SFUND RECORDS CTR
0217-00766

SFUND RECORDS CTR
88005411
[0217-00766]

REPORT

Volume 2 of 2

SOIL VAPOR EXTRACTION (SVE) FINAL REMEDY CONSENT DECREE FINAL EXTRACTION AND TREATMENT SYSTEM DESIGN PHOENIX-GOODYEAR AIRPORT (SOUTH) SUPERFUND SITE GOODYEAR, ARIZONA

Submitted to:

The Goodyear Tire and Rubber Company
Akron, Ohio

September 10, 1992
(Revised November 25, 1992)

Metcalf & Eddy, Inc.
816 State Street, Suite 500
Santa Barbara, CA 93101

APPENDIX C

DRAFT CONSTRUCTION QUALITY ASSURANCE QUALITY CONTROL PROJECT PLAN

APPENDIX C

CONSTRUCTION QUALITY ASSURANCE PROJECT PLAN

Preface

The Construction Quality Assurance Project Plan (CQAPjP) outlines the methods by which the Phoenix Goodyear Airport (PGA) Soil Vapor Extraction (SVE) Operable Unit remedial design and construction shall be measured and controlled to ensure the desired level of performance. This CQAPjP identifies quality elements which will be verified during each facet of the fabrication and erection of the project. The goals of this CQAPjP are to:

- Maintain sufficient control over design, field construction, and testing of facilities or equipment to assure quality workmanship, integrity of the materials of construction, conformance to specifications, and compliance with provisions of contracts and statements of work, and the 1990 Consent Decree (Section X).
- Ensure that appropriate quality requirements are included within contracts and statements of work with construction contractors and subcontractors.
- Ensure that all changes to drawings and specifications are approved in writing by an appropriate level of project management. These review and approval authorities shall be specified in writing. As-built drawings and specifications shall be generated as necessary.
- Ensure that independent inspections are performed and documented at specified hold points. Deficiencies and nonconformances shall be reported to appropriate management through an established system and the corrective actions documented.

(1) Title Page.

Contract Number: 006791.0001

Project Title: Phoenix Goodyear Airport Soil Vapor Extraction Operable Unit

EPA region: IX

Deputy Program Manager: _____
Signed

QA Manager: _____
Signed

Deputy Program Manager: _____
Signed

Site Manager: _____
Signed

EPA Remedial Project Manager: _____
Signed

Regional QA Officer: _____
Signed

(2) Table of Contents

Section

1 Title/Signature Page
2 Table of contents
3 Project Scope/Description
4 Project Responsibilities and Authorities
5 Construction Quality Assurance Training/Qualifications
6 Design Control
7 Procurement Control
8 Inspection Activities
9 Control of Purchased Items and Services
10 Identification and Control of Items and Materials
11 Control of Nonconforming Items and Materials
12 Supplier Selection
13 Control of Measuring and Test Equipment
14 Quality Records
15 Corrective Action
16 Construction Quality Audits
17 References

(3) Project Scope/Description. This CQAPjP is for the site remediation of vadose zone soils contaminated with chlorinated solvents as outlined in the Consent Decree, Section VII. The contaminants are known or suspected carcinogens and may be deemed hazardous at the concentrations present. Recovered contaminants collected in the treatment process are deemed hazardous under existing regulatory guidelines.

This CQAPjP covers the detailed design, fabrication, installation and startup of the major components of the vapor extraction system. The purpose of the CQAPjP is to ensure that the system functions as intended and that all components which comprise the system satisfy their performance criteria. The following is included in the CQAPjP:

- Work Flow Diagram (Figure C3-1)
- Start, Milestone and Completion Dates (Figure C3-2)

This CQAPjP applies in part or whole, as appropriate, to the successful bidders for the following components which make up the Vapor Extraction System (VES):

- Air/Water Separator (including Pump and Switches)
- Blower (Including Motor)
- Filters (Including Housing and Media)
- Carbon Vessels (Including Internal Carbon Support Structures, Integral Connections, Vacuum Relief Valves and Other Supplied Components)
- Muffler and Stack
- Field Erection and Electrical Contractors
- Electrical Components and Controls

(4) Project Responsibilities and Authorities. The personnel responsible for administering the CQAPjP are shown in Figure C4-1. or chart shall show the project organization and line authority.

The M&E Project Manager, Mr. Scott Zachary, is responsible for preforming quality assurance functions. Mr. Zachary has sufficient authority and organizational freedom to identify project problems; to initiate, recommend, or provide solutions; and to verify implementation of solutions. Mr. Zachary may appoint project personnel to assist him with CQAPjP activities as he deems necessary or appropriate. Mr. Zachary's activities will, in

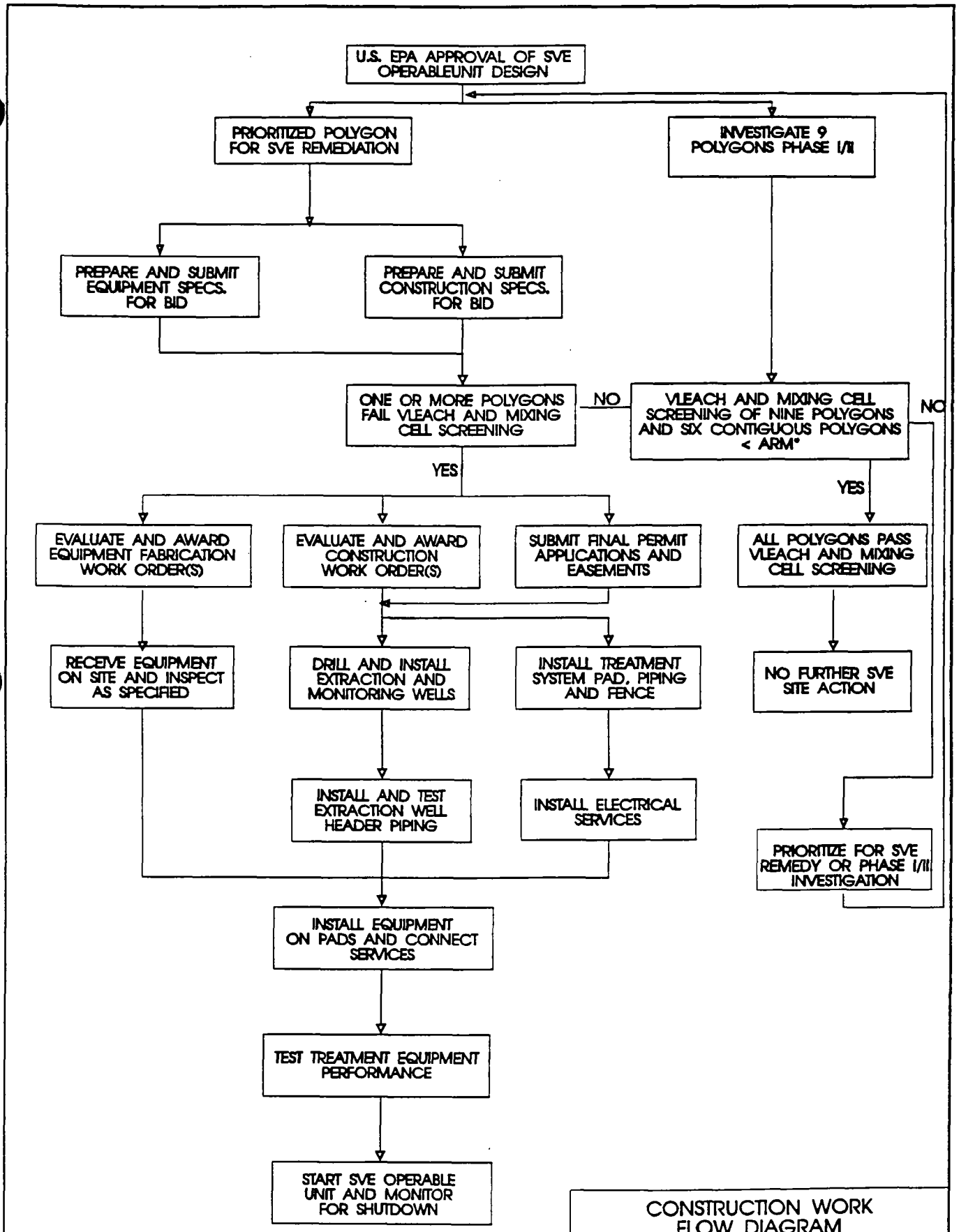

* ARM = ALLOWABLE RESIDUAL MASS FOR NO SVE REMEDY

CONSTRUCTION WORK FLOW DIAGRAM

M&E Metcalf & Eddy

Drawn by: J. Weldmann	Job Number: 006791	Date: November 24, 1992
Checked by: S. Zachary		Figure Number: C3-1

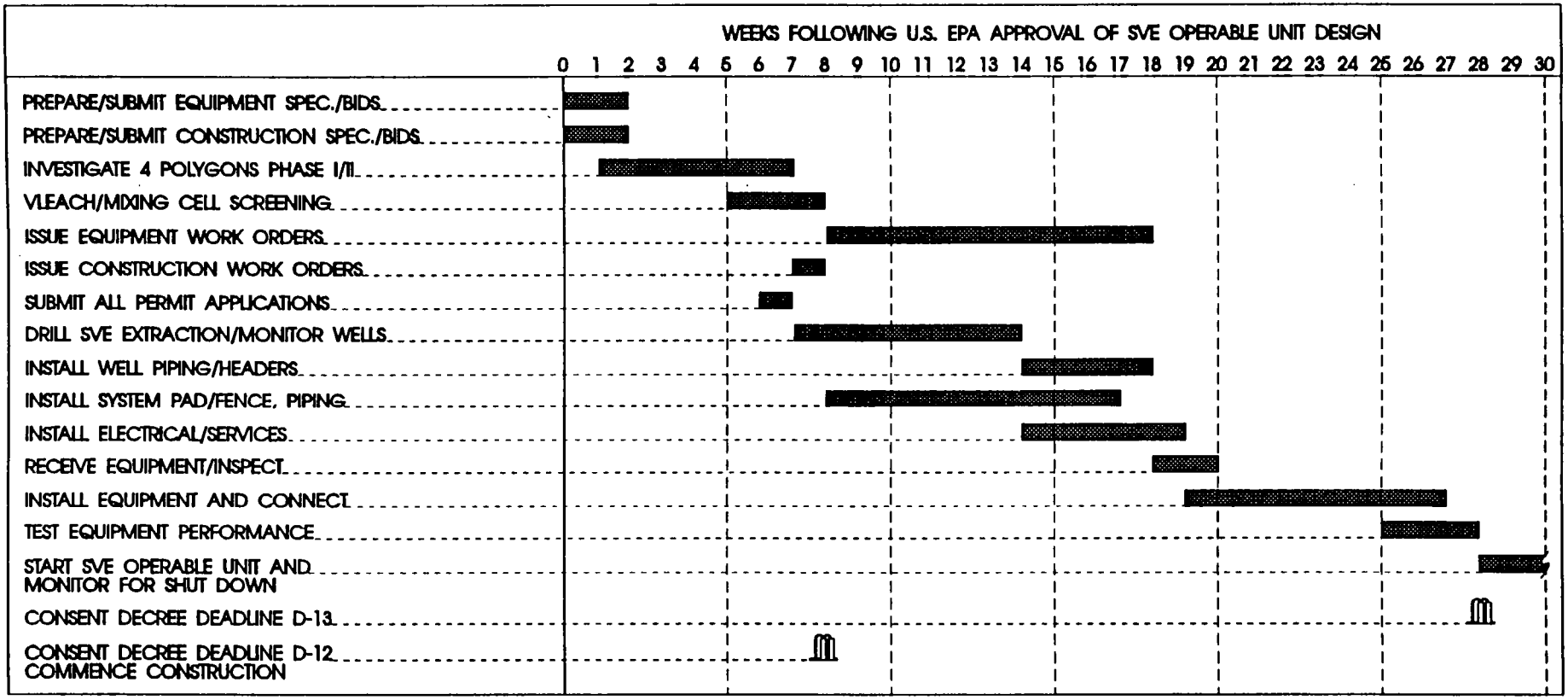

= DELIVERABLE MILESTONE

CONSTRUCTION WORK SCHEDULE - POLYGON 79

Metcalf & Eddy

Drawn by: J. Weidmann	Job Number: 006791	Date: September 1992
Checked by: S. Zachary		Figure Number: C3-2

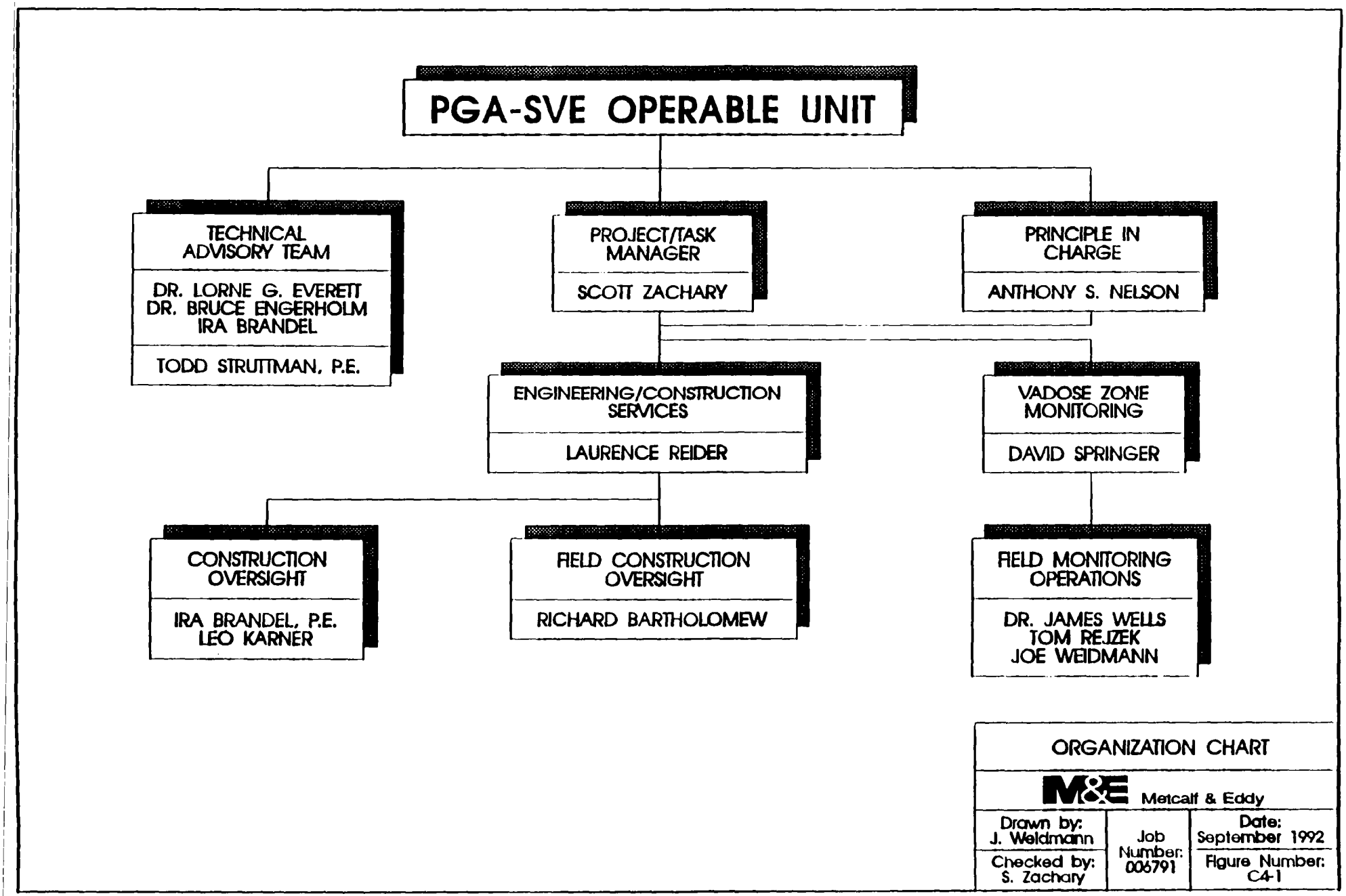
PGA-SVE OPERABLE UNIT
TECHNICAL ADVISORY TEAM
DR. LORNE G. EVERETT
DR. BRUCE ENGERHOLM
IRA BRANDEL
TODD STRUTTMAN, P.E.
PROJECT/TASK MANAGER
SCOTT ZACHARY
PRINCIPLE IN CHARGE
ANTHONY S. NELSON
ENGINEERING/CONSTRUCTION SERVICES
LAURENCE REIDER
VADOSE ZONE MONITORING
DAVID SPRINGER
CONSTRUCTION OVERSIGHT
IRA BRANDEL, P.E.
LEO KARNER
FIELD CONSTRUCTION OVERSIGHT
RICHARD BARTHOLOMEW
FIELD MONITORING OPERATIONS
DR. JAMES WELLS
TOM REJZEK
JOE WEIDMANN
ORGANIZATION CHART
M&E Metcalf & Eddy
Drawn by: J. Weidmann
Checked by: S. Zachary
Job Number: 006791
Date: September 1992
Figure Number: C4-1

turn, be monitored by M&E's Technical Advisory Team (TAT), which consists of senior M&E professionals not directly involved in project activities. The TAT is independent of schedule and cost pressures and has access to a management level that is not involved in the day-to-day direction of the project.

(5) Quality Assurance Training/Qualification. M&E's corporate policy is that every project have a Health & Safety (H&S) component. Field personnel are trained in safe field practice. As such, field personnel are only assigned tasks for which they are qualified. Furthermore, applicable Federal, State and local rules, regulations and ordinances are made a part of the H&S plan. M&E's subcontractors are required to satisfy project H&S criteria and sign the H&S plan.

Appendix G of this document contains the Site and Task-Specific H&S Plan for the construction and operation of the SVE Operable Unit. All contractors and subcontractors working within this work plan will be required to conform to the requirements of the H&S Plan (Appendix G).

The qualifications of each subcontractor to do the subcontracted task will be reviewed based on the firm's previous project experience, satisfaction of previous contracting entities and business reputation. Each major subcontractor will be required to submit a portfolio of experience and identify references or contacts knowledgeable of the firm's work. M&E will review the documentation of experience and contact references, or others knowledgeable of the candidate subcontractor's work history. The qualifications of construction quality assurance, inspection, and test personnel shall be in accordance with established procedures.

(6) Design Control. To ensure that field construction quality is achieved, M&E will prepare a field erection specification which will include construction quality assurance, inspection and documentation requirements. These requirements will be placed in the bidding specification documents submitted to the potential subcontractors. The successful bidder for this task will be required to satisfy the quality criteria.

Major VES components will be fabricated by the successful vendor or vendors for that contract. The bid specifications will include performance and quality criteria appropriate for the component. Detailed design, including drawings and specifications, shall be reviewed and approved by M&E engineers prior to fabrication. Design requirements, including materials and fabrication methods not rigorously identified in the bid documents, shall be reviewed by M&E engineers. Compatibility of materials, maintenance, operation and replacement will be considered. Any changes or substitutions of materials or components in the SVE Operable Unit equipment will be requested of M&E in writing prior to the substitution. M&E will determine if the substitution is appropriate under the application conditions.

Inspections, hold points and testing will be established where appropriate. These will be identified in the bid documents as being part of the contract.

Applicable codes, regulations and standards will be identified in the bid documents. Where not specifically identified in the bid documents, it will be the responsibility of the successful bidder to identify and comply with applicable codes, regulations and standards. All state, county, and local, building and construction codes will be adhered to in the construction of the SVE operable unit.

It shall be the responsibility of the successful bidder to ensure that the item(s) provided satisfy the service intended.

For each component of the SVE Operable Unit, the following will be considered and included, as appropriate, in the bid document:

- Design requirements, including quality assurance requirements, shall be established and incorporated into the design input.
- Acceptance criteria requirements for items, services, or operations shall be identified by the design input to assure that the items, services, and operations conform to the latest applicable requirements.

- Design reviews shall be conducted to verify the design and to provide assurance of the following:

  - The drawings and specifications contain the information and operations, including applicable specifications and process requirements, and any inspections or tests (including shop and operational testing) needed to determine conformance.

  - That appropriate quality requirements are specified.
  - That all applicable regulations and standards are incorporated.
  - That the design is indeed adequate to fulfill the specific intent.

- The results of design verification activities shall be clearly documented.

- Significant changes to designs, including field changes, shall be justified and subjected to design control measures commensurate with those applied to the original design and approved by the same affected groups or organization which reviewed and approved the original design documents.

- All authorized changes shall be processed in a manner which will assure their traceability and incorporation at specified effective points.

(7) Procurement Control. Procurement control will be maintained over procurement sources to assure that services and materials conform to specified requirements. Source surveillance and inspection shall be specified in the bid document and performed, as applicable, to assure the required quality of an item, process, or service. Purchase orders (or contracts) shall be controlled to ensure incorporation of pertinent technical and quality requirements, including authorized changes. Specifications and bid documents of major components for procurement will be prepared by M&E for Goodyear and will be issued directly by Goodyear. Subcontracts for successful bidders will be direct through Goodyear following M&E review and evaluation.

(8) Inspection Activities. Measures will be established and documented in the bid documents. Such inspections and tests or evaluations will be performed in accordance with written procedures by appropriately qualified individuals other than those who performed the activity being inspected. The inspection program will encompass, as applicable, inspections and tests performed at a supplier's facility, upon receipt of the material or products, during site preparation and during construction.

Inspection hold points will be identified in appropriate procedures or documents and verification that these hold points were indeed witnessed by the appropriate procedures or documents and verification that these hold points were indeed witnessed by the appropriate individuals will be specified. Inspection results will be recorded on appropriate checklists or other records in hardbound books that can be readily traced to the item inspected and the individual responsible for performing the inspection. The checklist book will consist of inspection items, quality documentation requirements, hold point requirements from each of the SVE Operable Unit component bid documents.

Examples of activities that will be specifically addressed, as applicable, under the inspection activities section of the CQAPjP are as follows:

- Preconstruction Inspection
  - Design/specification review.
  - Familiarization with site conditions.
  - Review of documentation requirements. These documentation requirements include but are not limited to 1) City of Phoenix Building Codes, 2) National Electrical Code, 3) Fire Codes, 4) Maricopa County Air Quality Regulations, 5) ASTM Codes, 6) Noise Ordinances etc.
- Construction Inspection
  - Sampling requirements (per bid document requirements).
  - Testing requirements (per bid document requirements).
  - Visual inspection requirements.
- Post-Construction Inspection
  - Visual inspection requirements.
  - Verification testing requirements.
  - The "punch-list" system.
  - Final inspections.
- Construction Sampling Strategies
  - Type of sampling strategy.
  - Judgmental sampling.
  - Statistical (random) sampling.

- Sample size.
- Sampling locations.
- Sampling frequencies.
- Sampling analysis.

Of particular concern relating to vessels used for the VES system are the integrity of welds; the ability of the vessels to retain their shape and not deform, leak or collapse under the design vacuum applied by the blower; the integrity of the protective epoxy and enamel paint coatings; and the function of protective equipment such as vacuum relief valves.

- Potential vendors will be required to identify the welding method used for vessel welds. Welds will be inspected for appearance, uniformity and thickness.

- Coatings of paint and epoxy are expected to be uniform in thickness and coverage. Drips, splatter, chipping, peeling and cracks are not permissible. Drips and splatter should be cleaned and brought even with other coated surfaces. Chips, peeling and cracks should be sanded to base metal, feathered into the adjoining coating, primed and brought to uniform thickness.

- Vacuum relief valves should be tested for function and calibration. Test results should be provided to M&E for review and inclusion with project QA files.

- Dimension control is important with piping systems. M&E will specify tolerances and require final dimension inspection and documentation where off-tolerance fabrication might adversely affect system performance or erection.

(9) Control of Purchased Items and Services. Methods used for the evaluation and/or testing of purchased items or services to assure conformance with the requirements of applicable standards and specifications shall be specified in the bid documents. The disposition of items and services that do not meet procurement document requirements shall also be addressed.

(10) Identification and Control of Items. Adequate methods and appropriate facilities for controlling the identification, handling, and storage of project-specific items and technological data shall be addressed in the bid documents. Data provided by successful bidders to support design, inspections and quality control shall be retained in the M&E project files.

(11) Control of Nonconforming Items. M&E shall review and act on data, facilities, items, materials, services, or activities which do not conform to project requirements as appropriate.

M&E will attempt to identify and deal with such items in a timely manner and to resolve such problems in a manner which minimizes project impact. The burden of correction will be placed on the vendor and stated as such in the bid document.

(12) Supplier Selection. Goodyear and M&E will select suppliers via a competitive bid process. While cost and the proven ability to meet schedule will be significant factors, other criteria, as appropriate and including quality, will be considered in the selection process.

The ability of potential suppliers to provide the required facilities, services, or materials will be based on past performance and current business status. Each supplier's quality capabilities shall be periodically evaluated based on performance, by means including audit visits where appropriate.

(13) Control of Measuring and Test Equipment. Vendors shall maintain any calibration measuring devices to directly or indirectly trace assigned values of measurement equipment to values in terms of nationally recognized standards, and shall address assurances that gauges and test equipment, including commercial test items used in acceptance of product, are in a state of proper calibration and maintenance, as appropriate.

The following information shall be included in the bid document to be completed by the supplier as a requirement, as appropriate:

- Reference to the applicable Standard Operating Procedure (SOP) or a written description of the calibration procedure(s) to be used for each applicable piece of equipment
- Planned recalibration frequencies
- Calibration standards to be used and their source(s)
- Documentation requirements
- Use of traceable calibration standards
- Description of recall system

(14) Quality Records. Suppliers are required to maintain sufficient records to furnish evidence of the quality of project-specific facilities, services, items, and activities to satisfy activity specific requirements which are specified in the bid documents. These records shall include the results of reviews, inspections, tests, audits, monitoring of work performance, and materials analysis. Closely related data, such as qualifications of personnel, procedures, and equipment shall also be maintained, as appropriate. It shall also be specified that quality data from all available sources be systematically collected, analyzed, and utilized for the prevention, detection, and correction of deficiencies.

Examples of quality records to be addressed in this section shall include, as appropriate, but not be limited to:

- Qualification/certification documents
- Daily inspection reports
- Test reports
- Final inspection reports
- Acceptance reports
- Process/procedure qualification records
- Performance audit reports
- Systems audit reports
- Nonconformance/corrective action reports

(15) Corrective Action. Conditions adverse to quality are to be promptly identified and corrected. The vendors will be required, by specification or contract, to notify M&E promptly of any adverse conditions relating to quality or which might otherwise affect the project. The cause for the adverse condition shall be reported and corrective action taken. Steps shall be implemented to minimize project impact and to prevent recurrence. As appropriate, bid documents will contain some or all of the following:

- Identification, determination, and correction procedures
- Documentation requirements
- Reporting requirements
- Assignment of corrective action responsibilities
- Corrective action follow-up procedures

(16) Construction Quality Audits. M&E, or its representatives, will be present at the site during

erection and startup of the VES system. M&E personnel will assist in startup activities and verify performance of system components. System component performance shall be compared with operating manuals provided by the vendors.

Construction quality audits may be conducted on both a scheduled and/or unannounced basis and shall be performed in accordance with written procedures and checklists by qualified audit personnel who do not have direct responsibility for performing the activities being audited.

Construction quality audit reports, including a requested date for response by the audited organization, shall be distributed to responsible management of both the auditing and audited organizations.

(17) References

1. Consent Decree, 1990, U. S. EPA, Phoenix-Goodyear Airport Superfund Site.
2. Soil Vapor Extraction Final Remedy Consent Decree Design Memorandum and Work Plan, Phoenix-Goodyear Airport (South) Superfund Site, Goodyear, Arizona. January 23, 1992; Revised May 1992.
3. QA/QC Control Guidance for Remedial Activities, Sampling QA/QC Plan and Data Validation Procedures, U. S. EPA, April 1990.
4. A Compendium of Superfund Operating Methods, U. S. EPA, December 1987, PB88-181557.
5. Field Screening Methods Catalogs - User's Guide, September, 1988, U. S. EPA, 540/2-88005.
6. Interim Guidelines and Specifications for Preparing Quality Assurance Project Plans, U. S. EPA, PB813-170514.
7. Guidance on Oversight of PRP Performed RD/RA, U. S. EPA, OSWER, Directive No. 9355.5-01, 2/14/90. PB90-249707.
8. Field Manual for Resident Representatives and Resident Staff, Metcalf & Eddy, Inc., 1989.
9. Standard Specifications for Public Works Construction, City of Phoenix, Arizona; (Green Book), Document No. 769709, 1988.

9. Regional Standard Drawings, City of Phoenix, Arizona, 1990.

10. National Electric Code, National Fire Protection Association, Quincy, MA, 1990, ISBN-87765-361-5.

APPENDIX D

DRAFT EMERGENCY CONTINGENCY PLAN

CONTINGENCY PLAN

1.0 INTRODUCTION

The Contingency Plan for the Phoenix-Goodyear Airport Soil Vapor Extraction (SVE) operable unit is prepared to protect local communities both residential and commercial in the event that an accident or an emergency should occur.

Due to the nature and design of the SVE operable unit, the contingency plan primarily deals with the facility personnel which directly interface with the SVE operable unit. Compliance points for SVE operable unit contingency plan monitoring will include air monitoring program and a spill control and countermeasures plan.

A brief description of the subsurface conditions present at the Phoenix-Goodyear Airport are presented as an overview of the required site treatment. A general description for the operable unit is also presented as a primer for the contingency plan terminology.

1.1 SUBSURFACE CONDITIONS

Past uses of the Phoenix-Goodyear Airport including maintenance and manufacturing utilized various solvents and cleaning agents as degreasers in the manufacturing and maintenance process. Use of the solvents and cleaning agents throughout the facility resulted in the solvents and cleaning agents being released to the site soils. Infiltration of surface and rainwater into the site soils following the release of the solvents and cleaning agents resulted in downward migration of the solvents to the groundwater table.

Due to the solvent migration, both the soil and groundwater in areas of the site contain levels of solvent contamination that exceed the U.S. EPA maximum contaminant levels. Concentrations of soil vapor in the soil range between 50 μg/L (ppbV) to as high as 1000 mg/L (ppmV) Groundwater concentrations range from 5 μg/L (ppbV) to 2,000 μg/L (ppbV) As a result of the soil and

groundwater concentrations exceeding the maximum contaminant levels, a remediation program was instituted to remove the contaminants, where required using groundwater and soil vapor extraction. The scope of this Contingency plan covers the soil vapor extraction operable unit. The groundwater extraction operable unit is covered in a separate Contingency Plan under a separate cover.

1.2 SVE OPERABLE UNIT

The soil vapor extraction operable unit is designed to remove the residual solvents in the soil in the vapor phase. The process is based on the principle that the solvents have a high vapor pressure and will volatilize from the liquid to the vapor phase under the proper thermodynamic conditions. The soil vapor extraction produces the proper conditions in the soil to promote the volatilization process and remove the solvents in the vapor phase.

The soil vapor extraction system in principle places a vacuum on the soil through a network of wells screened in the solvent-contaminated soil. The wells are connected to a vacuum blower which induces a vacuum on the network of wells and draws the solvent vapors out. As the solvent vapors are drawn out, liquid solvent in the soil volatilizes into the vapor phase and are then removed. Figure D-1 illustrates the configuration of the SVE wells.

Once the solvent vapors have been extracted, they must be removed from the vapor stream prior to discharge to the atmosphere. The solvent vapors are removed from the air stream through granular activated carbon (GAC) beds. Figure D-2 illustrates the configuration of the SVE operable unit and the individual components.

The solvent-laden air passes through the GAC beds and the solvents are removed. Prior to the solvent-laden air passing through the GAC beds, any entrained water is required to be removed. The water is removed from the solvent-laden air in the air/water separator and is held in the air/water separator reservoir until a set limit has been reached. At this point, a switch automatically starts a water transfer pump (P1) which evacuates the water into a water storage tank. A high level water switch in the water storage tank prevents tank over filling. This tank and the air/water separator are the only vessels containing liquids that could be spilled or released to the environment. The water

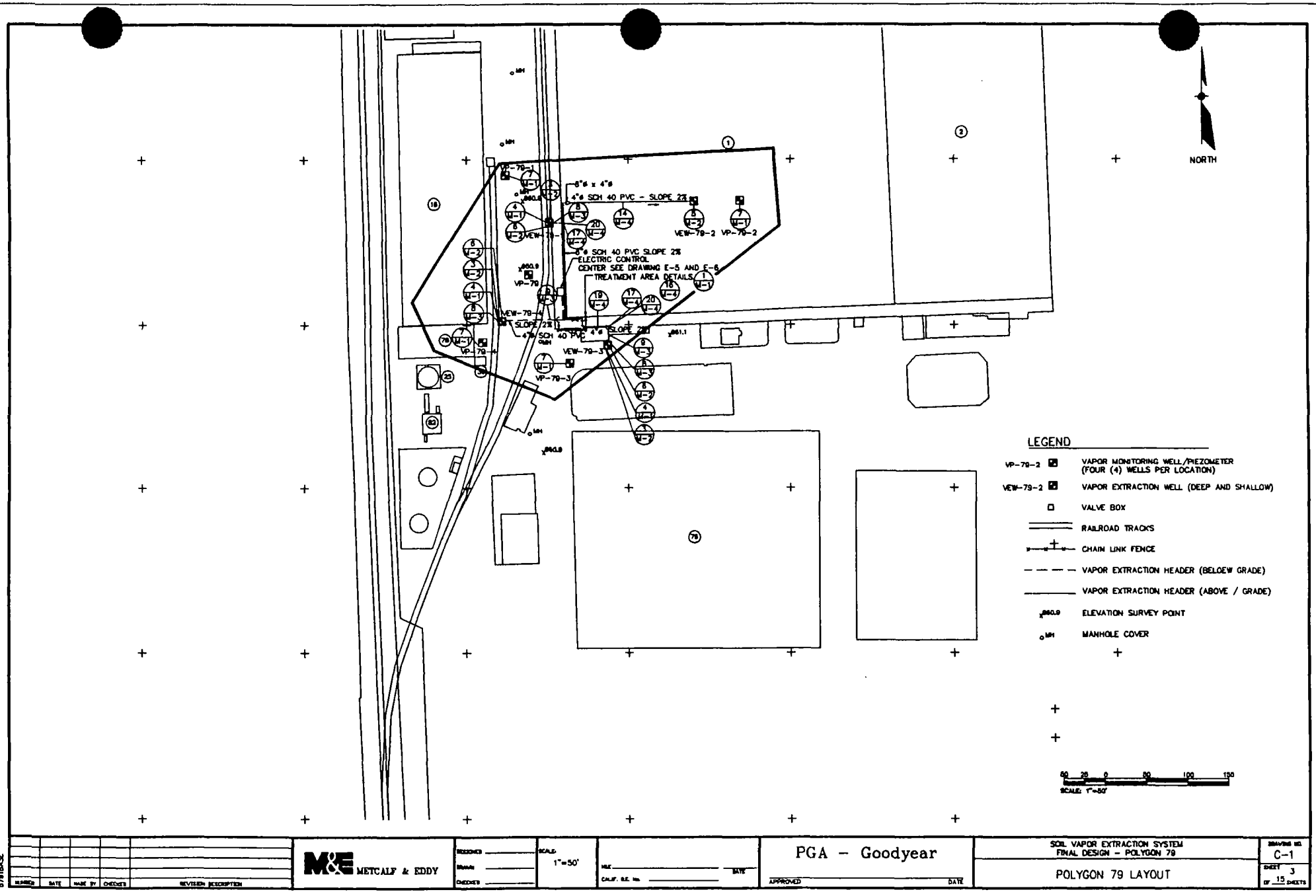
NORTH
LEGEND
VP-79-2 VAPOR MONITORING WELL/PIEZOMETER (FOUR (4) WELLS PER LOCATION)
VEW-79-2 VAPOR EXTRACTION WELL (DEEP AND SHALLOW)
VALVE BOX
RAILROAD TRACKS
CHAIN LINK FENCE
VAPOR EXTRACTION HEADER (BELOEW GRADE)
VAPOR EXTRACTION HEADER (ABOVE / GRADE)
ELEVATION SURVEY POINT
MANHOLE COVER
4"ø SCH 40 PVC - SLOPE 2%
ELECTRIC CONTROL CENTER SEE DRAWING E-5 AND E-6
TREATMENT AREA DETAILS
VEW-79-1
VEW-79-2
VEW-79-3
VEW-79-4
VP-79-1
VP-79-2
VP-79-3
VP-79-4
VP-79
SCALE: 1"=50'
METCALF & EDDY
PGA - Goodyear
SOIL VAPOR EXTRACTION SYSTEM
FINAL DESIGN - POLYGON 79
POLYGON 79 LAYOUT
C-1
SHEET 3 OF 15 SHEETS

FIGURE D-1

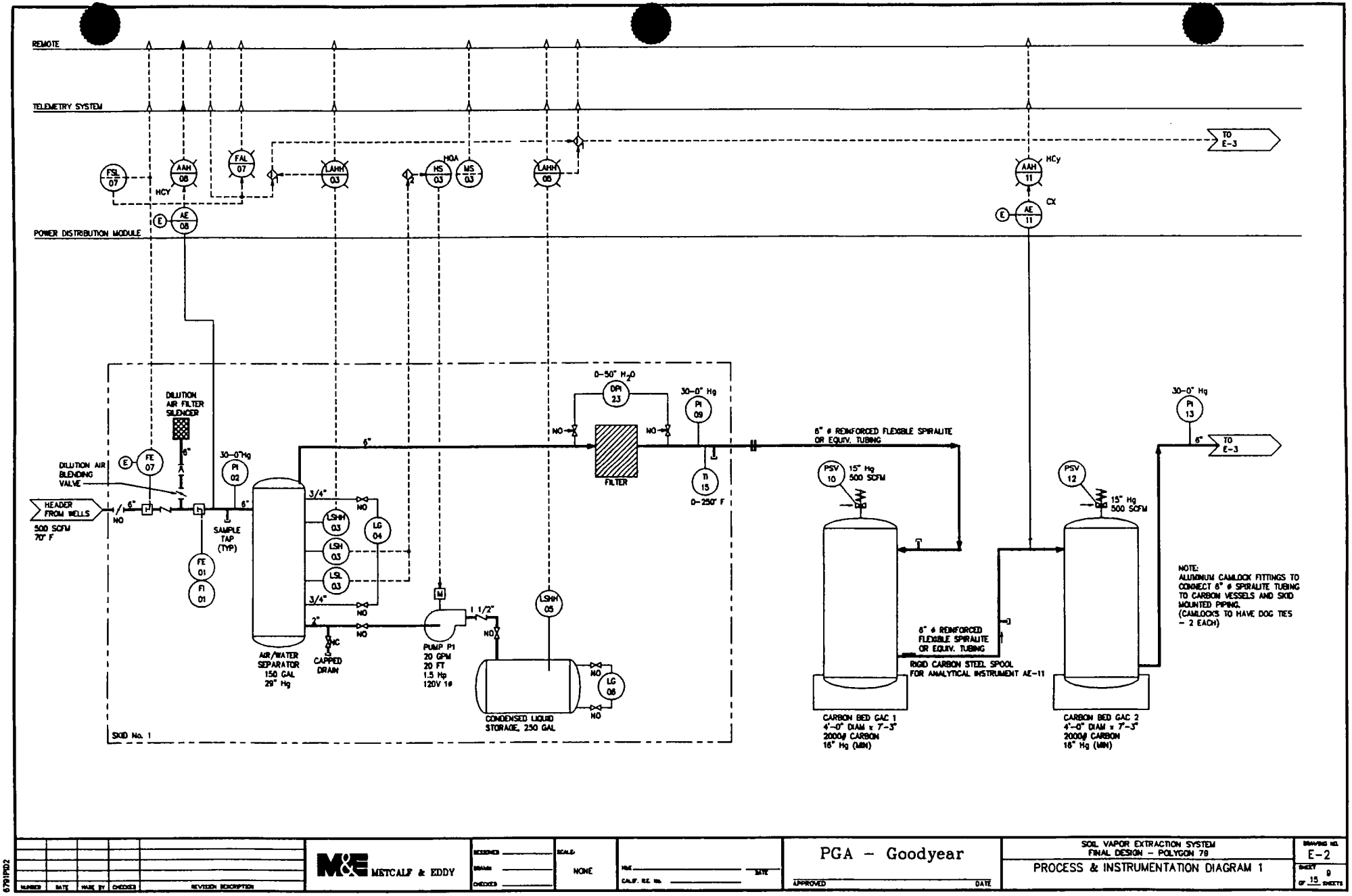
REMOTE
TELEMETRY SYSTEM
POWER DISTRIBUTION MODULE
TO E-3
FSL 07
AAH 08
HCY
FAL 07
LAHH 03
HS 03
HOA
MS 03
LAHH 05
AAH 11
HCy
AE 08
AE 11
CX
DILUTION AIR FILTER SILENCER
DILUTION AIR BLENDING VALVE
FE 07
FE 01
FI 01
HEADER FROM WELLS
500 SCFM
70° F
30-0" Hg
PI 02
SAMPLE TAP (TYP)
LSHH 03
LSH 03
LSL 03
LG 04
AIR/WATER SEPARATOR 150 GAL 29" Hg
CAPPED DRAIN
PUMP P1
20 GPM
20 FT
1.5 Hp
120V 1ø
LSHH 05
CONDENSED LIQUID STORAGE, 250 GAL
LG 06
SKID No. 1
0-50" H2O
DPI 23
FILTER
PI 09
TI 15
0-250° F
8" ø REINFORCED FLEXIBLE SPIRALITE OR EQUIV. TUBING
PSV 10
15" Hg
500 SCFM
CARBON BED GAC 1
4'-0" DIAM x 7'-3"
2000# CARBON
18" Hg (MIN)
8" ø REINFORCED FLEXIBLE SPIRALITE OR EQUIV. TUBING
RIGID CARBON STEEL SPOOL FOR ANALYTICAL INSTRUMENT AE-11
PSV 12
CARBON BED GAC 2
4'-0" DIAM x 7'-3"
2000# CARBON
18" Hg (MIN)
PI 13
NOTE:
ALUMINUM CAMLOCK FITTINGS TO CONNECT 8" ø SPIRALITE TUBING TO CARBON VESSELS AND SKID MOUNTED PIPING.
(CAMLOCKS TO HAVE DOG TIES - 2 EACH)
METCALF & EDDY
NONE
PGA - Goodyear
SOIL VAPOR EXTRACTION SYSTEM
FINAL DESIGN - POLYGON 78
PROCESS & INSTRUMENTATION DIAGRAM 1
E-2
9
15

FIGURE D-2

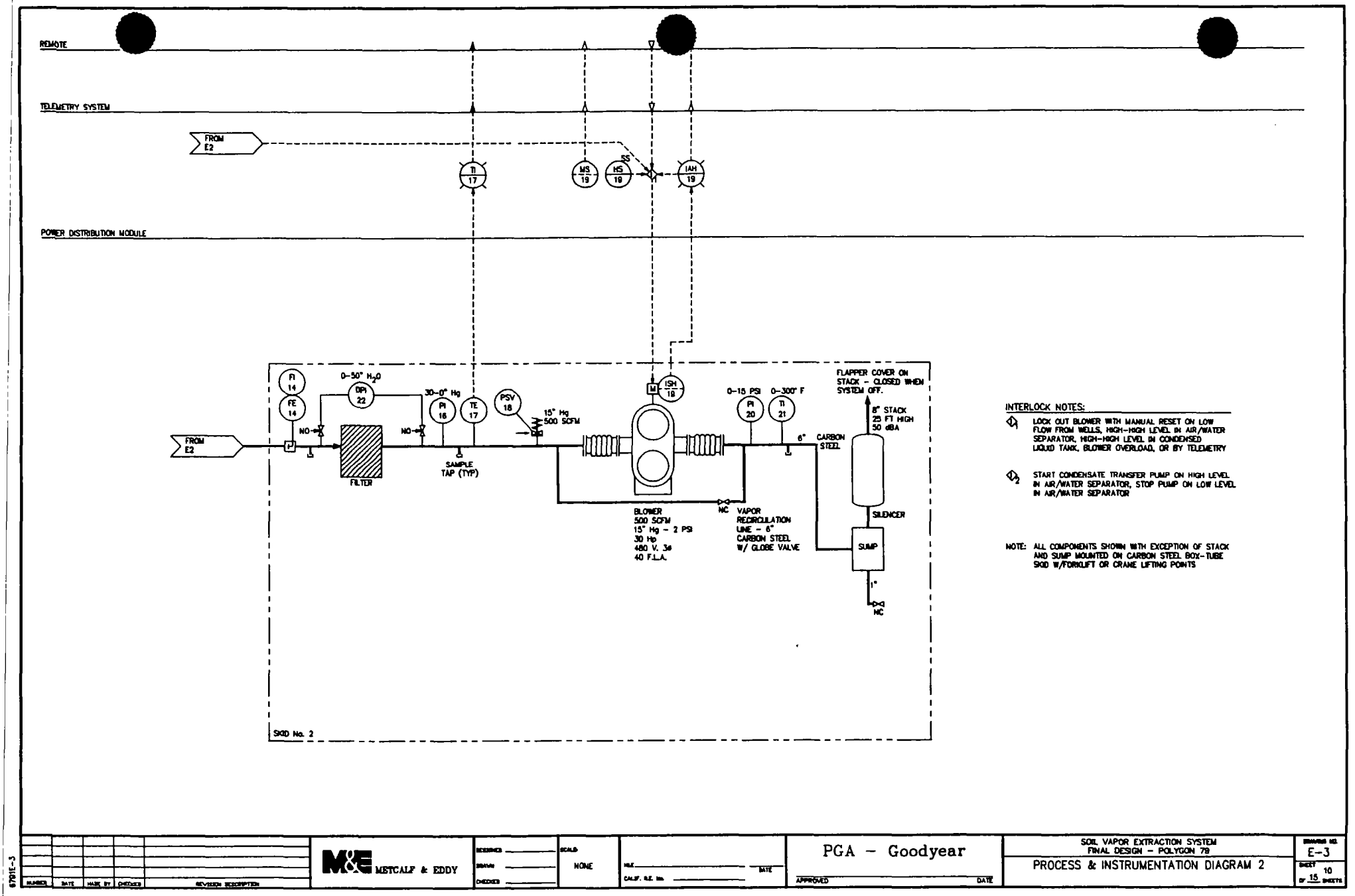

INTERLOCK NOTES:

1. LOCK OUT BLOWER WITH MANUAL RESET ON LOW FLOW FROM WELLS, HIGH-HIGH LEVEL IN AIR/WATER SEPARATOR, HIGH-HIGH LEVEL IN CONDENSED LIQUID TANK, BLOWER OVERLOAD, OR BY TELEMETRY
2. START CONDENSATE TRANSFER PUMP ON HIGH LEVEL IN AIR/WATER SEPARATOR, STOP PUMP ON LOW LEVEL IN AIR/WATER SEPARATOR

NOTE: ALL COMPONENTS SHOWN WITH EXCEPTION OF STACK AND SUMP MOUNTED ON CARBON STEEL BOX-TUBE SKID W/FORKLIFT OR CRANE LIFTING POINTS

NUMBER	DATE	MADE BY	CHECKED	REVISION DESCRIPTION

M&E METCALF & EDDY

DESIGNED
DRAWN
CHECKED
SCALE: NONE
M.E. DATE
CALIF. R.E. No. DATE
APPROVED DATE

PGA - Goodyear

SOIL VAPOR EXTRACTION SYSTEM
FINAL DESIGN - POLYGON 79

PROCESS & INSTRUMENTATION DIAGRAM 2

DRAWING NO. E-3
SHEET 10 OF 15 SHEETS

6709E-3

FIGURE D-2(CONT.)

contained in these vessels will be primarily from condensation in the SVE subsurface piping and could contain trace amounts of solvent. Based on previous experience with similar projects, it is anticipated that this water will not exceed greater 50 μg/L total solvents, therefore, it would not be considered an emergency hazard.

After the solvent-laden vapors pass through the GAC and the solvents are removed, the air then passes through the vacuum blower and is exhausted to the atmosphere via the discharge stack. The entire extraction and treatment system with the exception of the discharge stack and its related piping is under vacuum, resulting in a fail-safe system design with respect to fugitive emissions. Any leaks in the system piping will result in ambient air being drawn into the system rather that solvent-laden air being exhausted to the atmosphere. All piping under positive system pressure has had the solvent vapors removed.

The only opportunity for discharge of solvent-laden air to the atmosphere is if the GAC units are expended and the solvents are not removed. This scenario is minimized through the installation of a solvent vapor monitor in the discharge of the primary GAC bed. Detectable levels of solvents in the air effluent from the primary GAC bed will result in system shut-down and GAC regeneration and/or changeout.

As an added precaution against solvent breakthrough of the GAC and discharge to the atmosphere, a secondary GAC bed has been installed in series with the primary GAC. Should the primary GAC breakthrough, the secondary GAC, the same size as the primary, will assure that the treatment system remains within the permitted discharge allowances. Upon carbon changeout, the secondary GAC will be used as the primary GAC, thus enabling the fresh GAC to provide solvent discharge protection in the event of primary GAC breakthrough. Lastly, the entire treatment system is connected directly to a telemetry unit which can be accessed by M&E computers at an time of the day or night via telephone lines. In the event of an alarm condition, the telemetry will automatically dial the Emergency Response Parties to alert them of the condition.

The following sections of this Contingency Plan highlight the personnel and actions necessary to protect populations around the SVE operable unit when in operation.

2.0 EMERGENCY RESPONSE PARTY:

The SVE operable unit has been designed with safety as a primary concern. In the event that an emergency condition arises, the system telemetry unit will automatically dial the Emergency Response Parties for prompt response. Two parties have been listed to respond to system emergencies. The first party is for immediate response to evaluate the condition of the system emergency and determine if the system engineers are required to respond. Response time for the first party is less than two hours.

The second response party is the system engineers, or Metcalf & Eddy, Inc. M&E will respond to the system condition within 8 hours of the emergency condition if deemed necessary by the first response party.

2.1 FIRST RESPONSE PARTY:

Bartholomew Engineering
4120 N. 20th Street
Phoenix, Arizona 85016
(602) 957-0208
Mr. Richard Bartholomew

2.2 SECOND RESPONSE PARTY:

Metcalf & Eddy, Inc.
450 B Street, Suite 1900
San Diego, California 92101
Scott P. Zachary
(619) 233-7855
(619) 236-8707

3.0 OVERSIGHT NOTIFICATION

Due to the type of system and fail-safe nature of operation, notification of federal, state, and local agencies is not anticipated. If a system emergency should require oversight notification, the following agencies will be notified within 24 hours of the emergency for response.

3.1 LOCAL SITE REPRESENTATIVE

Loral Corporation
3200 S. Litchfield Road
Goodyear, Arizona 85338
Mr. Tom Heim
(602) 925-7102

3.2 STATE SITE REPRESENTATIVE

Arizona Department of Environmental Quality
3033 N. Central Avenue, Suite 400
Phoenix, Arizona 85012
Mr. Moses A. Olade
(602) 207-4409

3.3 FEDERAL SITE REPRESENTATIVE

United States Environmental Protection Agency
Superfund Enforcement Branch
75 Hawthorne Street
San Francisco, California 94105-3901
Mr. Craig Cooper
(415) 744-2370

3.4 EMERGENCY SQUAD

City of Goodyear Fire Department
S. Litchfield Road
Goodyear, Arizona 85338
(602) 932-3050

American Ambulance
1401 E. Washington St.
Phoenix, Arizona
(602) 253-1492

Lifeflite Air Ambulance
(602) 985-2873

Good Samaritan Hospital
51st Street and Campbell Ave.
Phoenix, Arizona
(602) 239-2000

Appendix G of the final design document, the Health and Safety Plan, contains more complete information with respect to emergency numbers and directions.

4.0 FIRST AID/MEDICAL RESPONSE:

Due to the nature of the SVE operable unit, it is anticipated that any need for medical response will be needed in the construction phase of the project. The hazards as well as the responses for accidents during the construction phase of the project are discussed in detail in the Health & Safety Plan of this Document (Appendix G). If an emergency should arise that requires first aid or medical attention, the following parties should be contacted or utilized.

4.1 FIRST-AID TRAINED PERSONNEL:

Scott P. Zachary, Metcalf & Eddy, Inc.
(619) 233-7855

David Springer, Metcalf & Eddy, Inc.
(805) 962-2122

Randy Clark, Loral Corporation
(602) 925-7101

Richard Bartholomew, Bartholomew Engineering
(602) 957-0208

4.2 MEDICAL FACILITIES:

In the event that an emergency should arise and medical facilities are:

American Ambulance
1401 E. Washington St.
Phoenix, Arizona
(602) 253-1492

Lifeflite Air Ambulance
(602) 985-2873

Good Samaritan Hospital
51st Street and Campbell Ave.
Phoenix, Arizona
(602) 239-2000

4.3 FIRE/RESCUE/EMERGENCY RESPONSE TEAMS

In the unlikely event that a fire or emergency should develop in or around the operable unit, the following response parties should be contacted for response as required.

City of Goodyear Fire Department
S. Litchfield Road
Goodyear, Arizona 85338
(602) 932-3050

Poison Control Center
Good Samaritan Hospital
(602) 253-3334
Explosives Unit
Phoenix Fire Department
(602) 262-6771

CHEMTREC Emergency Response
1-800-242-9300

EPA ERT Emergency Hotline
(201) 321-6660

5.0 AIR MONITORING PLAN

The Air Monitoring Plan for the treatment system consists of monitoring the area around the extraction and treatment operable unit with a hand-held vapor analyzer as outlined in detailed in the Health & Safety Plan (Appendix G) of this document.

Due to the nature of the operation of the extraction and treatment operable unit, failures in the piping or other components of the system would not result in releases of contaminants to the atmosphere, but rather will result in ambient air being drawn into the treatment system. As a result of this design, no fugitive emissions are expected to result which would require monitoring. The system will conform at all times during operations to the conditions in the air discharge permit with Maricopa County (Appendix F) and therefore will not result in a personal exposure problem.

To demonstrate compliance with the conditions in the Air Discharge Permit with Maricopa County, M&E has installed a hydrocarbon vapor analyzer in the treatment system piping to assure that the discharge limits are being met. Refer to Appendix F, Draft System Construction/Operation Permits and for the Air Permit specifications and Appendix G, the Health & Safety Plan for the personal work space monitoring specifics.

Should the treatment system and safety controls fail, a concentration of 4 ppmV in the stack exhaust would trigger the Contingency Plan operations. This level is based on 50 percent of the Maricopa County risk-based discharge limit of 4 pounds of TCE discharge per day with the operable unit operating at 1000 scfm. Because the concentrations in the site subsurface are low, and two GAC units operate in series to protect against unplanned emissions, this discharge level is not anticipated to be reached and should not trigger the Contingency Plan.

6.0 SPILL CONTROL AND COUNTERMEASURES PLAN

The soil vapor extraction operable unit is designed primarily as a vapor conveyance system. No hazardous liquids are handled directly by the operable unit and therefore does not require a formal Spill Control and Countermeasures Plan.

Operation of the system does however have the potential of generating small amounts of liquid in the form of condensate from the subsurface piping network. This entrained condensate liquid in the air stream is removed with the air/water separator. Once the water has been separated, it collects in the 150 gallon reservoir of the air/water separator. When the water in the reservoir reaches a set level, a pump is activated that transfers the water in the reservoir to a 250 gallon storage tank. The air/water separator, water transfer pump, and the 250 gallon water storage tank is located on skid number 1. See Appendix K, Draft Plans and Specifications for the skid configuration.

It is anticipated that the water collected in the air/water separator will contain only trace levels of the solvent contaminants. Due to the non-hazardous nature of this water, spill containment around the air/water separator is not required. Should a leak in the system piping occur, the system will be immediately shut down and the leak will be repaired. Water stored or collected in the air/water separator and 250 gallon storage tank will be transferred via a suction pump to a mobile trailer. the water, once transferred to the trailer will be transported to the site groundwater treatment system where it will be treated prior to discharge.

Spills or releases from the system will be minimized through the ongoing operable unit Operation and Maintenance Plan. All vessel and pump piping and fittings will be checked on a regular basis for integrity and tightness. Any fittings found to be loose will be tightened, and any fittings found to be sub-standard will be promptly replaced. In the event that a water release should occur, the following parties will respond to evaluate the need for additional emergency measures.

First Response Party:

Bartholomew Engineering
4120 N. 20th Street
Phoenix, Arizona 85016
(602) 957-0208
Mr. Richard Bartholomew

Second Response Party:

Metcalf & Eddy, Inc.
450 B Street, Suite 1900
San Diego, California 92101
Scott P. Zachary
(619) 233-7855
(619) 236-8707

In the event that a water release does occur, the water from the release will be tested to determine if any contaminants are present. If contaminants are present, any soils surrounding the operable unit in the immediate release area will be tested for the target contaminants. If soils at the surface are found to be impacted, they will be scraped off and placed in 17-H DOT 55-gallon drums which will then be remediated through the use of the SVE operable unit. The 55-gallon drums will be properly labeled and stored adjacent to or within the SVE operable treatment area fenced compound. Refer to Appendix K. Once the soils have been remediated to non-detect levels as determined by laboratory analysis, they will be disposed of in a location at the PGA facility that is agreeable to the U.S. EPA, the City of Phoenix, and Goodyear Tire and Rubber Company.

Due to the negligible to trace levels of contaminants expected to be present in the air/water separator condensate water, a local contractor will be used to excavate and move any soil if deemed necessary. Two potential contractors that could perform the work include:

Wright's Excavating Inc.
1545 E. Louis Way
Tempe, Arizona 85284
(602) 968-3312

Diversified Contractors, Inc.
Phoenix, Arizona
(602) 274-0787

Each of these contractors are OSHA certified for hazardous materials site operations and will conduct all work in compliance with the site Health & Safety Plan and all other pertinent sections of this report. All spill countermeasures work conducted on site will be overseen by Metcalf & Eddy, Inc., the Goodyear Tire and Rubber Company, and the U.S. EPA.

APPENDIX E

SVE OPERABLE UNIT DRAFT EASEMENTS

Goodyear has contacted the appropriate landowners or parties leasing facilities at the Phoenix-Goodyear Airport for the purpose of installing a Soil Vapor Extraction (SVE) operable unit in Polygon 79.

The installation is to include but not be limited to the installation of the following items:

- Soil vapor extraction wells
- Soil vapor monitoring wells
- Soil vapor extraction well subsurface piping
- SVE system aboveground/overhead piping
- SVE treatment compound including concrete pads, system components, and security fencing
- Temporary electrical and telephone services, either overhead or underground

The individual parties that have been contacted with respect to obtaining easements for Polygon 79 include:

1. City of Phoenix
   a) Phoenix-Litchfield Municipal Airport
   b) City of Phoenix Office of Environmental Programs

2. Loral Defense Systems

3. Southern Pacific Railroad

4. City of Goodyear Building Department

Table E-1 highlights the issues and requirements of each of the four listed parties with respect to draft easements.

TABLE E-1

SVE - PHOENIX - GOODYEAR AIRPORT

LAND OWNER CONTACTS AND SITE WORK REQUIREMENTS
SEPTEMBER 2, 1992, BY: RICHARD F. BARTHOLOMEW, P.E.

PARTIES CONTACTED	ADDRESS AND TELEPHONE	SUMMARY OF CONTACT DISCUSSION	CONSTRUCTION REQUIREMENTS
City of Phoenix Charles Boyer - Airport Mgr. Cynthia Parker -Aviation Env. Eng. Don Stoltzfus- Aviation Env. Geologist	Boyer, Admin. Bldg Phoenix-Litchfield Municipal Airport 1658 S. Litchfield Rd Goodyear AZ 85338 Boyer (602) 932-1200 Parker City of Phoenix Aviation Dept. 3400 Sky Harbor Blvd. Phoenix AZ 85034-4921 (602) 273-2730 Stoltzfus City of Phoenix Office of Environmental Programs 251 W. Washington St. Phoenix AZ 85003 (620) 256-5669	Discussed location of SVE wells and Pipe collection systems	1. Plans for work must be approved before work starts. 2. Street surfaces, runway areas and other work areas must be restored to original conditions. 3. No major runways or taxiways can be open cut. 4. FAA must be notified of any work within flight area. 5. Permanent easements for constructed items must be secured. 6. Must follow all City of Phoenix construction standards for street and related repairs.
Loral Defense Systems Tom Helm - Dir. of Fac. Engineering Randy Clark - Environmental Engineer	Loral Corporation 1300 S. Litchfield Road Goodyear AZ 85338 mail: P.O. Box 805 Litchfield Park AZ 85340 Helm (602) 925-7102 Clark (602) 925-7274	Discussed SVE Plant locations, Pipeline Collection System	1. Plans for work must be approved before work starts. 2. Surface areas in work area must be restored to original condition. 3. Permanent easements for constructed items must be secured plus access agreement.
Southern Pacific Railroad John Ivanunich - Mgr. of Contract Dept	Southern Pacific Railroad 1200 Corporate Center Monterey Park CA 91754 (213) 780-6957	Discussed RR easement requirements	1. Overhead crossing must have 23' clearance above railroad track. 2. Side structures must be at least 10' away from edge of tracks. 3. Plans for crossing must be approved prior to work start. 4. Easements for crossing must be obtained before work starts.
Lufthansa Airlines Training Ctr. Irmgard Bueschegen -Head of Admin. *Note: Lufthansa leases property from City of Phoenix	Lufthansa Airline Training Ctr 1858 S. Litchfield Rd Goodyear AZ 85338 (602) 932-1600	Discussed SVE wells (Polygon 92) and collection pipe system	1. Plans must be approved prior to work starting. 2. All work surface areas must be restored to original conditions. 3. Contractor to notify Lufthansa, 48 hours before working in parking or traffic area requiring any barricades or traffic detours.

Preliminary meetings have been held between all of the parties with respect to the installation of the SVE operable unit. Table E-1 summarizes the meeting results and requirements for granting of the Draft Easements.

The easement for crossing railroad tracks (if required) requires the longest lead time for processing. A main railroad crossing is not required for the installation of the SVE operable unit in Polygon 79, however a railroad service spur will be required to be crossed by a single subsurface vapor extraction header. Goodyear will work with Loral Defense Systems to obtain the permits for this spur crossing. If a main line railroad crossing is required for subsequent polygons, the easement request will be promptly processed so as not to delay the SVE operable unit construction and startup.

In obtaining all property easements, all property owners or renters will be notified of the intent and will be informed that all state, county, and local building codes will be upheld in the construction process.

Refer to Appendix F for system permitting and Appendix K for the SVE operable unit draft plans and specifications.

APPENDIX F

DRAFT SYSTEM OPERATION/CONSTRUCTION PERMIT APPLICATIONS

a) Draft Air Discharge Permit Application - Maricopa County

b) City of Goodyear Building Permit Application

In accordance with Section VII, Subsection D-8 of the 1990 Consent Decree, draft permit applications have been obtained for the construction and operation of the Soil Vapor Extraction (SVE) operable unit.

The two primary permits required for the construction and operation of the SVE operable unit are the Maricopa County Air Discharge Permit, and a City of Goodyear Building Permit.

Due to the fact the PGA site falls under the jurisdiction of U.S. EPA (Region IX) as a superfund site, an exemption from the formal Maricopa County Air Discharge permit can be granted. Goodyear has prepared this information for submittal to Maricopa County to ensure compliance with the air discharge regulations and facilitate the permit exemptions.

A permit from the Federal Aviation Administration was not deemed necessary due to the fact that Polygon 79 is not within any flight paths.

These two permit applications will be completed in accordance with the requirements of Appendix E (Draft Easements) of this document upon approval by U.S. EPA.

All permits will be submitted to the respective agencies in a timely manner so as not to cause any project delays.

Each permit application is presented in the following sections.

A) DRAFT AIR DISCHARGE PERMIT APPLICATION

September 2, 1992

State of Arizona
Department of Environmental Quality
2005 North Central Avenue
Phoenix, Arizona 85004

Subject: Application for Installation Permit for a Contaminated Soil Vapor Extraction System, Carbon Based

Dear Sir or Madam:

Enclosed pleased find the Application for Installation Permit for a carbon based soil vapor extraction system, to be operated at the Superfund remediation site located at the Phoenix-Goodyear Airport. A check for $160.00 is included to cover the cost of the filing fee. This application is submitted on behalf of Goodyear by Metcalf and Eddy, Inc.

The application follows the format specified in the attached list of contents, in accordance with the air pollution rules of the State of Arizona's Department of Environmental Quality, and specifically the Maricopa Intrastate Air Quality Control Region. The Department of Environmental Quality is reminded that the PGA site is currently under U.S. EPA Region IX superfund enforcement, and therefore falls under the rights and privileges of remedial action under CERCLA and SARA. Under U.S. EPA jurisdiction, a permit exemption being requested with the permit application providing the data necessary to ensure discharge compliance.

If you have questions or comments on the enclosed application, please contact me at (805) 962-2122. I anticipate to receive a letter of completeness/incompleteness within thirty days of your receipt of this application.

Sincerely yours,

METCALF & EDDY, INC.

Laurence S. Reider, P.E.
Senior Chemical Engineer

LIST OF CONTENTS

Section		Page
1.0	PERMIT APPLICATION	6
2.0	FACILITY BACKGROUND	12
3.0	SYSTEM INFORMATION	15
4.0	INSTRUMENTATION	23
5.0	REFERENCES	24

LIST OF ATTACHMENTS

Attachment		Page
A	Manufacturer's Specifications	25
B	Emissions Calculations	27

LIST OF FIGURES

Figure		Page
F3-1	Site Location	19
F3-2	Site Plan	20
F3-3	Process Flow Diagram	21
F3-4	Piping and Instrumentation Diagram	22

SECTION ONE

PERMIT APPLICATION

The following pages contain the permit application form.

MARICOPA COUNTY
ENVIRONMENTAL QUALITY &
COMMUNITY SERVICES AGENCY
DIVISION OF AIR POLLUTION CONTROL

2406 South 24th Street, Suite #E-214
Phoenix, Arizona 85034
(602) 506-6700
FAX (602) 506-6862

APPLICATION FOR INSTALLATION PERMIT

READ INSTRUCTIONS FIRST. ALL APPLICANTS MUST COMPLETE ITEMS 1 THROUGH 18. COMPLETE PERTINENT SECTIONS A THROUGH Z. DO NOT BEGIN CONSTRUCTION OR INSTALLATION OF EQUIPMENT BEFORE THIS APPLICATION IS APPROVED.

1. BUSINESS NAME: Goodyear Tire & Rubber Company, Inc.

2. ADDRESS OF INSTALLATION SITE: Phoenix Goodyear Airport (South)
Goodyear AZ
AZ ZIP:

3. TELEPHONE AT SITE: (602)

4. TYPE OF OWNERSHIP: ☒ Corporation ☐ Sole Owner ☐ Other--Specify: ☐ Partnership ☐ Government

5. NAME AND MAILING ADDRESS OF OWNERSHIP: Goodyear Tire & Rubber Company
1144 E. Market St.
Akron, OH 44316

6. TELEPHONE OF OWNERSHIP:

7. BRIEF DESCRIPTION OF BUSINESS/PROCESS AT SITE: Solvent vapors will be drawn from extraction wells through an air/water separator and carbon absorption tanks for 90% removal

8. STANDARD INDUSTRIAL CLASSIFICATION (S.I.C.) CODE(S), IF KNOWN:

9. EXISTING AIR POLLUTION CONTROL PERMIT TO OPERATE NUMBER FOR THIS SITE, IF ANY: N/A EXPIRATION DATE:

10. REASON FOR APPLICATION: ☒ Begin Installation of New Equipment ☐ Transfer Existing Equipment ☐ Other ☐ Modify Existing Equipment ☐ Change of Location of Ownership

11. BRIEF DESCRIPTION OF EQUIPMENT/PROCESSES COVERED BY THIS APPLICATION: Carbon Vapor Extraction System

12. OPERATING SCHEDULE: HOURS PER DAY 24 DAYS PER WEEK 7 WEEKS PER YEAR 52

13. PROJECTED DATE OF COMPLETION: December 31, 1995

14. THE FOLLOWING PERSON/COMPANY HAS BEEN AUTHORIZED TO SERVE ON OUR BEHALF: ☒ Consultant ☐ Installer

NAME OF PERSON/COMPANY Metcalf & Eddy, Inc.

BUSINESS ADDRESS 450 "B" Street Suite 1900

San Diego, CA 92101 TELEPHONE (619) 233-7855

15. THE AUTHORIZED CONTACT PERSON REGARDING THIS APPLICATION IS:

NAME Scott Zachary TELEPHONE (619) 233-7855

TITLE Project Manager COMPANY Metcalf & Eddy, Inc.

16. I CERTIFY THAT I AM FAMILIAR WITH THE OPERATIONS AND EQUIPMENT REPRESENTED ON THIS APPLICATION AND THE INFORMATION PROVIDED HEREIN IS TRUE AND COMPLETE TO THE BEST OF MY KNOWLEDGE.

DATE _____ SIGNATURE OF OWNER OR OFFICIAL OF BUSINESS _____

TYPE OR PRINT NAME AND TITLE _____

DATE _____ SIGNATURE OF PREPARER IF DIFFERENT FROM ABOVE _____

TYPE OR PRINT NAME, TITLE AND COMPANY _____

17. PLOT PLAN OF SURROUNDING AREA SHOWING STREETS, INTERSECTIONS AND TYPES OF NEIGHBORS IN EACH DIRECTION. PROVIDE DISTANCES TO PROPERTY LINES.

See Figure F3-1, Site Location Map.

N

18. LAYOUT OF INSTALLATION SITE SHOWING EQUIPMENT, CONTROLS, DUCTS, STACKS AND EMISSION POINTS. ALSO SHOW STORAGE AREAS FOR FUELS, RAW MATERIALS, CHEMICALS, FINISHED PRODUCTS, WASTE MATERIALS, ETC. ATTACH ADDITIONAL SHEETS IF NECESSARY.

See Figure F3-2, Site Plan.

SECTION A. FUEL BURNING EQUIPMENT No Fuel Burning Equipment.

LIST EQUIPMENT USED FOR PURPOSES OF HEATING OR HEAT EXCHANGE. SEE INSTRUCTIONS FOR DESCRIPTION OF FUELS AND EXAMPLES OF EQUIPMENT TO INCLUDE. LIST FIRST ALL EQUIPMENT RATED AT 500,000 BTU/HOUR INPUT RATING OR LARGER. THEN LIST ALL SMALLER EQUIPMENT.

FUEL	EQUIPMENT DESCRIPTION	HOW MANY	GROSS BTU/HR INPUT RATING (EACH)	DO NOT WRITE IN THIS SPACE
DO YOU INTEND TO BURN USED OIL, USED OIL FUEL, HAZARDOUS WASTE, OR HAZARDOUS WASTE FUEL?				

SECTION B. INTERNAL COMBUSTION ENGINES & GAS TURBINES No IC Engines or Gas Turbines.

FUEL	EQUIPMENT DESCRIPTION. INCLUDE MAKE & MODEL. DESCRIBE AIR POLLUTION CONTROLS, IF ANY.	HOW MANY	BTU/HOUR, H.P. OR OTHER RATING	NUMBER OF HRS IN OPERATION ANNUALLY

SECTION C. PETROLEUM STORAGE TANKS

1. DESCRIBE TANKS AND PRODUCTS STORED: None.

HOW MANY	CAPACITY	MATERIAL OF CONSTRUCTION	ABOVE OR UNDERGROUND	PRODUCT STORED

2. ESTIMATED TOTAL ANNUAL THROUGHPUT FOR EACH PRODUCT STORED IN THESE TANKS (GALLONS/YEAR):

3. RETAIL OR NONRETAIL: _____

4. EMISSION CONTROLS: VAPOR RECOVERY: ☐ 2-POINT ☐ COAXIAL ☐ Y/WYE ☐ STAGE II ☐ NONE

DESCRIBE: _____

☐ SUBMERGED FILL

☐ OTHER, SPECIFY _____

5. ARE THERE ANY DEVICES OR PROTRUSIONS IN THE PRODUCT FILL PIPE, SUCH AS THEFT OR OVER-FILL PREVENTION DEVICES? DESCRIBE: _____

DOES THIS IMPAIR OR PREVENT MEASURING THE FILL SLEEVE RELATIVE TO THE BOTTOM OF THE TANK? DESCRIBE: _____

SECTION D. WATER & SOIL REMEDIATION

1. TYPE OF CONTAMINANT: ☐ DIESEL ☐ GASOLINE ☒ OTHER, SPECIFY Trichloroethylene (TCE)
DO NOT DIG OUT SOIL CONTAMINATED WITH GASOLINE OR LIGHT VOLATILE ORGANIC COMPOUNDS UNLESS SPECIFIC PRIOR APPROVAL HAS BEEN OBTAINED FROM THIS BUREAU.

2. CONTAMINATED MATERIAL: ☒ SOIL 200,000 CUBIC YARDS ☐ WATER _____ GALLONS

3. CONCENTRATION OF EACH CONTAMINANT: 500 ppm (total)

4. OTHER AGENCIES NOTIFIED: ☐ CITY OF _____ FIRE DEPARTMENT
☐ ARIZONA DEPARTMENT OF ENVIRONMENTAL QUALITY. ATTACH COPY OF REPORT.

5. BRIEFLY DESCRIBE PROCEDURE: TCE will be extracted from soil by vapor extraction system, with ambient air, then passed throught air/water separtor, and through carbon adsorber tanks.

6. ESTIMATE INITIAL TOTAL VOC EMISSION RATES: BEFORE CONTROL DEVICE: 263.74 LB./DAY: 10.989 LB./HR.

IF POLLUTION CONTROL SYSTEM IS USED, AFTER CONTROL DEVICE: 26.38 LB./DAY: 1.099 LB./HR.

7. ESTIMATE LENGTH OF TIME FOR COMPLETION OF THIS PROJECT: 36 MONTHS

8. DESCRIBE TYPE AND EFFICIENCY OF CONTROLS FOR AIR EMISSIONS: Carbon vapor extraction system control efficiency @ 90%

9. ATTACH FULL DETAILS OF SCOPE OF WORK, SPECIFICATIONS, TEST RESULTS, PLAN FOR CLOSURE.

SECTION Y. OTHER SOURCES

1. NARRATIVE DESCRIPTION: No Other Sources.

2. EQUIPMENT LIST:

DESCRIBE EACH PIECE OF EQUIPMENT INCLUDE MAKE AND MODEL	HOW MANY	HP, KVA, GALLONS OR OTHER RATING (EACH)	EXHAUSTED NO	EXHAUSTED TO AIR	EXHAUSTED TO CONTROL

3. MATERIALS LIST:

	ANNUAL USAGE OR THROUGHPUT	VOC CONTENT % BY WT.	VOC CONTENT LB./GAL.

4. MATERIALS RECLAIMED OR SHIPPED AS WASTE:

SECTION Z. AIR POLLUTANT EMISSIONS

PROVIDE A SUMMARY OF THE ACTUAL AIR EMISSIONS ON AN ANNUAL BASIS FOR THE FOLLOWING THREE COLUMNS:

(i) ONLY THE EQUIPMENT AND PROCESSES DESCRIBED ON THIS PERMIT APPLICATION.

(ii) THE ENTIRE SITE PRIOR TO THE INSTALLATION OF THE EQUIPMENT AND PROCESSES DESCRIBED IN (i) ABOVE. IF THIS IS YOUR INITIAL PERMIT APPLICATION FOR THE ENTIRE SITE, NORMALLY EACH FIGURE IN THIS COLUMN WILL BE ZERO.

(iii) THE ENTIRE SITE INCLUDING THE EMISSIONS IDENTIFIED IN (i) ABOVE. NORMALLY, THIS COLUMN WILL BE THE SUM OF COLUMNS (i) AND (ii).

	ACTUAL EMISSIONS IN POUNDS PER YEAR		
	COLUMN (i)	COLUMN (ii)	COLUMN (iii)
CARBON MONOXIDE (CO)			
OXIDES OF NITROGEN (NO_x)			
OXIDES OF SULFUR (SO_x)			
PARTICULATES OF 10 MICRONS OR SMALLER (PM_{10})			
TOTAL SUSPENDED PARTICULATES (TSP), INCLUDING PM_{10}			
TOTAL VOLATILE ORGANIC COMPOUNDS (VOC) EXCLUDING NON-PRECURSOR ORGANIC COMPOUNDS	4,809.2		4,809.2
NON-PRECURSOR ORGANIC COMPOUNDS			
LEAD			
OTHER AIR POLLUTANTS (LIST EACH ONE SEPARATELY):			

REFER TO RULE 330, SECTION 202, FOR THE DEFINITION OF NON-PRECURSOR ORGANIC COMPOUND. ATTACH DETAILED CALCULATIONS TO SUPPORT THE FIGURES IN THE ABOVE SUMMARY TABLE. DO NOT INCLUDE THE EMISSIONS FROM MOTOR VEHICLES. DO INCLUDE THE EMISSIONS FROM STATIONARY SOURCES, PORTABLE SOURCES, TEST AREAS, EXPERIMENTAL FACILITIES, EVAPORATIVE LOSSES, STORAGE AND HANDLING LOSSES, FUEL LOADING AND UNLOADING LOSSES, ETC. SPECIFICALLY IDENTIFY THE FOLLOWING:

EMISSIONS FROM EACH POINT SOURCE AND EACH STACK
FUGITIVE EMISSIONS
CAPTURE EFFICIENCIES
CONTROL EFFICIENCIES
OVERALL EFFICIENCIES

FOR PARTICULATE EMISSIONS, DESCRIBE THE TYPES OF PARTICULATES BEING EMITTED AND THE QUANTITIES OF EMISSIONS FOR EACH TYPE. IDENTIFY AND QUANTIFY EACH AND EVERY TYPE OF VOC, PRECURSOR AS WELL AS NON-PRECURSOR, THAT IS INCLUDED IN THE ABOVE SUMMARY TABLE. "OTHER AIR POLLUTANTS" INCLUDE, BUT ARE NOT LIMITED TO: CHLORINE, BROMINE, IODINE, AMMONIA, HYDROGEN SULFIDE, ARSINE, PHOSPHINE, DIBORANE, SILANE, ACID FUMES, ALKALINE FUMES, METAL FUMES, ETC. WHEREVER A MATERIAL IS IDENTIFIED BY A TRADE NAME, ALSO PROVIDE ITS GENERIC NAME AND ITS CHEMICAL ABSTRACT SERVICE (CAS) NUMBER.

MCBAPC OFFICE USE ONLY

SECTION TWO
FACILITY BACKGROUND

Goodyear is required to initiate site remediation as ordered by the 1990 Consent Decree between the U.S. Environmental Protection Agency (EPA) and the Goodyear Tire and Rubber Company. Section VII of the Consent Decree, (Subsection 6, p. 19), required Goodyear to prepare a Design Memorandum to address the implementation of Soil Vapor Extraction (SVE) as the operable unit remedy for remediation of contaminated soils on the site. The site is contaminated by volatile organic compounds (VOC), specifically trichloroethylene (TCE), in the vadose zone. Remediation is to proceed where VOC residues pose a threat to groundwater quality in Subunit A, as provided in the Record of Decision (ROD), subparagraph C.6 and C.7 (1989).

A Remedial Investigation/Feasibility Study (RI/FS) was conducted at the Phoenix-Goodyear Airport in 1986/1987. The RI/FS divided the site into regions 1 through 4. Regions 1, 2, and 4 are considered to be uncontaminated with TCE. Region 3 contains the majority of the contamination. It was divided further into sub-areas, called polygons, for finer delineation.

A Design Memorandum was prepared by Metcalf and Eddy (March, 1992) under the provisions of the Comprehensive Environmental Response Compensation, and Liability Act (CERCLA) of 1980, as amended by the Superfund Amendment and Reauthorization Act (SARA) of 1986.
The Design Memorandum established five major objectives:

1) Evaluate the existing vadose zone and groundwater contamination database with respect to the SVE remedy.

2) Determine polygons within the site that require SVE remediation, using preliminary screening methods, and prioritize the polygons for further investigation and possible SVE remedy.

3) Design a field program to collect data required for the polygon screening and prioritization, and for the final design of SVE operable unit remedy at the Phoenix-Goodyear Airport site for polygons requiring SVE remedy.

4) Establish parameters, data base, and design criteria for the 90% Complete Conceptual Design of the SVE operable unit remedy for polygons requiring SVE remedy.

5) Establish a schedule for conducting the Design Memorandum tasks.

An initial Target Area 2/Region 3 Polygon Screening procedure was conducted to determine the areas at the airport that require further investigation or SVE remedy.

Of the original 143 polygons, 27 were found to potentially contribute to groundwater contamination above 5 μg/L, eight of which were considered marginal (ranging from 5.0 - 6.5 μg/L). The concentration of 5 μg/L is the site-specific clean-up level for TCE. Polygons were screened for potential groundwater impact using the VLEACH computer model. This model predicts the transport and equilibrium conditions of contaminants in the vadose zone and predicts the total impact to ground water over time. As a result of VLEACH polygon screening from data collected in May of 1992, two polygons require SVE remedy. These polygons include 79 and 92.

The SVE operable unit remedy for those polygons requiring remediation was designed in accordance with the U.S. EPA RI/FS (1989), the ROD (1989), and the Consent Decree (1991). As SVE remedy operational data becomes available, the information will be incorporated into the remedy design process.

The SVE design was conducted under the jurisdiction of several oversight parties: United States Environmental Protection Agency; the Federal Aviation Administration; State of Arizona Health Agencies; County Health and Building Departments; and local health, building, and fire departments, and property owners.

The initial stage of the SVE operable unit remedy is to install soil vapor extraction wells within a contaminated polygon. These wells will consist of a 12-inch diameter borehole advanced to a depth of about 50-60 feet below land surface, with a 3-4 inch I.D. Schedule 40 PVC casing installed with an end cap, a 20-30 foot slotted interval with factory-installed slots, and 30 feet of blank casing. The boreholes will be backfilled with silica sand and prehydrated bentonite pellets. The wells will be sealed with bentonite and grout, and completed with a locking cap and traffic boxes to prevent damage and vandalism. Each well will be tied to the vacuum extraction unit by a manifold system which is largely underground due to the traffic around well locations. The manifold will be connected to the suction end of a centrifugal blower. A pumping rate of approximately 150-200 scfm at each well will provide adequate vapor extraction pressures and flow rates at the site.

The SVE operable unit will be a skid-mounted extraction unit equipped with emission controls to remove VOC from the air stream. The extracted air will be treated by an activated carbon adsorption recovery system for a 90% recovery. The carbon will be monitored for breakthrough of TCE, and spent media will be taken to a RCRA-approved hazardous waste treatment, disposal, and storage facility or a licensed regeneration facility.

Experience at other sites where SVE has been applied for removal of VOC from contaminated soils has shown that a phased or staged approach is effective. An extraction and treatment system is installed in the area considered to be the most heavily contaminated, and the elements of the system are expanded as required to achieve the desired level of cleanup.

Goodyear will install extraction wells for sub-area treatment and will be spaced within a polygon to effectively treat the vadose zone within the polygon, based on extraction well operational data.

Goodyear will proceed as indicated in the Design Memorandum Schedule with the 90% Complete Conceptual Design of the SVE operable unit remedy for the first polygon requiring SVE remedy (Polygon 79).

A detailed description of the vapor extraction system follows in Section Four.

SECTION THREE
SYSTEM INFORMATION

3.1 GENERAL INFORMATION

a) The maximum TCE in parts per million by volume, (ppmv), in the gas stream, before control is 500 ppm, based on test data (included in Attachment B)

b) The average flow rate of the contaminated stream in standard cubic feet per minute is 500 scfm, based on manufacturer's specifications.

c) A plot plan showing the location and neighborhood of the proposed project is included as Figure F3-1, Site Location Map and as Drawing P-1, Appendix K.

d) Drawings showing the location of the blower and how the contaminated gas will be delivered from the contaminated soil to the emission control device, is included as Figure F3-2, Site Plan and as Drawing C-1, Appendix K.

e) Process and instrumentation diagrams showing the types and locations of the components is included in Figure F3-3 and Figure F3-4, Piping and Instrumentation Diagram. Also see Drawings E-2 and E-3, Appendix K.

f) The treatment system will receive air flow from existing dry wells at a flowrate of 500 scfm. The treatment system will be skid mounted and will consist of the following components:

1. Extraction well header piping with manual shutoff valve, check valve and dilution air

2. Air/water separator

3. Prefilter for the carbon

4. Vapor phase carbon adsorbers, 2 in service and each with vacuum relief valve

5. Prefilter for the blower

6. Positive displacement blower

7. Stack to atmosphere

8. Controls and instrumentation

Refer to Attachment A, Manufacturer's Specification.

g) The inlet temperature of the gas stream is nominally 70°F

h) The outlet temperature of the gas stream is nominally 200°F

i) Emission calculations are in Attachment B.

3.2 VAPOR EXTRACTION SYSTEM

a) The air/water separator will remove entrained water in the influent air stream, for discharge into a 250-gallon tank. It is constructed of coated carbon steel. The connections are 6" 150 lb. ANSI flanges. The drain is 1½" FNPT.

b) The in-line prefilter for the carbon will remove particulate matter from entering the carbon beds and interfering with the adsorption process. Differential pressure gauges across the filters measure filter loading.

c) Vapor phase carbon adsorbers, two (2), each consisting of 2000 pounds of carbon, at a density of 29 lb/cf, contained in carbon steel, vacuum rating 16" Hg.

d) Vacuum relief valve, set at 15" Hg for each carbon vessel

e) Inline pre-filter for the blower will remove carbon and dust from the air stream to prevent damage to the blower.

f) The blower will be a 30 horsepower positive displacement type blower run by electricity, 480 volt, 3 phase, 60 AMP TEFC.

g) A 25' stack will have a sump and drain, muffler and flapper valve on the discharge, to discharge effluent air to the atmosphere.

h) Controls and instrumentation will allow for the system to operate as independently as possible. Included are a starter, disconnect, interlocks, and telemetry package for system shutdown. Monitoring of TCE breakthrough will be provided.

i) The control efficiency of the carbon based treatment system will equal or exceed 90%, based on manufacturer's specifications.

3.3 SVE LOCATIONS AND SUB-AREA OPERATION

In accordance with the Consent Decree, Goodyear will conduct SVE remedy design, installation and operation on a phased sub-area by sub-area and polygon by polygon basis, beginning with Polygon 79.

The mobile skid-mounted vapor extraction system will be moved from polygon to polygon if required. The location of the system will be determined once all oversight agencies and airport staff have been consulted. At a minimum the system will be located outside the direct pathways of pedestrian and vehicular traffic.

The vapor extraction wells will be connected to the treatment system via a network of PVC headers and laterals. Depending upon the location of the wells and treatment system, the headers and laterals will be placed on the ground surface and anchored or buried a minimum of 24 inches below grade. All oversight parties will be consulted as to the location and anchoring of well connection piping.

Placement and operation of the soil vapor extraction wells will be dictated by two primary factors: 1) the location of the highest TCE concentrations in the vadose zone; and (2) the ability to install wells within areas that contain buildings and structures.

The total area of Polygon 79 is about 85,000 ft^2 (U.S. EPA RI/FS, Appendix S, 1989). Goodyear will install four (4) extraction wells in and around the highest concentration areas. Final placement of the wells will be contingent upon the results of the Phase II investigation.

Well operation will be in accordance with Appendix B of the 1990 Consent Decree and will follow these steps:

1) Operate wells in the most highly contaminated sub-area, and establish vadose zone pressure differentials and flow nets.

2) Monitor pressure differentials through use of the depth-specific vadose zone monitoring wells.

3) Monitor vadose zone soil gas concentrations in the depth-specific vadose monitoring wells.

4) When soil gas concentrations reach a concentration that translates to a total soil concentration which is less than the allowable residual mass (ARM) for the sub-area, the extraction wells are turned off and monitored for soil gas concentration rebound.

5) If a sub-area soil gas concentration rebounds higher than the ARM, the first sub-area extraction well will be placed back into service with other operational extraction wells.

6) Monitor soil vapor concentrations in both sub-areas. If the soil gas concentrations are greater than their respective ARM's, operation will continue. If the soil gas concentrations in either of the sub-areas are less than the ARM, well operation will cease and soil gas will be monitored for rebound. The extraction well will remain out of operation unless the soil gas concentrations exceed the ARM concentrations.

The ARM for a polygon will be determined through the use of VLEACH once the Phase II investigation data has been collected for that polygon. The ARM is defined as that amount of total VOCs as TCE that can exist in the vadose zone and not result in Subunit A groundwater TCE concentrations in excess of 5 μg/L as determined by refined VLEACH and Mixing Cell screening.

The well operation and monitoring will continue within the sub-areas of a polygon until soil gas concentrations remain below the ARM for the polygon. At this time, the SVE operable unit will be moved to the next prioritized polygon if required.

FIGURE F3-1

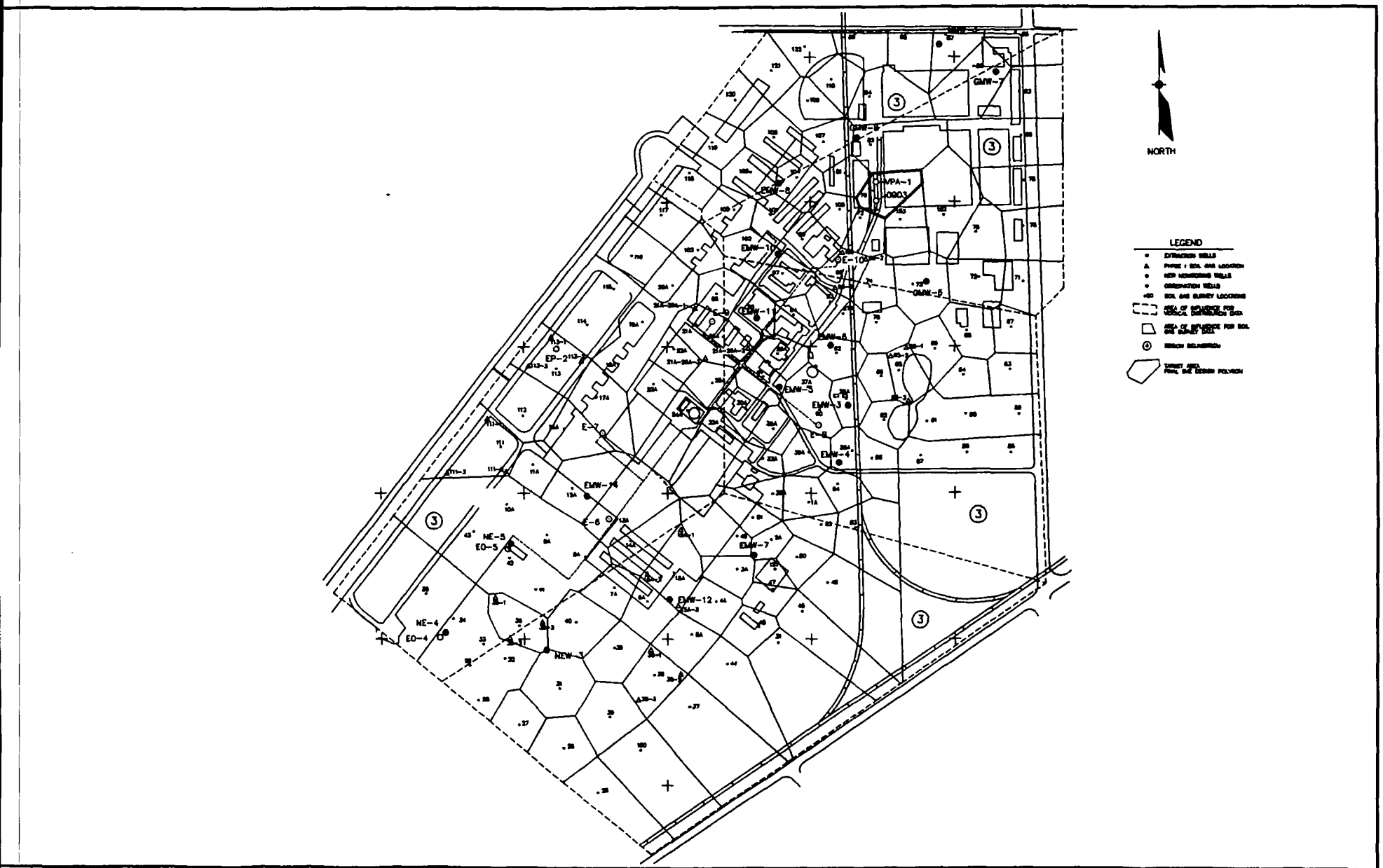

M&E METCALF & EDDY	SCALED 1"=600' GRID=2000'	PGA – Goodyear	SOIL VAPOR EXTRACTION SYSTEM FINAL DESIGN – POLYGON 70 FINAL SVE DESIGN	DRAWING NO. P-1 SHEET 2

FIGURE F3-2

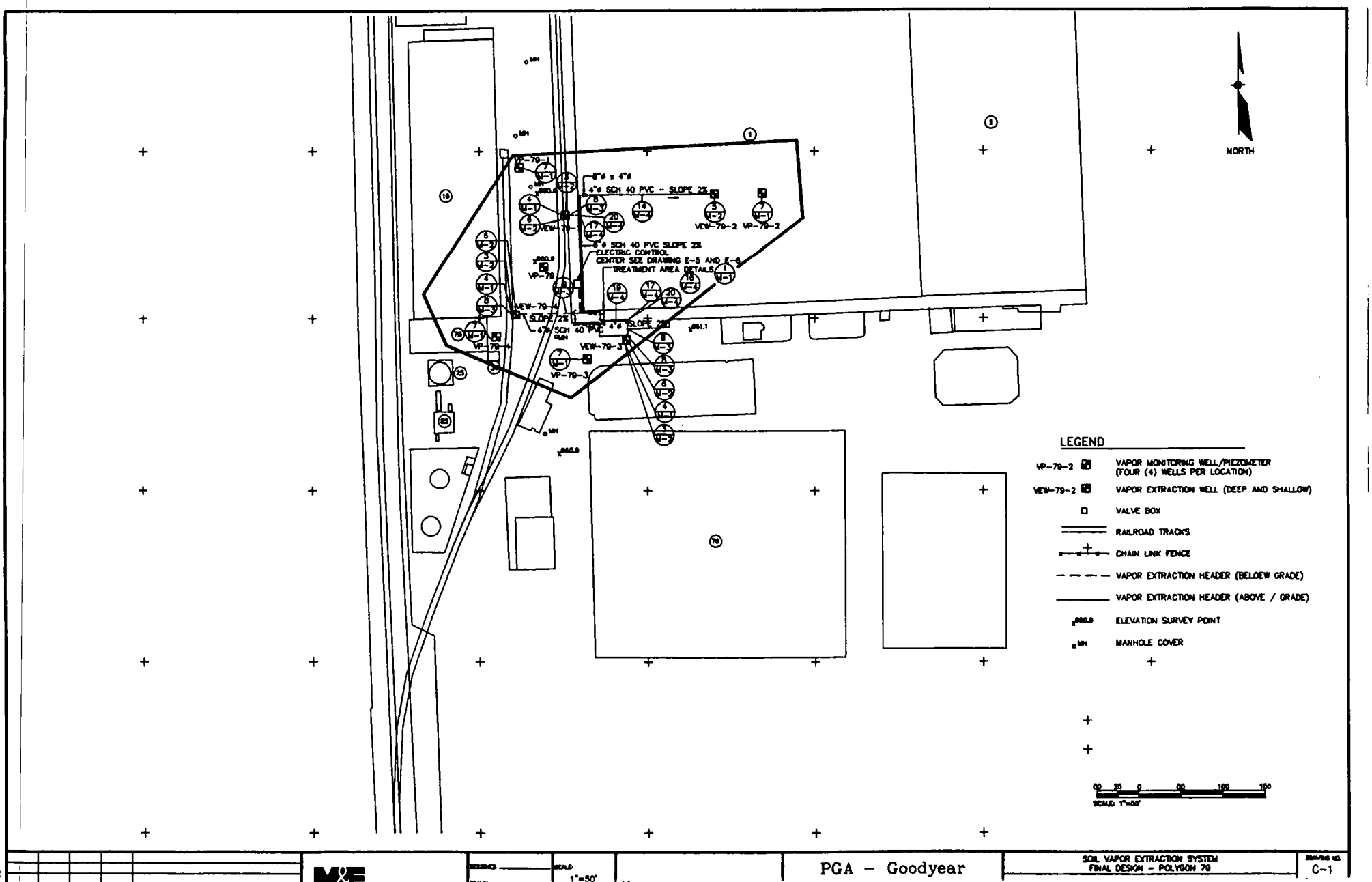
NORTH
LEGEND
VP-79-2 VAPOR MONITORING WELL/PIEZOMETER (FOUR (4) WELLS PER LOCATION)
VEW-79-2 VAPOR EXTRACTION WELL (DEEP AND SHALLOW)
VALVE BOX
RAILROAD TRACKS
CHAIN LINK FENCE
VAPOR EXTRACTION HEADER (BELOEW GRADE)
VAPOR EXTRACTION HEADER (ABOVE / GRADE)
ELEVATION SURVEY POINT
MANHOLE COVER
6"ø x 4"ø
4"ø SCH 40 PVC - SLOPE 2%
6"ø SCH 40 PVC SLOPE 2%
ELECTRIC CONTROL CENTER SEE DRAWING E-5 AND E-6
TREATMENT AREA DETAILS
VEW-79-1
VEW-79-2
VEW-79-3
VEW-79-4
VP-79-1
VP-79-2
VP-79-3
VP-79-4
VP-79
SLOPE 2%
4"ø SCH 40 PVC
SCALE: 1"=50'
PGA - Goodyear
SOIL VAPOR EXTRACTION SYSTEM
FINAL DESIGN - POLYGON 79
C-1

FIGURE F3-3

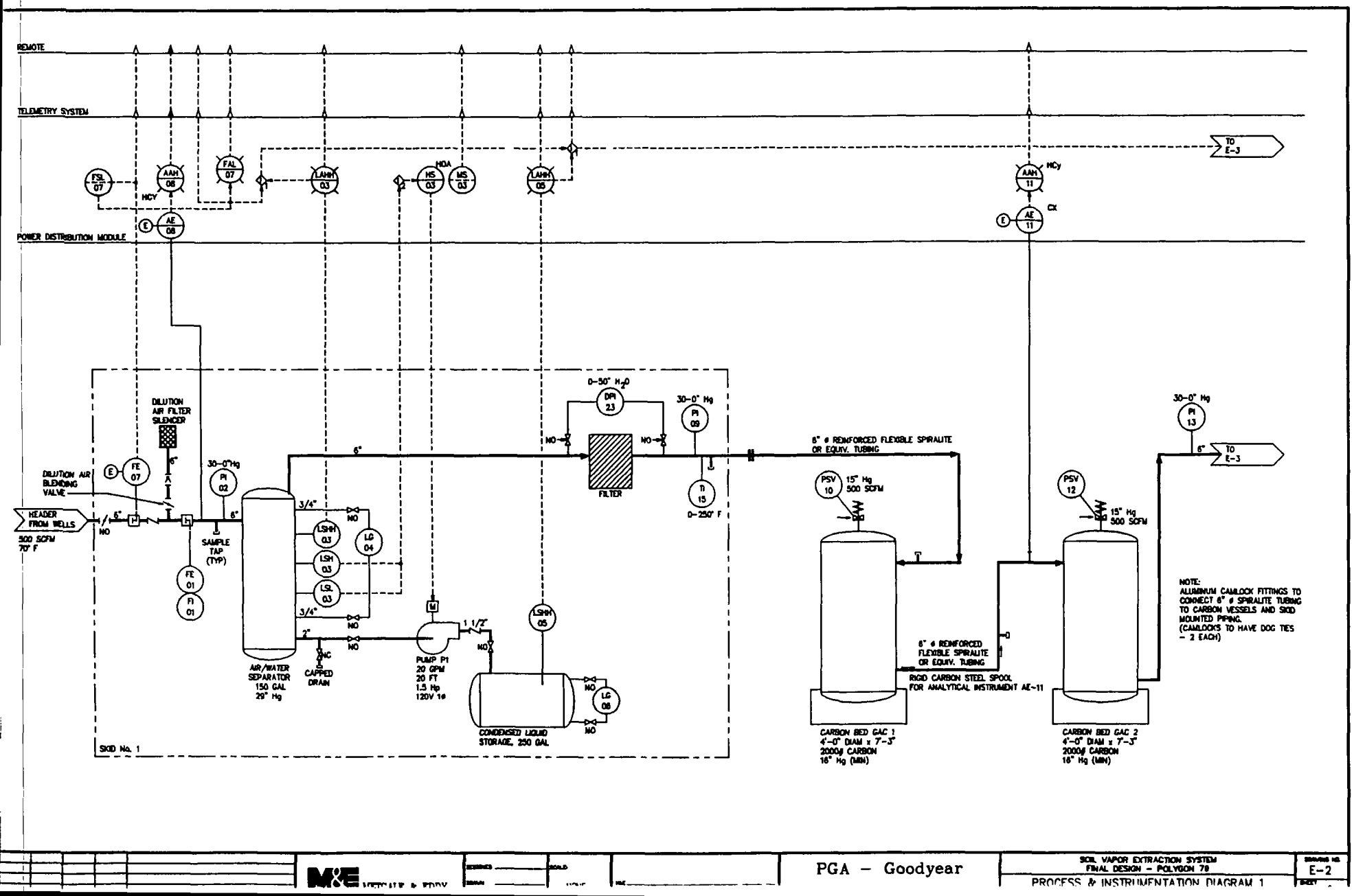
REMOTE
TELEMETRY SYSTEM
POWER DISTRIBUTION MODULE
TO E-3
FSL 07
AAH 08
FAL 07
LAHH 03
HS 03
MS 03
LAHH 05
AAH 11
AE 08
AE 11
HCY
HOA
CX
DILUTION AIR FILTER SILENCER
DILUTION AIR BLENDING VALVE
HEADER FROM WELLS
500 SCFM 70° F
FE 07
FE 01
FI 01
30-0" Hg
PI 02
SAMPLE TAP (TYP)
AIR/WATER SEPARATOR 150 GAL 29" Hg
LSHH 03
LSH 03
LSL 03
LG 04
CAPPED DRAIN
PUMP P1 20 GPM 20 FT 1.5 Hp 120V 1φ
1 1/2"
LSHH 05
LG 06
CONDENSED LIQUID STORAGE, 250 GAL
0-50" H2O
DPI 23
FILTER
30-0" Hg
PI 09
TI 15
0-250° F
6" φ REINFORCED FLEXIBLE SPIRALITE OR EQUIV. TUBING
PSV 10
15" Hg 500 SCFM
PSV 12
15" Hg 500 SCFM
30-0" Hg
PI 13
TO E-3
6" φ REINFORCED FLEXIBLE SPIRALITE OR EQUIV. TUBING
RIGID CARBON STEEL SPOOL FOR ANALYTICAL INSTRUMENT AE-11
CARBON BED GAC 1 4'-0" DIAM x 7'-3" 2000# CARBON 16" Hg (MIN)
CARBON BED GAC 2 4'-0" DIAM x 7'-3" 2000# CARBON 16" Hg (MIN)
NOTE: ALUMINUM CAMLOCK FITTINGS TO CONNECT 6" φ SPIRALITE TUBING TO CARBON VESSELS AND SKID MOUNTED PIPING. (CAMLOCKS TO HAVE DOG TIES - 2 EACH)
SKID No. 1
M&E MERCALE & EDDY
PGA - Goodyear
SOIL VAPOR EXTRACTION SYSTEM FINAL DESIGN - POLYGON 79
PROCESS & INSTRUMENTATION DIAGRAM 1
E-2

FIGURE F3-4

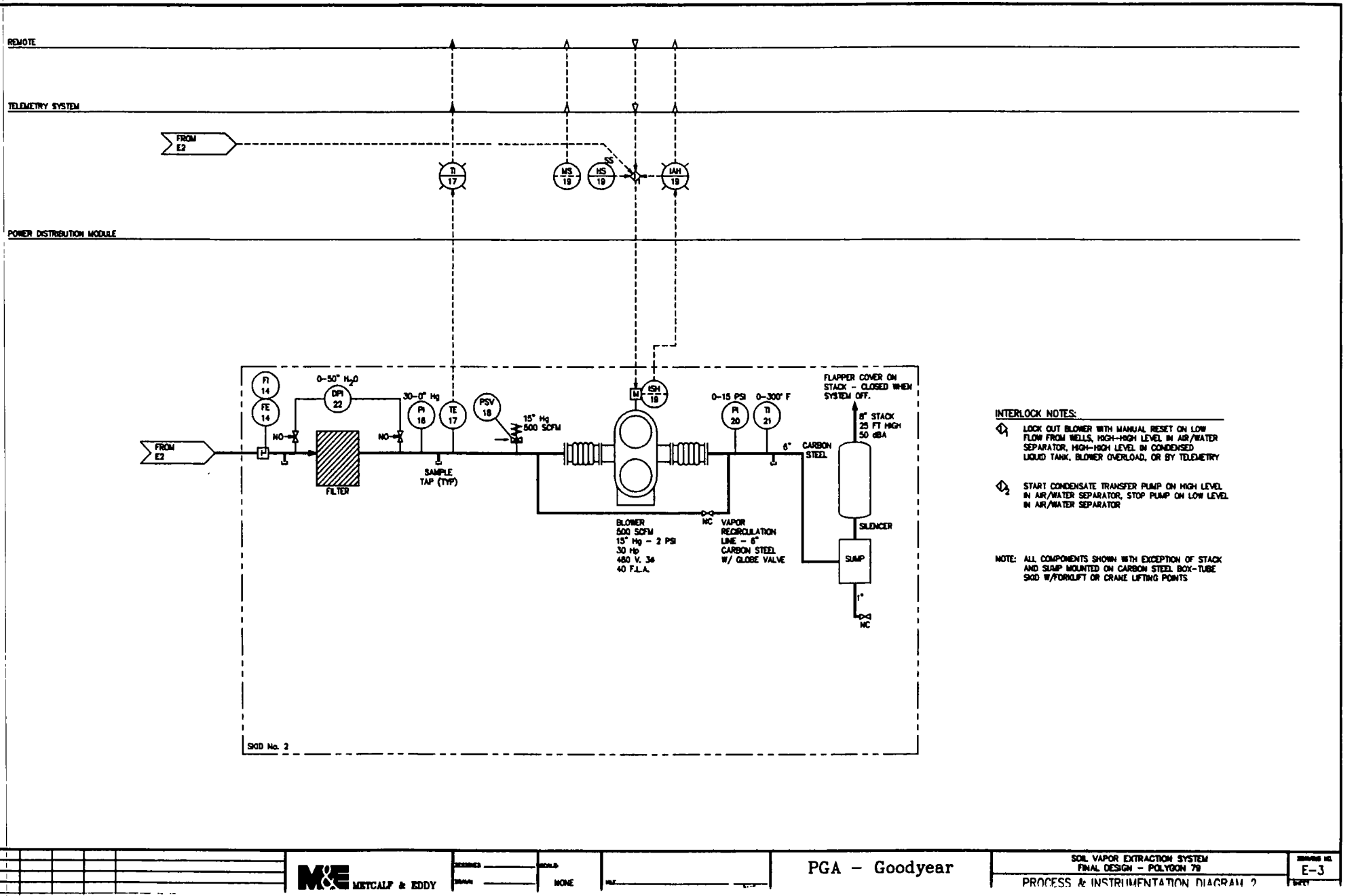

INTERLOCK NOTES:

1. LOCK OUT BLOWER WITH MANUAL RESET ON LOW FLOW FROM WELLS, HIGH-HIGH LEVEL IN AIR/WATER SEPARATOR, HIGH-HIGH LEVEL IN CONDENSED LIQUID TANK, BLOWER OVERLOAD, OR BY TELEMETRY

2. START CONDENSATE TRANSFER PUMP ON HIGH LEVEL IN AIR/WATER SEPARATOR, STOP PUMP ON LOW LEVEL IN AIR/WATER SEPARATOR

NOTE: ALL COMPONENTS SHOWN WITH EXCEPTION OF STACK AND SUMP MOUNTED ON CARBON STEEL BOX-TUBE SKID W/FORKLIFT OR CRANE LIFTING POINTS

M&E METCALF & EDDY	DESIGNED / DRAWN	SCALE: NONE	PGA - Goodyear	SOIL VAPOR EXTRACTION SYSTEM FINAL DESIGN - POLYGON 79
				PROCESS & INSTRUMENTATION DIAGRAM 2
				DRAWING NO. E-3

SECTION FOUR
INSTRUMENTATION

4.1 MONITORING INSTRUMENTATION FOR PROCESS PARAMETERS

Figures F3-3 and F3-4 identify the monitoring instrumentation.

a) Temperature will be measured by thermocouples for the inlet and exhaust air stream

b) Inlet flow to the control device is determined by an inline flow meter. Flow rate is measured by pitot tube and differential pressure gauge.

c) Inlet pressure to the control device is measured by a standard pressure gauge

d) A check valve closes upon system shutdown

e) Carbon breakthrough indicator will be used to monitor breakthrough

f) Blower will shutoff if operating conditions occur which might damage equipment or result in emissions to the atmosphere.

g) Vacuum relief is provided for each carbon vessel

SECTION FIVE
REFERENCES

Consent Decree, 1991, U.S. EPA, Phoenix-Goodyear Airport Superfund Site.

Record of Decision, Phoenix-Goodyear Airport Superfund Site, Sept. 1989, U.S. EPA 30-9L19.O/RDD63605.RA

Remedial Investigation/Feasibility Study, Phoenix-Goodyear Airport. RI/FS 1989, U.S. EPA 30-9L19.0/W63600.FG.

RI/FS Phoenix-Goodyear Airport, June 7, 1989, Vol. 6, Appendix S and T.

ATTACHMENT A

MANUFACTURER'S SPECIFICATIONS

The manufacturer's specifications will be included in the air permit once the treatment system components are selected and fabricated.

ATTACHMENT B

EMISSION CALCULATIONS

Phoenix-Goodyear Airport
Emission Calculation
August 12, 1992

Computed by: K. Hann
Checked by: L. Reider

Emission Estimate

Assumptions: Flow rate, Q = 500 standard cubic feet/minute (scfm).
Contaminant concentration, C = 500 ppm as TCE.
Control Efficiency, Eff = 90 percent.
359 scf = 1.0 lb-mole
Mole weight, MW, of TCE = 131.5

Emission Rate, E(lb/hr) = [Q(scfm)*60(min/hr)*C(ppm)*MW]/[1,000,000(ppm)*359(lb-mole/cf)]

E(lb/hr) = [500*60*500*131.5]/[359*1,000,000]

E(lb/hr) = 5.49 uncontrolled; 0.549 (lb/hr) controlled

E(lb/day) = 131.8 uncontrolled; 13.18 (lb/day) controlled

E(lb/yr) = 48,092.4 uncontrolled; 4809.2 (lb/hr) controlled

Phoenix-Goodyear Airport
Emission Calculation
August 12, 1992

Computed by: K. Hann
Checked by: L. Reider

Exhaust Velocity Estimate

Assumptions: Flow rate, Q = 500 standard cubic feet/minute (scfm).
Stack Exit Diameter, D = 0.5 feet
Exhaust Temperature, T = 250 F = 710 R
Standard Temp, T_o =32 F = 492 R

Exhaust velocity, $V(ft/min) = [Q(scfm)*\{T(R)/T_o(R)\}]/[3.14*\{D(ft)/2\}^2]$

$V(ft/min) = [500*(710/492)]/[3.14*(0.5/2)^2]$

$V(ft/min) = 3676.66$

$V(ft/sec) = 61.28$

$V(m/sec) = 18.67$

B) CITY OF GOODYEAR BUILDING PERMIT APPLICATION

SVE - PHOENIX - GOODYEAR AIRPORT

LAND OWNER CONTACTS AND SITE WORK REQUIREMENTS
SEPTEMBER 2, 1992, BY: RICHARD F. BARTHOLOMEW, P.E.

PARTIES CONTACTED	ADDRESS AND TELEPHONE	SUMMARY OF CONTACT DISCUSSION	CONSTRUCTION REQUIREMENTS
City of Phoenix Charles Boyer - Airport Mgr. Cynthia Parker -Aviation Env. Eng. Don Stoltzfus- Aviation Env. Geologist	Boyer, Admin. Bldg Phoenix-Litchfield Municipal Airport 1658 S. Litchfield Rd Goodyear AZ 85338 Boyer (602) 932-1200 Parker City of Phoenix Aviation Dept. 3400 Sky Harbor Blvd. Phoenix AZ 85034-4921 (602) 273-2730 Stoltzfus City of Phoenix Office of Environmental Programs 251 W. Washington St. Phoenix AZ 85003 (620) 256-5669	Discussed location of SVE wells and Pipe collection systems	1. Plans for work must be approved before work starts. 2. Street surfaces, runway areas and other work areas must be restored to original conditions. 3. No major runways or taxiways can be open cut. 4. FAA must be notified of any work within flight area. 5. Permanent easements for constructed items must be secured. 6. Must follow all City of Phoenix construction standards for street and related repairs.
Loral Defense Systems Tom Helm - Dir. of Fac. Engineering Randy Clark - Environmental Engineer	Loral Corporation 1300 S. Litchfield Road Goodyear AZ 85338 mail: P.O. Box 805 Litchfield Park AZ 85340 Heim (602) 925-7102 Clark (602) 925-7274	Discussed SVE Plant locations, Pipeline Collection System	1. Plans for work must be approved before work starts. 2. Surface areas in work ares must be restored to original condition. 3. Permanent easements for constructed items must be secured plus access agreement.
Southern Pacific Railroad John Ivanusich - Mgr. of Contract Dept	Southern Pacific Railroad 1200 Corporate Center Monterey Park CA 91754 (213) 780-6957	Discussed RR easement requirements	1. Overhead crossing must have 23' clearance above railroad track. 2. Side structures must be at least 10' away from edge of tracks. 3. Plans for crossing must be approved prior to work start. 4. Easements for crossing must be obtained before work starts.
Lufthansa Airlines Training Ctr. Irmgard Bueschegen -Head of Admin. *Note: Lufthansa leases property from City of Phoenix	Lufthansa Airline Training Ctr 1858 S. Litchfield Rd Goodyear AZ 85338 (602) 932-1600	Discussed SVE wells (Polygon 92) and collection pipe system	1. Plans must be approved prior to work starting. 2. All work surface areas must be restored to original conditions. 3. Contractor to notify Lufthansa, 48 hours before working in parking or traffic area requiring any barricades or traffic detours.

sve.tab

ORDINANCE 92-462

AN ORDINANCE OF THE MAYOR AND COUNCIL OF THE CITY OF GOODYEAR, MARICOPA COUNTY, ARIZONA, AMENDING ARTICLES 9-1 THROUGH 9-5 OF CHAPTER 9 OF THE GOODYEAR CITY CODE, PROVIDING FOR BUILDINGS AND BUILDING REGULATIONS, TECHNICAL CODES, AND ADOPTING AMENDMENTS TO: 1991 UNIFORM ADMINISTRATIVE CODE, 1991 UNIFORM BUILDING CODE, 1982 ADOBE CODE, 1991 DANGEROUS BUILDING CODE, 1991 UNIFORM MECHANICAL CODE, 1991 UNIFORM PLUMBING CODE, AND 1990 NATIONAL ELECTRICAL CODE; PROVIDING FOR SEPARABILITY AND DECLARING AN EMERGENCY.

WHEREAS, the Uniform Administrative Code, the Uniform Building Code (UBC), the Adobe Amendment to the Uniform Building Code (UBC), the Uniform Code for the Abatement of Dangerous Buildings, the Uniform Plumbing Code, Uniform Mechanical Code, and the National Electrical Code and related Maricopa Association of Governments (MAG) amendments to same, are updated every three years; and

WHEREAS, said updates and amendments reflect currently accepted construction criteria; and

WHEREAS, the City conforms to said Codes and amendments.

NOW, THEREFORE, BE IT ORDAINED BY THE MAYOR AND CITY COUNCIL OF THE CITY OF GOODYEAR, ARIZONA as follows:

SECTION I: AMENDMENT OF ARTICLES 9-1 THROUGH 9-5 OF CHAPTER 9 OF THE GOODYEAR CITY CODE. Articles 9-1 through 9-5 are hereby amended to provide as follows:

Article 9-1 TECHNICAL CODES

9-1-1 Adoption by Reference
9-1-2 Conformance to Zoning Ordinance
9-1-3 Permit Flat Fee Schedule

Section 9-1-1 Adopted by Reference

A. The following listed publications, three (3) copies of which are on file in the office of the City Clerk, are hereby adopted by reference as if set out at length in this code:

1. The Uniform Administrative Code, 1991 Edition;

2. The Uniform Building Code, 1991 Edition, including Appendix Chapters 1, 7, 10, 11, 29, 32, 35, 38, 55, 57 and 70;

3. The Adobe Amendment to the Uniform Building Code, 1982 Edition, (Revised July, 1984) sponsored by the Maricopa Association of Governments (M.A.G.);

4. The Uniform Code for the Abatement of Dangerous Buildings, 1991 Edition;

5. The Uniform Plumbing Code, 1991 Edition; including Appendices A, B, C, D, E, H, and I;

6. The Uniform Mechanical Code, 1991 Edition; including Appendices A, B, C and D;

7. The National Electrical Code, 1990 Edition;

8. Amendments to the National Electrical Code, 1990 Edition, sponsored and adopted by the Maricopa Association of Governments (M.A.G.) as amended;

9. Amendments to the Uniform Plumbing Code, 1991 Edition sponsored and adopted by the Maricopa Association of Governments as amended.

Section 9-1-2 Conformance to Zoning Ordinance

Whenever a building permit is issued and a building inspection performed, such building must conform to the provisions of the Zoning Ordinance of the City of Goodyear in addition to the provisions of this chapter.

Section 9-1-3. Permit Flat Fee Schedule

Swimming Pools:	
Above Ground	30.00
In-ground	70.00
Spas/Hot Tubs:	30.00
Re-Roof:	
Shingles-Overlay	20.00
Shingles and Sheathing	40.00
Tile and Sheathing	50.00
Vacuum Breaker:	
1 thru 5 units	10.00
over 5, each	1.50
Water Heater:	
and/or vent	22.50
Water Treating Equipment	
and/or repair of water piping	18.00

Gas Piping System (Natural and Propane)	
1 thru 4 outlets	18.00
over 4. - each	.75
Forced air or gravity furnace	
up to 100,000 BTU/H	24.00
over 100,000 BTU/H	6.50
Heat Pump, Refrigeration, Evaporative - cooler	24.00
over 1, each	6.50
Electric Services: Up to 200 amperes, each	33.50
Over 200 amperes, less than 1,000 amperes, each	52.50
Over 1,000 amperes, each	90.00
Temporary Power Pole and Service	30.00
Inspection Outside of Normal Business Hours with 48 hour notification. (Minimum Charge - two hours) -- Per Hour	30.00
Over the Counter Plan Review; accessory buildings, carports, patio covers, gazebos, etc.	20.00

THE ABOVE PERMITS AND FEES CAN BE REVIEWED AND AMENDED BY CITY COUNCIL ACTION WITHOUT THE NEED OF ADOPTING AN ORDINANCE, INCLUDING ADDITIONS OR DELETIONS.

OTHER PERMIT FEES AND PLAN REVIEW FEES WILL BE BASED ON TABLE 3A OF THE THEN CURRENT UNIFORM BUILDING CODE WITH A CURRENT MODIFIER LISTED IN THE BUILDING STANDARD REPORT.

Article 9-2 AMENDMENTS TO UNIFORM BUILDING CODE

The Uniform Building Code, 1991 Edition, is hereby amended as follows:

A. Chapter 1. Title, Scope and General is hereby amended by the deletion of Section 104 through 107.

Chapter 2. Organization and Enforcement is deleted.

Chapter 3. Permits and inspections is deleted.

For the administration of this Code, see the Uniform Administrative Code, 1991 Edition.

B. Section 307 is amended by adding thereto new subparagraph (g) as follows:

"(g) The city shall not grant a certificate of occupancy for any building or structure until all requisite off-site improvements have been constructed, or a cash deposit equal to twice the current estimated cost of construction is posted to guarantee completion of said improvements to

equal to twice the current estimated cost of construction is posted to guarantee completion of said improvements to the satisfaction of, and approval by, the city engineer. The city shall provide for inspection of off-site improvements during construction to insure satisfactory completion in accordance with the city's construction standards and specifications."

C. Section 504(a), second paragraph, is hereby amended to read as follows:

"For the purpose of this section, the centerline of an adjoining street, alley or designated common area shall be considered an adjacent property line."

D. Section 505(f) is hereby amended by adding a new paragraph to read.

"In Group R, Division 1 Occupancies, the area separation walls shall be of masonry construction."

E. Section 505(f) 3. is hereby amended by adding the following sentence to the second paragraph of the exceptions:

"The area separation wall in the concealed space of the projecting element may be constructed of any system approved in Table 43-B that matches the fire-resistive rating of the area separation wall."

F. Section 514 is hereby added to read as follows:

Electrical Services Located within the Building

Section 514 when a service overcurrent device is located within the building it shall be separated from the remainder of the building by a one-hour fire resistive separation."

Article 9-3 AMENDMENTS TO UNIFORM MECHANICAL CODE

The Uniform Mechanical Code, 1991 Edition, as adopted herein, is hereby amended as follows:

A. Section 1004 is hereby amended by adding to Subsection which shall read as follows:

"(d) Support at registers, diffusers, and grills shall be mechanically fastened to rigid supports or structural members on at least two (2) opposite sides in addition to being connected to the duct work they serve."

B. Section 1801 is hereby amended by adding the following language to the first paragraph:

"No building permit shall be issued until an air pollution control permit, issued by the Air Sanitation Division of the County Department of Health Services approving the installation of the incinerator, has been presented to the building official."

Article 9-4 AMENDMENTS TO UNIFORM PLUMBING CODE

The Uniform Plumbing Code, 1991 Edition, as adopted herein, is hereby amended as follows:

A. Part 1, Section 30.5(a) is hereby amended by adding the following sentence:

"The Building Safety Department shall not approve the rough plumbing until a water meter has been installed."

B. Section 608 (d) is hereby amended by adding the following sentence:

"The use of this air gap fitting may be waived if the drain hose from the dishwater is fastened to the underside of the sink top with a minimum of a three-fourths (3/4) inch-wide strap and is installed per the manufacturer's instructions."

C. Section 613 (a) is hereby amended by adding the following sentence:

"Each trap arm of these fixtures shall connect independently to this vertical drainage piping."

D. Section 1007 (e) is hereby amended by changing the second sentence to read as follows:

"Such drains may terminate at other approved locations, but shall not terminate over walkways, patios, carports or other similar areas."

E. The first paragraph of Section 1206 (c) (2), is hereby amended to read as follows:

"This inspection shall be made after all Gas piping authorized by the permit has been installed and after all portions thereof which are to be covered or concealed are so concealed and before any fixtures or appliances have been attached thereto."

F. Last sentence of Section 1213 (g), is hereby amended to read as follows:

"Ferrous metals in exposed exterior locations shall be zinc coated (galvanized) or protected from corrosion in a manner satisfactory to the administrative authority."

G. Appendix D Part C, D3.1 is hereby amended by adding a sentence which reads as follows:

"Rainfall amount for sizing rainwater piping shall be considered to be six (6) inches per hour in Goodyear."

Article 9-5 AMENDMENTS TO NATIONAL ELECTRICAL CODE

The National Electrical Code, 1990 Edition, is hereby amended as follows:

A. Section 90-1 (a) is hereby amended by adding a second paragraph which shall read as follows:

"Any and all electrical work for light, heat power, or any other purposes shall be installed in conformity with the rules and regulations as set forth in this Code, and that document titled the National Electrical Code, 1990 Edition, and in conformity with the rules and regulations as set forth by the Building Official."

B. Section 90-1 is hereby amended by adding Sub-section (d) which shall read as follows:

"(d) The Uniform Administrative Code, 1991 Edition, shall be the administrative code for this Article."

C. Section 90-5 is hereby amended to read as follows:

"To promote uniformity of interpretation and application of the provisions of this Code, Chapter 2, Board of Appeals of the Uniform Administrative Code, 1991 Edition, as adopted by the City, shall provide established procedures for appeals of interpretation under this Section."

D. Section 90-6 is hereby amended by adding the following paragraph:

"Any person, firm or corporation engaged in the manufacture of electrical materials, appliances, apparatus, devices, fixtures or signs to be used for any purpose, shall construct such apparatus so as to conform to requirements contained within this Code and any other applicable regulation. The label affixed by authorized local inspection shall be deemed to meet provisions of this Article and definition of "listed" for local usage."

E. Other sections of the National Electrical Code are hereby amended by the adoption of the Amendments of the National Electrical Code, 1990 Edition, sponsored by the Maricopa Association of Governments (M.A.G.).

SECTION II: SEPARABILITY. WHEREAS, if any section, subsection, sentence, clause, phrase or portion of this Ordinance is for any reason held invalid or unconstitutional by any court of competent jurisdiction, such portion shall be deemed a separate, distinct and independent provision and such holding shall not affect the validity of the remaining portions thereof.

SECTION III: EMERGENCY CLAUSE AND EFFECTIVE DATE. WHEREAS, it is necessary for the preservation of the peace, health and safety of the City of Goodyear, Arizona, an emergency is declared to exist, and this Ordinance shall become immediately operative and in force from and after its passage and adoption.

PASSED AND ADOPTED by the Mayor and Council of the City of Goodyear, Maricopa County, Arizona this 9th day of June, 1992.

Mayor

ATTEST:

City Clerk

City Attorney

092/462/TXTBARBM

City of Goodyear, Arizona

EXIBIT "A"

OFFSITE ENGINEERING PLAN REVIEW FEE

$75.00 Per sheet first and second review
$75.00 additional reviews per sheet

GRADING AND DRAINAGE PLAN REVIEW FEE

0 - 40	acres	$ 75.00
41 - 160	acres	$ 150.00
161 +	acres	$ 300.00

First and second review.
Additional review same as above.

DRAINAGE REPORT REVIEW FEE

0 - 40	acres	$ 75.00
41 - 160	acres	$ 150.00
160 +	acres	$ 300.00

Additional Review, same as above.

PROJECT: _____

OWNER: _____

ADDRESS: _____

_____

PROJECT ENGINEER: _____

ADDRESS: _____

_____

PHONE NO.: _____

NUMBER OF SHEETS _____ X $ 75.00 _____
DRAINAGE REPORT REVIEW FEE _____
TOTAL REVIEW FEE _____
DATE PAID: _____
RECEIPT NO.: _____

EXHIBIT "B"
CITY OF GOODYEAR, ARIZONA
CONSTRUCTION INSPECTION PERMIT FEE SCHEDULE

ITEM	QTY	UNIT CHARGE	TOTAL
WATER			
Waterlines	_____	$ 0.25 L.F.	$ _____
Service Lines	_____	0.25 L.F.	_____
Fire Hydrant	_____	15.00 Each	_____
Tapping/Sleeve & Valve	_____	50.00 Each	_____
Pavement Replacement	_____	0.20 S.Y.	_____
Shutoff	_____		NO CHARGE
SEWER			
Sewer Lines	_____	$ 0.25 L.F.	$ _____
Service Lines	_____	0.25 L.F.	_____
Manhole	_____	25.00 Each	_____
Cleanout	_____	15.00 Each	_____
Taps	_____	25.00 Each	_____
Pavement Replacement	_____	0.20 S.Y.	_____
PAVING			
A.C. Paving	_____	$ 0.20 S.Y.	$ _____
Curb and Gutter	_____	0.10 L.F.	_____
Sidewalk	_____	0.10 L.F.	_____
Valley Gutter	_____	0.10 L.F.	_____
Grading	_____	3% of	_____
Driveway/alley aprons	_____	15.00 Each	_____
Concrete Structures	_____	3% of	_____
STORMDRAIN AND IRRIGATION			
Stormdrain	_____	$ 0.55 L.F.	$ _____
Manholes (SD)	_____	25.00 Each	_____
Catch Basins	_____	20.00 Each	_____
Irrigation Pipe	_____	0.25 L.F.	_____
Pavement Replacement	_____	0.20 L.S.	_____
Concrete Structures	_____	3% of	_____
UTILITIES			
Utility Trenching and backfill	_____	$ 0.12 L.F.	$ _____
Pavement Replacement	_____	0.20 S.Y.	_____
MISCELLANEOUS			
Box Culverts	_____	3% of	$ _____
Grading/Drainage	_____	3% of	_____
Other _____	_____	3% of	_____
		TOTAL COST	$ _____

Exhibit "B"
Inspection Permit Fees Schedule
Page Two

WORK PERFORMED WITHOUT A PERMIT SHALL BE CHARGED AT TWICE THE RATE OF THE ORIGINAL PERMIT FEE.

The fees herein provided for may be changed from time to time by the City Council by ordinance or resolution duly adopted thereby.

* I HEREBY CERTIFY THAT THESE QUANTITIES ARE ACCURATE AND THAT THEY CORRESPOND TO THE PLANS AND SPECIFICATIONS WHICH I HAVE PREPARED FOR THE IMPROVEMENTS OF THIS PROJECT.

PROJECT ENGINEER: _____

_____

ADDRESS: _____

_____

PHONE NO.: _____

REVISED 9-25-90 ORD. No. 90-319

OFPLAN/TXTBARBM

CITY OF GOODYEAR
COMMUNITY DEVELOPMENT
112 WESTERN AVENUE
GOODYEAR, AZ 85338
(602) 932-3494 FAX (602) 932-3007

PLAN REVIEW # _____

APPLICATION DATE _____

TO BE FILLED IN BY APPLICANT

Application is hereby made for plan checking to cover this work hereinafter described.

Project Description: _____

Project Name: _____

☐ Residential ☐ Commercial ☐ Industrial

Address _____

☐ Architect
☐ Contractor _____

Contact Person _____

Telephone Number _____

Owner: _____

Address _____

Telephone Number _____

I hereby certify that the data submitted on or with this application is true and correct, that I am the OWNER at this ADDRESS or that for the purpose of obtaining this approval, I am acting on behalf of the owner. All contract work on this project will be done by a contractor holding valid privilege tax license and contractor's license issued by the State of Arizona and the City of Goodyear.

Applicant's Signature _____

City Sales Tax # _____

State of Arizona Contractor's License # _____

PLANS PACKAGE CONTENTS

Applicant, please check the appropriate box(es) below, indicating the type of plans submitted and review requested. Check all that apply.

☐ Architect. Plans	☐ Grading	☐ Fire Sprinkler Plan
☐ Structural Plans	☐ Offsite Water	☐ Fire Extinguishing System
☐ Structural Calculations	☐ Offsite Sewer	☐ Fire Alarm Systems
☐ Plumbing	☐ Offsite Drainage	☐ Underground Storage Tank
☐ Mechanical	☐ Onsite Sewer	☐ Aboveground Storage Tank
☐ Soils Report	☐ Onsite Water	☐ Hood Systems
☐ Landscaping	☐ Onsite Fireline	☐ Spray Booth
☐ Electrical	☐ _____	☐ Liquid Petroleum Gas Installation
☐ _____	☐ _____	☐ _____

No plans will be accepted unless application is complete and plan review fees are paid.

PLAN REVIEW FEE WORKSHEET

CITY OF GOODYEAR
COMMUNITY DEVELOPMENT
112 WESTERN AVENUE
GOODYEAR, AZ 85338
(602) 932-3494 FAX (602) 932-3007

PLAN REVIEW # _____

APPLICATION DATE _____

BUILDING SAFETY/FIRE

BUILDING
Area Square Footage _____

Valuation: _____

*Permit Fee: _____

Plan Review Fee
(65% of Permit Fee) 1 _____

FIRE
Fire Code Review** 2 _____
(35% of Building Plan Review Fee)

Specific Review
Area (Sq. Footage) _____

Valuation _____

*Permit Fee _____

Plan Review Fee
(65% of Permit Fee) 3 _____

* Table 3A, 1991 U.B.C.

** Fee required all H occupancies, storage in excess 20,000 square feet and special occupancies where the Fire Chief deems code review necessary.

ENGINEERING

Offsite Engineering
$75.00 per sheet 1st and 2nd Review.
$75.00 per sheet additional reviews.

Grading and Drainage Plan

0-40 Acres	$75.00
41-160 Acres	$150.00
161+ Acres	$300.00

First and Second review, additional reviews same as above.

Drainage Report

0-40 Acres	$75.00
41-160 Acres	$150.00
161+ Acres	$300.00

First and Second review, additional reviews same as above.

Number of Sheets _____ X $ 75.00 _____

Grading & Drainage Plan _____

Drainage Report _____

Total Engineering Review 4 _____

SUBTOTALS

1 _____ Building Safety

2 _____ Fire Code Review

3 _____ Fire Plan Review

4 _____ Engineering

_____ **TOTAL**

Date Paid _____ Receipt Number _____

APPENDIX G

HEALTH AND SAFETY PLAN

HEALTH & SAFETY PLAN

METCALF & EDDY, INC.

SITE HEALTH & SAFETY PLAN

Prepared for:
The Goodyear Tire & Rubber Company
1144 East Market Street
Akron, Ohio 44316

Prepared by:

Metcalf & Eddy, Inc.
2800 Corporate Exchange Dr. Suite 250
Columbus, Ohio 43081

SEPTEMBER, 1992

TABLE OF CONTENTS (Cont.)

			Page
8.0	DECONTAMINATION AND DISPOSAL PROCEDURES		23
	8.1 Decontamination Procedures		23
		8.1.1 Construction Vehicles	23
		8.1.2 Drilling Equipment Decontamination	23
		8.1.3 Support Vehicles	23
		8.1.4 Personal Gear	23
		8.1.5 Soil and Groundwater Sampling Equipment	23
	8.2 Disposal Procedures		24
		8.2.1 On-Site Disposal	24
		8.2.2 Off-Site Disposal	24
9.0	TRAINING AND MEDICAL SURVEILLANCE PROTOCOLS		25
	9.1 Employee Certification Form		25
	9.2 Training Requirements		25
	9.3 Medical Surveillance		25
	9.4 Health and Safety Briefing		25
10.0	EMERGENCY INFORMATION		26
	10.1 Required Emergency Information		26
	10.2 Emergency Phone Numbers		27
	10.3 Notification and Verification: Direction to Hospital		29
	10.4 Emergency Response		29
11.0	PLAN REVIEW		32
12.0	HEALTH AND SAFETY LOG BOOK		33
13.0	HEALTH AND SAFETY FIELD ACTIVITY REPORT		34

List of Figures

FIGURE 1	PGA Site Location Map	6
FIGURE 2	Current Well Locations at PGA	7

List of Tables

TABLE 1	Maximum Concentration of Chemicals reported in Soil and Groundwater at PGA site and Toxicity Characteristics	12
TABLE 2	Action Levels	16

List of Appendices

APPENDIX A: Heat Stress Management
APPENDIX B: Employee Certification Form
APPENDIX C: Material Safety and Data Sheets
APPENDIX D: Hazardous Material Exposure Report
APPENDIX E: Site Safety Plan Amendments
APPENDIX F: CARBON CHANGEOUT PROCEDURE

SITE HEALTH AND SAFETY PLAN

Phoenix-Goodyear Airport Site
Installation of Soil Vapor Extraction System

1.0 GENERAL INFORMATION

Metcalf & Eddy (M&E) has modified the existing Health & Safety Plan (HSP) for the Phoenix-Goodyear Airport (PGA) site. The original HSP was prepared by ICP Technology Incorporated, Universal City, California and Bartholomew Engineering, Phoenix, Arizona. The modifications update the existing HSP to include the installation of the Soil Vapor Extraction System. Only this modified HSP should be referenced to cover tasks under the new work order.

This plan contains general health and safety information related to the performance of remedial activities at the PGA site. The work is to be conducted at the Phoenix-Goodyear Airport located in the City of Goodyear, Arizona.

The remedial activities will include construction and installation of a Soil Vapor Extraction System (SVES), soil gas survey and soil borings. Additionally, vapor extraction wells and Vadose Zone piezometers will be monitored using vacuum gauges and sampling instruments. This monitoring will be conducted to determine the SVES influence on surrounding media.

Based on the information available, the overall hazard for performance of the work under this plan is low. The chemical contamination found at the site is primarily confined to the aquifer with limited surface contamination. The primary chemical hazard found at the site is trichloroethylene (TCE) in the ground water beneath the site. While there is a potential for exposure to TCE in soil, no volatile compounds have been detected in the air during previous field activities. Soil and ground water contaminated with chromium and cadmium have been identified, but are confined to the Goodyear Aerospace Corporation (GAC) Sludge Drying Beds.

Procedures identified in this plan adhere to accepted industry standards and applicable Federal and State regulations.

1.1 INTRODUCTION

This document describes the health and safety guidelines developed for the Phoenix-Goodyear Airport in Goodyear, Arizona. The HSP is developed to protect on-site personnel, visitors, and the public from physical harm and exposure to hazardous materials or waste. The procedures and guidelines contained herein were based upon the best available information at the time of the plan's preparation. Specific requirements will be revised when new information is received or conditions change. Any amendments to this plan will be included in Appendix E. Where appropriate, specific OSHA standards or other guidelines will be cited and applied.

This HSP will provide:

- Policy statements on the line of authority and accountability for implementing the program, the objectives of the program, and the role of site safety and health officer or manager and staff;
- Information for the development of procedures for identifying and controlling workplace hazards at the site;
- Information for the development and communication to site workers of the various plans, work rules, standard operating procedures (SOPs) and practices that pertain to individual employees and supervisors;

1.3 GENERAL SAFETY REQUIREMENTS:

The following general safety procedures shall be followed by all persons entering and/or working on the site:

a. All persons involved in this project shall read and sign this Health & Safety Plan prior to entering or working on the site. The master copy (with signature sheet) of this Safety Plan will be held by the designated on-site Safety Officer. A signature sheet is provided in Appendix B of this plan.

b. No employee or subcontractor may be allowed on-site without the prior knowledge and consent of the site Health & Safety Officer.

c. There will be no activities conducted on-site without sufficient backup personnel to permit operation of a buddy system. At a minimum, two persons must be present at the site. Visual, voice or radio communication will be maintained at all times.

d. All contractor or subcontractor personnel shall bring to the attention of the site Health & Safety Officer or resident project representative any unsafe condition or practice associated with the site activities.

e. There will be no smoking, eating, chewing gum, drinking or application of cosmetics in any exclusion zone.

f. Hands, face and all other potentially contaminated areas shall be thoroughly cleaned prior to smoking, eating or other activities subsequent to egress from an exclusion zone.

g. Team members must avoid unnecessary contamination (i.e., walking through known or suspected "hot" zones or contaminated puddles, kneeling or sitting on the ground, leaning against potentially contaminated barrels or equipment).

h. Close-fitting respirator facepieces may not be worn with beards, long sideburns, or other conditions that prevent a proper seal.

i. No contact lenses may be worn within an exclusion zone".

j. All boring, excavation, heavy equipment operation, and general construction activities shall be performed in compliance with 29 CFR 1926.

k. All project personnel who are likely to wear air purifying or air supplied respirators must first meet the training and medical requirements of 29 CFR 1910.120 and 29 CFR 1910.134.

l. Aerial obstructions such as power lines and tree branches will be verified prior to erection of drill rig masts or movement of large equipment. A 20 foot horizontal clearance must be maintained between all aerial obstructions.

m. Locations of subsurface utilities and buried bulk wastes shall be verified prior to any drilling or excavation activities.

n. All accidents and/or injuries shall be immediately reported to the site safety officer. If necessary, a first report of injury will be initiated by the site safety officer and provided to the Regional Safety Officer for processing.

2.0 SITE BACKGROUND

2.1 FACILITY DESCRIPTION

The Phoenix-Goodyear Airport (PGA) site is situated in the City of Goodyear, approximately 20 miles west of Phoenix, Arizona, as shown in Figure 1. In 1985, the combined population of the Goodyear and Avondale area was 30,000. The current land uses in the vicinity of the site consist of agriculture, industry, and residential developments. Figure 2 presents a more detailed view of the PGA site.

During the 1940s and 1950s, aircraft maintenance operations were conducted at PGA. Historic operations used chlorinated solvents for degreasing engine and machine parts.

In 1983, the PGA site was placed on EPA's National Priorities List subsequent to ground water monitoring studies performed in 1982 and 1983 which identified six area wells that were contaminated with TCE and exceeded the federal drinking water standard of 5 ppb. Section 16 lies in the southern area and includes the Loral Corporation facility (formerly owned by Goodyear Aerospace Corporation) and the Phoenix-Goodyear Airport (formerly owned and operated by the U.S. Navy). Included in Figure 2 are the approximate locations of all existing wells on Loral and PGA properties.

On September 6, 1988, the U.S. EPA and Goodyear entered into a consent decree. Under the provisions of the consent decree, Goodyear agreed to perform an operable unit (OU) remedial action at the PGA site. The OU remedy involves pumping ground water to contain the spread of TCE beneath Section 16, treating it, and then reinjecting the clean, treated water into the ground.

On September 26, 1989, the U.S. EPA issued a Record of Decision for the PGA site. Based on the PGA RI/FS, the preferred alternatives for the south portion of the site consists of extraction and treatment of Subunit B/C ground water, and soil vapor extraction (SVE) system for the vadose zone.

2.2 SCOPE OF WORK

The SVES for the extraction and collection of TCE contaminated soil and ground water includes the following tasks:

- conduct a soil gas survey of select areas of site
- collection of soil boring samples at soil gas locations
- drilling and construction of soil vapor monitoring and extraction wells
- construction and installation of Soil Vapor Extraction System

2.3 CHEMICAL/WASTE CHARACTERISTICS

Chemicals and wastes at the PGA site are present as liquids, solids, sludge, gases, and vapors. The chemicals and waste materials at the site may be characterized as: corrosive, volatile, toxic, and reactive. Chemical names of materials known to be presence at the PGA site are shown in Table 1.

2.4 SITE FEATURES

The site encompasses an operational airport (Goodyear Municipal Airport), industrial facilities occupied by Loral Corporation, and the Arizona Training Center.

Metcalf & Eddy

CURRENT WELL LOCATIONS AT PGA
GOODYEAR-PHOENIX AIRPORT

CHECKED	DRAWN	SCALE	PROJECT No	FIGURE
		NOTED	006791	2

3.2 SOIL BORINGS

Soil boring samples will be collected from a maximum of 30 points. Samples will be collected from surface soil to a depth of 60 feet below grade or until ground water. The samples will be collected using a 6 1/4 inch (ID) hollow stem auger advancing a five foot continuous coring sampler. The continuous coring sampler will contain a five foot plastic sleeve. At five foot intervals the core sampler will be retrieved and the plastic sleeve removed. The plastic sleeve will be cut into intervals and screened. Samples will be obtained from the plastic sleeve and submitted to the lab for analysis.

3.3 DRILLING AND CONSTRUCTION OF SOIL VAPOR EXTRACTION WELLS

Soil vapor extraction wells installed in the vadose zone. The wells will be installed to a maximum depth of 60 feet. Four-inch diameter Sch 40 PVC wells will be installed by hollow stem auger method. A 0.020 inch slot screen will be installed at a depth to be decided by the on-site geologist. The screen will be surrounded by rough coarse gravel with a bentonite plug installed above the screened region. The soil vapor extraction wells will be connected to the SVES by Sch 40 PVC piping.

3.4 CONSTRUCTION AND INSTALLATION OF SOIL VAPOR EXTRACTION SYSTEM

The SVES will include:

- subsurface manifold
- surface manifold
- one air/water separator
- two particulate filters
- air blower and duct work
- the effluent air from the blower will be treated with two (2) vapor phase granular activated carbon beds

The SVES will be located in the south portion of the site. All fabrication and construction, not absolutely required to be performed in the field, shall be performed in a factory prior to transportation to the site. The actual assembly of the SVES poses little potential for chemical exposure or contamination.

TABLE 1

MAXIMUM CONCENTRATIONS OF CHEMICALS REPORTED IN SOIL AND GROUNDWATER AT PGA SITE AND TOXICITY CHARACTERISTICS

Chemicals	Soil Maximum Conc. mg/kg	Groundwater Maximum Conc. ug/l	TLV		PEL		IDLH		Target Organs	Potential Exposure Routes
			ppm	mg/m3	mg/m3	ppm	mg/m3	mg/m3		
Organics:										
Trichloroethylene	2.5	16,200	50	270	50	–	1,000	–	Suspected carcinogen, CNS, liver, respiratory	1,2,3
1,1-Dichloroethylene	0.4	140	5	20	10	–	–	–	Suspected carcinogen, CNS, liver, kidney	1,2,3
Trans-1,2,-Dichloroethylene	–	3.6	200	790	200	790	–	–	CNS, liver, kidneys, respiratory sys.	1,2,3
1,1-Dichloroethane	–	3.3	200	810	100	400	4,000	–	Suspected carcinogen, liver, kidneys	1,2,3
1,2-Dibromoethane	–	2	A2	–	20	–	400	–	Suspected carcinogen, liver, kidneys	1,2,3
Acetone	–	3	750	1,780	750	1780	20,000	–	Respiratory system	1,2,3
Carbon tetrachloride	–	5.1	5A2	30	2	–	300	–	Suspected carcinogen, CNS	
Chloroform	–	12.8	10A2	50	2	–	–	–	Suspected carcinogen, liver, kidney, Heart, eyes, skin	1,2,3
Methylene chloride	–	13.2	50A2	175	500	–	5,000	–	CNS, CVS, skin, eyes	1,2,3
Toluene	–	16	100	375	100	–	2,000	–	CNS, liver, kidneys, skin	1,2,3
Total xylenes	–	8,800	100	240	100	480	10,000	–	CNS, liver, kidneys, eyes, skin	1,2,3
Trichlorofluoromethane	0.5	–	1,000	5,600	100	Ceil	–	–	CNS, respiratory sys.	1,2,3
Chlorobenzene	0.5	–	75	350	75	350	2,400	–	CNS, liver, respiratory sys.	1,2,3
4-DDT	0.8	–	–	1	–	1	–	–	Suspected carcinogen, skin, respiratory sys.	1,2,3
4-DDE	1.2	–	–	1	–	1	–	–	Suspected carcinogen, skin, respiratory sys	1,2,3

4.2 HAZARDS ANALYSIS FOR SITE

4.2.1 Construction of Soil Vapor Extraction System

This task includes use of a variety of small to heavy equipment. PVC or steel pipe will be installed in trenches of depth insufficient to introduce the lethal cave-in hazards covered by OSHA's excavation Safety standard at 29 CFR 1926 Subpart P. During these activities, potential of accidents and physical injury exist. All materials- or equipment-handling tasks offer potential for the human body to be caught under or in between objects or to be knocked over. Hazards to footing that also can result in falls are inherent in this type of work.

Back injuries are second only to falls as a source of lost time resulting from accidents. Even when heavy materials and subcomponents are handled by means of mechanical aids such as cranes and hoists, the potential for overexertion, pulls, and strains from manual efforts at final alignment and manipulation will present a significant injury potential. The use of hoists demands a high level of knowledge and skills in rigging so that loads are safely lifted and transported. A chain or wire rope sling is subject to failure if it is not used strictly in accordance with guidance based on safe working loads for the chain or rope, and on the geometry of various lifting arrangements that affect the actual stresses on the material. In addition, such equipment must be inspected regularly and rigorously by an experienced individual.

Fork lift trucks present a set of hazards peculiar to themselves. Trucks are designed for the essential purpose of lifting heavy weights. They are counterbalanced for the purpose, and are fitted with wheels and running gear suitable for the floor or terrain where they're intended to operate. However, it is not practicable to design these tools in such a way as to eliminate the need for a high level of operator training and knowledge. In particular, probably no lift truck can safely travel with the load held high off the floor or ground surface.

Construction activities may raise airborne dust levels. Only in the area of the sludge drying beds does it appear that a potential for overexposure to soil contaminants is present. No construction activity within this area is anticipated.

4.2.2 Drilling and Construction of Soil Vapor Extraction Wells and Soil Borings

Drilling operations involve use of heavy equipment and machinery, and physical trauma can occur. The greatest injury (fatality) potential probably lies in the possibility of becoming entangled in the rotating equipment. Hazards of becoming caught in between moving objects or a moving and a stationary object, are also very significant. Contact with overhead, or possibly buried, electrical lines is a very serious hazard that requires training or experience to recognize. When high-voltage conductors are involved, actual contact is not necessary for an electrocution current to flow. In even of contact between any part of the equipment and live electrical circuits, an electric current will flow to ground through the equipment. The typical electrocution accident happens when a worker standing on the ground is in contact with the equipment, and a portion of the ground fault current flows through the workers body. Only a very small portion of the fault current, flowing through the worker's body, is required to cause death.

4.2.3 Soil Gas Survey

Soil gas survey operations involve the advancement of a steel soil gas probe by a hydraulic push/pull mechanism mounted to a support vehicle. The hazards common to work with vehicles and mechanical powered equipment will be inherent in this work. Underground utilities may also contribute hazards.

5.0 SITE OPERATIONS

5.1 ENVIRONMENTAL MONITORING EQUIPMENT REQUIREMENTS

A variety of environmental monitoring instruments will be required to assess conditions during field operations. The number of monitoring instruments needed will depend on the number of concurrent operations in progress at the site. This will be determined prior to field mobilization. The following is a list of instruments required for field operations:

- Volatile Organic Compound Monitor -- either flame or photoionization detector;
- Oxygen Monitor; and
- Combustible Gas Indicator (CGI).

5.2 OPERATING PROCEDURES AND METHODS FOR SURVEILLANCE

Instruction manuals will be followed for instrument calibration and operation. During invasive construction operations and well sampling, air in the breathing zone will be monitored regularly with an organic vapor detector (either photoionization or flame ionization detector). Combustible gas and oxygen levels will be monitored regularly with a combustible gas/oxygen meter during invasive operations and prior to any cutting, welding, or grinding operation.

Action levels for environmental monitoring and required levels of protective equipment are shown in Table 2.

5.3 PERIMETER ESTABLISHMENT

The location of areas of known surface contamination (the chrome sludge pits) is established and the area is fenced. All construction/drilling work will be conducted inside the Phoenix Goodyear Airport property. As part of the normal security for an active airport, this part of the PGA site is surrounded by chain link fence with access controlled by a security guard. No public access is permitted in the construction area without passing through the control point. Exclusion zones will be established as needed at each individual work location and delineated with temporary barriers.

6.0 PERSONAL PROTECTIVE EQUIPMENT (PPE)

Personal Protective Equipment (PPE) will be utilized as indicated by on-site environmental monitoring. All previous field operations at the site have been conducted in Level D protective equipment. It is anticipated that most, if not all, work performed under this plan will be conducted in Level D PPE. Site personnel should be equipped to upgrade PPE to Level C if needed. The following sections describe the recommended equipment for each level of protection. Other specialty field activities (e.g., field welding, excavation, etc.) will require other specific protective measures and equipment which will be designated by the SSO.

6.1 LEVEL D PPE

Level D PPE is used when no respiratory protection is required and minimum skin protection is required. This level will not be worn in exclusion zones where action levels (given in Table 2) warrant Level C protection. The following equipment constitute Level D gear:

RECOMMENDED:

- Coveralls.
- Steel toe and steel shank safety boots/shoes.
- Safety glasses or chemical splash goggles.
- Hard hat.
- Gloves.

OPTIONAL:

- Escape mask.
- Face shield.

6.2 LEVEL C PPE

Level C PPE is used when types of air contaminants have been identified, concentrations measured, and a canister or a set of cartridges are available that can remove the contaminant. The atmosphere where level C protective equipment is used must not exceed IDLH levels and must contain at least 19.5 percent oxygen. The following equipment constitute Level C protection gear:

RECOMMENDED:

- Full-face piece, air-purifying, twin cartridge or canister-equipped respirator.
- Chemical-resistant clothing (hooded, one- or two-piece chemical splash suit; disposable chemical-resistant one-piece suit).
- Inner and outer chemical-resistant gloves.
- Chemical-resistant steel toe and steel shank safety boots/shoes.
- Hard hat.
- Two-way radio communications

6.3.2 Collection of Soil Borings Samples -- continued

Personnel	Respiratory	Clothing	Other
Site Health and Safety Officer	D	TYVEK coveralls, Neoprene Safety Boots, Hard Hat Safety glasses	
Drilling Subcontractor Personnel	D	TYVEK coveralls, Neoprene Safety Boots, Hard Hat Safety glasses, Nitrile gloves	

Note: Respiratory protection may be upgraded to Level C (full-face air purifying respirators with appropriate organic vapor cartridges) based on air monitoring at the site.

6.3.3 Drilling and Construction of Soil Vapor Extraction Wells

Personnel	Respiratory	Clothing	Other
Team Leader	D	TYVEK coveralls, Neoprene Safety Boots, Hard Hat Safety glasses	Splash Goggles
Site Health and Safety Officer	D	TYVEK coveralls, Neoprene Safety Boots, Hard Hat Safety glasses	
Drilling Subcontractor Personnel	D	TYVEK coveralls, Neoprene Safety Boots, Hard Hat Safety glasses, Neoprene gloves	

Note: Respiratory protection may be upgraded to Level C (air-purifying respirator with appropriate organic vapor cartridges) if site monitoring indicates that action levels have been reached.

Note 2: Under heat stress conditions, the Site Safety Officer may substitute for "Tyvek" coveralls another type of work clothing that offers less contribution to heat stress. The work clothing will not be worn away from the site.

7.0 SITE PERSONNEL RESPONSIBILITIES

Each company working on the SVES construction at the PGA site shall be responsible for the safety of its own employees. Before work begins, each implementing firm will be required to appoint a Site Safety Officer and prepare a site specific Health and Safety Plan for their employees.

The SVES Project Manager shall be responsible for all aspects of the construction, including compliance with OSHA rules and this HSP. The Project Manager will assign a Project Health and Safety Officer who will be responsible for assuring that each implementing firm has a plan and is implementing it in accordance with OSHA requirements.

Resident engineer will assist by checking that the respective site safety officers are properly implementing their plans. The resident engineer will maintain documentation on health and safety matters and will provide periodic reports to the PHSO. The resident engineer will also call the weekly safety meeting.

7.1 PROJECT HEALTH AND SAFETY OFFICER (SSO)

The SSO reports directly to the Project Manager on issues of health and safety of field operations. He is responsible for executing the provisions of this provisional Health and Safety Program as applicable to field operations. He is responsible for reviewing all site safety plans for construction and sampling and for assuring that these are approved by the respective management personnel and properly executed. He has direct authority over all on-site personnel on matters of health and safety and is able to stop all site work for safety reasons. He also has the responsibility of revising site safety plans when additional hazards are identified during the course of construction.

The duties of the SSO shall include:

- continuous health and safety supervision on-site;
- conducting site safety briefing;
- enforcing compliance with the HSP;
- conducting air monitoring as specified in the HSP;
- maintaining and calibrating health and safety equipment;
- supervising personnel and equipment decontamination;
- controlling access to designated exclusion zones;
- maintaining a site safety log; and
- reporting injuries, illnesses, and exposures to the PHSO.

7.2 FIELD PERSONNEL

All field personnel must comply with the provisions of this site safety plan, and sign the signature form presented in this plan. All field personnel must practice contaminant avoidance at all times.

7.3 WORK LIMITATIONS

All site work will be done during daylight hours. The buddy system will be in effect at all times when exposure potentials are present in the work or in the work area being occupied.

8.2 DISPOSAL PROCEDURES

8.2.1 On-Site Disposal

There will be three types of wastes generated during the site activities:

- Drill cuttings (box or covered piles);
- Equipment decontamination rinse water; and
- Disposable clothing.

Soils suspected of being contaminated will be labelled with site source location and will be temporarily stored on site at a secured location. Test results from the sampling of soils will determine if contaminant levels exceeded the Arizona State action levels and would require disposal as hazardous waste. Goodyear will be responsible for disposal of waste material generated during field activities.

Disposable clothing used in areas suspected of contamination will be stored separately and identified by location. If soils from that area are found to be contaminated, then the clothing will be disposed of as contaminated material with the soil. Otherwise, the clothing will be treated as common solid waste.

Monitoring well development and purge water and equipment decontamination rinse water will be disposed of in the City of Goodyear's sewer system under a permit from the City of Goodyear.

8.2.2 Off-Site Disposal

If determined hazardous, the soils will be disposed of by Goodyear at a licensed and permitted facility. M&E will assist Goodyear by assuring that wastes are properly labeled, segregated and sampled to minimize disposal costs.

10.0 EMERGENCY INFORMATION

10.1 REQUIRED EMERGENCY INFORMATION

This HSP contains pertinent emergency information for use in the event of an on-site emergency. The HASP includes the following;

- Location of on-site resources (i.e.: water supplies, radio and telephone communications);
- Ambulance and Poison Control Center telephone-numbers;
- Hospital Emergency Room telephone number and directions to hospital from site;
- Fire Department telephone number;
- Project Manager and Project Health and Safety Coordinator telephone numbered; and
- Client Contact telephone number.

10.2 EMERGENCY PHONE NUMBERS

Name		Phone Numbers
Ambulance	American Ambulance	(602) 253-1492
Hospital Emergency Care	Maryville Samaritan Hospital	(602) 848-5000
Poison Control Center	Good Samaritan Hospital	(602) 239-2000
Fire	City of Goodyear	(602) 932-3050
Police		
Explosives Unit (if applicable)	Phoenix Fire Department	(602) 262-6771
CHEMTREC		1-800-424-9300
TSCA Hotline (Toxic Substances Control Act)		202-554-1404
CDC (Center for Disease Control) (24 hrs.)		404-454-4100 or 404-329-2888
National Response Center		1-800-424-8802
Pesticide Information Center		1-800-845-7633
EPA ERT Emergency		201-321-6660
RCRA Hotline		1-800-424-9346
Bureau of Explosives		202-835-9500

Other Phone Numbers:

10.3. NOTIFICATION AND VERIFICATION:
Directions to Hospital*[2] (Attach map)

From Goodyear Airport, proceed north on Litchfield Avenue to Interstate 10. Take I-10 to 51st Street exit. Take 51st Street north to Campbell Avenue. Go left on Campbell Avenue. The hospital is on the corner of 51st Street and Campbell Avenue.

The route to the hospital was verified by

_____ on _____.

Present Status and Capability of Emergency Response Teams:

_____ Able to respond to site emergencies.

_____ Unable to respond to site emergencies.

_____
On-Site Safety Officer

10.4 EMERGENCY RESPONSE:

Line of Authority:

The Site Safety Officer will assume command and direct emergency operations until such time is a more senior person (e.g. Site Manager) actively assumes command, in which case the Site Safety Officer will advise and assist in direction of operations. Civil authorities responding to an emergency assume command of operations, and will have pre-arranged methods of determining the line of authority.

A. Injury/Exposure:

In the event of an injury, the victim should be stabilized and provided onsite first aid in the "clean zone". If an injury involves a potential trauma to the spinal cord, the victim shall remain where injured, if safely possible, and be moved by trained emergency medical technicians only. Minor injuries such as small lacerations, cuts and strains shall be initially treated onsite by the first aid qualified member of the field team. Ambulance and hospital support shall be provided for all major injuries such as head wounds, broken bones, and deep lacerations. Should an injury involve a contaminant exposure, and there is no potential spinal cord trauma, perform the following procedures:

- Escort victim to the decontamination station
- Remove all contaminated clothing
- Wash exposed body areas with a potable water flush (10 minutes)
- Cover with blanket or (if injury is not serious) dress victim in clean clothing
  Transport victim (with the H&S Plan) to hospital if necessary

B. Chemical/Oil Release - Spill Containment:

2

*** Emergency phone numbers and maps to the hospital will be posted in the office, decontamination area and all vehicles.**

Emergency Response Equipment Map

Fire Extinguishers:

Eyewash/Shower Station:

Alarm Systems:

Emergency Phone:

First Aid Kits/Equipment:

12.0 HEALTH & SAFETY LOG BOOK

The on-site Health & Safety Officer will keep a log book to record site Health and Safety information and to document subcontract personnel working on-site and other site visitors. At a minimum, the following information will be included in the log book on a daily basis:

- Date and time of observations
- Weather conditions
- Personnel on-site (w/company title)
- Air monitoring equipment in use
- Work activity conducted
- Level(s) of protection
- Air monitoring equipment readings obtained during work activity
- Any health & safety-related issues or situations.
- Any communications with regulatory agencies
- Signature of on-site Health and Safety Officer

APPENDIX A

HEAT STRESS MANAGEMENT

2. HEAT STROKE

Heat stroke is an acute and dangerous reaction to heat stress caused by a failure of heat regulating mechanisms of the body the individual's temperature control system that causes sweating stops working correctly. Body temperatures rises so high that brain damage and death will result if the person is not cooled quickly.

Symptoms: Red, hot, dry skin, although person may have been sweating earlier; nausea; dizziness; confusion; extremely high body temperature, rapid respiratory and pulse rate; unconsciousness or coma.

Treatment: Cool the victim quickly and obtain medical help immediately! If the body temperature is not brought down fast, permanent brain damage or death will result. Soak the victim in cool but not cold water, sponge the body with cool water, or pour water on the body to reduce the temperature to a safe level (102 | F). Observe the victim and be ready to provide respiratory support if needed. Do not give coffee, tea or alcoholic beverages.

3. HEAT EXHAUSTION

Heat exhaustion is a state of very definite weakness or exhaustion caused by the loss of fluids from the body. The condition is much less dangerous than heat stroke, but it nonetheless must be treated.

Symptoms: Pale, clammy, moist skin, profuse perspiration and extreme weakness. Body temperature is normal, pulse is weak and rapid, breathing is shallow. The person may have a headache, may vomit, and may be dizzy.

Treatment: Remove the person to a cool, air conditioned place, loosen clothing, place in a head-low position, and provide bed rest. Consult a physician. The normal thirst mechanism is not sensitive enough to ensure body fluids replacement. Have patient drink 1-2 cups water immediately, and every 20-minutes thereafter, until symptoms subside. Total water consumption should be about 1-2 gallons per day.

4. HEAT CRAMPS

Heat cramps are caused by perspiration that is not balanced by adequate fluid intake. Heat cramps are often the first sign of a condition that can lead to heat stroke.

Symptoms: Acute painful spasms of voluntary muscles; e.g., abdomen and extremities.

Treatment: Remove victim to a cool area and loosen clothing. Have patient drink 1-2 cups water immediately, and every 20-minutes thereafter, until symptoms subside. Total water consumption should be 1-2 gallons per day. Consult with physician.

5. HEAT RASH

Heat rash is caused by continuous exposure to heat and wet conditions and aggravated by chafing clothes. The condition decreases ability to tolerate heat.

Symptoms: Mild red rash, especially in areas of the body in contact with protective gear.

APPENDIX B

EMPLOYEE CERTIFICATION

APPENDIX C

MATERIAL SAFETY DATA SHEETS

HAZARDOUS MATERIALS EXPOSURE REPORT

Dates on Site: _____

Name of Employee: _____
Last First Initial

Project No.	Site Name/ Location	Duration on the Activity	Chemical or Other Materials Site (Days/Hours)	Present

If you believe you had a possible or actual exposure or injury, complete the following:

Date/Time of Exposure Type of Exposure Duration of Exposure

Date/Time of Injury Type of Injury

Date/Time of Notification of Injury Individuals Notified

_____
Employee Signature Date

_____
Regional Safety Coordinator Signature Date

SITE SAFETY PLAN AMENDMENT

Amendment # _____

Project # _____ Date: _____

Type of Amendment: _____

Reason for Amendment: _____

Additional Required Changes in Other H&S Procedures: _____

Required Changes in PPE: _____

Regional Health & Safety Coordinator Date

Health & Safety Manager Date

HAZARDOUS
CHANGE-OUT PROCEDURE

I. NWC's Spent GAC Removal Procedure:

A. Equipment and Personnel:

1. Two Protechs (one of which may or may not be truck driver). Each Protech to be certified according to OSHA standard 29 CFR 1910.120, which specifies requirements of hazardous waste workers and emergency response.

2. EPA Licensed Hazardous Waste Hauler, with bulk pneumatic trailer for transportation to TSD facility. Transportation equipment shall comply with all DOT requirements, (for hazardous wastes which require a Uniform Hazardous Waste Manifest).

3. Proper hoses and fittings to transfer GAC to and from filter vessels.

B. Technical Approach:

1. Position bulk trailers as close as possible to vessel GAC vessel to be emptied.

2. Connect 4" hose from GAC vessel carbon outlet to bulk trailer inlet.

3. Check that all trailer discharge valves are closed and outlets are caped.

4. Insure that there is no pressure in bulk trailer.

5. Open GAC inlet valve on bulk trailer.

6. Bulk trailer is now ready to receive GAC from vessel.

7. Fill GAC vessel water for slurry.

8. Pressurize GAC vessel with air.

9. Open vessel discharge valve to start transfer.

10. Add water when necessary for complete GAC removal and tank wash down.

11. GAC vessel should completely empty into bulk

5. Connect pneumatic pressure hose from plant to bulk trailer. Air supplied by NWC when not available on site.

6. Pressurize trailer to 20 PSI max.

7. Open trailer valves to start transfer of GAC water slurry mixture.

8. Monitor pressure gauges during transfer and add water when needed.

9. Continue slurry transfer until GAC vessel is full and trailer is empty. This completes the actual carbon delivery.

10. Hoses cleaned with water or air and disconnected and put away, valves checked for closure and system is ready for backwash.

NOTE: Spent carbon profile and manifestation of carbon will be arranged with client prior to doing any work.

NOTE: Non-Hazardous change-out procedures are the same as a hazardous Change-out, using the same personnel and equipment. The major difference is the use of a certified Hazardous Hauler for transportation of spent carbon to an approved TSD facility.

APPENDIX H

PHASE I/II QUALITY ASSURANCE PROJECT PLAN (QAPP)

1.0 INTRODUCTION

Comprehensive Quality Assurance (QA) objectives for the Supplemental Field Investigation (SFI) for the SVE operable unit remedy at the Phoenix-Goodyear Airport site (PGA) have been developed to provide guidelines for all field and laboratory procedures. The intention of the sampling and analysis effort is to produce data of acceptable quality to allow for an accurate characterization of the vertical and lateral extent of volatile organic contamination (VOC), primarily trichloroethene (TCE) in soil. This Quality Assurance Project Plan (QAPP) presents protocols to be followed in ensuring the quality and integrity of the Supplemental Field Investigation, accuracy and precision of the laboratory and field analyses, representativeness of the results, and completeness of the information.

The main QA objective for this work is to ensure that all measurements are representative of actual site conditions and that all data resulting from sampling and analysis activities are comparable. The use of accepted, published, sampling and analysis methods, as well as the use of standardized units, shall aid in ensuring the comparability of the data.

1.1 PROJECT ORGANIZATION AND RESPONSIBILITIES

This section identifies the key personnel proposed for this project and the support staff expected to be needed (see Figure 3.1).

Key personnel include the following staff members:

The Project Manager, Scott Zachary is responsible for ensuring that all activities are conducted in accordance with the work plans and within the overall contractual obligations. Mr. Zachary will: 1) monitor the project budget and schedule; 2) ensure the availability of personnel, equipment, subcontractors, and services; and 3) participate in all phases of the project including the development of the field program, SFI conclusions and recommendations, and progress reports on the technical and financial status of the project.

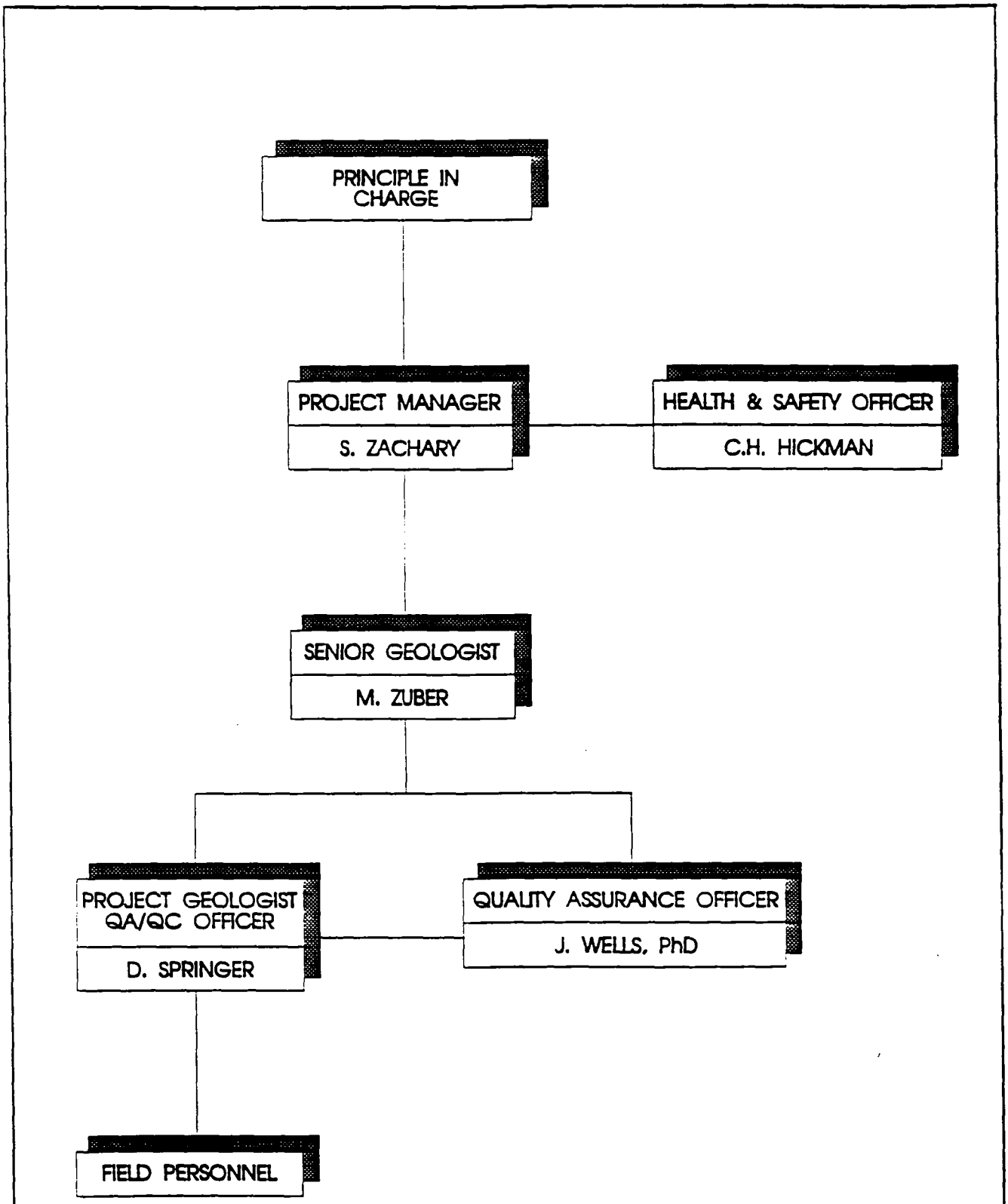

PROJECT ORGANIZATION

M&E Metcalf & Eddy

Drawn by: J. Weidmann	Job Number: 006791	Date: September 1992
Checked by: S. Zachary		Figure Number: 1-1

Mr. Struttmann also will provide technical coordination with the Goodyear Tire and Rubber Company (Goodyear) and direct M&E's technical staff.

The Project Geologist, Mr. David Springer, will conduct the field investigation activities described in this sampling section. Mr. Springer will function as the site Quality Assurance Officer and will be on site during all field activities and oversee operations. Any logistical problems hindering field activities such as equipment malfunctions or availability, personnel conflicts, or weather-dependent working conditions will be relayed and resolved by the Project Manager. Mr. Springer will be responsible for maintaining communication with the off-site and on-site analytical laboratory, as well as logging communications and site entries and departures by personnel.

The Quality Assurance Officer (QAO), Mr. James Wells, Ph.D. is responsible for implementing and administering the Quality Assurance Project Plan (QAPP) to ensure that all QA objectives of the project are met, to review selected field and analytical data, and to verify the quality of analytical data to be used in the SFI. The QAO is responsible for ongoing surveillance of project activities and has the authority to recommend that work be stopped when that work appears to jeopardize data quality.

The Health and Safety Officer (HSO), Mr. Herb Hickman, will review and approve the Health and Safety Plan prepared for this specific investigation, and ensure that an adequate level of personal protection exists for hazards anticipated in the field. The HSO is responsible for the daily supervision and documentation of all safety, decontamination, environmental monitoring, and field medical monitoring activities. The HSO has the authority to stop work which may result in an imminent safety hazard, emergency condition, or other potentially dangerous situation. Authorization to resume work will be issued by the HSO in conjunction with the Project Manager subsequent to such action.

2.0 DATA QUALITY OBJECTIVES

Data Quality Objectives (DQOs) are based on the concept that different data uses may require varying minimum levels of data quality. Data quality is defined as the degree of certainty of a data set with respect to precision, accuracy, reproducibility, comparability, and completeness. DQOs are qualitative and quantitative statements specifying the required quality of data needed to support SFI activities. The five established levels of data are:

1) Screening (DQO Level 1): This level provides the lowest data quality, but the most rapid results. It is often used for health and safety monitoring at the site, initial site characterization to locate areas for subsequent and more accurate analyses, and for engineering screening of alternatives.

2) Field Analyses (DQO Level 2): This level provides rapid results and better data quality than Level 1. Analyses may include mobile laboratory generated data. This level is used to verify a select portion of analytical results obtained from DQO Level 1.

3) Engineering (DQO Level 3): This level provides a high intermediate level of data quality and is used for site characterization. Engineering analyses may include mobile laboratory generated data and some EPA approved analytical laboratory methods (e.g., laboratory data with quick turnaround used for screening but without full quality control documentation).

4) Conformational (DQO Level 4): This level provides the highest level of data quality and is used for purposes of risk assessment, engineering design, and cost analyses. These analyses require full laboratory analytical and data validation procedures in accordance with U.S. EPA recognized protocols.

5) Non-Standard (DQO Level 5): This level refers to analyses by non-standard protocols (e.g., when exacting detection limits or analysis of an unusual compound). These

analyses often require method development or adaptation. The level of quality control is usually similar to DQO Level 4 data.

M&E will generate DQO Levels 1, 2, 3, and 4 analytical data during the SFI sampling activities, as detailed below:

- DQO Levels 1 and 2: Field Gas Chromatograph (GC) analyses performed, for health & safety monitoring, and field screening of samples using portable field equipment.
- DQO Level 3: Laboratory analyses performed on soil vapor samples collected during Phase II soil vapor survey activities. Information required for the installation of borings and vadose zone monitoring and extraction wells. Includes physical soil properties.
- DQO Level 4: Chemical analyses data for the soil boring samples. Level 4 data is required to meet rigorous QA/QC requirements and provide legally defensible data requiring a high degree of confidence.
- DQO Level 5: No Level 5 requirements have currently been identified.

2.1 DATA QUALITY CHARACTERISTICS

This project requires that five major characteristics of data quality be addressed during development of the project-specific environmental sampling and analytical plans.

2.1.1 Accuracy

Accuracy is defined as the degree of agreement of a measurement (or measurement average) with an accepted reference or true value. It is a measure of system bias and is usually expressed as a percentage of the true value.

Accuracy shall be determined in the laboratory through the use of matrix spike and matrix spike duplicate (MS/MSD) analyses. The laboratory shall perform these analyses in conformance with U.S. EPA protocols. For soil gas analyses, the accuracy is defined in Section 5.0. Accuracy, or percent recovery, is calculated as follows:

$$\% \text{ Recovery} = \frac{\text{Concentration (amount) found } \epsilon \text{ sample}}{\text{Concentration (amount) spiked } \epsilon \text{ matric}} \times 100$$

Sampling accuracy shall be maintained by the implementation and adherence to strict procedural protocols. Trip blanks and equipment blanks shall be collected and analyzed to ensure that samples are representative of site conditions and not contaminated by transportation or sampling methods, respectively.

2.1.2 Precision

Precision is a measure of agreement among individual measurements of the same property under similar conditions. It is expressed in terms of relative percent difference (RPD) between replicates or in terms of the standard deviation when three or more replicate analyses are performed.

Precision is calculated as the relative percent difference (RPD) of the recoveries of each compound in the matrix spike and the matrix spike duplicate. The formula for calculating RPD is as follows:

$$\text{RPD} = 1 \text{ MSR - MSDR } 1 \text{ X } 100$$

$$RPD = \frac{1 \; MSR - MSDR \; 1}{(\frac{1}{2}) \; (MSR + MSDR) \; X \; 100}$$

where:

MSR = Matrix Spike Recovery

MSDR = Matrix Spike Duplicate Recovery

RPD is always expressed as a positive value

MSR is further defined as:

$$MSR = \frac{SSR - SR}{SA} X\ 100$$

where:

SSR = Spiked Sample Result
SR = Sample Result
SA = Spike Added

Precision shall be determined through the use of MS/MSD analyses. The RPD between the two results shall be calculated as a measure of analytical precision.

2.1.3 Completeness

Completeness is a measure of the amount of valid data obtained compared to the amount expected to be collected under normal correct conditions. It is usually expressed as a percentage.

The objectives of the field sampling events at the PGA facility are to obtain samples for all analyses required at each individual site, to provide a sufficient quantity of sample for each of the required analyses, and to obtain quality control samples representative of all possible contamination sources (e.g., sample collection, storage, transportation, etc.). It is expected that the analytical laboratory will provide data that meet quality control acceptance criteria of 100 percent (see Tables 3-1A and 3-1B for acceptance criteria). Tables 3-1C and 3-1D provide targeted acceptance criteria for the field laboratory.

TABLE 3-1A
DATA QUALITY OBJECTIVES
PHOENIX-GOODYEAR AIRPORT SUPERFUND SITE
SUMMARY OF PRECISION, ACCURACY, COMPLETENESS OBJECTIVES
(SOIL VAPOR ANALYSES PHASE II)

PARAMETER Target Compound List	Method No.(1) Reference Modified	Detection Limits	Precision (a) (as RPD)	Accuracy(b) (Recovery)	Completeness
Benzene	EPA TO-14	.2-.5ppbv	15%	80-120%	100%
Carbon Tetrachloride	EPA TO-14	.2-.5ppbv	15%	80-120%	100%
Chlorobenzene	EPA TO-14	.2-.5ppbv	15%	80-120%	100%
Chloroform	EPA TO-14	.2-.5ppbv	15%	80-120%	100%
1,1-Dichloroethane	EPA TO-14	.2-.5ppbv	15%	80-120%	100%
1,2-Dichloroethane	EPA TO-14	.2-.5ppbv	15%	80-120%	100%
1,1-Dichloroethene	EPA TO-14	.2-.5ppbv	15%	80-120%	100%
cis 1,2-Dichloroethene	EPA TO-14	.2-.5ppbv	15%	80-120%	100%
trans 1,2-Dichloroethene	EPA TO-14	.2-.5ppbv	15%	80-120%	100%
Methylene Chloride	EPA TO-14	.2-.5ppbv	15%	80-120%	100%
Tetrachloroethene	EPA TO-14	.2-.5ppbv	15%	80-120%	100%
Toluene	EPA TO-14	.2-.5ppbv	15%	80-120%	100%
Trichloroethene	EPA TO-14	.2-.5ppbv	15%	80-120%	100%
Vinyl Chloride	EPA TO-14	.2-.5ppbv	20%	60-140%	100%
Total Xylenes	EPA TO-14	.2-.5ppbv	15%	80-120%	100%
1,1,1-Trichloroethane	EPA TO-14	.2-.5ppbv	15%	80-120%	100%

a) Precision-Relative Percent Difference (RPD) between duplicate matrix spike recoveries, or duplicate analyses.

b) Accuracy-Percent matrix spike recovery.

1) Soil vapor will be analyzed under U.S. EPA Method Modified TO-2 and speciated for the above compounds as a subset of U.S. EPA Method 8240 compound list.

TABLE 3-1B
DATA QUALITY OBJECTIVES
PHOENIX-GOODYEAR AIRPORT SUPERFUND SITE
SUMMARY OF PRECISION, ACCURACY, COMPLETENESS OBJECTIVES
(SOIL ANALYSES)

PARAMETER Target Compound List	Method No. Reference	Detection Limit	Precision (a) (as RPD)	Accuracy(b) (Recovery)	Completeness
Benzene	EPA 8240	5.0 ug/kg	20%	80-120%	100%
Carbon Tetrachloride	EPA 8240	5.0 ug/kg	20%	80-120%	100%
Chlorobenzene	EPA 8240	5.0 ug/kg	20%	80-120%	100%
Chloroform	EPA 8240	5.0 ug/kg	20%	80-120%	100%
1,1-Dichloroethane	EPA 8240	5.0 ug/kg	20%	80-120%	100%
1,2-Dichloroethane	EPA 8240	5.0 ug/kg	20%	80-120%	100%
1,1-Dichloroethene	EPA 8240	5.0 ug/kg	20%	80-120%	100%
cis 1,2-Dichloroethene	EPA 8240	5.0 ug/kg	20%	80-120%	100%
trans 1,2-Dichloroethene	EPA 8240	5.0 ug/kg	20%	80-120%	100%
Methylene Chloride	EPA 8240	5.0 ug/kg	20%	80-120%	100%
Tetrachloroethene	EPA 8240	5.0 ug/kg	20%	80-120%	100%
Toluene	EPA 8240	5.0 ug/kg	20%	80-120%	100%
Trichloroethene	EPA 8240	5.0 ug/kg	20%	80-120%	100%
Vinyl Chloride	EPA 8240	10.0 ug/kg	20%	60-140%	100%
Total Xylenes	EPA 8240	5.0 ug/kg	20%	80-120%	100%
1,1,1-Trichloroethane	EPA 8240	5.0 ug/kg	20%	80-120%	100%

a) Precision-Relative Percent Difference (RPD) between duplicate matrix spike recoveries, or duplicate analyses.
b) Accuracy-Percent matrix spike recovery.

TABLE 3-1C
DATA QUALITY OBJECTIVES
PHOENIX-GOODYEAR AIRPORT SUPERFUND SITE
SUMMARY OF PRECISION, ACCURACY, COMPLETENESS OBJECTIVES
(HEADSPACE SOIL ANALYSES)

PARAMETER Target Compound List	Method No. Reference	Detection Limit	Precision (a) (as RPD)	Accuracy(b) (Recovery)	Completeness
1,1-Dichloroethene	Headspace GC	50 ppbv	20%	80-120%	100%
Tetrachloroethene	Headspace GC	50 ppbv	20%	80-120%	100%
Trichloroethene	Headspace GC	50 ppbv	20%	80-120%	100%
1,1,1-Trichloroethane	Headspace GC	50 ppbv	20%	80-120%	100%

a) Precision-Relative Percent Difference (RPD) between duplicate matrix spike recoveries, or duplicate analyses.
b) Accuracy-Percent matrix spike recovery.

TABLE 3-1D

DATA QUALITY OBJECTIVES

PHOENIX-GOODYEAR AIRPORT SUPERFUND SITE

SUMMARY OF PRECISION, ACCURACY, COMPLETENESS OBJECTIVES

SOIL GAS ANALYSIS - PHASE I

Parameter	Method No. Reference	Detection Limit	Precision (a) (as RPD)	Accuracy (b) Recovery	Completeness
Trichloroethene	Modified TO-14 IND	50 ug/L	20%	80-120%	100%
1,1-Dichloroethene	Modified TO-14 IND	50 ug/L	20%	80-120%	100%
Tetrachloroethene	Modified TO-14 IND	50 ug/L	20%	80-120%	100%
1,1,1-Trichloroethane	Modified TO-14 IND	50 ug/L	20%	80-120%	100%

(a) Precision - Relative Percent Difference (PRD), between duplicate matrix spike recoveries or duplicate analysis.
(b) Accuracy - Percent matrix spike recovery.
IND - Quantifies indicator compounds (TCE, PCE 1,1-DCE AND 1,1,1-TCA

Completeness is calculated as the percentage of valid data points compared to the quantities of valid data that was to be collected to achieve particular project requirements. Data points may not be valid if samples exceeded holding times, if quality control sample criteria were not met and reanalysis of samples was not possible, or if samples containers were broken or otherwise destroyed. The overall completeness objective for this project is 100%.

The percent completeness is calculated as:

$$\%C = \frac{NA}{NI} X\ 100$$

where:

N_A = Actual number of valid analytical results obtained.

N_I = Theoretical number of results obtainable under ideal conditions.

2.1.4 Representativeness

Representativeness expresses the degree to which data accurately and precisely represent a characteristic of a data population, process condition, a sampling point, or an environment. For this project, grab samples shall be taken, and such samples are, by definition, representative of the conditions only at the point in time collected, within sampling and analytical error. The sampling network rationale was designed to provide data representative of affected site conditions and unaffected background condition. Consideration was given to past site practices, existing analytical data, the physical setting at the PGA facility, and constraints inherent to performance of specific objectives.

2.1.5 Comparability

Comparability expresses the confidence with which one data set can be compared to another. To achieve comparability in this project, the data generated shall be reported using units of micrograms per liter (μg/l) for field blank water samples, micrograms per kilogram (μg/kg) for soil samples, and parts per billion of volume of air (ppbv) for soil gas analysis. By using sampling and analysis procedures consistent with US EPA protocols, all data sets shall be comparable within a specific site and between sites to ensure that a consistent data base is used from which decisions concerning remedial action are made. To ensure data comparability, standard analytical reference materials traceable to NBS, U.S. EPA, or equivalent standards shall be used to establish that analytical procedures are generating valid data. The procedures used to obtain the planned analytical data, however, may not be directly comparable to existing data due to differences in analytical procedures and quality assurance objectives. Additionally, different quantities of a compound may be reported from the same sample by the same laboratory using different analytical techniques. This may result from variability within a non-homogenous sample, such as soil, or from extraction efficiency variation among methods.

2.2 DATA QUALITY OBJECTIVES FOR FIELD ACTIVITIES

The DQOs that have been developed for field activities to be conducted at the PGA facility take into consideration specific geotechnical requirements of the SFI. The geotechnical requirements are intended to provide acceptable technical data and tracking procedures to accurately obtain, describe, and evaluate representative samples of the subsurface environment. These quality assurance requirements are intended to ensure the validity and certainty of analytical results.

The summary of DQOs and data collection methods developed for the PGA facility Field Investigation are summarized as the following:

a. The objectives of collecting data from the media associated with each field activity;

b. The analytical and physical data types required to determine the type, degree, and migration characteristics of the contaminants and the required site characteristics. Included is the estimated number of data points or samples that will be collected to meet the data objective;

c. A description of the sampling method being employed for each type of data;

d. The use(s) for which data are being collected. This has been described by using general purpose categories which represent different data uses (e.g., Health and Environmental Assessment, Site Characterization, Evaluation of Remedial Action Alternatives);

e. The analytical method that will be employed to analyze samples. Depending on the analytical DQO level of the associated data, this item may specify an instrument or an analytical method number;

f. The detection limit requirements for the chosen analytical methods. Detection limits will always be lower than the levels of concern or action ranges for the site;

g. The types and numbers of quality control samples that will be collected in association with each sampling event/media.

3.0 QUALITY ASSURANCE METHODOLOGY FOR SAMPLING

Sampling methods for this SFI are based on M&E and U.S. EPA procedures. Step by step sample collection procedures are presented in detail in the sampling section.

3.1 QUALITY CONTROL SAMPLE TYPES

During sampling, a number of QC samples will be collected and submitted for laboratory analysis. The number and frequency of QC sample collection is determined by the individual project requirements and is outlined in this section.

A list of the types of QC samples that will be collected along with a brief description of each sample type is outlined in the following sections.

3.1.1 Trip Blanks

Trip blanks will be collected for chemical analysis of volatile organics. The analytical results serve as a baseline measurement of volatile organic contamination that samples may be exposed to during transport and laboratory storage prior to analysis.

Trip blanks originate in the analytical laboratory. For soils, they will be comprised of ASTM Type II reagent water for organic analyses. The water is placed in the appropriate sample containers by the subcontracting laboratory, transported to the sample collection site, stored along with the samples, and returned to the laboratory along with soil samples collected for volatile organic analysis. The trip blank containers will not to be opened in the field.

Trip blanks will not be used for soil gas samples collected in SUMMA canisters. The canisters are constructed of electropolished stainless steel and afford no ability for sample cross contamination. The sample inlet port cover will be tightened in the field and custody tape will be placed over the valve and sample inlet prior to shipment.

One trip blank will be included in each shipping cooler containing samples for volatile organics. The sample containers will later be stored in the laboratory with the samples and analyzed for the appropriate parameters.

Field blanks will also be collected for analysis of volatile organic compounds. Field blanks serve as a measurement or indicator of contamination which may be introduced during actual sample collection. For soils, field blanks will be comprised of organic free reagent water which will be transported from the analytical laboratory and transferred to appropriate sample containers on location and in conjunction with soil sampling. One (1) field blank will be prepared for every ten (10) soil samples which are collected.

3.1.2 Equipment Blanks

Equipment blanks will be collected for each piece of sampling equipment used in the collection of samples when devices other than the sample bottle itself are required. The analysis of these blanks serves to verify the cleanliness of the sampling equipment. Equipment blanks are rinseates. These samples will be placed in sample containers by the laboratory, and transported to the sample collection site. The container will then be opened and a sufficient amount transferred into the sampling device following equipment decontamination procedure, transferred back to the sample bottle, and returned to the laboratory for analysis. The equipment blanks will be analyzed for the same parameters as the associated samples.

One equipment blank will be collected for each day of sample collection.

If samples are collected directly into the sample containers, field blanks will be submitted instead of equipment blanks. These will consist of analyte-free water, air or gas (ultrapure with halogen assay) transferred into the appropriate sample containers in the field, preserved for the analytes of interest, shipped to the laboratory with the field samples, and analyzed at the laboratory for the same parameters as the associated field samples.

3.1.3 Field Duplicates

Field duplicates are defined as additional samples collected independently of each other at a single sampling location during a single episode of sampling. Analysis of these duplicates provides statistical information relating to sample variability and serves as a check on the precision of sample collection methods as well as analytical procedures.

Ten percent of all samples will be collected in duplicate and submitted for laboratory analysis. Field duplicates will be labeled so that persons performing laboratory analyses cannot distinguish duplicates from other samples. This type of duplicate has also been referred to as a blind duplicate.

3.1.4 Laboratory Quality Control Samples

Laboratory quality control samples indicate laboratory specific problems and provide indices relating to matrix recovery. Method blanks determine the existence and magnitude of contamination problems. Matrix and laboratory spikes provide information about matrix recovery limits. Duplicate analyses (for matrix and blank spikes) are indicators of both the precision and the accuracy of the sample results. M&E will direct the laboratory in the selection of matrix spikes and duplicate analyses.

3.2 SAMPLE PRESERVATION AND QUANTITIES

Table 3-1 lists the type of containers and preservatives required by the laboratory and the maximum holding time allotted for each analysis. The field crew or site manager will make arrangements to procure sample preservatives and decontaminated sample containers, including those necessary for field quality assurance samples, from the laboratory.

TABLE 3-1

LIST OF CONTAINER TYPE, REQUIRED SAMPLE PRESERVATIVE, AND MAXIMUM HOLDING TIME

Matrix	Container Type	Parameters	Preservative	Holding Time
Soil Gas (Phase 1)	Tedlar Bag	VOCs	4 Deg C Light Tight Container	24 Hours
Soil (1)	250 ml glass septa jar	VOCs	4 Deg C	14 Days
Soil Gas (2)	Summa cannister	VOCs	4 Deg C	14 Days

(1) Field lab headspace analysis - EPA Method 3810.
(2) CLP - laboratory analysis.

3.3 SAMPLE CUSTODY AND IDENTIFICATION

An overriding consideration essential for the validation of environmental measurement data is the necessity to demonstrate that samples have been obtained from the locations stated and that they have reached the laboratory without alteration. Evidence of the sample traceability from collection to shipment, laboratory receipt, and laboratory custody (until proper sample disposal) must be documented. A sample is considered to be in a person's custody if the sample is:

- In a person's actual possession;
- In view after being in a person's possession;
- Locked so that no one can tamper with it after having been in physical custody; and
- In a secured area, restricted to authorized personnel.

The Project Geologist is responsible for overseeing and supervising the implementation of proper sample custody procedures in the field. He/she is also designated as the field sample custodian and is responsible for ensuring sample custody until the samples have been transferred to a courier and sent directly to the laboratory.

Once the samples have been received by the laboratory, samples proceed through an orderly processing sequence specifically designed to ensure continuous integrity of both the sample and its documentation.

3.3.1 Chain of Custody

The chain of custody procedures are initiated in the field following sample collection. The procedures consist of: 1) preparing and attaching a unique sample label to each sample collected, 2) completing the chain of custody form, and 3) preparing and packing the samples for shipment. These procedures are further described in the following sections.

3.3.2 Sample Labels and Tags

Field personnel are responsible for uniquely identifying, labeling, and tagging, all samples collected during a field investigation. All labeling and tagging must be done in indelible/waterproof ink. Any errors are crossed out with a single line, dated, and initialled. Each sample label securely affixed to the appropriate sample container and sample tag attached to the neck of each sample container must contain the following information:

- Client/site name;
- Unique project-specific sample identification number (i.e., station number);
- Sample location/description number;
- Type of analysis to be performed and the name of the laboratory to whom the samples are being sent;
- Sample volume, container type, and the type of chemical preservation used;
- Sampling date and time; and
- Initials of the person obtaining the sample.

3.3.3 Chain of Custody Record

A chain of custody form (see Figure 3-1) must be completed for each sample set collected at a sampling location. The form is maintained as a record of sample collection, transfer, shipment, and receipt by the laboratory. The forms must also contain pertinent information concerning sampling location, date, and times; signatures of the sampling team members; types of samples collected along with a unique sample identification number; the number of samples collected and shipped for analysis in each lot; the project name and number; and the name of the laboratory to which the samples are being sent.

3.3.4 Transfer of Custody

Samples shall be accompanied by an approved and completed chain of custody form during each step of custody, transfer, and shipment. When physical possession of samples is transferred, both the

Metcalf & Eddy

CHAIN OF CUSTODY FORM

Job/Project Name:	Job/Project Location:	Job/Project Number:
Samplers: (Signatures)	Recorder: (Signature)	Date:
Lab (Samples Sent To):		

SAMPLING		SAMPLE NUMBER	SAMPLE LOCATION	MATRIX					COMPOSITE/GRAB	PRESERVATIVE (Y/N)	ANALYSIS REQUESTED									COMMENTS
Date	Time			Water	Soil														Total #	

Relinquished By: (Signature)	Date:	Time:	Received By: (Signature)	Relinquished By. (Signature)	Date:	Time:	Received By: (Signature)
Relinquished By: (Signature)	Date:	Time:	Received By: (Signature)	Relinquished By: (Signature)	Date:	Time:	Received By: (Signature)
Relinquished By. (Signature)	Date:	Time:	Received for Lab By: (Signature)	Date.	Time:	Comments:	
Method of Shipment:							

Distribution: **Original** to Lab. **Copy 1** to Field Files, **Copy 2** to Project Manager

Form 274 (Rev. 5/89)

FIGURE 3-1

Sample Chain of Custody Form

individual relinquishing the samples and the individual receiving them shall sign, date, and record the time on the chain of custody form. In the case of sample shipment by an overnight courier, a properly prepared airbill shall serve as an extension of the chain of custody form while the samples are in transit.

3.3.5 Sample Packaging and Shipping

Following sample collection, all samples shall be brought to an on-site location for batching and paperwork checks. At this central location, like sample types are matched (i.e., solids, liquids, gasses, etc.) with similar sample types from all sample locations. Labels and log information are checked to ensure there is no error in sample identification. The samples are packaged to prevent breakage and/or leakage, and the shipping containers are labeled in accordance with the DOT regulations for transport.

As soon as field personnel are ready to transport samples from the field to the laboratory, the laboratory shall be notified by telephone of the shipment along with the estimated time of arrival. All samples shall be shipped directly to the laboratory via an overnight carrier. The field team shall determine whether it is best to directly transport the packages to the shipping office or to arrange for on-site pick-up. For each sample shipment to a specific subcontracting laboratory, an overnight airbill must be properly completed.

Unless field collected information indicates otherwise, all environmental samples collected shall be treated as non-hazardous aqueous liquids, non-hazardous soil, and non-hazardous gasses.

Because of the expected non-hazardous nature of the collected samples, packaging and shipping criteria have been designed only to maintain chain of custody protocol as well as to prevent breakage of the sample containers. The packaging and shipping procedures shall be as follows:

- Place a layer of cushioning material (e.g., vermiculite) in the bottom of the watertight insulated metal or equivalent strength plastic shipping containers;

- Wrap the properly labeled and secured glass sample bottles and purgeable vials with plastic bubble wrap. Place the wrapped containers into watertight zip lock bags and seal the bags closed;

- Place sample bottles/containers (top side up) into the shipping container arranging the bottles so that the glass bottles are surrounded by plastic bottles;

- Using the necessary packing material, pack the sample containers to ensure that they do not shift during transport;

- Fill any void spaces of the shipping container, around and on top of the sample bottles, with ice cubes or chips sealed in plastic bags or with blue ice;

- Seal the appropriate chain of custody form(s) in a zip-lock plastic bag, and tape it securely to the inside of the shipping container lid;

- Close and lock/latch the shipping container. Seal the space between the container body and lid with waterproof tape. (If the shipping container used is a picnic cooler, tape the drain plug closed to prevent any leakage of water as the ice packs melt during transport.);

- Apply several wraps of chain of custody tape around the shipping containers perpendicular to the seal to ensure that the lid remains closed if the latch is accidentally released or damaged during shipment. Do not obscure any stickers or labels on the shipping container with the chain of custody tape;

- Place a completed overnight carrier airbill on the lid of the shipping container. Include the name, address, and telephone number of the receiving laboratory and the return address and telephone number of the shipper on the airbill;

- Place a "This End Up" label on the lid and on all four sides of the shipping container; and

- Each shipping container must not weigh more than 150 pounds if it is to be shipped overnight by Federal Express or similar carrier.

3.4 SAMPLE DOCUMENTATION

In all cases, the Field Geologist/Quality Assurance Officer shall maintain a concise, detailed field logbook containing accounts of all field activities and actions taken as well as documentation of observations made.

All sampling procedures, instrument calibration, and information pertinent to sampling conditions, progress, and field data collection must be documented following a prescribed set of guidelines. The

documentation serves as a permanent and traceable record of all activities related to a specific field investigation project. The record must be legible and accessible to allow ease in verifying sampling activities and addressing future questions which may arise concerning such issues as sample integrity, and sample traceability.

3.4.1 Sample Designation/Identification

All samples shall be identified by a unique sample identification number which includes the project number hyphenated with a consecutive numbering system specific to the samples collected for that project. For example: 006791-053 identifies this as the 53rd sample collected for project number 006791. The location and sample matrix may be further identified with descriptive information. For example: SG-1A-3 would describe a Soil Gas Sample collected at location 1A at a depth of 3 feet. This identification number is used to ensure sample traceability and identifies this particular sample as to its site origin, type, location, sample matrix, and sample data within a specific project; all samples shall be identified using a numbering system cross-referenced to descriptive sample information. The cross-index is to be designed and maintained by the field team leader.

The unique sample identification number shall be recorded on the chain of custody forms accompanying each sample to the laboratory for sample analysis.

3.4.2 Daily Log

The field team leader has the responsibility to maintain the daily field documents pertaining to sample identification and control. Special emphasis is placed on log book completeness and accuracy. Field log books, field data forms, and chain of custody forms must contain entries made with indelible ink and must be dated and signed. All statements in the logbook must be legible, accurate, and include documentation of all project activities. At a minimum, entries into the log book shall include weather conditions, date and time of each sample collection, and references to any difficulties encountered and how such difficulties were resolved.

3.4.3 Records

The following section describes the type of records that will be maintained by project staff members.

3.4.3.1 Field Log Books

A field log book shall be maintained by each field team member for this hazardous waste field investigation project. The log book shall be comprised of a bound book with consecutively numbered pages; no pages must be skipped when filling in the log books. The integrity of field documentation is further ensured by the use of field log books containing paper treated to repel the rain or any other aqueous splashings experienced during field documentation. Should more than one field log book be required, they shall be numbered sequentially.

The front of each field log book shall contain the following information:

- Project name and number;
- Name of the contract under which the investigation is being conducted; and
- Date(s) of use.

The field log book shall contain a diary of all pertinent project activities. Standard information recorded in the field log book includes: general observations made in the field, identification and calibration of instruments used, and field data.

The field log book shall contain the following information:

- Date and time of personnel entries on-site, weather conditions, temperature;
- List of start/stop times of all subcontractors hired for activities such as drilling, steam cleaning, well development;
- List of the personnel present on-site during each sampling day to include all M&E personnel, subcontractors, and visitors;
- List of the equipment decontaminated along with a reference to the procedures used;

- Description of the sampling locations in reference to permanent landmarks;
- List of any changes from standard operating procedures, decisions made in the field, and other pertinent information;
- QA/QC samples associated with the samples collected;
- Equipment and/or instrument identification numbers (if available) for those used;
- Sample preservation techniques performed;
- Air monitoring information gathered (e.g., PID, OVA readings, etc.);
- Level of personal protection mandated (e.g., Level B, C, D) and record of pertinent time intervals spent by each field team member at each level (e.g., time spent in Level C developing a well, time spent in Level C sampling soil from a backhoe, etc.);
- Other logs/paperwork used to document activities,
- Instrument calibration information including the instruments calibrated during the day and the individual who performed the calibration (Note: Instrument calibration information should be documented in the field logbook as well as on the instrument calibration log kept with each instrument, serving to document instrument response over time.);
- List of the samples collected by media (i.e., soil, gas, etc.); and
- Comments relative to any problem areas that occurred during the day's activities, their final resolution, and any anticipated impact on the outcome of the field investigation.

The last item to be entered at the bottom of each page of the field log book shall be the signature of the person responsible for completing the data entry.

3.4.3.2 Project Log Book

A unique project-specific log book shall be maintained for the Phoenix-Goodyear Airport environmental investigation. The log book shall be comprised of a bound book with consecutively numbered pages. Should more than one project log book be required, they shall be numbered sequentially.

The primary purpose of this log book is to contain all the data specific to the project in one central location. In general, the project log book shall contain essentially the same information as the field log book. However, the project log book need not list all the actual field data and instrument calibration information generated during a sampling episode. References to other documents that contain specific field activity descriptions, outlines of any administrative occurrences that have affected the field work for any given sampling activity, as well as a summary of the field activities, must be documented in the project log book and kept up-to-date on a daily basis.

3.4.3.3 Field Equipment Log Book

A unique field equipment log book is required for each piece of field equipment (i.e., OVA, PID meter, etc.). This log book is used for the documentation of the proper use, maintenance, and calibration of the field equipment as well as for any information concerning the conformance and decontamination status of each piece of equipment.

The field log book is maintained and kept up-to-date following every use, maintenance, inspection, repair, and/or calibration of the equipment. Entries into the log book should contain the following information:

- Signature of the person making the entry;
- Date of entry;
- Status of equipment in terms of its operational and decontamination standing;
- Reference to the procedures used for calibration or maintenance as well as the procedural results and/or description;
- Name of person(s) using the equipment and a brief description of the nature of the work; and
- Calibration log forms used to record all on-site calibrations.

The field equipment log book must be a bound book with consecutively numbered pages. Every page in the log book must be signed by the field equipment maintenance person responsible for

keeping each piece of equipment in proper repair and maintained for field use as a reflection of their review and approval of each entry.

3.4.3.4 Field Data Forms

Along with the completion of data entry in each of the above-mentioned log books, field data forms should also be completed and filed in a 3-ring notebook maintained at the sampling site for all field activities.

These forms may include the following:

- Site Health and Safety Log - to maintain accurate health and safety records for each field team member;
- Geologic Boring Log - to document soil boring operations;
- Monitoring Well Installation Form;
- Monitoring Well Soil Gas Sampling Worksheet; and
- Field parameter forms (including site I.D., sampling and time, field sample number, sample depth (if applicable), and sampling technique).

3.4.3.5 Chain of Custody Record

Possession of samples shall be traceable from the time a sample is collected until it is used as evidence in legal proceedings, if applicable. To adequately track sample possession, a documented chain of custody must be maintained. See Section 3.3 for more detailed guidelines concerning sample custody.

3.4.3.6 Materials Certification

Documentation concerning the quality of all materials used on site shall be retained on site for the duration of the Site Investigation at the Phoenix-Goodyear Airport. The following list of documentation for materials certification serves as an example:

- Sieve analysis of sand pack material for monitoring wells;
- Sample and manufacturer's certification of bentonite used for grout in monitoring and extraction wells;
- Sample and manufacturer's certification of cement (Type II or V) used for grout in monitoring and extraction wells;
- Manufacturer and lot number for calibration standards;
- Labels from materials used for well construction;
- Labels from distilled water used in decontamination; and
- Certificates of cleaning or decontamination furnished by the laboratory (the certificate shall detail the cleaning procedure).

Documentation and samples of the materials used in well construction and decontamination procedures will be archived for future reference. Material samples are required for sand pack material, bentonite, and cement used during the site investigation.

These materials shall be sampled and labeled in a similar fashion as described for the environmental and field QC samples. Approximately 2 pounds of dry material is required per sample.

The archived samples shall be stored in clean containers and protected from exposure to the elements for the duration of the site investigation. The Project Manager shall determine the length of time material blanks are to be stored following completion of the site investigation.

3.4.4 Variances

A variance is a deviation from project requirements. All variances from procedural, planning, and design documents, and other project requirements, shall be documented in a Field Change Request.

Field changes and deviations from project planning documents shall be reviewed and approved by the M&E Project Manager or Project Quality Assurance Officer. All deviations from procedural and planning documents shall be recorded in the field log book. Project reports shall detail all field changes and deviations.

4.0 SAMPLING - Phase I/II SFI

4.1 SCOPE AND APPLICATION

This section covers the materials, equipment and procedures utilized by M&E for collecting soil gas, soil, and groundwater samples in the field.

4.2 SAMPLING PROTOCOL AND EQUIPMENT - PHASE I

4.2.1 Phase I Sampling Probes and Drive Point Rigs

Soil gas sampling probes have been specially designed by M&E for use at the PGA site. The probe will consist of a five foot section of driller's "A" rod (sampling stem) of 1 5/8-inch O.D., 9/16-inch I.D., which is threaded (Acme threads) to a machined, solid drive point at the base and is in turn connected to a 24-inch segment of "A" rod at the top. The top segment will be connected to the sampling stem via an Acme threaded coupler into which a gas-tight threaded fitting has been machined. One quarter inch teflon tubing will be attached to this fitting and will be threaded through the top pipe segment where it will then run upwards to ground surface, allowing sampling at depth. Additionally, the top segment is fitted with an "A" to "AW" rod coupler allowing direct connection to a string of conventional driller's rod. The sampling stem features eight six-inch length sections of recessed, machined surfaces with a network of 1/32-inch holes drilled to permit vapor flow. Figure 4-1 shows the basic soil gas probe design. The probe will be lowered via a wire-line to the intended sampling depth and hammer-driven into place using a drilling rig equipped with a hydraulic hammer. The rig will be equipped with a hydraulic outrigger, pipe rack, and a steam cleaner. At the precise sampling depth, a vacuum will be applied to the soil gas sampling probe and a sample will be collected in accordance with the procedures described in the following two sections.

4.2.2 Sampling Adapters

Soil gas samples are collected from the probes via adapters constructed of stainless steel swage-lok fittings attached to new 1/4-inch teflon tubing.

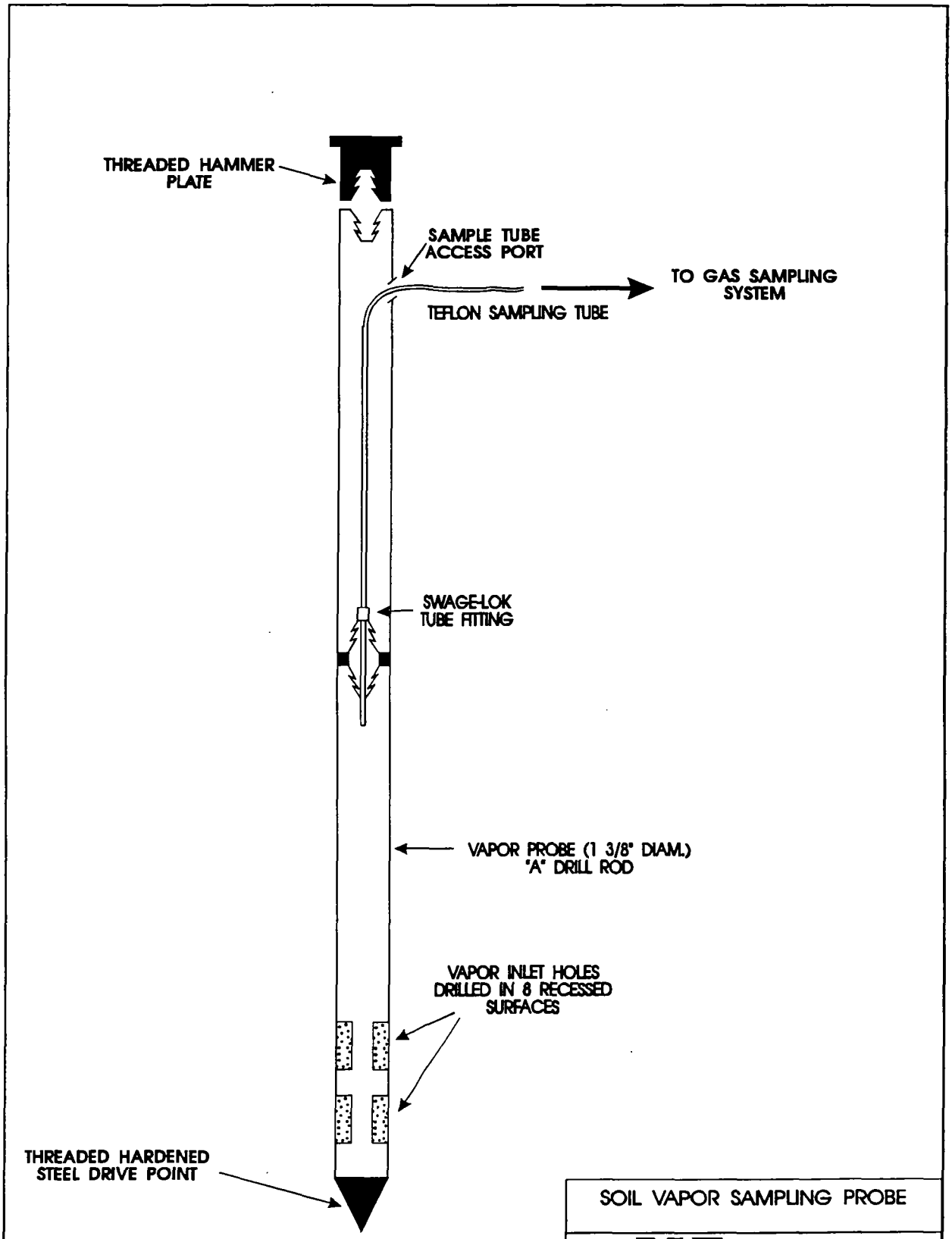

SOIL VAPOR SAMPLING PROBE

M&E Metcalf & Eddy

Drawn by: J. Weidmann	Job Number: 006791	Date: November 1992
Checked by: S. Zachary		Figure Number: 4-1

4.2.3 Soil Gas Containers

Atmospheric or soil gas samples will be collected in 3-liter capacity Tedlar bags. Each sample bag contains its own sample inlet valve and port for sample tubing. Full laboratory decontamination certification will be provided for each of the canisters used. Vapor sample is drawn into the sample bag through the opening of the valve. The flow rate of the sample into the bag will be controlled by placing a laboratory cleaned and calibrated mass flow controller between the sample tubing and the bag valve.

The total volume of sample collected in the sample bag will be determined by multiplying the mass flow rate of the controller by the time the sample was allowed to flow into the bag.

4.2.4 Soil Gas Sampling (Phase I)

After purging two (2) probe volumes from the sampling train or a peak of VOC concentrations occur, whichever comes first, the mass flow controlled pump will be shut off. Peak concentration will be determined during purging through the use of a PID detector placed within the sample train at the exhaust of the purge pump.

When the vacuum instrument is returned to its ambient reading (pressure prior to pumping), the programmable vacuum pump will be reactivated and a soil vapor sample taken between the pump and the vapor probe by collecting the gas sample in a three-liter capacity Tedlar bag. The flow controller on the programmable pump will be set to pump 3 liters of gas at a rate of 500 ml/min. Figure 4-2 provides a schematic of the programmable gas sampling/vacuum pump. Because of potential volatile losses from samples collected at the discharge end of a pump, M&E will use a soil vapor vacuum box. This technique utilizes the generation of a vacuum within a vacuum box, which reduces air pressure around the Tedlar bag through programmed pumping. This results in a non-intrusive flow of the soil vapor sample (which is connected to the vapor probe tubing) into the bag as pressures within the vacuum box begin to equalize. Figure 4-3 presents a schematic diagram of the soil vapor probe programmable pump and vacuum box sampling assembly. The flow controller on the pump will be set to 500 ml/min. to collect a 3-liter volume gas sample.

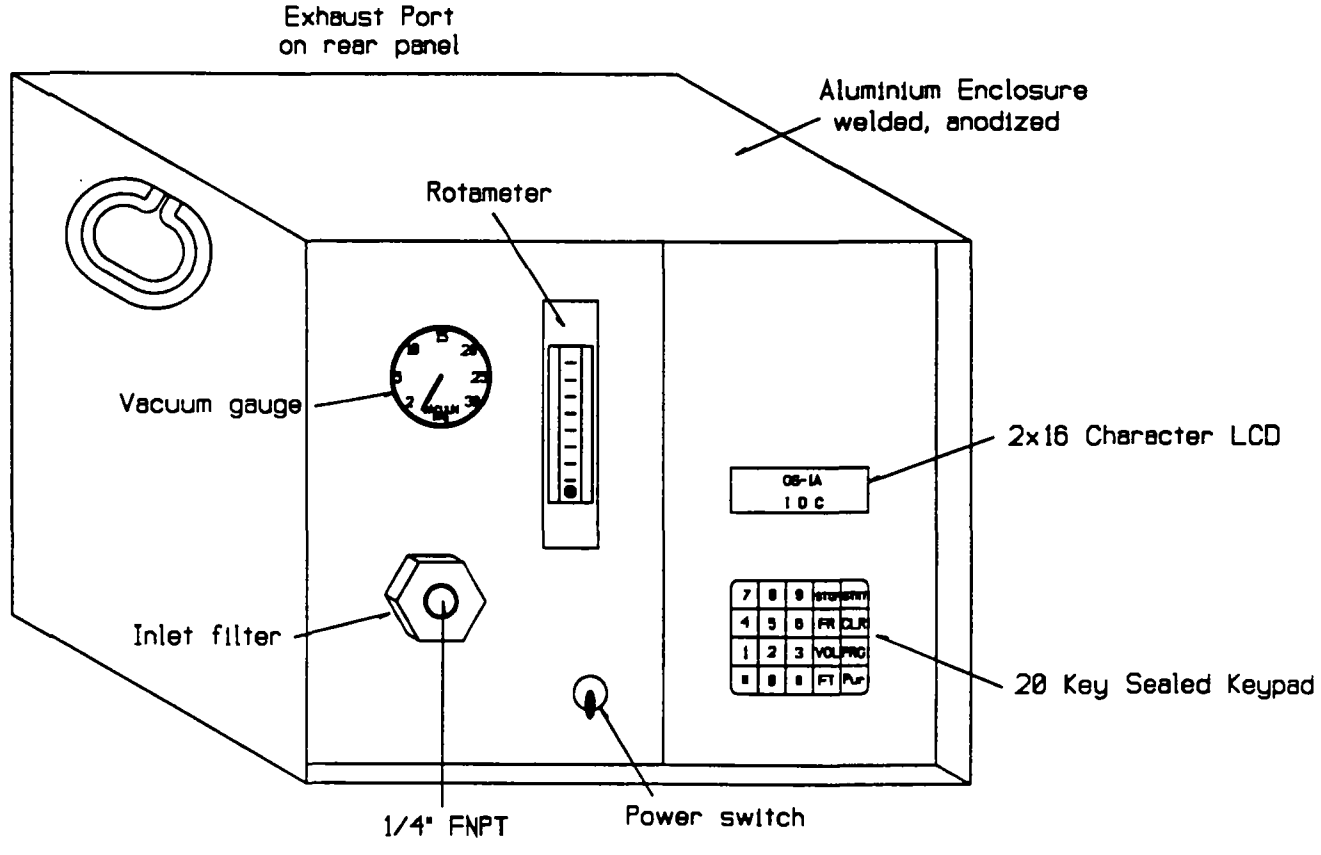

Source: IDC (1991)

FIGURE 4-2

Schematic of Programmable Soil Vapor Sampling/Vacuum Pump Instrument

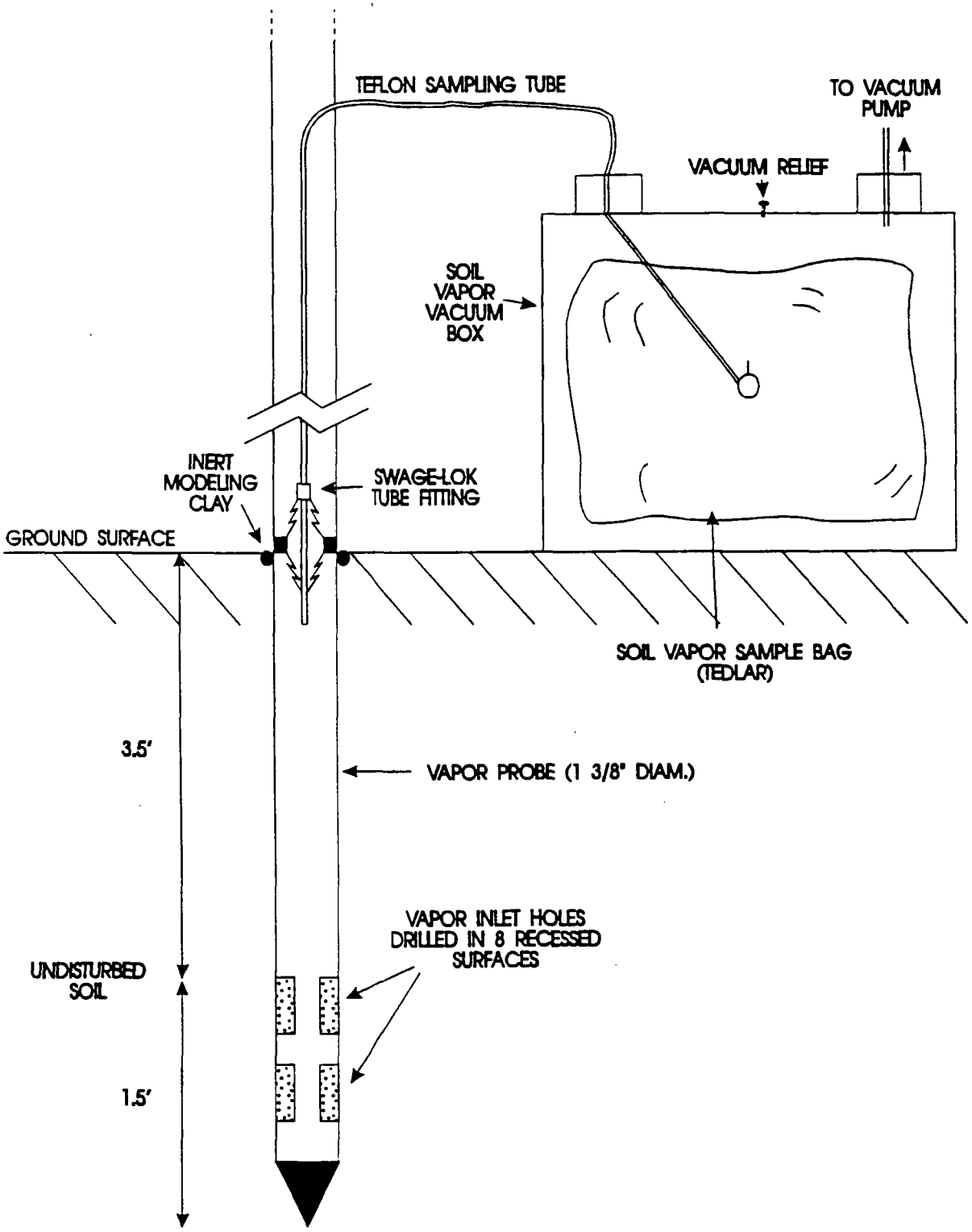

SOIL VAPOR SAMPLING PROBE WITH VACUUM BOX		
M&E Metcalf & Eddy		
Drawn by: J. Weidmann	Job Number: 006791	Date: September 1992
Checked by: S. Zachary		Figure Number: 4-3

4.3 SAMPLING PROTOCOL AND EQUIPMENT - PHASE II

4.3.1 Soil Gas Canisters

Phase II soil gas samples will be collected using 1-liter capacity SUMMA canisters. SUMMA canisters are constructed of pre-cleaned, electropolished stainless steel. The canisters are precleaned in the laboratory and are shipped preevacuated to approximately 27 inches of mercury vacuum. Each canister contains its own sample inlet needle valve onto which is threaded a precleaned, mass flow controller calibrated to 200 ml/min sampling rate. Full laboratory decontamination certification will be provided for each SUMA canister used at the site.

4.3.2 Soil Gas Sampling (Phase II)

Initially, each soil gas well to be sampled will be purged of static well gas using the programmable mass flow controlled vacuum pump. Purging will be conducted at a preset rate of 200 ml/min. To initiate purging, a gas tight, clean segment of 1/4-inch diameter Teflon tubing will be connected from the soil gas well valve to the programmable vacuum pump intake using stainless steel swage-lok fittings. The programmable vacuum pump will be activated to purge two (2) well volumes from the sampling train or until a peak of VOC concentrations occur, whichever comes first. Peak concentrations will be determined during purging through the use of a PID detector placed at the exhaust of the purge pump.

When the vacuum instrument returns to its ambient reading (pressure prior to pumping), laboratory soil gas sampling will commence. To initiate sampling, the downstream end of the teflon tubing will be attached to the intake of the mass flow controller mounted to the SUMMA canister (see Figure 4-4). After ensuring that all fittings are gas tight, the needle valve on the SUMMA canister will be opened to begin sample collection. Total sampling time will be five minutes which is

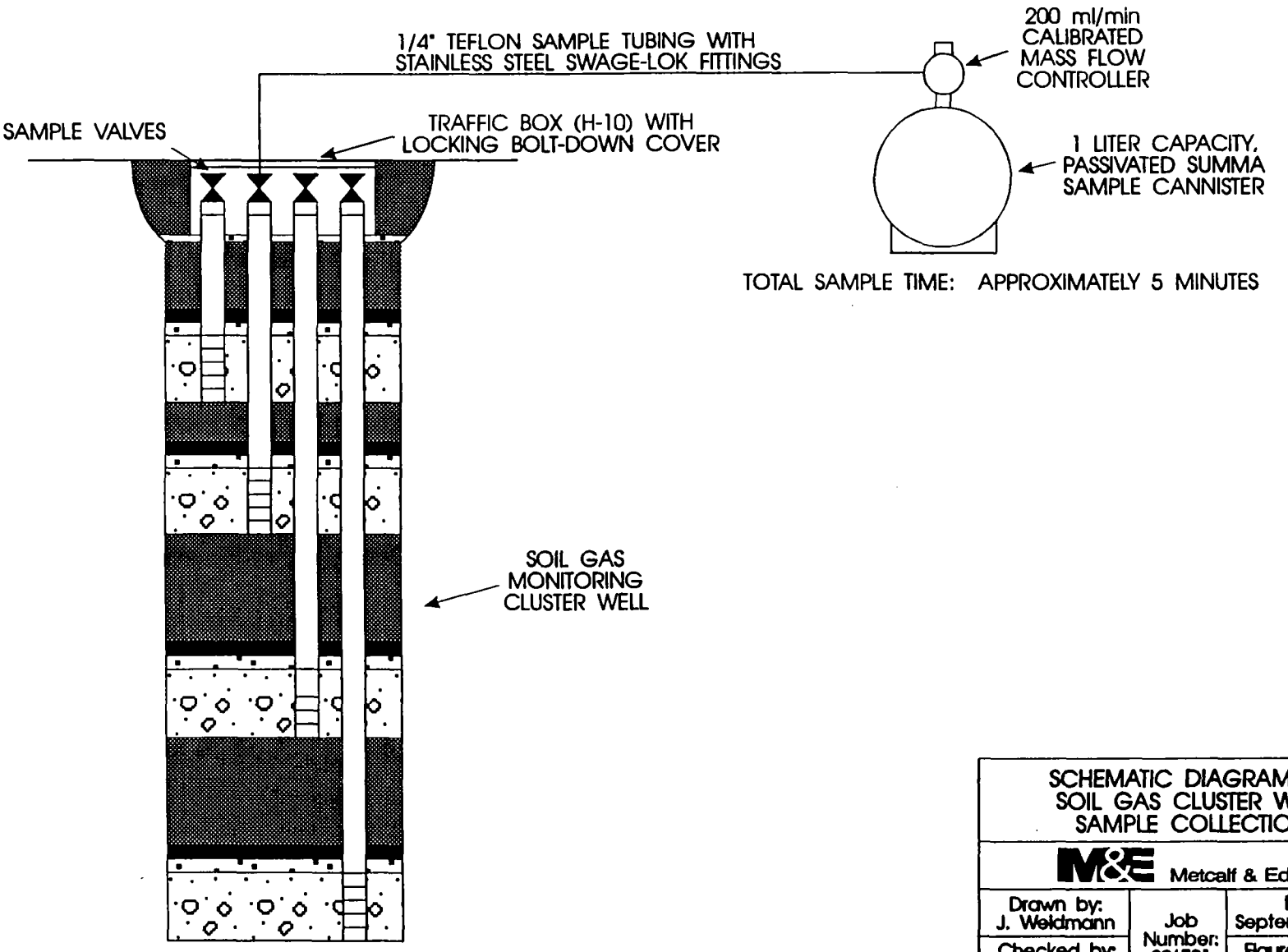

SCHEMATIC DIAGRAM OF SOIL GAS CLUSTER WELL SAMPLE COLLECTION		
M&E Metcalf & Eddy		
Drawn by: J. Weidmann	Job Number: 006791	Date: September 1992
Checked by: S. Zachary		Figure Number: 4-4

sufficient duration to collect one liter of soil gas at a controlled flow rate of 200 ml/min. All used segments of teflon tubing will be replaced with new segments following sampling.

4.4 SOIL CORE SAMPLING

Soil samples will be collected as a continuous core (Polygon 79), and at five foot intervals, using a California modified split-spoon sampler. The split-spoon sampler will be advanced down hole at five foot intervals using a 140-pound slide hammer. Split-spoon samples will also be collected in six-inch length, two-inch diameter brass sleeves. Continuous core samples will be collected during drilling where the five-foot length core barrel positioned below the lead auger will fill as augers are advanced. Soil samples will be transferred from the core barrel into six-inch length, two-inch diameter brass sleeves. Soil core samples will be prepared by placing Teflon sheets over each exposed soil face and secured in place with two-inch diameter plastic end caps. Samples will be chilled in a thermally insulated container. Selected samples (one from each boring) will be forwarded to a CLP approved analytical laboratory for chemical analysis within the 14-day holding time. Each soil sample will be analyzed via U.S. EPA Method 8240. The compounds to be analyzed are included in Table 3-1B.

4.5 DECONTAMINATION OF EQUIPMENT

Prior to each use and reuse, each sampler, stainless steel sleeve, and sampling probe will be steam cleaned and stored in clean storage areas on the drive/drilling point rigs. Care is taken with this equipment to eliminate both soil-surface and cross-hole contamination. Nitrile or latex surgical gloves are worn during handling and assembly of the sampling apparatus.

4.5.1 Adapters and stainless steel connectors are heated to 120°C using an oven and held for 1 hour at that temperature.

4.5.2 Separate storage areas are provided for used and cleaned equipment. No equipment will be reused without thorough cleaning.

5.0 SOIL GAS ANALYSIS

5.1 SCOPE

This section covers the equipment, materials, and procedures used to determine the concentrations of various volatile organic compounds in soil gas. Phase I soil gas samples will be analyzed on site with a GC in a mobile laboratory setup. EPA Method TO-14 will be the analytical method for Phase II soil gas analyses.

5.2 DETECTION LIMITS

Method detection limits (MDL's) are matrix dependent. For Tedlar bag soil gas samples, the MDL for GC analysis is estimated at 50 ppbV. For laboratory soil gas samples, the MDL is specified as lower than 1 ppbV (see Table 3-1A). The applicable concentration ranges of these methods are influenced by sample size and instrument limitations.

5.3 APPARATUS AND EQUIPMENT

5.3.1 Gas Chromatographs

For analysis of Phase I soil gas probe survey samples, and Phase II soil headspace samples, a Hewlett-Packard 5890 Series II gas chromatograph (GC) will be configured with an electron capture detector (ECD) and a photoionization detector. It is anticipated that the GC will be operated with two injection ports, each connected to a capillary column. One 30 m X 0.75 mm ID (1.5 μm film) VOCOL column (Supelco 2-3731M) will be installed to the ECD and a 30 m X 0.53mm ID Supelco Wax column to the PID. Two HP3396A integrators will be used to record detector response. Helium will be the carrier gas with nitrogen added as a makeup gas for the ECD. It is anticipated that the GC will be operated in the splitless mode.

Flow rates, temperature ramps, and column head pressures will be adjusted to maximize chromatographic separation. Once the operating conditions are established, all subsequent analyses will proceed according to the set parameters. All operating conditions, including temperature programming information, gas flow rates, column head pressures, attenuation settings and PID voltage settings will be recorded in waterproof ink in a sequentially bound laboratory notebook. Additional information, including instrument serial numbers and types will also be recorded in the notebook.

5.3.2 Tedlar Bag Analysis

A measured volume will be drawn from the Tedlar bag using a gas-tight syringe and immediately injected into the GC.

5.3.3 Calibration Standards

Calibration standards will be obtained from commercial sources (AccuStandard, or equivalent). A measured volume of the standard mixture will be injected into a nitrogen-filled 1-liter gas bottle through a septum side port. The bottle will be heated to achieve volatilization and mixing of the standards. For Tedlar bag analyses, a measured volume will be directly injected into the GC using a gas-tight syringe. The calibration standard will contain the following:

- 1,1,1-Trichloroethane
- 1,1-Dichloroethene
- Trichloroethene
- Tetrachloroethene

The initial calibrations will use at least three different concentrations expected to bracket the concentrations of the samples. The linear regression coefficient for the HP5890 GC will be greater than 0.99 or the calibration must be repeated.

Quantitation of sample concentrations will be performed by using the external standard technique, i.e., comparing instrument response against the initial calibration curve.

5.3.4 Continuing Calibration

At the beginning of each day, or every twelve hours, a continuing calibration in concentrations at mid-range of the initial calibration curve will be analyzed. The measured concentration, as determined from the initial calibration curve, will not vary more than plus or minus twenty percent. In the event the twenty percent criterion is exceeded, a new initial calibration curve must be generated and the continuing calibration reanalyzed.

5.3.5 Quality Control

5.3.6.1 System Bank

A randomly selected Tedlar bag will be analyzed daily to demonstrate interferences from the sampling device or the analytical system. If interferences are found at unacceptable levels, the contents of an unpacked cartridge or a new Tedlar bag will be analyzed to determine if the interference is due to the sampling device or to the analytical system. Appropriate measures will be taken to eliminate such interferences.

5.3.6.2 Field Blanks

Prior to each days soil gas or atmospheric sampling, field blanks of the entire sampling apparatus will be taken and analyzed to check background contamination in the sampling system. Tedlar bag samples will be obtained by drawing air through the sampling apparatus and collecting an aliquot for analysis. Additional field blanks are collected prior to any reuse of recleaned sampling equipment.

5.3.6.3 Duplicate Samples

Duplicate soil gas, or atmospheric, samples are collected from each sampling location. Duplicate analyses will be performed on at least 10% of the samples collected.

5.3.6.4 Trip Blanks

An unused sample cartridge or Tedlar bag will be transported into the field with the sampling equipment. The trip blank cartridge will be handled in the same manner as a sample, but a sample is not collected in the device. The trip blank is returned to the lab with the other samples and analyzed. If VOC's are detected, sample handling and transport procedures are subsequently reviewed.

5.3.7 Sample Handling

When each sample arrives in the mobile laboratory area the cartridge or bag number and the arrival time will be entered in waterproof ink in a sequentially numbered bound laboratory notebook. The injection number, as it corresponds to the chromatogram number from the integrators, will also be entered.

5.3.8 Records

The laboratory notebook will include all information necessary to trace analytical work, including sample calculations, injection order, sample numbers, instrument parameters, and any and all deviations or variances from the standard protocols. Observations of extraordinary circumstances will also be noted. The analyst's name will appear at the top of each page, the words "continued to page" and "continued from page" will be added along with the appropriate page number. A table of contents will be constructed at the beginning of the notebook. Chromatograms will remain in a continuous roll throughout the day and the sample ID added. If a roll of paper is torn or a new roll is used, an explanation will be included at the beginning. The integrator sample number, time, and date will be checked each morning and verified by entry into the laboratory notebook.

6.0 LABORATORY SOIL ANALYSES

Soil core analyses will be performed using SW-8240 (or SW-8260) per *Test Methods for Evaluating Solid Wastes* (SW-846, November 1986, 3rd ed., U.S. EPA). Detection limits, analyte list, and precision and accuracy criteria can be found in Table 3-1B. If any one surrogate falls outside the control limits listed in the method for soil sampling, then the sample is reanalyzed. Calibration and quantitation will be performed per the method. Data packages will be delivered in CLP format which includes all summary forms and raw data.

6.1 QUALITY CONTROL

A laboratory blank will be analyzed daily to demonstrate interferences from the analytical system. If interference is found at unacceptable levels. Appropriate measures will be taken to eliminate such interferences.

6.1.1 Field Blanks

Collection of field blank soil samples is not considered feasible due to the nature of the matrix and because interference-free soil is ordinarily not available. It is also not a common practice to include interference-free soil as trip blanks.

6.1.2 Duplicate Samples

Duplicate analyses are not performed on soil samples because it would require homogenization of the sample, tend to release volatiles from the sample, and therefore limit the accuracy of the results.

6.1.3 Trip Blanks

A sampling container is filled with water determined to be interference-free and taken into the field. The trip blank container is handled in the same manner as the soil samples. The trip blank is then returned to the laboratory for analysis with the other samples. If VOCs are detected, sample

handling and transport procedures are reviewed and sampling equipment is decontaminated as necessary.

6.1.4 Matrix Spike Duplicate

Soil sample spikes are provided by injecting a compound of known concentration directly into the purge vessel containing soil and methanol. The soil samples are then analyzed to evaluate extraction efficiencies and analytical precision.

6.1.5 Internal Quality Control

All chromatograms and mass spectra will be reviewed internally by a chemist other than the chemist performing the analysis.

6.1.6 Outside Quality Control Audits

Samples will be sent to laboratories not designated for routine analysis periodically as a quality assurance check. Two performance evaluation samples will be analyzed, one at the beginning and one at the end of the project.

7.0 SOIL HEADSPACE ANALYSIS

7.1 SCOPE

This section covers the equipment, materials, and procedures used to determine the concentrations of various volatile organic compounds in the soil. Soil samples will be analyzed on site with a GC in a mobile laboratory setup using headspace analysis. Soil headspace analyses will be performed using Modified EPA Method 3810 with direct injection.

7.2 DETECTION LIMITS

Method detection limits (MDL's) are matrix dependent. For soil headspace samples the MDL is estimated to be 50 ppbV. The applicable concentration range of this method is influenced by sample size and instrument limitations.

7.3 APPARATUS AND EQUIPMENT

7.3.1 Gas Chromatographs

A Hewlett-Packard 5890 Series II gas chromatograph (GC) will be configured with an electron capture detector (ECD) and a photoionization detector. It is anticipated that the GC will be operated with two injection ports each connected to a capillary column. One 30 m X 0.75 mm ID (1.5 μm film) VOCOL columns (Supelco 2-3731M) will be installed to the ECD and a 30 m x 0.53 mm ID Supelco Wax column to the PID. Two HP3396A integrators will be used to record detector response. Helium will be the carrier gas with nitrogen added as a makeup gas for the ECD. It is anticipated that the GC will be operated in the splitless mode. Flow rates, temperature ramps, and column head pressures will be adjusted to maximize chromatographic separation. Once the operating conditions are established, all subsequent analyses will proceed according to the set parameters. All operating conditions, including temperature programming information, gas flow rates, column head pressures, attenuation settings and PID voltage settings will be recorded in waterproof ink in a sequentially bound laboratory notebook. Additional information, including instrument serial numbers and types will also be recorded in the notebook.

7.3.2 Headspace Analysis

A preweighed 250 ml sample vial with a gas-tight Teflon septum cap containing approximately 50 grams of soil sample will be heated in a water bath at an approximate temperature of 50°F. An aliquot will be withdrawn from the vial by using a gas-tight syringe to pierce the septum into the "headspace" between the soil and cap. The aliquot will be drawn into the syringe and directly injected into the GC.

7.3.3 Calibration Standards

Gaseous calibration standard mixtures at three different concentrations bracketing the expected concentrations will be obtained from commercial sources (AccuStandard, or equivalent). A measured volume will be withdrawn with a gas-tight syringe and injected into the GC. The calibration standards will contain the following:

- Trichloroethene
- Tetrachloroethene
- 1,1-Dichloroethene
- 1,1,1-Trichloroethane

The initial calibrations will use at least three different concentrations expected to bracket the concentrations of the samples. The linear regression coefficient will be greater than 0.99 or the calibration must be repeated.

Quantitation of sample concentrations will be performed by using the external standard technique, i.e., comparing instrument response against the initial calibration curve.

7.3.4 Continuing Calibration

At the beginning of each day, or every twelve hours, a continuing calibration in concentrations at mid-range of the initial calibration curve will be analyzed. The measured concentration, as determined from the initial calibration curve, will not vary more than plus or minus twenty percent.

In the event the twenty percent criterion is exceeded, a new initial calibration curve must be generated and the continuing calibration reanalyzed.

7.3.5 Quality Control

7.3.5.1 System Bank

A random selected vial will be analyzed daily to demonstrate interferences from the sampling device or the analytical system. If interferences are found at unacceptable levels, the contents of a vial will be analyzed to determine if the interference is due to the sampling device or to the analytical system. Appropriate measures will be taken to eliminate such interferences.

7.3.6 Sample Handling

When each sample arrives in the mobile laboratory area the vial number and the arrival time will be entered in waterproof ink in a sequentially numbered bound laboratory notebook. The injection number, as it corresponds to the chromatogram number from the integrators, will also be entered.

7.3.7 Records

The laboratory notebook will include all information necessary to trace analytical work, including sample calculations, injection order, sample numbers, instrument parameters, and any and all deviations or variances from the standard protocols. Observations of extraordinary circumstances will also be noted. The analyst's name will appear at the top of each page, the words "continued to page" and "continued from page" will be added along with the appropriate page number. A table of contents will be constructed at the beginning of the notebook. Chromatograms will remain in a continuous roll throughout the day and the sample ID added. If a roll of paper is torn or a new roll is used, an explanation will be included at the beginning. The integrator sample number, time, and date will be checked each morning and verified by entry into the laboratory notebook.

APPENDIX I
VLEACH/MIXCELL DATA AND RESULTS (VOLUME ii)

```
PGA V-leach model, poly screen-TCE-11/10/92-Poly114-115.INP. Poly 116 Vert Dist
    1
       1.0         30.         1.0         10.
     123.6        .473       1100.       .7029
lygon 114-115
    251700.          1.    .196850        1.64        .381        .255     .00074
        0.           0.        -1.
    60
     1     6        1.02
     7    12        3.05
    13    18        5.08
    19    24        9.58
    25    30       14.56
    31    36       55.91
    37    42      104.57
    43    48      157.20
    49    54      211.86
    55    60      230.09
```

V-Leach, VER 1.1
Jake Turin, 11/91
PGA V-leach model, poly screen-TCE-11/10/92-Poly114-115.INP. Poly 116 Vert Dist

Polygon 1
At time = .00, total mass in vadose zone = .22093 g/sq.ft.
Mass in gas phase = .28341E-01g/sq.ft.
Mass in liquid phase = .12126 g/sq.ft.
Mass sorbed = .71330E-01g/sq.ft.

Polygon 1
At time = 1.00, total mass in vadose zone = .21636 g/sq.ft.
Mass in gas phase = .27755E-01g/sq.ft.
Mass in liquid phase = .11875 g/sq.ft.
Mass sorbed = .69855E-01g/sq.ft.

Since last printout at time = .00
Change in Total Mass = -.45693E-02g/sq.ft.
Advection in from atmosphere = .00000 g/sq.ft.
Advection in from water table = -.45271E-02g/sq.ft.
Diffusion in from atmosphere = -.42294E-04g/sq.ft.
Diffusion in from water table = .00000 g/sq.ft.
Total inflow at boundaries = -.45693E-02g/sq.ft.
Mass discrepancy = .88476E-08g/sq.ft.

Since beginning of run at time = 0.0
Change in Total Mass = -.45693E-02g/sq.ft.
Advection in from atmosphere = .00000 g/sq.ft.
Advection in from water table = -.45271E-02g/sq.ft.
Diffusion in from atmosphere = -.42294E-04g/sq.ft.
Diffusion in from water table = .00000 g/sq.ft.
Total inflow at boundaries = -.45693E-02g/sq.ft.
Mass discrepancy = .88476E-08g/sq.ft.

Polygon 1
At time = 2.00, total mass in vadose zone = .21182 g/sq.ft.
Mass in gas phase = .27172E-01g/sq.ft.
Mass in liquid phase = .11626 g/sq.ft.
Mass sorbed = .68389E-01g/sq.ft.

Since last printout at time = 1.00
Change in Total Mass = -.45416E-02g/sq.ft.
Advection in from atmosphere = .00000 g/sq.ft.
Advection in from water table = -.45022E-02g/sq.ft.
Diffusion in from atmosphere = -.39365E-04g/sq.ft.
Diffusion in from water table = .00000 g/sq.ft.
Total inflow at boundaries = -.45416E-02g/sq.ft.
Mass discrepancy = -.65193E-08g/sq.ft.

Since beginning of run at time = 0.0
Change in Total Mass = -.91109E-02g/sq.ft.
Advection in from atmosphere = .00000 g/sq.ft.
Advection in from water table = -.90293E-02g/sq.ft.
Diffusion in from atmosphere = -.81659E-04g/sq.ft.
Diffusion in from water table = .00000 g/sq.ft.
Total inflow at boundaries = -.91109E-02g/sq.ft.
Mass discrepancy = .27940E-08g/sq.ft.

```
Polygon   1
At time =       3.00, total mass in vadose zone =     .20731    g/sq.ft.
Mass in gas phase     =       .26594E-01g/sq.ft.
Mass in liquid phase  =       .11379    g/sq.ft.
Mass sorbed           =       .66933E-01g/sq.ft.

Since last printout at time =       2.00
               Change in Total Mass =     -.45090E-02g/sq.ft.
                    Advection in from atmosphere =       .00000    g/sq.ft.
                    Advection in from water table =     -.44721E-02g/sq.ft.
                    Diffusion in from atmosphere =      -.36928E-04g/sq.ft.
                    Diffusion in from water table =      .00000    g/sq.ft.
               Total inflow at boundaries =     -.45090E-02g/sq.ft.
               Mass discrepancy =      .19092E-07g/sq.ft.

Since beginning of run at time = 0.0
               Change in Total Mass =     -.13620E-01g/sq.ft.
                    Advection in from atmosphere =       .00000    g/sq.ft.
                    Advection in from water table =     -.13501E-01g/sq.ft.
                    Diffusion in from atmosphere =      -.11859E-03g/sq.ft.
                    Diffusion in from water table =      .00000    g/sq.ft.
               Total inflow at boundaries =     -.13620E-01g/sq.ft.
               Mass discrepancy =      .22352E-07g/sq.ft.


Polygon   1
At time =       4.00, total mass in vadose zone =     .20284    g/sq.ft.
Mass in gas phase     =       .26020E-01g/sq.ft.
Mass in liquid phase  =       .11133    g/sq.ft.
Mass sorbed           =       .65489E-01g/sq.ft.

Since last printout at time =       3.00
               Change in Total Mass =     -.44709E-02g/sq.ft.
                    Advection in from atmosphere =       .00000    g/sq.ft.
                    Advection in from water table =     -.44361E-02g/sq.ft.
                    Diffusion in from atmosphere =      -.34881E-04g/sq.ft.
                    Diffusion in from water table =      .00000    g/sq.ft.
               Total inflow at boundaries =     -.44710E-02g/sq.ft.
               Mass discrepancy =      .65193E-08g/sq.ft.

Since beginning of run at time = 0.0
               Change in Total Mass =     -.18091E-01g/sq.ft.
                    Advection in from atmosphere =       .00000    g/sq.ft.
                    Advection in from water table =     -.17937E-01g/sq.ft.
                    Diffusion in from atmosphere =      -.15347E-03g/sq.ft.
                    Diffusion in from water table =      .00000    g/sq.ft.
               Total inflow at boundaries =     -.18091E-01g/sq.ft.
               Mass discrepancy =      .29802E-07g/sq.ft.


Polygon   1
At time =       5.00, total mass in vadose zone =     .19841    g/sq.ft.
Mass in gas phase     =       .25452E-01g/sq.ft.
Mass in liquid phase  =       .10890    g/sq.ft.
Mass sorbed           =       .64060E-01g/sq.ft.

Since last printout at time =       4.00
               Change in Total Mass =     -.44273E-02g/sq.ft.
```

```
                Advection in from atmosphere =       .00000    g/sq.ft.
                Advection in from water table =    -.43941E-02g/sq.ft.
                Diffusion in from atmosphere =     -.33144E-04g/sq.ft.
                Diffusion in from water table =      .00000    g/sq.ft.
           Total inflow at boundaries =    -.44273E-02g/sq.ft.
           Mass discrepancy =      .25146E-07g/sq.ft.

Since beginning of run at time = 0.0
           Change in Total Mass =    -.22518E-01g/sq.ft.
                Advection in from atmosphere =       .00000    g/sq.ft.
                Advection in from water table =    -.22332E-01g/sq.ft.
                Diffusion in from atmosphere =     -.18661E-03g/sq.ft.
                Diffusion in from water table =      .00000    g/sq.ft.
           Total inflow at boundaries =    -.22518E-01g/sq.ft.
           Mass discrepancy =      .54017E-07g/sq.ft.


Polygon   1
At time =       6.00, total mass in vadose zone =     .19403    g/sq.ft.
Mass in gas phase     =       .24890E-01g/sq.ft.
Mass in liquid phase  =       .10650    g/sq.ft.
Mass sorbed           =       .62646E-01g/sq.ft.

Since last printout at time =       5.00
           Change in Total Mass =    -.43783E-02g/sq.ft.
                Advection in from atmosphere =       .00000    g/sq.ft.
                Advection in from water table =    -.43467E-02g/sq.ft.
                Diffusion in from atmosphere =     -.31654E-04g/sq.ft.
                Diffusion in from water table =      .00000    g/sq.ft.
           Total inflow at boundaries =    -.43783E-02g/sq.ft.
           Mass discrepancy =    -.46566E-08g/sq.ft.

Since beginning of run at time = 0.0
           Change in Total Mass =    -.26896E-01g/sq.ft.
                Advection in from atmosphere =       .00000    g/sq.ft.
                Advection in from water table =    -.26678E-01g/sq.ft.
                Diffusion in from atmosphere =     -.21827E-03g/sq.ft.
                Diffusion in from water table =      .00000    g/sq.ft.
           Total inflow at boundaries =    -.26896E-01g/sq.ft.
           Mass discrepancy =      .48429E-07g/sq.ft.


Polygon   1
At time =       7.00, total mass in vadose zone =     .18971    g/sq.ft.
Mass in gas phase     =       .24336E-01g/sq.ft.
Mass in liquid phase  =       .10412    g/sq.ft.
Mass sorbed           =       .61250E-01g/sq.ft.

Since last printout at time =       6.00
           Change in Total Mass =    -.43247E-02g/sq.ft.
                Advection in from atmosphere =       .00000    g/sq.ft.
                Advection in from water table =    -.42944E-02g/sq.ft.
                Diffusion in from atmosphere =     -.30363E-04g/sq.ft.
                Diffusion in from water table =      .00000    g/sq.ft.
           Total inflow at boundaries =    -.43247E-02g/sq.ft.
           Mass discrepancy =      .32596E-08g/sq.ft.

Since beginning of run at time = 0.0
           Change in Total Mass =    -.31221E-01g/sq.ft.
                Advection in from atmosphere =       .00000    g/sq.ft.
```

```
                Advection in from water table =     -.30973E-01g/sq.ft.
                Diffusion in from atmosphere =      -.24863E-03g/sq.ft.
                Diffusion in from water table =      .00000    g/sq.ft.
           Total inflow at boundaries =     -.31221E-01g/sq.ft.
           Mass discrepancy =      .52154E-07g/sq.ft.


Polygon   1
At time =       8.00, total mass in vadose zone =     .18544    g/sq.ft.
Mass in gas phase     =       .23788E-01g/sq.ft.
Mass in liquid phase  =       .10178    g/sq.ft.
Mass sorbed           =       .59872E-01g/sq.ft.

Since last printout at time =       7.00
           Change in Total Mass =     -.42672E-02g/sq.ft.
                Advection in from atmosphere =       .00000    g/sq.ft.
                Advection in from water table =     -.42380E-02g/sq.ft.
                Diffusion in from atmosphere =      -.29233E-04g/sq.ft.
                Diffusion in from water table =      .00000    g/sq.ft.
           Total inflow at boundaries =     -.42672E-02g/sq.ft.
           Mass discrepancy =     -.46566E-09g/sq.ft.

Since beginning of run at time = 0.0
           Change in Total Mass =     -.35488E-01g/sq.ft.
                Advection in from atmosphere =       .00000    g/sq.ft.
                Advection in from water table =     -.35211E-01g/sq.ft.
                Diffusion in from atmosphere =      -.27786E-03g/sq.ft.
                Diffusion in from water table =      .00000    g/sq.ft.
           Total inflow at boundaries =     -.35488E-01g/sq.ft.
           Mass discrepancy =      .52154E-07g/sq.ft.


Polygon   1
At time =       9.00, total mass in vadose zone =     .18124    g/sq.ft.
Mass in gas phase     =       .23249E-01g/sq.ft.
Mass in liquid phase  =       .99473E-01g/sq.ft.
Mass sorbed           =       .58514E-01g/sq.ft.

Since last printout at time =       8.00
           Change in Total Mass =     -.42065E-02g/sq.ft.
                Advection in from atmosphere =       .00000    g/sq.ft.
                Advection in from water table =     -.41783E-02g/sq.ft.
                Diffusion in from atmosphere =      -.28234E-04g/sq.ft.
                Diffusion in from water table =      .00000    g/sq.ft.
           Total inflow at boundaries =     -.42065E-02g/sq.ft.
           Mass discrepancy =      .88476E-08g/sq.ft.

Since beginning of run at time = 0.0
           Change in Total Mass =     -.39695E-01g/sq.ft.
                Advection in from atmosphere =       .00000    g/sq.ft.
                Advection in from water table =     -.39389E-01g/sq.ft.
                Diffusion in from atmosphere =      -.30610E-03g/sq.ft.
                Diffusion in from water table =      .00000    g/sq.ft.
           Total inflow at boundaries =     -.39695E-01g/sq.ft.
           Mass discrepancy =      .59605E-07g/sq.ft.


Polygon   1
At time =      10.00, total mass in vadose zone =     .17709    g/sq.ft.
Mass in gas phase     =       .22717E-01g/sq.ft.
```

```
Mass in liquid phase  =       .97199E-01g/sq.ft.
Mass sorbed           =       .57176E-01g/sq.ft.

Since last printout at time =       9.00
               Change in Total Mass =     -.41432E-02g/sq.ft.
                    Advection in from atmosphere =       .00000    g/sq.ft.
                    Advection in from water table =     -.41159E-02g/sq.ft.
                    Diffusion in from atmosphere =      -.27341E-04g/sq.ft.
                    Diffusion in from water table =      .00000    g/sq.ft.
               Total inflow at boundaries =     -.41432E-02g/sq.ft.
               Mass discrepancy =      .23749E-07g/sq.ft.

Since beginning of run at time = 0.0
               Change in Total Mass =     -.43838E-01g/sq.ft.
                    Advection in from atmosphere =       .00000    g/sq.ft.
                    Advection in from water table =     -.43505E-01g/sq.ft.
                    Diffusion in from atmosphere =      -.33344E-03g/sq.ft.
                    Diffusion in from water table =      .00000    g/sq.ft.
               Total inflow at boundaries =     -.43838E-01g/sq.ft.
               Mass discrepancy =      .85682E-07g/sq.ft.


Polygon   1
At time =      11.00, total mass in vadose zone =     .17302    g/sq.ft.
Mass in gas phase     =       .22194E-01g/sq.ft.
Mass in liquid phase  =       .94961E-01g/sq.ft.
Mass sorbed           =       .55860E-01g/sq.ft.

Since last printout at time =      10.00
               Change in Total Mass =     -.40777E-02g/sq.ft.
                    Advection in from atmosphere =       .00000    g/sq.ft.
                    Advection in from water table =     -.40512E-02g/sq.ft.
                    Diffusion in from atmosphere =      -.26535E-04g/sq.ft.
                    Diffusion in from water table =      .00000    g/sq.ft.
               Total inflow at boundaries =     -.40777E-02g/sq.ft.
               Mass discrepancy =     -.19092E-07g/sq.ft.

Since beginning of run at time = 0.0
               Change in Total Mass =     -.47916E-01g/sq.ft.
                    Advection in from atmosphere =       .00000    g/sq.ft.
                    Advection in from water table =     -.47556E-01g/sq.ft.
                    Diffusion in from atmosphere =      -.35997E-03g/sq.ft.
                    Diffusion in from water table =      .00000    g/sq.ft.
               Total inflow at boundaries =     -.47916E-01g/sq.ft.
               Mass discrepancy =      .67055E-07g/sq.ft.


Polygon   1
At time =      12.00, total mass in vadose zone =     .16901    g/sq.ft.
Mass in gas phase     =       .21680E-01g/sq.ft.
Mass in liquid phase  =       .92760E-01g/sq.ft.
Mass sorbed           =       .54565E-01g/sq.ft.

Since last printout at time =      11.00
               Change in Total Mass =     -.40103E-02g/sq.ft.
                    Advection in from atmosphere =       .00000    g/sq.ft.
                    Advection in from water table =     -.39845E-02g/sq.ft.
                    Diffusion in from atmosphere =      -.25802E-04g/sq.ft.
                    Diffusion in from water table =      .00000    g/sq.ft.
               Total inflow at boundaries =     -.40103E-02g/sq.ft.
```

Mass discrepancy = .69849E-08g/sq.ft.

Since beginning of run at time = 0.0
Change in Total Mass = -.51926E-01g/sq.ft.
Advection in from atmosphere = .00000 g/sq.ft.
Advection in from water table = -.51540E-01g/sq.ft.
Diffusion in from atmosphere = -.38578E-03g/sq.ft.
Diffusion in from water table = .00000 g/sq.ft.
Total inflow at boundaries = -.51926E-01g/sq.ft.
Mass discrepancy = .74506E-07g/sq.ft.

Polygon 1
At time = 13.00, total mass in vadose zone = .16506 g/sq.ft.
Mass in gas phase = .21174E-01g/sq.ft.
Mass in liquid phase = .90597E-01g/sq.ft.
Mass sorbed = .53293E-01g/sq.ft.

Since last printout at time = 12.00
Change in Total Mass = -.39414E-02g/sq.ft.
Advection in from atmosphere = .00000 g/sq.ft.
Advection in from water table = -.39162E-02g/sq.ft.
Diffusion in from atmosphere = -.25129E-04g/sq.ft.
Diffusion in from water table = .00000 g/sq.ft.
Total inflow at boundaries = -.39414E-02g/sq.ft.
Mass discrepancy = .88476E-08g/sq.ft.

Since beginning of run at time = 0.0
Change in Total Mass = -.55868E-01g/sq.ft.
Advection in from atmosphere = .00000 g/sq.ft.
Advection in from water table = -.55457E-01g/sq.ft.
Diffusion in from atmosphere = -.41090E-03g/sq.ft.
Diffusion in from water table = .00000 g/sq.ft.
Total inflow at boundaries = -.55868E-01g/sq.ft.
Mass discrepancy = .81956E-07g/sq.ft.

Polygon 1
At time = 14.00, total mass in vadose zone = .16119 g/sq.ft.
Mass in gas phase = .20678E-01g/sq.ft.
Mass in liquid phase = .88472E-01g/sq.ft.
Mass sorbed = .52043E-01g/sq.ft.

Since last printout at time = 13.00
Change in Total Mass = -.38710E-02g/sq.ft.
Advection in from atmosphere = .00000 g/sq.ft.
Advection in from water table = -.38465E-02g/sq.ft.
Diffusion in from atmosphere = -.24506E-04g/sq.ft.
Diffusion in from water table = .00000 g/sq.ft.
Total inflow at boundaries = -.38710E-02g/sq.ft.
Mass discrepancy = .23516E-07g/sq.ft.

Since beginning of run at time = 0.0
Change in Total Mass = -.59739E-01g/sq.ft.
Advection in from atmosphere = .00000 g/sq.ft.
Advection in from water table = -.59303E-01g/sq.ft.
Diffusion in from atmosphere = -.43541E-03g/sq.ft.
Diffusion in from water table = .00000 g/sq.ft.
Total inflow at boundaries = -.59739E-01g/sq.ft.
Mass discrepancy = .10431E-06g/sq.ft.

```
Polygon   1
At time =      15.00, total mass in vadose zone =     .15739    g/sq.ft.
Mass in gas phase     =       .20190E-01g/sq.ft.
Mass in liquid phase  =       .86387E-01g/sq.ft.
Mass sorbed           =       .50816E-01g/sq.ft.

Since last printout at time =      14.00
               Change in Total Mass =     -.37996E-02g/sq.ft.
                    Advection in from atmosphere =       .00000    g/sq.ft.
                    Advection in from water table =     -.37757E-02g/sq.ft.
                    Diffusion in from atmosphere =      -.23925E-04g/sq.ft.
                    Diffusion in from water table =      .00000    g/sq.ft.
               Total inflow at boundaries =     -.37996E-02g/sq.ft.
               Mass discrepancy =     -.11642E-07g/sq.ft.

Since beginning of run at time = 0.0
               Change in Total Mass =     -.63538E-01g/sq.ft.
                    Advection in from atmosphere =       .00000    g/sq.ft.
                    Advection in from water table =     -.63079E-01g/sq.ft.
                    Diffusion in from atmosphere =      -.45933E-03g/sq.ft.
                    Diffusion in from water table =      .00000    g/sq.ft.
               Total inflow at boundaries =     -.63538E-01g/sq.ft.
               Mass discrepancy =      .96858E-07g/sq.ft.


Polygon   1
At time =      16.00, total mass in vadose zone =     .15367    g/sq.ft.
Mass in gas phase     =       .19712E-01g/sq.ft.
Mass in liquid phase  =       .84341E-01g/sq.ft.
Mass sorbed           =       .49613E-01g/sq.ft.

Since last printout at time =      15.00
               Change in Total Mass =     -.37272E-02g/sq.ft.
                    Advection in from atmosphere =       .00000    g/sq.ft.
                    Advection in from water table =     -.37038E-02g/sq.ft.
                    Diffusion in from atmosphere =      -.23380E-04g/sq.ft.
                    Diffusion in from water table =      .00000    g/sq.ft.
               Total inflow at boundaries =     -.37272E-02g/sq.ft.
               Mass discrepancy =     -.74506E-08g/sq.ft.

Since beginning of run at time = 0.0
               Change in Total Mass =     -.67265E-01g/sq.ft.
                    Advection in from atmosphere =       .00000    g/sq.ft.
                    Advection in from water table =     -.66783E-01g/sq.ft.
                    Diffusion in from atmosphere =      -.48271E-03g/sq.ft.
                    Diffusion in from water table =      .00000    g/sq.ft.
               Total inflow at boundaries =     -.67265E-01g/sq.ft.
               Mass discrepancy =      .89407E-07g/sq.ft.


Polygon   1
At time =      17.00, total mass in vadose zone =     .15001    g/sq.ft.
Mass in gas phase     =       .19243E-01g/sq.ft.
Mass in liquid phase  =       .82335E-01g/sq.ft.
Mass sorbed           =       .48433E-01g/sq.ft.

Since last printout at time =      16.00
               Change in Total Mass =     -.36542E-02g/sq.ft.
```

```
                Advection in from atmosphere =       .00000    g/sq.ft.
                Advection in from water table =     -.36313E-02g/sq.ft.
                Diffusion in from atmosphere =      -.22865E-04g/sq.ft.
                Diffusion in from water table =      .00000    g/sq.ft.
            Total inflow at boundaries =     -.36542E-02g/sq.ft.
            Mass discrepancy =      .12340E-07g/sq.ft.

Since beginning of run at time = 0.0
            Change in Total Mass =     -.70920E-01g/sq.ft.
                Advection in from atmosphere =       .00000    g/sq.ft.
                Advection in from water table =     -.70414E-01g/sq.ft.
                Diffusion in from atmosphere =      -.50558E-03g/sq.ft.
                Diffusion in from water table =      .00000    g/sq.ft.
            Total inflow at boundaries =     -.70920E-01g/sq.ft.
            Mass discrepancy =      .10431E-06g/sq.ft.


Polygon   1
At time =      18.00, total mass in vadose zone =     .14643    g/sq.ft.
Mass in gas phase     =       .18784E-01g/sq.ft.
Mass in liquid phase  =       .80370E-01g/sq.ft.
Mass sorbed           =       .47277E-01g/sq.ft.

Since last printout at time =      17.00
            Change in Total Mass =     -.35806E-02g/sq.ft.
                Advection in from atmosphere =       .00000    g/sq.ft.
                Advection in from water table =     -.35583E-02g/sq.ft.
                Diffusion in from atmosphere =      -.22376E-04g/sq.ft.
                Diffusion in from water table =      .00000    g/sq.ft.
            Total inflow at boundaries =     -.35807E-02g/sq.ft.
            Mass discrepancy =      .10943E-07g/sq.ft.

Since beginning of run at time = 0.0
            Change in Total Mass =     -.74500E-01g/sq.ft.
                Advection in from atmosphere =       .00000    g/sq.ft.
                Advection in from water table =     -.73972E-01g/sq.ft.
                Diffusion in from atmosphere =      -.52795E-03g/sq.ft.
                Diffusion in from water table =      .00000    g/sq.ft.
            Total inflow at boundaries =     -.74500E-01g/sq.ft.
            Mass discrepancy =      .11176E-06g/sq.ft.


Polygon   1
At time =      19.00, total mass in vadose zone =     .14292    g/sq.ft.
Mass in gas phase     =       .18334E-01g/sq.ft.
Mass in liquid phase  =       .78445E-01g/sq.ft.
Mass sorbed           =       .46145E-01g/sq.ft.

Since last printout at time =      18.00
            Change in Total Mass =     -.35069E-02g/sq.ft.
                Advection in from atmosphere =       .00000    g/sq.ft.
                Advection in from water table =     -.34850E-02g/sq.ft.
                Diffusion in from atmosphere =      -.21909E-04g/sq.ft.
                Diffusion in from water table =      .00000    g/sq.ft.
            Total inflow at boundaries =     -.35069E-02g/sq.ft.
            Mass discrepancy =      .20256E-07g/sq.ft.

Since beginning of run at time = 0.0
            Change in Total Mass =     -.78007E-01g/sq.ft.
                Advection in from atmosphere =       .00000    g/sq.ft.
```

```
                Advection in from water table =     -.77457E-01g/sq.ft.
                Diffusion in from atmosphere =      -.54986E-03g/sq.ft.
                Diffusion in from water table =      .00000    g/sq.ft.
           Total inflow at boundaries =     -.78007E-01g/sq.ft.
           Mass discrepancy =      .12666E-06g/sq.ft.


Polygon   1
At time =      20.00, total mass in vadose zone =     .13949    g/sq.ft.
Mass in gas phase     =       .17894E-01g/sq.ft.
Mass in liquid phase  =       .76561E-01g/sq.ft.
Mass sorbed           =       .45036E-01g/sq.ft.

Since last printout at time =      19.00
           Change in Total Mass =     -.34332E-02g/sq.ft.
                Advection in from atmosphere =       .00000    g/sq.ft.
                Advection in from water table =     -.34117E-02g/sq.ft.
                Diffusion in from atmosphere =      -.21462E-04g/sq.ft.
                Diffusion in from water table =      .00000    g/sq.ft.
           Total inflow at boundaries =     -.34332E-02g/sq.ft.
           Mass discrepancy =      .13970E-08g/sq.ft.

Since beginning of run at time = 0.0
           Change in Total Mass =     -.81440E-01g/sq.ft.
                Advection in from atmosphere =       .00000    g/sq.ft.
                Advection in from water table =     -.80869E-01g/sq.ft.
                Diffusion in from atmosphere =      -.57132E-03g/sq.ft.
                Diffusion in from water table =      .00000    g/sq.ft.
           Total inflow at boundaries =     -.81440E-01g/sq.ft.
           Mass discrepancy =      .13411E-06g/sq.ft.


Polygon   1
At time =      21.00, total mass in vadose zone =     .13613    g/sq.ft.
Mass in gas phase     =       .17463E-01g/sq.ft.
Mass in liquid phase  =       .74717E-01g/sq.ft.
Mass sorbed           =       .43952E-01g/sq.ft.

Since last printout at time =      20.00
           Change in Total Mass =     -.33596E-02g/sq.ft.
                Advection in from atmosphere =       .00000    g/sq.ft.
                Advection in from water table =     -.33386E-02g/sq.ft.
                Diffusion in from atmosphere =      -.21031E-04g/sq.ft.
                Diffusion in from water table =      .00000    g/sq.ft.
           Total inflow at boundaries =     -.33596E-02g/sq.ft.
           Mass discrepancy =      .16298E-08g/sq.ft.

Since beginning of run at time = 0.0
           Change in Total Mass =     -.84800E-01g/sq.ft.
                Advection in from atmosphere =       .00000    g/sq.ft.
                Advection in from water table =     -.84208E-01g/sq.ft.
                Diffusion in from atmosphere =      -.59236E-03g/sq.ft.
                Diffusion in from water table =      .00000    g/sq.ft.
           Total inflow at boundaries =     -.84800E-01g/sq.ft.
           Mass discrepancy =      .13411E-06g/sq.ft.


Polygon   1
At time =      22.00, total mass in vadose zone =     .13284    g/sq.ft.
Mass in gas phase     =       .17041E-01g/sq.ft.
```

```
Mass in liquid phase  =       .72913E-01g/sq.ft.
Mass sorbed           =       .42890E-01g/sq.ft.

Since last printout at time =      21.00
              Change in Total Mass =     -.32864E-02g/sq.ft.
                   Advection in from atmosphere =       .00000    g/sq.ft.
                   Advection in from water table =     -.32658E-02g/sq.ft.
                   Diffusion in from atmosphere =      -.20616E-04g/sq.ft.
                   Diffusion in from water table =      .00000    g/sq.ft.
              Total inflow at boundaries =     -.32864E-02g/sq.ft.
              Mass discrepancy =     -.12573E-07g/sq.ft.

Since beginning of run at time = 0.0
              Change in Total Mass =     -.88086E-01g/sq.ft.
                   Advection in from atmosphere =       .00000    g/sq.ft.
                   Advection in from water table =     -.87473E-01g/sq.ft.
                   Diffusion in from atmosphere =      -.61297E-03g/sq.ft.
                   Diffusion in from water table =      .00000    g/sq.ft.
              Total inflow at boundaries =     -.88086E-01g/sq.ft.
              Mass discrepancy =      .11921E-06g/sq.ft.


Polygon   1
At time =      23.00, total mass in vadose zone =     .12963    g/sq.ft.
Mass in gas phase     =       .16629E-01g/sq.ft.
Mass in liquid phase  =       .71149E-01g/sq.ft.
Mass sorbed           =       .41853E-01g/sq.ft.

Since last printout at time =      22.00
              Change in Total Mass =     -.32137E-02g/sq.ft.
                   Advection in from atmosphere =       .00000    g/sq.ft.
                   Advection in from water table =     -.31935E-02g/sq.ft.
                   Diffusion in from atmosphere =      -.20214E-04g/sq.ft.
                   Diffusion in from water table =      .00000    g/sq.ft.
              Total inflow at boundaries =     -.32137E-02g/sq.ft.
              Mass discrepancy =      .36787E-07g/sq.ft.

Since beginning of run at time = 0.0
              Change in Total Mass =     -.91300E-01g/sq.ft.
                   Advection in from atmosphere =       .00000    g/sq.ft.
                   Advection in from water table =     -.90667E-01g/sq.ft.
                   Diffusion in from atmosphere =      -.63319E-03g/sq.ft.
                   Diffusion in from water table =      .00000    g/sq.ft.
              Total inflow at boundaries =     -.91300E-01g/sq.ft.
              Mass discrepancy =      .15646E-06g/sq.ft.


Polygon   1
At time =      24.00, total mass in vadose zone =     .12649    g/sq.ft.
Mass in gas phase     =       .16226E-01g/sq.ft.
Mass in liquid phase  =       .69425E-01g/sq.ft.
Mass sorbed           =       .40839E-01g/sq.ft.

Since last printout at time =      23.00
              Change in Total Mass =     -.31417E-02g/sq.ft.
                   Advection in from atmosphere =       .00000    g/sq.ft.
                   Advection in from water table =     -.31218E-02g/sq.ft.
                   Diffusion in from atmosphere =      -.19824E-04g/sq.ft.
                   Diffusion in from water table =      .00000    g/sq.ft.
              Total inflow at boundaries =     -.31416E-02g/sq.ft.
```

```
                Mass discrepancy =     -.20256E-07g/sq.ft.

Since beginning of run at time = 0.0
                Change in Total Mass =     -.94442E-01g/sq.ft.
                     Advection in from atmosphere =       .00000    g/sq.ft.
                     Advection in from water table =     -.93789E-01g/sq.ft.
                     Diffusion in from atmosphere =      -.65301E-03g/sq.ft.
                     Diffusion in from water table =      .00000    g/sq.ft.
                Total inflow at boundaries =     -.94442E-01g/sq.ft.
                Mass discrepancy =      .14156E-06g/sq.ft.


Polygon   1
At time =      25.00, total mass in vadose zone =     .12342    g/sq.ft.
Mass in gas phase     =       .15832E-01g/sq.ft.
Mass in liquid phase  =       .67740E-01g/sq.ft.
Mass sorbed           =       .39847E-01g/sq.ft.

Since last printout at time =      24.00
                Change in Total Mass =     -.30703E-02g/sq.ft.
                     Advection in from atmosphere =       .00000    g/sq.ft.
                     Advection in from water table =     -.30509E-02g/sq.ft.
                     Diffusion in from atmosphere =      -.19444E-04g/sq.ft.
                     Diffusion in from water table =      .00000    g/sq.ft.
                Total inflow at boundaries =     -.30703E-02g/sq.ft.
                Mass discrepancy =      .22817E-07g/sq.ft.

Since beginning of run at time = 0.0
                Change in Total Mass =     -.97512E-01g/sq.ft.
                     Advection in from atmosphere =       .00000    g/sq.ft.
                     Advection in from water table =     -.96840E-01g/sq.ft.
                     Diffusion in from atmosphere =      -.67245E-03g/sq.ft.
                     Diffusion in from water table =      .00000    g/sq.ft.
                Total inflow at boundaries =     -.97512E-01g/sq.ft.
                Mass discrepancy =      .15646E-06g/sq.ft.


Polygon   1
At time =      26.00, total mass in vadose zone =     .12042    g/sq.ft.
Mass in gas phase     =       .15447E-01g/sq.ft.
Mass in liquid phase  =       .66093E-01g/sq.ft.
Mass sorbed           =       .38879E-01g/sq.ft.

Since last printout at time =      25.00
                Change in Total Mass =     -.29998E-02g/sq.ft.
                     Advection in from atmosphere =       .00000    g/sq.ft.
                     Advection in from water table =     -.29808E-02g/sq.ft.
                     Diffusion in from atmosphere =      -.19075E-04g/sq.ft.
                     Diffusion in from water table =      .00000    g/sq.ft.
                Total inflow at boundaries =     -.29999E-02g/sq.ft.
                Mass discrepancy =      .10012E-07g/sq.ft.

Since beginning of run at time = 0.0
                Change in Total Mass =     -.10051    g/sq.ft.
                     Advection in from atmosphere =       .00000    g/sq.ft.
                     Advection in from water table =     -.99820E-01g/sq.ft.
                     Diffusion in from atmosphere =      -.69153E-03g/sq.ft.
                     Diffusion in from water table =      .00000    g/sq.ft.
                Total inflow at boundaries =     -.10051    g/sq.ft.
                Mass discrepancy =      .17136E-06g/sq.ft.
```

Polygon 1
At time = 27.00, total mass in vadose zone = .11749 g/sq.ft.
Mass in gas phase = .15071E-01g/sq.ft.
Mass in liquid phase = .64485E-01g/sq.ft.
Mass sorbed = .37933E-01g/sq.ft.

Since last printout at time = 26.00
Change in Total Mass = -.29303E-02g/sq.ft.
Advection in from atmosphere = .00000 g/sq.ft.
Advection in from water table = -.29116E-02g/sq.ft.
Diffusion in from atmosphere = -.18714E-04g/sq.ft.
Diffusion in from water table = .00000 g/sq.ft.
Total inflow at boundaries = -.29303E-02g/sq.ft.
Mass discrepancy = .76834E-08g/sq.ft.

Since beginning of run at time = 0.0
Change in Total Mass = -.10344 g/sq.ft.
Advection in from atmosphere = .00000 g/sq.ft.
Advection in from water table = -.10273 g/sq.ft.
Diffusion in from atmosphere = -.71024E-03g/sq.ft.
Diffusion in from water table = .00000 g/sq.ft.
Total inflow at boundaries = -.10344 g/sq.ft.
Mass discrepancy = .17136E-06g/sq.ft.

Polygon 1
At time = 28.00, total mass in vadose zone = .11463 g/sq.ft.
Mass in gas phase = .14704E-01g/sq.ft.
Mass in liquid phase = .62915E-01g/sq.ft.
Mass sorbed = .37009E-01g/sq.ft.

Since last printout at time = 27.00
Change in Total Mass = -.28617E-02g/sq.ft.
Advection in from atmosphere = .00000 g/sq.ft.
Advection in from water table = -.28433E-02g/sq.ft.
Diffusion in from atmosphere = -.18361E-04g/sq.ft.
Diffusion in from water table = .00000 g/sq.ft.
Total inflow at boundaries = -.28617E-02g/sq.ft.
Mass discrepancy = -.12573E-07g/sq.ft.

Since beginning of run at time = 0.0
Change in Total Mass = -.10630 g/sq.ft.
Advection in from atmosphere = .00000 g/sq.ft.
Advection in from water table = -.10558 g/sq.ft.
Diffusion in from atmosphere = -.72860E-03g/sq.ft.
Diffusion in from water table = .00000 g/sq.ft.
Total inflow at boundaries = -.10630 g/sq.ft.
Mass discrepancy = .16391E-06g/sq.ft.

Polygon 1
At time = 29.00, total mass in vadose zone = .11183 g/sq.ft.
Mass in gas phase = .14346E-01g/sq.ft.
Mass in liquid phase = .61381E-01g/sq.ft.
Mass sorbed = .36107E-01g/sq.ft.

Since last printout at time = 28.00
Change in Total Mass = -.27941E-02g/sq.ft.

Advection in from atmosphere = .00000 g/sq.ft.
Advection in from water table = -.27761E-02g/sq.ft.
Diffusion in from atmosphere = -.18016E-04g/sq.ft.
Diffusion in from water table = .00000 g/sq.ft.
Total inflow at boundaries = -.27941E-02g/sq.ft.
Mass discrepancy = .65193E-08g/sq.ft.

Since beginning of run at time = 0.0
Change in Total Mass = -.10910 g/sq.ft.
Advection in from atmosphere = .00000 g/sq.ft.
Advection in from water table = -.10835 g/sq.ft.
Diffusion in from atmosphere = -.74662E-03g/sq.ft.
Diffusion in from water table = .00000 g/sq.ft.
Total inflow at boundaries = -.10910 g/sq.ft.
Mass discrepancy = .17136E-06g/sq.ft.

Polygon 1
At time = 30.00, total mass in vadose zone = .10911 g/sq.ft.
Mass in gas phase = .13996E-01g/sq.ft.
Mass in liquid phase = .59884E-01g/sq.ft.
Mass sorbed = .35226E-01g/sq.ft.

Since last printout at time = 29.00
Change in Total Mass = -.27276E-02g/sq.ft.
Advection in from atmosphere = .00000 g/sq.ft.
Advection in from water table = -.27100E-02g/sq.ft.
Diffusion in from atmosphere = -.17678E-04g/sq.ft.
Diffusion in from water table = .00000 g/sq.ft.
Total inflow at boundaries = -.27276E-02g/sq.ft.
Mass discrepancy = .25611E-08g/sq.ft.

Since beginning of run at time = 0.0
Change in Total Mass = -.11183 g/sq.ft.
Advection in from atmosphere = .00000 g/sq.ft.
Advection in from water table = -.11106 g/sq.ft.
Diffusion in from atmosphere = -.76430E-03g/sq.ft.
Diffusion in from water table = .00000 g/sq.ft.
Total inflow at boundaries = -.11183 g/sq.ft.
Mass discrepancy = .17136E-06g/sq.ft.

GROUNDWATER IMPACT OF POLYGON 1

Time	Mass per area (g/sq.ft.)	Total Mass (g)
1.00	.45271E-02	1139.5
2.00	.45022E-02	1133.2
3.00	.44721E-02	1125.6
4.00	.44361E-02	1116.6
5.00	.43941E-02	1106.0
6.00	.43467E-02	1094.1
7.00	.42944E-02	1080.9
8.00	.42380E-02	1066.7
9.00	.41783E-02	1051.7
10.00	.41159E-02	1036.0
11.00	.40512E-02	1019.7
12.00	.39845E-02	1002.9
13.00	.39162E-02	985.72
14.00	.38465E-02	968.17
15.00	.37757E-02	950.34

16.00	.37038E-02	932.26
17.00	.36313E-02	914.00
18.00	.35583E-02	895.62
19.00	.34850E-02	877.18
20.00	.34117E-02	858.73
21.00	.33386E-02	840.32
22.00	.32658E-02	822.00
23.00	.31935E-02	803.80
24.00	.31218E-02	785.76
25.00	.30509E-02	767.91
26.00	.29808E-02	750.26
27.00	.29116E-02	732.84
28.00	.28433E-02	715.67
29.00	.27761E-02	698.75
30.00	.27100E-02	682.10

****

****

TOTAL GROUNDWATER IMPACT

Time (yr)	Mass (g)	Cumulative Mass (g)
1.00	1139.5	1139.5
2.00	1133.2	2272.7
3.00	1125.6	3398.3
4.00	1116.6	4514.8
5.00	1106.0	5620.9
6.00	1094.1	6714.9
7.00	1080.9	7795.8
8.00	1066.7	8862.5
9.00	1051.7	9914.2
10.00	1036.0	10950.
11.00	1019.7	11970.
12.00	1002.9	12973.
13.00	985.72	13958.
14.00	968.17	14927.
15.00	950.34	15877.
16.00	932.26	16809.
17.00	914.00	17723.
18.00	895.62	18619.
19.00	877.18	19496.
20.00	858.73	20355.
21.00	840.32	21195.
22.00	822.00	22017.
23.00	803.80	22821.
24.00	785.76	23607.
25.00	767.91	24375.
26.00	750.26	25125.
27.00	732.84	25858.
28.00	715.67	26573.
29.00	698.75	27272.
30.00	682.10	27954.

Polygon 114-115
Time: .000

Cell	Cgas(g/cu.ft.)	Cliq(g/cu.ft.)	Csol
1	.48224E-04	.10195E-03	.32931E-09
2	.48224E-04	.10195E-03	.32931E-09
3	.48224E-04	.10195E-03	.32931E-09
4	.48224E-04	.10195E-03	.32931E-09
5	.48224E-04	.10195E-03	.32931E-09
6	.48224E-04	.10195E-03	.32931E-09
7	.14420E-03	.30486E-03	.98469E-09
8	.14420E-03	.30486E-03	.98469E-09
9	.14420E-03	.30486E-03	.98469E-09
10	.14420E-03	.30486E-03	.98469E-09
11	.14420E-03	.30486E-03	.98469E-09
12	.14420E-03	.30486E-03	.98469E-09
13	.24017E-03	.50776E-03	.16401E-08
14	.24017E-03	.50776E-03	.16401E-08
15	.24017E-03	.50776E-03	.16401E-08
16	.24017E-03	.50776E-03	.16401E-08
17	.24017E-03	.50776E-03	.16401E-08
18	.24017E-03	.50776E-03	.16401E-08
19	.45292E-03	.95756E-03	.30929E-08
20	.45292E-03	.95756E-03	.30929E-08
21	.45292E-03	.95756E-03	.30929E-08
22	.45292E-03	.95756E-03	.30929E-08
23	.45292E-03	.95756E-03	.30929E-08
24	.45292E-03	.95756E-03	.30929E-08
25	.68837E-03	.14553E-02	.47007E-08
26	.68837E-03	.14553E-02	.47007E-08
27	.68837E-03	.14553E-02	.47007E-08
28	.68837E-03	.14553E-02	.47007E-08
29	.68837E-03	.14553E-02	.47007E-08
30	.68837E-03	.14553E-02	.47007E-08
31	.26433E-02	.55884E-02	.18051E-07
32	.26433E-02	.55884E-02	.18051E-07
33	.26433E-02	.55884E-02	.18051E-07
34	.26433E-02	.55884E-02	.18051E-07
35	.26433E-02	.55884E-02	.18051E-07
36	.26433E-02	.55884E-02	.18051E-07
37	.49439E-02	.10452E-01	.33760E-07
38	.49439E-02	.10452E-01	.33760E-07
39	.49439E-02	.10452E-01	.33760E-07
40	.49439E-02	.10452E-01	.33760E-07
41	.49439E-02	.10452E-01	.33760E-07
42	.49439E-02	.10452E-01	.33760E-07
43	.74321E-02	.15713E-01	.50752E-07
44	.74321E-02	.15713E-01	.50752E-07
45	.74321E-02	.15713E-01	.50752E-07
46	.74321E-02	.15713E-01	.50752E-07
47	.74321E-02	.15713E-01	.50752E-07
48	.74321E-02	.15713E-01	.50752E-07
49	.10016E-01	.21176E-01	.68399E-07
50	.10016E-01	.21176E-01	.68399E-07
51	.10016E-01	.21176E-01	.68399E-07
52	.10016E-01	.21176E-01	.68399E-07
53	.10016E-01	.21176E-01	.68399E-07
54	.10016E-01	.21176E-01	.68399E-07
55	.10878E-01	.22998E-01	.74285E-07
56	.10878E-01	.22998E-01	.74285E-07

57	.10878E-01	.22998E-01	.74285E-07
58	.10878E-01	.22998E-01	.74285E-07
59	.10878E-01	.22998E-01	.74285E-07
60	.10878E-01	.22998E-01	.74285E-07

Polygon 114-115
Time: 10.000

Cell	Cgas(g/cu.ft.)	Cliq(g/cu.ft.)	Csol
1	.36776E-05	.77751E-05	.25113E-10
2	.98289E-05	.20780E-04	.67119E-10
3	.18322E-04	.38736E-04	.12512E-09
4	.28727E-04	.60733E-04	.19617E-09
5	.40441E-04	.85500E-04	.27617E-09
6	.52952E-04	.11195E-03	.36160E-09
7	.66320E-04	.14021E-03	.45288E-09
8	.81135E-04	.17153E-03	.55405E-09
9	.97856E-04	.20688E-03	.66823E-09
10	.11635E-03	.24599E-03	.79455E-09
11	.13608E-03	.28769E-03	.92923E-09
12	.15648E-03	.33082E-03	.10685E-08
13	.17767E-03	.37562E-03	.12133E-08
14	.20041E-03	.42370E-03	.13686E-08
15	.22543E-03	.47659E-03	.15394E-08
16	.25291E-03	.53470E-03	.17271E-08
17	.28266E-03	.59758E-03	.19302E-08
18	.31446E-03	.66482E-03	.21474E-08
19	.34920E-03	.73827E-03	.23846E-08
20	.38873E-03	.82185E-03	.26546E-08
21	.43449E-03	.91858E-03	.29670E-08
22	.48656E-03	.10287E-02	.33226E-08
23	.54408E-03	.11503E-02	.37154E-08
24	.60625E-03	.12817E-02	.41399E-08
25	.67385E-03	.14246E-02	.46016E-08
26	.74925E-03	.15840E-02	.51164E-08
27	.83474E-03	.17648E-02	.57002E-08
28	.93137E-03	.19691E-02	.63601E-08
29	.10393E-02	.21972E-02	.70970E-08
30	.11588E-02	.24499E-02	.79132E-08
31	.12978E-02	.27438E-02	.88625E-08
32	.14705E-02	.31089E-02	.10042E-07
33	.16851E-02	.35625E-02	.11507E-07
34	.19358E-02	.40925E-02	.13219E-07
35	.22072E-02	.46664E-02	.15073E-07
36	.24839E-02	.52514E-02	.16962E-07
37	.27646E-02	.58447E-02	.18879E-07
38	.30617E-02	.64729E-02	.20908E-07
39	.33854E-02	.71573E-02	.23118E-07
40	.37318E-02	.78897E-02	.25484E-07
41	.40861E-02	.86387E-02	.27903E-07
42	.44327E-02	.93714E-02	.30270E-07
43	.47713E-02	.10087E-01	.32582E-07
44	.51166E-02	.10817E-01	.34940E-07
45	.54805E-02	.11587E-01	.37425E-07
46	.58596E-02	.12388E-01	.40014E-07
47	.62383E-02	.13189E-01	.42600E-07
48	.66001E-02	.13954E-01	.45070E-07
49	.69440E-02	.14681E-01	.47419E-07
50	.72850E-02	.15402E-01	.49747E-07
51	.76348E-02	.16141E-01	.52136E-07
52	.79892E-02	.16891E-01	.54557E-07

53	.83314E-02	.17614E-01	.56893E-07
54	.86427E-02	.18272E-01	.59019E-07
55	.89147E-02	.18847E-01	.60877E-07
56	.91499E-02	.19344E-01	.62482E-07
57	.93538E-02	.19776E-01	.63875E-07
58	.95287E-02	.20145E-01	.65069E-07
59	.96724E-02	.20449E-01	.66051E-07
60	.97814E-02	.20679E-01	.66795E-07

Polygon 114-115
Time: 20.000

Cell	Cgas(g/cu.ft.)	Cliq(g/cu.ft.)	Csol
1	.27162E-05	.57426E-05	.18548E-10
2	.69889E-05	.14776E-04	.47725E-10
3	.12689E-04	.26827E-04	.86651E-10
4	.19760E-04	.41777E-04	.13494E-09
5	.28191E-04	.59601E-04	.19251E-09
6	.37992E-04	.80322E-04	.25944E-09
7	.49177E-04	.10397E-03	.33582E-09
8	.61762E-04	.13058E-03	.42176E-09
9	.75775E-04	.16020E-03	.51745E-09
10	.91268E-04	.19296E-03	.62325E-09
11	.10832E-03	.22901E-03	.73971E-09
12	.12704E-03	.26858E-03	.86752E-09
13	.14753E-03	.31189E-03	.10074E-08
14	.16989E-03	.35919E-03	.11602E-08
15	.19428E-03	.41073E-03	.13267E-08
16	.22084E-03	.46689E-03	.15081E-08
17	.24979E-03	.52811E-03	.17058E-08
18	.28140E-03	.59492E-03	.19216E-08
19	.31595E-03	.66796E-03	.21575E-08
20	.35377E-03	.74792E-03	.24158E-08
21	.39525E-03	.83562E-03	.26990E-08
22	.44085E-03	.93203E-03	.30105E-08
23	.49110E-03	.10383E-02	.33536E-08
24	.54656E-03	.11555E-02	.37323E-08
25	.60778E-03	.12850E-02	.41504E-08
26	.67534E-03	.14278E-02	.46117E-08
27	.74980E-03	.15852E-02	.51202E-08
28	.83184E-03	.17586E-02	.56804E-08
29	.92218E-03	.19496E-02	.62974E-08
30	.10217E-02	.21600E-02	.69767E-08
31	.11312E-02	.23915E-02	.77245E-08
32	.12517E-02	.26464E-02	.85478E-08
33	.13846E-02	.29273E-02	.94550E-08
34	.15312E-02	.32373E-02	.10456E-07
35	.16932E-02	.35798E-02	.11563E-07
36	.18717E-02	.39571E-02	.12781E-07
37	.20671E-02	.43701E-02	.14116E-07
38	.22789E-02	.48180E-02	.15562E-07
39	.25062E-02	.52985E-02	.17114E-07
40	.27478E-02	.58094E-02	.18764E-07
41	.30028E-02	.63485E-02	.20506E-07
42	.32701E-02	.69136E-02	.22331E-07
43	.35483E-02	.75016E-02	.24230E-07
44	.38355E-02	.81090E-02	.26192E-07
45	.41300E-02	.87314E-02	.28203E-07
46	.44298E-02	.93654E-02	.30250E-07
47	.47337E-02	.10008E-01	.32325E-07
48	.50400E-02	.10655E-01	.34417E-07

49	.53473E-02	.11305E-01	.36515E-07
50	.56532E-02	.11952E-01	.38604E-07
51	.59554E-02	.12591E-01	.40668E-07
52	.62517E-02	.13217E-01	.42691E-07
53	.65398E-02	.13826E-01	.44659E-07
54	.68176E-02	.14413E-01	.46556E-07
55	.70824E-02	.14973E-01	.48364E-07
56	.73310E-02	.15499E-01	.50062E-07
57	.75594E-02	.15982E-01	.51621E-07
58	.77634E-02	.16413E-01	.53014E-07
59	.79389E-02	.16784E-01	.54213E-07
60	.80819E-02	.17086E-01	.55189E-07

Polygon 114-115
Time: 30.000

Cell	Cgas(g/cu.ft.)	Cliq(g/cu.ft.)	Csol
1	.22295E-05	.47135E-05	.15224E-10
2	.57247E-05	.12103E-04	.39092E-10
3	.10368E-04	.21921E-04	.70804E-10
4	.16102E-04	.34042E-04	.10996E-09
5	.22909E-04	.48434E-04	.15644E-09
6	.30807E-04	.65131E-04	.21037E-09
7	.39835E-04	.84218E-04	.27202E-09
8	.50052E-04	.10582E-03	.34180E-09
9	.61532E-04	.13009E-03	.42019E-09
10	.74356E-04	.15720E-03	.50776E-09
11	.88617E-04	.18735E-03	.60515E-09
12	.10442E-03	.22075E-03	.71303E-09
13	.12186E-03	.25764E-03	.83217E-09
14	.14108E-03	.29826E-03	.96339E-09
15	.16220E-03	.34291E-03	.11076E-08
16	.18537E-03	.39189E-03	.12658E-08
17	.21075E-03	.44555E-03	.14391E-08
18	.23852E-03	.50426E-03	.16288E-08
19	.26888E-03	.56845E-03	.18361E-08
20	.30205E-03	.63858E-03	.20626E-08
21	.33828E-03	.71518E-03	.23100E-08
22	.37784E-03	.79881E-03	.25802E-08
23	.42103E-03	.89012E-03	.28751E-08
24	.46817E-03	.98980E-03	.31971E-08
25	.51964E-03	.10986E-02	.35485E-08
26	.57582E-03	.12174E-02	.39321E-08
27	.63712E-03	.13470E-02	.43507E-08
28	.70399E-03	.14883E-02	.48073E-08
29	.77687E-03	.16424E-02	.53051E-08
30	.85625E-03	.18103E-02	.58471E-08
31	.94262E-03	.19929E-02	.64369E-08
32	.10365E-02	.21913E-02	.70779E-08
33	.11384E-02	.24067E-02	.77735E-08
34	.12487E-02	.26401E-02	.85274E-08
35	.13682E-02	.28926E-02	.93432E-08
36	.14973E-02	.31654E-02	.10224E-07
37	.16364E-02	.34596E-02	.11174E-07
38	.17860E-02	.37760E-02	.12196E-07
39	.19466E-02	.41154E-02	.13293E-07
40	.21182E-02	.44781E-02	.14464E-07
41	.23008E-02	.48642E-02	.15711E-07
42	.24942E-02	.52731E-02	.17032E-07
43	.26979E-02	.57039E-02	.18424E-07
44	.29114E-02	.61551E-02	.19881E-07

45	.31336E-02	.66250E-02	.21399E-07
46	.33636E-02	.71112E-02	.22969E-07
47	.36001E-02	.76113E-02	.24584E-07
48	.38417E-02	.81221E-02	.26234E-07
49	.40869E-02	.86404E-02	.27908E-07
50	.43339E-02	.91625E-02	.29595E-07
51	.45809E-02	.96847E-02	.31282E-07
52	.48258E-02	.10203E-01	.32955E-07
53	.50666E-02	.10712E-01	.34599E-07
54	.53009E-02	.11207E-01	.36198E-07
55	.55260E-02	.11683E-01	.37736E-07
56	.57393E-02	.12134E-01	.39193E-07
57	.59378E-02	.12554E-01	.40548E-07
58	.61182E-02	.12935E-01	.41780E-07
59	.62770E-02	.13271E-01	.42864E-07
60	.64103E-02	.13552E-01	.43774E-07

V-Leach, VER 1.1
Jake Turin, 11/91
PGA V-leach model, poly screen-TCE-11/10/92-Poly114-115.INP. Poly 116 Vert Dist
1 polygons.
Timestep = 1.00 years. Simulation length = 30.00 years.
Printout every 1.00 years. Vertical profile stored every 10.00 years.
Koc = 123.60 ml/g, .43649E-02cu.ft./g
Kh = .47300 (dimensionless).
Aqueous solubility = 1100.0 mg/l, 31.149 g/cu.ft
Free air diffusion coefficient = .70290 sq. m/day, 2761.7 sq.ft./yr

Polygon 1
Polygon 114-115
Polygon area = .25170E+06sq. ft.
60 cells, each cell 1.000 ft. thick.
Soil Properties:
Bulk density = 1.6400 g/ml, 46440. g/cu.ft.
Porosity = .3810 Volumetric water content = .2550
Organic carbon content = .00074000
Recharge Rate = .19685000 ft/yr
Conc. in recharge water = .00000 mg/l, .00000 g/cu.ft
Atmospheric concentration = .00000 mg/l, .00000 g/cu.ft
Water table is impermeable to gas diffusion.

POLYGON 114-115 VERT DIST CALC.'S, Total Clx VOC's: Using Revised Physical Soil Parameters and New Polygon 116 Vertical Distribution Data

% Total Mass per 6 ft Interval (Polygon 116 data)	Total Mass VOC's in Polygon 114-115 (from RI/FS data) (Table C-2)	Incremental Mass per 6 ft Interval (pounds)	Incremental Mass per 6 ft Interval (grams)	Volume Soil per interval (cu. ft)	Calculated Soil Concentration (ug/Kg) using Polygon 116 Distribution and Revised Soil Physical Data
0.001281035	122.60	0.16	71.24	1510200	1.02
0.003843104	122.60	0.47	213.72	1510200	3.05
0.006405173	122.60	0.79	356.19	1510200	5.08
0.012078326	122.60	1.48	671.68	1510200	9.58
0.018361496	122.60	2.25	1021.09	1510200	14.56
0.070517904	122.60	8.65	3921.51	1510200	55.91
0.131885561	122.60	16.17	7334.17	1510200	104.57
0.198255353	122.60	24.31	11025.01	1510200	157.20
0.267187214	122.60	32.76	14858.32	1510200	211.86
0.290184835	122.60	35.58	16137.22	1510200	230.09
1.00		122.60	55610.13		

POLYGON 116 VERT DIST CALC.'S, Total Clx VOC's: Using Revised VLEACH Parameters

CONC (ug/Kg) M&E June, 92*	Depth Interval Feet	Mass VOC's (grams) over depth interval	Incr. Mass Lbs	Percentage of Total Mass per Interval
0.021	6	0.76	0.00	0.001281035
0.063	6	2.28	0.01	0.003843104
0.105	6	3.80	0.01	0.006405173
0.198	6	7.17	0.02	0.012078326
0.301	6	10.90	0.02	0.018361496
1.156	6	41.87	0.09	0.070517904
2.162	6	78.31	0.17	0.131885561
3.25	6	117.73	0.26	0.198255353
4.38	6	158.66	0.35	0.267187214
4.757	6	172.31	0.38	0.290184835
	60	593.81	**1.31**	**1.00**

*From INTERP output Polygon 116 (10/92)

```
PGA V-leach model, polygon screen-TCE-11/10/92-POLY96.INP.  Old chem, New soil.
    1
       1.0          30.          1.0          10.
     123.6         .473       1100.        .7029
lygon 96
     83000.           1.     .196850         1.64         .381         .255      .00074
         0.           0.          -1.
   60
    1     6    1635.33
    7    12     147.18
   13    18     169.41
   19    24     169.41
   25    30     178.61
   31    36     512.59
   37    42     512.59
   43    48     935.28
   49    54     353.41
   55    60     206.47
```

V-Leach, VER 1.1
Jake Turin, 11/91
PGA V-leach model, polygon screen-TCE-11/10/92-POLY96.INP. Old chem, New soil.

Polygon 1
At time = .00, total mass in vadose zone = 1.3431 g/sq.ft.
Mass in gas phase = .17229 g/sq.ft.
Mass in liquid phase = .73716 g/sq.ft.
Mass sorbed = .43363 g/sq.ft.

Polygon 1
At time = 1.00, total mass in vadose zone = 1.3098 g/sq.ft.
Mass in gas phase = .16802 g/sq.ft.
Mass in liquid phase = .71889 g/sq.ft.
Mass sorbed = .42288 g/sq.ft.

Since last printout at time = .00
Change in Total Mass = -.33293E-01g/sq.ft.
Advection in from atmosphere = .00000 g/sq.ft.
Advection in from water table = -.40638E-02g/sq.ft.
Diffusion in from atmosphere = -.29230E-01g/sq.ft.
Diffusion in from water table = .00000 g/sq.ft.
Total inflow at boundaries = -.33293E-01g/sq.ft.
Mass discrepancy = .11176E-06g/sq.ft.

Since beginning of run at time = 0.0
Change in Total Mass = -.33293E-01g/sq.ft.
Advection in from atmosphere = .00000 g/sq.ft.
Advection in from water table = -.40638E-02g/sq.ft.
Diffusion in from atmosphere = -.29230E-01g/sq.ft.
Diffusion in from water table = .00000 g/sq.ft.
Total inflow at boundaries = -.33293E-01g/sq.ft.
Mass discrepancy = .11176E-06g/sq.ft.

Polygon 1
At time = 2.00, total mass in vadose zone = 1.2811 g/sq.ft.
Mass in gas phase = .16433 g/sq.ft.
Mass in liquid phase = .70313 g/sq.ft.
Mass sorbed = .41361 g/sq.ft.

Since last printout at time = 1.00
Change in Total Mass = -.28711E-01g/sq.ft.
Advection in from atmosphere = .00000 g/sq.ft.
Advection in from water table = -.42455E-02g/sq.ft.
Diffusion in from atmosphere = -.24466E-01g/sq.ft.
Diffusion in from water table = .00000 g/sq.ft.
Total inflow at boundaries = -.28711E-01g/sq.ft.
Mass discrepancy = -.12666E-06g/sq.ft.

Since beginning of run at time = 0.0
Change in Total Mass = -.62005E-01g/sq.ft.
Advection in from atmosphere = .00000 g/sq.ft.
Advection in from water table = -.83094E-02g/sq.ft.
Diffusion in from atmosphere = -.53695E-01g/sq.ft.
Diffusion in from water table = .00000 g/sq.ft.
Total inflow at boundaries = -.62005E-01g/sq.ft.
Mass discrepancy = -.14901E-07g/sq.ft.

```
Polygon   1
At time =       3.00, total mass in vadose zone =     1.2560    g/sq.ft.
Mass in gas phase     =       .16111    g/sq.ft.
Mass in liquid phase  =       .68936    g/sq.ft.
Mass sorbed           =       .40551    g/sq.ft.

Since last printout at time =       2.00
               Change in Total Mass =     -.25094E-01g/sq.ft.
                    Advection in from atmosphere =       .00000    g/sq.ft.
                    Advection in from water table =     -.44619E-02g/sq.ft.
                    Diffusion in from atmosphere =      -.20632E-01g/sq.ft.
                    Diffusion in from water table =      .00000    g/sq.ft.
               Total inflow at boundaries =     -.25094E-01g/sq.ft.
               Mass discrepancy =      .74506E-08g/sq.ft.

Since beginning of run at time = 0.0
               Change in Total Mass =     -.87099E-01g/sq.ft.
                    Advection in from atmosphere =       .00000    g/sq.ft.
                    Advection in from water table =     -.12771E-01g/sq.ft.
                    Diffusion in from atmosphere =      -.74328E-01g/sq.ft.
                    Diffusion in from water table =      .00000    g/sq.ft.
               Total inflow at boundaries =     -.87099E-01g/sq.ft.
               Mass discrepancy =     -.74506E-08g/sq.ft.


Polygon   1
At time =       4.00, total mass in vadose zone =     1.2337    g/sq.ft.
Mass in gas phase     =       .15826    g/sq.ft.
Mass in liquid phase  =       .67715    g/sq.ft.
Mass sorbed           =       .39832    g/sq.ft.

Since last printout at time =       3.00
               Change in Total Mass =     -.22244E-01g/sq.ft.
                    Advection in from atmosphere =       .00000    g/sq.ft.
                    Advection in from water table =     -.47159E-02g/sq.ft.
                    Diffusion in from atmosphere =      -.17528E-01g/sq.ft.
                    Diffusion in from water table =      .00000    g/sq.ft.
               Total inflow at boundaries =     -.22244E-01g/sq.ft.
               Mass discrepancy =     -.11548E-06g/sq.ft.

Since beginning of run at time = 0.0
               Change in Total Mass =     -.10934    g/sq.ft.
                    Advection in from atmosphere =       .00000    g/sq.ft.
                    Advection in from water table =     -.17487E-01g/sq.ft.
                    Diffusion in from atmosphere =      -.91855E-01g/sq.ft.
                    Diffusion in from water table =      .00000    g/sq.ft.
               Total inflow at boundaries =     -.10934    g/sq.ft.
               Mass discrepancy =     -.11921E-06g/sq.ft.


Polygon   1
At time =       5.00, total mass in vadose zone =     1.2137    g/sq.ft.
Mass in gas phase     =       .15570    g/sq.ft.
Mass in liquid phase  =       .66617    g/sq.ft.
Mass sorbed           =       .39187    g/sq.ft.

Since last printout at time =       4.00
               Change in Total Mass =     -.20004E-01g/sq.ft.
```

```
                    Advection in from atmosphere =       .00000    g/sq.ft.
                    Advection in from water table =     -.50065E-02g/sq.ft.
                    Diffusion in from atmosphere =      -.14998E-01g/sq.ft.
                    Diffusion in from water table =      .00000    g/sq.ft.
               Total inflow at boundaries =     -.20004E-01g/sq.ft.
               Mass discrepancy =      .26077E-06g/sq.ft.

Since beginning of run at time = 0.0
               Change in Total Mass =     -.12935    g/sq.ft.
                    Advection in from atmosphere =       .00000    g/sq.ft.
                    Advection in from water table =     -.22494E-01g/sq.ft.
                    Diffusion in from atmosphere =      -.10685    g/sq.ft.
                    Diffusion in from water table =      .00000    g/sq.ft.
               Total inflow at boundaries =     -.12935    g/sq.ft.
               Mass discrepancy =      .13411E-06g/sq.ft.


Polygon   1
At time =       6.00, total mass in vadose zone =     1.1955    g/sq.ft.
Mass in gas phase     =       .15335    g/sq.ft.
Mass in liquid phase  =       .65615    g/sq.ft.
Mass sorbed           =       .38597    g/sq.ft.

Since last printout at time =       5.00
               Change in Total Mass =     -.18252E-01g/sq.ft.
                    Advection in from atmosphere =       .00000    g/sq.ft.
                    Advection in from water table =     -.53289E-02g/sq.ft.
                    Diffusion in from atmosphere =      -.12923E-01g/sq.ft.
                    Diffusion in from water table =      .00000    g/sq.ft.
               Total inflow at boundaries =     -.18252E-01g/sq.ft.
               Mass discrepancy =      .19372E-06g/sq.ft.

Since beginning of run at time = 0.0
               Change in Total Mass =     -.14760    g/sq.ft.
                    Advection in from atmosphere =       .00000    g/sq.ft.
                    Advection in from water table =     -.27823E-01g/sq.ft.
                    Diffusion in from atmosphere =      -.11978    g/sq.ft.
                    Diffusion in from water table =      .00000    g/sq.ft.
               Total inflow at boundaries =     -.14760    g/sq.ft.
               Mass discrepancy =      .32783E-06g/sq.ft.


Polygon   1
At time =       7.00, total mass in vadose zone =     1.1786    g/sq.ft.
Mass in gas phase     =       .15119    g/sq.ft.
Mass in liquid phase  =       .64688    g/sq.ft.
Mass sorbed           =       .38052    g/sq.ft.

Since last printout at time =       6.00
               Change in Total Mass =     -.16886E-01g/sq.ft.
                    Advection in from atmosphere =       .00000    g/sq.ft.
                    Advection in from water table =     -.56759E-02g/sq.ft.
                    Diffusion in from atmosphere =      -.11210E-01g/sq.ft.
                    Diffusion in from water table =      .00000    g/sq.ft.
               Total inflow at boundaries =     -.16886E-01g/sq.ft.
               Mass discrepancy =     -.15274E-06g/sq.ft.

Since beginning of run at time = 0.0
               Change in Total Mass =     -.16448    g/sq.ft.
                    Advection in from atmosphere =       .00000    g/sq.ft.
```

```
                Advection in from water table =     -.33498E-01g/sq.ft.
                Diffusion in from atmosphere =      -.13099    g/sq.ft.
                Diffusion in from water table =      .00000    g/sq.ft.
           Total inflow at boundaries =     -.16448    g/sq.ft.
           Mass discrepancy =      .17881E-06g/sq.ft.


Polygon   1
At time =       8.00, total mass in vadose zone =     1.1628    g/sq.ft.
Mass in gas phase     =       .14916    g/sq.ft.
Mass in liquid phase  =       .63819    g/sq.ft.
Mass sorbed           =       .37541    g/sq.ft.

Since last printout at time =       7.00
           Change in Total Mass =     -.15827E-01g/sq.ft.
                Advection in from atmosphere =       .00000    g/sq.ft.
                Advection in from water table =     -.60398E-02g/sq.ft.
                Diffusion in from atmosphere =      -.97874E-02g/sq.ft.
                Diffusion in from water table =      .00000    g/sq.ft.
           Total inflow at boundaries =     -.15827E-01g/sq.ft.
           Mass discrepancy =      .27940E-06g/sq.ft.

Since beginning of run at time = 0.0
           Change in Total Mass =     -.18031    g/sq.ft.
                Advection in from atmosphere =       .00000    g/sq.ft.
                Advection in from water table =     -.39538E-01g/sq.ft.
                Diffusion in from atmosphere =      -.14077    g/sq.ft.
                Diffusion in from water table =      .00000    g/sq.ft.
           Total inflow at boundaries =     -.18031    g/sq.ft.
           Mass discrepancy =      .46194E-06g/sq.ft.


Polygon   1
At time =       9.00, total mass in vadose zone =     1.1478    g/sq.ft.
Mass in gas phase     =       .14723    g/sq.ft.
Mass in liquid phase  =       .62996    g/sq.ft.
Mass sorbed           =       .37056    g/sq.ft.

Since last printout at time =       8.00
           Change in Total Mass =     -.15011E-01g/sq.ft.
                Advection in from atmosphere =       .00000    g/sq.ft.
                Advection in from water table =     -.64132E-02g/sq.ft.
                Diffusion in from atmosphere =      -.85980E-02g/sq.ft.
                Diffusion in from water table =      .00000    g/sq.ft.
           Total inflow at boundaries =     -.15011E-01g/sq.ft.
           Mass discrepancy =     -.19465E-06g/sq.ft.

Since beginning of run at time = 0.0
           Change in Total Mass =     -.19532    g/sq.ft.
                Advection in from atmosphere =       .00000    g/sq.ft.
                Advection in from water table =     -.45951E-01g/sq.ft.
                Diffusion in from atmosphere =      -.14937    g/sq.ft.
                Diffusion in from water table =      .00000    g/sq.ft.
           Total inflow at boundaries =     -.19532    g/sq.ft.
           Mass discrepancy =      .26822E-06g/sq.ft.


Polygon   1
At time =      10.00, total mass in vadose zone =     1.1334    g/sq.ft.
Mass in gas phase     =       .14539    g/sq.ft.
```

```
Mass in liquid phase  =        .62206    g/sq.ft.
Mass sorbed           =        .36592    g/sq.ft.

Since last printout at time =        9.00
               Change in Total Mass =     -.14387E-01g/sq.ft.
                    Advection in from atmosphere =       .00000    g/sq.ft.
                    Advection in from water table =     -.67894E-02g/sq.ft.
                    Diffusion in from atmosphere =      -.75974E-02g/sq.ft.
                    Diffusion in from water table =      .00000    g/sq.ft.
               Total inflow at boundaries =     -.14387E-01g/sq.ft.
               Mass discrepancy =      .28871E-07g/sq.ft.

Since beginning of run at time = 0.0
               Change in Total Mass =     -.20971    g/sq.ft.
                    Advection in from atmosphere =       .00000    g/sq.ft.
                    Advection in from water table =     -.52741E-01g/sq.ft.
                    Diffusion in from atmosphere =      -.15697    g/sq.ft.
                    Diffusion in from water table =      .00000    g/sq.ft.
               Total inflow at boundaries =     -.20971    g/sq.ft.
               Mass discrepancy =      .29802E-06g/sq.ft.


Polygon   1
At time =      11.00, total mass in vadose zone =     1.1195    g/sq.ft.
Mass in gas phase     =        .14360    g/sq.ft.
Mass in liquid phase  =        .61442    g/sq.ft.
Mass sorbed           =        .36143    g/sq.ft.

Since last printout at time =       10.00
               Change in Total Mass =     -.13914E-01g/sq.ft.
                    Advection in from atmosphere =       .00000    g/sq.ft.
                    Advection in from water table =     -.71632E-02g/sq.ft.
                    Diffusion in from atmosphere =      -.67505E-02g/sq.ft.
                    Diffusion in from water table =      .00000    g/sq.ft.
               Total inflow at boundaries =     -.13914E-01g/sq.ft.
               Mass discrepancy =      .74506E-07g/sq.ft.

Since beginning of run at time = 0.0
               Change in Total Mass =     -.22362    g/sq.ft.
                    Advection in from atmosphere =       .00000    g/sq.ft.
                    Advection in from water table =     -.59904E-01g/sq.ft.
                    Diffusion in from atmosphere =      -.16372    g/sq.ft.
                    Diffusion in from water table =      .00000    g/sq.ft.
               Total inflow at boundaries =     -.22362    g/sq.ft.
               Mass discrepancy =      .35763E-06g/sq.ft.


Polygon   1
At time =      12.00, total mass in vadose zone =     1.1059    g/sq.ft.
Mass in gas phase     =        .14186    g/sq.ft.
Mass in liquid phase  =        .60698    g/sq.ft.
Mass sorbed           =        .35705    g/sq.ft.

Since last printout at time =       11.00
               Change in Total Mass =     -.13559E-01g/sq.ft.
                    Advection in from atmosphere =       .00000    g/sq.ft.
                    Advection in from water table =     -.75300E-02g/sq.ft.
                    Diffusion in from atmosphere =      -.60293E-02g/sq.ft.
                    Diffusion in from water table =      .00000    g/sq.ft.
               Total inflow at boundaries =     -.13559E-01g/sq.ft.
```

Mass discrepancy = .39488E-06g/sq.ft.

Since beginning of run at time = 0.0
Change in Total Mass = -.23718 g/sq.ft.
Advection in from atmosphere = .00000 g/sq.ft.
Advection in from water table = -.67434E-01g/sq.ft.
Diffusion in from atmosphere = -.16975 g/sq.ft.
Diffusion in from water table = .00000 g/sq.ft.
Total inflow at boundaries = -.23718 g/sq.ft.
Mass discrepancy = .75996E-06g/sq.ft.

Polygon 1
At time = 13.00, total mass in vadose zone = 1.0926 g/sq.ft.
Mass in gas phase = .14016 g/sq.ft.
Mass in liquid phase = .59968 g/sq.ft.
Mass sorbed = .35276 g/sq.ft.

Since last printout at time = 12.00
Change in Total Mass = -.13298E-01g/sq.ft.
Advection in from atmosphere = .00000 g/sq.ft.
Advection in from water table = -.78859E-02g/sq.ft.
Diffusion in from atmosphere = -.54117E-02g/sq.ft.
Diffusion in from water table = .00000 g/sq.ft.
Total inflow at boundaries = -.13298E-01g/sq.ft.
Mass discrepancy = -.27753E-06g/sq.ft.

Since beginning of run at time = 0.0
Change in Total Mass = -.25048 g/sq.ft.
Advection in from atmosphere = .00000 g/sq.ft.
Advection in from water table = -.75320E-01g/sq.ft.
Diffusion in from atmosphere = -.17516 g/sq.ft.
Diffusion in from water table = .00000 g/sq.ft.
Total inflow at boundaries = -.25048 g/sq.ft.
Mass discrepancy = .47684E-06g/sq.ft.

Polygon 1
At time = 14.00, total mass in vadose zone = 1.0795 g/sq.ft.
Mass in gas phase = .13847 g/sq.ft.
Mass in liquid phase = .59249 g/sq.ft.
Mass sorbed = .34852 g/sq.ft.

Since last printout at time = 13.00
Change in Total Mass = -.13107E-01g/sq.ft.
Advection in from atmosphere = .00000 g/sq.ft.
Advection in from water table = -.82274E-02g/sq.ft.
Diffusion in from atmosphere = -.48797E-02g/sq.ft.
Diffusion in from water table = .00000 g/sq.ft.
Total inflow at boundaries = -.13107E-01g/sq.ft.
Mass discrepancy = -.67055E-07g/sq.ft.

Since beginning of run at time = 0.0
Change in Total Mass = -.26359 g/sq.ft.
Advection in from atmosphere = .00000 g/sq.ft.
Advection in from water table = -.83547E-01g/sq.ft.
Diffusion in from atmosphere = -.18004 g/sq.ft.
Diffusion in from water table = .00000 g/sq.ft.
Total inflow at boundaries = -.26359 g/sq.ft.
Mass discrepancy = .41723E-06g/sq.ft.

```
Polygon   1
At time =      15.00, total mass in vadose zone =     1.0665    g/sq.ft.
Mass in gas phase     =       .13681    g/sq.ft.
Mass in liquid phase  =       .58537    g/sq.ft.
Mass sorbed           =       .34434    g/sq.ft.

Since last printout at time =      14.00
               Change in Total Mass =     -.12970E-01g/sq.ft.
                    Advection in from atmosphere =       .00000    g/sq.ft.
                    Advection in from water table =     -.85512E-02g/sq.ft.
                    Diffusion in from atmosphere =      -.44190E-02g/sq.ft.
                    Diffusion in from water table =      .00000    g/sq.ft.
               Total inflow at boundaries =     -.12970E-01g/sq.ft.
               Mass discrepancy =      .22631E-06g/sq.ft.

Since beginning of run at time = 0.0
               Change in Total Mass =     -.27656    g/sq.ft.
                    Advection in from atmosphere =       .00000    g/sq.ft.
                    Advection in from water table =     -.92099E-01g/sq.ft.
                    Diffusion in from atmosphere =      -.18446    g/sq.ft.
                    Diffusion in from water table =      .00000    g/sq.ft.
               Total inflow at boundaries =     -.27656    g/sq.ft.
               Mass discrepancy =      .65565E-06g/sq.ft.


Polygon   1
At time =      16.00, total mass in vadose zone =     1.0536    g/sq.ft.
Mass in gas phase     =       .13516    g/sq.ft.
Mass in liquid phase  =       .57830    g/sq.ft.
Mass sorbed           =       .34018    g/sq.ft.

Since last printout at time =      15.00
               Change in Total Mass =     -.12872E-01g/sq.ft.
                    Advection in from atmosphere =       .00000    g/sq.ft.
                    Advection in from water table =     -.88543E-02g/sq.ft.
                    Diffusion in from atmosphere =      -.40179E-02g/sq.ft.
                    Diffusion in from water table =      .00000    g/sq.ft.
               Total inflow at boundaries =     -.12872E-01g/sq.ft.
               Mass discrepancy =     -.16950E-06g/sq.ft.

Since beginning of run at time = 0.0
               Change in Total Mass =     -.28943    g/sq.ft.
                    Advection in from atmosphere =       .00000    g/sq.ft.
                    Advection in from water table =     -.10095    g/sq.ft.
                    Diffusion in from atmosphere =      -.18848    g/sq.ft.
                    Diffusion in from water table =      .00000    g/sq.ft.
               Total inflow at boundaries =     -.28943    g/sq.ft.
               Mass discrepancy =      .47684E-06g/sq.ft.


Polygon   1
At time =      17.00, total mass in vadose zone =     1.0408    g/sq.ft.
Mass in gas phase     =       .13352    g/sq.ft.
Mass in liquid phase  =       .57128    g/sq.ft.
Mass sorbed           =       .33605    g/sq.ft.

Since last printout at time =      16.00
               Change in Total Mass =     -.12801E-01g/sq.ft.
```

```
                Advection in from atmosphere =       .00000    g/sq.ft.
                Advection in from water table =     -.91343E-02g/sq.ft.
                Diffusion in from atmosphere =      -.36670E-02g/sq.ft.
                Diffusion in from water table =      .00000    g/sq.ft.
            Total inflow at boundaries =     -.12801E-01g/sq.ft.
            Mass discrepancy =      .12573E-06g/sq.ft.

Since beginning of run at time = 0.0
            Change in Total Mass =     -.30223    g/sq.ft.
                Advection in from atmosphere =       .00000    g/sq.ft.
                Advection in from water table =     -.11009    g/sq.ft.
                Diffusion in from atmosphere =      -.19214    g/sq.ft.
                Diffusion in from water table =      .00000    g/sq.ft.
            Total inflow at boundaries =     -.30223    g/sq.ft.
            Mass discrepancy =      .59605E-06g/sq.ft.


Polygon   1
At time =      18.00, total mass in vadose zone =     1.0281    g/sq.ft.
Mass in gas phase     =       .13188    g/sq.ft.
Mass in liquid phase  =       .56428    g/sq.ft.
Mass sorbed           =       .33193    g/sq.ft.

Since last printout at time =      17.00
            Change in Total Mass =     -.12747E-01g/sq.ft.
                Advection in from atmosphere =       .00000    g/sq.ft.
                Advection in from water table =     -.93888E-02g/sq.ft.
                Diffusion in from atmosphere =      -.33585E-02g/sq.ft.
                Diffusion in from water table =      .00000    g/sq.ft.
            Total inflow at boundaries =     -.12747E-01g/sq.ft.
            Mass discrepancy =      .55879E-08g/sq.ft.

Since beginning of run at time = 0.0
            Change in Total Mass =     -.31498    g/sq.ft.
                Advection in from atmosphere =       .00000    g/sq.ft.
                Advection in from water table =     -.11948    g/sq.ft.
                Diffusion in from atmosphere =      -.19550    g/sq.ft.
                Diffusion in from water table =      .00000    g/sq.ft.
            Total inflow at boundaries =     -.31498    g/sq.ft.
            Mass discrepancy =      .59605E-06g/sq.ft.


Polygon   1
At time =      19.00, total mass in vadose zone =     1.0154    g/sq.ft.
Mass in gas phase     =       .13025    g/sq.ft.
Mass in liquid phase  =       .55731    g/sq.ft.
Mass sorbed           =       .32783    g/sq.ft.

Since last printout at time =      18.00
            Change in Total Mass =     -.12702E-01g/sq.ft.
                Advection in from atmosphere =       .00000    g/sq.ft.
                Advection in from water table =     -.96163E-02g/sq.ft.
                Diffusion in from atmosphere =      -.30860E-02g/sq.ft.
                Diffusion in from water table =      .00000    g/sq.ft.
            Total inflow at boundaries =     -.12702E-01g/sq.ft.
            Mass discrepancy =      .15087E-06g/sq.ft.

Since beginning of run at time = 0.0
            Change in Total Mass =     -.32768    g/sq.ft.
                Advection in from atmosphere =       .00000    g/sq.ft.
```

```
                Advection in from water table =     -.12909    g/sq.ft.
                Diffusion in from atmosphere =      -.19859    g/sq.ft.
                Diffusion in from water table =      .00000    g/sq.ft.
            Total inflow at boundaries =     -.32768    g/sq.ft.
            Mass discrepancy =      .77486E-06g/sq.ft.


Polygon   1
At time =      20.00, total mass in vadose zone =     1.0027    g/sq.ft.
Mass in gas phase     =       .12863    g/sq.ft.
Mass in liquid phase  =       .55036    g/sq.ft.
Mass sorbed           =       .32374    g/sq.ft.

Since last printout at time =      19.00
            Change in Total Mass =     -.12660E-01g/sq.ft.
                Advection in from atmosphere =       .00000    g/sq.ft.
                Advection in from water table =     -.98156E-02g/sq.ft.
                Diffusion in from atmosphere =      -.28442E-02g/sq.ft.
                Diffusion in from water table =      .00000    g/sq.ft.
            Total inflow at boundaries =     -.12660E-01g/sq.ft.
            Mass discrepancy =     -.42841E-07g/sq.ft.

Since beginning of run at time = 0.0
            Change in Total Mass =     -.34034    g/sq.ft.
                Advection in from atmosphere =       .00000    g/sq.ft.
                Advection in from water table =     -.13891    g/sq.ft.
                Diffusion in from atmosphere =      -.20143    g/sq.ft.
                Diffusion in from water table =      .00000    g/sq.ft.
            Total inflow at boundaries =     -.34034    g/sq.ft.
            Mass discrepancy =      .71526E-06g/sq.ft.


Polygon   1
At time =      21.00, total mass in vadose zone =      .99012    g/sq.ft.
Mass in gas phase     =       .12701    g/sq.ft.
Mass in liquid phase  =       .54344    g/sq.ft.
Mass sorbed           =       .31967    g/sq.ft.

Since last printout at time =      20.00
            Change in Total Mass =     -.12615E-01g/sq.ft.
                Advection in from atmosphere =       .00000    g/sq.ft.
                Advection in from water table =     -.99864E-02g/sq.ft.
                Diffusion in from atmosphere =      -.26289E-02g/sq.ft.
                Diffusion in from water table =      .00000    g/sq.ft.
            Total inflow at boundaries =     -.12615E-01g/sq.ft.
            Mass discrepancy =      .16298E-06g/sq.ft.

Since beginning of run at time = 0.0
            Change in Total Mass =     -.35296    g/sq.ft.
                Advection in from atmosphere =       .00000    g/sq.ft.
                Advection in from water table =     -.14889    g/sq.ft.
                Diffusion in from atmosphere =      -.20406    g/sq.ft.
                Diffusion in from water table =      .00000    g/sq.ft.
            Total inflow at boundaries =     -.35296    g/sq.ft.
            Mass discrepancy =      .89407E-06g/sq.ft.


Polygon   1
At time =      22.00, total mass in vadose zone =      .97755    g/sq.ft.
Mass in gas phase     =       .12540    g/sq.ft.
```

```
Mass in liquid phase  =       .53654    g/sq.ft.
Mass sorbed           =       .31561    g/sq.ft.

Since last printout at time =      21.00
              Change in Total Mass =     -.12565E-01g/sq.ft.
                   Advection in from atmosphere =       .00000    g/sq.ft.
                   Advection in from water table =     -.10129E-01g/sq.ft.
                   Diffusion in from atmosphere =      -.24364E-02g/sq.ft.
                   Diffusion in from water table =      .00000    g/sq.ft.
              Total inflow at boundaries =     -.12565E-01g/sq.ft.
              Mass discrepancy =      .87544E-07g/sq.ft.

Since beginning of run at time = 0.0
              Change in Total Mass =     -.36552    g/sq.ft.
                   Advection in from atmosphere =       .00000    g/sq.ft.
                   Advection in from water table =     -.15902    g/sq.ft.
                   Diffusion in from atmosphere =      -.20650    g/sq.ft.
                   Diffusion in from water table =      .00000    g/sq.ft.
              Total inflow at boundaries =     -.36552    g/sq.ft.
              Mass discrepancy =      .95367E-06g/sq.ft.


Polygon   1
At time =      23.00, total mass in vadose zone =     .96505    g/sq.ft.
Mass in gas phase     =       .12379    g/sq.ft.
Mass in liquid phase  =       .52968    g/sq.ft.
Mass sorbed           =       .31158    g/sq.ft.

Since last printout at time =      22.00
              Change in Total Mass =     -.12507E-01g/sq.ft.
                   Advection in from atmosphere =       .00000    g/sq.ft.
                   Advection in from water table =     -.10243E-01g/sq.ft.
                   Diffusion in from atmosphere =      -.22635E-02g/sq.ft.
                   Diffusion in from water table =      .00000    g/sq.ft.
              Total inflow at boundaries =     -.12507E-01g/sq.ft.
              Mass discrepancy =      .10245E-07g/sq.ft.

Since beginning of run at time = 0.0
              Change in Total Mass =     -.37803    g/sq.ft.
                   Advection in from atmosphere =       .00000    g/sq.ft.
                   Advection in from water table =     -.16927    g/sq.ft.
                   Diffusion in from atmosphere =      -.20876    g/sq.ft.
                   Diffusion in from water table =      .00000    g/sq.ft.
              Total inflow at boundaries =     -.37803    g/sq.ft.
              Mass discrepancy =      .98348E-06g/sq.ft.


Polygon   1
At time =      24.00, total mass in vadose zone =     .95261    g/sq.ft.
Mass in gas phase     =       .12220    g/sq.ft.
Mass in liquid phase  =       .52285    g/sq.ft.
Mass sorbed           =       .30756    g/sq.ft.

Since last printout at time =      23.00
              Change in Total Mass =     -.12439E-01g/sq.ft.
                   Advection in from atmosphere =       .00000    g/sq.ft.
                   Advection in from water table =     -.10332E-01g/sq.ft.
                   Diffusion in from atmosphere =      -.21078E-02g/sq.ft.
                   Diffusion in from water table =      .00000    g/sq.ft.
              Total inflow at boundaries =     -.12439E-01g/sq.ft.
```

Mass discrepancy = -.27008E-07g/sq.ft.

Since beginning of run at time = 0.0
Change in Total Mass = -.39047 g/sq.ft.
Advection in from atmosphere = .00000 g/sq.ft.
Advection in from water table = -.17960 g/sq.ft.
Diffusion in from atmosphere = -.21087 g/sq.ft.
Diffusion in from water table = .00000 g/sq.ft.
Total inflow at boundaries = -.39047 g/sq.ft.
Mass discrepancy = .95367E-06g/sq.ft.

Polygon 1
At time = 25.00, total mass in vadose zone = .94025 g/sq.ft.
Mass in gas phase = .12061 g/sq.ft.
Mass in liquid phase = .51606 g/sq.ft.
Mass sorbed = .30357 g/sq.ft.

Since last printout at time = 24.00
Change in Total Mass = -.12362E-01g/sq.ft.
Advection in from atmosphere = .00000 g/sq.ft.
Advection in from water table = -.10395E-01g/sq.ft.
Diffusion in from atmosphere = -.19670E-02g/sq.ft.
Diffusion in from water table = .00000 g/sq.ft.
Total inflow at boundaries = -.12362E-01g/sq.ft.
Mass discrepancy = .69849E-07g/sq.ft.

Since beginning of run at time = 0.0
Change in Total Mass = -.40283 g/sq.ft.
Advection in from atmosphere = .00000 g/sq.ft.
Advection in from water table = -.18999 g/sq.ft.
Diffusion in from atmosphere = -.21284 g/sq.ft.
Diffusion in from water table = .00000 g/sq.ft.
Total inflow at boundaries = -.40283 g/sq.ft.
Mass discrepancy = .10133E-05g/sq.ft.

Polygon 1
At time = 26.00, total mass in vadose zone = .92797 g/sq.ft.
Mass in gas phase = .11904 g/sq.ft.
Mass in liquid phase = .50933 g/sq.ft.
Mass sorbed = .29961 g/sq.ft.

Since last printout at time = 25.00
Change in Total Mass = -.12274E-01g/sq.ft.
Advection in from atmosphere = .00000 g/sq.ft.
Advection in from water table = -.10435E-01g/sq.ft.
Diffusion in from atmosphere = -.18394E-02g/sq.ft.
Diffusion in from water table = .00000 g/sq.ft.
Total inflow at boundaries = -.12274E-01g/sq.ft.
Mass discrepancy = -.21420E-07g/sq.ft.

Since beginning of run at time = 0.0
Change in Total Mass = -.41510 g/sq.ft.
Advection in from atmosphere = .00000 g/sq.ft.
Advection in from water table = -.20043 g/sq.ft.
Diffusion in from atmosphere = -.21468 g/sq.ft.
Diffusion in from water table = .00000 g/sq.ft.
Total inflow at boundaries = -.41510 g/sq.ft.
Mass discrepancy = .10133E-05g/sq.ft.

```
Polygon   1
At time =      27.00, total mass in vadose zone =     .91580    g/sq.ft.
Mass in gas phase     =       .11748    g/sq.ft.
Mass in liquid phase  =       .50264    g/sq.ft.
Mass sorbed           =       .29567    g/sq.ft.

Since last printout at time =      26.00
               Change in Total Mass =     -.12177E-01g/sq.ft.
                    Advection in from atmosphere =       .00000    g/sq.ft.
                    Advection in from water table =     -.10454E-01g/sq.ft.
                    Diffusion in from atmosphere =      -.17234E-02g/sq.ft.
                    Diffusion in from water table =      .00000    g/sq.ft.
               Total inflow at boundaries =     -.12177E-01g/sq.ft.
               Mass discrepancy =      .59605E-07g/sq.ft.

Since beginning of run at time = 0.0
               Change in Total Mass =     -.42728    g/sq.ft.
                    Advection in from atmosphere =       .00000    g/sq.ft.
                    Advection in from water table =     -.21088    g/sq.ft.
                    Diffusion in from atmosphere =      -.21640    g/sq.ft.
                    Diffusion in from water table =      .00000    g/sq.ft.
               Total inflow at boundaries =     -.42728    g/sq.ft.
               Mass discrepancy =      .10729E-05g/sq.ft.


Polygon   1
At time =      28.00, total mass in vadose zone =     .90372    g/sq.ft.
Mass in gas phase     =       .11593    g/sq.ft.
Mass in liquid phase  =       .49602    g/sq.ft.
Mass sorbed           =       .29178    g/sq.ft.

Since last printout at time =      27.00
               Change in Total Mass =     -.12071E-01g/sq.ft.
                    Advection in from atmosphere =       .00000    g/sq.ft.
                    Advection in from water table =     -.10453E-01g/sq.ft.
                    Diffusion in from atmosphere =      -.16175E-02g/sq.ft.
                    Diffusion in from water table =      .00000    g/sq.ft.
               Total inflow at boundaries =     -.12071E-01g/sq.ft.
               Mass discrepancy =     -.31665E-07g/sq.ft.

Since beginning of run at time = 0.0
               Change in Total Mass =     -.43935    g/sq.ft.
                    Advection in from atmosphere =       .00000    g/sq.ft.
                    Advection in from water table =     -.22133    g/sq.ft.
                    Diffusion in from atmosphere =      -.21802    g/sq.ft.
                    Diffusion in from water table =      .00000    g/sq.ft.
               Total inflow at boundaries =     -.43935    g/sq.ft.
               Mass discrepancy =      .10133E-05g/sq.ft.


Polygon   1
At time =      29.00, total mass in vadose zone =     .89177    g/sq.ft.
Mass in gas phase     =       .11439    g/sq.ft.
Mass in liquid phase  =       .48946    g/sq.ft.
Mass sorbed           =       .28792    g/sq.ft.

Since last printout at time =      28.00
               Change in Total Mass =     -.11957E-01g/sq.ft.
```

Advection in from atmosphere = .00000 g/sq.ft.
Advection in from water table = -.10436E-01g/sq.ft.
Diffusion in from atmosphere = -.15207E-02g/sq.ft.
Diffusion in from water table = .00000 g/sq.ft.
Total inflow at boundaries = -.11957E-01g/sq.ft.
Mass discrepancy = .32596E-07g/sq.ft.

Since beginning of run at time = 0.0
Change in Total Mass = -.45131 g/sq.ft.
Advection in from atmosphere = .00000 g/sq.ft.
Advection in from water table = -.23177 g/sq.ft.
Diffusion in from atmosphere = -.21954 g/sq.ft.
Diffusion in from water table = .00000 g/sq.ft.
Total inflow at boundaries = -.45131 g/sq.ft.
Mass discrepancy = .10729E-05g/sq.ft.

Polygon 1
At time = 30.00, total mass in vadose zone = .87993 g/sq.ft.
Mass in gas phase = .11288 g/sq.ft.
Mass in liquid phase = .48296 g/sq.ft.
Mass sorbed = .28410 g/sq.ft.

Since last printout at time = 29.00
Change in Total Mass = -.11836E-01g/sq.ft.
Advection in from atmosphere = .00000 g/sq.ft.
Advection in from water table = -.10404E-01g/sq.ft.
Diffusion in from atmosphere = -.14320E-02g/sq.ft.
Diffusion in from water table = .00000 g/sq.ft.
Total inflow at boundaries = -.11836E-01g/sq.ft.
Mass discrepancy = .91270E-07g/sq.ft.

Since beginning of run at time = 0.0
Change in Total Mass = -.46314 g/sq.ft.
Advection in from atmosphere = .00000 g/sq.ft.
Advection in from water table = -.24217 g/sq.ft.
Diffusion in from atmosphere = -.22097 g/sq.ft.
Diffusion in from water table = .00000 g/sq.ft.
Total inflow at boundaries = -.46314 g/sq.ft.
Mass discrepancy = .11325E-05g/sq.ft.

GROUNDWATER IMPACT OF POLYGON 1

Time	Mass per area (g/sq.ft.)	Total Mass (g)
1.00	.40638E-02	337.30
2.00	.42455E-02	352.38
3.00	.44619E-02	370.34
4.00	.47159E-02	391.42
5.00	.50065E-02	415.54
6.00	.53289E-02	442.30
7.00	.56759E-02	471.10
8.00	.60398E-02	501.31
9.00	.64132E-02	532.29
10.00	.67894E-02	563.52
11.00	.71632E-02	594.55
12.00	.75300E-02	624.99
13.00	.78859E-02	654.53
14.00	.82274E-02	682.87
15.00	.85512E-02	709.75

16.00	.88543E-02	734.91
17.00	.91343E-02	758.15
18.00	.93888E-02	779.27
19.00	.96163E-02	798.15
20.00	.98156E-02	814.70
21.00	.99864E-02	828.87
22.00	.10129E-01	840.69
23.00	.10243E-01	850.20
24.00	.10332E-01	857.52
25.00	.10395E-01	862.76
26.00	.10435E-01	866.08
27.00	.10454E-01	867.65
28.00	.10453E-01	867.63
29.00	.10436E-01	866.20
30.00	.10404E-01	863.53

****

****

TOTAL GROUNDWATER IMPACT

Time (yr)	Mass (g)	Cumulative Mass (g)
1.00	337.30	337.30
2.00	352.38	689.68
3.00	370.34	1060.0
4.00	391.42	1451.4
5.00	415.54	1867.0
6.00	442.30	2309.3
7.00	471.10	2780.4
8.00	501.31	3281.7
9.00	532.29	3814.0
10.00	563.52	4377.5
11.00	594.55	4972.0
12.00	624.99	5597.0
13.00	654.53	6251.6
14.00	682.87	6934.4
15.00	709.75	7644.2
16.00	734.91	8379.1
17.00	758.15	9137.2
18.00	779.27	9916.5
19.00	798.15	10715.
20.00	814.70	11529.
21.00	828.87	12358.
22.00	840.69	13199.
23.00	850.20	14049.
24.00	857.52	14907.
25.00	862.76	15769.
26.00	866.08	16635.
27.00	867.65	17503.
28.00	867.63	18371.
29.00	866.20	19237.
30.00	863.53	20100.

Polygon 96
Time: .000

Cell	Cgas(g/cu.ft.)	Cliq(g/cu.ft.)	Csol
1	.77315E-01	.16346	.52797E-06
2	.77315E-01	.16346	.52797E-06
3	.77315E-01	.16346	.52797E-06
4	.77315E-01	.16346	.52797E-06
5	.77315E-01	.16346	.52797E-06
6	.77315E-01	.16346	.52797E-06
7	.69584E-02	.14711E-01	.47517E-07
8	.69584E-02	.14711E-01	.47517E-07
9	.69584E-02	.14711E-01	.47517E-07
10	.69584E-02	.14711E-01	.47517E-07
11	.69584E-02	.14711E-01	.47517E-07
12	.69584E-02	.14711E-01	.47517E-07
13	.80094E-02	.16933E-01	.54694E-07
14	.80094E-02	.16933E-01	.54694E-07
15	.80094E-02	.16933E-01	.54694E-07
16	.80094E-02	.16933E-01	.54694E-07
17	.80094E-02	.16933E-01	.54694E-07
18	.80094E-02	.16933E-01	.54694E-07
19	.80094E-02	.16933E-01	.54694E-07
20	.80094E-02	.16933E-01	.54694E-07
21	.80094E-02	.16933E-01	.54694E-07
22	.80094E-02	.16933E-01	.54694E-07
23	.80094E-02	.16933E-01	.54694E-07
24	.80094E-02	.16933E-01	.54694E-07
25	.84443E-02	.17853E-01	.57664E-07
26	.84443E-02	.17853E-01	.57664E-07
27	.84443E-02	.17853E-01	.57664E-07
28	.84443E-02	.17853E-01	.57664E-07
29	.84443E-02	.17853E-01	.57664E-07
30	.84443E-02	.17853E-01	.57664E-07
31	.24234E-01	.51235E-01	.16549E-06
32	.24234E-01	.51235E-01	.16549E-06
33	.24234E-01	.51235E-01	.16549E-06
34	.24234E-01	.51235E-01	.16549E-06
35	.24234E-01	.51235E-01	.16549E-06
36	.24234E-01	.51235E-01	.16549E-06
37	.24234E-01	.51235E-01	.16549E-06
38	.24234E-01	.51235E-01	.16549E-06
39	.24234E-01	.51235E-01	.16549E-06
40	.24234E-01	.51235E-01	.16549E-06
41	.24234E-01	.51235E-01	.16549E-06
42	.24234E-01	.51235E-01	.16549E-06
43	.44218E-01	.93485E-01	.30196E-06
44	.44218E-01	.93485E-01	.30196E-06
45	.44218E-01	.93485E-01	.30196E-06
46	.44218E-01	.93485E-01	.30196E-06
47	.44218E-01	.93485E-01	.30196E-06
48	.44218E-01	.93485E-01	.30196E-06
49	.16709E-01	.35325E-01	.11410E-06
50	.16709E-01	.35325E-01	.11410E-06
51	.16709E-01	.35325E-01	.11410E-06
52	.16709E-01	.35325E-01	.11410E-06
53	.16709E-01	.35325E-01	.11410E-06
54	.16709E-01	.35325E-01	.11410E-06
55	.97615E-02	.20637E-01	.66659E-07
56	.97615E-02	.20637E-01	.66659E-07

57	.97615E-02	.20637E-01	.66659E-07
58	.97615E-02	.20637E-01	.66659E-07
59	.97615E-02	.20637E-01	.66659E-07
60	.97615E-02	.20637E-01	.66659E-07

Polygon 96
Time: 10.000

Cell	Cgas(g/cu.ft.)	Cliq(g/cu.ft.)	Csol
1	.13934E-02	.29459E-02	.95153E-08
2	.43105E-02	.91132E-02	.29436E-07
3	.88901E-02	.18795E-01	.60708E-07
4	.14666E-01	.31007E-01	.10015E-06
5	.20767E-01	.43904E-01	.14181E-06
6	.26315E-01	.55634E-01	.17970E-06
7	.30468E-01	.64413E-01	.20806E-06
8	.32519E-01	.68751E-01	.22207E-06
9	.32253E-01	.68188E-01	.22025E-06
10	.30092E-01	.63619E-01	.20549E-06
11	.26852E-01	.56770E-01	.18337E-06
12	.23351E-01	.49368E-01	.15946E-06
13	.20154E-01	.42610E-01	.13763E-06
14	.17528E-01	.37057E-01	.11969E-06
15	.15512E-01	.32794E-01	.10593E-06
16	.14024E-01	.29650E-01	.95768E-07
17	.12944E-01	.27365E-01	.88389E-07
18	.12157E-01	.25703E-01	.83021E-07
19	.11580E-01	.24483E-01	.79080E-07
20	.11156E-01	.23585E-01	.76178E-07
21	.10847E-01	.22933E-01	.74073E-07
22	.10635E-01	.22484E-01	.72623E-07
23	.10507E-01	.22213E-01	.71748E-07
24	.10456E-01	.22106E-01	.71404E-07
25	.10482E-01	.22161E-01	.71582E-07
26	.10587E-01	.22383E-01	.72297E-07
27	.10773E-01	.22777E-01	.73569E-07
28	.11043E-01	.23346E-01	.75408E-07
29	.11396E-01	.24094E-01	.77823E-07
30	.11837E-01	.25026E-01	.80834E-07
31	.12425E-01	.26269E-01	.84850E-07
32	.13266E-01	.28045E-01	.90587E-07
33	.14409E-01	.30463E-01	.98396E-07
34	.15793E-01	.33388E-01	.10784E-06
35	.17273E-01	.36518E-01	.11795E-06
36	.18704E-01	.39543E-01	.12773E-06
37	.19990E-01	.42263E-01	.13651E-06
38	.21098E-01	.44604E-01	.14407E-06
39	.22038E-01	.46591E-01	.15049E-06
40	.22842E-01	.48292E-01	.15598E-06
41	.23550E-01	.49790E-01	.16082E-06
42	.24197E-01	.51157E-01	.16524E-06
43	.24879E-01	.52599E-01	.16990E-06
44	.25740E-01	.54418E-01	.17577E-06
45	.26845E-01	.56754E-01	.18332E-06
46	.28109E-01	.59428E-01	.19195E-06
47	.29342E-01	.62034E-01	.20037E-06
48	.30344E-01	.64153E-01	.20721E-06
49	.30884E-01	.65293E-01	.21090E-06
50	.30730E-01	.64968E-01	.20985E-06
51	.29805E-01	.63012E-01	.20353E-06
52	.28259E-01	.59744E-01	.19297E-06

53	.26390E-01	.55792E-01	.18021E-06
54	.24494E-01	.51784E-01	.16726E-06
55	.22749E-01	.48095E-01	.15535E-06
56	.21200E-01	.44820E-01	.14477E-06
57	.19832E-01	.41929E-01	.13543E-06
58	.18642E-01	.39412E-01	.12730E-06
59	.17650E-01	.37315E-01	.12053E-06
60	.16884E-01	.35696E-01	.11530E-06

Polygon 96
Time: 20.000

Cell	Cgas(g/cu.ft.)	Cliq(g/cu.ft.)	Csol
1	.39776E-03	.84093E-03	.27162E-08
2	.10682E-02	.22583E-02	.72942E-08
3	.20239E-02	.42789E-02	.13821E-07
4	.32880E-02	.69513E-02	.22453E-07
5	.48789E-02	.10315E-01	.33317E-07
6	.67894E-02	.14354E-01	.46363E-07
7	.89668E-02	.18957E-01	.61232E-07
8	.11305E-01	.23900E-01	.77197E-07
9	.13649E-01	.28856E-01	.93205E-07
10	.15819E-01	.33444E-01	.10803E-06
11	.17642E-01	.37299E-01	.12047E-06
12	.18987E-01	.40142E-01	.12966E-06
13	.19791E-01	.41841E-01	.13515E-06
14	.20063E-01	.42417E-01	.13701E-06
15	.19879E-01	.42027E-01	.13575E-06
16	.19349E-01	.40907E-01	.13213E-06
17	.18598E-01	.39319E-01	.12700E-06
18	.17738E-01	.37501E-01	.12113E-06
19	.16859E-01	.35642E-01	.11512E-06
20	.16022E-01	.33873E-01	.10941E-06
21	.15265E-01	.32274E-01	.10424E-06
22	.14607E-01	.30883E-01	.99751E-07
23	.14054E-01	.29713E-01	.95972E-07
24	.13604E-01	.28761E-01	.92899E-07
25	.13253E-01	.28020E-01	.90504E-07
26	.12997E-01	.27477E-01	.88752E-07
27	.12830E-01	.27125E-01	.87613E-07
28	.12749E-01	.26955E-01	.87063E-07
29	.12753E-01	.26962E-01	.87088E-07
30	.12839E-01	.27145E-01	.87678E-07
31	.13008E-01	.27501E-01	.88828E-07
32	.13259E-01	.28033E-01	.90545E-07
33	.13596E-01	.28745E-01	.92846E-07
34	.14023E-01	.29648E-01	.95763E-07
35	.14545E-01	.30750E-01	.99323E-07
36	.15161E-01	.32053E-01	.10353E-06
37	.15866E-01	.33542E-01	.10834E-06
38	.16643E-01	.35186E-01	.11365E-06
39	.17471E-01	.36937E-01	.11931E-06
40	.18325E-01	.38742E-01	.12514E-06
41	.19179E-01	.40548E-01	.13097E-06
42	.20014E-01	.42313E-01	.13667E-06
43	.20816E-01	.44008E-01	.14215E-06
44	.21577E-01	.45618E-01	.14735E-06
45	.22299E-01	.47143E-01	.15227E-06
46	.22986E-01	.48596E-01	.15696E-06
47	.23646E-01	.49991E-01	.16147E-06
48	.24281E-01	.51334E-01	.16581E-06

49	.24885E-01	.52612E-01	.16994E-06
50	.25439E-01	.53782E-01	.17372E-06
51	.25910E-01	.54778E-01	.17693E-06
52	.26260E-01	.55517E-01	.17932E-06
53	.26450E-01	.55921E-01	.18062E-06
54	.26458E-01	.55937E-01	.18068E-06
55	.26280E-01	.55559E-01	.17946E-06
56	.25934E-01	.54829E-01	.17710E-06
57	.25461E-01	.53829E-01	.17387E-06
58	.24910E-01	.52664E-01	.17010E-06
59	.24334E-01	.51446E-01	.16617E-06
60	.23782E-01	.50279E-01	.16240E-06

Polygon 96
Time: 30.000

Cell	Cgas(g/cu.ft.)	Cliq(g/cu.ft.)	Csol
1	.19234E-03	.40664E-03	.13134E-08
2	.50589E-03	.10695E-02	.34546E-08
3	.93598E-03	.19788E-02	.63916E-08
4	.14812E-02	.31314E-02	.10115E-07
5	.21420E-02	.45286E-02	.14627E-07
6	.29197E-02	.61728E-02	.19938E-07
7	.38146E-02	.80646E-02	.26049E-07
8	.48235E-02	.10198E-01	.32939E-07
9	.59379E-02	.12554E-01	.40549E-07
10	.71407E-02	.15097E-01	.48762E-07
11	.84046E-02	.17769E-01	.57393E-07
12	.96927E-02	.20492E-01	.66189E-07
13	.10960E-01	.23171E-01	.74842E-07
14	.12157E-01	.25703E-01	.83020E-07
15	.13239E-01	.27989E-01	.90404E-07
16	.14165E-01	.29947E-01	.96727E-07
17	.14909E-01	.31519E-01	.10181E-06
18	.15459E-01	.32683E-01	.10557E-06
19	.15819E-01	.33444E-01	.10802E-06
20	.16005E-01	.33837E-01	.10930E-06
21	.16043E-01	.33917E-01	.10955E-06
22	.15963E-01	.33749E-01	.10901E-06
23	.15799E-01	.33402E-01	.10789E-06
24	.15580E-01	.32939E-01	.10639E-06
25	.15335E-01	.32420E-01	.10472E-06
26	.15085E-01	.31892E-01	.10301E-06
27	.14848E-01	.31392E-01	.10140E-06
28	.14640E-01	.30951E-01	.99971E-07
29	.14469E-01	.30589E-01	.98804E-07
30	.14343E-01	.30324E-01	.97947E-07
31	.14269E-01	.30166E-01	.97437E-07
32	.14249E-01	.30124E-01	.97300E-07
33	.14286E-01	.30202E-01	.97554E-07
34	.14382E-01	.30405E-01	.98210E-07
35	.14538E-01	.30735E-01	.99276E-07
36	.14755E-01	.31193E-01	.10076E-06
37	.15032E-01	.31779E-01	.10265E-06
38	.15368E-01	.32491E-01	.10495E-06
39	.15763E-01	.33325E-01	.10764E-06
40	.16211E-01	.34273E-01	.11070E-06
41	.16709E-01	.35325E-01	.11410E-06
42	.17248E-01	.36465E-01	.11778E-06
43	.17820E-01	.37675E-01	.12169E-06
44	.18417E-01	.38936E-01	.12576E-06

45	.19027E-01	.40226E-01	.12993E-06
46	.19641E-01	.41525E-01	.13413E-06
47	.20251E-01	.42814E-01	.13829E-06
48	.20848E-01	.44077E-01	.14237E-06
49	.21427E-01	.45300E-01	.14632E-06
50	.21982E-01	.46473E-01	.15011E-06
51	.22507E-01	.47585E-01	.15370E-06
52	.22999E-01	.48623E-01	.15705E-06
53	.23449E-01	.49576E-01	.16013E-06
54	.23852E-01	.50427E-01	.16288E-06
55	.24198E-01	.51159E-01	.16524E-06
56	.24481E-01	.51756E-01	.16717E-06
57	.24693E-01	.52205E-01	.16862E-06
58	.24832E-01	.52499E-01	.16957E-06
59	.24899E-01	.52642E-01	.17003E-06
60	.24901E-01	.52645E-01	.17004E-06

V-Leach, VER 1.1
Jake Turin, 11/91
PGA V-leach model, polygon screen-TCE-11/10/92-POLY96.INP. Old chem, New soil.
1 polygons.
mestep = 1.00 years. Simulation length = 30.00 years.
Printout every 1.00 years. Vertical profile stored every 10.00 years.
Koc = 123.60 ml/g, .43649E-02cu.ft./g
Kh = .47300 (dimensionless).
Aqueous solubility = 1100.0 mg/l, 31.149 g/cu.ft
Free air diffusion coefficient = .70290 sq. m/day, 2761.7 sq.ft./yr

Polygon 1
Polygon 96
Polygon area = 83000. sq. ft.
60 cells, each cell 1.000 ft. thick.
Soil Properties:
Bulk density = 1.6400 g/ml, 46440. g/cu.ft.
Porosity = .3810 Volumetric water content = .2550
Organic carbon content = .00074000
Recharge Rate = .19685000 ft/yr
Conc. in recharge water = .00000 mg/l, .00000 g/cu.ft
Atmospheric concentration = .00000 mg/l, .00000 g/cu.ft
Water table is impermeable to gas diffusion.

-1.00	1635.330
-6.00	1635.330
-6.50	147.180
-12.00	147.180
-12.50	169.410
-22.00	169.410
-22.50	178.610
-32.00	178.610
-32.50	512.590
-41.00	512.590
-41.50	935.280
-47.50	935.280
-48.00	353.410
-52.50	353.410
-53.00	206.470
-57.50	206.470
-58.00	324.020
-60.00	324.020

List of interpolated concentrations for desired depths

At a depth of : 3.000
Interpolated concentration is: 1635.330

At a depth of : 9.000
Interpolated concentration is: 147.180

At a depth of : 15.000
Interpolated concentration is: 169.410

At a depth of : 21.000
Interpolated concentration is: 169.410

At a depth of : 27.000
Interpolated concentration is: 178.610

At a depth of : 33.000
Interpolated concentration is: 512.590

At a depth of : 39.000
Interpolated concentration is: 512.590

At a depth of : 45.000
Interpolated concentration is: 935.280

At a depth of : 51.000

POLY 96 92

Interpolated concentration is: 353.410

At a depth of : 57.000
terpolated concentration is: 206.470

At a depth of : 60.000
Interpolated concentration is: 324.020

Polygon 96 Calculation of Total TCE Mass in Sub-Unit A. Redistributing Total Soil Concentrations using INTERP and original HGC Total Soil Concentrations and Vertical Distributions to derive new VLEACH vertical distribution input data. Top of depth interval

Depth Interval (feet)	Depth (feet)	Total Soil Conc INTERP Ct (ug/Kg)	Mt (ug/cc)	Volume Soil (cubic feet)	Mass TCE in interval (grams)	Mass TCE in interval (lb)
0-6	6	1635.33	2.68	498000	37820.38	83.38
6-12	6	147.18	0.24	498000	3403.84	7.50
12-18	6	169.41	0.28	498000	3917.96	8.64
18-24	6	169.41	0.28	498000	3917.96	8.64
24-30	6	178.61	0.29	498000	4130.72	9.11
30-36	6	512.59	0.84	498000	11854.70	26.14
36-42	6	512.59	0.84	498000	11854.70	26.14
42-48	6	935.28	1.53	498000	21630.28	47.69
48-54	6	353.41	0.58	498000	8173.33	18.02
54-60	6	206.47	0.34	498000	4775.04	10.53
Totals:	60				111478.91	245.77

Calculation of Total VOC Mass (as TCE) in Polygon 96
using HGC Distribution and original Depth Intervals

Depth Interval (ft) (HGC, 1989)	Depth (ft)	Total Soil Conc. Ct*(ug/Kg) VOC's as TCE (HGC, 1989) (Table D-5)	Mt (ug/cc)	Volume Soil (cu. ft)	Mass of Contaminant (grams)	Mass of Contaminant (pounds)
0-6	6	1635.33	2.6819412	498000	37820.38	83.38
6-12	6	147.18	0.2413752	498000	3403.84	7.50
12-22	10	169.41	0.2778324	830000	6529.93	14.40
22-32	10	178.61	0.2929204	830000	6884.54	15.18
32-41	9	512.59	0.8406476	747000	17782.05	39.20
41-47.5	6.5	935.28	1.5338592	539500	23432.80	51.66
47.5-52.5	5	353.41	0.5795924	415000	6811.11	15.02
52.5-57.5	5	206.47	0.3386108	415000	3979.20	8.77
57.5-62.5	5	324.02	0.5313928	415000	6244.69	13.77
Totals:	62.5				112888.54	**248.88**

* Based on sum of four VOC concentrations listed in Tables D-1 - D-4 of HGC, 1989.
Area of Polygon 96: 83000 square feet

```
PGA V-leach model, polygon screen-TCE-11/10/92-Poly36.INP.  New soil, Old chem.
    1
       1.0         30.         1.0         10.
     123.6        .473        1100.       .7029
lygon 36
    107500.          1.    .196850        1.64        .381        .255     .00074
        0.           0.         -1.
    60
     1     6       0.14
     7    12      42.10
    13    18     105.05
    19    24     167.99
    25    30     230.94
    31    36     293.88
    37    42     356.83
    43    48     419.77
    49    54     482.72
    55    60     545.66
```

V-Leach, VER 1.1
Jake Turin, 11/91
PGA V-leach model, polygon screen-TCE-11/10/92-Poly36.INP. New soil, Old chem.

Polygon 1
At time = .00, total mass in vadose zone = .73700 g/sq.ft.
Mass in gas phase = .94541E-01g/sq.ft.
Mass in liquid phase = .40451 g/sq.ft.
Mass sorbed = .23795 g/sq.ft.

Polygon 1
At time = 1.00, total mass in vadose zone = .72589 g/sq.ft.
Mass in gas phase = .93115E-01g/sq.ft.
Mass in liquid phase = .39841 g/sq.ft.
Mass sorbed = .23436 g/sq.ft.

Since last printout at time = .00
Change in Total Mass = -.11113E-01g/sq.ft.
Advection in from atmosphere = .00000 g/sq.ft.
Advection in from water table = -.10736E-01g/sq.ft.
Diffusion in from atmosphere = -.37687E-03g/sq.ft.
Diffusion in from water table = .00000 g/sq.ft.
Total inflow at boundaries = -.11113E-01g/sq.ft.
Mass discrepancy = -.10245E-07g/sq.ft.

Since beginning of run at time = 0.0
Change in Total Mass = -.11113E-01g/sq.ft.
Advection in from atmosphere = .00000 g/sq.ft.
Advection in from water table = -.10736E-01g/sq.ft.
Diffusion in from atmosphere = -.37687E-03g/sq.ft.
Diffusion in from water table = .00000 g/sq.ft.
Total inflow at boundaries = -.11113E-01g/sq.ft.
Mass discrepancy = -.10245E-07g/sq.ft.

Polygon 1
At time = 2.00, total mass in vadose zone = .71484 g/sq.ft.
Mass in gas phase = .91698E-01g/sq.ft.
Mass in liquid phase = .39235 g/sq.ft.
Mass sorbed = .23079 g/sq.ft.

Since last printout at time = 1.00
Change in Total Mass = -.11050E-01g/sq.ft.
Advection in from atmosphere = .00000 g/sq.ft.
Advection in from water table = -.10677E-01g/sq.ft.
Diffusion in from atmosphere = -.37274E-03g/sq.ft.
Diffusion in from water table = .00000 g/sq.ft.
Total inflow at boundaries = -.11050E-01g/sq.ft.
Mass discrepancy = -.40978E-07g/sq.ft.

Since beginning of run at time = 0.0
Change in Total Mass = -.22163E-01g/sq.ft.
Advection in from atmosphere = .00000 g/sq.ft.
Advection in from water table = -.21413E-01g/sq.ft.
Diffusion in from atmosphere = -.74961E-03g/sq.ft.
Diffusion in from water table = .00000 g/sq.ft.
Total inflow at boundaries = -.22163E-01g/sq.ft.
Mass discrepancy = -.50291E-07g/sq.ft.

```
Polygon   1
At time =       3.00, total mass in vadose zone =     .70386    g/sq.ft.
Mass in gas phase     =       .90290E-01g/sq.ft.
Mass in liquid phase  =       .38632    g/sq.ft.
Mass sorbed           =       .22725    g/sq.ft.

Since last printout at time =       2.00
               Change in Total Mass =     -.10974E-01g/sq.ft.
                    Advection in from atmosphere =       .00000    g/sq.ft.
                    Advection in from water table =     -.10607E-01g/sq.ft.
                    Diffusion in from atmosphere =      -.36690E-03g/sq.ft.
                    Diffusion in from water table =      .00000    g/sq.ft.
               Total inflow at boundaries =     -.10974E-01g/sq.ft.
               Mass discrepancy =      .15832E-07g/sq.ft.

Since beginning of run at time = 0.0
               Change in Total Mass =     -.33137E-01g/sq.ft.
                    Advection in from atmosphere =       .00000    g/sq.ft.
                    Advection in from water table =     -.32020E-01g/sq.ft.
                    Diffusion in from atmosphere =      -.11165E-02g/sq.ft.
                    Diffusion in from water table =      .00000    g/sq.ft.
               Total inflow at boundaries =     -.33137E-01g/sq.ft.
               Mass discrepancy =     -.37253E-07g/sq.ft.


Polygon   1
At time =       4.00, total mass in vadose zone =     .69298    g/sq.ft.
Mass in gas phase     =       .88894E-01g/sq.ft.
Mass in liquid phase  =       .38035    g/sq.ft.
Mass sorbed           =       .22374    g/sq.ft.

Since last printout at time =       3.00
               Change in Total Mass =     -.10883E-01g/sq.ft.
                    Advection in from atmosphere =       .00000    g/sq.ft.
                    Advection in from water table =     -.10523E-01g/sq.ft.
                    Diffusion in from atmosphere =      -.35984E-03g/sq.ft.
                    Diffusion in from water table =      .00000    g/sq.ft.
               Total inflow at boundaries =     -.10883E-01g/sq.ft.
               Mass discrepancy =     -.13039E-07g/sq.ft.

Since beginning of run at time = 0.0
               Change in Total Mass =     -.44020E-01g/sq.ft.
                    Advection in from atmosphere =       .00000    g/sq.ft.
                    Advection in from water table =     -.42544E-01g/sq.ft.
                    Diffusion in from atmosphere =      -.14763E-02g/sq.ft.
                    Diffusion in from water table =      .00000    g/sq.ft.
               Total inflow at boundaries =     -.44020E-01g/sq.ft.
               Mass discrepancy =     -.48429E-07g/sq.ft.


Polygon   1
At time =       5.00, total mass in vadose zone =     .68220    g/sq.ft.
Mass in gas phase     =       .87511E-01g/sq.ft.
Mass in liquid phase  =       .37443    g/sq.ft.
Mass sorbed           =       .22026    g/sq.ft.

Since last printout at time =       4.00
               Change in Total Mass =     -.10779E-01g/sq.ft.
```

```
                    Advection in from atmosphere =       .00000    g/sq.ft.
                    Advection in from water table =     -.10427E-01g/sq.ft.
                    Diffusion in from atmosphere =      -.35193E-03g/sq.ft.
                    Diffusion in from water table =      .00000    g/sq.ft.
               Total inflow at boundaries =     -.10779E-01g/sq.ft.
               Mass discrepancy =      .24028E-06g/sq.ft.

Since beginning of run at time = 0.0
               Change in Total Mass =     -.54799E-01g/sq.ft.
                    Advection in from atmosphere =       .00000    g/sq.ft.
                    Advection in from water table =     -.52971E-01g/sq.ft.
                    Diffusion in from atmosphere =      -.18283E-02g/sq.ft.
                    Diffusion in from water table =      .00000    g/sq.ft.
               Total inflow at boundaries =     -.54799E-01g/sq.ft.
               Mass discrepancy =      .18999E-06g/sq.ft.


Polygon   1
At time =       6.00, total mass in vadose zone =     .67154    g/sq.ft.
Mass in gas phase     =       .86144E-01g/sq.ft.
Mass in liquid phase  =       .36858    g/sq.ft.
Mass sorbed           =       .21681    g/sq.ft.

Since last printout at time =       5.00
               Change in Total Mass =     -.10663E-01g/sq.ft.
                    Advection in from atmosphere =       .00000    g/sq.ft.
                    Advection in from water table =     -.10320E-01g/sq.ft.
                    Diffusion in from atmosphere =      -.34347E-03g/sq.ft.
                    Diffusion in from water table =      .00000    g/sq.ft.
               Total inflow at boundaries =     -.10663E-01g/sq.ft.
               Mass discrepancy =     -.95926E-07g/sq.ft.

Since beginning of run at time = 0.0
               Change in Total Mass =     -.65462E-01g/sq.ft.
                    Advection in from atmosphere =       .00000    g/sq.ft.
                    Advection in from water table =     -.63290E-01g/sq.ft.
                    Diffusion in from atmosphere =      -.21717E-02g/sq.ft.
                    Diffusion in from water table =      .00000    g/sq.ft.
               Total inflow at boundaries =     -.65462E-01g/sq.ft.
               Mass discrepancy =      .89407E-07g/sq.ft.


Polygon   1
At time =       7.00, total mass in vadose zone =     .66100    g/sq.ft.
Mass in gas phase     =       .84792E-01g/sq.ft.
Mass in liquid phase  =       .36280    g/sq.ft.
Mass sorbed           =       .21341    g/sq.ft.

Since last printout at time =       6.00
               Change in Total Mass =     -.10539E-01g/sq.ft.
                    Advection in from atmosphere =       .00000    g/sq.ft.
                    Advection in from water table =     -.10204E-01g/sq.ft.
                    Diffusion in from atmosphere =      -.33465E-03g/sq.ft.
                    Diffusion in from water table =      .00000    g/sq.ft.
               Total inflow at boundaries =     -.10539E-01g/sq.ft.
               Mass discrepancy =      .37253E-07g/sq.ft.

Since beginning of run at time = 0.0
               Change in Total Mass =     -.76001E-01g/sq.ft.
                    Advection in from atmosphere =       .00000    g/sq.ft.
```

```
                Advection in from water table =     -.73494E-01g/sq.ft.
                Diffusion in from atmosphere =      -.25064E-02g/sq.ft.
                Diffusion in from water table =      .00000    g/sq.ft.
           Total inflow at boundaries =     -.76001E-01g/sq.ft.
           Mass discrepancy =      .13411E-06g/sq.ft.


Polygon   1
At time =       8.00, total mass in vadose zone =     .65059    g/sq.ft.
Mass in gas phase     =       .83456E-01g/sq.ft.
Mass in liquid phase  =       .35708    g/sq.ft.
Mass sorbed           =       .21005    g/sq.ft.

Since last printout at time =       7.00
           Change in Total Mass =     -.10409E-01g/sq.ft.
                Advection in from atmosphere =       .00000    g/sq.ft.
                Advection in from water table =     -.10084E-01g/sq.ft.
                Diffusion in from atmosphere =      -.32565E-03g/sq.ft.
                Diffusion in from water table =      .00000    g/sq.ft.
           Total inflow at boundaries =     -.10409E-01g/sq.ft.
           Mass discrepancy =      .55879E-08g/sq.ft.

Since beginning of run at time = 0.0
           Change in Total Mass =     -.86410E-01g/sq.ft.
                Advection in from atmosphere =       .00000    g/sq.ft.
                Advection in from water table =     -.83578E-01g/sq.ft.
                Diffusion in from atmosphere =      -.28320E-02g/sq.ft.
                Diffusion in from water table =      .00000    g/sq.ft.
           Total inflow at boundaries =     -.86410E-01g/sq.ft.
           Mass discrepancy =      .14156E-06g/sq.ft.


Polygon   1
At time =       9.00, total mass in vadose zone =     .64031    g/sq.ft.
Mass in gas phase     =       .82138E-01g/sq.ft.
Mass in liquid phase  =       .35144    g/sq.ft.
Mass sorbed           =       .20673    g/sq.ft.

Since last printout at time =       8.00
           Change in Total Mass =     -.10277E-01g/sq.ft.
                Advection in from atmosphere =       .00000    g/sq.ft.
                Advection in from water table =     -.99608E-02g/sq.ft.
                Diffusion in from atmosphere =      -.31658E-03g/sq.ft.
                Diffusion in from water table =      .00000    g/sq.ft.
           Total inflow at boundaries =     -.10277E-01g/sq.ft.
           Mass discrepancy =      .56811E-07g/sq.ft.

Since beginning of run at time = 0.0
           Change in Total Mass =     -.96687E-01g/sq.ft.
                Advection in from atmosphere =       .00000    g/sq.ft.
                Advection in from water table =     -.93539E-01g/sq.ft.
                Diffusion in from atmosphere =      -.31486E-02g/sq.ft.
                Diffusion in from water table =      .00000    g/sq.ft.
           Total inflow at boundaries =     -.96687E-01g/sq.ft.
           Mass discrepancy =      .19372E-06g/sq.ft.


Polygon   1
At time =      10.00, total mass in vadose zone =     .63017    g/sq.ft.
Mass in gas phase     =       .80837E-01g/sq.ft.
```

```
Mass in liquid phase  =        .34587    g/sq.ft.
Mass sorbed           =        .20346    g/sq.ft.

Since last printout at time =       9.00
               Change in Total Mass =     -.10146E-01g/sq.ft.
                    Advection in from atmosphere =       .00000    g/sq.ft.
                    Advection in from water table =     -.98380E-02g/sq.ft.
                    Diffusion in from atmosphere =      -.30754E-03g/sq.ft.
                    Diffusion in from water table =      .00000    g/sq.ft.
               Total inflow at boundaries =     -.10146E-01g/sq.ft.
               Mass discrepancy =     -.40978E-07g/sq.ft.

Since beginning of run at time = 0.0
               Change in Total Mass =     -.10683    g/sq.ft.
                    Advection in from atmosphere =       .00000    g/sq.ft.
                    Advection in from water table =     -.10338    g/sq.ft.
                    Diffusion in from atmosphere =      -.34562E-02g/sq.ft.
                    Diffusion in from water table =      .00000    g/sq.ft.
               Total inflow at boundaries =     -.10683    g/sq.ft.
               Mass discrepancy =      .15646E-06g/sq.ft.


Polygon   1
At time =      11.00, total mass in vadose zone =     .62015    g/sq.ft.
Mass in gas phase     =       .79552E-01g/sq.ft.
Mass in liquid phase  =        .34038    g/sq.ft.
Mass sorbed           =        .20022    g/sq.ft.

Since last printout at time =      10.00
               Change in Total Mass =     -.10015E-01g/sq.ft.
                    Advection in from atmosphere =       .00000    g/sq.ft.
                    Advection in from water table =     -.97164E-02g/sq.ft.
                    Diffusion in from atmosphere =      -.29858E-03g/sq.ft.
                    Diffusion in from water table =      .00000    g/sq.ft.
               Total inflow at boundaries =     -.10015E-01g/sq.ft.
               Mass discrepancy =      .77300E-07g/sq.ft.

Since beginning of run at time = 0.0
               Change in Total Mass =     -.11685    g/sq.ft.
                    Advection in from atmosphere =       .00000    g/sq.ft.
                    Advection in from water table =     -.11309    g/sq.ft.
                    Diffusion in from atmosphere =      -.37547E-02g/sq.ft.
                    Diffusion in from water table =      .00000    g/sq.ft.
               Total inflow at boundaries =     -.11685    g/sq.ft.
               Mass discrepancy =      .23097E-06g/sq.ft.


Polygon   1
At time =      12.00, total mass in vadose zone =     .61026    g/sq.ft.
Mass in gas phase     =       .78284E-01g/sq.ft.
Mass in liquid phase  =        .33495    g/sq.ft.
Mass sorbed           =        .19703    g/sq.ft.

Since last printout at time =      11.00
               Change in Total Mass =     -.98868E-02g/sq.ft.
                    Advection in from atmosphere =       .00000    g/sq.ft.
                    Advection in from water table =     -.95970E-02g/sq.ft.
                    Diffusion in from atmosphere =      -.28977E-03g/sq.ft.
                    Diffusion in from water table =      .00000    g/sq.ft.
               Total inflow at boundaries =     -.98868E-02g/sq.ft.
```

```
              Mass discrepancy =      .11176E-07g/sq.ft.

Since beginning of run at time = 0.0
              Change in Total Mass =     -.12673    g/sq.ft.
                   Advection in from atmosphere =       .00000    g/sq.ft.
                   Advection in from water table =     -.12269    g/sq.ft.
                   Diffusion in from atmosphere =      -.40445E-02g/sq.ft.
                   Diffusion in from water table =      .00000    g/sq.ft.
              Total inflow at boundaries =     -.12673    g/sq.ft.
              Mass discrepancy =      .23842E-06g/sq.ft.


Polygon   1
At time =      13.00, total mass in vadose zone =     .60050    g/sq.ft.
Mass in gas phase     =       .77032E-01g/sq.ft.
Mass in liquid phase  =       .32959    g/sq.ft.
Mass sorbed           =       .19388    g/sq.ft.

Since last printout at time =      12.00
              Change in Total Mass =     -.97611E-02g/sq.ft.
                   Advection in from atmosphere =       .00000    g/sq.ft.
                   Advection in from water table =     -.94801E-02g/sq.ft.
                   Diffusion in from atmosphere =      -.28113E-03g/sq.ft.
                   Diffusion in from water table =      .00000    g/sq.ft.
              Total inflow at boundaries =     -.97612E-02g/sq.ft.
              Mass discrepancy =      .13132E-06g/sq.ft.

Since beginning of run at time = 0.0
              Change in Total Mass =     -.13650    g/sq.ft.
                   Advection in from atmosphere =       .00000    g/sq.ft.
                   Advection in from water table =     -.13217    g/sq.ft.
                   Diffusion in from atmosphere =      -.43256E-02g/sq.ft.
                   Diffusion in from water table =      .00000    g/sq.ft.
              Total inflow at boundaries =     -.13650    g/sq.ft.
              Mass discrepancy =      .37253E-06g/sq.ft.


Polygon   1
At time =      14.00, total mass in vadose zone =     .59086    g/sq.ft.
Mass in gas phase     =       .75795E-01g/sq.ft.
Mass in liquid phase  =       .32430    g/sq.ft.
Mass sorbed           =       .19077    g/sq.ft.

Since last printout at time =      13.00
              Change in Total Mass =     -.96384E-02g/sq.ft.
                   Advection in from atmosphere =       .00000    g/sq.ft.
                   Advection in from water table =     -.93656E-02g/sq.ft.
                   Diffusion in from atmosphere =      -.27270E-03g/sq.ft.
                   Diffusion in from water table =      .00000    g/sq.ft.
              Total inflow at boundaries =     -.96383E-02g/sq.ft.
              Mass discrepancy =     -.12107E-06g/sq.ft.

Since beginning of run at time = 0.0
              Change in Total Mass =     -.14613    g/sq.ft.
                   Advection in from atmosphere =       .00000    g/sq.ft.
                   Advection in from water table =     -.14154    g/sq.ft.
                   Diffusion in from atmosphere =      -.45983E-02g/sq.ft.
                   Diffusion in from water table =      .00000    g/sq.ft.
              Total inflow at boundaries =     -.14613    g/sq.ft.
              Mass discrepancy =      .25332E-06g/sq.ft.
```

```
Polygon   1
At time =      15.00, total mass in vadose zone =     .58135    g/sq.ft.
Mass in gas phase     =       .74574E-01g/sq.ft.
Mass in liquid phase  =       .31908    g/sq.ft.
Mass sorbed           =       .18769    g/sq.ft.

Since last printout at time =      14.00
               Change in Total Mass =     -.95178E-02g/sq.ft.
                    Advection in from atmosphere =       .00000    g/sq.ft.
                    Advection in from water table =     -.92534E-02g/sq.ft.
                    Diffusion in from atmosphere =      -.26448E-03g/sq.ft.
                    Diffusion in from water table =      .00000    g/sq.ft.
               Total inflow at boundaries =     -.95179E-02g/sq.ft.
               Mass discrepancy =      .11828E-06g/sq.ft.

Since beginning of run at time = 0.0
               Change in Total Mass =     -.15565    g/sq.ft.
                    Advection in from atmosphere =       .00000    g/sq.ft.
                    Advection in from water table =     -.15079    g/sq.ft.
                    Diffusion in from atmosphere =      -.48628E-02g/sq.ft.
                    Diffusion in from water table =      .00000    g/sq.ft.
               Total inflow at boundaries =     -.15565    g/sq.ft.
               Mass discrepancy =      .37253E-06g/sq.ft.


Polygon   1
At time =      16.00, total mass in vadose zone =     .57195    g/sq.ft.
Mass in gas phase     =       .73368E-01g/sq.ft.
Mass in liquid phase  =       .31392    g/sq.ft.
Mass sorbed           =       .18466    g/sq.ft.

Since last printout at time =      15.00
               Change in Total Mass =     -.93998E-02g/sq.ft.
                    Advection in from atmosphere =       .00000    g/sq.ft.
                    Advection in from water table =     -.91433E-02g/sq.ft.
                    Diffusion in from atmosphere =      -.25648E-03g/sq.ft.
                    Diffusion in from water table =      .00000    g/sq.ft.
               Total inflow at boundaries =     -.93998E-02g/sq.ft.
               Mass discrepancy =     -.44703E-07g/sq.ft.

Since beginning of run at time = 0.0
               Change in Total Mass =     -.16505    g/sq.ft.
                    Advection in from atmosphere =       .00000    g/sq.ft.
                    Advection in from water table =     -.15993    g/sq.ft.
                    Diffusion in from atmosphere =      -.51193E-02g/sq.ft.
                    Diffusion in from water table =      .00000    g/sq.ft.
               Total inflow at boundaries =     -.16505    g/sq.ft.
               Mass discrepancy =      .32783E-06g/sq.ft.


Polygon   1
At time =      17.00, total mass in vadose zone =     .56266    g/sq.ft.
Mass in gas phase     =       .72178E-01g/sq.ft.
Mass in liquid phase  =       .30882    g/sq.ft.
Mass sorbed           =       .18166    g/sq.ft.

Since last printout at time =      16.00
               Change in Total Mass =     -.92837E-02g/sq.ft.
```

```
                    Advection in from atmosphere =       .00000    g/sq.ft.
                    Advection in from water table =     -.90350E-02g/sq.ft.
                    Diffusion in from atmosphere =      -.24873E-03g/sq.ft.
                    Diffusion in from water table =      .00000    g/sq.ft.
               Total inflow at boundaries =     -.92837E-02g/sq.ft.
               Mass discrepancy =     -.31665E-07g/sq.ft.

Since beginning of run at time = 0.0
               Change in Total Mass =     -.17434    g/sq.ft.
                    Advection in from atmosphere =       .00000    g/sq.ft.
                    Advection in from water table =     -.16897    g/sq.ft.
                    Diffusion in from atmosphere =      -.53680E-02g/sq.ft.
                    Diffusion in from water table =      .00000    g/sq.ft.
               Total inflow at boundaries =     -.17434    g/sq.ft.
               Mass discrepancy =      .29802E-06g/sq.ft.


Polygon   1
At time =      18.00, total mass in vadose zone =     .55349    g/sq.ft.
Mass in gas phase     =       .71001E-01g/sq.ft.
Mass in liquid phase  =       .30379    g/sq.ft.
Mass sorbed           =       .17870    g/sq.ft.

Since last printout at time =      17.00
               Change in Total Mass =     -.91692E-02g/sq.ft.
                    Advection in from atmosphere =       .00000    g/sq.ft.
                    Advection in from water table =     -.89282E-02g/sq.ft.
                    Diffusion in from atmosphere =      -.24121E-03g/sq.ft.
                    Diffusion in from water table =      .00000    g/sq.ft.
               Total inflow at boundaries =     -.91694E-02g/sq.ft.
               Mass discrepancy =      .15460E-06g/sq.ft.

Since beginning of run at time = 0.0
               Change in Total Mass =     -.18350    g/sq.ft.
                    Advection in from atmosphere =       .00000    g/sq.ft.
                    Advection in from water table =     -.17790    g/sq.ft.
                    Diffusion in from atmosphere =      -.56092E-02g/sq.ft.
                    Diffusion in from water table =      .00000    g/sq.ft.
               Total inflow at boundaries =     -.18350    g/sq.ft.
               Mass discrepancy =      .44703E-06g/sq.ft.


Polygon   1
At time =      19.00, total mass in vadose zone =     .54444    g/sq.ft.
Mass in gas phase     =       .69840E-01g/sq.ft.
Mass in liquid phase  =       .29882    g/sq.ft.
Mass sorbed           =       .17578    g/sq.ft.

Since last printout at time =      18.00
               Change in Total Mass =     -.90566E-02g/sq.ft.
                    Advection in from atmosphere =       .00000    g/sq.ft.
                    Advection in from water table =     -.88227E-02g/sq.ft.
                    Diffusion in from atmosphere =      -.23392E-03g/sq.ft.
                    Diffusion in from water table =      .00000    g/sq.ft.
               Total inflow at boundaries =     -.90566E-02g/sq.ft.
               Mass discrepancy =      .11176E-07g/sq.ft.

Since beginning of run at time = 0.0
               Change in Total Mass =     -.19256    g/sq.ft.
                    Advection in from atmosphere =       .00000    g/sq.ft.
```

```
                    Advection in from water table =     -.18672    g/sq.ft.
                    Diffusion in from atmosphere =     -.58432E-02g/sq.ft.
                    Diffusion in from water table =      .00000    g/sq.ft.
               Total inflow at boundaries =     -.19256    g/sq.ft.
               Mass discrepancy =      .44703E-06g/sq.ft.


Polygon   1
At time =      20.00, total mass in vadose zone =     .53549    g/sq.ft.
Mass in gas phase     =       .68692E-01g/sq.ft.
Mass in liquid phase  =       .29391    g/sq.ft.
Mass sorbed           =       .17289    g/sq.ft.

Since last printout at time =      19.00
               Change in Total Mass =     -.89453E-02g/sq.ft.
                    Advection in from atmosphere =       .00000    g/sq.ft.
                    Advection in from water table =     -.87184E-02g/sq.ft.
                    Diffusion in from atmosphere =      -.22688E-03g/sq.ft.
                    Diffusion in from water table =      .00000    g/sq.ft.
               Total inflow at boundaries =     -.89453E-02g/sq.ft.
               Mass discrepancy =     -.32596E-07g/sq.ft.

Since beginning of run at time = 0.0
               Change in Total Mass =     -.20151    g/sq.ft.
                    Advection in from atmosphere =       .00000    g/sq.ft.
                    Advection in from water table =     -.19544    g/sq.ft.
                    Diffusion in from atmosphere =      -.60700E-02g/sq.ft.
                    Diffusion in from water table =      .00000    g/sq.ft.
               Total inflow at boundaries =     -.20151    g/sq.ft.
               Mass discrepancy =      .43213E-06g/sq.ft.


Polygon   1
At time =      21.00, total mass in vadose zone =     .52666    g/sq.ft.
Mass in gas phase     =       .67559E-01g/sq.ft.
Mass in liquid phase  =       .28906    g/sq.ft.
Mass sorbed           =       .17004    g/sq.ft.

Since last printout at time =      20.00
               Change in Total Mass =     -.88352E-02g/sq.ft.
                    Advection in from atmosphere =       .00000    g/sq.ft.
                    Advection in from water table =     -.86152E-02g/sq.ft.
                    Diffusion in from atmosphere =      -.22006E-03g/sq.ft.
                    Diffusion in from water table =      .00000    g/sq.ft.
               Total inflow at boundaries =     -.88353E-02g/sq.ft.
               Mass discrepancy =      .67987E-07g/sq.ft.

Since beginning of run at time = 0.0
               Change in Total Mass =     -.21034    g/sq.ft.
                    Advection in from atmosphere =       .00000    g/sq.ft.
                    Advection in from water table =     -.20405    g/sq.ft.
                    Diffusion in from atmosphere =      -.62901E-02g/sq.ft.
                    Diffusion in from water table =      .00000    g/sq.ft.
               Total inflow at boundaries =     -.21034    g/sq.ft.
               Mass discrepancy =      .50664E-06g/sq.ft.


Polygon   1
At time =      22.00, total mass in vadose zone =     .51793    g/sq.ft.
Mass in gas phase     =       .66439E-01g/sq.ft.
```

```
Mass in liquid phase  =       .28427    g/sq.ft.
Mass sorbed           =       .16722    g/sq.ft.

Since last printout at time =      21.00
              Change in Total Mass =     -.87264E-02g/sq.ft.
                   Advection in from atmosphere =       .00000    g/sq.ft.
                   Advection in from water table =     -.85129E-02g/sq.ft.
                   Diffusion in from atmosphere =      -.21346E-03g/sq.ft.
                   Diffusion in from water table =      .00000    g/sq.ft.
              Total inflow at boundaries =     -.87264E-02g/sq.ft.
              Mass discrepancy =     -.34459E-07g/sq.ft.

Since beginning of run at time = 0.0
              Change in Total Mass =     -.21907    g/sq.ft.
                   Advection in from atmosphere =       .00000    g/sq.ft.
                   Advection in from water table =     -.21256    g/sq.ft.
                   Diffusion in from atmosphere =      -.65035E-02g/sq.ft.
                   Diffusion in from water table =      .00000    g/sq.ft.
              Total inflow at boundaries =     -.21907    g/sq.ft.
              Mass discrepancy =      .46194E-06g/sq.ft.


Polygon   1
At time =      23.00, total mass in vadose zone =     .50931    g/sq.ft.
Mass in gas phase     =       .65334E-01g/sq.ft.
Mass in liquid phase  =       .27954    g/sq.ft.
Mass sorbed           =       .16444    g/sq.ft.

Since last printout at time =      22.00
              Change in Total Mass =     -.86185E-02g/sq.ft.
                   Advection in from atmosphere =       .00000    g/sq.ft.
                   Advection in from water table =     -.84115E-02g/sq.ft.
                   Diffusion in from atmosphere =      -.20709E-03g/sq.ft.
                   Diffusion in from water table =      .00000    g/sq.ft.
              Total inflow at boundaries =     -.86186E-02g/sq.ft.
              Mass discrepancy =      .54017E-07g/sq.ft.

Since beginning of run at time = 0.0
              Change in Total Mass =     -.22769    g/sq.ft.
                   Advection in from atmosphere =       .00000    g/sq.ft.
                   Advection in from water table =     -.22098    g/sq.ft.
                   Diffusion in from atmosphere =      -.67106E-02g/sq.ft.
                   Diffusion in from water table =      .00000    g/sq.ft.
              Total inflow at boundaries =     -.22769    g/sq.ft.
              Mass discrepancy =      .50664E-06g/sq.ft.


Polygon   1
At time =      24.00, total mass in vadose zone =     .50080    g/sq.ft.
Mass in gas phase     =       .64242E-01g/sq.ft.
Mass in liquid phase  =       .27487    g/sq.ft.
Mass sorbed           =       .16169    g/sq.ft.

Since last printout at time =      23.00
              Change in Total Mass =     -.85118E-02g/sq.ft.
                   Advection in from atmosphere =       .00000    g/sq.ft.
                   Advection in from water table =     -.83109E-02g/sq.ft.
                   Diffusion in from atmosphere =      -.20093E-03g/sq.ft.
                   Diffusion in from water table =      .00000    g/sq.ft.
              Total inflow at boundaries =     -.85118E-02g/sq.ft.
```

Mass discrepancy = .21420E-07g/sq.ft.

Since beginning of run at time = 0.0
Change in Total Mass = -.23620 g/sq.ft.
Advection in from atmosphere = .00000 g/sq.ft.
Advection in from water table = -.22929 g/sq.ft.
Diffusion in from atmosphere = -.69116E-02g/sq.ft.
Diffusion in from water table = .00000 g/sq.ft.
Total inflow at boundaries = -.23620 g/sq.ft.
Mass discrepancy = .53644E-06g/sq.ft.

Polygon 1
At time = 25.00, total mass in vadose zone = .49239 g/sq.ft.
Mass in gas phase = .63164E-01g/sq.ft.
Mass in liquid phase = .27026 g/sq.ft.
Mass sorbed = .15897 g/sq.ft.

Since last printout at time = 24.00
Change in Total Mass = -.84059E-02g/sq.ft.
Advection in from atmosphere = .00000 g/sq.ft.
Advection in from water table = -.82110E-02g/sq.ft.
Diffusion in from atmosphere = -.19498E-03g/sq.ft.
Diffusion in from water table = .00000 g/sq.ft.
Total inflow at boundaries = -.84060E-02g/sq.ft.
Mass discrepancy = .47497E-07g/sq.ft.

Since beginning of run at time = 0.0
Change in Total Mass = -.24460 g/sq.ft.
Advection in from atmosphere = .00000 g/sq.ft.
Advection in from water table = -.23750 g/sq.ft.
Diffusion in from atmosphere = -.71066E-02g/sq.ft.
Diffusion in from water table = .00000 g/sq.ft.
Total inflow at boundaries = -.24460 g/sq.ft.
Mass discrepancy = .58115E-06g/sq.ft.

Polygon 1
At time = 26.00, total mass in vadose zone = .48409 g/sq.ft.
Mass in gas phase = .62099E-01g/sq.ft.
Mass in liquid phase = .26570 g/sq.ft.
Mass sorbed = .15629 g/sq.ft.

Since last printout at time = 25.00
Change in Total Mass = -.83010E-02g/sq.ft.
Advection in from atmosphere = .00000 g/sq.ft.
Advection in from water table = -.81118E-02g/sq.ft.
Diffusion in from atmosphere = -.18923E-03g/sq.ft.
Diffusion in from water table = .00000 g/sq.ft.
Total inflow at boundaries = -.83010E-02g/sq.ft.
Mass discrepancy = -.10245E-07g/sq.ft.

Since beginning of run at time = 0.0
Change in Total Mass = -.25291 g/sq.ft.
Advection in from atmosphere = .00000 g/sq.ft.
Advection in from water table = -.24561 g/sq.ft.
Diffusion in from atmosphere = -.72958E-02g/sq.ft.
Diffusion in from water table = .00000 g/sq.ft.
Total inflow at boundaries = -.25291 g/sq.ft.
Mass discrepancy = .56624E-06g/sq.ft.

```
Polygon   1
At time =      27.00, total mass in vadose zone =     .47590    g/sq.ft.
Mass in gas phase     =       .61047E-01g/sq.ft.
Mass in liquid phase  =       .26120    g/sq.ft.
Mass sorbed           =       .15365    g/sq.ft.

Since last printout at time =      26.00
               Change in Total Mass =     -.81970E-02g/sq.ft.
                    Advection in from atmosphere =       .00000    g/sq.ft.
                    Advection in from water table =     -.80133E-02g/sq.ft.
                    Diffusion in from atmosphere =      -.18367E-03g/sq.ft.
                    Diffusion in from water table =      .00000    g/sq.ft.
               Total inflow at boundaries =     -.81970E-02g/sq.ft.
               Mass discrepancy =     -.20489E-07g/sq.ft.

Since beginning of run at time = 0.0
               Change in Total Mass =     -.26110    g/sq.ft.
                    Advection in from atmosphere =       .00000    g/sq.ft.
                    Advection in from water table =     -.25362    g/sq.ft.
                    Diffusion in from atmosphere =      -.74795E-02g/sq.ft.
                    Diffusion in from water table =      .00000    g/sq.ft.
               Total inflow at boundaries =     -.26110    g/sq.ft.
               Mass discrepancy =      .53644E-06g/sq.ft.


Polygon   1
At time =      28.00, total mass in vadose zone =     .46780    g/sq.ft.
Mass in gas phase     =       .60009E-01g/sq.ft.
Mass in liquid phase  =       .25676    g/sq.ft.
Mass sorbed           =       .15104    g/sq.ft.

Since last printout at time =      27.00
               Change in Total Mass =     -.80936E-02g/sq.ft.
                    Advection in from atmosphere =       .00000    g/sq.ft.
                    Advection in from water table =     -.79154E-02g/sq.ft.
                    Diffusion in from atmosphere =      -.17831E-03g/sq.ft.
                    Diffusion in from water table =      .00000    g/sq.ft.
               Total inflow at boundaries =     -.80937E-02g/sq.ft.
               Mass discrepancy =      .66124E-07g/sq.ft.

Since beginning of run at time = 0.0
               Change in Total Mass =     -.26920    g/sq.ft.
                    Advection in from atmosphere =       .00000    g/sq.ft.
                    Advection in from water table =     -.26154    g/sq.ft.
                    Diffusion in from atmosphere =      -.76578E-02g/sq.ft.
                    Diffusion in from water table =      .00000    g/sq.ft.
               Total inflow at boundaries =     -.26920    g/sq.ft.
               Mass discrepancy =      .59605E-06g/sq.ft.


Polygon   1
At time =      29.00, total mass in vadose zone =     .45981    g/sq.ft.
Mass in gas phase     =       .58984E-01g/sq.ft.
Mass in liquid phase  =       .25237    g/sq.ft.
Mass sorbed           =       .14846    g/sq.ft.

Since last printout at time =      28.00
               Change in Total Mass =     -.79913E-02g/sq.ft.
```

```
                    Advection in from atmosphere =       .00000    g/sq.ft.
                    Advection in from water table =     -.78181E-02g/sq.ft.
                    Diffusion in from atmosphere =      -.17312E-03g/sq.ft.
                    Diffusion in from water table =      .00000    g/sq.ft.
               Total inflow at boundaries =     -.79912E-02g/sq.ft.
               Mass discrepancy =     -.57742E-07g/sq.ft.

Since beginning of run at time = 0.0
               Change in Total Mass =     -.27719    g/sq.ft.
                    Advection in from atmosphere =       .00000    g/sq.ft.
                    Advection in from water table =     -.26936    g/sq.ft.
                    Diffusion in from atmosphere =      -.78309E-02g/sq.ft.
                    Diffusion in from water table =      .00000    g/sq.ft.
               Total inflow at boundaries =     -.27719    g/sq.ft.
               Mass discrepancy =      .53644E-06g/sq.ft.


Polygon   1
At time =      30.00, total mass in vadose zone =     .45192    g/sq.ft.
Mass in gas phase     =       .57972E-01g/sq.ft.
Mass in liquid phase  =       .24804    g/sq.ft.
Mass sorbed           =       .14591    g/sq.ft.

Since last printout at time =      29.00
               Change in Total Mass =     -.78893E-02g/sq.ft.
                    Advection in from atmosphere =       .00000    g/sq.ft.
                    Advection in from water table =     -.77213E-02g/sq.ft.
                    Diffusion in from atmosphere =      -.16811E-03g/sq.ft.
                    Diffusion in from water table =      .00000    g/sq.ft.
               Total inflow at boundaries =     -.78894E-02g/sq.ft.
               Mass discrepancy =      .14249E-06g/sq.ft.

Since beginning of run at time = 0.0
               Change in Total Mass =     -.28508    g/sq.ft.
                    Advection in from atmosphere =       .00000    g/sq.ft.
                    Advection in from water table =     -.27708    g/sq.ft.
                    Diffusion in from atmosphere =      -.79990E-02g/sq.ft.
                    Diffusion in from water table =      .00000    g/sq.ft.
               Total inflow at boundaries =     -.28508    g/sq.ft.
               Mass discrepancy =      .65565E-06g/sq.ft.


GROUNDWATER IMPACT OF POLYGON   1

 Time        Mass per area (g/sq.ft.)      Total Mass (g)
     1.00          .10736E-01                1154.1
     2.00          .10677E-01                1147.8
     3.00          .10607E-01                1140.3
     4.00          .10523E-01                1131.3
     5.00          .10427E-01                1120.9
     6.00          .10320E-01                1109.3
     7.00          .10204E-01                1096.9
     8.00          .10084E-01                1084.0
     9.00          .99608E-02                1070.8
    10.00          .98380E-02                1057.6
    11.00          .97164E-02                1044.5
    12.00          .95970E-02                1031.7
    13.00          .94801E-02                1019.1
    14.00          .93656E-02                1006.8
    15.00          .92534E-02                994.74
```

16.00	.91433E-02	982.90
17.00	.90350E-02	971.26
18.00	.89282E-02	959.78
19.00	.88227E-02	948.44
20.00	.87184E-02	937.23
21.00	.86152E-02	926.13
22.00	.85129E-02	915.14
23.00	.84115E-02	904.24
24.00	.83109E-02	893.42
25.00	.82110E-02	882.68
26.00	.81118E-02	872.02
27.00	.80133E-02	861.43
28.00	.79154E-02	850.90
29.00	.78181E-02	840.44
30.00	.77213E-02	830.04

****

****

TOTAL GROUNDWATER IMPACT

Time (yr)	Mass (g)	Cumulative Mass (g)
1.00	1154.1	1154.1
2.00	1147.8	2301.9
3.00	1140.3	3442.2
4.00	1131.3	4573.5
5.00	1120.9	5694.4
6.00	1109.3	6803.7
7.00	1096.9	7900.6
8.00	1084.0	8984.6
9.00	1070.8	10055.
10.00	1057.6	11113.
11.00	1044.5	12158.
12.00	1031.7	13189.
13.00	1019.1	14208.
14.00	1006.8	15215.
15.00	994.74	16210.
16.00	982.90	17193.
17.00	971.26	18164.
18.00	959.78	19124.
19.00	948.44	20072.
20.00	937.23	21009.
21.00	926.13	21936.
22.00	915.14	22851.
23.00	904.24	23755.
24.00	893.42	24648.
25.00	882.68	25531.
26.00	872.02	26403.
27.00	861.43	27265.
28.00	850.90	28115.
29.00	840.44	28956.
30.00	830.04	29786.

Polygon 36
Time: .000

Cell	Cgas(g/cu.ft.)	Cliq(g/cu.ft.)	Csol
1	.66189E-05	.13993E-04	.45199E-10
2	.66189E-05	.13993E-04	.45199E-10
3	.66189E-05	.13993E-04	.45199E-10
4	.66189E-05	.13993E-04	.45199E-10
5	.66189E-05	.13993E-04	.45199E-10
6	.66189E-05	.13993E-04	.45199E-10
7	.19904E-02	.42080E-02	.13592E-07
8	.19904E-02	.42080E-02	.13592E-07
9	.19904E-02	.42080E-02	.13592E-07
10	.19904E-02	.42080E-02	.13592E-07
11	.19904E-02	.42080E-02	.13592E-07
12	.19904E-02	.42080E-02	.13592E-07
13	.49666E-02	.10500E-01	.33915E-07
14	.49666E-02	.10500E-01	.33915E-07
15	.49666E-02	.10500E-01	.33915E-07
16	.49666E-02	.10500E-01	.33915E-07
17	.49666E-02	.10500E-01	.33915E-07
18	.49666E-02	.10500E-01	.33915E-07
19	.79422E-02	.16791E-01	.54236E-07
20	.79422E-02	.16791E-01	.54236E-07
21	.79422E-02	.16791E-01	.54236E-07
22	.79422E-02	.16791E-01	.54236E-07
23	.79422E-02	.16791E-01	.54236E-07
24	.79422E-02	.16791E-01	.54236E-07
25	.10918E-01	.23083E-01	.74559E-07
26	.10918E-01	.23083E-01	.74559E-07
27	.10918E-01	.23083E-01	.74559E-07
28	.10918E-01	.23083E-01	.74559E-07
29	.10918E-01	.23083E-01	.74559E-07
30	.10918E-01	.23083E-01	.74559E-07
31	.13894E-01	.29374E-01	.94879E-07
32	.13894E-01	.29374E-01	.94879E-07
33	.13894E-01	.29374E-01	.94879E-07
34	.13894E-01	.29374E-01	.94879E-07
35	.13894E-01	.29374E-01	.94879E-07
36	.13894E-01	.29374E-01	.94879E-07
37	.16870E-01	.35666E-01	.11520E-06
38	.16870E-01	.35666E-01	.11520E-06
39	.16870E-01	.35666E-01	.11520E-06
40	.16870E-01	.35666E-01	.11520E-06
41	.16870E-01	.35666E-01	.11520E-06
42	.16870E-01	.35666E-01	.11520E-06
43	.19846E-01	.41958E-01	.13552E-06
44	.19846E-01	.41958E-01	.13552E-06
45	.19846E-01	.41958E-01	.13552E-06
46	.19846E-01	.41958E-01	.13552E-06
47	.19846E-01	.41958E-01	.13552E-06
48	.19846E-01	.41958E-01	.13552E-06
49	.22822E-01	.48250E-01	.15585E-06
50	.22822E-01	.48250E-01	.15585E-06
51	.22822E-01	.48250E-01	.15585E-06
52	.22822E-01	.48250E-01	.15585E-06
53	.22822E-01	.48250E-01	.15585E-06
54	.22822E-01	.48250E-01	.15585E-06
55	.25798E-01	.54541E-01	.17617E-06
56	.25798E-01	.54541E-01	.17617E-06

57	.25798E-01	.54541E-01	.17617E-06
58	.25798E-01	.54541E-01	.17617E-06
59	.25798E-01	.54541E-01	.17617E-06
60	.25798E-01	.54541E-01	.17617E-06

Polygon 36
Time: 10.000

Cell	Cgas(g/cu.ft.)	Cliq(g/cu.ft.)	Csol
1	.39097E-04	.82658E-04	.26699E-09
2	.10013E-03	.21170E-03	.68379E-09
3	.18015E-03	.38088E-03	.12302E-08
4	.27706E-03	.58576E-03	.18920E-08
5	.38982E-03	.82414E-03	.26620E-08
6	.51858E-03	.10964E-02	.35412E-08
7	.67139E-03	.14194E-02	.45848E-08
8	.86263E-03	.18237E-02	.58907E-08
9	.11004E-02	.23264E-02	.75144E-08
10	.13789E-02	.29152E-02	.94162E-08
11	.16826E-02	.35574E-02	.11490E-07
12	.19962E-02	.42203E-02	.13632E-07
13	.23210E-02	.49071E-02	.15850E-07
14	.26746E-02	.56545E-02	.18264E-07
15	.30696E-02	.64896E-02	.20962E-07
16	.35001E-02	.73998E-02	.23901E-07
17	.39459E-02	.83422E-02	.26945E-07
18	.43859E-02	.92725E-02	.29950E-07
19	.48183E-02	.10187E-01	.32903E-07
20	.52604E-02	.11121E-01	.35922E-07
21	.57268E-02	.12107E-01	.39107E-07
22	.62144E-02	.13138E-01	.42437E-07
23	.67059E-02	.14177E-01	.45793E-07
24	.71829E-02	.15186E-01	.49050E-07
25	.76453E-02	.16164E-01	.52208E-07
26	.81120E-02	.17150E-01	.55395E-07
27	.85986E-02	.18179E-01	.58718E-07
28	.91029E-02	.19245E-01	.62161E-07
29	.96081E-02	.20313E-01	.65611E-07
30	.10096E-01	.21345E-01	.68945E-07
31	.10568E-01	.22342E-01	.72165E-07
32	.11042E-01	.23344E-01	.75400E-07
33	.11534E-01	.24384E-01	.78762E-07
34	.12042E-01	.25459E-01	.82234E-07
35	.12551E-01	.26534E-01	.85704E-07
36	.13040E-01	.27570E-01	.89050E-07
37	.13513E-01	.28568E-01	.92275E-07
38	.13986E-01	.29569E-01	.95508E-07
39	.14477E-01	.30607E-01	.98860E-07
40	.14983E-01	.31676E-01	.10231E-06
41	.15487E-01	.32743E-01	.10576E-06
42	.15972E-01	.33767E-01	.10907E-06
43	.16438E-01	.34752E-01	.11225E-06
44	.16903E-01	.35735E-01	.11542E-06
45	.17383E-01	.36750E-01	.11870E-06
46	.17876E-01	.37793E-01	.12207E-06
47	.18365E-01	.38826E-01	.12541E-06
48	.18831E-01	.39811E-01	.12859E-06
49	.19273E-01	.40747E-01	.13161E-06
50	.19711E-01	.41672E-01	.13460E-06
51	.20159E-01	.42619E-01	.13766E-06
52	.20612E-01	.43578E-01	.14076E-06

53	.21054E-01	.44512E-01	.14377E-06
54	.21464E-01	.45379E-01	.14657E-06
55	.21840E-01	.46174E-01	.14914E-06
56	.22198E-01	.46931E-01	.15159E-06
57	.22551E-01	.47676E-01	.15400E-06
58	.22892E-01	.48398E-01	.15632E-06
59	.23200E-01	.49049E-01	.15843E-06
60	.23451E-01	.49580E-01	.16014E-06

Polygon 36
Time: 20.000

Cell	Cgas(g/cu.ft.)	Cliq(g/cu.ft.)	Csol
1	.29074E-04	.61467E-04	.19854E-09
2	.75061E-04	.15869E-03	.51257E-09
3	.13654E-03	.28866E-03	.93237E-09
4	.21272E-03	.44972E-03	.14526E-08
5	.30329E-03	.64120E-03	.20711E-08
6	.40825E-03	.86312E-03	.27879E-08
7	.52790E-03	.11161E-02	.36049E-08
8	.66285E-03	.14014E-02	.45264E-08
9	.81416E-03	.17213E-02	.55597E-08
10	.98330E-03	.20789E-02	.67147E-08
11	.11719E-02	.24776E-02	.80028E-08
12	.13814E-02	.29205E-02	.94334E-08
13	.16125E-02	.34090E-02	.11011E-07
14	.18650E-02	.39429E-02	.12736E-07
15	.21386E-02	.45214E-02	.14604E-07
16	.24328E-02	.51433E-02	.16613E-07
17	.27472E-02	.58080E-02	.18760E-07
18	.30814E-02	.65146E-02	.21042E-07
19	.34344E-02	.72609E-02	.23453E-07
20	.38046E-02	.80436E-02	.25981E-07
21	.41901E-02	.88585E-02	.28613E-07
22	.45890E-02	.97020E-02	.31338E-07
23	.50002E-02	.10571E-01	.34145E-07
24	.54225E-02	.11464E-01	.37029E-07
25	.58547E-02	.12378E-01	.39980E-07
26	.62953E-02	.13309E-01	.42989E-07
27	.67429E-02	.14256E-01	.46046E-07
28	.71962E-02	.15214E-01	.49141E-07
29	.76547E-02	.16183E-01	.52272E-07
30	.81178E-02	.17162E-01	.55435E-07
31	.85852E-02	.18150E-01	.58626E-07
32	.90558E-02	.19145E-01	.61840E-07
33	.95288E-02	.20145E-01	.65070E-07
34	.10003E-01	.21149E-01	.68310E-07
35	.10479E-01	.22155E-01	.71560E-07
36	.10956E-01	.23163E-01	.74818E-07
37	.11434E-01	.24174E-01	.78082E-07
38	.11913E-01	.25185E-01	.81349E-07
39	.12390E-01	.26195E-01	.84611E-07
40	.12867E-01	.27203E-01	.87865E-07
41	.13342E-01	.28207E-01	.91108E-07
42	.13815E-01	.29208E-01	.94341E-07
43	.14287E-01	.30204E-01	.97560E-07
44	.14755E-01	.31195E-01	.10076E-06
45	.15219E-01	.32176E-01	.10393E-06
46	.15679E-01	.33148E-01	.10707E-06
47	.16133E-01	.34107E-01	.11017E-06
48	.16580E-01	.35054E-01	.11322E-06

49	.17021E-01	.35985E-01	.11623E-06
50	.17452E-01	.36897E-01	.11918E-06
51	.17873E-01	.37786E-01	.12205E-06
52	.18281E-01	.38649E-01	.12484E-06
53	.18674E-01	.39481E-01	.12752E-06
54	.19052E-01	.40278E-01	.13010E-06
55	.19410E-01	.41035E-01	.13254E-06
56	.19746E-01	.41746E-01	.13484E-06
57	.20056E-01	.42401E-01	.13696E-06
58	.20335E-01	.42992E-01	.13886E-06
59	.20580E-01	.43510E-01	.14054E-06
60	.20786E-01	.43945E-01	.14194E-06

Polygon 36
Time: 30.000

Cell	Cgas(g/cu.ft.)	Cliq(g/cu.ft.)	Csol
1	.21512E-04	.45479E-04	.14690E-09
2	.55519E-04	.11738E-03	.37912E-09
3	.10098E-03	.21349E-03	.68956E-09
4	.15735E-03	.33267E-03	.10745E-08
5	.22445E-03	.47453E-03	.15327E-08
6	.30236E-03	.63924E-03	.20647E-08
7	.39133E-03	.82734E-03	.26723E-08
8	.49177E-03	.10397E-02	.33581E-08
9	.60414E-03	.12773E-02	.41256E-08
10	.72903E-03	.15413E-02	.49784E-08
11	.86703E-03	.18331E-02	.59208E-08
12	.10188E-02	.21540E-02	.69573E-08
13	.11851E-02	.25055E-02	.80928E-08
14	.13665E-02	.28891E-02	.93317E-08
15	.15637E-02	.33060E-02	.10678E-07
16	.17773E-02	.37574E-02	.12136E-07
17	.20075E-02	.42441E-02	.13708E-07
18	.22546E-02	.47665E-02	.15396E-07
19	.25186E-02	.53247E-02	.17199E-07
20	.27995E-02	.59185E-02	.19117E-07
21	.30969E-02	.65473E-02	.21148E-07
22	.34104E-02	.72102E-02	.23289E-07
23	.37394E-02	.79058E-02	.25536E-07
24	.40832E-02	.86326E-02	.27883E-07
25	.44409E-02	.93889E-02	.30326E-07
26	.48117E-02	.10173E-01	.32858E-07
27	.51945E-02	.10982E-01	.35472E-07
28	.55883E-02	.11815E-01	.38161E-07
29	.59922E-02	.12669E-01	.40920E-07
30	.64052E-02	.13542E-01	.43740E-07
31	.68263E-02	.14432E-01	.46615E-07
32	.72546E-02	.15337E-01	.49540E-07
33	.76891E-02	.16256E-01	.52507E-07
34	.81290E-02	.17186E-01	.55511E-07
35	.85736E-02	.18126E-01	.58547E-07
36	.90219E-02	.19074E-01	.61608E-07
37	.94732E-02	.20028E-01	.64690E-07
38	.99267E-02	.20987E-01	.67787E-07
39	.10382E-01	.21949E-01	.70894E-07
40	.10838E-01	.22912E-01	.74007E-07
41	.11293E-01	.23876E-01	.77119E-07
42	.11748E-01	.24838E-01	.80226E-07
43	.12202E-01	.25796E-01	.83322E-07
44	.12653E-01	.26750E-01	.86402E-07

```
   45      .13100E-01      .27696E-01

**********
Sector not found error reading file
C:\DATA\SPRINGER\BATCH.PRF
```

V-Leach, VER 1.1
Jake Turin, 11/91
PGA V-leach model, polygon screen-TCE-11/10/92-Poly14A.INP. New soil, Old chem.
1 polygons.
Timestep = 1.00 years. Simulation length = 30.00 years.
Printout every 1.00 years. Vertical profile stored every 10.00 years.
Koc = 123.60 ml/g, .43649E-02cu.ft./g
Kh = .47300 (dimensionless).
Aqueous solubility = 1100.0 mg/l, 31.149 g/cu.ft
Free air diffusion coefficient = .70290 sq. m/day, 2761.7 sq.ft./yr

Polygon 1
Polygon 14A
Polygon area = .12750E+06sq. ft.
60 cells, each cell 1.000 ft. thick.
Soil Properties:
Bulk density = 1.6400 g/ml, 46440. g/cu.ft.
Porosity = .3810 Volumetric water content = .2550
Organic carbon content = .00074000
Recharge Rate = .08202100 ft/yr
Conc. in recharge water = .00000 mg/l, .00000 g/cu.ft
Atmospheric concentration = .00000 mg/l, .00000 g/cu.ft
Water table is impermeable to gas diffusion.

Calculation of Total TCE Mass and Revised Vertical Distributions in Polygon 36 using HGC Distribution equations and Revised Soil Physical Data

0.235 (Cs)	Cz = (74.527z - 371.636)Cs

Cz (ug/L) Vert. Dist. Eq.	Calculated Depth Interval (z)	Total Depth Interval (feet)	Total Soil Conc Ct* (ug/Kg)	Mt (ug/cc)	Volume of Soil (cubic ft)	Mass TCE (grams)	Mass TCE (pounds)
0.235	3	6	0.14	2.31E-04	645000	4.22	0.01
70.29	9	6	42.10	0.07	645000	1261.17	2.78
175.37	15	6	105.05	0.17	645000	3146.60	6.94
280.46	21	6	167.99	0.28	645000	5032.03	11.09
385.54	27	6	230.94	0.38	645000	6917.45	15.25
490.62	33	6	293.88	0.48	645000	8802.88	19.41
595.71	39	6	356.83	0.59	645000	10688.31	23.56
700.79	45	6	419.77	0.69	645000	12573.74	27.72
805.87	51	6	482.72	0.79	645000	14459.17	31.88
910.95	57	6	545.66	0.89	645000	16344.60	36.03
4415.84		60				79230.18	174.67

* Ct conversion based on Kgt of 0.599 L/Kg

** Cs determined as mathematical average of VOC concentrations for polygon listed in Table A-1 of HGC, 1989.

PGA V-leach model, polygon screen-TCE-11/3/92-Poly13A.INP. New soil, Old chem.

```
    1
       1.0          30.          1.0          10.
     123.6         .473        1100.        .7029
Polygon 13A
   192500.           1.     .196850         1.64         .381         .255      .00074
        0.           0.          -1.
   60
    1     6       0.17
    7    12      49.99
   13    18     124.72
   19    24     199.45
   25    30     274.18
   31    36     348.91
   37    42     423.64
   43    48     498.37
   49    54     573.10
   55    60     647.83
```

V-Leach, VER 1.1
Jake Turin, 11/91
PGA V-leach model, polygon screen-TCE-11/3/92-Poly13A.INP. New soil, Old chem.

Polygon 1
At time = .00, total mass in vadose zone = .87500 g/sq.ft.
Mass in gas phase = .11224 g/sq.ft.
Mass in liquid phase = .48025 g/sq.ft.
Mass sorbed = .28250 g/sq.ft.

Polygon 1
At time = 1.00, total mass in vadose zone = .86180 g/sq.ft.
Mass in gas phase = .11055 g/sq.ft.
Mass in liquid phase = .47301 g/sq.ft.
Mass sorbed = .27824 g/sq.ft.

Since last printout at time = .00
Change in Total Mass = -.13193E-01g/sq.ft.
Advection in from atmosphere = .00000 g/sq.ft.
Advection in from water table = -.12746E-01g/sq.ft.
Diffusion in from atmosphere = -.44753E-03g/sq.ft.
Diffusion in from water table = .00000 g/sq.ft.
Total inflow at boundaries = -.13193E-01g/sq.ft.
Mass discrepancy = .20955E-06g/sq.ft.

Since beginning of run at time = 0.0
Change in Total Mass = -.13193E-01g/sq.ft.
Advection in from atmosphere = .00000 g/sq.ft.
Advection in from water table = -.12746E-01g/sq.ft.
Diffusion in from atmosphere = -.44753E-03g/sq.ft.
Diffusion in from water table = .00000 g/sq.ft.
Total inflow at boundaries = -.13193E-01g/sq.ft.
Mass discrepancy = .20955E-06g/sq.ft.

Polygon 1
At time = 2.00, total mass in vadose zone = .84869 g/sq.ft.
Mass in gas phase = .10887 g/sq.ft.
Mass in liquid phase = .46581 g/sq.ft.
Mass sorbed = .27401 g/sq.ft.

Since last printout at time = 1.00
Change in Total Mass = -.13119E-01g/sq.ft.
Advection in from atmosphere = .00000 g/sq.ft.
Advection in from water table = -.12677E-01g/sq.ft.
Diffusion in from atmosphere = -.44261E-03g/sq.ft.
Diffusion in from water table = .00000 g/sq.ft.
Total inflow at boundaries = -.13119E-01g/sq.ft.
Mass discrepancy = -.82888E-07g/sq.ft.

Since beginning of run at time = 0.0
Change in Total Mass = -.26313E-01g/sq.ft.
Advection in from atmosphere = .00000 g/sq.ft.
Advection in from water table = -.25423E-01g/sq.ft.
Diffusion in from atmosphere = -.89015E-03g/sq.ft.
Diffusion in from water table = .00000 g/sq.ft.
Total inflow at boundaries = -.26313E-01g/sq.ft.
Mass discrepancy = .12666E-06g/sq.ft.

```
Polygon   1
At time =       3.00, total mass in vadose zone =      .83566    g/sq.ft.
Mass in gas phase     =       .10720    g/sq.ft.
Mass in liquid phase  =       .45866    g/sq.ft.
Mass sorbed           =       .26980    g/sq.ft.

Since last printout at time =       2.00
              Change in Total Mass =     -.13029E-01g/sq.ft.
                   Advection in from atmosphere =       .00000    g/sq.ft.
                   Advection in from water table =     -.12593E-01g/sq.ft.
                   Diffusion in from atmosphere =      -.43567E-03g/sq.ft.
                   Diffusion in from water table =      .00000    g/sq.ft.
              Total inflow at boundaries =     -.13029E-01g/sq.ft.
              Mass discrepancy =      .60536E-07g/sq.ft.

Since beginning of run at time = 0.0
              Change in Total Mass =     -.39341E-01g/sq.ft.
                   Advection in from atmosphere =       .00000    g/sq.ft.
                   Advection in from water table =     -.38016E-01g/sq.ft.
                   Diffusion in from atmosphere =      -.13258E-02g/sq.ft.
                   Diffusion in from water table =      .00000    g/sq.ft.
              Total inflow at boundaries =     -.39342E-01g/sq.ft.
              Mass discrepancy =      .18999E-06g/sq.ft.


Polygon   1
At time =       4.00, total mass in vadose zone =      .82274    g/sq.ft.
Mass in gas phase     =       .10554    g/sq.ft.
Mass in liquid phase  =       .45157    g/sq.ft.
Mass sorbed           =       .26563    g/sq.ft.

Since last printout at time =       3.00
              Change in Total Mass =     -.12921E-01g/sq.ft.
                   Advection in from atmosphere =       .00000    g/sq.ft.
                   Advection in from water table =     -.12494E-01g/sq.ft.
                   Diffusion in from atmosphere =      -.42728E-03g/sq.ft.
                   Diffusion in from water table =      .00000    g/sq.ft.
              Total inflow at boundaries =     -.12921E-01g/sq.ft.
              Mass discrepancy =      .14622E-06g/sq.ft.

Since beginning of run at time = 0.0
              Change in Total Mass =     -.52262E-01g/sq.ft.
                   Advection in from atmosphere =       .00000    g/sq.ft.
                   Advection in from water table =     -.50510E-01g/sq.ft.
                   Diffusion in from atmosphere =      -.17531E-02g/sq.ft.
                   Diffusion in from water table =      .00000    g/sq.ft.
              Total inflow at boundaries =     -.52263E-01g/sq.ft.
              Mass discrepancy =      .33528E-06g/sq.ft.


Polygon   1
At time =       5.00, total mass in vadose zone =      .80994    g/sq.ft.
Mass in gas phase     =       .10390    g/sq.ft.
Mass in liquid phase  =       .44454    g/sq.ft.
Mass sorbed           =       .26150    g/sq.ft.

Since last printout at time =       4.00
              Change in Total Mass =     -.12797E-01g/sq.ft.
```

```
                    Advection in from atmosphere =       .00000    g/sq.ft.
                    Advection in from water table =    -.12379E-01g/sq.ft.
                    Diffusion in from atmosphere =     -.41789E-03g/sq.ft.
                    Diffusion in from water table =      .00000    g/sq.ft.
               Total inflow at boundaries =     -.12797E-01g/sq.ft.
               Mass discrepancy =     -.21048E-06g/sq.ft.

Since beginning of run at time = 0.0
               Change in Total Mass =     -.65060E-01g/sq.ft.
                    Advection in from atmosphere =       .00000    g/sq.ft.
                    Advection in from water table =    -.62889E-01g/sq.ft.
                    Diffusion in from atmosphere =     -.21710E-02g/sq.ft.
                    Diffusion in from water table =      .00000    g/sq.ft.
               Total inflow at boundaries =     -.65060E-01g/sq.ft.
               Mass discrepancy =      .12666E-06g/sq.ft.


Polygon   1
At time =       6.00, total mass in vadose zone =     .79728    g/sq.ft.
Mass in gas phase     =       .10227    g/sq.ft.
Mass in liquid phase  =       .43759    g/sq.ft.
Mass sorbed           =       .25741    g/sq.ft.

Since last printout at time =       5.00
               Change in Total Mass =     -.12659E-01g/sq.ft.
                    Advection in from atmosphere =       .00000    g/sq.ft.
                    Advection in from water table =    -.12252E-01g/sq.ft.
                    Diffusion in from atmosphere =     -.40783E-03g/sq.ft.
                    Diffusion in from water table =      .00000    g/sq.ft.
               Total inflow at boundaries =     -.12660E-01g/sq.ft.
               Mass discrepancy =      .15181E-06g/sq.ft.

Since beginning of run at time = 0.0
               Change in Total Mass =     -.77719E-01g/sq.ft.
                    Advection in from atmosphere =       .00000    g/sq.ft.
                    Advection in from water table =    -.75141E-01g/sq.ft.
                    Diffusion in from atmosphere =     -.25788E-02g/sq.ft.
                    Diffusion in from water table =      .00000    g/sq.ft.
               Total inflow at boundaries =     -.77720E-01g/sq.ft.
               Mass discrepancy =      .28312E-06g/sq.ft.


Polygon   1
At time =       7.00, total mass in vadose zone =     .78477    g/sq.ft.
Mass in gas phase     =       .10067    g/sq.ft.
Mass in liquid phase  =       .43073    g/sq.ft.
Mass sorbed           =       .25337    g/sq.ft.

Since last printout at time =       6.00
               Change in Total Mass =     -.12512E-01g/sq.ft.
                    Advection in from atmosphere =       .00000    g/sq.ft.
                    Advection in from water table =    -.12115E-01g/sq.ft.
                    Diffusion in from atmosphere =     -.39736E-03g/sq.ft.
                    Diffusion in from water table =      .00000    g/sq.ft.
               Total inflow at boundaries =     -.12512E-01g/sq.ft.
               Mass discrepancy =      .62399E-07g/sq.ft.

Since beginning of run at time = 0.0
               Change in Total Mass =     -.90231E-01g/sq.ft.
                    Advection in from atmosphere =       .00000    g/sq.ft.
```

```
                Advection in from water table =     -.87255E-01g/sq.ft.
                Diffusion in from atmosphere =      -.29762E-02g/sq.ft.
                Diffusion in from water table =      .00000    g/sq.ft.
           Total inflow at boundaries =     -.90232E-01g/sq.ft.
           Mass discrepancy =      .34273E-06g/sq.ft.


Polygon   1
At time =       8.00, total mass in vadose zone =     .77241    g/sq.ft.
Mass in gas phase     =       .99083E-01g/sq.ft.
Mass in liquid phase  =       .42394    g/sq.ft.
Mass sorbed           =       .24938    g/sq.ft.

Since last printout at time =       7.00
           Change in Total Mass =     -.12358E-01g/sq.ft.
                Advection in from atmosphere =       .00000    g/sq.ft.
                Advection in from water table =     -.11972E-01g/sq.ft.
                Diffusion in from atmosphere =      -.38667E-03g/sq.ft.
                Diffusion in from water table =      .00000    g/sq.ft.
           Total inflow at boundaries =     -.12358E-01g/sq.ft.
           Mass discrepancy =      .94995E-07g/sq.ft.

Since beginning of run at time = 0.0
           Change in Total Mass =     -.10259    g/sq.ft.
                Advection in from atmosphere =       .00000    g/sq.ft.
                Advection in from water table =     -.99227E-01g/sq.ft.
                Diffusion in from atmosphere =      -.33628E-02g/sq.ft.
                Diffusion in from water table =      .00000    g/sq.ft.
           Total inflow at boundaries =     -.10259    g/sq.ft.
           Mass discrepancy =      .43958E-06g/sq.ft.


Polygon   1
At time =       9.00, total mass in vadose zone =     .76021    g/sq.ft.
Mass in gas phase     =       .97518E-01g/sq.ft.
Mass in liquid phase  =       .41725    g/sq.ft.
Mass sorbed           =       .24544    g/sq.ft.

Since last printout at time =       8.00
           Change in Total Mass =     -.12202E-01g/sq.ft.
                Advection in from atmosphere =       .00000    g/sq.ft.
                Advection in from water table =     -.11826E-01g/sq.ft.
                Diffusion in from atmosphere =      -.37590E-03g/sq.ft.
                Diffusion in from water table =      .00000    g/sq.ft.
           Total inflow at boundaries =     -.12202E-01g/sq.ft.
           Mass discrepancy =     -.41910E-07g/sq.ft.

Since beginning of run at time = 0.0
           Change in Total Mass =     -.11479    g/sq.ft.
                Advection in from atmosphere =       .00000    g/sq.ft.
                Advection in from water table =     -.11105    g/sq.ft.
                Diffusion in from atmosphere =      -.37387E-02g/sq.ft.
                Diffusion in from water table =      .00000    g/sq.ft.
           Total inflow at boundaries =     -.11479    g/sq.ft.
           Mass discrepancy =      .39488E-06g/sq.ft.


Polygon   1
At time =      10.00, total mass in vadose zone =     .74816    g/sq.ft.
Mass in gas phase     =       .95973E-01g/sq.ft.
```

```
Mass in liquid phase  =        .41064    g/sq.ft.
Mass sorbed           =        .24155    g/sq.ft.

Since last printout at time =        9.00
               Change in Total Mass =     -.12045E-01g/sq.ft.
                    Advection in from atmosphere =        .00000    g/sq.ft.
                    Advection in from water table =     -.11680E-01g/sq.ft.
                    Diffusion in from atmosphere =      -.36515E-03g/sq.ft.
                    Diffusion in from water table =       .00000    g/sq.ft.
               Total inflow at boundaries =     -.12045E-01g/sq.ft.
               Mass discrepancy =      .76368E-07g/sq.ft.

Since beginning of run at time = 0.0
               Change in Total Mass =     -.12684    g/sq.ft.
                    Advection in from atmosphere =        .00000    g/sq.ft.
                    Advection in from water table =     -.12273    g/sq.ft.
                    Diffusion in from atmosphere =      -.41039E-02g/sq.ft.
                    Diffusion in from water table =       .00000    g/sq.ft.
               Total inflow at boundaries =     -.12684    g/sq.ft.
               Mass discrepancy =      .47684E-06g/sq.ft.


Polygon   1
At time =      11.00, total mass in vadose zone =      .73627    g/sq.ft.
Mass in gas phase     =        .94448E-01g/sq.ft.
Mass in liquid phase  =        .40411    g/sq.ft.
Mass sorbed           =        .23771    g/sq.ft.

Since last printout at time =       10.00
               Change in Total Mass =     -.11890E-01g/sq.ft.
                    Advection in from atmosphere =        .00000    g/sq.ft.
                    Advection in from water table =     -.11536E-01g/sq.ft.
                    Diffusion in from atmosphere =      -.35452E-03g/sq.ft.
                    Diffusion in from water table =       .00000    g/sq.ft.
               Total inflow at boundaries =     -.11890E-01g/sq.ft.
               Mass discrepancy =     -.44703E-07g/sq.ft.

Since beginning of run at time = 0.0
               Change in Total Mass =     -.13873    g/sq.ft.
                    Advection in from atmosphere =        .00000    g/sq.ft.
                    Advection in from water table =     -.13427    g/sq.ft.
                    Diffusion in from atmosphere =      -.44584E-02g/sq.ft.
                    Diffusion in from water table =       .00000    g/sq.ft.
               Total inflow at boundaries =     -.13873    g/sq.ft.
               Mass discrepancy =      .43213E-06g/sq.ft.


Polygon   1
At time =      12.00, total mass in vadose zone =      .72453    g/sq.ft.
Mass in gas phase     =        .92942E-01g/sq.ft.
Mass in liquid phase  =        .39767    g/sq.ft.
Mass sorbed           =        .23392    g/sq.ft.

Since last printout at time =       11.00
               Change in Total Mass =     -.11738E-01g/sq.ft.
                    Advection in from atmosphere =        .00000    g/sq.ft.
                    Advection in from water table =     -.11394E-01g/sq.ft.
                    Diffusion in from atmosphere =      -.34405E-03g/sq.ft.
                    Diffusion in from water table =       .00000    g/sq.ft.
               Total inflow at boundaries =     -.11738E-01g/sq.ft.
```

Mass discrepancy = .19558E-07g/sq.ft.

Since beginning of run at time = 0.0
Change in Total Mass = -.15046 g/sq.ft.
Advection in from atmosphere = .00000 g/sq.ft.
Advection in from water table = -.14566 g/sq.ft.
Diffusion in from atmosphere = -.48025E-02g/sq.ft.
Diffusion in from water table = .00000 g/sq.ft.
Total inflow at boundaries = -.15046 g/sq.ft.
Mass discrepancy = .44703E-06g/sq.ft.

Polygon 1
At time = 13.00, total mass in vadose zone = .71294 g/sq.ft.
Mass in gas phase = .91455E-01g/sq.ft.
Mass in liquid phase = .39131 g/sq.ft.
Mass sorbed = .23018 g/sq.ft.

Since last printout at time = 12.00
Change in Total Mass = -.11589E-01g/sq.ft.
Advection in from atmosphere = .00000 g/sq.ft.
Advection in from water table = -.11255E-01g/sq.ft.
Diffusion in from atmosphere = -.33380E-03g/sq.ft.
Diffusion in from water table = .00000 g/sq.ft.
Total inflow at boundaries = -.11589E-01g/sq.ft.
Mass discrepancy = .10431E-06g/sq.ft.

Since beginning of run at time = 0.0
Change in Total Mass = -.16205 g/sq.ft.
Advection in from atmosphere = .00000 g/sq.ft.
Advection in from water table = -.15692 g/sq.ft.
Diffusion in from atmosphere = -.51363E-02g/sq.ft.
Diffusion in from water table = .00000 g/sq.ft.
Total inflow at boundaries = -.16205 g/sq.ft.
Mass discrepancy = .55134E-06g/sq.ft.

Polygon 1
At time = 14.00, total mass in vadose zone = .70150 g/sq.ft.
Mass in gas phase = .89988E-01g/sq.ft.
Mass in liquid phase = .38503 g/sq.ft.
Mass sorbed = .22649 g/sq.ft.

Since last printout at time = 13.00
Change in Total Mass = -.11443E-01g/sq.ft.
Advection in from atmosphere = .00000 g/sq.ft.
Advection in from water table = -.11119E-01g/sq.ft.
Diffusion in from atmosphere = -.32378E-03g/sq.ft.
Diffusion in from water table = .00000 g/sq.ft.
Total inflow at boundaries = -.11443E-01g/sq.ft.
Mass discrepancy = .21420E-07g/sq.ft.

Since beginning of run at time = 0.0
Change in Total Mass = -.17350 g/sq.ft.
Advection in from atmosphere = .00000 g/sq.ft.
Advection in from water table = -.16804 g/sq.ft.
Diffusion in from atmosphere = -.54600E-02g/sq.ft.
Diffusion in from water table = .00000 g/sq.ft.
Total inflow at boundaries = -.17350 g/sq.ft.
Mass discrepancy = .56624E-06g/sq.ft.

Polygon 1
At time = 15.00, total mass in vadose zone = .69020 g/sq.ft.
Mass in gas phase = .88538E-01g/sq.ft.
Mass in liquid phase = .37882 g/sq.ft.
Mass sorbed = .22284 g/sq.ft.

Since last printout at time = 14.00
Change in Total Mass = -.11300E-01g/sq.ft.
Advection in from atmosphere = .00000 g/sq.ft.
Advection in from water table = -.10986E-01g/sq.ft.
Diffusion in from atmosphere = -.31402E-03g/sq.ft.
Diffusion in from water table = .00000 g/sq.ft.
Total inflow at boundaries = -.11300E-01g/sq.ft.
Mass discrepancy = -.11269E-06g/sq.ft.

Since beginning of run at time = 0.0
Change in Total Mass = -.18480 g/sq.ft.
Advection in from atmosphere = .00000 g/sq.ft.
Advection in from water table = -.17902 g/sq.ft.
Diffusion in from atmosphere = -.57741E-02g/sq.ft.
Diffusion in from water table = .00000 g/sq.ft.
Total inflow at boundaries = -.18480 g/sq.ft.
Mass discrepancy = .46194E-06g/sq.ft.

Polygon 1
At time = 16.00, total mass in vadose zone = .67904 g/sq.ft.
Mass in gas phase = .87106E-01g/sq.ft.
Mass in liquid phase = .37270 g/sq.ft.
Mass sorbed = .21924 g/sq.ft.

Since last printout at time = 15.00
Change in Total Mass = -.11160E-01g/sq.ft.
Advection in from atmosphere = .00000 g/sq.ft.
Advection in from water table = -.10855E-01g/sq.ft.
Diffusion in from atmosphere = -.30453E-03g/sq.ft.
Diffusion in from water table = .00000 g/sq.ft.
Total inflow at boundaries = -.11160E-01g/sq.ft.
Mass discrepancy = .13690E-06g/sq.ft.

Since beginning of run at time = 0.0
Change in Total Mass = -.19596 g/sq.ft.
Advection in from atmosphere = .00000 g/sq.ft.
Advection in from water table = -.18988 g/sq.ft.
Diffusion in from atmosphere = -.60786E-02g/sq.ft.
Diffusion in from water table = .00000 g/sq.ft.
Total inflow at boundaries = -.19596 g/sq.ft.
Mass discrepancy = .61095E-06g/sq.ft.

Polygon 1
At time = 17.00, total mass in vadose zone = .66802 g/sq.ft.
Mass in gas phase = .85693E-01g/sq.ft.
Mass in liquid phase = .36665 g/sq.ft.
Mass sorbed = .21568 g/sq.ft.

Since last printout at time = 16.00
Change in Total Mass = -.11022E-01g/sq.ft.

```
                Advection in from atmosphere =       .00000    g/sq.ft.
                Advection in from water table =    -.10727E-01g/sq.ft.
                Diffusion in from atmosphere =     -.29532E-03g/sq.ft.
                Diffusion in from water table =      .00000    g/sq.ft.
           Total inflow at boundaries =     -.11022E-01g/sq.ft.
           Mass discrepancy =     -.13132E-06g/sq.ft.

Since beginning of run at time = 0.0
           Change in Total Mass =     -.20698    g/sq.ft.
                Advection in from atmosphere =       .00000    g/sq.ft.
                Advection in from water table =    -.20060    g/sq.ft.
                Diffusion in from atmosphere =     -.63739E-02g/sq.ft.
                Diffusion in from water table =      .00000    g/sq.ft.
           Total inflow at boundaries =     -.20698    g/sq.ft.
           Mass discrepancy =      .47684E-06g/sq.ft.


Polygon   1
At time =      18.00, total mass in vadose zone =     .65713    g/sq.ft.
Mass in gas phase     =       .84296E-01g/sq.ft.
Mass in liquid phase  =       .36067    g/sq.ft.
Mass sorbed           =       .21216    g/sq.ft.

Since last printout at time =      17.00
           Change in Total Mass =     -.10886E-01g/sq.ft.
                Advection in from atmosphere =       .00000    g/sq.ft.
                Advection in from water table =    -.10600E-01g/sq.ft.
                Diffusion in from atmosphere =     -.28639E-03g/sq.ft.
                Diffusion in from water table =      .00000    g/sq.ft.
           Total inflow at boundaries =     -.10886E-01g/sq.ft.
           Mass discrepancy =      .16950E-06g/sq.ft.

Since beginning of run at time = 0.0
           Change in Total Mass =     -.21786    g/sq.ft.
                Advection in from atmosphere =       .00000    g/sq.ft.
                Advection in from water table =    -.21120    g/sq.ft.
                Diffusion in from atmosphere =     -.66603E-02g/sq.ft.
                Diffusion in from water table =      .00000    g/sq.ft.
           Total inflow at boundaries =     -.21786    g/sq.ft.
           Mass discrepancy =      .64075E-06g/sq.ft.


Polygon   1
At time =      19.00, total mass in vadose zone =     .64638    g/sq.ft.
Mass in gas phase     =       .82917E-01g/sq.ft.
Mass in liquid phase  =       .35477    g/sq.ft.
Mass sorbed           =       .20869    g/sq.ft.

Since last printout at time =      18.00
           Change in Total Mass =     -.10752E-01g/sq.ft.
                Advection in from atmosphere =       .00000    g/sq.ft.
                Advection in from water table =    -.10475E-01g/sq.ft.
                Diffusion in from atmosphere =     -.27774E-03g/sq.ft.
                Diffusion in from water table =      .00000    g/sq.ft.
           Total inflow at boundaries =     -.10752E-01g/sq.ft.
           Mass discrepancy =      .17695E-07g/sq.ft.

Since beginning of run at time = 0.0
           Change in Total Mass =     -.22862    g/sq.ft.
                Advection in from atmosphere =       .00000    g/sq.ft.
```

```
                Advection in from water table =      -.22168    g/sq.ft.
                Diffusion in from atmosphere =       -.69380E-02g/sq.ft.
                Diffusion in from water table =       .00000    g/sq.ft.
           Total inflow at boundaries =      -.22862    g/sq.ft.
           Mass discrepancy =       .65565E-06g/sq.ft.


Polygon   1
At time =       20.00, total mass in vadose zone =      .63576    g/sq.ft.
Mass in gas phase      =        .81554E-01g/sq.ft.
Mass in liquid phase   =        .34894    g/sq.ft.
Mass sorbed            =        .20526    g/sq.ft.

Since last printout at time =       19.00
           Change in Total Mass =      -.10620E-01g/sq.ft.
                Advection in from atmosphere =        .00000    g/sq.ft.
                Advection in from water table =      -.10351E-01g/sq.ft.
                Diffusion in from atmosphere =       -.26937E-03g/sq.ft.
                Diffusion in from water table =       .00000    g/sq.ft.
           Total inflow at boundaries =      -.10620E-01g/sq.ft.
           Mass discrepancy =       .52154E-07g/sq.ft.

Since beginning of run at time = 0.0
           Change in Total Mass =      -.23924    g/sq.ft.
                Advection in from atmosphere =        .00000    g/sq.ft.
                Advection in from water table =      -.23203    g/sq.ft.
                Diffusion in from atmosphere =       -.72074E-02g/sq.ft.
                Diffusion in from water table =       .00000    g/sq.ft.
           Total inflow at boundaries =      -.23924    g/sq.ft.
           Mass discrepancy =       .70035E-06g/sq.ft.


Polygon   1
At time =       21.00, total mass in vadose zone =      .62527    g/sq.ft.
Mass in gas phase      =        .80209E-01g/sq.ft.
Mass in liquid phase   =        .34319    g/sq.ft.
Mass sorbed            =        .20188    g/sq.ft.

Since last printout at time =       20.00
           Change in Total Mass =      -.10490E-01g/sq.ft.
                Advection in from atmosphere =        .00000    g/sq.ft.
                Advection in from water table =      -.10228E-01g/sq.ft.
                Diffusion in from atmosphere =       -.26127E-03g/sq.ft.
                Diffusion in from water table =       .00000    g/sq.ft.
           Total inflow at boundaries =      -.10490E-01g/sq.ft.
           Mass discrepancy =      -.93132E-08g/sq.ft.

Since beginning of run at time = 0.0
           Change in Total Mass =      -.24973    g/sq.ft.
                Advection in from atmosphere =        .00000    g/sq.ft.
                Advection in from water table =      -.24226    g/sq.ft.
                Diffusion in from atmosphere =       -.74687E-02g/sq.ft.
                Diffusion in from water table =       .00000    g/sq.ft.
           Total inflow at boundaries =      -.24973    g/sq.ft.
           Mass discrepancy =       .70035E-06g/sq.ft.


Polygon   1
At time =       22.00, total mass in vadose zone =      .61491    g/sq.ft.
Mass in gas phase      =        .78880E-01g/sq.ft.
```

```
Mass in liquid phase  =        .33750    g/sq.ft.
Mass sorbed           =        .19853    g/sq.ft.

Since last printout at time =      21.00
              Change in Total Mass =     -.10360E-01g/sq.ft.
                   Advection in from atmosphere =       .00000    g/sq.ft.
                   Advection in from water table =     -.10107E-01g/sq.ft.
                   Diffusion in from atmosphere =      -.25345E-03g/sq.ft.
                   Diffusion in from water table =      .00000    g/sq.ft.
              Total inflow at boundaries =     -.10360E-01g/sq.ft.
              Mass discrepancy =      .74506E-08g/sq.ft.

Since beginning of run at time = 0.0
              Change in Total Mass =     -.26009    g/sq.ft.
                   Advection in from atmosphere =       .00000    g/sq.ft.
                   Advection in from water table =     -.25237    g/sq.ft.
                   Diffusion in from atmosphere =      -.77221E-02g/sq.ft.
                   Diffusion in from water table =      .00000    g/sq.ft.
              Total inflow at boundaries =     -.26009    g/sq.ft.
              Mass discrepancy =      .71526E-06g/sq.ft.


Polygon   1
At time =      23.00, total mass in vadose zone =     .60468    g/sq.ft.
Mass in gas phase     =        .77567E-01g/sq.ft.
Mass in liquid phase  =        .33188    g/sq.ft.
Mass sorbed           =        .19523    g/sq.ft.

Since last printout at time =      22.00
              Change in Total Mass =     -.10232E-01g/sq.ft.
                   Advection in from atmosphere =       .00000    g/sq.ft.
                   Advection in from water table =     -.99864E-02g/sq.ft.
                   Diffusion in from atmosphere =      -.24588E-03g/sq.ft.
                   Diffusion in from water table =      .00000    g/sq.ft.
              Total inflow at boundaries =     -.10232E-01g/sq.ft.
              Mass discrepancy =     -.93132E-09g/sq.ft.

Since beginning of run at time = 0.0
              Change in Total Mass =     -.27032    g/sq.ft.
                   Advection in from atmosphere =       .00000    g/sq.ft.
                   Advection in from water table =     -.26235    g/sq.ft.
                   Diffusion in from atmosphere =      -.79680E-02g/sq.ft.
                   Diffusion in from water table =      .00000    g/sq.ft.
              Total inflow at boundaries =     -.27032    g/sq.ft.
              Mass discrepancy =      .74506E-06g/sq.ft.


Polygon   1
At time =      24.00, total mass in vadose zone =     .59457    g/sq.ft.
Mass in gas phase     =        .76271E-01g/sq.ft.
Mass in liquid phase  =        .32634    g/sq.ft.
Mass sorbed           =        .19196    g/sq.ft.

Since last printout at time =      23.00
              Change in Total Mass =     -.10105E-01g/sq.ft.
                   Advection in from atmosphere =       .00000    g/sq.ft.
                   Advection in from water table =     -.98670E-02g/sq.ft.
                   Diffusion in from atmosphere =      -.23857E-03g/sq.ft.
                   Diffusion in from water table =      .00000    g/sq.ft.
              Total inflow at boundaries =     -.10106E-01g/sq.ft.
```

```
                Mass discrepancy =      .60536E-07g/sq.ft.

Since beginning of run at time = 0.0
                Change in Total Mass =     -.28042    g/sq.ft.
                     Advection in from atmosphere =       .00000    g/sq.ft.
                     Advection in from water table =     -.27222    g/sq.ft.
                     Diffusion in from atmosphere =      -.82066E-02g/sq.ft.
                     Diffusion in from water table =      .00000    g/sq.ft.
                Total inflow at boundaries =     -.28043    g/sq.ft.
                Mass discrepancy =      .80466E-06g/sq.ft.


Polygon   1
At time =      25.00, total mass in vadose zone =     .58459    g/sq.ft.
Mass in gas phase     =       .74991E-01g/sq.ft.
Mass in liquid phase  =       .32086    g/sq.ft.
Mass sorbed           =       .18874    g/sq.ft.

Since last printout at time =      24.00
                Change in Total Mass =     -.99798E-02g/sq.ft.
                     Advection in from atmosphere =       .00000    g/sq.ft.
                     Advection in from water table =     -.97484E-02g/sq.ft.
                     Diffusion in from atmosphere =      -.23150E-03g/sq.ft.
                     Diffusion in from water table =      .00000    g/sq.ft.
                Total inflow at boundaries =     -.99799E-02g/sq.ft.
                Mass discrepancy =      .59605E-07g/sq.ft.

Since beginning of run at time = 0.0
                Change in Total Mass =     -.29040    g/sq.ft.
                     Advection in from atmosphere =       .00000    g/sq.ft.
                     Advection in from water table =     -.28197    g/sq.ft.
                     Diffusion in from atmosphere =      -.84381E-02g/sq.ft.
                     Diffusion in from water table =      .00000    g/sq.ft.
                Total inflow at boundaries =     -.29041    g/sq.ft.
                Mass discrepancy =      .83447E-06g/sq.ft.


Polygon   1
At time =      26.00, total mass in vadose zone =     .57474    g/sq.ft.
Mass in gas phase     =       .73727E-01g/sq.ft.
Mass in liquid phase  =       .31545    g/sq.ft.
Mass sorbed           =       .18556    g/sq.ft.

Since last printout at time =      25.00
                Change in Total Mass =     -.98554E-02g/sq.ft.
                     Advection in from atmosphere =       .00000    g/sq.ft.
                     Advection in from water table =     -.96307E-02g/sq.ft.
                     Diffusion in from atmosphere =      -.22467E-03g/sq.ft.
                     Diffusion in from water table =      .00000    g/sq.ft.
                Total inflow at boundaries =     -.98553E-02g/sq.ft.
                Mass discrepancy =     -.65193E-07g/sq.ft.

Since beginning of run at time = 0.0
                Change in Total Mass =     -.30026    g/sq.ft.
                     Advection in from atmosphere =       .00000    g/sq.ft.
                     Advection in from water table =     -.29160    g/sq.ft.
                     Diffusion in from atmosphere =      -.86627E-02g/sq.ft.
                     Diffusion in from water table =      .00000    g/sq.ft.
                Total inflow at boundaries =     -.30026    g/sq.ft.
                Mass discrepancy =      .77486E-06g/sq.ft.
```

```
Polygon   1
At time =      27.00, total mass in vadose zone =     .56501    g/sq.ft.
Mass in gas phase     =       .72478E-01g/sq.ft.
Mass in liquid phase  =       .31011    g/sq.ft.
Mass sorbed           =       .18242    g/sq.ft.

Since last printout at time =      26.00
               Change in Total Mass =     -.97317E-02g/sq.ft.
                    Advection in from atmosphere =       .00000    g/sq.ft.
                    Advection in from water table =     -.95137E-02g/sq.ft.
                    Diffusion in from atmosphere =      -.21808E-03g/sq.ft.
                    Diffusion in from water table =      .00000    g/sq.ft.
               Total inflow at boundaries =     -.97318E-02g/sq.ft.
               Mass discrepancy =      .10710E-06g/sq.ft.

Since beginning of run at time = 0.0
               Change in Total Mass =     -.30999    g/sq.ft.
                    Advection in from atmosphere =       .00000    g/sq.ft.
                    Advection in from water table =     -.30111    g/sq.ft.
                    Diffusion in from atmosphere =      -.88808E-02g/sq.ft.
                    Diffusion in from water table =      .00000    g/sq.ft.
               Total inflow at boundaries =     -.30999    g/sq.ft.
               Mass discrepancy =      .89407E-06g/sq.ft.


Polygon   1
At time =      28.00, total mass in vadose zone =     .55540    g/sq.ft.
Mass in gas phase     =       .71245E-01g/sq.ft.
Mass in liquid phase  =       .30484    g/sq.ft.
Mass sorbed           =       .17932    g/sq.ft.

Since last printout at time =      27.00
               Change in Total Mass =     -.96092E-02g/sq.ft.
                    Advection in from atmosphere =       .00000    g/sq.ft.
                    Advection in from water table =     -.93975E-02g/sq.ft.
                    Diffusion in from atmosphere =      -.21170E-03g/sq.ft.
                    Diffusion in from water table =      .00000    g/sq.ft.
               Total inflow at boundaries =     -.96092E-02g/sq.ft.
               Mass discrepancy =     -.83819E-08g/sq.ft.

Since beginning of run at time = 0.0
               Change in Total Mass =     -.31960    g/sq.ft.
                    Advection in from atmosphere =       .00000    g/sq.ft.
                    Advection in from water table =     -.31051    g/sq.ft.
                    Diffusion in from atmosphere =      -.90925E-02g/sq.ft.
                    Diffusion in from water table =      .00000    g/sq.ft.
               Total inflow at boundaries =     -.31960    g/sq.ft.
               Mass discrepancy =      .86427E-06g/sq.ft.


Polygon   1
At time =      29.00, total mass in vadose zone =     .54591    g/sq.ft.
Mass in gas phase     =       .70028E-01g/sq.ft.
Mass in liquid phase  =       .29963    g/sq.ft.
Mass sorbed           =       .17625    g/sq.ft.

Since last printout at time =      28.00
               Change in Total Mass =     -.94875E-02g/sq.ft.
```

```
                    Advection in from atmosphere =       .00000    g/sq.ft.
                    Advection in from water table =     -.92819E-02g/sq.ft.
                    Diffusion in from atmosphere =      -.20554E-03g/sq.ft.
                    Diffusion in from water table =      .00000    g/sq.ft.
               Total inflow at boundaries =     -.94875E-02g/sq.ft.
               Mass discrepancy =      .19558E-07g/sq.ft.

Since beginning of run at time = 0.0
               Change in Total Mass =     -.32909    g/sq.ft.
                    Advection in from atmosphere =       .00000    g/sq.ft.
                    Advection in from water table =     -.31979    g/sq.ft.
                    Diffusion in from atmosphere =      -.92981E-02g/sq.ft.
                    Diffusion in from water table =      .00000    g/sq.ft.
               Total inflow at boundaries =     -.32909    g/sq.ft.
               Mass discrepancy =      .89407E-06g/sq.ft.


Polygon   1
At time =      30.00, total mass in vadose zone =     .53654    g/sq.ft.
Mass in gas phase     =       .68827E-01g/sq.ft.
Mass in liquid phase  =       .29449    g/sq.ft.
Mass sorbed           =       .17323    g/sq.ft.

Since last printout at time =      29.00
               Change in Total Mass =     -.93666E-02g/sq.ft.
                    Advection in from atmosphere =       .00000    g/sq.ft.
                    Advection in from water table =     -.91671E-02g/sq.ft.
                    Diffusion in from atmosphere =      -.19959E-03g/sq.ft.
                    Diffusion in from water table =      .00000    g/sq.ft.
               Total inflow at boundaries =     -.93667E-02g/sq.ft.
               Mass discrepancy =      .92201E-07g/sq.ft.

Since beginning of run at time = 0.0
               Change in Total Mass =     -.33845    g/sq.ft.
                    Advection in from atmosphere =       .00000    g/sq.ft.
                    Advection in from water table =     -.32896    g/sq.ft.
                    Diffusion in from atmosphere =      -.94976E-02g/sq.ft.
                    Diffusion in from water table =      .00000    g/sq.ft.
               Total inflow at boundaries =     -.33846    g/sq.ft.
               Mass discrepancy =      .98348E-06g/sq.ft.


GROUNDWATER IMPACT OF POLYGON   1

 Time        Mass per area (g/sq.ft.)      Total Mass (g)
     1.00          .12746E-01                 2453.6
     2.00          .12677E-01                 2440.3
     3.00          .12593E-01                 2424.2
     4.00          .12494E-01                 2405.1
     5.00          .12379E-01                 2383.0
     6.00          .12252E-01                 2358.5
     7.00          .12115E-01                 2332.1
     8.00          .11972E-01                 2304.5
     9.00          .11826E-01                 2276.5
    10.00          .11680E-01                 2248.4
    11.00          .11536E-01                 2220.6
    12.00          .11394E-01                 2193.3
    13.00          .11255E-01                 2166.6
    14.00          .11119E-01                 2140.4
    15.00          .10986E-01                 2114.8
```

16.00	.10855E-01	2089.6
17.00	.10727E-01	2064.9
18.00	.10600E-01	2040.5
19.00	.10475E-01	2016.4
20.00	.10351E-01	1992.5
21.00	.10228E-01	1968.9
22.00	.10107E-01	1945.6
23.00	.99864E-02	1922.4
24.00	.98670E-02	1899.4
25.00	.97484E-02	1876.6
26.00	.96307E-02	1853.9
27.00	.95137E-02	1831.4
28.00	.93975E-02	1809.0
29.00	.92819E-02	1786.8
30.00	.91671E-02	1764.7

****

****

TOTAL GROUNDWATER IMPACT

Time (yr)	Mass (g)	Cumulative Mass (g)
1.00	2453.6	2453.6
2.00	2440.3	4893.9
3.00	2424.2	7318.0
4.00	2405.1	9723.1
5.00	2383.0	12106.
6.00	2358.5	14465.
7.00	2332.1	16797.
8.00	2304.5	19101.
9.00	2276.5	21378.
10.00	2248.4	23626.
11.00	2220.6	25847.
12.00	2193.3	28040.
13.00	2166.6	30207.
14.00	2140.4	32347.
15.00	2114.8	34462.
16.00	2089.6	36552.
17.00	2064.9	38616.
18.00	2040.5	40657.
19.00	2016.4	42673.
20.00	1992.5	44666.
21.00	1968.9	46635.
22.00	1945.6	48580.
23.00	1922.4	50503.
24.00	1899.4	52402.
25.00	1876.6	54279.
26.00	1853.9	56133.
27.00	1831.4	57964.
28.00	1809.0	59773.
29.00	1786.8	61560.
30.00	1764.7	63324.

Polygon 13A
Time: .000

Cell	Cgas(g/cu.ft.)	Cliq(g/cu.ft.)	Csol
1	.80373E-05	.16992E-04	.54885E-10
2	.80373E-05	.16992E-04	.54885E-10
3	.80373E-05	.16992E-04	.54885E-10
4	.80373E-05	.16992E-04	.54885E-10
5	.80373E-05	.16992E-04	.54885E-10
6	.80373E-05	.16992E-04	.54885E-10
7	.23634E-02	.49967E-02	.16139E-07
8	.23634E-02	.49967E-02	.16139E-07
9	.23634E-02	.49967E-02	.16139E-07
10	.23634E-02	.49967E-02	.16139E-07
11	.23634E-02	.49967E-02	.16139E-07
12	.23634E-02	.49967E-02	.16139E-07
13	.58965E-02	.12466E-01	.40266E-07
14	.58965E-02	.12466E-01	.40266E-07
15	.58965E-02	.12466E-01	.40266E-07
16	.58965E-02	.12466E-01	.40266E-07
17	.58965E-02	.12466E-01	.40266E-07
18	.58965E-02	.12466E-01	.40266E-07
19	.94296E-02	.19936E-01	.64392E-07
20	.94296E-02	.19936E-01	.64392E-07
21	.94296E-02	.19936E-01	.64392E-07
22	.94296E-02	.19936E-01	.64392E-07
23	.94296E-02	.19936E-01	.64392E-07
24	.94296E-02	.19936E-01	.64392E-07
25	.12963E-01	.27405E-01	.88519E-07
26	.12963E-01	.27405E-01	.88519E-07
27	.12963E-01	.27405E-01	.88519E-07
28	.12963E-01	.27405E-01	.88519E-07
29	.12963E-01	.27405E-01	.88519E-07
30	.12963E-01	.27405E-01	.88519E-07
31	.16496E-01	.34875E-01	.11265E-06
32	.16496E-01	.34875E-01	.11265E-06
33	.16496E-01	.34875E-01	.11265E-06
34	.16496E-01	.34875E-01	.11265E-06
35	.16496E-01	.34875E-01	.11265E-06
36	.16496E-01	.34875E-01	.11265E-06
37	.20029E-01	.42344E-01	.13677E-06
38	.20029E-01	.42344E-01	.13677E-06
39	.20029E-01	.42344E-01	.13677E-06
40	.20029E-01	.42344E-01	.13677E-06
41	.20029E-01	.42344E-01	.13677E-06
42	.20029E-01	.42344E-01	.13677E-06
43	.23562E-01	.49814E-01	.16090E-06
44	.23562E-01	.49814E-01	.16090E-06
45	.23562E-01	.49814E-01	.16090E-06
46	.23562E-01	.49814E-01	.16090E-06
47	.23562E-01	.49814E-01	.16090E-06
48	.23562E-01	.49814E-01	.16090E-06
49	.27095E-01	.57283E-01	.18503E-06
50	.27095E-01	.57283E-01	.18503E-06
51	.27095E-01	.57283E-01	.18503E-06
52	.27095E-01	.57283E-01	.18503E-06
53	.27095E-01	.57283E-01	.18503E-06
54	.27095E-01	.57283E-01	.18503E-06
55	.30628E-01	.64753E-01	.20915E-06
56	.30628E-01	.64753E-01	.20915E-06

57	.30628E-01	.64753E-01	.20915E-06
58	.30628E-01	.64753E-01	.20915E-06
59	.30628E-01	.64753E-01	.20915E-06
60	.30628E-01	.64753E-01	.20915E-06

Polygon 13A
Time: 10.000

Cell	Cgas(g/cu.ft.)	Cliq(g/cu.ft.)	Csol
1	.46423E-04	.98147E-04	.31701E-09
2	.11890E-03	.25137E-03	.81193E-09
3	.21392E-03	.45226E-03	.14608E-08
4	.32899E-03	.69555E-03	.22466E-08
5	.46288E-03	.97861E-03	.31609E-08
6	.61577E-03	.13018E-02	.42049E-08
7	.79722E-03	.16854E-02	.54440E-08
8	.10243E-02	.21655E-02	.69945E-08
9	.13066E-02	.27624E-02	.89224E-08
10	.16373E-02	.34614E-02	.11180E-07
11	.19979E-02	.42238E-02	.13643E-07
12	.23702E-02	.50109E-02	.16185E-07
13	.27558E-02	.58263E-02	.18819E-07
14	.31756E-02	.67137E-02	.21685E-07
15	.36446E-02	.77052E-02	.24888E-07
16	.41557E-02	.87858E-02	.28378E-07
17	.46849E-02	.99046E-02	.31992E-07
18	.52072E-02	.11009E-01	.35559E-07
19	.57206E-02	.12094E-01	.39065E-07
20	.62454E-02	.13204E-01	.42649E-07
21	.67992E-02	.14375E-01	.46430E-07
22	.73781E-02	.15599E-01	.50383E-07
23	.79617E-02	.16832E-01	.54368E-07
24	.85279E-02	.18029E-01	.58235E-07
25	.90770E-02	.19190E-01	.61985E-07
26	.96310E-02	.20362E-01	.65768E-07
27	.10209E-01	.21583E-01	.69713E-07
28	.10807E-01	.22849E-01	.73801E-07
29	.11407E-01	.24117E-01	.77897E-07
30	.11987E-01	.25342E-01	.81854E-07
31	.12547E-01	.26525E-01	.85677E-07
32	.13109E-01	.27715E-01	.89519E-07
33	.13693E-01	.28950E-01	.93510E-07
34	.14297E-01	.30227E-01	.97632E-07
35	.14901E-01	.31502E-01	.10175E-06
36	.15482E-01	.32732E-01	.10572E-06
37	.16043E-01	.33917E-01	.10955E-06
38	.16605E-01	.35106E-01	.11339E-06
39	.17188E-01	.36338E-01	.11737E-06
40	.17788E-01	.37607E-01	.12147E-06
41	.18387E-01	.38873E-01	.12556E-06
42	.18963E-01	.40090E-01	.12949E-06
43	.19515E-01	.41259E-01	.13327E-06
44	.20067E-01	.42426E-01	.13704E-06
45	.20638E-01	.43631E-01	.14093E-06
46	.21223E-01	.44869E-01	.14493E-06
47	.21803E-01	.46096E-01	.14889E-06
48	.22356E-01	.47265E-01	.15267E-06
49	.22882E-01	.48376E-01	.15626E-06
50	.23402E-01	.49475E-01	.15980E-06
51	.23933E-01	.50598E-01	.16343E-06
52	.24472E-01	.51738E-01	.16711E-06

53	.24996E-01	.52846E-01	.17069E-06
54	.25483E-01	.53875E-01	.17402E-06
55	.25929E-01	.54819E-01	.17707E-06
56	.26354E-01	.55718E-01	.17997E-06
57	.26773E-01	.56603E-01	.18283E-06
58	.27178E-01	.57460E-01	.18559E-06
59	.27544E-01	.58233E-01	.18809E-06
60	.27842E-01	.58863E-01	.19013E-06

Polygon 13A
Time: 20.000

Cell	Cgas(g/cu.ft.)	Cliq(g/cu.ft.)	Csol
1	.34520E-04	.72981E-04	.23573E-09
2	.89121E-04	.18842E-03	.60859E-09
3	.16211E-03	.34273E-03	.11070E-08
4	.25257E-03	.53396E-03	.17247E-08
5	.36010E-03	.76131E-03	.24590E-08
6	.48473E-03	.10248E-02	.33101E-08
7	.62679E-03	.13251E-02	.42802E-08
8	.78702E-03	.16639E-02	.53744E-08
9	.96667E-03	.20437E-02	.66011E-08
10	.11675E-02	.24683E-02	.79725E-08
11	.13915E-02	.29418E-02	.95019E-08
12	.16402E-02	.34676E-02	.11200E-07
13	.19145E-02	.40476E-02	.13074E-07
14	.22143E-02	.46815E-02	.15121E-07
15	.25392E-02	.53682E-02	.17339E-07
16	.28884E-02	.61066E-02	.19724E-07
17	.32617E-02	.68958E-02	.22274E-07
18	.36585E-02	.77347E-02	.24983E-07
19	.40776E-02	.86208E-02	.27845E-07
20	.45172E-02	.95500E-02	.30847E-07
21	.49748E-02	.10518E-01	.33972E-07
22	.54484E-02	.11519E-01	.37206E-07
23	.59366E-02	.12551E-01	.40540E-07
24	.64379E-02	.13611E-01	.43963E-07
25	.69511E-02	.14696E-01	.47467E-07
26	.74742E-02	.15802E-01	.51040E-07
27	.80056E-02	.16925E-01	.54668E-07
28	.85438E-02	.18063E-01	.58343E-07
29	.90880E-02	.19214E-01	.62060E-07
30	.96379E-02	.20376E-01	.65815E-07
31	.10193E-01	.21549E-01	.69604E-07
32	.10752E-01	.22731E-01	.73420E-07
33	.11313E-01	.23918E-01	.77254E-07
34	.11876E-01	.25109E-01	.81101E-07
35	.12441E-01	.26303E-01	.84959E-07
36	.13008E-01	.27501E-01	.88827E-07
37	.13575E-01	.28701E-01	.92703E-07
38	.14143E-01	.29901E-01	.96581E-07
39	.14710E-01	.31100E-01	.10045E-06
40	.15276E-01	.32296E-01	.10432E-06
41	.15840E-01	.33488E-01	.10817E-06
42	.16402E-01	.34677E-01	.11201E-06
43	.16962E-01	.35860E-01	.11583E-06
44	.17518E-01	.37036E-01	.11962E-06
45	.18069E-01	.38201E-01	.12339E-06
46	.18615E-01	.39354E-01	.12712E-06
47	.19153E-01	.40494E-01	.13079E-06
48	.19685E-01	.41617E-01	.13442E-06

49	.20208E-01	.42722E-01	.13799E-06
50	.20720E-01	.43805E-01	.14149E-06
51	.21219E-01	.44861E-01	.14490E-06
[illegible]	.21704E-01	.45885E-01	.14821E-06
[illegible]	.22171E-01	.46873E-01	.15140E-06
54	.22619E-01	.47820E-01	.15446E-06
55	.23044E-01	.48719E-01	.15736E-06
56	.23443E-01	.49562E-01	.16009E-06
57	.23811E-01	.50340E-01	.16260E-06
58	.24143E-01	.51042E-01	.16487E-06
59	.24434E-01	.51657E-01	.16685E-06
60	.24678E-01	.52173E-01	.16852E-06

Polygon 13A
Time: 30.000

Cell	Cgas(g/cu.ft.)	Cliq(g/cu.ft.)	Csol
1	.25541E-04	.53997E-04	.17441E-09
2	.65917E-04	.13936E-03	.45013E-09
3	.11989E-03	.25347E-03	.81871E-09
4	.18682E-03	.39497E-03	.12758E-08
5	.26649E-03	.56341E-03	.18198E-08
6	.35899E-03	.75896E-03	.24515E-08
7	.46463E-03	.98230E-03	.31728E-08
8	.58387E-03	.12344E-02	.39871E-08
9	.71730E-03	.15165E-02	.48983E-08
10	.86557E-03	.18300E-02	.59108E-08
11	.10294E-02	.21764E-02	.70297E-08
12	.12096E-02	.25574E-02	.82604E-08
13	.14071E-02	.29748E-02	.96085E-08
[illegible]	.16225E-02	.34302E-02	.11079E-07
[illegible]	.18566E-02	.39252E-02	.12678E-07
16	.21101E-02	.44612E-02	.14410E-07
17	.23834E-02	.50390E-02	.16276E-07
18	.26768E-02	.56592E-02	.18279E-07
19	.29903E-02	.63220E-02	.20420E-07
20	.33238E-02	.70270E-02	.22697E-07
21	.36769E-02	.77735E-02	.25108E-07
22	.40491E-02	.85604E-02	.27650E-07
23	.44397E-02	.93863E-02	.30318E-07
24	.48479E-02	.10249E-01	.33105E-07
25	.52726E-02	.11147E-01	.36005E-07
26	.57127E-02	.12078E-01	.39011E-07
27	.61672E-02	.13038E-01	.42114E-07
28	.66348E-02	.14027E-01	.45307E-07
29	.71143E-02	.15041E-01	.48582E-07
30	.76047E-02	.16078E-01	.51930E-07
31	.81046E-02	.17134E-01	.55344E-07
32	.86130E-02	.18209E-01	.58816E-07
33	.91289E-02	.19300E-01	.62339E-07
34	.96512E-02	.20404E-01	.65906E-07
35	.10179E-01	.21520E-01	.69510E-07
36	.10711E-01	.22645E-01	.73144E-07
37	.11247E-01	.23778E-01	.76803E-07
38	.11785E-01	.24916E-01	.80480E-07
[illegible]	.12326E-01	.26059E-01	.84169E-07
[illegible]	.12867E-01	.27203E-01	.87864E-07
41	.13408E-01	.28347E-01	.91560E-07
42	.13948E-01	.29489E-01	.95248E-07
43	.14486E-01	.30627E-01	.98924E-07
44	.15022E-01	.31758E-01	.10258E-06

45	.15553E-01	.32882E-01	.10621E-06
46	.16079E-01	.33994E-01	.10980E-06
47	.16599E-01	.35093E-01	.11335E-06
48	.17111E-01	.36176E-01	.11685E-06
49	.17614E-01	.37238E-01	.12028E-06
50	.18105E-01	.38278E-01	.12364E-06
51	.18584E-01	.39289E-01	.12691E-06
52	.19047E-01	.40269E-01	.13007E-06
53	.19493E-01	.41212E-01	.13312E-06
54	.19919E-01	.42112E-01	.13602E-06
55	.20321E-01	.42963E-01	.13877E-06
56	.20697E-01	.43757E-01	.14133E-06
57	.21042E-01	.44486E-01	.14369E-06
58	.21352E-01	.45141E-01	.14580E-06
59	.21621E-01	.45711E-01	.14765E-06
60	.21846E-01	.46185E-01	.14918E-06

```
 V-Leach, VER 1.1
 Jake Turin, 11/91
PGA V-leach model, polygon screen-TCE-11/3/92-Poly13A.INP.  New soil, Old chem.
  1 polygons.
Time step =   1.00 years.  Simulation length =   30.00 years.
Printout every   1.00 years.  Vertical profile stored every  10.00 years.
Koc =      123.60    ml/g,       .43649E-02cu.ft./g
Kh =      .47300     (dimensionless).
Aqueous solubility =     1100.0     mg/l,       31.149     g/cu.ft
Free air diffusion coefficient = .70290     sq. m/day,  2761.7     sq.ft./yr


Polygon   1
Polygon 13A
Polygon area =      .19250E+06sq. ft.
 60 cells, each cell  1.000 ft. thick.
Soil Properties:
 Bulk density =     1.6400    g/ml,       46440.    g/cu.ft.
 Porosity =  .3810 Volumetric water content =  .2550
 Organic carbon content =  .00074000
Recharge Rate =  .19685000 ft/yr
Conc. in recharge water =      .00000    mg/l,       .00000    g/cu.ft
Atmospheric concentration =      .00000    mg/l,       .00000    g/cu.ft
Water table is impermeable to gas diffusion.
```

Calculation of Total TCE Mass and Revised Vertical Distributions in Polygon 13A using HGC Distribution equations and Revised Soil Physical Data

0.279 Cs **	Cz = (74.527*z - 371.636)Cs

Cz (ug/L) Vert. Dist. Eq.	Calculated Depth Interval (z)	Total Depth Interval (feet)	Total Soil Conc Ct (ug/Kg)	Mt (ug/cc)	Volume of Soil (cubic ft)	Mass TCE (grams)	Mass TCE (pounds)
0.279	3	6	0.17	2.74E-04	1155000	8.96	0.02
83.45	9	6	49.99	0.08	1155000	2681.21	5.91
208.21	15	6	124.72	0.20	1155000	6689.59	14.75
332.97	21	6	199.45	0.33	1155000	10697.97	23.59
457.73	27	6	274.18	0.45	1155000	14706.35	32.42
582.48	33	6	348.91	0.57	1155000	18714.73	41.26
707.24	39	6	423.64	0.69	1155000	22723.11	50.10
832.00	45	6	498.37	0.82	1155000	26731.49	58.93
956.76	51	6	573.10	0.94	1155000	30739.88	67.77
1081.52	57	6	647.83	1.06	1155000	34748.26	76.61
5242.63		60	3140.34	5.15		168441.56	371.35

** Cs Determined as mathematical average for VOC concentrations for polygon(s) listed in Table A-1 of HGC, 1989.

8.00	2197.100	0.123	40.804
9.00	2170.400	0.121	40.863
10.00	2143.600	0.120	40.727
11.00	2117.100	0.118	40.465
12.00	2091.100	0.117	40.124
13.00	2065.600	0.116	39.734
14.00	2040.700	0.114	39.316
15.00	2016.300	0.113	38.884
16.00	1992.300	0.111	38.444
17.00	1968.700	0.110	38.003
18.00	1945.400	0.109	37.562
19.00	1922.400	0.107	37.123
20.00	1899.700	0.106	36.688
21.00	1877.200	0.105	36.256
22.00	1854.900	0.104	35.828
23.00	1832.800	0.102	35.404
24.00	1810.900	0.101	34.983
25.00	1789.100	0.100	34.566
26.00	1767.500	0.099	34.152
27.00	1746.000	0.098	33.741
28.00	1724.700	0.096	33.333
29.00	1703.500	0.095	32.927
30.00	1682.400	0.094	32.524

**** Batch 3 ****
Polygon 13A

Time Interval (years)	Mass In (grams)	Mass/Area (g/sq m)	GW Concentration (ugrams/l)
1.00	2453.600	0.137	16.031
2.00	2440.300	0.136	26.427
3.00	2424.200	0.136	33.120
4.00	2405.100	0.134	37.373
5.00	2383.000	0.133	40.009
6.00	2358.500	0.132	41.572
7.00	2332.100	0.130	42.423
8.00	2304.500	0.129	42.798
9.00	2276.500	0.127	42.861
10.00	2248.400	0.126	42.718
11.00	2220.600	0.124	42.443
12.00	2193.300	0.123	42.085
13.00	2166.600	0.121	41.676
14.00	2140.400	0.120	41.238
15.00	2114.800	0.118	40.784
16.00	2089.600	0.117	40.323
17.00	2064.900	0.115	39.859
18.00	2040.500	0.114	39.397
19.00	2016.400	0.113	38.937
20.00	1992.500	0.111	38.481
21.00	1968.900	0.110	38.028
22.00	1945.600	0.109	37.579
23.00	1922.400	0.107	37.134
24.00	1899.400	0.106	36.693
25.00	1876.600	0.105	36.256

26.00	1853.900	0.104	35.821
27.00	1831.400	0.102	35.390
28.00	1809.000	0.101	34.962
29.00	1786.800	0.100	34.537
30.00	1764.700	0.099	34.115

**** Batch 4 ****
Polygon 21A, 26A

Time Interval (years)	Mass In (grams)	Mass/Area (g/sq m)	GW Concentration (ugrams/l)
1.00	5503.500	0.399	45.362
2.00	5460.700	0.396	72.976
3.00	5395.900	0.391	89.468
4.00	5311.700	0.385	98.942
5.00	5214.700	0.378	103.984
6.00	5112.300	0.371	106.248
7.00	5009.400	0.363	106.796
8.00	4908.400	0.356	106.302
9.00	4809.900	0.349	105.185
10.00	4713.700	0.342	103.703
11.00	4619.300	0.335	102.012
12.00	4526.300	0.328	100.202
13.00	4434.300	0.321	98.329
14.00	4343.100	0.315	96.421
15.00	4252.700	0.308	94.501
16.00	4162.900	0.302	92.576
17.00	4073.700	0.295	90.654
18.00	3985.000	0.289	88.738
19.00	3896.800	0.282	86.830
20.00	3809.000	0.276	84.930
21.00	3721.600	0.270	83.038
22.00	3634.600	0.263	81.154
23.00	3547.900	0.257	79.279
24.00	3461.700	0.251	77.411
25.00	3375.800	0.245	75.552
26.00	3290.300	0.238	73.701
27.00	3205.200	0.232	71.859
28.00	3120.500	0.226	70.024
29.00	3036.300	0.220	68.200
30.00	2952.500	0.214	66.384

**** Batch 5 ****

```
PGA V-leach model, polygon screen-TCE-11/3/92-POLY113.INP.  Old chem, New soil.
    1
       1.0          30.          1.0          10.
     123.6         .473       1100.        .7029
Polygon 113
    155000.           1.     .196850         1.64         .381         .255      .00074
        0.            0.          -1.
    60
     1     6        0.35
     7    12      104.27
    13    18      260.16
    19    24      416.05
    25    30      571.94
    31    36      727.83
    37    42      883.72
    43    48     1039.61
    49    54     1195.50
    55    60     1351.38
```

V-Leach, VER 1.1
Jake Turin, 11/91
PGA V-leach model, polygon screen-TCE-11/3/92-POLY113.INP. Old chem, New so

Polygon 1
At time = .00, total mass in vadose zone = 1.8253 g/sq.ft.
Mass in gas phase = .23414 g/sq.ft.
Mass in liquid phase = 1.0018 g/sq.ft.
Mass sorbed = .58930 g/sq.ft.

Polygon 1
At time = 1.00, total mass in vadose zone = 1.7977 g/sq.ft.
Mass in gas phase = .23061 g/sq.ft.
Mass in liquid phase = .98670 g/sq.ft.
Mass sorbed = .58042 g/sq.ft.

Since last printout at time = .00
Change in Total Mass = -.27521E-01g/sq.ft.
Advection in from atmosphere = .00000 g/sq.ft.
Advection in from water table = -.26588E-01g/sq.ft.
Diffusion in from atmosphere = -.93343E-03g/sq.ft.
Diffusion in from water table = .00000 g/sq.ft.
Total inflow at boundaries = -.27522E-01g/sq.ft.
Mass discrepancy = .54389E-06g/sq.ft.

Since beginning of run at time = 0.0
Change in Total Mass = -.27521E-01g/sq.ft.
Advection in from atmosphere = .00000 g/sq.ft.
Advection in from water table = -.26588E-01g/sq.ft.
Diffusion in from atmosphere = -.93343E-03g/sq.ft.
Diffusion in from water table = .00000 g/sq.ft.
Total inflow at boundaries = -.27522E-01g/sq.ft.
Mass discrepancy = .54389E-06g/sq.ft.

Polygon 1
At time = 2.00, total mass in vadose zone = 1.7704 g/sq.ft.
Mass in gas phase = .22710 g/sq.ft.
Mass in liquid phase = .97168 g/sq.ft.
Mass sorbed = .57158 g/sq.ft.

Since last printout at time = 1.00
Change in Total Mass = -.27367E-01g/sq.ft.
Advection in from atmosphere = .00000 g/sq.ft.
Advection in from water table = -.26444E-01g/sq.ft.
Diffusion in from atmosphere = -.92318E-03g/sq.ft.
Diffusion in from water table = .00000 g/sq.ft.
Total inflow at boundaries = -.27367E-01g/sq.ft.
Mass discrepancy = -.81956E-07g/sq.ft.

Since beginning of run at time = 0.0
Change in Total Mass = -.54888E-01g/sq.ft.
Advection in from atmosphere = .00000 g/sq.ft.
Advection in from water table = -.53032E-01g/sq.ft.
Diffusion in from atmosphere = -.18566E-02g/sq.ft.
Diffusion in from water table = .00000 g/sq.ft.
Total inflow at boundaries = -.54888E-01g/sq.ft.
Mass discrepancy = .46194E-06g/sq.ft.

Polygon 1
At time = 3.00, total mass in vadose zone = 1.7432 g/sq.ft.
Mass in gas phase = .22361 g/sq.ft.
Mass in liquid phase = .95677 g/sq.ft.
Mass sorbed = .56281 g/sq.ft.

Since last printout at time = 2.00
Change in Total Mass = -.27178E-01g/sq.ft.
Advection in from atmosphere = .00000 g/sq.ft.
Advection in from water table = -.26270E-01g/sq.ft.
Diffusion in from atmosphere = -.90871E-03g/sq.ft.
Diffusion in from water table = .00000 g/sq.ft.
Total inflow at boundaries = -.27178E-01g/sq.ft.
Mass discrepancy = .19372E-06g/sq.ft.

Since beginning of run at time = 0.0
Change in Total Mass = -.82066E-01g/sq.ft.
Advection in from atmosphere = .00000 g/sq.ft.
Advection in from water table = -.79301E-01g/sq.ft.
Diffusion in from atmosphere = -.27653E-02g/sq.ft.
Diffusion in from water table = .00000 g/sq.ft.
Total inflow at boundaries = -.82067E-01g/sq.ft.
Mass discrepancy = .65565E-06g/sq.ft.

Polygon 1
At time = 4.00, total mass in vadose zone = 1.7162 g/sq.ft.
Mass in gas phase = .22016 g/sq.ft.
Mass in liquid phase = .94197 g/sq.ft.
Mass sorbed = .55410 g/sq.ft.

Since last printout at time = 3.00
Change in Total Mass = -.26954E-01g/sq.ft.
Advection in from atmosphere = .00000 g/sq.ft.
Advection in from water table = -.26062E-01g/sq.ft.
Diffusion in from atmosphere = -.89122E-03g/sq.ft.
Diffusion in from water table = .00000 g/sq.ft.
Total inflow at boundaries = -.26954E-01g/sq.ft.
Mass discrepancy = -.55879E-07g/sq.ft.

Since beginning of run at time = 0.0
Change in Total Mass = -.10902 g/sq.ft.
Advection in from atmosphere = .00000 g/sq.ft.
Advection in from water table = -.10536 g/sq.ft.
Diffusion in from atmosphere = -.36565E-02g/sq.ft.
Diffusion in from water table = .00000 g/sq.ft.
Total inflow at boundaries = -.10902 g/sq.ft.
Mass discrepancy = .60350E-06g/sq.ft.

Polygon 1
At time = 5.00, total mass in vadose zone = 1.6895 g/sq.ft.
Mass in gas phase = .21673 g/sq.ft.
Mass in liquid phase = .92732 g/sq.ft.
Mass sorbed = .54549 g/sq.ft.

Since last printout at time = 4.00
Change in Total Mass = -.26695E-01g/sq.ft.

```
                Advection in from atmosphere =       .00000    g/sq.ft.
                Advection in from water table =     -.25823E-01g/sq.ft.
                Diffusion in from atmosphere =      -.87163E-03g/sq.ft.
                Diffusion in from water table =      .00000    g/sq.ft.
           Total inflow at boundaries =     -.26695E-01g/sq.ft.
           Mass discrepancy =      .14715E-06g/sq.ft.

Since beginning of run at time = 0.0
           Change in Total Mass =     -.13571    g/sq.ft.
                Advection in from atmosphere =       .00000    g/sq.ft.
                Advection in from water table =     -.13119    g/sq.ft.
                Diffusion in from atmosphere =      -.45282E-02g/sq.ft.
                Diffusion in from water table =      .00000    g/sq.ft.
           Total inflow at boundaries =     -.13572    g/sq.ft.
           Mass discrepancy =      .74506E-06g/sq.ft.


Polygon   1
At time =       6.00, total mass in vadose zone =     1.6631    g/sq.ft.
Mass in gas phase     =       .21334    g/sq.ft.
Mass in liquid phase  =       .91283    g/sq.ft.
Mass sorbed           =       .53696    g/sq.ft.

Since last printout at time =       5.00
           Change in Total Mass =     -.26408E-01g/sq.ft.
                Advection in from atmosphere =       .00000    g/sq.ft.
                Advection in from water table =     -.25557E-01g/sq.ft.
                Diffusion in from atmosphere =      -.85066E-03g/sq.ft.
                Diffusion in from water table =      .00000    g/sq.ft.
           Total inflow at boundaries =     -.26408E-01g/sq.ft.
           Mass discrepancy =      .25518E-06g/sq.ft.

Since beginning of run at time = 0.0
           Change in Total Mass =     -.16212    g/sq.ft.
                Advection in from atmosphere =       .00000    g/sq.ft.
                Advection in from water table =     -.15674    g/sq.ft.
                Diffusion in from atmosphere =      -.53788E-02g/sq.ft.
                Diffusion in from water table =      .00000    g/sq.ft.
           Total inflow at boundaries =     -.16212    g/sq.ft.
           Mass discrepancy =      .99838E-06g/sq.ft.


Polygon   1
At time =       7.00, total mass in vadose zone =     1.6370    g/sq.ft.
Mass in gas phase     =       .21000    g/sq.ft.
Mass in liquid phase  =       .89850    g/sq.ft.
Mass sorbed           =       .52853    g/sq.ft.

Since last printout at time =       6.00
           Change in Total Mass =     -.26100E-01g/sq.ft.
                Advection in from atmosphere =       .00000    g/sq.ft.
                Advection in from water table =     -.25271E-01g/sq.ft.
                Diffusion in from atmosphere =      -.82883E-03g/sq.ft.
                Diffusion in from water table =      .00000    g/sq.ft.
           Total inflow at boundaries =     -.26100E-01g/sq.ft.
           Mass discrepancy =     -.83819E-07g/sq.ft.

Since beginning of run at time = 0.0
           Change in Total Mass =     -.18822    g/sq.ft.
                Advection in from atmosphere =       .00000    g/sq.ft.
```

```
                Advection in from water table =     -.18202    g/sq.ft.
                Diffusion in from atmosphere =     -.62077E-02g/sq.ft.
                Diffusion in from water table =      .00000    g/sq.ft.
           Total inflow at boundaries =     -.18822    g/sq.ft.
           Mass discrepancy =      .92387E-06g/sq.ft.


Polygon   1
At time =       8.00, total mass in vadose zone =     1.6112    g/sq.ft.
Mass in gas phase     =       .20669    g/sq.ft.
Mass in liquid phase  =       .88435    g/sq.ft.
Mass sorbed           =       .52021    g/sq.ft.

Since last printout at time =       7.00
           Change in Total Mass =     -.25779E-01g/sq.ft.
                Advection in from atmosphere =       .00000    g/sq.ft.
                Advection in from water table =     -.24973E-01g/sq.ft.
                Diffusion in from atmosphere =     -.80653E-03g/sq.ft.
                Diffusion in from water table =      .00000    g/sq.ft.
           Total inflow at boundaries =     -.25779E-01g/sq.ft.
           Mass discrepancy =      .12107E-06g/sq.ft.

Since beginning of run at time = 0.0
           Change in Total Mass =     -.21400    g/sq.ft.
                Advection in from atmosphere =       .00000    g/sq.ft.
                Advection in from water table =     -.20699    g/sq.ft.
                Diffusion in from atmosphere =     -.70142E-02g/sq.ft.
                Diffusion in from water table =      .00000    g/sq.ft.
           Total inflow at boundaries =     -.21400    g/sq.ft.
           Mass discrepancy =      .10431E-05g/sq.ft.


Polygon   1
At time =       9.00, total mass in vadose zone =     1.5858    g/sq.ft.
Mass in gas phase     =       .20342    g/sq.ft.
Mass in liquid phase  =       .87038    g/sq.ft.
Mass sorbed           =       .51199    g/sq.ft.

Since last printout at time =       8.00
           Change in Total Mass =     -.25453E-01g/sq.ft.
                Advection in from atmosphere =       .00000    g/sq.ft.
                Advection in from water table =     -.24669E-01g/sq.ft.
                Diffusion in from atmosphere =     -.78407E-03g/sq.ft.
                Diffusion in from water table =      .00000    g/sq.ft.
           Total inflow at boundaries =     -.25453E-01g/sq.ft.
           Mass discrepancy =     -.36322E-06g/sq.ft.

Since beginning of run at time = 0.0
           Change in Total Mass =     -.23946    g/sq.ft.
                Advection in from atmosphere =       .00000    g/sq.ft.
                Advection in from water table =     -.23166    g/sq.ft.
                Diffusion in from atmosphere =     -.77983E-02g/sq.ft.
                Diffusion in from water table =      .00000    g/sq.ft.
           Total inflow at boundaries =     -.23946    g/sq.ft.
           Mass discrepancy =      .68545E-06g/sq.ft.


Polygon   1
At time =      10.00, total mass in vadose zone =     1.5607    g/sq.ft.
Mass in gas phase     =       .20020    g/sq.ft.
```

```
Mass in liquid phase  =        .85659    g/sq.ft.
Mass sorbed           =        .50388    g/sq.ft.

Since last printout at time =       9.00
               Change in Total Mass =     -.25126E-01g/sq.ft.
                    Advection in from atmosphere =       .00000    g/sq.ft.
                    Advection in from water table =     -.24365E-01g/sq.ft.
                    Diffusion in from atmosphere =      -.76166E-03g/sq.ft.
                    Diffusion in from water table =      .00000    g/sq.ft.
               Total inflow at boundaries =     -.25126E-01g/sq.ft.
               Mass discrepancy =      .36508E-06g/sq.ft.

Since beginning of run at time = 0.0
               Change in Total Mass =     -.26458    g/sq.ft.
                    Advection in from atmosphere =       .00000    g/sq.ft.
                    Advection in from water table =     -.25602    g/sq.ft.
                    Diffusion in from atmosphere =      -.85599E-02g/sq.ft.
                    Diffusion in from water table =      .00000    g/sq.ft.
               Total inflow at boundaries =     -.26458    g/sq.ft.
               Mass discrepancy =      .10431E-05g/sq.ft.


Polygon   1
At time =      11.00, total mass in vadose zone =     1.5359    g/sq.ft.
Mass in gas phase     =        .19702    g/sq.ft.
Mass in liquid phase  =        .84298    g/sq.ft.
Mass sorbed           =        .49587    g/sq.ft.

Since last printout at time =      10.00
               Change in Total Mass =     -.24803E-01g/sq.ft.
                    Advection in from atmosphere =       .00000    g/sq.ft.
                    Advection in from water table =     -.24064E-01g/sq.ft.
                    Diffusion in from atmosphere =      -.73949E-03g/sq.ft.
                    Diffusion in from water table =      .00000    g/sq.ft.
               Total inflow at boundaries =     -.24803E-01g/sq.ft.
               Mass discrepancy =      .42841E-07g/sq.ft.

Since beginning of run at time = 0.0
               Change in Total Mass =     -.28938    g/sq.ft.
                    Advection in from atmosphere =       .00000    g/sq.ft.
                    Advection in from water table =     -.28009    g/sq.ft.
                    Diffusion in from atmosphere =      -.92994E-02g/sq.ft.
                    Diffusion in from water table =      .00000    g/sq.ft.
               Total inflow at boundaries =     -.28939    g/sq.ft.
               Mass discrepancy =      .10729E-05g/sq.ft.


Polygon   1
At time =      12.00, total mass in vadose zone =     1.5114    g/sq.ft.
Mass in gas phase     =        .19388    g/sq.ft.
Mass in liquid phase  =        .82954    g/sq.ft.
Mass sorbed           =        .48797    g/sq.ft.

Since last printout at time =      11.00
               Change in Total Mass =     -.24486E-01g/sq.ft.
                    Advection in from atmosphere =       .00000    g/sq.ft.
                    Advection in from water table =     -.23768E-01g/sq.ft.
                    Diffusion in from atmosphere =      -.71766E-03g/sq.ft.
                    Diffusion in from water table =      .00000    g/sq.ft.
               Total inflow at boundaries =     -.24486E-01g/sq.ft.
```

Mass discrepancy = -.16019E-06g/sq.ft.

Since beginning of run at time = 0.0
Change in Total Mass = -.31387 g/sq.ft.
Advection in from atmosphere = .00000 g/sq.ft.
Advection in from water table = -.30385 g/sq.ft.
Diffusion in from atmosphere = -.10017E-01g/sq.ft.
Diffusion in from water table = .00000 g/sq.ft.
Total inflow at boundaries = -.31387 g/sq.ft.
Mass discrepancy = .92387E-06g/sq.ft.

Polygon 1
At time = 13.00, total mass in vadose zone = 1.4872 g/sq.ft.
Mass in gas phase = .19078 g/sq.ft.
Mass in liquid phase = .81627 g/sq.ft.
Mass sorbed = .48016 g/sq.ft.

Since last printout at time = 12.00
Change in Total Mass = -.24175E-01g/sq.ft.
Advection in from atmosphere = .00000 g/sq.ft.
Advection in from water table = -.23478E-01g/sq.ft.
Diffusion in from atmosphere = -.69627E-03g/sq.ft.
Diffusion in from water table = .00000 g/sq.ft.
Total inflow at boundaries = -.24175E-01g/sq.ft.
Mass discrepancy = .70781E-07g/sq.ft.

Since beginning of run at time = 0.0
Change in Total Mass = -.33804 g/sq.ft.
Advection in from atmosphere = .00000 g/sq.ft.
Advection in from water table = -.32733 g/sq.ft.
Diffusion in from atmosphere = -.10713E-01g/sq.ft.
Diffusion in from water table = .00000 g/sq.ft.
Total inflow at boundaries = -.33805 g/sq.ft.
Mass discrepancy = .10133E-05g/sq.ft.

Polygon 1
At time = 14.00, total mass in vadose zone = 1.4633 g/sq.ft.
Mass in gas phase = .18771 g/sq.ft.
Mass in liquid phase = .80317 g/sq.ft.
Mass sorbed = .47245 g/sq.ft.

Since last printout at time = 13.00
Change in Total Mass = -.23870E-01g/sq.ft.
Advection in from atmosphere = .00000 g/sq.ft.
Advection in from water table = -.23195E-01g/sq.ft.
Diffusion in from atmosphere = -.67537E-03g/sq.ft.
Diffusion in from water table = .00000 g/sq.ft.
Total inflow at boundaries = -.23870E-01g/sq.ft.
Mass discrepancy = .35018E-06g/sq.ft.

Since beginning of run at time = 0.0
Change in Total Mass = -.36191 g/sq.ft.
Advection in from atmosphere = .00000 g/sq.ft.
Advection in from water table = -.35053 g/sq.ft.
Diffusion in from atmosphere = -.11389E-01g/sq.ft.
Diffusion in from water table = .00000 g/sq.ft.
Total inflow at boundaries = -.36192 g/sq.ft.
Mass discrepancy = .13411E-05g/sq.ft.

Polygon 1
At time = 15.00, total mass in vadose zone = 1.4398 g/sq.ft.
Mass in gas phase = .18469 g/sq.ft.
Mass in liquid phase = .79023 g/sq.ft.
Mass sorbed = .46484 g/sq.ft.

Since last printout at time = 14.00
Change in Total Mass = -.23572E-01g/sq.ft.
Advection in from atmosphere = .00000 g/sq.ft.
Advection in from water table = -.22917E-01g/sq.ft.
Diffusion in from atmosphere = -.65501E-03g/sq.ft.
Diffusion in from water table = .00000 g/sq.ft.
Total inflow at boundaries = -.23572E-01g/sq.ft.
Mass discrepancy = .70781E-07g/sq.ft.

Since beginning of run at time = 0.0
Change in Total Mass = -.38549 g/sq.ft.
Advection in from atmosphere = .00000 g/sq.ft.
Advection in from water table = -.37344 g/sq.ft.
Diffusion in from atmosphere = -.12044E-01g/sq.ft.
Diffusion in from water table = .00000 g/sq.ft.
Total inflow at boundaries = -.38549 g/sq.ft.
Mass discrepancy = .14305E-05g/sq.ft.

Polygon 1
At time = 16.00, total mass in vadose zone = 1.4165 g/sq.ft.
Mass in gas phase = .18170 g/sq.ft.
Mass in liquid phase = .77745 g/sq.ft.
Mass sorbed = .45733 g/sq.ft.

Since last printout at time = 15.00
Change in Total Mass = -.23280E-01g/sq.ft.
Advection in from atmosphere = .00000 g/sq.ft.
Advection in from water table = -.22644E-01g/sq.ft.
Diffusion in from atmosphere = -.63522E-03g/sq.ft.
Diffusion in from water table = .00000 g/sq.ft.
Total inflow at boundaries = -.23280E-01g/sq.ft.
Mass discrepancy = -.42841E-07g/sq.ft.

Since beginning of run at time = 0.0
Change in Total Mass = -.40877 g/sq.ft.
Advection in from atmosphere = .00000 g/sq.ft.
Advection in from water table = -.39609 g/sq.ft.
Diffusion in from atmosphere = -.12679E-01g/sq.ft.
Diffusion in from water table = .00000 g/sq.ft.
Total inflow at boundaries = -.40877 g/sq.ft.
Mass discrepancy = .13709E-05g/sq.ft.

Polygon 1
At time = 17.00, total mass in vadose zone = 1.3935 g/sq.ft.
Mass in gas phase = .17876 g/sq.ft.
Mass in liquid phase = .76483 g/sq.ft.
Mass sorbed = .44990 g/sq.ft.

Since last printout at time = 16.00
Change in Total Mass = -.22992E-01g/sq.ft.

```
                Advection in from atmosphere =        .00000    g/sq.ft.
                Advection in from water table =     -.22376E-01g/sq.ft.
                Diffusion in from atmosphere =      -.61601E-03g/sq.ft.
                Diffusion in from water table =       .00000    g/sq.ft.
           Total inflow at boundaries =     -.22992E-01g/sq.ft.
           Mass discrepancy =     -.35390E-07g/sq.ft.

Since beginning of run at time = 0.0
           Change in Total Mass =     -.43176    g/sq.ft.
                Advection in from atmosphere =        .00000    g/sq.ft.
                Advection in from water table =     -.41846    g/sq.ft.
                Diffusion in from atmosphere =      -.13295E-01g/sq.ft.
                Diffusion in from water table =       .00000    g/sq.ft.
           Total inflow at boundaries =     -.43176    g/sq.ft.
           Mass discrepancy =      .13411E-05g/sq.ft.


Polygon   1
At time =      18.00, total mass in vadose zone =     1.3708    g/sq.ft.
Mass in gas phase     =       .17584    g/sq.ft.
Mass in liquid phase  =       .75237    g/sq.ft.
Mass sorbed           =       .44257    g/sq.ft.

Since last printout at time =      17.00
           Change in Total Mass =     -.22709E-01g/sq.ft.
                Advection in from atmosphere =        .00000    g/sq.ft.
                Advection in from water table =     -.22111E-01g/sq.ft.
                Diffusion in from atmosphere =      -.59738E-03g/sq.ft.
                Diffusion in from water table =       .00000    g/sq.ft.
           Total inflow at boundaries =     -.22709E-01g/sq.ft.
           Mass discrepancy =      .96858E-07g/sq.ft.

Since beginning of run at time = 0.0
           Change in Total Mass =     -.45447    g/sq.ft.
                Advection in from atmosphere =        .00000    g/sq.ft.
                Advection in from water table =     -.44058    g/sq.ft.
                Diffusion in from atmosphere =      -.13892E-01g/sq.ft.
                Diffusion in from water table =       .00000    g/sq.ft.
           Total inflow at boundaries =     -.45447    g/sq.ft.
           Mass discrepancy =      .14305E-05g/sq.ft.


Polygon   1
At time =      19.00, total mass in vadose zone =     1.3484    g/sq.ft.
Mass in gas phase     =       .17296    g/sq.ft.
Mass in liquid phase  =       .74006    g/sq.ft.
Mass sorbed           =       .43533    g/sq.ft.

Since last printout at time =      18.00
           Change in Total Mass =     -.22430E-01g/sq.ft.
                Advection in from atmosphere =        .00000    g/sq.ft.
                Advection in from water table =     -.21850E-01g/sq.ft.
                Diffusion in from atmosphere =      -.57935E-03g/sq.ft.
                Diffusion in from water table =       .00000    g/sq.ft.
           Total inflow at boundaries =     -.22430E-01g/sq.ft.
           Mass discrepancy =      .87544E-07g/sq.ft.

Since beginning of run at time = 0.0
           Change in Total Mass =     -.47690    g/sq.ft.
                Advection in from atmosphere =        .00000    g/sq.ft.
```

```
                    Advection in from water table =      -.46243    g/sq.ft.
                    Diffusion in from atmosphere =       -.14472E-01g/sq.ft.
                    Diffusion in from water table =       .00000    g/sq.ft.
               Total inflow at boundaries =      -.47690    g/sq.ft.
               Mass discrepancy =       .15199E-05g/sq.ft.


Polygon   1
At time =      20.00, total mass in vadose zone =     1.3262    g/sq.ft.
Mass in gas phase     =       .17012    g/sq.ft.
Mass in liquid phase  =       .72790    g/sq.ft.
Mass sorbed           =       .42818    g/sq.ft.

Since last printout at time =      19.00
               Change in Total Mass =      -.22154E-01g/sq.ft.
                    Advection in from atmosphere =        .00000    g/sq.ft.
                    Advection in from water table =      -.21592E-01g/sq.ft.
                    Diffusion in from atmosphere =       -.56189E-03g/sq.ft.
                    Diffusion in from water table =       .00000    g/sq.ft.
               Total inflow at boundaries =      -.22154E-01g/sq.ft.
               Mass discrepancy =      -.24587E-06g/sq.ft.

Since beginning of run at time = 0.0
               Change in Total Mass =      -.49905    g/sq.ft.
                    Advection in from atmosphere =        .00000    g/sq.ft.
                    Advection in from water table =      -.48402    g/sq.ft.
                    Diffusion in from atmosphere =       -.15034E-01g/sq.ft.
                    Diffusion in from water table =       .00000    g/sq.ft.
               Total inflow at boundaries =      -.49905    g/sq.ft.
               Mass discrepancy =       .12815E-05g/sq.ft.


Polygon   1
At time =      21.00, total mass in vadose zone =     1.3043    g/sq.ft.
Mass in gas phase     =       .16732    g/sq.ft.
Mass in liquid phase  =       .71589    g/sq.ft.
Mass sorbed           =       .42111    g/sq.ft.

Since last printout at time =      20.00
               Change in Total Mass =      -.21881E-01g/sq.ft.
                    Advection in from atmosphere =        .00000    g/sq.ft.
                    Advection in from water table =      -.21336E-01g/sq.ft.
                    Diffusion in from atmosphere =       -.54500E-03g/sq.ft.
                    Diffusion in from water table =       .00000    g/sq.ft.
               Total inflow at boundaries =      -.21881E-01g/sq.ft.
               Mass discrepancy =       .19744E-06g/sq.ft.

Since beginning of run at time = 0.0
               Change in Total Mass =      -.52093    g/sq.ft.
                    Advection in from atmosphere =        .00000    g/sq.ft.
                    Advection in from water table =      -.50535    g/sq.ft.
                    Diffusion in from atmosphere =       -.15579E-01g/sq.ft.
                    Diffusion in from water table =       .00000    g/sq.ft.
               Total inflow at boundaries =      -.52093    g/sq.ft.
               Mass discrepancy =       .14901E-05g/sq.ft.


Polygon   1
At time =      22.00, total mass in vadose zone =     1.2827    g/sq.ft.
Mass in gas phase     =       .16454    g/sq.ft.
```

```
Mass in liquid phase  =        .70403    g/sq.ft.
Mass sorbed           =        .41414    g/sq.ft.

Since last printout at time =      21.00
              Change in Total Mass =     -.21612E-01g/sq.ft.
                   Advection in from atmosphere =       .00000    g/sq.ft.
                   Advection in from water table =     -.21083E-01g/sq.ft.
                   Diffusion in from atmosphere =      -.52867E-03g/sq.ft.
                   Diffusion in from water table =      .00000    g/sq.ft.
              Total inflow at boundaries =     -.21612E-01g/sq.ft.
              Mass discrepancy =      .78231E-07g/sq.ft.

Since beginning of run at time = 0.0
              Change in Total Mass =     -.54254    g/sq.ft.
                   Advection in from atmosphere =       .00000    g/sq.ft.
                   Advection in from water table =     -.52644    g/sq.ft.
                   Diffusion in from atmosphere =      -.16107E-01g/sq.ft.
                   Diffusion in from water table =      .00000    g/sq.ft.
              Total inflow at boundaries =     -.54255    g/sq.ft.
              Mass discrepancy =      .15497E-05g/sq.ft.


Polygon   1
At time =      23.00, total mass in vadose zone =     1.2614    g/sq.ft.
Mass in gas phase     =        .16181    g/sq.ft.
Mass in liquid phase  =        .69231    g/sq.ft.
Mass sorbed           =        .40725    g/sq.ft.

Since last printout at time =      22.00
              Change in Total Mass =     -.21345E-01g/sq.ft.
                   Advection in from atmosphere =       .00000    g/sq.ft.
                   Advection in from water table =     -.20832E-01g/sq.ft.
                   Diffusion in from atmosphere =      -.51289E-03g/sq.ft.
                   Diffusion in from water table =      .00000    g/sq.ft.
              Total inflow at boundaries =     -.21345E-01g/sq.ft.
              Mass discrepancy =      .13970E-06g/sq.ft.

Since beginning of run at time = 0.0
              Change in Total Mass =     -.56389    g/sq.ft.
                   Advection in from atmosphere =       .00000    g/sq.ft.
                   Advection in from water table =     -.54727    g/sq.ft.
                   Diffusion in from atmosphere =      -.16620E-01g/sq.ft.
                   Diffusion in from water table =      .00000    g/sq.ft.
              Total inflow at boundaries =     -.56389    g/sq.ft.
              Mass discrepancy =      .17285E-05g/sq.ft.


Polygon   1
At time =      24.00, total mass in vadose zone =     1.2403    g/sq.ft.
Mass in gas phase     =        .15910    g/sq.ft.
Mass in liquid phase  =        .68074    g/sq.ft.
Mass sorbed           =        .40044    g/sq.ft.

Since last printout at time =      23.00
              Change in Total Mass =     -.21080E-01g/sq.ft.
                   Advection in from atmosphere =       .00000    g/sq.ft.
                   Advection in from water table =     -.20583E-01g/sq.ft.
                   Diffusion in from atmosphere =      -.49763E-03g/sq.ft.
                   Diffusion in from water table =      .00000    g/sq.ft.
              Total inflow at boundaries =     -.21080E-01g/sq.ft.
```

Mass discrepancy = -.33528E-07g/sq.ft.

Since beginning of run at time = 0.0
Change in Total Mass = -.58497 g/sq.ft.
Advection in from atmosphere = .00000 g/sq.ft.
Advection in from water table = -.56785 g/sq.ft.
Diffusion in from atmosphere = -.17118E-01g/sq.ft.
Diffusion in from water table = .00000 g/sq.ft.
Total inflow at boundaries = -.58497 g/sq.ft.
Mass discrepancy = .17285E-05g/sq.ft.

Polygon 1
At time = 25.00, total mass in vadose zone = 1.2195 g/sq.ft.
Mass in gas phase = .15643 g/sq.ft.
Mass in liquid phase = .66932 g/sq.ft.
Mass sorbed = .39372 g/sq.ft.

Since last printout at time = 24.00
Change in Total Mass = -.20818E-01g/sq.ft.
Advection in from atmosphere = .00000 g/sq.ft.
Advection in from water table = -.20335E-01g/sq.ft.
Diffusion in from atmosphere = -.48289E-03g/sq.ft.
Diffusion in from water table = .00000 g/sq.ft.
Total inflow at boundaries = -.20818E-01g/sq.ft.
Mass discrepancy = .12293E-06g/sq.ft.

Since beginning of run at time = 0.0
Change in Total Mass = -.60579 g/sq.ft.
Advection in from atmosphere = .00000 g/sq.ft.
Advection in from water table = -.58819 g/sq.ft.
Diffusion in from atmosphere = -.17601E-01g/sq.ft.
Diffusion in from water table = .00000 g/sq.ft.
Total inflow at boundaries = -.60579 g/sq.ft.
Mass discrepancy = .18477E-05g/sq.ft.

Polygon 1
At time = 26.00, total mass in vadose zone = 1.1989 g/sq.ft.
Mass in gas phase = .15379 g/sq.ft.
Mass in liquid phase = .65803 g/sq.ft.
Mass sorbed = .38708 g/sq.ft.

Since last printout at time = 25.00
Change in Total Mass = -.20558E-01g/sq.ft.
Advection in from atmosphere = .00000 g/sq.ft.
Advection in from water table = -.20090E-01g/sq.ft.
Diffusion in from atmosphere = -.46865E-03g/sq.ft.
Diffusion in from water table = .00000 g/sq.ft.
Total inflow at boundaries = -.20558E-01g/sq.ft.
Mass discrepancy = .12293E-06g/sq.ft.

Since beginning of run at time = 0.0
Change in Total Mass = -.62634 g/sq.ft.
Advection in from atmosphere = .00000 g/sq.ft.
Advection in from water table = -.60828 g/sq.ft.
Diffusion in from atmosphere = -.18069E-01g/sq.ft.
Diffusion in from water table = .00000 g/sq.ft.
Total inflow at boundaries = -.62635 g/sq.ft.
Mass discrepancy = .19073E-05g/sq.ft.

```
Polygon   1
At time =      27.00, total mass in vadose zone =     1.1786    g/sq.ft.
Mass in gas phase     =       .15119    g/sq.ft.
Mass in liquid phase  =       .64689    g/sq.ft.
Mass sorbed           =       .38053    g/sq.ft.

Since last printout at time =      26.00
               Change in Total Mass =     -.20301E-01g/sq.ft.
                    Advection in from atmosphere =       .00000    g/sq.ft.
                    Advection in from water table =     -.19846E-01g/sq.ft.
                    Diffusion in from atmosphere =      -.45489E-03g/sq.ft.
                    Diffusion in from water table =      .00000    g/sq.ft.
               Total inflow at boundaries =     -.20301E-01g/sq.ft.
               Mass discrepancy =     -.26077E-07g/sq.ft.

Since beginning of run at time = 0.0
               Change in Total Mass =     -.64665    g/sq.ft.
                    Advection in from atmosphere =       .00000    g/sq.ft.
                    Advection in from water table =     -.62812    g/sq.ft.
                    Diffusion in from atmosphere =      -.18524E-01g/sq.ft.
                    Diffusion in from water table =      .00000    g/sq.ft.
               Total inflow at boundaries =     -.64665    g/sq.ft.
               Mass discrepancy =      .19073E-05g/sq.ft.


Polygon   1
At time =      28.00, total mass in vadose zone =     1.1586    g/sq.ft.
Mass in gas phase     =       .14862    g/sq.ft.
Mass in liquid phase  =       .63589    g/sq.ft.
Mass sorbed           =       .37405    g/sq.ft.

Since last printout at time =      27.00
               Change in Total Mass =     -.20045E-01g/sq.ft.
                    Advection in from atmosphere =       .00000    g/sq.ft.
                    Advection in from water table =     -.19603E-01g/sq.ft.
                    Diffusion in from atmosphere =      -.44160E-03g/sq.ft.
                    Diffusion in from water table =      .00000    g/sq.ft.
               Total inflow at boundaries =     -.20045E-01g/sq.ft.
               Mass discrepancy =      .44703E-07g/sq.ft.

Since beginning of run at time = 0.0
               Change in Total Mass =     -.66669    g/sq.ft.
                    Advection in from atmosphere =       .00000    g/sq.ft.
                    Advection in from water table =     -.64773    g/sq.ft.
                    Diffusion in from atmosphere =      -.18966E-01g/sq.ft.
                    Diffusion in from water table =      .00000    g/sq.ft.
               Total inflow at boundaries =     -.66669    g/sq.ft.
               Mass discrepancy =      .19670E-05g/sq.ft.


Polygon   1
At time =      29.00, total mass in vadose zone =     1.1388    g/sq.ft.
Mass in gas phase     =       .14608    g/sq.ft.
Mass in liquid phase  =       .62503    g/sq.ft.
Mass sorbed           =       .36766    g/sq.ft.

Since last printout at time =      28.00
               Change in Total Mass =     -.19791E-01g/sq.ft.
```

Advection in from atmosphere = .00000 g/sq.ft.
Advection in from water table = -.19362E-01g/sq.ft.
Diffusion in from atmosphere = -.42875E-03g/sq.ft.
Diffusion in from water table = .00000 g/sq.ft.
Total inflow at boundaries = -.19791E-01g/sq.ft.
Mass discrepancy = .37253E-08g/sq.ft.

Since beginning of run at time = 0.0
Change in Total Mass = -.68648 g/sq.ft.
Advection in from atmosphere = .00000 g/sq.ft.
Advection in from water table = -.66709 g/sq.ft.
Diffusion in from atmosphere = -.19395E-01g/sq.ft.
Diffusion in from water table = .00000 g/sq.ft.
Total inflow at boundaries = -.68648 g/sq.ft.
Mass discrepancy = .19670E-05g/sq.ft.

Polygon 1
At time = 30.00, total mass in vadose zone = 1.1192 g/sq.ft.
Mass in gas phase = .14357 g/sq.ft.
Mass in liquid phase = .61430 g/sq.ft.
Mass sorbed = .36136 g/sq.ft.

Since last printout at time = 29.00
Change in Total Mass = -.19539E-01g/sq.ft.
Advection in from atmosphere = .00000 g/sq.ft.
Advection in from water table = -.19123E-01g/sq.ft.
Diffusion in from atmosphere = -.41633E-03g/sq.ft.
Diffusion in from water table = .00000 g/sq.ft.
Total inflow at boundaries = -.19539E-01g/sq.ft.
Mass discrepancy = -.11176E-06g/sq.ft.

Since beginning of run at time = 0.0
Change in Total Mass = -.70602 g/sq.ft.
Advection in from atmosphere = .00000 g/sq.ft.
Advection in from water table = -.68621 g/sq.ft.
Diffusion in from atmosphere = -.19811E-01g/sq.ft.
Diffusion in from water table = .00000 g/sq.ft.
Total inflow at boundaries = -.70602 g/sq.ft.
Mass discrepancy = .18477E-05g/sq.ft.

GROUNDWATER IMPACT OF POLYGON 1

Time	Mass per area (g/sq.ft.)	Total Mass (g)
1.00	.26588E-01	4121.2
2.00	.26444E-01	4098.8
3.00	.26270E-01	4071.8
4.00	.26062E-01	4039.7
5.00	.25823E-01	4002.6
6.00	.25557E-01	3961.4
7.00	.25271E-01	3917.0
8.00	.24973E-01	3870.8
9.00	.24669E-01	3823.7
10.00	.24365E-01	3776.5
11.00	.24064E-01	3729.9
12.00	.23768E-01	3684.0
13.00	.23478E-01	3639.1
14.00	.23195E-01	3595.2
15.00	.22917E-01	3552.1

16.00	.22644E-01	3509.9
17.00	.22376E-01	3468.3
18.00	.22111E-01	3427.3
19.00	.21850E-01	3386.8
20.00	.21592E-01	3346.8
21.00	.21336E-01	3307.1
22.00	.21083E-01	3267.9
23.00	.20832E-01	3228.9
24.00	.20583E-01	3190.3
25.00	.20335E-01	3152.0
26.00	.20090E-01	3113.9
27.00	.19846E-01	3076.1
28.00	.19603E-01	3038.5
29.00	.19362E-01	3001.2
30.00	.19123E-01	2964.0

****

****

TOTAL GROUNDWATER IMPACT

Time (yr)	Mass (g)	Cumulative Mass (g)
1.00	4121.2	4121.2
2.00	4098.8	8219.9
3.00	4071.8	12292.
4.00	4039.7	16331.
5.00	4002.6	20334.
6.00	3961.4	24295.
7.00	3917.0	28212.
8.00	3870.8	32083.
9.00	3823.7	35907.
10.00	3776.5	39683.
11.00	3729.9	43413.
12.00	3684.0	47097.
13.00	3639.1	50737.
14.00	3595.2	54332.
15.00	3552.1	57884.
16.00	3509.9	61394.
17.00	3468.3	64862.
18.00	3427.3	68289.
19.00	3386.8	71676.
20.00	3346.8	75023.
21.00	3307.1	78330.
22.00	3267.9	81598.
23.00	3228.9	84827.
24.00	3190.3	88017.
25.00	3152.0	91169.
26.00	3113.9	94283.
27.00	3076.1	97359.
28.00	3038.5	.10040E+06
29.00	3001.2	.10340E+06
30.00	2964.0	.10636E+06

Polygon 113
Time: .000

Cell	Cgas(g/cu.ft.)	Cliq(g/cu.ft.)	Csol
1	.16547E-04	.34984E-04	.11300E-09
2	.16547E-04	.34984E-04	.11300E-09
3	.16547E-04	.34984E-04	.11300E-09
4	.16547E-04	.34984E-04	.11300E-09
5	.16547E-04	.34984E-04	.11300E-09
6	.16547E-04	.34984E-04	.11300E-09
7	.49297E-02	.10422E-01	.33664E-07
8	.49297E-02	.10422E-01	.33664E-07
9	.49297E-02	.10422E-01	.33664E-07
10	.49297E-02	.10422E-01	.33664E-07
11	.49297E-02	.10422E-01	.33664E-07
12	.49297E-02	.10422E-01	.33664E-07
13	.12300E-01	.26004E-01	.83993E-07
14	.12300E-01	.26004E-01	.83993E-07
15	.12300E-01	.26004E-01	.83993E-07
16	.12300E-01	.26004E-01	.83993E-07
17	.12300E-01	.26004E-01	.83993E-07
18	.12300E-01	.26004E-01	.83993E-07
19	.19670E-01	.41586E-01	.13432E-06
20	.19670E-01	.41586E-01	.13432E-06
21	.19670E-01	.41586E-01	.13432E-06
22	.19670E-01	.41586E-01	.13432E-06
23	.19670E-01	.41586E-01	.13432E-06
24	.19670E-01	.41586E-01	.13432E-06
25	.27040E-01	.57167E-01	.18465E-06
26	.27040E-01	.57167E-01	.18465E-06
27	.27040E-01	.57167E-01	.18465E-06
28	.27040E-01	.57167E-01	.18465E-06
29	.27040E-01	.57167E-01	.18465E-06
30	.27040E-01	.57167E-01	.18465E-06
31	.34410E-01	.72749E-01	.23498E-06
32	.34410E-01	.72749E-01	.23498E-06
33	.34410E-01	.72749E-01	.23498E-06
34	.34410E-01	.72749E-01	.23498E-06
35	.34410E-01	.72749E-01	.23498E-06
36	.34410E-01	.72749E-01	.23498E-06
37	.41781E-01	.88331E-01	.28531E-06
38	.41781E-01	.88331E-01	.28531E-06
39	.41781E-01	.88331E-01	.28531E-06
40	.41781E-01	.88331E-01	.28531E-06
41	.41781E-01	.88331E-01	.28531E-06
42	.41781E-01	.88331E-01	.28531E-06
43	.49151E-01	.10391	.33564E-06
44	.49151E-01	.10391	.33564E-06
45	.49151E-01	.10391	.33564E-06
46	.49151E-01	.10391	.33564E-06
47	.49151E-01	.10391	.33564E-06
48	.49151E-01	.10391	.33564E-06
49	.56521E-01	.11949	.38597E-06
50	.56521E-01	.11949	.38597E-06
51	.56521E-01	.11949	.38597E-06
52	.56521E-01	.11949	.38597E-06
53	.56521E-01	.11949	.38597E-06
54	.56521E-01	.11949	.38597E-06
55	.63891E-01	.13508	.43629E-06
56	.63891E-01	.13508	.43629E-06

57	.63891E-01	.13508	.43629E-06
58	.63891E-01	.13508	.43629E-06
59	.63891E-01	.13508	.43629E-06
60	.63891E-01	.13508	.43629E-06

Polygon 113
Time: 10.000

Cell	Cgas(g/cu.ft.)	Cliq(g/cu.ft.)	Csol
1	.96832E-04	.20472E-03	.66124E-09
2	.24800E-03	.52432E-03	.16935E-08
3	.44619E-03	.94333E-03	.30469E-08
4	.68621E-03	.14508E-02	.46860E-08
5	.96548E-03	.20412E-02	.65930E-08
6	.12844E-02	.27154E-02	.87706E-08
7	.16628E-02	.35155E-02	.11355E-07
8	.21365E-02	.45169E-02	.14589E-07
9	.27254E-02	.57619E-02	.18611E-07
10	.34151E-02	.72200E-02	.23321E-07
11	.41673E-02	.88104E-02	.28458E-07
12	.49439E-02	.10452E-01	.33761E-07
13	.57484E-02	.12153E-01	.39255E-07
14	.66240E-02	.14004E-01	.45233E-07
15	.76022E-02	.16072E-01	.51914E-07
16	.86684E-02	.18326E-01	.59195E-07
17	.97723E-02	.20660E-01	.66733E-07
18	.10862E-01	.22964E-01	.74174E-07
19	.11933E-01	.25228E-01	.81488E-07
20	.13028E-01	.27543E-01	.88963E-07
21	.14183E-01	.29985E-01	.96851E-07
22	.15391E-01	.32538E-01	.10510E-06
23	.16608E-01	.35112E-01	.11341E-06
24	.17789E-01	.37609E-01	.12148E-06
25	.18934E-01	.40031E-01	.12930E-06
26	.20090E-01	.42474E-01	.13719E-06
27	.21295E-01	.45022E-01	.14542E-06
28	.22544E-01	.47662E-01	.15395E-06
29	.23795E-01	.50307E-01	.16249E-06
30	.25004E-01	.52863E-01	.17075E-06
31	.26172E-01	.55332E-01	.17872E-06
32	.27346E-01	.57813E-01	.18674E-06
33	.28565E-01	.60390E-01	.19506E-06
34	.29824E-01	.63053E-01	.20366E-06
35	.31083E-01	.65714E-01	.21226E-06
36	.32296E-01	.68279E-01	.22054E-06
37	.33466E-01	.70752E-01	.22853E-06
38	.34638E-01	.73231E-01	.23654E-06
39	.35854E-01	.75801E-01	.24484E-06
40	.37107E-01	.78450E-01	.25339E-06
41	.38356E-01	.81090E-01	.26192E-06
42	.39556E-01	.83628E-01	.27012E-06
43	.40709E-01	.86066E-01	.27799E-06
44	.41861E-01	.88501E-01	.28586E-06
45	.43050E-01	.91016E-01	.29398E-06
46	.44272E-01	.93597E-01	.30232E-06
47	.45482E-01	.96157E-01	.31059E-06
48	.46636E-01	.98596E-01	.31846E-06
49	.47732E-01	.10091	.32595E-06
50	.48816E-01	.10321	.33336E-06
51	.49925E-01	.10555	.34092E-06
52	.51049E-01	.10793	.34860E-06

53	.52143E-01	.11024	.35607E-06
54	.53158E-01	.11238	.36300E-06
55	.54089E-01	.11435	.36936E-06
56	.54976E-01	.11623	.37542E-06
57	.55850E-01	.11808	.38138E-06
58	.56695E-01	.11986	.38715E-06
59	.57457E-01	.12147	.39236E-06
60	.58079E-01	.12279	.39661E-06

Polygon 113
Time: 20.000

Cell	Cgas(g/cu.ft.)	Cliq(g/cu.ft.)	Csol
1	.72006E-04	.15223E-03	.49171E-09
2	.18590E-03	.39302E-03	.12695E-08
3	.33815E-03	.71490E-03	.23091E-08
4	.52683E-03	.11138E-02	.35976E-08
5	.75114E-03	.15880E-02	.51294E-08
6	.10111E-02	.21376E-02	.69046E-08
7	.13074E-02	.27641E-02	.89281E-08
8	.16416E-02	.34707E-02	.11210E-07
9	.20164E-02	.42630E-02	.13769E-07
10	.24353E-02	.51486E-02	.16630E-07
11	.29024E-02	.61362E-02	.19820E-07
12	.34213E-02	.72331E-02	.23363E-07
13	.39935E-02	.84429E-02	.27271E-07
14	.46190E-02	.97652E-02	.31542E-07
15	.52965E-02	.11198E-01	.36169E-07
16	.60251E-02	.12738E-01	.41144E-07
17	.68038E-02	.14384E-01	.46461E-07
18	.76315E-02	.16134E-01	.52113E-07
19	.85057E-02	.17983E-01	.58084E-07
20	.94226E-02	.19921E-01	.64345E-07
21	.10377E-01	.21939E-01	.70863E-07
22	.11365E-01	.24028E-01	.77611E-07
23	.12384E-01	.26181E-01	.84564E-07
24	.13429E-01	.28392E-01	.91706E-07
25	.14500E-01	.30655E-01	.99015E-07
26	.15591E-01	.32962E-01	.10647E-06
27	.16699E-01	.35305E-01	.11404E-06
28	.17822E-01	.37679E-01	.12170E-06
29	.18958E-01	.40079E-01	.12946E-06
30	.20105E-01	.42505E-01	.13729E-06
31	.21262E-01	.44952E-01	.14519E-06
32	.22428E-01	.47416E-01	.15315E-06
33	.23599E-01	.49892E-01	.16115E-06
34	.24774E-01	.52377E-01	.16918E-06
35	.25953E-01	.54868E-01	.17722E-06
36	.27134E-01	.57366E-01	.18529E-06
37	.28318E-01	.59870E-01	.19338E-06
38	.29503E-01	.62374E-01	.20147E-06
39	.30686E-01	.64875E-01	.20955E-06
40	.31866E-01	.67370E-01	.21761E-06
41	.33042E-01	.69857E-01	.22564E-06
42	.34215E-01	.72336E-01	.23364E-06
43	.35382E-01	.74804E-01	.24162E-06
44	.36542E-01	.77257E-01	.24954E-06
45	.37693E-01	.79688E-01	.25739E-06
46	.38830E-01	.82094E-01	.26516E-06
47	.39954E-01	.84470E-01	.27284E-06
48	.41063E-01	.86814E-01	.28041E-06

49	.42153E-01	.89119E-01	.28786E-06
50	.43222E-01	.91379E-01	.29515E-06
51	.44264E-01	.93582E-01	.30227E-06
52	.45275E-01	.95718E-01	.30917E-06
53	.46249E-01	.97778E-01	.31582E-06
54	.47183E-01	.99753E-01	.32220E-06
55	.48070E-01	.10163	.32826E-06
56	.48902E-01	.10339	.33394E-06
57	.49670E-01	.10501	.33918E-06
58	.50362E-01	.10647	.34391E-06
59	.50969E-01	.10776	.34806E-06
60	.51479E-01	.10883	.35153E-06

Polygon 113
Time: 30.000

Cell	Cgas(g/cu.ft.)	Cliq(g/cu.ft.)	Csol
1	.53276E-04	.11264E-03	.36381E-09
2	.13750E-03	.29070E-03	.93895E-09
3	.25009E-03	.52873E-03	.17078E-08
4	.38970E-03	.82389E-03	.26612E-08
5	.55588E-03	.11752E-02	.37960E-08
6	.74883E-03	.15832E-02	.51136E-08
7	.96919E-03	.20490E-02	.66183E-08
8	.12179E-02	.25749E-02	.83169E-08
9	.14962E-02	.31633E-02	.10217E-07
10	.18055E-02	.38172E-02	.12330E-07
11	.21473E-02	.45398E-02	.14664E-07
12	.25233E-02	.53346E-02	.17231E-07
13	.29350E-02	.62052E-02	.20043E-07
14	.33844E-02	.71551E-02	.23111E-07
15	.38728E-02	.81877E-02	.26446E-07
16	.44016E-02	.93057E-02	.30057E-07
17	.49717E-02	.10511E-01	.33951E-07
18	.55837E-02	.11805E-01	.38130E-07
19	.62376E-02	.13187E-01	.42595E-07
20	.69332E-02	.14658E-01	.47345E-07
21	.76698E-02	.16215E-01	.52375E-07
22	.84462E-02	.17857E-01	.57677E-07
23	.92611E-02	.19580E-01	.63242E-07
24	.10113E-01	.21380E-01	.69056E-07
25	.10998E-01	.23253E-01	.75106E-07
26	.11917E-01	.25194E-01	.81376E-07
27	.12865E-01	.27198E-01	.87849E-07
28	.13840E-01	.29260E-01	.94510E-07
29	.14840E-01	.31375E-01	.10134E-06
30	.15863E-01	.33537E-01	.10833E-06
31	.16906E-01	.35742E-01	.11545E-06
32	.17967E-01	.37984E-01	.12269E-06
33	.19043E-01	.40260E-01	.13004E-06
34	.20132E-01	.42563E-01	.13748E-06
35	.21233E-01	.44891E-01	.14500E-06
36	.22344E-01	.47238E-01	.15258E-06
37	.23461E-01	.49601E-01	.16021E-06
38	.24584E-01	.51976E-01	.16788E-06
39	.25711E-01	.54358E-01	.17558E-06
40	.26840E-01	.56745E-01	.18329E-06
41	.27969E-01	.59131E-01	.19099E-06
42	.29096E-01	.61513E-01	.19869E-06
43	.30219E-01	.63887E-01	.20636E-06
44	.31335E-01	.66248E-01	.21398E-06

45	.32444E-01	.68592E-01	.22155E-06
46	.33542E-01	.70913E-01	.22905E-06
47	.34626E-01	.73205E-01	.23645E-06
48	.35694E-01	.75463E-01	.24375E-06
49	.36743E-01	.77680E-01	.25091E-06
50	.37768E-01	.79848E-01	.25791E-06
51	.38766E-01	.81958E-01	.26473E-06
52	.39733E-01	.84002E-01	.27133E-06
53	.40663E-01	.85969E-01	.27768E-06
54	.41551E-01	.87846E-01	.28374E-06
55	.42391E-01	.89621E-01	.28947E-06
56	.43174E-01	.91277E-01	.29482E-06
57	.43893E-01	.92798E-01	.29974E-06
58	.44540E-01	.94164E-01	.30415E-06
59	.45103E-01	.95354E-01	.30799E-06
60	.45570E-01	.96343E-01	.31119E-06

V-Leach, VER 1.1
Jake Turin, 11/91
PGA V-leach model, polygon screen-TCE-11/3/92-POLY113.INP. Old chem, New soil.
1 polygons.
Timestep = 1.00 years. Simulation length = 30.00 years.
Printout every 1.00 years. Vertical profile stored every 10.00 years.
Koc = 123.60 ml/g, .43649E-02cu.ft./g
Kh = .47300 (dimensionless).
Aqueous solubility = 1100.0 mg/l, 31.149 g/cu.ft
Free air diffusion coefficient = .70290 sq. m/day, 2761.7 sq.ft./yr

Polygon 1
Polygon 113
Polygon area = .15500E+06sq. ft.
60 cells, each cell 1.000 ft. thick.
Soil Properties:
Bulk density = 1.6400 g/ml, 46440. g/cu.ft.
Porosity = .3810 Volumetric water content = .2550
Organic carbon content = .00074000
Recharge Rate = .19685000 ft/yr
Conc. in recharge water = .00000 mg/l, .00000 g/cu.ft
Atmospheric concentration = .00000 mg/l, .00000 g/cu.ft
Water table is impermeable to gas diffusion.

Calculation of Total TCE Mass and Revised Vertical Distributions in Polygon 113 using HGC Distribution equations and Revised Soil Physical Data

0.582 Cs **	Cz = (74.527*z - 371.636)Cs

Cz (ug/L) Vert. Dist. Eq.	Calculated Depth Interval (z)	Total Depth Interval (feet)	Total Soil Conc Ct (ug/Kg)	Mt (ug/cc)	Volume of Soil (cubic ft)	Mass TCE (grams)	Mass TCE (pounds)
0.582	3	6	0.35	5.72E-04	930000	15.06	0.03
174.08	9	6	104.27	0.17	930000	4503.50	9.93
434.33	15	6	260.16	0.43	930000	11236.19	24.77
694.58	21	6	416.05	0.68	930000	17968.89	39.61
954.83	27	6	571.94	0.94	930000	24701.58	54.46
1215.07	33	6	727.83	1.19	930000	31434.27	69.30
1475.32	39	6	883.72	1.45	930000	38166.96	84.14
1735.57	45	6	1039.61	1.70	930000	44899.65	98.99
1995.82	51	6	1195.50	1.96	930000	51632.35	113.83
2256.07	57	6	1351.38	2.22	930000	58365.04	128.67
10936.24		60	6550.81	10.74		282923.49	623.74

** Cs Determined as mathematical average of VOC concentrations for polygon(s) listed in Table A-1 of HGC, 1989.

**** Mixing Cell Output ****

PGA Mixcell Input Data

**** Batch 1 ****
Polygon 113

Time Interval (years)	Mass In (grams)	Mass/Area (g/sq m)	GW Concentration (ugrams/l)
1.00	4121.200	0.286	32.697
2.00	4098.800	0.285	52.887
3.00	4071.800	0.283	65.249
4.00	4039.700	0.281	72.694
5.00	4002.600	0.278	77.038
6.00	3961.400	0.275	79.417
7.00	3917.000	0.272	80.546
8.00	3870.800	0.269	80.883
9.00	3823.700	0.266	80.719
10.00	3776.500	0.262	80.243
11.00	3729.900	0.259	79.576
12.00	3684.000	0.256	78.797
13.00	3639.100	0.253	77.955
14.00	3595.200	0.250	77.083
15.00	3552.100	0.247	76.197
16.00	3509.900	0.244	75.311
17.00	3468.300	0.241	74.428
18.00	3427.300	0.238	73.554
19.00	3386.800	0.235	72.687
20.00	3346.800	0.232	71.830
21.00	3307.100	0.230	70.982
22.00	3267.900	0.227	70.142
23.00	3228.900	0.224	69.309
24.00	3190.300	0.222	68.485
25.00	3152.000	0.219	67.667
26.00	3113.900	0.216	66.855
27.00	3076.100	0.214	66.050
28.00	3038.500	0.211	65.250
29.00	3001.200	0.208	64.456
30.00	2964.000	0.206	63.666

**** Batch 2 ****
Polygon 111

Time Interval (years)	Mass In (grams)	Mass/Area (g/sq m)	GW Concentration (ugrams/l)
1.00	2339.200	0.131	15.284
2.00	2326.500	0.130	25.195
3.00	2311.200	0.129	31.576
4.00	2293.000	0.128	35.630
5.00	2272.000	0.127	38.144
6.00	2248.600	0.126	39.635
7.00	2223.400	0.124	40.445

```
PGA V-leach model,poly screen-TCE-11/10/92POLY41-43,8A-10A.INP Rev soil,HGC chem
    1
       1.0          30.          1.0          10.
     123.6         .473        1100.        .7029
lygon 41-43, 8A-10A
    848000.           1.    .196850         1.64         .381         .255     .00074
         0.           0.          -1.
    60
     1     6        0.06
     7    12       18.27
    13    18       45.60
    19    24       72.92
    25    30      100.24
    31    36      127.56
    37    42      154.88
    43    48      182.20
    49    54      209.52
    55    60      236.84
```

V-Leach, VER 1.1
Jake Turin, 11/91
PGA V-leach model,poly screen-TCE-11/10/92POLY41-43,8A-10A.INP Rev soil,HGC chem

Polygon 1
At time = .00, total mass in vadose zone = .31989 g/sq.ft.
Mass in gas phase = .41035E-01g/sq.ft.
Mass in liquid phase = .17558 g/sq.ft.
Mass sorbed = .10328 g/sq.ft.

Polygon 1
At time = 1.00, total mass in vadose zone = .31507 g/sq.ft.
Mass in gas phase = .40417E-01g/sq.ft.
Mass in liquid phase = .17293 g/sq.ft.
Mass sorbed = .10172 g/sq.ft.

Since last printout at time = .00
Change in Total Mass = -.48234E-02g/sq.ft.
Advection in from atmosphere = .00000 g/sq.ft.
Advection in from water table = -.46598E-02g/sq.ft.
Diffusion in from atmosphere = -.16356E-03g/sq.ft.
Diffusion in from water table = .00000 g/sq.ft.
Total inflow at boundaries = -.48233E-02g/sq.ft.
Mass discrepancy = -.80559E-07g/sq.ft.

Since beginning of run at time = 0.0
Change in Total Mass = -.48234E-02g/sq.ft.
Advection in from atmosphere = .00000 g/sq.ft.
Advection in from water table = -.46598E-02g/sq.ft.
Diffusion in from atmosphere = -.16356E-03g/sq.ft.
Diffusion in from water table = .00000 g/sq.ft.
Total inflow at boundaries = -.48233E-02g/sq.ft.
Mass discrepancy = -.80559E-07g/sq.ft.

Polygon 1
At time = 2.00, total mass in vadose zone = .31027 g/sq.ft.
Mass in gas phase = .39801E-01g/sq.ft.
Mass in liquid phase = .17030 g/sq.ft.
Mass sorbed = .10017 g/sq.ft.

Since last printout at time = 1.00
Change in Total Mass = -.47961E-02g/sq.ft.
Advection in from atmosphere = .00000 g/sq.ft.
Advection in from water table = -.46345E-02g/sq.ft.
Diffusion in from atmosphere = -.16177E-03g/sq.ft.
Diffusion in from water table = .00000 g/sq.ft.
Total inflow at boundaries = -.47962E-02g/sq.ft.
Mass discrepancy = .12107E-06g/sq.ft.

Since beginning of run at time = 0.0
Change in Total Mass = -.96195E-02g/sq.ft.
Advection in from atmosphere = .00000 g/sq.ft.
Advection in from water table = -.92943E-02g/sq.ft.
Diffusion in from atmosphere = -.32532E-03g/sq.ft.
Diffusion in from water table = .00000 g/sq.ft.
Total inflow at boundaries = -.96196E-02g/sq.ft.
Mass discrepancy = .40978E-07g/sq.ft.

```
Polygon   1
At time =       3.00, total mass in vadose zone =     .30551    g/sq.ft.
Mass in gas phase     =       .39190E-01g/sq.ft.
Mass in liquid phase  =       .16768    g/sq.ft.
Mass sorbed           =       .98637E-01g/sq.ft.

Since last printout at time =       2.00
               Change in Total Mass =     -.47632E-02g/sq.ft.
                    Advection in from atmosphere =       .00000    g/sq.ft.
                    Advection in from water table =     -.46039E-02g/sq.ft.
                    Diffusion in from atmosphere =      -.15923E-03g/sq.ft.
                    Diffusion in from water table =      .00000    g/sq.ft.
               Total inflow at boundaries =     -.47632E-02g/sq.ft.
               Mass discrepancy =     -.93132E-08g/sq.ft.

Since beginning of run at time = 0.0
               Change in Total Mass =     -.14383E-01g/sq.ft.
                    Advection in from atmosphere =       .00000    g/sq.ft.
                    Advection in from water table =     -.13898E-01g/sq.ft.
                    Diffusion in from atmosphere =      -.48456E-03g/sq.ft.
                    Diffusion in from water table =      .00000    g/sq.ft.
               Total inflow at boundaries =     -.14383E-01g/sq.ft.
               Mass discrepancy =      .30734E-07g/sq.ft.


Polygon   1
At time =       4.00, total mass in vadose zone =     .30079    g/sq.ft.
Mass in gas phase     =       .38584E-01g/sq.ft.
Mass in liquid phase  =       .16509    g/sq.ft.
Mass sorbed           =       .97112E-01g/sq.ft.

Since last printout at time =       3.00
               Change in Total Mass =     -.47238E-02g/sq.ft.
                    Advection in from atmosphere =       .00000    g/sq.ft.
                    Advection in from water table =     -.45676E-02g/sq.ft.
                    Diffusion in from atmosphere =      -.15617E-03g/sq.ft.
                    Diffusion in from water table =      .00000    g/sq.ft.
               Total inflow at boundaries =     -.47238E-02g/sq.ft.
               Mass discrepancy =      .58673E-07g/sq.ft.

Since beginning of run at time = 0.0
               Change in Total Mass =     -.19106E-01g/sq.ft.
                    Advection in from atmosphere =       .00000    g/sq.ft.
                    Advection in from water table =     -.18466E-01g/sq.ft.
                    Diffusion in from atmosphere =      -.64073E-03g/sq.ft.
                    Diffusion in from water table =      .00000    g/sq.ft.
               Total inflow at boundaries =     -.19107E-01g/sq.ft.
               Mass discrepancy =      .89407E-07g/sq.ft.


Polygon   1
At time =       5.00, total mass in vadose zone =     .29611    g/sq.ft.
Mass in gas phase     =       .37984E-01g/sq.ft.
Mass in liquid phase  =       .16252    g/sq.ft.
Mass sorbed           =       .95602E-01g/sq.ft.

Since last printout at time =       4.00
               Change in Total Mass =     -.46785E-02g/sq.ft.
```

```
                    Advection in from atmosphere =       .00000    g/sq.ft.
                    Advection in from water table =     -.45258E-02g/sq.ft.
                    Diffusion in from atmosphere =      -.15274E-03g/sq.ft.
                    Diffusion in from water table =      .00000    g/sq.ft.
               Total inflow at boundaries =     -.46785E-02g/sq.ft.
               Mass discrepancy =     -.19558E-07g/sq.ft.

Since beginning of run at time = 0.0
               Change in Total Mass =     -.23785E-01g/sq.ft.
                    Advection in from atmosphere =       .00000    g/sq.ft.
                    Advection in from water table =     -.22992E-01g/sq.ft.
                    Diffusion in from atmosphere =      -.79347E-03g/sq.ft.
                    Diffusion in from water table =      .00000    g/sq.ft.
               Total inflow at boundaries =     -.23785E-01g/sq.ft.
               Mass discrepancy =      .68918E-07g/sq.ft.


Polygon   1
At time =       6.00, total mass in vadose zone =     .29148    g/sq.ft.
Mass in gas phase     =       .37390E-01g/sq.ft.
Mass in liquid phase  =       .15998    g/sq.ft.
Mass sorbed           =       .94107E-01g/sq.ft.

Since last printout at time =       5.00
               Change in Total Mass =     -.46282E-02g/sq.ft.
                    Advection in from atmosphere =       .00000    g/sq.ft.
                    Advection in from water table =     -.44791E-02g/sq.ft.
                    Diffusion in from atmosphere =      -.14907E-03g/sq.ft.
                    Diffusion in from water table =      .00000    g/sq.ft.
               Total inflow at boundaries =     -.46282E-02g/sq.ft.
               Mass discrepancy =     -.22352E-07g/sq.ft.

Since beginning of run at time = 0.0
               Change in Total Mass =     -.28413E-01g/sq.ft.
                    Advection in from atmosphere =       .00000    g/sq.ft.
                    Advection in from water table =     -.27471E-01g/sq.ft.
                    Diffusion in from atmosphere =      -.94254E-03g/sq.ft.
                    Diffusion in from water table =      .00000    g/sq.ft.
               Total inflow at boundaries =     -.28413E-01g/sq.ft.
               Mass discrepancy =      .46566E-07g/sq.ft.


Polygon   1
At time =       7.00, total mass in vadose zone =     .28690    g/sq.ft.
Mass in gas phase     =       .36804E-01g/sq.ft.
Mass in liquid phase  =       .15747    g/sq.ft.
Mass sorbed           =       .92630E-01g/sq.ft.

Since last printout at time =       6.00
               Change in Total Mass =     -.45742E-02g/sq.ft.
                    Advection in from atmosphere =       .00000    g/sq.ft.
                    Advection in from water table =     -.44290E-02g/sq.ft.
                    Diffusion in from atmosphere =      -.14525E-03g/sq.ft.
                    Diffusion in from water table =      .00000    g/sq.ft.
               Total inflow at boundaries =     -.45742E-02g/sq.ft.
               Mass discrepancy =      .18626E-07g/sq.ft.

Since beginning of run at time = 0.0
               Change in Total Mass =     -.32987E-01g/sq.ft.
                    Advection in from atmosphere =       .00000    g/sq.ft.
```

```
                Advection in from water table =     -.31900E-01g/sq.ft.
                Diffusion in from atmosphere =      -.10878E-02g/sq.ft.
                Diffusion in from water table =       .00000    g/sq.ft.
           Total inflow at boundaries =     -.32987E-01g/sq.ft.
           Mass discrepancy =      .63330E-07g/sq.ft.


Polygon   1
At time =       8.00, total mass in vadose zone =     .28239    g/sq.ft.
Mass in gas phase     =       .36224E-01g/sq.ft.
Mass in liquid phase  =       .15499    g/sq.ft.
Mass sorbed           =       .91172E-01g/sq.ft.

Since last printout at time =       7.00
           Change in Total Mass =     -.45180E-02g/sq.ft.
                Advection in from atmosphere =       .00000    g/sq.ft.
                Advection in from water table =     -.43767E-02g/sq.ft.
                Diffusion in from atmosphere =      -.14134E-03g/sq.ft.
                Diffusion in from water table =       .00000    g/sq.ft.
           Total inflow at boundaries =     -.45180E-02g/sq.ft.
           Mass discrepancy =      .21420E-07g/sq.ft.

Since beginning of run at time = 0.0
           Change in Total Mass =     -.37505E-01g/sq.ft.
                Advection in from atmosphere =       .00000    g/sq.ft.
                Advection in from water table =     -.36276E-01g/sq.ft.
                Diffusion in from atmosphere =      -.12291E-02g/sq.ft.
                Diffusion in from water table =       .00000    g/sq.ft.
           Total inflow at boundaries =     -.37506E-01g/sq.ft.
           Mass discrepancy =      .85682E-07g/sq.ft.


Polygon   1
At time =       9.00, total mass in vadose zone =     .27793    g/sq.ft.
Mass in gas phase     =       .35652E-01g/sq.ft.
Mass in liquid phase  =       .15254    g/sq.ft.
Mass sorbed           =       .89731E-01g/sq.ft.

Since last printout at time =       8.00
           Change in Total Mass =     -.44608E-02g/sq.ft.
                Advection in from atmosphere =       .00000    g/sq.ft.
                Advection in from water table =     -.43234E-02g/sq.ft.
                Diffusion in from atmosphere =      -.13740E-03g/sq.ft.
                Diffusion in from water table =       .00000    g/sq.ft.
           Total inflow at boundaries =     -.44608E-02g/sq.ft.
           Mass discrepancy =     -.21420E-07g/sq.ft.

Since beginning of run at time = 0.0
           Change in Total Mass =     -.41966E-01g/sq.ft.
                Advection in from atmosphere =       .00000    g/sq.ft.
                Advection in from water table =     -.40600E-01g/sq.ft.
                Diffusion in from atmosphere =      -.13665E-02g/sq.ft.
                Diffusion in from water table =       .00000    g/sq.ft.
           Total inflow at boundaries =     -.41966E-01g/sq.ft.
           Mass discrepancy =      .63330E-07g/sq.ft.


Polygon   1
At time =      10.00, total mass in vadose zone =     .27352    g/sq.ft.
Mass in gas phase     =       .35087E-01g/sq.ft.
```

```
Mass in liquid phase  =        .15013    g/sq.ft.
Mass sorbed           =        .88310E-01g/sq.ft.

Since last printout at time =       9.00
               Change in Total Mass =     -.44036E-02g/sq.ft.
                    Advection in from atmosphere =       .00000    g/sq.ft.
                    Advection in from water table =     -.42701E-02g/sq.ft.
                    Diffusion in from atmosphere =      -.13348E-03g/sq.ft.
                    Diffusion in from water table =      .00000    g/sq.ft.
               Total inflow at boundaries =     -.44036E-02g/sq.ft.
               Mass discrepancy =      .16298E-07g/sq.ft.

Since beginning of run at time = 0.0
               Change in Total Mass =     -.46370E-01g/sq.ft.
                    Advection in from atmosphere =       .00000    g/sq.ft.
                    Advection in from water table =     -.44870E-01g/sq.ft.
                    Diffusion in from atmosphere =      -.15000E-02g/sq.ft.
                    Diffusion in from water table =      .00000    g/sq.ft.
               Total inflow at boundaries =     -.46370E-01g/sq.ft.
               Mass discrepancy =      .81956E-07g/sq.ft.


Polygon   1
At time =      11.00, total mass in vadose zone =     .26918    g/sq.ft.
Mass in gas phase     =        .34529E-01g/sq.ft.
Mass in liquid phase  =        .14774    g/sq.ft.
Mass sorbed           =        .86906E-01g/sq.ft.

Since last printout at time =      10.00
               Change in Total Mass =     -.43469E-02g/sq.ft.
                    Advection in from atmosphere =       .00000    g/sq.ft.
                    Advection in from water table =     -.42174E-02g/sq.ft.
                    Diffusion in from atmosphere =      -.12959E-03g/sq.ft.
                    Diffusion in from water table =      .00000    g/sq.ft.
               Total inflow at boundaries =     -.43469E-02g/sq.ft.
               Mass discrepancy =      .39116E-07g/sq.ft.

Since beginning of run at time = 0.0
               Change in Total Mass =     -.50717E-01g/sq.ft.
                    Advection in from atmosphere =       .00000    g/sq.ft.
                    Advection in from water table =     -.49087E-01g/sq.ft.
                    Diffusion in from atmosphere =      -.16296E-02g/sq.ft.
                    Diffusion in from water table =      .00000    g/sq.ft.
               Total inflow at boundaries =     -.50717E-01g/sq.ft.
               Mass discrepancy =      .12293E-06g/sq.ft.


Polygon   1
At time =      12.00, total mass in vadose zone =     .26488    g/sq.ft.
Mass in gas phase     =        .33979E-01g/sq.ft.
Mass in liquid phase  =        .14538    g/sq.ft.
Mass sorbed           =        .85521E-01g/sq.ft.

Since last printout at time =      11.00
               Change in Total Mass =     -.42913E-02g/sq.ft.
                    Advection in from atmosphere =       .00000    g/sq.ft.
                    Advection in from water table =     -.41655E-02g/sq.ft.
                    Diffusion in from atmosphere =      -.12577E-03g/sq.ft.
                    Diffusion in from water table =      .00000    g/sq.ft.
               Total inflow at boundaries =     -.42913E-02g/sq.ft.
```

Mass discrepancy = -.29337E-07g/sq.ft.

Since beginning of run at time = 0.0
Change in Total Mass = -.55008E-01g/sq.ft.
Advection in from atmosphere = .00000 g/sq.ft.
Advection in from water table = -.53253E-01g/sq.ft.
Diffusion in from atmosphere = -.17554E-02g/sq.ft.
Diffusion in from water table = .00000 g/sq.ft.
Total inflow at boundaries = -.55008E-01g/sq.ft.
Mass discrepancy = .93132E-07g/sq.ft.

Polygon 1
At time = 13.00, total mass in vadose zone = .26065 g/sq.ft.
Mass in gas phase = .33435E-01g/sq.ft.
Mass in liquid phase = .14306 g/sq.ft.
Mass sorbed = .84153E-01g/sq.ft.

Since last printout at time = 12.00
Change in Total Mass = -.42368E-02g/sq.ft.
Advection in from atmosphere = .00000 g/sq.ft.
Advection in from water table = -.41148E-02g/sq.ft.
Diffusion in from atmosphere = -.12202E-03g/sq.ft.
Diffusion in from water table = .00000 g/sq.ft.
Total inflow at boundaries = -.42368E-02g/sq.ft.
Mass discrepancy = .30268E-07g/sq.ft.

Since beginning of run at time = 0.0
Change in Total Mass = -.59245E-01g/sq.ft.
Advection in from atmosphere = .00000 g/sq.ft.
Advection in from water table = -.57368E-01g/sq.ft.
Diffusion in from atmosphere = -.18774E-02g/sq.ft.
Diffusion in from water table = .00000 g/sq.ft.
Total inflow at boundaries = -.59245E-01g/sq.ft.
Mass discrepancy = .11921E-06g/sq.ft.

Polygon 1
At time = 14.00, total mass in vadose zone = .25646 g/sq.ft.
Mass in gas phase = .32899E-01g/sq.ft.
Mass in liquid phase = .14076 g/sq.ft.
Mass sorbed = .82802E-01g/sq.ft.

Since last printout at time = 13.00
Change in Total Mass = -.41834E-02g/sq.ft.
Advection in from atmosphere = .00000 g/sq.ft.
Advection in from water table = -.40651E-02g/sq.ft.
Diffusion in from atmosphere = -.11836E-03g/sq.ft.
Diffusion in from water table = .00000 g/sq.ft.
Total inflow at boundaries = -.41834E-02g/sq.ft.
Mass discrepancy = -.41910E-08g/sq.ft.

Since beginning of run at time = 0.0
Change in Total Mass = -.63428E-01g/sq.ft.
Advection in from atmosphere = .00000 g/sq.ft.
Advection in from water table = -.61433E-01g/sq.ft.
Diffusion in from atmosphere = -.19958E-02g/sq.ft.
Diffusion in from water table = .00000 g/sq.ft.
Total inflow at boundaries = -.63428E-01g/sq.ft.
Mass discrepancy = .11921E-06g/sq.ft.

```
Polygon   1
At time =      15.00, total mass in vadose zone =     .25233    g/sq.ft.
Mass in gas phase     =       .32369E-01g/sq.ft.
Mass in liquid phase  =       .13850    g/sq.ft.
Mass sorbed           =       .81468E-01g/sq.ft.

Since last printout at time =      14.00
               Change in Total Mass =     -.41312E-02g/sq.ft.
                    Advection in from atmosphere =       .00000    g/sq.ft.
                    Advection in from water table =     -.40164E-02g/sq.ft.
                    Diffusion in from atmosphere =      -.11479E-03g/sq.ft.
                    Diffusion in from water table =       .00000    g/sq.ft.
               Total inflow at boundaries =     -.41312E-02g/sq.ft.
               Mass discrepancy =      .11642E-07g/sq.ft.

Since beginning of run at time = 0.0
               Change in Total Mass =     -.67559E-01g/sq.ft.
                    Advection in from atmosphere =       .00000    g/sq.ft.
                    Advection in from water table =     -.65449E-01g/sq.ft.
                    Diffusion in from atmosphere =      -.21105E-02g/sq.ft.
                    Diffusion in from water table =       .00000    g/sq.ft.
               Total inflow at boundaries =     -.67560E-01g/sq.ft.
               Mass discrepancy =      .12666E-06g/sq.ft.


Polygon   1
At time =      16.00, total mass in vadose zone =     .24825    g/sq.ft.
Mass in gas phase     =       .31845E-01g/sq.ft.
Mass in liquid phase  =       .13626    g/sq.ft.
Mass sorbed           =       .80151E-01g/sq.ft.

Since last printout at time =      15.00
               Change in Total Mass =     -.40799E-02g/sq.ft.
                    Advection in from atmosphere =       .00000    g/sq.ft.
                    Advection in from water table =     -.39686E-02g/sq.ft.
                    Diffusion in from atmosphere =      -.11132E-03g/sq.ft.
                    Diffusion in from water table =       .00000    g/sq.ft.
               Total inflow at boundaries =     -.40799E-02g/sq.ft.
               Mass discrepancy =      .33062E-07g/sq.ft.

Since beginning of run at time = 0.0
               Change in Total Mass =     -.71639E-01g/sq.ft.
                    Advection in from atmosphere =       .00000    g/sq.ft.
                    Advection in from water table =     -.69418E-01g/sq.ft.
                    Diffusion in from atmosphere =      -.22219E-02g/sq.ft.
                    Diffusion in from water table =       .00000    g/sq.ft.
               Total inflow at boundaries =     -.71639E-01g/sq.ft.
               Mass discrepancy =      .15646E-06g/sq.ft.


Polygon   1
At time =      17.00, total mass in vadose zone =     .24422    g/sq.ft.
Mass in gas phase     =       .31329E-01g/sq.ft.
Mass in liquid phase  =       .13404    g/sq.ft.
Mass sorbed           =       .78850E-01g/sq.ft.

Since last printout at time =      16.00
               Change in Total Mass =     -.40295E-02g/sq.ft.
```

```
                    Advection in from atmosphere =       .00000    g/sq.ft.
                    Advection in from water table =     -.39216E-02g/sq.ft.
                    Diffusion in from atmosphere =      -.10796E-03g/sq.ft.
                    Diffusion in from water table =       .00000    g/sq.ft.
               Total inflow at boundaries =     -.40295E-02g/sq.ft.
               Mass discrepancy =      .93132E-08g/sq.ft.

Since beginning of run at time = 0.0
               Change in Total Mass =     -.75669E-01g/sq.ft.
                    Advection in from atmosphere =       .00000    g/sq.ft.
                    Advection in from water table =     -.73339E-01g/sq.ft.
                    Diffusion in from atmosphere =      -.23298E-02g/sq.ft.
                    Diffusion in from water table =       .00000    g/sq.ft.
               Total inflow at boundaries =     -.75669E-01g/sq.ft.
               Mass discrepancy =      .16391E-06g/sq.ft.


Polygon   1
At time =      18.00, total mass in vadose zone =     .24024    g/sq.ft.
Mass in gas phase     =       .30818E-01g/sq.ft.
Mass in liquid phase  =       .13186    g/sq.ft.
Mass sorbed           =       .77565E-01g/sq.ft.

Since last printout at time =      17.00
               Change in Total Mass =     -.39799E-02g/sq.ft.
                    Advection in from atmosphere =       .00000    g/sq.ft.
                    Advection in from water table =     -.38752E-02g/sq.ft.
                    Diffusion in from atmosphere =      -.10469E-03g/sq.ft.
                    Diffusion in from water table =       .00000    g/sq.ft.
               Total inflow at boundaries =     -.39799E-02g/sq.ft.
               Mass discrepancy =     -.30268E-07g/sq.ft.

Since beginning of run at time = 0.0
               Change in Total Mass =     -.79649E-01g/sq.ft.
                    Advection in from atmosphere =       .00000    g/sq.ft.
                    Advection in from water table =     -.77214E-01g/sq.ft.
                    Diffusion in from atmosphere =      -.24345E-02g/sq.ft.
                    Diffusion in from water table =       .00000    g/sq.ft.
               Total inflow at boundaries =     -.79649E-01g/sq.ft.
               Mass discrepancy =      .13411E-06g/sq.ft.


Polygon   1
At time =      19.00, total mass in vadose zone =     .23631    g/sq.ft.
Mass in gas phase     =       .30314E-01g/sq.ft.
Mass in liquid phase  =       .12970    g/sq.ft.
Mass sorbed           =       .76296E-01g/sq.ft.

Since last printout at time =      18.00
               Change in Total Mass =     -.39309E-02g/sq.ft.
                    Advection in from atmosphere =       .00000    g/sq.ft.
                    Advection in from water table =     -.38294E-02g/sq.ft.
                    Diffusion in from atmosphere =      -.10153E-03g/sq.ft.
                    Diffusion in from water table =       .00000    g/sq.ft.
               Total inflow at boundaries =     -.39310E-02g/sq.ft.
               Mass discrepancy =      .34925E-07g/sq.ft.

Since beginning of run at time = 0.0
               Change in Total Mass =     -.83580E-01g/sq.ft.
                    Advection in from atmosphere =       .00000    g/sq.ft.
```

```
                    Advection in from water table =     -.81044E-01g/sq.ft.
                    Diffusion in from atmosphere =      -.25361E-02g/sq.ft.
                    Diffusion in from water table =      .00000    g/sq.ft.
               Total inflow at boundaries =     -.83580E-01g/sq.ft.
               Mass discrepancy =      .17136E-06g/sq.ft.


Polygon   1
At time =      20.00, total mass in vadose zone =     .23243    g/sq.ft.
Mass in gas phase     =       .29816E-01g/sq.ft.
Mass in liquid phase  =       .12757    g/sq.ft.
Mass sorbed           =       .75043E-01g/sq.ft.

Since last printout at time =      19.00
               Change in Total Mass =     -.38826E-02g/sq.ft.
                    Advection in from atmosphere =       .00000    g/sq.ft.
                    Advection in from water table =     -.37842E-02g/sq.ft.
                    Diffusion in from atmosphere =      -.98473E-04g/sq.ft.
                    Diffusion in from water table =      .00000    g/sq.ft.
               Total inflow at boundaries =     -.38827E-02g/sq.ft.
               Mass discrepancy =      .40280E-07g/sq.ft.

Since beginning of run at time = 0.0
               Change in Total Mass =     -.87462E-01g/sq.ft.
                    Advection in from atmosphere =       .00000    g/sq.ft.
                    Advection in from water table =     -.84828E-01g/sq.ft.
                    Diffusion in from atmosphere =      -.26345E-02g/sq.ft.
                    Diffusion in from water table =      .00000    g/sq.ft.
               Total inflow at boundaries =     -.87463E-01g/sq.ft.
               Mass discrepancy =      .20862E-06g/sq.ft.


Polygon   1
At time =      21.00, total mass in vadose zone =     .22860    g/sq.ft.
Mass in gas phase     =       .29324E-01g/sq.ft.
Mass in liquid phase  =       .12547    g/sq.ft.
Mass sorbed           =       .73804E-01g/sq.ft.

Since last printout at time =      20.00
               Change in Total Mass =     -.38349E-02g/sq.ft.
                    Advection in from atmosphere =       .00000    g/sq.ft.
                    Advection in from water table =     -.37394E-02g/sq.ft.
                    Diffusion in from atmosphere =      -.95514E-04g/sq.ft.
                    Diffusion in from water table =      .00000    g/sq.ft.
               Total inflow at boundaries =     -.38349E-02g/sq.ft.
               Mass discrepancy =     -.10477E-07g/sq.ft.

Since beginning of run at time = 0.0
               Change in Total Mass =     -.91297E-01g/sq.ft.
                    Advection in from atmosphere =       .00000    g/sq.ft.
                    Advection in from water table =     -.88567E-01g/sq.ft.
                    Diffusion in from atmosphere =      -.27300E-02g/sq.ft.
                    Diffusion in from water table =      .00000    g/sq.ft.
               Total inflow at boundaries =     -.91297E-01g/sq.ft.
               Mass discrepancy =      .20117E-06g/sq.ft.


Polygon   1
At time =      22.00, total mass in vadose zone =     .22481    g/sq.ft.
Mass in gas phase     =       .28838E-01g/sq.ft.
```

Mass in liquid phase = .12339 g/sq.ft.
Mass sorbed = .72582E-01g/sq.ft.

Since last printout at time = 21.00
Change in Total Mass = -.37876E-02g/sq.ft.
Advection in from atmosphere = .00000 g/sq.ft.
Advection in from water table = -.36950E-02g/sq.ft.
Diffusion in from atmosphere = -.92652E-04g/sq.ft.
Diffusion in from water table = .00000 g/sq.ft.
Total inflow at boundaries = -.37876E-02g/sq.ft.
Mass discrepancy = -.11642E-08g/sq.ft.

Since beginning of run at time = 0.0
Change in Total Mass = -.95085E-01g/sq.ft.
Advection in from atmosphere = .00000 g/sq.ft.
Advection in from water table = -.92262E-01g/sq.ft.
Diffusion in from atmosphere = -.28227E-02g/sq.ft.
Diffusion in from water table = .00000 g/sq.ft.
Total inflow at boundaries = -.95085E-01g/sq.ft.
Mass discrepancy = .20117E-06g/sq.ft.

Polygon 1
At time = 23.00, total mass in vadose zone = .22107 g/sq.ft.
Mass in gas phase = .28358E-01g/sq.ft.
Mass in liquid phase = .12133 g/sq.ft.
Mass sorbed = .71374E-01g/sq.ft.

Since last printout at time = 22.00
Change in Total Mass = -.37408E-02g/sq.ft.
Advection in from atmosphere = .00000 g/sq.ft.
Advection in from water table = -.36510E-02g/sq.ft.
Diffusion in from atmosphere = -.89886E-04g/sq.ft.
Diffusion in from water table = .00000 g/sq.ft.
Total inflow at boundaries = -.37408E-02g/sq.ft.
Mass discrepancy = .16531E-07g/sq.ft.

Since beginning of run at time = 0.0
Change in Total Mass = -.98826E-01g/sq.ft.
Advection in from atmosphere = .00000 g/sq.ft.
Advection in from water table = -.95913E-01g/sq.ft.
Diffusion in from atmosphere = -.29126E-02g/sq.ft.
Diffusion in from water table = .00000 g/sq.ft.
Total inflow at boundaries = -.98826E-01g/sq.ft.
Mass discrepancy = .21607E-06g/sq.ft.

Polygon 1
At time = 24.00, total mass in vadose zone = .21737 g/sq.ft.
Mass in gas phase = .27884E-01g/sq.ft.
Mass in liquid phase = .11931 g/sq.ft.
Mass sorbed = .70181E-01g/sq.ft.

Since last printout at time = 23.00
Change in Total Mass = -.36945E-02g/sq.ft.
Advection in from atmosphere = .00000 g/sq.ft.
Advection in from water table = -.36073E-02g/sq.ft.
Diffusion in from atmosphere = -.87213E-04g/sq.ft.
Diffusion in from water table = .00000 g/sq.ft.
Total inflow at boundaries = -.36945E-02g/sq.ft.

Mass discrepancy = -.32596E-08g/sq.ft.

Since beginning of run at time = 0.0
Change in Total Mass = -.10252 g/sq.ft.
Advection in from atmosphere = .00000 g/sq.ft.
Advection in from water table = -.99521E-01g/sq.ft.
Diffusion in from atmosphere = -.29998E-02g/sq.ft.
Diffusion in from water table = .00000 g/sq.ft.
Total inflow at boundaries = -.10252 g/sq.ft.
Mass discrepancy = .20862E-06g/sq.ft.

Polygon 1
At time = 25.00, total mass in vadose zone = .21372 g/sq.ft.
Mass in gas phase = .27416E-01g/sq.ft.
Mass in liquid phase = .11730 g/sq.ft.
Mass sorbed = .69003E-01g/sq.ft.

Since last printout at time = 24.00
Change in Total Mass = -.36486E-02g/sq.ft.
Advection in from atmosphere = .00000 g/sq.ft.
Advection in from water table = -.35639E-02g/sq.ft.
Diffusion in from atmosphere = -.84630E-04g/sq.ft.
Diffusion in from water table = .00000 g/sq.ft.
Total inflow at boundaries = -.36486E-02g/sq.ft.
Mass discrepancy = .25611E-08g/sq.ft.

Since beginning of run at time = 0.0
Change in Total Mass = -.10617 g/sq.ft.
Advection in from atmosphere = .00000 g/sq.ft.
Advection in from water table = -.10308 g/sq.ft.
Diffusion in from atmosphere = -.30844E-02g/sq.ft.
Diffusion in from water table = .00000 g/sq.ft.
Total inflow at boundaries = -.10617 g/sq.ft.
Mass discrepancy = .20862E-06g/sq.ft.

Polygon 1
At time = 26.00, total mass in vadose zone = .21012 g/sq.ft.
Mass in gas phase = .26954E-01g/sq.ft.
Mass in liquid phase = .11533 g/sq.ft.
Mass sorbed = .67840E-01g/sq.ft.

Since last printout at time = 25.00
Change in Total Mass = -.36030E-02g/sq.ft.
Advection in from atmosphere = .00000 g/sq.ft.
Advection in from water table = -.35209E-02g/sq.ft.
Diffusion in from atmosphere = -.82134E-04g/sq.ft.
Diffusion in from water table = .00000 g/sq.ft.
Total inflow at boundaries = -.36030E-02g/sq.ft.
Mass discrepancy = .27008E-07g/sq.ft.

Since beginning of run at time = 0.0
Change in Total Mass = -.10977 g/sq.ft.
Advection in from atmosphere = .00000 g/sq.ft.
Advection in from water table = -.10661 g/sq.ft.
Diffusion in from atmosphere = -.31666E-02g/sq.ft.
Diffusion in from water table = .00000 g/sq.ft.
Total inflow at boundaries = -.10977 g/sq.ft.
Mass discrepancy = .23842E-06g/sq.ft.

```
Polygon   1
 time =      27.00, total mass in vadose zone =     .20656    g/sq.ft.
ss in gas phase     =       .26498E-01g/sq.ft.
Mass in liquid phase  =       .11337    g/sq.ft.
Mass sorbed           =       .66691E-01g/sq.ft.

Since last printout at time =      26.00
               Change in Total Mass =     -.35578E-02g/sq.ft.
                    Advection in from atmosphere =       .00000    g/sq.ft.
                    Advection in from water table =     -.34781E-02g/sq.ft.
                    Diffusion in from atmosphere =      -.79723E-04g/sq.ft.
                    Diffusion in from water table =      .00000    g/sq.ft.
               Total inflow at boundaries =     -.35578E-02g/sq.ft.
               Mass discrepancy =      .34925E-08g/sq.ft.

Since beginning of run at time = 0.0
               Change in Total Mass =     -.11333    g/sq.ft.
                    Advection in from atmosphere =       .00000    g/sq.ft.
                    Advection in from water table =     -.11008    g/sq.ft.
                    Diffusion in from atmosphere =      -.32463E-02g/sq.ft.
                    Diffusion in from water table =      .00000    g/sq.ft.
               Total inflow at boundaries =     -.11333    g/sq.ft.
               Mass discrepancy =      .23842E-06g/sq.ft.


Polygon   1
At time =      28.00, total mass in vadose zone =     .20305    g/sq.ft.
ss in gas phase     =       .26047E-01g/sq.ft.
ass in liquid phase  =       .11145    g/sq.ft.
Mass sorbed           =       .65557E-01g/sq.ft.

Since last printout at time =      27.00
               Change in Total Mass =     -.35130E-02g/sq.ft.
                    Advection in from atmosphere =       .00000    g/sq.ft.
                    Advection in from water table =     -.34356E-02g/sq.ft.
                    Diffusion in from atmosphere =      -.77393E-04g/sq.ft.
                    Diffusion in from water table =      .00000    g/sq.ft.
               Total inflow at boundaries =     -.35130E-02g/sq.ft.
               Mass discrepancy =      .20023E-07g/sq.ft.

Since beginning of run at time = 0.0
               Change in Total Mass =     -.11684    g/sq.ft.
                    Advection in from atmosphere =       .00000    g/sq.ft.
                    Advection in from water table =     -.11352    g/sq.ft.
                    Diffusion in from atmosphere =      -.33237E-02g/sq.ft.
                    Diffusion in from water table =      .00000    g/sq.ft.
               Total inflow at boundaries =     -.11684    g/sq.ft.
               Mass discrepancy =      .26077E-06g/sq.ft.


Polygon   1
At time =      29.00, total mass in vadose zone =     .19958    g/sq.ft.
ss in gas phase     =       .25602E-01g/sq.ft.
ss in liquid phase  =       .10954    g/sq.ft.
Mass sorbed           =       .64437E-01g/sq.ft.

Since last printout at time =      28.00
               Change in Total Mass =     -.34685E-02g/sq.ft.
```

Advection in from atmosphere = .00000 g/sq.ft.
Advection in from water table = -.33934E-02g/sq.ft.
Diffusion in from atmosphere = -.75141E-04g/sq.ft.
Diffusion in from water table = .00000 g/sq.ft.
Total inflow at boundaries = -.34685E-02g/sq.ft.
Mass discrepancy = -.93132E-09g/sq.ft.

Since beginning of run at time = 0.0
Change in Total Mass = -.12031 g/sq.ft.
Advection in from atmosphere = .00000 g/sq.ft.
Advection in from water table = -.11691 g/sq.ft.
Diffusion in from atmosphere = -.33988E-02g/sq.ft.
Diffusion in from water table = .00000 g/sq.ft.
Total inflow at boundaries = -.12031 g/sq.ft.
Mass discrepancy = .26077E-06g/sq.ft.

Polygon 1
At time = 30.00, total mass in vadose zone = .19616 g/sq.ft.
Mass in gas phase = .25163E-01g/sq.ft.
Mass in liquid phase = .10766 g/sq.ft.
Mass sorbed = .63331E-01g/sq.ft.

Since last printout at time = 29.00
Change in Total Mass = -.34244E-02g/sq.ft.
Advection in from atmosphere = .00000 g/sq.ft.
Advection in from water table = -.33514E-02g/sq.ft.
Diffusion in from atmosphere = -.72965E-04g/sq.ft.
Diffusion in from water table = .00000 g/sq.ft.
Total inflow at boundaries = -.34244E-02g/sq.ft.
Mass discrepancy = -.13504E-07g/sq.ft.

Since beginning of run at time = 0.0
Change in Total Mass = -.12374 g/sq.ft.
Advection in from atmosphere = .00000 g/sq.ft.
Advection in from water table = -.12026 g/sq.ft.
Diffusion in from atmosphere = -.34718E-02g/sq.ft.
Diffusion in from water table = .00000 g/sq.ft.
Total inflow at boundaries = -.12374 g/sq.ft.
Mass discrepancy = .24587E-06g/sq.ft.

GROUNDWATER IMPACT OF POLYGON 1

Time	Mass per area (g/sq.ft.)	Total Mass (g)
1.00	.46598E-02	3951.5
2.00	.46345E-02	3930.0
3.00	.46039E-02	3904.1
4.00	.45676E-02	3873.4
5.00	.45258E-02	3837.8
6.00	.44791E-02	3798.3
7.00	.44290E-02	3755.8
8.00	.43767E-02	3711.4
9.00	.43234E-02	3666.3
10.00	.42701E-02	3621.0
11.00	.42174E-02	3576.3
12.00	.41655E-02	3532.4
13.00	.41148E-02	3489.3
14.00	.40651E-02	3447.2
15.00	.40164E-02	3405.9

16.00	.39686E-02	3365.4
17.00	.39216E-02	3325.5
18.00	.38752E-02	3286.2
19.00	.38294E-02	3247.4
20.00	.37842E-02	3209.0
21.00	.37394E-02	3171.0
22.00	.36950E-02	3133.3
23.00	.36510E-02	3096.0
24.00	.36073E-02	3059.0
25.00	.35639E-02	3022.2
26.00	.35209E-02	2985.7
27.00	.34781E-02	2949.5
28.00	.34356E-02	2913.4
29.00	.33934E-02	2877.6
30.00	.33514E-02	2842.0

****

****

TOTAL GROUNDWATER IMPACT

Time (yr)	Mass (g)	Cumulative Mass (g)
1.00	3951.5	3951.5
2.00	3930.0	7881.5
3.00	3904.1	11786.
4.00	3873.4	15659.
5.00	3837.8	19497.
6.00	3798.3	23295.
7.00	3755.8	27051.
8.00	3711.4	30762.
9.00	3666.3	34429.
10.00	3621.0	38050.
11.00	3576.3	41626.
12.00	3532.4	45158.
13.00	3489.3	48648.
14.00	3447.2	52095.
15.00	3405.9	55501.
16.00	3365.4	58866.
17.00	3325.5	62192.
18.00	3286.2	65478.
19.00	3247.4	68725.
20.00	3209.0	71934.
21.00	3171.0	75105.
22.00	3133.3	78238.
23.00	3096.0	81334.
24.00	3059.0	84393.
25.00	3022.2	87416.
26.00	2985.7	90401.
27.00	2949.5	93351.
28.00	2913.4	96264.
29.00	2877.6	99142.
30.00	2842.0	.10198E+06

Polygon 41-43, 8A-10A
Time: .000

Cell	Cgas(g/cu.ft.)	Cliq(g/cu.ft.)	Csol
1	.28367E-05	.59972E-05	.19371E-10
2	.28367E-05	.59972E-05	.19371E-10
3	.28367E-05	.59972E-05	.19371E-10
4	.28367E-05	.59972E-05	.19371E-10
5	.28367E-05	.59972E-05	.19371E-10
6	.28367E-05	.59972E-05	.19371E-10
7	.86377E-03	.18262E-02	.58985E-08
8	.86377E-03	.18262E-02	.58985E-08
9	.86377E-03	.18262E-02	.58985E-08
10	.86377E-03	.18262E-02	.58985E-08
11	.86377E-03	.18262E-02	.58985E-08
12	.86377E-03	.18262E-02	.58985E-08
13	.21559E-02	.45579E-02	.14722E-07
14	.21559E-02	.45579E-02	.14722E-07
15	.21559E-02	.45579E-02	.14722E-07
16	.21559E-02	.45579E-02	.14722E-07
17	.21559E-02	.45579E-02	.14722E-07
18	.21559E-02	.45579E-02	.14722E-07
19	.34475E-02	.72886E-02	.23542E-07
20	.34475E-02	.72886E-02	.23542E-07
21	.34475E-02	.72886E-02	.23542E-07
22	.34475E-02	.72886E-02	.23542E-07
23	.34475E-02	.72886E-02	.23542E-07
24	.34475E-02	.72886E-02	.23542E-07
25	.47391E-02	.10019E-01	.32363E-07
26	.47391E-02	.10019E-01	.32363E-07
27	.47391E-02	.10019E-01	.32363E-07
28	.47391E-02	.10019E-01	.32363E-07
29	.47391E-02	.10019E-01	.32363E-07
30	.47391E-02	.10019E-01	.32363E-07
31	.60308E-02	.12750E-01	.41183E-07
32	.60308E-02	.12750E-01	.41183E-07
33	.60308E-02	.12750E-01	.41183E-07
34	.60308E-02	.12750E-01	.41183E-07
35	.60308E-02	.12750E-01	.41183E-07
36	.60308E-02	.12750E-01	.41183E-07
37	.73224E-02	.15481E-01	.50003E-07
38	.73224E-02	.15481E-01	.50003E-07
39	.73224E-02	.15481E-01	.50003E-07
40	.73224E-02	.15481E-01	.50003E-07
41	.73224E-02	.15481E-01	.50003E-07
42	.73224E-02	.15481E-01	.50003E-07
43	.86141E-02	.18212E-01	.58823E-07
44	.86141E-02	.18212E-01	.58823E-07
45	.86141E-02	.18212E-01	.58823E-07
46	.86141E-02	.18212E-01	.58823E-07
47	.86141E-02	.18212E-01	.58823E-07
48	.86141E-02	.18212E-01	.58823E-07
49	.99057E-02	.20942E-01	.67644E-07
50	.99057E-02	.20942E-01	.67644E-07
51	.99057E-02	.20942E-01	.67644E-07
52	.99057E-02	.20942E-01	.67644E-07
53	.99057E-02	.20942E-01	.67644E-07
54	.99057E-02	.20942E-01	.67644E-07
55	.11197E-01	.23673E-01	.76464E-07
56	.11197E-01	.23673E-01	.76464E-07

57	.11197E-01	.23673E-01	.76464E-07
58	.11197E-01	.23673E-01	.76464E-07
59	.11197E-01	.23673E-01	.76464E-07
60	.11197E-01	.23673E-01	.76464E-07

Polygon 41-43, 8A-10A
Time: 10.000

Cell	Cgas(g/cu.ft.)	Cliq(g/cu.ft.)	Csol
1	.16969E-04	.35875E-04	.11588E-09
2	.43460E-04	.91881E-04	.29678E-09
3	.78190E-04	.16531E-03	.53394E-09
4	.12025E-03	.25423E-03	.82116E-09
5	.16919E-03	.35769E-03	.11553E-08
6	.22507E-03	.47583E-03	.15369E-08
7	.29139E-03	.61606E-03	.19899E-08
8	.37439E-03	.79153E-03	.25567E-08
9	.47760E-03	.10097E-02	.32614E-08
10	.59847E-03	.12653E-02	.40868E-08
11	.73030E-03	.15440E-02	.49870E-08
12	.86640E-03	.18317E-02	.59164E-08
13	.10074E-02	.21298E-02	.68793E-08
14	.11609E-02	.24542E-02	.79272E-08
15	.13323E-02	.28168E-02	.90982E-08
16	.15192E-02	.32119E-02	.10374E-07
17	.17127E-02	.36210E-02	.11696E-07
18	.19037E-02	.40248E-02	.13000E-07
19	.20914E-02	.44217E-02	.14282E-07
20	.22833E-02	.48273E-02	.15592E-07
21	.24858E-02	.52554E-02	.16975E-07
22	.26974E-02	.57028E-02	.18420E-07
23	.29108E-02	.61539E-02	.19877E-07
24	.31178E-02	.65916E-02	.21291E-07
25	.33186E-02	.70160E-02	.22662E-07
26	.35211E-02	.74442E-02	.24045E-07
27	.37323E-02	.78907E-02	.25487E-07
28	.39512E-02	.83535E-02	.26982E-07
29	.41705E-02	.88170E-02	.28479E-07
30	.43823E-02	.92650E-02	.29926E-07
31	.45870E-02	.96976E-02	.31323E-07
32	.47927E-02	.10132E-01	.32728E-07
33	.50063E-02	.10584E-01	.34187E-07
34	.52270E-02	.11051E-01	.35694E-07
35	.54476E-02	.11517E-01	.37200E-07
36	.56602E-02	.11967E-01	.38652E-07
37	.58652E-02	.12400E-01	.40052E-07
38	.60707E-02	.12834E-01	.41455E-07
39	.62837E-02	.13285E-01	.42910E-07
40	.65033E-02	.13749E-01	.44410E-07
41	.67222E-02	.14212E-01	.45904E-07
42	.69326E-02	.14657E-01	.47341E-07
43	.71347E-02	.15084E-01	.48721E-07
44	.73365E-02	.15511E-01	.50099E-07
45	.75450E-02	.15951E-01	.51523E-07
46	.77590E-02	.16404E-01	.52984E-07
47	.79711E-02	.16852E-01	.54433E-07
48	.81733E-02	.17280E-01	.55814E-07
49	.83655E-02	.17686E-01	.57126E-07
50	.85555E-02	.18088E-01	.58423E-07
51	.87497E-02	.18498E-01	.59750E-07
52	.89467E-02	.18915E-01	.61095E-07

53	.91385E-02	.19320E-01	.62404E-07
54	.93164E-02	.19696E-01	.63619E-07
55	.94795E-02	.20041E-01	.64733E-07
56	.96350E-02	.20370E-01	.65795E-07
57	.97881E-02	.20694E-01	.66840E-07
58	.99362E-02	.21007E-01	.67852E-07
59	.10070E-01	.21289E-01	.68765E-07
60	.10179E-01	.21520E-01	.69509E-07

Polygon 41-43, 8A-10A
Time: 20.000

Cell	Cgas(g/cu.ft.)	Cliq(g/cu.ft.)	Csol
1	.12619E-04	.26679E-04	.86174E-10
2	.32579E-04	.68878E-04	.22248E-09
3	.59262E-04	.12529E-03	.40468E-09
4	.92328E-04	.19520E-03	.63049E-09
5	.13164E-03	.27831E-03	.89893E-09
6	.17720E-03	.37463E-03	.12100E-08
7	.22913E-03	.48442E-03	.15647E-08
8	.28770E-03	.60825E-03	.19646E-08
9	.35337E-03	.74709E-03	.24131E-08
10	.42679E-03	.90230E-03	.29144E-08
11	.50866E-03	.10754E-02	.34735E-08
12	.59959E-03	.12676E-02	.40945E-08
13	.69987E-03	.14796E-02	.47793E-08
14	.80949E-03	.17114E-02	.55278E-08
15	.92824E-03	.19625E-02	.63388E-08
16	.10559E-02	.22324E-02	.72107E-08
17	.11924E-02	.25209E-02	.81427E-08
18	.13375E-02	.28276E-02	.91333E-08
19	.14907E-02	.31516E-02	.10180E-07
20	.16514E-02	.34913E-02	.11277E-07
21	.18187E-02	.38451E-02	.12420E-07
22	.19919E-02	.42112E-02	.13602E-07
23	.21704E-02	.45885E-02	.14821E-07
24	.23537E-02	.49761E-02	.16073E-07
25	.25413E-02	.53727E-02	.17354E-07
26	.27325E-02	.57771E-02	.18660E-07
27	.29268E-02	.61878E-02	.19987E-07
28	.31236E-02	.66038E-02	.21330E-07
29	.33226E-02	.70245E-02	.22689E-07
30	.35236E-02	.74495E-02	.24062E-07
31	.37265E-02	.78784E-02	.25447E-07
32	.39307E-02	.83102E-02	.26842E-07
33	.41360E-02	.87442E-02	.28244E-07
34	.43420E-02	.91797E-02	.29650E-07
35	.45485E-02	.96163E-02	.31061E-07
36	.47556E-02	.10054E-01	.32475E-07
37	.49631E-02	.10493E-01	.33892E-07
38	.51707E-02	.10932E-01	.35310E-07
39	.53781E-02	.11370E-01	.36726E-07
40	.55849E-02	.11807E-01	.38138E-07
41	.57910E-02	.12243E-01	.39546E-07
42	.59965E-02	.12678E-01	.40949E-07
43	.62011E-02	.13110E-01	.42346E-07
44	.64044E-02	.13540E-01	.43734E-07
45	.66060E-02	.13966E-01	.45111E-07
46	.68054E-02	.14388E-01	.46473E-07
47	.70024E-02	.14804E-01	.47818E-07
48	.71967E-02	.15215E-01	.49144E-07

49	.73878E-02	.15619E-01	.50449E-07
50	.75751E-02	.16015E-01	.51728E-07
51	.77577E-02	.16401E-01	.52975E-07
52	.79348E-02	.16775E-01	.54185E-07
53	.81056E-02	.17136E-01	.55351E-07
54	.82692E-02	.17483E-01	.56469E-07
55	.84247E-02	.17811E-01	.57530E-07
56	.85706E-02	.18120E-01	.58526E-07
57	.87051E-02	.18404E-01	.59445E-07
58	.88264E-02	.18661E-01	.60274E-07
59	.89328E-02	.18885E-01	.61000E-07
60	.90220E-02	.19074E-01	.61609E-07

Polygon 41-43, 8A-10A
Time: 30.000

Cell	Cgas(g/cu.ft.)	Cliq(g/cu.ft.)	Csol
1	.93371E-05	.19740E-04	.63761E-10
2	.24098E-04	.50947E-04	.16456E-09
3	.43830E-04	.92663E-04	.29930E-09
4	.68297E-04	.14439E-03	.46639E-09
5	.97422E-04	.20597E-03	.66527E-09
6	.13124E-03	.27746E-03	.89619E-09
7	.16986E-03	.35910E-03	.11599E-08
8	.21345E-03	.45127E-03	.14576E-08
9	.26223E-03	.55439E-03	.17907E-08
10	.31643E-03	.66899E-03	.21608E-08
11	.37633E-03	.79563E-03	.25699E-08
12	.44222E-03	.93492E-03	.30198E-08
13	.51439E-03	.10875E-02	.35126E-08
14	.59314E-03	.12540E-02	.40504E-08
15	.67874E-03	.14350E-02	.46349E-08
16	.77142E-03	.16309E-02	.52678E-08
17	.87133E-03	.18421E-02	.59501E-08
18	.97859E-03	.20689E-02	.66825E-08
19	.10932E-02	.23112E-02	.74652E-08
20	.12151E-02	.25689E-02	.82977E-08
21	.13442E-02	.28419E-02	.91792E-08
22	.14803E-02	.31296E-02	.10109E-07
23	.16231E-02	.34315E-02	.11084E-07
24	.17723E-02	.37470E-02	.12103E-07
25	.19276E-02	.40753E-02	.13163E-07
26	.20885E-02	.44155E-02	.14262E-07
27	.22547E-02	.47668E-02	.15397E-07
28	.24256E-02	.51282E-02	.16564E-07
29	.26010E-02	.54989E-02	.17761E-07
30	.27802E-02	.58779E-02	.18985E-07
31	.29630E-02	.62643E-02	.20234E-07
32	.31489E-02	.66573E-02	.21503E-07
33	.33375E-02	.70560E-02	.22791E-07
34	.35285E-02	.74597E-02	.24095E-07
35	.37214E-02	.78677E-02	.25413E-07
36	.39160E-02	.82790E-02	.26741E-07
37	.41119E-02	.86932E-02	.28079E-07
38	.43087E-02	.91094E-02	.29423E-07
39	.45062E-02	.95269E-02	.30772E-07
40	.47041E-02	.99452E-02	.32123E-07
41	.49019E-02	.10363E-01	.33474E-07
42	.50994E-02	.10781E-01	.34822E-07
43	.52962E-02	.11197E-01	.36166E-07
44	.54919E-02	.11611E-01	.37503E-07

45	.56861E-02	.12021E-01	.38829E-07
46	.58785E-02	.12428E-01	.40143E-07
47	.60686E-02	.12830E-01	.41441E-07
48	.62557E-02	.13226E-01	.42719E-07
49	.64395E-02	.13614E-01	.43974E-07
50	.66192E-02	.13994E-01	.45201E-07
51	.67942E-02	.14364E-01	.46396E-07
52	.69636E-02	.14722E-01	.47553E-07
53	.71266E-02	.15067E-01	.48666E-07
54	.72822E-02	.15396E-01	.49729E-07
55	.74293E-02	.15707E-01	.50733E-07
56	.75666E-02	.15997E-01	.51671E-07
57	.76927E-02	.16264E-01	.52532E-07
58	.78060E-02	.16503E-01	.53305E-07
59	.79046E-02	.16712E-01	.53979E-07
60	.79866E-02	.16885E-01	.54539E-07

V-Leach, VER 1.1
Jake Turin, 11/91
PGA V-leach model,poly screen-TCE-11/10/92POLY41-43,8A-10A.INP Rev soil,HGC chem
1 polygons.
Timestep = 1.00 years. Simulation length = 30.00 years.
Printout every 1.00 years. Vertical profile stored every 10.00 years.
Koc = 123.60 ml/g, .43649E-02cu.ft./g
Kh = .47300 (dimensionless).
Aqueous solubility = 1100.0 mg/l, 31.149 g/cu.ft
Free air diffusion coefficient = .70290 sq. m/day, 2761.7 sq.ft./yr

Polygon 1
Polygon 41-43, 8A-10A
Polygon area = .84800E+06sq. ft.
60 cells, each cell 1.000 ft. thick.
Soil Properties:
Bulk density = 1.6400 g/ml, 46440. g/cu.ft.
Porosity = .3810 Volumetric water content = .2550
Organic carbon content = .00074000
Recharge Rate = .19685000 ft/yr
Conc. in recharge water = .00000 mg/l, .00000 g/cu.ft
Atmospheric concentration = .00000 mg/l, .00000 g/cu.ft
Water table is impermeable to gas diffusion.

Calculation of Total TCE Mass and Revised Vertical Distributions
in Polygon 41-43, 8A-10A using HGC Distribution equations and Revised Soil Physical Data

0.102 Cs **	Cz = (74.527z - 371.636)Cs

Cz (ug/L) Vert. Dist. Eq.	Calculated Depth Interval (z)	Total Depth Interval (feet)	Total Soil Conc Ct* (ug/Kg)	Mt (ug/cc)	Volume of Soil (cubic ft)	Mass TCE (grams)	Mass TCE (pounds)
0.102	3	6	0.06	1.00E-04	5088000	14.44	0.03
30.51	9	6	18.27	0.03	5088000	4318.09	9.52
76.12	15	6	45.60	0.07	5088000	10773.59	23.75
121.73	21	6	72.92	0.12	5088000	17229.10	37.98
167.34	27	6	100.24	0.16	5088000	23684.60	52.22
212.95	33	6	127.56	0.21	5088000	30140.10	66.45
258.56	39	6	154.88	0.25	5088000	36595.60	80.68
304.17	45	6	182.20	0.30	5088000	43051.11	94.91
349.78	51	6	209.52	0.34	5088000	49506.61	109.14
395.39	57	6	236.84	0.39	5088000	55962.11	123.38
		60				271275.35	598.06

* Ct conversion based on Kgt of 0.599 L/Kg

** Cs Determined as Mathematical Average of VOC concentrations for polygon(s) listed in Table A-1 of HGC, 1989.

```
PGA V-leach model, poly screen-TCE-11/3/92-Poly21A,26A.INP. New soil, Old chem
    1
      1.0         30.         1.0         10.
    123.6        .473        1100.       .7029
Polygon 21A, 26A
   148500.          1.    .370735        1.64        .381        .255     .00074
        0.          0.         -1.
   60
    1     6       0.26
    7    12      77.22
   13    18     192.66
   19    24     308.11
   25    30     423.55
   31    36     538.99
   37    42     654.44
   43    48     769.88
   49    54     885.32
   55    60    1000.77
```

V-Leach, VER 1.1

Jake Turin, 11/91

PGA V-leach model, poly screen-TCE-11/3/92-Poly21A,26A.INP. New soil, Old c

Polygon 1
At time = .00, total mass in vadose zone = 1.3517 g/sq.ft.
Mass in gas phase = .17339 g/sq.ft.
Mass in liquid phase = .74189 g/sq.ft.
Mass sorbed = .43641 g/sq.ft.

Polygon 1
At time = 1.00, total mass in vadose zone = 1.3139 g/sq.ft.
Mass in gas phase = .16855 g/sq.ft.
Mass in liquid phase = .72117 g/sq.ft.
Mass sorbed = .42422 g/sq.ft.

Since last printout at time = .00
Change in Total Mass = -.37752E-01g/sq.ft.
Advection in from atmosphere = .00000 g/sq.ft.
Advection in from water table = -.37061E-01g/sq.ft.
Diffusion in from atmosphere = -.69128E-03g/sq.ft.
Diffusion in from water table = .00000 g/sq.ft.
Total inflow at boundaries = -.37752E-01g/sq.ft.
Mass discrepancy = .11176E-07g/sq.ft.

Since beginning of run at time = 0.0
Change in Total Mass = -.37752E-01g/sq.ft.
Advection in from atmosphere = .00000 g/sq.ft.
Advection in from water table = -.37061E-01g/sq.ft.
Diffusion in from atmosphere = -.69128E-03g/sq.ft.
Diffusion in from water table = .00000 g/sq.ft.
Total inflow at boundaries = -.37752E-01g/sq.ft.
Mass discrepancy = .11176E-07g/sq.ft.

Polygon 1
At time = 2.00, total mass in vadose zone = 1.2765 g/sq.ft.
Mass in gas phase = .16375 g/sq.ft.
Mass in liquid phase = .70063 g/sq.ft.
Mass sorbed = .41214 g/sq.ft.

Since last printout at time = 1.00
Change in Total Mass = -.37413E-01g/sq.ft.
Advection in from atmosphere = .00000 g/sq.ft.
Advection in from water table = -.36772E-01g/sq.ft.
Diffusion in from atmosphere = -.64104E-03g/sq.ft.
Diffusion in from water table = .00000 g/sq.ft.
Total inflow at boundaries = -.37413E-01g/sq.ft.
Mass discrepancy = .00000 g/sq.ft.

Since beginning of run at time = 0.0
Change in Total Mass = -.75166E-01g/sq.ft.
Advection in from atmosphere = .00000 g/sq.ft.
Advection in from water table = -.73833E-01g/sq.ft.
Diffusion in from atmosphere = -.13323E-02g/sq.ft.
Diffusion in from water table = .00000 g/sq.ft.
Total inflow at boundaries = -.75166E-01g/sq.ft.
Mass discrepancy = .14901E-07g/sq.ft.

Polygon 1
At time = 3.00, total mass in vadose zone = 1.2396 g/sq.ft.
Mass in gas phase = .15901 g/sq.ft.
Mass in liquid phase = .68036 g/sq.ft.
Mass sorbed = .40022 g/sq.ft.

Since last printout at time = 2.00
Change in Total Mass = -.36929E-01g/sq.ft.
Advection in from atmosphere = .00000 g/sq.ft.
Advection in from water table = -.36336E-01g/sq.ft.
Diffusion in from atmosphere = -.59317E-03g/sq.ft.
Diffusion in from water table = .00000 g/sq.ft.
Total inflow at boundaries = -.36929E-01g/sq.ft.
Mass discrepancy = .26822E-06g/sq.ft.

Since beginning of run at time = 0.0
Change in Total Mass = -.11209 g/sq.ft.
Advection in from atmosphere = .00000 g/sq.ft.
Advection in from water table = -.11017 g/sq.ft.
Diffusion in from atmosphere = -.19255E-02g/sq.ft.
Diffusion in from water table = .00000 g/sq.ft.
Total inflow at boundaries = -.11210 g/sq.ft.
Mass discrepancy = .28312E-06g/sq.ft.

Polygon 1
At time = 4.00, total mass in vadose zone = 1.2033 g/sq.ft.
Mass in gas phase = .15435 g/sq.ft.
Mass in liquid phase = .66043 g/sq.ft.
Mass sorbed = .38849 g/sq.ft.

Since last printout at time = 3.00
Change in Total Mass = -.36317E-01g/sq.ft.
Advection in from atmosphere = .00000 g/sq.ft.
Advection in from water table = -.35769E-01g/sq.ft.
Diffusion in from atmosphere = -.54820E-03g/sq.ft.
Diffusion in from water table = .00000 g/sq.ft.
Total inflow at boundaries = -.36317E-01g/sq.ft.
Mass discrepancy = -.30547E-06g/sq.ft.

Since beginning of run at time = 0.0
Change in Total Mass = -.14841 g/sq.ft.
Advection in from atmosphere = .00000 g/sq.ft.
Advection in from water table = -.14594 g/sq.ft.
Diffusion in from atmosphere = -.24737E-02g/sq.ft.
Diffusion in from water table = .00000 g/sq.ft.
Total inflow at boundaries = -.14841 g/sq.ft.
Mass discrepancy = -.29802E-07g/sq.ft.

Polygon 1
At time = 5.00, total mass in vadose zone = 1.1677 g/sq.ft.
Mass in gas phase = .14978 g/sq.ft.
Mass in liquid phase = .64088 g/sq.ft.
Mass sorbed = .37699 g/sq.ft.

Since last printout at time = 4.00
Change in Total Mass = -.35622E-01g/sq.ft.

```
                    Advection in from atmosphere =       .00000    g/sq.ft.
                    Advection in from water table =    -.35116E-01g/sq.ft.
                    Diffusion in from atmosphere =     -.50634E-03g/sq.ft.
                    Diffusion in from water table =      .00000    g/sq.ft.
               Total inflow at boundaries =    -.35622E-01g/sq.ft.
               Mass discrepancy =      .35018E-06g/sq.ft.

Since beginning of run at time = 0.0
               Change in Total Mass =     -.18403    g/sq.ft.
                    Advection in from atmosphere =       .00000    g/sq.ft.
                    Advection in from water table =    -.18105    g/sq.ft.
                    Diffusion in from atmosphere =     -.29800E-02g/sq.ft.
                    Diffusion in from water table =      .00000    g/sq.ft.
               Total inflow at boundaries =    -.18403    g/sq.ft.
               Mass discrepancy =      .32783E-06g/sq.ft.


Polygon   1
At time =       6.00, total mass in vadose zone =     1.1328    g/sq.ft.
Mass in gas phase     =       .14531    g/sq.ft.
Mass in liquid phase  =       .62173    g/sq.ft.
Mass sorbed           =       .36572    g/sq.ft.

Since last printout at time =       5.00
               Change in Total Mass =    -.34894E-01g/sq.ft.
                    Advection in from atmosphere =       .00000    g/sq.ft.
                    Advection in from water table =    -.34427E-01g/sq.ft.
                    Diffusion in from atmosphere =     -.46760E-03g/sq.ft.
                    Diffusion in from water table =      .00000    g/sq.ft.
               Total inflow at boundaries =    -.34894E-01g/sq.ft.
               Mass discrepancy =    -.78231E-07g/sq.ft.

Since beginning of run at time = 0.0
               Change in Total Mass =     -.21893    g/sq.ft.
                    Advection in from atmosphere =       .00000    g/sq.ft.
                    Advection in from water table =    -.21548    g/sq.ft.
                    Diffusion in from atmosphere =     -.34476E-02g/sq.ft.
                    Diffusion in from water table =      .00000    g/sq.ft.
               Total inflow at boundaries =    -.21893    g/sq.ft.
               Mass discrepancy =      .23842E-06g/sq.ft.


Polygon   1
At time =       7.00, total mass in vadose zone =     1.0986    g/sq.ft.
Mass in gas phase     =       .14093    g/sq.ft.
Mass in liquid phase  =       .60298    g/sq.ft.
Mass sorbed           =       .35469    g/sq.ft.

Since last printout at time =       6.00
               Change in Total Mass =    -.34165E-01g/sq.ft.
                    Advection in from atmosphere =       .00000    g/sq.ft.
                    Advection in from water table =    -.33733E-01g/sq.ft.
                    Diffusion in from atmosphere =     -.43191E-03g/sq.ft.
                    Diffusion in from water table =      .00000    g/sq.ft.
               Total inflow at boundaries =    -.34165E-01g/sq.ft.
               Mass discrepancy =      .40978E-07g/sq.ft.

Since beginning of run at time = 0.0
               Change in Total Mass =     -.25309    g/sq.ft.
                    Advection in from atmosphere =       .00000    g/sq.ft.
```

```
                Advection in from water table =     -.24921    g/sq.ft.
                Diffusion in from atmosphere =      -.38795E-02g/sq.ft.
                Diffusion in from water table =      .00000    g/sq.ft.
           Total inflow at boundaries =     -.25309    g/sq.ft.
           Mass discrepancy =      .26822E-06g/sq.ft.


Polygon   1
At time =       8.00, total mass in vadose zone =     1.0651    g/sq.ft.
Mass in gas phase     =       .13663    g/sq.ft.
Mass in liquid phase  =       .58462    g/sq.ft.
Mass sorbed           =       .34389    g/sq.ft.

Since last printout at time =       7.00
           Change in Total Mass =     -.33452E-01g/sq.ft.
                Advection in from atmosphere =       .00000    g/sq.ft.
                Advection in from water table =     -.33053E-01g/sq.ft.
                Diffusion in from atmosphere =      -.39908E-03g/sq.ft.
                Diffusion in from water table =      .00000    g/sq.ft.
           Total inflow at boundaries =     -.33452E-01g/sq.ft.
           Mass discrepancy =      .33900E-06g/sq.ft.

Since beginning of run at time = 0.0
           Change in Total Mass =     -.28655    g/sq.ft.
                Advection in from atmosphere =       .00000    g/sq.ft.
                Advection in from water table =     -.28227    g/sq.ft.
                Diffusion in from atmosphere =      -.42786E-02g/sq.ft.
                Diffusion in from water table =      .00000    g/sq.ft.
           Total inflow at boundaries =     -.28655    g/sq.ft.
           Mass discrepancy =      .59605E-06g/sq.ft.


Polygon   1
At time =       9.00, total mass in vadose zone =     1.0324    g/sq.ft.
Mass in gas phase     =       .13243    g/sq.ft.
Mass in liquid phase  =       .56664    g/sq.ft.
Mass sorbed           =       .33332    g/sq.ft.

Since last printout at time =       8.00
           Change in Total Mass =     -.32759E-01g/sq.ft.
                Advection in from atmosphere =       .00000    g/sq.ft.
                Advection in from water table =     -.32390E-01g/sq.ft.
                Diffusion in from atmosphere =      -.36894E-03g/sq.ft.
                Diffusion in from water table =      .00000    g/sq.ft.
           Total inflow at boundaries =     -.32759E-01g/sq.ft.
           Mass discrepancy =     -.18999E-06g/sq.ft.

Since beginning of run at time = 0.0
           Change in Total Mass =     -.31930    g/sq.ft.
                Advection in from atmosphere =       .00000    g/sq.ft.
                Advection in from water table =     -.31466    g/sq.ft.
                Diffusion in from atmosphere =      -.46476E-02g/sq.ft.
                Diffusion in from water table =      .00000    g/sq.ft.
           Total inflow at boundaries =     -.31930    g/sq.ft.
           Mass discrepancy =      .41723E-06g/sq.ft.


Polygon   1
At time =      10.00, total mass in vadose zone =     1.0003    g/sq.ft.
Mass in gas phase     =       .12832    g/sq.ft.
```

```
Mass in liquid phase  =        .54903    g/sq.ft.
Mass sorbed           =        .32296    g/sq.ft.

Since last printout at time =       9.00
               Change in Total Mass =     -.32083E-01g/sq.ft.
                    Advection in from atmosphere =        .00000    g/sq.ft.
                    Advection in from water table =     -.31742E-01g/sq.ft.
                    Diffusion in from atmosphere =      -.34129E-03g/sq.ft.
                    Diffusion in from water table =       .00000    g/sq.ft.
               Total inflow at boundaries =     -.32083E-01g/sq.ft.
               Mass discrepancy =      .20489E-06g/sq.ft.

Since beginning of run at time = 0.0
               Change in Total Mass =     -.35139    g/sq.ft.
                    Advection in from atmosphere =        .00000    g/sq.ft.
                    Advection in from water table =      -.34640    g/sq.ft.
                    Diffusion in from atmosphere =      -.49888E-02g/sq.ft.
                    Diffusion in from water table =       .00000    g/sq.ft.
               Total inflow at boundaries =     -.35139    g/sq.ft.
               Mass discrepancy =      .62585E-06g/sq.ft.


Polygon   1
At time =      11.00, total mass in vadose zone =      .96888    g/sq.ft.
Mass in gas phase     =        .12429    g/sq.ft.
Mass in liquid phase  =        .53178    g/sq.ft.
Mass sorbed           =        .31281    g/sq.ft.

Since last printout at time =      10.00
               Change in Total Mass =     -.31422E-01g/sq.ft.
                    Advection in from atmosphere =        .00000    g/sq.ft.
                    Advection in from water table =     -.31106E-01g/sq.ft.
                    Diffusion in from atmosphere =      -.31592E-03g/sq.ft.
                    Diffusion in from water table =       .00000    g/sq.ft.
               Total inflow at boundaries =     -.31422E-01g/sq.ft.
               Mass discrepancy =      .67055E-07g/sq.ft.

Since beginning of run at time = 0.0
               Change in Total Mass =     -.38281    g/sq.ft.
                    Advection in from atmosphere =        .00000    g/sq.ft.
                    Advection in from water table =      -.37751    g/sq.ft.
                    Diffusion in from atmosphere =      -.53048E-02g/sq.ft.
                    Diffusion in from water table =       .00000    g/sq.ft.
               Total inflow at boundaries =     -.38281    g/sq.ft.
               Mass discrepancy =      .71526E-06g/sq.ft.


Polygon   1
At time =      12.00, total mass in vadose zone =      .93811    g/sq.ft.
Mass in gas phase     =        .12034    g/sq.ft.
Mass in liquid phase  =        .51489    g/sq.ft.
Mass sorbed           =        .30288    g/sq.ft.

Since last printout at time =      11.00
               Change in Total Mass =     -.30773E-01g/sq.ft.
                    Advection in from atmosphere =        .00000    g/sq.ft.
                    Advection in from water table =     -.30480E-01g/sq.ft.
                    Diffusion in from atmosphere =      -.29265E-03g/sq.ft.
                    Diffusion in from water table =       .00000    g/sq.ft.
               Total inflow at boundaries =     -.30773E-01g/sq.ft.
```

```
              Mass discrepancy =     -.46566E-07g/sq.ft.

Since beginning of run at time = 0.0
              Change in Total Mass =     -.41358    g/sq.ft.
                   Advection in from atmosphere =       .00000    g/sq.ft.
                   Advection in from water table =     -.40799    g/sq.ft.
                   Diffusion in from atmosphere =      -.55974E-02g/sq.ft.
                   Diffusion in from water table =      .00000    g/sq.ft.
              Total inflow at boundaries =     -.41358    g/sq.ft.
              Mass discrepancy =      .65565E-06g/sq.ft.


Polygon   1
At time =      13.00, total mass in vadose zone =     .90798    g/sq.ft.
Mass in gas phase     =       .11647    g/sq.ft.
Mass in liquid phase  =       .49835    g/sq.ft.
Mass sorbed           =       .29315    g/sq.ft.

Since last printout at time =      12.00
              Change in Total Mass =     -.30132E-01g/sq.ft.
                   Advection in from atmosphere =       .00000    g/sq.ft.
                   Advection in from water table =     -.29861E-01g/sq.ft.
                   Diffusion in from atmosphere =      -.27128E-03g/sq.ft.
                   Diffusion in from water table =      .00000    g/sq.ft.
              Total inflow at boundaries =     -.30132E-01g/sq.ft.
              Mass discrepancy =      .18999E-06g/sq.ft.

Since beginning of run at time = 0.0
              Change in Total Mass =     -.44371    g/sq.ft.
                   Advection in from atmosphere =       .00000    g/sq.ft.
                   Advection in from water table =     -.43785    g/sq.ft.
                   Diffusion in from atmosphere =      -.58687E-02g/sq.ft.
                   Diffusion in from water table =      .00000    g/sq.ft.
              Total inflow at boundaries =     -.44372    g/sq.ft.
              Mass discrepancy =      .86427E-06g/sq.ft.


Polygon   1
At time =      14.00, total mass in vadose zone =     .87848    g/sq.ft.
Mass in gas phase     =       .11269    g/sq.ft.
Mass in liquid phase  =       .48216    g/sq.ft.
Mass sorbed           =       .28363    g/sq.ft.

Since last printout at time =      13.00
              Change in Total Mass =     -.29499E-01g/sq.ft.
                   Advection in from atmosphere =       .00000    g/sq.ft.
                   Advection in from water table =     -.29247E-01g/sq.ft.
                   Diffusion in from atmosphere =      -.25166E-03g/sq.ft.
                   Diffusion in from water table =      .00000    g/sq.ft.
              Total inflow at boundaries =     -.29498E-01g/sq.ft.
              Mass discrepancy =     -.70781E-07g/sq.ft.

Since beginning of run at time = 0.0
              Change in Total Mass =     -.47321    g/sq.ft.
                   Advection in from atmosphere =       .00000    g/sq.ft.
                   Advection in from water table =     -.46709    g/sq.ft.
                   Diffusion in from atmosphere =      -.61204E-02g/sq.ft.
                   Diffusion in from water table =      .00000    g/sq.ft.
              Total inflow at boundaries =     -.47321    g/sq.ft.
              Mass discrepancy =      .77486E-06g/sq.ft.
```

```
Polygon   1
At time =      15.00, total mass in vadose zone =     .84961    g/sq.ft.
Mass in gas phase     =       .10899    g/sq.ft.
Mass in liquid phase  =       .46631    g/sq.ft.
Mass sorbed           =       .27430    g/sq.ft.

Since last printout at time =      14.00
              Change in Total Mass =     -.28871E-01g/sq.ft.
                   Advection in from atmosphere =       .00000    g/sq.ft.
                   Advection in from water table =     -.28638E-01g/sq.ft.
                   Diffusion in from atmosphere =      -.23362E-03g/sq.ft.
                   Diffusion in from water table =      .00000    g/sq.ft.
              Total inflow at boundaries =     -.28872E-01g/sq.ft.
              Mass discrepancy =      .83819E-07g/sq.ft.

Since beginning of run at time = 0.0
              Change in Total Mass =     -.50208    g/sq.ft.
                   Advection in from atmosphere =       .00000    g/sq.ft.
                   Advection in from water table =     -.49573    g/sq.ft.
                   Diffusion in from atmosphere =      -.63540E-02g/sq.ft.
                   Diffusion in from water table =      .00000    g/sq.ft.
              Total inflow at boundaries =     -.50208    g/sq.ft.
              Mass discrepancy =      .83447E-06g/sq.ft.


Polygon   1
At time =      16.00, total mass in vadose zone =     .82136    g/sq.ft.
Mass in gas phase     =       .10536    g/sq.ft.
Mass in liquid phase  =       .45081    g/sq.ft.
Mass sorbed           =       .26518    g/sq.ft.

Since last printout at time =      15.00
              Change in Total Mass =     -.28250E-01g/sq.ft.
                   Advection in from atmosphere =       .00000    g/sq.ft.
                   Advection in from water table =     -.28033E-01g/sq.ft.
                   Diffusion in from atmosphere =      -.21703E-03g/sq.ft.
                   Diffusion in from water table =      .00000    g/sq.ft.
              Total inflow at boundaries =     -.28250E-01g/sq.ft.
              Mass discrepancy =     -.37253E-08g/sq.ft.

Since beginning of run at time = 0.0
              Change in Total Mass =     -.53033    g/sq.ft.
                   Advection in from atmosphere =       .00000    g/sq.ft.
                   Advection in from water table =     -.52376    g/sq.ft.
                   Diffusion in from atmosphere =      -.65710E-02g/sq.ft.
                   Diffusion in from water table =      .00000    g/sq.ft.
              Total inflow at boundaries =     -.53034    g/sq.ft.
              Mass discrepancy =      .83447E-06g/sq.ft.


Polygon   1
At time =      17.00, total mass in vadose zone =     .79372    g/sq.ft.
Mass in gas phase     =       .10182    g/sq.ft.
Mass in liquid phase  =       .43564    g/sq.ft.
Mass sorbed           =       .25626    g/sq.ft.

Since last printout at time =      16.00
              Change in Total Mass =     -.27634E-01g/sq.ft.
```

```
                Advection in from atmosphere =       .00000    g/sq.ft.
                Advection in from water table =     -.27432E-01g/sq.ft.
                Diffusion in from atmosphere =      -.20175E-03g/sq.ft.
                Diffusion in from water table =      .00000    g/sq.ft.
           Total inflow at boundaries =     -.27634E-01g/sq.ft.
           Mass discrepancy =     -.93132E-08g/sq.ft.

Since beginning of run at time = 0.0
           Change in Total Mass =     -.55797    g/sq.ft.
                Advection in from atmosphere =       .00000    g/sq.ft.
                Advection in from water table =     -.55120    g/sq.ft.
                Diffusion in from atmosphere =      -.67728E-02g/sq.ft.
                Diffusion in from water table =      .00000    g/sq.ft.
           Total inflow at boundaries =     -.55797    g/sq.ft.
           Mass discrepancy =      .83447E-06g/sq.ft.


Polygon   1
At time =      18.00, total mass in vadose zone =     .76670    g/sq.ft.
Mass in gas phase     =       .98351E-01g/sq.ft.
Mass in liquid phase  =       .42081    g/sq.ft.
Mass sorbed           =       .24754    g/sq.ft.

Since last printout at time =      17.00
           Change in Total Mass =     -.27023E-01g/sq.ft.
                Advection in from atmosphere =       .00000    g/sq.ft.
                Advection in from water table =     -.26835E-01g/sq.ft.
                Diffusion in from atmosphere =      -.18768E-03g/sq.ft.
                Diffusion in from water table =      .00000    g/sq.ft.
           Total inflow at boundaries =     -.27023E-01g/sq.ft.
           Mass discrepancy =      .63330E-07g/sq.ft.

Since beginning of run at time = 0.0
           Change in Total Mass =     -.58499    g/sq.ft.
                Advection in from atmosphere =       .00000    g/sq.ft.
                Advection in from water table =     -.57803    g/sq.ft.
                Diffusion in from atmosphere =      -.69604E-02g/sq.ft.
                Diffusion in from water table =      .00000    g/sq.ft.
           Total inflow at boundaries =     -.58499    g/sq.ft.
           Mass discrepancy =      .89407E-06g/sq.ft.


Polygon   1
At time =      19.00, total mass in vadose zone =     .74028    g/sq.ft.
Mass in gas phase     =       .94962E-01g/sq.ft.
Mass in liquid phase  =       .40631    g/sq.ft.
Mass sorbed           =       .23901    g/sq.ft.

Since last printout at time =      18.00
           Change in Total Mass =     -.26416E-01g/sq.ft.
                Advection in from atmosphere =       .00000    g/sq.ft.
                Advection in from water table =     -.26241E-01g/sq.ft.
                Diffusion in from atmosphere =      -.17469E-03g/sq.ft.
                Diffusion in from water table =      .00000    g/sq.ft.
           Total inflow at boundaries =     -.26416E-01g/sq.ft.
           Mass discrepancy =     -.93132E-08g/sq.ft.

Since beginning of run at time = 0.0
           Change in Total Mass =     -.61141    g/sq.ft.
                Advection in from atmosphere =       .00000    g/sq.ft.
```

```
                Advection in from water table =     -.60427    g/sq.ft.
                Diffusion in from atmosphere =      -.71351E-02g/sq.ft.
                Diffusion in from water table =      .00000    g/sq.ft.
           Total inflow at boundaries =     -.61141    g/sq.ft.
           Mass discrepancy =      .83447E-06g/sq.ft.


Polygon   1
At time =      20.00, total mass in vadose zone =     .71447    g/sq.ft.
Mass in gas phase     =       .91651E-01g/sq.ft.
Mass in liquid phase  =       .39214    g/sq.ft.
Mass sorbed           =       .23067    g/sq.ft.

Since last printout at time =      19.00
           Change in Total Mass =     -.25812E-01g/sq.ft.
                Advection in from atmosphere =       .00000    g/sq.ft.
                Advection in from water table =     -.25650E-01g/sq.ft.
                Diffusion in from atmosphere =      -.16271E-03g/sq.ft.
                Diffusion in from water table =      .00000    g/sq.ft.
           Total inflow at boundaries =     -.25812E-01g/sq.ft.
           Mass discrepancy =      .20303E-06g/sq.ft.

Since beginning of run at time = 0.0
           Change in Total Mass =     -.63722    g/sq.ft.
                Advection in from atmosphere =       .00000    g/sq.ft.
                Advection in from water table =     -.62992    g/sq.ft.
                Diffusion in from atmosphere =      -.72978E-02g/sq.ft.
                Diffusion in from water table =      .00000    g/sq.ft.
           Total inflow at boundaries =     -.63722    g/sq.ft.
           Mass discrepancy =      .10729E-05g/sq.ft.


Polygon   1
At time =      21.00, total mass in vadose zone =     .68926    g/sq.ft.
Mass in gas phase     =       .88417E-01g/sq.ft.
Mass in liquid phase  =       .37831    g/sq.ft.
Mass sorbed           =       .22253    g/sq.ft.

Since last printout at time =      20.00
           Change in Total Mass =     -.25213E-01g/sq.ft.
                Advection in from atmosphere =       .00000    g/sq.ft.
                Advection in from water table =     -.25061E-01g/sq.ft.
                Diffusion in from atmosphere =      -.15164E-03g/sq.ft.
                Diffusion in from water table =      .00000    g/sq.ft.
           Total inflow at boundaries =     -.25213E-01g/sq.ft.
           Mass discrepancy =      .11176E-07g/sq.ft.

Since beginning of run at time = 0.0
           Change in Total Mass =     -.66243    g/sq.ft.
                Advection in from atmosphere =       .00000    g/sq.ft.
                Advection in from water table =     -.65498    g/sq.ft.
                Diffusion in from atmosphere =      -.74495E-02g/sq.ft.
                Diffusion in from water table =      .00000    g/sq.ft.
           Total inflow at boundaries =     -.66243    g/sq.ft.
           Mass discrepancy =      .10729E-05g/sq.ft.


Polygon   1
At time =      22.00, total mass in vadose zone =     .66464    g/sq.ft.
Mass in gas phase     =       .85259E-01g/sq.ft.
```

```
Mass in liquid phase  =        .36480    g/sq.ft.
Mass sorbed           =        .21459    g/sq.ft.

Since last printout at time =      21.00
              Change in Total Mass =     -.24617E-01g/sq.ft.
                   Advection in from atmosphere =       .00000    g/sq.ft.
                   Advection in from water table =     -.24475E-01g/sq.ft.
                   Diffusion in from atmosphere =      -.14141E-03g/sq.ft.
                   Diffusion in from water table =      .00000    g/sq.ft.
              Total inflow at boundaries =     -.24617E-01g/sq.ft.
              Mass discrepancy =     -.20489E-07g/sq.ft.

Since beginning of run at time = 0.0
              Change in Total Mass =     -.68705    g/sq.ft.
                   Advection in from atmosphere =       .00000    g/sq.ft.
                   Advection in from water table =     -.67946    g/sq.ft.
                   Diffusion in from atmosphere =      -.75909E-02g/sq.ft.
                   Diffusion in from water table =      .00000    g/sq.ft.
              Total inflow at boundaries =     -.68705    g/sq.ft.
              Mass discrepancy =      .10729E-05g/sq.ft.


Polygon   1
At time =      23.00, total mass in vadose zone =     .64062    g/sq.ft.
Mass in gas phase     =        .82177E-01g/sq.ft.
Mass in liquid phase  =        .35161    g/sq.ft.
Mass sorbed           =        .20683    g/sq.ft.

Since last printout at time =      22.00
              Change in Total Mass =     -.24024E-01g/sq.ft.
                   Advection in from atmosphere =       .00000    g/sq.ft.
                   Advection in from water table =     -.23892E-01g/sq.ft.
                   Diffusion in from atmosphere =      -.13194E-03g/sq.ft.
                   Diffusion in from water table =      .00000    g/sq.ft.
              Total inflow at boundaries =     -.24024E-01g/sq.ft.
              Mass discrepancy =      .20489E-07g/sq.ft.

Since beginning of run at time = 0.0
              Change in Total Mass =     -.71107    g/sq.ft.
                   Advection in from atmosphere =       .00000    g/sq.ft.
                   Advection in from water table =     -.70335    g/sq.ft.
                   Diffusion in from atmosphere =      -.77228E-02g/sq.ft.
                   Diffusion in from water table =      .00000    g/sq.ft.
              Total inflow at boundaries =     -.71107    g/sq.ft.
              Mass discrepancy =      .11325E-05g/sq.ft.


Polygon   1
At time =      24.00, total mass in vadose zone =     .61718    g/sq.ft.
Mass in gas phase     =        .79171E-01g/sq.ft.
Mass in liquid phase  =        .33875    g/sq.ft.
Mass sorbed           =        .19926    g/sq.ft.

Since last printout at time =      23.00
              Change in Total Mass =     -.23434E-01g/sq.ft.
                   Advection in from atmosphere =       .00000    g/sq.ft.
                   Advection in from water table =     -.23311E-01g/sq.ft.
                   Diffusion in from atmosphere =      -.12317E-03g/sq.ft.
                   Diffusion in from water table =      .00000    g/sq.ft.
              Total inflow at boundaries =     -.23434E-01g/sq.ft.
```

Mass discrepancy = -.78231E-07g/sq.ft.

Since beginning of run at time = 0.0
Change in Total Mass = -.73451 g/sq.ft.
Advection in from atmosphere = .00000 g/sq.ft.
Advection in from water table = -.72666 g/sq.ft.
Diffusion in from atmosphere = -.78460E-02g/sq.ft.
Diffusion in from water table = .00000 g/sq.ft.
Total inflow at boundaries = -.73451 g/sq.ft.
Mass discrepancy = .10133E-05g/sq.ft.

Polygon 1
At time = 25.00, total mass in vadose zone = .59434 g/sq.ft.
Mass in gas phase = .76240E-01g/sq.ft.
Mass in liquid phase = .32621 g/sq.ft.
Mass sorbed = .19189 g/sq.ft.

Since last printout at time = 24.00
Change in Total Mass = -.22848E-01g/sq.ft.
Advection in from atmosphere = .00000 g/sq.ft.
Advection in from water table = -.22733E-01g/sq.ft.
Diffusion in from atmosphere = -.11504E-03g/sq.ft.
Diffusion in from water table = .00000 g/sq.ft.
Total inflow at boundaries = -.22848E-01g/sq.ft.
Mass discrepancy = .11735E-06g/sq.ft.

Since beginning of run at time = 0.0
Change in Total Mass = -.75735 g/sq.ft.
Advection in from atmosphere = .00000 g/sq.ft.
Advection in from water table = -.74939 g/sq.ft.
Diffusion in from atmosphere = -.79610E-02g/sq.ft.
Diffusion in from water table = .00000 g/sq.ft.
Total inflow at boundaries = -.75736 g/sq.ft.
Mass discrepancy = .11325E-05g/sq.ft.

Polygon 1
At time = 26.00, total mass in vadose zone = .57207 g/sq.ft.
Mass in gas phase = .73384E-01g/sq.ft.
Mass in liquid phase = .31399 g/sq.ft.
Mass sorbed = .18470 g/sq.ft.

Since last printout at time = 25.00
Change in Total Mass = -.22264E-01g/sq.ft.
Advection in from atmosphere = .00000 g/sq.ft.
Advection in from water table = -.22157E-01g/sq.ft.
Diffusion in from atmosphere = -.10751E-03g/sq.ft.
Diffusion in from water table = .00000 g/sq.ft.
Total inflow at boundaries = -.22264E-01g/sq.ft.
Mass discrepancy = .27940E-07g/sq.ft.

Since beginning of run at time = 0.0
Change in Total Mass = -.77962 g/sq.ft.
Advection in from atmosphere = .00000 g/sq.ft.
Advection in from water table = -.77155 g/sq.ft.
Diffusion in from atmosphere = -.80685E-02g/sq.ft.
Diffusion in from water table = .00000 g/sq.ft.
Total inflow at boundaries = -.77962 g/sq.ft.
Mass discrepancy = .11921E-05g/sq.ft.

Polygon 1
At time = 27.00, total mass in vadose zone = .55039 g/sq.ft.
Mass in gas phase = .70603E-01g/sq.ft.
Mass in liquid phase = .30209 g/sq.ft.
Mass sorbed = .17770 g/sq.ft.

Since last printout at time = 26.00
Change in Total Mass = -.21684E-01g/sq.ft.
Advection in from atmosphere = .00000 g/sq.ft.
Advection in from water table = -.21584E-01g/sq.ft.
Diffusion in from atmosphere = -.10051E-03g/sq.ft.
Diffusion in from water table = .00000 g/sq.ft.
Total inflow at boundaries = -.21684E-01g/sq.ft.
Mass discrepancy = .70781E-07g/sq.ft.

Since beginning of run at time = 0.0
Change in Total Mass = -.80130 g/sq.ft.
Advection in from atmosphere = .00000 g/sq.ft.
Advection in from water table = -.79314 g/sq.ft.
Diffusion in from atmosphere = -.81691E-02g/sq.ft.
Diffusion in from water table = .00000 g/sq.ft.
Total inflow at boundaries = -.80130 g/sq.ft.
Mass discrepancy = .12517E-05g/sq.ft.

Polygon 1
At time = 28.00, total mass in vadose zone = .52928 g/sq.ft.
Mass in gas phase = .67895E-01g/sq.ft.
Mass in liquid phase = .29050 g/sq.ft.
Mass sorbed = .17088 g/sq.ft.

Since last printout at time = 27.00
Change in Total Mass = -.21108E-01g/sq.ft.
Advection in from atmosphere = .00000 g/sq.ft.
Advection in from water table = -.21014E-01g/sq.ft.
Diffusion in from atmosphere = -.94010E-04g/sq.ft.
Diffusion in from water table = .00000 g/sq.ft.
Total inflow at boundaries = -.21108E-01g/sq.ft.
Mass discrepancy = -.93132E-08g/sq.ft.

Since beginning of run at time = 0.0
Change in Total Mass = -.82241 g/sq.ft.
Advection in from atmosphere = .00000 g/sq.ft.
Advection in from water table = -.81415 g/sq.ft.
Diffusion in from atmosphere = -.82631E-02g/sq.ft.
Diffusion in from water table = .00000 g/sq.ft.
Total inflow at boundaries = -.82241 g/sq.ft.
Mass discrepancy = .12517E-05g/sq.ft.

Polygon 1
At time = 29.00, total mass in vadose zone = .50874 g/sq.ft.
Mass in gas phase = .65261E-01g/sq.ft.
Mass in liquid phase = .27923 g/sq.ft.
Mass sorbed = .16425 g/sq.ft.

Since last printout at time = 28.00
Change in Total Mass = -.20534E-01g/sq.ft.

```
                Advection in from atmosphere =        .00000    g/sq.ft.
                Advection in from water table =     -.20446E-01g/sq.ft.
                Diffusion in from atmosphere =      -.87970E-04g/sq.ft.
                Diffusion in from water table =       .00000    g/sq.ft.
            Total inflow at boundaries =     -.20534E-01g/sq.ft.
            Mass discrepancy =      .61467E-07g/sq.ft.

Since beginning of run at time = 0.0
            Change in Total Mass =     -.84294    g/sq.ft.
                Advection in from atmosphere =        .00000    g/sq.ft.
                Advection in from water table =     -.83460    g/sq.ft.
                Diffusion in from atmosphere =      -.83510E-02g/sq.ft.
                Diffusion in from water table =       .00000    g/sq.ft.
            Total inflow at boundaries =     -.84295    g/sq.ft.
            Mass discrepancy =      .13113E-05g/sq.ft.


Polygon   1
At time =      30.00, total mass in vadose zone =     .48878    g/sq.ft.
Mass in gas phase     =       .62700E-01g/sq.ft.
Mass in liquid phase  =       .26827    g/sq.ft.
Mass sorbed           =       .15781    g/sq.ft.

Since last printout at time =      29.00
            Change in Total Mass =     -.19965E-01g/sq.ft.
                Advection in from atmosphere =        .00000    g/sq.ft.
                Advection in from water table =     -.19882E-01g/sq.ft.
                Diffusion in from atmosphere =      -.82353E-04g/sq.ft.
                Diffusion in from water table =       .00000    g/sq.ft.
            Total inflow at boundaries =     -.19965E-01g/sq.ft.
            Mass discrepancy =     -.33528E-07g/sq.ft.

Since beginning of run at time = 0.0
            Change in Total Mass =     -.86291    g/sq.ft.
                Advection in from atmosphere =        .00000    g/sq.ft.
                Advection in from water table =     -.85448    g/sq.ft.
                Diffusion in from atmosphere =      -.84334E-02g/sq.ft.
                Diffusion in from water table =       .00000    g/sq.ft.
            Total inflow at boundaries =     -.86291    g/sq.ft.
            Mass discrepancy =      .13113E-05g/sq.ft.


GROUNDWATER IMPACT OF POLYGON   1

 Time        Mass per area (g/sq.ft.)      Total Mass (g)
     1.00          .37061E-01                 5503.5
     2.00          .36772E-01                 5460.7
     3.00          .36336E-01                 5395.9
     4.00          .35769E-01                 5311.7
     5.00          .35116E-01                 5214.7
     6.00          .34427E-01                 5112.3
     7.00          .33733E-01                 5009.4
     8.00          .33053E-01                 4908.4
     9.00          .32390E-01                 4809.9
    10.00          .31742E-01                 4713.7
    11.00          .31106E-01                 4619.3
    12.00          .30480E-01                 4526.3
    13.00          .29861E-01                 4434.3
    14.00          .29247E-01                 4343.1
    15.00          .28638E-01                 4252.7
```

16.00	.28033E-01	4162.9
17.00	.27432E-01	4073.7
18.00	.26835E-01	3985.0
19.00	.26241E-01	3896.8
20.00	.25650E-01	3809.0
21.00	.25061E-01	3721.6
22.00	.24475E-01	3634.6
23.00	.23892E-01	3547.9
24.00	.23311E-01	3461.7
25.00	.22733E-01	3375.8
26.00	.22157E-01	3290.3
27.00	.21584E-01	3205.2
28.00	.21014E-01	3120.5
29.00	.20446E-01	3036.3
30.00	.19882E-01	2952.5

****

****

TOTAL GROUNDWATER IMPACT

Time (yr)	Mass (g)	Cumulative Mass (g)
1.00	5503.5	5503.5
2.00	5460.7	10964.
3.00	5395.9	16360.
4.00	5311.7	21672.
5.00	5214.7	26887.
6.00	5112.3	31999.
7.00	5009.4	37008.
8.00	4908.4	41917.
9.00	4809.9	46727.
10.00	4713.7	51440.
11.00	4619.3	56060.
12.00	4526.3	60586.
13.00	4434.3	65020.
14.00	4343.1	69363.
15.00	4252.7	73616.
16.00	4162.9	77779.
17.00	4073.7	81853.
18.00	3985.0	85838.
19.00	3896.8	89735.
20.00	3809.0	93543.
21.00	3721.6	97265.
22.00	3634.6	.10090E+06
23.00	3547.9	.10445E+06
24.00	3461.7	.10791E+06
25.00	3375.8	.11129E+06
26.00	3290.3	.11458E+06
27.00	3205.2	.11778E+06
28.00	3120.5	.12090E+06
29.00	3036.3	.12394E+06
30.00	2952.5	.12689E+06

Polygon 21A, 26A
Time: .000

Cell	Cgas(g/cu.ft.)	Cliq(g/cu.ft.)	Csol
1	.12292E-04	.25988E-04	.83941E-10
2	.12292E-04	.25988E-04	.83941E-10
3	.12292E-04	.25988E-04	.83941E-10
4	.12292E-04	.25988E-04	.83941E-10
5	.12292E-04	.25988E-04	.83941E-10
6	.12292E-04	.25988E-04	.83941E-10
7	.36508E-02	.77184E-02	.24931E-07
8	.36508E-02	.77184E-02	.24931E-07
9	.36508E-02	.77184E-02	.24931E-07
10	.36508E-02	.77184E-02	.24931E-07
11	.36508E-02	.77184E-02	.24931E-07
12	.36508E-02	.77184E-02	.24931E-07
13	.91086E-02	.19257E-01	.62200E-07
14	.91086E-02	.19257E-01	.62200E-07
15	.91086E-02	.19257E-01	.62200E-07
16	.91086E-02	.19257E-01	.62200E-07
17	.91086E-02	.19257E-01	.62200E-07
18	.91086E-02	.19257E-01	.62200E-07
19	.14567E-01	.30797E-01	.99473E-07
20	.14567E-01	.30797E-01	.99473E-07
21	.14567E-01	.30797E-01	.99473E-07
22	.14567E-01	.30797E-01	.99473E-07
23	.14567E-01	.30797E-01	.99473E-07
24	.14567E-01	.30797E-01	.99473E-07
25	.20025E-01	.42335E-01	.13674E-06
26	.20025E-01	.42335E-01	.13674E-06
27	.20025E-01	.42335E-01	.13674E-06
28	.20025E-01	.42335E-01	.13674E-06
29	.20025E-01	.42335E-01	.13674E-06
30	.20025E-01	.42335E-01	.13674E-06
31	.25482E-01	.53874E-01	.17401E-06
32	.25482E-01	.53874E-01	.17401E-06
33	.25482E-01	.53874E-01	.17401E-06
34	.25482E-01	.53874E-01	.17401E-06
35	.25482E-01	.53874E-01	.17401E-06
36	.25482E-01	.53874E-01	.17401E-06
37	.30941E-01	.65414E-01	.21129E-06
38	.30941E-01	.65414E-01	.21129E-06
39	.30941E-01	.65414E-01	.21129E-06
40	.30941E-01	.65414E-01	.21129E-06
41	.30941E-01	.65414E-01	.21129E-06
42	.30941E-01	.65414E-01	.21129E-06
43	.36398E-01	.76952E-01	.24856E-06
44	.36398E-01	.76952E-01	.24856E-06
45	.36398E-01	.76952E-01	.24856E-06
46	.36398E-01	.76952E-01	.24856E-06
47	.36398E-01	.76952E-01	.24856E-06
48	.36398E-01	.76952E-01	.24856E-06
49	.41856E-01	.88491E-01	.28583E-06
50	.41856E-01	.88491E-01	.28583E-06
51	.41856E-01	.88491E-01	.28583E-06
52	.41856E-01	.88491E-01	.28583E-06
53	.41856E-01	.88491E-01	.28583E-06
54	.41856E-01	.88491E-01	.28583E-06
55	.47314E-01	.10003	.32310E-06
56	.47314E-01	.10003	.32310E-06

57	.47314E-01	.10003	.32310E-06
58	.47314E-01	.10003	.32310E-06
59	.47314E-01	.10003	.32310E-06
60	.47314E-01	.10003	.32310E-06

Polygon 21A, 26A
Time: 10.000

Cell	Cgas(g/cu.ft.)	Cliq(g/cu.ft.)	Csol
1	.32689E-04	.69110E-04	.22322E-09
2	.83603E-04	.17675E-03	.57090E-09
3	.15337E-03	.32425E-03	.10473E-08
4	.24291E-03	.51356E-03	.16588E-08
5	.35337E-03	.74709E-03	.24131E-08
6	.48611E-03	.10277E-02	.33195E-08
7	.64328E-03	.13600E-02	.43928E-08
8	.82918E-03	.17530E-02	.56622E-08
9	.10509E-02	.22218E-02	.71765E-08
10	.13172E-02	.27848E-02	.89948E-08
11	.16352E-02	.34571E-02	.11166E-07
12	.20077E-02	.42445E-02	.13710E-07
13	.24327E-02	.51432E-02	.16613E-07
14	.29069E-02	.61458E-02	.19851E-07
15	.34288E-02	.72491E-02	.23415E-07
16	.39997E-02	.84560E-02	.27313E-07
17	.46205E-02	.97685E-02	.31552E-07
18	.52888E-02	.11181E-01	.36116E-07
19	.59975E-02	.12680E-01	.40955E-07
20	.67379E-02	.14245E-01	.46011E-07
21	.75041E-02	.15865E-01	.51244E-07
22	.82942E-02	.17535E-01	.56639E-07
23	.91075E-02	.19255E-01	.62193E-07
24	.99415E-02	.21018E-01	.67888E-07
25	.10790E-01	.22813E-01	.73685E-07
26	.11648E-01	.24626E-01	.79541E-07
27	.12511E-01	.26451E-01	.85436E-07
28	.13381E-01	.28289E-01	.91373E-07
29	.14259E-01	.30146E-01	.97370E-07
30	.15146E-01	.32020E-01	.10343E-06
31	.16037E-01	.33906E-01	.10952E-06
32	.16930E-01	.35792E-01	.11561E-06
33	.17820E-01	.37675E-01	.12169E-06
34	.18712E-01	.39561E-01	.12778E-06
35	.19608E-01	.41454E-01	.13390E-06
36	.20508E-01	.43357E-01	.14004E-06
37	.21410E-01	.45264E-01	.14620E-06
38	.22309E-01	.47164E-01	.15234E-06
39	.23204E-01	.49056E-01	.15845E-06
40	.24097E-01	.50944E-01	.16455E-06
41	.24991E-01	.52835E-01	.17066E-06
42	.25887E-01	.54730E-01	.17678E-06
43	.26782E-01	.56622E-01	.18289E-06
44	.27672E-01	.58502E-01	.18896E-06
45	.28554E-01	.60367E-01	.19499E-06
46	.29430E-01	.62219E-01	.20097E-06
47	.30303E-01	.64065E-01	.20693E-06
48	.31173E-01	.65905E-01	.21287E-06
49	.32036E-01	.67729E-01	.21876E-06
50	.32886E-01	.69526E-01	.22457E-06
51	.33720E-01	.71291E-01	.23027E-06
52	.34539E-01	.73022E-01	.23586E-06

53	.35344E-01	.74722E-01	.24135E-06
54	.36131E-01	.76387E-01	.24673E-06
55	.36894E-01	.78001E-01	.25194E-06
56	.37625E-01	.79546E-01	.25693E-06
57	.38317E-01	.81009E-01	.26166E-06
58	.38966E-01	.82380E-01	.26609E-06
59	.39566E-01	.83649E-01	.27019E-06
60	.40109E-01	.84798E-01	.27390E-06

Polygon 21A, 26A
Time: 20.000

Cell	Cgas(g/cu.ft.)	Cliq(g/cu.ft.)	Csol
1	.15505E-04	.32781E-04	.10588E-09
2	.39589E-04	.83698E-04	.27035E-09
3	.72588E-04	.15346E-03	.49568E-09
4	.11507E-03	.24328E-03	.78581E-09
5	.16782E-03	.35480E-03	.11460E-08
6	.23179E-03	.49004E-03	.15828E-08
7	.30809E-03	.65136E-03	.21039E-08
8	.39799E-03	.84142E-03	.27178E-08
9	.50288E-03	.10632E-02	.34341E-08
10	.62429E-03	.13199E-02	.42632E-08
11	.76387E-03	.16150E-02	.52163E-08
12	.92342E-03	.19523E-02	.63058E-08
13	.11049E-02	.23359E-02	.75450E-08
14	.13103E-02	.27703E-02	.89479E-08
15	.15419E-02	.32599E-02	.10530E-07
16	.18019E-02	.38095E-02	.12305E-07
17	.20923E-02	.44235E-02	.14288E-07
18	.24151E-02	.51058E-02	.16492E-07
19	.27718E-02	.58600E-02	.18928E-07
20	.31637E-02	.66885E-02	.21604E-07
21	.35916E-02	.75932E-02	.24526E-07
22	.40559E-02	.85749E-02	.27697E-07
23	.45566E-02	.96334E-02	.31116E-07
24	.50930E-02	.10767E-01	.34779E-07
25	.56641E-02	.11975E-01	.38678E-07
26	.62684E-02	.13252E-01	.42806E-07
27	.69043E-02	.14597E-01	.47148E-07
28	.75698E-02	.16004E-01	.51692E-07
29	.82625E-02	.17468E-01	.56423E-07
30	.89803E-02	.18986E-01	.61324E-07
31	.97207E-02	.20551E-01	.66380E-07
32	.10481E-01	.22159E-01	.71574E-07
33	.11260E-01	.23805E-01	.76892E-07
34	.12054E-01	.25485E-01	.82316E-07
35	.12863E-01	.27193E-01	.87835E-07
36	.13682E-01	.28927E-01	.93434E-07
37	.14512E-01	.30681E-01	.99101E-07
38	.15350E-01	.32453E-01	.10482E-06
39	.16195E-01	.34239E-01	.11059E-06
40	.17045E-01	.36036E-01	.11639E-06
41	.17898E-01	.37840E-01	.12222E-06
42	.18754E-01	.39650E-01	.12807E-06
43	.19611E-01	.41461E-01	.13392E-06
44	.20468E-01	.43272E-01	.13977E-06
45	.21322E-01	.45078E-01	.14560E-06
46	.22173E-01	.46878E-01	.15142E-06
47	.23020E-01	.48668E-01	.15720E-06
48	.23860E-01	.50444E-01	.16293E-06

49	.24691E-01	.52201E-01	.16861E-06
50	.25512E-01	.53937E-01	.17422E-06
51	.26320E-01	.55644E-01	.17973E-06
52	.27112E-01	.57319E-01	.18514E-06
53	.27885E-01	.58953E-01	.19042E-06
54	.28635E-01	.60539E-01	.19554E-06
55	.29358E-01	.62068E-01	.20048E-06
56	.30049E-01	.63529E-01	.20520E-06
57	.30703E-01	.64911E-01	.20966E-06
58	.31312E-01	.66198E-01	.21382E-06
59	.31868E-01	.67375E-01	.21762E-06
60	.32363E-01	.68421E-01	.22100E-06

Polygon 21A, 26A
Time: 30.000

Cell	Cgas(g/cu.ft.)	Cliq(g/cu.ft.)	Csol
1	.78156E-05	.16524E-04	.53371E-10
2	.19918E-04	.42110E-04	.13601E-09
3	.36459E-04	.77080E-04	.24897E-09
4	.57712E-04	.12201E-03	.39410E-09
5	.84057E-04	.17771E-03	.57401E-09
6	.11597E-03	.24518E-03	.79193E-09
7	.15402E-03	.32562E-03	.10517E-08
8	.19884E-03	.42038E-03	.13578E-08
9	.25117E-03	.53102E-03	.17152E-08
10	.31181E-03	.65921E-03	.21293E-08
11	.38162E-03	.80682E-03	.26060E-08
12	.46157E-03	.97583E-03	.31519E-08
13	.55264E-03	.11684E-02	.37739E-08
14	.65593E-03	.13867E-02	.44792E-08
15	.77256E-03	.16333E-02	.52756E-08
16	.90373E-03	.19106E-02	.61713E-08
17	.10507E-02	.22213E-02	.71747E-08
18	.12146E-02	.25679E-02	.82945E-08
19	.13970E-02	.29534E-02	.95395E-08
20	.15990E-02	.33805E-02	.10919E-07
21	.18219E-02	.38519E-02	.12442E-07
22	.20672E-02	.43705E-02	.14117E-07
23	.23360E-02	.49388E-02	.15952E-07
24	.26296E-02	.55593E-02	.17957E-07
25	.29489E-02	.62344E-02	.20137E-07
26	.32949E-02	.69660E-02	.22500E-07
27	.36684E-02	.77556E-02	.25051E-07
28	.40700E-02	.86046E-02	.27793E-07
29	.45000E-02	.95137E-02	.30729E-07
30	.49585E-02	.10483E-01	.33860E-07
31	.54455E-02	.11513E-01	.37186E-07
32	.59606E-02	.12602E-01	.40703E-07
33	.65031E-02	.13749E-01	.44408E-07
34	.70724E-02	.14952E-01	.48296E-07
35	.76673E-02	.16210E-01	.52358E-07
36	.82866E-02	.17519E-01	.56587E-07
37	.89289E-02	.18877E-01	.60973E-07
38	.95927E-02	.20280E-01	.65506E-07
39	.10276E-01	.21726E-01	.70173E-07
40	.10978E-01	.23209E-01	.74964E-07
41	.11695E-01	.24725E-01	.79863E-07
42	.12427E-01	.26272E-01	.84859E-07
43	.13170E-01	.27844E-01	.89938E-07
44	.13924E-01	.29438E-01	.95084E-07

45	.14685E-01	.31047E-01	.10028E-06
46	.15452E-01	.32669E-01	.10552E-06
47	.16222E-01	.34296E-01	.11078E-06
48	.16993E-01	.35926E-01	.11604E-06
49	.17762E-01	.37551E-01	.12129E-06
50	.18526E-01	.39166E-01	.12651E-06
51	.19282E-01	.40765E-01	.13167E-06
52	.20027E-01	.42339E-01	.13676E-06
53	.20756E-01	.43883E-01	.14174E-06
54	.21467E-01	.45386E-01	.14660E-06
55	.22155E-01	.46839E-01	.15129E-06
56	.22813E-01	.48231E-01	.15579E-06
57	.23437E-01	.49549E-01	.16004E-06
58	.24018E-01	.50779E-01	.16402E-06
59	.24550E-01	.51903E-01	.16765E-06
60	.25024E-01	.52904E-01	.17088E-06

V-Leach, VER 1.1
Jake Turin, 11/91
PGA V-leach model, poly screen-TCE-11/3/92-Poly21A,26A.INP. New soil, Old chem
polygons.
Timestep = 1.00 years. Simulation length = 30.00 years.
Printout every 1.00 years. Vertical profile stored every 10.00 years.
Koc = 123.60 ml/g, .43649E-02cu.ft./g
Kh = .47300 (dimensionless).
Aqueous solubility = 1100.0 mg/l, 31.149 g/cu.ft
Free air diffusion coefficient = .70290 sq. m/day, 2761.7 sq.ft./yr

Polygon 1
Polygon 21A, 26A
Polygon area = .14850E+06sq. ft.
60 cells, each cell 1.000 ft. thick.
Soil Properties:
Bulk density = 1.6400 g/ml, 46440. g/cu.ft.
Porosity = .3810 Volumetric water content = .2550
Organic carbon content = .00074000
Recharge Rate = .37073500 ft/yr
Conc. in recharge water = .00000 mg/l, .00000 g/cu.ft
Atmospheric concentration = .00000 mg/l, .00000 g/cu.ft
Water table is impermeable to gas diffusion.

Calculation of Total TCE Mass and Revised Vertical Distributions in Polygon 21A, 26A using HGC Distribution equations and Revised Soil Physical Data

0.431 Cs **	Cz = (74.527*z - 371.636)Cs

Cz (ug/L) Vert. Dist. Eq.	Calculated Depth Interval (z)	Total Depth Interval (feet)	Total Soil Conc Ct (ug/Kg)	Mt (ug/cc)	Volume of Soil (cubic ft)	Mass TCE (grams)	Mass TCE (pounds)
0.431	3	6	0.26	4.23E-04	891000	10.68	0.02
128.92	9	6	77.22	0.13	891000	3195.21	7.04
321.64	15	6	192.66	0.32	891000	7972.02	17.58
514.37	21	6	308.11	0.51	891000	12748.83	28.11
707.10	27	6	423.55	0.69	891000	17525.63	38.64
899.82	33	6	538.99	0.88	891000	22302.44	49.17
1092.55	39	6	654.44	1.07	891000	27079.25	59.70
1285.28	45	6	769.88	1.26	891000	31856.06	70.23
1478.00	51	6	885.32	1.45	891000	36632.87	80.76
1670.73	57	6	1000.77	1.64	891000	41409.67	91.29
8098.83		60	4851.20	7.96		200732.66	442.54

** Cs Determined as mathematical average of VOC concentrations for polygon(s) listed in Table A-1 of HGC, 1989.

26.00	1853.900	0.104	35.821
27.00	1831.400	0.102	35.390
28.00	1809.000	0.101	34.962
29.00	1786.800	0.100	34.537
30.00	1764.700	0.099	34.115

**** Batch 4 ****
Polygon 21A, 26A

Time Interval (years)	Mass In (grams)	Mass/Area (g/sq m)	GW Concentration (ugrams/l)
1.00	5503.500	0.399	45.362
2.00	5460.700	0.396	72.976
3.00	5395.900	0.391	89.468
4.00	5311.700	0.385	98.942
5.00	5214.700	0.378	103.984
6.00	5112.300	0.371	106.248
7.00	5009.400	0.363	106.796
8.00	4908.400	0.356	106.302
9.00	4809.900	0.349	105.185
10.00	4713.700	0.342	103.703
11.00	4619.300	0.335	102.012
12.00	4526.300	0.328	100.202
13.00	4434.300	0.321	98.329
14.00	4343.100	0.315	96.421
15.00	4252.700	0.308	94.501
16.00	4162.900	0.302	92.576
17.00	4073.700	0.295	90.654
18.00	3985.000	0.289	88.738
19.00	3896.800	0.282	86.830
20.00	3809.000	0.276	84.930
21.00	3721.600	0.270	83.038
22.00	3634.600	0.263	81.154
23.00	3547.900	0.257	79.279
24.00	3461.700	0.251	77.411
25.00	3375.800	0.245	75.552
26.00	3290.300	0.238	73.701
27.00	3205.200	0.232	71.859
28.00	3120.500	0.226	70.024
29.00	3036.300	0.220	68.200
30.00	2952.500	0.214	66.384

**** Batch 5 ****

```
PGA V-leach model, polygon screen-TCE-11/3/92-Poly111.INP.  New soil, Old chem.
    1
       1.0         30.         1.0         10.
     123.6        .473       1100.       .7029
lygon 111
    192500.          1.    .196850        1.64        .381        .255     .00074
         0.          0.        -1.
    60
     1     6       0.16
     7    12      47.66
    13    18     118.91
    19    24     190.15
    25    30     261.40
    31    36     332.65
    37    42     403.90
    43    48     475.15
    49    54     546.39
    55    60     617.64
```

V-Leach, VER 1.1
Jake Turin, 11/91
PGA V-leach model, polygon screen-TCE-11/3/92-Poly111.INP. New soil, Old chem.

Polygon 1
At time = .00, total mass in vadose zone = .83422 g/sq.ft.
Mass in gas phase = .10701 g/sq.ft.
Mass in liquid phase = .45787 g/sq.ft.
Mass sorbed = .26934 g/sq.ft.

Polygon 1
At time = 1.00, total mass in vadose zone = .82164 g/sq.ft.
Mass in gas phase = .10540 g/sq.ft.
Mass in liquid phase = .45097 g/sq.ft.
Mass sorbed = .26528 g/sq.ft.

Since last printout at time = .00
Change in Total Mass = -.12579E-01g/sq.ft.
Advection in from atmosphere = .00000 g/sq.ft.
Advection in from water table = -.12152E-01g/sq.ft.
Diffusion in from atmosphere = -.42664E-03g/sq.ft.
Diffusion in from water table = .00000 g/sq.ft.
Total inflow at boundaries = -.12579E-01g/sq.ft.
Mass discrepancy = -.20117E-06g/sq.ft.

Since beginning of run at time = 0.0
Change in Total Mass = -.12579E-01g/sq.ft.
Advection in from atmosphere = .00000 g/sq.ft.
Advection in from water table = -.12152E-01g/sq.ft.
Diffusion in from atmosphere = -.42664E-03g/sq.ft.
Diffusion in from water table = .00000 g/sq.ft.
Total inflow at boundaries = -.12579E-01g/sq.ft.
Mass discrepancy = -.20117E-06g/sq.ft.

Polygon 1
At time = 2.00, total mass in vadose zone = .80913 g/sq.ft.
Mass in gas phase = .10379 g/sq.ft.
Mass in liquid phase = .44410 g/sq.ft.
Mass sorbed = .26124 g/sq.ft.

Since last printout at time = 1.00
Change in Total Mass = -.12508E-01g/sq.ft.
Advection in from atmosphere = .00000 g/sq.ft.
Advection in from water table = -.12086E-01g/sq.ft.
Diffusion in from atmosphere = -.42196E-03g/sq.ft.
Diffusion in from water table = .00000 g/sq.ft.
Total inflow at boundaries = -.12508E-01g/sq.ft.
Mass discrepancy = -.73574E-07g/sq.ft.

Since beginning of run at time = 0.0
Change in Total Mass = -.25087E-01g/sq.ft.
Advection in from atmosphere = .00000 g/sq.ft.
Advection in from water table = -.24238E-01g/sq.ft.
Diffusion in from atmosphere = -.84860E-03g/sq.ft.
Diffusion in from water table = .00000 g/sq.ft.
Total inflow at boundaries = -.25086E-01g/sq.ft.
Mass discrepancy = -.27381E-06g/sq.ft.

```
Polygon   1
At time =       3.00, total mass in vadose zone =     .79671    g/sq.ft.
Mass in gas phase     =       .10220    g/sq.ft.
Mass in liquid phase  =       .43728    g/sq.ft.
Mass sorbed           =       .25723    g/sq.ft.

Since last printout at time =       2.00
               Change in Total Mass =     -.12421E-01g/sq.ft.
                    Advection in from atmosphere =       .00000    g/sq.ft.
                    Advection in from water table =     -.12006E-01g/sq.ft.
                    Diffusion in from atmosphere =      -.41534E-03g/sq.ft.
                    Diffusion in from water table =      .00000    g/sq.ft.
               Total inflow at boundaries =     -.12422E-01g/sq.ft.
               Mass discrepancy =      .17695E-06g/sq.ft.

Since beginning of run at time = 0.0
               Change in Total Mass =     -.37508E-01g/sq.ft.
                    Advection in from atmosphere =       .00000    g/sq.ft.
                    Advection in from water table =     -.36244E-01g/sq.ft.
                    Diffusion in from atmosphere =      -.12639E-02g/sq.ft.
                    Diffusion in from water table =      .00000    g/sq.ft.
               Total inflow at boundaries =     -.37508E-01g/sq.ft.
               Mass discrepancy =     -.96858E-07g/sq.ft.


Polygon   1
At time =       4.00, total mass in vadose zone =     .78439    g/sq.ft.
Mass in gas phase     =       .10062    g/sq.ft.
Mass in liquid phase  =       .43052    g/sq.ft.
Mass sorbed           =       .25325    g/sq.ft.

Since last printout at time =       3.00
               Change in Total Mass =     -.12319E-01g/sq.ft.
                    Advection in from atmosphere =       .00000    g/sq.ft.
                    Advection in from water table =     -.11912E-01g/sq.ft.
                    Diffusion in from atmosphere =      -.40734E-03g/sq.ft.
                    Diffusion in from water table =      .00000    g/sq.ft.
               Total inflow at boundaries =     -.12319E-01g/sq.ft.
               Mass discrepancy =      .38184E-07g/sq.ft.

Since beginning of run at time = 0.0
               Change in Total Mass =     -.49827E-01g/sq.ft.
                    Advection in from atmosphere =       .00000    g/sq.ft.
                    Advection in from water table =     -.48156E-01g/sq.ft.
                    Diffusion in from atmosphere =      -.16713E-02g/sq.ft.
                    Diffusion in from water table =      .00000    g/sq.ft.
               Total inflow at boundaries =     -.49827E-01g/sq.ft.
               Mass discrepancy =     -.55879E-07g/sq.ft.


Polygon   1
At time =       5.00, total mass in vadose zone =     .77219    g/sq.ft.
Mass in gas phase     =       .99056E-01g/sq.ft.
Mass in liquid phase  =       .42383    g/sq.ft.
Mass sorbed           =       .24931    g/sq.ft.

Since last printout at time =       4.00
               Change in Total Mass =     -.12201E-01g/sq.ft.
```

```
                Advection in from atmosphere =       .00000    g/sq.ft.
                Advection in from water table =     -.11802E-01g/sq.ft.
                Diffusion in from atmosphere =      -.39839E-03g/sq.ft.
                Diffusion in from water table =      .00000    g/sq.ft.
            Total inflow at boundaries =     -.12201E-01g/sq.ft.
            Mass discrepancy =     -.81956E-07g/sq.ft.

Since beginning of run at time = 0.0
            Change in Total Mass =     -.62028E-01g/sq.ft.
                Advection in from atmosphere =       .00000    g/sq.ft.
                Advection in from water table =     -.59958E-01g/sq.ft.
                Diffusion in from atmosphere =      -.20697E-02g/sq.ft.
                Diffusion in from water table =      .00000    g/sq.ft.
            Total inflow at boundaries =     -.62028E-01g/sq.ft.
            Mass discrepancy =     -.14156E-06g/sq.ft.


Polygon   1
At time =       6.00, total mass in vadose zone =     .76012    g/sq.ft.
Mass in gas phase     =       .97507E-01g/sq.ft.
Mass in liquid phase  =       .41720    g/sq.ft.
Mass sorbed           =       .24541    g/sq.ft.

Since last printout at time =       5.00
            Change in Total Mass =     -.12069E-01g/sq.ft.
                Advection in from atmosphere =       .00000    g/sq.ft.
                Advection in from water table =     -.11681E-01g/sq.ft.
                Diffusion in from atmosphere =      -.38881E-03g/sq.ft.
                Diffusion in from water table =      .00000    g/sq.ft.
            Total inflow at boundaries =     -.12070E-01g/sq.ft.
            Mass discrepancy =      .13784E-06g/sq.ft.

Since beginning of run at time = 0.0
            Change in Total Mass =     -.74098E-01g/sq.ft.
                Advection in from atmosphere =       .00000    g/sq.ft.
                Advection in from water table =     -.71639E-01g/sq.ft.
                Diffusion in from atmosphere =      -.24585E-02g/sq.ft.
                Diffusion in from water table =      .00000    g/sq.ft.
            Total inflow at boundaries =     -.74098E-01g/sq.ft.
            Mass discrepancy =      .00000    g/sq.ft.


Polygon   1
At time =       7.00, total mass in vadose zone =     .74819    g/sq.ft.
Mass in gas phase     =       .95977E-01g/sq.ft.
Mass in liquid phase  =       .41065    g/sq.ft.
Mass sorbed           =       .24156    g/sq.ft.

Since last printout at time =       6.00
            Change in Total Mass =     -.11929E-01g/sq.ft.
                Advection in from atmosphere =       .00000    g/sq.ft.
                Advection in from water table =     -.11550E-01g/sq.ft.
                Diffusion in from atmosphere =      -.37883E-03g/sq.ft.
                Diffusion in from water table =      .00000    g/sq.ft.
            Total inflow at boundaries =     -.11929E-01g/sq.ft.
            Mass discrepancy =     -.43772E-07g/sq.ft.

Since beginning of run at time = 0.0
            Change in Total Mass =     -.86026E-01g/sq.ft.
                Advection in from atmosphere =       .00000    g/sq.ft.
```

```
                    Advection in from water table =     -.83189E-01g/sq.ft.
                    Diffusion in from atmosphere =      -.28373E-02g/sq.ft.
                    Diffusion in from water table =      .00000    g/sq.ft.
               Total inflow at boundaries =     -.86026E-01g/sq.ft.
               Mass discrepancy =     -.44703E-07g/sq.ft.


Polygon   1
At time =       8.00, total mass in vadose zone =     .73641    g/sq.ft.
Mass in gas phase     =       .94466E-01g/sq.ft.
Mass in liquid phase  =       .40419    g/sq.ft.
Mass sorbed           =       .23776    g/sq.ft.

Since last printout at time =       7.00
               Change in Total Mass =     -.11782E-01g/sq.ft.
                    Advection in from atmosphere =       .00000    g/sq.ft.
                    Advection in from water table =     -.11414E-01g/sq.ft.
                    Diffusion in from atmosphere =      -.36863E-03g/sq.ft.
                    Diffusion in from water table =      .00000    g/sq.ft.
               Total inflow at boundaries =     -.11782E-01g/sq.ft.
               Mass discrepancy =      .93132E-09g/sq.ft.

Since beginning of run at time = 0.0
               Change in Total Mass =     -.97809E-01g/sq.ft.
                    Advection in from atmosphere =       .00000    g/sq.ft.
                    Advection in from water table =     -.94603E-01g/sq.ft.
                    Diffusion in from atmosphere =      -.32059E-02g/sq.ft.
                    Diffusion in from water table =      .00000    g/sq.ft.
               Total inflow at boundaries =     -.97809E-01g/sq.ft.
               Mass discrepancy =     -.44703E-07g/sq.ft.


Polygon   1
At time =       9.00, total mass in vadose zone =     .72478    g/sq.ft.
Mass in gas phase     =       .92974E-01g/sq.ft.
Mass in liquid phase  =       .39780    g/sq.ft.
Mass sorbed           =       .23400    g/sq.ft.

Since last printout at time =       8.00
               Change in Total Mass =     -.11633E-01g/sq.ft.
                    Advection in from atmosphere =       .00000    g/sq.ft.
                    Advection in from water table =     -.11275E-01g/sq.ft.
                    Diffusion in from atmosphere =      -.35837E-03g/sq.ft.
                    Diffusion in from water table =      .00000    g/sq.ft.
               Total inflow at boundaries =     -.11633E-01g/sq.ft.
               Mass discrepancy =      .65193E-07g/sq.ft.

Since beginning of run at time = 0.0
               Change in Total Mass =     -.10944    g/sq.ft.
                    Advection in from atmosphere =       .00000    g/sq.ft.
                    Advection in from water table =     -.10588    g/sq.ft.
                    Diffusion in from atmosphere =      -.35643E-02g/sq.ft.
                    Diffusion in from water table =      .00000    g/sq.ft.
               Total inflow at boundaries =     -.10944    g/sq.ft.
               Mass discrepancy =      .22352E-07g/sq.ft.


Polygon   1
At time =      10.00, total mass in vadose zone =     .71330    g/sq.ft.
Mass in gas phase     =       .91500E-01g/sq.ft.
```

```
Mass in liquid phase  =        .39150    g/sq.ft.
Mass sorbed           =        .23030    g/sq.ft.

Since last printout at time =       9.00
               Change in Total Mass =     -.11484E-01g/sq.ft.
                    Advection in from atmosphere =       .00000    g/sq.ft.
                    Advection in from water table =     -.11136E-01g/sq.ft.
                    Diffusion in from atmosphere =      -.34813E-03g/sq.ft.
                    Diffusion in from water table =      .00000    g/sq.ft.
               Total inflow at boundaries =     -.11484E-01g/sq.ft.
               Mass discrepancy =      .90338E-07g/sq.ft.

Since beginning of run at time = 0.0
               Change in Total Mass =     -.12093    g/sq.ft.
                    Advection in from atmosphere =       .00000    g/sq.ft.
                    Advection in from water table =     -.11701    g/sq.ft.
                    Diffusion in from atmosphere =      -.39124E-02g/sq.ft.
                    Diffusion in from water table =      .00000    g/sq.ft.
               Total inflow at boundaries =     -.12093    g/sq.ft.
               Mass discrepancy =      .11176E-06g/sq.ft.


Polygon   1
At time =      11.00, total mass in vadose zone =     .70196    g/sq.ft.
Mass in gas phase     =       .90046E-01g/sq.ft.
Mass in liquid phase  =        .38528    g/sq.ft.
Mass sorbed           =        .22664    g/sq.ft.

Since last printout at time =      10.00
               Change in Total Mass =     -.11336E-01g/sq.ft.
                    Advection in from atmosphere =       .00000    g/sq.ft.
                    Advection in from water table =     -.10998E-01g/sq.ft.
                    Diffusion in from atmosphere =      -.33799E-03g/sq.ft.
                    Diffusion in from water table =      .00000    g/sq.ft.
               Total inflow at boundaries =     -.11336E-01g/sq.ft.
               Mass discrepancy =      .40047E-07g/sq.ft.

Since beginning of run at time = 0.0
               Change in Total Mass =     -.13226    g/sq.ft.
                    Advection in from atmosphere =       .00000    g/sq.ft.
                    Advection in from water table =     -.12801    g/sq.ft.
                    Diffusion in from atmosphere =      -.42504E-02g/sq.ft.
                    Diffusion in from water table =      .00000    g/sq.ft.
               Total inflow at boundaries =     -.13226    g/sq.ft.
               Mass discrepancy =      .14901E-06g/sq.ft.


Polygon   1
At time =      12.00, total mass in vadose zone =     .69077    g/sq.ft.
Mass in gas phase     =       .88611E-01g/sq.ft.
Mass in liquid phase  =        .37914    g/sq.ft.
Mass sorbed           =        .22302    g/sq.ft.

Since last printout at time =      11.00
               Change in Total Mass =     -.11191E-01g/sq.ft.
                    Advection in from atmosphere =       .00000    g/sq.ft.
                    Advection in from water table =     -.10863E-01g/sq.ft.
                    Diffusion in from atmosphere =      -.32801E-03g/sq.ft.
                    Diffusion in from water table =      .00000    g/sq.ft.
               Total inflow at boundaries =     -.11191E-01g/sq.ft.
```

```
              Mass discrepancy =     -.13225E-06g/sq.ft.

Since beginning of run at time = 0.0
              Change in Total Mass =     -.14345    g/sq.ft.
                   Advection in from atmosphere =       .00000    g/sq.ft.
                   Advection in from water table =     -.13887    g/sq.ft.
                   Diffusion in from atmosphere =     -.45784E-02g/sq.ft.
                   Diffusion in from water table =      .00000    g/sq.ft.
              Total inflow at boundaries =     -.14345    g/sq.ft.
              Mass discrepancy =      .29802E-07g/sq.ft.


Polygon   1
At time =      13.00, total mass in vadose zone =     .67972    g/sq.ft.
Mass in gas phase     =       .87193E-01g/sq.ft.
Mass in liquid phase  =       .37307    g/sq.ft.
Mass sorbed           =       .21946    g/sq.ft.

Since last printout at time =      12.00
              Change in Total Mass =     -.11049E-01g/sq.ft.
                   Advection in from atmosphere =       .00000    g/sq.ft.
                   Advection in from water table =     -.10731E-01g/sq.ft.
                   Diffusion in from atmosphere =      -.31823E-03g/sq.ft.
                   Diffusion in from water table =      .00000    g/sq.ft.
              Total inflow at boundaries =     -.11049E-01g/sq.ft.
              Mass discrepancy =      .10990E-06g/sq.ft.

Since beginning of run at time = 0.0
              Change in Total Mass =     -.15450    g/sq.ft.
                   Advection in from atmosphere =       .00000    g/sq.ft.
                   Advection in from water table =     -.14960    g/sq.ft.
                   Diffusion in from atmosphere =     -.48967E-02g/sq.ft.
                   Diffusion in from water table =      .00000    g/sq.ft.
              Total inflow at boundaries =     -.15450    g/sq.ft.
              Mass discrepancy =      .13411E-06g/sq.ft.


Polygon   1
At time =      14.00, total mass in vadose zone =     .66881    g/sq.ft.
Mass in gas phase     =       .85794E-01g/sq.ft.
Mass in liquid phase  =       .36708    g/sq.ft.
Mass sorbed           =       .21593    g/sq.ft.

Since last printout at time =      13.00
              Change in Total Mass =     -.10910E-01g/sq.ft.
                   Advection in from atmosphere =       .00000    g/sq.ft.
                   Advection in from water table =     -.10601E-01g/sq.ft.
                   Diffusion in from atmosphere =      -.30868E-03g/sq.ft.
                   Diffusion in from water table =      .00000    g/sq.ft.
              Total inflow at boundaries =     -.10910E-01g/sq.ft.
              Mass discrepancy =      .34459E-07g/sq.ft.

Since beginning of run at time = 0.0
              Change in Total Mass =     -.16541    g/sq.ft.
                   Advection in from atmosphere =       .00000    g/sq.ft.
                   Advection in from water table =     -.16021    g/sq.ft.
                   Diffusion in from atmosphere =     -.52054E-02g/sq.ft.
                   Diffusion in from water table =      .00000    g/sq.ft.
              Total inflow at boundaries =     -.16541    g/sq.ft.
              Mass discrepancy =      .16391E-06g/sq.ft.
```

```
Polygon   1
At time =      15.00, total mass in vadose zone =     .65804    g/sq.ft.
Mass in gas phase     =       .84412E-01g/sq.ft.
Mass in liquid phase  =       .36117    g/sq.ft.
Mass sorbed           =       .21245    g/sq.ft.

Since last printout at time =      14.00
               Change in Total Mass =     -.10773E-01g/sq.ft.
                    Advection in from atmosphere =       .00000    g/sq.ft.
                    Advection in from water table =     -.10474E-01g/sq.ft.
                    Diffusion in from atmosphere =      -.29938E-03g/sq.ft.
                    Diffusion in from water table =      .00000    g/sq.ft.
               Total inflow at boundaries =     -.10773E-01g/sq.ft.
               Mass discrepancy =     -.52154E-07g/sq.ft.

Since beginning of run at time = 0.0
               Change in Total Mass =     -.17618    g/sq.ft.
                    Advection in from atmosphere =       .00000    g/sq.ft.
                    Advection in from water table =     -.17068    g/sq.ft.
                    Diffusion in from atmosphere =      -.55047E-02g/sq.ft.
                    Diffusion in from water table =      .00000    g/sq.ft.
               Total inflow at boundaries =     -.17618    g/sq.ft.
               Mass discrepancy =      .11921E-06g/sq.ft.


Polygon   1
At time =      16.00, total mass in vadose zone =     .64740    g/sq.ft.
Mass in gas phase     =       .83047E-01g/sq.ft.
Mass in liquid phase  =       .35533    g/sq.ft.
Mass sorbed           =       .20902    g/sq.ft.

Since last printout at time =      15.00
               Change in Total Mass =     -.10640E-01g/sq.ft.
                    Advection in from atmosphere =       .00000    g/sq.ft.
                    Advection in from water table =     -.10349E-01g/sq.ft.
                    Diffusion in from atmosphere =      -.29033E-03g/sq.ft.
                    Diffusion in from water table =      .00000    g/sq.ft.
               Total inflow at boundaries =     -.10640E-01g/sq.ft.
               Mass discrepancy =      .93132E-09g/sq.ft.

Since beginning of run at time = 0.0
               Change in Total Mass =     -.18682    g/sq.ft.
                    Advection in from atmosphere =       .00000    g/sq.ft.
                    Advection in from water table =     -.18103    g/sq.ft.
                    Diffusion in from atmosphere =      -.57951E-02g/sq.ft.
                    Diffusion in from water table =      .00000    g/sq.ft.
               Total inflow at boundaries =     -.18682    g/sq.ft.
               Mass discrepancy =      .11921E-06g/sq.ft.


Polygon   1
At time =      17.00, total mass in vadose zone =     .63689    g/sq.ft.
Mass in gas phase     =       .81699E-01g/sq.ft.
Mass in liquid phase  =       .34956    g/sq.ft.
Mass sorbed           =       .20563    g/sq.ft.

Since last printout at time =      16.00
               Change in Total Mass =     -.10508E-01g/sq.ft.
```

```
                Advection in from atmosphere =       .00000    g/sq.ft.
                Advection in from water table =     -.10227E-01g/sq.ft.
                Diffusion in from atmosphere =      -.28155E-03g/sq.ft.
                Diffusion in from water table =      .00000    g/sq.ft.
           Total inflow at boundaries =     -.10508E-01g/sq.ft.
           Mass discrepancy =      .19558E-07g/sq.ft.

Since beginning of run at time = 0.0
           Change in Total Mass =     -.19733    g/sq.ft.
                Advection in from atmosphere =       .00000    g/sq.ft.
                Advection in from water table =     -.19126    g/sq.ft.
                Diffusion in from atmosphere =      -.60766E-02g/sq.ft.
                Diffusion in from water table =      .00000    g/sq.ft.
           Total inflow at boundaries =     -.19733    g/sq.ft.
           Mass discrepancy =      .14901E-06g/sq.ft.


Polygon   1
At time =      18.00, total mass in vadose zone =     .62651    g/sq.ft.
Mass in gas phase     =       .80368E-01g/sq.ft.
Mass in liquid phase  =       .34387    g/sq.ft.
Mass sorbed           =       .20228    g/sq.ft.

Since last printout at time =      17.00
           Change in Total Mass =     -.10379E-01g/sq.ft.
                Advection in from atmosphere =       .00000    g/sq.ft.
                Advection in from water table =     -.10106E-01g/sq.ft.
                Diffusion in from atmosphere =      -.27304E-03g/sq.ft.
                Diffusion in from water table =      .00000    g/sq.ft.
           Total inflow at boundaries =     -.10379E-01g/sq.ft.
           Mass discrepancy =      .90338E-07g/sq.ft.

Since beginning of run at time = 0.0
           Change in Total Mass =     -.20771    g/sq.ft.
                Advection in from atmosphere =       .00000    g/sq.ft.
                Advection in from water table =     -.20136    g/sq.ft.
                Diffusion in from atmosphere =      -.63497E-02g/sq.ft.
                Diffusion in from water table =      .00000    g/sq.ft.
           Total inflow at boundaries =     -.20771    g/sq.ft.
           Mass discrepancy =      .23842E-06g/sq.ft.


Polygon   1
At time =      19.00, total mass in vadose zone =     .61626    g/sq.ft.
Mass in gas phase     =       .79053E-01g/sq.ft.
Mass in liquid phase  =       .33824    g/sq.ft.
Mass sorbed           =       .19897    g/sq.ft.

Since last printout at time =      18.00
           Change in Total Mass =     -.10251E-01g/sq.ft.
                Advection in from atmosphere =       .00000    g/sq.ft.
                Advection in from water table =     -.99865E-02g/sq.ft.
                Diffusion in from atmosphere =      -.26479E-03g/sq.ft.
                Diffusion in from water table =      .00000    g/sq.ft.
           Total inflow at boundaries =     -.10251E-01g/sq.ft.
           Mass discrepancy =      .40047E-07g/sq.ft.

Since beginning of run at time = 0.0
           Change in Total Mass =     -.21796    g/sq.ft.
                Advection in from atmosphere =       .00000    g/sq.ft.
```

```
                Advection in from water table =     -.21135    g/sq.ft.
                Diffusion in from atmosphere =      -.66144E-02g/sq.ft.
                Diffusion in from water table =      .00000    g/sq.ft.
           Total inflow at boundaries =     -.21796    g/sq.ft.
           Mass discrepancy =      .28312E-06g/sq.ft.


Polygon   1
At time =      20.00, total mass in vadose zone =     .60613    g/sq.ft.
Mass in gas phase     =       .77754E-01g/sq.ft.
Mass in liquid phase  =       .33268    g/sq.ft.
Mass sorbed           =       .19570    g/sq.ft.

Since last printout at time =      19.00
           Change in Total Mass =     -.10125E-01g/sq.ft.
                Advection in from atmosphere =       .00000    g/sq.ft.
                Advection in from water table =     -.98685E-02g/sq.ft.
                Diffusion in from atmosphere =      -.25681E-03g/sq.ft.
                Diffusion in from water table =      .00000    g/sq.ft.
           Total inflow at boundaries =     -.10125E-01g/sq.ft.
           Mass discrepancy =     -.24214E-07g/sq.ft.

Since beginning of run at time = 0.0
           Change in Total Mass =     -.22809    g/sq.ft.
                Advection in from atmosphere =       .00000    g/sq.ft.
                Advection in from water table =     -.22122    g/sq.ft.
                Diffusion in from atmosphere =      -.68713E-02g/sq.ft.
                Diffusion in from water table =      .00000    g/sq.ft.
           Total inflow at boundaries =     -.22809    g/sq.ft.
           Mass discrepancy =      .26822E-06g/sq.ft.


Polygon   1
At time =      21.00, total mass in vadose zone =     .59613    g/sq.ft.
Mass in gas phase     =       .76471E-01g/sq.ft.
Mass in liquid phase  =       .32719    g/sq.ft.
Mass sorbed           =       .19247    g/sq.ft.

Since last printout at time =      20.00
           Change in Total Mass =     -.10001E-01g/sq.ft.
                Advection in from atmosphere =       .00000    g/sq.ft.
                Advection in from water table =     -.97517E-02g/sq.ft.
                Diffusion in from atmosphere =      -.24909E-03g/sq.ft.
                Diffusion in from water table =      .00000    g/sq.ft.
           Total inflow at boundaries =     -.10001E-01g/sq.ft.
           Mass discrepancy =      .10524E-06g/sq.ft.

Since beginning of run at time = 0.0
           Change in Total Mass =     -.23809    g/sq.ft.
                Advection in from atmosphere =       .00000    g/sq.ft.
                Advection in from water table =     -.23097    g/sq.ft.
                Diffusion in from atmosphere =      -.71204E-02g/sq.ft.
                Diffusion in from water table =      .00000    g/sq.ft.
           Total inflow at boundaries =     -.23809    g/sq.ft.
           Mass discrepancy =      .37253E-06g/sq.ft.


Polygon   1
At time =      22.00, total mass in vadose zone =     .58625    g/sq.ft.
Mass in gas phase     =       .75204E-01g/sq.ft.
```

```
Mass in liquid phase  =       .32177    g/sq.ft.
Mass sorbed           =       .18928    g/sq.ft.

Since last printout at time =      21.00
              Change in Total Mass =     -.98774E-02g/sq.ft.
                   Advection in from atmosphere =       .00000    g/sq.ft.
                   Advection in from water table =     -.96359E-02g/sq.ft.
                   Diffusion in from atmosphere =      -.24163E-03g/sq.ft.
                   Diffusion in from water table =      .00000    g/sq.ft.
              Total inflow at boundaries =     -.98775E-02g/sq.ft.
              Mass discrepancy =      .67987E-07g/sq.ft.

Since beginning of run at time = 0.0
              Change in Total Mass =     -.24797    g/sq.ft.
                   Advection in from atmosphere =       .00000    g/sq.ft.
                   Advection in from water table =     -.24060    g/sq.ft.
                   Diffusion in from atmosphere =      -.73620E-02g/sq.ft.
                   Diffusion in from water table =      .00000    g/sq.ft.
              Total inflow at boundaries =     -.24797    g/sq.ft.
              Mass discrepancy =      .44703E-06g/sq.ft.


Polygon   1
At time =      23.00, total mass in vadose zone =     .57650    g/sq.ft.
Mass in gas phase     =       .73952E-01g/sq.ft.
Mass in liquid phase  =       .31642    g/sq.ft.
Mass sorbed           =       .18613    g/sq.ft.

Since last printout at time =      22.00
              Change in Total Mass =     -.97555E-02g/sq.ft.
                   Advection in from atmosphere =       .00000    g/sq.ft.
                   Advection in from water table =     -.95211E-02g/sq.ft.
                   Diffusion in from atmosphere =      -.23442E-03g/sq.ft.
                   Diffusion in from water table =      .00000    g/sq.ft.
              Total inflow at boundaries =     -.97555E-02g/sq.ft.
              Mass discrepancy =      .55879E-08g/sq.ft.

Since beginning of run at time = 0.0
              Change in Total Mass =     -.25772    g/sq.ft.
                   Advection in from atmosphere =       .00000    g/sq.ft.
                   Advection in from water table =     -.25013    g/sq.ft.
                   Diffusion in from atmosphere =      -.75964E-02g/sq.ft.
                   Diffusion in from water table =      .00000    g/sq.ft.
              Total inflow at boundaries =     -.25772    g/sq.ft.
              Mass discrepancy =      .44703E-06g/sq.ft.


Polygon   1
At time =      24.00, total mass in vadose zone =     .56686    g/sq.ft.
Mass in gas phase     =       .72716E-01g/sq.ft.
Mass in liquid phase  =       .31113    g/sq.ft.
Mass sorbed           =       .18302    g/sq.ft.

Since last printout at time =      23.00
              Change in Total Mass =     -.96347E-02g/sq.ft.
                   Advection in from atmosphere =       .00000    g/sq.ft.
                   Advection in from water table =     -.94072E-02g/sq.ft.
                   Diffusion in from atmosphere =      -.22744E-03g/sq.ft.
                   Diffusion in from water table =      .00000    g/sq.ft.
              Total inflow at boundaries =     -.96346E-02g/sq.ft.
```

```
          Mass discrepancy =     -.45635E-07g/sq.ft.

Since beginning of run at time = 0.0
          Change in Total Mass =     -.26736    g/sq.ft.
               Advection in from atmosphere =       .00000    g/sq.ft.
               Advection in from water table =     -.25953    g/sq.ft.
               Diffusion in from atmosphere =     -.78238E-02g/sq.ft.
               Diffusion in from water table =      .00000    g/sq.ft.
          Total inflow at boundaries =     -.26736    g/sq.ft.
          Mass discrepancy =      .41723E-06g/sq.ft.


Polygon   1
At time =      25.00, total mass in vadose zone =     .55735    g/sq.ft.
Mass in gas phase     =       .71496E-01g/sq.ft.
Mass in liquid phase  =       .30591    g/sq.ft.
Mass sorbed           =       .17995    g/sq.ft.

Since last printout at time =      24.00
          Change in Total Mass =     -.95148E-02g/sq.ft.
               Advection in from atmosphere =       .00000    g/sq.ft.
               Advection in from water table =     -.92941E-02g/sq.ft.
               Diffusion in from atmosphere =     -.22071E-03g/sq.ft.
               Diffusion in from water table =      .00000    g/sq.ft.
          Total inflow at boundaries =     -.95148E-02g/sq.ft.
          Mass discrepancy =      .28871E-07g/sq.ft.

Since beginning of run at time = 0.0
          Change in Total Mass =     -.27687    g/sq.ft.
               Advection in from atmosphere =       .00000    g/sq.ft.
               Advection in from water table =     -.26883    g/sq.ft.
               Diffusion in from atmosphere =     -.80446E-02g/sq.ft.
               Diffusion in from water table =      .00000    g/sq.ft.
          Total inflow at boundaries =     -.27687    g/sq.ft.
          Mass discrepancy =      .44703E-06g/sq.ft.


Polygon   1
At time =      26.00, total mass in vadose zone =     .54795    g/sq.ft.
Mass in gas phase     =       .70291E-01g/sq.ft.
Mass in liquid phase  =       .30075    g/sq.ft.
Mass sorbed           =       .17691    g/sq.ft.

Since last printout at time =      25.00
          Change in Total Mass =     -.93960E-02g/sq.ft.
               Advection in from atmosphere =       .00000    g/sq.ft.
               Advection in from water table =     -.91819E-02g/sq.ft.
               Diffusion in from atmosphere =     -.21420E-03g/sq.ft.
               Diffusion in from water table =      .00000    g/sq.ft.
          Total inflow at boundaries =     -.93961E-02g/sq.ft.
          Mass discrepancy =      .46566E-07g/sq.ft.

Since beginning of run at time = 0.0
          Change in Total Mass =     -.28627    g/sq.ft.
               Advection in from atmosphere =       .00000    g/sq.ft.
               Advection in from water table =     -.27801    g/sq.ft.
               Diffusion in from atmosphere =     -.82588E-02g/sq.ft.
               Diffusion in from water table =      .00000    g/sq.ft.
          Total inflow at boundaries =     -.28627    g/sq.ft.
          Mass discrepancy =      .47684E-06g/sq.ft.
```

```
Polygon   1
At time =      27.00, total mass in vadose zone =     .53868    g/sq.ft.
Mass in gas phase     =       .69100E-01g/sq.ft.
Mass in liquid phase  =       .29566    g/sq.ft.
Mass sorbed           =       .17392    g/sq.ft.

Since last printout at time =      26.00
               Change in Total Mass =     -.92783E-02g/sq.ft.
                    Advection in from atmosphere =       .00000    g/sq.ft.
                    Advection in from water table =     -.90703E-02g/sq.ft.
                    Diffusion in from atmosphere =      -.20791E-03g/sq.ft.
                    Diffusion in from water table =      .00000    g/sq.ft.
               Total inflow at boundaries =     -.92783E-02g/sq.ft.
               Mass discrepancy =     -.40978E-07g/sq.ft.

Since beginning of run at time = 0.0
               Change in Total Mass =     -.29555    g/sq.ft.
                    Advection in from atmosphere =       .00000    g/sq.ft.
                    Advection in from water table =     -.28708    g/sq.ft.
                    Diffusion in from atmosphere =      -.84667E-02g/sq.ft.
                    Diffusion in from water table =      .00000    g/sq.ft.
               Total inflow at boundaries =     -.29555    g/sq.ft.
               Mass discrepancy =      .41723E-06g/sq.ft.


Polygon   1
At time =      28.00, total mass in vadose zone =     .52951    g/sq.ft.
Mass in gas phase     =       .67925E-01g/sq.ft.
Mass in liquid phase  =       .29063    g/sq.ft.
Mass sorbed           =       .17096    g/sq.ft.

Since last printout at time =      27.00
               Change in Total Mass =     -.91614E-02g/sq.ft.
                    Advection in from atmosphere =       .00000    g/sq.ft.
                    Advection in from water table =     -.89595E-02g/sq.ft.
                    Diffusion in from atmosphere =      -.20183E-03g/sq.ft.
                    Diffusion in from water table =      .00000    g/sq.ft.
               Total inflow at boundaries =     -.91614E-02g/sq.ft.
               Mass discrepancy =      .13970E-07g/sq.ft.

Since beginning of run at time = 0.0
               Change in Total Mass =     -.30471    g/sq.ft.
                    Advection in from atmosphere =       .00000    g/sq.ft.
                    Advection in from water table =     -.29604    g/sq.ft.
                    Diffusion in from atmosphere =      -.86685E-02g/sq.ft.
                    Diffusion in from water table =      .00000    g/sq.ft.
               Total inflow at boundaries =     -.30471    g/sq.ft.
               Mass discrepancy =      .41723E-06g/sq.ft.


Polygon   1
At time =      29.00, total mass in vadose zone =     .52047    g/sq.ft.
Mass in gas phase     =       .66765E-01g/sq.ft.
Mass in liquid phase  =       .28566    g/sq.ft.
Mass sorbed           =       .16804    g/sq.ft.

Since last printout at time =      28.00
               Change in Total Mass =     -.90453E-02g/sq.ft.
```

```
                Advection in from atmosphere =       .00000    g/sq.ft.
                Advection in from water table =    -.88494E-02g/sq.ft.
                Diffusion in from atmosphere =     -.19596E-03g/sq.ft.
                Diffusion in from water table =      .00000    g/sq.ft.
           Total inflow at boundaries =     -.90454E-02g/sq.ft.
           Mass discrepancy =      .50291E-07g/sq.ft.

Since beginning of run at time = 0.0
           Change in Total Mass =     -.31375    g/sq.ft.
                Advection in from atmosphere =       .00000    g/sq.ft.
                Advection in from water table =    -.30489    g/sq.ft.
                Diffusion in from atmosphere =     -.88645E-02g/sq.ft.
                Diffusion in from water table =      .00000    g/sq.ft.
           Total inflow at boundaries =     -.31375    g/sq.ft.
           Mass discrepancy =      .47684E-06g/sq.ft.


Polygon   1
At time =      30.00, total mass in vadose zone =     .51154    g/sq.ft.
Mass in gas phase     =       .65619E-01g/sq.ft.
Mass in liquid phase  =       .28076    g/sq.ft.
Mass sorbed           =       .16516    g/sq.ft.

Since last printout at time =      29.00
           Change in Total Mass =     -.89301E-02g/sq.ft.
                Advection in from atmosphere =       .00000    g/sq.ft.
                Advection in from water table =    -.87399E-02g/sq.ft.
                Diffusion in from atmosphere =     -.19029E-03g/sq.ft.
                Diffusion in from water table =      .00000    g/sq.ft.
           Total inflow at boundaries =     -.89302E-02g/sq.ft.
           Mass discrepancy =      .29802E-07g/sq.ft.

Since beginning of run at time = 0.0
           Change in Total Mass =     -.32268    g/sq.ft.
                Advection in from atmosphere =       .00000    g/sq.ft.
                Advection in from water table =    -.31363    g/sq.ft.
                Diffusion in from atmosphere =     -.90547E-02g/sq.ft.
                Diffusion in from water table =      .00000    g/sq.ft.
           Total inflow at boundaries =     -.32268    g/sq.ft.
           Mass discrepancy =      .50664E-06g/sq.ft.


GROUNDWATER IMPACT OF POLYGON   1

 Time        Mass per area (g/sq.ft.)      Total Mass (g)
     1.00          .12152E-01                2339.2
     2.00          .12086E-01                2326.5
     3.00          .12006E-01                2311.2
     4.00          .11912E-01                2293.0
     5.00          .11802E-01                2272.0
     6.00          .11681E-01                2248.6
     7.00          .11550E-01                2223.4
     8.00          .11414E-01                2197.1
     9.00          .11275E-01                2170.4
    10.00          .11136E-01                2143.6
    11.00          .10998E-01                2117.1
    12.00          .10863E-01                2091.1
    13.00          .10731E-01                2065.6
    14.00          .10601E-01                2040.7
    15.00          .10474E-01                2016.3
```

16.00	.10349E-01	1992.3
17.00	.10227E-01	1968.7
18.00	.10106E-01	1945.4
19.00	.99865E-02	1922.4
20.00	.98685E-02	1899.7
21.00	.97517E-02	1877.2
22.00	.96359E-02	1854.9
23.00	.95211E-02	1832.8
24.00	.94072E-02	1810.9
25.00	.92941E-02	1789.1
26.00	.91819E-02	1767.5
27.00	.90703E-02	1746.0
28.00	.89595E-02	1724.7
29.00	.88494E-02	1703.5
30.00	.87399E-02	1682.4

****

****

TOTAL GROUNDWATER IMPACT

Time (yr)	Mass (g)	Cumulative Mass (g)
1.00	2339.2	2339.2
2.00	2326.5	4665.8
3.00	2311.2	6977.0
4.00	2293.0	9270.0
5.00	2272.0	11542.
6.00	2248.6	13791.
7.00	2223.4	16014.
8.00	2197.1	18211.
9.00	2170.4	20381.
10.00	2143.6	22525.
11.00	2117.1	24642.
12.00	2091.1	26733.
13.00	2065.6	28799.
14.00	2040.7	30840.
15.00	2016.3	32856.
16.00	1992.3	34848.
17.00	1968.7	36817.
18.00	1945.4	38762.
19.00	1922.4	40685.
20.00	1899.7	42584.
21.00	1877.2	44461.
22.00	1854.9	46316.
23.00	1832.8	48149.
24.00	1810.9	49960.
25.00	1789.1	51749.
26.00	1767.5	53517.
27.00	1746.0	55263.
28.00	1724.7	56987.
29.00	1703.5	58691.
30.00	1682.4	60373.

Polygon 111
Time: .000

Cell	Cgas(g/cu.ft.)	Cliq(g/cu.ft.)	Csol
1	.75645E-05	.15993E-04	.51656E-10
2	.75645E-05	.15993E-04	.51656E-10
3	.75645E-05	.15993E-04	.51656E-10
4	.75645E-05	.15993E-04	.51656E-10
5	.75645E-05	.15993E-04	.51656E-10
6	.75645E-05	.15993E-04	.51656E-10
7	.22533E-02	.47638E-02	.15387E-07
8	.22533E-02	.47638E-02	.15387E-07
9	.22533E-02	.47638E-02	.15387E-07
10	.22533E-02	.47638E-02	.15387E-07
11	.22533E-02	.47638E-02	.15387E-07
12	.22533E-02	.47638E-02	.15387E-07
13	.56218E-02	.11885E-01	.38390E-07
14	.56218E-02	.11885E-01	.38390E-07
15	.56218E-02	.11885E-01	.38390E-07
16	.56218E-02	.11885E-01	.38390E-07
17	.56218E-02	.11885E-01	.38390E-07
18	.56218E-02	.11885E-01	.38390E-07
19	.89899E-02	.19006E-01	.61390E-07
20	.89899E-02	.19006E-01	.61390E-07
21	.89899E-02	.19006E-01	.61390E-07
22	.89899E-02	.19006E-01	.61390E-07
23	.89899E-02	.19006E-01	.61390E-07
24	.89899E-02	.19006E-01	.61390E-07
25	.12358E-01	.26128E-01	.84393E-07
26	.12358E-01	.26128E-01	.84393E-07
27	.12358E-01	.26128E-01	.84393E-07
28	.12358E-01	.26128E-01	.84393E-07
29	.12358E-01	.26128E-01	.84393E-07
30	.12358E-01	.26128E-01	.84393E-07
31	.15727E-01	.33250E-01	.10740E-06
32	.15727E-01	.33250E-01	.10740E-06
33	.15727E-01	.33250E-01	.10740E-06
34	.15727E-01	.33250E-01	.10740E-06
35	.15727E-01	.33250E-01	.10740E-06
36	.15727E-01	.33250E-01	.10740E-06
37	.19096E-01	.40371E-01	.13040E-06
38	.19096E-01	.40371E-01	.13040E-06
39	.19096E-01	.40371E-01	.13040E-06
40	.19096E-01	.40371E-01	.13040E-06
41	.19096E-01	.40371E-01	.13040E-06
42	.19096E-01	.40371E-01	.13040E-06
43	.22464E-01	.47493E-01	.15340E-06
44	.22464E-01	.47493E-01	.15340E-06
45	.22464E-01	.47493E-01	.15340E-06
46	.22464E-01	.47493E-01	.15340E-06
47	.22464E-01	.47493E-01	.15340E-06
48	.22464E-01	.47493E-01	.15340E-06
49	.25832E-01	.54614E-01	.17640E-06
50	.25832E-01	.54614E-01	.17640E-06
51	.25832E-01	.54614E-01	.17640E-06
52	.25832E-01	.54614E-01	.17640E-06
53	.25832E-01	.54614E-01	.17640E-06
54	.25832E-01	.54614E-01	.17640E-06
55	.29201E-01	.61735E-01	.19941E-06
56	.29201E-01	.61735E-01	.19941E-06

57	.29201E-01	.61735E-01	.19941E-06
58	.29201E-01	.61735E-01	.19941E-06
59	.29201E-01	.61735E-01	.19941E-06
60	.29201E-01	.61735E-01	.19941E-06

Polygon 111
Time: 10.000

Cell	Cgas(g/cu.ft.)	Cliq(g/cu.ft.)	Csol
1	.44258E-04	.93569E-04	.30223E-09
2	.11335E-03	.23965E-03	.77406E-09
3	.20394E-03	.43116E-03	.13926E-08
4	.31364E-03	.66309E-03	.21418E-08
5	.44128E-03	.93294E-03	.30134E-08
6	.58704E-03	.12411E-02	.40087E-08
7	.76003E-03	.16068E-02	.51900E-08
8	.97650E-03	.20645E-02	.66683E-08
9	.12457E-02	.26335E-02	.85064E-08
10	.15609E-02	.33000E-02	.10659E-07
11	.19047E-02	.40269E-02	.13007E-07
12	.22597E-02	.47773E-02	.15431E-07
13	.26274E-02	.55547E-02	.17942E-07
14	.30276E-02	.64008E-02	.20674E-07
15	.34747E-02	.73461E-02	.23728E-07
16	.39620E-02	.83763E-02	.27055E-07
17	.44665E-02	.94430E-02	.30501E-07
18	.49646E-02	.10496E-01	.33902E-07
19	.54540E-02	.11531E-01	.37244E-07
20	.59544E-02	.12589E-01	.40661E-07
21	.64823E-02	.13705E-01	.44266E-07
22	.70342E-02	.14871E-01	.48035E-07
23	.75906E-02	.16048E-01	.51834E-07
24	.81304E-02	.17189E-01	.55521E-07
25	.86539E-02	.18296E-01	.59095E-07
26	.91821E-02	.19412E-01	.62702E-07
27	.97328E-02	.20577E-01	.66463E-07
28	.10304E-01	.21784E-01	.70361E-07
29	.10875E-01	.22993E-01	.74266E-07
30	.11428E-01	.24161E-01	.78039E-07
31	.11962E-01	.25289E-01	.81684E-07
32	.12498E-01	.26423E-01	.85346E-07
33	.13055E-01	.27601E-01	.89151E-07
34	.13631E-01	.28818E-01	.93082E-07
35	.14206E-01	.30034E-01	.97010E-07
36	.14761E-01	.31206E-01	.10080E-06
37	.15295E-01	.32337E-01	.10445E-06
38	.15831E-01	.33470E-01	.10811E-06
39	.16387E-01	.34644E-01	.11190E-06
40	.16959E-01	.35855E-01	.11581E-06
41	.17530E-01	.37062E-01	.11971E-06
42	.18079E-01	.38222E-01	.12346E-06
43	.18606E-01	.39336E-01	.12706E-06
44	.19132E-01	.40449E-01	.13065E-06
45	.19676E-01	.41598E-01	.13436E-06
46	.20234E-01	.42778E-01	.13817E-06
47	.20787E-01	.43948E-01	.14195E-06
48	.21315E-01	.45063E-01	.14555E-06
49	.21816E-01	.46122E-01	.14898E-06
50	.22311E-01	.47170E-01	.15236E-06
51	.22818E-01	.48241E-01	.15582E-06
52	.23331E-01	.49327E-01	.15933E-06

53	.23832E-01	.50384E-01	.16274E-06
54	.24295E-01	.51365E-01	.16591E-06
55	.24721E-01	.52264E-01	.16881E-06
56	.25126E-01	.53121E-01	.17158E-06
57	.25526E-01	.53965E-01	.17431E-06
58	.25912E-01	.54782E-01	.17695E-06
59	.26260E-01	.55519E-01	.17933E-06
60	.26545E-01	.56120E-01	.18127E-06

Polygon 111
Time: 20.000

Cell	Cgas(g/cu.ft.)	Cliq(g/cu.ft.)	Csol
1	.32911E-04	.69579E-04	.22474E-09
2	.84966E-04	.17963E-03	.58021E-09
3	.15455E-03	.32675E-03	.10554E-08
4	.24079E-03	.50907E-03	.16443E-08
5	.34331E-03	.72582E-03	.23444E-08
6	.46213E-03	.97702E-03	.31558E-08
7	.59757E-03	.12634E-02	.40806E-08
8	.75033E-03	.15863E-02	.51238E-08
9	.92160E-03	.19484E-02	.62934E-08
10	.11131E-02	.23532E-02	.76008E-08
11	.13266E-02	.28046E-02	.90589E-08
12	.15637E-02	.33060E-02	.10678E-07
13	.18252E-02	.38589E-02	.12464E-07
14	.21111E-02	.44633E-02	.14416E-07
15	.24208E-02	.51180E-02	.16531E-07
16	.27538E-02	.58220E-02	.18805E-07
17	.31097E-02	.65744E-02	.21235E-07
18	.34880E-02	.73742E-02	.23819E-07
19	.38876E-02	.82190E-02	.26547E-07
20	.43066E-02	.91049E-02	.29409E-07
21	.47429E-02	.10027E-01	.32388E-07
22	.51945E-02	.10982E-01	.35472E-07
23	.56599E-02	.11966E-01	.38650E-07
24	.61379E-02	.12976E-01	.41914E-07
25	.66271E-02	.14011E-01	.45255E-07
26	.71258E-02	.15065E-01	.48661E-07
27	.76324E-02	.16136E-01	.52120E-07
28	.81455E-02	.17221E-01	.55624E-07
29	.86645E-02	.18318E-01	.59167E-07
30	.91887E-02	.19426E-01	.62748E-07
31	.97177E-02	.20545E-01	.66360E-07
32	.10250E-01	.21671E-01	.69998E-07
33	.10786E-01	.22803E-01	.73653E-07
34	.11323E-01	.23938E-01	.77321E-07
35	.11861E-01	.25077E-01	.80999E-07
36	.12402E-01	.26219E-01	.84687E-07
37	.12943E-01	.27363E-01	.88382E-07
38	.13484E-01	.28508E-01	.92080E-07
39	.14025E-01	.29651E-01	.95772E-07
40	.14564E-01	.30791E-01	.99455E-07
41	.15102E-01	.31928E-01	.10313E-06
42	.15638E-01	.33061E-01	.10679E-06
43	.16171E-01	.34189E-01	.11043E-06
44	.16701E-01	.35310E-01	.11405E-06
45	.17227E-01	.36421E-01	.11764E-06
46	.17747E-01	.37521E-01	.12119E-06
47	.18261E-01	.38607E-01	.12470E-06
48	.18768E-01	.39678E-01	.12816E-06

49	.19266E-01	.40731E-01	.13156E-06
50	.19754E-01	.41764E-01	.13490E-06
51	.20231E-01	.42771E-01	.13815E-06
52	.20692E-01	.43747E-01	.14130E-06
53	.21138E-01	.44689E-01	.14435E-06
54	.21565E-01	.45591E-01	.14726E-06
55	.21970E-01	.46449E-01	.15003E-06
56	.22351E-01	.47253E-01	.15263E-06
57	.22701E-01	.47994E-01	.15502E-06
58	.23018E-01	.48663E-01	.15718E-06
59	.23295E-01	.49250E-01	.15908E-06
60	.23528E-01	.49742E-01	.16067E-06

Polygon 111
Time: 30.000

Cell	Cgas(g/cu.ft.)	Cliq(g/cu.ft.)	Csol
1	.24350E-04	.51480E-04	.16628E-09
2	.62845E-04	.13286E-03	.42915E-09
3	.11430E-03	.24166E-03	.78055E-09
4	.17811E-03	.37656E-03	.12163E-08
5	.25407E-03	.53714E-03	.17350E-08
6	.34226E-03	.72359E-03	.23372E-08
7	.44297E-03	.93651E-03	.30249E-08
8	.55665E-03	.11769E-02	.38013E-08
9	.68386E-03	.14458E-02	.46699E-08
10	.82522E-03	.17447E-02	.56353E-08
11	.98144E-03	.20749E-02	.67020E-08
12	.11533E-02	.24382E-02	.78754E-08
13	.13415E-02	.28361E-02	.91606E-08
14	.15468E-02	.32703E-02	.10563E-07
15	.17701E-02	.37422E-02	.12087E-07
16	.20118E-02	.42532E-02	.13738E-07
17	.22723E-02	.48041E-02	.15517E-07
18	.25520E-02	.53954E-02	.17427E-07
19	.28509E-02	.60273E-02	.19468E-07
20	.31688E-02	.66994E-02	.21639E-07
21	.35055E-02	.74112E-02	.23938E-07
22	.38604E-02	.81614E-02	.26362E-07
23	.42328E-02	.89488E-02	.28905E-07
24	.46219E-02	.97715E-02	.31562E-07
25	.50268E-02	.10628E-01	.34327E-07
26	.54465E-02	.11515E-01	.37193E-07
27	.58798E-02	.12431E-01	.40151E-07
28	.63256E-02	.13373E-01	.43196E-07
29	.67828E-02	.14340E-01	.46318E-07
30	.72502E-02	.15328E-01	.49510E-07
31	.77269E-02	.16336E-01	.52765E-07
32	.82116E-02	.17361E-01	.56075E-07
33	.87034E-02	.18400E-01	.59434E-07
34	.92014E-02	.19453E-01	.62834E-07
35	.97046E-02	.20517E-01	.66270E-07
36	.10212E-01	.21590E-01	.69735E-07
37	.10723E-01	.22670E-01	.73224E-07
38	.11236E-01	.23755E-01	.76729E-07
39	.11751E-01	.24844E-01	.80246E-07
40	.12267E-01	.25935E-01	.83769E-07
41	.12783E-01	.27025E-01	.87292E-07
42	.13298E-01	.28114E-01	.90809E-07
43	.13811E-01	.29199E-01	.94314E-07
44	.14322E-01	.30278E-01	.97799E-07

45	.14828E-01	.31349E-01	.10126E-06
46	.15330E-01	.32410E-01	.10468E-06
47	.15826E-01	.33458E-01	.10807E-06
48	.16314E-01	.34490E-01	.11140E-06
49	.16793E-01	.35503E-01	.11468E-06
50	.17262E-01	.36494E-01	.11788E-06
51	.17718E-01	.37459E-01	.12099E-06
52	.18160E-01	.38393E-01	.12401E-06
53	.18585E-01	.39292E-01	.12691E-06
54	.18991E-01	.40150E-01	.12968E-06
55	.19374E-01	.40961E-01	.13230E-06
56	.19732E-01	.41717E-01	.13475E-06
57	.20061E-01	.42413E-01	.13699E-06
58	.20357E-01	.43037E-01	.13901E-06
59	.20614E-01	.43581E-01	.14077E-06
60	.20828E-01	.44033E-01	.14223E-06

V-Leach, VER 1.1
Jake Turin, 11/91
PGA V-leach model, polygon screen-TCE-11/3/92-Poly111.INP. New soil, Old chem.
1 polygons.
Timestep = 1.00 years. Simulation length = 30.00 years.
Printout every 1.00 years. Vertical profile stored every 10.00 years.
Koc = 123.60 ml/g, .43649E-02cu.ft./g
Kh = .47300 (dimensionless).
Aqueous solubility = 1100.0 mg/l, 31.149 g/cu.ft
Free air diffusion coefficient = .70290 sq. m/day, 2761.7 sq.ft./yr

Polygon 1
Polygon 111
Polygon area = .19250E+06sq. ft.
60 cells, each cell 1.000 ft. thick.
Soil Properties:
Bulk density = 1.6400 g/ml, 46440. g/cu.ft.
Porosity = .3810 Volumetric water content = .2550
Organic carbon content = .00074000
Recharge Rate = .19685000 ft/yr
Conc. in recharge water = .00000 mg/l, .00000 g/cu.ft
Atmospheric concentration = .00000 mg/l, .00000 g/cu.ft
Water table is impermeable to gas diffusion.

Calculation of Total TCE Mass and Revised Vertical Distributions in Polygon 111 using HGC Distribution equations and Revised Soil Physical Data

0.266 Cs **	Cz = (74.527*z - 371.636)Cs

Cz (ug/L) Vert. Dist. Eq.	Calculated Depth Interval (z)	Total Depth Interval (feet)	Total Soil Conc Ct (ug/Kg)	Mt (ug/cc)	Volume of Soil (cubic ft)	Mass TCE (grams)	Mass TCE (pounds)
0.266	3	6	0.16	2.61E-04	1155000	8.55	0.02
79.56	9	6	47.66	0.08	1155000	2556.28	5.64
198.51	15	6	118.91	0.20	1155000	6377.89	14.06
317.45	21	6	190.15	0.31	1155000	10199.50	22.49
436.40	27	6	261.40	0.43	1155000	14021.11	30.91
555.34	33	6	332.65	0.55	1155000	17842.72	39.34
674.29	39	6	403.90	0.66	1155000	21664.33	47.76
793.23	45	6	475.15	0.78	1155000	25485.94	56.19
912.18	51	6	546.39	0.90	1155000	29307.55	64.61
1031.12	57	6	617.64	1.01	1155000	33129.16	73.04
4998.35		60	2994.01	4.91		160593.03	354.05

** Cs Determined as mathematical average of VOC concentrations for polygon(s) listed in Table A-1 of HGC, 1989.

**** Mixing Cell Output ****

PGA Mixcell Input Data

**** Batch 1 ****
Polygon 113

Time Interval (years)	Mass In (grams)	Mass/Area (g/sq m)	GW Concentration (ugrams/l)
1.00	4121.200	0.286	32.697
2.00	4098.800	0.285	52.887
3.00	4071.800	0.283	65.249
4.00	4039.700	0.281	72.694
5.00	4002.600	0.278	77.038
6.00	3961.400	0.275	79.417
7.00	3917.000	0.272	80.546
8.00	3870.800	0.269	80.883
9.00	3823.700	0.266	80.719
10.00	3776.500	0.262	80.243
11.00	3729.900	0.259	79.576
12.00	3684.000	0.256	78.797
13.00	3639.100	0.253	77.955
14.00	3595.200	0.250	77.083
15.00	3552.100	0.247	76.197
16.00	3509.900	0.244	75.311
17.00	3468.300	0.241	74.428
18.00	3427.300	0.238	73.554
19.00	3386.800	0.235	72.687
20.00	3346.800	0.232	71.830
21.00	3307.100	0.230	70.982
22.00	3267.900	0.227	70.142
23.00	3228.900	0.224	69.309
24.00	3190.300	0.222	68.485
25.00	3152.000	0.219	67.667
26.00	3113.900	0.216	66.855
27.00	3076.100	0.214	66.050
28.00	3038.500	0.211	65.250
29.00	3001.200	0.208	64.456
30.00	2964.000	0.206	63.666

**** Batch 2 ****
Polygon 111

Time Interval (years)	Mass In (grams)	Mass/Area (g/sq m)	GW Concentration (ugrams/l)
1.00	2339.200	0.131	15.284
2.00	2326.500	0.130	25.195
3.00	2311.200	0.129	31.576
4.00	2293.000	0.128	35.630
5.00	2272.000	0.127	38.144
6.00	2248.600	0.126	39.635
7.00	2223.400	0.124	40.445

8.00	2197.100	0.123	40.804
9.00	2170.400	0.121	40.863
10.00	2143.600	0.120	40.727
11.00	2117.100	0.118	40.465
12.00	2091.100	0.117	40.124
13.00	2065.600	0.116	39.734
14.00	2040.700	0.114	39.316
15.00	2016.300	0.113	38.884
16.00	1992.300	0.111	38.444
17.00	1968.700	0.110	38.003
18.00	1945.400	0.109	37.562
19.00	1922.400	0.107	37.123
20.00	1899.700	0.106	36.688
21.00	1877.200	0.105	36.256
22.00	1854.900	0.104	35.828
23.00	1832.800	0.102	35.404
24.00	1810.900	0.101	34.983
25.00	1789.100	0.100	34.566
26.00	1767.500	0.099	34.152
27.00	1746.000	0.098	33.741
28.00	1724.700	0.096	33.333
29.00	1703.500	0.095	32.927
30.00	1682.400	0.094	32.524

**** Batch 3 ****
Polygon 13A

Time Interval (years)	Mass In (grams)	Mass/Area (g/sq m)	GW Concentration (ugrams/l)
1.00	2453.600	0.137	16.031
2.00	2440.300	0.136	26.427
3.00	2424.200	0.136	33.120
4.00	2405.100	0.134	37.373
5.00	2383.000	0.133	40.009
6.00	2358.500	0.132	41.572
7.00	2332.100	0.130	42.423
8.00	2304.500	0.129	42.798
9.00	2276.500	0.127	42.861
10.00	2248.400	0.126	42.718
11.00	2220.600	0.124	42.443
12.00	2193.300	0.123	42.085
13.00	2166.600	0.121	41.676
14.00	2140.400	0.120	41.238
15.00	2114.800	0.118	40.784
16.00	2089.600	0.117	40.323
17.00	2064.900	0.115	39.859
18.00	2040.500	0.114	39.397
19.00	2016.400	0.113	38.937
20.00	1992.500	0.111	38.481
21.00	1968.900	0.110	38.028
22.00	1945.600	0.109	37.579
23.00	1922.400	0.107	37.134
24.00	1899.400	0.106	36.693
25.00	1876.600	0.105	36.256

```
PGA V-leach model, polygon screen-TCE-11/10/92-Poly88.INP.  New soil, Old chem.
    1
       1.0          30.          1.0          10.
     123.6         .473        1100.        .7029
olygon 88
     97500.           1.     .022966         1.64         .381         .255      .00074
         0.           0.          -1.
   60
    1     6     417.77
    7    12    1641.84
   13    18     927.45
   19    24     426.13
   25    30       0.00
   31    36       0.00
   37    42       0.00
   43    48       0.00
   49    54       0.00
   55    60       0.00
```

V-Leach, VER 1.1
Jake Turin, 11/91
PGA V-leach model, polygon screen-TCE-11/10/92-Poly88.INP. New soil, Old chem.

Polygon 1
At time = .00, total mass in vadose zone = .95102 g/sq.ft.
Mass in gas phase = .12199 g/sq.ft.
Mass in liquid phase = .52198 g/sq.ft.
Mass sorbed = .30705 g/sq.ft.

Polygon 1
At time = 1.00, total mass in vadose zone = .93541 g/sq.ft.
Mass in gas phase = .11999 g/sq.ft.
Mass in liquid phase = .51341 g/sq.ft.
Mass sorbed = .30201 g/sq.ft.

Since last printout at time = .00
Change in Total Mass = -.15611E-01g/sq.ft.
Advection in from atmosphere = .00000 g/sq.ft.
Advection in from water table = .00000 g/sq.ft.
Diffusion in from atmosphere = -.15611E-01g/sq.ft.
Diffusion in from water table = .00000 g/sq.ft.
Total inflow at boundaries = -.15611E-01g/sq.ft.
Mass discrepancy = .15832E-07g/sq.ft.

Since beginning of run at time = 0.0
Change in Total Mass = -.15611E-01g/sq.ft.
Advection in from atmosphere = .00000 g/sq.ft.
Advection in from water table = .00000 g/sq.ft.
Diffusion in from atmosphere = -.15611E-01g/sq.ft.
Diffusion in from water table = .00000 g/sq.ft.
Total inflow at boundaries = -.15611E-01g/sq.ft.
Mass discrepancy = .15832E-07g/sq.ft.

Polygon 1
At time = 2.00, total mass in vadose zone = .92046 g/sq.ft.
Mass in gas phase = .11807 g/sq.ft.
Mass in liquid phase = .50520 g/sq.ft.
Mass sorbed = .29718 g/sq.ft.

Since last printout at time = 1.00
Change in Total Mass = -.14947E-01g/sq.ft.
Advection in from atmosphere = .00000 g/sq.ft.
Advection in from water table = -.45557E-07g/sq.ft.
Diffusion in from atmosphere = -.14948E-01g/sq.ft.
Diffusion in from water table = .00000 g/sq.ft.
Total inflow at boundaries = -.14948E-01g/sq.ft.
Mass discrepancy = .20955E-06g/sq.ft.

Since beginning of run at time = 0.0
Change in Total Mass = -.30559E-01g/sq.ft.
Advection in from atmosphere = .00000 g/sq.ft.
Advection in from water table = -.45557E-07g/sq.ft.
Diffusion in from atmosphere = -.30559E-01g/sq.ft.
Diffusion in from water table = .00000 g/sq.ft.
Total inflow at boundaries = -.30559E-01g/sq.ft.
Mass discrepancy = .22352E-06g/sq.ft.

```
Polygon   1
At time =       3.00, total mass in vadose zone =     .90613    g/sq.ft.
Mass in gas phase     =       .11624    g/sq.ft.
Mass in liquid phase  =       .49734    g/sq.ft.
Mass sorbed           =       .29255    g/sq.ft.

Since last printout at time =       2.00
               Change in Total Mass =     -.14328E-01g/sq.ft.
                    Advection in from atmosphere =       .00000    g/sq.ft.
                    Advection in from water table =     -.11089E-06g/sq.ft.
                    Diffusion in from atmosphere =      -.14327E-01g/sq.ft.
                    Diffusion in from water table =      .00000    g/sq.ft.
               Total inflow at boundaries =     -.14327E-01g/sq.ft.
               Mass discrepancy =     -.46100E-06g/sq.ft.

Since beginning of run at time = 0.0
               Change in Total Mass =     -.44886E-01g/sq.ft.
                    Advection in from atmosphere =       .00000    g/sq.ft.
                    Advection in from water table =     -.15644E-06g/sq.ft.
                    Diffusion in from atmosphere =      -.44886E-01g/sq.ft.
                    Diffusion in from water table =      .00000    g/sq.ft.
               Total inflow at boundaries =     -.44886E-01g/sq.ft.
               Mass discrepancy =     -.23842E-06g/sq.ft.


Polygon   1
At time =       4.00, total mass in vadose zone =     .89238    g/sq.ft.
Mass in gas phase     =       .11447    g/sq.ft.
Mass in liquid phase  =       .48979    g/sq.ft.
Mass sorbed           =       .28812    g/sq.ft.

Since last printout at time =       3.00
               Change in Total Mass =     -.13746E-01g/sq.ft.
                    Advection in from atmosphere =       .00000    g/sq.ft.
                    Advection in from water table =     -.19846E-06g/sq.ft.
                    Diffusion in from atmosphere =      -.13746E-01g/sq.ft.
                    Diffusion in from water table =      .00000    g/sq.ft.
               Total inflow at boundaries =     -.13746E-01g/sq.ft.
               Mass discrepancy =      .13970E-06g/sq.ft.

Since beginning of run at time = 0.0
               Change in Total Mass =     -.58632E-01g/sq.ft.
                    Advection in from atmosphere =       .00000    g/sq.ft.
                    Advection in from water table =     -.35490E-06g/sq.ft.
                    Diffusion in from atmosphere =      -.58632E-01g/sq.ft.
                    Diffusion in from water table =      .00000    g/sq.ft.
               Total inflow at boundaries =     -.58632E-01g/sq.ft.
               Mass discrepancy =     -.10058E-06g/sq.ft.


Polygon   1
At time =       5.00, total mass in vadose zone =     .87918    g/sq.ft.
Mass in gas phase     =       .11278    g/sq.ft.
Mass in liquid phase  =       .48255    g/sq.ft.
Mass sorbed           =       .28385    g/sq.ft.

Since last printout at time =       4.00
               Change in Total Mass =     -.13200E-01g/sq.ft.
```

```
                Advection in from atmosphere =       .00000    g/sq.ft.
                Advection in from water table =     -.31073E-06g/sq.ft.
                Diffusion in from atmosphere =      -.13200E-01g/sq.ft.
                Diffusion in from water table =       .00000    g/sq.ft.
           Total inflow at boundaries =     -.13201E-01g/sq.ft.
           Mass discrepancy =      .46287E-06g/sq.ft.

Since beginning of run at time = 0.0
           Change in Total Mass =     -.71833E-01g/sq.ft.
                Advection in from atmosphere =       .00000    g/sq.ft.
                Advection in from water table =     -.66563E-06g/sq.ft.
                Diffusion in from atmosphere =      -.71832E-01g/sq.ft.
                Diffusion in from water table =       .00000    g/sq.ft.
           Total inflow at boundaries =     -.71833E-01g/sq.ft.
           Mass discrepancy =      .35763E-06g/sq.ft.


Polygon   1
At time =       6.00, total mass in vadose zone =     .86650    g/sq.ft.
Mass in gas phase     =       .11115    g/sq.ft.
Mass in liquid phase  =       .47559    g/sq.ft.
Mass sorbed           =       .27976    g/sq.ft.

Since last printout at time =       5.00
           Change in Total Mass =     -.12688E-01g/sq.ft.
                Advection in from atmosphere =       .00000    g/sq.ft.
                Advection in from water table =     -.45012E-06g/sq.ft.
                Diffusion in from atmosphere =      -.12687E-01g/sq.ft.
                Diffusion in from water table =       .00000    g/sq.ft.
           Total inflow at boundaries =     -.12688E-01g/sq.ft.
           Mass discrepancy =     -.10990E-06g/sq.ft.

Since beginning of run at time = 0.0
           Change in Total Mass =     -.84521E-01g/sq.ft.
                Advection in from atmosphere =       .00000    g/sq.ft.
                Advection in from water table =     -.11157E-05g/sq.ft.
                Diffusion in from atmosphere =      -.84520E-01g/sq.ft.
                Diffusion in from water table =       .00000    g/sq.ft.
           Total inflow at boundaries =     -.84521E-01g/sq.ft.
           Mass discrepancy =      .25332E-06g/sq.ft.


Polygon   1
At time =       7.00, total mass in vadose zone =     .85429    g/sq.ft.
Mass in gas phase     =       .10959    g/sq.ft.
Mass in liquid phase  =       .46889    g/sq.ft.
Mass sorbed           =       .27582    g/sq.ft.

Since last printout at time =       6.00
           Change in Total Mass =     -.12205E-01g/sq.ft.
                Advection in from atmosphere =       .00000    g/sq.ft.
                Advection in from water table =     -.61905E-06g/sq.ft.
                Diffusion in from atmosphere =      -.12204E-01g/sq.ft.
                Diffusion in from water table =       .00000    g/sq.ft.
           Total inflow at boundaries =     -.12205E-01g/sq.ft.
           Mass discrepancy =      .18626E-07g/sq.ft.

Since beginning of run at time = 0.0
           Change in Total Mass =     -.96725E-01g/sq.ft.
                Advection in from atmosphere =       .00000    g/sq.ft.
```

```
                    Advection in from water table =     -.17348E-05g/sq.ft.
                    Diffusion in from atmosphere =      -.96724E-01g/sq.ft.
                    Diffusion in from water table =      .00000    g/sq.ft.
               Total inflow at boundaries =     -.96726E-01g/sq.ft.
               Mass discrepancy =      .26822E-06g/sq.ft.


Polygon   1
At time =       8.00, total mass in vadose zone =     .84254    g/sq.ft.
Mass in gas phase     =       .10808    g/sq.ft.
Mass in liquid phase  =       .46244    g/sq.ft.
Mass sorbed           =       .27202    g/sq.ft.

Since last printout at time =       7.00
               Change in Total Mass =     -.11750E-01g/sq.ft.
                    Advection in from atmosphere =       .00000    g/sq.ft.
                    Advection in from water table =     -.81985E-06g/sq.ft.
                    Diffusion in from atmosphere =      -.11749E-01g/sq.ft.
                    Diffusion in from water table =      .00000    g/sq.ft.
               Total inflow at boundaries =     -.11749E-01g/sq.ft.
               Mass discrepancy =     -.17229E-06g/sq.ft.

Since beginning of run at time = 0.0
               Change in Total Mass =     -.10847    g/sq.ft.
                    Advection in from atmosphere =       .00000    g/sq.ft.
                    Advection in from water table =     -.25546E-05g/sq.ft.
                    Diffusion in from atmosphere =      -.10847    g/sq.ft.
                    Diffusion in from water table =      .00000    g/sq.ft.
               Total inflow at boundaries =     -.10848    g/sq.ft.
               Mass discrepancy =      .96858E-07g/sq.ft.


Polygon   1
At time =       9.00, total mass in vadose zone =     .83122    g/sq.ft.
Mass in gas phase     =       .10663    g/sq.ft.
Mass in liquid phase  =       .45623    g/sq.ft.
Mass sorbed           =       .26837    g/sq.ft.

Since last printout at time =       8.00
               Change in Total Mass =     -.11319E-01g/sq.ft.
                    Advection in from atmosphere =       .00000    g/sq.ft.
                    Advection in from water table =     -.10548E-05g/sq.ft.
                    Diffusion in from atmosphere =      -.11318E-01g/sq.ft.
                    Diffusion in from water table =      .00000    g/sq.ft.
               Total inflow at boundaries =     -.11319E-01g/sq.ft.
               Mass discrepancy =      .93132E-09g/sq.ft.

Since beginning of run at time = 0.0
               Change in Total Mass =     -.11979    g/sq.ft.
                    Advection in from atmosphere =       .00000    g/sq.ft.
                    Advection in from water table =     -.36095E-05g/sq.ft.
                    Diffusion in from atmosphere =      -.11979    g/sq.ft.
                    Diffusion in from water table =      .00000    g/sq.ft.
               Total inflow at boundaries =     -.11979    g/sq.ft.
               Mass discrepancy =      .89407E-07g/sq.ft.


Polygon   1
At time =      10.00, total mass in vadose zone =     .82031    g/sq.ft.
Mass in gas phase     =       .10523    g/sq.ft.
```

```
Mass in liquid phase  =        .45024    g/sq.ft.
Mass sorbed           =        .26485    g/sq.ft.

Since last printout at time =       9.00
               Change in Total Mass =     -.10912E-01g/sq.ft.
                    Advection in from atmosphere =       .00000    g/sq.ft.
                    Advection in from water table =     -.13262E-05g/sq.ft.
                    Diffusion in from atmosphere =      -.10911E-01g/sq.ft.
                    Diffusion in from water table =      .00000    g/sq.ft.
               Total inflow at boundaries =     -.10912E-01g/sq.ft.
               Mass discrepancy =     -.48429E-07g/sq.ft.

Since beginning of run at time = 0.0
               Change in Total Mass =     -.13071    g/sq.ft.
                    Advection in from atmosphere =       .00000    g/sq.ft.
                    Advection in from water table =     -.49357E-05g/sq.ft.
                    Diffusion in from atmosphere =      -.13070    g/sq.ft.
                    Diffusion in from water table =      .00000    g/sq.ft.
               Total inflow at boundaries =     -.13071    g/sq.ft.
               Mass discrepancy =      .44703E-07g/sq.ft.


Polygon   1
At time =      11.00, total mass in vadose zone =     .80978    g/sq.ft.
Mass in gas phase     =        .10388    g/sq.ft.
Mass in liquid phase  =        .44446    g/sq.ft.
Mass sorbed           =        .26145    g/sq.ft.

Since last printout at time =      10.00
               Change in Total Mass =     -.10526E-01g/sq.ft.
                    Advection in from atmosphere =       .00000    g/sq.ft.
                    Advection in from water table =     -.16361E-05g/sq.ft.
                    Diffusion in from atmosphere =      -.10525E-01g/sq.ft.
                    Diffusion in from water table =      .00000    g/sq.ft.
               Total inflow at boundaries =     -.10526E-01g/sq.ft.
               Mass discrepancy =      .14342E-06g/sq.ft.

Since beginning of run at time = 0.0
               Change in Total Mass =     -.14123    g/sq.ft.
                    Advection in from atmosphere =       .00000    g/sq.ft.
                    Advection in from water table =     -.65718E-05g/sq.ft.
                    Diffusion in from atmosphere =      -.14123    g/sq.ft.
                    Diffusion in from water table =      .00000    g/sq.ft.
               Total inflow at boundaries =     -.14123    g/sq.ft.
               Mass discrepancy =      .19372E-06g/sq.ft.


Polygon   1
At time =      12.00, total mass in vadose zone =     .79962    g/sq.ft.
Mass in gas phase     =        .10257    g/sq.ft.
Mass in liquid phase  =        .43888    g/sq.ft.
Mass sorbed           =        .25817    g/sq.ft.

Since last printout at time =      11.00
               Change in Total Mass =     -.10161E-01g/sq.ft.
                    Advection in from atmosphere =       .00000    g/sq.ft.
                    Advection in from water table =     -.19867E-05g/sq.ft.
                    Diffusion in from atmosphere =      -.10159E-01g/sq.ft.
                    Diffusion in from water table =      .00000    g/sq.ft.
               Total inflow at boundaries =     -.10161E-01g/sq.ft.
```

```
              Mass discrepancy =     -.22165E-06g/sq.ft.

Since beginning of run at time = 0.0
              Change in Total Mass =     -.15139    g/sq.ft.
                   Advection in from atmosphere =       .00000    g/sq.ft.
                   Advection in from water table =    -.85586E-05g/sq.ft.
                   Diffusion in from atmosphere =      -.15138    g/sq.ft.
                   Diffusion in from water table =      .00000    g/sq.ft.
              Total inflow at boundaries =     -.15139    g/sq.ft.
              Mass discrepancy =     -.29802E-07g/sq.ft.


Polygon   1
At time =      13.00, total mass in vadose zone =     .78981    g/sq.ft.
Mass in gas phase     =       .10132    g/sq.ft.
Mass in liquid phase  =       .43350    g/sq.ft.
Mass sorbed           =       .25500    g/sq.ft.

Since last printout at time =      12.00
              Change in Total Mass =     -.98135E-02g/sq.ft.
                   Advection in from atmosphere =       .00000    g/sq.ft.
                   Advection in from water table =    -.23799E-05g/sq.ft.
                   Diffusion in from atmosphere =     -.98112E-02g/sq.ft.
                   Diffusion in from water table =      .00000    g/sq.ft.
              Total inflow at boundaries =     -.98136E-02g/sq.ft.
              Mass discrepancy =      .12480E-06g/sq.ft.

Since beginning of run at time = 0.0
              Change in Total Mass =     -.16121    g/sq.ft.
                   Advection in from atmosphere =       .00000    g/sq.ft.
                   Advection in from water table =    -.10939E-04g/sq.ft.
                   Diffusion in from atmosphere =      -.16120    g/sq.ft.
                   Diffusion in from water table =      .00000    g/sq.ft.
              Total inflow at boundaries =     -.16121    g/sq.ft.
              Mass discrepancy =      .10431E-06g/sq.ft.


Polygon   1
At time =      14.00, total mass in vadose zone =     .78033    g/sq.ft.
Mass in gas phase     =       .10010    g/sq.ft.
Mass in liquid phase  =       .42829    g/sq.ft.
Mass sorbed           =       .25194    g/sq.ft.

Since last printout at time =      13.00
              Change in Total Mass =     -.94841E-02g/sq.ft.
                   Advection in from atmosphere =       .00000    g/sq.ft.
                   Advection in from water table =    -.28177E-05g/sq.ft.
                   Diffusion in from atmosphere =     -.94810E-02g/sq.ft.
                   Diffusion in from water table =      .00000    g/sq.ft.
              Total inflow at boundaries =     -.94838E-02g/sq.ft.
              Mass discrepancy =     -.27567E-06g/sq.ft.

Since beginning of run at time = 0.0
              Change in Total Mass =     -.17069    g/sq.ft.
                   Advection in from atmosphere =       .00000    g/sq.ft.
                   Advection in from water table =    -.13756E-04g/sq.ft.
                   Diffusion in from atmosphere =      -.17068    g/sq.ft.
                   Diffusion in from water table =      .00000    g/sq.ft.
              Total inflow at boundaries =     -.17069    g/sq.ft.
              Mass discrepancy =     -.17881E-06g/sq.ft.
```

```
Polygon   1
At time =      15.00, total mass in vadose zone =     .77116    g/sq.ft.
Mass in gas phase     =       .98923E-01g/sq.ft.
Mass in liquid phase  =       .42326    g/sq.ft.
Mass sorbed           =       .24898    g/sq.ft.

Since last printout at time =      14.00
               Change in Total Mass =     -.91699E-02g/sq.ft.
                    Advection in from atmosphere =       .00000    g/sq.ft.
                    Advection in from water table =     -.33018E-05g/sq.ft.
                    Diffusion in from atmosphere =      -.91667E-02g/sq.ft.
                    Diffusion in from water table =      .00000    g/sq.ft.
               Total inflow at boundaries =     -.91700E-02g/sq.ft.
               Mass discrepancy =      .16298E-06g/sq.ft.

Since beginning of run at time = 0.0
               Change in Total Mass =     -.17986    g/sq.ft.
                    Advection in from atmosphere =       .00000    g/sq.ft.
                    Advection in from water table =     -.17058E-04g/sq.ft.
                    Diffusion in from atmosphere =      -.17984    g/sq.ft.
                    Diffusion in from water table =      .00000    g/sq.ft.
               Total inflow at boundaries =     -.17986    g/sq.ft.
               Mass discrepancy =     -.14901E-07g/sq.ft.


Polygon   1
At time =      16.00, total mass in vadose zone =     .76229    g/sq.ft.
Mass in gas phase     =       .97785E-01g/sq.ft.
Mass in liquid phase  =       .41839    g/sq.ft.
Mass sorbed           =       .24611    g/sq.ft.

Since last printout at time =      15.00
               Change in Total Mass =     -.88714E-02g/sq.ft.
                    Advection in from atmosphere =       .00000    g/sq.ft.
                    Advection in from water table =     -.38339E-05g/sq.ft.
                    Diffusion in from atmosphere =      -.88675E-02g/sq.ft.
                    Diffusion in from water table =      .00000    g/sq.ft.
               Total inflow at boundaries =     -.88713E-02g/sq.ft.
               Mass discrepancy =     -.35390E-07g/sq.ft.

Since beginning of run at time = 0.0
               Change in Total Mass =     -.18873    g/sq.ft.
                    Advection in from atmosphere =       .00000    g/sq.ft.
                    Advection in from water table =     -.20892E-04g/sq.ft.
                    Diffusion in from atmosphere =      -.18871    g/sq.ft.
                    Diffusion in from water table =      .00000    g/sq.ft.
               Total inflow at boundaries =     -.18873    g/sq.ft.
               Mass discrepancy =     -.59605E-07g/sq.ft.


Polygon   1
At time =      17.00, total mass in vadose zone =     .75370    g/sq.ft.
Mass in gas phase     =       .96683E-01g/sq.ft.
Mass in liquid phase  =       .41368    g/sq.ft.
Mass sorbed           =       .24334    g/sq.ft.

Since last printout at time =      16.00
               Change in Total Mass =     -.85866E-02g/sq.ft.
```

```
                    Advection in from atmosphere =       .00000    g/sq.ft.
                    Advection in from water table =     -.44156E-05g/sq.ft.
                    Diffusion in from atmosphere =      -.85823E-02g/sq.ft.
                    Diffusion in from water table =      .00000    g/sq.ft.
               Total inflow at boundaries =     -.85867E-02g/sq.ft.
               Mass discrepancy =      .13970E-06g/sq.ft.

Since beginning of run at time = 0.0
               Change in Total Mass =     -.19732    g/sq.ft.
                    Advection in from atmosphere =       .00000    g/sq.ft.
                    Advection in from water table =     -.25308E-04g/sq.ft.
                    Diffusion in from atmosphere =      -.19729    g/sq.ft.
                    Diffusion in from water table =      .00000    g/sq.ft.
               Total inflow at boundaries =     -.19732    g/sq.ft.
               Mass discrepancy =      .74506E-07g/sq.ft.


Polygon   1
At time =      18.00, total mass in vadose zone =     .74538    g/sq.ft.
Mass in gas phase     =       .95617E-01g/sq.ft.
Mass in liquid phase  =       .40911    g/sq.ft.
Mass sorbed           =       .24066    g/sq.ft.

Since last printout at time =      17.00
               Change in Total Mass =     -.83154E-02g/sq.ft.
                    Advection in from atmosphere =       .00000    g/sq.ft.
                    Advection in from water table =     -.50485E-05g/sq.ft.
                    Diffusion in from atmosphere =      -.83103E-02g/sq.ft.
                    Diffusion in from water table =      .00000    g/sq.ft.
               Total inflow at boundaries =     -.83153E-02g/sq.ft.
               Mass discrepancy =     -.13132E-06g/sq.ft.

Since beginning of run at time = 0.0
               Change in Total Mass =     -.20563    g/sq.ft.
                    Advection in from atmosphere =       .00000    g/sq.ft.
                    Advection in from water table =     -.30356E-04g/sq.ft.
                    Diffusion in from atmosphere =      -.20560    g/sq.ft.
                    Diffusion in from water table =      .00000    g/sq.ft.
               Total inflow at boundaries =     -.20563    g/sq.ft.
               Mass discrepancy =     -.59605E-07g/sq.ft.


Polygon   1
At time =      19.00, total mass in vadose zone =     .73733    g/sq.ft.
Mass in gas phase     =       .94583E-01g/sq.ft.
Mass in liquid phase  =       .40469    g/sq.ft.
Mass sorbed           =       .23805    g/sq.ft.

Since last printout at time =      18.00
               Change in Total Mass =     -.80563E-02g/sq.ft.
                    Advection in from atmosphere =       .00000    g/sq.ft.
                    Advection in from water table =     -.57338E-05g/sq.ft.
                    Diffusion in from atmosphere =      -.80506E-02g/sq.ft.
                    Diffusion in from water table =      .00000    g/sq.ft.
               Total inflow at boundaries =     -.80563E-02g/sq.ft.
               Mass discrepancy =      .17695E-07g/sq.ft.

Since beginning of run at time = 0.0
               Change in Total Mass =     -.21369    g/sq.ft.
                    Advection in from atmosphere =       .00000    g/sq.ft.
```

```
                    Advection in from water table =     -.36090E-04g/sq.ft.
                    Diffusion in from atmosphere =      -.21365    g/sq.ft.
                    Diffusion in from water table =      .00000    g/sq.ft.
               Total inflow at boundaries =     -.21369    g/sq.ft.
               Mass discrepancy =     -.44703E-07g/sq.ft.


Polygon   1
At time =      20.00, total mass in vadose zone =     .72952    g/sq.ft.
Mass in gas phase     =       .93581E-01g/sq.ft.
Mass in liquid phase  =       .40040    g/sq.ft.
Mass sorbed           =       .23553    g/sq.ft.

Since last printout at time =      19.00
               Change in Total Mass =     -.78088E-02g/sq.ft.
                    Advection in from atmosphere =       .00000    g/sq.ft.
                    Advection in from water table =     -.64729E-05g/sq.ft.
                    Diffusion in from atmosphere =      -.78025E-02g/sq.ft.
                    Diffusion in from water table =      .00000    g/sq.ft.
               Total inflow at boundaries =     -.78089E-02g/sq.ft.
               Mass discrepancy =      .14435E-06g/sq.ft.

Since beginning of run at time = 0.0
               Change in Total Mass =     -.22150    g/sq.ft.
                    Advection in from atmosphere =       .00000    g/sq.ft.
                    Advection in from water table =     -.42563E-04g/sq.ft.
                    Diffusion in from atmosphere =      -.22146    g/sq.ft.
                    Diffusion in from water table =      .00000    g/sq.ft.
               Total inflow at boundaries =     -.22150    g/sq.ft.
               Mass discrepancy =      .89407E-07g/sq.ft.


Polygon   1
At time =      21.00, total mass in vadose zone =     .72195    g/sq.ft.
Mass in gas phase     =       .92610E-01g/sq.ft.
Mass in liquid phase  =       .39625    g/sq.ft.
Mass sorbed           =       .23309    g/sq.ft.

Since last printout at time =      20.00
               Change in Total Mass =     -.75727E-02g/sq.ft.
                    Advection in from atmosphere =       .00000    g/sq.ft.
                    Advection in from water table =     -.72668E-05g/sq.ft.
                    Diffusion in from atmosphere =      -.75653E-02g/sq.ft.
                    Diffusion in from water table =      .00000    g/sq.ft.
               Total inflow at boundaries =     -.75726E-02g/sq.ft.
               Mass discrepancy =     -.13039E-06g/sq.ft.

Since beginning of run at time = 0.0
               Change in Total Mass =     -.22907    g/sq.ft.
                    Advection in from atmosphere =       .00000    g/sq.ft.
                    Advection in from water table =     -.49830E-04g/sq.ft.
                    Diffusion in from atmosphere =      -.22902    g/sq.ft.
                    Diffusion in from water table =      .00000    g/sq.ft.
               Total inflow at boundaries =     -.22907    g/sq.ft.
               Mass discrepancy =     -.29802E-07g/sq.ft.


Polygon   1
At time =      22.00, total mass in vadose zone =     .71460    g/sq.ft.
Mass in gas phase     =       .91668E-01g/sq.ft.
```

```
Mass in liquid phase  =       .39222    g/sq.ft.
Mass sorbed           =       .23072    g/sq.ft.

Since last printout at time =      21.00
              Change in Total Mass =     -.73466E-02g/sq.ft.
                   Advection in from atmosphere =       .00000    g/sq.ft.
                   Advection in from water table =     -.81167E-05g/sq.ft.
                   Diffusion in from atmosphere =      -.73384E-02g/sq.ft.
                   Diffusion in from water table =      .00000    g/sq.ft.
              Total inflow at boundaries =     -.73466E-02g/sq.ft.
              Mass discrepancy =     -.51223E-08g/sq.ft.

Since beginning of run at time = 0.0
              Change in Total Mass =     -.23642    g/sq.ft.
                   Advection in from atmosphere =       .00000    g/sq.ft.
                   Advection in from water table =     -.57946E-04g/sq.ft.
                   Diffusion in from atmosphere =      -.23636    g/sq.ft.
                   Diffusion in from water table =      .00000    g/sq.ft.
              Total inflow at boundaries =     -.23642    g/sq.ft.
              Mass discrepancy =     -.29802E-07g/sq.ft.


Polygon   1
At time =      23.00, total mass in vadose zone =     .70747    g/sq.ft.
Mass in gas phase     =       .90753E-01g/sq.ft.
Mass in liquid phase  =       .38830    g/sq.ft.
Mass sorbed           =       .22841    g/sq.ft.

Since last printout at time =      22.00
              Change in Total Mass =     -.71303E-02g/sq.ft.
                   Advection in from atmosphere =       .00000    g/sq.ft.
                   Advection in from water table =     -.90233E-05g/sq.ft.
                   Diffusion in from atmosphere =      -.71213E-02g/sq.ft.
                   Diffusion in from water table =      .00000    g/sq.ft.
              Total inflow at boundaries =     -.71303E-02g/sq.ft.
              Mass discrepancy =      .13970E-08g/sq.ft.

Since beginning of run at time = 0.0
              Change in Total Mass =     -.24355    g/sq.ft.
                   Advection in from atmosphere =       .00000    g/sq.ft.
                   Advection in from water table =     -.66970E-04g/sq.ft.
                   Diffusion in from atmosphere =      -.24348    g/sq.ft.
                   Diffusion in from water table =      .00000    g/sq.ft.
              Total inflow at boundaries =     -.24355    g/sq.ft.
              Mass discrepancy =     -.29802E-07g/sq.ft.


Polygon   1
At time =      24.00, total mass in vadose zone =     .70055    g/sq.ft.
Mass in gas phase     =       .89865E-01g/sq.ft.
Mass in liquid phase  =       .38450    g/sq.ft.
Mass sorbed           =       .22618    g/sq.ft.

Since last printout at time =      23.00
              Change in Total Mass =     -.69231E-02g/sq.ft.
                   Advection in from atmosphere =       .00000    g/sq.ft.
                   Advection in from water table =     -.99876E-05g/sq.ft.
                   Diffusion in from atmosphere =      -.69133E-02g/sq.ft.
                   Diffusion in from water table =      .00000    g/sq.ft.
              Total inflow at boundaries =     -.69233E-02g/sq.ft.
```

```
            Mass discrepancy =      .18533E-06g/sq.ft.

Since beginning of run at time = 0.0
            Change in Total Mass =     -.25047    g/sq.ft.
                 Advection in from atmosphere =       .00000    g/sq.ft.
                 Advection in from water table =   -.76957E-04g/sq.ft.
                 Diffusion in from atmosphere =     -.25039    g/sq.ft.
                 Diffusion in from water table =      .00000    g/sq.ft.
            Total inflow at boundaries =     -.25047    g/sq.ft.
            Mass discrepancy =      .14901E-06g/sq.ft.


Polygon   1
At time =      25.00, total mass in vadose zone =     .69382    g/sq.ft.
Mass in gas phase     =       .89002E-01g/sq.ft.
Mass in liquid phase  =       .38081    g/sq.ft.
Mass sorbed           =       .22401    g/sq.ft.

Since last printout at time =      24.00
            Change in Total Mass =     -.67251E-02g/sq.ft.
                 Advection in from atmosphere =       .00000    g/sq.ft.
                 Advection in from water table =   -.11010E-04g/sq.ft.
                 Diffusion in from atmosphere =     -.67141E-02g/sq.ft.
                 Diffusion in from water table =      .00000    g/sq.ft.
            Total inflow at boundaries =     -.67251E-02g/sq.ft.
            Mass discrepancy =     -.72177E-07g/sq.ft.

Since beginning of run at time = 0.0
            Change in Total Mass =     -.25720    g/sq.ft.
                 Advection in from atmosphere =       .00000    g/sq.ft.
                 Advection in from water table =   -.87967E-04g/sq.ft.
                 Diffusion in from atmosphere =     -.25711    g/sq.ft.
                 Diffusion in from water table =      .00000    g/sq.ft.
            Total inflow at boundaries =     -.25720    g/sq.ft.
            Mass discrepancy =      .89407E-07g/sq.ft.


Polygon   1
At time =      26.00, total mass in vadose zone =     .68729    g/sq.ft.
Mass in gas phase     =       .88164E-01g/sq.ft.
Mass in liquid phase  =       .37722    g/sq.ft.
Mass sorbed           =       .22190    g/sq.ft.

Since last printout at time =      25.00
            Change in Total Mass =     -.65350E-02g/sq.ft.
                 Advection in from atmosphere =       .00000    g/sq.ft.
                 Advection in from water table =   -.12091E-04g/sq.ft.
                 Diffusion in from atmosphere =     -.65230E-02g/sq.ft.
                 Diffusion in from water table =      .00000    g/sq.ft.
            Total inflow at boundaries =     -.65351E-02g/sq.ft.
            Mass discrepancy =      .76834E-07g/sq.ft.

Since beginning of run at time = 0.0
            Change in Total Mass =     -.26373    g/sq.ft.
                 Advection in from atmosphere =       .00000    g/sq.ft.
                 Advection in from water table =   -.10006E-03g/sq.ft.
                 Diffusion in from atmosphere =     -.26363    g/sq.ft.
                 Diffusion in from water table =      .00000    g/sq.ft.
            Total inflow at boundaries =     -.26373    g/sq.ft.
            Mass discrepancy =      .14901E-06g/sq.ft.
```

```
Polygon   1
At time =      27.00, total mass in vadose zone =     .68093    g/sq.ft.
Mass in gas phase     =       .87349E-01g/sq.ft.
Mass in liquid phase  =       .37374    g/sq.ft.
Mass sorbed           =       .21985    g/sq.ft.

Since last printout at time =      26.00
               Change in Total Mass =     -.63531E-02g/sq.ft.
                    Advection in from atmosphere =       .00000    g/sq.ft.
                    Advection in from water table =     -.13232E-04g/sq.ft.
                    Diffusion in from atmosphere =      -.63397E-02g/sq.ft.
                    Diffusion in from water table =      .00000    g/sq.ft.
               Total inflow at boundaries =     -.63529E-02g/sq.ft.
               Mass discrepancy =     -.15879E-06g/sq.ft.

Since beginning of run at time = 0.0
               Change in Total Mass =     -.27008    g/sq.ft.
                    Advection in from atmosphere =       .00000    g/sq.ft.
                    Advection in from water table =     -.11329E-03g/sq.ft.
                    Diffusion in from atmosphere =      -.26997    g/sq.ft.
                    Diffusion in from water table =      .00000    g/sq.ft.
               Total inflow at boundaries =     -.27008    g/sq.ft.
               Mass discrepancy =      .00000    g/sq.ft.


Polygon   1
At time =      28.00, total mass in vadose zone =     .67475    g/sq.ft.
Mass in gas phase     =       .86556E-01g/sq.ft.
Mass in liquid phase  =       .37035    g/sq.ft.
Mass sorbed           =       .21785    g/sq.ft.

Since last printout at time =      27.00
               Change in Total Mass =     -.61780E-02g/sq.ft.
                    Advection in from atmosphere =       .00000    g/sq.ft.
                    Advection in from water table =     -.14432E-04g/sq.ft.
                    Diffusion in from atmosphere =      -.61638E-02g/sq.ft.
                    Diffusion in from water table =      .00000    g/sq.ft.
               Total inflow at boundaries =     -.61782E-02g/sq.ft.
               Mass discrepancy =      .18999E-06g/sq.ft.

Since beginning of run at time = 0.0
               Change in Total Mass =     -.27626    g/sq.ft.
                    Advection in from atmosphere =       .00000    g/sq.ft.
                    Advection in from water table =     -.12772E-03g/sq.ft.
                    Diffusion in from atmosphere =      -.27614    g/sq.ft.
                    Diffusion in from water table =      .00000    g/sq.ft.
               Total inflow at boundaries =     -.27626    g/sq.ft.
               Mass discrepancy =      .20862E-06g/sq.ft.


Polygon   1
At time =      29.00, total mass in vadose zone =     .66874    g/sq.ft.
Mass in gas phase     =       .85785E-01g/sq.ft.
Mass in liquid phase  =       .36705    g/sq.ft.
Mass sorbed           =       .21591    g/sq.ft.

Since last printout at time =      28.00
               Change in Total Mass =     -.60105E-02g/sq.ft.
```

```
                Advection in from atmosphere =       .00000    g/sq.ft.
                Advection in from water table =     -.15692E-04g/sq.ft.
                Diffusion in from atmosphere =      -.59949E-02g/sq.ft.
                Diffusion in from water table =      .00000    g/sq.ft.
           Total inflow at boundaries =     -.60106E-02g/sq.ft.
           Mass discrepancy =      .29802E-07g/sq.ft.

Since beginning of run at time = 0.0
           Change in Total Mass =     -.28227    g/sq.ft.
                Advection in from atmosphere =       .00000    g/sq.ft.
                Advection in from water table =     -.14342E-03g/sq.ft.
                Diffusion in from atmosphere =      -.28213    g/sq.ft.
                Diffusion in from water table =      .00000    g/sq.ft.
           Total inflow at boundaries =     -.28227    g/sq.ft.
           Mass discrepancy =      .20862E-06g/sq.ft.


Polygon   1
At time =      30.00, total mass in vadose zone =     .66289    g/sq.ft.
Mass in gas phase     =       .85035E-01g/sq.ft.
Mass in liquid phase  =       .36384    g/sq.ft.
Mass sorbed           =       .21402    g/sq.ft.

Since last printout at time =      29.00
           Change in Total Mass =     -.58497E-02g/sq.ft.
                Advection in from atmosphere =       .00000    g/sq.ft.
                Advection in from water table =     -.17012E-04g/sq.ft.
                Diffusion in from atmosphere =      -.58326E-02g/sq.ft.
                Diffusion in from water table =      .00000    g/sq.ft.
           Total inflow at boundaries =     -.58496E-02g/sq.ft.
           Mass discrepancy =     -.99652E-07g/sq.ft.

Since beginning of run at time = 0.0
           Change in Total Mass =     -.28812    g/sq.ft.
                Advection in from atmosphere =       .00000    g/sq.ft.
                Advection in from water table =     -.16043E-03g/sq.ft.
                Diffusion in from atmosphere =      -.28796    g/sq.ft.
                Diffusion in from water table =      .00000    g/sq.ft.
           Total inflow at boundaries =     -.28812    g/sq.ft.
           Mass discrepancy =      .11921E-06g/sq.ft.


GROUNDWATER IMPACT OF POLYGON   1

 Time        Mass per area (g/sq.ft.)      Total Mass (g)
     1.00          .00000                    .00000
     2.00          .45557E-07                .44418E-02
     3.00          .11089E-06                .10811E-01
     4.00          .19846E-06                .19350E-01
     5.00          .31073E-06                .30296E-01
     6.00          .45012E-06                .43887E-01
     7.00          .61905E-06                .60357E-01
     8.00          .81985E-06                .79935E-01
     9.00          .10548E-05                .10285
    10.00          .13262E-05                .12930
    11.00          .16361E-05                .15952
    12.00          .19867E-05                .19371
    13.00          .23799E-05                .23205
    14.00          .28177E-05                .27473
    15.00          .33018E-05                .32192
```

16.00	.38339E-05	.37381
17.00	.44156E-05	.43053
18.00	.50485E-05	.49223
19.00	.57338E-05	.55905
20.00	.64729E-05	.63111
21.00	.72668E-05	.70852
22.00	.81167E-05	.79138
23.00	.90233E-05	.87977
24.00	.99876E-05	.97379
25.00	.11010E-04	1.0735
26.00	.12091E-04	1.1789
27.00	.13232E-04	1.2901
28.00	.14432E-04	1.4072
29.00	.15692E-04	1.5300
30.00	.17012E-04	1.6587

****

****

TOTAL GROUNDWATER IMPACT

Time (yr)	Mass (g)	Cumulative Mass (g)
1.00	.00000	.00000
2.00	.44418E-02	.44418E-02
3.00	.10811E-01	.15253E-01
4.00	.19350E-01	.34603E-01
5.00	.30296E-01	.64899E-01
6.00	.43887E-01	.10879
7.00	.60357E-01	.16914
8.00	.79935E-01	.24908
9.00	.10285	.35192
10.00	.12930	.48123
11.00	.15952	.64075
12.00	.19371	.83446
13.00	.23205	1.0665
14.00	.27473	1.3412
15.00	.32192	1.6632
16.00	.37381	2.0370
17.00	.43053	2.4675
18.00	.49223	2.9597
19.00	.55905	3.5188
20.00	.63111	4.1499
21.00	.70852	4.8584
22.00	.79138	5.6498
23.00	.87977	6.5295
24.00	.97379	7.5033
25.00	1.0735	8.5768
26.00	1.1789	9.7557
27.00	1.2901	11.046
28.00	1.4072	12.453
29.00	1.5300	13.983
30.00	1.6587	15.642

Polygon 88
Time: .000

Cell	Cgas(g/cu.ft.)	Cliq(g/cu.ft.)	Csol
1	.19751E-01	.41758E-01	.13488E-06
2	.19751E-01	.41758E-01	.13488E-06
3	.19751E-01	.41758E-01	.13488E-06
4	.19751E-01	.41758E-01	.13488E-06
5	.19751E-01	.41758E-01	.13488E-06
6	.19751E-01	.41758E-01	.13488E-06
7	.77623E-01	.16411	.53007E-06
8	.77623E-01	.16411	.53007E-06
9	.77623E-01	.16411	.53007E-06
10	.77623E-01	.16411	.53007E-06
11	.77623E-01	.16411	.53007E-06
12	.77623E-01	.16411	.53007E-06
13	.43848E-01	.92702E-01	.29943E-06
14	.43848E-01	.92702E-01	.29943E-06
15	.43848E-01	.92702E-01	.29943E-06
16	.43848E-01	.92702E-01	.29943E-06
17	.43848E-01	.92702E-01	.29943E-06
18	.43848E-01	.92702E-01	.29943E-06
19	.20147E-01	.42593E-01	.13758E-06
20	.20147E-01	.42593E-01	.13758E-06
21	.20147E-01	.42593E-01	.13758E-06
22	.20147E-01	.42593E-01	.13758E-06
23	.20147E-01	.42593E-01	.13758E-06
24	.20147E-01	.42593E-01	.13758E-06
25	.00000	.00000	.00000
26	.00000	.00000	.00000
27	.00000	.00000	.00000
28	.00000	.00000	.00000
29	.00000	.00000	.00000
30	.00000	.00000	.00000
31	.00000	.00000	.00000
32	.00000	.00000	.00000
33	.00000	.00000	.00000
34	.00000	.00000	.00000
35	.00000	.00000	.00000
36	.00000	.00000	.00000
37	.00000	.00000	.00000
38	.00000	.00000	.00000
39	.00000	.00000	.00000
40	.00000	.00000	.00000
41	.00000	.00000	.00000
42	.00000	.00000	.00000
43	.00000	.00000	.00000
44	.00000	.00000	.00000
45	.00000	.00000	.00000
46	.00000	.00000	.00000
47	.00000	.00000	.00000
48	.00000	.00000	.00000
49	.00000	.00000	.00000
50	.00000	.00000	.00000
51	.00000	.00000	.00000
52	.00000	.00000	.00000
53	.00000	.00000	.00000
54	.00000	.00000	.00000
55	.00000	.00000	.00000
56	.00000	.00000	.00000

57	.00000	.00000	.00000
58	.00000	.00000	.00000
59	.00000	.00000	.00000
60	.00000	.00000	.00000

Polygon 88
Time: 10.000

Cell	Cgas(g/cu.ft.)	Cliq(g/cu.ft.)	Csol
1	.60617E-02	.12816E-01	.41394E-07
2	.11256E-01	.23796E-01	.76862E-07
3	.15251E-01	.32244E-01	.10415E-06
4	.18775E-01	.39694E-01	.12821E-06
5	.22179E-01	.46890E-01	.15146E-06
6	.25608E-01	.54140E-01	.17487E-06
7	.37548E-01	.79383E-01	.25641E-06
8	.45219E-01	.95600E-01	.30879E-06
9	.48868E-01	.10331	.33371E-06
10	.50670E-01	.10712	.34601E-06
11	.51482E-01	.10884	.35156E-06
12	.51514E-01	.10891	.35178E-06
13	.45906E-01	.97052E-01	.31348E-06
14	.42158E-01	.89129E-01	.28789E-06
15	.40149E-01	.84881E-01	.27417E-06
16	.38615E-01	.81638E-01	.26369E-06
17	.37049E-01	.78327E-01	.25300E-06
18	.35304E-01	.74639E-01	.24108E-06
19	.29885E-01	.63182E-01	.20408E-06
20	.26012E-01	.54993E-01	.17763E-06
21	.23564E-01	.49818E-01	.16091E-06
22	.21629E-01	.45726E-01	.14770E-06
23	.19826E-01	.41916E-01	.13539E-06
24	.18035E-01	.38130E-01	.12316E-06
25	.13277E-01	.28069E-01	.90665E-07
26	.99829E-02	.21105E-01	.68171E-07
27	.80504E-02	.17020E-01	.54974E-07
28	.67049E-02	.14175E-01	.45786E-07
29	.56295E-02	.11902E-01	.38442E-07
30	.47305E-02	.10001E-01	.32303E-07
31	.39724E-02	.83983E-02	.27127E-07
32	.33329E-02	.70463E-02	.22759E-07
33	.27939E-02	.59067E-02	.19079E-07
34	.23401E-02	.49473E-02	.15980E-07
35	.19584E-02	.41405E-02	.13374E-07
36	.16378E-02	.34625E-02	.11184E-07
37	.13686E-02	.28935E-02	.93460E-08
38	.11429E-02	.24163E-02	.78046E-08
39	.95379E-03	.20165E-02	.65132E-08
40	.79548E-03	.16818E-02	.54321E-08
41	.66306E-03	.14018E-02	.45279E-08
42	.55239E-03	.11678E-02	.37721E-08
43	.45998E-03	.97247E-03	.31411E-08
44	.38287E-03	.80946E-03	.26146E-08
45	.31860E-03	.67357E-03	.21756E-08
46	.26507E-03	.56041E-03	.18101E-08
47	.22054E-03	.46627E-03	.15060E-08
48	.18355E-03	.38805E-03	.12534E-08
49	.15286E-03	.32318E-03	.10439E-08
50	.12746E-03	.26947E-03	.87039E-09
51	.10649E-03	.22513E-03	.72718E-09
52	.89241E-04	.18867E-03	.60940E-09

53	.75131E-04	.15884E-03	.51305E-09
54	.63679E-04	.13463E-03	.43485E-09
55	.54491E-04	.11520E-03	.37211E-09
56	.47252E-04	.99899E-04	.32267E-09
57	.41713E-04	.88188E-04	.28485E-09
58	.37681E-04	.79665E-04	.25732E-09
59	.35019E-04	.74035E-04	.23913E-09
60	.33633E-04	.71105E-04	.22967E-09

Polygon 88
Time: 20.000

Cell	Cgas(g/cu.ft.)	Cliq(g/cu.ft.)	Csol
1	.31214E-02	.65991E-02	.21315E-07
2	.69843E-02	.14766E-01	.47694E-07
3	.10765E-01	.22759E-01	.73512E-07
4	.14332E-01	.30300E-01	.97869E-07
5	.17739E-01	.37503E-01	.12113E-06
6	.21036E-01	.44475E-01	.14365E-06
7	.25470E-01	.53847E-01	.17393E-06
8	.29755E-01	.62906E-01	.20319E-06
9	.32990E-01	.69747E-01	.22528E-06
10	.35194E-01	.74405E-01	.24033E-06
11	.36591E-01	.77359E-01	.24987E-06
12	.37321E-01	.78903E-01	.25486E-06
13	.36732E-01	.77658E-01	.25084E-06
14	.35607E-01	.75280E-01	.24315E-06
15	.34491E-01	.72920E-01	.23553E-06
16	.33389E-01	.70590E-01	.22801E-06
17	.32180E-01	.68033E-01	.21975E-06
18	.30792E-01	.65099E-01	.21027E-06
19	.28701E-01	.60678E-01	.19599E-06
20	.26430E-01	.55877E-01	.18048E-06
21	.24347E-01	.51474E-01	.16626E-06
22	.22446E-01	.47454E-01	.15328E-06
23	.20630E-01	.43615E-01	.14088E-06
24	.18839E-01	.39829E-01	.12865E-06
25	.16623E-01	.35143E-01	.11351E-06
26	.14418E-01	.30483E-01	.98460E-07
27	.12533E-01	.26497E-01	.85586E-07
28	.10954E-01	.23159E-01	.74804E-07
29	.95956E-02	.20287E-01	.65526E-07
30	.84014E-02	.17762E-01	.57371E-07
31	.73442E-02	.15527E-01	.50152E-07
32	.64081E-02	.13548E-01	.43759E-07
33	.55810E-02	.11799E-01	.38112E-07
34	.48522E-02	.10258E-01	.33134E-07
35	.42115E-02	.89038E-02	.28759E-07
36	.36497E-02	.77161E-02	.24923E-07
37	.31582E-02	.66769E-02	.21567E-07
38	.27291E-02	.57697E-02	.18636E-07
39	.23552E-02	.49792E-02	.16083E-07
40	.20300E-02	.42918E-02	.13862E-07
41	.17478E-02	.36951E-02	.11935E-07
42	.15032E-02	.31780E-02	.10265E-07
43	.12917E-02	.27308E-02	.88205E-08
44	.11090E-02	.23446E-02	.75732E-08
45	.95157E-03	.20118E-02	.64981E-08
46	.81613E-03	.17254E-02	.55731E-08
47	.69984E-03	.14796E-02	.47790E-08
48	.60021E-03	.12689E-02	.40987E-08

49	.51508E-03	.10890E-02	.35174E-08
50	.44258E-03	.93568E-03	.30223E-08
51	.38106E-03	.80563E-03	.26022E-08
52	.32913E-03	.69584E-03	.22476E-08
53	.28560E-03	.60380E-03	.19503E-08
54	.24943E-03	.52735E-03	.17033E-08
55	.21980E-03	.46469E-03	.15010E-08
56	.19598E-03	.41434E-03	.13383E-08
57	.17743E-03	.37511E-03	.12116E-08
58	.16368E-03	.34605E-03	.11177E-08
59	.15442E-03	.32647E-03	.10545E-08
60	.14943E-03	.31592E-03	.10204E-08

Polygon 88
Time: 30.000

Cell	Cgas(g/cu.ft.)	Cliq(g/cu.ft.)	Csol
1	.21068E-02	.44541E-02	.14387E-07
2	.48670E-02	.10290E-01	.33236E-07
3	.77857E-02	.16460E-01	.53167E-07
4	.10673E-01	.22565E-01	.72885E-07
5	.13470E-01	.28479E-01	.91986E-07
6	.16158E-01	.34162E-01	.11034E-06
7	.18901E-01	.39960E-01	.12907E-06
8	.21577E-01	.45617E-01	.14734E-06
9	.23939E-01	.50610E-01	.16347E-06
10	.25857E-01	.54667E-01	.17657E-06
11	.27319E-01	.57756E-01	.18655E-06
12	.28345E-01	.59926E-01	.19356E-06
13	.28856E-01	.61006E-01	.19705E-06
14	.28930E-01	.61162E-01	.19755E-06
15	.28717E-01	.60712E-01	.19610E-06
16	.28299E-01	.59830E-01	.19325E-06
17	.27696E-01	.58554E-01	.18913E-06
18	.26906E-01	.56883E-01	.18373E-06
19	.25861E-01	.54674E-01	.17660E-06
20	.24615E-01	.52040E-01	.16809E-06
21	.23275E-01	.49207E-01	.15894E-06
22	.21902E-01	.46305E-01	.14957E-06
23	.20511E-01	.43365E-01	.14007E-06
24	.19102E-01	.40385E-01	.13044E-06
25	.17615E-01	.37241E-01	.12029E-06
26	.16093E-01	.34022E-01	.10989E-06
27	.14622E-01	.30912E-01	.99847E-07
28	.13248E-01	.28009E-01	.90469E-07
29	.11979E-01	.25325E-01	.81800E-07
30	.10806E-01	.22846E-01	.73791E-07
31	.97237E-02	.20557E-01	.66400E-07
32	.87276E-02	.18452E-01	.59598E-07
33	.78143E-02	.16521E-01	.53362E-07
34	.69802E-02	.14757E-01	.47666E-07
35	.62215E-02	.13153E-01	.42485E-07
36	.55337E-02	.11699E-01	.37788E-07
37	.49124E-02	.10386E-01	.33545E-07
38	.43528E-02	.92026E-02	.29724E-07
39	.38504E-02	.81404E-02	.26294E-07
40	.34006E-02	.71893E-02	.23222E-07
41	.29988E-02	.63401E-02	.20478E-07
42	.26410E-02	.55836E-02	.18035E-07
43	.23232E-02	.49115E-02	.15864E-07
44	.20414E-02	.43160E-02	.13941E-07

45	.17924E-02	.37895E-02	.12240E-07
46	.15729E-02	.33253E-02	.10741E-07
47	.13798E-02	.29172E-02	.94226E-08
48	.12107E-02	.25595E-02	.82672E-08
49	.10629E-02	.22471E-02	.72581E-08
50	.93432E-03	.19753E-02	.63802E-08
51	.82303E-03	.17400E-02	.56203E-08
52	.72729E-03	.15376E-02	.49665E-08
53	.64558E-03	.13649E-02	.44085E-08
54	.57656E-03	.12190E-02	.39372E-08
55	.51913E-03	.10975E-02	.35450E-08
56	.47233E-03	.99857E-03	.32254E-08
57	.43537E-03	.92045E-03	.29731E-08
58	.40766E-03	.86186E-03	.27838E-08
59	.38874E-03	.82186E-03	.26546E-08
60	.37832E-03	.79983E-03	.25834E-08

V-Leach, VER 1.1
Jake Turin, 11/91
PGA V-leach model, polygon screen-TCE-11/10/92-Poly88.INP. New soil, Old chem.
1 polygons.
Timestep = 1.00 years. Simulation length = 30.00 years.
Printout every 1.00 years. Vertical profile stored every 10.00 years.
Koc = 123.60 ml/g, .43649E-02cu.ft./g
Kh = .47300 (dimensionless).
Aqueous solubility = 1100.0 mg/l, 31.149 g/cu.ft
Free air diffusion coefficient = .70290 sq. m/day, 2761.7 sq.ft./yr

Polygon 1
Polygon 88
Polygon area = 97500. sq. ft.
60 cells, each cell 1.000 ft. thick.
Soil Properties:
Bulk density = 1.6400 g/ml, 46440. g/cu.ft.
Porosity = .3810 Volumetric water content = .2550
Organic carbon content = .00074000
Recharge Rate = .02296600 ft/yr
Conc. in recharge water = .00000 mg/l, .00000 g/cu.ft
Atmospheric concentration = .00000 mg/l, .00000 g/cu.ft
Water table is impermeable to gas diffusion.

Polygon 88 Calculation of Total TCE Mass in Sub-Unit A. Redistributing Total Soil Concentrations using INTERP and original HGC Total Soil Concentrations and Vertical Distributions to derive new VLEACH vertical distribution input data.

Depth Interval (feet)	Depth (feet)	Total Soil Conc INTERP Ct (ug/Kg)	Mt (ug/cc)	Volume Soil (cubic feet)	Mass TCE in interval (grams)	Mass TCE in interval (lb)
0-6	6	417.77	0.69	585000	11349.70	25.02
6-12	6	1641.84	2.69	585000	44604.41	98.34
12-18	6	927.45	1.52	585000	25196.34	55.55
18-24	6	426.13	0.70	585000	11576.81	25.52
24-30	6	0	0	585000	0.00	0.00
30-36	6	0	0	585000	0.00	0.00
36-42	6	0	0	585000	0.00	0.00
42-48	6	0	0	585000	0.00	0.00
48-54	6	0	0	585000	0.00	0.00
54-60	6	0	0	585000	0.00	0.00
Totals:	60				92727.26	204.43

POLY 88 11/92

At a depth of	:	3.000
Interpolated concentration is:		417.770
At a depth of	:	9.000
Interpolated concentration is:		1641.840
At a depth of	:	15.000
Interpolated concentration is:		927.450
At a depth of	:	21.000
Interpolated concentration is:		426.130
At a depth of	:	27.000
Interpolated concentration is:		0.000
At a depth of	:	33.000
Interpolated concentration is:		0.000
At a depth of	:	39.000
Interpolated concentration is:		0.000
At a depth of	:	45.000
Interpolated concentration is:		0.000
At a depth of	:	51.000
Interpolated concentration is:		0.000
At a depth of	:	57.000
Interpolated concentration is:		0.000
At a depth of	:	60.000
Interpolated concentration is:		0.000

POLY 88 11/92

System File Edit Window Browse

Change Data If Desired, Hit Ctrl-W when done

Sample Depth (-)	Sample Concentation
-1.00	417.770
-7.50	417.770
-8.00	1641.840
-12.50	1641.840
-13.00	927.450
-17.50	927.450
-18.00	426.130
-22.50	426.130
-23.00	0.000
-62.50	0.000

System File Edit Window Browse

Change Data If Desired, Hit Ctrl-W when done

Sample Depth (-)	Sample Concentation
-1.00	417.770
-7.50	417.770
-8.00	1641.840
-12.50	1641.840
-13.00	927.450
-17.50	927.450
-18.00	426.130
-22.50	426.130
-23.00	0.000
-62.50	0.000

List of interpolated concentrations for desired depths

Calculation of Total TCE Mass in Polygon 88
using HGC Distribution and original Depth Intervals

Depth Interval (ft)	Depth (ft)	Total Soil Conc. Ct* (ug/Kg) HGC Data	Mt (ug/cc)	Volume Soil (cu. ft)	Mass of Contaminant (grams)	Mass of Contaminant (pounds)
0-7.5	7.5	417.77	0.69	731250	14187.12	31.28
7.5-12.5	5	1641.84	2.69	487500	37170.34	81.95
12.5-17.5	5	927.45	1.52	487500	20996.95	46.29
17.5-22.5	5	426.13	0.70	487500	9647.35	21.27
22.5-62.5	40	0	0.00	3900000	0.00	0
Totals:	62.5				82001.76	180.78

* Ct Determined as sum of four VOC concentrations listed in Tables D-9 - D-12 of HGC, 1989.

```
PGA V-leach model, polygon screen-TCE-10/30/92-POLY117.INP-full distribution.
   1
      1.0        30.        1.0        10.
    123.6       .473      1100.      .7029
olygon 117
  143500.         1.    .082021       1.64       .381       .255     .00074
       0.         0.        -1.
  60
   1    6      0.037
   7   12      0.110
  13   18      0.184
  19   24      0.234
  25   30      0.280
  31   36      0.238
  37   42      0.108
  43   48      0.000
  49   54      0.000
  55   60      0.000
```

V-Leach, VER 1.1
Jake Turin, 11/91
PGA V-leach model, polygon screen-TCE-10/30/92-POLY117.INP-full distribution.

Polygon 1
At time = .00, total mass in vadose zone = .33185E-03g/sq.ft.
Mass in gas phase = .42569E-04g/sq.ft.
Mass in liquid phase = .18214E-03g/sq.ft.
Mass sorbed = .10714E-03g/sq.ft.

Polygon 1
At time = 1.00, total mass in vadose zone = .33043E-03g/sq.ft.
Mass in gas phase = .42387E-04g/sq.ft.
Mass in liquid phase = .18136E-03g/sq.ft.
Mass sorbed = .10668E-03g/sq.ft.

Since last printout at time = .00
Change in Total Mass = -.14215E-05g/sq.ft.
Advection in from atmosphere = .00000 g/sq.ft.
Advection in from water table = -.31314E-21g/sq.ft.
Diffusion in from atmosphere = -.14213E-05g/sq.ft.
Diffusion in from water table = .00000 g/sq.ft.
Total inflow at boundaries = -.14213E-05g/sq.ft.
Mass discrepancy = -.13881E-09g/sq.ft.

Since beginning of run at time = 0.0
Change in Total Mass = -.14215E-05g/sq.ft.
Advection in from atmosphere = .00000 g/sq.ft.
Advection in from water table = -.31314E-21g/sq.ft.
Diffusion in from atmosphere = -.14213E-05g/sq.ft.
Diffusion in from water table = .00000 g/sq.ft.
Total inflow at boundaries = -.14213E-05g/sq.ft.
Mass discrepancy = -.13881E-09g/sq.ft.

Polygon 1
At time = 2.00, total mass in vadose zone = .32907E-03g/sq.ft.
Mass in gas phase = .42213E-04g/sq.ft.
Mass in liquid phase = .18061E-03g/sq.ft.
Mass sorbed = .10624E-03g/sq.ft.

Since last printout at time = 1.00
Change in Total Mass = -.13559E-05g/sq.ft.
Advection in from atmosphere = .00000 g/sq.ft.
Advection in from water table = -.24811E-08g/sq.ft.
Diffusion in from atmosphere = -.13535E-05g/sq.ft.
Diffusion in from water table = .00000 g/sq.ft.
Total inflow at boundaries = -.13560E-05g/sq.ft.
Mass discrepancy = .94474E-10g/sq.ft.

Since beginning of run at time = 0.0
Change in Total Mass = -.27774E-05g/sq.ft.
Advection in from atmosphere = .00000 g/sq.ft.
Advection in from water table = -.24811E-08g/sq.ft.
Diffusion in from atmosphere = -.27749E-05g/sq.ft.
Diffusion in from water table = .00000 g/sq.ft.
Total inflow at boundaries = -.27773E-05g/sq.ft.
Mass discrepancy = -.44338E-10g/sq.ft.

```
Polygon   1
At time =       3.00, total mass in vadose zone =     .32777E-03g/sq.ft.
Mass in gas phase     =       .42046E-04g/sq.ft.
Mass in liquid phase  =       .17990E-03g/sq.ft.
Mass sorbed           =       .10582E-03g/sq.ft.

Since last printout at time =       2.00
               Change in Total Mass =     -.12986E-05g/sq.ft.
                    Advection in from atmosphere =       .00000    g/sq.ft.
                    Advection in from water table =     -.54931E-08g/sq.ft.
                    Diffusion in from atmosphere =      -.12931E-05g/sq.ft.
                    Diffusion in from water table =      .00000    g/sq.ft.
               Total inflow at boundaries =     -.12986E-05g/sq.ft.
               Mass discrepancy =      .59117E-11g/sq.ft.

Since beginning of run at time = 0.0
               Change in Total Mass =     -.40760E-05g/sq.ft.
                    Advection in from atmosphere =       .00000    g/sq.ft.
                    Advection in from water table =     -.79742E-08g/sq.ft.
                    Diffusion in from atmosphere =      -.40679E-05g/sq.ft.
                    Diffusion in from water table =      .00000    g/sq.ft.
               Total inflow at boundaries =     -.40759E-05g/sq.ft.
               Mass discrepancy =     -.38654E-10g/sq.ft.


Polygon   1
At time =       4.00, total mass in vadose zone =     .32652E-03g/sq.ft.
Mass in gas phase     =       .41886E-04g/sq.ft.
Mass in liquid phase  =       .17922E-03g/sq.ft.
Mass sorbed           =       .10542E-03g/sq.ft.

Since last printout at time =       3.00
               Change in Total Mass =     -.12480E-05g/sq.ft.
                    Advection in from atmosphere =       .00000    g/sq.ft.
                    Advection in from water table =     -.90562E-08g/sq.ft.
                    Diffusion in from atmosphere =      -.12389E-05g/sq.ft.
                    Diffusion in from water table =      .00000    g/sq.ft.
               Total inflow at boundaries =     -.12480E-05g/sq.ft.
               Mass discrepancy =     -.43883E-10g/sq.ft.

Since beginning of run at time = 0.0
               Change in Total Mass =     -.53240E-05g/sq.ft.
                    Advection in from atmosphere =       .00000    g/sq.ft.
                    Advection in from water table =     -.17030E-07g/sq.ft.
                    Diffusion in from atmosphere =      -.53069E-05g/sq.ft.
                    Diffusion in from water table =      .00000    g/sq.ft.
               Total inflow at boundaries =     -.53239E-05g/sq.ft.
               Mass discrepancy =     -.82309E-10g/sq.ft.


Polygon   1
At time =       5.00, total mass in vadose zone =     .32532E-03g/sq.ft.
Mass in gas phase     =       .41732E-04g/sq.ft.
Mass in liquid phase  =       .17856E-03g/sq.ft.
Mass sorbed           =       .10503E-03g/sq.ft.

Since last printout at time =       4.00
               Change in Total Mass =     -.12032E-05g/sq.ft.
```

```
                    Advection in from atmosphere =       .00000    g/sq.ft.
                    Advection in from water table =     -.13187E-07g/sq.ft.
                    Diffusion in from atmosphere =      -.11900E-05g/sq.ft.
                    Diffusion in from water table =      .00000    g/sq.ft.
               Total inflow at boundaries =     -.12032E-05g/sq.ft.
               Mass discrepancy =     -.31037E-10g/sq.ft.

Since beginning of run at time = 0.0
               Change in Total Mass =     -.65272E-05g/sq.ft.
                    Advection in from atmosphere =       .00000    g/sq.ft.
                    Advection in from water table =     -.30217E-07g/sq.ft.
                    Diffusion in from atmosphere =      -.64969E-05g/sq.ft.
                    Diffusion in from water table =      .00000    g/sq.ft.
               Total inflow at boundaries =     -.65271E-05g/sq.ft.
               Mass discrepancy =     -.11369E-09g/sq.ft.


Polygon   1
At time =       6.00, total mass in vadose zone =     .32416E-03g/sq.ft.
Mass in gas phase     =       .41582E-04g/sq.ft.
Mass in liquid phase  =       .17792E-03g/sq.ft.
Mass sorbed           =       .10466E-03g/sq.ft.

Since last printout at time =       5.00
               Change in Total Mass =     -.11635E-05g/sq.ft.
                    Advection in from atmosphere =       .00000    g/sq.ft.
                    Advection in from water table =     -.17898E-07g/sq.ft.
                    Diffusion in from atmosphere =      -.11457E-05g/sq.ft.
                    Diffusion in from water table =      .00000    g/sq.ft.
               Total inflow at boundaries =     -.11636E-05g/sq.ft.
               Mass discrepancy =      .10220E-09g/sq.ft.

Since beginning of run at time = 0.0
               Change in Total Mass =     -.76907E-05g/sq.ft.
                    Advection in from atmosphere =       .00000    g/sq.ft.
                    Advection in from water table =     -.48115E-07g/sq.ft.
                    Diffusion in from atmosphere =      -.76426E-05g/sq.ft.
                    Diffusion in from water table =      .00000    g/sq.ft.
               Total inflow at boundaries =     -.76907E-05g/sq.ft.
               Mass discrepancy =     -.11823E-10g/sq.ft.


Polygon   1
At time =       7.00, total mass in vadose zone =     .32303E-03g/sq.ft.
Mass in gas phase     =       .41438E-04g/sq.ft.
Mass in liquid phase  =       .17730E-03g/sq.ft.
Mass sorbed           =       .10429E-03g/sq.ft.

Since last printout at time =       6.00
               Change in Total Mass =     -.11284E-05g/sq.ft.
                    Advection in from atmosphere =       .00000    g/sq.ft.
                    Advection in from water table =     -.23199E-07g/sq.ft.
                    Diffusion in from atmosphere =      -.11053E-05g/sq.ft.
                    Diffusion in from water table =      .00000    g/sq.ft.
               Total inflow at boundaries =     -.11285E-05g/sq.ft.
               Mass discrepancy =      .43769E-10g/sq.ft.

Since beginning of run at time = 0.0
               Change in Total Mass =     -.88191E-05g/sq.ft.
                    Advection in from atmosphere =       .00000    g/sq.ft.
```

```
                Advection in from water table =     -.71314E-07g/sq.ft.
                Diffusion in from atmosphere =      -.87478E-05g/sq.ft.
                Diffusion in from water table =      .00000    g/sq.ft.
           Total inflow at boundaries =     -.88191E-05g/sq.ft.
           Mass discrepancy =      .31832E-10g/sq.ft.


Polygon   1
At time =       8.00, total mass in vadose zone =     .32193E-03g/sq.ft.
Mass in gas phase     =       .41297E-04g/sq.ft.
Mass in liquid phase  =       .17670E-03g/sq.ft.
Mass sorbed           =       .10394E-03g/sq.ft.

Since last printout at time =       7.00
           Change in Total Mass =     -.10974E-05g/sq.ft.
                Advection in from atmosphere =       .00000    g/sq.ft.
                Advection in from water table =     -.29096E-07g/sq.ft.
                Diffusion in from atmosphere =      -.10682E-05g/sq.ft.
                Diffusion in from water table =      .00000    g/sq.ft.
           Total inflow at boundaries =     -.10973E-05g/sq.ft.
           Mass discrepancy =     -.15507E-09g/sq.ft.

Since beginning of run at time = 0.0
           Change in Total Mass =     -.99165E-05g/sq.ft.
                Advection in from atmosphere =       .00000    g/sq.ft.
                Advection in from water table =     -.10041E-06g/sq.ft.
                Diffusion in from atmosphere =      -.98160E-05g/sq.ft.
                Diffusion in from water table =      .00000    g/sq.ft.
           Total inflow at boundaries =     -.99164E-05g/sq.ft.
           Mass discrepancy =     -.12369E-09g/sq.ft.


Polygon   1
At time =       9.00, total mass in vadose zone =     .32086E-03g/sq.ft.
Mass in gas phase     =       .41160E-04g/sq.ft.
Mass in liquid phase  =       .17611E-03g/sq.ft.
Mass sorbed           =       .10359E-03g/sq.ft.

Since last printout at time =       8.00
           Change in Total Mass =     -.10695E-05g/sq.ft.
                Advection in from atmosphere =       .00000    g/sq.ft.
                Advection in from water table =     -.35591E-07g/sq.ft.
                Diffusion in from atmosphere =      -.10341E-05g/sq.ft.
                Diffusion in from water table =      .00000    g/sq.ft.
           Total inflow at boundaries =     -.10696E-05g/sq.ft.
           Mass discrepancy =      .10664E-09g/sq.ft.

Since beginning of run at time = 0.0
           Change in Total Mass =     -.10986E-04g/sq.ft.
                Advection in from atmosphere =       .00000    g/sq.ft.
                Advection in from water table =     -.13600E-06g/sq.ft.
                Diffusion in from atmosphere =      -.10850E-04g/sq.ft.
                Diffusion in from water table =      .00000    g/sq.ft.
           Total inflow at boundaries =     -.10986E-04g/sq.ft.
           Mass discrepancy =     -.17280E-10g/sq.ft.


Polygon   1
At time =      10.00, total mass in vadose zone =     .31982E-03g/sq.ft.
Mass in gas phase     =       .41026E-04g/sq.ft.
```

```
Mass in liquid phase  =       .17554E-03g/sq.ft.
Mass sorbed           =       .10326E-03g/sq.ft.

Since last printout at time =       9.00
               Change in Total Mass =     -.10451E-05g/sq.ft.
                    Advection in from atmosphere =       .00000    g/sq.ft.
                    Advection in from water table =     -.42684E-07g/sq.ft.
                    Diffusion in from atmosphere =      -.10024E-05g/sq.ft.
                    Diffusion in from water table =      .00000    g/sq.ft.
               Total inflow at boundaries =     -.10451E-05g/sq.ft.
               Mass discrepancy =      .13756E-10g/sq.ft.

Since beginning of run at time = 0.0
               Change in Total Mass =     -.12031E-04g/sq.ft.
                    Advection in from atmosphere =       .00000    g/sq.ft.
                    Advection in from water table =     -.17869E-06g/sq.ft.
                    Diffusion in from atmosphere =      -.11853E-04g/sq.ft.
                    Diffusion in from water table =      .00000    g/sq.ft.
               Total inflow at boundaries =     -.12031E-04g/sq.ft.
               Mass discrepancy =     -.36380E-11g/sq.ft.


Polygon   1
At time =      11.00, total mass in vadose zone =     .31879E-03g/sq.ft.
Mass in gas phase     =       .40894E-04g/sq.ft.
Mass in liquid phase  =       .17497E-03g/sq.ft.
Mass sorbed           =       .10293E-03g/sq.ft.

Since last printout at time =      10.00
               Change in Total Mass =     -.10234E-05g/sq.ft.
                    Advection in from atmosphere =       .00000    g/sq.ft.
                    Advection in from water table =     -.50371E-07g/sq.ft.
                    Diffusion in from atmosphere =      -.97307E-06g/sq.ft.
                    Diffusion in from water table =      .00000    g/sq.ft.
               Total inflow at boundaries =     -.10234E-05g/sq.ft.
               Mass discrepancy =      .29786E-10g/sq.ft.

Since beginning of run at time = 0.0
               Change in Total Mass =     -.13055E-04g/sq.ft.
                    Advection in from atmosphere =       .00000    g/sq.ft.
                    Advection in from water table =     -.22906E-06g/sq.ft.
                    Diffusion in from atmosphere =      -.12826E-04g/sq.ft.
                    Diffusion in from water table =      .00000    g/sq.ft.
               Total inflow at boundaries =     -.13055E-04g/sq.ft.
               Mass discrepancy =      .26375E-10g/sq.ft.


Polygon   1
At time =      12.00, total mass in vadose zone =     .31779E-03g/sq.ft.
Mass in gas phase     =       .40766E-04g/sq.ft.
Mass in liquid phase  =       .17442E-03g/sq.ft.
Mass sorbed           =       .10260E-03g/sq.ft.

Since last printout at time =      11.00
               Change in Total Mass =     -.10043E-05g/sq.ft.
                    Advection in from atmosphere =       .00000    g/sq.ft.
                    Advection in from water table =     -.58647E-07g/sq.ft.
                    Diffusion in from atmosphere =      -.94563E-06g/sq.ft.
                    Diffusion in from water table =      .00000    g/sq.ft.
               Total inflow at boundaries =     -.10043E-05g/sq.ft.
```

```
          Mass discrepancy =     -.48885E-11g/sq.ft.

Since beginning of run at time = 0.0
          Change in Total Mass =     -.14059E-04g/sq.ft.
               Advection in from atmosphere =       .00000    g/sq.ft.
               Advection in from water table =     -.28770E-06g/sq.ft.
               Diffusion in from atmosphere =      -.13771E-04g/sq.ft.
               Diffusion in from water table =      .00000    g/sq.ft.
          Total inflow at boundaries =     -.14059E-04g/sq.ft.
          Mass discrepancy =      .21828E-10g/sq.ft.


Polygon   1
At time =      13.00, total mass in vadose zone =     .31680E-03g/sq.ft.
Mass in gas phase     =       .40639E-04g/sq.ft.
Mass in liquid phase  =       .17388E-03g/sq.ft.
Mass sorbed           =       .10228E-03g/sq.ft.

Since last printout at time =      12.00
          Change in Total Mass =     -.98741E-06g/sq.ft.
               Advection in from atmosphere =       .00000    g/sq.ft.
               Advection in from water table =     -.67500E-07g/sq.ft.
               Diffusion in from atmosphere =      -.91993E-06g/sq.ft.
               Diffusion in from water table =      .00000    g/sq.ft.
          Total inflow at boundaries =     -.98743E-06g/sq.ft.
          Mass discrepancy =      .21714E-10g/sq.ft.

Since beginning of run at time = 0.0
          Change in Total Mass =     -.15046E-04g/sq.ft.
               Advection in from atmosphere =       .00000    g/sq.ft.
               Advection in from water table =     -.35520E-06g/sq.ft.
               Diffusion in from atmosphere =      -.14691E-04g/sq.ft.
               Diffusion in from water table =      .00000    g/sq.ft.
          Total inflow at boundaries =     -.15046E-04g/sq.ft.
          Mass discrepancy =      .43656E-10g/sq.ft.


Polygon   1
At time =      14.00, total mass in vadose zone =     .31583E-03g/sq.ft.
Mass in gas phase     =       .40514E-04g/sq.ft.
Mass in liquid phase  =       .17335E-03g/sq.ft.
Mass sorbed           =       .10197E-03g/sq.ft.

Since last printout at time =      13.00
          Change in Total Mass =     -.97262E-06g/sq.ft.
               Advection in from atmosphere =       .00000    g/sq.ft.
               Advection in from water table =     -.76921E-07g/sq.ft.
               Diffusion in from atmosphere =      -.89575E-06g/sq.ft.
               Diffusion in from water table =      .00000    g/sq.ft.
          Total inflow at boundaries =     -.97267E-06g/sq.ft.
          Mass discrepancy =      .48544E-10g/sq.ft.

Since beginning of run at time = 0.0
          Change in Total Mass =     -.16019E-04g/sq.ft.
               Advection in from atmosphere =       .00000    g/sq.ft.
               Advection in from water table =     -.43212E-06g/sq.ft.
               Diffusion in from atmosphere =      -.15587E-04g/sq.ft.
               Diffusion in from water table =      .00000    g/sq.ft.
          Total inflow at boundaries =     -.16019E-04g/sq.ft.
          Mass discrepancy =      .92768E-10g/sq.ft.
```

```
Polygon   1
At time =      15.00, total mass in vadose zone =     .31487E-03g/sq.ft.
Mass in gas phase     =       .40391E-04g/sq.ft.
Mass in liquid phase  =       .17282E-03g/sq.ft.
Mass sorbed           =       .10166E-03g/sq.ft.

Since last printout at time =      14.00
               Change in Total Mass =     -.95984E-06g/sq.ft.
                    Advection in from atmosphere =       .00000    g/sq.ft.
                    Advection in from water table =     -.86893E-07g/sq.ft.
                    Diffusion in from atmosphere =      -.87293E-06g/sq.ft.
                    Diffusion in from water table =      .00000    g/sq.ft.
               Total inflow at boundaries =     -.95983E-06g/sq.ft.
               Mass discrepancy =     -.16598E-10g/sq.ft.

Since beginning of run at time = 0.0
               Change in Total Mass =     -.16979E-04g/sq.ft.
                    Advection in from atmosphere =       .00000    g/sq.ft.
                    Advection in from water table =     -.51902E-06g/sq.ft.
                    Diffusion in from atmosphere =      -.16460E-04g/sq.ft.
                    Diffusion in from water table =      .00000    g/sq.ft.
               Total inflow at boundaries =     -.16979E-04g/sq.ft.
               Mass discrepancy =      .76398E-10g/sq.ft.


Polygon   1
At time =      16.00, total mass in vadose zone =     .31392E-03g/sq.ft.
Mass in gas phase     =       .40269E-04g/sq.ft.
Mass in liquid phase  =       .17230E-03g/sq.ft.
Mass sorbed           =       .10135E-03g/sq.ft.

Since last printout at time =      15.00
               Change in Total Mass =     -.94876E-06g/sq.ft.
                    Advection in from atmosphere =       .00000    g/sq.ft.
                    Advection in from water table =     -.97403E-07g/sq.ft.
                    Diffusion in from atmosphere =      -.85134E-06g/sq.ft.
                    Diffusion in from water table =      .00000    g/sq.ft.
               Total inflow at boundaries =     -.94874E-06g/sq.ft.
               Mass discrepancy =     -.12676E-10g/sq.ft.

Since beginning of run at time = 0.0
               Change in Total Mass =     -.17928E-04g/sq.ft.
                    Advection in from atmosphere =       .00000    g/sq.ft.
                    Advection in from water table =     -.61642E-06g/sq.ft.
                    Diffusion in from atmosphere =      -.17311E-04g/sq.ft.
                    Diffusion in from water table =      .00000    g/sq.ft.
               Total inflow at boundaries =     -.17928E-04g/sq.ft.
               Mass discrepancy =      .61846E-10g/sq.ft.


Polygon   1
At time =      17.00, total mass in vadose zone =     .31298E-03g/sq.ft.
Mass in gas phase     =       .40149E-04g/sq.ft.
Mass in liquid phase  =       .17178E-03g/sq.ft.
Mass sorbed           =       .10105E-03g/sq.ft.

Since last printout at time =      16.00
               Change in Total Mass =     -.93933E-06g/sq.ft.
```

```
                    Advection in from atmosphere =       .00000    g/sq.ft.
                    Advection in from water table =     -.10843E-06g/sq.ft.
                    Diffusion in from atmosphere =      -.83085E-06g/sq.ft.
                    Diffusion in from water table =      .00000    g/sq.ft.
               Total inflow at boundaries =     -.93928E-06g/sq.ft.
               Mass discrepancy =     -.50704E-10g/sq.ft.

Since beginning of run at time = 0.0
               Change in Total Mass =     -.18867E-04g/sq.ft.
                    Advection in from atmosphere =       .00000    g/sq.ft.
                    Advection in from water table =     -.72485E-06g/sq.ft.
                    Diffusion in from atmosphere =      -.18142E-04g/sq.ft.
                    Diffusion in from water table =      .00000    g/sq.ft.
               Total inflow at boundaries =     -.18867E-04g/sq.ft.
               Mass discrepancy =      .10914E-10g/sq.ft.


Polygon   1
At time =      18.00, total mass in vadose zone =     .31205E-03g/sq.ft.
Mass in gas phase     =       .40029E-04g/sq.ft.
Mass in liquid phase  =       .17127E-03g/sq.ft.
Mass sorbed           =       .10075E-03g/sq.ft.

Since last printout at time =      17.00
               Change in Total Mass =     -.93126E-06g/sq.ft.
                    Advection in from atmosphere =       .00000    g/sq.ft.
                    Advection in from water table =     -.11995E-06g/sq.ft.
                    Diffusion in from atmosphere =      -.81134E-06g/sq.ft.
                    Diffusion in from water table =      .00000    g/sq.ft.
               Total inflow at boundaries =     -.93130E-06g/sq.ft.
               Mass discrepancy =      .34845E-10g/sq.ft.

Since beginning of run at time = 0.0
               Change in Total Mass =     -.19798E-04g/sq.ft.
                    Advection in from atmosphere =       .00000    g/sq.ft.
                    Advection in from water table =     -.84480E-06g/sq.ft.
                    Diffusion in from atmosphere =      -.18953E-04g/sq.ft.
                    Diffusion in from water table =      .00000    g/sq.ft.
               Total inflow at boundaries =     -.19798E-04g/sq.ft.
               Mass discrepancy =      .47294E-10g/sq.ft.


Polygon   1
At time =      19.00, total mass in vadose zone =     .31113E-03g/sq.ft.
Mass in gas phase     =       .39911E-04g/sq.ft.
Mass in liquid phase  =       .17076E-03g/sq.ft.
Mass sorbed           =       .10045E-03g/sq.ft.

Since last printout at time =      18.00
               Change in Total Mass =     -.92472E-06g/sq.ft.
                    Advection in from atmosphere =       .00000    g/sq.ft.
                    Advection in from water table =     -.13195E-06g/sq.ft.
                    Diffusion in from atmosphere =      -.79275E-06g/sq.ft.
                    Diffusion in from water table =      .00000    g/sq.ft.
               Total inflow at boundaries =     -.92470E-06g/sq.ft.
               Mass discrepancy =     -.14552E-10g/sq.ft.

Since beginning of run at time = 0.0
               Change in Total Mass =     -.20723E-04g/sq.ft.
                    Advection in from atmosphere =       .00000    g/sq.ft.
```

```
                    Advection in from water table =     -.97676E-06g/sq.ft.
                    Diffusion in from atmosphere =      -.19746E-04g/sq.ft.
                    Diffusion in from water table =      .00000    g/sq.ft.
               Total inflow at boundaries =     -.20723E-04g/sq.ft.
               Mass discrepancy =      .32742E-10g/sq.ft.


Polygon   1
At time =      20.00, total mass in vadose zone =     .31021E-03g/sq.ft.
Mass in gas phase     =       .39793E-04g/sq.ft.
Mass in liquid phase  =       .17026E-03g/sq.ft.
Mass sorbed           =       .10015E-03g/sq.ft.

Since last printout at time =      19.00
               Change in Total Mass =     -.91930E-06g/sq.ft.
                    Advection in from atmosphere =       .00000    g/sq.ft.
                    Advection in from water table =     -.14441E-06g/sq.ft.
                    Diffusion in from atmosphere =      -.77497E-06g/sq.ft.
                    Diffusion in from water table =      .00000    g/sq.ft.
               Total inflow at boundaries =     -.91938E-06g/sq.ft.
               Mass discrepancy =      .76966E-10g/sq.ft.

Since beginning of run at time = 0.0
               Change in Total Mass =     -.21642E-04g/sq.ft.
                    Advection in from atmosphere =       .00000    g/sq.ft.
                    Advection in from water table =     -.11212E-05g/sq.ft.
                    Diffusion in from atmosphere =      -.20521E-04g/sq.ft.
                    Diffusion in from water table =      .00000    g/sq.ft.
               Total inflow at boundaries =     -.21642E-04g/sq.ft.
               Mass discrepancy =      .10914E-09g/sq.ft.


Polygon   1
At time =      21.00, total mass in vadose zone =     .30929E-03g/sq.ft.
Mass in gas phase     =       .39675E-04g/sq.ft.
Mass in liquid phase  =       .16976E-03g/sq.ft.
Mass sorbed           =       .99858E-04g/sq.ft.

Since last printout at time =      20.00
               Change in Total Mass =     -.91520E-06g/sq.ft.
                    Advection in from atmosphere =       .00000    g/sq.ft.
                    Advection in from water table =     -.15729E-06g/sq.ft.
                    Diffusion in from atmosphere =      -.75795E-06g/sq.ft.
                    Diffusion in from water table =      .00000    g/sq.ft.
               Total inflow at boundaries =     -.91524E-06g/sq.ft.
               Mass discrepancy =      .41268E-10g/sq.ft.

Since beginning of run at time = 0.0
               Change in Total Mass =     -.22557E-04g/sq.ft.
                    Advection in from atmosphere =       .00000    g/sq.ft.
                    Advection in from water table =     -.12785E-05g/sq.ft.
                    Diffusion in from atmosphere =      -.21279E-04g/sq.ft.
                    Diffusion in from water table =      .00000    g/sq.ft.
               Total inflow at boundaries =     -.22557E-04g/sq.ft.
               Mass discrepancy =      .15098E-09g/sq.ft.


Polygon   1
At time =      22.00, total mass in vadose zone =     .30838E-03g/sq.ft.
Mass in gas phase     =       .39558E-04g/sq.ft.
```

```
Mass in liquid phase  =       .16926E-03g/sq.ft.
Mass sorbed           =       .99564E-04g/sq.ft.

Since last printout at time =      21.00
              Change in Total Mass =     -.91229E-06g/sq.ft.
                   Advection in from atmosphere =       .00000    g/sq.ft.
                   Advection in from water table =     -.17058E-06g/sq.ft.
                   Diffusion in from atmosphere =      -.74162E-06g/sq.ft.
                   Diffusion in from water table =      .00000    g/sq.ft.
              Total inflow at boundaries =     -.91220E-06g/sq.ft.
              Mass discrepancy =     -.91006E-10g/sq.ft.

Since beginning of run at time = 0.0
              Change in Total Mass =     -.23470E-04g/sq.ft.
                   Advection in from atmosphere =       .00000    g/sq.ft.
                   Advection in from water table =     -.14490E-05g/sq.ft.
                   Diffusion in from atmosphere =      -.22021E-04g/sq.ft.
                   Diffusion in from water table =      .00000    g/sq.ft.
              Total inflow at boundaries =     -.23470E-04g/sq.ft.
              Mass discrepancy =      .60027E-10g/sq.ft.


Polygon   1
At time =      23.00, total mass in vadose zone =     .30747E-03g/sq.ft.
Mass in gas phase     =       .39442E-04g/sq.ft.
Mass in liquid phase  =       .16876E-03g/sq.ft.
Mass sorbed           =       .99270E-04g/sq.ft.

Since last printout at time =      22.00
              Change in Total Mass =     -.91011E-06g/sq.ft.
                   Advection in from atmosphere =       .00000    g/sq.ft.
                   Advection in from water table =     -.18424E-06g/sq.ft.
                   Diffusion in from atmosphere =      -.72593E-06g/sq.ft.
                   Diffusion in from water table =      .00000    g/sq.ft.
              Total inflow at boundaries =     -.91017E-06g/sq.ft.
              Mass discrepancy =      .65938E-10g/sq.ft.

Since beginning of run at time = 0.0
              Change in Total Mass =     -.24380E-04g/sq.ft.
                   Advection in from atmosphere =       .00000    g/sq.ft.
                   Advection in from water table =     -.16333E-05g/sq.ft.
                   Diffusion in from atmosphere =      -.22747E-04g/sq.ft.
                   Diffusion in from water table =      .00000    g/sq.ft.
              Total inflow at boundaries =     -.24380E-04g/sq.ft.
              Mass discrepancy =      .12733E-09g/sq.ft.


Polygon   1
At time =      24.00, total mass in vadose zone =     .30656E-03g/sq.ft.
Mass in gas phase     =       .39325E-04g/sq.ft.
Mass in liquid phase  =       .16826E-03g/sq.ft.
Mass sorbed           =       .98976E-04g/sq.ft.

Since last printout at time =      23.00
              Change in Total Mass =     -.90912E-06g/sq.ft.
                   Advection in from atmosphere =       .00000    g/sq.ft.
                   Advection in from water table =     -.19825E-06g/sq.ft.
                   Diffusion in from atmosphere =      -.71084E-06g/sq.ft.
                   Diffusion in from water table =      .00000    g/sq.ft.
              Total inflow at boundaries =     -.90909E-06g/sq.ft.
```

```
                Mass discrepancy =     -.27114E-10g/sq.ft.

Since beginning of run at time = 0.0
                Change in Total Mass =     -.25289E-04g/sq.ft.
                     Advection in from atmosphere =       .00000    g/sq.ft.
                     Advection in from water table =     -.18315E-05g/sq.ft.
                     Diffusion in from atmosphere =      -.23457E-04g/sq.ft.
                     Diffusion in from water table =      .00000    g/sq.ft.
                Total inflow at boundaries =     -.25289E-04g/sq.ft.
                Mass discrepancy =      .10004E-09g/sq.ft.


Polygon   1
At time =      25.00, total mass in vadose zone =     .30565E-03g/sq.ft.
Mass in gas phase     =       .39208E-04g/sq.ft.
Mass in liquid phase  =       .16776E-03g/sq.ft.
Mass sorbed           =       .98683E-04g/sq.ft.

Since last printout at time =      24.00
                Change in Total Mass =     -.90883E-06g/sq.ft.
                     Advection in from atmosphere =       .00000    g/sq.ft.
                     Advection in from water table =     -.21259E-06g/sq.ft.
                     Diffusion in from atmosphere =      -.69629E-06g/sq.ft.
                     Diffusion in from water table =      .00000    g/sq.ft.
                Total inflow at boundaries =     -.90888E-06g/sq.ft.
                Mass discrepancy =      .55422E-10g/sq.ft.

Since beginning of run at time = 0.0
                Change in Total Mass =     -.26198E-04g/sq.ft.
                     Advection in from atmosphere =       .00000    g/sq.ft.
                     Advection in from water table =     -.20441E-05g/sq.ft.
                     Diffusion in from atmosphere =      -.24154E-04g/sq.ft.
                     Diffusion in from water table =      .00000    g/sq.ft.
                Total inflow at boundaries =     -.26198E-04g/sq.ft.
                Mass discrepancy =      .15461E-09g/sq.ft.


Polygon   1
At time =      26.00, total mass in vadose zone =     .30474E-03g/sq.ft.
Mass in gas phase     =       .39092E-04g/sq.ft.
Mass in liquid phase  =       .16726E-03g/sq.ft.
Mass sorbed           =       .98389E-04g/sq.ft.

Since last printout at time =      25.00
                Change in Total Mass =     -.90947E-06g/sq.ft.
                     Advection in from atmosphere =       .00000    g/sq.ft.
                     Advection in from water table =     -.22722E-06g/sq.ft.
                     Diffusion in from atmosphere =      -.68226E-06g/sq.ft.
                     Diffusion in from water table =      .00000    g/sq.ft.
                Total inflow at boundaries =     -.90948E-06g/sq.ft.
                Mass discrepancy =      .15746E-10g/sq.ft.

Since beginning of run at time = 0.0
                Change in Total Mass =     -.27107E-04g/sq.ft.
                     Advection in from atmosphere =       .00000    g/sq.ft.
                     Advection in from water table =     -.22713E-05g/sq.ft.
                     Diffusion in from atmosphere =      -.24836E-04g/sq.ft.
                     Diffusion in from water table =      .00000    g/sq.ft.
                Total inflow at boundaries =     -.27107E-04g/sq.ft.
                Mass discrepancy =      .17099E-09g/sq.ft.
```

```
Polygon   1
At time =      27.00, total mass in vadose zone =     .30383E-03g/sq.ft.
Mass in gas phase     =       .38975E-04g/sq.ft.
Mass in liquid phase  =       .16676E-03g/sq.ft.
Mass sorbed           =       .98095E-04g/sq.ft.

Since last printout at time =      26.00
               Change in Total Mass =     -.91086E-06g/sq.ft.
                    Advection in from atmosphere =       .00000    g/sq.ft.
                    Advection in from water table =     -.24212E-06g/sq.ft.
                    Diffusion in from atmosphere =      -.66871E-06g/sq.ft.
                    Diffusion in from water table =      .00000    g/sq.ft.
               Total inflow at boundaries =     -.91083E-06g/sq.ft.
               Mass discrepancy =     -.32458E-10g/sq.ft.

Since beginning of run at time = 0.0
               Change in Total Mass =     -.28018E-04g/sq.ft.
                    Advection in from atmosphere =       .00000    g/sq.ft.
                    Advection in from water table =     -.25134E-05g/sq.ft.
                    Diffusion in from atmosphere =      -.25505E-04g/sq.ft.
                    Diffusion in from water table =      .00000    g/sq.ft.
               Total inflow at boundaries =     -.28018E-04g/sq.ft.
               Mass discrepancy =      .13824E-09g/sq.ft.


Polygon   1
At time =      28.00, total mass in vadose zone =     .30292E-03g/sq.ft.
Mass in gas phase     =       .38858E-04g/sq.ft.
Mass in liquid phase  =       .16626E-03g/sq.ft.
Mass sorbed           =       .97800E-04g/sq.ft.

Since last printout at time =      27.00
               Change in Total Mass =     -.91284E-06g/sq.ft.
                    Advection in from atmosphere =       .00000    g/sq.ft.
                    Advection in from water table =     -.25725E-06g/sq.ft.
                    Diffusion in from atmosphere =      -.65561E-06g/sq.ft.
                    Diffusion in from water table =      .00000    g/sq.ft.
               Total inflow at boundaries =     -.91287E-06g/sq.ft.
               Mass discrepancy =      .27967E-10g/sq.ft.

Since beginning of run at time = 0.0
               Change in Total Mass =     -.28931E-04g/sq.ft.
                    Advection in from atmosphere =       .00000    g/sq.ft.
                    Advection in from water table =     -.27707E-05g/sq.ft.
                    Diffusion in from atmosphere =      -.26160E-04g/sq.ft.
                    Diffusion in from water table =      .00000    g/sq.ft.
               Total inflow at boundaries =     -.28931E-04g/sq.ft.
               Mass discrepancy =      .16553E-09g/sq.ft.


Polygon   1
At time =      29.00, total mass in vadose zone =     .30200E-03g/sq.ft.
Mass in gas phase     =       .38740E-04g/sq.ft.
Mass in liquid phase  =       .16576E-03g/sq.ft.
Mass sorbed           =       .97505E-04g/sq.ft.

Since last printout at time =      28.00
               Change in Total Mass =     -.91555E-06g/sq.ft.
```

```
                    Advection in from atmosphere =       .00000    g/sq.ft.
                    Advection in from water table =     -.27260E-06g/sq.ft.
                    Diffusion in from atmosphere =      -.64294E-06g/sq.ft.
                    Diffusion in from water table =      .00000    g/sq.ft.
               Total inflow at boundaries =     -.91555E-06g/sq.ft.
               Mass discrepancy =     -.32401E-11g/sq.ft.

Since beginning of run at time = 0.0
               Change in Total Mass =     -.29846E-04g/sq.ft.
                    Advection in from atmosphere =       .00000    g/sq.ft.
                    Advection in from water table =     -.30433E-05g/sq.ft.
                    Diffusion in from atmosphere =      -.26803E-04g/sq.ft.
                    Diffusion in from water table =      .00000    g/sq.ft.
               Total inflow at boundaries =     -.29847E-04g/sq.ft.
               Mass discrepancy =      .16189E-09g/sq.ft.


Polygon   1
At time =      30.00, total mass in vadose zone =     .30108E-03g/sq.ft.
Mass in gas phase     =       .38622E-04g/sq.ft.
Mass in liquid phase  =       .16525E-03g/sq.ft.
Mass sorbed           =       .97208E-04g/sq.ft.

Since last printout at time =      29.00
               Change in Total Mass =     -.91875E-06g/sq.ft.
                    Advection in from atmosphere =       .00000    g/sq.ft.
                    Advection in from water table =     -.28814E-06g/sq.ft.
                    Diffusion in from atmosphere =      -.63067E-06g/sq.ft.
                    Diffusion in from water table =      .00000    g/sq.ft.
               Total inflow at boundaries =     -.91880E-06g/sq.ft.
               Mass discrepancy =      .54911E-10g/sq.ft.

Since beginning of run at time = 0.0
               Change in Total Mass =     -.30765E-04g/sq.ft.
                    Advection in from atmosphere =       .00000    g/sq.ft.
                    Advection in from water table =     -.33314E-05g/sq.ft.
                    Diffusion in from atmosphere =      -.27434E-04g/sq.ft.
                    Diffusion in from water table =      .00000    g/sq.ft.
               Total inflow at boundaries =     -.30765E-04g/sq.ft.
               Mass discrepancy =      .21828E-09g/sq.ft.


GROUNDWATER IMPACT OF POLYGON   1

 Time        Mass per area (g/sq.ft.)      Total Mass (g)
     1.00          .31314E-21               .44935E-16
     2.00          .24811E-08               .35603E-03
     3.00          .54931E-08               .78826E-03
     4.00          .90562E-08               .12996E-02
     5.00          .13187E-07               .18923E-02
     6.00          .17898E-07               .25684E-02
     7.00          .23199E-07               .33291E-02
     8.00          .29096E-07               .41752E-02
     9.00          .35591E-07               .51073E-02
    10.00          .42684E-07               .61252E-02
    11.00          .50371E-07               .72283E-02
    12.00          .58647E-07               .84158E-02
    13.00          .67500E-07               .96863E-02
    14.00          .76921E-07               .11038E-01
    15.00          .86893E-07               .12469E-01
```

16.00	.97403E-07	.13977E-01
17.00	.10843E-06	.15560E-01
18.00	.11995E-06	.17213E-01
19.00	.13195E-06	.18936E-01
20.00	.14441E-06	.20723E-01
21.00	.15729E-06	.22571E-01
22.00	.17058E-06	.24478E-01
23.00	.18424E-06	.26438E-01
24.00	.19825E-06	.28449E-01
25.00	.21259E-06	.30506E-01
26.00	.22722E-06	.32606E-01
27.00	.24212E-06	.34744E-01
28.00	.25725E-06	.36916E-01
29.00	.27260E-06	.39119E-01
30.00	.28814E-06	.41348E-01

****

****

TOTAL GROUNDWATER IMPACT

Time (yr)	Mass (g)	Cumulative Mass (g)
1.00	.44935E-16	.44935E-16
2.00	.35603E-03	.35603E-03
3.00	.78826E-03	.11443E-02
4.00	.12996E-02	.24439E-02
5.00	.18923E-02	.43362E-02
6.00	.25684E-02	.69045E-02
7.00	.33291E-02	.10234E-01
8.00	.41752E-02	.14409E-01
9.00	.51073E-02	.19516E-01
10.00	.61252E-02	.25641E-01
11.00	.72283E-02	.32870E-01
12.00	.84158E-02	.41285E-01
13.00	.96863E-02	.50972E-01
14.00	.11038E-01	.62010E-01
15.00	.12469E-01	.74479E-01
16.00	.13977E-01	.88456E-01
17.00	.15560E-01	.10402
18.00	.17213E-01	.12123
19.00	.18936E-01	.14016
20.00	.20723E-01	.16089
21.00	.22571E-01	.18346
22.00	.24478E-01	.20794
23.00	.26438E-01	.23437
24.00	.28449E-01	.26282
25.00	.30506E-01	.29333
26.00	.32606E-01	.32594
27.00	.34744E-01	.36068
28.00	.36916E-01	.39760
29.00	.39119E-01	.43671
30.00	.41348E-01	.47806

Polygon 117
Time: .000

Cell	Cgas(g/cu.ft.)	Cliq(g/cu.ft.)	Csol
1	.17493E-05	.36983E-05	.11945E-10
2	.17493E-05	.36983E-05	.11945E-10
3	.17493E-05	.36983E-05	.11945E-10
4	.17493E-05	.36983E-05	.11945E-10
5	.17493E-05	.36983E-05	.11945E-10
6	.17493E-05	.36983E-05	.11945E-10
7	.52006E-05	.10995E-04	.35514E-10
8	.52006E-05	.10995E-04	.35514E-10
9	.52006E-05	.10995E-04	.35514E-10
10	.52006E-05	.10995E-04	.35514E-10
11	.52006E-05	.10995E-04	.35514E-10
12	.52006E-05	.10995E-04	.35514E-10
13	.86992E-05	.18391E-04	.59404E-10
14	.86992E-05	.18391E-04	.59404E-10
15	.86992E-05	.18391E-04	.59404E-10
16	.86992E-05	.18391E-04	.59404E-10
17	.86992E-05	.18391E-04	.59404E-10
18	.86992E-05	.18391E-04	.59404E-10
19	.11063E-04	.23389E-04	.75547E-10
20	.11063E-04	.23389E-04	.75547E-10
21	.11063E-04	.23389E-04	.75547E-10
22	.11063E-04	.23389E-04	.75547E-10
23	.11063E-04	.23389E-04	.75547E-10
24	.11063E-04	.23389E-04	.75547E-10
25	.13238E-04	.27987E-04	.90398E-10
26	.13238E-04	.27987E-04	.90398E-10
27	.13238E-04	.27987E-04	.90398E-10
28	.13238E-04	.27987E-04	.90398E-10
29	.13238E-04	.27987E-04	.90398E-10
30	.13238E-04	.27987E-04	.90398E-10
31	.11252E-04	.23789E-04	.76838E-10
32	.11252E-04	.23789E-04	.76838E-10
33	.11252E-04	.23789E-04	.76838E-10
34	.11252E-04	.23789E-04	.76838E-10
35	.11252E-04	.23789E-04	.76838E-10
36	.11252E-04	.23789E-04	.76838E-10
37	.51060E-05	.10795E-04	.34868E-10
38	.51060E-05	.10795E-04	.34868E-10
39	.51060E-05	.10795E-04	.34868E-10
40	.51060E-05	.10795E-04	.34868E-10
41	.51060E-05	.10795E-04	.34868E-10
42	.51060E-05	.10795E-04	.34868E-10
43	.00000	.00000	.00000
44	.00000	.00000	.00000
45	.00000	.00000	.00000
46	.00000	.00000	.00000
47	.00000	.00000	.00000
48	.00000	.00000	.00000
49	.00000	.00000	.00000
50	.00000	.00000	.00000
51	.00000	.00000	.00000
52	.00000	.00000	.00000
53	.00000	.00000	.00000
54	.00000	.00000	.00000
55	.00000	.00000	.00000
56	.00000	.00000	.00000

57	.00000	.00000	.00000
58	.00000	.00000	.00000
59	.00000	.00000	.00000
60	.00000	.00000	.00000

Polygon 117
Time: 10.000

Cell	Cgas(g/cu.ft.)	Cliq(g/cu.ft.)	Csol
1	.26372E-06	.55754E-06	.18008E-11
2	.66671E-06	.14095E-05	.45528E-11
3	.11035E-05	.23329E-05	.75353E-11
4	.15175E-05	.32082E-05	.10363E-10
5	.19026E-05	.40224E-05	.12992E-10
6	.22740E-05	.48077E-05	.15529E-10
7	.27782E-05	.58735E-05	.18971E-10
8	.33947E-05	.71769E-05	.23181E-10
9	.40006E-05	.84579E-05	.27319E-10
10	.45259E-05	.95686E-05	.30907E-10
11	.49730E-05	.10514E-04	.33959E-10
12	.53726E-05	.11359E-04	.36688E-10
13	.58849E-05	.12442E-04	.40186E-10
14	.64954E-05	.13732E-04	.44356E-10
15	.70821E-05	.14973E-04	.48362E-10
16	.75743E-05	.16013E-04	.51723E-10
17	.79738E-05	.16858E-04	.54451E-10
18	.83106E-05	.17570E-04	.56751E-10
19	.87012E-05	.18396E-04	.59418E-10
20	.91410E-05	.19326E-04	.62422E-10
21	.95501E-05	.20190E-04	.65215E-10
22	.98817E-05	.20892E-04	.67480E-10
23	.10137E-04	.21432E-04	.69224E-10
24	.10336E-04	.21853E-04	.70585E-10
25	.10579E-04	.22366E-04	.72241E-10
26	.10855E-04	.22948E-04	.74123E-10
27	.11085E-04	.23435E-04	.75696E-10
28	.11223E-04	.23726E-04	.76637E-10
29	.11264E-04	.23815E-04	.76923E-10
30	.11224E-04	.23729E-04	.76646E-10
31	.11039E-04	.23337E-04	.75380E-10
32	.10733E-04	.22692E-04	.73294E-10
33	.10385E-04	.21955E-04	.70915E-10
34	.10036E-04	.21218E-04	.68533E-10
35	.96852E-05	.20476E-04	.66138E-10
36	.93130E-05	.19689E-04	.63596E-10
37	.86701E-05	.18330E-04	.59206E-10
38	.78027E-05	.16496E-04	.53283E-10
39	.69376E-05	.14667E-04	.47375E-10
40	.62058E-05	.13120E-04	.42378E-10
41	.56093E-05	.11859E-04	.38305E-10
42	.50987E-05	.10779E-04	.34818E-10
43	.44362E-05	.93789E-05	.30294E-10
44	.36416E-05	.76990E-05	.24868E-10
45	.28941E-05	.61186E-05	.19763E-10
46	.22989E-05	.48603E-05	.15699E-10
47	.18566E-05	.39251E-05	.12678E-10
48	.15266E-05	.32275E-05	.10425E-10
49	.12712E-05	.26875E-05	.86807E-11
50	.10664E-05	.22545E-05	.72819E-11
51	.89846E-06	.18995E-05	.61354E-11
52	.75967E-06	.16061E-05	.51876E-11

53	.64495E-06	.13635E-05	.44042E-11
54	.55062E-06	.11641E-05	.37600E-11
55	.47383E-06	.10017E-05	.32356E-11
56	.41229E-06	.87164E-06	.28154E-11
57	.36417E-06	.76991E-06	.24868E-11
58	.32804E-06	.69353E-06	.22401E-11
59	.30283E-06	.64023E-06	.20680E-11
60	.28780E-06	.60845E-06	.19653E-11

Polygon 117
Time: 20.000

Cell	Cgas(g/cu.ft.)	Cliq(g/cu.ft.)	Csol
1	.15960E-06	.33742E-06	.10899E-11
2	.40895E-06	.86459E-06	.27926E-11
3	.72261E-06	.15277E-05	.49345E-11
4	.10787E-05	.22807E-05	.73665E-11
5	.14595E-05	.30857E-05	.99668E-11
6	.18534E-05	.39184E-05	.12656E-10
7	.22601E-05	.47782E-05	.15434E-10
8	.26864E-05	.56794E-05	.18345E-10
9	.31340E-05	.66258E-05	.21401E-10
10	.35948E-05	.76001E-05	.24548E-10
11	.40562E-05	.85754E-05	.27698E-10
12	.45081E-05	.95309E-05	.30785E-10
13	.49519E-05	.10469E-04	.33816E-10
14	.53962E-05	.11408E-04	.36849E-10
15	.58444E-05	.12356E-04	.39910E-10
16	.62895E-05	.13297E-04	.42950E-10
17	.67193E-05	.14206E-04	.45885E-10
18	.71240E-05	.15061E-04	.48648E-10
19	.75030E-05	.15863E-04	.51236E-10
20	.78620E-05	.16622E-04	.53688E-10
21	.82041E-05	.17345E-04	.56024E-10
22	.85254E-05	.18024E-04	.58218E-10
23	.88181E-05	.18643E-04	.60217E-10
24	.90757E-05	.19188E-04	.61976E-10
25	.92983E-05	.19658E-04	.63496E-10
26	.94906E-05	.20065E-04	.64809E-10
27	.96539E-05	.20410E-04	.65924E-10
28	.97824E-05	.20682E-04	.66802E-10
29	.98673E-05	.20861E-04	.67381E-10
30	.99005E-05	.20931E-04	.67608E-10
31	.98749E-05	.20877E-04	.67433E-10
32	.97851E-05	.20687E-04	.66820E-10
33	.96313E-05	.20362E-04	.65770E-10
34	.94205E-05	.19916E-04	.64330E-10
35	.91618E-05	.19370E-04	.62564E-10
36	.88622E-05	.18736E-04	.60518E-10
37	.85162E-05	.18005E-04	.58155E-10
38	.81110E-05	.17148E-04	.55388E-10
39	.76454E-05	.16164E-04	.52209E-10
40	.71376E-05	.15090E-04	.48741E-10
41	.66140E-05	.13983E-04	.45165E-10
42	.60960E-05	.12888E-04	.41628E-10
43	.55867E-05	.11811E-04	.38150E-10
44	.50766E-05	.10733E-04	.34667E-10
45	.45625E-05	.96460E-05	.31157E-10
46	.40563E-05	.85758E-05	.27700E-10
47	.35773E-05	.75630E-05	.24429E-10
48	.31411E-05	.66408E-05	.21450E-10

49	.27548E-05	.58241E-05	.18812E-10
50	.24179E-05	.51118E-05	.16511E-10
51	.21261E-05	.44950E-05	.14519E-10
52	.18744E-05	.39628E-05	.12800E-10
53	.16580E-05	.35053E-05	.11322E-10
54	.14732E-05	.31146E-05	.10060E-10
55	.13171E-05	.27845E-05	.89939E-11
56	.11872E-05	.25100E-05	.81073E-11
57	.10819E-05	.22873E-05	.73878E-11
58	.99957E-06	.21133E-05	.68258E-11
59	.93926E-06	.19857E-05	.64140E-11
60	.90024E-06	.19033E-05	.61475E-11

Polygon 117
Time: 30.000

Cell	Cgas(g/cu.ft.)	Cliq(g/cu.ft.)	Csol
1	.12672E-06	.26791E-06	.86534E-12
2	.32106E-06	.67877E-06	.21924E-11
3	.56409E-06	.11926E-05	.38521E-11
4	.84387E-06	.17841E-05	.57626E-11
5	.11520E-05	.24355E-05	.78667E-11
6	.14820E-05	.31332E-05	.10120E-10
7	.18289E-05	.38666E-05	.12489E-10
8	.21896E-05	.46291E-05	.14952E-10
9	.25620E-05	.54166E-05	.17496E-10
10	.29448E-05	.62258E-05	.20109E-10
11	.33355E-05	.70517E-05	.22777E-10
12	.37309E-05	.78877E-05	.25477E-10
13	.41276E-05	.87263E-05	.28186E-10
14	.45229E-05	.95622E-05	.30886E-10
15	.49153E-05	.10392E-04	.33565E-10
16	.53032E-05	.11212E-04	.36215E-10
17	.56845E-05	.12018E-04	.38818E-10
18	.60560E-05	.12803E-04	.41355E-10
19	.64141E-05	.13560E-04	.43800E-10
20	.67560E-05	.14283E-04	.46135E-10
21	.70798E-05	.14968E-04	.48346E-10
22	.73839E-05	.15611E-04	.50423E-10
23	.76664E-05	.16208E-04	.52352E-10
24	.79250E-05	.16755E-04	.54118E-10
25	.81571E-05	.17246E-04	.55703E-10
26	.83607E-05	.17676E-04	.57093E-10
27	.85344E-05	.18043E-04	.58279E-10
28	.86767E-05	.18344E-04	.59251E-10
29	.87859E-05	.18575E-04	.59997E-10
30	.88597E-05	.18731E-04	.60501E-10
31	.88955E-05	.18806E-04	.60745E-10
32	.88905E-05	.18796E-04	.60711E-10
33	.88430E-05	.18696E-04	.60387E-10
34	.87521E-05	.18503E-04	.59766E-10
35	.86186E-05	.18221E-04	.58855E-10
36	.84444E-05	.17853E-04	.57665E-10
37	.82318E-05	.17403E-04	.56213E-10
38	.79824E-05	.16876E-04	.54510E-10
39	.76973E-05	.16273E-04	.52563E-10
40	.73789E-05	.15600E-04	.50389E-10
41	.70315E-05	.14866E-04	.48016E-10
42	.66618E-05	.14084E-04	.45492E-10
43	.62774E-05	.13271E-04	.42867E-10
44	.58845E-05	.12441E-04	.40184E-10

45	.54879E-05	.11602E-04	.37475E-10
46	.50914E-05	.10764E-04	.34768E-10
47	.46999E-05	.99363E-05	.32094E-10
48	.43190E-05	.91310E-05	.29493E-10
49	.39549E-05	.83612E-05	.27007E-10
50	.36129E-05	.76382E-05	.24671E-10
51	.32968E-05	.69700E-05	.22513E-10
52	.30089E-05	.63614E-05	.20547E-10
53	.27501E-05	.58142E-05	.18780E-10
54	.25206E-05	.53289E-05	.17212E-10
55	.23200E-05	.49049E-05	.15843E-10
56	.21481E-05	.45415E-05	.14669E-10
57	.20045E-05	.42378E-05	.13688E-10
58	.18889E-05	.39934E-05	.12899E-10
59	.18013E-05	.38082E-05	.12301E-10
60	.17418E-05	.36825E-05	.11895E-10

V-Leach, VER 1.1
Jake Turin, 11/91
PGA V-leach model, polygon screen-TCE-10/30/92-POLY117.INP-full distribution.
1 polygons.
Timestep = 1.00 years. Simulation length = 30.00 years.
Printout every 1.00 years. Vertical profile stored every 10.00 years.
Koc = 123.60 ml/g, .43649E-02cu.ft./g
Kh = .47300 (dimensionless).
Aqueous solubility = 1100.0 mg/l, 31.149 g/cu.ft
Free air diffusion coefficient = .70290 sq. m/day, 2761.7 sq.ft./yr

Polygon 1
Polygon 117
Polygon area = .14350E+06sq. ft.
60 cells, each cell 1.000 ft. thick.
Soil Properties:
Bulk density = 1.6400 g/ml, 46440. g/cu.ft.
Porosity = .3810 Volumetric water content = .2550
Organic carbon content = .00074000
Recharge Rate = .08202100 ft/yr
Conc. in recharge water = .00000 mg/l, .00000 g/cu.ft
Atmospheric concentration = .00000 mg/l, .00000 g/cu.ft
Water table is impermeable to gas diffusion.

POLYGON 117

List of interpolated concentrations for desired depths

At a depth of	:	*3.000*
Interpolated concentration is:		*0.037*
At a depth of	:	9.000
Interpolated concentration is:		0.110
At a depth of	:	15.000
Interpolated concentration is:		0.184
At a depth of	:	21.000
Interpolated concentration is:		0.234
At a depth of	:	27.000
Interpolated concentration is:		0.280
At a depth of	:	33.000
Interpolated concentration is:		0.238
At a depth of	:	39.000
Interpolated concentration is:		0.108
At a depth of	:	45.000
Interpolated concentration is:		0.000
At a depth of	:	51.000
Interpolated concentration is:		0.000
At a depth of	:	57.000
Interpolated concentration is:		0.000
At a depth of	:	60.000
Interpolated concentration is:		0.000
At a depth of	:	0.000
Interpolated concentration is:		0.000

Total Soil Concentration Calculations from Soil Gas Data
Polygon 117, June-1992

Sample #	Total Clx Conc (ppbV)	Total Clx Conc (ug/L)*	Total Clx Conc (ug/Kg)**
NA	0	0	0
VS-VP117-16	59.9	0.326	0.196
VS-VP117-30	89	0.506	0.303
VS-VP117-44	0	0	0
VS-VP117-55	0	0	0
	148.9	0.832	0.499

*Multiply ppbV concentration by compound Molecular Weight, divide by Ideal Gas conversion corrected for laboratory pressure and temperature.

**Multiply ug/L concentration by 0.599 L/Kg (calculated Kgt based on revised soil physical data).

1,1-DCE Soil Concentration Calculations from Soil Gas Data
Polygon 117, June-1992

Sample #	1,1-DCE Conc (ppbV)	1,1-DCE Conc (ug/L)*	1,1-DCE Conc (ug/Kg)**
NA	0	0.00	0
VS-VP117-16	0	0.00	0
VS-VP117-30	0	0.00	0
VS-VP117-44	0	0.00	0
VS-VP117-55	0	0.00	0
	0.00	0.00	0.00

1,1,1-TCA Soil Concentration Calculations from Soil Gas Data
Polygon 117, June-1992

Sample #	1,1,1-TCA Conc (ppbV)	1,1,1-TCA Conc (ug/L)*	1,1,1-TCA Conc (ug/Kg)**
NA	0	0	0
VS-VP117-16	53	0.28	0.168
VS-VP117-30	67	0.36	0.216
VS-VP117-44	0	0	0
VS-VP117-55	0	0	0
	120.00	0.64	0.384

TCE Soil Concentration Calculations from Soil Gas Data
Polygon 117, June-1992

Sample #	TCE Conc (ppbV)	TCE Conc (ug/L)*	TCE Conc (ug/Kg)**
NA	0	0.00	0
VS-VP117-16	0	0.00	0
VS-VP117-30	0	0.00	0
VS-VP117-44	0	0.00	0
VS-VP117-55	0	0.00	0
	0.00	0.00	0.00

PCE Soil Concentration Calculations from Soil Gas Data
Polygon 117, June-1992

Sample #	PCE Conc (ppbV)	PCE Conc (ug/L)*	PCE Conc (ug/Kg)**
NA	0	0.00	0
VS-VP117-16	6.9	0.05	0.028
VS-VP117-30	22	0.15	0.087
VS-VP117-44	0	0.00	0
VS-VP117-55	0	0.00	0
	28.90	0.19	0.115

8.00	4.846	0.000	0.111
9.00	4.807	0.000	0.111
10.00	4.767	0.000	0.110
11.00	4.726	0.000	0.110
12.00	4.685	0.000	0.109
13.00	4.642	0.000	0.108
14.00	4.599	0.000	0.107
15.00	4.555	0.000	0.106
16.00	4.511	0.000	0.105
17.00	4.467	0.000	0.104
18.00	4.422	0.000	0.103
19.00	4.378	0.000	0.102
20.00	4.333	0.000	0.101
21.00	4.289	0.000	0.100
22.00	4.244	0.000	0.099
23.00	4.200	0.000	0.098
24.00	4.155	0.000	0.097
25.00	4.111	0.000	0.096
26.00	4.067	0.000	0.095
27.00	4.024	0.000	0.094
28.00	3.980	0.000	0.093
29.00	3.937	0.000	0.092
30.00	3.895	0.000	0.091

**** Batch 3 ****
Polygon 117

Time Interval (years)	Mass In (grams)	Mass/Area (g/sq m)	GW Concentration (ugrams/l)
1.00	0.000	0.000	0.000
2.00	0.000	0.000	0.000
3.00	0.001	0.000	0.000
4.00	0.001	0.000	0.000
5.00	0.002	0.000	0.000
6.00	0.003	0.000	0.000
7.00	0.003	0.000	0.000
8.00	0.004	0.000	0.000
9.00	0.005	0.000	0.000
10.00	0.006	0.000	0.000
11.00	0.007	0.000	0.000
12.00	0.008	0.000	0.000
13.00	0.010	0.000	0.000
14.00	0.011	0.000	0.000
15.00	0.012	0.000	0.000
16.00	0.014	0.000	0.000
17.00	0.016	0.000	0.000
18.00	0.017	0.000	0.000
19.00	0.019	0.000	0.000
20.00	0.021	0.000	0.000
21.00	0.023	0.000	0.000
22.00	0.024	0.000	0.000
23.00	0.026	0.000	0.001
24.00	0.028	0.000	0.001
25.00	0.031	0.000	0.001

26.00	0.033	0.000	0.001
27.00	0.035	0.000	0.001
28.00	0.037	0.000	0.001
29.00	0.039	0.000	0.001
30.00	0.041	0.000	0.001

**** Batch 4 ****
Polygon 79

Time Interval (years)	Mass In (grams)	Mass/Area (g/sq m)	GW Concentration (ugrams/l)
1.00	305.200	0.039	4.095
2.00	304.100	0.039	6.241
3.00	302.900	0.038	7.358
4.00	301.620	0.038	7.930
5.00	300.270	0.038	8.214
6.00	298.850	0.038	8.344
7.00	297.360	0.038	8.393
8.00	295.820	0.037	8.398
9.00	294.220	0.037	8.380
10.00	292.580	0.037	8.348
11.00	290.900	0.037	8.308
12.00	289.190	0.037	8.265
13.00	287.440	0.036	8.218
14.00	285.670	0.036	8.170
15.00	283.870	0.036	8.120
16.00	282.060	0.036	8.070
17.00	280.230	0.035	8.018
18.00	278.390	0.035	7.967
19.00	276.540	0.035	7.915
20.00	274.680	0.035	7.862
21.00	272.820	0.035	7.810
22.00	270.960	0.034	7.757
23.00	269.100	0.034	7.704
24.00	267.240	0.034	7.651
25.00	265.390	0.034	7.599
26.00	263.550	0.033	7.546
27.00	261.710	0.033	7.494
28.00	259.880	0.033	7.441
29.00	258.060	0.033	7.389
30.00	256.260	0.032	7.338

**** Batch 5 ****

```
PGA V-leach model, polygon screen-TCE-11/10/92-Poly84.INP.  New Soil, Old Chem
    1
       1.0          30.          1.0          10.
     123.6         .473        1100.        .7029
ygon 84
    171000.           1.     .022966         1.64         .381         .255      .00074
        0.            0.          -1.
    60
     1     6     348.00
     7    12    1367.62
    13    18     772.55
    19    24     354.95
    25    30       0.00
    31    36       0.00
    37    42       0.00
    43    48       0.00
    49    54       0.00
    55    60       0.00
```

V-Leach, VER 1.1
Jake Turin, 11/91
PGA V-leach model, polygon screen-TCE-11/10/92-Poly84.INP. New Soil, Old Chem

Polygon 1
At time = .00, total mass in vadose zone = .79218 g/sq.ft.
Mass in gas phase = .10162 g/sq.ft.
Mass in liquid phase = .43480 g/sq.ft.
Mass sorbed = .25576 g/sq.ft.

Polygon 1
At time = 1.00, total mass in vadose zone = .77917 g/sq.ft.
Mass in gas phase = .99951E-01g/sq.ft.
Mass in liquid phase = .42766 g/sq.ft.
Mass sorbed = .25157 g/sq.ft.

Since last printout at time = .00
Change in Total Mass = -.13004E-01g/sq.ft.
Advection in from atmosphere = .00000 g/sq.ft.
Advection in from water table = .00000 g/sq.ft.
Diffusion in from atmosphere = -.13004E-01g/sq.ft.
Diffusion in from water table = .00000 g/sq.ft.
Total inflow at boundaries = -.13004E-01g/sq.ft.
Mass discrepancy = .19465E-06g/sq.ft.

Since beginning of run at time = 0.0
Change in Total Mass = -.13004E-01g/sq.ft.
Advection in from atmosphere = .00000 g/sq.ft.
Advection in from water table = .00000 g/sq.ft.
Diffusion in from atmosphere = -.13004E-01g/sq.ft.
Diffusion in from water table = .00000 g/sq.ft.
Total inflow at boundaries = -.13004E-01g/sq.ft.
Mass discrepancy = .19465E-06g/sq.ft.

Polygon 1
At time = 2.00, total mass in vadose zone = .76672 g/sq.ft.
Mass in gas phase = .98354E-01g/sq.ft.
Mass in liquid phase = .42082 g/sq.ft.
Mass sorbed = .24755 g/sq.ft.

Since last printout at time = 1.00
Change in Total Mass = -.12451E-01g/sq.ft.
Advection in from atmosphere = .00000 g/sq.ft.
Advection in from water table = -.37948E-07g/sq.ft.
Diffusion in from atmosphere = -.12451E-01g/sq.ft.
Diffusion in from water table = .00000 g/sq.ft.
Total inflow at boundaries = -.12451E-01g/sq.ft.
Mass discrepancy = -.24494E-06g/sq.ft.

Since beginning of run at time = 0.0
Change in Total Mass = -.25455E-01g/sq.ft.
Advection in from atmosphere = .00000 g/sq.ft.
Advection in from water table = -.37948E-07g/sq.ft.
Diffusion in from atmosphere = -.25455E-01g/sq.ft.
Diffusion in from water table = .00000 g/sq.ft.
Total inflow at boundaries = -.25455E-01g/sq.ft.
Mass discrepancy = -.52154E-07g/sq.ft.

```
Polygon   1
At time =       3.00, total mass in vadose zone =     .75479    g/sq.ft.
Mass in gas phase     =       .96823E-01g/sq.ft.
Mass in liquid phase  =       .41427    g/sq.ft.
Mass sorbed           =       .24369    g/sq.ft.

Since last printout at time =       2.00
               Change in Total Mass =     -.11934E-01g/sq.ft.
                    Advection in from atmosphere =       .00000    g/sq.ft.
                    Advection in from water table =     -.92365E-07g/sq.ft.
                    Diffusion in from atmosphere =      -.11934E-01g/sq.ft.
                    Diffusion in from water table =      .00000    g/sq.ft.
               Total inflow at boundaries =     -.11934E-01g/sq.ft.
               Mass discrepancy =      .52154E-07g/sq.ft.

Since beginning of run at time = 0.0
               Change in Total Mass =     -.37390E-01g/sq.ft.
                    Advection in from atmosphere =       .00000    g/sq.ft.
                    Advection in from water table =     -.13031E-06g/sq.ft.
                    Diffusion in from atmosphere =      -.37389E-01g/sq.ft.
                    Diffusion in from water table =      .00000    g/sq.ft.
               Total inflow at boundaries =     -.37390E-01g/sq.ft.
               Mass discrepancy =      .00000    g/sq.ft.


Polygon   1
At time =       4.00, total mass in vadose zone =     .74334    g/sq.ft.
Mass in gas phase     =       .95354E-01g/sq.ft.
Mass in liquid phase  =       .40799    g/sq.ft.
Mass sorbed           =       .24000    g/sq.ft.

Since last printout at time =       3.00
               Change in Total Mass =     -.11450E-01g/sq.ft.
                    Advection in from atmosphere =       .00000    g/sq.ft.
                    Advection in from water table =     -.16531E-06g/sq.ft.
                    Diffusion in from atmosphere =      -.11450E-01g/sq.ft.
                    Diffusion in from water table =      .00000    g/sq.ft.
               Total inflow at boundaries =     -.11450E-01g/sq.ft.
               Mass discrepancy =      .25518E-06g/sq.ft.

Since beginning of run at time = 0.0
               Change in Total Mass =     -.48840E-01g/sq.ft.
                    Advection in from atmosphere =       .00000    g/sq.ft.
                    Advection in from water table =     -.29562E-06g/sq.ft.
                    Diffusion in from atmosphere =      -.48840E-01g/sq.ft.
                    Diffusion in from water table =      .00000    g/sq.ft.
               Total inflow at boundaries =     -.48840E-01g/sq.ft.
               Mass discrepancy =      .25332E-06g/sq.ft.


Polygon   1
At time =       5.00, total mass in vadose zone =     .73234    g/sq.ft.
Mass in gas phase     =       .93944E-01g/sq.ft.
Mass in liquid phase  =       .40195    g/sq.ft.
Mass sorbed           =       .23644    g/sq.ft.

Since last printout at time =       4.00
               Change in Total Mass =     -.10996E-01g/sq.ft.
```

```
                    Advection in from atmosphere =       .00000    g/sq.ft.
                    Advection in from water table =     -.25883E-06g/sq.ft.
                    Diffusion in from atmosphere =      -.10996E-01g/sq.ft.
                    Diffusion in from water table =       .00000    g/sq.ft.
               Total inflow at boundaries =     -.10996E-01g/sq.ft.
               Mass discrepancy =     -.24494E-06g/sq.ft.

Since beginning of run at time = 0.0
               Change in Total Mass =     -.59836E-01g/sq.ft.
                    Advection in from atmosphere =       .00000    g/sq.ft.
                    Advection in from water table =     -.55445E-06g/sq.ft.
                    Diffusion in from atmosphere =      -.59835E-01g/sq.ft.
                    Diffusion in from water table =       .00000    g/sq.ft.
               Total inflow at boundaries =     -.59836E-01g/sq.ft.
               Mass discrepancy =      .11176E-07g/sq.ft.


Polygon   1
At time =       6.00, total mass in vadose zone =     .72177    g/sq.ft.
Mass in gas phase     =       .92588E-01g/sq.ft.
Mass in liquid phase  =       .39615    g/sq.ft.
Mass sorbed           =       .23303    g/sq.ft.

Since last printout at time =       5.00
               Change in Total Mass =     -.10569E-01g/sq.ft.
                    Advection in from atmosphere =       .00000    g/sq.ft.
                    Advection in from water table =     -.37494E-06g/sq.ft.
                    Diffusion in from atmosphere =      -.10568E-01g/sq.ft.
                    Diffusion in from water table =       .00000    g/sq.ft.
               Total inflow at boundaries =     -.10569E-01g/sq.ft.
               Mass discrepancy =      .68918E-07g/sq.ft.

Since beginning of run at time = 0.0
               Change in Total Mass =     -.70405E-01g/sq.ft.
                    Advection in from atmosphere =       .00000    g/sq.ft.
                    Advection in from water table =     -.92939E-06g/sq.ft.
                    Diffusion in from atmosphere =      -.70404E-01g/sq.ft.
                    Diffusion in from water table =       .00000    g/sq.ft.
               Total inflow at boundaries =     -.70405E-01g/sq.ft.
               Mass discrepancy =      .81956E-07g/sq.ft.


Polygon   1
At time =       7.00, total mass in vadose zone =     .71161    g/sq.ft.
Mass in gas phase     =       .91284E-01g/sq.ft.
Mass in liquid phase  =       .39057    g/sq.ft.
Mass sorbed           =       .22975    g/sq.ft.

Since last printout at time =       6.00
               Change in Total Mass =     -.10167E-01g/sq.ft.
                    Advection in from atmosphere =       .00000    g/sq.ft.
                    Advection in from water table =     -.51565E-06g/sq.ft.
                    Diffusion in from atmosphere =      -.10166E-01g/sq.ft.
                    Diffusion in from water table =       .00000    g/sq.ft.
               Total inflow at boundaries =     -.10166E-01g/sq.ft.
               Mass discrepancy =     -.86613E-07g/sq.ft.

Since beginning of run at time = 0.0
               Change in Total Mass =     -.80571E-01g/sq.ft.
                    Advection in from atmosphere =       .00000    g/sq.ft.
```

```
                Advection in from water table =     -.14450E-05g/sq.ft.
                Diffusion in from atmosphere =      -.80570E-01g/sq.ft.
                Diffusion in from water table =      .00000    g/sq.ft.
           Total inflow at boundaries =     -.80571E-01g/sq.ft.
           Mass discrepancy =     -.74506E-08g/sq.ft.


Polygon   1
At time =       8.00, total mass in vadose zone =     .70182    g/sq.ft.
Mass in gas phase     =       .90028E-01g/sq.ft.
Mass in liquid phase  =       .38520    g/sq.ft.
Mass sorbed           =       .22659    g/sq.ft.

Since last printout at time =       7.00
           Change in Total Mass =     -.97870E-02g/sq.ft.
                Advection in from atmosphere =       .00000    g/sq.ft.
                Advection in from water table =     -.68291E-06g/sq.ft.
                Diffusion in from atmosphere =      -.97863E-02g/sq.ft.
                Diffusion in from water table =      .00000    g/sq.ft.
           Total inflow at boundaries =     -.97870E-02g/sq.ft.
           Mass discrepancy =      .50291E-07g/sq.ft.

Since beginning of run at time = 0.0
           Change in Total Mass =     -.90358E-01g/sq.ft.
                Advection in from atmosphere =       .00000    g/sq.ft.
                Advection in from water table =     -.21279E-05g/sq.ft.
                Diffusion in from atmosphere =      -.90356E-01g/sq.ft.
                Diffusion in from water table =      .00000    g/sq.ft.
           Total inflow at boundaries =     -.90358E-01g/sq.ft.
           Mass discrepancy =      .44703E-07g/sq.ft.


Polygon   1
At time =       9.00, total mass in vadose zone =     .69239    g/sq.ft.
Mass in gas phase     =       .88819E-01g/sq.ft.
Mass in liquid phase  =       .38003    g/sq.ft.
Mass sorbed           =       .22355    g/sq.ft.

Since last printout at time =       8.00
           Change in Total Mass =     -.94287E-02g/sq.ft.
                Advection in from atmosphere =       .00000    g/sq.ft.
                Advection in from water table =     -.87864E-06g/sq.ft.
                Diffusion in from atmosphere =      -.94277E-02g/sq.ft.
                Diffusion in from water table =      .00000    g/sq.ft.
           Total inflow at boundaries =     -.94285E-02g/sq.ft.
           Mass discrepancy =     -.14808E-06g/sq.ft.

Since beginning of run at time = 0.0
           Change in Total Mass =     -.99787E-01g/sq.ft.
                Advection in from atmosphere =       .00000    g/sq.ft.
                Advection in from water table =     -.30066E-05g/sq.ft.
                Diffusion in from atmosphere =      -.99784E-01g/sq.ft.
                Diffusion in from water table =      .00000    g/sq.ft.
           Total inflow at boundaries =     -.99787E-01g/sq.ft.
           Mass discrepancy =     -.10431E-06g/sq.ft.


Polygon   1
At time =      10.00, total mass in vadose zone =     .68330    g/sq.ft.
Mass in gas phase     =       .87653E-01g/sq.ft.
```

```
Mass in liquid phase  =        .37504    g/sq.ft.
Mass sorbed           =        .22061    g/sq.ft.

Since last printout at time =       9.00
               Change in Total Mass =     -.90894E-02g/sq.ft.
                    Advection in from atmosphere =       .00000    g/sq.ft.
                    Advection in from water table =     -.11047E-05g/sq.ft.
                    Diffusion in from atmosphere =      -.90883E-02g/sq.ft.
                    Diffusion in from water table =      .00000    g/sq.ft.
               Total inflow at boundaries =     -.90894E-02g/sq.ft.
               Mass discrepancy =      .81025E-07g/sq.ft.

Since beginning of run at time = 0.0
               Change in Total Mass =     -.10888    g/sq.ft.
                    Advection in from atmosphere =       .00000    g/sq.ft.
                    Advection in from water table =     -.41113E-05g/sq.ft.
                    Diffusion in from atmosphere =      -.10887    g/sq.ft.
                    Diffusion in from water table =      .00000    g/sq.ft.
               Total inflow at boundaries =     -.10888    g/sq.ft.
               Mass discrepancy =     -.22352E-07g/sq.ft.


Polygon   1
At time =      11.00, total mass in vadose zone =     .67453    g/sq.ft.
Mass in gas phase     =        .86528E-01g/sq.ft.
Mass in liquid phase  =        .37022    g/sq.ft.
Mass sorbed           =        .21778    g/sq.ft.

Since last printout at time =      10.00
               Change in Total Mass =     -.87683E-02g/sq.ft.
                    Advection in from atmosphere =       .00000    g/sq.ft.
                    Advection in from water table =     -.13629E-05g/sq.ft.
                    Diffusion in from atmosphere =      -.87669E-02g/sq.ft.
                    Diffusion in from water table =      .00000    g/sq.ft.
               Total inflow at boundaries =     -.87683E-02g/sq.ft.
               Mass discrepancy =     -.65193E-07g/sq.ft.

Since beginning of run at time = 0.0
               Change in Total Mass =     -.11764    g/sq.ft.
                    Advection in from atmosphere =       .00000    g/sq.ft.
                    Advection in from water table =     -.54741E-05g/sq.ft.
                    Diffusion in from atmosphere =      -.11764    g/sq.ft.
                    Diffusion in from water table =      .00000    g/sq.ft.
               Total inflow at boundaries =     -.11764    g/sq.ft.
               Mass discrepancy =     -.89407E-07g/sq.ft.


Polygon   1
At time =      12.00, total mass in vadose zone =     .66607    g/sq.ft.
Mass in gas phase     =        .85442E-01g/sq.ft.
Mass in liquid phase  =        .36558    g/sq.ft.
Mass sorbed           =        .21505    g/sq.ft.

Since last printout at time =      11.00
               Change in Total Mass =     -.84637E-02g/sq.ft.
                    Advection in from atmosphere =       .00000    g/sq.ft.
                    Advection in from water table =     -.16549E-05g/sq.ft.
                    Diffusion in from atmosphere =      -.84620E-02g/sq.ft.
                    Diffusion in from water table =      .00000    g/sq.ft.
               Total inflow at boundaries =     -.84637E-02g/sq.ft.
```

Mass discrepancy = -.43772E-07g/sq.ft.

Since beginning of run at time = 0.0
Change in Total Mass = -.12611 g/sq.ft.
Advection in from atmosphere = .00000 g/sq.ft.
Advection in from water table = -.71290E-05g/sq.ft.
Diffusion in from atmosphere = -.12610 g/sq.ft.
Diffusion in from water table = .00000 g/sq.ft.
Total inflow at boundaries = -.12611 g/sq.ft.
Mass discrepancy = -.14901E-06g/sq.ft.

Polygon 1
At time = 13.00, total mass in vadose zone = .65790 g/sq.ft.
Mass in gas phase = .84394E-01g/sq.ft.
Mass in liquid phase = .36109 g/sq.ft.
Mass sorbed = .21241 g/sq.ft.

Since last printout at time = 12.00
Change in Total Mass = -.81744E-02g/sq.ft.
Advection in from atmosphere = .00000 g/sq.ft.
Advection in from water table = -.19824E-05g/sq.ft.
Diffusion in from atmosphere = -.81726E-02g/sq.ft.
Diffusion in from water table = .00000 g/sq.ft.
Total inflow at boundaries = -.81746E-02g/sq.ft.
Mass discrepancy = .15646E-06g/sq.ft.

Since beginning of run at time = 0.0
Change in Total Mass = -.13428 g/sq.ft.
Advection in from atmosphere = .00000 g/sq.ft.
Advection in from water table = -.91115E-05g/sq.ft.
Diffusion in from atmosphere = -.13427 g/sq.ft.
Diffusion in from water table = .00000 g/sq.ft.
Total inflow at boundaries = -.13428 g/sq.ft.
Mass discrepancy = .00000 g/sq.ft.

Polygon 1
At time = 14.00, total mass in vadose zone = .65000 g/sq.ft.
Mass in gas phase = .83380E-01g/sq.ft.
Mass in liquid phase = .35676 g/sq.ft.
Mass sorbed = .20986 g/sq.ft.

Since last printout at time = 13.00
Change in Total Mass = -.78999E-02g/sq.ft.
Advection in from atmosphere = .00000 g/sq.ft.
Advection in from water table = -.23471E-05g/sq.ft.
Diffusion in from atmosphere = -.78975E-02g/sq.ft.
Diffusion in from water table = .00000 g/sq.ft.
Total inflow at boundaries = -.78998E-02g/sq.ft.
Mass discrepancy = -.11269E-06g/sq.ft.

Since beginning of run at time = 0.0
Change in Total Mass = -.14218 g/sq.ft.
Advection in from atmosphere = .00000 g/sq.ft.
Advection in from water table = -.11459E-04g/sq.ft.
Diffusion in from atmosphere = -.14217 g/sq.ft.
Diffusion in from water table = .00000 g/sq.ft.
Total inflow at boundaries = -.14218 g/sq.ft.
Mass discrepancy = -.10431E-06g/sq.ft.

Polygon 1
At time = 15.00, total mass in vadose zone = .64236 g/sq.ft.
Mass in gas phase = .82401E-01g/sq.ft.
Mass in liquid phase = .35256 g/sq.ft.
Mass sorbed = .20739 g/sq.ft.

Since last printout at time = 14.00
Change in Total Mass = -.76386E-02g/sq.ft.
Advection in from atmosphere = .00000 g/sq.ft.
Advection in from water table = -.27503E-05g/sq.ft.
Diffusion in from atmosphere = -.76357E-02g/sq.ft.
Diffusion in from water table = .00000 g/sq.ft.
Total inflow at boundaries = -.76385E-02g/sq.ft.
Mass discrepancy = -.87544E-07g/sq.ft.

Since beginning of run at time = 0.0
Change in Total Mass = -.14982 g/sq.ft.
Advection in from atmosphere = .00000 g/sq.ft.
Advection in from water table = -.14209E-04g/sq.ft.
Diffusion in from atmosphere = -.14981 g/sq.ft.
Diffusion in from water table = .00000 g/sq.ft.
Total inflow at boundaries = -.14982 g/sq.ft.
Mass discrepancy = -.17881E-06g/sq.ft.

Polygon 1
At time = 16.00, total mass in vadose zone = .63497 g/sq.ft.
Mass in gas phase = .81453E-01g/sq.ft.
Mass in liquid phase = .34851 g/sq.ft.
Mass sorbed = .20501 g/sq.ft.

Since last printout at time = 15.00
Change in Total Mass = -.73894E-02g/sq.ft.
Advection in from atmosphere = .00000 g/sq.ft.
Advection in from water table = -.31935E-05g/sq.ft.
Diffusion in from atmosphere = -.73865E-02g/sq.ft.
Diffusion in from water table = .00000 g/sq.ft.
Total inflow at boundaries = -.73897E-02g/sq.ft.
Mass discrepancy = .24866E-06g/sq.ft.

Since beginning of run at time = 0.0
Change in Total Mass = -.15721 g/sq.ft.
Advection in from atmosphere = .00000 g/sq.ft.
Advection in from water table = -.17402E-04g/sq.ft.
Diffusion in from atmosphere = -.15719 g/sq.ft.
Diffusion in from water table = .00000 g/sq.ft.
Total inflow at boundaries = -.15721 g/sq.ft.
Mass discrepancy = .59605E-07g/sq.ft.

Polygon 1
At time = 17.00, total mass in vadose zone = .62782 g/sq.ft.
Mass in gas phase = .80535E-01g/sq.ft.
Mass in liquid phase = .34458 g/sq.ft.
Mass sorbed = .20270 g/sq.ft.

Since last printout at time = 16.00
Change in Total Mass = -.71527E-02g/sq.ft.

```
                Advection in from atmosphere =       .00000    g/sq.ft.
                Advection in from water table =     -.36781E-05g/sq.ft.
                Diffusion in from atmosphere =      -.71489E-02g/sq.ft.
                Diffusion in from water table =       .00000    g/sq.ft.
           Total inflow at boundaries =     -.71526E-02g/sq.ft.
           Mass discrepancy =     -.83353E-07g/sq.ft.

Since beginning of run at time = 0.0
           Change in Total Mass =     -.16436    g/sq.ft.
                Advection in from atmosphere =       .00000    g/sq.ft.
                Advection in from water table =     -.21080E-04g/sq.ft.
                Diffusion in from atmosphere =      -.16434    g/sq.ft.
                Diffusion in from water table =       .00000    g/sq.ft.
           Total inflow at boundaries =     -.16436    g/sq.ft.
           Mass discrepancy =     -.14901E-07g/sq.ft.


Polygon   1
At time =      18.00, total mass in vadose zone =     .62089    g/sq.ft.
Mass in gas phase     =       .79647E-01g/sq.ft.
Mass in liquid phase  =       .34078    g/sq.ft.
Mass sorbed           =       .20046    g/sq.ft.

Since last printout at time =      17.00
           Change in Total Mass =     -.69265E-02g/sq.ft.
                Advection in from atmosphere =       .00000    g/sq.ft.
                Advection in from water table =     -.42053E-05g/sq.ft.
                Diffusion in from atmosphere =      -.69223E-02g/sq.ft.
                Diffusion in from water table =       .00000    g/sq.ft.
           Total inflow at boundaries =     -.69265E-02g/sq.ft.
           Mass discrepancy =      .33528E-07g/sq.ft.

Since beginning of run at time = 0.0
           Change in Total Mass =     -.17129    g/sq.ft.
                Advection in from atmosphere =       .00000    g/sq.ft.
                Advection in from water table =     -.25286E-04g/sq.ft.
                Diffusion in from atmosphere =      -.17126    g/sq.ft.
                Diffusion in from water table =       .00000    g/sq.ft.
           Total inflow at boundaries =     -.17129    g/sq.ft.
           Mass discrepancy =      .14901E-07g/sq.ft.


Polygon   1
At time =      19.00, total mass in vadose zone =     .61418    g/sq.ft.
Mass in gas phase     =       .78786E-01g/sq.ft.
Mass in liquid phase  =       .33710    g/sq.ft.
Mass sorbed           =       .19829    g/sq.ft.

Since last printout at time =      18.00
           Change in Total Mass =     -.67109E-02g/sq.ft.
                Advection in from atmosphere =       .00000    g/sq.ft.
                Advection in from water table =     -.47761E-05g/sq.ft.
                Diffusion in from atmosphere =      -.67060E-02g/sq.ft.
                Diffusion in from water table =       .00000    g/sq.ft.
           Total inflow at boundaries =     -.67108E-02g/sq.ft.
           Mass discrepancy =     -.19046E-06g/sq.ft.

Since beginning of run at time = 0.0
           Change in Total Mass =     -.17800    g/sq.ft.
                Advection in from atmosphere =       .00000    g/sq.ft.
```

```
                    Advection in from water table =     -.30062E-04g/sq.ft.
                    Diffusion in from atmosphere =      -.17797    g/sq.ft.
                    Diffusion in from water table =      .00000    g/sq.ft.
               Total inflow at boundaries =     -.17800    g/sq.ft.
               Mass discrepancy =     -.17881E-06g/sq.ft.


Polygon   1
At time =      20.00, total mass in vadose zone =     .60767    g/sq.ft.
Mass in gas phase     =       .77951E-01g/sq.ft.
Mass in liquid phase  =       .33353    g/sq.ft.
Mass sorbed           =       .19619    g/sq.ft.

Since last printout at time =      19.00
               Change in Total Mass =     -.65047E-02g/sq.ft.
                    Advection in from atmosphere =       .00000    g/sq.ft.
                    Advection in from water table =     -.53917E-05g/sq.ft.
                    Diffusion in from atmosphere =      -.64993E-02g/sq.ft.
                    Diffusion in from water table =      .00000    g/sq.ft.
               Total inflow at boundaries =     -.65047E-02g/sq.ft.
               Mass discrepancy =      .62864E-07g/sq.ft.

Since beginning of run at time = 0.0
               Change in Total Mass =     -.18451    g/sq.ft.
                    Advection in from atmosphere =       .00000    g/sq.ft.
                    Advection in from water table =     -.35454E-04g/sq.ft.
                    Diffusion in from atmosphere =      -.18447    g/sq.ft.
                    Diffusion in from water table =      .00000    g/sq.ft.
               Total inflow at boundaries =     -.18451    g/sq.ft.
               Mass discrepancy =     -.11921E-06g/sq.ft.


Polygon   1
At time =      21.00, total mass in vadose zone =     .60137    g/sq.ft.
Mass in gas phase     =       .77142E-01g/sq.ft.
Mass in liquid phase  =       .33007    g/sq.ft.
Mass sorbed           =       .19416    g/sq.ft.

Since last printout at time =      20.00
               Change in Total Mass =     -.63078E-02g/sq.ft.
                    Advection in from atmosphere =       .00000    g/sq.ft.
                    Advection in from water table =     -.60531E-05g/sq.ft.
                    Diffusion in from atmosphere =      -.63018E-02g/sq.ft.
                    Diffusion in from water table =      .00000    g/sq.ft.
               Total inflow at boundaries =     -.63078E-02g/sq.ft.
               Mass discrepancy =     -.15367E-07g/sq.ft.

Since beginning of run at time = 0.0
               Change in Total Mass =     -.19081    g/sq.ft.
                    Advection in from atmosphere =       .00000    g/sq.ft.
                    Advection in from water table =     -.41507E-04g/sq.ft.
                    Diffusion in from atmosphere =      -.19077    g/sq.ft.
                    Diffusion in from water table =      .00000    g/sq.ft.
               Total inflow at boundaries =     -.19081    g/sq.ft.
               Mass discrepancy =     -.13411E-06g/sq.ft.


Polygon   1
At time =      22.00, total mass in vadose zone =     .59525    g/sq.ft.
Mass in gas phase     =       .76357E-01g/sq.ft.
```

```
Mass in liquid phase  =       .32671    g/sq.ft.
Mass sorbed           =       .19218    g/sq.ft.

Since last printout at time =      21.00
              Change in Total Mass =     -.61195E-02g/sq.ft.
                   Advection in from atmosphere =       .00000    g/sq.ft.
                   Advection in from water table =     -.67610E-05g/sq.ft.
                   Diffusion in from atmosphere =      -.61128E-02g/sq.ft.
                   Diffusion in from water table =      .00000    g/sq.ft.
              Total inflow at boundaries =     -.61196E-02g/sq.ft.
              Mass discrepancy =      .83819E-08g/sq.ft.

Since beginning of run at time = 0.0
              Change in Total Mass =     -.19693    g/sq.ft.
                   Advection in from atmosphere =       .00000    g/sq.ft.
                   Advection in from water table =     -.48268E-04g/sq.ft.
                   Diffusion in from atmosphere =      -.19688    g/sq.ft.
                   Diffusion in from water table =      .00000    g/sq.ft.
              Total inflow at boundaries =     -.19693    g/sq.ft.
              Mass discrepancy =     -.11921E-06g/sq.ft.


Polygon   1
At time =      23.00, total mass in vadose zone =     .58931    g/sq.ft.
Mass in gas phase     =       .75595E-01g/sq.ft.
Mass in liquid phase  =       .32345    g/sq.ft.
Mass sorbed           =       .19026    g/sq.ft.

Since last printout at time =      22.00
              Change in Total Mass =     -.59395E-02g/sq.ft.
                   Advection in from atmosphere =       .00000    g/sq.ft.
                   Advection in from water table =     -.75162E-05g/sq.ft.
                   Diffusion in from atmosphere =      -.59319E-02g/sq.ft.
                   Diffusion in from water table =      .00000    g/sq.ft.
              Total inflow at boundaries =     -.59394E-02g/sq.ft.
              Mass discrepancy =     -.50757E-07g/sq.ft.

Since beginning of run at time = 0.0
              Change in Total Mass =     -.20287    g/sq.ft.
                   Advection in from atmosphere =       .00000    g/sq.ft.
                   Advection in from water table =     -.55784E-04g/sq.ft.
                   Diffusion in from atmosphere =      -.20282    g/sq.ft.
                   Diffusion in from water table =      .00000    g/sq.ft.
              Total inflow at boundaries =     -.20287    g/sq.ft.
              Mass discrepancy =     -.16391E-06g/sq.ft.


Polygon   1
At time =      24.00, total mass in vadose zone =     .58354    g/sq.ft.
Mass in gas phase     =       .74855E-01g/sq.ft.
Mass in liquid phase  =       .32028    g/sq.ft.
Mass sorbed           =       .18840    g/sq.ft.

Since last printout at time =      23.00
              Change in Total Mass =     -.57669E-02g/sq.ft.
                   Advection in from atmosphere =       .00000    g/sq.ft.
                   Advection in from water table =     -.83194E-05g/sq.ft.
                   Diffusion in from atmosphere =      -.57587E-02g/sq.ft.
                   Diffusion in from water table =      .00000    g/sq.ft.
              Total inflow at boundaries =     -.57670E-02g/sq.ft.
```

```
          Mass discrepancy =      .13458E-06g/sq.ft.

Since beginning of run at time = 0.0
          Change in Total Mass =     -.20864    g/sq.ft.
               Advection in from atmosphere =       .00000    g/sq.ft.
               Advection in from water table =     -.64103E-04g/sq.ft.
               Diffusion in from atmosphere =      -.20857    g/sq.ft.
               Diffusion in from water table =      .00000    g/sq.ft.
          Total inflow at boundaries =     -.20864    g/sq.ft.
          Mass discrepancy =     -.29802E-07g/sq.ft.


Polygon   1
At time =      25.00, total mass in vadose zone =     .57794    g/sq.ft.
Mass in gas phase     =       .74137E-01g/sq.ft.
Mass in liquid phase  =       .31721    g/sq.ft.
Mass sorbed           =       .18659    g/sq.ft.

Since last printout at time =      24.00
          Change in Total Mass =     -.56018E-02g/sq.ft.
               Advection in from atmosphere =       .00000    g/sq.ft.
               Advection in from water table =     -.91711E-05g/sq.ft.
               Diffusion in from atmosphere =      -.55927E-02g/sq.ft.
               Diffusion in from water table =      .00000    g/sq.ft.
          Total inflow at boundaries =     -.56019E-02g/sq.ft.
          Mass discrepancy =      .88941E-07g/sq.ft.

Since beginning of run at time = 0.0
          Change in Total Mass =     -.21424    g/sq.ft.
               Advection in from atmosphere =       .00000    g/sq.ft.
               Advection in from water table =     -.73274E-04g/sq.ft.
               Diffusion in from atmosphere =      -.21417    g/sq.ft.
               Diffusion in from water table =      .00000    g/sq.ft.
          Total inflow at boundaries =     -.21424    g/sq.ft.
          Mass discrepancy =      .44703E-07g/sq.ft.


Polygon   1
At time =      26.00, total mass in vadose zone =     .57249    g/sq.ft.
Mass in gas phase     =       .73439E-01g/sq.ft.
Mass in liquid phase  =       .31422    g/sq.ft.
Mass sorbed           =       .18484    g/sq.ft.

Since last printout at time =      25.00
          Change in Total Mass =     -.54435E-02g/sq.ft.
               Advection in from atmosphere =       .00000    g/sq.ft.
               Advection in from water table =     -.10072E-04g/sq.ft.
               Diffusion in from atmosphere =      -.54335E-02g/sq.ft.
               Diffusion in from water table =      .00000    g/sq.ft.
          Total inflow at boundaries =     -.54436E-02g/sq.ft.
          Mass discrepancy =      .79628E-07g/sq.ft.

Since beginning of run at time = 0.0
          Change in Total Mass =     -.21968    g/sq.ft.
               Advection in from atmosphere =       .00000    g/sq.ft.
               Advection in from water table =     -.83346E-04g/sq.ft.
               Diffusion in from atmosphere =      -.21960    g/sq.ft.
               Diffusion in from water table =      .00000    g/sq.ft.
          Total inflow at boundaries =     -.21968    g/sq.ft.
          Mass discrepancy =      .11921E-06g/sq.ft.
```

```
Polygon   1
At time =      27.00, total mass in vadose zone =     .56720    g/sq.ft.
Mass in gas phase     =       .72760E-01g/sq.ft.
Mass in liquid phase  =       .31131    g/sq.ft.
Mass sorbed           =       .18313    g/sq.ft.

Since last printout at time =      26.00
               Change in Total Mass =     -.52919E-02g/sq.ft.
                    Advection in from atmosphere =       .00000    g/sq.ft.
                    Advection in from water table =     -.11022E-04g/sq.ft.
                    Diffusion in from atmosphere =      -.52808E-02g/sq.ft.
                    Diffusion in from water table =      .00000    g/sq.ft.
               Total inflow at boundaries =     -.52919E-02g/sq.ft.
               Mass discrepancy =     -.13039E-07g/sq.ft.

Since beginning of run at time = 0.0
               Change in Total Mass =     -.22498    g/sq.ft.
                    Advection in from atmosphere =       .00000    g/sq.ft.
                    Advection in from water table =     -.94368E-04g/sq.ft.
                    Diffusion in from atmosphere =      -.22488    g/sq.ft.
                    Diffusion in from water table =      .00000    g/sq.ft.
               Total inflow at boundaries =     -.22498    g/sq.ft.
               Mass discrepancy =      .10431E-06g/sq.ft.


Polygon   1
At time =      28.00, total mass in vadose zone =     .56206    g/sq.ft.
Mass in gas phase     =       .72100E-01g/sq.ft.
Mass in liquid phase  =       .30849    g/sq.ft.
Mass sorbed           =       .18147    g/sq.ft.

Since last printout at time =      27.00
               Change in Total Mass =     -.51465E-02g/sq.ft.
                    Advection in from atmosphere =       .00000    g/sq.ft.
                    Advection in from water table =     -.12022E-04g/sq.ft.
                    Diffusion in from atmosphere =      -.51343E-02g/sq.ft.
                    Diffusion in from water table =      .00000    g/sq.ft.
               Total inflow at boundaries =     -.51463E-02g/sq.ft.
               Mass discrepancy =     -.16810E-06g/sq.ft.

Since beginning of run at time = 0.0
               Change in Total Mass =     -.23012    g/sq.ft.
                    Advection in from atmosphere =       .00000    g/sq.ft.
                    Advection in from water table =     -.10639E-03g/sq.ft.
                    Diffusion in from atmosphere =      -.23002    g/sq.ft.
                    Diffusion in from water table =      .00000    g/sq.ft.
               Total inflow at boundaries =     -.23012    g/sq.ft.
               Mass discrepancy =     -.59605E-07g/sq.ft.


Polygon   1
At time =      29.00, total mass in vadose zone =     .55705    g/sq.ft.
Mass in gas phase     =       .71457E-01g/sq.ft.
Mass in liquid phase  =       .30574    g/sq.ft.
Mass sorbed           =       .17985    g/sq.ft.

Since last printout at time =      28.00
               Change in Total Mass =     -.50066E-02g/sq.ft.
```

```
                Advection in from atmosphere =       .00000    g/sq.ft.
                Advection in from water table =    -.13071E-04g/sq.ft.
                Diffusion in from atmosphere =     -.49936E-02g/sq.ft.
                Diffusion in from water table =      .00000    g/sq.ft.
           Total inflow at boundaries =     -.50067E-02g/sq.ft.
           Mass discrepancy =      .13411E-06g/sq.ft.

Since beginning of run at time = 0.0
           Change in Total Mass =     -.23513    g/sq.ft.
                Advection in from atmosphere =       .00000    g/sq.ft.
                Advection in from water table =    -.11946E-03g/sq.ft.
                Diffusion in from atmosphere =     -.23501    g/sq.ft.
                Diffusion in from water table =      .00000    g/sq.ft.
           Total inflow at boundaries =     -.23513    g/sq.ft.
           Mass discrepancy =      .74506E-07g/sq.ft.


Polygon   1
At time =      30.00, total mass in vadose zone =     .55218    g/sq.ft.
Mass in gas phase     =       .70832E-01g/sq.ft.
Mass in liquid phase  =       .30307    g/sq.ft.
Mass sorbed           =       .17828    g/sq.ft.

Since last printout at time =      29.00
           Change in Total Mass =     -.48727E-02g/sq.ft.
                Advection in from atmosphere =       .00000    g/sq.ft.
                Advection in from water table =    -.14171E-04g/sq.ft.
                Diffusion in from atmosphere =     -.48585E-02g/sq.ft.
                Diffusion in from water table =      .00000    g/sq.ft.
           Total inflow at boundaries =     -.48726E-02g/sq.ft.
           Mass discrepancy =     -.55879E-07g/sq.ft.

Since beginning of run at time = 0.0
           Change in Total Mass =     -.24000    g/sq.ft.
                Advection in from atmosphere =       .00000    g/sq.ft.
                Advection in from water table =    -.13363E-03g/sq.ft.
                Diffusion in from atmosphere =     -.23987    g/sq.ft.
                Diffusion in from water table =      .00000    g/sq.ft.
           Total inflow at boundaries =     -.24000    g/sq.ft.
           Mass discrepancy =      .14901E-07g/sq.ft.


GROUNDWATER IMPACT OF POLYGON   1

 Time        Mass per area (g/sq.ft.)      Total Mass (g)
     1.00          .00000                    .00000
     2.00          .37948E-07                .64891E-02
     3.00          .92365E-07                .15794E-01
     4.00          .16531E-06                .28268E-01
     5.00          .25883E-06                .44259E-01
     6.00          .37494E-06                .64115E-01
     7.00          .51565E-06                .88176E-01
     8.00          .68291E-06                .11678
     9.00          .87864E-06                .15025
    10.00          .11047E-05                .18890
    11.00          .13629E-05                .23305
    12.00          .16549E-05                .28299
    13.00          .19824E-05                .33900
    14.00          .23471E-05                .40135
    15.00          .27503E-05                .47030
```

16.00	.31935E-05	.54609
17.00	.36781E-05	.62896
18.00	.42053E-05	.71910
19.00	.47761E-05	.81672
20.00	.53917E-05	.92199
21.00	.60531E-05	1.0351
22.00	.67610E-05	1.1561
23.00	.75162E-05	1.2853
24.00	.83194E-05	1.4226
25.00	.91711E-05	1.5683
26.00	.10072E-04	1.7223
27.00	.11022E-04	1.8848
28.00	.12022E-04	2.0557
29.00	.13071E-04	2.2352
30.00	.14171E-04	2.4232

****

****

TOTAL GROUNDWATER IMPACT

Time (yr)	Mass (g)	Cumulative Mass (g)
1.00	.00000	.00000
2.00	.64891E-02	.64891E-02
3.00	.15794E-01	.22284E-01
4.00	.28268E-01	.50551E-01
5.00	.44259E-01	.94811E-01
6.00	.64115E-01	.15893
7.00	.88176E-01	.24710
8.00	.11678	.36388
9.00	.15025	.51413
10.00	.18890	.70303
11.00	.23305	.93608
12.00	.28299	1.2191
13.00	.33900	1.5581
14.00	.40135	1.9594
15.00	.47030	2.4297
16.00	.54609	2.9758
17.00	.62896	3.6048
18.00	.71910	4.3239
19.00	.81672	5.1406
20.00	.92199	6.0626
21.00	1.0351	7.0976
22.00	1.1561	8.2538
23.00	1.2853	9.5390
24.00	1.4226	10.962
25.00	1.5683	12.530
26.00	1.7223	14.252
27.00	1.8848	16.137
28.00	2.0557	18.193
29.00	2.2352	20.428
30.00	2.4232	22.851

Polygon 84
Time: .000

Cell	Cgas(g/cu.ft.)	Cliq(g/cu.ft.)	Csol
1	.16453E-01	.34784E-01	.11235E-06
2	.16453E-01	.34784E-01	.11235E-06
3	.16453E-01	.34784E-01	.11235E-06
4	.16453E-01	.34784E-01	.11235E-06
5	.16453E-01	.34784E-01	.11235E-06
6	.16453E-01	.34784E-01	.11235E-06
7	.64658E-01	.13670	.44154E-06
8	.64658E-01	.13670	.44154E-06
9	.64658E-01	.13670	.44154E-06
10	.64658E-01	.13670	.44154E-06
11	.64658E-01	.13670	.44154E-06
12	.64658E-01	.13670	.44154E-06
13	.36525E-01	.77219E-01	.24942E-06
14	.36525E-01	.77219E-01	.24942E-06
15	.36525E-01	.77219E-01	.24942E-06
16	.36525E-01	.77219E-01	.24942E-06
17	.36525E-01	.77219E-01	.24942E-06
18	.36525E-01	.77219E-01	.24942E-06
19	.16781E-01	.35479E-01	.11460E-06
20	.16781E-01	.35479E-01	.11460E-06
21	.16781E-01	.35479E-01	.11460E-06
22	.16781E-01	.35479E-01	.11460E-06
23	.16781E-01	.35479E-01	.11460E-06
24	.16781E-01	.35479E-01	.11460E-06
25	.00000	.00000	.00000
26	.00000	.00000	.00000
27	.00000	.00000	.00000
28	.00000	.00000	.00000
29	.00000	.00000	.00000
30	.00000	.00000	.00000
31	.00000	.00000	.00000
32	.00000	.00000	.00000
33	.00000	.00000	.00000
34	.00000	.00000	.00000
35	.00000	.00000	.00000
36	.00000	.00000	.00000
37	.00000	.00000	.00000
38	.00000	.00000	.00000
39	.00000	.00000	.00000
40	.00000	.00000	.00000
41	.00000	.00000	.00000
42	.00000	.00000	.00000
43	.00000	.00000	.00000
44	.00000	.00000	.00000
45	.00000	.00000	.00000
46	.00000	.00000	.00000
47	.00000	.00000	.00000
48	.00000	.00000	.00000
49	.00000	.00000	.00000
50	.00000	.00000	.00000
51	.00000	.00000	.00000
52	.00000	.00000	.00000
53	.00000	.00000	.00000
54	.00000	.00000	.00000
55	.00000	.00000	.00000
56	.00000	.00000	.00000

57	.00000	.00000	.00000
58	.00000	.00000	.00000
59	.00000	.00000	.00000
60	.00000	.00000	.00000

Polygon 84
Time: 10.000

Cell	Cgas(g/cu.ft.)	Cliq(g/cu.ft.)	Csol
1	.50494E-02	.10675E-01	.34481E-07
2	.93758E-02	.19822E-01	.64025E-07
3	.12704E-01	.26858E-01	.86753E-07
4	.15639E-01	.33064E-01	.10680E-06
5	.18475E-01	.39059E-01	.12616E-06
6	.21331E-01	.45098E-01	.14567E-06
7	.31277E-01	.66124E-01	.21358E-06
8	.37666E-01	.79633E-01	.25721E-06
9	.40706E-01	.86059E-01	.27797E-06
10	.42207E-01	.89233E-01	.28822E-06
11	.42883E-01	.90662E-01	.29284E-06
12	.42910E-01	.90719E-01	.29302E-06
13	.38239E-01	.80843E-01	.26112E-06
14	.35117E-01	.74243E-01	.23980E-06
15	.33443E-01	.70704E-01	.22837E-06
16	.32166E-01	.68003E-01	.21965E-06
17	.30861E-01	.65245E-01	.21074E-06
18	.29408E-01	.62173E-01	.20082E-06
19	.24894E-01	.52630E-01	.16999E-06
20	.21667E-01	.45807E-01	.14796E-06
21	.19628E-01	.41497E-01	.13403E-06
22	.18016E-01	.38089E-01	.12303E-06
23	.16515E-01	.34915E-01	.11277E-06
24	.15023E-01	.31761E-01	.10259E-06
25	.11059E-01	.23381E-01	.75521E-07
26	.83155E-02	.17580E-01	.56784E-07
27	.67058E-02	.14177E-01	.45792E-07
28	.55850E-02	.11808E-01	.38139E-07
29	.46892E-02	.99138E-02	.32022E-07
30	.39404E-02	.83306E-02	.26908E-07
31	.33089E-02	.69956E-02	.22596E-07
32	.27762E-02	.58694E-02	.18958E-07
33	.23272E-02	.49202E-02	.15892E-07
34	.19492E-02	.41210E-02	.13311E-07
35	.16313E-02	.34489E-02	.11140E-07
36	.13642E-02	.28842E-02	.93159E-08
37	.11400E-02	.24102E-02	.77850E-08
38	.95201E-03	.20127E-02	.65011E-08
39	.79448E-03	.16797E-02	.54253E-08
40	.66261E-03	.14009E-02	.45248E-08
41	.55231E-03	.11677E-02	.37716E-08
42	.46013E-03	.97278E-03	.31421E-08
43	.38315E-03	.81004E-03	.26164E-08
44	.31892E-03	.67426E-03	.21778E-08
45	.26538E-03	.56107E-03	.18122E-08
46	.22080E-03	.46680E-03	.15078E-08
47	.18371E-03	.38839E-03	.12545E-08
48	.15289E-03	.32324E-03	.10441E-08
49	.12733E-03	.26920E-03	.86951E-09
50	.10617E-03	.22446E-03	.72501E-09
51	.88702E-04	.18753E-03	.60572E-09
52	.74335E-04	.15716E-03	.50762E-09

53	.62582E-04	.13231E-03	.42736E-09
54	.53043E-04	.11214E-03	.36222E-09
55	.45390E-04	.95961E-04	.30995E-09
56	.39360E-04	.83213E-04	.26878E-09
57	.34746E-04	.73458E-04	.23727E-09
58	.31388E-04	.66359E-04	.21434E-09
59	.29169E-04	.61669E-04	.19919E-09
60	.28015E-04	.59228E-04	.19131E-09

Polygon 84
Time: 20.000

Cell	Cgas(g/cu.ft.)	Cliq(g/cu.ft.)	Csol
1	.26001E-02	.54970E-02	.17755E-07
2	.58178E-02	.12300E-01	.39729E-07
3	.89671E-02	.18958E-01	.61234E-07
4	.11938E-01	.25239E-01	.81524E-07
5	.14776E-01	.31239E-01	.10090E-06
6	.17523E-01	.37047E-01	.11966E-06
7	.21216E-01	.44854E-01	.14488E-06
8	.24785E-01	.52400E-01	.16925E-06
9	.27480E-01	.58098E-01	.18766E-06
10	.29316E-01	.61978E-01	.20019E-06
11	.30480E-01	.64439E-01	.20814E-06
12	.31088E-01	.65725E-01	.21229E-06
13	.30597E-01	.64688E-01	.20894E-06
14	.29660E-01	.62707E-01	.20254E-06
15	.28731E-01	.60741E-01	.19619E-06
16	.27812E-01	.58800E-01	.18992E-06
17	.26805E-01	.56670E-01	.18304E-06
18	.25649E-01	.54226E-01	.17515E-06
19	.23907E-01	.50543E-01	.16325E-06
20	.22015E-01	.46544E-01	.15034E-06
21	.20281E-01	.42877E-01	.13849E-06
22	.18697E-01	.39528E-01	.12768E-06
23	.17184E-01	.36330E-01	.11735E-06
24	.15692E-01	.33177E-01	.10716E-06
25	.13846E-01	.29273E-01	.94552E-07
26	.12010E-01	.25392E-01	.82015E-07
27	.10440E-01	.22072E-01	.71291E-07
28	.91246E-02	.19291E-01	.62310E-07
29	.79929E-02	.16898E-01	.54581E-07
30	.69981E-02	.14795E-01	.47789E-07
31	.61175E-02	.12933E-01	.41775E-07
32	.53378E-02	.11285E-01	.36451E-07
33	.46489E-02	.98285E-02	.31746E-07
34	.40417E-02	.85449E-02	.27600E-07
35	.35081E-02	.74167E-02	.23956E-07
36	.30401E-02	.64273E-02	.20760E-07
37	.26307E-02	.55617E-02	.17964E-07
38	.22732E-02	.48060E-02	.15523E-07
39	.19618E-02	.41475E-02	.13397E-07
40	.16909E-02	.35749E-02	.11547E-07
41	.14558E-02	.30779E-02	.99416E-08
42	.12521E-02	.26472E-02	.85505E-08
43	.10759E-02	.22747E-02	.73472E-08
44	.92378E-03	.19530E-02	.63082E-08
45	.79264E-03	.16758E-02	.54127E-08
46	.67981E-03	.14372E-02	.46423E-08
47	.58294E-03	.12324E-02	.39808E-08
48	.49996E-03	.10570E-02	.34141E-08

49	.42905E-03	.90709E-03	.29299E-08
50	.36866E-03	.77940E-03	.25175E-08
51	.31741E-03	.67107E-03	.21675E-08
52	.27416E-03	.57962E-03	.18722E-08
53	.23789E-03	.50295E-03	.16245E-08
54	.20777E-03	.43927E-03	.14188E-08
55	.18309E-03	.38708E-03	.12503E-08
56	.16325E-03	.34514E-03	.11148E-08
57	.14779E-03	.31246E-03	.10092E-08
58	.13634E-03	.28825E-03	.93104E-09
59	.12863E-03	.27194E-03	.87837E-09
60	.12447E-03	.26316E-03	.84999E-09

Polygon 84
Time: 30.000

Cell	Cgas(g/cu.ft.)	Cliq(g/cu.ft.)	Csol
1	.17549E-02	.37102E-02	.11984E-07
2	.40541E-02	.85711E-02	.27685E-07
3	.64854E-02	.13711E-01	.44287E-07
4	.88906E-02	.18796E-01	.60712E-07
5	.11221E-01	.23722E-01	.76623E-07
6	.13460E-01	.28456E-01	.91913E-07
7	.15744E-01	.33286E-01	.10751E-06
8	.17973E-01	.37998E-01	.12273E-06
9	.19940E-01	.42157E-01	.13617E-06
10	.21539E-01	.45536E-01	.14708E-06
11	.22756E-01	.48110E-01	.15539E-06
12	.23611E-01	.49918E-01	.16123E-06
13	.24036E-01	.50817E-01	.16414E-06
14	.24098E-01	.50947E-01	.16456E-06
15	.23921E-01	.50572E-01	.16335E-06
16	.23573E-01	.49837E-01	.16097E-06
17	.23070E-01	.48774E-01	.15754E-06
18	.22412E-01	.47383E-01	.15305E-06
19	.21542E-01	.45543E-01	.14710E-06
20	.20504E-01	.43348E-01	.14001E-06
21	.19388E-01	.40989E-01	.13239E-06
22	.18244E-01	.38571E-01	.12459E-06
23	.17086E-01	.36122E-01	.11667E-06
24	.15912E-01	.33640E-01	.10866E-06
25	.14673E-01	.31021E-01	.10020E-06
26	.13405E-01	.28340E-01	.91537E-07
27	.12179E-01	.25749E-01	.83170E-07
28	.11036E-01	.23331E-01	.75359E-07
29	.99780E-02	.21095E-01	.68137E-07
30	.90011E-02	.19030E-01	.61466E-07
31	.80996E-02	.17124E-01	.55310E-07
32	.72698E-02	.15370E-01	.49644E-07
33	.65091E-02	.13761E-01	.44449E-07
34	.58143E-02	.12292E-01	.39705E-07
35	.51823E-02	.10956E-01	.35389E-07
36	.46094E-02	.97451E-02	.31477E-07
37	.40919E-02	.86509E-02	.27942E-07
38	.36258E-02	.76655E-02	.24760E-07
39	.32073E-02	.67808E-02	.21902E-07
40	.28326E-02	.59885E-02	.19343E-07
41	.24980E-02	.52811E-02	.17058E-07
42	.21999E-02	.46510E-02	.15023E-07
43	.19351E-02	.40912E-02	.13215E-07
44	.17005E-02	.35951E-02	.11612E-07

45	.14930E-02	.31565E-02	.10196E-07
46	.13102E-02	.27699E-02	.89468E-08
47	.11494E-02	.24300E-02	.78488E-08
48	.10084E-02	.21320E-02	.68864E-08
49	.88535E-03	.18718E-02	.60458E-08
50	.77826E-03	.16454E-02	.53146E-08
51	.68557E-03	.14494E-02	.46816E-08
52	.60582E-03	.12808E-02	.41370E-08
53	.53775E-03	.11369E-02	.36722E-08
54	.48026E-03	.10154E-02	.32796E-08
55	.43242E-03	.91421E-03	.29529E-08
56	.39343E-03	.83179E-03	.26867E-08
57	.36265E-03	.76671E-03	.24765E-08
58	.33957E-03	.71791E-03	.23188E-08
59	.32381E-03	.68459E-03	.22112E-08
60	.31513E-03	.66623E-03	.21519E-08

V-Leach, VER 1.1
Jake Turin, 11/91
PGA V-leach model, polygon screen-TCE-11/10/92-Poly84.INP. New Soil, Old Chem
1 polygons.
Timestep = 1.00 years. Simulation length = 30.00 years.
Printout every 1.00 years. Vertical profile stored every 10.00 years.
Koc = 123.60 ml/g, .43649E-02cu.ft./g
Kh = .47300 (dimensionless).
Aqueous solubility = 1100.0 mg/l, 31.149 g/cu.ft
Free air diffusion coefficient = .70290 sq. m/day, 2761.7 sq.ft./yr

Polygon 1
Polygon 84
Polygon area = .17100E+06sq. ft.
60 cells, each cell 1.000 ft. thick.
Soil Properties:
Bulk density = 1.6400 g/ml, 46440. g/cu.ft.
Porosity = .3810 Volumetric water content = .2550
Organic carbon content = .00074000
Recharge Rate = .02296600 ft/yr
Conc. in recharge water = .00000 mg/l, .00000 g/cu.ft
Atmospheric concentration = .00000 mg/l, .00000 g/cu.ft
Water table is impermeable to gas diffusion.

Polygon 84 Calculation of Total TCE Mass in Sub-Unit A. Redistributing Total Soil Concentrations using INTERP and original HGC Total Soil Concentrations and Vertical Distributions to derive new VLEACH vertical distribution input data.

Depth Interval (feet)	Depth (feet)	Total Soil Conc INTERP Ct (ug/Kg)	Mt (ug/cc)	Volume Soil (cubic feet)	Mass TCE in interval (grams)	Mass TCE in interval (lb)
0-6	6	348	0.57	1026000	16581.27	36.56
6-12	6	1367.62	2.24	1026000	65163.42	143.66
12-18	6	772.55	1.27	1026000	36809.93	81.15
18-24	6	354.95	0.58	1026000	16912.42	37.29
24-30	6	0	0	1026000	0.00	0.00
30-36	6	0	0	1026000	0.00	0.00
36-42	6	0	0	1026000	0.00	0.00
42-48	6	0	0	1026000	0.00	0.00
48-54	6	0	0	1026000	0.00	0.00
54-60	6	0	0	1026000	0.00	0.00
Totals:	60				135467.04	298.66

P0C484 11/92

System File Edit Window Browse

Change Data If Desired, Hit Ctrl-W when done

Sample Depth (-)	Sample Concentation
-1.00	348.000
-7.50	348.000
-8.00	1367.620
-12.50	1367.620
-13.00	772.550
-17.50	772.550
-18.00	354.950
-22.50	354.950
-23.00	0.000
-62.50	0.000

System File Edit Window Browse

Change Data If Desired, Hit Ctrl-W when done

Sample Depth (-)	Sample Concentation
-1.00	348.000
-7.50	348.000
-8.00	1367.620
-12.50	1367.620
-13.00	772.550
-17.50	772.550
-18.00	354.950
-22.50	354.950
-23.00	0.000
-62.50	0.000

List of interpolated concentrations for desired depths

POLY 84 11/92

At a depth of	:	3.000
Interpolated concentration is:		348.000
At a depth of	:	9.000
Interpolated concentration is:		1367.620
At a depth of	:	15.000
Interpolated concentration is:		772.550
At a depth of	:	21.000
Interpolated concentration is:		354.950
At a depth of	:	27.000
Interpolated concentration is:		0.000
At a depth of	:	33.000
Interpolated concentration is:		0.000
At a depth of	:	39.000
Interpolated concentration is:		0.000
At a depth of	:	45.000
Interpolated concentration is:		0.000
At a depth of	:	51.000
Interpolated concentration is:		0.000
At a depth of	:	57.000
Interpolated concentration is:		0.000
At a depth of	:	60.000
Interpolated concentration is:		0.000

Calculation of Total TCE Mass in Polygon 84
using HGC Distribution and original Depth Intervals

Depth Interval (ft)	Depth (ft)	Total Soil Conc. Ct* (ug/Kg) HGC Data	Mt (ug/cc)	Volume Soil (cu. ft)	Mass of Contaminant (grams)	Mass of Contaminant (pounds)
0-7.5	7.5	348.00	0.57	1282500	20726.58	45.69
7.5-12.5	5	1367.62	2.24	855000	54302.85	119.72
12.5-17.5	5	772.55	1.27	855000	30674.95	67.63
17.5-22.5	5	354.95	0.58	855000	14093.68	31.07
22.5-62.5	40	0.00	0.00	6840000	0.00	0
Totals:	62.5				119798.06	264.11

* Ct Determined as sum of four VOC concentrations listed in Tables D-9 - D-12 of HGC, 1989.

PGA V-leach model, polygon screen-TCE-11/10/92-POLY87.INP. Old chem, New soil.

```
    1
      1.0        30.        1.0        10.
    123.6       .473      1100.      .7029
olygon 87
    75000.         1.    .022966       1.64       .381       .255     .00074
        0.         0.        -1.
   60
    1     6    709.49
    7    12   2788.31
   13    18   1575.07
   19    24    723.68
   25    30      0.00
   31    36      0.00
   37    42      0.00
   43    48      0.00
   49    54      0.00
   55    60      0.00
```

V-Leach, VER 1.1
Jake Turin, 11/91
PGA V-leach model, polygon screen-TCE-11/10/92-POLY87.INP. Old chem, New soil.

Polygon 1
At time = .00, total mass in vadose zone = 1.6151 g/sq.ft.
Mass in gas phase = .20718 g/sq.ft.
Mass in liquid phase = .88646 g/sq.ft.
Mass sorbed = .52145 g/sq.ft.

Polygon 1
At time = 1.00, total mass in vadose zone = 1.5886 g/sq.ft.
Mass in gas phase = .20378 g/sq.ft.
Mass in liquid phase = .87191 g/sq.ft.
Mass sorbed = .51289 g/sq.ft.

Since last printout at time = .00
Change in Total Mass = -.26513E-01g/sq.ft.
Advection in from atmosphere = .00000 g/sq.ft.
Advection in from water table = .00000 g/sq.ft.
Diffusion in from atmosphere = -.26512E-01g/sq.ft.
Diffusion in from water table = .00000 g/sq.ft.
Total inflow at boundaries = -.26512E-01g/sq.ft.
Mass discrepancy = -.21979E-06g/sq.ft.

Since beginning of run at time = 0.0
Change in Total Mass = -.26513E-01g/sq.ft.
Advection in from atmosphere = .00000 g/sq.ft.
Advection in from water table = .00000 g/sq.ft.
Diffusion in from atmosphere = -.26512E-01g/sq.ft.
Diffusion in from water table = .00000 g/sq.ft.
Total inflow at boundaries = -.26512E-01g/sq.ft.
Mass discrepancy = -.21979E-06g/sq.ft.

Polygon 1
At time = 2.00, total mass in vadose zone = 1.5632 g/sq.ft.
Mass in gas phase = .20052 g/sq.ft.
Mass in liquid phase = .85798 g/sq.ft.
Mass sorbed = .50469 g/sq.ft.

Since last printout at time = 1.00
Change in Total Mass = -.25385E-01g/sq.ft.
Advection in from atmosphere = .00000 g/sq.ft.
Advection in from water table = -.77368E-07g/sq.ft.
Diffusion in from atmosphere = -.25385E-01g/sq.ft.
Diffusion in from water table = .00000 g/sq.ft.
Total inflow at boundaries = -.25385E-01g/sq.ft.
Mass discrepancy = -.10990E-06g/sq.ft.

Since beginning of run at time = 0.0
Change in Total Mass = -.51898E-01g/sq.ft.
Advection in from atmosphere = .00000 g/sq.ft.
Advection in from water table = -.77368E-07g/sq.ft.
Diffusion in from atmosphere = -.51897E-01g/sq.ft.
Diffusion in from water table = .00000 g/sq.ft.
Total inflow at boundaries = -.51898E-01g/sq.ft.
Mass discrepancy = -.33155E-06g/sq.ft.

Polygon 1
At time = 3.00, total mass in vadose zone = 1.5389 g/sq.ft.
Mass in gas phase = .19740 g/sq.ft.
Mass in liquid phase = .84462 g/sq.ft.
Mass sorbed = .49684 g/sq.ft.

Since last printout at time = 2.00
Change in Total Mass = -.24332E-01g/sq.ft.
Advection in from atmosphere = .00000 g/sq.ft.
Advection in from water table = -.18832E-06g/sq.ft.
Diffusion in from atmosphere = -.24331E-01g/sq.ft.
Diffusion in from water table = .00000 g/sq.ft.
Total inflow at boundaries = -.24332E-01g/sq.ft.
Mass discrepancy = -.12293E-06g/sq.ft.

Since beginning of run at time = 0.0
Change in Total Mass = -.76230E-01g/sq.ft.
Advection in from atmosphere = .00000 g/sq.ft.
Advection in from water table = -.26568E-06g/sq.ft.
Diffusion in from atmosphere = -.76229E-01g/sq.ft.
Diffusion in from water table = .00000 g/sq.ft.
Total inflow at boundaries = -.76229E-01g/sq.ft.
Mass discrepancy = -.45449E-06g/sq.ft.

Polygon 1
At time = 4.00, total mass in vadose zone = 1.5155 g/sq.ft.
Mass in gas phase = .19441 g/sq.ft.
Mass in liquid phase = .83181 g/sq.ft.
Mass sorbed = .48930 g/sq.ft.

Since last printout at time = 3.00
Change in Total Mass = -.23344E-01g/sq.ft.
Advection in from atmosphere = .00000 g/sq.ft.
Advection in from water table = -.33703E-06g/sq.ft.
Diffusion in from atmosphere = -.23344E-01g/sq.ft.
Diffusion in from water table = .00000 g/sq.ft.
Total inflow at boundaries = -.23345E-01g/sq.ft.
Mass discrepancy = .47311E-06g/sq.ft.

Since beginning of run at time = 0.0
Change in Total Mass = -.99574E-01g/sq.ft.
Advection in from atmosphere = .00000 g/sq.ft.
Advection in from water table = -.60272E-06g/sq.ft.
Diffusion in from atmosphere = -.99573E-01g/sq.ft.
Diffusion in from water table = .00000 g/sq.ft.
Total inflow at boundaries = -.99574E-01g/sq.ft.
Mass discrepancy = .14901E-07g/sq.ft.

Polygon 1
At time = 5.00, total mass in vadose zone = 1.4931 g/sq.ft.
Mass in gas phase = .19153 g/sq.ft.
Mass in liquid phase = .81950 g/sq.ft.
Mass sorbed = .48206 g/sq.ft.

Since last printout at time = 4.00
Change in Total Mass = -.22419E-01g/sq.ft.

```
                Advection in from atmosphere =       .00000    g/sq.ft.
                Advection in from water table =    -.52770E-06g/sq.ft.
                Diffusion in from atmosphere =     -.22418E-01g/sq.ft.
                Diffusion in from water table =      .00000    g/sq.ft.
            Total inflow at boundaries =     -.22418E-01g/sq.ft.
            Mass discrepancy =     -.14529E-06g/sq.ft.

Since beginning of run at time = 0.0
            Change in Total Mass =     -.12199    g/sq.ft.
                Advection in from atmosphere =       .00000    g/sq.ft.
                Advection in from water table =    -.11304E-05g/sq.ft.
                Diffusion in from atmosphere =     -.12199    g/sq.ft.
                Diffusion in from water table =      .00000    g/sq.ft.
            Total inflow at boundaries =     -.12199    g/sq.ft.
            Mass discrepancy =     -.12666E-06g/sq.ft.


Polygon   1
At time =       6.00, total mass in vadose zone =     1.4716    g/sq.ft.
Mass in gas phase     =       .18877    g/sq.ft.
Mass in liquid phase  =       .80768    g/sq.ft.
Mass sorbed           =       .47511    g/sq.ft.

Since last printout at time =       5.00
            Change in Total Mass =     -.21548E-01g/sq.ft.
                Advection in from atmosphere =       .00000    g/sq.ft.
                Advection in from water table =    -.76443E-06g/sq.ft.
                Diffusion in from atmosphere =     -.21547E-01g/sq.ft.
                Diffusion in from water table =      .00000    g/sq.ft.
            Total inflow at boundaries =     -.21548E-01g/sq.ft.
            Mass discrepancy =     -.34086E-06g/sq.ft.

Since beginning of run at time = 0.0
            Change in Total Mass =     -.14354    g/sq.ft.
                Advection in from atmosphere =       .00000    g/sq.ft.
                Advection in from water table =    -.18948E-05g/sq.ft.
                Diffusion in from atmosphere =     -.14354    g/sq.ft.
                Diffusion in from water table =      .00000    g/sq.ft.
            Total inflow at boundaries =     -.14354    g/sq.ft.
            Mass discrepancy =     -.47684E-06g/sq.ft.


Polygon   1
At time =       7.00, total mass in vadose zone =     1.4508    g/sq.ft.
Mass in gas phase     =       .18611    g/sq.ft.
Mass in liquid phase  =       .79630    g/sq.ft.
Mass sorbed           =       .46841    g/sq.ft.

Since last printout at time =       6.00
            Change in Total Mass =     -.20727E-01g/sq.ft.
                Advection in from atmosphere =       .00000    g/sq.ft.
                Advection in from water table =    -.10513E-05g/sq.ft.
                Diffusion in from atmosphere =     -.20726E-01g/sq.ft.
                Diffusion in from water table =      .00000    g/sq.ft.
            Total inflow at boundaries =     -.20727E-01g/sq.ft.
            Mass discrepancy =      .56066E-06g/sq.ft.

Since beginning of run at time = 0.0
            Change in Total Mass =     -.16427    g/sq.ft.
                Advection in from atmosphere =       .00000    g/sq.ft.
```

```
                Advection in from water table =     -.29462E-05g/sq.ft.
                Diffusion in from atmosphere =      -.16426    g/sq.ft.
                Diffusion in from water table =      .00000    g/sq.ft.
           Total inflow at boundaries =     -.16427    g/sq.ft.
           Mass discrepancy =      .89407E-07g/sq.ft.


Polygon   1
At time =       8.00, total mass in vadose zone =     1.4309    g/sq.ft.
Mass in gas phase     =       .18355    g/sq.ft.
Mass in liquid phase  =       .78535    g/sq.ft.
Mass sorbed           =       .46197    g/sq.ft.

Since last printout at time =       7.00
           Change in Total Mass =     -.19953E-01g/sq.ft.
                Advection in from atmosphere =       .00000    g/sq.ft.
                Advection in from water table =     -.13923E-05g/sq.ft.
                Diffusion in from atmosphere =      -.19952E-01g/sq.ft.
                Diffusion in from water table =      .00000    g/sq.ft.
           Total inflow at boundaries =     -.19954E-01g/sq.ft.
           Mass discrepancy =      .42468E-06g/sq.ft.

Since beginning of run at time = 0.0
           Change in Total Mass =     -.18422    g/sq.ft.
                Advection in from atmosphere =       .00000    g/sq.ft.
                Advection in from water table =     -.43385E-05g/sq.ft.
                Diffusion in from atmosphere =      -.18422    g/sq.ft.
                Diffusion in from water table =      .00000    g/sq.ft.
           Total inflow at boundaries =     -.18422    g/sq.ft.
           Mass discrepancy =      .50664E-06g/sq.ft.


Polygon   1
At time =       9.00, total mass in vadose zone =     1.4116    g/sq.ft.
Mass in gas phase     =       .18108    g/sq.ft.
Mass in liquid phase  =       .77480    g/sq.ft.
Mass sorbed           =       .45577    g/sq.ft.

Since last printout at time =       8.00
           Change in Total Mass =     -.19223E-01g/sq.ft.
                Advection in from atmosphere =       .00000    g/sq.ft.
                Advection in from water table =     -.17914E-05g/sq.ft.
                Diffusion in from atmosphere =      -.19221E-01g/sq.ft.
                Diffusion in from water table =      .00000    g/sq.ft.
           Total inflow at boundaries =     -.19223E-01g/sq.ft.
           Mass discrepancy =     -.63702E-06g/sq.ft.

Since beginning of run at time = 0.0
           Change in Total Mass =     -.20344    g/sq.ft.
                Advection in from atmosphere =       .00000    g/sq.ft.
                Advection in from water table =     -.61299E-05g/sq.ft.
                Diffusion in from atmosphere =      -.20344    g/sq.ft.
                Diffusion in from water table =      .00000    g/sq.ft.
           Total inflow at boundaries =     -.20344    g/sq.ft.
           Mass discrepancy =     -.13411E-06g/sq.ft.


Polygon   1
At time =      10.00, total mass in vadose zone =     1.3931    g/sq.ft.
Mass in gas phase     =       .17871    g/sq.ft.
```

```
Mass in liquid phase  =        .76463    g/sq.ft.
Mass sorbed           =        .44978    g/sq.ft.

Since last printout at time =        9.00
               Change in Total Mass =     -.18532E-01g/sq.ft.
                    Advection in from atmosphere =       .00000    g/sq.ft.
                    Advection in from water table =     -.22523E-05g/sq.ft.
                    Diffusion in from atmosphere =      -.18529E-01g/sq.ft.
                    Diffusion in from water table =      .00000    g/sq.ft.
               Total inflow at boundaries =     -.18531E-01g/sq.ft.
               Mass discrepancy =     -.96858E-07g/sq.ft.

Since beginning of run at time = 0.0
               Change in Total Mass =     -.22198    g/sq.ft.
                    Advection in from atmosphere =       .00000    g/sq.ft.
                    Advection in from water table =     -.83821E-05g/sq.ft.
                    Diffusion in from atmosphere =      -.22197    g/sq.ft.
                    Diffusion in from water table =      .00000    g/sq.ft.
               Total inflow at boundaries =     -.22198    g/sq.ft.
               Mass discrepancy =     -.22352E-06g/sq.ft.


Polygon   1
At time =      11.00, total mass in vadose zone =     1.3752    g/sq.ft.
Mass in gas phase     =        .17641    g/sq.ft.
Mass in liquid phase  =        .75481    g/sq.ft.
Mass sorbed           =        .44401    g/sq.ft.

Since last printout at time =       10.00
               Change in Total Mass =     -.17877E-01g/sq.ft.
                    Advection in from atmosphere =       .00000    g/sq.ft.
                    Advection in from water table =     -.27786E-05g/sq.ft.
                    Diffusion in from atmosphere =      -.17874E-01g/sq.ft.
                    Diffusion in from water table =      .00000    g/sq.ft.
               Total inflow at boundaries =     -.17877E-01g/sq.ft.
               Mass discrepancy =     -.20675E-06g/sq.ft.

Since beginning of run at time = 0.0
               Change in Total Mass =     -.23985    g/sq.ft.
                    Advection in from atmosphere =       .00000    g/sq.ft.
                    Advection in from water table =     -.11161E-04g/sq.ft.
                    Diffusion in from atmosphere =      -.23984    g/sq.ft.
                    Diffusion in from water table =      .00000    g/sq.ft.
               Total inflow at boundaries =     -.23985    g/sq.ft.
               Mass discrepancy =     -.43213E-06g/sq.ft.


Polygon   1
At time =      12.00, total mass in vadose zone =     1.3580    g/sq.ft.
Mass in gas phase     =        .17420    g/sq.ft.
Mass in liquid phase  =        .74534    g/sq.ft.
Mass sorbed           =        .43844    g/sq.ft.

Since last printout at time =       11.00
               Change in Total Mass =     -.17256E-01g/sq.ft.
                    Advection in from atmosphere =       .00000    g/sq.ft.
                    Advection in from water table =     -.33740E-05g/sq.ft.
                    Diffusion in from atmosphere =      -.17252E-01g/sq.ft.
                    Diffusion in from water table =      .00000    g/sq.ft.
               Total inflow at boundaries =     -.17256E-01g/sq.ft.
```

Mass discrepancy = .18254E-06g/sq.ft.

Since beginning of run at time = 0.0
Change in Total Mass = -.25711 g/sq.ft.
Advection in from atmosphere = .00000 g/sq.ft.
Advection in from water table = -.14535E-04g/sq.ft.
Diffusion in from atmosphere = -.25709 g/sq.ft.
Diffusion in from water table = .00000 g/sq.ft.
Total inflow at boundaries = -.25711 g/sq.ft.
Mass discrepancy = -.23842E-06g/sq.ft.

Polygon 1
At time = 13.00, total mass in vadose zone = 1.3413 g/sq.ft.
Mass in gas phase = .17206 g/sq.ft.
Mass in liquid phase = .73620 g/sq.ft.
Mass sorbed = .43306 g/sq.ft.

Since last printout at time = 12.00
Change in Total Mass = -.16667E-01g/sq.ft.
Advection in from atmosphere = .00000 g/sq.ft.
Advection in from water table = -.40418E-05g/sq.ft.
Diffusion in from atmosphere = -.16662E-01g/sq.ft.
Diffusion in from water table = .00000 g/sq.ft.
Total inflow at boundaries = -.16666E-01g/sq.ft.
Mass discrepancy = -.25891E-06g/sq.ft.

Since beginning of run at time = 0.0
Change in Total Mass = -.27377 g/sq.ft.
Advection in from atmosphere = .00000 g/sq.ft.
Advection in from water table = -.18577E-04g/sq.ft.
Diffusion in from atmosphere = -.27376 g/sq.ft.
Diffusion in from water table = .00000 g/sq.ft.
Total inflow at boundaries = -.27377 g/sq.ft.
Mass discrepancy = -.50664E-06g/sq.ft.

Polygon 1
At time = 14.00, total mass in vadose zone = 1.3252 g/sq.ft.
Mass in gas phase = .17000 g/sq.ft.
Mass in liquid phase = .72736 g/sq.ft.
Mass sorbed = .42786 g/sq.ft.

Since last printout at time = 13.00
Change in Total Mass = -.16106E-01g/sq.ft.
Advection in from atmosphere = .00000 g/sq.ft.
Advection in from water table = -.47852E-05g/sq.ft.
Diffusion in from atmosphere = -.16101E-01g/sq.ft.
Diffusion in from water table = .00000 g/sq.ft.
Total inflow at boundaries = -.16106E-01g/sq.ft.
Mass discrepancy = .46939E-06g/sq.ft.

Since beginning of run at time = 0.0
Change in Total Mass = -.28988 g/sq.ft.
Advection in from atmosphere = .00000 g/sq.ft.
Advection in from water table = -.23362E-04g/sq.ft.
Diffusion in from atmosphere = -.28986 g/sq.ft.
Diffusion in from water table = .00000 g/sq.ft.
Total inflow at boundaries = -.28988 g/sq.ft.
Mass discrepancy = -.29802E-07g/sq.ft.

```
Polygon   1
At time =      15.00, total mass in vadose zone =     1.3096    g/sq.ft.
Mass in gas phase     =       .16800    g/sq.ft.
Mass in liquid phase  =       .71881    g/sq.ft.
Mass sorbed           =       .42283    g/sq.ft.

Since last printout at time =      14.00
               Change in Total Mass =     -.15574E-01g/sq.ft.
                    Advection in from atmosphere =       .00000    g/sq.ft.
                    Advection in from water table =     -.56073E-05g/sq.ft.
                    Diffusion in from atmosphere =      -.15568E-01g/sq.ft.
                    Diffusion in from water table =      .00000    g/sq.ft.
               Total inflow at boundaries =     -.15573E-01g/sq.ft.
               Mass discrepancy =     -.43586E-06g/sq.ft.

Since beginning of run at time = 0.0
               Change in Total Mass =     -.30545    g/sq.ft.
                    Advection in from atmosphere =       .00000    g/sq.ft.
                    Advection in from water table =     -.28969E-04g/sq.ft.
                    Diffusion in from atmosphere =      -.30542    g/sq.ft.
                    Diffusion in from water table =      .00000    g/sq.ft.
               Total inflow at boundaries =     -.30545    g/sq.ft.
               Mass discrepancy =     -.47684E-06g/sq.ft.


Polygon   1
At time =      16.00, total mass in vadose zone =     1.2946    g/sq.ft.
Mass in gas phase     =       .16607    g/sq.ft.
Mass in liquid phase  =       .71054    g/sq.ft.
Mass sorbed           =       .41797    g/sq.ft.

Since last printout at time =      15.00
               Change in Total Mass =     -.15066E-01g/sq.ft.
                    Advection in from atmosphere =       .00000    g/sq.ft.
                    Advection in from water table =     -.65110E-05g/sq.ft.
                    Diffusion in from atmosphere =      -.15060E-01g/sq.ft.
                    Diffusion in from water table =      .00000    g/sq.ft.
               Total inflow at boundaries =     -.15066E-01g/sq.ft.
               Mass discrepancy =      .24214E-06g/sq.ft.

Since beginning of run at time = 0.0
               Change in Total Mass =     -.32052    g/sq.ft.
                    Advection in from atmosphere =       .00000    g/sq.ft.
                    Advection in from water table =     -.35480E-04g/sq.ft.
                    Diffusion in from atmosphere =      -.32048    g/sq.ft.
                    Diffusion in from water table =      .00000    g/sq.ft.
               Total inflow at boundaries =     -.32052    g/sq.ft.
               Mass discrepancy =     -.20862E-06g/sq.ft.


Polygon   1
At time =      17.00, total mass in vadose zone =     1.2800    g/sq.ft.
Mass in gas phase     =       .16420    g/sq.ft.
Mass in liquid phase  =       .70254    g/sq.ft.
Mass sorbed           =       .41326    g/sq.ft.

Since last printout at time =      16.00
               Change in Total Mass =     -.14583E-01g/sq.ft.
```

```
                Advection in from atmosphere =       .00000    g/sq.ft.
                Advection in from water table =    -.74990E-05g/sq.ft.
                Diffusion in from atmosphere =     -.14575E-01g/sq.ft.
                Diffusion in from water table =      .00000    g/sq.ft.
           Total inflow at boundaries =     -.14583E-01g/sq.ft.
           Mass discrepancy =      .15739E-06g/sq.ft.

Since beginning of run at time = 0.0
           Change in Total Mass =     -.33510    g/sq.ft.
                Advection in from atmosphere =       .00000    g/sq.ft.
                Advection in from water table =    -.42979E-04g/sq.ft.
                Diffusion in from atmosphere =     -.33506    g/sq.ft.
                Diffusion in from water table =      .00000    g/sq.ft.
           Total inflow at boundaries =     -.33510    g/sq.ft.
           Mass discrepancy =     -.59605E-07g/sq.ft.


Polygon   1
At time =      18.00, total mass in vadose zone =     1.2659    g/sq.ft.
Mass in gas phase     =       .16238    g/sq.ft.
Mass in liquid phase  =       .69479    g/sq.ft.
Mass sorbed           =       .40870    g/sq.ft.

Since last printout at time =      17.00
           Change in Total Mass =     -.14122E-01g/sq.ft.
                Advection in from atmosphere =       .00000    g/sq.ft.
                Advection in from water table =    -.85737E-05g/sq.ft.
                Diffusion in from atmosphere =     -.14113E-01g/sq.ft.
                Diffusion in from water table =      .00000    g/sq.ft.
           Total inflow at boundaries =     -.14122E-01g/sq.ft.
           Mass discrepancy =     -.33528E-07g/sq.ft.

Since beginning of run at time = 0.0
           Change in Total Mass =     -.34922    g/sq.ft.
                Advection in from atmosphere =       .00000    g/sq.ft.
                Advection in from water table =    -.51553E-04g/sq.ft.
                Diffusion in from atmosphere =     -.34917    g/sq.ft.
                Diffusion in from water table =      .00000    g/sq.ft.
           Total inflow at boundaries =     -.34922    g/sq.ft.
           Mass discrepancy =     -.89407E-07g/sq.ft.


Polygon   1
At time =      19.00, total mass in vadose zone =     1.2522    g/sq.ft.
Mass in gas phase     =       .16063    g/sq.ft.
Mass in liquid phase  =       .68728    g/sq.ft.
Mass sorbed           =       .40428    g/sq.ft.

Since last printout at time =      18.00
           Change in Total Mass =     -.13682E-01g/sq.ft.
                Advection in from atmosphere =       .00000    g/sq.ft.
                Advection in from water table =    -.97376E-05g/sq.ft.
                Diffusion in from atmosphere =     -.13672E-01g/sq.ft.
                Diffusion in from water table =      .00000    g/sq.ft.
           Total inflow at boundaries =     -.13682E-01g/sq.ft.
           Mass discrepancy =     -.26543E-06g/sq.ft.

Since beginning of run at time = 0.0
           Change in Total Mass =     -.36291    g/sq.ft.
                Advection in from atmosphere =       .00000    g/sq.ft.
```

```
                Advection in from water table =     -.61290E-04g/sq.ft.
                Diffusion in from atmosphere =      -.36284    g/sq.ft.
                Diffusion in from water table =      .00000    g/sq.ft.
           Total inflow at boundaries =     -.36291    g/sq.ft.
           Mass discrepancy =     -.35763E-06g/sq.ft.


Polygon   1
At time =      20.00, total mass in vadose zone =     1.2389    g/sq.ft.
Mass in gas phase     =       .15893    g/sq.ft.
Mass in liquid phase  =       .68000    g/sq.ft.
Mass sorbed           =       .40000    g/sq.ft.

Since last printout at time =      19.00
           Change in Total Mass =     -.13262E-01g/sq.ft.
                Advection in from atmosphere =       .00000    g/sq.ft.
                Advection in from water table =     -.10993E-04g/sq.ft.
                Diffusion in from atmosphere =      -.13251E-01g/sq.ft.
                Diffusion in from water table =      .00000    g/sq.ft.
           Total inflow at boundaries =     -.13262E-01g/sq.ft.
           Mass discrepancy =      .23283E-06g/sq.ft.

Since beginning of run at time = 0.0
           Change in Total Mass =     -.37617    g/sq.ft.
                Advection in from atmosphere =       .00000    g/sq.ft.
                Advection in from water table =     -.72283E-04g/sq.ft.
                Diffusion in from atmosphere =      -.37610    g/sq.ft.
                Diffusion in from water table =      .00000    g/sq.ft.
           Total inflow at boundaries =     -.37617    g/sq.ft.
           Mass discrepancy =     -.14901E-06g/sq.ft.


Polygon   1
At time =      21.00, total mass in vadose zone =     1.2261    g/sq.ft.
Mass in gas phase     =       .15728    g/sq.ft.
Mass in liquid phase  =       .67294    g/sq.ft.
Mass sorbed           =       .39585    g/sq.ft.

Since last printout at time =      20.00
           Change in Total Mass =     -.12860E-01g/sq.ft.
                Advection in from atmosphere =       .00000    g/sq.ft.
                Advection in from water table =     -.12341E-04g/sq.ft.
                Diffusion in from atmosphere =      -.12848E-01g/sq.ft.
                Diffusion in from water table =      .00000    g/sq.ft.
           Total inflow at boundaries =     -.12860E-01g/sq.ft.
           Mass discrepancy =      .18906E-06g/sq.ft.

Since beginning of run at time = 0.0
           Change in Total Mass =     -.38903    g/sq.ft.
                Advection in from atmosphere =       .00000    g/sq.ft.
                Advection in from water table =     -.84624E-04g/sq.ft.
                Diffusion in from atmosphere =      -.38894    g/sq.ft.
                Diffusion in from water table =      .00000    g/sq.ft.
           Total inflow at boundaries =     -.38903    g/sq.ft.
           Mass discrepancy =      .59605E-07g/sq.ft.


Polygon   1
At time =      22.00, total mass in vadose zone =     1.2136    g/sq.ft.
Mass in gas phase     =       .15568    g/sq.ft.
```

Mass in liquid phase = .66609 g/sq.ft.
Mass sorbed = .39182 g/sq.ft.

Since last printout at time = 21.00
Change in Total Mass = -.12477E-01g/sq.ft.
Advection in from atmosphere = .00000 g/sq.ft.
Advection in from water table = -.13784E-04g/sq.ft.
Diffusion in from atmosphere = -.12463E-01g/sq.ft.
Diffusion in from water table = .00000 g/sq.ft.
Total inflow at boundaries = -.12477E-01g/sq.ft.
Mass discrepancy = -.50757E-06g/sq.ft.

Since beginning of run at time = 0.0
Change in Total Mass = -.40150 g/sq.ft.
Advection in from atmosphere = .00000 g/sq.ft.
Advection in from water table = -.98408E-04g/sq.ft.
Diffusion in from atmosphere = -.40141 g/sq.ft.
Diffusion in from water table = .00000 g/sq.ft.
Total inflow at boundaries = -.40150 g/sq.ft.
Mass discrepancy = -.47684E-06g/sq.ft.

Polygon 1
At time = 23.00, total mass in vadose zone = 1.2015 g/sq.ft.
Mass in gas phase = .15412 g/sq.ft.
Mass in liquid phase = .65944 g/sq.ft.
Mass sorbed = .38791 g/sq.ft.

Since last printout at time = 22.00
Change in Total Mass = -.12109E-01g/sq.ft.
Advection in from atmosphere = .00000 g/sq.ft.
Advection in from water table = -.15324E-04g/sq.ft.
Diffusion in from atmosphere = -.12094E-01g/sq.ft.
Diffusion in from water table = .00000 g/sq.ft.
Total inflow at boundaries = -.12109E-01g/sq.ft.
Mass discrepancy = .25425E-06g/sq.ft.

Since beginning of run at time = 0.0
Change in Total Mass = -.41361 g/sq.ft.
Advection in from atmosphere = .00000 g/sq.ft.
Advection in from water table = -.11373E-03g/sq.ft.
Diffusion in from atmosphere = -.41350 g/sq.ft.
Diffusion in from water table = .00000 g/sq.ft.
Total inflow at boundaries = -.41361 g/sq.ft.
Mass discrepancy = -.23842E-06g/sq.ft.

Polygon 1
At time = 24.00, total mass in vadose zone = 1.1897 g/sq.ft.
Mass in gas phase = .15262 g/sq.ft.
Mass in liquid phase = .65299 g/sq.ft.
Mass sorbed = .38411 g/sq.ft.

Since last printout at time = 23.00
Change in Total Mass = -.11757E-01g/sq.ft.
Advection in from atmosphere = .00000 g/sq.ft.
Advection in from water table = -.16962E-04g/sq.ft.
Diffusion in from atmosphere = -.11741E-01g/sq.ft.
Diffusion in from water table = .00000 g/sq.ft.
Total inflow at boundaries = -.11758E-01g/sq.ft.

```
              Mass discrepancy =      .25611E-06g/sq.ft.

Since beginning of run at time = 0.0
              Change in Total Mass =     -.42537    g/sq.ft.
                   Advection in from atmosphere =       .00000    g/sq.ft.
                   Advection in from water table =    -.13069E-03g/sq.ft.
                   Diffusion in from atmosphere =      -.42524    g/sq.ft.
                   Diffusion in from water table =      .00000    g/sq.ft.
              Total inflow at boundaries =     -.42537    g/sq.ft.
              Mass discrepancy =      .00000    g/sq.ft.


Polygon   1
At time =      25.00, total mass in vadose zone =     1.1783    g/sq.ft.
Mass in gas phase     =       .15115    g/sq.ft.
Mass in liquid phase  =       .64672    g/sq.ft.
Mass sorbed           =       .38043    g/sq.ft.

Since last printout at time =      24.00
              Change in Total Mass =     -.11421E-01g/sq.ft.
                   Advection in from atmosphere =       .00000    g/sq.ft.
                   Advection in from water table =    -.18698E-04g/sq.ft.
                   Diffusion in from atmosphere =     -.11402E-01g/sq.ft.
                   Diffusion in from water table =      .00000    g/sq.ft.
              Total inflow at boundaries =     -.11421E-01g/sq.ft.
              Mass discrepancy =     -.28312E-06g/sq.ft.

Since beginning of run at time = 0.0
              Change in Total Mass =     -.43679    g/sq.ft.
                   Advection in from atmosphere =       .00000    g/sq.ft.
                   Advection in from water table =    -.14939E-03g/sq.ft.
                   Diffusion in from atmosphere =      -.43664    g/sq.ft.
                   Diffusion in from water table =      .00000    g/sq.ft.
              Total inflow at boundaries =     -.43679    g/sq.ft.
              Mass discrepancy =     -.26822E-06g/sq.ft.


Polygon   1
At time =      26.00, total mass in vadose zone =     1.1672    g/sq.ft.
Mass in gas phase     =       .14973    g/sq.ft.
Mass in liquid phase  =       .64063    g/sq.ft.
Mass sorbed           =       .37684    g/sq.ft.

Since last printout at time =      25.00
              Change in Total Mass =     -.11098E-01g/sq.ft.
                   Advection in from atmosphere =       .00000    g/sq.ft.
                   Advection in from water table =    -.20535E-04g/sq.ft.
                   Diffusion in from atmosphere =     -.11078E-01g/sq.ft.
                   Diffusion in from water table =      .00000    g/sq.ft.
              Total inflow at boundaries =     -.11098E-01g/sq.ft.
              Mass discrepancy =     -.93132E-09g/sq.ft.

Since beginning of run at time = 0.0
              Change in Total Mass =     -.44789    g/sq.ft.
                   Advection in from atmosphere =       .00000    g/sq.ft.
                   Advection in from water table =    -.16993E-03g/sq.ft.
                   Diffusion in from atmosphere =      -.44772    g/sq.ft.
                   Diffusion in from water table =      .00000    g/sq.ft.
              Total inflow at boundaries =     -.44789    g/sq.ft.
              Mass discrepancy =     -.26822E-06g/sq.ft.
```

```
Polygon   1
At time =      27.00, total mass in vadose zone =     1.1564    g/sq.ft.
Mass in gas phase     =       .14834    g/sq.ft.
Mass in liquid phase  =       .63471    g/sq.ft.
Mass sorbed           =       .37336    g/sq.ft.

Since last printout at time =      26.00
               Change in Total Mass =     -.10789E-01g/sq.ft.
                    Advection in from atmosphere =       .00000    g/sq.ft.
                    Advection in from water table =     -.22472E-04g/sq.ft.
                    Diffusion in from atmosphere =      -.10767E-01g/sq.ft.
                    Diffusion in from water table =      .00000    g/sq.ft.
               Total inflow at boundaries =     -.10789E-01g/sq.ft.
               Mass discrepancy =     -.35111E-06g/sq.ft.

Since beginning of run at time = 0.0
               Change in Total Mass =     -.45868    g/sq.ft.
                    Advection in from atmosphere =       .00000    g/sq.ft.
                    Advection in from water table =     -.19240E-03g/sq.ft.
                    Diffusion in from atmosphere =      -.45849    g/sq.ft.
                    Diffusion in from water table =      .00000    g/sq.ft.
               Total inflow at boundaries =     -.45868    g/sq.ft.
               Mass discrepancy =     -.62585E-06g/sq.ft.


Polygon   1
At time =      28.00, total mass in vadose zone =     1.1459    g/sq.ft.
Mass in gas phase     =       .14700    g/sq.ft.
Mass in liquid phase  =       .62895    g/sq.ft.
Mass sorbed           =       .36997    g/sq.ft.

Since last printout at time =      27.00
               Change in Total Mass =     -.10491E-01g/sq.ft.
                    Advection in from atmosphere =       .00000    g/sq.ft.
                    Advection in from water table =     -.24510E-04g/sq.ft.
                    Diffusion in from atmosphere =      -.10468E-01g/sq.ft.
                    Diffusion in from water table =      .00000    g/sq.ft.
               Total inflow at boundaries =     -.10492E-01g/sq.ft.
               Mass discrepancy =      .10841E-05g/sq.ft.

Since beginning of run at time = 0.0
               Change in Total Mass =     -.46917    g/sq.ft.
                    Advection in from atmosphere =       .00000    g/sq.ft.
                    Advection in from water table =     -.21691E-03g/sq.ft.
                    Diffusion in from atmosphere =      -.46896    g/sq.ft.
                    Diffusion in from water table =      .00000    g/sq.ft.
               Total inflow at boundaries =     -.46917    g/sq.ft.
               Mass discrepancy =      .44703E-06g/sq.ft.


Polygon   1
At time =      29.00, total mass in vadose zone =     1.1357    g/sq.ft.
Mass in gas phase     =       .14569    g/sq.ft.
Mass in liquid phase  =       .62335    g/sq.ft.
Mass sorbed           =       .36668    g/sq.ft.

Since last printout at time =      28.00
               Change in Total Mass =     -.10208E-01g/sq.ft.
```

```
                Advection in from atmosphere =       .00000    g/sq.ft.
                Advection in from water table =    -.26650E-04g/sq.ft.
                Diffusion in from atmosphere =     -.10181E-01g/sq.ft.
                Diffusion in from water table =      .00000    g/sq.ft.
           Total inflow at boundaries =     -.10208E-01g/sq.ft.
           Mass discrepancy =     -.51036E-06g/sq.ft.

Since beginning of run at time = 0.0
           Change in Total Mass =     -.47938    g/sq.ft.
                Advection in from atmosphere =       .00000    g/sq.ft.
                Advection in from water table =    -.24356E-03g/sq.ft.
                Diffusion in from atmosphere =     -.47914    g/sq.ft.
                Diffusion in from water table =      .00000    g/sq.ft.
           Total inflow at boundaries =     -.47938    g/sq.ft.
           Mass discrepancy =     -.59605E-07g/sq.ft.


Polygon   1
At time =      30.00, total mass in vadose zone =     1.1258    g/sq.ft.
Mass in gas phase     =       .14441    g/sq.ft.
Mass in liquid phase  =       .61790    g/sq.ft.
Mass sorbed           =       .36347    g/sq.ft.

Since last printout at time =      29.00
           Change in Total Mass =     -.99347E-02g/sq.ft.
                Advection in from atmosphere =       .00000    g/sq.ft.
                Advection in from water table =    -.28892E-04g/sq.ft.
                Diffusion in from atmosphere =     -.99054E-02g/sq.ft.
                Diffusion in from water table =      .00000    g/sq.ft.
           Total inflow at boundaries =     -.99343E-02g/sq.ft.
           Mass discrepancy =     -.36974E-06g/sq.ft.

Since beginning of run at time = 0.0
           Change in Total Mass =     -.48931    g/sq.ft.
                Advection in from atmosphere =       .00000    g/sq.ft.
                Advection in from water table =    -.27245E-03g/sq.ft.
                Diffusion in from atmosphere =     -.48904    g/sq.ft.
                Diffusion in from water table =      .00000    g/sq.ft.
           Total inflow at boundaries =     -.48931    g/sq.ft.
           Mass discrepancy =     -.41723E-06g/sq.ft.


GROUNDWATER IMPACT OF POLYGON   1

 Time        Mass per area (g/sq.ft.)      Total Mass (g)
     1.00          .00000                    .00000
     2.00          .77368E-07                .58026E-02
     3.00          .18832E-06                .14124E-01
     4.00          .33703E-06                .25278E-01
     5.00          .52770E-06                .39577E-01
     6.00          .76443E-06                .57332E-01
     7.00          .10513E-05                .78848E-01
     8.00          .13923E-05                .10442
     9.00          .17914E-05                .13435
    10.00          .22523E-05                .16892
    11.00          .27786E-05                .20840
    12.00          .33740E-05                .25305
    13.00          .40418E-05                .30314
    14.00          .47852E-05                .35889
    15.00          .56073E-05                .42055
```

16.00	.65110E-05	.48833
17.00	.74990E-05	.56242
18.00	.85737E-05	.64303
19.00	.97376E-05	.73032
20.00	.10993E-04	.82445
21.00	.12341E-04	.92558
22.00	.13784E-04	1.0338
23.00	.15324E-04	1.1493
24.00	.16962E-04	1.2721
25.00	.18698E-04	1.4024
26.00	.20535E-04	1.5401
27.00	.22472E-04	1.6854
28.00	.24510E-04	1.8383
29.00	.26650E-04	1.9988
30.00	.28892E-04	2.1669

****

****

TOTAL GROUNDWATER IMPACT

Time (yr)	Mass (g)	Cumulative Mass (g)
1.00	.00000	.00000
2.00	.58026E-02	.58026E-02
3.00	.14124E-01	.19926E-01
4.00	.25278E-01	.45204E-01
5.00	.39577E-01	.84781E-01
6.00	.57332E-01	.14211
7.00	.78848E-01	.22096
8.00	.10442	.32539
9.00	.13435	.45974
10.00	.16892	.62866
11.00	.20840	.83705
12.00	.25305	1.0901
13.00	.30314	1.3932
14.00	.35889	1.7521
15.00	.42055	2.1727
16.00	.48833	2.6610
17.00	.56242	3.2234
18.00	.64303	3.8665
19.00	.73032	4.5968
20.00	.82445	5.4212
21.00	.92558	6.3468
22.00	1.0338	7.3806
23.00	1.1493	8.5299
24.00	1.2721	9.8021
25.00	1.4024	11.204
26.00	1.5401	12.745
27.00	1.6854	14.430
28.00	1.8383	16.268
29.00	1.9988	18.267
30.00	2.1669	20.434

Polygon 87
Time: .000

Cell	Cgas(g/cu.ft.)	Cliq(g/cu.ft.)	Csol
1	.33543E-01	.70916E-01	.22906E-06
2	.33543E-01	.70916E-01	.22906E-06
3	.33543E-01	.70916E-01	.22906E-06
4	.33543E-01	.70916E-01	.22906E-06
5	.33543E-01	.70916E-01	.22906E-06
6	.33543E-01	.70916E-01	.22906E-06
7	.13183	.27870	.90021E-06
8	.13183	.27870	.90021E-06
9	.13183	.27870	.90021E-06
10	.13183	.27870	.90021E-06
11	.13183	.27870	.90021E-06
12	.13183	.27870	.90021E-06
13	.74466E-01	.15743	.50851E-06
14	.74466E-01	.15743	.50851E-06
15	.74466E-01	.15743	.50851E-06
16	.74466E-01	.15743	.50851E-06
17	.74466E-01	.15743	.50851E-06
18	.74466E-01	.15743	.50851E-06
19	.34214E-01	.72334E-01	.23364E-06
20	.34214E-01	.72334E-01	.23364E-06
21	.34214E-01	.72334E-01	.23364E-06
22	.34214E-01	.72334E-01	.23364E-06
23	.34214E-01	.72334E-01	.23364E-06
24	.34214E-01	.72334E-01	.23364E-06
25	.00000	.00000	.00000
26	.00000	.00000	.00000
27	.00000	.00000	.00000
28	.00000	.00000	.00000
29	.00000	.00000	.00000
30	.00000	.00000	.00000
31	.00000	.00000	.00000
32	.00000	.00000	.00000
33	.00000	.00000	.00000
34	.00000	.00000	.00000
35	.00000	.00000	.00000
36	.00000	.00000	.00000
37	.00000	.00000	.00000
38	.00000	.00000	.00000
39	.00000	.00000	.00000
40	.00000	.00000	.00000
41	.00000	.00000	.00000
42	.00000	.00000	.00000
43	.00000	.00000	.00000
44	.00000	.00000	.00000
45	.00000	.00000	.00000
46	.00000	.00000	.00000
47	.00000	.00000	.00000
48	.00000	.00000	.00000
49	.00000	.00000	.00000
50	.00000	.00000	.00000
51	.00000	.00000	.00000
52	.00000	.00000	.00000
53	.00000	.00000	.00000
54	.00000	.00000	.00000
55	.00000	.00000	.00000
56	.00000	.00000	.00000

57	.00000	.00000	.00000
58	.00000	.00000	.00000
59	.00000	.00000	.00000
60	.00000	.00000	.00000

Polygon 87
Time: 10.000

Cell	Cgas(g/cu.ft.)	Cliq(g/cu.ft.)	Csol
1	.10295E-01	.21764E-01	.70299E-07
2	.19115E-01	.40413E-01	.13053E-06
3	.25901E-01	.54759E-01	.17687E-06
4	.31886E-01	.67411E-01	.21774E-06
5	.37666E-01	.79633E-01	.25721E-06
6	.43490E-01	.91944E-01	.29698E-06
7	.63767E-01	.13481	.43545E-06
8	.76794E-01	.16236	.52441E-06
9	.82991E-01	.17546	.56673E-06
10	.86052E-01	.18193	.58763E-06
11	.87431E-01	.18484	.59704E-06
12	.87485E-01	.18496	.59742E-06
13	.77961E-01	.16482	.53238E-06
14	.71596E-01	.15137	.48891E-06
15	.68184E-01	.14415	.46561E-06
16	.65579E-01	.13864	.44782E-06
17	.62919E-01	.13302	.42966E-06
18	.59957E-01	.12676	.40943E-06
19	.50754E-01	.10730	.34658E-06
20	.44175E-01	.93392E-01	.30166E-06
21	.40018E-01	.84604E-01	.27327E-06
22	.36731E-01	.77656E-01	.25083E-06
23	.33670E-01	.71184E-01	.22993E-06
24	.30629E-01	.64754E-01	.20916E-06
25	.22548E-01	.47670E-01	.15397E-06
26	.16954E-01	.35843E-01	.11577E-06
27	.13672E-01	.28904E-01	.93361E-07
28	.11387E-01	.24074E-01	.77758E-07
29	.95604E-02	.20212E-01	.65286E-07
30	.80336E-02	.16984E-01	.54860E-07
31	.67462E-02	.14263E-01	.46068E-07
32	.56601E-02	.11966E-01	.38652E-07
33	.47448E-02	.10031E-01	.32401E-07
34	.39741E-02	.84019E-02	.27138E-07
35	.33260E-02	.70316E-02	.22712E-07
36	.27814E-02	.58803E-02	.18993E-07
37	.23243E-02	.49139E-02	.15872E-07
38	.19410E-02	.41035E-02	.13254E-07
39	.16198E-02	.34245E-02	.11061E-07
40	.13509E-02	.28561E-02	.92252E-08
41	.11261E-02	.23807E-02	.76896E-08
42	.93811E-03	.19833E-02	.64061E-08
43	.78117E-03	.16515E-02	.53344E-08
44	.65022E-03	.13747E-02	.44402E-08
45	.54107E-03	.11439E-02	.36948E-08
46	.45017E-03	.95172E-03	.30741E-08
47	.37454E-03	.79185E-03	.25577E-08
48	.31172E-03	.65902E-03	.21286E-08
49	.25960E-03	.54884E-03	.17728E-08
50	.21646E-03	.45764E-03	.14782E-08
51	.18085E-03	.38234E-03	.12350E-08
52	.15155E-03	.32041E-03	.10349E-08

53	.12759E-03	.26975E-03	.87130E-09
54	.10814E-03	.22863E-03	.73849E-09
55	.92541E-04	.19565E-03	.63194E-09
56	.80247E-04	.16966E-03	.54799E-09
57	.70840E-04	.14977E-03	.48375E-09
58	.63993E-04	.13529E-03	.43699E-09
59	.59471E-04	.12573E-03	.40611E-09
60	.57117E-04	.12076E-03	.39004E-09

Polygon 87
Time: 20.000

Cell	Cgas(g/cu.ft.)	Cliq(g/cu.ft.)	Csol
1	.53010E-02	.11207E-01	.36199E-07
2	.11861E-01	.25077E-01	.80998E-07
3	.18282E-01	.38651E-01	.12484E-06
4	.24340E-01	.51458E-01	.16621E-06
5	.30125E-01	.63690E-01	.20572E-06
6	.35726E-01	.75530E-01	.24396E-06
7	.43255E-01	.91448E-01	.29538E-06
8	.50532E-01	.10683	.34507E-06
9	.56027E-01	.11845	.38259E-06
10	.59769E-01	.12636	.40815E-06
11	.62142E-01	.13138	.42435E-06
12	.63382E-01	.13400	.43282E-06
13	.62382E-01	.13189	.42599E-06
14	.60471E-01	.12785	.41294E-06
15	.58576E-01	.12384	.40000E-06
16	.56704E-01	.11988	.38722E-06
17	.54650E-01	.11554	.37319E-06
18	.52293E-01	.11056	.35710E-06
19	.48742E-01	.10305	.33284E-06
20	.44885E-01	.94894E-01	.30651E-06
21	.41349E-01	.87418E-01	.28236E-06
22	.38119E-01	.80590E-01	.26031E-06
23	.35035E-01	.74070E-01	.23925E-06
24	.31994E-01	.67640E-01	.21848E-06
25	.28230E-01	.59682E-01	.19277E-06
26	.24486E-01	.51768E-01	.16721E-06
27	.21285E-01	.45000E-01	.14535E-06
28	.18603E-01	.39331E-01	.12704E-06
29	.16296E-01	.34452E-01	.11128E-06
30	.14268E-01	.30165E-01	.97432E-07
31	.12472E-01	.26369E-01	.85171E-07
32	.10883E-01	.23008E-01	.74316E-07
33	.94781E-02	.20038E-01	.64724E-07
34	.82403E-02	.17421E-01	.56271E-07
35	.71523E-02	.15121E-01	.48841E-07
36	.61982E-02	.13104E-01	.42326E-07
37	.53635E-02	.11339E-01	.36626E-07
38	.46347E-02	.97985E-02	.31649E-07
39	.39997E-02	.84560E-02	.27313E-07
40	.34475E-02	.72886E-02	.23542E-07
41	.29682E-02	.62752E-02	.20269E-07
42	.25529E-02	.53972E-02	.17433E-07
43	.21936E-02	.46376E-02	.14980E-07
44	.18834E-02	.39818E-02	.12861E-07
45	.16160E-02	.34166E-02	.11036E-07
46	.13860E-02	.29303E-02	.94647E-08
47	.11885E-02	.25127E-02	.81161E-08
48	.10193E-02	.21550E-02	.69607E-08

49	.87475E-03	.18494E-02	.59735E-08
50	.75162E-03	.15890E-02	.51326E-08
51	.64715E-03	.13682E-02	.44192E-08
52	.55896E-03	.11817E-02	.38170E-08
53	.48502E-03	.10254E-02	.33121E-08
54	.42361E-03	.89558E-03	.28927E-08
55	.37328E-03	.78917E-03	.25490E-08
56	.33284E-03	.70367E-03	.22729E-08
57	.30132E-03	.63704E-03	.20576E-08
58	.27797E-03	.58768E-03	.18982E-08
59	.26225E-03	.55444E-03	.17908E-08
60	.25378E-03	.53652E-03	.17330E-08

Polygon 87
Time: 30.000

Cell	Cgas(g/cu.ft.)	Cliq(g/cu.ft.)	Csol
1	.35779E-02	.75643E-02	.24433E-07
2	.82656E-02	.17475E-01	.56444E-07
3	.13222E-01	.27954E-01	.90292E-07
4	.18126E-01	.38322E-01	.12378E-06
5	.22876E-01	.48365E-01	.15622E-06
6	.27441E-01	.58016E-01	.18739E-06
7	.32099E-01	.67863E-01	.21920E-06
8	.36644E-01	.77470E-01	.25023E-06
9	.40654E-01	.85950E-01	.27762E-06
10	.43913E-01	.92839E-01	.29987E-06
11	.46395E-01	.98086E-01	.31682E-06
12	.48138E-01	.10177	.32872E-06
13	.49005E-01	.10361	.33465E-06
14	.49131E-01	.10387	.33550E-06
15	.48769E-01	.10311	.33303E-06
16	.48060E-01	.10161	.32819E-06
17	.47035E-01	.99441E-01	.32119E-06
18	.45694E-01	.96604E-01	.31203E-06
19	.43919E-01	.92852E-01	.29991E-06
20	.41803E-01	.88378E-01	.28546E-06
21	.39527E-01	.83568E-01	.26992E-06
22	.37197E-01	.78640E-01	.25401E-06
23	.34834E-01	.73645E-01	.23787E-06
24	.32441E-01	.68585E-01	.22153E-06
25	.29915E-01	.63246E-01	.20428E-06
26	.27330E-01	.57779E-01	.18663E-06
27	.24831E-01	.52498E-01	.16957E-06
28	.22499E-01	.47567E-01	.15364E-06
29	.20343E-01	.43009E-01	.13892E-06
30	.18351E-01	.38798E-01	.12532E-06
31	.16513E-01	.34912E-01	.11277E-06
32	.14822E-01	.31336E-01	.10121E-06
33	.13271E-01	.28057E-01	.90623E-07
34	.11854E-01	.25062E-01	.80950E-07
35	.10566E-01	.22338E-01	.72151E-07
36	.93977E-02	.19868E-01	.64175E-07
37	.83425E-02	.17638E-01	.56969E-07
38	.73923E-02	.15629E-01	.50480E-07
39	.65391E-02	.13825E-01	.44654E-07
40	.57751E-02	.12209E-01	.39437E-07
41	.50929E-02	.10767E-01	.34778E-07
42	.44852E-02	.94825E-02	.30628E-07
43	.39454E-02	.83411E-02	.26942E-07
44	.34669E-02	.73297E-02	.23675E-07

45	.30440E-02	.64356E-02	.20787E-07
46	.26712E-02	.56473E-02	.18241E-07
47	.23433E-02	.49542E-02	.16002E-07
48	.20560E-02	.43468E-02	.14040E-07
49	.18050E-02	.38162E-02	.12326E-07
50	.15867E-02	.33546E-02	.10835E-07
51	.13977E-02	.29550E-02	.95448E-08
52	.12351E-02	.26113E-02	.84345E-08
53	.10964E-02	.23179E-02	.74868E-08
54	.97916E-03	.20701E-02	.66865E-08
55	.88163E-03	.18639E-02	.60204E-08
56	.80214E-03	.16959E-02	.54776E-08
57	.73938E-03	.15632E-02	.50491E-08
58	.69232E-03	.14637E-02	.47277E-08
59	.66019E-03	.13957E-02	.45083E-08
60	.64249E-03	.13583E-02	.43874E-08

V-Leach, VER 1.1
Jake Turin, 11/91
PGA V-leach model, polygon screen-TCE-11/10/92-POLY87.INP. Old chem, New soil.
1 polygons.
Timestep = 1.00 years. Simulation length = 30.00 years.
Printout every 1.00 years. Vertical profile stored every 10.00 years.
Koc = 123.60 ml/g, .43649E-02cu.ft./g
Kh = .47300 (dimensionless).
Aqueous solubility = 1100.0 mg/l, 31.149 g/cu.ft
Free air diffusion coefficient = .70290 sq. m/day, 2761.7 sq.ft./yr

Polygon 1
Polygon 87
Polygon area = 75000. sq. ft.
60 cells, each cell 1.000 ft. thick.
Soil Properties:
Bulk density = 1.6400 g/ml, 46440. g/cu.ft.
Porosity = .3810 Volumetric water content = .2550
Organic carbon content = .00074000
Recharge Rate = .02296600 ft/yr
Conc. in recharge water = .00000 mg/l, .00000 g/cu.ft
Atmospheric concentration = .00000 mg/l, .00000 g/cu.ft
Water table is impermeable to gas diffusion.

Polygon 87 Calculation of Total TCE Mass in Sub-Unit A. Redistributing Total Soil Concentrations using INTERP and original HGC Total Soil Concentrations and Vertical Distributions to derive new VLEACH vertical distribution input data.

Depth Interval (feet)	Depth (feet)	Total Soil Conc INTERP Ct (ug/Kg)	Mt (ug/cc)	Volume Soil (cubic feet)	Mass TCE in interval (grams)	Mass TCE in interval (lb)
0-6	6	709.49	1.16	450000	14826.88	32.69
6-12	6	2788.31	4.57	450000	58269.95	128.46
12-18	6	1575.07	2.58	450000	32915.73	72.57
18-24	6	723.68	1.19	450000	15123.43	33.34
24-30	6	0	0	450000	0.00	0.00
30-36	6	0	0	450000	0.00	0.00
36-42	6	0	0	450000	0.00	0.00
42-48	6	0	0	450000	0.00	0.00
48-54	6	0	0	450000	0.00	0.00
54-60	6	0	0	450000	0.00	0.00
Totals:	60				121135.99	267.06

POLY 87 4/92

At a depth of	:	3.000
Interpolated concentration is:		709.490
At a depth of	:	9.000
Interpolated concentration is:		2788.310
At a depth of	:	15.000
Interpolated concentration is:		1575.070
At a depth of	:	21.000
Interpolated concentration is:		723.680
At a depth of	:	27.000
Interpolated concentration is:		0.000
At a depth of	:	33.000
Interpolated concentration is:		0.000
At a depth of	:	39.000
Interpolated concentration is:		0.000
At a depth of	:	45.000
Interpolated concentration is:		0.000
At a depth of	:	51.000
Interpolated concentration is:		0.000
At a depth of	:	57.000
Interpolated concentration is:		0.000
At a depth of	:	60.000
Interpolated concentration is:		0.000

POLY 87 11/92

System File Edit Window Browse

Change Data If Desired, Hit Ctrl-W when done

Sample Depth (-)	Sample Concentation
-1.00	709.490
-7.50	709.490
-8.00	2788.310
-12.50	2788.310
-13.00	1575.070
-17.50	1575.070
-18.00	723.680
-22.50	723.680
-23.00	0.000
-62.50	0.000

System File Edit Window Browse

Change Data If Desired, Hit Ctrl-W when done

Sample Depth (-)	Sample Concentation
-1.00	709.490
-7.50	709.490
-8.00	2788.310
-12.50	2788.310
-13.00	1575.070
-17.50	1575.070
-18.00	723.680
-22.50	723.680
-23.00	0.000
-62.50	0.000

List of interpolated concentrations for desired depths

Calculation of Total TCE Mass in Polygon 87
using HGC Distribution and original Depth Intervals

Depth Interval (ft)	Depth (ft)	Total Soil Conc. Ct*(ug/Kg) HGC Data	Mt (ug/cc)	Volume Soil (cu. ft)	Mass of Contaminant (grams)	Mass of Contaminant (pounds)
0-7.5	7.5	709.49	1.16	562500	18533.60	40.86
7.5-12.5	5	2788.31	4.57	375000	48558.29	107.05
12.5-17.5	5	1575.07	2.58	375000	27429.77	60.47
17.5-22.5	5	723.68	1.19	375000	12602.85	27.78
22.5-62.5	40	0	0.00	3000000	0.00	0
Totals:	62.5				107124.53	236.17

*Ct Determined as sum of four VOC concentrations listed in Tables D-9 - D-12 of HGC, 1989.

```
PGA V-leach model, polygon screen-TCE-10/30/92-POLY116.INP-full dist-VPB.
    1
       1.0          30.          1.0          10.
     123.6         .473        1100.        .7029
olygon 116
    130000.           1.     .082021         1.64         .381         .255      .00074
         0.           0.          -1.
    60
     1     6      0.021
     7    12      0.063
    13    18      0.105
    19    24      0.198
    25    30      0.301
    31    36      1.156
    37    42      2.162
    43    48      3.250
    49    54      4.380
    55    60      4.757
```

V-Leach, VER 1.1
Jake Turin, 11/91
PGA V-leach model, polygon screen-TCE-10/30/92-POLY116.INP-full dist-VPB.

Polygon 1
At time = .00, total mass in vadose zone = .45676E-02g/sq.ft.
Mass in gas phase = .58592E-03g/sq.ft.
Mass in liquid phase = .25070E-02g/sq.ft.
Mass sorbed = .14747E-02g/sq.ft.

Polygon 1
At time = 1.00, total mass in vadose zone = .45277E-02g/sq.ft.
Mass in gas phase = .58081E-03g/sq.ft.
Mass in liquid phase = .24851E-02g/sq.ft.
Mass sorbed = .14618E-02g/sq.ft.

Since last printout at time = .00
Change in Total Mass = -.39872E-04g/sq.ft.
Advection in from atmosphere = .00000 g/sq.ft.
Advection in from water table = -.38999E-04g/sq.ft.
Diffusion in from atmosphere = -.87259E-06g/sq.ft.
Diffusion in from water table = .00000 g/sq.ft.
Total inflow at boundaries = -.39872E-04g/sq.ft.
Mass discrepancy = -.40382E-09g/sq.ft.

Since beginning of run at time = 0.0
Change in Total Mass = -.39872E-04g/sq.ft.
Advection in from atmosphere = .00000 g/sq.ft.
Advection in from water table = -.38999E-04g/sq.ft.
Diffusion in from atmosphere = -.87259E-06g/sq.ft.
Diffusion in from water table = .00000 g/sq.ft.
Total inflow at boundaries = -.39872E-04g/sq.ft.
Mass discrepancy = -.40382E-09g/sq.ft.

Polygon 1
At time = 2.00, total mass in vadose zone = .44881E-02g/sq.ft.
Mass in gas phase = .57572E-03g/sq.ft.
Mass in liquid phase = .24633E-02g/sq.ft.
Mass sorbed = .14490E-02g/sq.ft.

Since last printout at time = 1.00
Change in Total Mass = -.39647E-04g/sq.ft.
Advection in from atmosphere = .00000 g/sq.ft.
Advection in from water table = -.38796E-04g/sq.ft.
Diffusion in from atmosphere = -.85183E-06g/sq.ft.
Diffusion in from water table = .00000 g/sq.ft.
Total inflow at boundaries = -.39648E-04g/sq.ft.
Mass discrepancy = .65847E-09g/sq.ft.

Since beginning of run at time = 0.0
Change in Total Mass = -.79519E-04g/sq.ft.
Advection in from atmosphere = .00000 g/sq.ft.
Advection in from water table = -.77795E-04g/sq.ft.
Diffusion in from atmosphere = -.17244E-05g/sq.ft.
Diffusion in from water table = .00000 g/sq.ft.
Total inflow at boundaries = -.79519E-04g/sq.ft.
Mass discrepancy = .24738E-09g/sq.ft.

```
Polygon   1
 time =       3.00, total mass in vadose zone =     .44486E-02g/sq.ft.
ss in gas phase     =       .57067E-03g/sq.ft.
Mass in liquid phase  =       .24417E-02g/sq.ft.
Mass sorbed           =       .14363E-02g/sq.ft.

Since last printout at time =       2.00
               Change in Total Mass =     -.39413E-04g/sq.ft.
                    Advection in from atmosphere =       .00000    g/sq.ft.
                    Advection in from water table =     -.38577E-04g/sq.ft.
                    Diffusion in from atmosphere =      -.83552E-06g/sq.ft.
                    Diffusion in from water table =      .00000    g/sq.ft.
               Total inflow at boundaries =     -.39412E-04g/sq.ft.
               Mass discrepancy =     -.40018E-09g/sq.ft.

Since beginning of run at time = 0.0
               Change in Total Mass =     -.11893E-03g/sq.ft.
                    Advection in from atmosphere =       .00000    g/sq.ft.
                    Advection in from water table =     -.11637E-03g/sq.ft.
                    Diffusion in from atmosphere =      -.25599E-05g/sq.ft.
                    Diffusion in from water table =      .00000    g/sq.ft.
               Total inflow at boundaries =     -.11893E-03g/sq.ft.
               Mass discrepancy =     -.15280E-09g/sq.ft.


Polygon   1
At time =       4.00, total mass in vadose zone =     .44095E-02g/sq.ft.
ss in gas phase     =       .56564E-03g/sq.ft.
ass in liquid phase  =       .24202E-02g/sq.ft.
Mass sorbed           =       .14237E-02g/sq.ft.

Since last printout at time =       3.00
               Change in Total Mass =     -.39165E-04g/sq.ft.
                    Advection in from atmosphere =       .00000    g/sq.ft.
                    Advection in from water table =     -.38343E-04g/sq.ft.
                    Diffusion in from atmosphere =      -.82296E-06g/sq.ft.
                    Diffusion in from water table =      .00000    g/sq.ft.
               Total inflow at boundaries =     -.39166E-04g/sq.ft.
               Mass discrepancy =      .43292E-09g/sq.ft.

Since beginning of run at time = 0.0
               Change in Total Mass =     -.15810E-03g/sq.ft.
                    Advection in from atmosphere =       .00000    g/sq.ft.
                    Advection in from water table =     -.15471E-03g/sq.ft.
                    Diffusion in from atmosphere =      -.33829E-05g/sq.ft.
                    Diffusion in from water table =      .00000    g/sq.ft.
               Total inflow at boundaries =     -.15810E-03g/sq.ft.
               Mass discrepancy =      .27649E-09g/sq.ft.


Polygon   1
At time =       5.00, total mass in vadose zone =     .43706E-02g/sq.ft.
ss in gas phase     =       .56065E-03g/sq.ft.
ass in liquid phase  =       .23988E-02g/sq.ft.
Mass sorbed           =       .14111E-02g/sq.ft.

Since last printout at time =       4.00
               Change in Total Mass =     -.38909E-04g/sq.ft.
```

```
                    Advection in from atmosphere =       .00000    g/sq.ft.
                    Advection in from water table =     -.38095E-04g/sq.ft.
                    Diffusion in from atmosphere =      -.81357E-06g/sq.ft.
                    Diffusion in from water table =      .00000    g/sq.ft.
               Total inflow at boundaries =     -.38908E-04g/sq.ft.
               Mass discrepancy =     -.51659E-09g/sq.ft.

Since beginning of run at time = 0.0
               Change in Total Mass =     -.19701E-03g/sq.ft.
                    Advection in from atmosphere =       .00000    g/sq.ft.
                    Advection in from water table =     -.19281E-03g/sq.ft.
                    Diffusion in from atmosphere =      -.41965E-05g/sq.ft.
                    Diffusion in from water table =      .00000    g/sq.ft.
               Total inflow at boundaries =     -.19701E-03g/sq.ft.
               Mass discrepancy =     -.24738E-09g/sq.ft.


Polygon   1
At time =       6.00, total mass in vadose zone =     .43319E-02g/sq.ft.
Mass in gas phase     =       .55569E-03g/sq.ft.
Mass in liquid phase  =       .23776E-02g/sq.ft.
Mass sorbed           =       .13986E-02g/sq.ft.

Since last printout at time =       5.00
               Change in Total Mass =     -.38639E-04g/sq.ft.
                    Advection in from atmosphere =       .00000    g/sq.ft.
                    Advection in from water table =     -.37833E-04g/sq.ft.
                    Diffusion in from atmosphere =      -.80685E-06g/sq.ft.
                    Diffusion in from water table =      .00000    g/sq.ft.
               Total inflow at boundaries =     -.38640E-04g/sq.ft.
               Mass discrepancy =      .72396E-09g/sq.ft.

Since beginning of run at time = 0.0
               Change in Total Mass =     -.23565E-03g/sq.ft.
                    Advection in from atmosphere =       .00000    g/sq.ft.
                    Advection in from water table =     -.23064E-03g/sq.ft.
                    Diffusion in from atmosphere =      -.50033E-05g/sq.ft.
                    Diffusion in from water table =      .00000    g/sq.ft.
               Total inflow at boundaries =     -.23565E-03g/sq.ft.
               Mass discrepancy =      .46566E-09g/sq.ft.


Polygon   1
At time =       7.00, total mass in vadose zone =     .42936E-02g/sq.ft.
Mass in gas phase     =       .55077E-03g/sq.ft.
Mass in liquid phase  =       .23566E-02g/sq.ft.
Mass sorbed           =       .13862E-02g/sq.ft.

Since last printout at time =       6.00
               Change in Total Mass =     -.38362E-04g/sq.ft.
                    Advection in from atmosphere =       .00000    g/sq.ft.
                    Advection in from water table =     -.37559E-04g/sq.ft.
                    Diffusion in from atmosphere =      -.80240E-06g/sq.ft.
                    Diffusion in from water table =      .00000    g/sq.ft.
               Total inflow at boundaries =     -.38361E-04g/sq.ft.
               Mass discrepancy =     -.50568E-09g/sq.ft.

Since beginning of run at time = 0.0
               Change in Total Mass =     -.27401E-03g/sq.ft.
                    Advection in from atmosphere =       .00000    g/sq.ft.
```

```
                    Advection in from water table =     -.26820E-03g/sq.ft.
                    Diffusion in from atmosphere =      -.58057E-05g/sq.ft.
                    Diffusion in from water table =      .00000    g/sq.ft.
               Total inflow at boundaries =     -.27401E-03g/sq.ft.
               Mass discrepancy =     -.29104E-10g/sq.ft.


Polygon   1
At time =       8.00, total mass in vadose zone =     .42555E-02g/sq.ft.
Mass in gas phase     =       .54589E-03g/sq.ft.
Mass in liquid phase  =       .23357E-02g/sq.ft.
Mass sorbed           =       .13739E-02g/sq.ft.

Since last printout at time =       7.00
               Change in Total Mass =     -.38073E-04g/sq.ft.
                    Advection in from atmosphere =       .00000    g/sq.ft.
                    Advection in from water table =     -.37273E-04g/sq.ft.
                    Diffusion in from atmosphere =      -.79984E-06g/sq.ft.
                    Diffusion in from water table =      .00000    g/sq.ft.
               Total inflow at boundaries =     -.38073E-04g/sq.ft.
               Mass discrepancy =     -.30559E-09g/sq.ft.

Since beginning of run at time = 0.0
               Change in Total Mass =     -.31208E-03g/sq.ft.
                    Advection in from atmosphere =       .00000    g/sq.ft.
                    Advection in from water table =     -.30547E-03g/sq.ft.
                    Diffusion in from atmosphere =      -.66056E-05g/sq.ft.
                    Diffusion in from water table =      .00000    g/sq.ft.
               Total inflow at boundaries =     -.31208E-03g/sq.ft.
               Mass discrepancy =     -.34925E-09g/sq.ft.


Polygon   1
At time =       9.00, total mass in vadose zone =     .42177E-02g/sq.ft.
Mass in gas phase     =       .54104E-03g/sq.ft.
Mass in liquid phase  =       .23149E-02g/sq.ft.
Mass sorbed           =       .13617E-02g/sq.ft.

Since last printout at time =       8.00
               Change in Total Mass =     -.37775E-04g/sq.ft.
                    Advection in from atmosphere =       .00000    g/sq.ft.
                    Advection in from water table =     -.36976E-04g/sq.ft.
                    Diffusion in from atmosphere =      -.79890E-06g/sq.ft.
                    Diffusion in from water table =      .00000    g/sq.ft.
               Total inflow at boundaries =     -.37775E-04g/sq.ft.
               Mass discrepancy =      .25830E-09g/sq.ft.

Since beginning of run at time = 0.0
               Change in Total Mass =     -.34985E-03g/sq.ft.
                    Advection in from atmosphere =       .00000    g/sq.ft.
                    Advection in from water table =     -.34245E-03g/sq.ft.
                    Diffusion in from atmosphere =      -.74045E-05g/sq.ft.
                    Diffusion in from water table =      .00000    g/sq.ft.
               Total inflow at boundaries =     -.34985E-03g/sq.ft.
               Mass discrepancy =     -.87311E-10g/sq.ft.


Polygon   1
At time =      10.00, total mass in vadose zone =     .41803E-02g/sq.ft.
Mass in gas phase     =       .53624E-03g/sq.ft.
```

```
Mass in liquid phase  =        .22944E-02g/sq.ft.
Mass sorbed           =        .13496E-02g/sq.ft.

Since last printout at time =       9.00
               Change in Total Mass =     -.37469E-04g/sq.ft.
                    Advection in from atmosphere =        .00000    g/sq.ft.
                    Advection in from water table =     -.36670E-04g/sq.ft.
                    Diffusion in from atmosphere =      -.79931E-06g/sq.ft.
                    Diffusion in from water table =       .00000    g/sq.ft.
               Total inflow at boundaries =     -.37470E-04g/sq.ft.
               Mass discrepancy =      .11678E-08g/sq.ft.

Since beginning of run at time = 0.0
               Change in Total Mass =     -.38732E-03g/sq.ft.
                    Advection in from atmosphere =        .00000    g/sq.ft.
                    Advection in from water table =     -.37912E-03g/sq.ft.
                    Diffusion in from atmosphere =      -.82038E-05g/sq.ft.
                    Diffusion in from water table =       .00000    g/sq.ft.
               Total inflow at boundaries =     -.38732E-03g/sq.ft.
               Mass discrepancy =      .10768E-08g/sq.ft.


Polygon   1
At time =      11.00, total mass in vadose zone =     .41431E-02g/sq.ft.
Mass in gas phase     =        .53147E-03g/sq.ft.
Mass in liquid phase  =        .22740E-02g/sq.ft.
Mass sorbed           =        .13376E-02g/sq.ft.

Since last printout at time =      10.00
               Change in Total Mass =     -.37157E-04g/sq.ft.
                    Advection in from atmosphere =        .00000    g/sq.ft.
                    Advection in from water table =     -.36356E-04g/sq.ft.
                    Diffusion in from atmosphere =      -.80087E-06g/sq.ft.
                    Diffusion in from water table =       .00000    g/sq.ft.
               Total inflow at boundaries =     -.37157E-04g/sq.ft.
               Mass discrepancy =     -.32378E-09g/sq.ft.

Since beginning of run at time = 0.0
               Change in Total Mass =     -.42448E-03g/sq.ft.
                    Advection in from atmosphere =        .00000    g/sq.ft.
                    Advection in from water table =     -.41548E-03g/sq.ft.
                    Diffusion in from atmosphere =      -.90046E-05g/sq.ft.
                    Diffusion in from water table =       .00000    g/sq.ft.
               Total inflow at boundaries =     -.42448E-03g/sq.ft.
               Mass discrepancy =      .75670E-09g/sq.ft.


Polygon   1
At time =      12.00, total mass in vadose zone =     .41063E-02g/sq.ft.
Mass in gas phase     =        .52674E-03g/sq.ft.
Mass in liquid phase  =        .22538E-02g/sq.ft.
Mass sorbed           =        .13258E-02g/sq.ft.

Since last printout at time =      11.00
               Change in Total Mass =     -.36838E-04g/sq.ft.
                    Advection in from atmosphere =        .00000    g/sq.ft.
                    Advection in from water table =     -.36035E-04g/sq.ft.
                    Diffusion in from atmosphere =      -.80338E-06g/sq.ft.
                    Diffusion in from water table =       .00000    g/sq.ft.
               Total inflow at boundaries =     -.36838E-04g/sq.ft.
```

```
              Mass discrepancy =      .25466E-10g/sq.ft.

Since beginning of run at time = 0.0
              Change in Total Mass =     -.46132E-03g/sq.ft.
                   Advection in from atmosphere =       .00000    g/sq.ft.
                   Advection in from water table =     -.45151E-03g/sq.ft.
                   Diffusion in from atmosphere =      -.98080E-05g/sq.ft.
                   Diffusion in from water table =      .00000    g/sq.ft.
              Total inflow at boundaries =     -.46132E-03g/sq.ft.
              Mass discrepancy =      .78580E-09g/sq.ft.


Polygon   1
At time =      13.00, total mass in vadose zone =     .40697E-02g/sq.ft.
Mass in gas phase     =       .52206E-03g/sq.ft.
Mass in liquid phase  =       .22337E-02g/sq.ft.
Mass sorbed           =       .13140E-02g/sq.ft.

Since last printout at time =      12.00
              Change in Total Mass =     -.36515E-04g/sq.ft.
                   Advection in from atmosphere =       .00000    g/sq.ft.
                   Advection in from water table =     -.35708E-04g/sq.ft.
                   Diffusion in from atmosphere =      -.80669E-06g/sq.ft.
                   Diffusion in from water table =      .00000    g/sq.ft.
              Total inflow at boundaries =     -.36515E-04g/sq.ft.
              Mass discrepancy =     -.61846E-10g/sq.ft.

Since beginning of run at time = 0.0
              Change in Total Mass =     -.49783E-03g/sq.ft.
                   Advection in from atmosphere =       .00000    g/sq.ft.
                   Advection in from water table =     -.48722E-03g/sq.ft.
                   Diffusion in from atmosphere =      -.10615E-04g/sq.ft.
                   Diffusion in from water table =      .00000    g/sq.ft.
              Total inflow at boundaries =     -.49783E-03g/sq.ft.
              Mass discrepancy =      .69849E-09g/sq.ft.


Polygon   1
At time =      14.00, total mass in vadose zone =     .40336E-02g/sq.ft.
Mass in gas phase     =       .51742E-03g/sq.ft.
Mass in liquid phase  =       .22139E-02g/sq.ft.
Mass sorbed           =       .13023E-02g/sq.ft.

Since last printout at time =      13.00
              Change in Total Mass =     -.36187E-04g/sq.ft.
                   Advection in from atmosphere =       .00000    g/sq.ft.
                   Advection in from water table =     -.35376E-04g/sq.ft.
                   Diffusion in from atmosphere =      -.81066E-06g/sq.ft.
                   Diffusion in from water table =      .00000    g/sq.ft.
              Total inflow at boundaries =     -.36187E-04g/sq.ft.
              Mass discrepancy =     -.12005E-09g/sq.ft.

Since beginning of run at time = 0.0
              Change in Total Mass =     -.53402E-03g/sq.ft.
                   Advection in from atmosphere =       .00000    g/sq.ft.
                   Advection in from water table =     -.52260E-03g/sq.ft.
                   Diffusion in from atmosphere =      -.11425E-04g/sq.ft.
                   Diffusion in from water table =      .00000    g/sq.ft.
              Total inflow at boundaries =     -.53402E-03g/sq.ft.
              Mass discrepancy =      .58208E-09g/sq.ft.
```

```
Polygon   1
At time =      15.00, total mass in vadose zone =     .39977E-02g/sq.ft.
Mass in gas phase     =       .51282E-03g/sq.ft.
Mass in liquid phase  =       .21942E-02g/sq.ft.
Mass sorbed           =       .12907E-02g/sq.ft.

Since last printout at time =      14.00
               Change in Total Mass =     -.35855E-04g/sq.ft.
                    Advection in from atmosphere =       .00000    g/sq.ft.
                    Advection in from water table =     -.35041E-04g/sq.ft.
                    Diffusion in from atmosphere =      -.81518E-06g/sq.ft.
                    Diffusion in from water table =      .00000    g/sq.ft.
               Total inflow at boundaries =     -.35856E-04g/sq.ft.
               Mass discrepancy =      .71304E-09g/sq.ft.

Since beginning of run at time = 0.0
               Change in Total Mass =     -.56988E-03g/sq.ft.
                    Advection in from atmosphere =       .00000    g/sq.ft.
                    Advection in from water table =     -.55764E-03g/sq.ft.
                    Diffusion in from atmosphere =      -.12241E-04g/sq.ft.
                    Diffusion in from water table =      .00000    g/sq.ft.
               Total inflow at boundaries =     -.56988E-03g/sq.ft.
               Mass discrepancy =      .13388E-08g/sq.ft.


Polygon   1
At time =      16.00, total mass in vadose zone =     .39622E-02g/sq.ft.
Mass in gas phase     =       .50826E-03g/sq.ft.
Mass in liquid phase  =       .21747E-02g/sq.ft.
Mass sorbed           =       .12792E-02g/sq.ft.

Since last printout at time =      15.00
               Change in Total Mass =     -.35523E-04g/sq.ft.
                    Advection in from atmosphere =       .00000    g/sq.ft.
                    Advection in from water table =     -.34702E-04g/sq.ft.
                    Diffusion in from atmosphere =      -.82015E-06g/sq.ft.
                    Diffusion in from water table =      .00000    g/sq.ft.
               Total inflow at boundaries =     -.35522E-04g/sq.ft.
               Mass discrepancy =     -.49477E-09g/sq.ft.

Since beginning of run at time = 0.0
               Change in Total Mass =     -.60540E-03g/sq.ft.
                    Advection in from atmosphere =       .00000    g/sq.ft.
                    Advection in from water table =     -.59234E-03g/sq.ft.
                    Diffusion in from atmosphere =      -.13061E-04g/sq.ft.
                    Diffusion in from water table =      .00000    g/sq.ft.
               Total inflow at boundaries =     -.60540E-03g/sq.ft.
               Mass discrepancy =      .81491E-09g/sq.ft.


Polygon   1
At time =      17.00, total mass in vadose zone =     .39270E-02g/sq.ft.
Mass in gas phase     =       .50375E-03g/sq.ft.
Mass in liquid phase  =       .21554E-02g/sq.ft.
Mass sorbed           =       .12679E-02g/sq.ft.

Since last printout at time =      16.00
               Change in Total Mass =     -.35187E-04g/sq.ft.
```

```
                Advection in from atmosphere =       .00000    g/sq.ft.
                Advection in from water table =     -.34361E-04g/sq.ft.
                Diffusion in from atmosphere =      -.82549E-06g/sq.ft.
                Diffusion in from water table =      .00000    g/sq.ft.
           Total inflow at boundaries =     -.35187E-04g/sq.ft.
           Mass discrepancy =     -.23283E-09g/sq.ft.

Since beginning of run at time = 0.0
           Change in Total Mass =     -.64059E-03g/sq.ft.
                Advection in from atmosphere =       .00000    g/sq.ft.
                Advection in from water table =     -.62670E-03g/sq.ft.
                Diffusion in from atmosphere =      -.13886E-04g/sq.ft.
                Diffusion in from water table =      .00000    g/sq.ft.
           Total inflow at boundaries =     -.64059E-03g/sq.ft.
           Mass discrepancy =      .58208E-09g/sq.ft.


Polygon   1
At time =      18.00, total mass in vadose zone =     .38921E-02g/sq.ft.
Mass in gas phase     =       .49928E-03g/sq.ft.
Mass in liquid phase  =       .21362E-02g/sq.ft.
Mass sorbed           =       .12566E-02g/sq.ft.

Since last printout at time =      17.00
           Change in Total Mass =     -.34849E-04g/sq.ft.
                Advection in from atmosphere =       .00000    g/sq.ft.
                Advection in from water table =     -.34019E-04g/sq.ft.
                Diffusion in from atmosphere =      -.83110E-06g/sq.ft.
                Diffusion in from water table =      .00000    g/sq.ft.
           Total inflow at boundaries =     -.34850E-04g/sq.ft.
           Mass discrepancy =      .70577E-09g/sq.ft.

Since beginning of run at time = 0.0
           Change in Total Mass =     -.67543E-03g/sq.ft.
                Advection in from atmosphere =       .00000    g/sq.ft.
                Advection in from water table =     -.66072E-03g/sq.ft.
                Diffusion in from atmosphere =      -.14717E-04g/sq.ft.
                Diffusion in from water table =      .00000    g/sq.ft.
           Total inflow at boundaries =     -.67544E-03g/sq.ft.
           Mass discrepancy =      .12806E-08g/sq.ft.


Polygon   1
At time =      19.00, total mass in vadose zone =     .38576E-02g/sq.ft.
Mass in gas phase     =       .49485E-03g/sq.ft.
Mass in liquid phase  =       .21173E-02g/sq.ft.
Mass sorbed           =       .12455E-02g/sq.ft.

Since last printout at time =      18.00
           Change in Total Mass =     -.34512E-04g/sq.ft.
                Advection in from atmosphere =       .00000    g/sq.ft.
                Advection in from water table =     -.33676E-04g/sq.ft.
                Diffusion in from atmosphere =      -.83694E-06g/sq.ft.
                Diffusion in from water table =      .00000    g/sq.ft.
           Total inflow at boundaries =     -.34513E-04g/sq.ft.
           Mass discrepancy =      .94587E-10g/sq.ft.

Since beginning of run at time = 0.0
           Change in Total Mass =     -.70995E-03g/sq.ft.
                Advection in from atmosphere =       .00000    g/sq.ft.
```

```
                    Advection in from water table =     -.69439E-03g/sq.ft.
                    Diffusion in from atmosphere =      -.15554E-04g/sq.ft.
                    Diffusion in from water table =      .00000    g/sq.ft.
               Total inflow at boundaries =     -.70995E-03g/sq.ft.
               Mass discrepancy =      .13970E-08g/sq.ft.


Polygon   1
At time =      20.00, total mass in vadose zone =     .38235E-02g/sq.ft.
Mass in gas phase     =       .49047E-03g/sq.ft.
Mass in liquid phase  =       .20985E-02g/sq.ft.
Mass sorbed           =       .12344E-02g/sq.ft.

Since last printout at time =      19.00
               Change in Total Mass =     -.34175E-04g/sq.ft.
                    Advection in from atmosphere =       .00000    g/sq.ft.
                    Advection in from water table =     -.33332E-04g/sq.ft.
                    Diffusion in from atmosphere =      -.84295E-06g/sq.ft.
                    Diffusion in from water table =      .00000    g/sq.ft.
               Total inflow at boundaries =     -.34175E-04g/sq.ft.
               Mass discrepancy =     -.20736E-09g/sq.ft.

Since beginning of run at time = 0.0
               Change in Total Mass =     -.74412E-03g/sq.ft.
                    Advection in from atmosphere =       .00000    g/sq.ft.
                    Advection in from water table =     -.72773E-03g/sq.ft.
                    Diffusion in from atmosphere =      -.16397E-04g/sq.ft.
                    Diffusion in from water table =      .00000    g/sq.ft.
               Total inflow at boundaries =     -.74412E-03g/sq.ft.
               Mass discrepancy =      .11642E-08g/sq.ft.


Polygon   1
At time =      21.00, total mass in vadose zone =     .37896E-02g/sq.ft.
Mass in gas phase     =       .48613E-03g/sq.ft.
Mass in liquid phase  =       .20800E-02g/sq.ft.
Mass sorbed           =       .12235E-02g/sq.ft.

Since last printout at time =      20.00
               Change in Total Mass =     -.33837E-04g/sq.ft.
                    Advection in from atmosphere =       .00000    g/sq.ft.
                    Advection in from water table =     -.32989E-04g/sq.ft.
                    Diffusion in from atmosphere =      -.84907E-06g/sq.ft.
                    Diffusion in from water table =      .00000    g/sq.ft.
               Total inflow at boundaries =     -.33838E-04g/sq.ft.
               Mass discrepancy =      .68394E-09g/sq.ft.

Since beginning of run at time = 0.0
               Change in Total Mass =     -.77796E-03g/sq.ft.
                    Advection in from atmosphere =       .00000    g/sq.ft.
                    Advection in from water table =     -.76071E-03g/sq.ft.
                    Diffusion in from atmosphere =      -.17246E-04g/sq.ft.
                    Diffusion in from water table =      .00000    g/sq.ft.
               Total inflow at boundaries =     -.77796E-03g/sq.ft.
               Mass discrepancy =      .18626E-08g/sq.ft.


Polygon   1
At time =      22.00, total mass in vadose zone =     .37561E-02g/sq.ft.
Mass in gas phase     =       .48183E-03g/sq.ft.
```

```
Mass in liquid phase  =       .20616E-02g/sq.ft.
Mass sorbed           =       .12127E-02g/sq.ft.

Since last printout at time =      21.00
              Change in Total Mass =     -.33502E-04g/sq.ft.
                   Advection in from atmosphere =       .00000    g/sq.ft.
                   Advection in from water table =     -.32646E-04g/sq.ft.
                   Diffusion in from atmosphere =      -.85526E-06g/sq.ft.
                   Diffusion in from water table =      .00000    g/sq.ft.
              Total inflow at boundaries =     -.33501E-04g/sq.ft.
              Mass discrepancy =     -.82582E-09g/sq.ft.

Since beginning of run at time = 0.0
              Change in Total Mass =     -.81146E-03g/sq.ft.
                   Advection in from atmosphere =       .00000    g/sq.ft.
                   Advection in from water table =     -.79336E-03g/sq.ft.
                   Diffusion in from atmosphere =      -.18102E-04g/sq.ft.
                   Diffusion in from water table =      .00000    g/sq.ft.
              Total inflow at boundaries =     -.81146E-03g/sq.ft.
              Mass discrepancy =      .10477E-08g/sq.ft.


Polygon   1
At time =      23.00, total mass in vadose zone =     .37230E-02g/sq.ft.
Mass in gas phase     =       .47757E-03g/sq.ft.
Mass in liquid phase  =       .20434E-02g/sq.ft.
Mass sorbed           =       .12020E-02g/sq.ft.

Since last printout at time =      22.00
              Change in Total Mass =     -.33166E-04g/sq.ft.
                   Advection in from atmosphere =       .00000    g/sq.ft.
                   Advection in from water table =     -.32304E-04g/sq.ft.
                   Diffusion in from atmosphere =      -.86149E-06g/sq.ft.
                   Diffusion in from water table =      .00000    g/sq.ft.
              Total inflow at boundaries =     -.33166E-04g/sq.ft.
              Mass discrepancy =      .22192E-09g/sq.ft.

Since beginning of run at time = 0.0
              Change in Total Mass =     -.84463E-03g/sq.ft.
                   Advection in from atmosphere =       .00000    g/sq.ft.
                   Advection in from water table =     -.82567E-03g/sq.ft.
                   Diffusion in from atmosphere =      -.18963E-04g/sq.ft.
                   Diffusion in from water table =      .00000    g/sq.ft.
              Total inflow at boundaries =     -.84463E-03g/sq.ft.
              Mass discrepancy =      .12806E-08g/sq.ft.


Polygon   1
At time =      24.00, total mass in vadose zone =     .36901E-02g/sq.ft.
Mass in gas phase     =       .47336E-03g/sq.ft.
Mass in liquid phase  =       .20254E-02g/sq.ft.
Mass sorbed           =       .11914E-02g/sq.ft.

Since last printout at time =      23.00
              Change in Total Mass =     -.32831E-04g/sq.ft.
                   Advection in from atmosphere =       .00000    g/sq.ft.
                   Advection in from water table =     -.31964E-04g/sq.ft.
                   Diffusion in from atmosphere =      -.86772E-06g/sq.ft.
                   Diffusion in from water table =      .00000    g/sq.ft.
              Total inflow at boundaries =     -.32831E-04g/sq.ft.
```

```
                Mass discrepancy =      .14916E-09g/sq.ft.

Since beginning of run at time = 0.0
                Change in Total Mass =     -.87746E-03g/sq.ft.
                     Advection in from atmosphere =       .00000    g/sq.ft.
                     Advection in from water table =     -.85763E-03g/sq.ft.
                     Diffusion in from atmosphere =      -.19831E-04g/sq.ft.
                     Diffusion in from water table =      .00000    g/sq.ft.
                Total inflow at boundaries =     -.87746E-03g/sq.ft.
                Mass discrepancy =      .13970E-08g/sq.ft.


Polygon   1
At time =      25.00, total mass in vadose zone =     .36576E-02g/sq.ft.
Mass in gas phase     =       .46919E-03g/sq.ft.
Mass in liquid phase  =       .20075E-02g/sq.ft.
Mass sorbed           =       .11809E-02g/sq.ft.

Since last printout at time =      24.00
                Change in Total Mass =     -.32498E-04g/sq.ft.
                     Advection in from atmosphere =       .00000    g/sq.ft.
                     Advection in from water table =     -.31624E-04g/sq.ft.
                     Diffusion in from atmosphere =      -.87393E-06g/sq.ft.
                     Diffusion in from water table =      .00000    g/sq.ft.
                Total inflow at boundaries =     -.32498E-04g/sq.ft.
                Mass discrepancy =      .36016E-09g/sq.ft.

Since beginning of run at time = 0.0
                Change in Total Mass =     -.90996E-03g/sq.ft.
                     Advection in from atmosphere =       .00000    g/sq.ft.
                     Advection in from water table =     -.88925E-03g/sq.ft.
                     Diffusion in from atmosphere =      -.20705E-04g/sq.ft.
                     Diffusion in from water table =      .00000    g/sq.ft.
                Total inflow at boundaries =     -.90996E-03g/sq.ft.
                Mass discrepancy =      .17462E-08g/sq.ft.


Polygon   1
At time =      26.00, total mass in vadose zone =     .36255E-02g/sq.ft.
Mass in gas phase     =       .46507E-03g/sq.ft.
Mass in liquid phase  =       .19899E-02g/sq.ft.
Mass sorbed           =       .11705E-02g/sq.ft.

Since last printout at time =      25.00
                Change in Total Mass =     -.32167E-04g/sq.ft.
                     Advection in from atmosphere =       .00000    g/sq.ft.
                     Advection in from water table =     -.31287E-04g/sq.ft.
                     Diffusion in from atmosphere =      -.88008E-06g/sq.ft.
                     Diffusion in from water table =      .00000    g/sq.ft.
                Total inflow at boundaries =     -.32167E-04g/sq.ft.
                Mass discrepancy =     -.32742E-09g/sq.ft.

Since beginning of run at time = 0.0
                Change in Total Mass =     -.94212E-03g/sq.ft.
                     Advection in from atmosphere =       .00000    g/sq.ft.
                     Advection in from water table =     -.92054E-03g/sq.ft.
                     Diffusion in from atmosphere =      -.21585E-04g/sq.ft.
                     Diffusion in from water table =      .00000    g/sq.ft.
                Total inflow at boundaries =     -.94213E-03g/sq.ft.
                Mass discrepancy =      .14552E-08g/sq.ft.
```

```
Polygon   1
At time =      27.00, total mass in vadose zone =     .35936E-02g/sq.ft.
Mass in gas phase     =       .46098E-03g/sq.ft.
Mass in liquid phase  =       .19724E-02g/sq.ft.
Mass sorbed           =       .11602E-02g/sq.ft.

Since last printout at time =      26.00
               Change in Total Mass =     -.31838E-04g/sq.ft.
                    Advection in from atmosphere =       .00000    g/sq.ft.
                    Advection in from water table =     -.30951E-04g/sq.ft.
                    Diffusion in from atmosphere =      -.88617E-06g/sq.ft.
                    Diffusion in from water table =      .00000    g/sq.ft.
               Total inflow at boundaries =     -.31838E-04g/sq.ft.
               Mass discrepancy =     -.94587E-10g/sq.ft.

Since beginning of run at time = 0.0
               Change in Total Mass =     -.97396E-03g/sq.ft.
                    Advection in from atmosphere =       .00000    g/sq.ft.
                    Advection in from water table =     -.95149E-03g/sq.ft.
                    Diffusion in from atmosphere =      -.22471E-04g/sq.ft.
                    Diffusion in from water table =      .00000    g/sq.ft.
               Total inflow at boundaries =     -.97396E-03g/sq.ft.
               Mass discrepancy =      .13388E-08g/sq.ft.


Polygon   1
At time =      28.00, total mass in vadose zone =     .35621E-02g/sq.ft.
Mass in gas phase     =       .45694E-03g/sq.ft.
Mass in liquid phase  =       .19551E-02g/sq.ft.
Mass sorbed           =       .11501E-02g/sq.ft.

Since last printout at time =      27.00
               Change in Total Mass =     -.31510E-04g/sq.ft.
                    Advection in from atmosphere =       .00000    g/sq.ft.
                    Advection in from water table =     -.30618E-04g/sq.ft.
                    Diffusion in from atmosphere =      -.89216E-06g/sq.ft.
                    Diffusion in from water table =      .00000    g/sq.ft.
               Total inflow at boundaries =     -.31510E-04g/sq.ft.
               Mass discrepancy =      .65484E-10g/sq.ft.

Since beginning of run at time = 0.0
               Change in Total Mass =     -.10055E-02g/sq.ft.
                    Advection in from atmosphere =       .00000    g/sq.ft.
                    Advection in from water table =     -.98211E-03g/sq.ft.
                    Diffusion in from atmosphere =      -.23363E-04g/sq.ft.
                    Diffusion in from water table =      .00000    g/sq.ft.
               Total inflow at boundaries =     -.10055E-02g/sq.ft.
               Mass discrepancy =      .13970E-08g/sq.ft.


Polygon   1
At time =      29.00, total mass in vadose zone =     .35309E-02g/sq.ft.
Mass in gas phase     =       .45294E-03g/sq.ft.
Mass in liquid phase  =       .19380E-02g/sq.ft.
Mass sorbed           =       .11400E-02g/sq.ft.

Since last printout at time =      28.00
               Change in Total Mass =     -.31184E-04g/sq.ft.
```

```
                Advection in from atmosphere =       .00000    g/sq.ft.
                Advection in from water table =     -.30287E-04g/sq.ft.
                Diffusion in from atmosphere =      -.89805E-06g/sq.ft.
                Diffusion in from water table =      .00000    g/sq.ft.
           Total inflow at boundaries =     -.31185E-04g/sq.ft.
           Mass discrepancy =      .77853E-09g/sq.ft.

Since beginning of run at time = 0.0
           Change in Total Mass =     -.10367E-02g/sq.ft.
                Advection in from atmosphere =       .00000    g/sq.ft.
                Advection in from water table =     -.10124E-02g/sq.ft.
                Diffusion in from atmosphere =      -.24261E-04g/sq.ft.
                Diffusion in from water table =      .00000    g/sq.ft.
           Total inflow at boundaries =     -.10367E-02g/sq.ft.
           Mass discrepancy =      .20955E-08g/sq.ft.


Polygon   1
At time =      30.00, total mass in vadose zone =     .35001E-02g/sq.ft.
Mass in gas phase     =       .44898E-03g/sq.ft.
Mass in liquid phase  =       .19210E-02g/sq.ft.
Mass sorbed           =       .11300E-02g/sq.ft.

Since last printout at time =      29.00
           Change in Total Mass =     -.30862E-04g/sq.ft.
                Advection in from atmosphere =       .00000    g/sq.ft.
                Advection in from water table =     -.29958E-04g/sq.ft.
                Diffusion in from atmosphere =      -.90382E-06g/sq.ft.
                Diffusion in from water table =      .00000    g/sq.ft.
           Total inflow at boundaries =     -.30862E-04g/sq.ft.
           Mass discrepancy =      .83674E-10g/sq.ft.

Since beginning of run at time = 0.0
           Change in Total Mass =     -.10675E-02g/sq.ft.
                Advection in from atmosphere =       .00000    g/sq.ft.
                Advection in from water table =     -.10424E-02g/sq.ft.
                Diffusion in from atmosphere =      -.25165E-04g/sq.ft.
                Diffusion in from water table =      .00000    g/sq.ft.
           Total inflow at boundaries =     -.10675E-02g/sq.ft.
           Mass discrepancy =      .22119E-08g/sq.ft.


GROUNDWATER IMPACT OF POLYGON   1

 Time        Mass per area (g/sq.ft.)      Total Mass (g)
     1.00          .38999E-04                 5.0699
     2.00          .38796E-04                 5.0434
     3.00          .38577E-04                 5.0150
     4.00          .38343E-04                 4.9846
     5.00          .38095E-04                 4.9523
     6.00          .37833E-04                 4.9183
     7.00          .37559E-04                 4.8826
     8.00          .37273E-04                 4.8455
     9.00          .36976E-04                 4.8069
    10.00          .36670E-04                 4.7671
    11.00          .36356E-04                 4.7263
    12.00          .36035E-04                 4.6846
    13.00          .35708E-04                 4.6421
    14.00          .35376E-04                 4.5989
    15.00          .35041E-04                 4.5553
```

16.00	.34702E-04	4.5112
17.00	.34361E-04	4.4669
18.00	.34019E-04	4.4224
19.00	.33676E-04	4.3778
20.00	.33332E-04	4.3332
21.00	.32989E-04	4.2886
22.00	.32646E-04	4.2440
23.00	.32304E-04	4.1996
24.00	.31964E-04	4.1553
25.00	.31624E-04	4.1112
26.00	.31287E-04	4.0673
27.00	.30951E-04	4.0237
28.00	.30618E-04	3.9803
29.00	.30287E-04	3.9373
30.00	.29958E-04	3.8946

****

****

TOTAL GROUNDWATER IMPACT

Time (yr)	Mass (g)	Cumulative Mass (g)
1.00	5.0699	5.0699
2.00	5.0434	10.113
3.00	5.0150	15.128
4.00	4.9846	20.113
5.00	4.9523	25.065
6.00	4.9183	29.983
7.00	4.8826	34.866
8.00	4.8455	39.712
9.00	4.8069	44.519
10.00	4.7671	49.286
11.00	4.7263	54.012
12.00	4.6846	58.697
13.00	4.6421	63.339
14.00	4.5989	67.938
15.00	4.5553	72.493
16.00	4.5112	77.004
17.00	4.4669	81.471
18.00	4.4224	85.893
19.00	4.3778	90.271
20.00	4.3332	94.604
21.00	4.2886	98.893
22.00	4.2440	103.14
23.00	4.1996	107.34
24.00	4.1553	111.49
25.00	4.1112	115.60
26.00	4.0673	119.67
27.00	4.0237	123.69
28.00	3.9803	127.67
29.00	3.9373	131.61
30.00	3.8946	135.51

Polygon 116
Time: .000

Cell	Cgas(g/cu.ft.)	Cliq(g/cu.ft.)	Csol
1	.99284E-06	.20990E-05	.67799E-11
2	.99284E-06	.20990E-05	.67799E-11
3	.99284E-06	.20990E-05	.67799E-11
4	.99284E-06	.20990E-05	.67799E-11
5	.99284E-06	.20990E-05	.67799E-11
6	.99284E-06	.20990E-05	.67799E-11
7	.29785E-05	.62971E-05	.20340E-10
8	.29785E-05	.62971E-05	.20340E-10
9	.29785E-05	.62971E-05	.20340E-10
10	.29785E-05	.62971E-05	.20340E-10
11	.29785E-05	.62971E-05	.20340E-10
12	.29785E-05	.62971E-05	.20340E-10
13	.49642E-05	.10495E-04	.33899E-10
14	.49642E-05	.10495E-04	.33899E-10
15	.49642E-05	.10495E-04	.33899E-10
16	.49642E-05	.10495E-04	.33899E-10
17	.49642E-05	.10495E-04	.33899E-10
18	.49642E-05	.10495E-04	.33899E-10
19	.93611E-05	.19791E-04	.63924E-10
20	.93611E-05	.19791E-04	.63924E-10
21	.93611E-05	.19791E-04	.63924E-10
22	.93611E-05	.19791E-04	.63924E-10
23	.93611E-05	.19791E-04	.63924E-10
24	.93611E-05	.19791E-04	.63924E-10
25	.14231E-04	.30086E-04	.97178E-10
26	.14231E-04	.30086E-04	.97178E-10
27	.14231E-04	.30086E-04	.97178E-10
28	.14231E-04	.30086E-04	.97178E-10
29	.14231E-04	.30086E-04	.97178E-10
30	.14231E-04	.30086E-04	.97178E-10
31	.54653E-04	.11555E-03	.37321E-09
32	.54653E-04	.11555E-03	.37321E-09
33	.54653E-04	.11555E-03	.37321E-09
34	.54653E-04	.11555E-03	.37321E-09
35	.54653E-04	.11555E-03	.37321E-09
36	.54653E-04	.11555E-03	.37321E-09
37	.10222E-03	.21610E-03	.69800E-09
38	.10222E-03	.21610E-03	.69800E-09
39	.10222E-03	.21610E-03	.69800E-09
40	.10222E-03	.21610E-03	.69800E-09
41	.10222E-03	.21610E-03	.69800E-09
42	.10222E-03	.21610E-03	.69800E-09
43	.15365E-03	.32485E-03	.10493E-08
44	.15365E-03	.32485E-03	.10493E-08
45	.15365E-03	.32485E-03	.10493E-08
46	.15365E-03	.32485E-03	.10493E-08
47	.15365E-03	.32485E-03	.10493E-08
48	.15365E-03	.32485E-03	.10493E-08
49	.20708E-03	.43780E-03	.14141E-08
50	.20708E-03	.43780E-03	.14141E-08
51	.20708E-03	.43780E-03	.14141E-08
52	.20708E-03	.43780E-03	.14141E-08
53	.20708E-03	.43780E-03	.14141E-08
54	.20708E-03	.43780E-03	.14141E-08
55	.22490E-03	.47548E-03	.15358E-08
56	.22490E-03	.47548E-03	.15358E-08

57	.22490E-03	.47548E-03	.15358E-08
58	.22490E-03	.47548E-03	.15358E-08
59	.22490E-03	.47548E-03	.15358E-08
60	.22490E-03	.47548E-03	.15358E-08

Polygon 116
Time: 10.000

Cell	Cgas(g/cu.ft.)	Cliq(g/cu.ft.)	Csol
1	.18454E-06	.39014E-06	.12602E-11
2	.46009E-06	.97270E-06	.31418E-11
3	.76193E-06	.16109E-05	.52031E-11
4	.10571E-05	.22349E-05	.72187E-11
5	.13430E-05	.28394E-05	.91712E-11
6	.16302E-05	.34465E-05	.11132E-10
7	.20050E-05	.42390E-05	.13692E-10
8	.24585E-05	.51977E-05	.16789E-10
9	.29231E-05	.61799E-05	.19961E-10
10	.33621E-05	.71080E-05	.22959E-10
11	.37812E-05	.79941E-05	.25821E-10
12	.42032E-05	.88863E-05	.28703E-10
13	.47252E-05	.99899E-05	.32267E-10
14	.53462E-05	.11303E-04	.36508E-10
15	.60051E-05	.12696E-04	.41007E-10
16	.66717E-05	.14105E-04	.45559E-10
17	.73584E-05	.15557E-04	.50248E-10
18	.80956E-05	.17115E-04	.55283E-10
19	.90790E-05	.19195E-04	.61998E-10
20	.10293E-04	.21762E-04	.70291E-10
21	.11595E-04	.24514E-04	.79180E-10
22	.12911E-04	.27295E-04	.88163E-10
23	.14262E-04	.30152E-04	.97392E-10
24	.15711E-04	.33216E-04	.10729E-09
25	.17505E-04	.37008E-04	.11953E-09
26	.19651E-04	.41545E-04	.13419E-09
27	.22016E-04	.46545E-04	.15034E-09
28	.24543E-04	.51888E-04	.16760E-09
29	.27283E-04	.57682E-04	.18631E-09
30	.30337E-04	.64137E-04	.20716E-09
31	.35315E-04	.74661E-04	.24116E-09
32	.41910E-04	.88605E-04	.28619E-09
33	.48645E-04	.10284E-03	.33218E-09
34	.54681E-04	.11560E-03	.37340E-09
35	.60039E-04	.12693E-03	.40999E-09
36	.65083E-04	.13760E-03	.44444E-09
37	.71941E-04	.15210E-03	.49127E-09
38	.80395E-04	.16997E-03	.54900E-09
39	.88777E-04	.18769E-03	.60623E-09
40	.96134E-04	.20324E-03	.65647E-09
41	.10250E-03	.21671E-03	.69998E-09
42	.10832E-03	.22901E-03	.73970E-09
43	.11592E-03	.24507E-03	.79158E-09
44	.12508E-03	.26443E-03	.85412E-09
45	.13400E-03	.28330E-03	.91505E-09
46	.14165E-03	.29948E-03	.96732E-09
47	.14808E-03	.31306E-03	.10112E-08
48	.15372E-03	.32499E-03	.10497E-08
49	.16101E-03	.34040E-03	.10995E-08
50	.16971E-03	.35879E-03	.11589E-08
51	.17793E-03	.37618E-03	.12151E-08
52	.18459E-03	.39025E-03	.12605E-08

53	.18967E-03	.40100E-03	.12952E-08
54	.19362E-03	.40934E-03	.13222E-08
55	.19749E-03	.41754E-03	.13486E-08
56	.20139E-03	.42576E-03	.13752E-08
57	.20474E-03	.43286E-03	.13981E-08
58	.20724E-03	.43813E-03	.14152E-08
59	.20888E-03	.44162E-03	.14264E-08
60	.20983E-03	.44362E-03	.14329E-08

Polygon 116
Time: 20.000

Cell	Cgas(g/cu.ft.)	Cliq(g/cu.ft.)	Csol
1	.15912E-06	.33640E-06	.10866E-11
2	.39795E-06	.84134E-06	.27175E-11
3	.69167E-06	.14623E-05	.47233E-11
4	.10239E-05	.21647E-05	.69920E-11
5	.13841E-05	.29261E-05	.94514E-11
6	.17671E-05	.37360E-05	.12067E-10
7	.21757E-05	.45998E-05	.14857E-10
8	.26172E-05	.55333E-05	.17872E-10
9	.30969E-05	.65473E-05	.21148E-10
10	.36146E-05	.76419E-05	.24683E-10
11	.41685E-05	.88129E-05	.28466E-10
12	.47588E-05	.10061E-04	.32497E-10
13	.53930E-05	.11402E-04	.36828E-10
14	.60835E-05	.12862E-04	.41543E-10
15	.68408E-05	.14463E-04	.46714E-10
16	.76704E-05	.16217E-04	.52379E-10
17	.85761E-05	.18131E-04	.58564E-10
18	.95641E-05	.20220E-04	.65311E-10
19	.10651E-04	.22519E-04	.72736E-10
20	.11862E-04	.25079E-04	.81004E-10
21	.13214E-04	.27936E-04	.90233E-10
22	.14711E-04	.31102E-04	.10046E-09
23	.16355E-04	.34577E-04	.11168E-09
24	.18151E-04	.38375E-04	.12395E-09
25	.20122E-04	.42542E-04	.13741E-09
26	.22302E-04	.47151E-04	.15230E-09
27	.24720E-04	.52262E-04	.16881E-09
28	.27391E-04	.57908E-04	.18704E-09
29	.30326E-04	.64113E-04	.20709E-09
30	.33541E-04	.70911E-04	.22904E-09
31	.37118E-04	.78474E-04	.25347E-09
32	.41173E-04	.87047E-04	.28116E-09
33	.45737E-04	.96696E-04	.31233E-09
34	.50715E-04	.10722E-03	.34632E-09
35	.55956E-04	.11830E-03	.38211E-09
36	.61345E-04	.12969E-03	.41891E-09
37	.66908E-04	.14145E-03	.45690E-09
38	.72764E-04	.15384E-03	.49689E-09
39	.78961E-04	.16694E-03	.53921E-09
40	.85405E-04	.18056E-03	.58321E-09
41	.91931E-04	.19436E-03	.62777E-09
42	.98414E-04	.20806E-03	.67204E-09
43	.10488E-03	.22174E-03	.71621E-09
44	.11146E-03	.23565E-03	.76116E-09
45	.11821E-03	.24993E-03	.80726E-09
46	.12503E-03	.26434E-03	.85381E-09
47	.13174E-03	.27851E-03	.89959E-09
48	.13818E-03	.29215E-03	.94363E-09

49	.14440E-03	.30528E-03	.98607E-09
50	.15051E-03	.31819E-03	.10278E-08
51	.15655E-03	.33097E-03	.10690E-08
52	.16241E-03	.34336E-03	.11090E-08
53	.16789E-03	.35494E-03	.11465E-08
54	.17282E-03	.36538E-03	.11802E-08
55	.17717E-03	.37456E-03	.12098E-08
56	.18095E-03	.38255E-03	.12357E-08
57	.18420E-03	.38944E-03	.12579E-08
58	.18692E-03	.39517E-03	.12764E-08
59	.18903E-03	.39964E-03	.12908E-08
60	.19049E-03	.40273E-03	.13008E-08

Polygon 116
Time: 30.000

Cell	Cgas(g/cu.ft.)	Cliq(g/cu.ft.)	Csol
1	.16917E-06	.35765E-06	.11552E-11
2	.42058E-06	.88917E-06	.28720E-11
3	.72859E-06	.15404E-05	.49754E-11
4	.10797E-05	.22827E-05	.73730E-11
5	.14671E-05	.31016E-05	.10018E-10
6	.18876E-05	.39906E-05	.12890E-10
7	.23406E-05	.49484E-05	.15983E-10
8	.28277E-05	.59782E-05	.19310E-10
9	.33517E-05	.70861E-05	.22888E-10
10	.39165E-05	.82802E-05	.26745E-10
11	.45259E-05	.95686E-05	.30907E-10
12	.51839E-05	.10960E-04	.35400E-10
13	.58948E-05	.12463E-04	.40254E-10
14	.66640E-05	.14089E-04	.45507E-10
15	.74982E-05	.15852E-04	.51204E-10
16	.84048E-05	.17769E-04	.57394E-10
17	.93914E-05	.19855E-04	.64132E-10
18	.10466E-04	.22127E-04	.71469E-10
19	.11637E-04	.24602E-04	.79465E-10
20	.12914E-04	.27303E-04	.88188E-10
21	.14309E-04	.30252E-04	.97716E-10
22	.15834E-04	.33476E-04	.10813E-09
23	.17499E-04	.36996E-04	.11950E-09
24	.19314E-04	.40834E-04	.13189E-09
25	.21291E-04	.45012E-04	.14539E-09
26	.23440E-04	.49555E-04	.16006E-09
27	.25776E-04	.54494E-04	.17601E-09
28	.28312E-04	.59857E-04	.19334E-09
29	.31063E-04	.65672E-04	.21212E-09
30	.34040E-04	.71966E-04	.23245E-09
31	.37256E-04	.78765E-04	.25441E-09
32	.40729E-04	.86107E-04	.27813E-09
33	.44476E-04	.94030E-04	.30372E-09
34	.48509E-04	.10256E-03	.33126E-09
35	.52819E-04	.11167E-03	.36069E-09
36	.57383E-04	.12132E-03	.39185E-09
37	.62171E-04	.13144E-03	.42455E-09
38	.67161E-04	.14199E-03	.45863E-09
39	.72344E-04	.15295E-03	.49402E-09
40	.77707E-04	.16429E-03	.53065E-09
41	.83229E-04	.17596E-03	.56835E-09
42	.88870E-04	.18789E-03	.60687E-09
43	.94591E-04	.19998E-03	.64594E-09
44	.10036E-03	.21218E-03	.68533E-09

45	.10616E-03	.22443E-03	.72491E-09
46	.11196E-03	.23671E-03	.76456E-09
47	.11775E-03	.24894E-03	.80406E-09
48	.12346E-03	.26102E-03	.84311E-09
49	.12906E-03	.27286E-03	.88134E-09
50	.13450E-03	.28436E-03	.91848E-09
51	.13975E-03	.29546E-03	.95432E-09
52	.14478E-03	.30610E-03	.98869E-09
53	.14956E-03	.31619E-03	.10213E-08
54	.15402E-03	.32563E-03	.10518E-08
55	.15810E-03	.33426E-03	.10796E-08
56	.16175E-03	.34196E-03	.11045E-08
57	.16491E-03	.34865E-03	.11261E-08
58	.16755E-03	.35424E-03	.11442E-08
59	.16964E-03	.35865E-03	.11584E-08
60	.17114E-03	.36182E-03	.11687E-08

V-Leach, VER 1.1
Jake Turin, 11/91
PGA V-leach model, polygon screen-TCE-10/30/92-POLY116.INP-full dist-VPB.
1 polygons.
Timestep = 1.00 years. Simulation length = 30.00 years.
Printout every 1.00 years. Vertical profile stored every 10.00 years.
Koc = 123.60 ml/g, .43649E-02cu.ft./g
Kh = .47300 (dimensionless).
Aqueous solubility = 1100.0 mg/l, 31.149 g/cu.ft
Free air diffusion coefficient = .70290 sq. m/day, 2761.7 sq.ft./yr

Polygon 1
Polygon 116
Polygon area = .13000E+06sq. ft.
60 cells, each cell 1.000 ft. thick.
Soil Properties:
Bulk density = 1.6400 g/ml, 46440. g/cu.ft.
Porosity = .3810 Volumetric water content = .2550
Organic carbon content = .00074000
Recharge Rate = .08202100 ft/yr
Conc. in recharge water = .00000 mg/l, .00000 g/cu.ft
Atmospheric concentration = .00000 mg/l, .00000 g/cu.ft
Water table is impermeable to gas diffusion.

List of interpolated concentrations for desired depths

At a depth of	:	3.000
Interpolated concentration is:		0.021
At a depth of	:	9.000
Interpolated concentration is:		0.063
At a depth of	:	15.000
Interpolated concentration is:		0.105
At a depth of	:	21.000
Interpolated concentration is:		0.198
At a depth of	:	27.000
Interpolated concentration is:		0.301
At a depth of	:	33.000
Interpolated concentration is:		1.156
At a depth of	:	39.000
Interpolated concentration is:		2.162
At a depth of	:	45.000
Interpolated concentration is:		3.250
At a depth of	:	51.000
Interpolated concentration is:		4.380
At a depth of	:	57.000
Interpolated concentration is:		4.757
At a depth of	:	60.000
Interpolated concentration is:		4.757
At a depth of	:	0.000
Interpolated concentration is:		0.000

Total Soil Concentration Calculations from Soil Gas Data
Polygon 116, June-1992

Sample #	Total Clx Conc (ppbV)	Total Clx Conc (ug/L)*	Total Clx Conc (ug/Kg)**
NA	0	0	0.00
VS-VP116-16	27.1	0.187	0.112
VS-VP116-28	91	0.529	0.318
VS-VP116-41	789.4	4.169	2.497
VS-VP116-53	1507.8	7.942	4.757
	2415.30	12.827	7.684

*Multiply ppbV concentration by compound Molecular Weight, divide by Ideal Gas conversion corrected for laboratory pressure and temperature.

**Multiply ug/L concentration by 0.599 L/Kg (calculated Kgt based on revised soil physical data).

1,1-DCE Soil Concentration Calculations from Soil Gas Data
Polygon 116, June-1992

Sample #	1,1-DCE Conc (ppbV)	1,1-DCE Conc (ug/L)*	1,1-DCE Conc (ug/Kg)**
NA	0	0	0
VS-VP116-16	0	0	0
VS-VP116-28	0	0	0
VS-VP116-41	0	0	0
VS-VP116-53	3.4	0.013	0.008
	3.40	0.01	0.008

1,1,1-TCA Soil Concentration Calculations from Soil Gas Data
Polygon 116, June-1992

Sample #	1,1,1-TCA Conc (ppbV)	1,1,1-TCA Conc (ug/L)*	1,1,1-TCA Conc (ug/Kg)**
NA	0	0.00	0
VS-VP116-16	0	0.00	0
VS-VP116-28	0	0.00	0
VS-VP116-41	20	0.11	0
VS-VP116-53	200	1.10	1
	220.00	1.21	0.723

TCE Soil Concentration Calculations from Soil Gas Data
Polygon 116, June-1992

Sample #	TCE Conc (ppbV)	TCE Conc (ug/L)*	TCE Conc (ug/Kg)**
NA	0	0.00	0
VS-VP116-16	5.1	0.03	0.016
VS-VP116-28	55	0.29	0.174
VS-VP116-41	760	4.00	2.396
VS-VP116-53	1300	6.80	4.073
	2120.10	11.12	6.659

PCE Soil Concentration Calculations from Soil Gas Data
Polygon 116, June-1992

Sample #	PCE Conc (ppbV)	PCE Conc (ug/L)*	PCE Conc (ug/Kg)**
NA	0	0.00	0
VS-VP116-16	22	0.16	0.096
VS-VP116-28	36	0.24	0.144
VS-VP116-41	9.4	0.062	0.037
VS-VP116-53	4.4	0.029	0.017
	71.80	0.49	0.294

**** Mixing Cell Output ****

PGA Mixcell Input Data

**** Batch 1 ****
Polygon 92

Time Interval (years)	Mass In (grams)	Mass/Area (g/sq m)	GW Concentration (ugrams/l)
1.00	280.140	0.034	3.667
2.00	278.910	0.034	5.603
3.00	277.630	0.034	6.618
4.00	276.290	0.034	7.141
5.00	274.910	0.034	7.401
6.00	273.490	0.034	7.521
7.00	272.040	0.033	7.566
8.00	270.560	0.033	7.571
9.00	269.050	0.033	7.554
10.00	267.520	0.033	7.524
11.00	265.970	0.033	7.488
12.00	264.410	0.033	7.449
13.00	262.840	0.032	7.407
14.00	261.260	0.032	7.364
15.00	259.670	0.032	7.321
16.00	258.080	0.032	7.277
17.00	256.500	0.032	7.233
18.00	254.910	0.031	7.188
19.00	253.330	0.031	7.144
20.00	251.750	0.031	7.100
21.00	250.180	0.031	7.056
22.00	248.620	0.031	7.012
23.00	247.070	0.030	6.968
24.00	245.530	0.030	6.925
25.00	244.000	0.030	6.881
26.00	242.480	0.030	6.839
27.00	240.970	0.030	6.796
28.00	239.480	0.029	6.754
29.00	238.010	0.029	6.712
30.00	236.540	0.029	6.671

**** Batch 2 ****
Polygon 116

Time Interval (years)	Mass In (grams)	Mass/Area (g/sq m)	GW Concentration (ugrams/l)
1.00	5.070	0.000	0.047
2.00	5.043	0.000	0.075
3.00	5.015	0.000	0.091
4.00	4.985	0.000	0.101
5.00	4.952	0.000	0.106
6.00	4.918	0.000	0.109
7.00	4.883	0.000	0.110

8.00	4.846	0.000	0.111
9.00	4.807	0.000	0.111
10.00	4.767	0.000	0.110
11.00	4.726	0.000	0.110
12.00	4.685	0.000	0.109
13.00	4.642	0.000	0.108
14.00	4.599	0.000	0.107
15.00	4.555	0.000	0.106
16.00	4.511	0.000	0.105
17.00	4.467	0.000	0.104
18.00	4.422	0.000	0.103
19.00	4.378	0.000	0.102
20.00	4.333	0.000	0.101
21.00	4.289	0.000	0.100
22.00	4.244	0.000	0.099
23.00	4.200	0.000	0.098
24.00	4.155	0.000	0.097
25.00	4.111	0.000	0.096
26.00	4.067	0.000	0.095
27.00	4.024	0.000	0.094
28.00	3.980	0.000	0.093
29.00	3.937	0.000	0.092
30.00	3.895	0.000	0.091

**** Batch 3 ****
Polygon 117

Time Interval (years)	Mass In (grams)	Mass/Area (g/sq m)	GW Concentration (ugrams/l)
1.00	0.000	0.000	0.000
2.00	0.000	0.000	0.000
3.00	0.001	0.000	0.000
4.00	0.001	0.000	0.000
5.00	0.002	0.000	0.000
6.00	0.003	0.000	0.000
7.00	0.003	0.000	0.000
8.00	0.004	0.000	0.000
9.00	0.005	0.000	0.000
10.00	0.006	0.000	0.000
11.00	0.007	0.000	0.000
12.00	0.008	0.000	0.000
13.00	0.010	0.000	0.000
14.00	0.011	0.000	0.000
15.00	0.012	0.000	0.000
16.00	0.014	0.000	0.000
17.00	0.016	0.000	0.000
18.00	0.017	0.000	0.000
19.00	0.019	0.000	0.000
20.00	0.021	0.000	0.000
21.00	0.023	0.000	0.000
22.00	0.024	0.000	0.000
23.00	0.026	0.000	0.001
24.00	0.028	0.000	0.001
25.00	0.031	0.000	0.001

PGA V-leach model, poly screen-TCE-11/10/92-Poly 50.inp Rev Soil, HGC Chem

```
    1
       1.0         30.         1.0         10.
     123.6        .473       1100.       .7029
lygon 50
     62500.          1.    .196850        1.64        .381        .255     .00074
         0.          0.        -1.
   60
    1     6       0.29
    7    12       4.65
   13    18       9.97
   19    24      15.29
   25    30      20.62
   31    36      25.94
   37    42      31.26
   43    48      36.59
   49    54      41.91
   55    60      47.23
```

V-Leach, VER 1.1

Jake Turin, 12/92

PGA V-leach model, poly screen-TCE-11/10/92-Poly 50.inp Rev Soil, HGC Chem

Polygon 2

At time = .00, total mass in vadose zone = .65130E-01g/sq.ft.

Mass in gas phase = .83547E-02g/sq.ft.

Mass in liquid phase = .35747E-01g/sq.ft.

Mass sorbed = .22028E-01g/sq.ft.

Polygon 1

At time = 2.00, total mass in vadose zone = .64257E-01g/sq.ft.

Mass in gas phase = .82300E-02g/sq.ft.

Mass in liquid phase = .35213E-01g/sq.ft.

Mass sorbed = .20714E-01g/sq.ft.

Since last printout at time = .00

Change in Total Mass = -.97235E-03g/sq.ft.

Advection in from atmosphere = .00000 g/sq.ft.

Advection in from water table = -.92924E-03g/sq.ft.

Diffusion in from atmosphere = -.43105E-04g/sq.ft.

Diffusion in from water table = .00000 g/sq.ft.

Total inflow at boundaries = -.97235E-03g/sq.ft.

Mass discrepancy = .18044E-08g/sq.ft.

Since beginning of run at time = 0.0

Change in Total Mass = -.97235E-03g/sq.ft.

Advection in from atmosphere = .00000 g/sq.ft.

Advection in from water table = -.92924E-03g/sq.ft.

Diffusion in from atmosphere = -.43105E-04g/sq.ft.

Diffusion in from water table = .00000 g/sq.ft.

Total inflow at boundaries = -.97235E-03g/sq.ft.

Mass discrepancy = .18044E-08g/sq.ft.

Polygon 1

At time = 2.00, total mass in vadose zone = .63191E-01g/sq.ft.

Mass in gas phase = .81061E-02g/sq.ft.

Mass in liquid phase = .34683E-01g/sq.ft.

Mass sorbed = .20402E-01g/sq.ft.

Since last printout at time = 1.00

Change in Total Mass = -.96595E-03g/sq.ft.

Advection in from atmosphere = .00000 g/sq.ft.

Advection in from water table = -.92431E-03g/sq.ft.

Diffusion in from atmosphere = -.41634E-04g/sq.ft.

Diffusion in from water table = .00000 g/sq.ft.

Total inflow at boundaries = -.96595E-03g/sq.ft.

Mass discrepancy = .19209E-08g/sq.ft.

Since beginning of run at time = 0.0

Change in Total Mass = -.19383E-02g/sq.ft.

Advection in from atmosphere = .00000 g/sq.ft.

Advection in from water table = -.18536E-02g/sq.ft.

Diffusion in from atmosphere = -.84739E-04g/sq.ft.

Diffusion in from water table = .00000 g/sq.ft.

Total inflow at boundaries = -.19383E-02g/sq.ft.

Mass discrepancy = .37253E-08g/sq.ft.

Polygon 1
At time = 3.00, total mass in vadose zone = .62233E-01g/sq.ft.
Mass in gas phase = .79831E-02g/sq.ft.
Mass in liquid phase = .34157E-01g/sq.ft.
Mass sorbed = .20093E-01g/sq.ft.

Since last printout at time = 2.00
Change in Total Mass = -.95855E-03g/sq.ft.
Advection in from atmosphere = .00000 g/sq.ft.
Advection in from water table = -.91837E-03g/sq.ft.
Diffusion in from atmosphere = -.40184E-04g/sq.ft.
Diffusion in from water table = .00000 g/sq.ft.
Total inflow at boundaries = -.95855E-03g/sq.ft.
Mass discrepancy = .12806E-08g/sq.ft.

Since beginning of run at time = 0.0
Change in Total Mass = -.28968E-02g/sq.ft.
Advection in from atmosphere = .00000 g/sq.ft.
Advection in from water table = -.27719E-02g/sq.ft.
Diffusion in from atmosphere = -.12492E-03g/sq.ft.
Diffusion in from water table = .00000 g/sq.ft.
Total inflow at boundaries = -.28968E-02g/sq.ft.
Mass discrepancy = .51223E-08g/sq.ft.

Polygon 1
At time = 4.00, total mass in vadose zone = .61283E-01g/sq.ft.
Mass in gas phase = .78613E-02g/sq.ft.
Mass in liquid phase = .33636E-01g/sq.ft.
Mass sorbed = .19786E-01g/sq.ft.

Since last printout at time = 3.00
Change in Total Mass = -.95007E-03g/sq.ft.
Advection in from atmosphere = .00000 g/sq.ft.
Advection in from water table = -.91130E-03g/sq.ft.
Diffusion in from atmosphere = -.38786E-04g/sq.ft.
Diffusion in from water table = .00000 g/sq.ft.
Total inflow at boundaries = -.95007E-03g/sq.ft.
Mass discrepancy = -.30268E-08g/sq.ft.

Since beginning of run at time = 0.0
Change in Total Mass = -.38469E-02g/sq.ft.
Advection in from atmosphere = .00000 g/sq.ft.
Advection in from water table = -.38372E-02g/sq.ft.
Diffusion in from atmosphere = -.16369E-03g/sq.ft.
Diffusion in from water table = .00000 g/sq.ft.
Total inflow at boundaries = -.38469E-02g/sq.ft.
Mass discrepancy = .20955E-08g/sq.ft.

Polygon 1
At time = 5.00, total mass in vadose zone = .60342E-01g/sq.ft.
Mass in gas phase = .77406E-02g/sq.ft.
Mass in liquid phase = .33120E-01g/sq.ft.
Mass sorbed = .19482E-01g/sq.ft.

Since last printout at time = 4.00
Change in Total Mass = -.94052E-03g/sq.ft.

```
                Advection in from atmosphere =        .00000    g/sq.ft.
                Advection in from water table =     -.90314E-03g/sq.ft.
                Diffusion in from atmosphere =      -.37388E-04g/sq.ft.
                Diffusion in from water table =       .00000    g/sq.ft.
           Total inflow at boundaries =     -.94053E-03g/sq.ft.
           Mass discrepancy =      .47148E-08g/sq.ft.

Since beginning of run at time = 0.0
           Change in Total Mass =     -.47874E-02g/sq.ft.
                Advection in from atmosphere =        .00000    g/sq.ft.
                Advection in from water table =     -.45864E-02g/sq.ft.
                Diffusion in from atmosphere =      -.20108E-03g/sq.ft.
                Diffusion in from water table =       .00000    g/sq.ft.
           Total inflow at boundaries =     -.47874E-02g/sq.ft.
           Mass discrepancy =      .69849E-08g/sq.ft.


Polygon   1
At time =       6.00, total mass in vadose zone =     .59412E-01g/sq.ft.
Mass in gas phase     =       .76213E-02g/sq.ft.
Mass in liquid phase  =       .32609E-01g/sq.ft.
Mass sorbed           =       .19182E-01g/sq.ft.

Since last printout at time =       5.00
           Change in Total Mass =     -.93010E-03g/sq.ft.
                Advection in from atmosphere =        .00000    g/sq.ft.
                Advection in from water table =     -.89406E-03g/sq.ft.
                Diffusion in from atmosphere =      -.36054E-04g/sq.ft.
                Diffusion in from water table =       .00000    g/sq.ft.
           Total inflow at boundaries =     -.93011E-03g/sq.ft.
           Mass discrepancy =      .75088E-08g/sq.ft.

Since beginning of run at time = 0.0
           Change in Total Mass =     -.57175E-02g/sq.ft.
                Advection in from atmosphere =        .00000    g/sq.ft.
                Advection in from water table =     -.54804E-02g/sq.ft.
                Diffusion in from atmosphere =      -.23713E-03g/sq.ft.
                Diffusion in from water table =       .00000    g/sq.ft.
           Total inflow at boundaries =     -.57176E-02g/sq.ft.
           Mass discrepancy =      .14435E-07g/sq.ft.


Polygon   1
At time =       7.00, total mass in vadose zone =     .58493E-01g/sq.ft.
Mass in gas phase     =       .75034E-02g/sq.ft.
Mass in liquid phase  =       .32105E-01g/sq.ft.
Mass sorbed           =       .18885E-01g/sq.ft.

Since last printout at time =       6.00
           Change in Total Mass =     -.91906E-03g/sq.ft.
                Advection in from atmosphere =        .00000    g/sq.ft.
                Advection in from water table =     -.88429E-03g/sq.ft.
                Diffusion in from atmosphere =      -.34766E-04g/sq.ft.
                Diffusion in from water table =       .00000    g/sq.ft.
           Total inflow at boundaries =     -.91906E-03g/sq.ft.
           Mass discrepancy =      .46566E-08g/sq.ft.

Since beginning of run at time = 0.0
           Change in Total Mass =     -.66366E-02g/sq.ft.
                Advection in from atmosphere =        .00000    g/sq.ft.
```

Advection in from water table = -.63647E-02g/sq.ft.
Diffusion in from atmosphere = -.27190E-03g/sq.ft.
Diffusion in from water table = .00000 g/sq.ft.
Total inflow at boundaries = -.66366E-02g/sq.ft.
Mass discrepancy = .19092E-07g/sq.ft.

Polygon 1
At time = 8.00, total mass in vadose zone = .57586E-01g/sq.ft.
Mass in gas phase = .73870E-02g/sq.ft.
Mass in liquid phase = .31606E-01g/sq.ft.
Mass sorbed = .18592E-01g/sq.ft.

Since last printout at time = 7.00
Change in Total Mass = -.90764E-03g/sq.ft.
Advection in from atmosphere = .00000 g/sq.ft.
Advection in from water table = -.87411E-03g/sq.ft.
Diffusion in from atmosphere = -.33526E-04g/sq.ft.
Diffusion in from water table = .00000 g/sq.ft.
Total inflow at boundaries = -.90763E-03g/sq.ft.
Mass discrepancy = -.10594E-07g/sq.ft.

Since beginning of run at time = 0.0
Change in Total Mass = -.75442E-02g/sq.ft.
Advection in from atmosphere = .00000 g/sq.ft.
Advection in from water table = -.72388E-02g/sq.ft.
Diffusion in from atmosphere = -.30542E-03g/sq.ft.
Diffusion in from water table = .00000 g/sq.ft.
Total inflow at boundaries = -.75442E-02g/sq.ft.
Mass discrepancy = .83819E-08g/sq.ft.

Polygon 1
At time = 9.00, total mass in vadose zone = .56689E-01g/sq.ft.
Mass in gas phase = .72720E-02g/sq.ft.
Mass in liquid phase = .31115E-01g/sq.ft.
Mass sorbed = .18303E-01g/sq.ft.

Since last printout at time = 8.00
Change in Total Mass = -.89607E-03g/sq.ft.
Advection in from atmosphere = .00000 g/sq.ft.
Advection in from water table = -.86373E-03g/sq.ft.
Diffusion in from atmosphere = -.32334E-04g/sq.ft.
Diffusion in from water table = .00000 g/sq.ft.
Total inflow at boundaries = -.89607E-03g/sq.ft.
Mass discrepancy = .81491E-09g/sq.ft.

Since beginning of run at time = 0.0
Change in Total Mass = -.84403E-02g/sq.ft.
Advection in from atmosphere = .00000 g/sq.ft.
Advection in from water table = -.81026E-02g/sq.ft.
Diffusion in from atmosphere = -.33776E-03g/sq.ft.
Diffusion in from water table = .00000 g/sq.ft.
Total inflow at boundaries = -.84403E-02g/sq.ft.
Mass discrepancy = .93132E-08g/sq.ft.

Polygon 1
At time = 10.00, total mass in vadose zone = .55805E-01g/sq.ft.
Mass in gas phase = .71586E-02g/sq.ft.

```
Mass in liquid phase   =        .30629E-01g/sq.ft.
Mass sorbed            =        .18017E-01g/sq.ft.

Since last printout at time =        9.00
                Change in Total Mass =      -.88453E-03g/sq.ft.
                     Advection in from atmosphere =        .00000    g/sq.ft.
                     Advection in from water table =      -.85335E-03g/sq.ft.
                     Diffusion in from atmosphere =       -.31189E-04g/sq.ft.
                     Diffusion in from water table =       .00000    g/sq.ft.
                Total inflow at boundaries =      -.88454E-03g/sq.ft.
                Mass discrepancy =       .12806E-07g/sq.ft.

Since beginning of run at time = 0.0
                Change in Total Mass =      -.93248E-02g/sq.ft.
                     Advection in from atmosphere =        .00000    g/sq.ft.
                     Advection in from water table =      -.89559E-02g/sq.ft.
                     Diffusion in from atmosphere =       -.36895E-03g/sq.ft.
                     Diffusion in from water table =       .00000    g/sq.ft.
                Total inflow at boundaries =      -.93249E-02g/sq.ft.
                Mass discrepancy =       .21420E-07g/sq.ft.


Polygon    1
At time =       22.00, total mass in vadose zone =      .54932E-02g/sq.ft.
Mass in gas phase      =        .70466E-02g/sq.ft.
Mass in liquid phase   =        .70250E-02g/sq.ft.
Mass sorbed            =        .17735E-01g/sq.ft.

Since last printout at time =       10.00
                Change in Total Mass =      -.87317E-03g/sq.ft.
                     Advection in from atmosphere =        .00000    g/sq.ft.
                     Advection in from water table =      -.84306E-03g/sq.ft.
                     Diffusion in from atmosphere =       -.30092E-04g/sq.ft.
                     Diffusion in from water table =       .00000    g/sq.ft.
                Total inflow at boundaries =      -.87317E-03g/sq.ft.
                Mass discrepancy =      -.29104E-09g/sq.ft.

Since beginning of run at time = 0.0
                Change in Total Mass =      -.10198E-01g/sq.ft.
                     Advection in from atmosphere =        .00000    g/sq.ft.
                     Advection in from water table =      -.97990E-02g/sq.ft.
                     Diffusion in from atmosphere =       -.39904E-03g/sq.ft.
                     Diffusion in from water table =       .00000    g/sq.ft.
                Total inflow at boundaries =      -.10198E-01g/sq.ft.
                Mass discrepancy =       .21420E-07g/sq.ft.


Polygon    1
At time =       12.00, total mass in vadose zone =      .54070E-01g/sq.ft.
Mass in gas phase      =        .69360E-02g/sq.ft.
Mass in liquid phase   =        .29677E-01g/sq.ft.
Mass sorbed            =        .17457E-01g/sq.ft.

Since last printout at time =       11.00
                Change in Total Mass =      -.86202E-03g/sq.ft.
                     Advection in from atmosphere =        .00000    g/sq.ft.
                     Advection in from water table =      -.83298E-03g/sq.ft.
                     Diffusion in from atmosphere =       -.29039E-04g/sq.ft.
                     Diffusion in from water table =       .00000    g/sq.ft.
                Total inflow at boundaries =      -.86202E-03g/sq.ft.
```

Mass discrepancy = .24447E-08g/sq.ft.

Since beginning of run at time = 0.0
Change in Total Mass = -.11060E-01g/sq.ft.
Advection in from atmosphere = .00000 g/sq.ft.
Advection in from water table = -.10632E-01g/sq.ft.
Diffusion in from atmosphere = -.42808E-03g/sq.ft.
Diffusion in from water table = .00000 g/sq.ft.
Total inflow at boundaries = -.11060E-01g/sq.ft.
Mass discrepancy = .23283E-07g/sq.ft.

Polygon 1
At time = 13.00, total mass in vadose zone = .53219E-01g/sq.ft.
Mass in gas phase = .68268E-02g/sq.ft.
Mass in liquid phase = .29210E-01g/sq.ft.
Mass sorbed = .17182E-01g/sq.ft.

Since last printout at time = 12.00
Change in Total Mass = -.85112E-03g/sq.ft.
Advection in from atmosphere = .00000 g/sq.ft.
Advection in from water table = -.82309E-03g/sq.ft.
Diffusion in from atmosphere = -.28031E-04g/sq.ft.
Diffusion in from water table = .00000 g/sq.ft.
Total inflow at boundaries = -.85112E-03g/sq.ft.
Mass discrepancy = .84028E-08g/sq.ft.

Since beginning of run at time = 0.0
Change in Total Mass = -.11911E-01g/sq.ft.
Advection in from atmosphere = .00000 g/sq.ft.
Advection in from water table = -.11455E-01g/sq.ft.
Diffusion in from atmosphere = -.45622E-03g/sq.ft.
Diffusion in from water table = .00000 g/sq.ft.
Total inflow at boundaries = -.11911E-01g/sq.ft.
Mass discrepancy = .29802E-07g/sq.ft.

Polygon 1
At time = 14.00, total mass in vadose zone = .52378E-01g/sq.ft.
Mass in gas phase = .67390E-02g/sq.ft.
Mass in liquid phase = .28748E-01g/sq.ft.
Mass sorbed = .16931E-01g/sq.ft.

Since last printout at time = 13.00
Change in Total Mass = -.84048E-03g/sq.ft.
Advection in from atmosphere = .00000 g/sq.ft.
Advection in from water table = -.81341E-03g/sq.ft.
Diffusion in from atmosphere = -.27065E-04g/sq.ft.
Diffusion in from water table = .00000 g/sq.ft.
Total inflow at boundaries = -.84048E-03g/sq.ft.
Mass discrepancy = -.37253E-08g/sq.ft.

Since beginning of run at time = 0.0
Change in Total Mass = -.12752E-01g/sq.ft.
Advection in from atmosphere = .00000 g/sq.ft.
Advection in from water table = -.12268E-01g/sq.ft.
Diffusion in from atmosphere = -.48317E-03g/sq.ft.
Diffusion in from water table = .00000 g/sq.ft.
Total inflow at boundaries = -.12752E-01g/sq.ft.
Mass discrepancy = .27008E-07g/sq.ft.

```
Polygon   1
At time =      15.00, total mass in vadose zone =     .51548E-01g/sq.ft.
Mass in gas phase     =       .66125E-02g/sq.ft.
Mass in liquid phase  =       .28293E-01g/sq.ft.
Mass sorbed           =       .16643E-01g/sq.ft.

Since last printout at time =      14.00
               Change in Total Mass =     -.83007E-03g/sq.ft.
                    Advection in from atmosphere =       .00000    g/sq.ft.
                    Advection in from water table =     -.80393E-03g/sq.ft.
                    Diffusion in from atmosphere =      -.26139E-04g/sq.ft.
                    Diffusion in from water table =      .00000    g/sq.ft.
               Total inflow at boundaries =     -.83007E-03g/sq.ft.
               Mass discrepancy =      .93132E-09g/sq.ft.

Since beginning of run at time = 0.0
               Change in Total Mass =     -.13582E-01g/sq.ft.
                    Advection in from atmosphere =       .00000    g/sq.ft.
                    Advection in from water table =     -.13072E-01g/sq.ft.
                    Diffusion in from atmosphere =      -.50931E-03g/sq.ft.
                    Diffusion in from water table =      .00000    g/sq.ft.
               Total inflow at boundaries =     -.13582E-01g/sq.ft.
               Mass discrepancy =      .27940E-07g/sq.ft.


Polygon   1
At time =      16.00, total mass in vadose zone =     .50728E-01g/sq.ft.
Mass in gas phase     =       .65073E-02g/sq.ft.
Mass in liquid phase  =       .27843E-01g/sq.ft.
Mass sorbed           =       .16378E-01g/sq.ft.

Since last printout at time =      15.00
               Change in Total Mass =     -.81986E-03g/sq.ft.
                    Advection in from atmosphere =       .00000    g/sq.ft.
                    Advection in from water table =     -.79462E-03g/sq.ft.
                    Diffusion in from atmosphere =      -.25252E-04g/sq.ft.
                    Diffusion in from water table =      .00000    g/sq.ft.
               Total inflow at boundaries =     -.81987E-03g/sq.ft.
               Mass discrepancy =      .48894E-08g/sq.ft.

Since beginning of run at time = 0.0
               Change in Total Mass =     -.14402E-01g/sq.ft.
                    Advection in from atmosphere =       .00000    g/sq.ft.
                    Advection in from water table =     -.13867E-01g/sq.ft.
                    Diffusion in from atmosphere =      -.53456E-03g/sq.ft.
                    Diffusion in from water table =      .00000    g/sq.ft.
               Total inflow at boundaries =     -.14402E-01g/sq.ft.
               Mass discrepancy =      .32596E-07g/sq.ft.


Polygon   1
At time =      17.00, total mass in vadose zone =     .49918E-01g/sq.ft.
Mass in gas phase     =       .64034E-02g/sq.ft.
Mass in liquid phase  =       .27398E-01g/sq.ft.
Mass sorbed           =       .16117E-01g/sq.ft.

Since last printout at time =      16.00
               Change in Total Mass =     -.80986E-03g/sq.ft.
```

```
                    Advection in from atmosphere =       .00000    g/sq.ft.
                    Advection in from water table =     -.78545E-03g/sq.ft.
                    Diffusion in from atmosphere =      -.24402E-04g/sq.ft.
                    Diffusion in from water table =      .00000    g/sq.ft.
               Total inflow at boundaries =     -.80985E-03g/sq.ft.
               Mass discrepancy =     -.81491E-09g/sq.ft.

Since beginning of run at time = 0.0
               Change in Total Mass =     -.15211E-01g/sq.ft.
                    Advection in from atmosphere =       .00000    g/sq.ft.
                    Advection in from water table =     -.14652E-01g/sq.ft.
                    Diffusion in from atmosphere =      -.55896E-03g/sq.ft.
                    Diffusion in from water table =      .00000    g/sq.ft.
               Total inflow at boundaries =     -.15211E-01g/sq.ft.
               Mass discrepancy =      .31665E-07g/sq.ft.


Polygon   1
At time =      18.00, total mass in vadose zone =     .49118E-01g/sq.ft.
Mass in gas phase     =       .63008E-02g/sq.ft.
Mass in liquid phase  =       .26959E-01g/sq.ft.
Mass sorbed           =       .15858E-01g/sq.ft.

Since last printout at time =      17.00
               Change in Total Mass =     -.80001E-03g/sq.ft.
                    Advection in from atmosphere =       .00000    g/sq.ft.
                    Advection in from water table =     -.77642E-03g/sq.ft.
                    Diffusion in from atmosphere =      -.23587E-04g/sq.ft.
                    Diffusion in from water table =      .00000    g/sq.ft.
               Total inflow at boundaries =     -.80001E-03g/sq.ft.
               Mass discrepancy =     -.12224E-08g/sq.ft.

Since beginning of run at time = 0.0
               Change in Total Mass =     -.16011E-01g/sq.ft.
                    Advection in from atmosphere =       .00000    g/sq.ft.
                    Advection in from water table =     -.15429E-01g/sq.ft.
                    Diffusion in from atmosphere =      -.58255E-03g/sq.ft.
                    Diffusion in from water table =      .00000    g/sq.ft.
               Total inflow at boundaries =     -.16011E-01g/sq.ft.
               Mass discrepancy =      .29802E-07g/sq.ft.


Polygon   1
At time =      19.00, total mass in vadose zone =     .48328E-01g/sq.ft.
Mass in gas phase     =       .61994E-02g/sq.ft.
Mass in liquid phase  =       .26525E-01g/sq.ft.
Mass sorbed           =       .15603E-01g/sq.ft.

Since last printout at time =      18.00
               Change in Total Mass =     -.79031E-03g/sq.ft.
                    Advection in from atmosphere =       .00000    g/sq.ft.
                    Advection in from water table =     -.76750E-03g/sq.ft.
                    Diffusion in from atmosphere =      -.22806E-04g/sq.ft.
                    Diffusion in from water table =      .00000    g/sq.ft.
               Total inflow at boundaries =     -.79031E-03g/sq.ft.
               Mass discrepancy =      .33178E-08g/sq.ft.

Since beginning of run at time = 0.0
               Change in Total Mass =     -.16802E-01g/sq.ft.
                    Advection in from atmosphere =       .00000    g/sq.ft.
```

```
                    Advection in from water table =     -.16196E-01g/sq.ft.
                    Diffusion in from atmosphere =      -.60536E-03g/sq.ft.
                    Diffusion in from water table =      .00000    g/sq.ft.
               Total inflow at boundaries =     -.16802E-01g/sq.ft.
               Mass discrepancy =      .33528E-07g/sq.ft.


Polygon   1
At time =      20.00, total mass in vadose zone =     .47547E-01g/sq.ft.
Mass in gas phase     =       .60993E-02g/sq.ft.
Mass in liquid phase  =       .26097E-01g/sq.ft.
Mass sorbed           =       .15351E-01g/sq.ft.

Since last printout at time =      19.00
               Change in Total Mass =     -.78073E-03g/sq.ft.
                    Advection in from atmosphere =       .00000    g/sq.ft.
                    Advection in from water table =     -.75868E-03g/sq.ft.
                    Diffusion in from atmosphere =      -.22057E-04g/sq.ft.
                    Diffusion in from water table =      .00000    g/sq.ft.
               Total inflow at boundaries =     -.78074E-03g/sq.ft.
               Mass discrepancy =      .83237E-08g/sq.ft.

Since beginning of run at time = 0.0
               Change in Total Mass =     -.17582E-01g/sq.ft.
                    Advection in from atmosphere =       .00000    g/sq.ft.
                    Advection in from water table =     -.16955E-01g/sq.ft.
                    Diffusion in from atmosphere =      -.62741E-03g/sq.ft.
                    Diffusion in from water table =      .00000    g/sq.ft.
               Total inflow at boundaries =     -.17582E-01g/sq.ft.
               Mass discrepancy =      .40978E-07g/sq.ft.


Polygon   1
At time =      21.00, total mass in vadose zone =     .46776E-01g/sq.ft.
Mass in gas phase     =       .60004E-02g/sq.ft.
Mass in liquid phase  =       .25674E-01g/sq.ft.
Mass sorbed           =       .15102E-01g/sq.ft.

Since last printout at time =      20.00
               Change in Total Mass =     -.77129E-03g/sq.ft.
                    Advection in from atmosphere =       .00000    g/sq.ft.
                    Advection in from water table =     -.74995E-03g/sq.ft.
                    Diffusion in from atmosphere =      -.21338E-04g/sq.ft.
                    Diffusion in from water table =      .00000    g/sq.ft.
               Total inflow at boundaries =     -.77129E-03g/sq.ft.
               Mass discrepancy =      .11642E-08g/sq.ft.

Since beginning of run at time = 0.0
               Change in Total Mass =     -.18354E-01g/sq.ft.
                    Advection in from atmosphere =       .00000    g/sq.ft.
                    Advection in from water table =     -.17705E-01g/sq.ft.
                    Diffusion in from atmosphere =      -.64875E-03g/sq.ft.
                    Diffusion in from water table =      .00000    g/sq.ft.
               Total inflow at boundaries =     -.18354E-01g/sq.ft.
               Mass discrepancy =      .42841E-07g/sq.ft.


Polygon   1
At time =      22.00, total mass in vadose zone =     .46014E-01g/sq.ft.
Mass in gas phase     =       .59026E-02g/sq.ft.
```

```
Mass in liquid phase  =       .25255E-01g/sq.ft.
Mass sorbed           =       .14856E-01g/sq.ft.

Since last printout at time =      21.00
              Change in Total Mass =     -.76195E-03g/sq.ft.
                   Advection in from atmosphere =       .00000    g/sq.ft.
                   Advection in from water table =     -.74130E-03g/sq.ft.
                   Diffusion in from atmosphere =      -.20648E-04g/sq.ft.
                   Diffusion in from water table =      .00000    g/sq.ft.
              Total inflow at boundaries =     -.76195E-03g/sq.ft.
              Mass discrepancy =     -.22701E-08g/sq.ft.

Since beginning of run at time = 0.0
              Change in Total Mass =     -.19116E-01g/sq.ft.
                   Advection in from atmosphere =       .00000    g/sq.ft.
                   Advection in from water table =     -.18446E-01g/sq.ft.
                   Diffusion in from atmosphere =      -.66940E-03g/sq.ft.
                   Diffusion in from water table =      .00000    g/sq.ft.
              Total inflow at boundaries =     -.19116E-01g/sq.ft.
              Mass discrepancy =      .39116E-07g/sq.ft.


Polygon   1
At time =      23.00, total mass in vadose zone =     .45261E-01g/sq.ft.
Mass in gas phase     =       .58061E-02g/sq.ft.
Mass in liquid phase  =       .24842E-01g/sq.ft.
Mass sorbed           =       .14613E-01g/sq.ft.

Since last printout at time =      22.00
              Change in Total Mass =     -.75270E-03g/sq.ft.
                   Advection in from atmosphere =       .00000    g/sq.ft.
                   Advection in from water table =     -.73272E-03g/sq.ft.
                   Diffusion in from atmosphere =      -.19986E-04g/sq.ft.
                   Diffusion in from water table =      .00000    g/sq.ft.
              Total inflow at boundaries =     -.75270E-03g/sq.ft.
              Mass discrepancy =      .11059E-08g/sq.ft.

Since beginning of run at time = 0.0
              Change in Total Mass =     -.19868E-01g/sq.ft.
                   Advection in from atmosphere =       .00000    g/sq.ft.
                   Advection in from water table =     -.19179E-01g/sq.ft.
                   Diffusion in from atmosphere =      -.68939E-03g/sq.ft.
                   Diffusion in from water table =      .00000    g/sq.ft.
              Total inflow at boundaries =     -.19868E-01g/sq.ft.
              Mass discrepancy =      .40978E-07g/sq.ft.


Polygon   1
At time =      24.00, total mass in vadose zone =     .44518E-01g/sq.ft.
Mass in gas phase     =       .57107E-02g/sq.ft.
Mass in liquid phase  =       .24434E-01g/sq.ft.
Mass sorbed           =       .14373E-01g/sq.ft.

Since last printout at time =      23.00
              Change in Total Mass =     -.74355E-03g/sq.ft.
                   Advection in from atmosphere =       .00000    g/sq.ft.
                   Advection in from water table =     -.72420E-03g/sq.ft.
                   Diffusion in from atmosphere =      -.19350E-04g/sq.ft.
                   Diffusion in from water table =      .00000    g/sq.ft.
              Total inflow at boundaries =     -.74355E-03g/sq.ft.
```

```
              Mass discrepancy =      .52387E-09g/sq.ft.

Since beginning of run at time = 0.0
              Change in Total Mass =     -.20612E-01g/sq.ft.
                   Advection in from atmosphere =       .00000    g/sq.ft.
                   Advection in from water table =     -.19903E-01g/sq.ft.
                   Diffusion in from atmosphere =      -.70874E-03g/sq.ft.
                   Diffusion in from water table =      .00000    g/sq.ft.
              Total inflow at boundaries =     -.20612E-01g/sq.ft.
              Mass discrepancy =      .42841E-07g/sq.ft.


Polygon   1
At time =      25.00, total mass in vadose zone =     .43783E-01g/sq.ft.
Mass in gas phase     =       .56165E-02g/sq.ft.
Mass in liquid phase  =       .24031E-01g/sq.ft.
Mass sorbed           =       .14136E-01g/sq.ft.

Since last printout at time =      24.00
              Change in Total Mass =     -.73448E-03g/sq.ft.
                   Advection in from atmosphere =       .00000    g/sq.ft.
                   Advection in from water table =     -.71575E-03g/sq.ft.
                   Diffusion in from atmosphere =      -.18739E-04g/sq.ft.
                   Diffusion in from water table =      .00000    g/sq.ft.
              Total inflow at boundaries =     -.73449E-03g/sq.ft.
              Mass discrepancy =      .88476E-08g/sq.ft.

Since beginning of run at time = 0.0
              Change in Total Mass =     -.21346E-01g/sq.ft.
                   Advection in from atmosphere =       .00000    g/sq.ft.
                   Advection in from water table =     -.20619E-01g/sq.ft.
                   Diffusion in from atmosphere =      -.72748E-03g/sq.ft.
                   Diffusion in from water table =      .00000    g/sq.ft.
              Total inflow at boundaries =     -.21346E-01g/sq.ft.
              Mass discrepancy =      .50291E-07g/sq.ft.


Polygon   1
At time =      26.00, total mass in vadose zone =     .43058E-01g/sq.ft.
Mass in gas phase     =       .55234E-02g/sq.ft.
Mass in liquid phase  =       .23633E-01g/sq.ft.
Mass sorbed           =       .13902E-01g/sq.ft.

Since last printout at time =      25.00
              Change in Total Mass =     -.72552E-03g/sq.ft.
                   Advection in from atmosphere =       .00000    g/sq.ft.
                   Advection in from water table =     -.70736E-03g/sq.ft.
                   Diffusion in from atmosphere =      -.18152E-04g/sq.ft.
                   Diffusion in from water table =      .00000    g/sq.ft.
              Total inflow at boundaries =     -.72551E-03g/sq.ft.
              Mass discrepancy =     -.89058E-08g/sq.ft.

Since beginning of run at time = 0.0
              Change in Total Mass =     -.22072E-01g/sq.ft.
                   Advection in from atmosphere =       .00000    g/sq.ft.
                   Advection in from water table =     -.21326E-01g/sq.ft.
                   Diffusion in from atmosphere =      -.74563E-03g/sq.ft.
                   Diffusion in from water table =      .00000    g/sq.ft.
              Total inflow at boundaries =     -.22072E-01g/sq.ft.
              Mass discrepancy =      .40978E-07g/sq.ft.
```

Polygon 1
At time = 27.00, total mass in vadose zone = .42341E-01g/sq.ft.
Mass in gas phase = .54315E-02g/sq.ft.
Mass in liquid phase = .23239E-01g/sq.ft.
Mass sorbed = .13670E-01g/sq.ft.

Since last printout at time = 26.00
Change in Total Mass = -.71660E-03g/sq.ft.
Advection in from atmosphere = .00000 g/sq.ft.
Advection in from water table = -.69902E-03g/sq.ft.
Diffusion in from atmosphere = -.17587E-04g/sq.ft.
Diffusion in from water table = .00000 g/sq.ft.
Total inflow at boundaries = -.71661E-03g/sq.ft.
Mass discrepancy = .60536E-08g/sq.ft.

Since beginning of run at time = 0.0
Change in Total Mass = -.22789E-01g/sq.ft.
Advection in from atmosphere = .00000 g/sq.ft.
Advection in from water table = -.22025E-01g/sq.ft.
Diffusion in from atmosphere = -.76321E-03g/sq.ft.
Diffusion in from water table = .00000 g/sq.ft.
Total inflow at boundaries = -.22789E-01g/sq.ft.
Mass discrepancy = .48429E-07g/sq.ft.

Polygon 1
At time = 28.00, total mass in vadose zone = .41633E-01g/sq.ft.
Mass in gas phase = .53407E-02g/sq.ft.
Mass in liquid phase = .22851E-01g/sq.ft.
Mass sorbed = .13442E-01g/sq.ft.

Since last printout at time = 27.00
Change in Total Mass = -.70778E-03g/sq.ft.
Advection in from atmosphere = .00000 g/sq.ft.
Advection in from water table = -.69073E-03g/sq.ft.
Diffusion in from atmosphere = -.17044E-04g/sq.ft.
Diffusion in from water table = .00000 g/sq.ft.
Total inflow at boundaries = -.70778E-03g/sq.ft.
Mass discrepancy = .11059E-08g/sq.ft.

Since beginning of run at time = 0.0
Change in Total Mass = -.23496E-01g/sq.ft.
Advection in from atmosphere = .00000 g/sq.ft.
Advection in from water table = -.22716E-01g/sq.ft.
Diffusion in from atmosphere = -.78026E-03g/sq.ft.
Diffusion in from water table = .00000 g/sq.ft.
Total inflow at boundaries = -.23496E-01g/sq.ft.
Mass discrepancy = .48429E-07g/sq.ft.

Polygon 1
At time = 29.00, total mass in vadose zone = .40934E-01g/sq.ft.
Mass in gas phase = .52510E-02g/sq.ft.
Mass in liquid phase = .22467E-01g/sq.ft.
Mass sorbed = .13216E-01g/sq.ft.

Since last printout at time = 28.00
Change in Total Mass = -.69901E-03g/sq.ft.

```
                    Advection in from atmosphere =       .00000    g/sq.ft.
                    Advection in from water table =     -.68249E-03g/sq.ft.
                    Diffusion in from atmosphere =      -.16522E-04g/sq.ft.
                    Diffusion in from water table =       .00000    g/sq.ft.
               Total inflow at boundaries =     -.69902E-03g/sq.ft.
               Mass discrepancy =      .61700E-08g/sq.ft.

Since beginning of run at time = 0.0
               Change in Total Mass =     -.24195E-01g/sq.ft.
                    Advection in from atmosphere =       .00000    g/sq.ft.
                    Advection in from water table =     -.23399E-01g/sq.ft.
                    Diffusion in from atmosphere =      -.79678E-03g/sq.ft.
                    Diffusion in from water table =       .00000    g/sq.ft.
               Total inflow at boundaries =     -.24195E-01g/sq.ft.
               Mass discrepancy =      .54017E-07g/sq.ft.


Polygon   1
At time =      30.00, total mass in vadose zone =     .40244E-01g/sq.ft.
Mass in gas phase     =       .51624E-02g/sq.ft.
Mass in liquid phase  =       .22088E-01g/sq.ft.
Mass sorbed           =       .12993E-01g/sq.ft.

Since last printout at time =      29.00
               Change in Total Mass =     -.69032E-03g/sq.ft.
                    Advection in from atmosphere =       .00000    g/sq.ft.
                    Advection in from water table =     -.67430E-03g/sq.ft.
                    Diffusion in from atmosphere =      -.16019E-04g/sq.ft.
                    Diffusion in from water table =       .00000    g/sq.ft.
               Total inflow at boundaries =     -.69032E-03g/sq.ft.
               Mass discrepancy =     -.75670E-09g/sq.ft.

Since beginning of run at time = 0.0
               Change in Total Mass =     -.24886E-01g/sq.ft.
                    Advection in from atmosphere =       .00000    g/sq.ft.
                    Advection in from water table =     -.24073E-01g/sq.ft.
                    Diffusion in from atmosphere =      -.81280E-03g/sq.ft.
                    Diffusion in from water table =       .00000    g/sq.ft.
               Total inflow at boundaries =     -.24886E-01g/sq.ft.
               Mass discrepancy =      .54017E-07g/sq.ft.


GROUNDWATER IMPACT OF POLYGON   1

 Time        Mass per area (g/sq.ft.)      Total Mass (g)
     1.00          .92924E-03                 58.078
     2.00          .92431E-03                 57.770
     3.00          .91837E-03                 57.398
     4.00          .91130E-03                 56.956
     5.00          .90314E-03                 56.446
     6.00          .89406E-03                 55.879
     7.00          .88429E-03                 55.268
     8.00          .87411E-03                 54.632
     9.00          .86373E-03                 53.983
    10.00          .85335E-03                 53.334
    11.00          .84308E-03                 52.692
    12.00          .83298E-03                 52.061
    13.00          .82309E-03                 51.443
    14.00          .81341E-03                 50.838
    15.00          .80393E-03                 50.245
```

16.00	.79462E-03	49.663
17.00	.78545E-03	49.091
18.00	.77642E-03	48.526
19.00	.76750E-03	47.969
20.00	.75868E-03	47.418
21.00	.74995E-03	46.872
22.00	.74130E-03	46.331
23.00	.73272E-03	45.795
24.00	.72420E-03	45.263
25.00	.71575E-03	44.734
26.00	.70736E-03	44.210
27.00	.69902E-03	43.689
28.00	.69073E-03	43.171
29.00	.68249E-03	42.656
30.00	.67430E-03	42.144

****

****

TOTAL GROUNDWATER IMPACT

Time (yr)	Mass (g)	Cumulative Mass (g)
1.00	58.078	58.078
2.00	57.770	115.85
3.00	57.398	173.25
4.00	56.956	230.20
5.00	56.446	286.65
6.00	55.879	342.53
7.00	55.268	397.79
8.00	54.632	452.43
9.00	53.983	506.41
10.00	53.334	559.74
11.00	52.692	612.44
12.00	52.061	664.50
13.00	51.443	715.94
14.00	50.838	766.78
15.00	50.245	817.02
16.00	49.663	866.69
17.00	49.091	915.78
18.00	48.526	964.31
19.00	47.969	1012.3
20.00	47.418	1059.7
21.00	46.872	1106.6
22.00	46.331	1152.9
23.00	45.795	1198.7
24.00	45.263	1244.0
25.00	44.734	1288.7
26.00	44.210	1332.9
27.00	43.689	1376.6
28.00	43.171	1419.8
29.00	42.656	1462.4
30.00	42.144	1504.6

Polygon 50
Time: .000

Cell	Cgas(g/cu.ft.)	Cliq(g/cu.ft.)	Csol
1	.13711E-04	.28987E-04	.93627E-10
2	.13711E-04	.28987E-04	.93627E-10
3	.13711E-04	.28987E-04	.93627E-10
4	.13711E-04	.28987E-04	.93627E-10
5	.13711E-04	.28987E-04	.93627E-10
6	.13711E-04	.28987E-04	.93627E-10
7	.21984E-03	.46478E-03	.15013E-08
8	.21984E-03	.46478E-03	.15013E-08
9	.21984E-03	.46478E-03	.15013E-08
10	.21984E-03	.46478E-03	.15013E-08
11	.21984E-03	.46478E-03	.15013E-08
12	.21984E-03	.46478E-03	.15013E-08
13	.47136E-03	.99654E-03	.32188E-08
14	.47136E-03	.99654E-03	.32188E-08
15	.47136E-03	.99654E-03	.32188E-08
16	.47136E-03	.99654E-03	.32188E-08
17	.47136E-03	.99654E-03	.32188E-08
18	.47136E-03	.99654E-03	.32188E-08
19	.72288E-03	.15283E-02	.49364E-08
20	.72288E-03	.15283E-02	.49364E-08
21	.72288E-03	.15283E-02	.49364E-08
22	.72288E-03	.15283E-02	.49364E-08
23	.72288E-03	.15283E-02	.49364E-08
24	.72288E-03	.15283E-02	.49364E-08
25	.97487E-03	.20610E-02	.66572E-08
26	.97487E-03	.20610E-02	.66572E-08
27	.97487E-03	.20610E-02	.66572E-08
28	.97487E-03	.20610E-02	.66572E-08
29	.97487E-03	.20610E-02	.66572E-08
30	.97487E-03	.20610E-02	.66572E-08
31	.12264E-02	.25928E-02	.83747E-08
32	.12264E-02	.25928E-02	.83747E-08
33	.12264E-02	.25928E-02	.83747E-08
34	.12264E-02	.25928E-02	.83747E-08
35	.12264E-02	.25928E-02	.83747E-08
36	.12264E-02	.25928E-02	.83747E-08
37	.14779E-02	.31245E-02	.10092E-07
38	.14779E-02	.31245E-02	.10092E-07
39	.14779E-02	.31245E-02	.10092E-07
40	.14779E-02	.31245E-02	.10092E-07
41	.14779E-02	.31245E-02	.10092E-07
42	.14779E-02	.31245E-02	.10092E-07
43	.17299E-02	.36573E-02	.11813E-07
44	.17299E-02	.36573E-02	.11813E-07
45	.17299E-02	.36573E-02	.11813E-07
46	.17299E-02	.36573E-02	.11813E-07
47	.17299E-02	.36573E-02	.11813E-07
48	.17299E-02	.36573E-02	.11813E-07
49	.19814E-02	.41891E-02	.13531E-07
50	.19814E-02	.41891E-02	.13531E-07
51	.19814E-02	.41891E-02	.13531E-07
52	.19814E-02	.41891E-02	.13531E-07
53	.19814E-02	.41891E-02	.13531E-07
54	.19814E-02	.41891E-02	.13531E-07
55	.22329E-02	.47208E-02	.15248E-07
56	.22329E-02	.47208E-02	.15248E-07

57	.22329E-02	.47208E-02	.15248E-07
58	.22329E-02	.47208E-02	.15248E-07
59	.22329E-02	.47208E-02	.15248E-07
60	.22329E-02	.47208E-02	.15248E-07

Polygon 50
Time: 10.000

Cell	Cgas(g/cu.ft.)	Cliq(g/cu.ft.)	Csol
1	.40551E-05	.85732E-05	.27692E-10
2	.10527E-04	.22255E-04	.71885E-10
3	.19152E-04	.40491E-04	.13079E-09
4	.29647E-04	.62678E-04	.20245E-09
5	.41755E-04	.88277E-04	.28514E-09
6	.55340E-04	.11700E-03	.37791E-09
7	.71123E-04	.15037E-03	.48568E-09
8	.90527E-04	.19139E-03	.61819E-09
9	.11436E-03	.24178E-03	.78096E-09
10	.14200E-03	.30022E-03	.96970E-09
11	.17182E-03	.36325E-03	.11733E-08
12	.20218E-03	.42743E-03	.13806E-08
13	.23298E-03	.49257E-03	.15910E-08
14	.26565E-03	.56162E-03	.18140E-08
15	.30128E-03	.63695E-03	.20573E-08
16	.33945E-03	.71765E-03	.23180E-08
17	.37855E-03	.80032E-03	.25850E-08
18	.41689E-03	.88137E-03	.28468E-08
19	.45437E-03	.96062E-03	.31028E-08
20	.49250E-03	.10412E-02	.33632E-08
21	.53256E-03	.11259E-02	.36367E-08
22	.57430E-03	.12142E-02	.39218E-08
23	.61629E-03	.13029E-02	.42085E-08
24	.65698E-03	.13890E-02	.44864E-08
25	.69639E-03	.14723E-02	.47555E-08
26	.73611E-03	.15562E-02	.50267E-08
27	.77748E-03	.16437E-02	.53092E-08
28	.82031E-03	.17343E-02	.56017E-08
29	.86320E-03	.18250E-02	.58946E-08
30	.90462E-03	.19125E-02	.61774E-08
31	.94461E-03	.19971E-02	.64505E-08
32	.98478E-03	.20820E-02	.67248E-08
33	.10265E-02	.21701E-02	.70096E-08
34	.10695E-02	.22612E-02	.73036E-08
35	.11126E-02	.23521E-02	.75974E-08
36	.11540E-02	.24398E-02	.78805E-08
37	.11940E-02	.25243E-02	.81534E-08
38	.12340E-02	.26090E-02	.84270E-08
39	.12756E-02	.26967E-02	.87105E-08
40	.13184E-02	.27872E-02	.90027E-08
41	.13610E-02	.28774E-02	.92940E-08
42	.14020E-02	.29641E-02	.95740E-08
43	.14414E-02	.30473E-02	.98429E-08
44	.14807E-02	.31305E-02	.10112E-07
45	.15214E-02	.32164E-02	.10389E-07
46	.15631E-02	.33046E-02	.10674E-07
47	.16044E-02	.33921E-02	.10956E-07
48	.16439E-02	.34754E-02	.11226E-07
49	.16813E-02	.35546E-02	.11481E-07
50	.17184E-02	.36329E-02	.11734E-07
51	.17562E-02	.37129E-02	.11993E-07
52	.17946E-02	.37940E-02	.12255E-07

53	.18319E-02	.38730E-02	.12510E-07
54	.18666E-02	.39463E-02	.12747E-07
55	.18984E-02	.40135E-02	.12964E-07
56	.19287E-02	.40775E-02	.13170E-07
57	.19585E-02	.41405E-02	.13374E-07
58	.19873E-02	.42015E-02	.13571E-07
59	.20134E-02	.42566E-02	.13749E-07
60	.20346E-02	.43014E-02	.13894E-07

Polygon 50
Time: 20.000

Cell	Cgas(g/cu.ft.)	Cliq(g/cu.ft.)	Csol
1	.28394E-05	.60029E-05	.19389E-10
2	.73445E-05	.15527E-04	.50154E-10
3	.13385E-04	.28297E-04	.91400E-10
4	.20891E-04	.44166E-04	.14266E-09
5	.29835E-04	.63076E-04	.20374E-09
6	.40215E-04	.85022E-04	.27462E-09
7	.52047E-04	.11004E-03	.35541E-09
8	.65367E-04	.13820E-03	.44637E-09
9	.80248E-04	.16966E-03	.54799E-09
10	.96800E-04	.20465E-03	.66102E-09
11	.11515E-03	.24344E-03	.78631E-09
12	.13539E-03	.28623E-03	.92452E-09
13	.15754E-03	.33308E-03	.10758E-08
14	.18157E-03	.38388E-03	.12399E-08
15	.20738E-03	.43843E-03	.14161E-08
16	.23486E-03	.49653E-03	.16038E-08
17	.26393E-03	.55799E-03	.18023E-08
18	.29451E-03	.62264E-03	.20111E-08
19	.32649E-03	.69025E-03	.22295E-08
20	.35971E-03	.76050E-03	.24564E-08
21	.39403E-03	.83304E-03	.26907E-08
22	.42929E-03	.90758E-03	.29315E-08
23	.46539E-03	.98392E-03	.31781E-08
24	.50228E-03	.10619E-02	.34299E-08
25	.53985E-03	.11413E-02	.36865E-08
26	.57801E-03	.12220E-02	.39471E-08
27	.61664E-03	.13037E-02	.42109E-08
28	.65566E-03	.13862E-02	.44773E-08
29	.69502E-03	.14694E-02	.47461E-08
30	.73471E-03	.15533E-02	.50171E-08
31	.77468E-03	.16378E-02	.52901E-08
32	.81487E-03	.17228E-02	.55645E-08
33	.85520E-03	.18080E-02	.58400E-08
34	.89563E-03	.18935E-02	.61160E-08
35	.93612E-03	.19791E-02	.63925E-08
36	.97669E-03	.20649E-02	.66696E-08
37	.10173E-02	.21507E-02	.69469E-08
38	.10579E-02	.22366E-02	.72242E-08
39	.10984E-02	.23223E-02	.75010E-08
40	.11389E-02	.24077E-02	.77770E-08
41	.11791E-02	.24929E-02	.80520E-08
42	.12192E-02	.25777E-02	.83259E-08
43	.12592E-02	.26621E-02	.85986E-08
44	.12988E-02	.27460E-02	.88695E-08
45	.13382E-02	.28291E-02	.91380E-08
46	.13771E-02	.29114E-02	.94037E-08
47	.14155E-02	.29926E-02	.96660E-08
48	.14534E-02	.30727E-02	.99247E-08

49	.14906E-02	.31515E-02	.10179E-07
50	.15272E-02	.32287E-02	.10429E-07
51	.15628E-02	.33039E-02	.10672E-07
52	.15973E-02	.33769E-02	.10908E-07
53	.16306E-02	.34473E-02	.11135E-07
54	.16625E-02	.35148E-02	.11353E-07
55	.16928E-02	.35789E-02	.11560E-07
56	.17212E-02	.36390E-02	.11754E-07
57	.17474E-02	.36944E-02	.11933E-07
58	.17711E-02	.37444E-02	.12094E-07
59	.17918E-02	.37882E-02	.12236E-07
60	.18092E-02	.38250E-02	.12355E-07

Polygon 50
Time: 30.000

Cell	Cgas(g/cu.ft.)	Cliq(g/cu.ft.)	Csol
1	.20546E-05	.43438E-05	.14031E-10
2	.53075E-05	.11221E-04	.36243E-10
3	.96610E-05	.20425E-04	.65973E-10
4	.15065E-04	.31849E-04	.10287E-09
5	.21502E-04	.45458E-04	.14683E-09
6	.28979E-04	.61266E-04	.19789E-09
7	.37519E-04	.79322E-04	.25621E-09
8	.47157E-04	.99698E-04	.32203E-09
9	.57934E-04	.12248E-03	.39562E-09
10	.69895E-04	.14777E-03	.47730E-09
11	.83089E-04	.17566E-03	.56739E-09
12	.97565E-04	.20627E-03	.66625E-09
13	.11337E-03	.23969E-03	.77421E-09
14	.13056E-03	.27603E-03	.89159E-09
15	.14917E-03	.31537E-03	.10186E-08
16	.16922E-03	.35777E-03	.11556E-08
17	.19073E-03	.40324E-03	.13025E-08
18	.21370E-03	.45180E-03	.14593E-08
19	.23810E-03	.50338E-03	.16259E-08
20	.26390E-03	.55793E-03	.18021E-08
21	.29105E-03	.61533E-03	.19875E-08
22	.31950E-03	.67547E-03	.21818E-08
23	.34917E-03	.73820E-03	.23844E-08
24	.37999E-03	.80336E-03	.25949E-08
25	.41188E-03	.87078E-03	.28126E-08
26	.44475E-03	.94028E-03	.30371E-08
27	.47853E-03	.10117E-02	.32678E-08
28	.51312E-03	.10848E-02	.35040E-08
29	.54846E-03	.11595E-02	.37453E-08
30	.58445E-03	.12356E-02	.39911E-08
31	.62103E-03	.13130E-02	.42409E-08
32	.65812E-03	.13914E-02	.44941E-08
33	.69565E-03	.14707E-02	.47504E-08
34	.73356E-03	.15509E-02	.50093E-08
35	.77178E-03	.16317E-02	.52703E-08
36	.81026E-03	.17130E-02	.55330E-08
37	.84892E-03	.17948E-02	.57971E-08
38	.88772E-03	.18768E-02	.60620E-08
39	.92660E-03	.19590E-02	.63275E-08
40	.96549E-03	.20412E-02	.65931E-08
41	.10043E-02	.21233E-02	.68584E-08
42	.10431E-02	.22053E-02	.71230E-08
43	.10817E-02	.22868E-02	.73864E-08
44	.11200E-02	.23679E-02	.76483E-08

45	.11580E-02	.24483E-02	.79080E-08
46	.11957E-02	.25279E-02	.81650E-08
47	.12328E-02	.26064E-02	.84188E-08
48	.12694E-02	.26838E-02	.86687E-08
49	.13053E-02	.27597E-02	.89139E-08
50	.13405E-02	.28339E-02	.91536E-08
51	.13746E-02	.29062E-02	.93869E-08
52	.14077E-02	.29761E-02	.96129E-08
53	.14395E-02	.30434E-02	.98302E-08
54	.14699E-02	.31076E-02	.10038E-07
55	.14986E-02	.31683E-02	.10234E-07
56	.15254E-02	.32249E-02	.10416E-07
57	.15500E-02	.32769E-02	.10584E-07
58	.15721E-02	.33236E-02	.10735E-07
59	.15913E-02	.33643E-02	.10867E-07
60	.16073E-02	.33981E-02	.10976E-07

V-Leach, VER 1.1
Jake Turin, 11/91
PGA V-leach model, poly screen-TCE-11/10/92-Poly 50.inp Rev Soil, HGC Chem
1 polygons.
Timestep = 1.00 years. Simulation length = 30.00 years.
Printout every 1.00 years. Vertical profile stored every 10.00 years.
Koc = 123.60 ml/g, .43649E-02cu.ft./g
Kh = .47300 (dimensionless).
Aqueous solubility = 1100.0 mg/l, 31.149 g/cu.ft
Free air diffusion coefficient = .70290 sq. m/day, 2761.7 sq.ft./yr

Polygon 1
Polygon 50
Polygon area = 62500. sq. ft.
60 cells, each cell 1.000 ft. thick.
Soil Properties:
Bulk density = 1.6400 g/ml, 46440. g/cu.ft.
Porosity = .3810 Volumetric water content = .2550
Organic carbon content = .00074000
Recharge Rate = .19685000 ft/yr
Conc. in recharge water = .00000 mg/l, .00000 g/cu.ft
Atmospheric concentration = .00000 mg/l, .00000 g/cu.ft
Water table is impermeable to gas diffusion.

Calculation of Total TCE Mass and Revised Vertical Distributions in Polygon 50 using HGC Distribution equations and Revised Soil Physical Data

0.49 (Cs)	Cz = (3.023z - 11.38)Cs

Cz (ug/L) Vert. Dist. Eq.	Calculated Depth Interval (z)	Total Depth Interval (feet)	Total Soil Conc Ct* (ug/Kg)	Mt (ug/cc)	Volume of Soil (cubic ft)	Mass TCE (grams)	Mass TCE (pounds)
0.49	3	6	0.29	4.81E-04	375000	5.11	0.01
7.76	9	6	4.65	0.01	375000	80.90	0.18
16.64	15	6	9.97	0.02	375000	173.61	0.38
25.53	21	6	15.29	0.03	375000	266.32	0.59
34.42	27	6	20.62	0.03	375000	359.03	0.79
43.31	33	6	25.94	0.04	375000	451.75	1.00
52.19	39	6	31.26	0.05	375000	544.46	1.20
61.08	45	6	36.59	0.06	375000	637.17	1.40
69.97	51	6	41.91	0.07	375000	729.88	1.61
78.86	57	6	47.23	0.08	375000	822.59	1.81
390.24		60	233.75	0.38		4070.83	8.97

Polygon Area: 62,500 sq. ft.

* Ct conversion based on Kgt of 0.599 L/Kg

**Cs Determined as mathematical average for VOC concentrations of polygon listed in Table A-1 of HGC, 1989.

```
PGA V-leach model, polygon screen-TCE-11/18/92-Poly64.INP  New soil, Old chem
    1
       1.0          30.          1.0          10.
     123.6         .473        1100.        .7029
olygon 64
     80000.           1.     .196851         1.64         .381         .255      .00074
         0.           0.          -1.
   60
    1     6      12.08
    7    12      12.24
   13    18      12.40
   19    24      12.57
   25    30      36.76
   31    36      60.93
   37    42      60.93
   43    48      60.93
   49    54      60.93
   55    60      60.93
```

V-Leach, VER 1.1
Jake Turin, 11/91
PGA V-leach model, polygon screen-TCE-11/18/92-Poly64.INP New soil, Old chem

Polygon 1
At time = .00, total mass in vadose zone = .10886 g/sq.ft.
Mass in gas phase = .13964E-01g/sq.ft.
Mass in liquid phase = .59749E-01g/sq.ft.
Mass sorbed = .35147E-01g/sq.ft.

Polygon 1
At time = 1.00, total mass in vadose zone = .10738 g/sq.ft.
Mass in gas phase = .13774E-01g/sq.ft.
Mass in liquid phase = .58935E-01g/sq.ft.
Mass sorbed = .34668E-01g/sq.ft.

Since last printout at time = .00
Change in Total Mass = -.14834E-02g/sq.ft.
Advection in from atmosphere = .00000 g/sq.ft.
Advection in from water table = -.11989E-02g/sq.ft.
Diffusion in from atmosphere = -.28457E-03g/sq.ft.
Diffusion in from water table = .00000 g/sq.ft.
Total inflow at boundaries = -.14834E-02g/sq.ft.
Mass discrepancy = .13970E-08g/sq.ft.

Since beginning of run at time = 0.0
Change in Total Mass = -.14834E-02g/sq.ft.
Advection in from atmosphere = .00000 g/sq.ft.
Advection in from water table = -.11989E-02g/sq.ft.
Diffusion in from atmosphere = -.28457E-03g/sq.ft.
Diffusion in from water table = .00000 g/sq.ft.
Total inflow at boundaries = -.14834E-02g/sq.ft.
Mass discrepancy = .13970E-08g/sq.ft.

Polygon 1
At time = 2.00, total mass in vadose zone = .10593 g/sq.ft.
Mass in gas phase = .13589E-01g/sq.ft.
Mass in liquid phase = .58142E-01g/sq.ft.
Mass sorbed = .34201E-01g/sq.ft.

Since last printout at time = 1.00
Change in Total Mass = -.14455E-02g/sq.ft.
Advection in from atmosphere = .00000 g/sq.ft.
Advection in from water table = -.11988E-02g/sq.ft.
Diffusion in from atmosphere = -.24679E-03g/sq.ft.
Diffusion in from water table = .00000 g/sq.ft.
Total inflow at boundaries = -.14456E-02g/sq.ft.
Mass discrepancy = .28755E-07g/sq.ft.

Since beginning of run at time = 0.0
Change in Total Mass = -.29290E-02g/sq.ft.
Advection in from atmosphere = .00000 g/sq.ft.
Advection in from water table = -.23976E-02g/sq.ft.
Diffusion in from atmosphere = -.53136E-03g/sq.ft.
Diffusion in from water table = .00000 g/sq.ft.
Total inflow at boundaries = -.29290E-02g/sq.ft.
Mass discrepancy = .30035E-07g/sq.ft.

```
Polygon   1
At time =       3.00, total mass in vadose zone =     .10452    g/sq.ft.
Mass in gas phase     =       .13407E-01g/sq.ft.
Mass in liquid phase  =       .57365E-01g/sq.ft.
Mass sorbed           =       .33745E-01g/sq.ft.

Since last printout at time =       2.00
               Change in Total Mass =     -.14146E-02g/sq.ft.
                    Advection in from atmosphere =       .00000    g/sq.ft.
                    Advection in from water table =     -.11986E-02g/sq.ft.
                    Diffusion in from atmosphere =      -.21589E-03g/sq.ft.
                    Diffusion in from water table =       .00000    g/sq.ft.
               Total inflow at boundaries =     -.14145E-02g/sq.ft.
               Mass discrepancy =     -.17928E-07g/sq.ft.

Since beginning of run at time = 0.0
               Change in Total Mass =     -.43435E-02g/sq.ft.
                    Advection in from atmosphere =       .00000    g/sq.ft.
                    Advection in from water table =     -.35963E-02g/sq.ft.
                    Diffusion in from atmosphere =      -.74725E-03g/sq.ft.
                    Diffusion in from water table =       .00000    g/sq.ft.
               Total inflow at boundaries =     -.43435E-02g/sq.ft.
               Mass discrepancy =      .12107E-07g/sq.ft.


Polygon   1
At time =       4.00, total mass in vadose zone =     .10313    g/sq.ft.
Mass in gas phase     =       .13229E-01g/sq.ft.
Mass in liquid phase  =       .56603E-01g/sq.ft.
Mass sorbed           =       .33296E-01g/sq.ft.

Since last printout at time =       3.00
               Change in Total Mass =     -.13889E-02g/sq.ft.
                    Advection in from atmosphere =       .00000    g/sq.ft.
                    Advection in from water table =     -.11985E-02g/sq.ft.
                    Diffusion in from atmosphere =      -.19044E-03g/sq.ft.
                    Diffusion in from water table =       .00000    g/sq.ft.
               Total inflow at boundaries =     -.13889E-02g/sq.ft.
               Mass discrepancy =     -.12806E-08g/sq.ft.

Since beginning of run at time = 0.0
               Change in Total Mass =     -.57324E-02g/sq.ft.
                    Advection in from atmosphere =       .00000    g/sq.ft.
                    Advection in from water table =     -.47948E-02g/sq.ft.
                    Diffusion in from atmosphere =      -.93769E-03g/sq.ft.
                    Diffusion in from water table =       .00000    g/sq.ft.
               Total inflow at boundaries =     -.57324E-02g/sq.ft.
               Mass discrepancy =      .10710E-07g/sq.ft.


Polygon   1
At time =       5.00, total mass in vadose zone =     .10176    g/sq.ft.
Mass in gas phase     =       .13054E-01g/sq.ft.
Mass in liquid phase  =       .55852E-01g/sq.ft.
Mass sorbed           =       .32855E-01g/sq.ft.

Since last printout at time =       4.00
               Change in Total Mass =     -.13676E-02g/sq.ft.
```

```
                Advection in from atmosphere =       .00000    g/sq.ft.
                Advection in from water table =     -.11982E-02g/sq.ft.
                Diffusion in from atmosphere =      -.16931E-03g/sq.ft.
                Diffusion in from water table =      .00000    g/sq.ft.
           Total inflow at boundaries =     -.13675E-02g/sq.ft.
           Mass discrepancy =     -.80327E-08g/sq.ft.

Since beginning of run at time = 0.0
           Change in Total Mass =     -.71000E-02g/sq.ft.
                Advection in from atmosphere =       .00000    g/sq.ft.
                Advection in from water table =     -.59930E-02g/sq.ft.
                Diffusion in from atmosphere =      -.11070E-02g/sq.ft.
                Diffusion in from water table =      .00000    g/sq.ft.
           Total inflow at boundaries =     -.71000E-02g/sq.ft.
           Mass discrepancy =      .27940E-08g/sq.ft.


Polygon   1
At time =       6.00, total mass in vadose zone =     .10041    g/sq.ft.
Mass in gas phase     =       .12881E-01g/sq.ft.
Mass in liquid phase  =       .55112E-01g/sq.ft.
Mass sorbed           =       .32419E-01g/sq.ft.

Since last printout at time =       5.00
           Change in Total Mass =     -.13495E-02g/sq.ft.
                Advection in from atmosphere =       .00000    g/sq.ft.
                Advection in from water table =     -.11979E-02g/sq.ft.
                Diffusion in from atmosphere =      -.15163E-03g/sq.ft.
                Diffusion in from water table =      .00000    g/sq.ft.
           Total inflow at boundaries =     -.13496E-02g/sq.ft.
           Mass discrepancy =      .42608E-07g/sq.ft.

Since beginning of run at time = 0.0
           Change in Total Mass =     -.84495E-02g/sq.ft.
                Advection in from atmosphere =       .00000    g/sq.ft.
                Advection in from water table =     -.71909E-02g/sq.ft.
                Diffusion in from atmosphere =      -.12586E-02g/sq.ft.
                Diffusion in from water table =      .00000    g/sq.ft.
           Total inflow at boundaries =     -.84495E-02g/sq.ft.
           Mass discrepancy =      .45635E-07g/sq.ft.


Polygon   1
At time =       7.00, total mass in vadose zone =     .99077E-01g/sq.ft.
Mass in gas phase     =       .12709E-01g/sq.ft.
Mass in liquid phase  =       .54379E-01g/sq.ft.
Mass sorbed           =       .31988E-01g/sq.ft.

Since last printout at time =       6.00
           Change in Total Mass =     -.13343E-02g/sq.ft.
                Advection in from atmosphere =       .00000    g/sq.ft.
                Advection in from water table =     -.11975E-02g/sq.ft.
                Diffusion in from atmosphere =      -.13673E-03g/sq.ft.
                Diffusion in from water table =      .00000    g/sq.ft.
           Total inflow at boundaries =     -.13343E-02g/sq.ft.
           Mass discrepancy =     -.33993E-07g/sq.ft.

Since beginning of run at time = 0.0
           Change in Total Mass =     -.97838E-02g/sq.ft.
                Advection in from atmosphere =       .00000    g/sq.ft.
```

```
                Advection in from water table =     -.83885E-02g/sq.ft.
                Diffusion in from atmosphere =      -.13953E-02g/sq.ft.
                Diffusion in from water table =      .00000    g/sq.ft.
           Total inflow at boundaries =     -.97838E-02g/sq.ft.
           Mass discrepancy =      .12107E-07g/sq.ft.


Polygon   1
At time =       8.00, total mass in vadose zone =     .97756E-01g/sq.ft.
Mass in gas phase     =       .12540E-01g/sq.ft.
Mass in liquid phase  =       .53654E-01g/sq.ft.
Mass sorbed           =       .31562E-01g/sq.ft.

Since last printout at time =       7.00
           Change in Total Mass =     -.13211E-02g/sq.ft.
                Advection in from atmosphere =       .00000    g/sq.ft.
                Advection in from water table =     -.11970E-02g/sq.ft.
                Diffusion in from atmosphere =      -.12407E-03g/sq.ft.
                Diffusion in from water table =      .00000    g/sq.ft.
           Total inflow at boundaries =     -.13211E-02g/sq.ft.
           Mass discrepancy =      .21886E-07g/sq.ft.

Since beginning of run at time = 0.0
           Change in Total Mass =     -.11105E-01g/sq.ft.
                Advection in from atmosphere =       .00000    g/sq.ft.
                Advection in from water table =     -.95855E-02g/sq.ft.
                Diffusion in from atmosphere =      -.15194E-02g/sq.ft.
                Diffusion in from water table =      .00000    g/sq.ft.
           Total inflow at boundaries =     -.11105E-01g/sq.ft.
           Mass discrepancy =      .34459E-07g/sq.ft.


Polygon   1
At time =       9.00, total mass in vadose zone =     .96446E-01g/sq.ft.
Mass in gas phase     =       .12372E-01g/sq.ft.
Mass in liquid phase  =       .52935E-01g/sq.ft.
Mass sorbed           =       .31139E-01g/sq.ft.

Since last printout at time =       8.00
           Change in Total Mass =     -.13097E-02g/sq.ft.
                Advection in from atmosphere =       .00000    g/sq.ft.
                Advection in from water table =     -.11964E-02g/sq.ft.
                Diffusion in from atmosphere =      -.11324E-03g/sq.ft.
                Diffusion in from water table =      .00000    g/sq.ft.
           Total inflow at boundaries =     -.13097E-02g/sq.ft.
           Mass discrepancy =     -.15134E-07g/sq.ft.

Since beginning of run at time = 0.0
           Change in Total Mass =     -.12415E-01g/sq.ft.
                Advection in from atmosphere =       .00000    g/sq.ft.
                Advection in from water table =     -.10782E-01g/sq.ft.
                Diffusion in from atmosphere =      -.16327E-02g/sq.ft.
                Diffusion in from water table =      .00000    g/sq.ft.
           Total inflow at boundaries =     -.12415E-01g/sq.ft.
           Mass discrepancy =      .19558E-07g/sq.ft.


Polygon   1
At time =      10.00, total mass in vadose zone =     .95147E-01g/sq.ft.
Mass in gas phase     =       .12205E-01g/sq.ft.
```

```
Mass in liquid phase  =       .52222E-01g/sq.ft.
Mass sorbed           =       .30719E-01g/sq.ft.

Since last printout at time =       9.00
               Change in Total Mass =     -.12996E-02g/sq.ft.
                    Advection in from atmosphere =       .00000    g/sq.ft.
                    Advection in from water table =     -.11957E-02g/sq.ft.
                    Diffusion in from atmosphere =      -.10391E-03g/sq.ft.
                    Diffusion in from water table =      .00000    g/sq.ft.
               Total inflow at boundaries =     -.12996E-02g/sq.ft.
               Mass discrepancy =      .14319E-07g/sq.ft.

Since beginning of run at time = 0.0
               Change in Total Mass =     -.13714E-01g/sq.ft.
                    Advection in from atmosphere =       .00000    g/sq.ft.
                    Advection in from water table =     -.11978E-01g/sq.ft.
                    Diffusion in from atmosphere =      -.17366E-02g/sq.ft.
                    Diffusion in from water table =      .00000    g/sq.ft.
               Total inflow at boundaries =     -.13714E-01g/sq.ft.
               Mass discrepancy =      .33528E-07g/sq.ft.


Polygon   1
At time =      11.00, total mass in vadose zone =     .93856E-01g/sq.ft.
Mass in gas phase     =       .12040E-01g/sq.ft.
Mass in liquid phase  =       .51514E-01g/sq.ft.
Mass sorbed           =       .30302E-01g/sq.ft.

Since last printout at time =      10.00
               Change in Total Mass =     -.12906E-02g/sq.ft.
                    Advection in from atmosphere =       .00000    g/sq.ft.
                    Advection in from water table =     -.11948E-02g/sq.ft.
                    Diffusion in from atmosphere =      -.95815E-04g/sq.ft.
                    Diffusion in from water table =      .00000    g/sq.ft.
               Total inflow at boundaries =     -.12906E-02g/sq.ft.
               Mass discrepancy =     -.14435E-07g/sq.ft.

Since beginning of run at time = 0.0
               Change in Total Mass =     -.15005E-01g/sq.ft.
                    Advection in from atmosphere =       .00000    g/sq.ft.
                    Advection in from water table =     -.13172E-01g/sq.ft.
                    Diffusion in from atmosphere =      -.18324E-02g/sq.ft.
                    Diffusion in from water table =      .00000    g/sq.ft.
               Total inflow at boundaries =     -.15005E-01g/sq.ft.
               Mass discrepancy =      .18626E-07g/sq.ft.


Polygon   1
At time =      12.00, total mass in vadose zone =     .92574E-01g/sq.ft.
Mass in gas phase     =       .11875E-01g/sq.ft.
Mass in liquid phase  =       .50810E-01g/sq.ft.
Mass sorbed           =       .29888E-01g/sq.ft.

Since last printout at time =      11.00
               Change in Total Mass =     -.12824E-02g/sq.ft.
                    Advection in from atmosphere =       .00000    g/sq.ft.
                    Advection in from water table =     -.11937E-02g/sq.ft.
                    Diffusion in from atmosphere =      -.88741E-04g/sq.ft.
                    Diffusion in from water table =      .00000    g/sq.ft.
               Total inflow at boundaries =     -.12824E-02g/sq.ft.
```

```
          Mass discrepancy =      .13155E-07g/sq.ft.

Since beginning of run at time = 0.0
          Change in Total Mass =     -.16287E-01g/sq.ft.
               Advection in from atmosphere =       .00000    g/sq.ft.
               Advection in from water table =     -.14366E-01g/sq.ft.
               Diffusion in from atmosphere =      -.19211E-02g/sq.ft.
               Diffusion in from water table =      .00000    g/sq.ft.
          Total inflow at boundaries =     -.16287E-01g/sq.ft.
          Mass discrepancy =      .31665E-07g/sq.ft.


Polygon   1
At time =      13.00, total mass in vadose zone =     .91299E-01g/sq.ft.
Mass in gas phase     =       .11712E-01g/sq.ft.
Mass in liquid phase  =       .50110E-01g/sq.ft.
Mass sorbed           =       .29477E-01g/sq.ft.

Since last printout at time =      12.00
          Change in Total Mass =     -.12750E-02g/sq.ft.
               Advection in from atmosphere =       .00000    g/sq.ft.
               Advection in from water table =     -.11924E-02g/sq.ft.
               Diffusion in from atmosphere =      -.82521E-04g/sq.ft.
               Diffusion in from water table =      .00000    g/sq.ft.
          Total inflow at boundaries =     -.12750E-02g/sq.ft.
          Mass discrepancy =     -.32131E-07g/sq.ft.

Since beginning of run at time = 0.0
          Change in Total Mass =     -.17562E-01g/sq.ft.
               Advection in from atmosphere =       .00000    g/sq.ft.
               Advection in from water table =     -.15558E-01g/sq.ft.
               Diffusion in from atmosphere =      -.20037E-02g/sq.ft.
               Diffusion in from water table =      .00000    g/sq.ft.
          Total inflow at boundaries =     -.17562E-01g/sq.ft.
          Mass discrepancy =      .00000    g/sq.ft.


Polygon   1
At time =      14.00, total mass in vadose zone =     .90031E-01g/sq.ft.
Mass in gas phase     =       .11549E-01g/sq.ft.
Mass in liquid phase  =       .49414E-01g/sq.ft.
Mass sorbed           =       .29067E-01g/sq.ft.

Since last printout at time =      13.00
          Change in Total Mass =     -.12680E-02g/sq.ft.
               Advection in from atmosphere =       .00000    g/sq.ft.
               Advection in from water table =     -.11910E-02g/sq.ft.
               Diffusion in from atmosphere =      -.77018E-04g/sq.ft.
               Diffusion in from water table =      .00000    g/sq.ft.
          Total inflow at boundaries =     -.12680E-02g/sq.ft.
          Mass discrepancy =      .21420E-07g/sq.ft.

Since beginning of run at time = 0.0
          Change in Total Mass =     -.18830E-01g/sq.ft.
               Advection in from atmosphere =       .00000    g/sq.ft.
               Advection in from water table =     -.16749E-01g/sq.ft.
               Diffusion in from atmosphere =      -.20807E-02g/sq.ft.
               Diffusion in from water table =      .00000    g/sq.ft.
          Total inflow at boundaries =     -.18830E-01g/sq.ft.
          Mass discrepancy =      .20489E-07g/sq.ft.
```

```
Polygon   1
At time =      15.00, total mass in vadose zone =     .88769E-01g/sq.ft.
Mass in gas phase     =       .11387E-01g/sq.ft.
Mass in liquid phase  =       .48722E-01g/sq.ft.
Mass sorbed           =       .28660E-01g/sq.ft.

Since last printout at time =      14.00
               Change in Total Mass =     -.12614E-02g/sq.ft.
                    Advection in from atmosphere =       .00000    g/sq.ft.
                    Advection in from water table =     -.11893E-02g/sq.ft.
                    Diffusion in from atmosphere =      -.72121E-04g/sq.ft.
                    Diffusion in from water table =      .00000    g/sq.ft.
               Total inflow at boundaries =     -.12614E-02g/sq.ft.
               Mass discrepancy =     -.16298E-08g/sq.ft.

Since beginning of run at time = 0.0
               Change in Total Mass =     -.20091E-01g/sq.ft.
                    Advection in from atmosphere =       .00000    g/sq.ft.
                    Advection in from water table =     -.17939E-01g/sq.ft.
                    Diffusion in from atmosphere =      -.21528E-02g/sq.ft.
                    Diffusion in from water table =      .00000    g/sq.ft.
               Total inflow at boundaries =     -.20092E-01g/sq.ft.
               Mass discrepancy =      .18626E-07g/sq.ft.


Polygon   1
At time =      16.00, total mass in vadose zone =     .87514E-01g/sq.ft.
Mass in gas phase     =       .11226E-01g/sq.ft.
Mass in liquid phase  =       .48033E-01g/sq.ft.
Mass sorbed           =       .28255E-01g/sq.ft.

Since last printout at time =      15.00
               Change in Total Mass =     -.12551E-02g/sq.ft.
                    Advection in from atmosphere =       .00000    g/sq.ft.
                    Advection in from water table =     -.11873E-02g/sq.ft.
                    Diffusion in from atmosphere =      -.67740E-04g/sq.ft.
                    Diffusion in from water table =      .00000    g/sq.ft.
               Total inflow at boundaries =     -.12551E-02g/sq.ft.
               Mass discrepancy =      .39581E-08g/sq.ft.

Since beginning of run at time = 0.0
               Change in Total Mass =     -.21347E-01g/sq.ft.
                    Advection in from atmosphere =       .00000    g/sq.ft.
                    Advection in from water table =     -.19126E-01g/sq.ft.
                    Diffusion in from atmosphere =      -.22205E-02g/sq.ft.
                    Diffusion in from water table =      .00000    g/sq.ft.
               Total inflow at boundaries =     -.21347E-01g/sq.ft.
               Mass discrepancy =      .22352E-07g/sq.ft.


Polygon   1
At time =      17.00, total mass in vadose zone =     .86265E-01g/sq.ft.
Mass in gas phase     =       .11066E-01g/sq.ft.
Mass in liquid phase  =       .47348E-01g/sq.ft.
Mass sorbed           =       .27852E-01g/sq.ft.

Since last printout at time =      16.00
               Change in Total Mass =     -.12489E-02g/sq.ft.
```

```
                    Advection in from atmosphere =       .00000    g/sq.ft.
                    Advection in from water table =     -.11851E-02g/sq.ft.
                    Diffusion in from atmosphere =      -.63798E-04g/sq.ft.
                    Diffusion in from water table =      .00000    g/sq.ft.
               Total inflow at boundaries =     -.12489E-02g/sq.ft.
               Mass discrepancy =     -.11409E-07g/sq.ft.

Since beginning of run at time = 0.0
               Change in Total Mass =     -.22595E-01g/sq.ft.
                    Advection in from atmosphere =       .00000    g/sq.ft.
                    Advection in from water table =     -.20311E-01g/sq.ft.
                    Diffusion in from atmosphere =      -.22843E-02g/sq.ft.
                    Diffusion in from water table =      .00000    g/sq.ft.
               Total inflow at boundaries =     -.22595E-01g/sq.ft.
               Mass discrepancy =      .11176E-07g/sq.ft.


Polygon   1
At time =      18.00, total mass in vadose zone =     .85022E-01g/sq.ft.
Mass in gas phase     =       .10907E-01g/sq.ft.
Mass in liquid phase  =       .46665E-01g/sq.ft.
Mass sorbed           =       .27450E-01g/sq.ft.

Since last printout at time =      17.00
               Change in Total Mass =     -.12428E-02g/sq.ft.
                    Advection in from atmosphere =       .00000    g/sq.ft.
                    Advection in from water table =     -.11826E-02g/sq.ft.
                    Diffusion in from atmosphere =      -.60236E-04g/sq.ft.
                    Diffusion in from water table =      .00000    g/sq.ft.
               Total inflow at boundaries =     -.12428E-02g/sq.ft.
               Mass discrepancy =      .50059E-08g/sq.ft.

Since beginning of run at time = 0.0
               Change in Total Mass =     -.23838E-01g/sq.ft.
                    Advection in from atmosphere =       .00000    g/sq.ft.
                    Advection in from water table =     -.21494E-01g/sq.ft.
                    Diffusion in from atmosphere =      -.23446E-02g/sq.ft.
                    Diffusion in from water table =      .00000    g/sq.ft.
               Total inflow at boundaries =     -.23838E-01g/sq.ft.
               Mass discrepancy =      .16764E-07g/sq.ft.


Polygon   1
At time =      19.00, total mass in vadose zone =     .83786E-01g/sq.ft.
Mass in gas phase     =       .10748E-01g/sq.ft.
Mass in liquid phase  =       .45987E-01g/sq.ft.
Mass sorbed           =       .27051E-01g/sq.ft.

Since last printout at time =      18.00
               Change in Total Mass =     -.12368E-02g/sq.ft.
                    Advection in from atmosphere =       .00000    g/sq.ft.
                    Advection in from water table =     -.11798E-02g/sq.ft.
                    Diffusion in from atmosphere =      -.57001E-04g/sq.ft.
                    Diffusion in from water table =      .00000    g/sq.ft.
               Total inflow at boundaries =     -.12368E-02g/sq.ft.
               Mass discrepancy =      .13039E-07g/sq.ft.

Since beginning of run at time = 0.0
               Change in Total Mass =     -.25075E-01g/sq.ft.
                    Advection in from atmosphere =       .00000    g/sq.ft.
```

```
                Advection in from water table =     -.22674E-01g/sq.ft.
                Diffusion in from atmosphere =      -.24016E-02g/sq.ft.
                Diffusion in from water table =      .00000    g/sq.ft.
           Total inflow at boundaries =     -.25075E-01g/sq.ft.
           Mass discrepancy =      .29802E-07g/sq.ft.


Polygon   1
At time =      20.00, total mass in vadose zone =     .82555E-01g/sq.ft.
Mass in gas phase     =       .10590E-01g/sq.ft.
Mass in liquid phase  =       .45311E-01g/sq.ft.
Mass sorbed           =       .26654E-01g/sq.ft.

Since last printout at time =      19.00
           Change in Total Mass =     -.12307E-02g/sq.ft.
                Advection in from atmosphere =       .00000    g/sq.ft.
                Advection in from water table =     -.11767E-02g/sq.ft.
                Diffusion in from atmosphere =      -.54051E-04g/sq.ft.
                Diffusion in from water table =      .00000    g/sq.ft.
           Total inflow at boundaries =     -.12307E-02g/sq.ft.
           Mass discrepancy =     -.37253E-08g/sq.ft.

Since beginning of run at time = 0.0
           Change in Total Mass =     -.26306E-01g/sq.ft.
                Advection in from atmosphere =       .00000    g/sq.ft.
                Advection in from water table =     -.23850E-01g/sq.ft.
                Diffusion in from atmosphere =      -.24556E-02g/sq.ft.
                Diffusion in from water table =      .00000    g/sq.ft.
           Total inflow at boundaries =     -.26306E-01g/sq.ft.
           Mass discrepancy =      .26077E-07g/sq.ft.


Polygon   1
At time =      21.00, total mass in vadose zone =     .81330E-01g/sq.ft.
Mass in gas phase     =       .10433E-01g/sq.ft.
Mass in liquid phase  =       .44639E-01g/sq.ft.
Mass sorbed           =       .26258E-01g/sq.ft.

Since last printout at time =      20.00
           Change in Total Mass =     -.12245E-02g/sq.ft.
                Advection in from atmosphere =       .00000    g/sq.ft.
                Advection in from water table =     -.11732E-02g/sq.ft.
                Diffusion in from atmosphere =      -.51350E-04g/sq.ft.
                Diffusion in from water table =      .00000    g/sq.ft.
           Total inflow at boundaries =     -.12245E-02g/sq.ft.
           Mass discrepancy =     -.15134E-08g/sq.ft.

Since beginning of run at time = 0.0
           Change in Total Mass =     -.27530E-01g/sq.ft.
                Advection in from atmosphere =       .00000    g/sq.ft.
                Advection in from water table =     -.25023E-01g/sq.ft.
                Diffusion in from atmosphere =      -.25070E-02g/sq.ft.
                Diffusion in from water table =      .00000    g/sq.ft.
           Total inflow at boundaries =     -.27530E-01g/sq.ft.
           Mass discrepancy =      .24214E-07g/sq.ft.


Polygon   1
At time =      22.00, total mass in vadose zone =     .80112E-01g/sq.ft.
Mass in gas phase     =       .10277E-01g/sq.ft.
```

```
Mass in liquid phase  =       .43970E-01g/sq.ft.
Mass sorbed           =       .25865E-01g/sq.ft.

Since last printout at time =      21.00
              Change in Total Mass =     -.12182E-02g/sq.ft.
                   Advection in from atmosphere =       .00000    g/sq.ft.
                   Advection in from water table =     -.11694E-02g/sq.ft.
                   Diffusion in from atmosphere =      -.48868E-04g/sq.ft.
                   Diffusion in from water table =       .00000    g/sq.ft.
              Total inflow at boundaries =     -.12182E-02g/sq.ft.
              Mass discrepancy =     -.43074E-08g/sq.ft.

Since beginning of run at time = 0.0
              Change in Total Mass =     -.28749E-01g/sq.ft.
                   Advection in from atmosphere =       .00000    g/sq.ft.
                   Advection in from water table =     -.26193E-01g/sq.ft.
                   Diffusion in from atmosphere =      -.25558E-02g/sq.ft.
                   Diffusion in from water table =       .00000    g/sq.ft.
              Total inflow at boundaries =     -.28749E-01g/sq.ft.
              Mass discrepancy =      .20489E-07g/sq.ft.


Polygon   1
At time =      23.00, total mass in vadose zone =     .78900E-01g/sq.ft.
Mass in gas phase     =       .10121E-01g/sq.ft.
Mass in liquid phase  =       .43305E-01g/sq.ft.
Mass sorbed           =       .25474E-01g/sq.ft.

Since last printout at time =      22.00
              Change in Total Mass =     -.12117E-02g/sq.ft.
                   Advection in from atmosphere =       .00000    g/sq.ft.
                   Advection in from water table =     -.11652E-02g/sq.ft.
                   Diffusion in from atmosphere =      -.46578E-04g/sq.ft.
                   Diffusion in from water table =       .00000    g/sq.ft.
              Total inflow at boundaries =     -.12117E-02g/sq.ft.
              Mass discrepancy =     -.46566E-09g/sq.ft.

Since beginning of run at time = 0.0
              Change in Total Mass =     -.29960E-01g/sq.ft.
                   Advection in from atmosphere =       .00000    g/sq.ft.
                   Advection in from water table =     -.27358E-01g/sq.ft.
                   Diffusion in from atmosphere =      -.26024E-02g/sq.ft.
                   Diffusion in from water table =       .00000    g/sq.ft.
              Total inflow at boundaries =     -.29960E-01g/sq.ft.
              Mass discrepancy =      .20489E-07g/sq.ft.


Polygon   1
At time =      24.00, total mass in vadose zone =     .77695E-01g/sq.ft.
Mass in gas phase     =       .99666E-02g/sq.ft.
Mass in liquid phase  =       .42644E-01g/sq.ft.
Mass sorbed           =       .25085E-01g/sq.ft.

Since last printout at time =      23.00
              Change in Total Mass =     -.12050E-02g/sq.ft.
                   Advection in from atmosphere =       .00000    g/sq.ft.
                   Advection in from water table =     -.11606E-02g/sq.ft.
                   Diffusion in from atmosphere =      -.44460E-04g/sq.ft.
                   Diffusion in from water table =       .00000    g/sq.ft.
              Total inflow at boundaries =     -.12050E-02g/sq.ft.
```

```
                Mass discrepancy =     -.25611E-08g/sq.ft.

Since beginning of run at time = 0.0
                Change in Total Mass =     -.31165E-01g/sq.ft.
                     Advection in from atmosphere =       .00000    g/sq.ft.
                     Advection in from water table =     -.28519E-01g/sq.ft.
                     Diffusion in from atmosphere =      -.26469E-02g/sq.ft.
                     Diffusion in from water table =      .00000    g/sq.ft.
                Total inflow at boundaries =     -.31165E-01g/sq.ft.
                Mass discrepancy =      .16764E-07g/sq.ft.


Polygon   1
At time =      25.00, total mass in vadose zone =     .76497E-01g/sq.ft.
Mass in gas phase     =       .98129E-02g/sq.ft.
Mass in liquid phase  =       .41986E-01g/sq.ft.
Mass sorbed           =       .24698E-01g/sq.ft.

Since last printout at time =      24.00
                Change in Total Mass =     -.11981E-02g/sq.ft.
                     Advection in from atmosphere =       .00000    g/sq.ft.
                     Advection in from water table =     -.11556E-02g/sq.ft.
                     Diffusion in from atmosphere =      -.42494E-04g/sq.ft.
                     Diffusion in from water table =      .00000    g/sq.ft.
                Total inflow at boundaries =     -.11981E-02g/sq.ft.
                Mass discrepancy =      .39581E-08g/sq.ft.

Since beginning of run at time = 0.0
                Change in Total Mass =     -.32363E-01g/sq.ft.
                     Advection in from atmosphere =       .00000    g/sq.ft.
                     Advection in from water table =     -.29674E-01g/sq.ft.
                     Diffusion in from atmosphere =      -.26894E-02g/sq.ft.
                     Diffusion in from water table =      .00000    g/sq.ft.
                Total inflow at boundaries =     -.32363E-01g/sq.ft.
                Mass discrepancy =      .18626E-07g/sq.ft.


Polygon   1
At time =      26.00, total mass in vadose zone =     .75306E-01g/sq.ft.
Mass in gas phase     =       .96602E-02g/sq.ft.
Mass in liquid phase  =       .41333E-01g/sq.ft.
Mass sorbed           =       .24314E-01g/sq.ft.

Since last printout at time =      25.00
                Change in Total Mass =     -.11909E-02g/sq.ft.
                     Advection in from atmosphere =       .00000    g/sq.ft.
                     Advection in from water table =     -.11502E-02g/sq.ft.
                     Diffusion in from atmosphere =      -.40665E-04g/sq.ft.
                     Diffusion in from water table =      .00000    g/sq.ft.
                Total inflow at boundaries =     -.11909E-02g/sq.ft.
                Mass discrepancy =     -.62864E-08g/sq.ft.

Since beginning of run at time = 0.0
                Change in Total Mass =     -.33554E-01g/sq.ft.
                     Advection in from atmosphere =       .00000    g/sq.ft.
                     Advection in from water table =     -.30824E-01g/sq.ft.
                     Diffusion in from atmosphere =      -.27300E-02g/sq.ft.
                     Diffusion in from water table =      .00000    g/sq.ft.
                Total inflow at boundaries =     -.33554E-01g/sq.ft.
                Mass discrepancy =      .14901E-07g/sq.ft.
```

```
Polygon   1
At time =      27.00, total mass in vadose zone =     .74123E-01g/sq.ft.
Mass in gas phase     =       .95084E-02g/sq.ft.
Mass in liquid phase  =       .40683E-01g/sq.ft.
Mass sorbed           =       .23931E-01g/sq.ft.

Since last printout at time =      26.00
              Change in Total Mass =     -.11833E-02g/sq.ft.
                   Advection in from atmosphere =       .00000    g/sq.ft.
                   Advection in from water table =     -.11444E-02g/sq.ft.
                   Diffusion in from atmosphere =      -.38957E-04g/sq.ft.
                   Diffusion in from water table =      .00000    g/sq.ft.
              Total inflow at boundaries =     -.11833E-02g/sq.ft.
              Mass discrepancy =      .47730E-08g/sq.ft.

Since beginning of run at time = 0.0
              Change in Total Mass =     -.34738E-01g/sq.ft.
                   Advection in from atmosphere =       .00000    g/sq.ft.
                   Advection in from water table =     -.31969E-01g/sq.ft.
                   Diffusion in from atmosphere =      -.27690E-02g/sq.ft.
                   Diffusion in from water table =      .00000    g/sq.ft.
              Total inflow at boundaries =     -.34738E-01g/sq.ft.
              Mass discrepancy =      .18626E-07g/sq.ft.


Polygon   1
At time =      28.00, total mass in vadose zone =     .72948E-01g/sq.ft.
Mass in gas phase     =       .93576E-02g/sq.ft.
Mass in liquid phase  =       .40038E-01g/sq.ft.
Mass sorbed           =       .23552E-01g/sq.ft.

Since last printout at time =      27.00
              Change in Total Mass =     -.11755E-02g/sq.ft.
                   Advection in from atmosphere =       .00000    g/sq.ft.
                   Advection in from water table =     -.11382E-02g/sq.ft.
                   Diffusion in from atmosphere =      -.37360E-04g/sq.ft.
                   Diffusion in from water table =      .00000    g/sq.ft.
              Total inflow at boundaries =     -.11755E-02g/sq.ft.
              Mass discrepancy =      .12689E-07g/sq.ft.

Since beginning of run at time = 0.0
              Change in Total Mass =     -.35913E-01g/sq.ft.
                   Advection in from atmosphere =       .00000    g/sq.ft.
                   Advection in from water table =     -.33107E-01g/sq.ft.
                   Diffusion in from atmosphere =      -.28064E-02g/sq.ft.
                   Diffusion in from water table =      .00000    g/sq.ft.
              Total inflow at boundaries =     -.35913E-01g/sq.ft.
              Mass discrepancy =      .33528E-07g/sq.ft.


Polygon   1
At time =      29.00, total mass in vadose zone =     .71780E-01g/sq.ft.
Mass in gas phase     =       .92078E-02g/sq.ft.
Mass in liquid phase  =       .39397E-01g/sq.ft.
Mass sorbed           =       .23175E-01g/sq.ft.

Since last printout at time =      28.00
              Change in Total Mass =     -.11674E-02g/sq.ft.
```

```
                Advection in from atmosphere =        .00000    g/sq.ft.
                Advection in from water table =     -.11315E-02g/sq.ft.
                Diffusion in from atmosphere =      -.35863E-04g/sq.ft.
                Diffusion in from water table =       .00000    g/sq.ft.
            Total inflow at boundaries =     -.11674E-02g/sq.ft.
            Mass discrepancy =     -.10943E-07g/sq.ft.

Since beginning of run at time = 0.0
            Change in Total Mass =     -.37081E-01g/sq.ft.
                Advection in from atmosphere =        .00000    g/sq.ft.
                Advection in from water table =     -.34238E-01g/sq.ft.
                Diffusion in from atmosphere =      -.28422E-02g/sq.ft.
                Diffusion in from water table =       .00000    g/sq.ft.
            Total inflow at boundaries =     -.37081E-01g/sq.ft.
            Mass discrepancy =      .22352E-07g/sq.ft.


Polygon   1
At time =      30.00, total mass in vadose zone =     .70621E-01g/sq.ft.
Mass in gas phase     =       .90592E-02g/sq.ft.
Mass in liquid phase  =       .38761E-01g/sq.ft.
Mass sorbed           =       .22801E-01g/sq.ft.

Since last printout at time =      29.00
            Change in Total Mass =     -.11589E-02g/sq.ft.
                Advection in from atmosphere =        .00000    g/sq.ft.
                Advection in from water table =     -.11244E-02g/sq.ft.
                Diffusion in from atmosphere =      -.34456E-04g/sq.ft.
                Diffusion in from water table =       .00000    g/sq.ft.
            Total inflow at boundaries =     -.11589E-02g/sq.ft.
            Mass discrepancy =     -.16298E-08g/sq.ft.

Since beginning of run at time = 0.0
            Change in Total Mass =     -.38239E-01g/sq.ft.
                Advection in from atmosphere =        .00000    g/sq.ft.
                Advection in from water table =     -.35363E-01g/sq.ft.
                Diffusion in from atmosphere =      -.28767E-02g/sq.ft.
                Diffusion in from water table =       .00000    g/sq.ft.
            Total inflow at boundaries =     -.38239E-01g/sq.ft.
            Mass discrepancy =      .18626E-07g/sq.ft.


GROUNDWATER IMPACT OF POLYGON   1

 Time        Mass per area (g/sq.ft.)      Total Mass (g)
     1.00          .11989E-02                 95.908
     2.00          .11988E-02                 95.902
     3.00          .11986E-02                 95.892
     4.00          .11985E-02                 95.878
     5.00          .11982E-02                 95.859
     6.00          .11979E-02                 95.834
     7.00          .11975E-02                 95.803
     8.00          .11970E-02                 95.763
     9.00          .11964E-02                 95.714
    10.00          .11957E-02                 95.654
    11.00          .11948E-02                 95.581
    12.00          .11937E-02                 95.496
    13.00          .11924E-02                 95.395
    14.00          .11910E-02                 95.277
    15.00          .11893E-02                 95.141
```

16.00	.11873E-02	94.986
17.00	.11851E-02	94.809
18.00	.11826E-02	94.609
19.00	.11798E-02	94.384
20.00	.11767E-02	94.134
21.00	.11732E-02	93.856
22.00	.11694E-02	93.549
23.00	.11652E-02	93.213
24.00	.11606E-02	92.846
25.00	.11556E-02	92.447
26.00	.11502E-02	92.015
27.00	.11444E-02	91.551
28.00	.11382E-02	91.053
29.00	.11315E-02	90.521
30.00	.11244E-02	89.955

****

****

TOTAL GROUNDWATER IMPACT

Time (yr)	Mass (g)	Cumulative Mass (g)
1.00	95.908	95.908
2.00	95.902	191.81
3.00	95.892	287.70
4.00	95.878	383.58
5.00	95.859	479.44
6.00	95.834	575.27
7.00	95.803	671.08
8.00	95.763	766.84
9.00	95.714	862.55
10.00	95.654	958.21
11.00	95.581	1053.8
12.00	95.496	1149.3
13.00	95.395	1244.7
14.00	95.277	1340.0
15.00	95.141	1435.1
16.00	94.986	1530.1
17.00	94.809	1624.9
18.00	94.609	1719.5
19.00	94.384	1813.9
20.00	94.134	1908.0
21.00	93.856	2001.9
22.00	93.549	2095.4
23.00	93.213	2188.6
24.00	92.846	2281.5
25.00	92.447	2373.9
26.00	92.015	2465.9
27.00	91.551	2557.5
28.00	91.053	2648.5
29.00	90.521	2739.1
30.00	89.955	2829.0

Polygon 64
Time: .000

Cell	Cgas(g/cu.ft.)	Cliq(g/cu.ft.)	Csol
1	.57112E-03	.12074E-02	.39000E-08
2	.57112E-03	.12074E-02	.39000E-08
3	.57112E-03	.12074E-02	.39000E-08
4	.57112E-03	.12074E-02	.39000E-08
5	.57112E-03	.12074E-02	.39000E-08
6	.57112E-03	.12074E-02	.39000E-08
7	.57868E-03	.12234E-02	.39517E-08
8	.57868E-03	.12234E-02	.39517E-08
9	.57868E-03	.12234E-02	.39517E-08
10	.57868E-03	.12234E-02	.39517E-08
11	.57868E-03	.12234E-02	.39517E-08
12	.57868E-03	.12234E-02	.39517E-08
13	.58625E-03	.12394E-02	.40033E-08
14	.58625E-03	.12394E-02	.40033E-08
15	.58625E-03	.12394E-02	.40033E-08
16	.58625E-03	.12394E-02	.40033E-08
17	.58625E-03	.12394E-02	.40033E-08
18	.58625E-03	.12394E-02	.40033E-08
19	.59428E-03	.12564E-02	.40582E-08
20	.59428E-03	.12564E-02	.40582E-08
21	.59428E-03	.12564E-02	.40582E-08
22	.59428E-03	.12564E-02	.40582E-08
23	.59428E-03	.12564E-02	.40582E-08
24	.59428E-03	.12564E-02	.40582E-08
25	.17379E-02	.36743E-02	.11868E-07
26	.17379E-02	.36743E-02	.11868E-07
27	.17379E-02	.36743E-02	.11868E-07
28	.17379E-02	.36743E-02	.11868E-07
29	.17379E-02	.36743E-02	.11868E-07
30	.17379E-02	.36743E-02	.11868E-07
31	.28807E-02	.60902E-02	.19671E-07
32	.28807E-02	.60902E-02	.19671E-07
33	.28807E-02	.60902E-02	.19671E-07
34	.28807E-02	.60902E-02	.19671E-07
35	.28807E-02	.60902E-02	.19671E-07
36	.28807E-02	.60902E-02	.19671E-07
37	.28807E-02	.60902E-02	.19671E-07
38	.28807E-02	.60902E-02	.19671E-07
39	.28807E-02	.60902E-02	.19671E-07
40	.28807E-02	.60902E-02	.19671E-07
41	.28807E-02	.60902E-02	.19671E-07
42	.28807E-02	.60902E-02	.19671E-07
43	.28807E-02	.60902E-02	.19671E-07
44	.28807E-02	.60902E-02	.19671E-07
45	.28807E-02	.60902E-02	.19671E-07
46	.28807E-02	.60902E-02	.19671E-07
47	.28807E-02	.60902E-02	.19671E-07
48	.28807E-02	.60902E-02	.19671E-07
49	.28807E-02	.60902E-02	.19671E-07
50	.28807E-02	.60902E-02	.19671E-07
51	.28807E-02	.60902E-02	.19671E-07
52	.28807E-02	.60902E-02	.19671E-07
53	.28807E-02	.60902E-02	.19671E-07
54	.28807E-02	.60902E-02	.19671E-07
55	.28807E-02	.60902E-02	.19671E-07
56	.28807E-02	.60902E-02	.19671E-07

57	.28807E-02	.60902E-02	.19671E-07
58	.28807E-02	.60902E-02	.19671E-07
59	.28807E-02	.60902E-02	.19671E-07
60	.28807E-02	.60902E-02	.19671E-07

Polygon 64
Time: 10.000

Cell	Cgas(g/cu.ft.)	Cliq(g/cu.ft.)	Csol
1	.16470E-04	.34820E-04	.11247E-09
2	.47750E-04	.10095E-03	.32607E-09
3	.94414E-04	.19961E-03	.64473E-09
4	.15269E-03	.32280E-03	.10427E-08
5	.21594E-03	.45652E-03	.14746E-08
6	.27769E-03	.58709E-03	.18963E-08
7	.33370E-03	.70549E-03	.22787E-08
8	.38226E-03	.80816E-03	.26104E-08
9	.42354E-03	.89543E-03	.28922E-08
10	.45862E-03	.96960E-03	.31318E-08
11	.48885E-03	.10335E-02	.33383E-08
12	.51550E-03	.10899E-02	.35202E-08
13	.53970E-03	.11410E-02	.36855E-08
14	.56243E-03	.11891E-02	.38407E-08
15	.58452E-03	.12358E-02	.39915E-08
16	.60666E-03	.12826E-02	.41427E-08
17	.62946E-03	.13308E-02	.42985E-08
18	.65354E-03	.13817E-02	.44628E-08
19	.67953E-03	.14366E-02	.46404E-08
20	.70822E-03	.14973E-02	.48362E-08
21	.74038E-03	.15653E-02	.50559E-08
22	.77686E-03	.16424E-02	.53050E-08
23	.81853E-03	.17305E-02	.55896E-08
24	.86639E-03	.18317E-02	.59164E-08
25	.92544E-03	.19565E-02	.63196E-08
26	.10039E-02	.21223E-02	.68552E-08
27	.11059E-02	.23381E-02	.75520E-08
28	.12275E-02	.25952E-02	.83824E-08
29	.13588E-02	.28728E-02	.92790E-08
30	.14898E-02	.31498E-02	.10174E-07
31	.16182E-02	.34211E-02	.11050E-07
32	.17490E-02	.36976E-02	.11943E-07
33	.18865E-02	.39884E-02	.12882E-07
34	.20283E-02	.42882E-02	.13851E-07
35	.21665E-02	.45803E-02	.14794E-07
36	.22925E-02	.48467E-02	.15655E-07
37	.24010E-02	.50760E-02	.16396E-07
38	.24906E-02	.52655E-02	.17008E-07
39	.25629E-02	.54183E-02	.17501E-07
40	.26205E-02	.55403E-02	.17895E-07
41	.26667E-02	.56377E-02	.18210E-07
42	.27038E-02	.57163E-02	.18464E-07
43	.27340E-02	.57801E-02	.18670E-07
44	.27587E-02	.58324E-02	.18839E-07
45	.27792E-02	.58756E-02	.18978E-07
46	.27961E-02	.59115E-02	.19094E-07
47	.28102E-02	.59412E-02	.19190E-07
48	.28219E-02	.59660E-02	.19270E-07
49	.28317E-02	.59867E-02	.19337E-07
50	.28398E-02	.60038E-02	.19392E-07
51	.28465E-02	.60180E-02	.19438E-07
52	.28521E-02	.60298E-02	.19476E-07

53	.28567E-02	.60395E-02	.19508E-07
54	.28604E-02	.60474E-02	.19533E-07
55	.28635E-02	.60539E-02	.19554E-07
56	.28660E-02	.60591E-02	.19571E-07
57	.28679E-02	.60632E-02	.19584E-07
58	.28694E-02	.60663E-02	.19594E-07
59	.28705E-02	.60686E-02	.19602E-07
60	.28712E-02	.60701E-02	.19606E-07

Polygon 64
Time: 20.000

Cell	Cgas(g/cu.ft.)	Cliq(g/cu.ft.)	Csol
1	.72006E-05	.15223E-04	.49171E-10
2	.18924E-04	.40009E-04	.12923E-09
3	.35071E-04	.74145E-04	.23949E-09
4	.55704E-04	.11777E-03	.38039E-09
5	.80913E-04	.17106E-03	.55254E-09
6	.11064E-03	.23391E-03	.75553E-09
7	.14452E-03	.30555E-03	.98692E-09
8	.18186E-03	.38448E-03	.12419E-08
9	.22167E-03	.46864E-03	.15137E-08
10	.26286E-03	.55572E-03	.17950E-08
11	.30439E-03	.64354E-03	.20786E-08
12	.34546E-03	.73035E-03	.23590E-08
13	.38549E-03	.81499E-03	.26324E-08
14	.42423E-03	.89690E-03	.28970E-08
15	.46167E-03	.97606E-03	.31527E-08
16	.49800E-03	.10528E-02	.34007E-08
17	.53352E-03	.11280E-02	.36433E-08
18	.56866E-03	.12022E-02	.38832E-08
19	.60387E-03	.12767E-02	.41237E-08
20	.63965E-03	.13523E-02	.43680E-08
21	.67652E-03	.14303E-02	.46198E-08
22	.71501E-03	.15117E-02	.48827E-08
23	.75567E-03	.15976E-02	.51603E-08
24	.79904E-03	.16893E-02	.54565E-08
25	.84572E-03	.17880E-02	.57752E-08
26	.89634E-03	.18950E-02	.61209E-08
27	.95166E-03	.20120E-02	.64987E-08
28	.10126E-02	.21407E-02	.69146E-08
29	.10799E-02	.22831E-02	.73743E-08
30	.11542E-02	.24401E-02	.78815E-08
31	.12354E-02	.26118E-02	.84360E-08
32	.13229E-02	.27968E-02	.90338E-08
33	.14158E-02	.29932E-02	.96680E-08
34	.15128E-02	.31983E-02	.10331E-07
35	.16128E-02	.34098E-02	.11014E-07
36	.17146E-02	.36250E-02	.11709E-07
37	.18170E-02	.38414E-02	.12408E-07
38	.19183E-02	.40555E-02	.13099E-07
39	.20169E-02	.42640E-02	.13773E-07
40	.21111E-02	.44632E-02	.14416E-07
41	.21996E-02	.46502E-02	.15020E-07
42	.22812E-02	.48228E-02	.15578E-07
43	.23554E-02	.49796E-02	.16084E-07
44	.24219E-02	.51204E-02	.16539E-07
45	.24811E-02	.52455E-02	.16943E-07
46	.25333E-02	.53558E-02	.17299E-07
47	.25791E-02	.54526E-02	.17612E-07
48	.26191E-02	.55371E-02	.17885E-07

49	.26539E-02	.56107E-02	.18123E-07
50	.26840E-02	.56745E-02	.18329E-07
51	.27101E-02	.57297E-02	.18507E-07
52	.27326E-02	.57772E-02	.18661E-07
53	.27519E-02	.58180E-02	.18792E-07
54	.27683E-02	.58527E-02	.18904E-07
55	.27822E-02	.58820E-02	.18999E-07
56	.27938E-02	.59065E-02	.19078E-07
57	.28033E-02	.59266E-02	.19143E-07
58	.28109E-02	.59427E-02	.19195E-07
59	.28167E-02	.59550E-02	.19235E-07
60	.28208E-02	.59637E-02	.19263E-07

Polygon 64
Time: 30.000

Cell	Cgas(g/cu.ft.)	Cliq(g/cu.ft.)	Csol
1	.44843E-05	.94805E-05	.30622E-10
2	.11652E-04	.24634E-04	.79567E-10
3	.21323E-04	.45081E-04	.14561E-09
4	.33414E-04	.70643E-04	.22818E-09
5	.47903E-04	.10128E-03	.32712E-09
6	.64810E-04	.13702E-03	.44257E-09
7	.84169E-04	.17795E-03	.57477E-09
8	.10601E-03	.22412E-03	.72391E-09
9	.13032E-03	.27553E-03	.88995E-09
10	.15706E-03	.33204E-03	.10725E-08
11	.18608E-03	.39340E-03	.12707E-08
12	.21719E-03	.45917E-03	.14831E-08
13	.25013E-03	.52882E-03	.17081E-08
14	.28461E-03	.60172E-03	.19435E-08
15	.32033E-03	.67724E-03	.21875E-08
16	.35702E-03	.75480E-03	.24380E-08
17	.39445E-03	.83392E-03	.26936E-08
18	.43245E-03	.91428E-03	.29531E-08
19	.47096E-03	.99570E-03	.32161E-08
20	.50998E-03	.10782E-02	.34825E-08
21	.54956E-03	.11619E-02	.37528E-08
22	.58985E-03	.12470E-02	.40279E-08
23	.63103E-03	.13341E-02	.43091E-08
24	.67333E-03	.14235E-02	.45980E-08
25	.71701E-03	.15159E-02	.48963E-08
26	.76235E-03	.16117E-02	.52059E-08
27	.80964E-03	.17117E-02	.55289E-08
28	.85918E-03	.18165E-02	.58672E-08
29	.91127E-03	.19266E-02	.62228E-08
30	.96619E-03	.20427E-02	.65979E-08
31	.10242E-02	.21653E-02	.69941E-08
32	.10855E-02	.22950E-02	.74129E-08
33	.11503E-02	.24320E-02	.78553E-08
34	.12186E-02	.25763E-02	.83215E-08
35	.12902E-02	.27278E-02	.88107E-08
36	.13650E-02	.28858E-02	.93211E-08
37	.14425E-02	.30496E-02	.98503E-08
38	.15222E-02	.32181E-02	.10395E-07
39	.16035E-02	.33900E-02	.10950E-07
40	.16857E-02	.35639E-02	.11511E-07
41	.17681E-02	.37380E-02	.12074E-07
42	.18498E-02	.39108E-02	.12632E-07
43	.19301E-02	.40805E-02	.13180E-07
44	.20081E-02	.42454E-02	.13713E-07

45	.20831E-02	.44041E-02	.14225E-07
46	.21546E-02	.45552E-02	.14713E-07
47	.22220E-02	.46977E-02	.15173E-07
48	.22850E-02	.48308E-02	.15603E-07
49	.23432E-02	.49540E-02	.16001E-07
50	.23968E-02	.50672E-02	.16367E-07
51	.24455E-02	.51702E-02	.16700E-07
52	.24895E-02	.52632E-02	.17000E-07
53	.25289E-02	.53466E-02	.17269E-07
54	.25639E-02	.54205E-02	.17508E-07
55	.25946E-02	.54854E-02	.17718E-07
56	.26212E-02	.55416E-02	.17899E-07
57	.26438E-02	.55893E-02	.18054E-07
58	.26625E-02	.56290E-02	.18182E-07
59	.26775E-02	.56607E-02	.18284E-07
60	.26888E-02	.56845E-02	.18361E-07

V-Leach, VER 1.1
Jake Turin, 11/91
PGA V-leach model, polygon screen-TCE-11/18/92-Poly64.INP New soil, Old chem
1 polygons.
Timestep = 1.00 years. Simulation length = 30.00 years.
Printout every 1.00 years. Vertical profile stored every 10.00 years.
Koc = 123.60 ml/g, .43649E-02cu.ft./g
Kh = .47300 (dimensionless).
Aqueous solubility = 1100.0 mg/l, 31.149 g/cu.ft
Free air diffusion coefficient = .70290 sq. m/day, 2761.7 sq.ft./yr

Polygon 1
Polygon 64
Polygon area = 80000. sq. ft.
60 cells, each cell 1.000 ft. thick.
Soil Properties:
Bulk density = 1.6400 g/ml, 46440. g/cu.ft.
Porosity = .3810 Volumetric water content = .2550
Organic carbon content = .00074000
Recharge Rate = .19685100 ft/yr
Conc. in recharge water = .00000 mg/l, .00000 g/cu.ft
Atmospheric concentration = .00000 mg/l, .00000 g/cu.ft
Water table is impermeable to gas diffusion.

**** Mixing Cell Output ****

PGA Mixcell Input Data

**** Batch 1 ****
Polygon 64

Time Interval (years)	Mass In (grams)	Mass/Area (g/sq m)	GW Concentration (ugrams/l)
1.00	95.908	0.013	1.355
2.00	95.902	0.013	2.057
3.00	95.892	0.013	2.419
4.00	95.878	0.013	2.607
5.00	95.859	0.013	2.704
6.00	95.834	0.013	2.753
7.00	95.803	0.013	2.778
8.00	95.763	0.013	2.791
9.00	95.714	0.013	2.797
10.00	95.654	0.013	2.799
11.00	95.581	0.013	2.799
12.00	95.496	0.013	2.798
13.00	95.395	0.013	2.796
14.00	95.277	0.013	2.793
15.00	95.141	0.013	2.790
16.00	94.986	0.013	2.786
17.00	94.809	0.013	2.781
18.00	94.609	0.013	2.776
19.00	94.384	0.013	2.770
20.00	94.134	0.013	2.764
21.00	93.856	0.013	2.756
22.00	93.549	0.013	2.748
23.00	93.213	0.013	2.739
24.00	92.846	0.012	2.729
25.00	92.447	0.012	2.719
26.00	92.015	0.012	2.707
27.00	91.551	0.012	2.695
28.00	91.053	0.012	2.681
29.00	90.521	0.012	2.666
30.00	89.955	0.012	2.651

**** Batch 2 ****

Polygon 64 Vertical Distribution using Polygon 69 Vertical Investigation Data, Averaged Soil Physical Properties, and Estimated VOC Mass (pounds) from HGC (July, 1989)

% Total Mass per 6 foot interval (from Polygon 69)	Total VOC Mass Table C-2	Incremental Mass (lbs) per 6 ft	Incremental Mass (gram) per 6 ft	Volume Soil per interval (cu. feet)	Calculated Total Soil Conc (ug/Kg)
0.030912464	19.2	0.59	269.21	480000	12.08
0.031335118	19.2	0.60	272.90	480000	12.24
0.031746032	19.2	0.61	276.47	480000	12.40
0.032168686	19.2	0.62	280.15	480000	12.57
0.094099277	19.2	1.81	819.50	480000	36.76
0.155947685	19.2	2.99	1358.14	480000	60.93
0.155947685	19.2	2.99	1358.14	480000	60.93
0.155947685	19.2	2.99	1358.14	480000	60.93
0.155947685	19.2	2.99	1358.14	480000	60.93
0.155947685	19.2	2.99	1358.14	480000	60.93
1		19.20	8708.93		

```
PGA V-leach model, polygon screen-TCE-10/30/92-POLY79.inp-full dist-VPA.
    1
       1.0          30.          1.0          10.
     123.6         .473         1100.        .7029
lygon 79
     85000.           1.      .022639         1.64         .381         .255      .00074
         0.           0.          -1.
   60
    1     6        6.19
    7    12       18.57
   13    18       30.96
   19    24       91.74
   25    30      162.21
   31    36      342.20
   37    42      544.09
   43    48     1036.38
   49    54     1586.75
   55    60     1586.75
```

V-Leach, VER 1.1
Jake Turin, 11/91
PGA V-leach model, polygon screen-TCE-10/30/92-POLY79.inp-full dist-VPA.

Polygon 1
At time = .00, total mass in vadose zone = 1.5062 g/sq.ft.
Mass in gas phase = .19322 g/sq.ft.
Mass in liquid phase = .82671 g/sq.ft.
Mass sorbed = .48630 g/sq.ft.

Polygon 1
At time = 1.00, total mass in vadose zone = 1.5024 g/sq.ft.
Mass in gas phase = .19272 g/sq.ft.
Mass in liquid phase = .82459 g/sq.ft.
Mass sorbed = .48506 g/sq.ft.

Since last printout at time = .00
Change in Total Mass = -.38624E-02g/sq.ft.
Advection in from atmosphere = .00000 g/sq.ft.
Advection in from water table = -.35906E-02g/sq.ft.
Diffusion in from atmosphere = -.27177E-03g/sq.ft.
Diffusion in from water table = .00000 g/sq.ft.
Total inflow at boundaries = -.38623E-02g/sq.ft.
Mass discrepancy = -.36089E-07g/sq.ft.

Since beginning of run at time = 0.0
Change in Total Mass = -.38624E-02g/sq.ft.
Advection in from atmosphere = .00000 g/sq.ft.
Advection in from water table = -.35906E-02g/sq.ft.
Diffusion in from atmosphere = -.27177E-03g/sq.ft.
Diffusion in from water table = .00000 g/sq.ft.
Total inflow at boundaries = -.38623E-02g/sq.ft.
Mass discrepancy = -.36089E-07g/sq.ft.

Polygon 1
At time = 2.00, total mass in vadose zone = 1.4985 g/sq.ft.
Mass in gas phase = .19223 g/sq.ft.
Mass in liquid phase = .82248 g/sq.ft.
Mass sorbed = .48381 g/sq.ft.

Since last printout at time = 1.00
Change in Total Mass = -.38524E-02g/sq.ft.
Advection in from atmosphere = .00000 g/sq.ft.
Advection in from water table = -.35776E-02g/sq.ft.
Diffusion in from atmosphere = -.27494E-03g/sq.ft.
Diffusion in from water table = .00000 g/sq.ft.
Total inflow at boundaries = -.38525E-02g/sq.ft.
Mass discrepancy = .17299E-06g/sq.ft.

Since beginning of run at time = 0.0
Change in Total Mass = -.77147E-02g/sq.ft.
Advection in from atmosphere = .00000 g/sq.ft.
Advection in from water table = -.71682E-02g/sq.ft.
Diffusion in from atmosphere = -.54671E-03g/sq.ft.
Diffusion in from water table = .00000 g/sq.ft.
Total inflow at boundaries = -.77149E-02g/sq.ft.
Mass discrepancy = .13644E-06g/sq.ft.

```
Polygon   1
At time =       3.00, total mass in vadose zone =     1.4947    g/sq.ft.
Mass in gas phase     =       .19173    g/sq.ft.
Mass in liquid phase  =       .82037    g/sq.ft.
Mass sorbed           =       .48257    g/sq.ft.

Since last printout at time =       2.00
               Change in Total Mass =     -.38425E-02g/sq.ft.
                    Advection in from atmosphere =       .00000    g/sq.ft.
                    Advection in from water table =     -.35635E-02g/sq.ft.
                    Diffusion in from atmosphere =      -.27887E-03g/sq.ft.
                    Diffusion in from water table =      .00000    g/sq.ft.
               Total inflow at boundaries =     -.38424E-02g/sq.ft.
               Mass discrepancy =     -.56112E-07g/sq.ft.

Since beginning of run at time = 0.0
               Change in Total Mass =     -.11557E-01g/sq.ft.
                    Advection in from atmosphere =       .00000    g/sq.ft.
                    Advection in from water table =     -.10732E-01g/sq.ft.
                    Diffusion in from atmosphere =      -.82558E-03g/sq.ft.
                    Diffusion in from water table =      .00000    g/sq.ft.
               Total inflow at boundaries =     -.11557E-01g/sq.ft.
               Mass discrepancy =      .81025E-07g/sq.ft.


Polygon   1
At time =       4.00, total mass in vadose zone =     1.4908    g/sq.ft.
Mass in gas phase     =       .19124    g/sq.ft.
Mass in liquid phase  =       .81826    g/sq.ft.
Mass sorbed           =       .48133    g/sq.ft.

Since last printout at time =       3.00
               Change in Total Mass =     -.38319E-02g/sq.ft.
                    Advection in from atmosphere =       .00000    g/sq.ft.
                    Advection in from water table =     -.35485E-02g/sq.ft.
                    Diffusion in from atmosphere =      -.28346E-03g/sq.ft.
                    Diffusion in from water table =      .00000    g/sq.ft.
               Total inflow at boundaries =     -.38320E-02g/sq.ft.
               Mass discrepancy =      .11013E-06g/sq.ft.

Since beginning of run at time = 0.0
               Change in Total Mass =     -.15389E-01g/sq.ft.
                    Advection in from atmosphere =       .00000    g/sq.ft.
                    Advection in from water table =     -.14280E-01g/sq.ft.
                    Diffusion in from atmosphere =      -.11090E-02g/sq.ft.
                    Diffusion in from water table =      .00000    g/sq.ft.
               Total inflow at boundaries =     -.15389E-01g/sq.ft.
               Mass discrepancy =      .19092E-06g/sq.ft.


Polygon   1
At time =       5.00, total mass in vadose zone =     1.4870    g/sq.ft.
Mass in gas phase     =       .19075    g/sq.ft.
Mass in liquid phase  =       .81617    g/sq.ft.
Mass sorbed           =       .48010    g/sq.ft.

Since last printout at time =       4.00
               Change in Total Mass =     -.38214E-02g/sq.ft.
```

```
                    Advection in from atmosphere =       .00000    g/sq.ft.
                    Advection in from water table =     -.35326E-02g/sq.ft.
                    Diffusion in from atmosphere =      -.28863E-03g/sq.ft.
                    Diffusion in from water table =       .00000    g/sq.ft.
               Total inflow at boundaries =     -.38212E-02g/sq.ft.
               Mass discrepancy =     -.15693E-06g/sq.ft.

Since beginning of run at time = 0.0
               Change in Total Mass =     -.19210E-01g/sq.ft.
                    Advection in from atmosphere =       .00000    g/sq.ft.
                    Advection in from water table =     -.17813E-01g/sq.ft.
                    Diffusion in from atmosphere =      -.13977E-02g/sq.ft.
                    Diffusion in from water table =       .00000    g/sq.ft.
               Total inflow at boundaries =     -.19210E-01g/sq.ft.
               Mass discrepancy =      .33528E-07g/sq.ft.


Polygon   1
At time =       6.00, total mass in vadose zone =     1.4832    g/sq.ft.
Mass in gas phase     =       .19026    g/sq.ft.
Mass in liquid phase  =       .81407    g/sq.ft.
Mass sorbed           =       .47887    g/sq.ft.

Since last printout at time =       5.00
               Change in Total Mass =     -.38100E-02g/sq.ft.
                    Advection in from atmosphere =       .00000    g/sq.ft.
                    Advection in from water table =     -.35158E-02g/sq.ft.
                    Diffusion in from atmosphere =      -.29431E-03g/sq.ft.
                    Diffusion in from water table =       .00000    g/sq.ft.
               Total inflow at boundaries =     -.38102E-02g/sq.ft.
               Mass discrepancy =      .10896E-06g/sq.ft.

Since beginning of run at time = 0.0
               Change in Total Mass =     -.23021E-01g/sq.ft.
                    Advection in from atmosphere =       .00000    g/sq.ft.
                    Advection in from water table =     -.21329E-01g/sq.ft.
                    Diffusion in from atmosphere =      -.16920E-02g/sq.ft.
                    Diffusion in from water table =       .00000    g/sq.ft.
               Total inflow at boundaries =     -.23021E-01g/sq.ft.
               Mass discrepancy =      .14342E-06g/sq.ft.


Polygon   1
At time =       7.00, total mass in vadose zone =     1.4794    g/sq.ft.
Mass in gas phase     =       .18978    g/sq.ft.
Mass in liquid phase  =       .81199    g/sq.ft.
Mass sorbed           =       .47764    g/sq.ft.

Since last printout at time =       6.00
               Change in Total Mass =     -.37991E-02g/sq.ft.
                    Advection in from atmosphere =       .00000    g/sq.ft.
                    Advection in from water table =     -.34984E-02g/sq.ft.
                    Diffusion in from atmosphere =      -.30046E-03g/sq.ft.
                    Diffusion in from water table =       .00000    g/sq.ft.
               Total inflow at boundaries =     -.37988E-02g/sq.ft.
               Mass discrepancy =     -.26869E-06g/sq.ft.

Since beginning of run at time = 0.0
               Change in Total Mass =     -.26820E-01g/sq.ft.
                    Advection in from atmosphere =       .00000    g/sq.ft.
```

```
                Advection in from water table =     -.24827E-01g/sq.ft.
                Diffusion in from atmosphere =      -.19924E-02g/sq.ft.
                Diffusion in from water table =      .00000    g/sq.ft.
           Total inflow at boundaries =     -.26819E-01g/sq.ft.
           Mass discrepancy =     -.12480E-06g/sq.ft.


Polygon   1
At time =       8.00, total mass in vadose zone =     1.4756    g/sq.ft.
Mass in gas phase     =       .18929    g/sq.ft.
Mass in liquid phase  =       .80991    g/sq.ft.
Mass sorbed           =       .47642    g/sq.ft.

Since last printout at time =       7.00
           Change in Total Mass =     -.37869E-02g/sq.ft.
                Advection in from atmosphere =       .00000    g/sq.ft.
                Advection in from water table =     -.34802E-02g/sq.ft.
                Diffusion in from atmosphere =      -.30701E-03g/sq.ft.
                Diffusion in from water table =      .00000    g/sq.ft.
           Total inflow at boundaries =     -.37872E-02g/sq.ft.
           Mass discrepancy =      .27893E-06g/sq.ft.

Since beginning of run at time = 0.0
           Change in Total Mass =     -.30607E-01g/sq.ft.
                Advection in from atmosphere =       .00000    g/sq.ft.
                Advection in from water table =     -.28307E-01g/sq.ft.
                Diffusion in from atmosphere =      -.22994E-02g/sq.ft.
                Diffusion in from water table =      .00000 .  g/sq.ft.
           Total inflow at boundaries =     -.30607E-01g/sq.ft.
           Mass discrepancy =      .15460E-06g/sq.ft.


Polygon   1
At time =       9.00, total mass in vadose zone =     1.4718    g/sq.ft.
Mass in gas phase     =       .18881    g/sq.ft.
Mass in liquid phase  =       .80784    g/sq.ft.
Mass sorbed           =       .47520    g/sq.ft.

Since last printout at time =       8.00
           Change in Total Mass =     -.37754E-02g/sq.ft.
                Advection in from atmosphere =       .00000    g/sq.ft.
                Advection in from water table =     -.34614E-02g/sq.ft.
                Diffusion in from atmosphere =      -.31391E-03g/sq.ft.
                Diffusion in from water table =      .00000    g/sq.ft.
           Total inflow at boundaries =     -.37753E-02g/sq.ft.
           Mass discrepancy =     -.13970E-07g/sq.ft.

Since beginning of run at time = 0.0
           Change in Total Mass =     -.34382E-01g/sq.ft.
                Advection in from atmosphere =       .00000    g/sq.ft.
                Advection in from water table =     -.31769E-01g/sq.ft.
                Diffusion in from atmosphere =      -.26134E-02g/sq.ft.
                Diffusion in from water table =      .00000    g/sq.ft.
           Total inflow at boundaries =     -.34382E-01g/sq.ft.
           Mass discrepancy =      .14156E-06g/sq.ft.


Polygon   1
At time =      10.00, total mass in vadose zone =     1.4681    g/sq.ft.
Mass in gas phase     =       .18832    g/sq.ft.
```

```
Mass in liquid phase  =       .80577    g/sq.ft.
Mass sorbed           =       .47399    g/sq.ft.

Since last printout at time =       9.00
               Change in Total Mass =     -.37631E-02g/sq.ft.
                    Advection in from atmosphere =       .00000    g/sq.ft.
                    Advection in from water table =     -.34421E-02g/sq.ft.
                    Diffusion in from atmosphere =      -.32113E-03g/sq.ft.
                    Diffusion in from water table =      .00000    g/sq.ft.
               Total inflow at boundaries =     -.37633E-02g/sq.ft.
               Mass discrepancy =      .18720E-06g/sq.ft.

Since beginning of run at time = 0.0
               Change in Total Mass =     -.38145E-01g/sq.ft.
                    Advection in from atmosphere =       .00000    g/sq.ft.
                    Advection in from water table =     -.35211E-01g/sq.ft.
                    Diffusion in from atmosphere =      -.29345E-02g/sq.ft.
                    Diffusion in from water table =      .00000    g/sq.ft.
               Total inflow at boundaries =     -.38145E-01g/sq.ft.
               Mass discrepancy =      .32783E-06g/sq.ft.


Polygon   1
At time =      11.00, total mass in vadose zone =     1.4643    g/sq.ft.
Mass in gas phase     =       .18784    g/sq.ft.
Mass in liquid phase  =       .80371    g/sq.ft.
Mass sorbed           =       .47278    g/sq.ft.

Since last printout at time =      10.00
               Change in Total Mass =     -.37512E-02g/sq.ft.
                    Advection in from atmosphere =       .00000    g/sq.ft.
                    Advection in from water table =     -.34224E-02g/sq.ft.
                    Diffusion in from atmosphere =      -.32862E-03g/sq.ft.
                    Diffusion in from water table =      .00000    g/sq.ft.
               Total inflow at boundaries =     -.37510E-02g/sq.ft.
               Mass discrepancy =     -.16671E-06g/sq.ft.

Since beginning of run at time = 0.0
               Change in Total Mass =     -.41896E-01g/sq.ft.
                    Advection in from atmosphere =       .00000    g/sq.ft.
                    Advection in from water table =     -.38633E-01g/sq.ft.
                    Diffusion in from atmosphere =      -.32631E-02g/sq.ft.
                    Diffusion in from water table =      .00000    g/sq.ft.
               Total inflow at boundaries =     -.41896E-01g/sq.ft.
               Mass discrepancy =      .16019E-06g/sq.ft.


Polygon   1
At time =      12.00, total mass in vadose zone =     1.4606    g/sq.ft.
Mass in gas phase     =       .18736    g/sq.ft.
Mass in liquid phase  =       .80166    g/sq.ft.
Mass sorbed           =       .47157    g/sq.ft.

Since last printout at time =      11.00
               Change in Total Mass =     -.37385E-02g/sq.ft.
                    Advection in from atmosphere =       .00000    g/sq.ft.
                    Advection in from water table =     -.34022E-02g/sq.ft.
                    Diffusion in from atmosphere =      -.33636E-03g/sq.ft.
                    Diffusion in from water table =      .00000    g/sq.ft.
               Total inflow at boundaries =     -.37385E-02g/sq.ft.
```

```
              Mass discrepancy =      .22585E-07g/sq.ft.

Since beginning of run at time = 0.0
              Change in Total Mass =     -.45635E-01g/sq.ft.
                   Advection in from atmosphere =       .00000    g/sq.ft.
                   Advection in from water table =     -.42035E-01g/sq.ft.
                   Diffusion in from atmosphere =      -.35995E-02g/sq.ft.
                   Diffusion in from water table =      .00000    g/sq.ft.
              Total inflow at boundaries =     -.45635E-01g/sq.ft.
              Mass discrepancy =      .18626E-06g/sq.ft.


Polygon   1
At time =      13.00, total mass in vadose zone =     1.4569    g/sq.ft.
Mass in gas phase     =       .18688    g/sq.ft.
Mass in liquid phase  =       .79962    g/sq.ft.
Mass sorbed           =       .47037    g/sq.ft.

Since last printout at time =      12.00
              Change in Total Mass =     -.37258E-02g/sq.ft.
                   Advection in from atmosphere =       .00000    g/sq.ft.
                   Advection in from water table =     -.33816E-02g/sq.ft.
                   Diffusion in from atmosphere =      -.34432E-03g/sq.ft.
                   Diffusion in from water table =      .00000    g/sq.ft.
              Total inflow at boundaries =     -.37260E-02g/sq.ft.
              Mass discrepancy =      .18324E-06g/sq.ft.

Since beginning of run at time = 0.0
              Change in Total Mass =     -.49360E-01g/sq.ft.
                   Advection in from atmosphere =       .00000    g/sq.ft.
                   Advection in from water table =     -.45417E-01g/sq.ft.
                   Diffusion in from atmosphere =      -.39438E-02g/sq.ft.
                   Diffusion in from water table =      .00000    g/sq.ft.
              Total inflow at boundaries =     -.49361E-01g/sq.ft.
              Mass discrepancy =      .36880E-06g/sq.ft.


Polygon   1
At time =      14.00, total mass in vadose zone =     1.4532    g/sq.ft.
Mass in gas phase     =       .18641    g/sq.ft.
Mass in liquid phase  =       .79758    g/sq.ft.
Mass sorbed           =       .46917    g/sq.ft.

Since last printout at time =      13.00
              Change in Total Mass =     -.37133E-02g/sq.ft.
                   Advection in from atmosphere =       .00000    g/sq.ft.
                   Advection in from water table =     -.33608E-02g/sq.ft.
                   Diffusion in from atmosphere =      -.35246E-03g/sq.ft.
                   Diffusion in from water table =      .00000    g/sq.ft.
              Total inflow at boundaries =     -.37132E-02g/sq.ft.
              Mass discrepancy =     -.17462E-07g/sq.ft.

Since beginning of run at time = 0.0
              Change in Total Mass =     -.53074E-01g/sq.ft.
                   Advection in from atmosphere =       .00000    g/sq.ft.
                   Advection in from water table =     -.48778E-01g/sq.ft.
                   Diffusion in from atmosphere =      -.42963E-02g/sq.ft.
                   Diffusion in from water table =      .00000    g/sq.ft.
              Total inflow at boundaries =     -.53074E-01g/sq.ft.
              Mass discrepancy =      .35018E-06g/sq.ft.
```

```
Polygon   1
At time =      15.00, total mass in vadose zone =     1.4495    g/sq.ft.
Mass in gas phase     =       .18593    g/sq.ft.
Mass in liquid phase  =       .79555    g/sq.ft.
Mass sorbed           =       .46797    g/sq.ft.

Since last printout at time =      14.00
               Change in Total Mass =     -.37004E-02g/sq.ft.
                    Advection in from atmosphere =       .00000    g/sq.ft.
                    Advection in from water table =     -.33396E-02g/sq.ft.
                    Diffusion in from atmosphere =      -.36077E-03g/sq.ft.
                    Diffusion in from water table =      .00000    g/sq.ft.
               Total inflow at boundaries =     -.37004E-02g/sq.ft.
               Mass discrepancy =      .40513E-07g/sq.ft.

Since beginning of run at time = 0.0
               Change in Total Mass =     -.56774E-01g/sq.ft.
                    Advection in from atmosphere =       .00000    g/sq.ft.
                    Advection in from water table =     -.52117E-01g/sq.ft.
                    Diffusion in from atmosphere =      -.46570E-02g/sq.ft.
                    Diffusion in from water table =      .00000    g/sq.ft.
               Total inflow at boundaries =     -.56774E-01g/sq.ft.
               Mass discrepancy =      .39116E-06g/sq.ft.


Polygon   1
At time =      16.00, total mass in vadose zone =     1.4458    g/sq.ft.
Mass in gas phase     =       .18546    g/sq.ft.
Mass in liquid phase  =       .79352    g/sq.ft.
Mass sorbed           =       .46678    g/sq.ft.

Since last printout at time =      15.00
               Change in Total Mass =     -.36877E-02g/sq.ft.
                    Advection in from atmosphere =       .00000    g/sq.ft.
                    Advection in from water table =     -.33183E-02g/sq.ft.
                    Diffusion in from atmosphere =      -.36922E-03g/sq.ft.
                    Diffusion in from water table =      .00000    g/sq.ft.
               Total inflow at boundaries =     -.36875E-02g/sq.ft.
               Mass discrepancy =     -.21677E-06g/sq.ft.

Since beginning of run at time = 0.0
               Change in Total Mass =     -.60462E-01g/sq.ft.
                    Advection in from atmosphere =       .00000    g/sq.ft.
                    Advection in from water table =     -.55436E-01g/sq.ft.
                    Diffusion in from atmosphere =      -.50262E-02g/sq.ft.
                    Diffusion in from water table =      .00000    g/sq.ft.
               Total inflow at boundaries =     -.60462E-01g/sq.ft.
               Mass discrepancy =      .17509E-06g/sq.ft.


Polygon   1
At time =      17.00, total mass in vadose zone =     1.4421    g/sq.ft.
Mass in gas phase     =       .18499    g/sq.ft.
Mass in liquid phase  =       .79151    g/sq.ft.
Mass sorbed           =       .46560    g/sq.ft.

Since last printout at time =      16.00
               Change in Total Mass =     -.36745E-02g/sq.ft.
```

```
                Advection in from atmosphere =       .00000    g/sq.ft.
                Advection in from water table =     -.32968E-02g/sq.ft.
                Diffusion in from atmosphere =      -.37779E-03g/sq.ft.
                Diffusion in from water table =      .00000    g/sq.ft.
            Total inflow at boundaries =     -.36746E-02g/sq.ft.
            Mass discrepancy =      .67754E-07g/sq.ft.

Since beginning of run at time = 0.0
            Change in Total Mass =     -.64136E-01g/sq.ft.
                Advection in from atmosphere =       .00000    g/sq.ft.
                Advection in from water table =     -.58732E-01g/sq.ft.
                Diffusion in from atmosphere =      -.54040E-02g/sq.ft.
                Diffusion in from water table =      .00000    g/sq.ft.
            Total inflow at boundaries =     -.64137E-01g/sq.ft.
            Mass discrepancy =      .24587E-06g/sq.ft.


Polygon   1
At time =      18.00, total mass in vadose zone =     1.4384    g/sq.ft.
Mass in gas phase     =       .18452    g/sq.ft.
Mass in liquid phase  =       .78950    g/sq.ft.
Mass sorbed           =       .46441    g/sq.ft.

Since last printout at time =      17.00
            Change in Total Mass =     -.36615E-02g/sq.ft.
                Advection in from atmosphere =       .00000    g/sq.ft.
                Advection in from water table =     -.32751E-02g/sq.ft.
                Diffusion in from atmosphere =      -.38648E-03g/sq.ft.
                Diffusion in from water table =      .00000    g/sq.ft.
            Total inflow at boundaries =     -.36616E-02g/sq.ft.
            Mass discrepancy =      .80559E-07g/sq.ft.

Since beginning of run at time = 0.0
            Change in Total Mass =     -.67798E-01g/sq.ft.
                Advection in from atmosphere =       .00000    g/sq.ft.
                Advection in from water table =     -.62008E-01g/sq.ft.
                Diffusion in from atmosphere =      -.57905E-02g/sq.ft.
                Diffusion in from water table =      .00000    g/sq.ft.
            Total inflow at boundaries =     -.67798E-01g/sq.ft.
            Mass discrepancy =      .32783E-06g/sq.ft.


Polygon   1
At time =      19.00, total mass in vadose zone =     1.4348    g/sq.ft.
Mass in gas phase     =       .18405    g/sq.ft.
Mass in liquid phase  =       .78750    g/sq.ft.
Mass sorbed           =       .46324    g/sq.ft.

Since last printout at time =      18.00
            Change in Total Mass =     -.36483E-02g/sq.ft.
                Advection in from atmosphere =       .00000    g/sq.ft.
                Advection in from water table =     -.32534E-02g/sq.ft.
                Diffusion in from atmosphere =      -.39525E-03g/sq.ft.
                Diffusion in from water table =      .00000    g/sq.ft.
            Total inflow at boundaries =     -.36486E-02g/sq.ft.
            Mass discrepancy =      .31828E-06g/sq.ft.

Since beginning of run at time = 0.0
            Change in Total Mass =     -.71446E-01g/sq.ft.
                Advection in from atmosphere =       .00000    g/sq.ft.
```

```
                    Advection in from water table =     -.65261E-01g/sq.ft.
                    Diffusion in from atmosphere =      -.61858E-02g/sq.ft.
                    Diffusion in from water table =      .00000    g/sq.ft.
               Total inflow at boundaries =     -.71447E-01g/sq.ft.
               Mass discrepancy =      .64075E-06g/sq.ft.


Polygon   1
At time =      20.00, total mass in vadose zone =     1.4311    g/sq.ft.
Mass in gas phase     =       .18359    g/sq.ft.
Mass in liquid phase  =       .78550    g/sq.ft.
Mass sorbed           =       .46206    g/sq.ft.

Since last printout at time =      19.00
               Change in Total Mass =     -.36358E-02g/sq.ft.
                    Advection in from atmosphere =       .00000    g/sq.ft.
                    Advection in from water table =     -.32315E-02g/sq.ft.
                    Diffusion in from atmosphere =      -.40409E-03g/sq.ft.
                    Diffusion in from water table =      .00000    g/sq.ft.
               Total inflow at boundaries =     -.36356E-02g/sq.ft.
               Mass discrepancy =     -.15507E-06g/sq.ft.

Since beginning of run at time = 0.0
               Change in Total Mass =     -.75082E-01g/sq.ft.
                    Advection in from atmosphere =       .00000    g/sq.ft.
                    Advection in from water table =     -.68492E-01g/sq.ft.
                    Diffusion in from atmosphere =      -.65899E-02g/sq.ft.
                    Diffusion in from water table =      .00000    g/sq.ft.
               Total inflow at boundaries =     -.75082E-01g/sq.ft.
               Mass discrepancy =      .49174E-06g/sq.ft.


Polygon   1
At time =      21.00, total mass in vadose zone =     1.4275    g/sq.ft.
Mass in gas phase     =       .18312    g/sq.ft.
Mass in liquid phase  =       .78351    g/sq.ft.
Mass sorbed           =       .46089    g/sq.ft.

Since last printout at time =      20.00
               Change in Total Mass =     -.36227E-02g/sq.ft.
                    Advection in from atmosphere =       .00000    g/sq.ft.
                    Advection in from water table =     -.32096E-02g/sq.ft.
                    Diffusion in from atmosphere =      -.41300E-03g/sq.ft.
                    Diffusion in from water table =      .00000    g/sq.ft.
               Total inflow at boundaries =     -.36226E-02g/sq.ft.
               Mass discrepancy =     -.10012E-07g/sq.ft.

Since beginning of run at time = 0.0
               Change in Total Mass =     -.78704E-01g/sq.ft.
                    Advection in from atmosphere =       .00000    g/sq.ft.
                    Advection in from water table =     -.71702E-01g/sq.ft.
                    Diffusion in from atmosphere =      -.70029E-02g/sq.ft.
                    Diffusion in from water table =      .00000    g/sq.ft.
               Total inflow at boundaries =     -.78705E-01g/sq.ft.
               Mass discrepancy =      .47684E-06g/sq.ft.


Polygon   1
At time =      22.00, total mass in vadose zone =     1.4239    g/sq.ft.
Mass in gas phase     =       .18266    g/sq.ft.
```

```
Mass in liquid phase  =        .78153    g/sq.ft.
Mass sorbed           =        .45973    g/sq.ft.

Since last printout at time =      21.00
              Change in Total Mass =     -.36097E-02g/sq.ft.
                   Advection in from atmosphere =       .00000    g/sq.ft.
                   Advection in from water table =     -.31877E-02g/sq.ft.
                   Diffusion in from atmosphere =      -.42196E-03g/sq.ft.
                   Diffusion in from water table =      .00000    g/sq.ft.
              Total inflow at boundaries =     -.36097E-02g/sq.ft.
              Mass discrepancy =      .53318E-07g/sq.ft.

Since beginning of run at time = 0.0
              Change in Total Mass =     -.82314E-01g/sq.ft.
                   Advection in from atmosphere =       .00000    g/sq.ft.
                   Advection in from water table =     -.74890E-01g/sq.ft.
                   Diffusion in from atmosphere =      -.74248E-02g/sq.ft.
                   Diffusion in from water table =      .00000    g/sq.ft.
              Total inflow at boundaries =     -.82315E-01g/sq.ft.
              Mass discrepancy =      .52899E-06g/sq.ft.


Polygon   1
At time =      23.00, total mass in vadose zone =     1.4203    g/sq.ft.
Mass in gas phase     =        .18220    g/sq.ft.
Mass in liquid phase  =        .77956    g/sq.ft.
Mass sorbed           =        .45857    g/sq.ft.

Since last printout at time =      22.00
              Change in Total Mass =     -.35968E-02g/sq.ft.
                   Advection in from atmosphere =       .00000    g/sq.ft.
                   Advection in from water table =     -.31659E-02g/sq.ft.
                   Diffusion in from atmosphere =      -.43096E-03g/sq.ft.
                   Diffusion in from water table =      .00000    g/sq.ft.
              Total inflow at boundaries =     -.35968E-02g/sq.ft.
              Mass discrepancy =      .50291E-07g/sq.ft.

Since beginning of run at time = 0.0
              Change in Total Mass =     -.85911E-01g/sq.ft.
                   Advection in from atmosphere =       .00000    g/sq.ft.
                   Advection in from water table =     -.78056E-01g/sq.ft.
                   Diffusion in from atmosphere =      -.78558E-02g/sq.ft.
                   Diffusion in from water table =      .00000    g/sq.ft.
              Total inflow at boundaries =     -.85911E-01g/sq.ft.
              Mass discrepancy =      .58115E-06g/sq.ft.


Polygon   1
At time =      24.00, total mass in vadose zone =     1.4167    g/sq.ft.
Mass in gas phase     =        .18174    g/sq.ft.
Mass in liquid phase  =        .77759    g/sq.ft.
Mass sorbed           =        .45741    g/sq.ft.

Since last printout at time =      23.00
              Change in Total Mass =     -.35839E-02g/sq.ft.
                   Advection in from atmosphere =       .00000    g/sq.ft.
                   Advection in from water table =     -.31440E-02g/sq.ft.
                   Diffusion in from atmosphere =      -.43999E-03g/sq.ft.
                   Diffusion in from water table =      .00000    g/sq.ft.
              Total inflow at boundaries =     -.35840E-02g/sq.ft.
```

```
          Mass discrepancy =      .11292E-06g/sq.ft.

Since beginning of run at time = 0.0
          Change in Total Mass =     -.89495E-01g/sq.ft.
               Advection in from atmosphere =       .00000    g/sq.ft.
               Advection in from water table =     -.81200E-01g/sq.ft.
               Diffusion in from atmosphere =      -.82958E-02g/sq.ft.
               Diffusion in from water table =      .00000    g/sq.ft.
          Total inflow at boundaries =     -.89496E-01g/sq.ft.
          Mass discrepancy =      .68545E-06g/sq.ft.


Polygon   1
At time =      25.00, total mass in vadose zone =     1.4132    g/sq.ft.
Mass in gas phase     =       .18128    g/sq.ft.
Mass in liquid phase  =       .77563    g/sq.ft.
Mass sorbed           =       .45626    g/sq.ft.

Since last printout at time =      24.00
          Change in Total Mass =     -.35714E-02g/sq.ft.
               Advection in from atmosphere =       .00000    g/sq.ft.
               Advection in from water table =     -.31222E-02g/sq.ft.
               Diffusion in from atmosphere =      -.44904E-03g/sq.ft.
               Diffusion in from water table =      .00000    g/sq.ft.
          Total inflow at boundaries =     -.35713E-02g/sq.ft.
          Mass discrepancy =     -.10361E-06g/sq.ft.

Since beginning of run at time = 0.0
          Change in Total Mass =     -.93066E-01g/sq.ft.
               Advection in from atmosphere =       .00000    g/sq.ft.
               Advection in from water table =     -.84322E-01g/sq.ft.
               Diffusion in from atmosphere =      -.87448E-02g/sq.ft.
               Diffusion in from water table =      .00000    g/sq.ft.
          Total inflow at boundaries =     -.93067E-01g/sq.ft.
          Mass discrepancy =      .58115E-06g/sq.ft.


Polygon   1
At time =      26.00, total mass in vadose zone =     1.4096    g/sq.ft.
Mass in gas phase     =       .18082    g/sq.ft.
Mass in liquid phase  =       .77368    g/sq.ft.
Mass sorbed           =       .45511    g/sq.ft.

Since last printout at time =      25.00
          Change in Total Mass =     -.35584E-02g/sq.ft.
               Advection in from atmosphere =       .00000    g/sq.ft.
               Advection in from water table =     -.31005E-02g/sq.ft.
               Diffusion in from atmosphere =      -.45811E-03g/sq.ft.
               Diffusion in from water table =      .00000    g/sq.ft.
          Total inflow at boundaries =     -.35586E-02g/sq.ft.
          Mass discrepancy =      .24540E-06g/sq.ft.

Since beginning of run at time = 0.0
          Change in Total Mass =     -.96625E-01g/sq.ft.
               Advection in from atmosphere =       .00000    g/sq.ft.
               Advection in from water table =     -.87423E-01g/sq.ft.
               Diffusion in from atmosphere =      -.92029E-02g/sq.ft.
               Diffusion in from water table =      .00000    g/sq.ft.
          Total inflow at boundaries =     -.96625E-01g/sq.ft.
          Mass discrepancy =      .82701E-06g/sq.ft.
```

```
Polygon   1
At time =      27.00, total mass in vadose zone =     1.4061    g/sq.ft.
Mass in gas phase     =       .18037    g/sq.ft.
Mass in liquid phase  =       .77173    g/sq.ft.
Mass sorbed           =       .45396    g/sq.ft.

Since last printout at time =      26.00
               Change in Total Mass =     -.35462E-02g/sq.ft.
                    Advection in from atmosphere =       .00000    g/sq.ft.
                    Advection in from water table =     -.30789E-02g/sq.ft.
                    Diffusion in from atmosphere =      -.46717E-03g/sq.ft.
                    Diffusion in from water table =      .00000    g/sq.ft.
               Total inflow at boundaries =     -.35461E-02g/sq.ft.
               Mass discrepancy =     -.14086E-06g/sq.ft.

Since beginning of run at time = 0.0
               Change in Total Mass =     -.10017    g/sq.ft.
                    Advection in from atmosphere =       .00000    g/sq.ft.
                    Advection in from water table =     -.90501E-01g/sq.ft.
                    Diffusion in from atmosphere =      -.96701E-02g/sq.ft.
                    Diffusion in from water table =      .00000    g/sq.ft.
               Total inflow at boundaries =     -.10017    g/sq.ft.
               Mass discrepancy =      .68545E-06g/sq.ft.


Polygon   1
At time =      28.00, total mass in vadose zone =     1.4025    g/sq.ft.
Mass in gas phase     =       .17991    g/sq.ft.
Mass in liquid phase  =       .76979    g/sq.ft.
Mass sorbed           =       .45282    g/sq.ft.

Since last printout at time =      27.00
               Change in Total Mass =     -.35336E-02g/sq.ft.
                    Advection in from atmosphere =       .00000    g/sq.ft.
                    Advection in from water table =     -.30574E-02g/sq.ft.
                    Diffusion in from atmosphere =      -.47624E-03g/sq.ft.
                    Diffusion in from water table =      .00000    g/sq.ft.
               Total inflow at boundaries =     -.35337E-02g/sq.ft.
               Mass discrepancy =      .57276E-07g/sq.ft.

Since beginning of run at time = 0.0
               Change in Total Mass =     -.10370    g/sq.ft.
                    Advection in from atmosphere =       .00000    g/sq.ft.
                    Advection in from water table =     -.93559E-01g/sq.ft.
                    Diffusion in from atmosphere =      -.10146E-01g/sq.ft.
                    Diffusion in from water table =      .00000    g/sq.ft.
               Total inflow at boundaries =     -.10371    g/sq.ft.
               Mass discrepancy =      .74506E-06g/sq.ft.


Polygon   1
At time =      29.00, total mass in vadose zone =     1.3990    g/sq.ft.
Mass in gas phase     =       .17946    g/sq.ft.
Mass in liquid phase  =       .76786    g/sq.ft.
Mass sorbed           =       .45168    g/sq.ft.

Since last printout at time =      28.00
               Change in Total Mass =     -.35213E-02g/sq.ft.
```

Advection in from atmosphere = .00000 g/sq.ft.
Advection in from water table = -.30360E-02g/sq.ft.
Diffusion in from atmosphere = -.48529E-03g/sq.ft.
Diffusion in from water table = .00000 g/sq.ft.
Total inflow at boundaries = -.35213E-02g/sq.ft.
Mass discrepancy = .13271E-07g/sq.ft.

Since beginning of run at time = 0.0
Change in Total Mass = -.10723 g/sq.ft.
Advection in from atmosphere = .00000 g/sq.ft.
Advection in from water table = -.96595E-01g/sq.ft.
Diffusion in from atmosphere = -.10632E-01g/sq.ft.
Diffusion in from water table = .00000 g/sq.ft.
Total inflow at boundaries = -.10723 g/sq.ft.
Mass discrepancy = .75251E-06g/sq.ft.

Polygon 1
At time = 30.00, total mass in vadose zone = 1.3955 g/sq.ft.
Mass in gas phase = .17901 g/sq.ft.
Mass in liquid phase = .76593 g/sq.ft.
Mass sorbed = .45055 g/sq.ft.

Since last printout at time = 29.00
Change in Total Mass = -.35092E-02g/sq.ft.
Advection in from atmosphere = .00000 g/sq.ft.
Advection in from water table = -.30148E-02g/sq.ft.
Diffusion in from atmosphere = -.49433E-03g/sq.ft.
Diffusion in from water table = .00000 g/sq.ft.
Total inflow at boundaries = -.35091E-02g/sq.ft.
Mass discrepancy = -.27474E-07g/sq.ft.

Since beginning of run at time = 0.0
Change in Total Mass = -.11073 g/sq.ft.
Advection in from atmosphere = .00000 g/sq.ft.
Advection in from water table = -.99610E-01g/sq.ft.
Diffusion in from atmosphere = -.11126E-01g/sq.ft.
Diffusion in from water table = .00000 g/sq.ft.
Total inflow at boundaries = -.11074 g/sq.ft.
Mass discrepancy = .73016E-06g/sq.ft.

GROUNDWATER IMPACT OF POLYGON 1

Time	Mass per area (g/sq.ft.)	Total Mass (g)
1.00	.35906E-02	305.20
2.00	.35776E-02	304.10
3.00	.35635E-02	302.90
4.00	.35485E-02	301.62
5.00	.35326E-02	300.27
6.00	.35158E-02	298.85
7.00	.34984E-02	297.36
8.00	.34802E-02	295.82
9.00	.34614E-02	294.22
10.00	.34421E-02	292.58
11.00	.34224E-02	290.90
12.00	.34022E-02	289.19
13.00	.33816E-02	287.44
14.00	.33608E-02	285.67
15.00	.33396E-02	283.87

16.00	.33183E-02	282.06
17.00	.32968E-02	280.23
18.00	.32751E-02	278.39
19.00	.32534E-02	276.54
20.00	.32315E-02	274.68
21.00	.32096E-02	272.82
22.00	.31877E-02	270.96
23.00	.31659E-02	269.10
24.00	.31440E-02	267.24
25.00	.31222E-02	265.39
26.00	.31005E-02	263.55
27.00	.30789E-02	261.71
28.00	.30574E-02	259.88
29.00	.30360E-02	258.06
30.00	.30148E-02	256.26

****

****

TOTAL GROUNDWATER IMPACT

Time (yr)	Mass (g)	Cumulative Mass (g)
1.00	305.20	305.20
2.00	304.10	609.29
3.00	302.90	912.20
4.00	301.62	1213.8
5.00	300.27	1514.1
6.00	298.85	1812.9
7.00	297.36	2110.3
8.00	295.82	2406.1
9.00	294.22	2700.3
10.00	292.58	2992.9
11.00	290.90	3283.8
12.00	289.19	3573.0
13.00	287.44	3860.4
14.00	285.67	4146.1
15.00	283.87	4430.0
16.00	282.06	4712.0
17.00	280.23	4992.3
18.00	278.39	5270.6
19.00	276.54	5547.2
20.00	274.68	5821.9
21.00	272.82	6094.7
22.00	270.96	6365.6
23.00	269.10	6634.7
24.00	267.24	6902.0
25.00	265.39	7167.4
26.00	263.55	7430.9
27.00	261.71	7692.6
28.00	259.88	7952.5
29.00	258.06	8210.6
30.00	256.26	8466.8

Polygon 79
Time: .000

Cell	Cgas(g/cu.ft.)	Cliq(g/cu.ft.)	Csol
1	.29265E-03	.61871E-03	.19984E-08
2	.29265E-03	.61871E-03	.19984E-08
3	.29265E-03	.61871E-03	.19984E-08
4	.29265E-03	.61871E-03	.19984E-08
5	.29265E-03	.61871E-03	.19984E-08
6	.29265E-03	.61871E-03	.19984E-08
7	.87795E-03	.18561E-02	.59953E-08
8	.87795E-03	.18561E-02	.59953E-08
9	.87795E-03	.18561E-02	.59953E-08
10	.87795E-03	.18561E-02	.59953E-08
11	.87795E-03	.18561E-02	.59953E-08
12	.87795E-03	.18561E-02	.59953E-08
13	.14637E-02	.30946E-02	.99954E-08
14	.14637E-02	.30946E-02	.99954E-08
15	.14637E-02	.30946E-02	.99954E-08
16	.14637E-02	.30946E-02	.99954E-08
17	.14637E-02	.30946E-02	.99954E-08
18	.14637E-02	.30946E-02	.99954E-08
19	.43373E-02	.91697E-02	.29618E-07
20	.43373E-02	.91697E-02	.29618E-07
21	.43373E-02	.91697E-02	.29618E-07
22	.43373E-02	.91697E-02	.29618E-07
23	.43373E-02	.91697E-02	.29618E-07
24	.43373E-02	.91697E-02	.29618E-07
25	.76690E-02	.16213E-01	.52370E-07
26	.76690E-02	.16213E-01	.52370E-07
27	.76690E-02	.16213E-01	.52370E-07
28	.76690E-02	.16213E-01	.52370E-07
29	.76690E-02	.16213E-01	.52370E-07
30	.76690E-02	.16213E-01	.52370E-07
31	.16179E-01	.34204E-01	.11048E-06
32	.16179E-01	.34204E-01	.11048E-06
33	.16179E-01	.34204E-01	.11048E-06
34	.16179E-01	.34204E-01	.11048E-06
35	.16179E-01	.34204E-01	.11048E-06
36	.16179E-01	.34204E-01	.11048E-06
37	.25724E-01	.54384E-01	.17566E-06
38	.25724E-01	.54384E-01	.17566E-06
39	.25724E-01	.54384E-01	.17566E-06
40	.25724E-01	.54384E-01	.17566E-06
41	.25724E-01	.54384E-01	.17566E-06
42	.25724E-01	.54384E-01	.17566E-06
43	.48998E-01	.10359	.33460E-06
44	.48998E-01	.10359	.33460E-06
45	.48998E-01	.10359	.33460E-06
46	.48998E-01	.10359	.33460E-06
47	.48998E-01	.10359	.33460E-06
48	.48998E-01	.10359	.33460E-06
49	.75018E-01	.15860	.51228E-06
50	.75018E-01	.15860	.51228E-06
51	.75018E-01	.15860	.51228E-06
52	.75018E-01	.15860	.51228E-06
53	.75018E-01	.15860	.51228E-06
54	.75018E-01	.15860	.51228E-06
55	.75018E-01	.15860	.51228E-06
56	.75018E-01	.15860	.51228E-06

57	.75018E-01	.15860	.51228E-06
58	.75018E-01	.15860	.51228E-06
59	.75018E-01	.15860	.51228E-06
60	.75018E-01	.15860	.51228E-06

Polygon 79
Time: 10.000

Cell	Cgas(g/cu.ft.)	Cliq(g/cu.ft.)	Csol
1	.12142E-03	.25670E-03	.82916E-09
2	.23425E-03	.49524E-03	.15996E-08
3	.33205E-03	.70201E-03	.22675E-08
4	.42653E-03	.90175E-03	.29127E-08
5	.52418E-03	.11082E-02	.35795E-08
6	.62864E-03	.13290E-02	.42928E-08
7	.82855E-03	.17517E-02	.56579E-08
8	.99534E-03	.21043E-02	.67969E-08
9	.11351E-02	.23999E-02	.77516E-08
10	.12732E-02	.26917E-02	.86941E-08
11	.14214E-02	.30051E-02	.97063E-08
12	.15859E-02	.33528E-02	.10830E-07
13	.18572E-02	.39265E-02	.12682E-07
14	.21087E-02	.44582E-02	.14400E-07
15	.23489E-02	.49660E-02	.16040E-07
16	.26057E-02	.55088E-02	.17794E-07
17	.28943E-02	.61189E-02	.19764E-07
18	.32243E-02	.68168E-02	.22018E-07
19	.40252E-02	.85099E-02	.27487E-07
20	.46600E-02	.98520E-02	.31822E-07
21	.51533E-02	.10895E-01	.35190E-07
22	.56226E-02	.11887E-01	.38395E-07
23	.61206E-02	.12940E-01	.41796E-07
24	.66698E-02	.14101E-01	.45547E-07
25	.77736E-02	.16435E-01	.53084E-07
26	.86986E-02	.18390E-01	.59401E-07
27	.94782E-02	.20039E-01	.64725E-07
28	.10254E-01	.21680E-01	.70025E-07
29	.11094E-01	.23455E-01	.75760E-07
30	.12030E-01	.25434E-01	.82153E-07
31	.14333E-01	.30303E-01	.97878E-07
32	.16115E-01	.34069E-01	.11004E-06
33	.17444E-01	.36879E-01	.11912E-06
34	.18665E-01	.39460E-01	.12746E-06
35	.19928E-01	.42130E-01	.13608E-06
36	.21293E-01	.45016E-01	.14540E-06
37	.24196E-01	.51153E-01	.16523E-06
38	.26527E-01	.56082E-01	.18114E-06
39	.28372E-01	.59984E-01	.19375E-06
40	.30127E-01	.63693E-01	.20573E-06
41	.31968E-01	.67586E-01	.21830E-06
42	.33973E-01	.71824E-01	.23199E-06
43	.39599E-01	.83719E-01	.27041E-06
44	.43662E-01	.92309E-01	.29816E-06
45	.46328E-01	.97944E-01	.31636E-06
46	.48508E-01	.10255	.33125E-06
47	.50580E-01	.10693	.34540E-06
48	.52670E-01	.11135	.35967E-06
49	.58645E-01	.12399	.40047E-06
50	.62702E-01	.13256	.42818E-06
51	.65013E-01	.13745	.44396E-06
52	.66581E-01	.14076	.45467E-06

53	.67807E-01	.14336	.46304E-06
54	.68805E-01	.14547	.46986E-06
55	.69616E-01	.14718	.47539E-06
56	.70263E-01	.14855	.47981E-06
57	.70764E-01	.14961	.48323E-06
58	.71132E-01	.15039	.48575E-06
59	.71379E-01	.15091	.48743E-06
60	.71510E-01	.15118	.48833E-06

Polygon 79
Time: 20.000

Cell	Cgas(g/cu.ft.)	Cliq(g/cu.ft.)	Csol
1	.11624E-03	.24575E-03	.79377E-09
2	.25746E-03	.54431E-03	.17581E-08
3	.40349E-03	.85305E-03	.27554E-08
4	.55243E-03	.11679E-02	.37724E-08
5	.70675E-03	.14942E-02	.48262E-08
6	.86933E-03	.18379E-02	.59364E-08
7	.10554E-02	.22313E-02	.72070E-08
8	.12541E-02	.26514E-02	.85641E-08
9	.14593E-02	.30851E-02	.99649E-08
10	.16741E-02	.35392E-02	.11432E-07
11	.19041E-02	.40255E-02	.13003E-07
12	.21542E-02	.45542E-02	.14710E-07
13	.24411E-02	.51609E-02	.16670E-07
14	.27556E-02	.58258E-02	.18817E-07
15	.30930E-02	.65392E-02	.21122E-07
16	.34584E-02	.73116E-02	.23616E-07
17	.38590E-02	.81586E-02	.26352E-07
18	.43018E-02	.90947E-02	.29376E-07
19	.48544E-02	.10263E-01	.33149E-07
20	.54568E-02	.11536E-01	.37263E-07
21	.60708E-02	.12835E-01	.41456E-07
22	.67049E-02	.14175E-01	.45786E-07
23	.73780E-02	.15598E-01	.50383E-07
24	.81050E-02	.17135E-01	.55347E-07
25	.89683E-02	.18961E-01	.61243E-07
26	.99015E-02	.20933E-01	.67615E-07
27	.10863E-01	.22966E-01	.74179E-07
28	.11865E-01	.25084E-01	.81021E-07
29	.12932E-01	.27339E-01	.88306E-07
30	.14083E-01	.29774E-01	.96170E-07
31	.15517E-01	.32805E-01	.10596E-06
32	.17049E-01	.36045E-01	.11643E-06
33	.18563E-01	.39245E-01	.12676E-06
34	.20075E-01	.42441E-01	.13708E-06
35	.21633E-01	.45736E-01	.14773E-06
36	.23273E-01	.49204E-01	.15893E-06
37	.25223E-01	.53325E-01	.17224E-06
38	.27280E-01	.57674E-01	.18629E-06
39	.29313E-01	.61973E-01	.20017E-06
40	.31344E-01	.66267E-01	.21404E-06
41	.33428E-01	.70673E-01	.22827E-06
42	.35604E-01	.75272E-01	.24313E-06
43	.38393E-01	.81169E-01	.26218E-06
44	.41277E-01	.87266E-01	.28187E-06
45	.43908E-01	.92829E-01	.29984E-06
46	.46312E-01	.97912E-01	.31626E-06
47	.48594E-01	.10274	.33184E-06
48	.50820E-01	.10744	.34704E-06

49	.53579E-01	.11328	.36588E-06
50	.56289E-01	.11900	.38438E-06
51	.58556E-01	.12380	.39986E-06
52	.60403E-01	.12770	.41247E-06
53	.61941E-01	.13095	.42298E-06
54	.63239E-01	.13370	.43184E-06
55	.64329E-01	.13600	.43929E-06
56	.65228E-01	.13790	.44542E-06
57	.65944E-01	.13942	.45032E-06
58	.66486E-01	.14056	.45402E-06
59	.66860E-01	.14135	.45657E-06
60	.67069E-01	.14180	.45800E-06

Polygon 79
Time: 30.000

Cell	Cgas(g/cu.ft.)	Cliq(g/cu.ft.)	Csol
1	.13865E-03	.29314E-03	.94684E-09
2	.31122E-03	.65796E-03	.21252E-08
3	.49577E-03	.10481E-02	.33855E-08
4	.68770E-03	.14539E-02	.46962E-08
5	.88747E-03	.18762E-02	.60603E-08
6	.10969E-02	.23190E-02	.74904E-08
7	.13200E-02	.27907E-02	.90138E-08
8	.15579E-02	.32936E-02	.10638E-07
9	.18106E-02	.38279E-02	.12364E-07
10	.20795E-02	.43964E-02	.14200E-07
11	.23673E-02	.50049E-02	.16166E-07
12	.26771E-02	.56598E-02	.18281E-07
13	.30139E-02	.63718E-02	.20581E-07
14	.33798E-02	.71454E-02	.23080E-07
15	.37758E-02	.79826E-02	.25784E-07
16	.42042E-02	.88883E-02	.28709E-07
17	.46686E-02	.98702E-02	.31881E-07
18	.51731E-02	.10937E-01	.35326E-07
19	.57307E-02	.12116E-01	.39134E-07
20	.63398E-02	.13403E-01	.43293E-07
21	.69928E-02	.14784E-01	.47752E-07
22	.76885E-02	.16255E-01	.52503E-07
23	.84312E-02	.17825E-01	.57574E-07
24	.92270E-02	.19507E-01	.63009E-07
25	.10092E-01	.21337E-01	.68919E-07
26	.11026E-01	.23311E-01	.75296E-07
27	.12021E-01	.25414E-01	.82086E-07
28	.13074E-01	.27641E-01	.89280E-07
29	.14192E-01	.30005E-01	.96916E-07
30	.15382E-01	.32520E-01	.10504E-06
31	.16676E-01	.35257E-01	.11388E-06
32	.18064E-01	.38191E-01	.12336E-06
33	.19516E-01	.41261E-01	.13327E-06
34	.21021E-01	.44442E-01	.14355E-06
35	.22583E-01	.47743E-01	.15421E-06
36	.24210E-01	.51184E-01	.16533E-06
37	.25941E-01	.54844E-01	.17715E-06
38	.27762E-01	.58694E-01	.18958E-06
39	.29639E-01	.62661E-01	.20240E-06
40	.31555E-01	.66713E-01	.21548E-06
41	.33514E-01	.70855E-01	.22886E-06
42	.35521E-01	.75098E-01	.24257E-06
43	.37653E-01	.79605E-01	.25712E-06
44	.39864E-01	.84280E-01	.27222E-06

45	.42059E-01	.88919E-01	.28721E-06
46	.44188E-01	.93422E-01	.30175E-06
47	.46249E-01	.97778E-01	.31582E-06
48	.48249E-01	.10201	.32948E-06
49	.50272E-01	.10628	.34330E-06
50	.52267E-01	.11050	.35692E-06
51	.54125E-01	.11443	.36961E-06
52	.55791E-01	.11795	.38099E-06
53	.57261E-01	.12106	.39102E-06
54	.58544E-01	.12377	.39978E-06
55	.59649E-01	.12611	.40733E-06
56	.60578E-01	.12807	.41367E-06
57	.61333E-01	.12967	.41883E-06
58	.61915E-01	.13090	.42280E-06
59	.62324E-01	.13176	.42559E-06
60	.62559E-01	.13226	.42720E-06

V-Leach, VER 1.1
Jake Turin, 11/91
PGA V-leach model, polygon screen-TCE-10/30/92-POLY79.inp-full dist-VPA.
1 polygons.
Timestep = 1.00 years. Simulation length = 30.00 years.
Printout every 1.00 years. Vertical profile stored every 10.00 years.
Koc = 123.60 ml/g, .43649E-02cu.ft./g
Kh = .47300 (dimensionless).
Aqueous solubility = 1100.0 mg/l, 31.149 g/cu.ft
Free air diffusion coefficient = .70290 sq. m/day, 2761.7 sq.ft./yr

Polygon 1
Polygon 79
Polygon area = 85000. sq. ft.
60 cells, each cell 1.000 ft. thick.
Soil Properties:
Bulk density = 1.6400 g/ml, 46440. g/cu.ft.
Porosity = .3810 Volumetric water content = .2550
Organic carbon content = .00074000
Recharge Rate = .02263900 ft/yr
Conc. in recharge water = .00000 mg/l, .00000 g/cu.ft
Atmospheric concentration = .00000 mg/l, .00000 g/cu.ft
Water table is impermeable to gas diffusion.

POLYGON 79

List of interpolated concentrations for desired depths

At a depth of	:	3.000
Interpolated concentration is:		6.191
At a depth of	:	9.000
Interpolated concentration is:		18.574
At a depth of	:	15.000
Interpolated concentration is:		30.956
At a depth of	:	21.000
Interpolated concentration is:		91.741
At a depth of	:	27.000
Interpolated concentration is:		162.206
At a depth of	:	33.000
Interpolated concentration is:		342.196
At a depth of	:	39.000
Interpolated concentration is:		544.091
At a depth of	:	45.000
Interpolated concentration is:		1036.381
At a depth of	:	51.000
Interpolated concentration is:		1586.750
At a depth of	:	57.000
Interpolated concentration is:		1586.750
At a depth of	:	60.000
Interpolated concentration is:		1586.750
At a depth of	:	0.000
Interpolated concentration is:		0.000

Total Soil Concentration Calculations from Soil Gas Data
Polygon 79, June-1992

Sample #	Total Clx Conc (ppbV)	Total Clx Conc (ug/L)*	Total Clx Conc (ug/Kg)**
NA	0	0	0
VS-VP79-16	10475	55.13	33.02
VS-VP79-28	56440	290.40	173.95
VS-VP79-40	183150	964.50	577.74
VS-VP79-51	501200	2649.00	1586.75
	751265.00	3959.03	2371.46

*Multiply ppbV concentration by compound Molecular Weight, divide by Ideal Gas conversion corrected for laboratory pressure and temperature.

**Multiply ug/L concentration by 0.599 L/Kg (calculated Kgt based on revised soil physical data).

1,1-DCE Soil Concentration Calculations from Soil Gas Data
Polygon 79, June-1992

Sample #	1,1-DCE Conc (ppbV)	1,1-DCE Conc (ug/L)*	1,1-DCE Conc (ug/Kg)**
NA	0	0.00	0
VS-VP79-16	380	1.50	0.90
VS-VP79-28	2100	8.10	4.85
VS-VP79-40	2300	8.90	5.33
VS-VP79-51	9200	36.00	21.56
	13980.00	54.50	32.65

1,1,1-TCA Soil Concentration Calculations from Soil Gas Data
Polygon 79, June-1992

Sample #	1,1,1-TCA Conc (ppbV)	1,1,1-TCA Conc (ug/L)*	1,1,1-TCA Conc (ug/Kg)**
NA	0	0.00	0
VS-VP79-16	0	0.00	0
VS-VP79-28	0	0.00	0
VS-VP79-40	0	0.00	0
VS-VP79-51	0	0.00	0
	0.00	0.00	0.00

TCE Soil Concentration Calculations from Soil Gas Data
Polygon 79, June-1992

Sample #	TCE Conc (ppbV)	TCE Conc (ug/L)*	TCE Conc (ug/Kg)**
NA	0	0.00	0.00
VS-VP79-16	10000	53.00	31.75
VS-VP79-28	54000	280.00	167.72
VS-VP79-40	180000	950.00	569.05
VS-VP79-51	490000	2600.00	1557.40
	734000.00	3883.00	2325.92

PCE Soil Concentration Calculations from Soil Gas Data
Polygon 79, June-1992

Sample #	PCE Conc (ppbV)	PCE Conc (ug/L)*	PCE Conc (ug/Kg)**
NA	0	0.00	0.00
VS-VP79-16	95	0.63	0.38
VS-VP79-28	340	2.30	1.38
VS-VP79-40	850	5.60	3.35
VS-VP79-51	2000	13.00	7.79
	3285.00	21.53	12.90

26.00	0.033	0.000	0.001
27.00	0.035	0.000	0.001
28.00	0.037	0.000	0.001
29.00	0.039	0.000	0.001
30.00	0.041	0.000	0.001

**** Batch 4 ****
Polygon 79

Time Interval (years)	Mass In (grams)	Mass/Area (g/sq m)	GW Concentration (ugrams/l)
1.00	305.200	0.039	4.095
2.00	304.100	0.039	6.241
3.00	302.900	0.038	7.358
4.00	301.620	0.038	7.930
5.00	300.270	0.038	8.214
6.00	298.850	0.038	8.344
7.00	297.360	0.038	8.393
8.00	295.820	0.037	8.398
9.00	294.220	0.037	8.380
10.00	292.580	0.037	8.348
11.00	290.900	0.037	8.308
12.00	289.190	0.037	8.265
13.00	287.440	0.036	8.218
14.00	285.670	0.036	8.170
15.00	283.870	0.036	8.120
16.00	282.060	0.036	8.070
17.00	280.230	0.035	8.018
18.00	278.390	0.035	7.967
19.00	276.540	0.035	7.915
20.00	274.680	0.035	7.862
21.00	272.820	0.035	7.810
22.00	270.960	0.034	7.757
23.00	269.100	0.034	7.704
24.00	267.240	0.034	7.651
25.00	265.390	0.034	7.599
26.00	263.550	0.033	7.546
27.00	261.710	0.033	7.494
28.00	259.880	0.033	7.441
29.00	258.060	0.033	7.389
30.00	256.260	0.032	7.338

**** Batch 5 ****

Polygon 79 Vertical Distribution (as Percentage Total Mass) Calculations using Phase II Chemical and Physical Soil Data

Ct (ug/Kg) M&E June, 92*	Depth Interval Feet	Mt (ug/cc)	Volume Soil (cu. ft)	Mass TCE (grams) over depth interval	Incr. Mass pounds	% of Total Mass per Interval
6.191	6	0.01015324	510000	146.63	0.32	0.001145244
18.574	6	0.03046136	510000	439.91	0.97	0.003435916
30.956	6	0.05076784	510000	733.17	1.62	0.005726404
91.741	6	0.15045524	510000	2172.82	4.79	0.016970733
162.206	6	0.26601784	510000	3841.74	8.47	0.03000572
342.196	6	0.56120144	510000	8104.69	17.87	0.063301217
544.091	6	0.89230924	510000	12886.44	28.41	0.100648817
1036.381	6	1.69966484	510000	24546.00	54.11	0.191715213
1586.75	6	2.60227	510000	37581.12	82.85	0.293525368
1586.75	6	2.60227	510000	37581.12	82.85	0.293525368
	60			128033.65	**282.27**	**1.00**

* Using Kgt term of 0.599 L/Kg

PGA V-leach model, polygon screen-TCE-11/10/92-Poly15A.INP. Old chem, New soil.

```
    1
       1.0          30.          1.0          10.
     123.6         .473         1100.        .7029
lygon 15A
    147500.           1.     .082021         1.64         .381         .255      .00074
        0.           0.          -1.
   60
    1     6       2.51
    7    12      39.71
   13    18      85.23
   19    24     130.74
   25    30     176.25
   31    36     221.76
   37    42     267.27
   43    48     312.79
   49    54     358.30
   55    60     403.81
```

V-Leach, VER 1.1
Jake Turin, 11/91
PGA V-leach model, polygon screen-TCE-11/10/92-Poly15A.INP. Old chem, New soil.

Polygon 1
At time = .00, total mass in vadose zone = .55681 g/sq.ft.
Mass in gas phase = .71426E-01g/sq.ft.
Mass in liquid phase = .30561 g/sq.ft.
Mass sorbed = .17977 g/sq.ft.

Polygon 1
At time = 1.00, total mass in vadose zone = .55313 g/sq.ft.
Mass in gas phase = .70954E-01g/sq.ft.
Mass in liquid phase = .30359 g/sq.ft.
Mass sorbed = .17858 g/sq.ft.

Since last printout at time = .00
Change in Total Mass = -.36795E-02g/sq.ft.
Advection in from atmosphere = .00000 g/sq.ft.
Advection in from water table = -.33105E-02g/sq.ft.
Diffusion in from atmosphere = -.36885E-03g/sq.ft.
Diffusion in from water table = .00000 g/sq.ft.
Total inflow at boundaries = -.36794E-02g/sq.ft.
Mass discrepancy = -.51688E-07g/sq.ft.

Since beginning of run at time = 0.0
Change in Total Mass = -.36795E-02g/sq.ft.
Advection in from atmosphere = .00000 g/sq.ft.
Advection in from water table = -.33105E-02g/sq.ft.
Diffusion in from atmosphere = -.36885E-03g/sq.ft.
Diffusion in from water table = .00000 g/sq.ft.
Total inflow at boundaries = -.36794E-02g/sq.ft.
Mass discrepancy = -.51688E-07g/sq.ft.

Polygon 1
At time = 2.00, total mass in vadose zone = .54946 g/sq.ft.
Mass in gas phase = .70484E-01g/sq.ft.
Mass in liquid phase = .30158 g/sq.ft.
Mass sorbed = .17740 g/sq.ft.

Since last printout at time = 1.00
Change in Total Mass = -.36670E-02g/sq.ft.
Advection in from atmosphere = .00000 g/sq.ft.
Advection in from water table = -.32941E-02g/sq.ft.
Diffusion in from atmosphere = -.37291E-03g/sq.ft.
Diffusion in from water table = .00000 g/sq.ft.
Total inflow at boundaries = -.36670E-02g/sq.ft.
Mass discrepancy = -.51223E-08g/sq.ft.

Since beginning of run at time = 0.0
Change in Total Mass = -.73465E-02g/sq.ft.
Advection in from atmosphere = .00000 g/sq.ft.
Advection in from water table = -.66046E-02g/sq.ft.
Diffusion in from atmosphere = -.74176E-03g/sq.ft.
Diffusion in from water table = .00000 g/sq.ft.
Total inflow at boundaries = -.73464E-02g/sq.ft.
Mass discrepancy = -.56811E-07g/sq.ft.

Polygon 1
At time = 3.00, total mass in vadose zone = .54581 g/sq.ft.
Mass in gas phase = .70015E-01g/sq.ft.
Mass in liquid phase = .29957 g/sq.ft.
Mass sorbed = .17622 g/sq.ft.

Since last printout at time = 2.00
Change in Total Mass = -.36526E-02g/sq.ft.
Advection in from atmosphere = .00000 g/sq.ft.
Advection in from water table = -.32168E-01g/sq.ft.
Diffusion in from atmosphere = -.37593E-03g/sq.ft.
Diffusion in from water table = .00000 g/sq.ft.
Total inflow at boundaries = -.36527E-02g/sq.ft.
Mass discrepancy = .16135E-06g/sq.ft.

Since beginning of run at time = 0.0
Change in Total Mass = -.10999E-01g/sq.ft.
Advection in from atmosphere = .00000 g/sq.ft.
Advection in from water table = -.98614E-01g/sq.ft.
Diffusion in from atmosphere = -.11177E-02g/sq.ft.
Diffusion in from water table = .00000 g/sq.ft.
Total inflow at boundaries = -.10999E-01g/sq.ft.
Mass discrepancy = .10524E-06g/sq.ft.

Polygon 1
At time = 4.00, total mass in vadose zone = .54217 g/sq.ft.
Mass in gas phase = .69549E-01g/sq.ft.
Mass in liquid phase = .29758 g/sq.ft.
Mass sorbed = .17505 g/sq.ft.

Since last printout at time = 3.00
Change in Total Mass = -.36368E-02g/sq.ft.
Advection in from atmosphere = .00000 g/sq.ft.
Advection in from water table = -.32588E-01g/sq.ft.
Diffusion in from atmosphere = -.37806E-03g/sq.ft.
Diffusion in from water table = .00000 g/sq.ft.
Total inflow at boundaries = -.36368E-02g/sq.ft.
Mass discrepancy = .54017E-07g/sq.ft.

Since beginning of run at time = 0.0
Change in Total Mass = -.14636E-01g/sq.ft.
Advection in from atmosphere = .00000 g/sq.ft.
Advection in from water table = -.13140E-01g/sq.ft.
Diffusion in from atmosphere = -.14957E-02g/sq.ft.
Diffusion in from water table = .00000 g/sq.ft.
Total inflow at boundaries = -.14636E-01g/sq.ft.
Mass discrepancy = .15832E-06g/sq.ft.

Polygon 1
At time = 5.00, total mass in vadose zone = .53855 g/sq.ft.
Mass in gas phase = .69084E-01g/sq.ft.
Mass in liquid phase = .29559 g/sq.ft.
Mass sorbed = .17388 g/sq.ft.

Since last printout at time = 4.00
Change in Total Mass = -.36196E-02g/sq.ft.

Advection in from atmosphere = .00000 g/sq.ft.
Advection in from water table = -.32400E-02g/sq.ft.
Diffusion in from atmosphere = -.37943E-03g/sq.ft.
Diffusion in from water table = .00000 g/sq.ft.
Total inflow at boundaries = -.36195E-02g/sq.ft.
Mass discrepancy = -.83586E-07g/sq.ft.

Since beginning of run at time = 0.0
Change in Total Mass = -.18255E-01g/sq.ft.
Advection in from atmosphere = .00000 g/sq.ft.
Advection in from water table = -.16380E-01g/sq.ft.
Diffusion in from atmosphere = -.18753E-02g/sq.ft.
Diffusion in from water table = .00000 g/sq.ft.
Total inflow at boundaries = -.18255E-01g/sq.ft.
Mass discrepancy = .74506E-07g/sq.ft.

Polygon 1
At time = 6.00, total mass in vadose zone = .53495 g/sq.ft.
Mass in gas phase = .68622E-01g/sq.ft.
Mass in liquid phase = .29361 g/sq.ft.
Mass sorbed = .17271 g/sq.ft.

Since last printout at time = 5.00
Change in Total Mass = -.36008E-02g/sq.ft.
Advection in from atmosphere = .00000 g/sq.ft.
Advection in from water table = -.32207E-02g/sq.ft.
Diffusion in from atmosphere = -.38015E-03g/sq.ft.
Diffusion in from water table = .00000 g/sq.ft.
Total inflow at boundaries = -.36008E-02g/sq.ft.
Mass discrepancy = .40978E-07g/sq.ft.

Since beginning of run at time = 0.0
Change in Total Mass = -.21856E-01g/sq.ft.
Advection in from atmosphere = .00000 g/sq.ft.
Advection in from water table = -.19601E-01g/sq.ft.
Diffusion in from atmosphere = -.22553E-02g/sq.ft.
Diffusion in from water table = .00000 g/sq.ft.
Total inflow at boundaries = -.21856E-01g/sq.ft.
Mass discrepancy = .11548E-06g/sq.ft.

Polygon 1
At time = 7.00, total mass in vadose zone = .53137 g/sq.ft.
Mass in gas phase = .68163E-01g/sq.ft.
Mass in liquid phase = .29165 g/sq.ft.
Mass sorbed = .17156 g/sq.ft.

Since last printout at time = 6.00
Change in Total Mass = -.35810E-02g/sq.ft.
Advection in from atmosphere = .00000 g/sq.ft.
Advection in from water table = -.32007E-02g/sq.ft.
Diffusion in from atmosphere = -.38033E-03g/sq.ft.
Diffusion in from water table = .00000 g/sq.ft.
Total inflow at boundaries = -.35810E-02g/sq.ft.
Mass discrepancy = -.23283E-08g/sq.ft.

Since beginning of run at time = 0.0
Change in Total Mass = -.25437E-01g/sq.ft.
Advection in from atmosphere = .00000 g/sq.ft.

Advection in from water table = -.22802E-01g/sq.ft.
Diffusion in from atmosphere = -.26357E-02g/sq.ft.
Diffusion in from water table = .00000 g/sq.ft.
Total inflow at boundaries = -.25437E-01g/sq.ft.
Mass discrepancy = .11362E-06g/sq.ft.

Polygon 1
At time = 8.00, total mass in vadose zone = .52781 g/sq.ft.
Mass in gas phase = .67706E-01g/sq.ft.
Mass in liquid phase = .28969 g/sq.ft.
Mass sorbed = .17041 g/sq.ft.

Since last printout at time = 7.00
Change in Total Mass = -.35603E-02g/sq.ft.
Advection in from atmosphere = .00000 g/sq.ft.
Advection in from water table = -.31803E-02g/sq.ft.
Diffusion in from atmosphere = -.37997E-03g/sq.ft.
Diffusion in from water table = .00000 g/sq.ft.
Total inflow at boundaries = -.35603E-02g/sq.ft.
Mass discrepancy = .10710E-07g/sq.ft.

Since beginning of run at time = 0.0
Change in Total Mass = -.28997E-01g/sq.ft.
Advection in from atmosphere = .00000 g/sq.ft.
Advection in from water table = -.25982E-01g/sq.ft.
Diffusion in from atmosphere = -.30157E-02g/sq.ft.
Diffusion in from water table = .00000 g/sq.ft.
Total inflow at boundaries = -.28998E-01g/sq.ft.
Mass discrepancy = .12480E-06g/sq.ft.

Polygon 1
At time = 9.00, total mass in vadose zone = .52427 g/sq.ft.
Mass in gas phase = .67252E-01g/sq.ft.
Mass in liquid phase = .28775 g/sq.ft.
Mass sorbed = .16927 g/sq.ft.

Since last printout at time = 8.00
Change in Total Mass = -.35387E-02g/sq.ft.
Advection in from atmosphere = .00000 g/sq.ft.
Advection in from water table = -.31595E-02g/sq.ft.
Diffusion in from atmosphere = -.37932E-03g/sq.ft.
Diffusion in from water table = .00000 g/sq.ft.
Total inflow at boundaries = -.35388E-02g/sq.ft.
Mass discrepancy = .60536E-07g/sq.ft.

Since beginning of run at time = 0.0
Change in Total Mass = -.32536E-01g/sq.ft.
Advection in from atmosphere = .00000 g/sq.ft.
Advection in from water table = -.29141E-01g/sq.ft.
Diffusion in from atmosphere = -.33950E-02g/sq.ft.
Diffusion in from water table = .00000 g/sq.ft.
Total inflow at boundaries = -.32536E-01g/sq.ft.
Mass discrepancy = .18626E-06g/sq.ft.

Polygon 1
At time = 10.00, total mass in vadose zone = .52075 g/sq.ft.
Mass in gas phase = .66801E-01g/sq.ft.

Mass in liquid phase = .28582 g/sq.ft.
Mass sorbed = .16813 g/sq.ft.

Since last printout at time = 9.00
Change in Total Mass = -.35166E-02g/sq.ft.
Advection in from atmosphere = .00000 g/sq.ft.
Advection in from water table = -.31384E-02g/sq.ft.
Diffusion in from atmosphere = -.37827E-03g/sq.ft.
Diffusion in from water table = .00000 g/sq.ft.
Total inflow at boundaries = -.35166E-02g/sq.ft.
Mass discrepancy = .41910E-08g/sq.ft.

Since beginning of run at time = 0.0
Change in Total Mass = -.36053E-01g/sq.ft.
Advection in from atmosphere = .00000 g/sq.ft.
Advection in from water table = -.32280E-01g/sq.ft.
Diffusion in from atmosphere = -.37733E-02g/sq.ft.
Diffusion in from water table = .00000 g/sq.ft.
Total inflow at boundaries = -.36053E-01g/sq.ft.
Mass discrepancy = .18626E-06g/sq.ft.

Polygon 1
At time = 11.00, total mass in vadose zone = .51726 g/sq.ft.
Mass in gas phase = .66353E-01g/sq.ft.
Mass in liquid phase = .28390 g/sq.ft.
Mass sorbed = .16700 g/sq.ft.

Since last printout at time = 10.00
Change in Total Mass = -.34940E-02g/sq.ft.
Advection in from atmosphere = .00000 g/sq.ft.
Advection in from water table = -.31170E-02g/sq.ft.
Diffusion in from atmosphere = -.37692E-03g/sq.ft.
Diffusion in from water table = .00000 g/sq.ft.
Total inflow at boundaries = -.34940E-02g/sq.ft.
Mass discrepancy = -.11874E-07g/sq.ft.

Since beginning of run at time = 0.0
Change in Total Mass = -.39547E-01g/sq.ft.
Advection in from atmosphere = .00000 g/sq.ft.
Advection in from water table = -.35397E-01g/sq.ft.
Diffusion in from atmosphere = -.41502E-02g/sq.ft.
Diffusion in from water table = .00000 g/sq.ft.
Total inflow at boundaries = -.39547E-01g/sq.ft.
Mass discrepancy = .17881E-06g/sq.ft.

Polygon 1
At time = 12.00, total mass in vadose zone = .51379 g/sq.ft.
Mass in gas phase = .65908E-01g/sq.ft.
Mass in liquid phase = .28200 g/sq.ft.
Mass sorbed = .16588 g/sq.ft.

Since last printout at time = 11.00
Change in Total Mass = -.34710E-02g/sq.ft.
Advection in from atmosphere = .00000 g/sq.ft.
Advection in from water table = -.30956E-02g/sq.ft.
Diffusion in from atmosphere = -.37532E-03g/sq.ft.
Diffusion in from water table = .00000 g/sq.ft.
Total inflow at boundaries = -.34709E-02g/sq.ft.

Mass discrepancy = -.89873E-07g/sq.ft.

Since beginning of run at time = 0.0
Change in Total Mass = -.43018E-01g/sq.ft.
Advection in from atmosphere = .00000 g/sq.ft.
Advection in from water table = -.38492E-01g/sq.ft.
Diffusion in from atmosphere = -.45255E-02g/sq.ft.
Diffusion in from water table = .00000 g/sq.ft.
Total inflow at boundaries = -.43018E-01g/sq.ft.
Mass discrepancy = .89407E-07g/sq.ft.

Polygon 1
At time = 13.00, total mass in vadose zone = .51034 g/sq.ft.
Mass in gas phase = .65466E-01g/sq.ft.
Mass in liquid phase = .28011 g/sq.ft.
Mass sorbed = .16477 g/sq.ft.

Since last printout at time = 12.00
Change in Total Mass = -.34476E-02g/sq.ft.
Advection in from atmosphere = .00000 g/sq.ft.
Advection in from water table = -.30742E-02g/sq.ft.
Diffusion in from atmosphere = -.37351E-03g/sq.ft.
Diffusion in from water table = .00000 g/sq.ft.
Total inflow at boundaries = -.34477E-02g/sq.ft.
Mass discrepancy = .73109E-07g/sq.ft.

Since beginning of run at time = 0.0
Change in Total Mass = -.46465E-01g/sq.ft.
Advection in from atmosphere = .00000 g/sq.ft.
Advection in from water table = -.41567E-01g/sq.ft.
Diffusion in from atmosphere = -.48990E-02g/sq.ft.
Diffusion in from water table = .00000 g/sq.ft.
Total inflow at boundaries = -.46466E-01g/sq.ft.
Mass discrepancy = .16019E-06g/sq.ft.

Polygon 1
At time = 14.00, total mass in vadose zone = .50692 g/sq.ft.
Mass in gas phase = .65026E-01g/sq.ft.
Mass in liquid phase = .27823 g/sq.ft.
Mass sorbed = .16366 g/sq.ft.

Since last printout at time = 13.00
Change in Total Mass = -.34242E-02g/sq.ft.
Advection in from atmosphere = .00000 g/sq.ft.
Advection in from water table = -.30528E-02g/sq.ft.
Diffusion in from atmosphere = -.37151E-03g/sq.ft.
Diffusion in from water table = .00000 g/sq.ft.
Total inflow at boundaries = -.34243E-02g/sq.ft.
Mass discrepancy = .49127E-07g/sq.ft.

Since beginning of run at time = 0.0
Change in Total Mass = -.49890E-01g/sq.ft.
Advection in from atmosphere = .00000 g/sq.ft.
Advection in from water table = -.44619E-01g/sq.ft.
Diffusion in from atmosphere = -.52705E-02g/sq.ft.
Diffusion in from water table = .00000 g/sq.ft.
Total inflow at boundaries = -.49890E-01g/sq.ft.
Mass discrepancy = .20862E-06g/sq.ft.

```
Polygon   1
At time =      15.00, total mass in vadose zone =      .50352    g/sq.ft.
Mass in gas phase     =       .64590E-01g/sq.ft.
Mass in liquid phase  =       .27636    g/sq.ft.
Mass sorbed           =       .16257    g/sq.ft.

Since last printout at time =      14.00
               Change in Total Mass =     -.34009E-02g/sq.ft.
                    Advection in from atmosphere =       .00000    g/sq.ft.
                    Advection in from water table =     -.30315E-02g/sq.ft.
                    Diffusion in from atmosphere =      -.36937E-03g/sq.ft.
                    Diffusion in from water table =      .00000    g/sq.ft.
               Total inflow at boundaries =     -.34009E-02g/sq.ft.
               Mass discrepancy =     -.83819E-08g/sq.ft.

Since beginning of run at time = 0.0
               Change in Total Mass =     -.53290E-01g/sq.ft.
                    Advection in from atmosphere =       .00000    g/sq.ft.
                    Advection in from water table =     -.47651E-01g/sq.ft.
                    Diffusion in from atmosphere =      -.56399E-02g/sq.ft.
                    Diffusion in from water table =      .00000    g/sq.ft.
               Total inflow at boundaries =     -.53291E-01g/sq.ft.
               Mass discrepancy =      .20117E-06g/sq.ft.


Polygon   1
At time =      16.00, total mass in vadose zone =      .50014    g/sq.ft.
Mass in gas phase     =       .64157E-01g/sq.ft.
Mass in liquid phase  =       .27451    g/sq.ft.
Mass sorbed           =       .16148    g/sq.ft.

Since last printout at time =      15.00
               Change in Total Mass =     -.33775E-02g/sq.ft.
                    Advection in from atmosphere =       .00000    g/sq.ft.
                    Advection in from water table =     -.30104E-02g/sq.ft.
                    Diffusion in from atmosphere =      -.36709E-03g/sq.ft.
                    Diffusion in from water table =      .00000    g/sq.ft.
               Total inflow at boundaries =     -.33775E-02g/sq.ft.
               Mass discrepancy =     -.20256E-07g/sq.ft.

Since beginning of run at time = 0.0
               Change in Total Mass =     -.56668E-01g/sq.ft.
                    Advection in from atmosphere =       .00000    g/sq.ft.
                    Advection in from water table =     -.50661E-01g/sq.ft.
                    Diffusion in from atmosphere =      -.60070E-02g/sq.ft.
                    Diffusion in from water table =      .00000    g/sq.ft.
               Total inflow at boundaries =     -.56668E-01g/sq.ft.
               Mass discrepancy =      .18254E-06g/sq.ft.


Polygon   1
At time =      17.00, total mass in vadose zone =      .49678    g/sq.ft.
Mass in gas phase     =       .63727E-01g/sq.ft.
Mass in liquid phase  =       .27266    g/sq.ft.
Mass sorbed           =       .16039    g/sq.ft.

Since last printout at time =      16.00
               Change in Total Mass =     -.33542E-02g/sq.ft.
```

```
                Advection in from atmosphere =        .00000    g/sq.ft.
                Advection in from water table =     -.29895E-02g/sq.ft.
                Diffusion in from atmosphere =      -.36470E-03g/sq.ft.
                Diffusion in from water table =       .00000    g/sq.ft.
          Total inflow at boundaries =     -.33542E-02g/sq.ft.
          Mass discrepancy =      .47032E-07g/sq.ft.

Since beginning of run at time = 0.0
          Change in Total Mass =     -.60022E-01g/sq.ft.
                Advection in from atmosphere =        .00000    g/sq.ft.
                Advection in from water table =     -.53651E-01g/sq.ft.
                Diffusion in from atmosphere =      -.63717E-02g/sq.ft.
                Diffusion in from water table =       .00000    g/sq.ft.
          Total inflow at boundaries =     -.60022E-01g/sq.ft.
          Mass discrepancy =      .23097E-06g/sq.ft.


Polygon   1
At time =      18.00, total mass in vadose zone =      .49345    g/sq.ft.
Mass in gas phase     =       .63299E-01g/sq.ft.
Mass in liquid phase  =       .27084    g/sq.ft.
Mass sorbed           =       .15932    g/sq.ft.

Since last printout at time =      17.00
          Change in Total Mass =     -.33311E-02g/sq.ft.
                Advection in from atmosphere =        .00000    g/sq.ft.
                Advection in from water table =     -.29689E-02g/sq.ft.
                Diffusion in from atmosphere =      -.36223E-03g/sq.ft.
                Diffusion in from water table =       .00000    g/sq.ft.
          Total inflow at boundaries =     -.33311E-02g/sq.ft.
          Mass discrepancy =      .53551E-08g/sq.ft.

Since beginning of run at time = 0.0
          Change in Total Mass =     -.63353E-01g/sq.ft.
                Advection in from atmosphere =        .00000    g/sq.ft.
                Advection in from water table =     -.56620E-01g/sq.ft.
                Diffusion in from atmosphere =      -.67339E-02g/sq.ft.
                Diffusion in from water table =       .00000    g/sq.ft.
          Total inflow at boundaries =     -.63353E-01g/sq.ft.
          Mass discrepancy =      .23842E-06g/sq.ft.


Polygon   1
At time =      19.00, total mass in vadose zone =      .49014    g/sq.ft.
Mass in gas phase     =       .62875E-01g/sq.ft.
Mass in liquid phase  =       .26902    g/sq.ft.
Mass sorbed           =       .15825    g/sq.ft.

Since last printout at time =      18.00
          Change in Total Mass =     -.33082E-02g/sq.ft.
                Advection in from atmosphere =        .00000    g/sq.ft.
                Advection in from water table =     -.29485E-02g/sq.ft.
                Diffusion in from atmosphere =      -.35968E-03g/sq.ft.
                Diffusion in from water table =       .00000    g/sq.ft.
          Total inflow at boundaries =     -.33082E-02g/sq.ft.
          Mass discrepancy =     -.17928E-07g/sq.ft.

Since beginning of run at time = 0.0
          Change in Total Mass =     -.66661E-01g/sq.ft.
                Advection in from atmosphere =        .00000    g/sq.ft.
```

Advection in from water table = -.59568E-01g/sq.ft.
Diffusion in from atmosphere = -.70936E-02g/sq.ft.
Diffusion in from water table = .00000 g/sq.ft.
Total inflow at boundaries = -.66662E-01g/sq.ft.
Mass discrepancy = .21607E-06g/sq.ft.

Polygon 1
At time = 20.00, total mass in vadose zone = .48686 g/sq.ft.
Mass in gas phase = .62453E-01g/sq.ft.
Mass in liquid phase = .26722 g/sq.ft.
Mass sorbed = .15719 g/sq.ft.

Since last printout at time = 19.00
Change in Total Mass = -.32855E-02g/sq.ft.
Advection in from atmosphere = .00000 g/sq.ft.
Advection in from water table = -.29284E-02g/sq.ft.
Diffusion in from atmosphere = -.35706E-03g/sq.ft.
Diffusion in from water table = .00000 g/sq.ft.
Total inflow at boundaries = -.32855E-02g/sq.ft.
Mass discrepancy = .44238E-08g/sq.ft.

Since beginning of run at time = 0.0
Change in Total Mass = -.69947E-01g/sq.ft.
Advection in from atmosphere = .00000 g/sq.ft.
Advection in from water table = -.62497E-01g/sq.ft.
Diffusion in from atmosphere = -.74506E-02g/sq.ft.
Diffusion in from water table = .00000 g/sq.ft.
Total inflow at boundaries = -.69947E-01g/sq.ft.
Mass discrepancy = .22352E-06g/sq.ft.

Polygon 1
At time = 21.00, total mass in vadose zone = .48360 g/sq.ft.
Mass in gas phase = .62035E-01g/sq.ft.
Mass in liquid phase = .26543 g/sq.ft.
Mass sorbed = .15613 g/sq.ft.

Since last printout at time = 20.00
Change in Total Mass = -.32631E-02g/sq.ft.
Advection in from atmosphere = .00000 g/sq.ft.
Advection in from water table = -.29087E-02g/sq.ft.
Diffusion in from atmosphere = -.35440E-03g/sq.ft.
Diffusion in from water table = .00000 g/sq.ft.
Total inflow at boundaries = -.32631E-02g/sq.ft.
Mass discrepancy = -.27707E-07g/sq.ft.

Since beginning of run at time = 0.0
Change in Total Mass = -.73210E-01g/sq.ft.
Advection in from atmosphere = .00000 g/sq.ft.
Advection in from water table = -.65405E-01g/sq.ft.
Diffusion in from atmosphere = -.78050E-02g/sq.ft.
Diffusion in from water table = .00000 g/sq.ft.
Total inflow at boundaries = -.73210E-01g/sq.ft.
Mass discrepancy = .19372E-06g/sq.ft.

Polygon 1
At time = 22.00, total mass in vadose zone = .48035 g/sq.ft.
Mass in gas phase = .61619E-01g/sq.ft.

Mass in liquid phase = .26365 g/sq.ft.
Mass sorbed = .15509 g/sq.ft.

Since last printout at time = 21.00
Change in Total Mass = -.32408E-02g/sq.ft.
Advection in from atmosphere = .00000 g/sq.ft.
Advection in from water table = -.28892E-02g/sq.ft.
Diffusion in from atmosphere = -.35170E-03g/sq.ft.
Diffusion in from water table = .00000 g/sq.ft.
Total inflow at boundaries = -.32409E-02g/sq.ft.
Mass discrepancy = .74506E-07g/sq.ft.

Since beginning of run at time = 0.0
Change in Total Mass = -.76451E-01g/sq.ft.
Advection in from atmosphere = .00000 g/sq.ft.
Advection in from water table = -.68294E-01g/sq.ft.
Diffusion in from atmosphere = -.81567E-02g/sq.ft.
Diffusion in from water table = .00000 g/sq.ft.
Total inflow at boundaries = -.76451E-01g/sq.ft.
Mass discrepancy = .26822E-06g/sq.ft.

Polygon 1
At time = 23.00, total mass in vadose zone = .47714 g/sq.ft.
Mass in gas phase = .61206E-01g/sq.ft.
Mass in liquid phase = .26188 g/sq.ft.
Mass sorbed = .15405 g/sq.ft.

Since last printout at time = 22.00
Change in Total Mass = -.32190E-02g/sq.ft.
Advection in from atmosphere = .00000 g/sq.ft.
Advection in from water table = -.28700E-02g/sq.ft.
Diffusion in from atmosphere = -.34897E-03g/sq.ft.
Diffusion in from water table = .00000 g/sq.ft.
Total inflow at boundaries = -.32189E-02g/sq.ft.
Mass discrepancy = -.40978E-07g/sq.ft.

Since beginning of run at time = 0.0
Change in Total Mass = -.79670E-01g/sq.ft.
Advection in from atmosphere = .00000 g/sq.ft.
Advection in from water table = -.71164E-01g/sq.ft.
Diffusion in from atmosphere = -.85057E-02g/sq.ft.
Diffusion in from water table = .00000 g/sq.ft.
Total inflow at boundaries = -.79670E-01g/sq.ft.
Mass discrepancy = .22352E-06g/sq.ft.

Polygon 1
At time = 24.00, total mass in vadose zone = .47394 g/sq.ft.
Mass in gas phase = .60796E-01g/sq.ft.
Mass in liquid phase = .26013 g/sq.ft.
Mass sorbed = .15302 g/sq.ft.

Since last printout at time = 23.00
Change in Total Mass = -.31972E-02g/sq.ft.
Advection in from atmosphere = .00000 g/sq.ft.
Advection in from water table = -.28511E-02g/sq.ft.
Diffusion in from atmosphere = -.34621E-03g/sq.ft.
Diffusion in from water table = .00000 g/sq.ft.
Total inflow at boundaries = -.31973E-02g/sq.ft.

Mass discrepancy = .43306E-07g/sq.ft.

Since beginning of run at time = 0.0
Change in Total Mass = -.82867E-01g/sq.ft.
Advection in from atmosphere = .00000 g/sq.ft.
Advection in from water table = -.74015E-01g/sq.ft.
Diffusion in from atmosphere = -.88519E-02g/sq.ft.
Diffusion in from water table = .00000 g/sq.ft.
Total inflow at boundaries = -.82867E-01g/sq.ft.
Mass discrepancy = .26822E-06g/sq.ft.

Polygon 1
At time = 25.00, total mass in vadose zone = .47076 g/sq.ft.
Mass in gas phase = .60389E-01g/sq.ft.
Mass in liquid phase = .25838 g/sq.ft.
Mass sorbed = .15199 g/sq.ft.

Since last printout at time = 24.00
Change in Total Mass = -.31758E-02g/sq.ft.
Advection in from atmosphere = .00000 g/sq.ft.
Advection in from water table = -.28324E-02g/sq.ft.
Diffusion in from atmosphere = -.34344E-03g/sq.ft.
Diffusion in from water table = .00000 g/sq.ft.
Total inflow at boundaries = -.31759E-02g/sq.ft.
Mass discrepancy = .26077E-07g/sq.ft.

Since beginning of run at time = 0.0
Change in Total Mass = -.86043E-01g/sq.ft.
Advection in from atmosphere = .00000 g/sq.ft.
Advection in from water table = -.76848E-01g/sq.ft.
Diffusion in from atmosphere = -.91954E-02g/sq.ft.
Diffusion in from water table = .00000 g/sq.ft.
Total inflow at boundaries = -.86043E-01g/sq.ft.
Mass discrepancy = .29057E-06g/sq.ft.

Polygon 1
At time = 26.00, total mass in vadose zone = .46761 g/sq.ft.
Mass in gas phase = .59984E-01g/sq.ft.
Mass in liquid phase = .25665 g/sq.ft.
Mass sorbed = .15097 g/sq.ft.

Since last printout at time = 25.00
Change in Total Mass = -.31547E-02g/sq.ft.
Advection in from atmosphere = .00000 g/sq.ft.
Advection in from water table = -.28140E-02g/sq.ft.
Diffusion in from atmosphere = -.34065E-03g/sq.ft.
Diffusion in from water table = .00000 g/sq.ft.
Total inflow at boundaries = -.31547E-02g/sq.ft.
Mass discrepancy = -.79162E-08g/sq.ft.

Since beginning of run at time = 0.0
Change in Total Mass = -.89198E-01g/sq.ft.
Advection in from atmosphere = .00000 g/sq.ft.
Advection in from water table = -.79662E-01g/sq.ft.
Diffusion in from atmosphere = -.95360E-02g/sq.ft.
Diffusion in from water table = .00000 g/sq.ft.
Total inflow at boundaries = -.89198E-01g/sq.ft.
Mass discrepancy = .28312E-06g/sq.ft.

Polygon 1
At time = 27.00, total mass in vadose zone = .46447 g/sq.ft.
Mass in gas phase = .59582E-01g/sq.ft.
Mass in liquid phase = .25493 g/sq.ft.
Mass sorbed = .14996 g/sq.ft.

Since last printout at time = 26.00
Change in Total Mass = -.31337E-02g/sq.ft.
Advection in from atmosphere = .00000 g/sq.ft.
Advection in from water table = -.27959E-02g/sq.ft.
Diffusion in from atmosphere = -.33787E-03g/sq.ft.
Diffusion in from water table = .00000 g/sq.ft.
Total inflow at boundaries = -.31338E-02g/sq.ft.
Mass discrepancy = .52620E-07g/sq.ft.

Since beginning of run at time = 0.0
Change in Total Mass = -.92331E-01g/sq.ft.
Advection in from atmosphere = .00000 g/sq.ft.
Advection in from water table = -.82458E-01g/sq.ft.
Diffusion in from atmosphere = -.98739E-02g/sq.ft.
Diffusion in from water table = .00000 g/sq.ft.
Total inflow at boundaries = -.92333E-01g/sq.ft.
Mass discrepancy = .32783E-06g/sq.ft.

Polygon 1
At time = 28.00, total mass in vadose zone = .46136 g/sq.ft.
Mass in gas phase = .59183E-01g/sq.ft.
Mass in liquid phase = .25322 g/sq.ft.
Mass sorbed = .14896 g/sq.ft.

Since last printout at time = 27.00
Change in Total Mass = -.31131E-02g/sq.ft.
Advection in from atmosphere = .00000 g/sq.ft.
Advection in from water table = -.27780E-02g/sq.ft.
Diffusion in from atmosphere = -.33508E-03g/sq.ft.
Diffusion in from water table = .00000 g/sq.ft.
Total inflow at boundaries = -.31131E-02g/sq.ft.
Mass discrepancy = .21188E-07g/sq.ft.

Since beginning of run at time = 0.0
Change in Total Mass = -.95444E-01g/sq.ft.
Advection in from atmosphere = .00000 g/sq.ft.
Advection in from water table = -.85236E-01g/sq.ft.
Diffusion in from atmosphere = -.10209E-01g/sq.ft.
Diffusion in from water table = .00000 g/sq.ft.
Total inflow at boundaries = -.95445E-01g/sq.ft.
Mass discrepancy = .35763E-06g/sq.ft.

Polygon 1
At time = 29.00, total mass in vadose zone = .45827 g/sq.ft.
Mass in gas phase = .58786E-01g/sq.ft.
Mass in liquid phase = .25153 g/sq.ft.
Mass sorbed = .14796 g/sq.ft.

Since last printout at time = 28.00
Change in Total Mass = -.30927E-02g/sq.ft.

Advection in from atmosphere = .00000 g/sq.ft.
Advection in from water table = -.27603E-02g/sq.ft.
Diffusion in from atmosphere = -.33229E-03g/sq.ft.
Diffusion in from water table = .00000 g/sq.ft.
Total inflow at boundaries = -.30926E-02g/sq.ft.
Mass discrepancy = -.51688E-07g/sq.ft.

Since beginning of run at time = 0.0
Change in Total Mass = -.98537E-01g/sq.ft.
Advection in from atmosphere = .00000 g/sq.ft.
Advection in from water table = -.87996E-01g/sq.ft.
Diffusion in from atmosphere = -.10541E-01g/sq.ft.
Diffusion in from water table = .00000 g/sq.ft.
Total inflow at boundaries = -.98537E-01g/sq.ft.
Mass discrepancy = .30547E-06g/sq.ft.

Polygon 1
At time = 30.00, total mass in vadose zone = .45520 g/sq.ft.
Mass in gas phase = .58392E-01g/sq.ft.
Mass in liquid phase = .24984 g/sq.ft.
Mass sorbed = .14697 g/sq.ft.

Since last printout at time = 29.00
Change in Total Mass = -.30724E-02g/sq.ft.
Advection in from atmosphere = .00000 g/sq.ft.
Advection in from water table = -.27429E-02g/sq.ft.
Diffusion in from atmosphere = -.32951E-03g/sq.ft.
Diffusion in from water table = .00000 g/sq.ft.
Total inflow at boundaries = -.30724E-02g/sq.ft.
Mass discrepancy = .44238E-08g/sq.ft.

Since beginning of run at time = 0.0
Change in Total Mass = -.10161 g/sq.ft.
Advection in from atmosphere = .00000 g/sq.ft.
Advection in from water table = -.90739E-01g/sq.ft.
Diffusion in from atmosphere = -.10871E-01g/sq.ft.
Diffusion in from water table = .00000 g/sq.ft.
Total inflow at boundaries = -.10161 g/sq.ft.
Mass discrepancy = .31292E-06g/sq.ft.

GROUNDWATER IMPACT OF POLYGON 1

Time	Mass per area (g/sq.ft.)	Total Mass (g)
1.00	.33105E-02	488.31
2.00	.32941E-02	485.88
3.00	.32768E-02	483.33
4.00	.32588E-02	480.67
5.00	.32400E-02	477.91
6.00	.32207E-02	475.05
7.00	.32007E-02	472.11
8.00	.31803E-02	469.09
9.00	.31595E-02	466.02
10.00	.31384E-02	462.91
11.00	.31170E-02	459.76
12.00	.30956E-02	456.60
13.00	.30742E-02	453.44
14.00	.30528E-02	450.28
15.00	.30315E-02	447.14

16.00	.30104E-02	444.03
17.00	.29895E-02	440.95
18.00	.29689E-02	437.91
19.00	.29485E-02	434.91
20.00	.29284E-02	431.94
21.00	.29087E-02	429.03
22.00	.28892E-02	426.15
23.00	.28700E-02	423.32
24.00	.28511E-02	420.53
25.00	.28324E-02	417.78
26.00	.28140E-02	415.07
27.00	.27959E-02	412.40
28.00	.27780E-02	409.76
29.00	.27603E-02	407.15
30.00	.27429E-02	404.57

****

****

TOTAL GROUNDWATER IMPACT

Time (yr)	Mass (g)	Cumulative Mass (g)
1.00	488.31	488.31
2.00	485.88	974.18
3.00	483.33	1457.5
4.00	480.67	1938.2
5.00	477.91	2416.1
6.00	475.05	2891.1
7.00	472.11	3363.2
8.00	469.09	3832.3
9.00	466.02	4298.4
10.00	462.91	4761.3
11.00	459.76	5221.0
12.00	456.60	5677.6
13.00	453.44	6131.1
14.00	450.28	6581.3
15.00	447.14	7028.5
16.00	444.03	7472.5
17.00	440.95	7913.5
18.00	437.91	8351.4
19.00	434.91	8786.3
20.00	431.94	9218.2
21.00	429.03	9647.3
22.00	426.15	10073.
23.00	423.32	10497.
24.00	420.53	10917.
25.00	417.78	11335.
26.00	415.07	11750.
27.00	412.40	12163.
28.00	409.76	12572.
29.00	407.15	12979.
30.00	404.57	13384.

Polygon 15A
Time: .000

Cell	Cgas(g/cu.ft.)	Cliq(g/cu.ft.)	Csol
1	.11867E-03	.25088E-03	.81035E-09
2	.11867E-03	.25088E-03	.81035E-09
3	.11867E-03	.25088E-03	.81035E-09
4	.11867E-03	.25088E-03	.81035E-09
5	.11867E-03	.25088E-03	.81035E-09
6	.11867E-03	.25088E-03	.81035E-09
7	.18774E-02	.39692E-02	.12820E-07
8	.18774E-02	.39692E-02	.12820E-07
9	.18774E-02	.39692E-02	.12820E-07
10	.18774E-02	.39692E-02	.12820E-07
11	.18774E-02	.39692E-02	.12820E-07
12	.18774E-02	.39692E-02	.12820E-07
13	.40295E-02	.85190E-02	.27517E-07
14	.40295E-02	.85190E-02	.27517E-07
15	.40295E-02	.85190E-02	.27517E-07
16	.40295E-02	.85190E-02	.27517E-07
17	.40295E-02	.85190E-02	.27517E-07
18	.40295E-02	.85190E-02	.27517E-07
19	.61811E-02	.13068E-01	.42209E-07
20	.61811E-02	.13068E-01	.42209E-07
21	.61811E-02	.13068E-01	.42209E-07
22	.61811E-02	.13068E-01	.42209E-07
23	.61811E-02	.13068E-01	.42209E-07
24	.61811E-02	.13068E-01	.42209E-07
25	.83328E-02	.17617E-01	.56902E-07
26	.83328E-02	.17617E-01	.56902E-07
27	.83328E-02	.17617E-01	.56902E-07
28	.83328E-02	.17617E-01	.56902E-07
29	.83328E-02	.17617E-01	.56902E-07
30	.83328E-02	.17617E-01	.56902E-07
31	.10484E-01	.22166E-01	.71595E-07
32	.10484E-01	.22166E-01	.71595E-07
33	.10484E-01	.22166E-01	.71595E-07
34	.10484E-01	.22166E-01	.71595E-07
35	.10484E-01	.22166E-01	.71595E-07
36	.10484E-01	.22166E-01	.71595E-07
37	.12636E-01	.26715E-01	.86288E-07
38	.12636E-01	.26715E-01	.86288E-07
39	.12636E-01	.26715E-01	.86288E-07
40	.12636E-01	.26715E-01	.86288E-07
41	.12636E-01	.26715E-01	.86288E-07
42	.12636E-01	.26715E-01	.86288E-07
43	.14788E-01	.31264E-01	.10098E-06
44	.14788E-01	.31264E-01	.10098E-06
45	.14788E-01	.31264E-01	.10098E-06
46	.14788E-01	.31264E-01	.10098E-06
47	.14788E-01	.31264E-01	.10098E-06
48	.14788E-01	.31264E-01	.10098E-06
49	.16940E-01	.35813E-01	.11568E-06
50	.16940E-01	.35813E-01	.11568E-06
51	.16940E-01	.35813E-01	.11568E-06
52	.16940E-01	.35813E-01	.11568E-06
53	.16940E-01	.35813E-01	.11568E-06
54	.16940E-01	.35813E-01	.11568E-06
55	.19091E-01	.40362E-01	.13037E-06
56	.19091E-01	.40362E-01	.13037E-06

57	.19091E-01	.40362E-01	.13037E-06
58	.19091E-01	.40362E-01	.13037E-06
59	.19091E-01	.40362E-01	.13037E-06
60	.19091E-01	.40362E-01	.13037E-06

Polygon 15A
Time: 10.000

Cell	Cgas(g/cu.ft.)	Cliq(g/cu.ft.)	Csol
1	.73842E-04	.15611E-03	.50425E-09
2	.18062E-03	.38186E-03	.12334E-08
3	.30364E-03	.64195E-03	.20735E-08
4	.43580E-03	.92136E-03	.29760E-08
5	.57698E-03	.12198E-02	.39400E-08
6	.73029E-03	.15440E-02	.49870E-08
7	.96547E-03	.20412E-02	.65930E-08
8	.12692E-02	.26833E-02	.86672E-08
9	.15775E-02	.33352E-02	.10773E-07
10	.18543E-02	.39204E-02	.12663E-07
11	.21009E-02	.44417E-02	.14347E-07
12	.23335E-02	.49333E-02	.15935E-07
13	.26481E-02	.55986E-02	.18083E-07
14	.30348E-02	.64162E-02	.20724E-07
15	.34183E-02	.72268E-02	.23343E-07
16	.37554E-02	.79396E-02	.25645E-07
17	.40482E-02	.85586E-02	.27644E-07
18	.43164E-02	.91256E-02	.29476E-07
19	.46593E-02	.98506E-02	.31817E-07
20	.50691E-02	.10717E-01	.34615E-07
21	.54715E-02	.11568E-01	.37364E-07
22	.58245E-02	.12314E-01	.39774E-07
23	.61306E-02	.12961E-01	.41864E-07
24	.64098E-02	.13551E-01	.43771E-07
25	.67619E-02	.14296E-01	.46176E-07
26	.71793E-02	.15178E-01	.49025E-07
27	.75880E-02	.16042E-01	.51816E-07
28	.79461E-02	.16799E-01	.54262E-07
29	.82562E-02	.17455E-01	.56380E-07
30	.85387E-02	.18052E-01	.58309E-07
31	.88933E-02	.18802E-01	.60730E-07
32	.93124E-02	.19688E-01	.63592E-07
33	.97222E-02	.20554E-01	.66391E-07
34	.10081E-01	.21313E-01	.68840E-07
35	.10391E-01	.21968E-01	.70958E-07
36	.10673E-01	.22564E-01	.72882E-07
37	.11026E-01	.23311E-01	.75295E-07
38	.11443E-01	.24193E-01	.78144E-07
39	.11851E-01	.25054E-01	.80925E-07
40	.12206E-01	.25805E-01	.83351E-07
41	.12512E-01	.26452E-01	.85440E-07
42	.12788E-01	.27036E-01	.87328E-07
43	.13135E-01	.27770E-01	.89696E-07
44	.13544E-01	.28635E-01	.92490E-07
45	.13942E-01	.29475E-01	.95206E-07
46	.14285E-01	.30202E-01	.97552E-07
47	.14577E-01	.30819E-01	.99544E-07
48	.14837E-01	.31368E-01	.10132E-06
49	.15163E-01	.32058E-01	.10355E-06
50	.15549E-01	.32872E-01	.10618E-06
51	.15917E-01	.33652E-01	.10870E-06
52	.16227E-01	.34306E-01	.11081E-06

53	.16477E-01	.34836E-01	.11252E-06
54	.16688E-01	.35282E-01	.11396E-06
55	.16957E-01	.35851E-01	.11580E-06
56	.17274E-01	.36520E-01	.11796E-06
57	.17562E-01	.37128E-01	.11992E-06
58	.17775E-01	.37579E-01	.12138E-06
59	.17912E-01	.37870E-01	.12232E-06
60	.17989E-01	.38033E-01	.12285E-06

Polygon 15A
Time: 20.000

Cell	Cgas(g/cu.ft.)	Cliq(g/cu.ft.)	Csol
1	.69163E-04	.14622E-03	.47230E-09
2	.17317E-03	.36611E-03	.11825E-08
3	.30095E-03	.63626E-03	.20551E-08
4	.44593E-03	.94278E-03	.30452E-08
5	.60455E-03	.12781E-02	.41283E-08
6	.77541E-03	.16393E-02	.52951E-08
7	.96109E-03	.20319E-02	.65630E-08
8	.11663E-02	.24657E-02	.79641E-08
9	.13923E-02	.29435E-02	.95075E-08
10	.16352E-02	.34570E-02	.11166E-07
11	.18887E-02	.39930E-02	.12897E-07
12	.21482E-02	.45416E-02	.14669E-07
13	.24153E-02	.51064E-02	.16494E-07
14	.26959E-02	.56995E-02	.18409E-07
15	.29923E-02	.63263E-02	.20434E-07
16	.33008E-02	.69785E-02	.22541E-07
17	.36144E-02	.76414E-02	.24682E-07
18	.39277E-02	.83039E-02	.26821E-07
19	.42424E-02	.89692E-02	.28971E-07
20	.45646E-02	.96504E-02	.31177E-07
21	.48975E-02	.10354E-01	.33444E-07
22	.52376E-02	.11073E-01	.35766E-07
23	.55787E-02	.11794E-01	.38096E-07
24	.59160E-02	.12507E-01	.40399E-07
25	.62514E-02	.13217E-01	.42690E-07
26	.65915E-02	.13936E-01	.45012E-07
27	.69396E-02	.14671E-01	.47389E-07
28	.72927E-02	.15418E-01	.49800E-07
29	.76447E-02	.16162E-01	.52204E-07
30	.79910E-02	.16894E-01	.54569E-07
31	.83337E-02	.17619E-01	.56909E-07
32	.86794E-02	.18350E-01	.59269E-07
33	.90316E-02	.19094E-01	.61675E-07
34	.93874E-02	.19847E-01	.64104E-07
35	.97407E-02	.20593E-01	.66517E-07
36	.10087E-01	.21325E-01	.68881E-07
37	.10428E-01	.22047E-01	.71211E-07
38	.10771E-01	.22771E-01	.73552E-07
39	.11119E-01	.23507E-01	.75927E-07
40	.11468E-01	.24246E-01	.78315E-07
41	.11814E-01	.24977E-01	.80675E-07
42	.12150E-01	.25688E-01	.82972E-07
43	.12480E-01	.26384E-01	.85221E-07
44	.12808E-01	.27079E-01	.87465E-07
45	.13139E-01	.27778E-01	.89724E-07
46	.13469E-01	.28476E-01	.91976E-07
47	.13791E-01	.29156E-01	.94175E-07
48	.14100E-01	.29810E-01	.96286E-07

49	.14397E-01	.30439E-01	.98317E-07
50	.14689E-01	.31055E-01	.10031E-06
51	.14977E-01	.31664E-01	.10227E-06
52	.15257E-01	.32257E-01	.10419E-06
53	.15522E-01	.32817E-01	.10600E-06
54	.15766E-01	.33332E-01	.10766E-06
55	.15988E-01	.33802E-01	.10918E-06
56	.16194E-01	.34237E-01	.11059E-06
57	.16384E-01	.34638E-01	.11188E-06
58	.16553E-01	.34995E-01	.11303E-06
59	.16691E-01	.35287E-01	.11398E-06
60	.16791E-01	.35498E-01	.11466E-06

Polygon 15A
Time: 30.000

Cell	Cgas(g/cu.ft.)	Cliq(g/cu.ft.)	Csol
1	.64066E-04	.13545E-03	.43749E-09
2	.16071E-03	.33976E-03	.10974E-08
3	.28006E-03	.59210E-03	.19125E-08
4	.41650E-03	.88054E-03	.28442E-08
5	.56681E-03	.11983E-02	.38706E-08
6	.72927		

****
Sector not found error reading file
C:\DATA\SPRINGER\BATCH.PRF

V-Leach, VER 1.1
Jake Turin, 11/91
PGA V-leach model, polygon screen-TCE-11/10/92-POLY96.INP. Old chem, New soil.
1 polygons.
Timestep = 1.00 years. Simulation length = 30.00 years.
Printout every 1.00 years. Vertical profile stored every 10.00 years.
Koc = 123.60 ml/g, .43649E-02cu.ft./g
Kh = .47300 (dimensionless).
Aqueous solubility = 1100.0 mg/l, 31.149 g/cu.ft
Free air diffusion coefficient = .70290 sq. m/day, 2761.7 sq.ft./yr

Polygon 1
Polygon 96
Polygon area = 83000. sq. ft.
60 cells, each cell 1.000 ft. thick.
Soil Properties:
Bulk density = 1.6400 g/ml, 46440. g/cu.ft.
Porosity = .3810 Volumetric water content = .2550
Organic carbon content = .00074000
Recharge Rate = .19685000 ft/yr
Conc. in recharge water = .00000 mg/l, .00000 g/cu.ft
Atmospheric concentration = .00000 mg/l, .00000 g/cu.ft
Water table is impermeable to gas diffusion.

Calculation of Total TCE Mass and Revised Vertical Distributions in Polygon 15A using HGC Distribution equations and Revised Soil Physical Data

4.189 Cs **	Cz = (3.023z - 11.38)Cs

Cz (ug/L) Vert. Dist. Eq.	Calculated Depth Interval (z)	Total Depth Interval (feet)	Total Soil Conc Ct (ug/Kg)	Mt (ug/cc)	Volume of Soil (cubic ft)	Mass TCE (grams)	Mass TCE (pounds)
4.189	3	6	2.51	4.12E-03	885000	103.13	0.23
66.30	9	6	39.71	0.07	885000	1632.19	3.60
142.28	15	6	85.23	0.14	885000	3502.70	7.72
218.26	21	6	130.74	0.21	885000	5373.22	11.85
294.24	27	6	176.25	0.29	885000	7243.73	15.97
370.22	33	6	221.76	0.36	885000	9114.24	20.09
446.20	39	6	267.27	0.44	885000	10984.76	24.22
522.18	45	6	312.79	0.51	885000	12855.27	28.34
598.16	51	6	358.30	0.59	885000	14725.79	32.46
674.14	57	6	403.81	0.66	885000	16596.30	36.59
3336.17		60				82131.32	181.07

* Ct conversion based on Kgt of 0.599 L/Kg

** Cs Determined as mathematical average for VOC concentrations for polygon(s) listed in Table A-1 of HGC, 1989.

```
PGA V-leach model, polygon screen-TCE-11/10/92-Poly24A.INP.  New soil, Old chem.
   1
      1.0        30.        1.0        10.
    123.6       .473      1100.      .7029
lygon 24A
  162500.         1.    .082021       1.64       .381       .255     .00074
       0.         0.        -1.
  60
   1    6      00.12
   7   12      37.27
  13   18      92.98
  19   24     148.69
  25   30     204.40
  31   36     260.12
  37   42     315.83
  43   48     371.54
  49   54     427.26
  55   60     482.97
```

V-Leach, VER 1.1
Jake Turin, 11/91
PGA V-leach model, polygon screen-TCE-11/10/92-Poly24A.INP. New soil, Old chem.

Polygon 1
At time = .00, total mass in vadose zone = .65232 g/sq.ft.
Mass in gas phase = .83679E-01g/sq.ft.
Mass in liquid phase = .35803 g/sq.ft.
Mass sorbed = .21061 g/sq.ft.

Polygon 1
At time = 1.00, total mass in vadose zone = .64803 g/sq.ft.
Mass in gas phase = .83128E-01g/sq.ft.
Mass in liquid phase = .35568 g/sq.ft.
Mass sorbed = .20922 g/sq.ft.

Since last printout at time = .00
Change in Total Mass = -.42931E-02g/sq.ft.
Advection in from atmosphere = .00000 g/sq.ft.
Advection in from water table = -.39595E-02g/sq.ft.
Diffusion in from atmosphere = -.33353E-03g/sq.ft.
Diffusion in from water table = .00000 g/sq.ft.
Total inflow at boundaries = -.42931E-02g/sq.ft.
Mass discrepancy = -.26543E-07g/sq.ft.

Since beginning of run at time = 0.0
Change in Total Mass = -.42931E-02g/sq.ft.
Advection in from atmosphere = .00000 g/sq.ft.
Advection in from water table = -.39595E-02g/sq.ft.
Diffusion in from atmosphere = -.33353E-03g/sq.ft.
Diffusion in from water table = .00000 g/sq.ft.
Total inflow at boundaries = -.42931E-02g/sq.ft.
Mass discrepancy = -.26543E-07g/sq.ft.

Polygon 1
At time = 2.00, total mass in vadose zone = .64375 g/sq.ft.
Mass in gas phase = .82579E-01g/sq.ft.
Mass in liquid phase = .35333 g/sq.ft.
Mass sorbed = .20784 g/sq.ft.

Since last printout at time = 1.00
Change in Total Mass = -.42843E-02g/sq.ft.
Advection in from atmosphere = .00000 g/sq.ft.
Advection in from water table = -.39394E-02g/sq.ft.
Diffusion in from atmosphere = -.34499E-03g/sq.ft.
Diffusion in from water table = .00000 g/sq.ft.
Total inflow at boundaries = -.42844E-02g/sq.ft.
Mass discrepancy = .38184E-07g/sq.ft.

Since beginning of run at time = 0.0
Change in Total Mass = -.85774E-02g/sq.ft.
Advection in from atmosphere = .00000 g/sq.ft.
Advection in from water table = -.78989E-02g/sq.ft.
Diffusion in from atmosphere = -.67852E-03g/sq.ft.
Diffusion in from water table = .00000 g/sq.ft.
Total inflow at boundaries = -.85774E-02g/sq.ft.
Mass discrepancy = .12107E-07g/sq.ft.

```
Polygon   1
At time =       3.00, total mass in vadose zone =     .63947    g/sq.ft.
Mass in gas phase     =       .82031E-01g/sq.ft.
Mass in liquid phase  =       .35098    g/sq.ft.
Mass sorbed           =       .20646    g/sq.ft.

Since last printout at time =       2.00
               Change in Total Mass =     -.42728E-02g/sq.ft.
                    Advection in from atmosphere =       .00000    g/sq.ft.
                    Advection in from water table =     -.39182E-02g/sq.ft.
                    Diffusion in from atmosphere =      -.35452E-03g/sq.ft.
                    Diffusion in from water table =      .00000    g/sq.ft.
               Total inflow at boundaries =     -.42727E-02g/sq.ft.
               Mass discrepancy =     -.15367E-07g/sq.ft.

Since beginning of run at time = 0.0
               Change in Total Mass =     -.12850E-01g/sq.ft.
                    Advection in from atmosphere =       .00000    g/sq.ft.
                    Advection in from water table =     -.11817E-01g/sq.ft.
                    Diffusion in from atmosphere =      -.10330E-02g/sq.ft.
                    Diffusion in from water table =      .00000    g/sq.ft.
               Total inflow at boundaries =     -.12850E-01g/sq.ft.
               Mass discrepancy =     -.46566E-08g/sq.ft.


Polygon   1
At time =       4.00, total mass in vadose zone =     .63521    g/sq.ft.
Mass in gas phase     =       .81484E-01g/sq.ft.
Mass in liquid phase  =       .34864    g/sq.ft.
Mass sorbed           =       .20509    g/sq.ft.

Since last printout at time =       3.00
               Change in Total Mass =     -.42585E-02g/sq.ft.
                    Advection in from atmosphere =       .00000    g/sq.ft.
                    Advection in from water table =     -.38961E-02g/sq.ft.
                    Diffusion in from atmosphere =      -.36240E-03g/sq.ft.
                    Diffusion in from water table =      .00000    g/sq.ft.
               Total inflow at boundaries =     -.42585E-02g/sq.ft.
               Mass discrepancy =      .31199E-07g/sq.ft.

Since beginning of run at time = 0.0
               Change in Total Mass =     -.17109E-01g/sq.ft.
                    Advection in from atmosphere =       .00000    g/sq.ft.
                    Advection in from water table =     -.15713E-01g/sq.ft.
                    Diffusion in from atmosphere =      -.13954E-02g/sq.ft.
                    Diffusion in from water table =      .00000    g/sq.ft.
               Total inflow at boundaries =     -.17109E-01g/sq.ft.
               Mass discrepancy =      .26077E-07g/sq.ft.


Polygon   1
At time =       5.00, total mass in vadose zone =     .63097    g/sq.ft.
Mass in gas phase     =       .80940E-01g/sq.ft.
Mass in liquid phase  =       .34632    g/sq.ft.
Mass sorbed           =       .20372    g/sq.ft.

Since last printout at time =       4.00
               Change in Total Mass =     -.42421E-02g/sq.ft.
```

```
                Advection in from atmosphere =       .00000    g/sq.ft.
                Advection in from water table =     -.38732E-02g/sq.ft.
                Diffusion in from atmosphere =      -.36886E-03g/sq.ft.
                Diffusion in from water table =      .00000    g/sq.ft.
           Total inflow at boundaries =     -.42421E-02g/sq.ft.
           Mass discrepancy =      .32596E-08g/sq.ft.

Since beginning of run at time = 0.0
           Change in Total Mass =     -.21351E-01g/sq.ft.
                Advection in from atmosphere =       .00000    g/sq.ft.
                Advection in from water table =     -.19586E-01g/sq.ft.
                Diffusion in from atmosphere =      -.17643E-02g/sq.ft.
                Diffusion in from water table =      .00000    g/sq.ft.
           Total inflow at boundaries =     -.21351E-01g/sq.ft.
           Mass discrepancy =      .29802E-07g/sq.ft.


Polygon   1
At time =       6.00, total mass in vadose zone =     .62675    g/sq.ft.
Mass in gas phase     =       .80398E-01g/sq.ft.
Mass in liquid phase  =       .34400    g/sq.ft.
Mass sorbed           =       .20235    g/sq.ft.

Since last printout at time =       5.00
           Change in Total Mass =     -.42236E-02g/sq.ft.
                Advection in from atmosphere =       .00000    g/sq.ft.
                Advection in from water table =     -.38495E-02g/sq.ft.
                Diffusion in from atmosphere =      -.37409E-03g/sq.ft.
                Diffusion in from water table =      .00000    g/sq.ft.
           Total inflow at boundaries =     -.42236E-02g/sq.ft.
           Mass discrepancy =     -.37253E-08g/sq.ft.

Since beginning of run at time = 0.0
           Change in Total Mass =     -.25574E-01g/sq.ft.
                Advection in from atmosphere =       .00000    g/sq.ft.
                Advection in from water table =     -.23436E-01g/sq.ft.
                Diffusion in from atmosphere =      -.21384E-02g/sq.ft.
                Diffusion in from water table =      .00000    g/sq.ft.
           Total inflow at boundaries =     -.25574E-01g/sq.ft.
           Mass discrepancy =      .26077E-07g/sq.ft.


Polygon   1
At time =       7.00, total mass in vadose zone =     .62255    g/sq.ft.
Mass in gas phase     =       .79859E-01g/sq.ft.
Mass in liquid phase  =       .34169    g/sq.ft.
Mass sorbed           =       .20100    g/sq.ft.

Since last printout at time =       6.00
           Change in Total Mass =     -.42033E-02g/sq.ft.
                Advection in from atmosphere =       .00000    g/sq.ft.
                Advection in from water table =     -.38251E-02g/sq.ft.
                Diffusion in from atmosphere =      -.37827E-03g/sq.ft.
                Diffusion in from water table =      .00000    g/sq.ft.
           Total inflow at boundaries =     -.42034E-02g/sq.ft.
           Mass discrepancy =      .31665E-07g/sq.ft.

Since beginning of run at time = 0.0
           Change in Total Mass =     -.29778E-01g/sq.ft.
                Advection in from atmosphere =       .00000    g/sq.ft.
```

```
                Advection in from water table =     -.27261E-01g/sq.ft.
                Diffusion in from atmosphere =      -.25167E-02g/sq.ft.
                Diffusion in from water table =      .00000    g/sq.ft.
           Total inflow at boundaries =     -.29778E-01g/sq.ft.
           Mass discrepancy =      .59605E-07g/sq.ft.


Polygon   1
At time =       8.00, total mass in vadose zone =     .61836    g/sq.ft.
Mass in gas phase     =       .79323E-01g/sq.ft.
Mass in liquid phase  =       .33940    g/sq.ft.
Mass sorbed           =       .19965    g/sq.ft.

Since last printout at time =       7.00
           Change in Total Mass =     -.41816E-02g/sq.ft.
                Advection in from atmosphere =       .00000    g/sq.ft.
                Advection in from water table =     -.38001E-02g/sq.ft.
                Diffusion in from atmosphere =      -.38155E-03g/sq.ft.
                Diffusion in from water table =      .00000    g/sq.ft.
           Total inflow at boundaries =     -.41816E-02g/sq.ft.
           Mass discrepancy =     -.32596E-08g/sq.ft.

Since beginning of run at time = 0.0
           Change in Total Mass =     -.33959E-01g/sq.ft.
                Advection in from atmosphere =       .00000    g/sq.ft.
                Advection in from water table =     -.31061E-01g/sq.ft.
                Diffusion in from atmosphere =      -.28982E-02g/sq.ft.
                Diffusion in from water table =      .00000    g/sq.ft.
           Total inflow at boundaries =     -.33959E-01g/sq.ft.
           Mass discrepancy =      .55879E-07g/sq.ft.


Polygon   1
At time =       9.00, total mass in vadose zone =     .61421    g/sq.ft.
Mass in gas phase     =       .78789E-01g/sq.ft.
Mass in liquid phase  =       .33711    g/sq.ft.
Mass sorbed           =       .19830    g/sq.ft.

Since last printout at time =       8.00
           Change in Total Mass =     -.41586E-02g/sq.ft.
                Advection in from atmosphere =       .00000    g/sq.ft.
                Advection in from water table =     -.37746E-02g/sq.ft.
                Diffusion in from atmosphere =      -.38404E-03g/sq.ft.
                Diffusion in from water table =      .00000    g/sq.ft.
           Total inflow at boundaries =     -.41586E-02g/sq.ft.
           Mass discrepancy =      .83819E-08g/sq.ft.

Since beginning of run at time = 0.0
           Change in Total Mass =     -.38118E-01g/sq.ft.
                Advection in from atmosphere =       .00000    g/sq.ft.
                Advection in from water table =     -.34836E-01g/sq.ft.
                Diffusion in from atmosphere =      -.32823E-02g/sq.ft.
                Diffusion in from water table =      .00000    g/sq.ft.
           Total inflow at boundaries =     -.38118E-01g/sq.ft.
           Mass discrepancy =      .63330E-07g/sq.ft.


Polygon   1
At time =      10.00, total mass in vadose zone =     .61007    g/sq.ft.
Mass in gas phase     =       .78259E-01g/sq.ft.
```

```
Mass in liquid phase  =        .33484    g/sq.ft.
Mass sorbed           =        .19697    g/sq.ft.

Since last printout at time =        9.00
               Change in Total Mass =     -.41346E-02g/sq.ft.
                    Advection in from atmosphere =       .00000    g/sq.ft.
                    Advection in from water table =     -.37487E-02g/sq.ft.
                    Diffusion in from atmosphere =      -.38585E-03g/sq.ft.
                    Diffusion in from water table =      .00000    g/sq.ft.
               Total inflow at boundaries =     -.41346E-02g/sq.ft.
               Mass discrepancy =     -.93132E-08g/sq.ft.

Since beginning of run at time = 0.0
               Change in Total Mass =     -.42252E-01g/sq.ft.
                    Advection in from atmosphere =       .00000    g/sq.ft.
                    Advection in from water table =     -.38584E-01g/sq.ft.
                    Diffusion in from atmosphere =      -.36681E-02g/sq.ft.
                    Diffusion in from water table =      .00000    g/sq.ft.
               Total inflow at boundaries =     -.42253E-01g/sq.ft.
               Mass discrepancy =      .55879E-07g/sq.ft.


Polygon   1
At time =      11.00, total mass in vadose zone =     .60596    g/sq.ft.
Mass in gas phase     =        .77732E-01g/sq.ft.
Mass in liquid phase  =        .33259    g/sq.ft.
Mass sorbed           =        .19564    g/sq.ft.

Since last printout at time =       10.00
               Change in Total Mass =     -.41097E-02g/sq.ft.
                    Advection in from atmosphere =       .00000    g/sq.ft.
                    Advection in from water table =     -.37226E-02g/sq.ft.
                    Diffusion in from atmosphere =      -.38708E-03g/sq.ft.
                    Diffusion in from water table =      .00000    g/sq.ft.
               Total inflow at boundaries =     -.41097E-02g/sq.ft.
               Mass discrepancy =     -.27008E-07g/sq.ft.

Since beginning of run at time = 0.0
               Change in Total Mass =     -.46362E-01g/sq.ft.
                    Advection in from atmosphere =       .00000    g/sq.ft.
                    Advection in from water table =     -.42307E-01g/sq.ft.
                    Diffusion in from atmosphere =      -.40552E-02g/sq.ft.
                    Diffusion in from water table =      .00000    g/sq.ft.
               Total inflow at boundaries =     -.46362E-01g/sq.ft.
               Mass discrepancy =      .29802E-07g/sq.ft.


Polygon   1
At time =      12.00, total mass in vadose zone =     .60188    g/sq.ft.
Mass in gas phase     =        .77208E-01g/sq.ft.
Mass in liquid phase  =        .33035    g/sq.ft.
Mass sorbed           =        .19432    g/sq.ft.

Since last printout at time =       11.00
               Change in Total Mass =     -.40843E-02g/sq.ft.
                    Advection in from atmosphere =       .00000    g/sq.ft.
                    Advection in from water table =     -.36964E-02g/sq.ft.
                    Diffusion in from atmosphere =      -.38779E-03g/sq.ft.
                    Diffusion in from water table =      .00000    g/sq.ft.
               Total inflow at boundaries =     -.40842E-02g/sq.ft.
```

Mass discrepancy = -.91735E-07g/sq.ft.

Since beginning of run at time = 0.0
Change in Total Mass = -.50447E-01g/sq.ft.
Advection in from atmosphere = .00000 g/sq.ft.
Advection in from water table = -.46003E-01g/sq.ft.
Diffusion in from atmosphere = -.44430E-02g/sq.ft.
Diffusion in from water table = .00000 g/sq.ft.
Total inflow at boundaries = -.50446E-01g/sq.ft.
Mass discrepancy = -.63330E-07g/sq.ft.

Polygon 1
At time = 13.00, total mass in vadose zone = .59782 g/sq.ft.
Mass in gas phase = .76687E-01g/sq.ft.
Mass in liquid phase = .32812 g/sq.ft.
Mass sorbed = .19301 g/sq.ft.

Since last printout at time = 12.00
Change in Total Mass = -.40581E-02g/sq.ft.
Advection in from atmosphere = .00000 g/sq.ft.
Advection in from water table = -.36702E-02g/sq.ft.
Diffusion in from atmosphere = -.38806E-03g/sq.ft.
Diffusion in from water table = .00000 g/sq.ft.
Total inflow at boundaries = -.40582E-02g/sq.ft.
Mass discrepancy = .14855E-06g/sq.ft.

Since beginning of run at time = 0.0
Change in Total Mass = -.54505E-01g/sq.ft.
Advection in from atmosphere = .00000 g/sq.ft.
Advection in from water table = -.49674E-01g/sq.ft.
Diffusion in from atmosphere = -.48310E-02g/sq.ft.
Diffusion in from water table = .00000 g/sq.ft.
Total inflow at boundaries = -.54505E-01g/sq.ft.
Mass discrepancy = .85682E-07g/sq.ft.

Polygon 1
At time = 14.00, total mass in vadose zone = .59379 g/sq.ft.
Mass in gas phase = .76170E-01g/sq.ft.
Mass in liquid phase = .32591 g/sq.ft.
Mass sorbed = .19171 g/sq.ft.

Since last printout at time = 13.00
Change in Total Mass = -.40319E-02g/sq.ft.
Advection in from atmosphere = .00000 g/sq.ft.
Advection in from water table = -.36440E-02g/sq.ft.
Diffusion in from atmosphere = -.38794E-03g/sq.ft.
Diffusion in from water table = .00000 g/sq.ft.
Total inflow at boundaries = -.40319E-02g/sq.ft.
Mass discrepancy = .10245E-07g/sq.ft.

Since beginning of run at time = 0.0
Change in Total Mass = -.58536E-01g/sq.ft.
Advection in from atmosphere = .00000 g/sq.ft.
Advection in from water table = -.53318E-01g/sq.ft.
Diffusion in from atmosphere = -.52190E-02g/sq.ft.
Diffusion in from water table = .00000 g/sq.ft.
Total inflow at boundaries = -.58537E-01g/sq.ft.
Mass discrepancy = .96858E-07g/sq.ft.

```
Polygon   1
At time =      15.00, total mass in vadose zone =     .58978    g/sq.ft.
Mass in gas phase     =       .75656E-01g/sq.ft.
Mass in liquid phase  =       .32371    g/sq.ft.
Mass sorbed           =       .19042    g/sq.ft.

Since last printout at time =      14.00
               Change in Total Mass =     -.40054E-02g/sq.ft.
                    Advection in from atmosphere =       .00000    g/sq.ft.
                    Advection in from water table =     -.36179E-02g/sq.ft.
                    Diffusion in from atmosphere =      -.38749E-03g/sq.ft.
                    Diffusion in from water table =      .00000    g/sq.ft.
               Total inflow at boundaries =     -.40054E-02g/sq.ft.
               Mass discrepancy =      .42841E-07g/sq.ft.

Since beginning of run at time = 0.0
               Change in Total Mass =     -.62542E-01g/sq.ft.
                    Advection in from atmosphere =       .00000    g/sq.ft.
                    Advection in from water table =     -.56936E-01g/sq.ft.
                    Diffusion in from atmosphere =      -.56065E-02g/sq.ft.
                    Diffusion in from water table =      .00000    g/sq.ft.
               Total inflow at boundaries =     -.62542E-01g/sq.ft.
               Mass discrepancy =      .14156E-06g/sq.ft.


Polygon   1
At time =      16.00, total mass in vadose zone =     .58580    g/sq.ft.
Mass in gas phase     =       .75146E-01g/sq.ft.
Mass in liquid phase  =       .32152    g/sq.ft.
Mass sorbed           =       .18913    g/sq.ft.

Since last printout at time =      15.00
               Change in Total Mass =     -.39788E-02g/sq.ft.
                    Advection in from atmosphere =       .00000    g/sq.ft.
                    Advection in from water table =     -.35921E-02g/sq.ft.
                    Diffusion in from atmosphere =      -.38675E-03g/sq.ft.
                    Diffusion in from water table =      .00000    g/sq.ft.
               Total inflow at boundaries =     -.39788E-02g/sq.ft.
               Mass discrepancy =      .57742E-07g/sq.ft.

Since beginning of run at time = 0.0
               Change in Total Mass =     -.66521E-01g/sq.ft.
                    Advection in from atmosphere =       .00000    g/sq.ft.
                    Advection in from water table =     -.60528E-01g/sq.ft.
                    Diffusion in from atmosphere =      -.59932E-02g/sq.ft.
                    Diffusion in from water table =      .00000    g/sq.ft.
               Total inflow at boundaries =     -.66521E-01g/sq.ft.
               Mass discrepancy =      .19372E-06g/sq.ft.


Polygon   1
At time =      17.00, total mass in vadose zone =     .58185    g/sq.ft.
Mass in gas phase     =       .74639E-01g/sq.ft.
Mass in liquid phase  =       .31935    g/sq.ft.
Mass sorbed           =       .18786    g/sq.ft.

Since last printout at time =      16.00
               Change in Total Mass =     -.39524E-02g/sq.ft.
```

```
                    Advection in from atmosphere =       .00000    g/sq.ft.
                    Advection in from water table =    -.35665E-02g/sq.ft.
                    Diffusion in from atmosphere =     -.38576E-03g/sq.ft.
                    Diffusion in from water table =      .00000    g/sq.ft.
               Total inflow at boundaries =    -.39523E-02g/sq.ft.
               Mass discrepancy =    -.93132E-07g/sq.ft.

Since beginning of run at time = 0.0
               Change in Total Mass =    -.70473E-01g/sq.ft.
                    Advection in from atmosphere =       .00000    g/sq.ft.
                    Advection in from water table =    -.64094E-01g/sq.ft.
                    Diffusion in from atmosphere =     -.63790E-02g/sq.ft.
                    Diffusion in from water table =      .00000    g/sq.ft.
               Total inflow at boundaries =    -.70473E-01g/sq.ft.
               Mass discrepancy =     .10431E-06g/sq.ft.


Polygon   1
At time =      18.00, total mass in vadose zone =     .57792    g/sq.ft.
Mass in gas phase     =       .74135E-01g/sq.ft.
Mass in liquid phase  =       .31720    g/sq.ft.
Mass sorbed           =       .18659    g/sq.ft.

Since last printout at time =      17.00
               Change in Total Mass =    -.39257E-02g/sq.ft.
                    Advection in from atmosphere =       .00000    g/sq.ft.
                    Advection in from water table =    -.35413E-02g/sq.ft.
                    Diffusion in from atmosphere =     -.38454E-03g/sq.ft.
                    Diffusion in from water table =      .00000    g/sq.ft.
               Total inflow at boundaries =    -.39258E-02g/sq.ft.
               Mass discrepancy =     .13970E-06g/sq.ft.

Since beginning of run at time = 0.0
               Change in Total Mass =    -.74399E-01g/sq.ft.
                    Advection in from atmosphere =       .00000    g/sq.ft.
                    Advection in from water table =    -.67635E-01g/sq.ft.
                    Diffusion in from atmosphere =     -.67635E-02g/sq.ft.
                    Diffusion in from water table =      .00000    g/sq.ft.
               Total inflow at boundaries =    -.74399E-01g/sq.ft.
               Mass discrepancy =     .23842E-06g/sq.ft.


Polygon   1
At time =      19.00, total mass in vadose zone =     .57402    g/sq.ft.
Mass in gas phase     =       .73635E-01g/sq.ft.
Mass in liquid phase  =       .31506    g/sq.ft.
Mass sorbed           =       .18533    g/sq.ft.

Since last printout at time =      18.00
               Change in Total Mass =    -.38996E-02g/sq.ft.
                    Advection in from atmosphere =       .00000    g/sq.ft.
                    Advection in from water table =    -.35164E-02g/sq.ft.
                    Diffusion in from atmosphere =     -.38313E-03g/sq.ft.
                    Diffusion in from water table =      .00000    g/sq.ft.
               Total inflow at boundaries =    -.38995E-02g/sq.ft.
               Mass discrepancy =    -.14156E-06g/sq.ft.

Since beginning of run at time = 0.0
               Change in Total Mass =    -.78298E-01g/sq.ft.
                    Advection in from atmosphere =       .00000    g/sq.ft.
```

```
                Advection in from water table =     -.71152E-01g/sq.ft.
                Diffusion in from atmosphere =      -.71467E-02g/sq.ft.
                Diffusion in from water table =      .00000    g/sq.ft.
           Total inflow at boundaries =     -.78298E-01g/sq.ft.
           Mass discrepancy =      .10431E-06g/sq.ft.


Polygon   1
At time =      20.00, total mass in vadose zone =     .57015    g/sq.ft.
Mass in gas phase     =       .73138E-01g/sq.ft.
Mass in liquid phase  =       .31293    g/sq.ft.
Mass sorbed           =       .18408    g/sq.ft.

Since last printout at time =      19.00
           Change in Total Mass =     -.38732E-02g/sq.ft.
                Advection in from atmosphere =       .00000    g/sq.ft.
                Advection in from water table =     -.34918E-02g/sq.ft.
                Diffusion in from atmosphere =      -.38156E-03g/sq.ft.
                Diffusion in from water table =      .00000    g/sq.ft.
           Total inflow at boundaries =     -.38733E-02g/sq.ft.
           Mass discrepancy =      .17788E-06g/sq.ft.

Since beginning of run at time = 0.0
           Change in Total Mass =     -.82171E-01g/sq.ft.
                Advection in from atmosphere =       .00000    g/sq.ft.
                Advection in from water table =     -.74644E-01g/sq.ft.
                Diffusion in from atmosphere =      -.75282E-02g/sq.ft.
                Diffusion in from water table =      .00000    g/sq.ft.
           Total inflow at boundaries =     -.82172E-01g/sq.ft.
           Mass discrepancy =      .28312E-06g/sq.ft.


Polygon   1
At time =      21.00, total mass in vadose zone =     .56630    g/sq.ft.
Mass in gas phase     =       .72645E-01g/sq.ft.
Mass in liquid phase  =       .31082    g/sq.ft.
Mass sorbed           =       .18284    g/sq.ft.

Since last printout at time =      20.00
           Change in Total Mass =     -.38474E-02g/sq.ft.
                Advection in from atmosphere =       .00000    g/sq.ft.
                Advection in from water table =     -.34676E-02g/sq.ft.
                Diffusion in from atmosphere =      -.37984E-03g/sq.ft.
                Diffusion in from water table =      .00000    g/sq.ft.
           Total inflow at boundaries =     -.38474E-02g/sq.ft.
           Mass discrepancy =     -.44238E-08g/sq.ft.

Since beginning of run at time = 0.0
           Change in Total Mass =     -.86019E-01g/sq.ft.
                Advection in from atmosphere =       .00000    g/sq.ft.
                Advection in from water table =     -.78111E-01g/sq.ft.
                Diffusion in from atmosphere =      -.79081E-02g/sq.ft.
                Diffusion in from water table =      .00000    g/sq.ft.
           Total inflow at boundaries =     -.86019E-01g/sq.ft.
           Mass discrepancy =      .27567E-06g/sq.ft.


Polygon   1
At time =      22.00, total mass in vadose zone =     .56248    g/sq.ft.
Mass in gas phase     =       .72154E-01g/sq.ft.
```

```
Mass in liquid phase  =       .30872    g/sq.ft.
Mass sorbed           =       .18160    g/sq.ft.

Since last printout at time =      21.00
              Change in Total Mass =     -.38218E-02g/sq.ft.
                   Advection in from atmosphere =       .00000    g/sq.ft.
                   Advection in from water table =     -.34437E-02g/sq.ft.
                   Diffusion in from atmosphere =      -.37799E-03g/sq.ft.
                   Diffusion in from water table =       .00000    g/sq.ft.
              Total inflow at boundaries =     -.38217E-02g/sq.ft.
              Mass discrepancy =     -.71712E-07g/sq.ft.

Since beginning of run at time = 0.0
              Change in Total Mass =     -.89841E-01g/sq.ft.
                   Advection in from atmosphere =       .00000    g/sq.ft.
                   Advection in from water table =     -.81555E-01g/sq.ft.
                   Diffusion in from atmosphere =      -.82861E-02g/sq.ft.
                   Diffusion in from water table =       .00000    g/sq.ft.
              Total inflow at boundaries =     -.89841E-01g/sq.ft.
              Mass discrepancy =      .20117E-06g/sq.ft.


Polygon   1
At time =      23.00, total mass in vadose zone =     .55869    g/sq.ft.
Mass in gas phase     =       .71667E-01g/sq.ft.
Mass in liquid phase  =       .30664    g/sq.ft.
Mass sorbed           =       .18038    g/sq.ft.

Since last printout at time =      22.00
              Change in Total Mass =     -.37962E-02g/sq.ft.
                   Advection in from atmosphere =       .00000    g/sq.ft.
                   Advection in from water table =     -.34202E-02g/sq.ft.
                   Diffusion in from atmosphere =      -.37604E-03g/sq.ft.
                   Diffusion in from water table =       .00000    g/sq.ft.
              Total inflow at boundaries =     -.37963E-02g/sq.ft.
              Mass discrepancy =      .46799E-07g/sq.ft.

Since beginning of run at time = 0.0
              Change in Total Mass =     -.93637E-01g/sq.ft.
                   Advection in from atmosphere =       .00000    g/sq.ft.
                   Advection in from water table =     -.84975E-01g/sq.ft.
                   Diffusion in from atmosphere =      -.86621E-02g/sq.ft.
                   Diffusion in from water table =       .00000    g/sq.ft.
              Total inflow at boundaries =     -.93637E-01g/sq.ft.
              Mass discrepancy =      .25332E-06g/sq.ft.


Polygon   1
At time =      24.00, total mass in vadose zone =     .55491    g/sq.ft.
Mass in gas phase     =       .71184E-01g/sq.ft.
Mass in liquid phase  =       .30457    g/sq.ft.
Mass sorbed           =       .17916    g/sq.ft.

Since last printout at time =      23.00
              Change in Total Mass =     -.37710E-02g/sq.ft.
                   Advection in from atmosphere =       .00000    g/sq.ft.
                   Advection in from water table =     -.33971E-02g/sq.ft.
                   Diffusion in from atmosphere =      -.37399E-03g/sq.ft.
                   Diffusion in from water table =       .00000    g/sq.ft.
              Total inflow at boundaries =     -.37711E-02g/sq.ft.
```

```
              Mass discrepancy =      .59605E-07g/sq.ft.

Since beginning of run at time = 0.0
              Change in Total Mass =     -.97408E-01g/sq.ft.
                   Advection in from atmosphere =       .00000    g/sq.ft.
                   Advection in from water table =     -.88372E-01g/sq.ft.
                   Diffusion in from atmosphere =      -.90361E-02g/sq.ft.
                   Diffusion in from water table =      .00000    g/sq.ft.
              Total inflow at boundaries =     -.97408E-01g/sq.ft.
              Mass discrepancy =      .32037E-06g/sq.ft.


Polygon   1
At time =      25.00, total mass in vadose zone =     .55117    g/sq.ft.
Mass in gas phase     =       .70703E-01g/sq.ft.
Mass in liquid phase  =       .30251    g/sq.ft.
Mass sorbed           =       .17795    g/sq.ft.

Since last printout at time =      24.00
              Change in Total Mass =     -.37462E-02g/sq.ft.
                   Advection in from atmosphere =       .00000    g/sq.ft.
                   Advection in from water table =     -.33743E-02g/sq.ft.
                   Diffusion in from atmosphere =      -.37185E-03g/sq.ft.
                   Diffusion in from water table =      .00000    g/sq.ft.
              Total inflow at boundaries =     -.37461E-02g/sq.ft.
              Mass discrepancy =     -.31898E-07g/sq.ft.

Since beginning of run at time = 0.0
              Change in Total Mass =     -.10115    g/sq.ft.
                   Advection in from atmosphere =       .00000    g/sq.ft.
                   Advection in from water table =     -.91746E-01g/sq.ft.
                   Diffusion in from atmosphere =      -.94079E-02g/sq.ft.
                   Diffusion in from water table =      .00000    g/sq.ft.
              Total inflow at boundaries =     -.10115    g/sq.ft.
              Mass discrepancy =      .29057E-06g/sq.ft.


Polygon   1
At time =      26.00, total mass in vadose zone =     .54745    g/sq.ft.
Mass in gas phase     =       .70226E-01g/sq.ft.
Mass in liquid phase  =       .30047    g/sq.ft.
Mass sorbed           =       .17675    g/sq.ft.

Since last printout at time =      25.00
              Change in Total Mass =     -.37215E-02g/sq.ft.
                   Advection in from atmosphere =       .00000    g/sq.ft.
                   Advection in from water table =     -.33518E-02g/sq.ft.
                   Diffusion in from atmosphere =      -.36965E-03g/sq.ft.
                   Diffusion in from water table =      .00000    g/sq.ft.
              Total inflow at boundaries =     -.37214E-02g/sq.ft.
              Mass discrepancy =     -.51223E-07g/sq.ft.

Since beginning of run at time = 0.0
              Change in Total Mass =     -.10488    g/sq.ft.
                   Advection in from atmosphere =       .00000    g/sq.ft.
                   Advection in from water table =     -.95098E-01g/sq.ft.
                   Diffusion in from atmosphere =      -.97776E-02g/sq.ft.
                   Diffusion in from water table =      .00000    g/sq.ft.
              Total inflow at boundaries =     -.10488    g/sq.ft.
              Mass discrepancy =      .23842E-06g/sq.ft.
```

```
Polygon   1
At time =      27.00, total mass in vadose zone =     .54375    g/sq.ft.
Mass in gas phase     =       .69751E-01g/sq.ft.
Mass in liquid phase  =       .29844    g/sq.ft.
Mass sorbed           =       .17556    g/sq.ft.

Since last printout at time =      26.00
               Change in Total Mass =     -.36970E-02g/sq.ft.
                    Advection in from atmosphere =       .00000    g/sq.ft.
                    Advection in from water table =     -.33296E-02g/sq.ft.
                    Diffusion in from atmosphere =      -.36739E-03g/sq.ft.
                    Diffusion in from water table =      .00000    g/sq.ft.
               Total inflow at boundaries =     -.36970E-02g/sq.ft.
               Mass discrepancy =     -.34925E-08g/sq.ft.

Since beginning of run at time = 0.0
               Change in Total Mass =     -.10857    g/sq.ft.
                    Advection in from atmosphere =       .00000    g/sq.ft.
                    Advection in from water table =     -.98428E-01g/sq.ft.
                    Diffusion in from atmosphere =      -.10145E-01g/sq.ft.
                    Diffusion in from water table =      .00000    g/sq.ft.
               Total inflow at boundaries =     -.10857    g/sq.ft.
               Mass discrepancy =      .23842E-06g/sq.ft.


Polygon   1
At time =      28.00, total mass in vadose zone =     .54008    g/sq.ft.
Mass in gas phase     =       .69280E-01g/sq.ft.
Mass in liquid phase  =       .29643    g/sq.ft.
Mass sorbed           =       .17437    g/sq.ft.

Since last printout at time =      27.00
               Change in Total Mass =     -.36727E-02g/sq.ft.
                    Advection in from atmosphere =       .00000    g/sq.ft.
                    Advection in from water table =     -.33077E-02g/sq.ft.
                    Diffusion in from atmosphere =      -.36507E-03g/sq.ft.
                    Diffusion in from water table =      .00000    g/sq.ft.
               Total inflow at boundaries =     -.36728E-02g/sq.ft.
               Mass discrepancy =      .45635E-07g/sq.ft.

Since beginning of run at time = 0.0
               Change in Total Mass =     -.11225    g/sq.ft.
                    Advection in from atmosphere =       .00000    g/sq.ft.
                    Advection in from water table =     -.10174    g/sq.ft.
                    Diffusion in from atmosphere =      -.10510E-01g/sq.ft.
                    Diffusion in from water table =      .00000    g/sq.ft.
               Total inflow at boundaries =     -.11225    g/sq.ft.
               Mass discrepancy =      .29057E-06g/sq.ft.


Polygon   1
At time =      29.00, total mass in vadose zone =     .53643    g/sq.ft.
Mass in gas phase     =       .68812E-01g/sq.ft.
Mass in liquid phase  =       .29442    g/sq.ft.
Mass sorbed           =       .17319    g/sq.ft.

Since last printout at time =      28.00
               Change in Total Mass =     -.36487E-02g/sq.ft.
```

```
                Advection in from atmosphere =       .00000    g/sq.ft.
                Advection in from water table =     -.32861E-02g/sq.ft.
                Diffusion in from atmosphere =      -.36272E-03g/sq.ft.
                Diffusion in from water table =      .00000    g/sq.ft.
           Total inflow at boundaries =     -.36488E-02g/sq.ft.
           Mass discrepancy =      .88476E-07g/sq.ft.

Since beginning of run at time = 0.0
           Change in Total Mass =     -.11589    g/sq.ft.
                Advection in from atmosphere =       .00000    g/sq.ft.
                Advection in from water table =     -.10502    g/sq.ft.
                Diffusion in from atmosphere =      -.10873E-01g/sq.ft.
                Diffusion in from water table =      .00000    g/sq.ft.
           Total inflow at boundaries =     -.11589    g/sq.ft.
           Mass discrepancy =      .37253E-06g/sq.ft.


Polygon   1
At time =      30.00, total mass in vadose zone =     .53280    g/sq.ft.
Mass in gas phase     =       .68347E-01g/sq.ft.
Mass in liquid phase  =       .29243    g/sq.ft.
Mass sorbed           =       .17202    g/sq.ft.

Since last printout at time =      29.00
           Change in Total Mass =     -.36252E-02g/sq.ft.
                Advection in from atmosphere =       .00000    g/sq.ft.
                Advection in from water table =     -.32647E-02g/sq.ft.
                Diffusion in from atmosphere =      -.36032E-03g/sq.ft.
                Diffusion in from water table =      .00000    g/sq.ft.
           Total inflow at boundaries =     -.36250E-02g/sq.ft.
           Mass discrepancy =     -.12061E-06g/sq.ft.

Since beginning of run at time = 0.0
           Change in Total Mass =     -.11952    g/sq.ft.
                Advection in from atmosphere =       .00000    g/sq.ft.
                Advection in from water table =     -.10829    g/sq.ft.
                Diffusion in from atmosphere =      -.11233E-01g/sq.ft.
                Diffusion in from water table =      .00000    g/sq.ft.
           Total inflow at boundaries =     -.11952    g/sq.ft.
           Mass discrepancy =      .25332E-06g/sq.ft.


GROUNDWATER IMPACT OF POLYGON   1

 Time        Mass per area (g/sq.ft.)      Total Mass (g)
     1.00          .39595E-02                643.42
     2.00          .39394E-02                640.15
     3.00          .39182E-02                636.71
     4.00          .38961E-02                633.12
     5.00          .38732E-02                629.40
     6.00          .38495E-02                625.54
     7.00          .38251E-02                621.58
     8.00          .38001E-02                617.51
     9.00          .37746E-02                613.37
    10.00          .37487E-02                609.17
    11.00          .37226E-02                604.93
    12.00          .36964E-02                600.67
    13.00          .36702E-02                596.40
    14.00          .36440E-02                592.14
    15.00          .36179E-02                587.91
```

16.00	.35921E-02	583.72
17.00	.35665E-02	579.56
18.00	.35413E-02	575.46
19.00	.35164E-02	571.41
20.00	.34918E-02	567.42
21.00	.34676E-02	563.48
22.00	.34437E-02	559.61
23.00	.34202E-02	555.79
24.00	.33971E-02	552.03
25.00	.33743E-02	548.32
26.00	.33518E-02	544.66
27.00	.33296E-02	541.06
28.00	.33077E-02	537.50
29.00	.32861E-02	533.99
30.00	.32647E-02	530.52

****

****

TOTAL GROUNDWATER IMPACT

Time (yr)	Mass (g)	Cumulative Mass (g)
1.00	643.42	643.42
2.00	640.15	1283.6
3.00	636.71	1920.3
4.00	633.12	2553.4
5.00	629.40	3182.8
6.00	625.54	3808.3
7.00	621.58	4429.9
8.00	617.51	5047.4
9.00	613.37	5660.8
10.00	609.17	6270.0
11.00	604.93	6874.9
12.00	600.67	7475.6
13.00	596.40	8072.0
14.00	592.14	8664.1
15.00	587.91	9252.0
16.00	583.72	9835.7
17.00	579.56	10415.
18.00	575.46	10991.
19.00	571.41	11562.
20.00	567.42	12130.
21.00	563.48	12693.
22.00	559.61	13253.
23.00	555.79	13808.
24.00	552.03	14360.
25.00	548.32	14909.
26.00	544.66	15453.
27.00	541.06	15995.
28.00	537.50	16532.
29.00	533.99	17066.
30.00	530.52	17597.

Polygon 24A
Time: .000

Cell	Cgas(g/cu.ft.)	Cliq(g/cu.ft.)	Csol
1	.56734E-05	.11994E-04	.38742E-10
2	.56734E-05	.11994E-04	.38742E-10
3	.56734E-05	.11994E-04	.38742E-10
4	.56734E-05	.11994E-04	.38742E-10
5	.56734E-05	.11994E-04	.38742E-10
6	.56734E-05	.11994E-04	.38742E-10
7	.17621E-02	.37253E-02	.12033E-07
8	.17621E-02	.37253E-02	.12033E-07
9	.17621E-02	.37253E-02	.12033E-07
10	.17621E-02	.37253E-02	.12033E-07
11	.17621E-02	.37253E-02	.12033E-07
12	.17621E-02	.37253E-02	.12033E-07
13	.43959E-02	.92937E-02	.30019E-07
14	.43959E-02	.92937E-02	.30019E-07
15	.43959E-02	.92937E-02	.30019E-07
16	.43959E-02	.92937E-02	.30019E-07
17	.43959E-02	.92937E-02	.30019E-07
18	.43959E-02	.92937E-02	.30019E-07
19	.70298E-02	.14862E-01	.48005E-07
20	.70298E-02	.14862E-01	.48005E-07
21	.70298E-02	.14862E-01	.48005E-07
22	.70298E-02	.14862E-01	.48005E-07
23	.70298E-02	.14862E-01	.48005E-07
24	.70298E-02	.14862E-01	.48005E-07
25	.96636E-02	.20431E-01	.65991E-07
26	.96636E-02	.20431E-01	.65991E-07
27	.96636E-02	.20431E-01	.65991E-07
28	.96636E-02	.20431E-01	.65991E-07
29	.96636E-02	.20431E-01	.65991E-07
30	.96636E-02	.20431E-01	.65991E-07
31	.12298E-01	.26000E-01	.83980E-07
32	.12298E-01	.26000E-01	.83980E-07
33	.12298E-01	.26000E-01	.83980E-07
34	.12298E-01	.26000E-01	.83980E-07
35	.12298E-01	.26000E-01	.83980E-07
36	.12298E-01	.26000E-01	.83980E-07
37	.14932E-01	.31568E-01	.10197E-06
38	.14932E-01	.31568E-01	.10197E-06
39	.14932E-01	.31568E-01	.10197E-06
40	.14932E-01	.31568E-01	.10197E-06
41	.14932E-01	.31568E-01	.10197E-06
42	.14932E-01	.31568E-01	.10197E-06
43	.17566E-01	.37137E-01	.11995E-06
44	.17566E-01	.37137E-01	.11995E-06
45	.17566E-01	.37137E-01	.11995E-06
46	.17566E-01	.37137E-01	.11995E-06
47	.17566E-01	.37137E-01	.11995E-06
48	.17566E-01	.37137E-01	.11995E-06
49	.20200E-01	.42706E-01	.13794E-06
50	.20200E-01	.42706E-01	.13794E-06
51	.20200E-01	.42706E-01	.13794E-06
52	.20200E-01	.42706E-01	.13794E-06
53	.20200E-01	.42706E-01	.13794E-06
54	.20200E-01	.42706E-01	.13794E-06
55	.22834E-01	.48275E-01	.15593E-06
56	.22834E-01	.48275E-01	.15593E-06

57	.22834E-01	.48275E-01	.15593E-06
58	.22834E-01	.48275E-01	.15593E-06
59	.22834E-01	.48275E-01	.15593E-06
60	.22834E-01	.48275E-01	.15593E-06

Polygon 24A
Time: 10.000

Cell	Cgas(g/cu.ft.)	Cliq(g/cu.ft.)	Csol
1	.69590E-04	.14712E-03	.47521E-09
2	.16837E-03	.35595E-03	.11497E-08
3	.28432E-03	.60110E-03	.19415E-08
4	.41330E-03	.87378E-03	.28223E-08
5	.55568E-03	.11748E-02	.37946E-08
6	.71410E-03	.15097E-02	.48764E-08
7	.95778E-03	.20249E-02	.65405E-08
8	.12733E-02	.26920E-02	.86952E-08
9	.15970E-02	.33763E-02	.10905E-07
10	.18931E-02	.40024E-02	.12928E-07
11	.21635E-02	.45739E-02	.14774E-07
12	.24249E-02	.51266E-02	.16559E-07
13	.27921E-02	.59029E-02	.19067E-07
14	.32511E-02	.68733E-02	.22201E-07
15	.37085E-02	.78405E-02	.25325E-07
16	.41114E-02	.86921E-02	.28075E-07
17	.44615E-02	.94322E-02	.30466E-07
18	.47828E-02	.10112E-01	.32660E-07
19	.51967E-02	.10987E-01	.35487E-07
20	.56934E-02	.12037E-01	.38879E-07
21	.61819E-02	.13070E-01	.42215E-07
22	.66106E-02	.13976E-01	.45142E-07
23	.69824E-02	.14762E-01	.47681E-07
24	.73218E-02	.15479E-01	.49999E-07
25	.77508E-02	.16386E-01	.52928E-07
26	.82600E-02	.17463E-01	.56406E-07
27	.87589E-02	.18518E-01	.59813E-07
28	.91962E-02	.19442E-01	.62798E-07
29	.95749E-02	.20243E-01	.65384E-07
30	.99198E-02	.20972E-01	.67740E-07
31	.10353E-01	.21888E-01	.70700E-07
32	.10866E-01	.22972E-01	.74200E-07
33	.11367E-01	.24032E-01	.77623E-07
34	.11806E-01	.24959E-01	.80619E-07
35	.12185E-01	.25761E-01	.83209E-07
36	.12530E-01	.26490E-01	.85563E-07
37	.12962E-01	.27404E-01	.88515E-07
38	.13473E-01	.28483E-01	.92002E-07
39	.13971E-01	.29537E-01	.95405E-07
40	.14406E-01	.30456E-01	.98374E-07
41	.14780E-01	.31248E-01	.10093E-06
42	.15118E-01	.31963E-01	.10324E-06
43	.15543E-01	.32860E-01	.10614E-06
44	.16044E-01	.33919E-01	.10956E-06
45	.16530E-01	.34948E-01	.11288E-06
46	.16951E-01	.35837E-01	.11575E-06
47	.17308E-01	.36592E-01	.11819E-06
48	.17626E-01	.37264E-01	.12036E-06
49	.18025E-01	.38109E-01	.12309E-06
50	.18497E-01	.39106E-01	.12631E-06
51	.18948E-01	.40060E-01	.12939E-06
52	.19327E-01	.40860E-01	.13198E-06

53	.19634E-01	.41510E-01	.13408E-06
54	.19892E-01	.42056E-01	.13584E-06
55	.20222E-01	.42752E-01	.13809E-06
56	.20609E-01	.43571E-01	.14074E-06
57	.20961E-01	.44316E-01	.14314E-06
58	.21222E-01	.44868E-01	.14492E-06
59	.21391E-01	.45223E-01	.14607E-06
60	.21485E-01	.45423E-01	.14672E-06

Polygon 24A
Time: 20.000

Cell	Cgas(g/cu.ft.)	Cliq(g/cu.ft.)	Csol
1	.72992E-04	.15432E-03	.49844E-09
2	.18189E-03	.38456E-03	.12421E-08
3	.31501E-03	.66599E-03	.21512E-08
4	.46600E-03	.98521E-03	.31822E-08
5	.63193E-03	.13360E-02	.43153E-08
6	.81204E-03	.17168E-02	.55452E-08
7	.10094E-02	.21341E-02	.68931E-08
8	.12291E-02	.25985E-02	.83932E-08
9	.14727E-02	.31135E-02	.10056E-07
10	.17364E-02	.36711E-02	.11858E-07
11	.20144E-02	.42588E-02	.13756E-07
12	.23023E-02	.48674E-02	.15722E-07
13	.26027E-02	.55026E-02	.17773E-07
14	.29228E-02	.61792E-02	.19959E-07
15	.32653E-02	.69033E-02	.22298E-07
16	.36250E-02	.76638E-02	.24754E-07
17	.39931E-02	.84421E-02	.27268E-07
18	.43630E-02	.92240E-02	.29794E-07
19	.47361E-02	.10013E-01	.32342E-07
20	.51200E-02	.10824E-01	.34963E-07
21	.55181E-02	.11666E-01	.37682E-07
22	.59264E-02	.12529E-01	.40470E-07
23	.63369E-02	.13397E-01	.43273E-07
24	.67436E-02	.14257E-01	.46051E-07
25	.71489E-02	.15114E-01	.48818E-07
26	.75606E-02	.15984E-01	.51629E-07
27	.79827E-02	.16877E-01	.54512E-07
28	.84115E-02	.17783E-01	.57440E-07
29	.88394E-02	.18688E-01	.60362E-07
30	.92607E-02	.19579E-01	.63239E-07
31	.96780E-02	.20461E-01	.66089E-07
32	.10099E-01	.21352E-01	.68966E-07
33	.10529E-01	.22260E-01	.71899E-07
34	.10963E-01	.23178E-01	.74864E-07
35	.11394E-01	.24089E-01	.77809E-07
36	.11817E-01	.24983E-01	.80696E-07
37	.12234E-01	.25864E-01	.83542E-07
38	.12653E-01	.26750E-01	.86402E-07
39	.13078E-01	.27649E-01	.89305E-07
40	.13505E-01	.28553E-01	.92226E-07
41	.13928E-01	.29446E-01	.95111E-07
42	.14339E-01	.30316E-01	.97921E-07
43	.14742E-01	.31168E-01	.10067E-06
44	.15144E-01	.32017E-01	.10342E-06
45	.15549E-01	.32873E-01	.10618E-06
46	.15952E-01	.33726E-01	.10894E-06
47	.16346E-01	.34559E-01	.11163E-06
48	.16725E-01	.35359E-01	.11421E-06

49	.17089E-01	.36128E-01	.11669E-06
50	.17445E-01	.36882E-01	.11913E-06
51	.17798E-01	.37627E-01	.12154E-06
52	.18141E-01	.38353E-01	.12388E-06
53	.18465E-01	.39039E-01	.12609E-06
54	.18763E-01	.39669E-01	.12813E-06
55	.19036E-01	.40244E-01	.12999E-06
56	.19287E-01	.40777E-01	.13171E-06
57	.19520E-01	.41268E-01	.13330E-06
58	.19726E-01	.41705E-01	.13471E-06
59	.19896E-01	.42062E-01	.13586E-06
60	.20018E-01	.42321E-01	.13670E-06

Polygon 24A
Time: 30.000

Cell	Cgas(g/cu.ft.)	Cliq(g/cu.ft.)	Csol
1	.69667E-04	.14729E-03	.47574E-09
2	.17445E-03	.36881E-03	.11913E-08
3	.30357E-03	.64180E-03	.20730E-08
4	.45098E-03	.95345E-03	.30796E-08
5	.61340E-03	.12968E-02	.41887E-08
6	.78921E-03	.16685E-02	.53893E-08
7	.97792E-03	.20675E-02	.66780E-08
8	.11799E-02	.24944E-02	.80570E-08
9	.13958E-02	.29510E-02	.95318E-08
10	.16265E-02	.34386E-02	.11107E-07
11	.18717E-02	.39572E-02	.12782E-07
12	.21311E-02	.45054E-02	.14553E-07
13	.24037E-02	.50819E-02	.16414E-07
14	.26894E-02	.56858E-02	.18365E-07
15	.29883E-02	.63177E-02	.20406E-07
16	.33005E-02	.69778E-02	.22538E-07
17	.36254E-02	.76648E-02	.24757E-07
18	.39617E-02	.83757E-02	.27054E-07
19	.43076E-02	.91071E-02	.29416E-07
20	.46622E-02	.98567E-02	.31837E-07
21	.50252E-02	.10624E-01	.34316E-07
22	.53964E-02	.11409E-01	.36851E-07
23	.57752E-02	.12210E-01	.39438E-07
24	.61604E-02	.13024E-01	.42068E-07
25	.65505E-02	.13849E-01	.44732E-07
26	.69447E-02	.14682E-01	.47424E-07
27	.73430E-02	.15524E-01	.50143E-07
28	.77454E-02	.16375E-01	.52891E-07
29	.81516E-02	.17234E-01	.55665E-07
30	.85605E-02	.18098E-01	.58458E-07
31	.89709E-02	.18966E-01	.61260E-07
32	.93821E-02	.19835E-01	.64068E-07
33	.97942E-02	.20707E-01	.66882E-07
34	.10207E-01	.21580E-01	.69704E-07
35	.10622E-01	.22456E-01	.72532E-07
36	.11035E-01	.23331E-01	.75358E-07
37	.11448E-01	.24203E-01	.78175E-07
38	.11858E-01	.25070E-01	.80977E-07
39	.12267E-01	.25934E-01	.83766E-07
40	.12673E-01	.26793E-01	.86541E-07
41	.13077E-01	.27647E-01	.89301E-07
42	.13478E-01	.28494E-01	.92036E-07
43	.13873E-01	.29330E-01	.94736E-07
44	.14263E-01	.30154E-01	.97397E-07

45	.14646E-01	.30964E-01	.10001E-06
46	.15023E-01	.31761E-01	.10259E-06
47	.15392E-01	.32542E-01	.10511E-06
48	.15753E-01	.33304E-01	.10757E-06
49	.16102E-01	.34042E-01	.10996E-06
50	.16439E-01	.34754E-01	.11226E-06
51	.16762E-01	.35437E-01	.11446E-06
52	.17070E-01	.36088E-01	.11657E-06
53	.17362E-01	.36706E-01	.11856E-06
54	.17635E-01	.37282E-01	.12042E-06
55	.17885E-01	.37813E-01	.12213E-06
56	.18112E-01	.38291E-01	.12368E-06
57	.18311E-01	.38712E-01	.12504E-06
58	.18481E-01	.39073E-01	.12621E-06
59	.18620E-01	.39366E-01	.12715E-06
60	.18723E-01	.39583E-01	.12785E-06

V-Leach, VER 1.1
Jake Turin, 11/91
PGA V-leach model, polygon screen-TCE-11/10/92-Poly24A.INP. New soil, Old chem.
1 polygons.
Timestep = 1.00 years. Simulation length = 30.00 years.
Printout every 1.00 years. Vertical profile stored every 10.00 years.
Koc = 123.60 ml/g, .43649E-02cu.ft./g
Kh = .47300 (dimensionless).
Aqueous solubility = 1100.0 mg/l, 31.149 g/cu.ft
Free air diffusion coefficient = .70290 sq. m/day, 2761.7 sq.ft./yr

Polygon 1
Polygon 24A
Polygon area = .16250E+06sq. ft.
60 cells, each cell 1.000 ft. thick.
Soil Properties:
Bulk density = 1.6400 g/ml, 46440. g/cu.ft.
Porosity = .3810 Volumetric water content = .2550
Organic carbon content = .00074000
Recharge Rate = .08202100 ft/yr
Conc. in recharge water = .00000 mg/l, .00000 g/cu.ft
Atmospheric concentration = .00000 mg/l, .00000 g/cu.ft
Water table is impermeable to gas diffusion.

Calculation of Total TCE Mass and Revised Vertical Distributions in Polygon 24A using HGC Distribution equations and Revised Soil Physical Data

0.208 Cs **	Cz = (74.527z - 371.636)Cs

Cz (ug/L) Vert. Dist. Eq.	Calculated Depth Interval (z)	Total Depth Interval (feet)	Total Soil Conc Ct (ug/Kg)	Mt (ug/cc)	Volume of Soil (cubic ft)	Mass TCE (grams)	Mass TCE (pounds)
0.208	3	6	0.12	2.04E-04	975000	5.64	0.01
62.21	9	6	37.27	0.06	975000	1687.38	3.72
155.22	15	6	92.98	0.15	975000	4209.99	9.28
248.23	21	6	148.69	0.24	975000	6732.61	14.84
341.24	27	6	204.40	0.34	975000	9255.22	20.40
434.25	33	6	260.12	0.43	975000	11777.83	25.97
527.26	39	6	315.83	0.52	975000	14300.45	31.53
620.27	45	6	371.54	0.61	975000	16823.06	37.09
713.28	51	6	427.26	0.70	975000	19345.67	42.65
806.29	57	6	482.97	0.79	975000	21868.29	48.21
		60				106006.14	233.70

* Ct conversion based on Kgt of 0.599 L/Kg

** Cs Determined as mathematical average of VOC concentrations for polygon(s) listed in Table A-1 of HGC, 1989.

PGA V-leach model, polygon screen-TCE-11/10/92-Poly14A.INP. New soil, Old chem.

```
    1
       1.0          30.          1.0          10.
     123.6         .473        1100.        .7029
lygon 14A
    127500.           1.     .082021         1.64         .381         .255      .00074
        0.           0.          -1.
   60
    1     6        0.16
    7    12       47.66
   13    18      118.91
   19    24      190.15
   25    30      261.40
   31    36      332.65
   37    42      403.90
   43    48      475.15
   49    54      546.39
   55    60      617.64
```

V-Leach, VER 1.1
Jake Turin, 11/91
PGA V-leach model, polygon screen-TCE-11/10/92-Poly14A.INP. New soil, Old chem.

Polygon 1
At time = .00, total mass in vadose zone = .83422 g/sq.ft.
Mass in gas phase = .10701 g/sq.ft.
Mass in liquid phase = .45787 g/sq.ft.
Mass sorbed = .26934 g/sq.ft.

Polygon 1
At time = 1.00, total mass in vadose zone = .82873 g/sq.ft.
Mass in gas phase = .10631 g/sq.ft.
Mass in liquid phase = .45486 g/sq.ft.
Mass sorbed = .26756 g/sq.ft.

Since last printout at time = .00
Change in Total Mass = -.54905E-02g/sq.ft.
Advection in from atmosphere = .00000 g/sq.ft.
Advection in from water table = -.50636E-02g/sq.ft.
Diffusion in from atmosphere = -.42664E-03g/sq.ft.
Diffusion in from water table = .00000 g/sq.ft.
Total inflow at boundaries = -.54902E-02g/sq.ft.
Mass discrepancy = -.25239E-06g/sq.ft.

Since beginning of run at time = 0.0
Change in Total Mass = -.54905E-02g/sq.ft.
Advection in from atmosphere = .00000 g/sq.ft.
Advection in from water table = -.50636E-02g/sq.ft.
Diffusion in from atmosphere = -.42664E-03g/sq.ft.
Diffusion in from water table = .00000 g/sq.ft.
Total inflow at boundaries = -.54902E-02g/sq.ft.
Mass discrepancy = -.25239E-06g/sq.ft.

Polygon 1
At time = 2.00, total mass in vadose zone = .82325 g/sq.ft.
Mass in gas phase = .10561 g/sq.ft.
Mass in liquid phase = .45185 g/sq.ft.
Mass sorbed = .26580 g/sq.ft.

Since last printout at time = 1.00
Change in Total Mass = -.54791E-02g/sq.ft.
Advection in from atmosphere = .00000 g/sq.ft.
Advection in from water table = -.50378E-02g/sq.ft.
Diffusion in from atmosphere = -.44128E-03g/sq.ft.
Diffusion in from water table = .00000 g/sq.ft.
Total inflow at boundaries = -.54791E-02g/sq.ft.
Mass discrepancy = -.41910E-08g/sq.ft.

Since beginning of run at time = 0.0
Change in Total Mass = -.10970E-01g/sq.ft.
Advection in from atmosphere = .00000 g/sq.ft.
Advection in from water table = -.10101E-01g/sq.ft.
Diffusion in from atmosphere = -.86792E-03g/sq.ft.
Diffusion in from water table = .00000 g/sq.ft.
Total inflow at boundaries = -.10969E-01g/sq.ft.
Mass discrepancy = -.25705E-06g/sq.ft.

Polygon 1
At time = 3.00, total mass in vadose zone = .81779 g/sq.ft.
Mass in gas phase = .10490 g/sq.ft.
Mass in liquid phase = .44885 g/sq.ft.
Mass sorbed = .26403 g/sq.ft.

Since last printout at time = 2.00
Change in Total Mass = -.54642E-02g/sq.ft.
Advection in from atmosphere = .00000 g/sq.ft.
Advection in from water table = -.50108E-02g/sq.ft.
Diffusion in from atmosphere = -.45346E-03g/sq.ft.
Diffusion in from water table = .00000 g/sq.ft.
Total inflow at boundaries = -.54642E-02g/sq.ft.
Mass discrepancy = .28871E-07g/sq.ft.

Since beginning of run at time = 0.0
Change in Total Mass = -.16434E-01g/sq.ft.
Advection in from atmosphere = .00000 g/sq.ft.
Advection in from water table = -.15112E-01g/sq.ft.
Diffusion in from atmosphere = -.13214E-02g/sq.ft.
Diffusion in from water table = .00000 g/sq.ft.
Total inflow at boundaries = -.16434E-01g/sq.ft.
Mass discrepancy = -.22724E-06g/sq.ft.

Polygon 1
At time = 4.00, total mass in vadose zone = .81234 g/sq.ft.
Mass in gas phase = .10421 g/sq.ft.
Mass in liquid phase = .44586 g/sq.ft.
Mass sorbed = .26227 g/sq.ft.

Since last printout at time = 3.00
Change in Total Mass = -.54461E-02g/sq.ft.
Advection in from atmosphere = .00000 g/sq.ft.
Advection in from water table = -.49825E-02g/sq.ft.
Diffusion in from atmosphere = -.46352E-03g/sq.ft.
Diffusion in from water table = .00000 g/sq.ft.
Total inflow at boundaries = -.54461E-02g/sq.ft.
Mass discrepancy = -.18626E-07g/sq.ft.

Since beginning of run at time = 0.0
Change in Total Mass = -.21880E-01g/sq.ft.
Advection in from atmosphere = .00000 g/sq.ft.
Advection in from water table = -.20095E-01g/sq.ft.
Diffusion in from atmosphere = -.17849E-02g/sq.ft.
Diffusion in from water table = .00000 g/sq.ft.
Total inflow at boundaries = -.21880E-01g/sq.ft.
Mass discrepancy = -.24773E-06g/sq.ft.

Polygon 1
At time = 5.00, total mass in vadose zone = .80692 g/sq.ft.
Mass in gas phase = .10351 g/sq.ft.
Mass in liquid phase = .44288 g/sq.ft.
Mass sorbed = .26052 g/sq.ft.

Since last printout at time = 4.00
Change in Total Mass = -.54247E-02g/sq.ft.

```
                    Advection in from atmosphere =       .00000    g/sq.ft.
                    Advection in from water table =     -.49532E-02g/sq.ft.
                    Diffusion in from atmosphere =      -.47177E-03g/sq.ft.
                    Diffusion in from water table =      .00000    g/sq.ft.
               Total inflow at boundaries =     -.54250E-02g/sq.ft.
               Mass discrepancy =      .23656E-06g/sq.ft.

Since beginning of run at time = 0.0
               Change in Total Mass =     -.27305E-01g/sq.ft.
                    Advection in from atmosphere =       .00000    g/sq.ft.
                    Advection in from water table =     -.25048E-01g/sq.ft.
                    Diffusion in from atmosphere =      -.22567E-02g/sq.ft.
                    Diffusion in from water table =      .00000    g/sq.ft.
               Total inflow at boundaries =     -.27305E-01g/sq.ft.
               Mass discrepancy =     -.11176E-07g/sq.ft.


Polygon   1
At time =       6.00, total mass in vadose zone =     .80151    g/sq.ft.
Mass in gas phase     =       .10282    g/sq.ft.
Mass in liquid phase  =       .43992    g/sq.ft.
Mass sorbed           =       .25878    g/sq.ft.

Since last printout at time =       5.00
               Change in Total Mass =     -.54016E-02g/sq.ft.
                    Advection in from atmosphere =       .00000    g/sq.ft.
                    Advection in from water table =     -.49229E-02g/sq.ft.
                    Diffusion in from atmosphere =      -.47846E-03g/sq.ft.
                    Diffusion in from water table =      .00000    g/sq.ft.
               Total inflow at boundaries =     -.54013E-02g/sq.ft.
               Mass discrepancy =     -.22259E-06g/sq.ft.

Since beginning of run at time = 0.0
               Change in Total Mass =     -.32706E-01g/sq.ft.
                    Advection in from atmosphere =       .00000    g/sq.ft.
                    Advection in from water table =     -.29971E-01g/sq.ft.
                    Diffusion in from atmosphere =      -.27351E-02g/sq.ft.
                    Diffusion in from water table =      .00000    g/sq.ft.
               Total inflow at boundaries =     -.32706E-01g/sq.ft.
               Mass discrepancy =     -.23469E-06g/sq.ft.


Polygon   1
At time =       7.00, total mass in vadose zone =     .79614    g/sq.ft.
Mass in gas phase     =       .10213    g/sq.ft.
Mass in liquid phase  =       .43697    g/sq.ft.
Mass sorbed           =       .25704    g/sq.ft.

Since last printout at time =       6.00
               Change in Total Mass =     -.53753E-02g/sq.ft.
                    Advection in from atmosphere =       .00000    g/sq.ft.
                    Advection in from water table =     -.48916E-02g/sq.ft.
                    Diffusion in from atmosphere =      -.48380E-03g/sq.ft.
                    Diffusion in from water table =      .00000    g/sq.ft.
               Total inflow at boundaries =     -.53755E-02g/sq.ft.
               Mass discrepancy =      .18533E-06g/sq.ft.

Since beginning of run at time = 0.0
               Change in Total Mass =     -.38081E-01g/sq.ft.
                    Advection in from atmosphere =       .00000    g/sq.ft.
```

```
                Advection in from water table =     -.34862E-01g/sq.ft.
                Diffusion in from atmosphere =      -.32189E-02g/sq.ft.
                Diffusion in from water table =       .00000    g/sq.ft.
           Total inflow at boundaries =     -.38081E-01g/sq.ft.
           Mass discrepancy =     -.48429E-07g/sq.ft.


Polygon   1
At time =       8.00, total mass in vadose zone =     .79079    g/sq.ft.
Mass in gas phase     =       .10144    g/sq.ft.
Mass in liquid phase  =       .43403    g/sq.ft.
Mass sorbed           =       .25532    g/sq.ft.

Since last printout at time =       7.00
           Change in Total Mass =     -.53477E-02g/sq.ft.
                Advection in from atmosphere =       .00000    g/sq.ft.
                Advection in from water table =     -.48597E-02g/sq.ft.
                Diffusion in from atmosphere =      -.48799E-03g/sq.ft.
                Diffusion in from water table =       .00000    g/sq.ft.
           Total inflow at boundaries =     -.53477E-02g/sq.ft.
           Mass discrepancy =     -.72177E-07g/sq.ft.

Since beginning of run at time = 0.0
           Change in Total Mass =     -.43429E-01g/sq.ft.
                Advection in from atmosphere =       .00000    g/sq.ft.
                Advection in from water table =     -.39722E-01g/sq.ft.
                Diffusion in from atmosphere =      -.37069E-02g/sq.ft.
                Diffusion in from water table =       .00000    g/sq.ft.
           Total inflow at boundaries =     -.43429E-01g/sq.ft.
           Mass discrepancy =     -.11921E-06g/sq.ft.


Polygon   1
At time =       9.00, total mass in vadose zone =     .78547    g/sq.ft.
Mass in gas phase     =       .10076    g/sq.ft.
Mass in liquid phase  =       .43112    g/sq.ft.
Mass sorbed           =       .25360    g/sq.ft.

Since last printout at time =       8.00
           Change in Total Mass =     -.53182E-02g/sq.ft.
                Advection in from atmosphere =       .00000    g/sq.ft.
                Advection in from water table =     -.48271E-02g/sq.ft.
                Diffusion in from atmosphere =      -.49117E-03g/sq.ft.
                Diffusion in from water table =       .00000    g/sq.ft.
           Total inflow at boundaries =     -.53182E-02g/sq.ft.
           Mass discrepancy =      .19092E-07g/sq.ft.

Since beginning of run at time = 0.0
           Change in Total Mass =     -.48747E-01g/sq.ft.
                Advection in from atmosphere =       .00000    g/sq.ft.
                Advection in from water table =     -.44549E-01g/sq.ft.
                Diffusion in from atmosphere =      -.41981E-02g/sq.ft.
                Diffusion in from water table =       .00000    g/sq.ft.
           Total inflow at boundaries =     -.48747E-01g/sq.ft.
           Mass discrepancy =     -.10058E-06g/sq.ft.


Polygon   1
At time =      10.00, total mass in vadose zone =     .78019    g/sq.ft.
Mass in gas phase     =       .10008    g/sq.ft.
```

```
Mass in liquid phase  =       .42821    g/sq.ft.
Mass sorbed           =       .25189    g/sq.ft.

Since last printout at time =       9.00
               Change in Total Mass =     -.52875E-02g/sq.ft.
                    Advection in from atmosphere =       .00000    g/sq.ft.
                    Advection in from water table =     -.47940E-02g/sq.ft.
                    Diffusion in from atmosphere =      -.49348E-03g/sq.ft.
                    Diffusion in from water table =      .00000    g/sq.ft.
               Total inflow at boundaries =     -.52875E-02g/sq.ft.
               Mass discrepancy =     -.29802E-07g/sq.ft.

Since beginning of run at time = 0.0
               Change in Total Mass =     -.54035E-01g/sq.ft.
                    Advection in from atmosphere =       .00000    g/sq.ft.
                    Advection in from water table =     -.49343E-01g/sq.ft.
                    Diffusion in from atmosphere =      -.46916E-02g/sq.ft.
                    Diffusion in from water table =      .00000    g/sq.ft.
               Total inflow at boundaries =     -.54035E-01g/sq.ft.
               Mass discrepancy =     -.13039E-06g/sq.ft.


Polygon   1
At time =      11.00, total mass in vadose zone =     .77493    g/sq.ft.
Mass in gas phase     =       .99407E-01g/sq.ft.
Mass in liquid phase  =       .42533    g/sq.ft.
Mass sorbed           =       .25019    g/sq.ft.

Since last printout at time =      10.00
               Change in Total Mass =     -.52555E-02g/sq.ft.
                    Advection in from atmosphere =       .00000    g/sq.ft.
                    Advection in from water table =     -.47606E-02g/sq.ft.
                    Diffusion in from atmosphere =      -.49504E-03g/sq.ft.
                    Diffusion in from water table =      .00000    g/sq.ft.
               Total inflow at boundaries =     -.52557E-02g/sq.ft.
               Mass discrepancy =      .16578E-06g/sq.ft.

Since beginning of run at time = 0.0
               Change in Total Mass =     -.59290E-01g/sq.ft.
                    Advection in from atmosphere =       .00000    g/sq.ft.
                    Advection in from water table =     -.54104E-01g/sq.ft.
                    Diffusion in from atmosphere =      -.51866E-02g/sq.ft.
                    Diffusion in from water table =      .00000    g/sq.ft.
               Total inflow at boundaries =     -.59290E-01g/sq.ft.
               Mass discrepancy =      .37253E-07g/sq.ft.


Polygon   1
At time =      12.00, total mass in vadose zone =     .76971    g/sq.ft.
Mass in gas phase     =       .98737E-01g/sq.ft.
Mass in liquid phase  =       .42246    g/sq.ft.
Mass sorbed           =       .24851    g/sq.ft.

Since last printout at time =      11.00
               Change in Total Mass =     -.52232E-02g/sq.ft.
                    Advection in from atmosphere =       .00000    g/sq.ft.
                    Advection in from water table =     -.47271E-02g/sq.ft.
                    Diffusion in from atmosphere =      -.49595E-03g/sq.ft.
                    Diffusion in from water table =      .00000    g/sq.ft.
               Total inflow at boundaries =     -.52231E-02g/sq.ft.
```

```
              Mass discrepancy =     -.16205E-06g/sq.ft.

Since beginning of run at time = 0.0
              Change in Total Mass =     -.64514E-01g/sq.ft.
                   Advection in from atmosphere =       .00000    g/sq.ft.
                   Advection in from water table =     -.58831E-01g/sq.ft.
                   Diffusion in from atmosphere =      -.56826E-02g/sq.ft.
                   Diffusion in from water table =      .00000    g/sq.ft.
              Total inflow at boundaries =     -.64514E-01g/sq.ft.
              Mass discrepancy =     -.11921E-06g/sq.ft.


Polygon   1
At time =      13.00, total mass in vadose zone =     .76452    g/sq.ft.
Mass in gas phase     =       .98071E-01g/sq.ft.
Mass in liquid phase  =       .41961    g/sq.ft.
Mass sorbed           =       .24683    g/sq.ft.

Since last printout at time =      12.00
              Change in Total Mass =     -.51897E-02g/sq.ft.
                   Advection in from atmosphere =       .00000    g/sq.ft.
                   Advection in from water table =     -.46935E-02g/sq.ft.
                   Diffusion in from atmosphere =      -.49629E-03g/sq.ft.
                   Diffusion in from water table =      .00000    g/sq.ft.
              Total inflow at boundaries =     -.51898E-02g/sq.ft.
              Mass discrepancy =      .10151E-06g/sq.ft.

Since beginning of run at time = 0.0
              Change in Total Mass =     -.69703E-01g/sq.ft.
                   Advection in from atmosphere =       .00000    g/sq.ft.
                   Advection in from water table =     -.63524E-01g/sq.ft.
                   Diffusion in from atmosphere =      -.61789E-02g/sq.ft.
                   Diffusion in from water table =      .00000    g/sq.ft.
              Total inflow at boundaries =     -.69703E-01g/sq.ft.
              Mass discrepancy =     -.22352E-07g/sq.ft.


Polygon   1
At time =      14.00, total mass in vadose zone =     .75936    g/sq.ft.
Mass in gas phase     =       .97410E-01g/sq.ft.
Mass in liquid phase  =       .41678    g/sq.ft.
Mass sorbed           =       .24517    g/sq.ft.

Since last printout at time =      13.00
              Change in Total Mass =     -.51563E-02g/sq.ft.
                   Advection in from atmosphere =       .00000    g/sq.ft.
                   Advection in from water table =     -.46600E-02g/sq.ft.
                   Diffusion in from atmosphere =      -.49615E-03g/sq.ft.
                   Diffusion in from water table =      .00000    g/sq.ft.
              Total inflow at boundaries =     -.51562E-02g/sq.ft.
              Mass discrepancy =     -.10105E-06g/sq.ft.

Since beginning of run at time = 0.0
              Change in Total Mass =     -.74860E-01g/sq.ft.
                   Advection in from atmosphere =       .00000    g/sq.ft.
                   Advection in from water table =     -.68184E-01g/sq.ft.
                   Diffusion in from atmosphere =      -.66750E-02g/sq.ft.
                   Diffusion in from water table =      .00000    g/sq.ft.
              Total inflow at boundaries =     -.74859E-01g/sq.ft.
              Mass discrepancy =     -.11921E-06g/sq.ft.
```

```
Polygon   1
At time =      15.00, total mass in vadose zone =     .75424    g/sq.ft.
Mass in gas phase     =       .96753E-01g/sq.ft.
Mass in liquid phase  =       .41397    g/sq.ft.
Mass sorbed           =       .24351    g/sq.ft.

Since last printout at time =      14.00
               Change in Total Mass =     -.51222E-02g/sq.ft.
                    Advection in from atmosphere =       .00000    g/sq.ft.
                    Advection in from water table =     -.46267E-02g/sq.ft.
                    Diffusion in from atmosphere =      -.49557E-03g/sq.ft.
                    Diffusion in from water table =      .00000    g/sq.ft.
               Total inflow at boundaries =     -.51223E-02g/sq.ft.
               Mass discrepancy =      .11222E-06g/sq.ft.

Since beginning of run at time = 0.0
               Change in Total Mass =     -.79982E-01g/sq.ft.
                    Advection in from atmosphere =       .00000    g/sq.ft.
                    Advection in from water table =     -.72811E-01g/sq.ft.
                    Diffusion in from atmosphere =      -.71706E-02g/sq.ft.
                    Diffusion in from water table =      .00000    g/sq.ft.
               Total inflow at boundaries =     -.79982E-01g/sq.ft.
               Mass discrepancy =     -.14901E-07g/sq.ft.


Polygon   1
At time =      16.00, total mass in vadose zone =     .74915    g/sq.ft.
Mass in gas phase     =       .96100E-01g/sq.ft.
Mass in liquid phase  =       .41118    g/sq.ft.
Mass sorbed           =       .24187    g/sq.ft.

Since last printout at time =      15.00
               Change in Total Mass =     -.50883E-02g/sq.ft.
                    Advection in from atmosphere =       .00000    g/sq.ft.
                    Advection in from water table =     -.45937E-02g/sq.ft.
                    Diffusion in from atmosphere =      -.49462E-03g/sq.ft.
                    Diffusion in from water table =      .00000    g/sq.ft.
               Total inflow at boundaries =     -.50883E-02g/sq.ft.
               Mass discrepancy =     -.10710E-07g/sq.ft.

Since beginning of run at time = 0.0
               Change in Total Mass =     -.85070E-01g/sq.ft.
                    Advection in from atmosphere =       .00000    g/sq.ft.
                    Advection in from water table =     -.77405E-01g/sq.ft.
                    Diffusion in from atmosphere =      -.76652E-02g/sq.ft.
                    Diffusion in from water table =      .00000    g/sq.ft.
               Total inflow at boundaries =     -.85070E-01g/sq.ft.
               Mass discrepancy =     -.22352E-07g/sq.ft.


Polygon   1
At time =      17.00, total mass in vadose zone =     .74410    g/sq.ft.
Mass in gas phase     =       .95452E-01g/sq.ft.
Mass in liquid phase  =       .40841    g/sq.ft.
Mass sorbed           =       .24024    g/sq.ft.

Since last printout at time =      16.00
               Change in Total Mass =     -.50543E-02g/sq.ft.
```

```
                    Advection in from atmosphere =       .00000    g/sq.ft.
                    Advection in from water table =     -.45610E-02g/sq.ft.
                    Diffusion in from atmosphere =      -.49334E-03g/sq.ft.
                    Diffusion in from water table =      .00000    g/sq.ft.
               Total inflow at boundaries =     -.50544E-02g/sq.ft.
               Mass discrepancy =      .61933E-07g/sq.ft.

Since beginning of run at time = 0.0
               Change in Total Mass =     -.90124E-01g/sq.ft.
                    Advection in from atmosphere =       .00000    g/sq.ft.
                    Advection in from water table =     -.81966E-01g/sq.ft.
                    Diffusion in from atmosphere =      -.81585E-02g/sq.ft.
                    Diffusion in from water table =      .00000    g/sq.ft.
               Total inflow at boundaries =     -.90124E-01g/sq.ft.
               Mass discrepancy =      .44703E-07g/sq.ft.


Polygon   1
At time =      18.00, total mass in vadose zone =     .73908    g/sq.ft.
Mass in gas phase     =       .94808E-01g/sq.ft.
Mass in liquid phase  =       .40565    g/sq.ft.
Mass sorbed           =       .23862    g/sq.ft.

Since last printout at time =      17.00
               Change in Total Mass =     -.50205E-02g/sq.ft.
                    Advection in from atmosphere =       .00000    g/sq.ft.
                    Advection in from water table =     -.45287E-02g/sq.ft.
                    Diffusion in from atmosphere =      -.49179E-03g/sq.ft.
                    Diffusion in from water table =      .00000    g/sq.ft.
               Total inflow at boundaries =     -.50205E-02g/sq.ft.
               Mass discrepancy =      .60536E-08g/sq.ft.

Since beginning of run at time = 0.0
               Change in Total Mass =     -.95145E-01g/sq.ft.
                    Advection in from atmosphere =       .00000    g/sq.ft.
                    Advection in from water table =     -.86495E-01g/sq.ft.
                    Diffusion in from atmosphere =      -.86503E-02g/sq.ft.
                    Diffusion in from water table =      .00000    g/sq.ft.
               Total inflow at boundaries =     -.95145E-01g/sq.ft.
               Mass discrepancy =      .44703E-07g/sq.ft.


Polygon   1
At time =      19.00, total mass in vadose zone =     .73409    g/sq.ft.
Mass in gas phase     =       .94168E-01g/sq.ft.
Mass in liquid phase  =       .40291    g/sq.ft.
Mass sorbed           =       .23701    g/sq.ft.

Since last printout at time =      18.00
               Change in Total Mass =     -.49868E-02g/sq.ft.
                    Advection in from atmosphere =       .00000    g/sq.ft.
                    Advection in from water table =     -.44968E-02g/sq.ft.
                    Diffusion in from atmosphere =      -.48999E-03g/sq.ft.
                    Diffusion in from water table =      .00000    g/sq.ft.
               Total inflow at boundaries =     -.49868E-02g/sq.ft.
               Mass discrepancy =      .71246E-07g/sq.ft.

Since beginning of run at time = 0.0
               Change in Total Mass =     -.10013    g/sq.ft.
                    Advection in from atmosphere =       .00000    g/sq.ft.
```

```
                Advection in from water table =     -.90991E-01g/sq.ft.
                Diffusion in from atmosphere =      -.91403E-02g/sq.ft.
                Diffusion in from water table =      .00000    g/sq.ft.
           Total inflow at boundaries =     -.10013    g/sq.ft.
           Mass discrepancy =      .11921E-06g/sq.ft.


Polygon   1
At time =      20.00, total mass in vadose zone =     .72914    g/sq.ft.
Mass in gas phase     =       .93532E-01g/sq.ft.
Mass in liquid phase  =       .40019    g/sq.ft.
Mass sorbed           =       .23541    g/sq.ft.

Since last printout at time =      19.00
           Change in Total Mass =     -.49534E-02g/sq.ft.
                Advection in from atmosphere =       .00000    g/sq.ft.
                Advection in from water table =     -.44654E-02g/sq.ft.
                Diffusion in from atmosphere =      -.48797E-03g/sq.ft.
                Diffusion in from water table =      .00000    g/sq.ft.
           Total inflow at boundaries =     -.49534E-02g/sq.ft.
           Mass discrepancy =     -.45169E-07g/sq.ft.

Since beginning of run at time = 0.0
           Change in Total Mass =     -.10509    g/sq.ft.
                Advection in from atmosphere =       .00000    g/sq.ft.
                Advection in from water table =     -.95457E-01g/sq.ft.
                Diffusion in from atmosphere =      -.96283E-02g/sq.ft.
                Diffusion in from water table =      .00000    g/sq.ft.
           Total inflow at boundaries =     -.10509    g/sq.ft.
           Mass discrepancy =      .81956E-07g/sq.ft.


Polygon   1
At time =      21.00, total mass in vadose zone =     .72422    g/sq.ft.
Mass in gas phase     =       .92901E-01g/sq.ft.
Mass in liquid phase  =       .39749    g/sq.ft.
Mass sorbed           =       .23382    g/sq.ft.

Since last printout at time =      20.00
           Change in Total Mass =     -.49201E-02g/sq.ft.
                Advection in from atmosphere =       .00000    g/sq.ft.
                Advection in from water table =     -.44345E-02g/sq.ft.
                Diffusion in from atmosphere =      -.48577E-03g/sq.ft.
                Diffusion in from water table =      .00000    g/sq.ft.
           Total inflow at boundaries =     -.49202E-02g/sq.ft.
           Mass discrepancy =      .11129E-06g/sq.ft.

Since beginning of run at time = 0.0
           Change in Total Mass =     -.11001    g/sq.ft.
                Advection in from atmosphere =       .00000    g/sq.ft.
                Advection in from water table =     -.99891E-01g/sq.ft.
                Diffusion in from atmosphere =      -.10114E-01g/sq.ft.
                Diffusion in from water table =      .00000    g/sq.ft.
           Total inflow at boundaries =     -.11001    g/sq.ft.
           Mass discrepancy =      .19372E-06g/sq.ft.


Polygon   1
At time =      22.00, total mass in vadose zone =     .71933    g/sq.ft.
Mass in gas phase     =       .92274E-01g/sq.ft.
```

Mass in liquid phase = .39481 g/sq.ft.
Mass sorbed = .23224 g/sq.ft.

Since last printout at time = 21.00
Change in Total Mass = -.48875E-02g/sq.ft.
Advection in from atmosphere = .00000 g/sq.ft.
Advection in from water table = -.44040E-02g/sq.ft.
Diffusion in from atmosphere = -.48341E-03g/sq.ft.
Diffusion in from water table = .00000 g/sq.ft.
Total inflow at boundaries = -.48874E-02g/sq.ft.
Mass discrepancy = -.88941E-07g/sq.ft.

Since beginning of run at time = 0.0
Change in Total Mass = -.11489 g/sq.ft.
Advection in from atmosphere = .00000 g/sq.ft.
Advection in from water table = -.10430 g/sq.ft.
Diffusion in from atmosphere = -.10597E-01g/sq.ft.
Diffusion in from water table = .00000 g/sq.ft.
Total inflow at boundaries = -.11489 g/sq.ft.
Mass discrepancy = .96858E-07g/sq.ft.

Polygon 1
At time = 23.00, total mass in vadose zone = .71447 g/sq.ft.
Mass in gas phase = .91652E-01g/sq.ft.
Mass in liquid phase = .39215 g/sq.ft.
Mass sorbed = .23068 g/sq.ft.

Since last printout at time = 22.00
Change in Total Mass = -.48548E-02g/sq.ft.
Advection in from atmosphere = .00000 g/sq.ft.
Advection in from water table = -.43739E-02g/sq.ft.
Diffusion in from atmosphere = -.48090E-03g/sq.ft.
Diffusion in from water table = .00000 g/sq.ft.
Total inflow at boundaries = -.48548E-02g/sq.ft.
Mass discrepancy = .26077E-07g/sq.ft.

Since beginning of run at time = 0.0
Change in Total Mass = -.11975 g/sq.ft.
Advection in from atmosphere = .00000 g/sq.ft.
Advection in from water table = -.10867 g/sq.ft.
Diffusion in from atmosphere = -.11078E-01g/sq.ft.
Diffusion in from water table = .00000 g/sq.ft.
Total inflow at boundaries = -.11975 g/sq.ft.
Mass discrepancy = .12666E-06g/sq.ft.

Polygon 1
At time = 24.00, total mass in vadose zone = .70965 g/sq.ft.
Mass in gas phase = .91033E-01g/sq.ft.
Mass in liquid phase = .38950 g/sq.ft.
Mass sorbed = .22912 g/sq.ft.

Since last printout at time = 23.00
Change in Total Mass = -.48226E-02g/sq.ft.
Advection in from atmosphere = .00000 g/sq.ft.
Advection in from water table = -.43443E-02g/sq.ft.
Diffusion in from atmosphere = -.47828E-03g/sq.ft.
Diffusion in from water table = .00000 g/sq.ft.
Total inflow at boundaries = -.48226E-02g/sq.ft.

```
                Mass discrepancy =      .45635E-07g/sq.ft.

Since beginning of run at time = 0.0
                Change in Total Mass =     -.12457    g/sq.ft.
                     Advection in from atmosphere =       .00000    g/sq.ft.
                     Advection in from water table =     -.11301    g/sq.ft.
                     Diffusion in from atmosphere =      -.11557E-01g/sq.ft.
                     Diffusion in from water table =      .00000    g/sq.ft.
                Total inflow at boundaries =     -.12457    g/sq.ft.
                Mass discrepancy =      .17136E-06g/sq.ft.


Polygon   1
At time =      25.00, total mass in vadose zone =     .70486    g/sq.ft.
Mass in gas phase     =       .90418E-01g/sq.ft.
Mass in liquid phase  =       .38687    g/sq.ft.
Mass sorbed           =       .22757    g/sq.ft.

Since last printout at time =      24.00
                Change in Total Mass =     -.47907E-02g/sq.ft.
                     Advection in from atmosphere =       .00000    g/sq.ft.
                     Advection in from water table =     -.43151E-02g/sq.ft.
                     Diffusion in from atmosphere =      -.47555E-03g/sq.ft.
                     Diffusion in from water table =      .00000    g/sq.ft.
                Total inflow at boundaries =     -.47907E-02g/sq.ft.
                Mass discrepancy =     -.28405E-07g/sq.ft.

Since beginning of run at time = 0.0
                Change in Total Mass =     -.12936    g/sq.ft.
                     Advection in from atmosphere =       .00000    g/sq.ft.
                     Advection in from water table =     -.11733    g/sq.ft.
                     Diffusion in from atmosphere =      -.12032E-01g/sq.ft.
                     Diffusion in from water table =      .00000    g/sq.ft.
                Total inflow at boundaries =     -.12936    g/sq.ft.
                Mass discrepancy =      .14901E-06g/sq.ft.


Polygon   1
At time =      26.00, total mass in vadose zone =     .70010    g/sq.ft.
Mass in gas phase     =       .89808E-01g/sq.ft.
Mass in liquid phase  =       .38426    g/sq.ft.
Mass sorbed           =       .22604    g/sq.ft.

Since last printout at time =      25.00
                Change in Total Mass =     -.47590E-02g/sq.ft.
                     Advection in from atmosphere =       .00000    g/sq.ft.
                     Advection in from water table =     -.42864E-02g/sq.ft.
                     Diffusion in from atmosphere =      -.47274E-03g/sq.ft.
                     Diffusion in from water table =      .00000    g/sq.ft.
                Total inflow at boundaries =     -.47591E-02g/sq.ft.
                Mass discrepancy =      .15879E-06g/sq.ft.

Since beginning of run at time = 0.0
                Change in Total Mass =     -.13412    g/sq.ft.
                     Advection in from atmosphere =       .00000    g/sq.ft.
                     Advection in from water table =     -.12162    g/sq.ft.
                     Diffusion in from atmosphere =      -.12505E-01g/sq.ft.
                     Diffusion in from water table =      .00000    g/sq.ft.
                Total inflow at boundaries =     -.13412    g/sq.ft.
                Mass discrepancy =      .29802E-06g/sq.ft.
```

```
Polygon   1
At time =      27.00, total mass in vadose zone =     .69537    g/sq.ft.
Mass in gas phase     =       .89201E-01g/sq.ft.
Mass in liquid phase  =       .38166    g/sq.ft.
Mass sorbed           =       .22451    g/sq.ft.

Since last printout at time =      26.00
               Change in Total Mass =     -.47279E-02g/sq.ft.
                    Advection in from atmosphere =       .00000    g/sq.ft.
                    Advection in from water table =     -.42580E-02g/sq.ft.
                    Diffusion in from atmosphere =      -.46984E-03g/sq.ft.
                    Diffusion in from water table =      .00000    g/sq.ft.
               Total inflow at boundaries =     -.47278E-02g/sq.ft.
               Mass discrepancy =     -.54482E-07g/sq.ft.

Since beginning of run at time = 0.0
               Change in Total Mass =     -.13885    g/sq.ft.
                    Advection in from atmosphere =       .00000    g/sq.ft.
                    Advection in from water table =     -.12587    g/sq.ft.
                    Diffusion in from atmosphere =      -.12975E-01g/sq.ft.
                    Diffusion in from water table =      .00000    g/sq.ft.
               Total inflow at boundaries =     -.13885    g/sq.ft.
               Mass discrepancy =      .25332E-06g/sq.ft.


Polygon   1
At time =      28.00, total mass in vadose zone =     .69068    g/sq.ft.
Mass in gas phase     =       .88599E-01g/sq.ft.
Mass in liquid phase  =       .37908    g/sq.ft.
Mass sorbed           =       .22299    g/sq.ft.

Since last printout at time =      27.00
               Change in Total Mass =     -.46969E-02g/sq.ft.
                    Advection in from atmosphere =       .00000    g/sq.ft.
                    Advection in from water table =     -.42300E-02g/sq.ft.
                    Diffusion in from atmosphere =      -.46688E-03g/sq.ft.
                    Diffusion in from water table =      .00000    g/sq.ft.
               Total inflow at boundaries =     -.46969E-02g/sq.ft.
               Mass discrepancy =     -.20489E-07g/sq.ft.

Since beginning of run at time = 0.0
               Change in Total Mass =     -.14354    g/sq.ft.
                    Advection in from atmosphere =       .00000    g/sq.ft.
                    Advection in from water table =     -.13010    g/sq.ft.
                    Diffusion in from atmosphere =      -.13442E-01g/sq.ft.
                    Diffusion in from water table =      .00000    g/sq.ft.
               Total inflow at boundaries =     -.14354    g/sq.ft.
               Mass discrepancy =      .23842E-06g/sq.ft.


Polygon   1
At time =      29.00, total mass in vadose zone =     .68601    g/sq.ft.
Mass in gas phase     =       .88000E-01g/sq.ft.
Mass in liquid phase  =       .37652    g/sq.ft.
Mass sorbed           =       .22149    g/sq.ft.

Since last printout at time =      28.00
               Change in Total Mass =     -.46663E-02g/sq.ft.
```

Advection in from atmosphere = .00000 g/sq.ft.
Advection in from water table = -.42024E-02g/sq.ft.
Diffusion in from atmosphere = -.46387E-03g/sq.ft.
Diffusion in from water table = .00000 g/sq.ft.
Total inflow at boundaries = -.46662E-02g/sq.ft.
Mass discrepancy = -.10617E-06g/sq.ft.

Since beginning of run at time = 0.0
Change in Total Mass = -.14821 g/sq.ft.
Advection in from atmosphere = .00000 g/sq.ft.
Advection in from water table = -.13431 g/sq.ft.
Diffusion in from atmosphere = -.13906E-01g/sq.ft.
Diffusion in from water table = .00000 g/sq.ft.
Total inflow at boundaries = -.14821 g/sq.ft.
Mass discrepancy = .11921E-06g/sq.ft.

Polygon 1
At time = 30.00, total mass in vadose zone = .68137 g/sq.ft.
Mass in gas phase = .87406E-01g/sq.ft.
Mass in liquid phase = .37398 g/sq.ft.
Mass sorbed = .21999 g/sq.ft.

Since last printout at time = 29.00
Change in Total Mass = -.46358E-02g/sq.ft.
Advection in from atmosphere = .00000 g/sq.ft.
Advection in from water table = -.41750E-02g/sq.ft.
Diffusion in from atmosphere = -.46080E-03g/sq.ft.
Diffusion in from water table = .00000 g/sq.ft.
Total inflow at boundaries = -.46358E-02g/sq.ft.
Mass discrepancy = .35390E-07g/sq.ft.

Since beginning of run at time = 0.0
Change in Total Mass = -.15285 g/sq.ft.
Advection in from atmosphere = .00000 g/sq.ft.
Advection in from water table = -.13848 g/sq.ft.
Diffusion in from atmosphere = -.14366E-01g/sq.ft.
Diffusion in from water table = .00000 g/sq.ft.
Total inflow at boundaries = -.15285 g/sq.ft.
Mass discrepancy = .14901E-06g/sq.ft.

GROUNDWATER IMPACT OF POLYGON 1

Time	Mass per area (g/sq.ft.)	Total Mass (g)
1.00	.50636E-02	645.61
2.00	.50378E-02	642.32
3.00	.50108E-02	638.87
4.00	.49825E-02	635.27
5.00	.49532E-02	631.53
6.00	.49229E-02	627.67
7.00	.48916E-02	623.69
8.00	.48597E-02	619.61
9.00	.48271E-02	615.45
10.00	.47940E-02	611.24
11.00	.47606E-02	606.98
12.00	.47271E-02	602.71
13.00	.46935E-02	598.42
14.00	.46600E-02	594.15
15.00	.46267E-02	589.91

16.00	.45937E-02	585.70
17.00	.45610E-02	581.53
18.00	.45287E-02	577.41
19.00	.44968E-02	573.35
20.00	.44654E-02	569.34
21.00	.44345E-02	565.39
22.00	.44040E-02	561.51
23.00	.43739E-02	557.67
24.00	.43443E-02	553.90
25.00	.43151E-02	550.18
26.00	.42864E-02	546.51
27.00	.42580E-02	542.90
28.00	.42300E-02	539.33
29.00	.42024E-02	535.80
30.00	.41750E-02	532.32

****

****

TOTAL GROUNDWATER IMPACT

Time (yr)	Mass (g)	Cumulative Mass (g)
1.00	645.61	645.61
2.00	642.32	1287.9
3.00	638.87	1926.8
4.00	635.27	2562.1
5.00	631.53	3193.6
6.00	627.67	3821.3
7.00	623.69	4445.0
8.00	619.61	5064.6
9.00	615.45	5680.0
10.00	611.24	6291.3
11.00	606.98	6898.2
12.00	602.71	7500.9
13.00	598.42	8099.4
14.00	594.15	8693.5
15.00	589.91	9283.4
16.00	585.70	9869.1
17.00	581.53	10451.
18.00	577.41	11028.
19.00	573.35	11601.
20.00	569.34	12171.
21.00	565.39	12736.
22.00	561.51	13298.
23.00	557.67	13855.
24.00	553.90	14409.
25.00	550.18	14959.
26.00	546.51	15506.
27.00	542.90	16049.
28.00	539.33	16588.
29.00	535.80	17124.
30.00	532.32	17656.

Polygon 14A
Time: .000

Cell	Cgas(g/cu.ft.)	Cliq(g/cu.ft.)	Csol
1	.75645E-05	.15993E-04	.51656E-10
2	.75645E-05	.15993E-04	.51656E-10
3	.75645E-05	.15993E-04	.51656E-10
4	.75645E-05	.15993E-04	.51656E-10
5	.75645E-05	.15993E-04	.51656E-10
6	.75645E-05	.15993E-04	.51656E-10
7	.22533E-02	.47638E-02	.15387E-07
8	.22533E-02	.47638E-02	.15387E-07
9	.22533E-02	.47638E-02	.15387E-07
10	.22533E-02	.47638E-02	.15387E-07
11	.22533E-02	.47638E-02	.15387E-07
12	.22533E-02	.47638E-02	.15387E-07
13	.56218E-02	.11885E-01	.38390E-07
14	.56218E-02	.11885E-01	.38390E-07
15	.56218E-02	.11885E-01	.38390E-07
16	.56218E-02	.11885E-01	.38390E-07
17	.56218E-02	.11885E-01	.38390E-07
18	.56218E-02	.11885E-01	.38390E-07
19	.89899E-02	.19006E-01	.61390E-07
20	.89899E-02	.19006E-01	.61390E-07
21	.89899E-02	.19006E-01	.61390E-07
22	.89899E-02	.19006E-01	.61390E-07
23	.89899E-02	.19006E-01	.61390E-07
24	.89899E-02	.19006E-01	.61390E-07
25	.12358E-01	.26128E-01	.84393E-07
26	.12358E-01	.26128E-01	.84393E-07
27	.12358E-01	.26128E-01	.84393E-07
28	.12358E-01	.26128E-01	.84393E-07
29	.12358E-01	.26128E-01	.84393E-07
30	.12358E-01	.26128E-01	.84393E-07
31	.15727E-01	.33250E-01	.10740E-06
32	.15727E-01	.33250E-01	.10740E-06
33	.15727E-01	.33250E-01	.10740E-06
34	.15727E-01	.33250E-01	.10740E-06
35	.15727E-01	.33250E-01	.10740E-06
36	.15727E-01	.33250E-01	.10740E-06
37	.19096E-01	.40371E-01	.13040E-06
38	.19096E-01	.40371E-01	.13040E-06
39	.19096E-01	.40371E-01	.13040E-06
40	.19096E-01	.40371E-01	.13040E-06
41	.19096E-01	.40371E-01	.13040E-06
42	.19096E-01	.40371E-01	.13040E-06
43	.22464E-01	.47493E-01	.15340E-06
44	.22464E-01	.47493E-01	.15340E-06
45	.22464E-01	.47493E-01	.15340E-06
46	.22464E-01	.47493E-01	.15340E-06
47	.22464E-01	.47493E-01	.15340E-06
48	.22464E-01	.47493E-01	.15340E-06
49	.25832E-01	.54614E-01	.17640E-06
50	.25832E-01	.54614E-01	.17640E-06
51	.25832E-01	.54614E-01	.17640E-06
52	.25832E-01	.54614E-01	.17640E-06
53	.25832E-01	.54614E-01	.17640E-06
54	.25832E-01	.54614E-01	.17640E-06
55	.29201E-01	.61735E-01	.19941E-06
56	.29201E-01	.61735E-01	.19941E-06

57	.29201E-01	.61735E-01	.19941E-06
58	.29201E-01	.61735E-01	.19941E-06
59	.29201E-01	.61735E-01	.19941E-06
60	.29201E-01	.61735E-01	.19941E-06

Polygon 14A
Time: 10.000

Cell	Cgas(g/cu.ft.)	Cliq(g/cu.ft.)	Csol
1	.89014E-04	.18819E-03	.60786E-09
2	.21537E-03	.45532E-03	.14707E-08
3	.36368E-03	.76889E-03	.24835E-08
4	.52865E-03	.11177E-02	.36100E-08
5	.71075E-03	.15026E-02	.48535E-08
6	.91335E-03	.19310E-02	.62371E-08
7	.12250E-02	.25898E-02	.83650E-08
8	.16285E-02	.34428E-02	.11120E-07
9	.20423E-02	.43178E-02	.13947E-07
10	.24210E-02	.51184E-02	.16532E-07
11	.27667E-02	.58493E-02	.18893E-07
12	.31010E-02	.65561E-02	.21176E-07
13	.35707E-02	.75490E-02	.24383E-07
14	.41576E-02	.87899E-02	.28391E-07
15	.47427E-02	.10027E-01	.32387E-07
16	.52578E-02	.11116E-01	.35905E-07
17	.57056E-02	.12063E-01	.38962E-07
18	.61165E-02	.12931E-01	.41768E-07
19	.66458E-02	.14050E-01	.45383E-07
20	.72810E-02	.15393E-01	.49720E-07
21	.79057E-02	.16714E-01	.53986E-07
22	.84540E-02	.17873E-01	.57730E-07
23	.89294E-02	.18878E-01	.60977E-07
24	.93635E-02	.19796E-01	.63941E-07
25	.99121E-02	.20956E-01	.67687E-07
26	.10563E-01	.22333E-01	.72134E-07
27	.11201E-01	.23682E-01	.76491E-07
28	.11761E-01	.24864E-01	.80310E-07
29	.12245E-01	.25888E-01	.83617E-07
30	.12686E-01	.26820E-01	.86630E-07
31	.13240E-01	.27992E-01	.90414E-07
32	.13896E-01	.29378E-01	.94890E-07
33	.14537E-01	.30733E-01	.99268E-07
34	.15098E-01	.31919E-01	.10310E-06
35	.15583E-01	.32945E-01	.10641E-06
36	.16024E-01	.33877E-01	.10942E-06
37	.16577E-01	.35046E-01	.11320E-06
38	.17229E-01	.36426E-01	.11766E-06
39	.17867E-01	.37774E-01	.12201E-06
40	.18423E-01	.38949E-01	.12581E-06
41	.18901E-01	.39961E-01	.12907E-06
42	.19334E-01	.40876E-01	.13203E-06
43	.19877E-01	.42023E-01	.13573E-06
44	.20518E-01	.43377E-01	.14011E-06
45	.21140E-01	.44693E-01	.14436E-06
46	.21678E-01	.45830E-01	.14803E-06
47	.22134E-01	.46796E-01	.15115E-06
48	.22541E-01	.47655E-01	.15392E-06
49	.23052E-01	.48735E-01	.15742E-06
50	.23655E-01	.50010E-01	.16153E-06
51	.24232E-01	.51230E-01	.16547E-06
52	.24716E-01	.52254E-01	.16878E-06

53	.25109E-01	.53084E-01	.17146E-06
54	.25439E-01	.53783E-01	.17372E-06
55	.25860E-01	.54672E-01	.17659E-06
56	.26356E-01	.55720E-01	.17998E-06
57	.26806E-01	.56672E-01	.18305E-06
58	.27140E-01	.57378E-01	.18533E-06
59	.27355E-01	.57833E-01	.18680E-06
60	.27476E-01	.58088E-01	.18762E-06

Polygon 14A
Time: 20.000

Cell	Cgas(g/cu.ft.)	Cliq(g/cu.ft.)	Csol
1	.93349E-04	.19736E-03	.63746E-09
2	.23263E-03	.49181E-03	.15886E-08
3	.40288E-03	.85175E-03	.27511E-08
4	.59598E-03	.12600E-02	.40698E-08
5	.80818E-03	.17086E-02	.55189E-08
6	.10385E-02	.21956E-02	.70918E-08
7	.12910E-02	.27293E-02	.88156E-08
8	.15719E-02	.33232E-02	.10734E-07
9	.18834E-02	.39817E-02	.12861E-07
10	.22207E-02	.46949E-02	.15164E-07
11	.25762E-02	.54464E-02	.17592E-07
12	.29443E-02	.62248E-02	.20106E-07
13	.33285E-02	.70370E-02	.22730E-07
14	.37378E-02	.79024E-02	.25525E-07
15	.41758E-02	.88283E-02	.28515E-07
16	.46358E-02	.98009E-02	.31657E-07
17	.51066E-02	.10796E-01	.34872E-07
18	.55796E-02	.11796E-01	.38102E-07
19	.60568E-02	.12805E-01	.41360E-07
20	.65477E-02	.13843E-01	.44713E-07
21	.70568E-02	.14919E-01	.48189E-07
22	.75790E-02	.16023E-01	.51755E-07
23	.81039E-02	.17133E-01	.55340E-07
24	.86241E-02	.18233E-01	.58892E-07
25	.91424E-02	.19329E-01	.62431E-07
26	.96688E-02	.20442E-01	.66026E-07
27	.10209E-01	.21583E-01	.69713E-07
28	.10757E-01	.22742E-01	.73457E-07
29	.11304E-01	.23899E-01	.77194E-07
30	.11843E-01	.25038E-01	.80874E-07
31	.12377E-01	.26166E-01	.84518E-07
32	.12915E-01	.27305E-01	.88197E-07
33	.13465E-01	.28467E-01	.91948E-07
34	.14020E-01	.29641E-01	.95739E-07
35	.14572E-01	.30807E-01	.99506E-07
36	.15112E-01	.31950E-01	.10320E-06
37	.15645E-01	.33077E-01	.10684E-06
38	.16181E-01	.34209E-01	.11050E-06
39	.16725E-01	.35358E-01	.11421E-06
40	.17271E-01	.36515E-01	.11794E-06
41	.17812E-01	.37657E-01	.12163E-06
42	.18338E-01	.38769E-01	.12523E-06
43	.18853E-01	.39859E-01	.12874E-06
44	.19367E-01	.40945E-01	.13225E-06
45	.19885E-01	.42040E-01	.13579E-06
46	.20401E-01	.43130E-01	.13931E-06
47	.20905E-01	.44196E-01	.14275E-06
48	.21388E-01	.45218E-01	.14605E-06

49	.21854E-01	.46202E-01	.14923E-06
50	.22310E-01	.47167E-01	.15235E-06
51	.22761E-01	.48120E-01	.15543E-06
52	.23199E-01	.49047E-01	.15842E-06
53	.23614E-01	.49924E-01	.16126E-06
54	.23995E-01	.50730E-01	.16386E-06
55	.24343E-01	.51466E-01	.16624E-06
56	.24665E-01	.52147E-01	.16843E-06
57	.24963E-01	.52775E-01	.17046E-06
58	.25227E-01	.53334E-01	.17227E-06
59	.25443E-01	.53791E-01	.17374E-06
60	.25599E-01	.54121E-01	.17481E-06

Polygon 14A
Time: 30.000

Cell	Cgas(g/cu.ft.)	Cliq(g/cu.ft.)	Csol
1	.89095E-04	.18836E-03	.60841E-09
2	.22310E-03	.47166E-03	.15235E-08
3	.38823E-03	.82078E-03	.26511E-08
4	.57675E-03	.12193E-02	.39385E-08
5	.78446E-03	.16585E-02	.53569E-08
6	.10093E-02	.21338E-02	.68923E-08
7	.12506E-02	.26440E-02	.85403E-08
8	.15089E-02	.31901E-02	.10304E-07
9	.17851E-02	.37740E-02	.12190E-07
10	.20800E-02	.43975E-02	.14204E-07
11	.23937E-02	.50607E-02	.16346E-07
12	.27254E-02	.57619E-02	.18611E-07
13	.30740E-02	.64990E-02	.20992E-07
14	.34393E-02	.72713E-02	.23486E-07
15	.38216E-02	.80794E-02	.26097E-07
16	.42208E-02	.89236E-02	.28823E-07
17	.46364E-02	.98021E-02	.31661E-07
18	.50664E-02	.10711E-01	.34598E-07
19	.55089E-02	.11647E-01	.37619E-07
20	.59623E-02	.12605E-01	.40715E-07
21	.64265E-02	.13587E-01	.43885E-07
22	.69012E-02	.14590E-01	.47127E-07
23	.73857E-02	.15615E-01	.50435E-07
24	.78783E-02	.16656E-01	.53799E-07
25	.83771E-02	.17711E-01	.57205E-07
26	.88812E-02	.18776E-01	.60648E-07
27	.93905E-02	.19853E-01	.64126E-07
28	.99052E-02	.20941E-01	.67640E-07
29	.10425E-01	.22040E-01	.71188E-07
30	.10948E-01	.23145E-01	.74759E-07
31	.11472E-01	.24255E-01	.78342E-07
32	.11998E-01	.25366E-01	.81933E-07
33	.12525E-01	.26481E-01	.85532E-07
34	.13054E-01	.27598E-01	.89141E-07
35	.13583E-01	.28717E-01	.92757E-07
36	.14113E-01	.29836E-01	.96372E-07
37	.14640E-01	.30952E-01	.99974E-07
38	.15165E-01	.32061E-01	.10356E-06
39	.15687E-01	.33165E-01	.10712E-06
40	.16207E-01	.34264E-01	.11067E-06
41	.16724E-01	.35357E-01	.11420E-06
42	.17236E-01	.36439E-01	.11770E-06
43	.17742E-01	.37509E-01	.12115E-06
44	.18240E-01	.38562E-01	.12456E-06

45	.18730E-01	.39598E-01	.12790E-06
46	.19212E-01	.40617E-01	.13119E-06
47	.19684E-01	.41616E-01	.13442E-06
48	.20145E-01	.42590E-01	.13757E-06
49	.20592E-01	.43535E-01	.14062E-06
50	.21022E-01	.44445E-01	.14356E-06
51	.21435E-01	.45318E-01	.14638E-06
52	.21830E-01	.46151E-01	.14907E-06
53	.22203E-01	.46941E-01	.15162E-06
54	.22552E-01	.47678E-01	.15400E-06
55	.22873E-01	.48356E-01	.15619E-06
56	.23162E-01	.48968E-01	.15817E-06
57	.23417E-01	.49507E-01	.15991E-06
58	.23635E-01	.49968E-01	.16140E-06
59	.23812E-01	.50342E-01	.16261E-06
60	.23943E-01	.50620E-01	.16350E-06

V-Leach, VER 1.1
Jake Turin, 11/91
PGA V-leach model, polygon screen-TCE-11/10/92-Poly14A.INP. New soil, Old chem.
1 polygons.
mestep = 1.00 years. Simulation length = 30.00 years.
Printout every 1.00 years. Vertical profile stored every 10.00 years.
Koc = 123.60 ml/g, .43649E-02cu.ft./g
Kh = .47300 (dimensionless).
Aqueous solubility = 1100.0 mg/l, 31.149 g/cu.ft
Free air diffusion coefficient = .70290 sq. m/day, 2761.7 sq.ft./yr

Polygon 1
Polygon 14A
Polygon area = .12750E+06sq. ft.
60 cells, each cell 1.000 ft. thick.
Soil Properties:
Bulk density = 1.6400 g/ml, 46440. g/cu.ft.
Porosity = .3810 Volumetric water content = .2550
Organic carbon content = .00074000
Recharge Rate = .08202100 ft/yr
Conc. in recharge water = .00000 mg/l, .00000 g/cu.ft
Atmospheric concentration = .00000 mg/l, .00000 g/cu.ft
Water table is impermeable to gas diffusion.

Calculation of Total TCE Mass and Revised Vertical Distributions in Polygon 14A using HGC Distribution equations and Revised Soil Physical Data

0.266 Cs **	Cz = (74.527z - 371.636)Cs

Cz (ug/L) Vert. Dist. Eq.	Calculated Depth Interval (z)	Total Depth Interval (feet)	Total Soil Conc Ct* (ug/Kg)	Mt (ug/cc)	Volume of Soil (cubic ft)	Mass TCE (grams)	Mass TCE (pounds)
0.266	3	6	0.16	2.61E-04	765000	5.66	0.01
79.56	9	6	47.66	0.08	765000	1693.12	3.73
198.51	15	6	118.91	0.20	765000	4224.32	9.31
317.45	21	6	190.15	0.31	765000	6755.51	14.89
436.40	27	6	261.40	0.43	765000	9286.71	20.47
555.34	33	6	332.65	0.55	765000	11817.91	26.05
674.29	39	6	403.90	0.66	765000	14349.10	31.63
793.23	45	6	475.15	0.78	765000	16880.30	37.21
912.18	51	6	546.39	0.90	765000	19411.50	42.80
1031.12	57	6	617.64	1.01	765000	21942.69	48.38
4998.35		60	2994.01	4.91		106366.81	234.50

* Ct conversion based on Kgt of 0.599 L/Kg

** Cs Determined as mathematical average of VOC concentrations for polygon(s) listed in Table A-1 of HGC, 1989.

PGA V-leach model, polygon screen-TCE-11/10/92-Poly23A.INP.

```
 1
    1.0        30.        1.0        10.
  123.6        .473      1100.       .7029
lygon 23A
129000.          1.    .082021       1.64        .381        .255     .00074
     0.          0.        -1.
60
 1     6       0.06
 7    12      17.74
13    18      44.25
19    24      70.77
25    30      97.29
31    36     123.81
37    42     150.32
43    48     176.84
49    54     203.36
55    60     229.87
```

V-Leach, VER 1.1
Jake Turin, 11/91
PGA V-leach model, polygon screen-TCE-11/10/92-Poly23A.INP. New soil, Old chem.

Polygon 1
At time = .00, total mass in vadose zone = .31048 g/sq.ft.
Mass in gas phase = .39828E-01g/sq.ft.
Mass in liquid phase = .17041 g/sq.ft.
Mass sorbed = .10024 g/sq.ft.

Polygon 1
At time = 1.00, total mass in vadose zone = .30844 g/sq.ft.
Mass in gas phase = .39566E-01g/sq.ft.
Mass in liquid phase = .16929 g/sq.ft.
Mass sorbed = .99582E-01g/sq.ft.

Since last printout at time = .00
Change in Total Mass = -.20433E-02g/sq.ft.
Advection in from atmosphere = .00000 g/sq.ft.
Advection in from water table = -.18845E-02g/sq.ft.
Diffusion in from atmosphere = -.15880E-03g/sq.ft.
Diffusion in from water table = .00000 g/sq.ft.
Total inflow at boundaries = -.20433E-02g/sq.ft.
Mass discrepancy = .00000 g/sq.ft.

Since beginning of run at time = 0.0
Change in Total Mass = -.20433E-02g/sq.ft.
Advection in from atmosphere = .00000 g/sq.ft.
Advection in from water table = -.18845E-02g/sq.ft.
Diffusion in from atmosphere = -.15880E-03g/sq.ft.
Diffusion in from water table = .00000 g/sq.ft.
Total inflow at boundaries = -.20433E-02g/sq.ft.
Mass discrepancy = .00000 g/sq.ft.

Polygon 1
At time = 2.00, total mass in vadose zone = .30640 g/sq.ft.
Mass in gas phase = .39304E-01g/sq.ft.
Mass in liquid phase = .16817 g/sq.ft.
Mass sorbed = .98924E-01g/sq.ft.

Since last printout at time = 1.00
Change in Total Mass = -.20392E-02g/sq.ft.
Advection in from atmosphere = .00000 g/sq.ft.
Advection in from water table = -.18749E-02g/sq.ft.
Diffusion in from atmosphere = -.16425E-03g/sq.ft.
Diffusion in from water table = .00000 g/sq.ft.
Total inflow at boundaries = -.20392E-02g/sq.ft.
Mass discrepancy = -.20955E-08g/sq.ft.

Since beginning of run at time = 0.0
Change in Total Mass = -.40825E-02g/sq.ft.
Advection in from atmosphere = .00000 g/sq.ft.
Advection in from water table = -.37595E-02g/sq.ft.
Diffusion in from atmosphere = -.32304E-03g/sq.ft.
Diffusion in from water table = .00000 g/sq.ft.
Total inflow at boundaries = -.40825E-02g/sq.ft.
Mass discrepancy = -.18626E-08g/sq.ft.

```
Polygon   1
At time =       3.00, total mass in vadose zone =     .30436    g/sq.ft.
Mass in gas phase     =       .39043E-01g/sq.ft.
Mass in liquid phase  =       .16705    g/sq.ft.
Mass sorbed           =       .98267E-01g/sq.ft.

Since last printout at time =       2.00
               Change in Total Mass =     -.20336E-02g/sq.ft.
                    Advection in from atmosphere =       .00000    g/sq.ft.
                    Advection in from water table =     -.18649E-02g/sq.ft.
                    Diffusion in from atmosphere =      -.16878E-03g/sq.ft.
                    Diffusion in from water table =      .00000    g/sq.ft.
               Total inflow at boundaries =     -.20337E-02g/sq.ft.
               Mass discrepancy =      .37719E-07g/sq.ft.

Since beginning of run at time = 0.0
               Change in Total Mass =     -.61162E-02g/sq.ft.
                    Advection in from atmosphere =       .00000    g/sq.ft.
                    Advection in from water table =     -.56244E-02g/sq.ft.
                    Diffusion in from atmosphere =      -.49182E-03g/sq.ft.
                    Diffusion in from water table =      .00000    g/sq.ft.
               Total inflow at boundaries =     -.61162E-02g/sq.ft.
               Mass discrepancy =      .35856E-07g/sq.ft.


Polygon   1
At time =       4.00, total mass in vadose zone =     .30234    g/sq.ft.
Mass in gas phase     =       .38783E-01g/sq.ft.
Mass in liquid phase  =       .16594    g/sq.ft.
Mass sorbed           =       .97613E-01g/sq.ft.

Since last printout at time =       3.00
               Change in Total Mass =     -.20269E-02g/sq.ft.
                    Advection in from atmosphere =       .00000    g/sq.ft.
                    Advection in from water table =     -.18544E-02g/sq.ft.
                    Diffusion in from atmosphere =      -.17252E-03g/sq.ft.
                    Diffusion in from water table =      .00000    g/sq.ft.
               Total inflow at boundaries =     -.20269E-02g/sq.ft.
               Mass discrepancy =      .11874E-07g/sq.ft.

Since beginning of run at time = 0.0
               Change in Total Mass =     -.81430E-02g/sq.ft.
                    Advection in from atmosphere =       .00000    g/sq.ft.
                    Advection in from water table =     -.74787E-02g/sq.ft.
                    Diffusion in from atmosphere =      -.66434E-03g/sq.ft.
                    Diffusion in from water table =      .00000    g/sq.ft.
               Total inflow at boundaries =     -.81431E-02g/sq.ft.
               Mass discrepancy =      .47497E-07g/sq.ft.


Polygon   1
At time =       5.00, total mass in vadose zone =     .30032    g/sq.ft.
Mass in gas phase     =       .38524E-01g/sq.ft.
Mass in liquid phase  =       .16483    g/sq.ft.
Mass sorbed           =       .96961E-01g/sq.ft.

Since last printout at time =       4.00
               Change in Total Mass =     -.20191E-02g/sq.ft.
```

```
                    Advection in from atmosphere =       .00000    g/sq.ft.
                    Advection in from water table =     -.18435E-02g/sq.ft.
                    Diffusion in from atmosphere =      -.17559E-03g/sq.ft.
                    Diffusion in from water table =      .00000    g/sq.ft.
               Total inflow at boundaries =     -.20191E-02g/sq.ft.
               Mass discrepancy =     -.25844E-07g/sq.ft.

Since beginning of run at time = 0.0
               Change in Total Mass =     -.10162E-01g/sq.ft.
                    Advection in from atmosphere =       .00000    g/sq.ft.
                    Advection in from water table =     -.93222E-02g/sq.ft.
                    Diffusion in from atmosphere =      -.83993E-03g/sq.ft.
                    Diffusion in from water table =      .00000    g/sq.ft.
               Total inflow at boundaries =     -.10162E-01g/sq.ft.
               Mass discrepancy =      .22352E-07g/sq.ft.


Polygon   1
At time =       6.00, total mass in vadose zone =     .29831    g/sq.ft.
Mass in gas phase     =       .38266E-01g/sq.ft.
Mass in liquid phase  =       .16373    g/sq.ft.
Mass sorbed           =       .96312E-01g/sq.ft.

Since last printout at time =       5.00
               Change in Total Mass =     -.20102E-02g/sq.ft.
                    Advection in from atmosphere =       .00000    g/sq.ft.
                    Advection in from water table =     -.18322E-02g/sq.ft.
                    Diffusion in from atmosphere =      -.17808E-03g/sq.ft.
                    Diffusion in from water table =      .00000    g/sq.ft.
               Total inflow at boundaries =     -.20103E-02g/sq.ft.
               Mass discrepancy =      .25844E-07g/sq.ft.

Since beginning of run at time = 0.0
               Change in Total Mass =     -.12172E-01g/sq.ft.
                    Advection in from atmosphere =       .00000    g/sq.ft.
                    Advection in from water table =     -.11154E-01g/sq.ft.
                    Diffusion in from atmosphere =      -.10180E-02g/sq.ft.
                    Diffusion in from water table =      .00000    g/sq.ft.
               Total inflow at boundaries =     -.12172E-01g/sq.ft.
               Mass discrepancy =      .48429E-07g/sq.ft.


Polygon   1
At time =       7.00, total mass in vadose zone =     .29631    g/sq.ft.
Mass in gas phase     =       .38010E-01g/sq.ft.
Mass in liquid phase  =       .16263    g/sq.ft.
Mass sorbed           =       .95666E-01g/sq.ft.

Since last printout at time =       6.00
               Change in Total Mass =     -.20007E-02g/sq.ft.
                    Advection in from atmosphere =       .00000    g/sq.ft.
                    Advection in from water table =     -.18206E-02g/sq.ft.
                    Diffusion in from atmosphere =      -.18007E-03g/sq.ft.
                    Diffusion in from water table =      .00000    g/sq.ft.
               Total inflow at boundaries =     -.20006E-02g/sq.ft.
               Mass discrepancy =     -.37719E-07g/sq.ft.

Since beginning of run at time = 0.0
               Change in Total Mass =     -.14173E-01g/sq.ft.
                    Advection in from atmosphere =       .00000    g/sq.ft.
```

```
                Advection in from water table =     -.12975E-01g/sq.ft.
                Diffusion in from atmosphere =      -.11981E-02g/sq.ft.
                Diffusion in from water table =      .00000    g/sq.ft.
           Total inflow at boundaries =     -.14173E-01g/sq.ft.
           Mass discrepancy =      .10245E-07g/sq.ft.


Polygon   1
At time =       8.00, total mass in vadose zone =     .29432    g/sq.ft.
Mass in gas phase     =       .37754E-01g/sq.ft.
Mass in liquid phase  =       .16154    g/sq.ft.
Mass sorbed           =       .95023E-01g/sq.ft.

Since last printout at time =       7.00
           Change in Total Mass =     -.19902E-02g/sq.ft.
                Advection in from atmosphere =       .00000    g/sq.ft.
                Advection in from water table =     -.18087E-02g/sq.ft.
                Diffusion in from atmosphere =      -.18162E-03g/sq.ft.
                Diffusion in from water table =      .00000    g/sq.ft.
           Total inflow at boundaries =     -.19903E-02g/sq.ft.
           Mass discrepancy =      .49127E-07g/sq.ft.

Since beginning of run at time = 0.0
           Change in Total Mass =     -.16163E-01g/sq.ft.
                Advection in from atmosphere =       .00000    g/sq.ft.
                Advection in from water table =     -.14784E-01g/sq.ft.
                Diffusion in from atmosphere =      -.13797E-02g/sq.ft.
                Diffusion in from water table =      .00000    g/sq.ft.
           Total inflow at boundaries =     -.16163E-01g/sq.ft.
           Mass discrepancy =      .59605E-07g/sq.ft.


Polygon   1
At time =       9.00, total mass in vadose zone =     .29234    g/sq.ft.
Mass in gas phase     =       .37501E-01g/sq.ft.
Mass in liquid phase  =       .16045    g/sq.ft.
Mass sorbed           =       .94384E-01g/sq.ft.

Since last printout at time =       8.00
           Change in Total Mass =     -.19794E-02g/sq.ft.
                Advection in from atmosphere =       .00000    g/sq.ft.
                Advection in from water table =     -.17965E-02g/sq.ft.
                Diffusion in from atmosphere =      -.18280E-03g/sq.ft.
                Diffusion in from water table =      .00000    g/sq.ft.
           Total inflow at boundaries =     -.19793E-02g/sq.ft.
           Mass discrepancy =     -.18859E-07g/sq.ft.

Since beginning of run at time = 0.0
           Change in Total Mass =     -.18143E-01g/sq.ft.
                Advection in from atmosphere =       .00000    g/sq.ft.
                Advection in from water table =     -.16580E-01g/sq.ft.
                Diffusion in from atmosphere =      -.15625E-02g/sq.ft.
                Diffusion in from water table =      .00000    g/sq.ft.
           Total inflow at boundaries =     -.18143E-01g/sq.ft.
           Mass discrepancy =      .40978E-07g/sq.ft.


Polygon   1
At time =      10.00, total mass in vadose zone =     .29037    g/sq.ft.
Mass in gas phase     =       .37248E-01g/sq.ft.
```

```
Mass in liquid phase  =        .15937    g/sq.ft.
Mass sorbed           =        .93749E-01g/sq.ft.

Since last printout at time =       9.00
               Change in Total Mass =     -.19678E-02g/sq.ft.
                    Advection in from atmosphere =       .00000    g/sq.ft.
                    Advection in from water table =     -.17842E-02g/sq.ft.
                    Diffusion in from atmosphere =      -.18367E-03g/sq.ft.
                    Diffusion in from water table =      .00000    g/sq.ft.
               Total inflow at boundaries =     -.19679E-02g/sq.ft.
               Mass discrepancy =      .72876E-07g/sq.ft.

Since beginning of run at time = 0.0
               Change in Total Mass =     -.20110E-01g/sq.ft.
                    Advection in from atmosphere =       .00000    g/sq.ft.
                    Advection in from water table =     -.18364E-01g/sq.ft.
                    Diffusion in from atmosphere =      -.17462E-02g/sq.ft.
                    Diffusion in from water table =      .00000    g/sq.ft.
               Total inflow at boundaries =     -.20111E-01g/sq.ft.
               Mass discrepancy =      .11362E-06g/sq.ft.


Polygon   1
At time =      11.00, total mass in vadose zone =     .28841    g/sq.ft.
Mass in gas phase     =        .36997E-01g/sq.ft.
Mass in liquid phase  =        .15830    g/sq.ft.
Mass sorbed           =        .93118E-01g/sq.ft.

Since last printout at time =      10.00
               Change in Total Mass =     -.19560E-02g/sq.ft.
                    Advection in from atmosphere =       .00000    g/sq.ft.
                    Advection in from water table =     -.17718E-02g/sq.ft.
                    Diffusion in from atmosphere =      -.18425E-03g/sq.ft.
                    Diffusion in from water table =      .00000    g/sq.ft.
               Total inflow at boundaries =     -.19561E-02g/sq.ft.
               Mass discrepancy =      .35856E-07g/sq.ft.

Since beginning of run at time = 0.0
               Change in Total Mass =     -.22066E-01g/sq.ft.
                    Advection in from atmosphere =       .00000    g/sq.ft.
                    Advection in from water table =     -.20136E-01g/sq.ft.
                    Diffusion in from atmosphere =      -.19304E-02g/sq.ft.
                    Diffusion in from water table =      .00000    g/sq.ft.
               Total inflow at boundaries =     -.22067E-01g/sq.ft.
               Mass discrepancy =      .14901E-06g/sq.ft.


Polygon   1
At time =      12.00, total mass in vadose zone =     .28647    g/sq.ft.
Mass in gas phase     =        .36748E-01g/sq.ft.
Mass in liquid phase  =        .15723    g/sq.ft.
Mass sorbed           =        .92490E-01g/sq.ft.

Since last printout at time =      11.00
               Change in Total Mass =     -.19440E-02g/sq.ft.
                    Advection in from atmosphere =       .00000    g/sq.ft.
                    Advection in from water table =     -.17593E-02g/sq.ft.
                    Diffusion in from atmosphere =      -.18458E-03g/sq.ft.
                    Diffusion in from water table =      .00000    g/sq.ft.
               Total inflow at boundaries =     -.19439E-02g/sq.ft.
```

Mass discrepancy = -.98255E-07g/sq.ft.

Since beginning of run at time = 0.0
Change in Total Mass = -.24010E-01g/sq.ft.
Advection in from atmosphere = .00000 g/sq.ft.
Advection in from water table = -.21895E-01g/sq.ft.
Diffusion in from atmosphere = -.21150E-02g/sq.ft.
Diffusion in from water table = .00000 g/sq.ft.
Total inflow at boundaries = -.24010E-01g/sq.ft.
Mass discrepancy = .52154E-07g/sq.ft.

Polygon 1
At time = 13.00, total mass in vadose zone = .28454 g/sq.ft.
Mass in gas phase = .36500E-01g/sq.ft.
Mass in liquid phase = .15617 g/sq.ft.
Mass sorbed = .91866E-01g/sq.ft.

Since last printout at time = 12.00
Change in Total Mass = -.19315E-02g/sq.ft.
Advection in from atmosphere = .00000 g/sq.ft.
Advection in from water table = -.17468E-02g/sq.ft.
Diffusion in from atmosphere = -.18471E-03g/sq.ft.
Diffusion in from water table = .00000 g/sq.ft.
Total inflow at boundaries = -.19315E-02g/sq.ft.
Mass discrepancy = .20838E-07g/sq.ft.

Since beginning of run at time = 0.0
Change in Total Mass = -.25942E-01g/sq.ft.
Advection in from atmosphere = .00000 g/sq.ft.
Advection in from water table = -.23642E-01g/sq.ft.
Diffusion in from atmosphere = -.22997E-02g/sq.ft.
Diffusion in from water table = .00000 g/sq.ft.
Total inflow at boundaries = -.25942E-01g/sq.ft.
Mass discrepancy = .72643E-07g/sq.ft.

Polygon 1
At time = 14.00, total mass in vadose zone = .28262 g/sq.ft.
Mass in gas phase = .36254E-01g/sq.ft.
Mass in liquid phase = .15512 g/sq.ft.
Mass sorbed = .91247E-01g/sq.ft.

Since last printout at time = 13.00
Change in Total Mass = -.19190E-02g/sq.ft.
Advection in from atmosphere = .00000 g/sq.ft.
Advection in from water table = -.17344E-02g/sq.ft.
Diffusion in from atmosphere = -.18466E-03g/sq.ft.
Diffusion in from water table = .00000 g/sq.ft.
Total inflow at boundaries = -.19190E-02g/sq.ft.
Mass discrepancy = .18394E-07g/sq.ft.

Since beginning of run at time = 0.0
Change in Total Mass = -.27861E-01g/sq.ft.
Advection in from atmosphere = .00000 g/sq.ft.
Advection in from water table = -.25377E-01g/sq.ft.
Diffusion in from atmosphere = -.24844E-02g/sq.ft.
Diffusion in from water table = .00000 g/sq.ft.
Total inflow at boundaries = -.27861E-01g/sq.ft.
Mass discrepancy = .91270E-07g/sq.ft.

```
Polygon   1
At time =      15.00, total mass in vadose zone =     .28071    g/sq.ft.
Mass in gas phase     =       .36009E-01g/sq.ft.
Mass in liquid phase  =       .15407    g/sq.ft.
Mass sorbed           =       .90631E-01g/sq.ft.

Since last printout at time =      14.00
               Change in Total Mass =     -.19064E-02g/sq.ft.
                    Advection in from atmosphere =       .00000    g/sq.ft.
                    Advection in from water table =     -.17220E-02g/sq.ft.
                    Diffusion in from atmosphere =      -.18444E-03g/sq.ft.
                    Diffusion in from water table =      .00000    g/sq.ft.
               Total inflow at boundaries =     -.19064E-02g/sq.ft.
               Mass discrepancy =     -.13970E-07g/sq.ft.

Since beginning of run at time = 0.0
               Change in Total Mass =     -.29767E-01g/sq.ft.
                    Advection in from atmosphere =       .00000    g/sq.ft.
                    Advection in from water table =     -.27099E-01g/sq.ft.
                    Diffusion in from atmosphere =      -.26688E-02g/sq.ft.
                    Diffusion in from water table =      .00000    g/sq.ft.
               Total inflow at boundaries =     -.29767E-01g/sq.ft.
               Mass discrepancy =      .78231E-07g/sq.ft.


Polygon   1
At time =      16.00, total mass in vadose zone =     .27882    g/sq.ft.
Mass in gas phase     =       .35766E-01g/sq.ft.
Mass in liquid phase  =       .15303    g/sq.ft.
Mass sorbed           =       .90020E-01g/sq.ft.

Since last printout at time =      15.00
               Change in Total Mass =     -.18937E-02g/sq.ft.
                    Advection in from atmosphere =       .00000    g/sq.ft.
                    Advection in from water table =     -.17097E-02g/sq.ft.
                    Diffusion in from atmosphere =      -.18409E-03g/sq.ft.
                    Diffusion in from water table =      .00000    g/sq.ft.
               Total inflow at boundaries =     -.18938E-02g/sq.ft.
               Mass discrepancy =      .36554E-07g/sq.ft.

Since beginning of run at time = 0.0
               Change in Total Mass =     -.31661E-01g/sq.ft.
                    Advection in from atmosphere =       .00000    g/sq.ft.
                    Advection in from water table =     -.28808E-01g/sq.ft.
                    Diffusion in from atmosphere =      -.28529E-02g/sq.ft.
                    Diffusion in from water table =      .00000    g/sq.ft.
               Total inflow at boundaries =     -.31661E-01g/sq.ft.
               Mass discrepancy =      .11548E-06g/sq.ft.


Polygon   1
At time =      17.00, total mass in vadose zone =     .27694    g/sq.ft.
Mass in gas phase     =       .35525E-01g/sq.ft.
Mass in liquid phase  =       .15200    g/sq.ft.
Mass sorbed           =       .89412E-01g/sq.ft.

Since last printout at time =      16.00
               Change in Total Mass =     -.18811E-02g/sq.ft.
```

Advection in from atmosphere = .00000 g/sq.ft.
Advection in from water table = -.16975E-02g/sq.ft.
Diffusion in from atmosphere = -.18361E-03g/sq.ft.
Diffusion in from water table = .00000 g/sq.ft.
Total inflow at boundaries = -.18811E-02g/sq.ft.
Mass discrepancy = .38417E-08g/sq.ft.

Since beginning of run at time = 0.0
Change in Total Mass = -.33542E-01g/sq.ft.
Advection in from atmosphere = .00000 g/sq.ft.
Advection in from water table = -.30506E-01g/sq.ft.
Diffusion in from atmosphere = -.30365E-02g/sq.ft.
Diffusion in from water table = .00000 g/sq.ft.
Total inflow at boundaries = -.33542E-01g/sq.ft.
Mass discrepancy = .11921E-06g/sq.ft.

Polygon 1
At time = 18.00, total mass in vadose zone = .27507 g/sq.ft.
Mass in gas phase = .35285E-01g/sq.ft.
Mass in liquid phase = .15097 g/sq.ft.
Mass sorbed = .88809E-01g/sq.ft.

Since last printout at time = 17.00
Change in Total Mass = -.18685E-02g/sq.ft.
Advection in from atmosphere = .00000 g/sq.ft.
Advection in from water table = -.16855E-02g/sq.ft.
Diffusion in from atmosphere = -.18303E-03g/sq.ft.
Diffusion in from water table = .00000 g/sq.ft.
Total inflow at boundaries = -.18685E-02g/sq.ft.
Mass discrepancy = .11874E-07g/sq.ft.

Since beginning of run at time = 0.0
Change in Total Mass = -.35411E-01g/sq.ft.
Advection in from atmosphere = .00000 g/sq.ft.
Advection in from water table = -.32191E-01g/sq.ft.
Diffusion in from atmosphere = -.32195E-02g/sq.ft.
Diffusion in from water table = .00000 g/sq.ft.
Total inflow at boundaries = -.35411E-01g/sq.ft.
Mass discrepancy = .13039E-06g/sq.ft.

Polygon 1
At time = 19.00, total mass in vadose zone = .27321 g/sq.ft.
Mass in gas phase = .35047E-01g/sq.ft.
Mass in liquid phase = .14996 g/sq.ft.
Mass sorbed = .88210E-01g/sq.ft.

Since last printout at time = 18.00
Change in Total Mass = -.18560E-02g/sq.ft.
Advection in from atmosphere = .00000 g/sq.ft.
Advection in from water table = -.16736E-02g/sq.ft.
Diffusion in from atmosphere = -.18236E-03g/sq.ft.
Diffusion in from water table = .00000 g/sq.ft.
Total inflow at boundaries = -.18560E-02g/sq.ft.
Mass discrepancy = -.31898E-07g/sq.ft.

Since beginning of run at time = 0.0
Change in Total Mass = -.37267E-01g/sq.ft.
Advection in from atmosphere = .00000 g/sq.ft.

```
                Advection in from water table =     -.33865E-01g/sq.ft.
                Diffusion in from atmosphere =      -.34019E-02g/sq.ft.
                Diffusion in from water table =      .00000    g/sq.ft.
           Total inflow at boundaries =     -.37267E-01g/sq.ft.
           Mass discrepancy =      .96858E-07g/sq.ft.


Polygon   1
At time =      20.00, total mass in vadose zone =     .27137    g/sq.ft.
Mass in gas phase     =       .34811E-01g/sq.ft.
Mass in liquid phase  =       .14894    g/sq.ft.
Mass sorbed           =       .87615E-01g/sq.ft.

Since last printout at time =      19.00
           Change in Total Mass =     -.18435E-02g/sq.ft.
                Advection in from atmosphere =       .00000    g/sq.ft.
                Advection in from water table =     -.16619E-02g/sq.ft.
                Diffusion in from atmosphere =      -.18161E-03g/sq.ft.
                Diffusion in from water table =      .00000    g/sq.ft.
           Total inflow at boundaries =     -.18436E-02g/sq.ft.
           Mass discrepancy =      .11758E-07g/sq.ft.

Since beginning of run at time = 0.0
           Change in Total Mass =     -.39110E-01g/sq.ft.
                Advection in from atmosphere =       .00000    g/sq.ft.
                Advection in from water table =     -.35527E-01g/sq.ft.
                Diffusion in from atmosphere =      -.35835E-02g/sq.ft.
                Diffusion in from water table =      .00000    g/sq.ft.
           Total inflow at boundaries =     -.39110E-01g/sq.ft.
           Mass discrepancy =      .10803E-06g/sq.ft.


Polygon   1
At time =      21.00, total mass in vadose zone =     .26954    g/sq.ft.
Mass in gas phase     =       .34576E-01g/sq.ft.
Mass in liquid phase  =       .14794    g/sq.ft.
Mass sorbed           =       .87024E-01g/sq.ft.

Since last printout at time =      20.00
           Change in Total Mass =     -.18312E-02g/sq.ft.
                Advection in from atmosphere =       .00000    g/sq.ft.
                Advection in from water table =     -.16504E-02g/sq.ft.
                Diffusion in from atmosphere =      -.18079E-03g/sq.ft.
                Diffusion in from water table =      .00000    g/sq.ft.
           Total inflow at boundaries =     -.18312E-02g/sq.ft.
           Mass discrepancy =      .79162E-08g/sq.ft.

Since beginning of run at time = 0.0
           Change in Total Mass =     -.40942E-01g/sq.ft.
                Advection in from atmosphere =       .00000    g/sq.ft.
                Advection in from water table =     -.37177E-01g/sq.ft.
                Diffusion in from atmosphere =      -.37643E-02g/sq.ft.
                Diffusion in from water table =      .00000    g/sq.ft.
           Total inflow at boundaries =     -.40942E-01g/sq.ft.
           Mass discrepancy =      .11921E-06g/sq.ft.


Polygon   1
At time =      22.00, total mass in vadose zone =     .26772    g/sq.ft.
Mass in gas phase     =       .34343E-01g/sq.ft.
```

Mass in liquid phase = .14694 g/sq.ft.
Mass sorbed = .86436E-01g/sq.ft.

Since last printout at time = 21.00
Change in Total Mass = -.18190E-02g/sq.ft.
Advection in from atmosphere = .00000 g/sq.ft.
Advection in from water table = -.16391E-02g/sq.ft.
Diffusion in from atmosphere = -.17991E-03g/sq.ft.
Diffusion in from water table = .00000 g/sq.ft.
Total inflow at boundaries = -.18190E-02g/sq.ft.
Mass discrepancy = .26077E-07g/sq.ft.

Since beginning of run at time = 0.0
Change in Total Mass = -.42760E-01g/sq.ft.
Advection in from atmosphere = .00000 g/sq.ft.
Advection in from water table = -.38816E-01g/sq.ft.
Diffusion in from atmosphere = -.39442E-02g/sq.ft.
Diffusion in from water table = .00000 g/sq.ft.
Total inflow at boundaries = -.42761E-01g/sq.ft.
Mass discrepancy = .14529E-06g/sq.ft.

Polygon 1
At time = 23.00, total mass in vadose zone = .26591 g/sq.ft.
Mass in gas phase = .34111E-01g/sq.ft.
Mass in liquid phase = .14595 g/sq.ft.
Mass sorbed = .85853E-01g/sq.ft.

Since last printout at time = 22.00
Change in Total Mass = -.18069E-02g/sq.ft.
Advection in from atmosphere = .00000 g/sq.ft.
Advection in from water table = -.16279E-02g/sq.ft.
Diffusion in from atmosphere = -.17898E-03g/sq.ft.
Diffusion in from water table = .00000 g/sq.ft.
Total inflow at boundaries = -.18069E-02g/sq.ft.
Mass discrepancy = .12224E-07g/sq.ft.

Since beginning of run at time = 0.0
Change in Total Mass = -.44567E-01g/sq.ft.
Advection in from atmosphere = .00000 g/sq.ft.
Advection in from water table = -.40444E-01g/sq.ft.
Diffusion in from atmosphere = -.41232E-02g/sq.ft.
Diffusion in from water table = .00000 g/sq.ft.
Total inflow at boundaries = -.44567E-01g/sq.ft.
Mass discrepancy = .15646E-06g/sq.ft.

Polygon 1
At time = 24.00, total mass in vadose zone = .26412 g/sq.ft.
Mass in gas phase = .33881E-01g/sq.ft.
Mass in liquid phase = .14496 g/sq.ft.
Mass sorbed = .85273E-01g/sq.ft.

Since last printout at time = 23.00
Change in Total Mass = -.17949E-02g/sq.ft.
Advection in from atmosphere = .00000 g/sq.ft.
Advection in from water table = -.16169E-02g/sq.ft.
Diffusion in from atmosphere = -.17801E-03g/sq.ft.
Diffusion in from water table = .00000 g/sq.ft.
Total inflow at boundaries = -.17949E-02g/sq.ft.

Mass discrepancy = -.10477E-08g/sq.ft.

Since beginning of run at time = 0.0
Change in Total Mass = -.46362E-01g/sq.ft.
Advection in from atmosphere = .00000 g/sq.ft.
Advection in from water table = -.42061E-01g/sq.ft.
Diffusion in from atmosphere = -.43012E-02g/sq.ft.
Diffusion in from water table = .00000 g/sq.ft.
Total inflow at boundaries = -.46362E-01g/sq.ft.
Mass discrepancy = .15646E-06g/sq.ft.

Polygon 1
At time = 25.00, total mass in vadose zone = .26233 g/sq.ft.
Mass in gas phase = .33652E-01g/sq.ft.
Mass in liquid phase = .14399 g/sq.ft.
Mass sorbed = .84698E-01g/sq.ft.

Since last printout at time = 24.00
Change in Total Mass = -.17830E-02g/sq.ft.
Advection in from atmosphere = .00000 g/sq.ft.
Advection in from water table = -.16060E-02g/sq.ft.
Diffusion in from atmosphere = -.17699E-03g/sq.ft.
Diffusion in from water table = .00000 g/sq.ft.
Total inflow at boundaries = -.17830E-02g/sq.ft.
Mass discrepancy = -.13039E-07g/sq.ft.

Since beginning of run at time = 0.0
Change in Total Mass = -.48145E-01g/sq.ft.
Advection in from atmosphere = .00000 g/sq.ft.
Advection in from water table = -.43667E-01g/sq.ft.
Diffusion in from atmosphere = -.44782E-02g/sq.ft.
Diffusion in from water table = .00000 g/sq.ft.
Total inflow at boundaries = -.48145E-01g/sq.ft.
Mass discrepancy = .14156E-06g/sq.ft.

Polygon 1
At time = 26.00, total mass in vadose zone = .26056 g/sq.ft.
Mass in gas phase = .33425E-01g/sq.ft.
Mass in liquid phase = .14301 g/sq.ft.
Mass sorbed = .84126E-01g/sq.ft.

Since last printout at time = 25.00
Change in Total Mass = -.17713E-02g/sq.ft.
Advection in from atmosphere = .00000 g/sq.ft.
Advection in from water table = -.15953E-02g/sq.ft.
Diffusion in from atmosphere = -.17594E-03g/sq.ft.
Diffusion in from water table = .00000 g/sq.ft.
Total inflow at boundaries = -.17712E-02g/sq.ft.
Mass discrepancy = -.24680E-07g/sq.ft.

Since beginning of run at time = 0.0
Change in Total Mass = -.49916E-01g/sq.ft.
Advection in from atmosphere = .00000 g/sq.ft.
Advection in from water table = -.45262E-01g/sq.ft.
Diffusion in from atmosphere = -.46541E-02g/sq.ft.
Diffusion in from water table = .00000 g/sq.ft.
Total inflow at boundaries = -.49917E-01g/sq.ft.
Mass discrepancy = .11548E-06g/sq.ft.

```
Polygon   1
At time =      27.00, total mass in vadose zone =     .25880    g/sq.ft.
Mass in gas phase     =       .33199E-01g/sq.ft.
Mass in liquid phase  =       .14205    g/sq.ft.
Mass sorbed           =       .83558E-01g/sq.ft.

Since last printout at time =      26.00
               Change in Total Mass =     -.17596E-02g/sq.ft.
                    Advection in from atmosphere =       .00000    g/sq.ft.
                    Advection in from water table =     -.15847E-02g/sq.ft.
                    Diffusion in from atmosphere =      -.17486E-03g/sq.ft.
                    Diffusion in from water table =      .00000    g/sq.ft.
               Total inflow at boundaries =     -.17596E-02g/sq.ft.
               Mass discrepancy =      .50757E-07g/sq.ft.

Since beginning of run at time = 0.0
               Change in Total Mass =     -.51676E-01g/sq.ft.
                    Advection in from atmosphere =       .00000    g/sq.ft.
                    Advection in from water table =     -.46847E-01g/sq.ft.
                    Diffusion in from atmosphere =      -.48290E-02g/sq.ft.
                    Diffusion in from water table =      .00000    g/sq.ft.
               Total inflow at boundaries =     -.51676E-01g/sq.ft.
               Mass discrepancy =      .16391E-06g/sq.ft.


Polygon   1
At time =      28.00, total mass in vadose zone =     .25706    g/sq.ft.
Mass in gas phase     =       .32975E-01g/sq.ft.
Mass in liquid phase  =       .14109    g/sq.ft.
Mass sorbed           =       .82993E-01g/sq.ft.

Since last printout at time =      27.00
               Change in Total Mass =     -.17481E-02g/sq.ft.
                    Advection in from atmosphere =       .00000    g/sq.ft.
                    Advection in from water table =     -.15743E-02g/sq.ft.
                    Diffusion in from atmosphere =      -.17376E-03g/sq.ft.
                    Diffusion in from water table =      .00000    g/sq.ft.
               Total inflow at boundaries =     -.17481E-02g/sq.ft.
               Mass discrepancy =      .31781E-07g/sq.ft.

Since beginning of run at time = 0.0
               Change in Total Mass =     -.53424E-01g/sq.ft.
                    Advection in from atmosphere =       .00000    g/sq.ft.
                    Advection in from water table =     -.48422E-01g/sq.ft.
                    Diffusion in from atmosphere =      -.50028E-02g/sq.ft.
                    Diffusion in from water table =      .00000    g/sq.ft.
               Total inflow at boundaries =     -.53424E-01g/sq.ft.
               Mass discrepancy =      .19744E-06g/sq.ft.


Polygon   1
At time =      29.00, total mass in vadose zone =     .25532    g/sq.ft.
Mass in gas phase     =       .32752E-01g/sq.ft.
Mass in liquid phase  =       .14013    g/sq.ft.
Mass sorbed           =       .82433E-01g/sq.ft.

Since last printout at time =      28.00
               Change in Total Mass =     -.17367E-02g/sq.ft.
```

```
                    Advection in from atmosphere =       .00000    g/sq.ft.
                    Advection in from water table =     -.15640E-02g/sq.ft.
                    Diffusion in from atmosphere =      -.17264E-03g/sq.ft.
                    Diffusion in from water table =      .00000    g/sq.ft.
               Total inflow at boundaries =     -.17367E-02g/sq.ft.
               Mass discrepancy =      .41910E-08g/sq.ft.

Since beginning of run at time = 0.0
               Change in Total Mass =     -.55161E-01g/sq.ft.
                    Advection in from atmosphere =       .00000    g/sq.ft.
                    Advection in from water table =     -.49986E-01g/sq.ft.
                    Diffusion in from atmosphere =      -.51754E-02g/sq.ft.
                    Diffusion in from water table =      .00000    g/sq.ft.
               Total inflow at boundaries =     -.55161E-01g/sq.ft.
               Mass discrepancy =      .20117E-06g/sq.ft.


Polygon   1
At time =      30.00, total mass in vadose zone =     .25359    g/sq.ft.
Mass in gas phase     =       .32531E-01g/sq.ft.
Mass in liquid phase  =       .13919    g/sq.ft.
Mass sorbed           =       .81876E-01g/sq.ft.

Since last printout at time =      29.00
               Change in Total Mass =     -.17254E-02g/sq.ft.
                    Advection in from atmosphere =       .00000    g/sq.ft.
                    Advection in from water table =     -.15539E-02g/sq.ft.
                    Diffusion in from atmosphere =      -.17150E-03g/sq.ft.
                    Diffusion in from water table =      .00000    g/sq.ft.
               Total inflow at boundaries =     -.17254E-02g/sq.ft.
               Mass discrepancy =     -.58208E-08g/sq.ft.

Since beginning of run at time = 0.0
               Change in Total Mass =     -.56886E-01g/sq.ft.
                    Advection in from atmosphere =       .00000    g/sq.ft.
                    Advection in from water table =     -.51539E-01g/sq.ft.
                    Diffusion in from atmosphere =      -.53469E-02g/sq.ft.
                    Diffusion in from water table =      .00000    g/sq.ft.
               Total inflow at boundaries =     -.56886E-01g/sq.ft.
               Mass discrepancy =      .19744E-06g/sq.ft.


GROUNDWATER IMPACT OF POLYGON   1

 Time        Mass per area (g/sq.ft.)      Total Mass (g)
     1.00          .18845E-02                 243.11
     2.00          .18749E-02                 241.87
     3.00          .18649E-02                 240.57
     4.00          .18544E-02                 239.21
     5.00          .18435E-02                 237.81
     6.00          .18322E-02                 236.35
     7.00          .18206E-02                 234.85
     8.00          .18087E-02                 233.32
     9.00          .17965E-02                 231.75
    10.00          .17842E-02                 230.17
    11.00          .17718E-02                 228.56
    12.00          .17593E-02                 226.95
    13.00          .17468E-02                 225.34
    14.00          .17344E-02                 223.73
    15.00          .17220E-02                 222.13
```

16.00	.17097E-02	220.55
17.00	.16975E-02	218.98
18.00	.16855E-02	217.43
19.00	.16736E-02	215.90
20.00	.16619E-02	214.39
21.00	.16504E-02	212.90
22.00	.16391E-02	211.44
23.00	.16279E-02	210.00
24.00	.16169E-02	208.58
25.00	.16060E-02	207.18
26.00	.15953E-02	205.79
27.00	.15847E-02	204.43
28.00	.15743E-02	203.09
29.00	.15640E-02	201.76
30.00	.15539E-02	200.45

****

****

TOTAL GROUNDWATER IMPACT

Time (yr)	Mass (g)	Cumulative Mass (g)
1.00	243.11	243.11
2.00	241.87	484.97
3.00	240.57	725.54
4.00	239.21	964.76
5.00	237.81	1202.6
6.00	236.35	1438.9
7.00	234.85	1673.8
8.00	233.32	1907.1
9.00	231.75	2138.8
10.00	230.17	2369.0
11.00	228.56	2597.6
12.00	226.95	2824.5
13.00	225.34	3049.9
14.00	223.73	3273.6
15.00	222.13	3495.7
16.00	220.55	3716.3
17.00	218.98	3935.3
18.00	217.43	4152.7
19.00	215.90	4368.6
20.00	214.39	4583.0
21.00	212.90	4795.9
22.00	211.44	5007.3
23.00	210.00	5217.3
24.00	208.58	5425.9
25.00	207.18	5633.1
26.00	205.79	5838.9
27.00	204.43	6043.3
28.00	203.09	6246.4
29.00	201.76	6448.1
30.00	200.45	6648.6

Polygon 23A
Time: .000

Cell	Cgas(g/cu.ft.)	Cliq(g/cu.ft.)	Csol
1	.28367E-05	.59972E-05	.19371E-10
2	.28367E-05	.59972E-05	.19371E-10
3	.28367E-05	.59972E-05	.19371E-10
4	.28367E-05	.59972E-05	.19371E-10
5	.28367E-05	.59972E-05	.19371E-10
6	.28367E-05	.59972E-05	.19371E-10
7	.83871E-03	.17732E-02	.57274E-08
8	.83871E-03	.17732E-02	.57274E-08
9	.83871E-03	.17732E-02	.57274E-08
10	.83871E-03	.17732E-02	.57274E-08
11	.83871E-03	.17732E-02	.57274E-08
12	.83871E-03	.17732E-02	.57274E-08
13	.20921E-02	.44229E-02	.14286E-07
14	.20921E-02	.44229E-02	.14286E-07
15	.20921E-02	.44229E-02	.14286E-07
16	.20921E-02	.44229E-02	.14286E-07
17	.20921E-02	.44229E-02	.14286E-07
18	.20921E-02	.44229E-02	.14286E-07
19	.33459E-02	.70737E-02	.22848E-07
20	.33459E-02	.70737E-02	.22848E-07
21	.33459E-02	.70737E-02	.22848E-07
22	.33459E-02	.70737E-02	.22848E-07
23	.33459E-02	.70737E-02	.22848E-07
24	.33459E-02	.70737E-02	.22848E-07
25	.45997E-02	.97245E-02	.31410E-07
26	.45997E-02	.97245E-02	.31410E-07
27	.45997E-02	.97245E-02	.31410E-07
28	.45997E-02	.97245E-02	.31410E-07
29	.45997E-02	.97245E-02	.31410E-07
30	.45997E-02	.97245E-02	.31410E-07
31	.58535E-02	.12375E-01	.39972E-07
32	.58535E-02	.12375E-01	.39972E-07
33	.58535E-02	.12375E-01	.39972E-07
34	.58535E-02	.12375E-01	.39972E-07
35	.58535E-02	.12375E-01	.39972E-07
36	.58535E-02	.12375E-01	.39972E-07
37	.71068E-02	.15025E-01	.48531E-07
38	.71068E-02	.15025E-01	.48531E-07
39	.71068E-02	.15025E-01	.48531E-07
40	.71068E-02	.15025E-01	.48531E-07
41	.71068E-02	.15025E-01	.48531E-07
42	.71068E-02	.15025E-01	.48531E-07
43	.83606E-02	.17676E-01	.57093E-07
44	.83606E-02	.17676E-01	.57093E-07
45	.83606E-02	.17676E-01	.57093E-07
46	.83606E-02	.17676E-01	.57093E-07
47	.83606E-02	.17676E-01	.57093E-07
48	.83606E-02	.17676E-01	.57093E-07
49	.96145E-02	.20327E-01	.65655E-07
50	.96145E-02	.20327E-01	.65655E-07
51	.96145E-02	.20327E-01	.65655E-07
52	.96145E-02	.20327E-01	.65655E-07
53	.96145E-02	.20327E-01	.65655E-07
54	.96145E-02	.20327E-01	.65655E-07
55	.10868E-01	.22976E-01	.74214E-07
56	.10868E-01	.22976E-01	.74214E-07

57	.10868E-01	.22976E-01	.74214E-07
58	.10868E-01	.22976E-01	.74214E-07
59	.10868E-01	.22976E-01	.74214E-07
60	.10868E-01	.22976E-01	.74214E-07

Polygon 23A
Time: 10.000

Cell	Cgas(g/cu.ft.)	Cliq(g/cu.ft.)	Csol
1	.33131E-04	.70044E-04	.22624E-09
2	.80159E-04	.16947E-03	.54739E-09
3	.13536E-03	.28618E-03	.92435E-09
4	.19676E-03	.41599E-03	.13436E-08
5	.26453E-03	.55927E-03	.18064E-08
6	.33994E-03	.71869E-03	.23214E-08
7	.45592E-03	.96388E-03	.31133E-08
8	.60609E-03	.12814E-02	.41389E-08
9	.76013E-03	.16070E-02	.51908E-08
10	.90107E-03	.19050E-02	.61532E-08
11	.10297E-02	.21770E-02	.70318E-08
12	.11541E-02	.24401E-02	.78814E-08
13	.13289E-02	.28095E-02	.90748E-08
14	.15473E-02	.32713E-02	.10566E-07
15	.17650E-02	.37316E-02	.12053E-07
16	.19568E-02	.41369E-02	.13362E-07
17	.21234E-02	.44892E-02	.14500E-07
18	.22763E-02	.48125E-02	.15544E-07
19	.24733E-02	.52290E-02	.16890E-07
20	.27097E-02	.57288E-02	.18504E-07
21	.29423E-02	.62205E-02	.20092E-07
22	.31464E-02	.66519E-02	.21486E-07
23	.33233E-02	.70260E-02	.22694E-07
24	.34849E-02	.73676E-02	.23797E-07
25	.36891E-02	.77993E-02	.25192E-07
26	.39315E-02	.83118E-02	.26847E-07
27	.41690E-02	.88139E-02	.28469E-07
28	.43771E-02	.92539E-02	.29890E-07
29	.45573E-02	.96350E-02	.31121E-07
30	.47216E-02	.99821E-02	.32242E-07
31	.49278E-02	.10418E-01	.33651E-07
32	.51718E-02	.10934E-01	.35317E-07
33	.54104E-02	.11438E-01	.36946E-07
34	.56192E-02	.11880E-01	.38372E-07
35	.57997E-02	.12262E-01	.39605E-07
36	.59638E-02	.12608E-01	.40725E-07
37	.61695E-02	.13043E-01	.42130E-07
38	.64125E-02	.13557E-01	.43789E-07
39	.66497E-02	.14059E-01	.45409E-07
40	.68566E-02	.14496E-01	.46822E-07
41	.70347E-02	.14873E-01	.48038E-07
42	.71958E-02	.15213E-01	.49138E-07
43	.73978E-02	.15640E-01	.50517E-07
44	.76362E-02	.16144E-01	.52145E-07
45	.78678E-02	.16634E-01	.53727E-07
46	.80680E-02	.17057E-01	.55094E-07
47	.82379E-02	.17416E-01	.56255E-07
48	.83892E-02	.17736E-01	.57288E-07
49	.85794E-02	.18138E-01	.58587E-07
50	.88038E-02	.18613E-01	.60119E-07
51	.90187E-02	.19067E-01	.61586E-07
52	.91989E-02	.19448E-01	.62817E-07

53	.93450E-02	.19757E-01	.63815E-07
54	.94680E-02	.20017E-01	.64655E-07
55	.96246E-02	.20348E-01	.65724E-07
56	.98091E-02	.20738E-01	.66984E-07
57	.99767E-02	.21092E-01	.68128E-07
58	.10101E-01	.21355E-01	.68977E-07
59	.10181E-01	.21524E-01	.69523E-07
60	.10226E-01	.21619E-01	.69830E-07

Polygon 23A
Time: 20.000

Cell	Cgas(g/cu.ft.)	Cliq(g/cu.ft.)	Csol
1	.34743E-04	.73452E-04	.23725E-09
2	.86579E-04	.18304E-03	.59123E-09
3	.14994E-03	.31700E-03	.10239E-08
4	.22181E-03	.46895E-03	.15147E-08
5	.30079E-03	.63592E-03	.20540E-08
6	.38652E-03	.81716E-03	.26394E-08
7	.48047E-03	.10158E-02	.32810E-08
8	.58502E-03	.12368E-02	.39950E-08
9	.70095E-03	.14819E-02	.47866E-08
10	.82649E-03	.17473E-02	.56439E-08
11	.95879E-03	.20270E-02	.65474E-08
12	.10958E-02	.23167E-02	.74830E-08
13	.12388E-02	.26190E-02	.84594E-08
14	.13911E-02	.29411E-02	.94996E-08
15	.15541E-02	.32857E-02	.10613E-07
16	.17253E-02	.36476E-02	.11782E-07
17	.19005E-02	.40181E-02	.12978E-07
18	.20766E-02	.43902E-02	.14180E-07
19	.22542E-02	.47657E-02	.15393E-07
20	.24369E-02	.51519E-02	.16641E-07
21	.26264E-02	.55526E-02	.17935E-07
22	.28207E-02	.59634E-02	.19262E-07
23	.30161E-02	.63765E-02	.20596E-07
24	.32097E-02	.67858E-02	.21918E-07
25	.34026E-02	.71937E-02	.23236E-07
26	.35985E-02	.76079E-02	.24574E-07
27	.37995E-02	.80327E-02	.25946E-07
28	.40036E-02	.84642E-02	.27339E-07
29	.42072E-02	.88948E-02	.28730E-07
30	.44078E-02	.93188E-02	.30100E-07
31	.46064E-02	.97387E-02	.31456E-07
32	.48069E-02	.10163E-01	.32825E-07
33	.50114E-02	.10595E-01	.34221E-07
34	.52180E-02	.11032E-01	.35633E-07
35	.54233E-02	.11466E-01	.37034E-07
36	.56245E-02	.11891E-01	.38408E-07
37	.58229E-02	.12311E-01	.39763E-07
38	.60222E-02	.12732E-01	.41124E-07
39	.62246E-02	.13160E-01	.42506E-07
40	.64281E-02	.13590E-01	.43896E-07
41	.66292E-02	.14015E-01	.45269E-07
42	.68250E-02	.14429E-01	.46606E-07
43	.70167E-02	.14835E-01	.47916E-07
44	.72080E-02	.15239E-01	.49222E-07
45	.74007E-02	.15646E-01	.50537E-07
46	.75927E-02	.16052E-01	.51849E-07
47	.77803E-02	.16449E-01	.53129E-07
48	.79602E-02	.16829E-01	.54359E-07

49	.81335E-02	.17196E-01	.55542E-07
50	.83033E-02	.17554E-01	.56701E-07
51	.84710E-02	.17909E-01	.57847E-07
52	.86343E-02	.18254E-01	.58962E-07
53	.87887E-02	.18581E-01	.60016E-07
54	.89306E-02	.18881E-01	.60985E-07
55	.90602E-02	.19155E-01	.61870E-07
56	.91800E-02	.19408E-01	.62688E-07
57	.92907E-02	.19642E-01	.63444E-07
58	.93889E-02	.19850E-01	.64115E-07
59	.94694E-02	.20020E-01	.64664E-07
60	.95276E-02	.20143E-01	.65062E-07

Polygon 23A
Time: 30.000

Cell	Cgas(g/cu.ft.)	Cliq(g/cu.ft.)	Csol
1	.33159E-04	.70104E-04	.22644E-09
2	.83031E-04	.17554E-03	.56700E-09
3	.14449E-03	.30547E-03	.98668E-09
4	.21465E-03	.45381E-03	.14658E-08
5	.29196E-03	.61725E-03	.19937E-08
6	.37564E-03	.79416E-03	.25651E-08
7	.46546E-03	.98405E-03	.31785E-08
8	.56158E-03	.11873E-02	.38349E-08
9	.66437E-03	.14046E-02	.45368E-08
10	.77414E-03	.16367E-02	.52864E-08
11	.89088E-03	.18835E-02	.60836E-08
12	.10143E-02	.21444E-02	.69265E-08
13	.11441E-02	.24188E-02	.78126E-08
14	.12800E-02	.27062E-02	.87411E-08
15	.14223E-02	.30070E-02	.97125E-08
16	.15709E-02	.33211E-02	.10727E-07
17	.17256E-02	.36481E-02	.11783E-07
18	.18856E-02	.39865E-02	.12876E-07
19	.20503E-02	.43346E-02	.14001E-07
20	.22190E-02	.46914E-02	.15153E-07
21	.23918E-02	.50566E-02	.16333E-07
22	.25685E-02	.54302E-02	.17539E-07
23	.27488E-02	.58114E-02	.18771E-07
24	.29321E-02	.61990E-02	.20023E-07
25	.31178E-02	.65915E-02	.21291E-07
26	.33054E-02	.69882E-02	.22572E-07
27	.34950E-02	.73889E-02	.23866E-07
28	.36865E-02	.77939E-02	.25174E-07
29	.38799E-02	.82027E-02	.26495E-07
30	.40745E-02	.86142E-02	.27824E-07
31	.42698E-02	.90271E-02	.29158E-07
32	.44655E-02	.94409E-02	.30494E-07
33	.46617E-02	.98556E-02	.31834E-07
34	.48584E-02	.10271E-01	.33177E-07
35	.50555E-02	.10688E-01	.34523E-07
36	.52525E-02	.11105E-01	.35868E-07
37	.54488E-02	.11520E-01	.37208E-07
38	.56441E-02	.11933E-01	.38542E-07
39	.58385E-02	.12343E-01	.39869E-07
40	.60319E-02	.12752E-01	.41190E-07
41	.62242E-02	.13159E-01	.42504E-07
42	.64149E-02	.13562E-01	.43806E-07
43	.66031E-02	.13960E-01	.45091E-07
44	.67885E-02	.14352E-01	.46357E-07

45	.69709E-02	.14738E-01	.47603E-07
46	.71503E-02	.15117E-01	.48828E-07
47	.73262E-02	.15489E-01	.50029E-07
48	.74977E-02	.15851E-01	.51200E-07
49	.76639E-02	.16203E-01	.52335E-07
50	.78241E-02	.16541E-01	.53429E-07
51	.79778E-02	.16866E-01	.54479E-07
52	.81246E-02	.17177E-01	.55481E-07
53	.82635E-02	.17470E-01	.56429E-07
54	.83933E-02	.17745E-01	.57316E-07
55	.85127E-02	.17997E-01	.58131E-07
56	.86204E-02	.18225E-01	.58866E-07
57	.87153E-02	.18426E-01	.59514E-07
58	.87964E-02	.18597E-01	.60068E-07
59	.88623E-02	.18736E-01	.60519E-07
60	.89112E-02	.18840E-01	.60853E-07

V-Leach, VER 1.1
Jake Turin, 11/91
PGA V-leach model, polygon screen-TCE-11/10/92-Poly23A.INP. New soil, Old chem.
1 polygons.
Timestep = 1.00 years. Simulation length = 30.00 years.
Printout every 1.00 years. Vertical profile stored every 10.00 years.
Koc = 123.60 ml/g, .43649E-02cu.ft./g
Kh = .47300 (dimensionless).
Aqueous solubility = 1100.0 mg/l, 31.149 g/cu.ft
Free air diffusion coefficient = .70290 sq. m/day, 2761.7 sq.ft./yr

Polygon 1
Polygon 23A
Polygon area = .12900E+06sq. ft.
60 cells, each cell 1.000 ft. thick.
Soil Properties:
Bulk density = 1.6400 g/ml, 46440. g/cu.ft.
Porosity = .3810 Volumetric water content = .2550
Organic carbon content = .00074000
Recharge Rate = .08202100 ft/yr
Conc. in recharge water = .00000 mg/l, .00000 g/cu.ft
Atmospheric concentration = .00000 mg/l, .00000 g/cu.ft
Water table is impermeable to gas diffusion.

Calculation of Total TCE Mass and Revised Vertical Distributions
in Polygon 23A using HGC Distribution equations and Revised Soil Physical Data

0.099 Cs **	Cz = (74.527z - 371.636)Cs

Cz (ug/L) Vert. Dist. Eq.	Calculated Depth Interval (z)	Total Depth Interval (feet)	Total Soil Conc Ct* (ug/Kg)	Mt (ug/cc)	Volume of Soil (cubic ft)	Mass TCE (grams)	Mass TCE (pounds)
0.099	3	6	0.06	9.73E-05	774000	2.13	0.00
29.61	9	6	17.74	0.03	774000	637.56	1.41
73.88	15	6	44.25	0.07	774000	1590.70	3.51
118.15	21	6	70.77	0.12	774000	2543.85	5.61
162.42	27	6	97.29	0.16	774000	3496.99	7.71
206.69	33	6	123.81	0.20	774000	4450.14	9.81
250.96	39	6	150.32	0.25	774000	5403.28	11.91
295.23	45	6	176.84	0.29	774000	6356.43	14.01
339.49	51	6	203.36	0.33	774000	7309.57	16.11
383.76	57	6	229.87	0.38	774000	8262.72	18.22
		60				40053.38	88.30

* Ct conversion based on Kgt of 0.599 L/Kg

** Cs Determined as mathematical average of VOC concentrations for polygon(s) listed in Table A-1 of HGC, 1989.

PGA V-leach model, polygon screen-TCE-11/10/92-Poly32A.INP. New soil, Old chem.

```
    1
       1.0          30.          1.0          10.
     123.6         .473        1100.        .7029
lygon 32A
    169500.           1.     .082021         1.64         .381         .255      .00074
        0.            0.          -1.
   60
    1     6        0.06
    7    12       16.48
   13    18       41.13
   19    24       65.77
   25    30       90.41
   31    36      115.05
   37    42      139.69
   43    48      164.34
   49    54      188.98
   55    60      213.62
```

V-Leach, VER 1.1
Jake Turin, 11/91
PGA V-leach model, polygon screen-TCE-11/10/92-Poly32A.INP. New soil, Old chem.

Polygon 1
At time = .00, total mass in vadose zone = .28853 g/sq.ft.
Mass in gas phase = .37012E-01g/sq.ft.
Mass in liquid phase = .15836 g/sq.ft.
Mass sorbed = .93155E-01g/sq.ft.

Polygon 1
At time = 1.00, total mass in vadose zone = .28663 g/sq.ft.
Mass in gas phase = .36769E-01g/sq.ft.
Mass in liquid phase = .15732 g/sq.ft.
Mass sorbed = .92542E-01g/sq.ft.

Since last printout at time = .00
Change in Total Mass = -.18990E-02g/sq.ft.
Advection in from atmosphere = .00000 g/sq.ft.
Advection in from water table = -.17513E-02g/sq.ft.
Diffusion in from atmosphere = -.14763E-03g/sq.ft.
Diffusion in from water table = .00000 g/sq.ft.
Total inflow at boundaries = -.18989E-02g/sq.ft.
Mass discrepancy = -.28405E-07g/sq.ft.

Since beginning of run at time = 0.0
Change in Total Mass = -.18990E-02g/sq.ft.
Advection in from atmosphere = .00000 g/sq.ft.
Advection in from water table = -.17513E-02g/sq.ft.
Diffusion in from atmosphere = -.14763E-03g/sq.ft.
Diffusion in from water table = .00000 g/sq.ft.
Total inflow at boundaries = -.18989E-02g/sq.ft.
Mass discrepancy = -.28405E-07g/sq.ft.

Polygon 1
At time = 2.00, total mass in vadose zone = .28474 g/sq.ft.
Mass in gas phase = .36525E-01g/sq.ft.
Mass in liquid phase = .15628 g/sq.ft.
Mass sorbed = .91930E-01g/sq.ft.

Since last printout at time = 1.00
Change in Total Mass = -.18951E-02g/sq.ft.
Advection in from atmosphere = .00000 g/sq.ft.
Advection in from water table = -.17424E-02g/sq.ft.
Diffusion in from atmosphere = -.15268E-03g/sq.ft.
Diffusion in from water table = .00000 g/sq.ft.
Total inflow at boundaries = -.18951E-02g/sq.ft.
Mass discrepancy = -.14086E-07g/sq.ft.

Since beginning of run at time = 0.0
Change in Total Mass = -.37941E-02g/sq.ft.
Advection in from atmosphere = .00000 g/sq.ft.
Advection in from water table = -.34937E-02g/sq.ft.
Diffusion in from atmosphere = -.30031E-03g/sq.ft.
Diffusion in from water table = .00000 g/sq.ft.
Total inflow at boundaries = -.37940E-02g/sq.ft.
Mass discrepancy = -.42375E-07g/sq.ft.

```
Polygon   1
At time =       3.00, total mass in vadose zone =     .28285    g/sq.ft.
Mass in gas phase     =       .36283E-01g/sq.ft.
Mass in liquid phase  =       .15524    g/sq.ft.
Mass sorbed           =       .91320E-01g/sq.ft.

Since last printout at time =       2.00
               Change in Total Mass =     -.18899E-02g/sq.ft.
                    Advection in from atmosphere =       .00000    g/sq.ft.
                    Advection in from water table =     -.17330E-02g/sq.ft.
                    Diffusion in from atmosphere =      -.15689E-03g/sq.ft.
                    Diffusion in from water table =      .00000    g/sq.ft.
               Total inflow at boundaries =     -.18899E-02g/sq.ft.
               Mass discrepancy =      .52038E-07g/sq.ft.

Since beginning of run at time = 0.0
               Change in Total Mass =     -.56840E-02g/sq.ft.
                    Advection in from atmosphere =       .00000    g/sq.ft.
                    Advection in from water table =     -.52268E-02g/sq.ft.
                    Diffusion in from atmosphere =      -.45720E-03g/sq.ft.
                    Diffusion in from water table =      .00000    g/sq.ft.
               Total inflow at boundaries =     -.56840E-02g/sq.ft.
               Mass discrepancy =      .97789E-08g/sq.ft.


Polygon   1
At time =       4.00, total mass in vadose zone =     .28096    g/sq.ft.
Mass in gas phase     =       .36041E-01g/sq.ft.
Mass in liquid phase  =       .15421    g/sq.ft.
Mass sorbed           =       .90712E-01g/sq.ft.

Since last printout at time =       3.00
               Change in Total Mass =     -.18836E-02g/sq.ft.
                    Advection in from atmosphere =       .00000    g/sq.ft.
                    Advection in from water table =     -.17233E-02g/sq.ft.
                    Diffusion in from atmosphere =      -.16036E-03g/sq.ft.
                    Diffusion in from water table =      .00000    g/sq.ft.
               Total inflow at boundaries =     -.18836E-02g/sq.ft.
               Mass discrepancy =      .21188E-07g/sq.ft.

Since beginning of run at time = 0.0
               Change in Total Mass =     -.75676E-02g/sq.ft.
                    Advection in from atmosphere =       .00000    g/sq.ft.
                    Advection in from water table =     -.69501E-02g/sq.ft.
                    Diffusion in from atmosphere =      -.61756E-03g/sq.ft.
                    Diffusion in from water table =      .00000    g/sq.ft.
               Total inflow at boundaries =     -.75676E-02g/sq.ft.
               Mass discrepancy =      .30734E-07g/sq.ft.


Polygon   1
At time =       5.00, total mass in vadose zone =     .27909    g/sq.ft.
Mass in gas phase     =       .35801E-01g/sq.ft.
Mass in liquid phase  =       .15318    g/sq.ft.
Mass sorbed           =       .90106E-01g/sq.ft.

Since last printout at time =       4.00
               Change in Total Mass =     -.18764E-02g/sq.ft.
```

```
                    Advection in from atmosphere =       .00000    g/sq.ft.
                    Advection in from water table =     -.17131E-02g/sq.ft.
                    Diffusion in from atmosphere =      -.16321E-03g/sq.ft.
                    Diffusion in from water table =      .00000    g/sq.ft.
               Total inflow at boundaries =     -.18764E-02g/sq.ft.
               Mass discrepancy =     -.63214E-07g/sq.ft.

Since beginning of run at time = 0.0
               Change in Total Mass =     -.94440E-02g/sq.ft.
                    Advection in from atmosphere =       .00000    g/sq.ft.
                    Advection in from water table =     -.86632E-02g/sq.ft.
                    Diffusion in from atmosphere =      -.78077E-03g/sq.ft.
                    Diffusion in from water table =      .00000    g/sq.ft.
               Total inflow at boundaries =     -.94440E-02g/sq.ft.
               Mass discrepancy =     -.32596E-07g/sq.ft.


Polygon   1
At time =       6.00, total mass in vadose zone =     .27722    g/sq.ft.
Mass in gas phase     =       .35561E-01g/sq.ft.
Mass in liquid phase  =       .15215    g/sq.ft.
Mass sorbed           =       .89503E-01g/sq.ft.

Since last printout at time =       5.00
               Change in Total Mass =     -.18681E-02g/sq.ft.
                    Advection in from atmosphere =       .00000    g/sq.ft.
                    Advection in from water table =     -.17027E-02g/sq.ft.
                    Diffusion in from atmosphere =      -.16552E-03g/sq.ft.
                    Diffusion in from water table =      .00000    g/sq.ft.
               Total inflow at boundaries =     -.18682E-02g/sq.ft.
               Mass discrepancy =      .69384E-07g/sq.ft.

Since beginning of run at time = 0.0
               Change in Total Mass =     -.11312E-01g/sq.ft.
                    Advection in from atmosphere =       .00000    g/sq.ft.
                    Advection in from water table =     -.10366E-01g/sq.ft.
                    Diffusion in from atmosphere =      -.94629E-03g/sq.ft.
                    Diffusion in from water table =      .00000    g/sq.ft.
               Total inflow at boundaries =     -.11312E-01g/sq.ft.
               Mass discrepancy =      .37253E-07g/sq.ft.


Polygon   1
At time =       7.00, total mass in vadose zone =     .27536    g/sq.ft.
Mass in gas phase     =       .35323E-01g/sq.ft.
Mass in liquid phase  =       .15113    g/sq.ft.
Mass sorbed           =       .88903E-01g/sq.ft.

Since last printout at time =       6.00
               Change in Total Mass =     -.18592E-02g/sq.ft.
                    Advection in from atmosphere =       .00000    g/sq.ft.
                    Advection in from water table =     -.16919E-02g/sq.ft.
                    Diffusion in from atmosphere =      -.16736E-03g/sq.ft.
                    Diffusion in from water table =      .00000    g/sq.ft.
               Total inflow at boundaries =     -.18592E-02g/sq.ft.
               Mass discrepancy =     -.30268E-08g/sq.ft.

Since beginning of run at time = 0.0
               Change in Total Mass =     -.13171E-01g/sq.ft.
                    Advection in from atmosphere =       .00000    g/sq.ft.
```

```
                Advection in from water table =     -.12058E-01g/sq.ft.
                Diffusion in from atmosphere =      -.11137E-02g/sq.ft.
                Diffusion in from water table =      .00000    g/sq.ft.
           Total inflow at boundaries =     -.13171E-01g/sq.ft.
           Mass discrepancy =      .34459E-07g/sq.ft.


Polygon   1
At time =       8.00, total mass in vadose zone =     .27351    g/sq.ft.
Mass in gas phase     =       .35085E-01g/sq.ft.
Mass in liquid phase  =       .15012    g/sq.ft.
Mass sorbed           =       .88305E-01g/sq.ft.

Since last printout at time =       7.00
           Change in Total Mass =     -.18496E-02g/sq.ft.
                Advection in from atmosphere =       .00000    g/sq.ft.
                Advection in from water table =     -.16808E-02g/sq.ft.
                Diffusion in from atmosphere =      -.16881E-03g/sq.ft.
                Diffusion in from water table =      .00000    g/sq.ft.
           Total inflow at boundaries =     -.18496E-02g/sq.ft.
           Mass discrepancy =     -.22934E-07g/sq.ft.

Since beginning of run at time = 0.0
           Change in Total Mass =     -.15021E-01g/sq.ft.
                Advection in from atmosphere =       .00000    g/sq.ft.
                Advection in from water table =     -.13738E-01g/sq.ft.
                Diffusion in from atmosphere =      -.12825E-02g/sq.ft.
                Diffusion in from water table =      .00000    g/sq.ft.
           Total inflow at boundaries =     -.15021E-01g/sq.ft.
           Mass discrepancy =      .12107E-07g/sq.ft.


Polygon   1
At time =       9.00, total mass in vadose zone =     .27167    g/sq.ft.
Mass in gas phase     =       .34849E-01g/sq.ft.
Mass in liquid phase  =       .14911    g/sq.ft.
Mass sorbed           =       .87711E-01g/sq.ft.

Since last printout at time =       8.00
           Change in Total Mass =     -.18394E-02g/sq.ft.
                Advection in from atmosphere =       .00000    g/sq.ft.
                Advection in from water table =     -.16695E-02g/sq.ft.
                Diffusion in from atmosphere =      -.16990E-03g/sq.ft.
                Diffusion in from water table =      .00000    g/sq.ft.
           Total inflow at boundaries =     -.18394E-02g/sq.ft.
           Mass discrepancy =      .53784E-07g/sq.ft.

Since beginning of run at time = 0.0
           Change in Total Mass =     -.16860E-01g/sq.ft.
                Advection in from atmosphere =       .00000    g/sq.ft.
                Advection in from water table =     -.15408E-01g/sq.ft.
                Diffusion in from atmosphere =      -.14524E-02g/sq.ft.
                Diffusion in from water table =      .00000    g/sq.ft.
           Total inflow at boundaries =     -.16860E-01g/sq.ft.
           Mass discrepancy =      .65193E-07g/sq.ft.


Polygon   1
At time =      10.00, total mass in vadose zone =     .26984    g/sq.ft.
Mass in gas phase     =       .34615E-01g/sq.ft.
```

```
Mass in liquid phase  =       .14810    g/sq.ft.
Mass sorbed           =       .87121E-01g/sq.ft.

Since last printout at time =       9.00
               Change in Total Mass =     -.18288E-02g/sq.ft.
                    Advection in from atmosphere =       .00000    g/sq.ft.
                    Advection in from water table =     -.16581E-02g/sq.ft.
                    Diffusion in from atmosphere =      -.17070E-03g/sq.ft.
                    Diffusion in from water table =      .00000    g/sq.ft.
               Total inflow at boundaries =     -.18288E-02g/sq.ft.
               Mass discrepancy =     -.22119E-08g/sq.ft.

Since beginning of run at time = 0.0
               Change in Total Mass =     -.18689E-01g/sq.ft.
                    Advection in from atmosphere =       .00000    g/sq.ft.
                    Advection in from water table =     -.17066E-01g/sq.ft.
                    Diffusion in from atmosphere =      -.16231E-02g/sq.ft.
                    Diffusion in from water table =      .00000    g/sq.ft.
               Total inflow at boundaries =     -.18689E-01g/sq.ft.
               Mass discrepancy =      .63330E-07g/sq.ft.


Polygon   1
At time =      11.00, total mass in vadose zone =     .26802    g/sq.ft.
Mass in gas phase     =       .34382E-01g/sq.ft.
Mass in liquid phase  =       .14711    g/sq.ft.
Mass sorbed           =       .86534E-01g/sq.ft.

Since last printout at time =      10.00
               Change in Total Mass =     -.18178E-02g/sq.ft.
                    Advection in from atmosphere =       .00000    g/sq.ft.
                    Advection in from water table =     -.16465E-02g/sq.ft.
                    Diffusion in from atmosphere =      -.17124E-03g/sq.ft.
                    Diffusion in from water table =      .00000    g/sq.ft.
               Total inflow at boundaries =     -.18178E-02g/sq.ft.
               Mass discrepancy =     -.93132E-08g/sq.ft.

Since beginning of run at time = 0.0
               Change in Total Mass =     -.20507E-01g/sq.ft.
                    Advection in from atmosphere =       .00000    g/sq.ft.
                    Advection in from water table =     -.18713E-01g/sq.ft.
                    Diffusion in from atmosphere =      -.17943E-02g/sq.ft.
                    Diffusion in from water table =      .00000    g/sq.ft.
               Total inflow at boundaries =     -.20507E-01g/sq.ft.
               Mass discrepancy =      .54017E-07g/sq.ft.


Polygon   1
At time =      12.00, total mass in vadose zone =     .26622    g/sq.ft.
Mass in gas phase     =       .34150E-01g/sq.ft.
Mass in liquid phase  =       .14612    g/sq.ft.
Mass sorbed           =       .85951E-01g/sq.ft.

Since last printout at time =      11.00
               Change in Total Mass =     -.18065E-02g/sq.ft.
                    Advection in from atmosphere =       .00000    g/sq.ft.
                    Advection in from water table =     -.16349E-02g/sq.ft.
                    Diffusion in from atmosphere =      -.17155E-03g/sq.ft.
                    Diffusion in from water table =      .00000    g/sq.ft.
               Total inflow at boundaries =     -.18065E-02g/sq.ft.
```

```
              Mass discrepancy =     -.23283E-08g/sq.ft.

Since beginning of run at time = 0.0
              Change in Total Mass =     -.22313E-01g/sq.ft.
                   Advection in from atmosphere =       .00000    g/sq.ft.
                   Advection in from water table =     -.20348E-01g/sq.ft.
                   Diffusion in from atmosphere =      -.19658E-02g/sq.ft.
                   Diffusion in from water table =      .00000    g/sq.ft.
              Total inflow at boundaries =     -.22313E-01g/sq.ft.
              Mass discrepancy =      .50291E-07g/sq.ft.


Polygon   1
At time =      13.00, total mass in vadose zone =     .26442    g/sq.ft.
Mass in gas phase     =       .33920E-01g/sq.ft.
Mass in liquid phase  =       .14513    g/sq.ft.
Mass sorbed           =       .85371E-01g/sq.ft.

Since last printout at time =      12.00
              Change in Total Mass =     -.17950E-02g/sq.ft.
                   Advection in from atmosphere =       .00000    g/sq.ft.
                   Advection in from water table =     -.16233E-02g/sq.ft.
                   Diffusion in from atmosphere =      -.17167E-03g/sq.ft.
                   Diffusion in from water table =      .00000    g/sq.ft.
              Total inflow at boundaries =     -.17950E-02g/sq.ft.
              Mass discrepancy =      .55879E-08g/sq.ft.

Since beginning of run at time = 0.0
              Change in Total Mass =     -.24108E-01g/sq.ft.
                   Advection in from atmosphere =       .00000    g/sq.ft.
                   Advection in from water table =     -.21971E-01g/sq.ft.
                   Diffusion in from atmosphere =      -.21375E-02g/sq.ft.
                   Diffusion in from water table =      .00000    g/sq.ft.
              Total inflow at boundaries =     -.24108E-01g/sq.ft.
              Mass discrepancy =      .57742E-07g/sq.ft.


Polygon   1
At time =      14.00, total mass in vadose zone =     .26264    g/sq.ft.
Mass in gas phase     =       .33691E-01g/sq.ft.
Mass in liquid phase  =       .14415    g/sq.ft.
Mass sorbed           =       .84796E-01g/sq.ft.

Since last printout at time =      13.00
              Change in Total Mass =     -.17834E-02g/sq.ft.
                   Advection in from atmosphere =       .00000    g/sq.ft.
                   Advection in from water table =     -.16117E-02g/sq.ft.
                   Diffusion in from atmosphere =      -.17161E-03g/sq.ft.
                   Diffusion in from water table =      .00000    g/sq.ft.
              Total inflow at boundaries =     -.17834E-02g/sq.ft.
              Mass discrepancy =     -.37835E-07g/sq.ft.

Since beginning of run at time = 0.0
              Change in Total Mass =     -.25892E-01g/sq.ft.
                   Advection in from atmosphere =       .00000    g/sq.ft.
                   Advection in from water table =     -.23583E-01g/sq.ft.
                   Diffusion in from atmosphere =      -.23091E-02g/sq.ft.
                   Diffusion in from water table =      .00000    g/sq.ft.
              Total inflow at boundaries =     -.25892E-01g/sq.ft.
              Mass discrepancy =      .18626E-07g/sq.ft.
```

```
Polygon   1
At time =      15.00, total mass in vadose zone =     .26087    g/sq.ft.
Mass in gas phase     =       .33464E-01g/sq.ft.
Mass in liquid phase  =       .14318    g/sq.ft.
Mass sorbed           =       .84224E-01g/sq.ft.

Since last printout at time =      14.00
               Change in Total Mass =     -.17716E-02g/sq.ft.
                    Advection in from atmosphere =       .00000    g/sq.ft.
                    Advection in from water table =     -.16002E-02g/sq.ft.
                    Diffusion in from atmosphere =      -.17141E-03g/sq.ft.
                    Diffusion in from water table =       .00000    g/sq.ft.
               Total inflow at boundaries =     -.17716E-02g/sq.ft.
               Mass discrepancy =      .74622E-07g/sq.ft.

Since beginning of run at time = 0.0
               Change in Total Mass =     -.27663E-01g/sq.ft.
                    Advection in from atmosphere =       .00000    g/sq.ft.
                    Advection in from water table =     -.25183E-01g/sq.ft.
                    Diffusion in from atmosphere =      -.24805E-02g/sq.ft.
                    Diffusion in from water table =       .00000    g/sq.ft.
               Total inflow at boundaries =     -.27663E-01g/sq.ft.
               Mass discrepancy =      .94995E-07g/sq.ft.


Polygon   1
At time =      16.00, total mass in vadose zone =     .25911    g/sq.ft.
Mass in gas phase     =       .33238E-01g/sq.ft.
Mass in liquid phase  =       .14221    g/sq.ft.
Mass sorbed           =       .83655E-01g/sq.ft.

Since last printout at time =      15.00
               Change in Total Mass =     -.17599E-02g/sq.ft.
                    Advection in from atmosphere =       .00000    g/sq.ft.
                    Advection in from water table =     -.15888E-02g/sq.ft.
                    Diffusion in from atmosphere =      -.17108E-03g/sq.ft.
                    Diffusion in from water table =       .00000    g/sq.ft.
               Total inflow at boundaries =     -.17599E-02g/sq.ft.
               Mass discrepancy =     -.25495E-07g/sq.ft.

Since beginning of run at time = 0.0
               Change in Total Mass =     -.29423E-01g/sq.ft.
                    Advection in from atmosphere =       .00000    g/sq.ft.
                    Advection in from water table =     -.26772E-01g/sq.ft.
                    Diffusion in from atmosphere =      -.26516E-02g/sq.ft.
                    Diffusion in from water table =       .00000    g/sq.ft.
               Total inflow at boundaries =     -.29423E-01g/sq.ft.
               Mass discrepancy =      .68918E-07g/sq.ft.


Polygon   1
At time =      17.00, total mass in vadose zone =     .25736    g/sq.ft.
Mass in gas phase     =       .33014E-01g/sq.ft.
Mass in liquid phase  =       .14125    g/sq.ft.
Mass sorbed           =       .83091E-01g/sq.ft.

Since last printout at time =      16.00
               Change in Total Mass =     -.17481E-02g/sq.ft.
```

```
                Advection in from atmosphere =       .00000    g/sq.ft.
                Advection in from water table =     -.15775E-02g/sq.ft.
                Diffusion in from atmosphere =      -.17064E-03g/sq.ft.
                Diffusion in from water table =      .00000    g/sq.ft.
           Total inflow at boundaries =     -.17481E-02g/sq.ft.
           Mass discrepancy =      .29337E-07g/sq.ft.

Since beginning of run at time = 0.0
           Change in Total Mass =     -.31171E-01g/sq.ft.
                Advection in from atmosphere =       .00000    g/sq.ft.
                Advection in from water table =     -.28349E-01g/sq.ft.
                Diffusion in from atmosphere =      -.28223E-02g/sq.ft.
                Diffusion in from water table =      .00000    g/sq.ft.
           Total inflow at boundaries =     -.31171E-01g/sq.ft.
           Mass discrepancy =      .98720E-07g/sq.ft.


Polygon   1
At time =      18.00, total mass in vadose zone =     .25562    g/sq.ft.
Mass in gas phase     =       .32791E-01g/sq.ft.
Mass in liquid phase  =       .14030    g/sq.ft.
Mass sorbed           =       .82530E-01g/sq.ft.

Since last printout at time =      17.00
           Change in Total Mass =     -.17365E-02g/sq.ft.
                Advection in from atmosphere =       .00000    g/sq.ft.
                Advection in from water table =     -.15663E-02g/sq.ft.
                Diffusion in from atmosphere =      -.17010E-03g/sq.ft.
                Diffusion in from water table =      .00000    g/sq.ft.
           Total inflow at boundaries =     -.17364E-02g/sq.ft.
           Mass discrepancy =     -.27008E-07g/sq.ft.

Since beginning of run at time = 0.0
           Change in Total Mass =     -.32908E-01g/sq.ft.
                Advection in from atmosphere =       .00000    g/sq.ft.
                Advection in from water table =     -.29916E-01g/sq.ft.
                Diffusion in from atmosphere =      -.29924E-02g/sq.ft.
                Diffusion in from water table =      .00000    g/sq.ft.
           Total inflow at boundaries =     -.32908E-01g/sq.ft.
           Mass discrepancy =      .70781E-07g/sq.ft.


Polygon   1
At time =      19.00, total mass in vadose zone =     .25390    g/sq.ft.
Mass in gas phase     =       .32570E-01g/sq.ft.
Mass in liquid phase  =       .13935    g/sq.ft.
Mass sorbed           =       .81973E-01g/sq.ft.

Since last printout at time =      18.00
           Change in Total Mass =     -.17247E-02g/sq.ft.
                Advection in from atmosphere =       .00000    g/sq.ft.
                Advection in from water table =     -.15553E-02g/sq.ft.
                Diffusion in from atmosphere =      -.16948E-03g/sq.ft.
                Diffusion in from water table =      .00000    g/sq.ft.
           Total inflow at boundaries =     -.17248E-02g/sq.ft.
           Mass discrepancy =      .39116E-07g/sq.ft.

Since beginning of run at time = 0.0
           Change in Total Mass =     -.34633E-01g/sq.ft.
                Advection in from atmosphere =       .00000    g/sq.ft.
```

```
                    Advection in from water table =     -.31471E-01g/sq.ft.
                    Diffusion in from atmosphere =      -.31619E-02g/sq.ft.
                    Diffusion in from water table =      .00000    g/sq.ft.
               Total inflow at boundaries =     -.34633E-01g/sq.ft.
               Mass discrepancy =      .11176E-06g/sq.ft.


Polygon   1
At time =      20.00, total mass in vadose zone =     .25218    g/sq.ft.
Mass in gas phase     =       .32350E-01g/sq.ft.
Mass in liquid phase  =       .13841    g/sq.ft.
Mass sorbed           =       .81420E-01g/sq.ft.

Since last printout at time =      19.00
               Change in Total Mass =     -.17132E-02g/sq.ft.
                    Advection in from atmosphere =       .00000    g/sq.ft.
                    Advection in from water table =     -.15444E-02g/sq.ft.
                    Diffusion in from atmosphere =      -.16878E-03g/sq.ft.
                    Diffusion in from water table =      .00000    g/sq.ft.
               Total inflow at boundaries =     -.17132E-02g/sq.ft.
               Mass discrepancy =     -.22002E-07g/sq.ft.

Since beginning of run at time = 0.0
               Change in Total Mass =     -.36346E-01g/sq.ft.
                    Advection in from atmosphere =       .00000    g/sq.ft.
                    Advection in from water table =     -.33015E-01g/sq.ft.
                    Diffusion in from atmosphere =      -.33306E-02g/sq.ft.
                    Diffusion in from water table =      .00000    g/sq.ft.
               Total inflow at boundaries =     -.36346E-01g/sq.ft.
               Mass discrepancy =      .89407E-07g/sq.ft.


Polygon   1
At time =      21.00, total mass in vadose zone =     .25048    g/sq.ft.
Mass in gas phase     =       .32131E-01g/sq.ft.
Mass in liquid phase  =       .13748    g/sq.ft.
Mass sorbed           =       .80871E-01g/sq.ft.

Since last printout at time =      20.00
               Change in Total Mass =     -.17018E-02g/sq.ft.
                    Advection in from atmosphere =       .00000    g/sq.ft.
                    Advection in from water table =     -.15337E-02g/sq.ft.
                    Diffusion in from atmosphere =      -.16802E-03g/sq.ft.
                    Diffusion in from water table =      .00000    g/sq.ft.
               Total inflow at boundaries =     -.17018E-02g/sq.ft.
               Mass discrepancy =     -.47963E-07g/sq.ft.

Since beginning of run at time = 0.0
               Change in Total Mass =     -.38048E-01g/sq.ft.
                    Advection in from atmosphere =       .00000    g/sq.ft.
                    Advection in from water table =     -.34549E-01g/sq.ft.
                    Diffusion in from atmosphere =      -.34987E-02g/sq.ft.
                    Diffusion in from water table =      .00000    g/sq.ft.
               Total inflow at boundaries =     -.38048E-01g/sq.ft.
               Mass discrepancy =      .44703E-07g/sq.ft.


Polygon   1
At time =      22.00, total mass in vadose zone =     .24879    g/sq.ft.
Mass in gas phase     =       .31915E-01g/sq.ft.
```

Mass in liquid phase = .13655 g/sq.ft.
Mass sorbed = .80325E-01g/sq.ft.

Since last printout at time = 21.00
Change in Total Mass = -.16903E-02g/sq.ft.
Advection in from atmosphere = .00000 g/sq.ft.
Advection in from water table = -.15232E-02g/sq.ft.
Diffusion in from atmosphere = -.16720E-03g/sq.ft.
Diffusion in from water table = .00000 g/sq.ft.
Total inflow at boundaries = -.16904E-02g/sq.ft.
Mass discrepancy = .73924E-07g/sq.ft.

Since beginning of run at time = 0.0
Change in Total Mass = -.39738E-01g/sq.ft.
Advection in from atmosphere = .00000 g/sq.ft.
Advection in from water table = -.36072E-01g/sq.ft.
Diffusion in from atmosphere = -.36659E-02g/sq.ft.
Diffusion in from water table = .00000 g/sq.ft.
Total inflow at boundaries = -.39738E-01g/sq.ft.
Mass discrepancy = .11921E-06g/sq.ft.

Polygon 1
At time = 23.00, total mass in vadose zone = .24711 g/sq.ft.
Mass in gas phase = .31699E-01g/sq.ft.
Mass in liquid phase = .13563 g/sq.ft.
Mass sorbed = .79783E-01g/sq.ft.

Since last printout at time = 22.00
Change in Total Mass = -.16792E-02g/sq.ft.
Advection in from atmosphere = .00000 g/sq.ft.
Advection in from water table = -.15128E-02g/sq.ft.
Diffusion in from atmosphere = -.16634E-03g/sq.ft.
Diffusion in from water table = .00000 g/sq.ft.
Total inflow at boundaries = -.16791E-02g/sq.ft.
Mass discrepancy = -.23167E-07g/sq.ft.

Since beginning of run at time = 0.0
Change in Total Mass = -.41417E-01g/sq.ft.
Advection in from atmosphere = .00000 g/sq.ft.
Advection in from water table = -.37585E-01g/sq.ft.
Diffusion in from atmosphere = -.38322E-02g/sq.ft.
Diffusion in from water table = .00000 g/sq.ft.
Total inflow at boundaries = -.41417E-01g/sq.ft.
Mass discrepancy = .93132E-07g/sq.ft.

Polygon 1
At time = 24.00, total mass in vadose zone = .24544 g/sq.ft.
Mass in gas phase = .31485E-01g/sq.ft.
Mass in liquid phase = .13471 g/sq.ft.
Mass sorbed = .79245E-01g/sq.ft.

Since last printout at time = 23.00
Change in Total Mass = -.16679E-02g/sq.ft.
Advection in from atmosphere = .00000 g/sq.ft.
Advection in from water table = -.15026E-02g/sq.ft.
Diffusion in from atmosphere = -.16543E-03g/sq.ft.
Diffusion in from water table = .00000 g/sq.ft.
Total inflow at boundaries = -.16680E-02g/sq.ft.

```
          Mass discrepancy =      .50757E-07g/sq.ft.

Since beginning of run at time = 0.0
          Change in Total Mass =     -.43085E-01g/sq.ft.
               Advection in from atmosphere =       .00000    g/sq.ft.
               Advection in from water table =     -.39088E-01g/sq.ft.
               Diffusion in from atmosphere =      -.39976E-02g/sq.ft.
               Diffusion in from water table =      .00000    g/sq.ft.
          Total inflow at boundaries =     -.43085E-01g/sq.ft.
          Mass discrepancy =      .14529E-06g/sq.ft.


Polygon   1
At time =      25.00, total mass in vadose zone =     .24379    g/sq.ft.
Mass in gas phase     =       .31273E-01g/sq.ft.
Mass in liquid phase  =       .13381    g/sq.ft.
Mass sorbed           =       .78710E-01g/sq.ft.

Since last printout at time =      24.00
          Change in Total Mass =     -.16570E-02g/sq.ft.
               Advection in from atmosphere =       .00000    g/sq.ft.
               Advection in from water table =     -.14925E-02g/sq.ft.
               Diffusion in from atmosphere =      -.16448E-03g/sq.ft.
               Diffusion in from water table =      .00000    g/sq.ft.
          Total inflow at boundaries =     -.16569E-02g/sq.ft.
          Mass discrepancy =     -.31199E-07g/sq.ft.

Since beginning of run at time = 0.0
          Change in Total Mass =     -.44742E-01g/sq.ft.
               Advection in from atmosphere =       .00000    g/sq.ft.
               Advection in from water table =     -.40580E-01g/sq.ft.
               Diffusion in from atmosphere =      -.41621E-02g/sq.ft.
               Diffusion in from water table =      .00000    g/sq.ft.
          Total inflow at boundaries =     -.44742E-01g/sq.ft.
          Mass discrepancy =      .11176E-06g/sq.ft.


Polygon   1
At time =      26.00, total mass in vadose zone =     .24214    g/sq.ft.
Mass in gas phase     =       .31062E-01g/sq.ft.
Mass in liquid phase  =       .13290    g/sq.ft.
Mass sorbed           =       .78178E-01g/sq.ft.

Since last printout at time =      25.00
          Change in Total Mass =     -.16460E-02g/sq.ft.
               Advection in from atmosphere =       .00000    g/sq.ft.
               Advection in from water table =     -.14825E-02g/sq.ft.
               Diffusion in from atmosphere =      -.16351E-03g/sq.ft.
               Diffusion in from water table =      .00000    g/sq.ft.
          Total inflow at boundaries =     -.16460E-02g/sq.ft.
          Mass discrepancy =      .12340E-07g/sq.ft.

Since beginning of run at time = 0.0
          Change in Total Mass =     -.46388E-01g/sq.ft.
               Advection in from atmosphere =       .00000    g/sq.ft.
               Advection in from water table =     -.42063E-01g/sq.ft.
               Diffusion in from atmosphere =      -.43256E-02g/sq.ft.
               Diffusion in from water table =      .00000    g/sq.ft.
          Total inflow at boundaries =     -.46388E-01g/sq.ft.
          Mass discrepancy =      .12666E-06g/sq.ft.
```

```
Polygon   1
At time =      27.00, total mass in vadose zone =     .24051    g/sq.ft.
Mass in gas phase     =       .30852E-01g/sq.ft.
Mass in liquid phase  =       .13200    g/sq.ft.
Mass sorbed           =       .77650E-01g/sq.ft.

Since last printout at time =      26.00
               Change in Total Mass =     -.16352E-02g/sq.ft.
                    Advection in from atmosphere =       .00000    g/sq.ft.
                    Advection in from water table =     -.14727E-02g/sq.ft.
                    Diffusion in from atmosphere =      -.16251E-03g/sq.ft.
                    Diffusion in from water table =      .00000    g/sq.ft.
               Total inflow at boundaries =     -.16352E-02g/sq.ft.
               Mass discrepancy =      .30966E-07g/sq.ft.

Since beginning of run at time = 0.0
               Change in Total Mass =     -.48023E-01g/sq.ft.
                    Advection in from atmosphere =       .00000    g/sq.ft.
                    Advection in from water table =     -.43535E-01g/sq.ft.
                    Diffusion in from atmosphere =      -.44881E-02g/sq.ft.
                    Diffusion in from water table =      .00000    g/sq.ft.
               Total inflow at boundaries =     -.48023E-01g/sq.ft.
               Mass discrepancy =      .15646E-06g/sq.ft.


Polygon   1
At time =      28.00, total mass in vadose zone =     .23888    g/sq.ft.
Mass in gas phase     =       .30643E-01g/sq.ft.
Mass in liquid phase  =       .13111    g/sq.ft.
Mass sorbed           =       .77126E-01g/sq.ft.

Since last printout at time =      27.00
               Change in Total Mass =     -.16245E-02g/sq.ft.
                    Advection in from atmosphere =       .00000    g/sq.ft.
                    Advection in from water table =     -.14630E-02g/sq.ft.
                    Diffusion in from atmosphere =      -.16148E-03g/sq.ft.
                    Diffusion in from water table =      .00000    g/sq.ft.
               Total inflow at boundaries =     -.16245E-02g/sq.ft.
               Mass discrepancy =     -.38184E-07g/sq.ft.

Since beginning of run at time = 0.0
               Change in Total Mass =     -.49648E-01g/sq.ft.
                    Advection in from atmosphere =       .00000    g/sq.ft.
                    Advection in from water table =     -.44998E-01g/sq.ft.
                    Diffusion in from atmosphere =      -.46496E-02g/sq.ft.
                    Diffusion in from water table =      .00000    g/sq.ft.
               Total inflow at boundaries =     -.49648E-01g/sq.ft.
               Mass discrepancy =      .11921E-06g/sq.ft.


Polygon   1
At time =      29.00, total mass in vadose zone =     .23727    g/sq.ft.
Mass in gas phase     =       .30436E-01g/sq.ft.
Mass in liquid phase  =       .13023    g/sq.ft.
Mass sorbed           =       .76605E-01g/sq.ft.

Since last printout at time =      28.00
               Change in Total Mass =     -.16139E-02g/sq.ft.
```

Advection in from atmosphere = .00000 g/sq.ft.
Advection in from water table = -.14535E-02g/sq.ft.
Diffusion in from atmosphere = -.16044E-03g/sq.ft.
Diffusion in from water table = .00000 g/sq.ft.
Total inflow at boundaries = -.16139E-02g/sq.ft.
Mass discrepancy = .10361E-07g/sq.ft.

Since beginning of run at time = 0.0
Change in Total Mass = -.51262E-01g/sq.ft.
Advection in from atmosphere = .00000 g/sq.ft.
Advection in from water table = -.46452E-01g/sq.ft.
Diffusion in from atmosphere = -.48101E-02g/sq.ft.
Diffusion in from water table = .00000 g/sq.ft.
Total inflow at boundaries = -.51262E-01g/sq.ft.
Mass discrepancy = .13039E-06g/sq.ft.

Polygon 1
At time = 30.00, total mass in vadose zone = .23566 g/sq.ft.
Mass in gas phase = .30231E-01g/sq.ft.
Mass in liquid phase = .12935 g/sq.ft.
Mass sorbed = .76087E-01g/sq.ft.

Since last printout at time = 29.00
Change in Total Mass = -.16034E-02g/sq.ft.
Advection in from atmosphere = .00000 g/sq.ft.
Advection in from water table = -.14440E-02g/sq.ft.
Diffusion in from atmosphere = -.15938E-03g/sq.ft.
Diffusion in from water table = .00000 g/sq.ft.
Total inflow at boundaries = -.16034E-02g/sq.ft.
Mass discrepancy = .94296E-08g/sq.ft.

Since beginning of run at time = 0.0
Change in Total Mass = -.52865E-01g/sq.ft.
Advection in from atmosphere = .00000 g/sq.ft.
Advection in from water table = -.47896E-01g/sq.ft.
Diffusion in from atmosphere = -.49694E-02g/sq.ft.
Diffusion in from water table = .00000 g/sq.ft.
Total inflow at boundaries = -.52865E-01g/sq.ft.
Mass discrepancy = .14156E-06g/sq.ft.

GROUNDWATER IMPACT OF POLYGON 1

Time	Mass per area (g/sq.ft.)	Total Mass (g)
1.00	.17513E-02	296.85
2.00	.17424E-02	295.34
3.00	.17330E-02	293.75
4.00	.17233E-02	292.10
5.00	.17131E-02	290.38
6.00	.17027E-02	288.60
7.00	.16919E-02	286.77
8.00	.16808E-02	284.89
9.00	.16695E-02	282.98
10.00	.16581E-02	281.05
11.00	.16465E-02	279.09
12.00	.16349E-02	277.12
13.00	.16233E-02	275.15
14.00	.16117E-02	273.19
15.00	.16002E-02	271.24

16.00	.15888E-02	269.30
17.00	.15775E-02	267.39
18.00	.15663E-02	265.49
19.00	.15553E-02	263.62
20.00	.15444E-02	261.78
21.00	.15337E-02	259.97
22.00	.15232E-02	258.18
23.00	.15128E-02	256.42
24.00	.15026E-02	254.68
25.00	.14925E-02	252.97
26.00	.14825E-02	251.29
27.00	.14727E-02	249.62
28.00	.14630E-02	247.98
29.00	.14535E-02	246.36
30.00	.14440E-02	244.76

****

****

TOTAL GROUNDWATER IMPACT

Time (yr)	Mass (g)	Cumulative Mass (g)
1.00	296.85	296.85
2.00	295.34	592.19
3.00	293.75	885.94
4.00	292.10	1178.0
5.00	290.38	1468.4
6.00	288.60	1757.0
7.00	286.77	2043.8
8.00	284.89	2328.7
9.00	282.98	2611.7
10.00	281.05	2892.7
11.00	279.09	3171.8
12.00	277.12	3448.9
13.00	275.15	3724.1
14.00	273.19	3997.3
15.00	271.24	4268.5
16.00	269.30	4537.8
17.00	267.39	4805.2
18.00	265.49	5070.7
19.00	263.62	5334.3
20.00	261.78	5596.1
21.00	259.97	5856.1
22.00	258.18	6114.2
23.00	256.42	6370.7
24.00	254.68	6625.3
25.00	252.97	6878.3
26.00	251.29	7129.6
27.00	249.62	7379.2
28.00	247.98	7627.2
29.00	246.36	7873.6
30.00	244.76	8118.3

Polygon 32A
Time: .000

Cell	Cgas(g/cu.ft.)	Cliq(g/cu.ft.)	Csol
1	.28367E-05	.59972E-05	.19371E-10
2	.28367E-05	.59972E-05	.19371E-10
3	.28367E-05	.59972E-05	.19371E-10
4	.28367E-05	.59972E-05	.19371E-10
5	.28367E-05	.59972E-05	.19371E-10
6	.28367E-05	.59972E-05	.19371E-10
7	.77914E-03	.16472E-02	.53206E-08
8	.77914E-03	.16472E-02	.53206E-08
9	.77914E-03	.16472E-02	.53206E-08
10	.77914E-03	.16472E-02	.53206E-08
11	.77914E-03	.16472E-02	.53206E-08
12	.77914E-03	.16472E-02	.53206E-08
13	.19445E-02	.41111E-02	.13279E-07
14	.19445E-02	.41111E-02	.13279E-07
15	.19445E-02	.41111E-02	.13279E-07
16	.19445E-02	.41111E-02	.13279E-07
17	.19445E-02	.41111E-02	.13279E-07
18	.19445E-02	.41111E-02	.13279E-07
19	.31095E-02	.65739E-02	.21234E-07
20	.31095E-02	.65739E-02	.21234E-07
21	.31095E-02	.65739E-02	.21234E-07
22	.31095E-02	.65739E-02	.21234E-07
23	.31095E-02	.65739E-02	.21234E-07
24	.31095E-02	.65739E-02	.21234E-07
25	.42744E-02	.90368E-02	.29189E-07
26	.42744E-02	.90368E-02	.29189E-07
27	.42744E-02	.90368E-02	.29189E-07
28	.42744E-02	.90368E-02	.29189E-07
29	.42744E-02	.90368E-02	.29189E-07
30	.42744E-02	.90368E-02	.29189E-07
31	.54393E-02	.11500E-01	.37144E-07
32	.54393E-02	.11500E-01	.37144E-07
33	.54393E-02	.11500E-01	.37144E-07
34	.54393E-02	.11500E-01	.37144E-07
35	.54393E-02	.11500E-01	.37144E-07
36	.54393E-02	.11500E-01	.37144E-07
37	.66043E-02	.13963E-01	.45099E-07
38	.66043E-02	.13963E-01	.45099E-07
39	.66043E-02	.13963E-01	.45099E-07
40	.66043E-02	.13963E-01	.45099E-07
41	.66043E-02	.13963E-01	.45099E-07
42	.66043E-02	.13963E-01	.45099E-07
43	.77697E-02	.16426E-01	.53057E-07
44	.77697E-02	.16426E-01	.53057E-07
45	.77697E-02	.16426E-01	.53057E-07
46	.77697E-02	.16426E-01	.53057E-07
47	.77697E-02	.16426E-01	.53057E-07
48	.77697E-02	.16426E-01	.53057E-07
49	.89346E-02	.18889E-01	.61012E-07
50	.89346E-02	.18889E-01	.61012E-07
51	.89346E-02	.18889E-01	.61012E-07
52	.89346E-02	.18889E-01	.61012E-07
53	.89346E-02	.18889E-01	.61012E-07
54	.89346E-02	.18889E-01	.61012E-07
55	.10100E-01	.21352E-01	.68967E-07
56	.10100E-01	.21352E-01	.68967E-07

57	.10100E-01	.21352E-01	.68967E-07
58	.10100E-01	.21352E-01	.68967E-07
59	.10100E-01	.21352E-01	.68967E-07
60	.10100E-01	.21352E-01	.68967E-07

Polygon 32A
Time: 10.000

Cell	Cgas(g/cu.ft.)	Cliq(g/cu.ft.)	Csol
1	.30801E-04	.65118E-04	.21033E-09
2	.74525E-04	.15756E-03	.50891E-09
3	.12584E-03	.26606E-03	.85936E-09
4	.18292E-03	.38671E-03	.12491E-08
5	.24590E-03	.51988E-03	.16792E-08
6	.31598E-03	.66803E-03	.21578E-08
7	.42374E-03	.89585E-03	.28936E-08
8	.56326E-03	.11908E-02	.38464E-08
9	.70637E-03	.14934E-02	.48236E-08
10	.83732E-03	.17702E-02	.57178E-08
11	.95688E-03	.20230E-02	.65343E-08
12	.10725E-02	.22674E-02	.73238E-08
13	.12349E-02	.26109E-02	.84331E-08
14	.14380E-02	.30401E-02	.98197E-08
15	.16404E-02	.34680E-02	.11202E-07
16	.18186E-02	.38448E-02	.12419E-07
17	.19734E-02	.41722E-02	.13476E-07
18	.21156E-02	.44727E-02	.14447E-07
19	.22987E-02	.48597E-02	.15697E-07
20	.25183E-02	.53242E-02	.17197E-07
21	.27344E-02	.57810E-02	.18673E-07
22	.29240E-02	.61819E-02	.19968E-07
23	.30885E-02	.65295E-02	.21090E-07
24	.32386E-02	.68469E-02	.22116E-07
25	.34283E-02	.72481E-02	.23411E-07
26	.36536E-02	.77242E-02	.24949E-07
27	.38742E-02	.81908E-02	.26456E-07
28	.40676E-02	.85996E-02	.27777E-07
29	.42351E-02	.89537E-02	.28920E-07
30	.43877E-02	.92763E-02	.29962E-07
31	.45793E-02	.96815E-02	.31271E-07
32	.48060E-02	.10161E-01	.32819E-07
33	.50277E-02	.10629E-01	.34333E-07
34	.52217E-02	.11040E-01	.35658E-07
35	.53895E-02	.11394E-01	.36804E-07
36	.55420E-02	.11717E-01	.37845E-07
37	.57332E-02	.12121E-01	.39150E-07
38	.59590E-02	.12598E-01	.40692E-07
39	.61794E-02	.13064E-01	.42198E-07
40	.63717E-02	.13471E-01	.43511E-07
41	.65373E-02	.13821E-01	.44641E-07
42	.66869E-02	.14137E-01	.45663E-07
43	.68747E-02	.14534E-01	.46945E-07
44	.70962E-02	.15003E-01	.48459E-07
45	.73115E-02	.15458E-01	.49929E-07
46	.74976E-02	.15851E-01	.51199E-07
47	.76555E-02	.16185E-01	.52278E-07
48	.77961E-02	.16482E-01	.53238E-07
49	.79729E-02	.16856E-01	.54445E-07
50	.81814E-02	.17297E-01	.55869E-07
51	.83810E-02	.17719E-01	.57232E-07
52	.85485E-02	.18073E-01	.58376E-07

```
 V-Leach, VER 1.1
 Jake Turin, 11/91
PGA V-leach model, polygon screen-TCE-11/10/92-Poly64.INP  New soil, Old chem
  1 polygons.
Timestep =   1.00 years.  Simulation length =   30.00 years.
Printout every   1.00 years.  Vertical profile stored every  10.00 years.
Koc =      123.60    ml/g,       .43649E-02cu.ft./g
Kh =      .47300     (dimensionless).
Aqueous solubility =     1100.0     mg/l,      31.149     g/cu.ft
Free air diffusion coefficient = .70290     sq. m/day,  2761.7     sq.ft./yr


Polygon   1
Polygon 64
Polygon area =      80000.    sq. ft.
 60 cells, each cell  1.000 ft. thick.
Soil Properties:
 Bulk density =     1.6400    g/ml,       46440.    g/cu.ft.
 Porosity =  .3810 Volumetric water content =  .2550
 Organic carbon content =  .00074000
Recharge Rate =  .19685100 ft/yr
Conc. in recharge water =      .00000    mg/l,       .00000    g/cu.ft
Atmospheric concentration =      .00000    mg/l,       .00000    g/cu.ft
Water table is impermeable to gas diffusion.
```

Calculation of Total TCE Mass and Revised Vertical Distributions in Polygon 32A using HGC Distribution equations and Revised Soil Physical Data

0.092 Cs **	Cz = (74.527z - 371.636)Cs

Cz (ug/L) Vert. Dist. Eq.	Calculated Depth Interval (z)	Total Depth Interval (feet)	Total Soil Conc Ct* (ug/Kg)	Mt (ug/cc)	Volume of Soil (cubic ft)	Mass TCE (grams)	Mass TCE (pounds)
0.092	3	6	0.06	9.04E-05	1017000	2.60	0.01
27.52	9	6	16.48	0.03	1017000	778.49	1.72
68.66	15	6	41.13	0.07	1017000	1942.33	4.28
109.80	21	6	65.77	0.11	1017000	3106.16	6.85
150.93	27	6	90.41	0.15	1017000	4270.00	9.41
192.07	33	6	115.05	0.19	1017000	5433.83	11.98
233.21	39	6	139.69	0.23	1017000	6597.67	14.55
274.35	45	6	164.34	0.27	1017000	7761.50	17.11
315.49	51	6	188.98	0.31	1017000	8925.34	19.68
356.63	57	6	213.62	0.35	1017000	10089.17	22.24
		60				48907.09	107.82

* Ct conversion based on Kgt of 0.599 L/Kg

** Cs Determined as mathematical average of VOC concentrations for polygon(s) listed in Table A-1 of HGC, 1989.

```
PGA V-leach model, polygon screen-TCE-11/18/92-POLY65.INP.  Rev Soil, HGC Chem
    1
       1.0          30.          1.0          10.
     123.6         .473        1100.        .7029
olygon 65
     80500.           1.     .022965         1.64         .381         .255      .00074
         0.           0.          -1.
   60
    1     6     208.85
    7    12     211.71
   13    18     214.48
   19    24     217.34
   25    30     635.75
   31    36    1053.61
   37    42    1053.61
   43    48    1053.61
   49    54    1053.61
   55    60    1053.61
```

V-Leach, VER 1.1
Jake Turin, 11/91
PGA V-leach model, polygon screen-TCE-11/18/92-POLY65.INP. Rev Soil, HGC Chem

Polygon 1
At time = .00, total mass in vadose zone = 1.8825 g/sq.ft.
Mass in gas phase = .24148 g/sq.ft.
Mass in liquid phase = 1.0332 g/sq.ft.
Mass sorbed = .60778 g/sq.ft.

Polygon 1
At time = 1.00, total mass in vadose zone = 1.8751 g/sq.ft.
Mass in gas phase = .24054 g/sq.ft.
Mass in liquid phase = 1.0292 g/sq.ft.
Mass sorbed = .60541 g/sq.ft.

Since last printout at time = .00
Change in Total Mass = -.73394E-02g/sq.ft.
Advection in from atmosphere = .00000 g/sq.ft.
Advection in from water table = -.24185E-02g/sq.ft.
Diffusion in from atmosphere = -.49205E-02g/sq.ft.
Diffusion in from water table = .00000 g/sq.ft.
Total inflow at boundaries = -.73390E-02g/sq.ft.
Mass discrepancy = -.40419E-06g/sq.ft.

Since beginning of run at time = 0.0
Change in Total Mass = -.73394E-02g/sq.ft.
Advection in from atmosphere = .00000 g/sq.ft.
Advection in from water table = -.24185E-02g/sq.ft.
Diffusion in from atmosphere = -.49205E-02g/sq.ft.
Diffusion in from water table = .00000 g/sq.ft.
Total inflow at boundaries = -.73390E-02g/sq.ft.
Mass discrepancy = -.40419E-06g/sq.ft.

Polygon 1
At time = 2.00, total mass in vadose zone = 1.8681 g/sq.ft.
Mass in gas phase = .23964 g/sq.ft.
Mass in liquid phase = 1.0253 g/sq.ft.
Mass sorbed = .60314 g/sq.ft.

Since last printout at time = 1.00
Change in Total Mass = -.70310E-02g/sq.ft.
Advection in from atmosphere = .00000 g/sq.ft.
Advection in from water table = -.24183E-02g/sq.ft.
Diffusion in from atmosphere = -.46127E-02g/sq.ft.
Diffusion in from water table = .00000 g/sq.ft.
Total inflow at boundaries = -.70310E-02g/sq.ft.
Mass discrepancy = .15832E-07g/sq.ft.

Since beginning of run at time = 0.0
Change in Total Mass = -.14370E-01g/sq.ft.
Advection in from atmosphere = .00000 g/sq.ft.
Advection in from water table = -.48368E-02g/sq.ft.
Diffusion in from atmosphere = -.95331E-02g/sq.ft.
Diffusion in from water table = .00000 g/sq.ft.
Total inflow at boundaries = -.14370E-01g/sq.ft.
Mass discrepancy = -.38836E-06g/sq.ft.

```
Polygon   1
At time =       3.00, total mass in vadose zone =     1.8613    g/sq.ft.
Mass in gas phase     =       .23877    g/sq.ft.
Mass in liquid phase  =      1.0216     g/sq.ft.
Mass sorbed           =       .60096    g/sq.ft.

Since last printout at time =       2.00
               Change in Total Mass =     -.67567E-02g/sq.ft.
                    Advection in from atmosphere =       .00000    g/sq.ft.
                    Advection in from water table =     -.24181E-02g/sq.ft.
                    Diffusion in from atmosphere =      -.43384E-02g/sq.ft.
                    Diffusion in from water table =      .00000    g/sq.ft.
               Total inflow at boundaries =     -.67565E-02g/sq.ft.
               Mass discrepancy =     -.12340E-06g/sq.ft.

Since beginning of run at time = 0.0
               Change in Total Mass =     -.21127E-01g/sq.ft.
                    Advection in from atmosphere =       .00000    g/sq.ft.
                    Advection in from water table =     -.72549E-02g/sq.ft.
                    Diffusion in from atmosphere =      -.13872E-01g/sq.ft.
                    Diffusion in from water table =      .00000    g/sq.ft.
               Total inflow at boundaries =     -.21126E-01g/sq.ft.
               Mass discrepancy =     -.51223E-06g/sq.ft.


Polygon   1
At time =       4.00, total mass in vadose zone =     1.8548    g/sq.ft.
Mass in gas phase     =       .23794    g/sq.ft.
Mass in liquid phase  =      1.0180     g/sq.ft.
Mass sorbed           =       .59885    g/sq.ft.

Since last printout at time =       3.00
               Change in Total Mass =     -.65114E-02g/sq.ft.
                    Advection in from atmosphere =       .00000    g/sq.ft.
                    Advection in from water table =     -.24178E-02g/sq.ft.
                    Diffusion in from atmosphere =      -.40939E-02g/sq.ft.
                    Diffusion in from water table =      .00000    g/sq.ft.
               Total inflow at boundaries =     -.65117E-02g/sq.ft.
               Mass discrepancy =      .23190E-06g/sq.ft.

Since beginning of run at time = 0.0
               Change in Total Mass =     -.27638E-01g/sq.ft.
                    Advection in from atmosphere =       .00000    g/sq.ft.
                    Advection in from water table =     -.96728E-02g/sq.ft.
                    Diffusion in from atmosphere =      -.17965E-01g/sq.ft.
                    Diffusion in from water table =      .00000    g/sq.ft.
               Total inflow at boundaries =     -.27638E-01g/sq.ft.
               Mass discrepancy =     -.27940E-06g/sq.ft.


Polygon   1
At time =       5.00, total mass in vadose zone =     1.8485    g/sq.ft.
Mass in gas phase     =       .23713    g/sq.ft.
Mass in liquid phase  =      1.0146     g/sq.ft.
Mass sorbed           =       .59682    g/sq.ft.

Since last printout at time =       4.00
               Change in Total Mass =     -.62927E-02g/sq.ft.
```

```
                Advection in from atmosphere =       .00000    g/sq.ft.
                Advection in from water table =     -.24175E-02g/sq.ft.
                Diffusion in from atmosphere =      -.38755E-02g/sq.ft.
                Diffusion in from water table =       .00000    g/sq.ft.
           Total inflow at boundaries =     -.62929E-02g/sq.ft.
           Mass discrepancy =      .24401E-06g/sq.ft.

Since beginning of run at time = 0.0
           Change in Total Mass =     -.33931E-01g/sq.ft.
                Advection in from atmosphere =       .00000    g/sq.ft.
                Advection in from water table =     -.12090E-01g/sq.ft.
                Diffusion in from atmosphere =      -.21841E-01g/sq.ft.
                Diffusion in from water table =       .00000    g/sq.ft.
           Total inflow at boundaries =     -.33931E-01g/sq.ft.
           Mass discrepancy =     -.37253E-07g/sq.ft.


Polygon   1
At time =       6.00, total mass in vadose zone =     1.8424    g/sq.ft.
Mass in gas phase     =       .23635    g/sq.ft.
Mass in liquid phase  =       1.0112    g/sq.ft.
Mass sorbed           =       .59485    g/sq.ft.

Since last printout at time =       5.00
           Change in Total Mass =     -.60976E-02g/sq.ft.
                Advection in from atmosphere =       .00000    g/sq.ft.
                Advection in from water table =     -.24171E-02g/sq.ft.
                Diffusion in from atmosphere =      -.36802E-02g/sq.ft.
                Diffusion in from water table =       .00000    g/sq.ft.
           Total inflow at boundaries =     -.60973E-02g/sq.ft.
           Mass discrepancy =     -.25798E-06g/sq.ft.

Since beginning of run at time = 0.0
           Change in Total Mass =     -.40029E-01g/sq.ft.
                Advection in from atmosphere =       .00000    g/sq.ft.
                Advection in from water table =     -.14507E-01g/sq.ft.
                Diffusion in from atmosphere =      -.25521E-01g/sq.ft.
                Diffusion in from water table =       .00000    g/sq.ft.
           Total inflow at boundaries =     -.40028E-01g/sq.ft.
           Mass discrepancy =     -.29057E-06g/sq.ft.


Polygon   1
At time =       7.00, total mass in vadose zone =     1.8365    g/sq.ft.
Mass in gas phase     =       .23559    g/sq.ft.
Mass in liquid phase  =       1.0080    g/sq.ft.
Mass sorbed           =       .59294    g/sq.ft.

Since last printout at time =       6.00
           Change in Total Mass =     -.59220E-02g/sq.ft.
                Advection in from atmosphere =       .00000    g/sq.ft.
                Advection in from water table =     -.24166E-02g/sq.ft.
                Diffusion in from atmosphere =      -.35055E-02g/sq.ft.
                Diffusion in from water table =       .00000    g/sq.ft.
           Total inflow at boundaries =     -.59221E-02g/sq.ft.
           Mass discrepancy =      .12061E-06g/sq.ft.

Since beginning of run at time = 0.0
           Change in Total Mass =     -.45951E-01g/sq.ft.
                Advection in from atmosphere =       .00000    g/sq.ft.
```

```
                Advection in from water table =     -.16924E-01g/sq.ft.
                Diffusion in from atmosphere =      -.29027E-01g/sq.ft.
                Diffusion in from water table =      .00000    g/sq.ft.
           Total inflow at boundaries =     -.45950E-01g/sq.ft.
           Mass discrepancy =     -.17136E-06g/sq.ft.


Polygon   1
At time =       8.00, total mass in vadose zone =     1.8308    g/sq.ft.
Mass in gas phase     =       .23485    g/sq.ft.
Mass in liquid phase  =      1.0048     g/sq.ft.
Mass sorbed           =       .59108    g/sq.ft.

Since last printout at time =       7.00
           Change in Total Mass =     -.57651E-02g/sq.ft.
                Advection in from atmosphere =       .00000    g/sq.ft.
                Advection in from water table =     -.24160E-02g/sq.ft.
                Diffusion in from atmosphere =      -.33489E-02g/sq.ft.
                Diffusion in from water table =      .00000    g/sq.ft.
           Total inflow at boundaries =     -.57650E-02g/sq.ft.
           Mass discrepancy =     -.11921E-06g/sq.ft.

Since beginning of run at time = 0.0
           Change in Total Mass =     -.51716E-01g/sq.ft.
                Advection in from atmosphere =       .00000    g/sq.ft.
                Advection in from water table =     -.19340E-01g/sq.ft.
                Diffusion in from atmosphere =      -.32376E-01g/sq.ft.
                Diffusion in from water table =      .00000    g/sq.ft.
           Total inflow at boundaries =     -.51715E-01g/sq.ft.
           Mass discrepancy =     -.29057E-06g/sq.ft.


Polygon   1
At time =       9.00, total mass in vadose zone =     1.8251    g/sq.ft.
Mass in gas phase     =       .23413    g/sq.ft.
Mass in liquid phase  =      1.0017     g/sq.ft.
Mass sorbed           =       .58927    g/sq.ft.

Since last printout at time =       8.00
           Change in Total Mass =     -.56237E-02g/sq.ft.
                Advection in from atmosphere =       .00000    g/sq.ft.
                Advection in from water table =     -.24154E-02g/sq.ft.
                Diffusion in from atmosphere =      -.32085E-02g/sq.ft.
                Diffusion in from water table =      .00000    g/sq.ft.
           Total inflow at boundaries =     -.56239E-02g/sq.ft.
           Mass discrepancy =      .18906E-06g/sq.ft.

Since beginning of run at time = 0.0
           Change in Total Mass =     -.57339E-01g/sq.ft.
                Advection in from atmosphere =       .00000    g/sq.ft.
                Advection in from water table =     -.21755E-01g/sq.ft.
                Diffusion in from atmosphere =      -.35584E-01g/sq.ft.
                Diffusion in from water table =      .00000    g/sq.ft.
           Total inflow at boundaries =     -.57339E-01g/sq.ft.
           Mass discrepancy =     -.10058E-06g/sq.ft.


Polygon   1
At time =      10.00, total mass in vadose zone =     1.8196    g/sq.ft.
Mass in gas phase     =       .23342    g/sq.ft.
```

```
Mass in liquid phase  =       .99873    g/sq.ft.
Mass sorbed           =       .58749    g/sq.ft.

Since last printout at time =       9.00
               Change in Total Mass =     -.54971E-02g/sq.ft.
                    Advection in from atmosphere =       .00000    g/sq.ft.
                    Advection in from water table =     -.24147E-02g/sq.ft.
                    Diffusion in from atmosphere =      -.30824E-02g/sq.ft.
                    Diffusion in from water table =      .00000    g/sq.ft.
               Total inflow at boundaries =     -.54971E-02g/sq.ft.
               Mass discrepancy =     -.42841E-07g/sq.ft.

Since beginning of run at time = 0.0
               Change in Total Mass =     -.62837E-01g/sq.ft.
                    Advection in from atmosphere =       .00000    g/sq.ft.
                    Advection in from water table =     -.24170E-01g/sq.ft.
                    Diffusion in from atmosphere =      -.38666E-01g/sq.ft.
                    Diffusion in from water table =      .00000    g/sq.ft.
               Total inflow at boundaries =     -.62836E-01g/sq.ft.
               Mass discrepancy =     -.14156E-06g/sq.ft.


Polygon   1
At time =      11.00, total mass in vadose zone =     1.8143    g/sq.ft.
Mass in gas phase     =       .23273    g/sq.ft.
Mass in liquid phase  =       .99577    g/sq.ft.
Mass sorbed           =       .58575    g/sq.ft.

Since last printout at time =      10.00
               Change in Total Mass =     -.53830E-02g/sq.ft.
                    Advection in from atmosphere =       .00000    g/sq.ft.
                    Advection in from water table =     -.24139E-02g/sq.ft.
                    Diffusion in from atmosphere =      -.29690E-02g/sq.ft.
                    Diffusion in from water table =      .00000    g/sq.ft.
               Total inflow at boundaries =     -.53829E-02g/sq.ft.
               Mass discrepancy =     -.13923E-06g/sq.ft.

Since beginning of run at time = 0.0
               Change in Total Mass =     -.68220E-01g/sq.ft.
                    Advection in from atmosphere =       .00000    g/sq.ft.
                    Advection in from water table =     -.26584E-01g/sq.ft.
                    Diffusion in from atmosphere =      -.41635E-01g/sq.ft.
                    Diffusion in from water table =      .00000    g/sq.ft.
               Total inflow at boundaries =     -.68219E-01g/sq.ft.
               Mass discrepancy =     -.28312E-06g/sq.ft.


Polygon   1
At time =      12.00, total mass in vadose zone =     1.8090    g/sq.ft.
Mass in gas phase     =       .23205    g/sq.ft.
Mass in liquid phase  =       .99287    g/sq.ft.
Mass sorbed           =       .58405    g/sq.ft.

Since last printout at time =      11.00
               Change in Total Mass =     -.52797E-02g/sq.ft.
                    Advection in from atmosphere =       .00000    g/sq.ft.
                    Advection in from water table =     -.24130E-02g/sq.ft.
                    Diffusion in from atmosphere =      -.28670E-02g/sq.ft.
                    Diffusion in from water table =      .00000    g/sq.ft.
               Total inflow at boundaries =     -.52799E-02g/sq.ft.
```

```
              Mass discrepancy =      .28824E-06g/sq.ft.

Since beginning of run at time = 0.0
              Change in Total Mass =     -.73499E-01g/sq.ft.
                   Advection in from atmosphere =       .00000    g/sq.ft.
                   Advection in from water table =     -.28997E-01g/sq.ft.
                   Diffusion in from atmosphere =      -.44502E-01g/sq.ft.
                   Diffusion in from water table =      .00000    g/sq.ft.
              Total inflow at boundaries =     -.73499E-01g/sq.ft.
              Mass discrepancy =      .74506E-08g/sq.ft.


Polygon   1
At time =      13.00, total mass in vadose zone =     1.8038    g/sq.ft.
Mass in gas phase     =       .23139    g/sq.ft.
Mass in liquid phase  =       .99003    g/sq.ft.
Mass sorbed           =       .58237    g/sq.ft.

Since last printout at time =      12.00
              Change in Total Mass =     -.51870E-02g/sq.ft.
                   Advection in from atmosphere =       .00000    g/sq.ft.
                   Advection in from water table =     -.24120E-02g/sq.ft.
                   Diffusion in from atmosphere =      -.27751E-02g/sq.ft.
                   Diffusion in from water table =      .00000    g/sq.ft.
              Total inflow at boundaries =     -.51870E-02g/sq.ft.
              Mass discrepancy =      .37253E-08g/sq.ft.

Since beginning of run at time = 0.0
              Change in Total Mass =     -.78686E-01g/sq.ft.
                   Advection in from atmosphere =       .00000    g/sq.ft.
                   Advection in from water table =     -.31409E-01g/sq.ft.
                   Diffusion in from atmosphere =      -.47277E-01g/sq.ft.
                   Diffusion in from water table =      .00000    g/sq.ft.
              Total inflow at boundaries =     -.78686E-01g/sq.ft.
              Mass discrepancy =      .14901E-07g/sq.ft.


Polygon   1
At time =      14.00, total mass in vadose zone =     1.7987    g/sq.ft.
Mass in gas phase     =       .23073    g/sq.ft.
Mass in liquid phase  =       .98723    g/sq.ft.
Mass sorbed           =       .58073    g/sq.ft.

Since last printout at time =      13.00
              Change in Total Mass =     -.51026E-02g/sq.ft.
                   Advection in from atmosphere =       .00000    g/sq.ft.
                   Advection in from water table =     -.24109E-02g/sq.ft.
                   Diffusion in from atmosphere =      -.26921E-02g/sq.ft.
                   Diffusion in from water table =      .00000    g/sq.ft.
              Total inflow at boundaries =     -.51031E-02g/sq.ft.
              Mass discrepancy =      .41816E-06g/sq.ft.

Since beginning of run at time = 0.0
              Change in Total Mass =     -.83789E-01g/sq.ft.
                   Advection in from atmosphere =       .00000    g/sq.ft.
                   Advection in from water table =     -.33820E-01g/sq.ft.
                   Diffusion in from atmosphere =      -.49970E-01g/sq.ft.
                   Diffusion in from water table =      .00000    g/sq.ft.
              Total inflow at boundaries =     -.83789E-01g/sq.ft.
              Mass discrepancy =      .43213E-06g/sq.ft.
```

```
Polygon   1
At time =      15.00, total mass in vadose zone =     1.7937    g/sq.ft.
Mass in gas phase     =       .23009    g/sq.ft.
Mass in liquid phase  =       .98447    g/sq.ft.
Mass sorbed           =       .57910    g/sq.ft.

Since last printout at time =      14.00
               Change in Total Mass =     -.50272E-02g/sq.ft.
                    Advection in from atmosphere =       .00000    g/sq.ft.
                    Advection in from water table =     -.24097E-02g/sq.ft.
                    Diffusion in from atmosphere =      -.26173E-02g/sq.ft.
                    Diffusion in from water table =      .00000    g/sq.ft.
               Total inflow at boundaries =     -.50270E-02g/sq.ft.
               Mass discrepancy =     -.14948E-06g/sq.ft.

Since beginning of run at time = 0.0
               Change in Total Mass =     -.88816E-01g/sq.ft.
                    Advection in from atmosphere =       .00000    g/sq.ft.
                    Advection in from water table =     -.36229E-01g/sq.ft.
                    Diffusion in from atmosphere =      -.52587E-01g/sq.ft.
                    Diffusion in from water table =      .00000    g/sq.ft.
               Total inflow at boundaries =     -.88816E-01g/sq.ft.
               Mass discrepancy =      .28312E-06g/sq.ft.


Polygon   1
At time =      16.00, total mass in vadose zone =     1.7887    g/sq.ft.
Mass in gas phase     =       .22945    g/sq.ft.
Mass in liquid phase  =       .98175    g/sq.ft.
Mass sorbed           =       .57750    g/sq.ft.

Since last printout at time =      15.00
               Change in Total Mass =     -.49579E-02g/sq.ft.
                    Advection in from atmosphere =       .00000    g/sq.ft.
                    Advection in from water table =     -.24085E-02g/sq.ft.
                    Diffusion in from atmosphere =      -.25496E-02g/sq.ft.
                    Diffusion in from water table =      .00000    g/sq.ft.
               Total inflow at boundaries =     -.49581E-02g/sq.ft.
               Mass discrepancy =      .18859E-06g/sq.ft.

Since beginning of run at time = 0.0
               Change in Total Mass =     -.93774E-01g/sq.ft.
                    Advection in from atmosphere =       .00000    g/sq.ft.
                    Advection in from water table =     -.38638E-01g/sq.ft.
                    Diffusion in from atmosphere =      -.55137E-01g/sq.ft.
                    Diffusion in from water table =      .00000    g/sq.ft.
               Total inflow at boundaries =     -.93774E-01g/sq.ft.
               Mass discrepancy =      .46194E-06g/sq.ft.


Polygon   1
At time =      17.00, total mass in vadose zone =     1.7838    g/sq.ft.
Mass in gas phase     =       .22882    g/sq.ft.
Mass in liquid phase  =       .97906    g/sq.ft.
Mass sorbed           =       .57592    g/sq.ft.

Since last printout at time =      16.00
               Change in Total Mass =     -.48959E-02g/sq.ft.
```

```
                    Advection in from atmosphere =       .00000    g/sq.ft.
                    Advection in from water table =     -.24071E-02g/sq.ft.
                    Diffusion in from atmosphere =      -.24884E-02g/sq.ft.
                    Diffusion in from water table =       .00000    g/sq.ft.
               Total inflow at boundaries =     -.48955E-02g/sq.ft.
               Mass discrepancy =     -.39954E-06g/sq.ft.

Since beginning of run at time = 0.0
               Change in Total Mass =     -.98670E-01g/sq.ft.
                    Advection in from atmosphere =       .00000    g/sq.ft.
                    Advection in from water table =     -.41045E-01g/sq.ft.
                    Diffusion in from atmosphere =      -.57625E-01g/sq.ft.
                    Diffusion in from water table =       .00000    g/sq.ft.
               Total inflow at boundaries =     -.98670E-01g/sq.ft.
               Mass discrepancy =      .59605E-07g/sq.ft.


Polygon   1
At time =      18.00, total mass in vadose zone =     1.7790    g/sq.ft.
Mass in gas phase     =       .22820    g/sq.ft.
Mass in liquid phase  =       .97640    g/sq.ft.
Mass sorbed           =       .57436    g/sq.ft.

Since last printout at time =      17.00
               Change in Total Mass =     -.48383E-02g/sq.ft.
                    Advection in from atmosphere =       .00000    g/sq.ft.
                    Advection in from water table =     -.24057E-02g/sq.ft.
                    Diffusion in from atmosphere =      -.24330E-02g/sq.ft.
                    Diffusion in from water table =       .00000    g/sq.ft.
               Total inflow at boundaries =     -.48386E-02g/sq.ft.
               Mass discrepancy =      .27567E-06g/sq.ft.

Since beginning of run at time = 0.0
               Change in Total Mass =     -.10351    g/sq.ft.
                    Advection in from atmosphere =       .00000    g/sq.ft.
                    Advection in from water table =     -.43451E-01g/sq.ft.
                    Diffusion in from atmosphere =      -.60058E-01g/sq.ft.
                    Diffusion in from water table =       .00000    g/sq.ft.
               Total inflow at boundaries =     -.10351    g/sq.ft.
               Mass discrepancy =      .34273E-06g/sq.ft.


Polygon   1
At time =      19.00, total mass in vadose zone =     1.7742    g/sq.ft.
Mass in gas phase     =       .22759    g/sq.ft.
Mass in liquid phase  =       .97378    g/sq.ft.
Mass sorbed           =       .57281    g/sq.ft.

Since last printout at time =      18.00
               Change in Total Mass =     -.47867E-02g/sq.ft.
                    Advection in from atmosphere =       .00000    g/sq.ft.
                    Advection in from water table =     -.24041E-02g/sq.ft.
                    Diffusion in from atmosphere =      -.23827E-02g/sq.ft.
                    Diffusion in from water table =       .00000    g/sq.ft.
               Total inflow at boundaries =     -.47868E-02g/sq.ft.
               Mass discrepancy =      .67987E-07g/sq.ft.

Since beginning of run at time = 0.0
               Change in Total Mass =     -.10829    g/sq.ft.
                    Advection in from atmosphere =       .00000    g/sq.ft.
```

```
                Advection in from water table =     -.45855E-01g/sq.ft.
                Diffusion in from atmosphere =      -.62441E-01g/sq.ft.
                Diffusion in from water table =      .00000    g/sq.ft.
           Total inflow at boundaries =     -.10830    g/sq.ft.
           Mass discrepancy =      .40233E-06g/sq.ft.


Polygon   1
At time =      20.00, total mass in vadose zone =     1.7694    g/sq.ft.
Mass in gas phase     =       .22698    g/sq.ft.
Mass in liquid phase  =       .97118    g/sq.ft.
Mass sorbed           =       .57128    g/sq.ft.

Since last printout at time =      19.00
           Change in Total Mass =     -.47396E-02g/sq.ft.
                Advection in from atmosphere =       .00000    g/sq.ft.
                Advection in from water table =     -.24025E-02g/sq.ft.
                Diffusion in from atmosphere =      -.23370E-02g/sq.ft.
                Diffusion in from water table =      .00000    g/sq.ft.
           Total inflow at boundaries =     -.47395E-02g/sq.ft.
           Mass discrepancy =     -.12433E-06g/sq.ft.

Since beginning of run at time = 0.0
           Change in Total Mass =     -.11303    g/sq.ft.
                Advection in from atmosphere =       .00000    g/sq.ft.
                Advection in from water table =     -.48257E-01g/sq.ft.
                Diffusion in from atmosphere =      -.64778E-01g/sq.ft.
                Diffusion in from water table =      .00000    g/sq.ft.
           Total inflow at boundaries =     -.11303    g/sq.ft.
           Mass discrepancy =      .28312E-06g/sq.ft.


Polygon   1
At time =      21.00, total mass in vadose zone =     1.7647    g/sq.ft.
Mass in gas phase     =       .22638    g/sq.ft.
Mass in liquid phase  =       .96860    g/sq.ft.
Mass sorbed           =       .56977    g/sq.ft.

Since last printout at time =      20.00
           Change in Total Mass =     -.46961E-02g/sq.ft.
                Advection in from atmosphere =       .00000    g/sq.ft.
                Advection in from water table =     -.24007E-02g/sq.ft.
                Diffusion in from atmosphere =      -.22956E-02g/sq.ft.
                Diffusion in from water table =      .00000    g/sq.ft.
           Total inflow at boundaries =     -.46963E-02g/sq.ft.
           Mass discrepancy =      .18021E-06g/sq.ft.

Since beginning of run at time = 0.0
           Change in Total Mass =     -.11773    g/sq.ft.
                Advection in from atmosphere =       .00000    g/sq.ft.
                Advection in from water table =     -.50658E-01g/sq.ft.
                Diffusion in from atmosphere =      -.67073E-01g/sq.ft.
                Diffusion in from water table =      .00000    g/sq.ft.
           Total inflow at boundaries =     -.11773    g/sq.ft.
           Mass discrepancy =      .46194E-06g/sq.ft.


Polygon   1
At time =      22.00, total mass in vadose zone =     1.7601    g/sq.ft.
Mass in gas phase     =       .22578    g/sq.ft.
```

```
Mass in liquid phase  =       .96604    g/sq.ft.
Mass sorbed           =       .56826    g/sq.ft.

Since last printout at time =      21.00
              Change in Total Mass =     -.46567E-02g/sq.ft.
                   Advection in from atmosphere =       .00000    g/sq.ft.
                   Advection in from water table =     -.23989E-02g/sq.ft.
                   Diffusion in from atmosphere =      -.22579E-02g/sq.ft.
                   Diffusion in from water table =      .00000    g/sq.ft.
              Total inflow at boundaries =     -.46568E-02g/sq.ft.
              Mass discrepancy =      .83819E-07g/sq.ft.

Since beginning of run at time = 0.0
              Change in Total Mass =     -.12239    g/sq.ft.
                   Advection in from atmosphere =       .00000    g/sq.ft.
                   Advection in from water table =     -.53057E-01g/sq.ft.
                   Diffusion in from atmosphere =      -.69331E-01g/sq.ft.
                   Diffusion in from water table =      .00000    g/sq.ft.
              Total inflow at boundaries =     -.12239    g/sq.ft.
              Mass discrepancy =      .55134E-06g/sq.ft.


Polygon   1
At time =      23.00, total mass in vadose zone =     1.7555    g/sq.ft.
Mass in gas phase     =       .22519    g/sq.ft.
Mass in liquid phase  =       .96351    g/sq.ft.
Mass sorbed           =       .56677    g/sq.ft.

Since last printout at time =      22.00
              Change in Total Mass =     -.46204E-02g/sq.ft.
                   Advection in from atmosphere =       .00000    g/sq.ft.
                   Advection in from water table =     -.23969E-02g/sq.ft.
                   Diffusion in from atmosphere =      -.22235E-02g/sq.ft.
                   Diffusion in from water table =      .00000    g/sq.ft.
              Total inflow at boundaries =     -.46205E-02g/sq.ft.
              Mass discrepancy =      .45635E-07g/sq.ft.

Since beginning of run at time = 0.0
              Change in Total Mass =     -.12701    g/sq.ft.
                   Advection in from atmosphere =       .00000    g/sq.ft.
                   Advection in from water table =     -.55454E-01g/sq.ft.
                   Diffusion in from atmosphere =      -.71555E-01g/sq.ft.
                   Diffusion in from water table =      .00000    g/sq.ft.
              Total inflow at boundaries =     -.12701    g/sq.ft.
              Mass discrepancy =      .59605E-06g/sq.ft.


Polygon   1
At time =      24.00, total mass in vadose zone =     1.7509    g/sq.ft.
Mass in gas phase     =       .22460    g/sq.ft.
Mass in liquid phase  =       .96099    g/sq.ft.
Mass sorbed           =       .56529    g/sq.ft.

Since last printout at time =      23.00
              Change in Total Mass =     -.45872E-02g/sq.ft.
                   Advection in from atmosphere =       .00000    g/sq.ft.
                   Advection in from water table =     -.23949E-02g/sq.ft.
                   Diffusion in from atmosphere =      -.21922E-02g/sq.ft.
                   Diffusion in from water table =      .00000    g/sq.ft.
              Total inflow at boundaries =     -.45871E-02g/sq.ft.
```

Mass discrepancy = -.31665E-07g/sq.ft.

Since beginning of run at time = 0.0
Change in Total Mass = -.13160 g/sq.ft.
Advection in from atmosphere = .00000 g/sq.ft.
Advection in from water table = -.57849E-01g/sq.ft.
Diffusion in from atmosphere = -.73747E-01g/sq.ft.
Diffusion in from water table = .00000 g/sq.ft.
Total inflow at boundaries = -.13160 g/sq.ft.
Mass discrepancy = .56624E-06g/sq.ft.

Polygon 1
At time = 25.00, total mass in vadose zone = 1.7463 g/sq.ft.
Mass in gas phase = .22402 g/sq.ft.
Mass in liquid phase = .95849 g/sq.ft.
Mass sorbed = .56382 g/sq.ft.

Since last printout at time = 24.00
Change in Total Mass = -.45564E-02g/sq.ft.
Advection in from atmosphere = .00000 g/sq.ft.
Advection in from water table = -.23928E-02g/sq.ft.
Diffusion in from atmosphere = -.21637E-02g/sq.ft.
Diffusion in from water table = .00000 g/sq.ft.
Total inflow at boundaries = -.45564E-02g/sq.ft.
Mass discrepancy = .29337E-07g/sq.ft.

Since beginning of run at time = 0.0
Change in Total Mass = -.13615 g/sq.ft.
Advection in from atmosphere = .00000 g/sq.ft.
Advection in from water table = -.60241E-01g/sq.ft.
Diffusion in from atmosphere = -.75911E-01g/sq.ft.
Diffusion in from water table = .00000 g/sq.ft.
Total inflow at boundaries = -.13615 g/sq.ft.
Mass discrepancy = .59605E-06g/sq.ft.

Polygon 1
At time = 26.00, total mass in vadose zone = 1.7418 g/sq.ft.
Mass in gas phase = .22343 g/sq.ft.
Mass in liquid phase = .95600 g/sq.ft.
Mass sorbed = .56236 g/sq.ft.

Since last printout at time = 25.00
Change in Total Mass = -.45282E-02g/sq.ft.
Advection in from atmosphere = .00000 g/sq.ft.
Advection in from water table = -.23905E-02g/sq.ft.
Diffusion in from atmosphere = -.21376E-02g/sq.ft.
Diffusion in from water table = .00000 g/sq.ft.
Total inflow at boundaries = -.45281E-02g/sq.ft.
Mass discrepancy = -.40047E-07g/sq.ft.

Since beginning of run at time = 0.0
Change in Total Mass = -.14068 g/sq.ft.
Advection in from atmosphere = .00000 g/sq.ft.
Advection in from water table = -.62632E-01g/sq.ft.
Diffusion in from atmosphere = -.78048E-01g/sq.ft.
Diffusion in from water table = .00000 g/sq.ft.
Total inflow at boundaries = -.14068 g/sq.ft.
Mass discrepancy = .53644E-06g/sq.ft.

```
Polygon   1
At time =      27.00, total mass in vadose zone =     1.7373    g/sq.ft.
Mass in gas phase     =       .22286    g/sq.ft.
Mass in liquid phase  =       .95353    g/sq.ft.
Mass sorbed           =       .56090    g/sq.ft.

Since last printout at time =      26.00
               Change in Total Mass =     -.45017E-02g/sq.ft.
                    Advection in from atmosphere =       .00000    g/sq.ft.
                    Advection in from water table =     -.23882E-02g/sq.ft.
                    Diffusion in from atmosphere =      -.21137E-02g/sq.ft.
                    Diffusion in from water table =      .00000    g/sq.ft.
               Total inflow at boundaries =     -.45019E-02g/sq.ft.
               Mass discrepancy =      .23562E-06g/sq.ft.

Since beginning of run at time = 0.0
               Change in Total Mass =     -.14518    g/sq.ft.
                    Advection in from atmosphere =       .00000    g/sq.ft.
                    Advection in from water table =     -.65020E-01g/sq.ft.
                    Diffusion in from atmosphere =      -.80162E-01g/sq.ft.
                    Diffusion in from water table =      .00000    g/sq.ft.
               Total inflow at boundaries =     -.14518    g/sq.ft.
               Mass discrepancy =      .77486E-06g/sq.ft.


Polygon   1
At time =      28.00, total mass in vadose zone =     1.7328    g/sq.ft.
Mass in gas phase     =       .22228    g/sq.ft.
Mass in liquid phase  =       .95107    g/sq.ft.
Mass sorbed           =       .55946    g/sq.ft.

Since last printout at time =      27.00
               Change in Total Mass =     -.44776E-02g/sq.ft.
                    Advection in from atmosphere =       .00000    g/sq.ft.
                    Advection in from water table =     -.23858E-02g/sq.ft.
                    Diffusion in from atmosphere =      -.20919E-02g/sq.ft.
                    Diffusion in from water table =      .00000    g/sq.ft.
               Total inflow at boundaries =     -.44777E-02g/sq.ft.
               Mass discrepancy =      .45169E-07g/sq.ft.

Since beginning of run at time = 0.0
               Change in Total Mass =     -.14966    g/sq.ft.
                    Advection in from atmosphere =       .00000    g/sq.ft.
                    Advection in from water table =     -.67406E-01g/sq.ft.
                    Diffusion in from atmosphere =      -.82254E-01g/sq.ft.
                    Diffusion in from water table =      .00000    g/sq.ft.
               Total inflow at boundaries =     -.14966    g/sq.ft.
               Mass discrepancy =      .81956E-06g/sq.ft.


Polygon   1
At time =      29.00, total mass in vadose zone =     1.7284    g/sq.ft.
Mass in gas phase     =       .22171    g/sq.ft.
Mass in liquid phase  =       .94863    g/sq.ft.
Mass sorbed           =       .55802    g/sq.ft.

Since last printout at time =      28.00
               Change in Total Mass =     -.44551E-02g/sq.ft.
```

Advection in from atmosphere = .00000 g/sq.ft.
Advection in from water table = -.23832E-02g/sq.ft.
Diffusion in from atmosphere = -.20719E-02g/sq.ft.
Diffusion in from water table = .00000 g/sq.ft.
Total inflow at boundaries = -.44551E-02g/sq.ft.
Mass discrepancy = .29337E-07g/sq.ft.

Since beginning of run at time = 0.0
Change in Total Mass = -.15411 g/sq.ft.
Advection in from atmosphere = .00000 g/sq.ft.
Advection in from water table = -.69789E-01g/sq.ft.
Diffusion in from atmosphere = -.84326E-01g/sq.ft.
Diffusion in from water table = .00000 g/sq.ft.
Total inflow at boundaries = -.15411 g/sq.ft.
Mass discrepancy = .84937E-06g/sq.ft.

Polygon 1
At time = 30.00, total mass in vadose zone = 1.7239 g/sq.ft.
Mass in gas phase = .22114 g/sq.ft.
Mass in liquid phase = .94620 g/sq.ft.
Mass sorbed = .55659 g/sq.ft.

Since last printout at time = 29.00
Change in Total Mass = -.44343E-02g/sq.ft.
Advection in from atmosphere = .00000 g/sq.ft.
Advection in from water table = -.23806E-02g/sq.ft.
Diffusion in from atmosphere = -.20535E-02g/sq.ft.
Diffusion in from water table = .00000 g/sq.ft.
Total inflow at boundaries = -.44341E-02g/sq.ft.
Mass discrepancy = -.22305E-06g/sq.ft.

Since beginning of run at time = 0.0
Change in Total Mass = -.15855 g/sq.ft.
Advection in from atmosphere = .00000 g/sq.ft.
Advection in from water table = -.72170E-01g/sq.ft.
Diffusion in from atmosphere = -.86379E-01g/sq.ft.
Diffusion in from water table = .00000 g/sq.ft.
Total inflow at boundaries = -.15855 g/sq.ft.
Mass discrepancy = .62585E-06g/sq.ft.

GROUNDWATER IMPACT OF POLYGON 1

Time	Mass per area (g/sq.ft.)	Total Mass (g)
1.00	.24185E-02	194.69
2.00	.24183E-02	194.68
3.00	.24181E-02	194.66
4.00	.24178E-02	194.64
5.00	.24175E-02	194.61
6.00	.24171E-02	194.57
7.00	.24166E-02	194.54
8.00	.24160E-02	194.49
9.00	.24154E-02	194.44
10.00	.24147E-02	194.38
11.00	.24139E-02	194.32
12.00	.24130E-02	194.24
13.00	.24120E-02	194.16
14.00	.24109E-02	194.08
15.00	.24097E-02	193.98

16.00	.24085E-02	193.88
17.00	.24071E-02	193.77
18.00	.24057E-02	193.66
19.00	.24041E-02	193.53
20.00	.24025E-02	193.40
21.00	.24007E-02	193.26
22.00	.23989E-02	193.11
23.00	.23969E-02	192.95
24.00	.23949E-02	192.79
25.00	.23928E-02	192.62
26.00	.23905E-02	192.44
27.00	.23882E-02	192.25
28.00	.23858E-02	192.05
29.00	.23832E-02	191.85
30.00	.23806E-02	191.64

****

****

TOTAL GROUNDWATER IMPACT

Time (yr)	Mass (g)	Cumulative Mass (g)
1.00	194.69	194.69
2.00	194.68	389.36
3.00	194.66	584.02
4.00	194.64	778.66
5.00	194.61	973.26
6.00	194.57	1167.8
7.00	194.54	1362.4
8.00	194.49	1556.9
9.00	194.44	1751.3
10.00	194.38	1945.7
11.00	194.32	2140.0
12.00	194.24	2334.2
13.00	194.16	2528.4
14.00	194.08	2722.5
15.00	193.98	2916.5
16.00	193.88	3110.3
17.00	193.77	3304.1
18.00	193.66	3497.8
19.00	193.53	3691.3
20.00	193.40	3884.7
21.00	193.26	4078.0
22.00	193.11	4271.1
23.00	192.95	4464.0
24.00	192.79	4656.8
25.00	192.62	4849.4
26.00	192.44	5041.9
27.00	192.25	5234.1
28.00	192.05	5426.2
29.00	191.85	5618.0
30.00	191.64	5809.7

```
 V-Leach, VER 1.1
 Jake Turin, 11/91
PGA V-leach model, polygon screen-TCE-11/18/92-POLY65.INP.  Rev Soil, HGC Chem
  1 polygons.
Timestep =   1.00 years.  Simulation length =   30.00 years.
Printout every   1.00 years.  Vertical profile stored every  10.00 years.
Koc =      123.60    ml/g,       .43649E-02cu.ft./g
Kh =      .47300     (dimensionless).
Aqueous solubility =     1100.0     mg/l,      31.149     g/cu.ft
Free air diffusion coefficient = .70290     sq. m/day,  2761.7     sq.ft./yr


Polygon   1
Polygon 65
Polygon area =      80500.    sq. ft.
 60 cells, each cell  1.000 ft. thick.
Soil Properties:
 Bulk density =     1.6400    g/ml,       46440.    g/cu.ft.
 Porosity =  .3810 Volumetric water content =  .2550
 Organic carbon content =  .00074000
Recharge Rate =  .02296500 ft/yr
Conc. in recharge water =      .00000    mg/l,       .00000    g/cu.ft
Atmospheric concentration =      .00000    mg/l,       .00000    g/cu.ft
Water table is impermeable to gas diffusion.
```

Polygon 65
Time: .000

Cell	Cgas(g/cu.ft.)	Cliq(g/cu.ft.)	Csol
1	.98740E-02	.20875E-01	.67427E-07
2	.98740E-02	.20875E-01	.67427E-07
3	.98740E-02	.20875E-01	.67427E-07
4	.98740E-02	.20875E-01	.67427E-07
5	.98740E-02	.20875E-01	.67427E-07
6	.98740E-02	.20875E-01	.67427E-07
7	.10009E-01	.21161E-01	.68351E-07
8	.10009E-01	.21161E-01	.68351E-07
9	.10009E-01	.21161E-01	.68351E-07
10	.10009E-01	.21161E-01	.68351E-07
11	.10009E-01	.21161E-01	.68351E-07
12	.10009E-01	.21161E-01	.68351E-07
13	.10140E-01	.21438E-01	.69245E-07
14	.10140E-01	.21438E-01	.69245E-07
15	.10140E-01	.21438E-01	.69245E-07
16	.10140E-01	.21438E-01	.69245E-07
17	.10140E-01	.21438E-01	.69245E-07
18	.10140E-01	.21438E-01	.69245E-07
19	.10275E-01	.21724E-01	.70168E-07
20	.10275E-01	.21724E-01	.70168E-07
21	.10275E-01	.21724E-01	.70168E-07
22	.10275E-01	.21724E-01	.70168E-07
23	.10275E-01	.21724E-01	.70168E-07
24	.10275E-01	.21724E-01	.70168E-07
25	.30057E-01	.63545E-01	.20525E-06
26	.30057E-01	.63545E-01	.20525E-06
27	.30057E-01	.63545E-01	.20525E-06
28	.30057E-01	.63545E-01	.20525E-06
29	.30057E-01	.63545E-01	.20525E-06
30	.30057E-01	.63545E-01	.20525E-06
31	.49813E-01	.10531	.34016E-06
32	.49813E-01	.10531	.34016E-06
33	.49813E-01	.10531	.34016E-06
34	.49813E-01	.10531	.34016E-06
35	.49813E-01	.10531	.34016E-06
36	.49813E-01	.10531	.34016E-06
37	.49813E-01	.10531	.34016E-06
38	.49813E-01	.10531	.34016E-06
39	.49813E-01	.10531	.34016E-06
40	.49813E-01	.10531	.34016E-06
41	.49813E-01	.10531	.34016E-06
42	.49813E-01	.10531	.34016E-06
43	.49813E-01	.10531	.34016E-06
44	.49813E-01	.10531	.34016E-06
45	.49813E-01	.10531	.34016E-06
46	.49813E-01	.10531	.34016E-06
47	.49813E-01	.10531	.34016E-06
48	.49813E-01	.10531	.34016E-06
49	.49813E-01	.10531	.34016E-06
50	.49813E-01	.10531	.34016E-06
51	.49813E-01	.10531	.34016E-06
52	.49813E-01	.10531	.34016E-06
53	.49813E-01	.10531	.34016E-06
54	.49813E-01	.10531	.34016E-06
55	.49813E-01	.10531	.34016E-06
56	.49813E-01	.10531	.34016E-06

57	.49813E-01	.10531	.34016E-06
58	.49813E-01	.10531	.34016E-06
59	.49813E-01	.10531	.34016E-06
60	.49813E-01	.10531	.34016E-06

Polygon 65
Time: 10.000

Cell	Cgas(g/cu.ft.)	Cliq(g/cu.ft.)	Csol
1	.23608E-02	.49910E-02	.16121E-07
2	.41534E-02	.87811E-02	.28363E-07
3	.52900E-02	.11184E-01	.36124E-07
4	.61294E-02	.12959E-01	.41856E-07
5	.68277E-02	.14435E-01	.46625E-07
6	.74345E-02	.15718E-01	.50768E-07
7	.79911E-02	.16894E-01	.54569E-07
8	.84829E-02	.17934E-01	.57928E-07
9	.89239E-02	.18867E-01	.60939E-07
10	.93315E-02	.19728E-01	.63723E-07
11	.97194E-02	.20548E-01	.66371E-07
12	.10099E-01	.21352E-01	.68966E-07
13	.10502E-01	.22202E-01	.71712E-07
14	.10908E-01	.23062E-01	.74490E-07
15	.11332E-01	.23957E-01	.77381E-07
16	.11789E-01	.24923E-01	.80502E-07
17	.12295E-01	.25993E-01	.83957E-07
18	.12864E-01	.27197E-01	.87847E-07
19	.13534E-01	.28612E-01	.92417E-07
20	.14290E-01	.30212E-01	.97584E-07
21	.15155E-01	.32040E-01	.10349E-06
22	.16156E-01	.34157E-01	.11033E-06
23	.17321E-01	.36620E-01	.11828E-06
24	.18681E-01	.39494E-01	.12757E-06
25	.23137E-01	.48915E-01	.15800E-06
26	.26331E-01	.55669E-01	.17981E-06
27	.28364E-01	.59965E-01	.19369E-06
28	.29997E-01	.63419E-01	.20484E-06
29	.31549E-01	.66701E-01	.21544E-06
30	.33124E-01	.70029E-01	.22619E-06
31	.37635E-01	.79567E-01	.25700E-06
32	.40734E-01	.86118E-01	.27816E-06
33	.42517E-01	.89888E-01	.29034E-06
34	.43742E-01	.92477E-01	.29870E-06
35	.44716E-01	.94537E-01	.30536E-06
36	.45530E-01	.96257E-01	.31091E-06
37	.46216E-01	.97708E-01	.31560E-06
38	.46795E-01	.98931E-01	.31955E-06
39	.47282E-01	.99963E-01	.32288E-06
40	.47693E-01	.10083	.32568E-06
41	.48038E-01	.10156	.32804E-06
42	.48328E-01	.10217	.33002E-06
43	.48572E-01	.10269	.33169E-06
44	.48776E-01	.10312	.33308E-06
45	.48947E-01	.10348	.33425E-06
46	.49090E-01	.10378	.33522E-06
47	.49209E-01	.10404	.33604E-06
48	.49309E-01	.10425	.33672E-06
49	.49391E-01	.10442	.33728E-06
50	.49460E-01	.10457	.33775E-06
51	.49517E-01	.10469	.33814E-06
52	.49564E-01	.10479	.33846E-06

53	.49603E-01	.10487	.33873E-06
54	.49634E-01	.10494	.33894E-06
55	.49660E-01	.10499	.33911E-06
56	.49680E-01	.10503	.33925E-06
57	.49695E-01	.10506	.33935E-06
58	.49706E-01	.10509	.33943E-06
59	.49713E-01	.10510	.33948E-06
60	.49717E-01	.10511	.33951E-06

Polygon 65
Time: 20.000

Cell	Cgas(g/cu.ft.)	Cliq(g/cu.ft.)	Csol
1	.99457E-03	.21027E-02	.67917E-08
2	.21979E-02	.46467E-02	.15009E-07
3	.33075E-02	.69926E-02	.22586E-07
4	.42871E-02	.90635E-02	.29275E-07
5	.51696E-02	.10929E-01	.35302E-07
6	.59825E-02	.12648E-01	.40853E-07
7	.67443E-02	.14259E-01	.46055E-07
8	.74632E-02	.15778E-01	.50964E-07
9	.81466E-02	.17223E-01	.55631E-07
10	.88043E-02	.18614E-01	.60123E-07
11	.94465E-02	.19972E-01	.64508E-07
12	.10083E-01	.21318E-01	.68858E-07
13	.10728E-01	.22681E-01	.73260E-07
14	.11388E-01	.24076E-01	.77766E-07
15	.12072E-01	.25521E-01	.82434E-07
16	.12790E-01	.27040E-01	.87338E-07
17	.13554E-01	.28656E-01	.92559E-07
18	.14377E-01	.30395E-01	.98176E-07
19	.15272E-01	.32288E-01	.10429E-06
20	.16250E-01	.34355E-01	.11097E-06
21	.17320E-01	.36617E-01	.11827E-06
22	.18494E-01	.39100E-01	.12629E-06
23	.19787E-01	.41832E-01	.13512E-06
24	.21208E-01	.44838E-01	.14483E-06
25	.23188E-01	.49022E-01	.15834E-06
26	.25291E-01	.53470E-01	.17271E-06
27	.27218E-01	.57544E-01	.18587E-06
28	.28982E-01	.61274E-01	.19791E-06
29	.30669E-01	.64839E-01	.20943E-06
30	.32333E-01	.68357E-01	.22079E-06
31	.34416E-01	.72762E-01	.23502E-06
32	.36491E-01	.77148E-01	.24919E-06
33	.38257E-01	.80882E-01	.26125E-06
34	.39728E-01	.83992E-01	.27129E-06
35	.40989E-01	.86657E-01	.27990E-06
36	.42093E-01	.88992E-01	.28745E-06
37	.43070E-01	.91056E-01	.29411E-06
38	.43933E-01	.92881E-01	.30001E-06
39	.44694E-01	.94491E-01	.30521E-06
40	.45364E-01	.95907E-01	.30978E-06
41	.45952E-01	.97151E-01	.31380E-06
42	.46467E-01	.98240E-01	.31731E-06
43	.46917E-01	.99191E-01	.32039E-06
44	.47309E-01	.10002	.32306E-06
45	.47650E-01	.10074	.32539E-06
46	.47946E-01	.10137	.32741E-06
47	.48202E-01	.10191	.32916E-06
48	.48423E-01	.10237	.33067E-06

49	.48613E-01	.10278	.33196E-06
50	.48776E-01	.10312	.33308E-06
51	.48915E-01	.10341	.33403E-06
52	.49033E-01	.10366	.33483E-06
53	.49132E-01	.10387	.33551E-06
54	.49215E-01	.10405	.33608E-06
55	.49284E-01	.10419	.33655E-06
56	.49339E-01	.10431	.33692E-06
57	.49382E-01	.10440	.33722E-06
58	.49414E-01	.10447	.33744E-06
59	.49436E-01	.10451	.33758E-06
60	.49447E-01	.10454	.33766E-06

Polygon 65
Time: 30.000

Cell	Cgas(g/cu.ft.)	Cliq(g/cu.ft.)	Csol
1	.69541E-03	.14702E-02	.47488E-08
2	.15968E-02	.33759E-02	.10904E-07
3	.25394E-02	.53686E-02	.17341E-07
4	.34625E-02	.73203E-02	.23645E-07
5	.43532E-02	.92033E-02	.29727E-07
6	.52136E-02	.11022E-01	.35603E-07
7	.60492E-02	.12789E-01	.41309E-07
8	.68644E-02	.14513E-01	.46875E-07
9	.76636E-02	.16202E-01	.52333E-07
10	.84519E-02	.17869E-01	.57716E-07
11	.92349E-02	.19524E-01	.63063E-07
12	.10019E-01	.21182E-01	.68418E-07
13	.10811E-01	.22857E-01	.73828E-07
14	.11619E-01	.24564E-01	.79341E-07
15	.12447E-01	.26316E-01	.85000E-07
16	.13304E-01	.28128E-01	.90853E-07
17	.14197E-01	.30015E-01	.96950E-07
18	.15133E-01	.31993E-01	.10334E-06
19	.16119E-01	.34077E-01	.11007E-06
20	.17161E-01	.36281E-01	.11719E-06
21	.18265E-01	.38615E-01	.12473E-06
22	.19436E-01	.41091E-01	.13272E-06
23	.20678E-01	.43717E-01	.14121E-06
24	.21995E-01	.46500E-01	.15020E-06
25	.23447E-01	.49571E-01	.16011E-06
26	.24999E-01	.52851E-01	.17071E-06
27	.26569E-01	.56172E-01	.18144E-06
28	.28117E-01	.59445E-01	.19201E-06
29	.29639E-01	.62662E-01	.20240E-06
30	.31141E-01	.65838E-01	.21266E-06
31	.32688E-01	.69109E-01	.22322E-06
32	.34245E-01	.72399E-01	.23385E-06
33	.35730E-01	.75539E-01	.24399E-06
34	.37103E-01	.78441E-01	.25336E-06
35	.38361E-01	.81101E-01	.26196E-06
36	.39514E-01	.83539E-01	.26983E-06
37	.40571E-01	.85774E-01	.27705E-06
38	.41538E-01	.87818E-01	.28365E-06
39	.42419E-01	.89681E-01	.28967E-06
40	.43220E-01	.91374E-01	.29514E-06
41	.43945E-01	.92907E-01	.30009E-06
42	.44599E-01	.94290E-01	.30456E-06
43	.45187E-01	.95534E-01	.30857E-06
44	.45715E-01	.96648E-01	.31217E-06

45	.46186E-01	.97644E-01	.31539E-06
46	.46605E-01	.98531E-01	.31826E-06
47	.46978E-01	.99319E-01	.32080E-06
48	.47307E-01	.10001	.32305E-06
49	.47597E-01	.10063	.32503E-06
50	.47851E-01	.10117	.32677E-06
51	.48073E-01	.10163	.32828E-06
52	.48265E-01	.10204	.32959E-06
53	.48430E-01	.10239	.33072E-06
54	.48570E-01	.10269	.33167E-06
55	.48687E-01	.10293	.33247E-06
56	.48783E-01	.10314	.33313E-06
57	.48859E-01	.10330	.33365E-06
58	.48916E-01	.10342	.33404E-06
59	.48956E-01	.10350	.33431E-06
60	.48978E-01	.10355	.33446E-06

Polygon 65 Vertical Distribution using Polygon 69 Vertical Investigation Data, Averaged Soil Physical Properties, and Estimated VOC Mass (pounds) from HGC (July, 1989)

% Total Mass per 6 foot interval (from Polygon 69)	Total VOC Mass Table C-2	Incremental Mass (lbs) per 6 ft	Incremental Mass (gram) per 6 ft	Volume Soil per interval (cu. feet)	Calculated Total Soil Conc (ug/Kg)
0.030912464	334.1	10.33	4684.61	483000	208.85
0.031335118	334.1	10.47	4748.66	483000	211.71
0.031746032	334.1	10.61	4810.93	483000	214.48
0.032168686	334.1	10.75	4874.98	483000	217.34
0.094099277	334.1	31.44	14260.22	483000	635.75
0.155947685	334.1	52.10	23633.00	483000	1053.61
0.155947685	334.1	52.10	23633.00	483000	1053.61
0.155947685	334.1	52.10	23633.00	483000	1053.61
0.155947685	334.1	52.10	23633.00	483000	1053.61
0.155947685	334.1	52.10	23633.00	483000	1053.61
1		334.10	151544.42		

```
PGA V-leach model, polygon screen-TCE-10/30/92-POLY92.INP  6/92 Soil Gas Data.
    1
       1.0          30.          1.0          10.
     123.6         .473        1100.        .7029
lygon 92
     87500.           1.      .02667         1.64         .381         .255      .00074
         0.           0.          -1.
   60
    1     6       15.12
    7    12       45.35
   13    18       75.58
   19    24      205.46
   25    30      385.16
   31    36      463.53
   37    42      521.63
   43    48      810.35
   49    54     1145.19
   55    60     1201.00
```

```
                    V-Leach, VER 1.1
 Jake Turin, 11/91
PGA V-leach model, polygon screen-TCE-10/30/92-POLY92.INP  6/92 Soil Gas Data.


Polygon   1
At time =        .00, total mass in vadose zone =     1.3565    g/sq.ft.
Mass in gas phase     =       .17401    g/sq.ft.
Mass in liquid phase  =       .74451    g/sq.ft.
Mass sorbed           =       .43795    g/sq.ft.


Polygon   1
At time =       1.00, total mass in vadose zone =     1.3526    g/sq.ft.
Mass in gas phase     =       .17351    g/sq.ft.
Mass in liquid phase  =       .74240    g/sq.ft.
Mass sorbed           =       .43671    g/sq.ft.

Since last printout at time =        .00
               Change in Total Mass =     -.38455E-02g/sq.ft.
                    Advection in from atmosphere =       .00000    g/sq.ft.
                    Advection in from water table =     -.32016E-02g/sq.ft.
                    Diffusion in from atmosphere =      -.64399E-03g/sq.ft.
                    Diffusion in from water table =      .00000    g/sq.ft.
               Total inflow at boundaries =     -.38456E-02g/sq.ft.
               Mass discrepancy =      .11432E-06g/sq.ft.

Since beginning of run at time = 0.0
               Change in Total Mass =     -.38455E-02g/sq.ft.
                    Advection in from atmosphere =       .00000    g/sq.ft.
                    Advection in from water table =     -.32016E-02g/sq.ft.
                    Diffusion in from atmosphere =      -.64399E-03g/sq.ft.
                    Diffusion in from water table =      .00000    g/sq.ft.
               Total inflow at boundaries =     -.38456E-02g/sq.ft.
               Mass discrepancy =      .11432E-06g/sq.ft.


Polygon   1
At time =       2.00, total mass in vadose zone =     1.3488    g/sq.ft.
Mass in gas phase     =       .17302    g/sq.ft.
Mass in liquid phase  =       .74030    g/sq.ft.
Mass sorbed           =       .43547    g/sq.ft.

Since last printout at time =       1.00
               Change in Total Mass =     -.38317E-02g/sq.ft.
                    Advection in from atmosphere =       .00000    g/sq.ft.
                    Advection in from water table =     -.31876E-02g/sq.ft.
                    Diffusion in from atmosphere =      -.64387E-03g/sq.ft.
                    Diffusion in from water table =      .00000    g/sq.ft.
               Total inflow at boundaries =     -.38314E-02g/sq.ft.
               Mass discrepancy =     -.30850E-06g/sq.ft.

Since beginning of run at time = 0.0
               Change in Total Mass =     -.76772E-02g/sq.ft.
                    Advection in from atmosphere =       .00000    g/sq.ft.
                    Advection in from water table =     -.63891E-02g/sq.ft.
                    Diffusion in from atmosphere =      -.12879E-02g/sq.ft.
                    Diffusion in from water table =      .00000    g/sq.ft.
               Total inflow at boundaries =     -.76770E-02g/sq.ft.
               Mass discrepancy =     -.19465E-06g/sq.ft.
```

```
Polygon   1
At time =       3.00, total mass in vadose zone =     1.3450    g/sq.ft.
Mass in gas phase     =       .17253    g/sq.ft.
Mass in liquid phase  =       .73821    g/sq.ft.
Mass sorbed           =       .43424    g/sq.ft.

Since last printout at time =       2.00
               Change in Total Mass =     -.38178E-02g/sq.ft.
                    Advection in from atmosphere =       .00000    g/sq.ft.
                    Advection in from water table =     -.31729E-02g/sq.ft.
                    Diffusion in from atmosphere =      -.64512E-03g/sq.ft.
                    Diffusion in from water table =      .00000    g/sq.ft.
               Total inflow at boundaries =     -.38180E-02g/sq.ft.
               Mass discrepancy =      .21490E-06g/sq.ft.

Since beginning of run at time = 0.0
               Change in Total Mass =     -.11495E-01g/sq.ft.
                    Advection in from atmosphere =       .00000    g/sq.ft.
                    Advection in from water table =     -.95620E-02g/sq.ft.
                    Diffusion in from atmosphere =      -.19330E-02g/sq.ft.
                    Diffusion in from water table =      .00000    g/sq.ft.
               Total inflow at boundaries =     -.11495E-01g/sq.ft.
               Mass discrepancy =      .20489E-07g/sq.ft.


Polygon   1
At time =       4.00, total mass in vadose zone =     1.3412    g/sq.ft.
Mass in gas phase     =       .17204    g/sq.ft.
Mass in liquid phase  =       .73612    g/sq.ft.
Mass sorbed           =       .43301    g/sq.ft.

Since last printout at time =       3.00
               Change in Total Mass =     -.38049E-02g/sq.ft.
                    Advection in from atmosphere =       .00000    g/sq.ft.
                    Advection in from water table =     -.31576E-02g/sq.ft.
                    Diffusion in from atmosphere =      -.64752E-03g/sq.ft.
                    Diffusion in from water table =      .00000    g/sq.ft.
               Total inflow at boundaries =     -.38052E-02g/sq.ft.
               Mass discrepancy =      .23143E-06g/sq.ft.

Since beginning of run at time = 0.0
               Change in Total Mass =     -.15300E-01g/sq.ft.
                    Advection in from atmosphere =       .00000    g/sq.ft.
                    Advection in from water table =     -.12720E-01g/sq.ft.
                    Diffusion in from atmosphere =      -.25805E-02g/sq.ft.
                    Diffusion in from water table =      .00000    g/sq.ft.
               Total inflow at boundaries =     -.15300E-01g/sq.ft.
               Mass discrepancy =      .25146E-06g/sq.ft.


Polygon   1
At time =       5.00, total mass in vadose zone =     1.3374    g/sq.ft.
Mass in gas phase     =       .17156    g/sq.ft.
Mass in liquid phase  =       .73404    g/sq.ft.
Mass sorbed           =       .43179    g/sq.ft.

Since last printout at time =       4.00
               Change in Total Mass =     -.37929E-02g/sq.ft.
```

```
                Advection in from atmosphere =       .00000    g/sq.ft.
                Advection in from water table =     -.31419E-02g/sq.ft.
                Diffusion in from atmosphere =      -.65087E-03g/sq.ft.
                Diffusion in from water table =      .00000    g/sq.ft.
            Total inflow at boundaries =     -.37927E-02g/sq.ft.
            Mass discrepancy =     -.13737E-06g/sq.ft.

Since beginning of run at time = 0.0
            Change in Total Mass =     -.19093E-01g/sq.ft.
                Advection in from atmosphere =       .00000    g/sq.ft.
                Advection in from water table =     -.15862E-01g/sq.ft.
                Diffusion in from atmosphere =      -.32314E-02g/sq.ft.
                Diffusion in from water table =      .00000    g/sq.ft.
            Total inflow at boundaries =     -.19093E-01g/sq.ft.
            Mass discrepancy =      .11548E-06g/sq.ft.


Polygon   1
At time =       6.00, total mass in vadose zone =     1.3336    g/sq.ft.
Mass in gas phase     =       .17107    g/sq.ft.
Mass in liquid phase  =       .73196    g/sq.ft.
Mass sorbed           =       .43057    g/sq.ft.

Since last printout at time =       5.00
            Change in Total Mass =     -.37806E-02g/sq.ft.
                Advection in from atmosphere =       .00000    g/sq.ft.
                Advection in from water table =     -.31256E-02g/sq.ft.
                Diffusion in from atmosphere =      -.65504E-03g/sq.ft.
                Diffusion in from water table =      .00000    g/sq.ft.
            Total inflow at boundaries =     -.37807E-02g/sq.ft.
            Mass discrepancy =      .85915E-07g/sq.ft.

Since beginning of run at time = 0.0
            Change in Total Mass =     -.22873E-01g/sq.ft.
                Advection in from atmosphere =       .00000    g/sq.ft.
                Advection in from water table =     -.18987E-01g/sq.ft.
                Diffusion in from atmosphere =      -.38864E-02g/sq.ft.
                Diffusion in from water table =      .00000    g/sq.ft.
            Total inflow at boundaries =     -.22874E-01g/sq.ft.
            Mass discrepancy =      .19930E-06g/sq.ft.


Polygon   1
At time =       7.00, total mass in vadose zone =     1.3298    g/sq.ft.
Mass in gas phase     =       .17059    g/sq.ft.
Mass in liquid phase  =       .72989    g/sq.ft.
Mass sorbed           =       .42935    g/sq.ft.

Since last printout at time =       6.00
            Change in Total Mass =     -.37690E-02g/sq.ft.
                Advection in from atmosphere =       .00000    g/sq.ft.
                Advection in from water table =     -.31090E-02g/sq.ft.
                Diffusion in from atmosphere =      -.65987E-03g/sq.ft.
                Diffusion in from water table =      .00000    g/sq.ft.
            Total inflow at boundaries =     -.37689E-02g/sq.ft.
            Mass discrepancy =     -.13085E-06g/sq.ft.

Since beginning of run at time = 0.0
            Change in Total Mass =     -.26642E-01g/sq.ft.
                Advection in from atmosphere =       .00000    g/sq.ft.
```

```
                Advection in from water table =     -.22096E-01g/sq.ft.
                Diffusion in from atmosphere =      -.45463E-02g/sq.ft.
                Diffusion in from water table =      .00000    g/sq.ft.
           Total inflow at boundaries =     -.26643E-01g/sq.ft.
           Mass discrepancy =      .68918E-07g/sq.ft.


Polygon   1
At time =       8.00, total mass in vadose zone =     1.3261    g/sq.ft.
Mass in gas phase     =       .17011    g/sq.ft.
Mass in liquid phase  =       .72783    g/sq.ft.
Mass sorbed           =       .42814    g/sq.ft.

Since last printout at time =       7.00
           Change in Total Mass =     -.37572E-02g/sq.ft.
                Advection in from atmosphere =       .00000    g/sq.ft.
                Advection in from water table =     -.30921E-02g/sq.ft.
                Diffusion in from atmosphere =      -.66526E-03g/sq.ft.
                Diffusion in from water table =      .00000    g/sq.ft.
           Total inflow at boundaries =     -.37573E-02g/sq.ft.
           Mass discrepancy =      .10268E-06g/sq.ft.

Since beginning of run at time = 0.0
           Change in Total Mass =     -.30400E-01g/sq.ft.
                Advection in from atmosphere =       .00000    g/sq.ft.
                Advection in from water table =     -.25188E-01g/sq.ft.
                Diffusion in from atmosphere =      -.52115E-02g/sq.ft.
                Diffusion in from water table =      .00000    g/sq.ft.
           Total inflow at boundaries =     -.30400E-01g/sq.ft.
           Mass discrepancy =      .17136E-06g/sq.ft.


Polygon   1
At time =       9.00, total mass in vadose zone =     1.3223    g/sq.ft.
Mass in gas phase     =       .16963    g/sq.ft.
Mass in liquid phase  =       .72577    g/sq.ft.
Mass sorbed           =       .42693    g/sq.ft.

Since last printout at time =       8.00
           Change in Total Mass =     -.37462E-02g/sq.ft.
                Advection in from atmosphere =       .00000    g/sq.ft.
                Advection in from water table =     -.30748E-02g/sq.ft.
                Diffusion in from atmosphere =      -.67110E-03g/sq.ft.
                Diffusion in from water table =      .00000    g/sq.ft.
           Total inflow at boundaries =     -.37459E-02g/sq.ft.
           Mass discrepancy =     -.21863E-06g/sq.ft.

Since beginning of run at time = 0.0
           Change in Total Mass =     -.34146E-01g/sq.ft.
                Advection in from atmosphere =       .00000    g/sq.ft.
                Advection in from water table =     -.28263E-01g/sq.ft.
                Diffusion in from atmosphere =      -.58827E-02g/sq.ft.
                Diffusion in from water table =      .00000    g/sq.ft.
           Total inflow at boundaries =     -.34146E-01g/sq.ft.
           Mass discrepancy =     -.44703E-07g/sq.ft.


Polygon   1
At time =      10.00, total mass in vadose zone =     1.3186    g/sq.ft.
Mass in gas phase     =       .16915    g/sq.ft.
```

```
Mass in liquid phase  =       .72372    g/sq.ft.
Mass sorbed           =       .42572    g/sq.ft.

Since last printout at time =       9.00
               Change in Total Mass =     -.37344E-02g/sq.ft.
                    Advection in from atmosphere =       .00000    g/sq.ft.
                    Advection in from water table =     -.30573E-02g/sq.ft.
                    Diffusion in from atmosphere =      -.67730E-03g/sq.ft.
                    Diffusion in from water table =      .00000    g/sq.ft.
               Total inflow at boundaries =     -.37346E-02g/sq.ft.
               Mass discrepancy =      .29616E-06g/sq.ft.

Since beginning of run at time = 0.0
               Change in Total Mass =     -.37880E-01g/sq.ft.
                    Advection in from atmosphere =       .00000    g/sq.ft.
                    Advection in from water table =     -.31320E-01g/sq.ft.
                    Diffusion in from atmosphere =      -.65600E-02g/sq.ft.
                    Diffusion in from water table =      .00000    g/sq.ft.
               Total inflow at boundaries =     -.37880E-01g/sq.ft.
               Mass discrepancy =      .24959E-06g/sq.ft.


Polygon   1
At time =      11.00, total mass in vadose zone =     1.3149    g/sq.ft.
Mass in gas phase     =       .16867    g/sq.ft.
Mass in liquid phase  =       .72168    g/sq.ft.
Mass sorbed           =       .42452    g/sq.ft.

Since last printout at time =      10.00
               Change in Total Mass =     -.37236E-02g/sq.ft.
                    Advection in from atmosphere =       .00000    g/sq.ft.
                    Advection in from water table =     -.30397E-02g/sq.ft.
                    Diffusion in from atmosphere =      -.68379E-03g/sq.ft.
                    Diffusion in from water table =      .00000    g/sq.ft.
               Total inflow at boundaries =     -.37234E-02g/sq.ft.
               Mass discrepancy =     -.17323E-06g/sq.ft.

Since beginning of run at time = 0.0
               Change in Total Mass =     -.41604E-01g/sq.ft.
                    Advection in from atmosphere =       .00000    g/sq.ft.
                    Advection in from water table =     -.34360E-01g/sq.ft.
                    Diffusion in from atmosphere =      -.72437E-02g/sq.ft.
                    Diffusion in from water table =      .00000    g/sq.ft.
               Total inflow at boundaries =     -.41604E-01g/sq.ft.
               Mass discrepancy =      .78231E-07g/sq.ft.


Polygon   1
At time =      12.00, total mass in vadose zone =     1.3112    g/sq.ft.
Mass in gas phase     =       .16819    g/sq.ft.
Mass in liquid phase  =       .71964    g/sq.ft.
Mass sorbed           =       .42332    g/sq.ft.

Since last printout at time =      11.00
               Change in Total Mass =     -.37124E-02g/sq.ft.
                    Advection in from atmosphere =       .00000    g/sq.ft.
                    Advection in from water table =     -.30218E-02g/sq.ft.
                    Diffusion in from atmosphere =      -.69051E-03g/sq.ft.
                    Diffusion in from water table =      .00000    g/sq.ft.
               Total inflow at boundaries =     -.37123E-02g/sq.ft.
```

Mass discrepancy = -.10221E-06g/sq.ft.

Since beginning of run at time = 0.0
Change in Total Mass = -.45316E-01g/sq.ft.
Advection in from atmosphere = .00000 g/sq.ft.
Advection in from water table = -.37382E-01g/sq.ft.
Diffusion in from atmosphere = -.79343E-02g/sq.ft.
Diffusion in from water table = .00000 g/sq.ft.
Total inflow at boundaries = -.45316E-01g/sq.ft.
Mass discrepancy = -.22352E-07g/sq.ft.

Polygon 1
At time = 13.00, total mass in vadose zone = 1.3075 g/sq.ft.
Mass in gas phase = .16772 g/sq.ft.
Mass in liquid phase = .71761 g/sq.ft.
Mass sorbed = .42213 g/sq.ft.

Since last printout at time = 12.00
Change in Total Mass = -.37011E-02g/sq.ft.
Advection in from atmosphere = .00000 g/sq.ft.
Advection in from water table = -.30038E-02g/sq.ft.
Diffusion in from atmosphere = -.69739E-03g/sq.ft.
Diffusion in from water table = .00000 g/sq.ft.
Total inflow at boundaries = -.37012E-02g/sq.ft.
Mass discrepancy = .13341E-06g/sq.ft.

Since beginning of run at time = 0.0
Change in Total Mass = -.49017E-01g/sq.ft.
Advection in from atmosphere = .00000 g/sq.ft.
Advection in from water table = -.40386E-01g/sq.ft.
Diffusion in from atmosphere = -.86316E-02g/sq.ft.
Diffusion in from water table = .00000 g/sq.ft.
Total inflow at boundaries = -.49017E-01g/sq.ft.
Mass discrepancy = .10803E-06g/sq.ft.

Polygon 1
At time = 14.00, total mass in vadose zone = 1.3038 g/sq.ft.
Mass in gas phase = .16725 g/sq.ft.
Mass in liquid phase = .71559 g/sq.ft.
Mass sorbed = .42094 g/sq.ft.

Since last printout at time = 13.00
Change in Total Mass = -.36900E-02g/sq.ft.
Advection in from atmosphere = .00000 g/sq.ft.
Advection in from water table = -.29858E-02g/sq.ft.
Diffusion in from atmosphere = -.70439E-03g/sq.ft.
Diffusion in from water table = .00000 g/sq.ft.
Total inflow at boundaries = -.36902E-02g/sq.ft.
Mass discrepancy = .16112E-06g/sq.ft.

Since beginning of run at time = 0.0
Change in Total Mass = -.52707E-01g/sq.ft.
Advection in from atmosphere = .00000 g/sq.ft.
Advection in from water table = -.43372E-01g/sq.ft.
Diffusion in from atmosphere = -.93360E-02g/sq.ft.
Diffusion in from water table = .00000 g/sq.ft.
Total inflow at boundaries = -.52708E-01g/sq.ft.
Mass discrepancy = .26822E-06g/sq.ft.

```
Polygon   1
At time =      15.00, total mass in vadose zone =     1.3001    g/sq.ft.
Mass in gas phase     =       .16677    g/sq.ft.
Mass in liquid phase  =       .71357    g/sq.ft.
Mass sorbed           =       .41975    g/sq.ft.

Since last printout at time =      14.00
               Change in Total Mass =     -.36792E-02g/sq.ft.
                    Advection in from atmosphere =       .00000    g/sq.ft.
                    Advection in from water table =     -.29677E-02g/sq.ft.
                    Diffusion in from atmosphere =      -.71146E-03g/sq.ft.
                    Diffusion in from water table =      .00000    g/sq.ft.
               Total inflow at boundaries =     -.36791E-02g/sq.ft.
               Mass discrepancy =     -.28405E-07g/sq.ft.

Since beginning of run at time = 0.0
               Change in Total Mass =     -.56386E-01g/sq.ft.
                    Advection in from atmosphere =       .00000    g/sq.ft.
                    Advection in from water table =     -.46339E-01g/sq.ft.
                    Diffusion in from atmosphere =      -.10047E-01g/sq.ft.
                    Diffusion in from water table =      .00000    g/sq.ft.
               Total inflow at boundaries =     -.56387E-01g/sq.ft.
               Mass discrepancy =      .24214E-06g/sq.ft.


Polygon   1
At time =      16.00, total mass in vadose zone =     1.2964    g/sq.ft.
Mass in gas phase     =       .16630    g/sq.ft.
Mass in liquid phase  =       .71155    g/sq.ft.
Mass sorbed           =       .41856    g/sq.ft.

Since last printout at time =      15.00
               Change in Total Mass =     -.36683E-02g/sq.ft.
                    Advection in from atmosphere =       .00000    g/sq.ft.
                    Advection in from water table =     -.29495E-02g/sq.ft.
                    Diffusion in from atmosphere =      -.71858E-03g/sq.ft.
                    Diffusion in from water table =      .00000    g/sq.ft.
               Total inflow at boundaries =     -.36681E-02g/sq.ft.
               Mass discrepancy =     -.20349E-06g/sq.ft.

Since beginning of run at time = 0.0
               Change in Total Mass =     -.60055E-01g/sq.ft.
                    Advection in from atmosphere =       .00000    g/sq.ft.
                    Advection in from water table =     -.49289E-01g/sq.ft.
                    Diffusion in from atmosphere =      -.10766E-01g/sq.ft.
                    Diffusion in from water table =      .00000    g/sq.ft.
               Total inflow at boundaries =     -.60055E-01g/sq.ft.
               Mass discrepancy =      .37253E-07g/sq.ft.


Polygon   1
At time =      17.00, total mass in vadose zone =     1.2928    g/sq.ft.
Mass in gas phase     =       .16583    g/sq.ft.
Mass in liquid phase  =       .70955    g/sq.ft.
Mass sorbed           =       .41738    g/sq.ft.

Since last printout at time =      16.00
               Change in Total Mass =     -.36572E-02g/sq.ft.
```

```
                    Advection in from atmosphere =       .00000    g/sq.ft.
                    Advection in from water table =     -.29314E-02g/sq.ft.
                    Diffusion in from atmosphere =      -.72572E-03g/sq.ft.
                    Diffusion in from water table =      .00000    g/sq.ft.
               Total inflow at boundaries =     -.36571E-02g/sq.ft.
               Mass discrepancy =     -.13039E-06g/sq.ft.

Since beginning of run at time = 0.0
               Change in Total Mass =     -.63712E-01g/sq.ft.
                    Advection in from atmosphere =       .00000    g/sq.ft.
                    Advection in from water table =     -.52220E-01g/sq.ft.
                    Diffusion in from atmosphere =      -.11492E-01g/sq.ft.
                    Diffusion in from water table =      .00000    g/sq.ft.
               Total inflow at boundaries =     -.63712E-01g/sq.ft.
               Mass discrepancy =     -.89407E-07g/sq.ft.


Polygon   1
At time =      18.00, total mass in vadose zone =     1.2891    g/sq.ft.
Mass in gas phase     =       .16537    g/sq.ft.
Mass in liquid phase  =       .70754    g/sq.ft.
Mass sorbed           =       .41621    g/sq.ft.

Since last printout at time =      17.00
               Change in Total Mass =     -.36457E-02g/sq.ft.
                    Advection in from atmosphere =       .00000    g/sq.ft.
                    Advection in from water table =     -.29132E-02g/sq.ft.
                    Diffusion in from atmosphere =      -.73284E-03g/sq.ft.
                    Diffusion in from water table =      .00000    g/sq.ft.
               Total inflow at boundaries =     -.36461E-02g/sq.ft.
               Mass discrepancy =      .42724E-06g/sq.ft.

Since beginning of run at time = 0.0
               Change in Total Mass =     -.67358E-01g/sq.ft.
                    Advection in from atmosphere =       .00000    g/sq.ft.
                    Advection in from water table =     -.55133E-01g/sq.ft.
                    Diffusion in from atmosphere =      -.12225E-01g/sq.ft.
                    Diffusion in from water table =      .00000    g/sq.ft.
               Total inflow at boundaries =     -.67358E-01g/sq.ft.
               Mass discrepancy =      .33528E-06g/sq.ft.


Polygon   1
At time =      19.00, total mass in vadose zone =     1.2855    g/sq.ft.
Mass in gas phase     =       .16490    g/sq.ft.
Mass in liquid phase  =       .70555    g/sq.ft.
Mass sorbed           =       .41503    g/sq.ft.

Since last printout at time =      18.00
               Change in Total Mass =     -.36354E-02g/sq.ft.
                    Advection in from atmosphere =       .00000    g/sq.ft.
                    Advection in from water table =     -.28952E-02g/sq.ft.
                    Diffusion in from atmosphere =      -.73992E-03g/sq.ft.
                    Diffusion in from water table =      .00000    g/sq.ft.
               Total inflow at boundaries =     -.36351E-02g/sq.ft.
               Mass discrepancy =     -.31898E-06g/sq.ft.

Since beginning of run at time = 0.0
               Change in Total Mass =     -.70993E-01g/sq.ft.
                    Advection in from atmosphere =       .00000    g/sq.ft.
```

```
                    Advection in from water table =     -.58029E-01g/sq.ft.
                    Diffusion in from atmosphere =      -.12965E-01g/sq.ft.
                    Diffusion in from water table =      .00000    g/sq.ft.
               Total inflow at boundaries =     -.70993E-01g/sq.ft.
               Mass discrepancy =      .14901E-07g/sq.ft.


Polygon   1
At time =      20.00, total mass in vadose zone =     1.2819    g/sq.ft.
Mass in gas phase     =       .16443    g/sq.ft.
Mass in liquid phase  =       .70356    g/sq.ft.
Mass sorbed           =       .41386    g/sq.ft.

Since last printout at time =      19.00
               Change in Total Mass =     -.36240E-02g/sq.ft.
                    Advection in from atmosphere =       .00000    g/sq.ft.
                    Advection in from water table =     -.28771E-02g/sq.ft.
                    Diffusion in from atmosphere =      -.74695E-03g/sq.ft.
                    Diffusion in from water table =      .00000    g/sq.ft.
               Total inflow at boundaries =     -.36241E-02g/sq.ft.
               Mass discrepancy =      .13458E-06g/sq.ft.

Since beginning of run at time = 0.0
               Change in Total Mass =     -.74617E-01g/sq.ft.
                    Advection in from atmosphere =       .00000    g/sq.ft.
                    Advection in from water table =     -.60906E-01g/sq.ft.
                    Diffusion in from atmosphere =      -.13712E-01g/sq.ft.
                    Diffusion in from water table =      .00000    g/sq.ft.
               Total inflow at boundaries =     -.74617E-01g/sq.ft.
               Mass discrepancy =      .14901E-06g/sq.ft.


Polygon   1
At time =      21.00, total mass in vadose zone =     1.2782    g/sq.ft.
Mass in gas phase     =       .16397    g/sq.ft.
Mass in liquid phase  =       .70158    g/sq.ft.
Mass sorbed           =       .41270    g/sq.ft.

Since last printout at time =      20.00
               Change in Total Mass =     -.36134E-02g/sq.ft.
                    Advection in from atmosphere =       .00000    g/sq.ft.
                    Advection in from water table =     -.28592E-02g/sq.ft.
                    Diffusion in from atmosphere =      -.75391E-03g/sq.ft.
                    Diffusion in from water table =      .00000    g/sq.ft.
               Total inflow at boundaries =     -.36131E-02g/sq.ft.
               Mass discrepancy =     -.23656E-06g/sq.ft.

Since beginning of run at time = 0.0
               Change in Total Mass =     -.78230E-01g/sq.ft.
                    Advection in from atmosphere =       .00000    g/sq.ft.
                    Advection in from water table =     -.63765E-01g/sq.ft.
                    Diffusion in from atmosphere =      -.14465E-01g/sq.ft.
                    Diffusion in from water table =      .00000    g/sq.ft.
               Total inflow at boundaries =     -.78230E-01g/sq.ft.
               Mass discrepancy =     -.89407E-07g/sq.ft.


Polygon   1
At time =      22.00, total mass in vadose zone =     1.2746    g/sq.ft.
Mass in gas phase     =       .16351    g/sq.ft.
```

```
Mass in liquid phase  =       .69960    g/sq.ft.
Mass sorbed           =       .41153    g/sq.ft.

Since last printout at time =      21.00
              Change in Total Mass =     -.36019E-02g/sq.ft.
                   Advection in from atmosphere =       .00000    g/sq.ft.
                   Advection in from water table =     -.28414E-02g/sq.ft.
                   Diffusion in from atmosphere =      -.76079E-03g/sq.ft.
                   Diffusion in from water table =      .00000    g/sq.ft.
              Total inflow at boundaries =     -.36021E-02g/sq.ft.
              Mass discrepancy =      .23888E-06g/sq.ft.

Since beginning of run at time = 0.0
              Change in Total Mass =     -.81832E-01g/sq.ft.
                   Advection in from atmosphere =       .00000    g/sq.ft.
                   Advection in from water table =     -.66606E-01g/sq.ft.
                   Diffusion in from atmosphere =      -.15226E-01g/sq.ft.
                   Diffusion in from water table =      .00000    g/sq.ft.
              Total inflow at boundaries =     -.81832E-01g/sq.ft.
              Mass discrepancy =      .14901E-06g/sq.ft.


Polygon   1
At time =      23.00, total mass in vadose zone =     1.2711    g/sq.ft.
Mass in gas phase     =       .16305    g/sq.ft.
Mass in liquid phase  =       .69763    g/sq.ft.
Mass sorbed           =       .41037    g/sq.ft.

Since last printout at time =      22.00
              Change in Total Mass =     -.35912E-02g/sq.ft.
                   Advection in from atmosphere =       .00000    g/sq.ft.
                   Advection in from water table =     -.28236E-02g/sq.ft.
                   Diffusion in from atmosphere =      -.76757E-03g/sq.ft.
                   Diffusion in from water table =      .00000    g/sq.ft.
              Total inflow at boundaries =     -.35912E-02g/sq.ft.
              Mass discrepancy =      .13271E-07g/sq.ft.

Since beginning of run at time = 0.0
              Change in Total Mass =     -.85423E-01g/sq.ft.
                   Advection in from atmosphere =       .00000    g/sq.ft.
                   Advection in from water table =     -.69430E-01g/sq.ft.
                   Diffusion in from atmosphere =      -.15994E-01g/sq.ft.
                   Diffusion in from water table =      .00000    g/sq.ft.
              Total inflow at boundaries =     -.85424E-01g/sq.ft.
              Mass discrepancy =      .16391E-06g/sq.ft.


Polygon   1
At time =      24.00, total mass in vadose zone =     1.2675    g/sq.ft.
Mass in gas phase     =       .16259    g/sq.ft.
Mass in liquid phase  =       .69566    g/sq.ft.
Mass sorbed           =       .40922    g/sq.ft.

Since last printout at time =      23.00
              Change in Total Mass =     -.35800E-02g/sq.ft.
                   Advection in from atmosphere =       .00000    g/sq.ft.
                   Advection in from water table =     -.28060E-02g/sq.ft.
                   Diffusion in from atmosphere =      -.77425E-03g/sq.ft.
                   Diffusion in from water table =      .00000    g/sq.ft.
              Total inflow at boundaries =     -.35803E-02g/sq.ft.
```

```
                Mass discrepancy =      .28266E-06g/sq.ft.

Since beginning of run at time = 0.0
                Change in Total Mass =     -.89003E-01g/sq.ft.
                     Advection in from atmosphere =       .00000    g/sq.ft.
                     Advection in from water table =     -.72236E-01g/sq.ft.
                     Diffusion in from atmosphere =      -.16768E-01g/sq.ft.
                     Diffusion in from water table =      .00000    g/sq.ft.
                Total inflow at boundaries =     -.89004E-01g/sq.ft.
                Mass discrepancy =      .44703E-06g/sq.ft.


Polygon   1
At time =      25.00, total mass in vadose zone =     1.2639    g/sq.ft.
Mass in gas phase     =       .16213    g/sq.ft.
Mass in liquid phase  =       .69371    g/sq.ft.
Mass sorbed           =       .40806    g/sq.ft.

Since last printout at time =      24.00
                Change in Total Mass =     -.35696E-02g/sq.ft.
                     Advection in from atmosphere =       .00000    g/sq.ft.
                     Advection in from water table =     -.27885E-02g/sq.ft.
                     Diffusion in from atmosphere =      -.78083E-03g/sq.ft.
                     Diffusion in from water table =      .00000    g/sq.ft.
                Total inflow at boundaries =     -.35693E-02g/sq.ft.
                Mass discrepancy =     -.26147E-06g/sq.ft.

Since beginning of run at time = 0.0
                Change in Total Mass =     -.92573E-01g/sq.ft.
                     Advection in from atmosphere =       .00000    g/sq.ft.
                     Advection in from water table =     -.75024E-01g/sq.ft.
                     Diffusion in from atmosphere =      -.17549E-01g/sq.ft.
                     Diffusion in from water table =      .00000    g/sq.ft.
                Total inflow at boundaries =     -.92573E-01g/sq.ft.
                Mass discrepancy =      .18626E-06g/sq.ft.


Polygon   1
At time =      26.00, total mass in vadose zone =     1.2603    g/sq.ft.
Mass in gas phase     =       .16167    g/sq.ft.
Mass in liquid phase  =       .69175    g/sq.ft.
Mass sorbed           =       .40692    g/sq.ft.

Since last printout at time =      25.00
                Change in Total Mass =     -.35585E-02g/sq.ft.
                     Advection in from atmosphere =       .00000    g/sq.ft.
                     Advection in from water table =     -.27712E-02g/sq.ft.
                     Diffusion in from atmosphere =      -.78728E-03g/sq.ft.
                     Diffusion in from water table =      .00000    g/sq.ft.
                Total inflow at boundaries =     -.35585E-02g/sq.ft.
                Mass discrepancy =     -.65193E-07g/sq.ft.

Since beginning of run at time = 0.0
                Change in Total Mass =     -.96132E-01g/sq.ft.
                     Advection in from atmosphere =       .00000    g/sq.ft.
                     Advection in from water table =     -.77796E-01g/sq.ft.
                     Diffusion in from atmosphere =      -.18336E-01g/sq.ft.
                     Diffusion in from water table =      .00000    g/sq.ft.
                Total inflow at boundaries =     -.96132E-01g/sq.ft.
                Mass discrepancy =      .11921E-06g/sq.ft.
```

```
Polygon   1
At time =      27.00, total mass in vadose zone =     1.2568    g/sq.ft.
Mass in gas phase     =       .16122    g/sq.ft.
Mass in liquid phase  =       .68980    g/sq.ft.
Mass sorbed           =       .40577    g/sq.ft.

Since last printout at time =      26.00
               Change in Total Mass =     -.35472E-02g/sq.ft.
                    Advection in from atmosphere =       .00000    g/sq.ft.
                    Advection in from water table =     -.27540E-02g/sq.ft.
                    Diffusion in from atmosphere =      -.79361E-03g/sq.ft.
                    Diffusion in from water table =      .00000    g/sq.ft.
               Total inflow at boundaries =     -.35476E-02g/sq.ft.
               Mass discrepancy =      .39674E-06g/sq.ft.

Since beginning of run at time = 0.0
               Change in Total Mass =     -.99679E-01g/sq.ft.
                    Advection in from atmosphere =       .00000    g/sq.ft.
                    Advection in from water table =     -.80550E-01g/sq.ft.
                    Diffusion in from atmosphere =      -.19130E-01g/sq.ft.
                    Diffusion in from water table =      .00000    g/sq.ft.
               Total inflow at boundaries =     -.99679E-01g/sq.ft.
               Mass discrepancy =      .51409E-06g/sq.ft.


Polygon   1
At time =      28.00, total mass in vadose zone =     1.2533    g/sq.ft.
Mass in gas phase     =       .16077    g/sq.ft.
Mass in liquid phase  =       .68786    g/sq.ft.
Mass sorbed           =       .40463    g/sq.ft.

Since last printout at time =      27.00
               Change in Total Mass =     -.35369E-02g/sq.ft.
                    Advection in from atmosphere =       .00000    g/sq.ft.
                    Advection in from water table =     -.27369E-02g/sq.ft.
                    Diffusion in from atmosphere =      -.79982E-03g/sq.ft.
                    Diffusion in from water table =      .00000    g/sq.ft.
               Total inflow at boundaries =     -.35368E-02g/sq.ft.
               Mass discrepancy =     -.18347E-06g/sq.ft.

Since beginning of run at time = 0.0
               Change in Total Mass =     -.10322    g/sq.ft.
                    Advection in from atmosphere =       .00000    g/sq.ft.
                    Advection in from water table =     -.83286E-01g/sq.ft.
                    Diffusion in from atmosphere =      -.19930E-01g/sq.ft.
                    Diffusion in from water table =      .00000    g/sq.ft.
               Total inflow at boundaries =     -.10322    g/sq.ft.
               Mass discrepancy =      .32783E-06g/sq.ft.


Polygon   1
At time =      29.00, total mass in vadose zone =     1.2497    g/sq.ft.
Mass in gas phase     =       .16031    g/sq.ft.
Mass in liquid phase  =       .68593    g/sq.ft.
Mass sorbed           =       .40349    g/sq.ft.

Since last printout at time =      28.00
               Change in Total Mass =     -.35261E-02g/sq.ft.
```

```
                    Advection in from atmosphere =       .00000    g/sq.ft.
                    Advection in from water table =     -.27201E-02g/sq.ft.
                    Diffusion in from atmosphere =      -.80590E-03g/sq.ft.
                    Diffusion in from water table =      .00000    g/sq.ft.
               Total inflow at boundaries =     -.35260E-02g/sq.ft.
               Mass discrepancy =     -.13248E-06g/sq.ft.

Since beginning of run at time = 0.0
               Change in Total Mass =     -.10674    g/sq.ft.
                    Advection in from atmosphere =       .00000    g/sq.ft.
                    Advection in from water table =     -.86007E-01g/sq.ft.
                    Diffusion in from atmosphere =      -.20735E-01g/sq.ft.
                    Diffusion in from water table =      .00000    g/sq.ft.
               Total inflow at boundaries =     -.10674    g/sq.ft.
               Mass discrepancy =      .19372E-06g/sq.ft.


Polygon   1
At time =      30.00, total mass in vadose zone =     1.2462    g/sq.ft.
Mass in gas phase     =       .15986    g/sq.ft.
Mass in liquid phase  =       .68400    g/sq.ft.
Mass sorbed           =       .40235    g/sq.ft.

Since last printout at time =      29.00
               Change in Total Mass =     -.35150E-02g/sq.ft.
                    Advection in from atmosphere =       .00000    g/sq.ft.
                    Advection in from water table =     -.27033E-02g/sq.ft.
                    Diffusion in from atmosphere =      -.81185E-03g/sq.ft.
                    Diffusion in from water table =      .00000    g/sq.ft.
               Total inflow at boundaries =     -.35152E-02g/sq.ft.
               Mass discrepancy =      .19395E-06g/sq.ft.

Since beginning of run at time = 0.0
               Change in Total Mass =     -.11026    g/sq.ft.
                    Advection in from atmosphere =       .00000    g/sq.ft.
                    Advection in from water table =     -.88710E-01g/sq.ft.
                    Diffusion in from atmosphere =      -.21547E-01g/sq.ft.
                    Diffusion in from water table =      .00000    g/sq.ft.
               Total inflow at boundaries =     -.11026    g/sq.ft.
               Mass discrepancy =      .38743E-06g/sq.ft.


GROUNDWATER IMPACT OF POLYGON   1

 Time        Mass per area (g/sq.ft.)      Total Mass (g)
     1.00          .32016E-02                 280.14
     2.00          .31876E-02                 278.91
     3.00          .31729E-02                 277.63
     4.00          .31576E-02                 276.29
     5.00          .31419E-02                 274.91
     6.00          .31256E-02                 273.49
     7.00          .31090E-02                 272.04
     8.00          .30921E-02                 270.56
     9.00          .30748E-02                 269.05
    10.00          .30573E-02                 267.52
    11.00          .30397E-02                 265.97
    12.00          .30218E-02                 264.41
    13.00          .30038E-02                 262.84
    14.00          .29858E-02                 261.26
    15.00          .29677E-02                 259.67
```

16.00	.29495E-02	258.08
17.00	.29314E-02	256.50
18.00	.29132E-02	254.91
19.00	.28952E-02	253.33
20.00	.28771E-02	251.75
21.00	.28592E-02	250.18
22.00	.28414E-02	248.62
23.00	.28236E-02	247.07
24.00	.28060E-02	245.53
25.00	.27885E-02	244.00
26.00	.27712E-02	242.48
27.00	.27540E-02	240.97
28.00	.27369E-02	239.48
29.00	.27201E-02	238.01
30.00	.27033E-02	236.54

****

****

TOTAL GROUNDWATER IMPACT

Time (yr)	Mass (g)	Cumulative Mass (g)
1.00	280.14	280.14
2.00	278.91	559.05
3.00	277.63	836.68
4.00	276.29	1113.0
5.00	274.91	1387.9
6.00	273.49	1661.4
7.00	272.04	1933.4
8.00	270.56	2204.0
9.00	269.05	2473.0
10.00	267.52	2740.5
11.00	265.97	3006.5
12.00	264.41	3270.9
13.00	262.84	3533.8
14.00	261.26	3795.0
15.00	259.67	4054.7
16.00	258.08	4312.8
17.00	256.50	4569.3
18.00	254.91	4824.2
19.00	253.33	5077.5
20.00	251.75	5329.2
21.00	250.18	5579.4
22.00	248.62	5828.0
23.00	247.07	6075.1
24.00	245.53	6320.6
25.00	244.00	6564.6
26.00	242.48	6807.1
27.00	240.97	7048.1
28.00	239.48	7287.6
29.00	238.01	7525.6
30.00	236.54	7762.1

Polygon 92
Time: .000

Cell	Cgas(g/cu.ft.)	Cliq(g/cu.ft.)	Csol
1	.71484E-03	.15113E-02	.48815E-08
2	.71484E-03	.15113E-02	.48815E-08
3	.71484E-03	.15113E-02	.48815E-08
4	.71484E-03	.15113E-02	.48815E-08
5	.71484E-03	.15113E-02	.48815E-08
6	.71484E-03	.15113E-02	.48815E-08
7	.21441E-02	.45329E-02	.14641E-07
8	.21441E-02	.45329E-02	.14641E-07
9	.21441E-02	.45329E-02	.14641E-07
10	.21441E-02	.45329E-02	.14641E-07
11	.21441E-02	.45329E-02	.14641E-07
12	.21441E-02	.45329E-02	.14641E-07
13	.35733E-02	.75545E-02	.24401E-07
14	.35733E-02	.75545E-02	.24401E-07
15	.35733E-02	.75545E-02	.24401E-07
16	.35733E-02	.75545E-02	.24401E-07
17	.35733E-02	.75545E-02	.24401E-07
18	.35733E-02	.75545E-02	.24401E-07
19	.97137E-02	.20536E-01	.66333E-07
20	.97137E-02	.20536E-01	.66333E-07
21	.97137E-02	.20536E-01	.66333E-07
22	.97137E-02	.20536E-01	.66333E-07
23	.97137E-02	.20536E-01	.66333E-07
24	.97137E-02	.20536E-01	.66333E-07
25	.18210E-01	.38498E-01	.12435E-06
26	.18210E-01	.38498E-01	.12435E-06
27	.18210E-01	.38498E-01	.12435E-06
28	.18210E-01	.38498E-01	.12435E-06
29	.18210E-01	.38498E-01	.12435E-06
30	.18210E-01	.38498E-01	.12435E-06
31	.21915E-01	.46331E-01	.14965E-06
32	.21915E-01	.46331E-01	.14965E-06
33	.21915E-01	.46331E-01	.14965E-06
34	.21915E-01	.46331E-01	.14965E-06
35	.21915E-01	.46331E-01	.14965E-06
36	.21915E-01	.46331E-01	.14965E-06
37	.24662E-01	.52139E-01	.16841E-06
38	.24662E-01	.52139E-01	.16841E-06
39	.24662E-01	.52139E-01	.16841E-06
40	.24662E-01	.52139E-01	.16841E-06
41	.24662E-01	.52139E-01	.16841E-06
42	.24662E-01	.52139E-01	.16841E-06
43	.38312E-01	.80997E-01	.26162E-06
44	.38312E-01	.80997E-01	.26162E-06
45	.38312E-01	.80997E-01	.26162E-06
46	.38312E-01	.80997E-01	.26162E-06
47	.38312E-01	.80997E-01	.26162E-06
48	.38312E-01	.80997E-01	.26162E-06
49	.54142E-01	.11447	.36972E-06
50	.54142E-01	.11447	.36972E-06
51	.54142E-01	.11447	.36972E-06
52	.54142E-01	.11447	.36972E-06
53	.54142E-01	.11447	.36972E-06
54	.54142E-01	.11447	.36972E-06
55	.56781E-01	.12004	.38774E-06
56	.56781E-01	.12004	.38774E-06

57	.56781E-01	.12004	.38774E-06
58	.56781E-01	.12004	.38774E-06
59	.56781E-01	.12004	.38774E-06
60	.56781E-01	.12004	.38774E-06

Polygon 92
Time: 10.000

Cell	Cgas(g/cu.ft.)	Cliq(g/cu.ft.)	Csol
1	.26256E-03	.55510E-03	.17930E-08
2	.51819E-03	.10955E-02	.35386E-08
3	.73729E-03	.15587E-02	.50348E-08
4	.94379E-03	.19953E-02	.64449E-08
5	.11537E-02	.24391E-02	.78784E-08
6	.13758E-02	.29086E-02	.93948E-08
7	.18064E-02	.38190E-02	.12335E-07
8	.21773E-02	.46032E-02	.14868E-07
9	.24759E-02	.52345E-02	.16907E-07
10	.27557E-02	.58259E-02	.18818E-07
11	.30465E-02	.64409E-02	.20804E-07
12	.33626E-02	.71091E-02	.22962E-07
13	.39035E-02	.82526E-02	.26656E-07
14	.44040E-02	.93107E-02	.30074E-07
15	.48548E-02	.10264E-01	.33152E-07
16	.53134E-02	.11233E-01	.36284E-07
17	.58143E-02	.12292E-01	.39704E-07
18	.63765E-02	.13481E-01	.43544E-07
19	.78311E-02	.16556E-01	.53477E-07
20	.90139E-02	.19057E-01	.61554E-07
21	.98577E-02	.20841E-01	.67316E-07
22	.10579E-01	.22367E-01	.72244E-07
23	.11293E-01	.23876E-01	.77120E-07
24	.12044E-01	.25463E-01	.82246E-07
25	.13984E-01	.29565E-01	.95493E-07
26	.15501E-01	.32772E-01	.10585E-06
27	.16499E-01	.34881E-01	.11267E-06
28	.17274E-01	.36520E-01	.11796E-06
29	.17979E-01	.38011E-01	.12277E-06
30	.18669E-01	.39469E-01	.12748E-06
31	.19861E-01	.41989E-01	.13562E-06
32	.20863E-01	.44108E-01	.14247E-06
33	.21643E-01	.45757E-01	.14779E-06
34	.22340E-01	.47230E-01	.15255E-06
35	.23030E-01	.48689E-01	.15727E-06
36	.23748E-01	.50208E-01	.16217E-06
37	.24882E-01	.52605E-01	.16991E-06
38	.25925E-01	.54809E-01	.17703E-06
39	.26860E-01	.56787E-01	.18342E-06
40	.27800E-01	.58774E-01	.18984E-06
41	.28813E-01	.60915E-01	.19676E-06
42	.29935E-01	.63289E-01	.20442E-06
43	.33012E-01	.69792E-01	.22543E-06
44	.35448E-01	.74944E-01	.24207E-06
45	.37091E-01	.78416E-01	.25328E-06
46	.38414E-01	.81214E-01	.26232E-06
47	.39665E-01	.83859E-01	.27087E-06
48	.40933E-01	.86540E-01	.27952E-06
49	.44364E-01	.93792E-01	.30295E-06
50	.46946E-01	.99252E-01	.32058E-06
51	.48496E-01	.10253	.33117E-06
52	.49555E-01	.10477	.33840E-06

53	.50396E-01	.10655	.34414E-06
54	.51110E-01	.10805	.34902E-06
55	.52078E-01	.11010	.35563E-06
56	.52811E-01	.11165	.36063E-06
57	.53287E-01	.11266	.36388E-06
58	.53602E-01	.11332	.36604E-06
59	.53806E-01	.11376	.36743E-06
60	.53915E-01	.11399	.36817E-06

Polygon 92
Time: 20.000

Cell	Cgas(g/cu.ft.)	Cliq(g/cu.ft.)	Csol
1	.21866E-03	.46229E-03	.14932E-08
2	.49443E-03	.10453E-02	.33764E-08
3	.78226E-03	.16538E-02	.53419E-08
4	.10735E-02	.22696E-02	.73308E-08
5	.13714E-02	.28993E-02	.93648E-08
6	.16809E-02	.35537E-02	.11478E-07
7	.20320E-02	.42960E-02	.13876E-07
8	.24066E-02	.50880E-02	.16434E-07
9	.27864E-02	.58909E-02	.19028E-07
10	.31725E-02	.67072E-02	.21664E-07
11	.35741E-02	.75561E-02	.24406E-07
12	.39997E-02	.84559E-02	.27313E-07
13	.44815E-02	.94747E-02	.30603E-07
14	.50033E-02	.10578E-01	.34166E-07
15	.55481E-02	.11730E-01	.37886E-07
16	.61186E-02	.12936E-01	.41782E-07
17	.67255E-02	.14219E-01	.45927E-07
18	.73786E-02	.15600E-01	.50387E-07
19	.81944E-02	.17324E-01	.55958E-07
20	.90830E-02	.19203E-01	.62025E-07
21	.99528E-02	.21042E-01	.67966E-07
22	.10796E-01	.22825E-01	.73723E-07
23	.11638E-01	.24604E-01	.79471E-07
24	.12500E-01	.26427E-01	.85360E-07
25	.13547E-01	.28641E-01	.92511E-07
26	.14655E-01	.30983E-01	.10007E-06
27	.15696E-01	.33183E-01	.10718E-06
28	.16657E-01	.35215E-01	.11375E-06
29	.17572E-01	.37150E-01	.12000E-06
30	.18471E-01	.39051E-01	.12613E-06
31	.19438E-01	.41095E-01	.13274E-06
32	.20427E-01	.43187E-01	.13949E-06
33	.21391E-01	.45224E-01	.14607E-06
34	.22330E-01	.47210E-01	.15249E-06
35	.23267E-01	.49191E-01	.15889E-06
36	.24223E-01	.51211E-01	.16541E-06
37	.25260E-01	.53404E-01	.17249E-06
38	.26348E-01	.55705E-01	.17993E-06
39	.27456E-01	.58048E-01	.18749E-06
40	.28589E-01	.60442E-01	.19523E-06
41	.29766E-01	.62930E-01	.20326E-06
42	.31005E-01	.65549E-01	.21172E-06
43	.32560E-01	.68837E-01	.22234E-06
44	.34227E-01	.72362E-01	.23373E-06
45	.35798E-01	.75682E-01	.24445E-06
46	.37247E-01	.78747E-01	.25435E-06
47	.38626E-01	.81661E-01	.26377E-06
48	.39975E-01	.84513E-01	.27298E-06

49	.41596E-01	.87942E-01	.28405E-06
50	.43254E-01	.91445E-01	.29537E-06
51	.44701E-01	.94506E-01	.30525E-06
52	.45908E-01	.97057E-01	.31349E-06
53	.46926E-01	.99210E-01	.32045E-06
54	.47801E-01	.10106	.32642E-06
55	.48603E-01	.10275	.33190E-06
56	.49300E-01	.10423	.33666E-06
57	.49857E-01	.10541	.34046E-06
58	.50272E-01	.10628	.34330E-06
59	.50556E-01	.10688	.34524E-06
60	.50718E-01	.10723	.34634E-06

Polygon 92
Time: 30.000

Cell	Cgas(g/cu.ft.)	Cliq(g/cu.ft.)	Csol
1	.22990E-03	.48604E-03	.15699E-08
2	.52591E-03	.11119E-02	.35913E-08
3	.84676E-03	.17902E-02	.57823E-08
4	.11802E-02	.24951E-02	.80592E-08
5	.15243E-02	.32227E-02	.10409E-07
6	.18807E-02	.39762E-02	.12843E-07
7	.22553E-02	.47681E-02	.15401E-07
8	.26496E-02	.56017E-02	.18093E-07
9	.30616E-02	.64727E-02	.20907E-07
10	.34907E-02	.73800E-02	.23837E-07
11	.39391E-02	.83279E-02	.26899E-07
12	.44101E-02	.93237E-02	.30116E-07
13	.49106E-02	.10382E-01	.33534E-07
14	.54428E-02	.11507E-01	.37168E-07
15	.60051E-02	.12696E-01	.41008E-07
16	.65972E-02	.13948E-01	.45051E-07
17	.72211E-02	.15267E-01	.49311E-07
18	.78800E-02	.16660E-01	.53811E-07
19	.85913E-02	.18163E-01	.58668E-07
20	.93525E-02	.19773E-01	.63866E-07
21	.10145E-01	.21449E-01	.69280E-07
22	.10957E-01	.23165E-01	.74823E-07
23	.11786E-01	.24918E-01	.80485E-07
24	.12636E-01	.26715E-01	.86291E-07
25	.13531E-01	.28608E-01	.92403E-07
26	.14468E-01	.30587E-01	.98796E-07
27	.15419E-01	.32598E-01	.10529E-06
28	.16368E-01	.34604E-01	.11177E-06
29	.17311E-01	.36599E-01	.11822E-06
30	.18256E-01	.38595E-01	.12466E-06
31	.19215E-01	.40624E-01	.13121E-06
32	.20192E-01	.42690E-01	.13789E-06
33	.21180E-01	.44778E-01	.14463E-06
34	.22174E-01	.46880E-01	.15142E-06
35	.23177E-01	.49000E-01	.15827E-06
36	.24195E-01	.51152E-01	.16522E-06
37	.25240E-01	.53361E-01	.17236E-06
38	.26315E-01	.55634E-01	.17970E-06
39	.27416E-01	.57962E-01	.18722E-06
40	.28541E-01	.60340E-01	.19490E-06
41	.29691E-01	.62772E-01	.20275E-06
42	.30870E-01	.65265E-01	.21081E-06
43	.32113E-01	.67893E-01	.21929E-06
44	.33410E-01	.70635E-01	.22815E-06

45	.34716E-01	.73395E-01	.23707E-06
46	.35997E-01	.76103E-01	.24581E-06
47	.37243E-01	.78739E-01	.25433E-06
48	.38458E-01	.81307E-01	.26262E-06
49	.39681E-01	.83892E-01	.27097E-06
50	.40898E-01	.86466E-01	.27928E-06
51	.42056E-01	.88913E-01	.28719E-06
52	.43113E-01	.91148E-01	.29441E-06
53	.44059E-01	.93147E-01	.30087E-06
54	.44894E-01	.94914E-01	.30657E-06
55	.45630E-01	.96469E-01	.31159E-06
56	.46264E-01	.97811E-01	.31593E-06
57	.46790E-01	.98922E-01	.31952E-06
58	.47199E-01	.99787E-01	.32231E-06
59	.47490E-01	.10040	.32429E-06
60	.47661E-01	.10076	.32546E-06

```
 V-Leach, VER 1.1
 Jake Turin, 11/91
PGA V-leach model, polygon screen-TCE-10/30/92-POLY92.INP  6/92 Soil Gas Data.
 1 polygons.
Timestep =   1.00 years.  Simulation length =   30.00 years.
Printout every   1.00 years.  Vertical profile stored every  10.00 years.
Koc =      123.60    ml/g,       .43649E-02cu.ft./g
Kh =      .47300     (dimensionless).
Aqueous solubility =     1100.0     mg/l,      31.149     g/cu.ft
Free air diffusion coefficient = .70290     sq. m/day,  2761.7     sq.ft./yr


Polygon   1
Polygon 92
Polygon area =      87500.    sq. ft.
 60 cells, each cell  1.000 ft. thick.
Soil Properties:
 Bulk density =     1.6400    g/ml,       46440.    g/cu.ft.
 Porosity =  .3810 Volumetric water content =  .2550
 Organic carbon content =  .00074000
Recharge Rate =  .02667000 ft/yr
Conc. in recharge water =      .00000    mg/l,       .00000    g/cu.ft
Atmospheric concentration =      .00000    mg/l,       .00000    g/cu.ft
Water table is impermeable to gas diffusion.
```

**** Mixing Cell Output ****

PGA Mixcell Input Data

**** Batch 1 ****
Polygon 92

Time Interval (years)	Mass In (grams)	Mass/Area (g/sq m)	GW Concentration (ugrams/l)
1.00	280.140	0.034	3.667
2.00	278.910	0.034	5.603
3.00	277.630	0.034	6.618
4.00	276.290	0.034	7.141
5.00	274.910	0.034	7.401
6.00	273.490	0.034	7.521
7.00	272.040	0.033	7.566
8.00	270.560	0.033	7.571
9.00	269.050	0.033	7.554
10.00	267.520	0.033	7.524
11.00	265.970	0.033	7.488
12.00	264.410	0.033	7.449
13.00	262.840	0.032	7.407
14.00	261.260	0.032	7.364
15.00	259.670	0.032	7.321
16.00	258.080	0.032	7.277
17.00	256.500	0.032	7.233
18.00	254.910	0.031	7.188
19.00	253.330	0.031	7.144
20.00	251.750	0.031	7.100
21.00	250.180	0.031	7.056
22.00	248.620	0.031	7.012
23.00	247.070	0.030	6.968
24.00	245.530	0.030	6.925
25.00	244.000	0.030	6.881
26.00	242.480	0.030	6.839
27.00	240.970	0.030	6.796
28.00	239.480	0.029	6.754
29.00	238.010	0.029	6.712
30.00	236.540	0.029	6.671

**** Batch 2 ****
Polygon 116

Time Interval (years)	Mass In (grams)	Mass/Area (g/sq m)	GW Concentration (ugrams/l)
1.00	5.070	0.000	0.047
2.00	5.043	0.000	0.075
3.00	5.015	0.000	0.091
4.00	4.985	0.000	0.101
5.00	4.952	0.000	0.106
6.00	4.918	0.000	0.109
7.00	4.883	0.000	0.110

TABLE 2-10a: Total Soil Concentration Calculations from soil gas data for Polygon 92, June-1992

Sample #	Total Clx Conc (ppbV)	Total Clx Conc (ug/L)*	Total Clx Conc (ug/Kg)**
NA	0	0	0
VS-VP92-17	34926	143.01	85.66
VS-VP92-28	167400	693.00	415.11
VS-VP92-40	211300	887.00	531.31
VS-VP92-52	439800	2005.00	1201.00

* Laboratory ppbV to ug/L conversion
**Multiply ug/L concentration 0.599 L/Kg (calculated Kgt based on revised soil physical data)

TABLE 10b: 1,1-DCE Soil Concentration Calculations from soil gas data for Polygon 92, June-1992

Sample #	1,1-DCE Conc (ppbV)	1,1-DCE Conc (ug/L)*	1,1-DCE Conc (ug/Kg)**
NA	0	0.00	0.00
VS-VP92-17	30000	116.00	69.48
VS-VP92-28	140000	540.00	323.46
VS-VP92-40	170000	660.00	395.34
VS-VP92-52	270000	1100.00	658.90

TABLE 10c: 1,1,1-TCA Soil Concentration Calculations from soil gas data for Polygon 92, June-1992

Sample #	1,1,1-TCA Conc (ppbV)	1,1,1-TCA Conc (ug/L)*	1,1,1-TCA Conc (ug/Kg)**
NA	0	0.00	0.00
VS-VP92-17	96	0.51	0.31
VS-VP92-28	4800	26.00	15.57
VS-VP92-40	16000	85.00	50.92
VS-VP92-52	160000	850.00	509.15

TABLE 10d: TCE Soil Concentration Calculations from soil gas data for Polygon 92, June-1992

Sample #	TCE Conc (ppbV)	TCE Conc (ug/L)*	TCE Conc (ug/Kg)**
NA	0	0.00	0.00
VS-VP92-17	4300	23.00	13.78
VS-VP92-28	20000	110.00	65.89
VS-VP92-40	22000	120.00	71.88
VS-VP92-52	7400	39.00	23.36

TABLE 2-10e: PCE Soil Concentration Calculations from soil gas data for Polygon 92, June-1992

Sample #	PCE Conc (ppbV)	PCE Conc (ug/L)*	PCE Conc (ug/Kg)**
NA	0	0.00	0.00
VS-VP92-17	530	3.50	2.10
VS-VP92-28	2600	17.00	10.18
VS-VP92-40	3300	22.00	13.18
VS-VP92-52	2400	16.00	9.58

List of interpolated concentrations for desired depths

At a depth of	:	3.000
Interpolated concentration is:		15.116
At a depth of	:	9.000
Interpolated concentration is:		45.349
At a depth of	:	15.000
Interpolated concentration is:		75.582
At a depth of	:	21.000
Interpolated concentration is:		205.460
At a depth of	:	27.000
Interpolated concentration is:		385.160
At a depth of	:	33.000
Interpolated concentration is:		463.527
At a depth of	:	39.000
Interpolated concentration is:		521.627
At a depth of	:	45.000
Interpolated concentration is:		810.348
At a depth of	:	51.000
Interpolated concentration is:		1145.193
At a depth of	:	57.000
Interpolated concentration is:		1201.000
At a depth of	:	60.000
Interpolated concentration is:		1201.000
At a depth of	:	0.000
Interpolated concentration is:		0.000

Polygon 92 (VP-B) Mass Dist Calc's

Polygon 92 Vertical Distribution (as Percentage Total Mass) Calculations using Phase II Chemical and Physical Soil Data

Ct (ug/Kg) M&E June, 92	Depth Interval Feet	Mt (ug/cc)	Volume Soil (cu. ft)	Mass TCE (grams) over depth interval	Incr. Mass Lbs	% of Total Mass per Interval
15.12	6	0.0247968	525000	368.64	0.81	0.003105762
45.35	6	0.074374	525000	1105.68	2.44	0.009315233
75.58	6	0.1239512	525000	1842.71	4.06	0.015524703
205.46	6	0.3369544	525000	5009.31	11.04	0.042203037
385.16	6	0.6316624	525000	9390.56	20.70	0.079114776
463.53	6	0.7601892	525000	11301.30	24.92	0.095212566
521.63	6	0.8554732	525000	12717.83	28.04	0.107146745
810.35	6	1.328974	525000	19757.09	43.56	0.166452016
1145.19	6	1.8781116	525000	27920.81	61.56	0.235230683
1201	6	1.96964	525000	29281.51	64.56	0.246694479
4868.37	60			118695.42	**261.68**	**1.00**

*Using Kgt term of 0.599 L/Kg

```
PGA V-leach model, polygon screen-TCE-11/4/92-Poly69.INP.  New soil, New chem.
    1
       1.0          30.          1.0          10.
     123.6         .473        1100.        .7029
lygon 69
    102500.           1.     .082021         1.64         .381         .255      .00074
        0.           0.          -1.
60
 1     6      26.33
 7    12      26.69
13    18      27.04
19    24      27.40
25    30      80.15
31    36     132.83
37    42     132.83
43    48     132.83
49    54     132.83
55    60     132.83
```

V-Leach, VER 1.1
Jake Turin, 11/91
PGA V-leach model, polygon screen-TCE-11/4/92-Poly69.INP. New soil, New chem.

Polygon 1
At time = .00, total mass in vadose zone = .23733 g/sq.ft.
Mass in gas phase = .30444E-01g/sq.ft.
Mass in liquid phase = .13026 g/sq.ft.
Mass sorbed = .76623E-01g/sq.ft.

Polygon 1
At time = 1.00, total mass in vadose zone = .23562 g/sq.ft.
Mass in gas phase = .30225E-01g/sq.ft.
Mass in liquid phase = .12932 g/sq.ft.
Mass sorbed = .76071E-01g/sq.ft.

Since last printout at time = .00
Change in Total Mass = -.17092E-02g/sq.ft.
Advection in from atmosphere = .00000 g/sq.ft.
Advection in from water table = -.10890E-02g/sq.ft.
Diffusion in from atmosphere = -.62033E-03g/sq.ft.
Diffusion in from water table = .00000 g/sq.ft.
Total inflow at boundaries = -.17093E-02g/sq.ft.
Mass discrepancy = .11304E-06g/sq.ft.

Since beginning of run at time = 0.0
Change in Total Mass = -.17092E-02g/sq.ft.
Advection in from atmosphere = .00000 g/sq.ft.
Advection in from water table = -.10890E-02g/sq.ft.
Diffusion in from atmosphere = -.62033E-03g/sq.ft.
Diffusion in from water table = .00000 g/sq.ft.
Total inflow at boundaries = -.17093E-02g/sq.ft.
Mass discrepancy = .11304E-06g/sq.ft.

Polygon 1
At time = 2.00, total mass in vadose zone = .23396 g/sq.ft.
Mass in gas phase = .30012E-01g/sq.ft.
Mass in liquid phase = .12841 g/sq.ft.
Mass sorbed = .75537E-01g/sq.ft.

Since last printout at time = 1.00
Change in Total Mass = -.16550E-02g/sq.ft.
Advection in from atmosphere = .00000 g/sq.ft.
Advection in from water table = -.10889E-02g/sq.ft.
Diffusion in from atmosphere = -.56607E-03g/sq.ft.
Diffusion in from water table = .00000 g/sq.ft.
Total inflow at boundaries = -.16550E-02g/sq.ft.
Mass discrepancy = -.61700E-08g/sq.ft.

Since beginning of run at time = 0.0
Change in Total Mass = -.33642E-02g/sq.ft.
Advection in from atmosphere = .00000 g/sq.ft.
Advection in from water table = -.21779E-02g/sq.ft.
Diffusion in from atmosphere = -.11864E-02g/sq.ft.
Diffusion in from water table = .00000 g/sq.ft.
Total inflow at boundaries = -.33643E-02g/sq.ft.
Mass discrepancy = .10664E-06g/sq.ft.

```
Polygon   1
At time =       3.00, total mass in vadose zone =     .23235    g/sq.ft.
Mass in gas phase     =       .29806E-01g/sq.ft.
Mass in liquid phase  =       .12753    g/sq.ft.
Mass sorbed           =       .75018E-01g/sq.ft.

Since last printout at time =       2.00
               Change in Total Mass =     -.16080E-02g/sq.ft.
                    Advection in from atmosphere =       .00000    g/sq.ft.
                    Advection in from water table =     -.10888E-02g/sq.ft.
                    Diffusion in from atmosphere =      -.51921E-03g/sq.ft.
                    Diffusion in from water table =      .00000    g/sq.ft.
               Total inflow at boundaries =     -.16080E-02g/sq.ft.
               Mass discrepancy =      .43539E-07g/sq.ft.

Since beginning of run at time = 0.0
               Change in Total Mass =     -.49721E-02g/sq.ft.
                    Advection in from atmosphere =       .00000    g/sq.ft.
                    Advection in from water table =     -.32667E-02g/sq.ft.
                    Diffusion in from atmosphere =      -.17056E-02g/sq.ft.
                    Diffusion in from water table =      .00000    g/sq.ft.
               Total inflow at boundaries =     -.49723E-02g/sq.ft.
               Mass discrepancy =      .15041E-06g/sq.ft.


Polygon   1
At time =       4.00, total mass in vadose zone =     .23079    g/sq.ft.
Mass in gas phase     =       .29605E-01g/sq.ft.
Mass in liquid phase  =       .12667    g/sq.ft.
Mass sorbed           =       .74512E-01g/sq.ft.

Since last printout at time =       3.00
               Change in Total Mass =     -.15673E-02g/sq.ft.
                    Advection in from atmosphere =       .00000    g/sq.ft.
                    Advection in from water table =     -.10887E-02g/sq.ft.
                    Diffusion in from atmosphere =      -.47860E-03g/sq.ft.
                    Diffusion in from water table =      .00000    g/sq.ft.
               Total inflow at boundaries =     -.15673E-02g/sq.ft.
               Mass discrepancy =     -.22585E-07g/sq.ft.

Since beginning of run at time = 0.0
               Change in Total Mass =     -.65394E-02g/sq.ft.
                    Advection in from atmosphere =       .00000    g/sq.ft.
                    Advection in from water table =     -.43554E-02g/sq.ft.
                    Diffusion in from atmosphere =      -.21842E-02g/sq.ft.
                    Diffusion in from water table =      .00000    g/sq.ft.
               Total inflow at boundaries =     -.65396E-02g/sq.ft.
               Mass discrepancy =      .12759E-06g/sq.ft.


Polygon   1
At time =       5.00, total mass in vadose zone =     .22925    g/sq.ft.
Mass in gas phase     =       .29408E-01g/sq.ft.
Mass in liquid phase  =       .12583    g/sq.ft.
Mass sorbed           =       .74017E-01g/sq.ft.

Since last printout at time =       4.00
               Change in Total Mass =     -.15317E-02g/sq.ft.
```

```
                    Advection in from atmosphere =       .00000    g/sq.ft.
                    Advection in from water table =     -.10885E-02g/sq.ft.
                    Diffusion in from atmosphere =      -.44328E-03g/sq.ft.
                    Diffusion in from water table =      .00000    g/sq.ft.
               Total inflow at boundaries =     -.15318E-02g/sq.ft.
               Mass discrepancy =      .43656E-07g/sq.ft.

Since beginning of run at time = 0.0
               Change in Total Mass =     -.80712E-02g/sq.ft.
                    Advection in from atmosphere =       .00000    g/sq.ft.
                    Advection in from water table =     -.54438E-02g/sq.ft.
                    Diffusion in from atmosphere =      -.26275E-02g/sq.ft.
                    Diffusion in from water table =      .00000    g/sq.ft.
               Total inflow at boundaries =     -.80713E-02g/sq.ft.
               Mass discrepancy =      .17136E-06g/sq.ft.


Polygon   1
At time =       6.00, total mass in vadose zone =     .22775    g/sq.ft.
Mass in gas phase     =       .29216E-01g/sq.ft.
Mass in liquid phase  =       .12501    g/sq.ft.
Mass sorbed           =       .73533E-01g/sq.ft.

Since last printout at time =       5.00
               Change in Total Mass =     -.15008E-02g/sq.ft.
                    Advection in from atmosphere =       .00000    g/sq.ft.
                    Advection in from water table =     -.10883E-02g/sq.ft.
                    Diffusion in from atmosphere =      -.41246E-03g/sq.ft.
                    Diffusion in from water table =      .00000    g/sq.ft.
               Total inflow at boundaries =     -.15007E-02g/sq.ft.
               Mass discrepancy =     -.37486E-07g/sq.ft.

Since beginning of run at time = 0.0
               Change in Total Mass =     -.95720E-02g/sq.ft.
                    Advection in from atmosphere =       .00000    g/sq.ft.
                    Advection in from water table =     -.65321E-02g/sq.ft.
                    Diffusion in from atmosphere =      -.30400E-02g/sq.ft.
                    Diffusion in from water table =      .00000    g/sq.ft.
               Total inflow at boundaries =     -.95721E-02g/sq.ft.
               Mass discrepancy =      .13411E-06g/sq.ft.


Polygon   1
At time =       7.00, total mass in vadose zone =     .22628    g/sq.ft.
Mass in gas phase     =       .29027E-01g/sq.ft.
Mass in liquid phase  =       .12420    g/sq.ft.
Mass sorbed           =       .73057E-01g/sq.ft.

Since last printout at time =       6.00
               Change in Total Mass =     -.14735E-02g/sq.ft.
                    Advection in from atmosphere =       .00000    g/sq.ft.
                    Advection in from water table =     -.10880E-02g/sq.ft.
                    Diffusion in from atmosphere =      -.38548E-03g/sq.ft.
                    Diffusion in from water table =      .00000    g/sq.ft.
               Total inflow at boundaries =     -.14735E-02g/sq.ft.
               Mass discrepancy =      .16298E-07g/sq.ft.

Since beginning of run at time = 0.0
               Change in Total Mass =     -.11045E-01g/sq.ft.
                    Advection in from atmosphere =       .00000    g/sq.ft.
```

```
                Advection in from water table =     -.76202E-02g/sq.ft.
                Diffusion in from atmosphere =      -.34254E-02g/sq.ft.
                Diffusion in from water table =      .00000    g/sq.ft.
           Total inflow at boundaries =     -.11046E-01g/sq.ft.
           Mass discrepancy =      .15087E-06g/sq.ft.


Polygon   1
At time =       8.00, total mass in vadose zone =     .22483    g/sq.ft.
Mass in gas phase     =       .28841E-01g/sq.ft.
Mass in liquid phase  =       .12340    g/sq.ft.
Mass sorbed           =       .72589E-01g/sq.ft.

Since last printout at time =       7.00
           Change in Total Mass =     -.14495E-02g/sq.ft.
                Advection in from atmosphere =       .00000    g/sq.ft.
                Advection in from water table =     -.10877E-02g/sq.ft.
                Diffusion in from atmosphere =      -.36176E-03g/sq.ft.
                Diffusion in from water table =      .00000    g/sq.ft.
           Total inflow at boundaries =     -.14495E-02g/sq.ft.
           Mass discrepancy =      .13621E-07g/sq.ft.

Since beginning of run at time = 0.0
           Change in Total Mass =     -.12495E-01g/sq.ft.
                Advection in from atmosphere =       .00000    g/sq.ft.
                Advection in from water table =     -.87079E-02g/sq.ft.
                Diffusion in from atmosphere =      -.37872E-02g/sq.ft.
                Diffusion in from water table =      .00000    g/sq.ft.
           Total inflow at boundaries =     -.12495E-01g/sq.ft.
           Mass discrepancy =      .16391E-06g/sq.ft.


Polygon   1
At time =       9.00, total mass in vadose zone =     .22340    g/sq.ft.
Mass in gas phase     =       .28658E-01g/sq.ft.
Mass in liquid phase  =       .12262    g/sq.ft.
Mass sorbed           =       .72128E-01g/sq.ft.

Since last printout at time =       8.00
           Change in Total Mass =     -.14282E-02g/sq.ft.
                Advection in from atmosphere =       .00000    g/sq.ft.
                Advection in from water table =     -.10874E-02g/sq.ft.
                Diffusion in from atmosphere =      -.34084E-03g/sq.ft.
                Diffusion in from water table =      .00000    g/sq.ft.
           Total inflow at boundaries =     -.14282E-02g/sq.ft.
           Mass discrepancy =     -.13039E-07g/sq.ft.

Since beginning of run at time = 0.0
           Change in Total Mass =     -.13923E-01g/sq.ft.
                Advection in from atmosphere =       .00000    g/sq.ft.
                Advection in from water table =     -.97953E-02g/sq.ft.
                Diffusion in from atmosphere =      -.41280E-02g/sq.ft.
                Diffusion in from water table =      .00000    g/sq.ft.
           Total inflow at boundaries =     -.13923E-01g/sq.ft.
           Mass discrepancy =      .15087E-06g/sq.ft.


Polygon   1
At time =      10.00, total mass in vadose zone =     .22199    g/sq.ft.
Mass in gas phase     =       .28477E-01g/sq.ft.
```

```
Mass in liquid phase  =       .12184    g/sq.ft.
Mass sorbed           =       .71673E-01g/sq.ft.

Since last printout at time =       9.00
               Change in Total Mass =     -.14092E-02g/sq.ft.
                    Advection in from atmosphere =       .00000    g/sq.ft.
                    Advection in from water table =     -.10870E-02g/sq.ft.
                    Diffusion in from atmosphere =      -.32232E-03g/sq.ft.
                    Diffusion in from water table =      .00000    g/sq.ft.
               Total inflow at boundaries =     -.14093E-02g/sq.ft.
               Mass discrepancy =      .27474E-07g/sq.ft.

Since beginning of run at time = 0.0
               Change in Total Mass =     -.15332E-01g/sq.ft.
                    Advection in from atmosphere =       .00000    g/sq.ft.
                    Advection in from water table =     -.10882E-01g/sq.ft.
                    Diffusion in from atmosphere =      -.44503E-02g/sq.ft.
                    Diffusion in from water table =      .00000    g/sq.ft.
               Total inflow at boundaries =     -.15333E-01g/sq.ft.
               Mass discrepancy =      .17695E-06g/sq.ft.


Polygon   1
At time =      11.00, total mass in vadose zone =     .22060    g/sq.ft.
Mass in gas phase     =       .28298E-01g/sq.ft.
Mass in liquid phase  =       .12108    g/sq.ft.
Mass sorbed           =       .71223E-01g/sq.ft.

Since last printout at time =      10.00
               Change in Total Mass =     -.13923E-02g/sq.ft.
                    Advection in from atmosphere =       .00000    g/sq.ft.
                    Advection in from water table =     -.10865E-02g/sq.ft.
                    Diffusion in from atmosphere =      -.30587E-03g/sq.ft.
                    Diffusion in from water table =      .00000    g/sq.ft.
               Total inflow at boundaries =     -.13924E-02g/sq.ft.
               Mass discrepancy =      .20722E-07g/sq.ft.

Since beginning of run at time = 0.0
               Change in Total Mass =     -.16725E-01g/sq.ft.
                    Advection in from atmosphere =       .00000    g/sq.ft.
                    Advection in from water table =     -.11969E-01g/sq.ft.
                    Diffusion in from atmosphere =      -.47562E-02g/sq.ft.
                    Diffusion in from water table =      .00000    g/sq.ft.
               Total inflow at boundaries =     -.16725E-01g/sq.ft.
               Mass discrepancy =      .19744E-06g/sq.ft.


Polygon   1
At time =      12.00, total mass in vadose zone =     .21922    g/sq.ft.
Mass in gas phase     =       .28122E-01g/sq.ft.
Mass in liquid phase  =       .12032    g/sq.ft.
Mass sorbed           =       .70779E-01g/sq.ft.

Since last printout at time =      11.00
               Change in Total Mass =     -.13771E-02g/sq.ft.
                    Advection in from atmosphere =       .00000    g/sq.ft.
                    Advection in from water table =     -.10860E-02g/sq.ft.
                    Diffusion in from atmosphere =      -.29121E-03g/sq.ft.
                    Diffusion in from water table =      .00000    g/sq.ft.
               Total inflow at boundaries =     -.13772E-02g/sq.ft.
```

```
              Mass discrepancy =      .37020E-07g/sq.ft.

Since beginning of run at time = 0.0
              Change in Total Mass =     -.18102E-01g/sq.ft.
                   Advection in from atmosphere =       .00000    g/sq.ft.
                   Advection in from water table =     -.13055E-01g/sq.ft.
                   Diffusion in from atmosphere =      -.50474E-02g/sq.ft.
                   Diffusion in from water table =      .00000    g/sq.ft.
              Total inflow at boundaries =     -.18102E-01g/sq.ft.
              Mass discrepancy =      .23469E-06g/sq.ft.


Polygon   1
At time =      13.00, total mass in vadose zone =     .21786    g/sq.ft.
Mass in gas phase     =       .27947E-01g/sq.ft.
Mass in liquid phase  =       .11957    g/sq.ft.
Mass sorbed           =       .70339E-01g/sq.ft.

Since last printout at time =      12.00
              Change in Total Mass =     -.13635E-02g/sq.ft.
                   Advection in from atmosphere =       .00000    g/sq.ft.
                   Advection in from water table =     -.10854E-02g/sq.ft.
                   Diffusion in from atmosphere =      -.27809E-03g/sq.ft.
                   Diffusion in from water table =      .00000    g/sq.ft.
              Total inflow at boundaries =     -.13634E-02g/sq.ft.
              Mass discrepancy =     -.18161E-07g/sq.ft.

Since beginning of run at time = 0.0
              Change in Total Mass =     -.19465E-01g/sq.ft.
                   Advection in from atmosphere =       .00000    g/sq.ft.
                   Advection in from water table =     -.14140E-01g/sq.ft.
                   Diffusion in from atmosphere =      -.53255E-02g/sq.ft.
                   Diffusion in from water table =      .00000    g/sq.ft.
              Total inflow at boundaries =     -.19465E-01g/sq.ft.
              Mass discrepancy =      .21607E-06g/sq.ft.


Polygon   1
At time =      14.00, total mass in vadose zone =     .21651    g/sq.ft.
Mass in gas phase     =       .27773E-01g/sq.ft.
Mass in liquid phase  =       .11883    g/sq.ft.
Mass sorbed           =       .69902E-01g/sq.ft.

Since last printout at time =      13.00
              Change in Total Mass =     -.13510E-02g/sq.ft.
                   Advection in from atmosphere =       .00000    g/sq.ft.
                   Advection in from water table =     -.10847E-02g/sq.ft.
                   Diffusion in from atmosphere =      -.26631E-03g/sq.ft.
                   Diffusion in from water table =      .00000    g/sq.ft.
              Total inflow at boundaries =     -.13510E-02g/sq.ft.
              Mass discrepancy =     -.54599E-07g/sq.ft.

Since beginning of run at time = 0.0
              Change in Total Mass =     -.20816E-01g/sq.ft.
                   Advection in from atmosphere =       .00000    g/sq.ft.
                   Advection in from water table =     -.15225E-01g/sq.ft.
                   Diffusion in from atmosphere =      -.55918E-02g/sq.ft.
                   Diffusion in from water table =      .00000    g/sq.ft.
              Total inflow at boundaries =     -.20816E-01g/sq.ft.
              Mass discrepancy =      .16205E-06g/sq.ft.
```

```
Polygon   1
At time =      15.00, total mass in vadose zone =     .21517    g/sq.ft.
Mass in gas phase     =       .27602E-01g/sq.ft.
Mass in liquid phase  =       .11810    g/sq.ft.
Mass sorbed           =       .69470E-01g/sq.ft.

Since last printout at time =      14.00
               Change in Total Mass =     -.13396E-02g/sq.ft.
                    Advection in from atmosphere =       .00000    g/sq.ft.
                    Advection in from water table =     -.10839E-02g/sq.ft.
                    Diffusion in from atmosphere =      -.25570E-03g/sq.ft.
                    Diffusion in from water table =      .00000    g/sq.ft.
               Total inflow at boundaries =     -.13396E-02g/sq.ft.
               Mass discrepancy =      .48429E-07g/sq.ft.

Since beginning of run at time = 0.0
               Change in Total Mass =     -.22156E-01g/sq.ft.
                    Advection in from atmosphere =       .00000    g/sq.ft.
                    Advection in from water table =     -.16309E-01g/sq.ft.
                    Diffusion in from atmosphere =      -.58475E-02g/sq.ft.
                    Diffusion in from water table =      .00000    g/sq.ft.
               Total inflow at boundaries =     -.22156E-01g/sq.ft.
               Mass discrepancy =      .21048E-06g/sq.ft.


Polygon   1
At time =      16.00, total mass in vadose zone =     .21384    g/sq.ft.
Mass in gas phase     =       .27431E-01g/sq.ft.
Mass in liquid phase  =       .11737    g/sq.ft.
Mass sorbed           =       .69041E-01g/sq.ft.

Since last printout at time =      15.00
               Change in Total Mass =     -.13292E-02g/sq.ft.
                    Advection in from atmosphere =       .00000    g/sq.ft.
                    Advection in from water table =     -.10831E-02g/sq.ft.
                    Diffusion in from atmosphere =      -.24610E-03g/sq.ft.
                    Diffusion in from water table =      .00000    g/sq.ft.
               Total inflow at boundaries =     -.13292E-02g/sq.ft.
               Mass discrepancy =      .53551E-08g/sq.ft.

Since beginning of run at time = 0.0
               Change in Total Mass =     -.23485E-01g/sq.ft.
                    Advection in from atmosphere =       .00000    g/sq.ft.
                    Advection in from water table =     -.17392E-01g/sq.ft.
                    Diffusion in from atmosphere =      -.60936E-02g/sq.ft.
                    Diffusion in from water table =      .00000    g/sq.ft.
               Total inflow at boundaries =     -.23485E-01g/sq.ft.
               Mass discrepancy =      .21607E-06g/sq.ft.


Polygon   1
At time =      17.00, total mass in vadose zone =     .21252    g/sq.ft.
Mass in gas phase     =       .27262E-01g/sq.ft.
Mass in liquid phase  =       .11664    g/sq.ft.
Mass sorbed           =       .68615E-01g/sq.ft.

Since last printout at time =      16.00
               Change in Total Mass =     -.13196E-02g/sq.ft.
```

```
                Advection in from atmosphere =       .00000    g/sq.ft.
                Advection in from water table =     -.10822E-02g/sq.ft.
                Diffusion in from atmosphere =      -.23740E-03g/sq.ft.
                Diffusion in from water table =      .00000    g/sq.ft.
           Total inflow at boundaries =     -.13196E-02g/sq.ft.
           Mass discrepancy =      .13039E-07g/sq.ft.

Since beginning of run at time = 0.0
           Change in Total Mass =     -.24805E-01g/sq.ft.
                Advection in from atmosphere =       .00000    g/sq.ft.
                Advection in from water table =     -.18474E-01g/sq.ft.
                Diffusion in from atmosphere =      -.63310E-02g/sq.ft.
                Diffusion in from water table =      .00000    g/sq.ft.
           Total inflow at boundaries =     -.24805E-01g/sq.ft.
           Mass discrepancy =      .23097E-06g/sq.ft.


Polygon   1
At time =      18.00, total mass in vadose zone =     .21121    g/sq.ft.
Mass in gas phase     =       .27094E-01g/sq.ft.
Mass in liquid phase  =       .11592    g/sq.ft.
Mass sorbed           =       .68192E-01g/sq.ft.

Since last printout at time =      17.00
           Change in Total Mass =     -.13107E-02g/sq.ft.
                Advection in from atmosphere =       .00000    g/sq.ft.
                Advection in from water table =     -.10812E-02g/sq.ft.
                Diffusion in from atmosphere =      -.22948E-03g/sq.ft.
                Diffusion in from water table =      .00000    g/sq.ft.
           Total inflow at boundaries =     -.13107E-02g/sq.ft.
           Mass discrepancy =     -.25029E-07g/sq.ft.

Since beginning of run at time = 0.0
           Change in Total Mass =     -.26115E-01g/sq.ft.
                Advection in from atmosphere =       .00000    g/sq.ft.
                Advection in from water table =     -.19555E-01g/sq.ft.
                Diffusion in from atmosphere =      -.65605E-02g/sq.ft.
                Diffusion in from water table =      .00000    g/sq.ft.
           Total inflow at boundaries =     -.26116E-01g/sq.ft.
           Mass discrepancy =      .20489E-06g/sq.ft.


Polygon   1
At time =      19.00, total mass in vadose zone =     .20991    g/sq.ft.
Mass in gas phase     =       .26927E-01g/sq.ft.
Mass in liquid phase  =       .11521    g/sq.ft.
Mass sorbed           =       .67771E-01g/sq.ft.

Since last printout at time =      18.00
           Change in Total Mass =     -.13024E-02g/sq.ft.
                Advection in from atmosphere =       .00000    g/sq.ft.
                Advection in from water table =     -.10802E-02g/sq.ft.
                Diffusion in from atmosphere =      -.22224E-03g/sq.ft.
                Diffusion in from water table =      .00000    g/sq.ft.
           Total inflow at boundaries =     -.13024E-02g/sq.ft.
           Mass discrepancy =      .17695E-07g/sq.ft.

Since beginning of run at time = 0.0
           Change in Total Mass =     -.27418E-01g/sq.ft.
                Advection in from atmosphere =       .00000    g/sq.ft.
```

```
                    Advection in from water table =     -.20635E-01g/sq.ft.
                    Diffusion in from atmosphere =      -.67827E-02g/sq.ft.
                    Diffusion in from water table =      .00000    g/sq.ft.
               Total inflow at boundaries =     -.27418E-01g/sq.ft.
               Mass discrepancy =      .22352E-06g/sq.ft.


Polygon   1
At time =      20.00, total mass in vadose zone =     .20861    g/sq.ft.
Mass in gas phase     =       .26761E-01g/sq.ft.
Mass in liquid phase  =       .11450    g/sq.ft.
Mass sorbed           =       .67353E-01g/sq.ft.

Since last printout at time =      19.00
               Change in Total Mass =     -.12947E-02g/sq.ft.
                    Advection in from atmosphere =       .00000    g/sq.ft.
                    Advection in from water table =     -.10790E-02g/sq.ft.
                    Diffusion in from atmosphere =      -.21561E-03g/sq.ft.
                    Diffusion in from water table =      .00000    g/sq.ft.
               Total inflow at boundaries =     -.12946E-02g/sq.ft.
               Mass discrepancy =     -.31665E-07g/sq.ft.

Since beginning of run at time = 0.0
               Change in Total Mass =     -.28713E-01g/sq.ft.
                    Advection in from atmosphere =       .00000    g/sq.ft.
                    Advection in from water table =     -.21714E-01g/sq.ft.
                    Diffusion in from atmosphere =      -.69984E-02g/sq.ft.
                    Diffusion in from water table =      .00000    g/sq.ft.
               Total inflow at boundaries =     -.28713E-01g/sq.ft.
               Mass discrepancy =      .19185E-06g/sq.ft.


Polygon   1
At time =      21.00, total mass in vadose zone =     .20733    g/sq.ft.
Mass in gas phase     =       .26595E-01g/sq.ft.
Mass in liquid phase  =       .11379    g/sq.ft.
Mass sorbed           =       .66937E-01g/sq.ft.

Since last printout at time =      20.00
               Change in Total Mass =     -.12872E-02g/sq.ft.
                    Advection in from atmosphere =       .00000    g/sq.ft.
                    Advection in from water table =     -.10778E-02g/sq.ft.
                    Diffusion in from atmosphere =      -.20952E-03g/sq.ft.
                    Diffusion in from water table =      .00000    g/sq.ft.
               Total inflow at boundaries =     -.12873E-02g/sq.ft.
               Mass discrepancy =      .67637E-07g/sq.ft.

Since beginning of run at time = 0.0
               Change in Total Mass =     -.30000E-01g/sq.ft.
                    Advection in from atmosphere =       .00000    g/sq.ft.
                    Advection in from water table =     -.22792E-01g/sq.ft.
                    Diffusion in from atmosphere =      -.72079E-02g/sq.ft.
                    Diffusion in from water table =      .00000    g/sq.ft.
               Total inflow at boundaries =     -.30000E-01g/sq.ft.
               Mass discrepancy =      .25891E-06g/sq.ft.


Polygon   1
At time =      22.00, total mass in vadose zone =     .20605    g/sq.ft.
Mass in gas phase     =       .26431E-01g/sq.ft.
```

```
Mass in liquid phase  =       .11309    g/sq.ft.
Mass sorbed           =       .66524E-01g/sq.ft.

Since last printout at time =      21.00
              Change in Total Mass =     -.12803E-02g/sq.ft.
                   Advection in from atmosphere =       .00000    g/sq.ft.
                   Advection in from water table =     -.10764E-02g/sq.ft.
                   Diffusion in from atmosphere =      -.20390E-03g/sq.ft.
                   Diffusion in from water table =      .00000    g/sq.ft.
              Total inflow at boundaries =     -.12803E-02g/sq.ft.
              Mass discrepancy =     -.46566E-09g/sq.ft.

Since beginning of run at time = 0.0
              Change in Total Mass =     -.31280E-01g/sq.ft.
                   Advection in from atmosphere =       .00000    g/sq.ft.
                   Advection in from water table =     -.23869E-01g/sq.ft.
                   Diffusion in from atmosphere =      -.74118E-02g/sq.ft.
                   Diffusion in from water table =      .00000    g/sq.ft.
              Total inflow at boundaries =     -.31280E-01g/sq.ft.
              Mass discrepancy =      .26077E-06g/sq.ft.


Polygon   1
At time =      23.00, total mass in vadose zone =     .20477    g/sq.ft.
Mass in gas phase     =       .26268E-01g/sq.ft.
Mass in liquid phase  =       .11239    g/sq.ft.
Mass sorbed           =       .66113E-01g/sq.ft.

Since last printout at time =      22.00
              Change in Total Mass =     -.12737E-02g/sq.ft.
                   Advection in from atmosphere =       .00000    g/sq.ft.
                   Advection in from water table =     -.10750E-02g/sq.ft.
                   Diffusion in from atmosphere =      -.19871E-03g/sq.ft.
                   Diffusion in from water table =      .00000    g/sq.ft.
              Total inflow at boundaries =     -.12737E-02g/sq.ft.
              Mass discrepancy =     -.75670E-08g/sq.ft.

Since beginning of run at time = 0.0
              Change in Total Mass =     -.32554E-01g/sq.ft.
                   Advection in from atmosphere =       .00000    g/sq.ft.
                   Advection in from water table =     -.24944E-01g/sq.ft.
                   Diffusion in from atmosphere =      -.76105E-02g/sq.ft.
                   Diffusion in from water table =      .00000    g/sq.ft.
              Total inflow at boundaries =     -.32554E-01g/sq.ft.
              Mass discrepancy =      .24959E-06g/sq.ft.


Polygon   1
At time =      24.00, total mass in vadose zone =     .20350    g/sq.ft.
Mass in gas phase     =       .26105E-01g/sq.ft.
Mass in liquid phase  =       .11170    g/sq.ft.
Mass sorbed           =       .65704E-01g/sq.ft.

Since last printout at time =      23.00
              Change in Total Mass =     -.12674E-02g/sq.ft.
                   Advection in from atmosphere =       .00000    g/sq.ft.
                   Advection in from water table =     -.10735E-02g/sq.ft.
                   Diffusion in from atmosphere =      -.19389E-03g/sq.ft.
                   Diffusion in from water table =      .00000    g/sq.ft.
              Total inflow at boundaries =     -.12674E-02g/sq.ft.
```

```
                Mass discrepancy =     -.11642E-08g/sq.ft.

Since beginning of run at time = 0.0
                Change in Total Mass =     -.33821E-01g/sq.ft.
                     Advection in from atmosphere =       .00000    g/sq.ft.
                     Advection in from water table =     -.26017E-01g/sq.ft.
                     Diffusion in from atmosphere =      -.78044E-02g/sq.ft.
                     Diffusion in from water table =      .00000    g/sq.ft.
                Total inflow at boundaries =     -.33821E-01g/sq.ft.
                Mass discrepancy =      .24959E-06g/sq.ft.


Polygon   1
At time =      25.00, total mass in vadose zone =     .20224    g/sq.ft.
Mass in gas phase     =       .25943E-01g/sq.ft.
Mass in liquid phase  =       .11100    g/sq.ft.
Mass sorbed           =       .65296E-01g/sq.ft.

Since last printout at time =      24.00
                Change in Total Mass =     -.12613E-02g/sq.ft.
                     Advection in from atmosphere =       .00000    g/sq.ft.
                     Advection in from water table =     -.10719E-02g/sq.ft.
                     Diffusion in from atmosphere =      -.18941E-03g/sq.ft.
                     Diffusion in from water table =      .00000    g/sq.ft.
                Total inflow at boundaries =     -.12613E-02g/sq.ft.
                Mass discrepancy =     -.74506E-08g/sq.ft.

Since beginning of run at time = 0.0
                Change in Total Mass =     -.35082E-01g/sq.ft.
                     Advection in from atmosphere =       .00000    g/sq.ft.
                     Advection in from water table =     -.27089E-01g/sq.ft.
                     Diffusion in from atmosphere =      -.79938E-02g/sq.ft.
                     Diffusion in from water table =      .00000    g/sq.ft.
                Total inflow at boundaries =     -.35083E-01g/sq.ft.
                Mass discrepancy =      .24214E-06g/sq.ft.


Polygon   1
At time =      26.00, total mass in vadose zone =     .20099    g/sq.ft.
Mass in gas phase     =       .25782E-01g/sq.ft.
Mass in liquid phase  =       .11031    g/sq.ft.
Mass sorbed           =       .64891E-01g/sq.ft.

Since last printout at time =      25.00
                Change in Total Mass =     -.12554E-02g/sq.ft.
                     Advection in from atmosphere =       .00000    g/sq.ft.
                     Advection in from water table =     -.10702E-02g/sq.ft.
                     Diffusion in from atmosphere =      -.18522E-03g/sq.ft.
                     Diffusion in from water table =      .00000    g/sq.ft.
                Total inflow at boundaries =     -.12554E-02g/sq.ft.
                Mass discrepancy =      .11292E-07g/sq.ft.

Since beginning of run at time = 0.0
                Change in Total Mass =     -.36338E-01g/sq.ft.
                     Advection in from atmosphere =       .00000    g/sq.ft.
                     Advection in from water table =     -.28159E-01g/sq.ft.
                     Diffusion in from atmosphere =      -.81790E-02g/sq.ft.
                     Diffusion in from water table =      .00000    g/sq.ft.
                Total inflow at boundaries =     -.36338E-01g/sq.ft.
                Mass discrepancy =      .25332E-06g/sq.ft.
```

```
Polygon   1
At time =      27.00, total mass in vadose zone =     .19974    g/sq.ft.
Mass in gas phase     =       .25622E-01g/sq.ft.
Mass in liquid phase  =       .10963    g/sq.ft.
Mass sorbed           =       .64488E-01g/sq.ft.

Since last printout at time =      26.00
               Change in Total Mass =     -.12496E-02g/sq.ft.
                    Advection in from atmosphere =       .00000    g/sq.ft.
                    Advection in from water table =     -.10683E-02g/sq.ft.
                    Diffusion in from atmosphere =      -.18131E-03g/sq.ft.
                    Diffusion in from water table =      .00000    g/sq.ft.
               Total inflow at boundaries =     -.12497E-02g/sq.ft.
               Mass discrepancy =      .38650E-07g/sq.ft.

Since beginning of run at time = 0.0
               Change in Total Mass =     -.37587E-01g/sq.ft.
                    Advection in from atmosphere =       .00000    g/sq.ft.
                    Advection in from water table =     -.29227E-01g/sq.ft.
                    Diffusion in from atmosphere =      -.83603E-02g/sq.ft.
                    Diffusion in from water table =      .00000    g/sq.ft.
               Total inflow at boundaries =     -.37588E-01g/sq.ft.
               Mass discrepancy =      .29057E-06g/sq.ft.


Polygon   1
At time =      28.00, total mass in vadose zone =     .19849    g/sq.ft.
Mass in gas phase     =       .25463E-01g/sq.ft.
Mass in liquid phase  =       .10895    g/sq.ft.
Mass sorbed           =       .64086E-01g/sq.ft.

Since last printout at time =      27.00
               Change in Total Mass =     -.12441E-02g/sq.ft.
                    Advection in from atmosphere =       .00000    g/sq.ft.
                    Advection in from water table =     -.10664E-02g/sq.ft.
                    Diffusion in from atmosphere =      -.17764E-03g/sq.ft.
                    Diffusion in from water table =      .00000    g/sq.ft.
               Total inflow at boundaries =     -.12441E-02g/sq.ft.
               Mass discrepancy =     -.27474E-07g/sq.ft.

Since beginning of run at time = 0.0
               Change in Total Mass =     -.38832E-01g/sq.ft.
                    Advection in from atmosphere =       .00000    g/sq.ft.
                    Advection in from water table =     -.30294E-01g/sq.ft.
                    Diffusion in from atmosphere =      -.85380E-02g/sq.ft.
                    Diffusion in from water table =      .00000    g/sq.ft.
               Total inflow at boundaries =     -.38832E-01g/sq.ft.
               Mass discrepancy =      .26077E-06g/sq.ft.


Polygon   1
At time =      29.00, total mass in vadose zone =     .19726    g/sq.ft.
Mass in gas phase     =       .25304E-01g/sq.ft.
Mass in liquid phase  =       .10827    g/sq.ft.
Mass sorbed           =       .63686E-01g/sq.ft.

Since last printout at time =      28.00
               Change in Total Mass =     -.12386E-02g/sq.ft.
```

```
                Advection in from atmosphere =       .00000    g/sq.ft.
                Advection in from water table =     -.10644E-02g/sq.ft.
                Diffusion in from atmosphere =      -.17420E-03g/sq.ft.
                Diffusion in from water table =      .00000    g/sq.ft.
           Total inflow at boundaries =     -.12386E-02g/sq.ft.
           Mass discrepancy =     -.31432E-08g/sq.ft.

Since beginning of run at time = 0.0
           Change in Total Mass =     -.40070E-01g/sq.ft.
                Advection in from atmosphere =       .00000    g/sq.ft.
                Advection in from water table =     -.31358E-01g/sq.ft.
                Diffusion in from atmosphere =      -.87122E-02g/sq.ft.
                Diffusion in from water table =      .00000    g/sq.ft.
           Total inflow at boundaries =     -.40070E-01g/sq.ft.
           Mass discrepancy =      .26077E-06g/sq.ft.


Polygon   1
At time =      30.00, total mass in vadose zone =     .19602    g/sq.ft.
Mass in gas phase     =       .25145E-01g/sq.ft.
Mass in liquid phase  =       .10759    g/sq.ft.
Mass sorbed           =       .63288E-01g/sq.ft.

Since last printout at time =      29.00
           Change in Total Mass =     -.12332E-02g/sq.ft.
                Advection in from atmosphere =       .00000    g/sq.ft.
                Advection in from water table =     -.10623E-02g/sq.ft.
                Diffusion in from atmosphere =      -.17094E-03g/sq.ft.
                Diffusion in from water table =      .00000    g/sq.ft.
           Total inflow at boundaries =     -.12333E-02g/sq.ft.
           Mass discrepancy =      .15949E-07g/sq.ft.

Since beginning of run at time = 0.0
           Change in Total Mass =     -.41303E-01g/sq.ft.
                Advection in from atmosphere =       .00000    g/sq.ft.
                Advection in from water table =     -.32421E-01g/sq.ft.
                Diffusion in from atmosphere =      -.88831E-02g/sq.ft.
                Diffusion in from water table =      .00000    g/sq.ft.
           Total inflow at boundaries =     -.41304E-01g/sq.ft.
           Mass discrepancy =      .27567E-06g/sq.ft.


GROUNDWATER IMPACT OF POLYGON   1

 Time        Mass per area (g/sq.ft.)      Total Mass (g)
     1.00          .10890E-02                 111.62
     2.00          .10889E-02                 111.61
     3.00          .10888E-02                 111.60
     4.00          .10887E-02                 111.59
     5.00          .10885E-02                 111.57
     6.00          .10883E-02                 111.55
     7.00          .10880E-02                 111.52
     8.00          .10877E-02                 111.49
     9.00          .10874E-02                 111.46
    10.00          .10870E-02                 111.41
    11.00          .10865E-02                 111.36
    12.00          .10860E-02                 111.31
    13.00          .10854E-02                 111.25
    14.00          .10847E-02                 111.18
    15.00          .10839E-02                 111.10
```

16.00	.10831E-02	111.02
17.00	.10822E-02	110.93
18.00	.10812E-02	110.83
19.00	.10802E-02	110.72
20.00	.10790E-02	110.60
21.00	.10778E-02	110.47
22.00	.10764E-02	110.33
23.00	.10750E-02	110.19
24.00	.10735E-02	110.03
25.00	.10719E-02	109.87
26.00	.10702E-02	109.69
27.00	.10683E-02	109.50
28.00	.10664E-02	109.31
29.00	.10644E-02	109.10
30.00	.10623E-02	108.89

****

****

TOTAL GROUNDWATER IMPACT

Time (yr)	Mass (g)	Cumulative Mass (g)
1.00	111.62	111.62
2.00	111.61	223.23
3.00	111.60	334.84
4.00	111.59	446.42
5.00	111.57	557.99
6.00	111.55	669.54
7.00	111.52	781.07
8.00	111.49	892.56
9.00	111.46	1004.0
10.00	111.41	1115.4
11.00	111.36	1226.8
12.00	111.31	1338.1
13.00	111.25	1449.3
14.00	111.18	1560.5
15.00	111.10	1671.6
16.00	111.02	1782.7
17.00	110.93	1893.6
18.00	110.83	2004.4
19.00	110.72	2115.1
20.00	110.60	2225.7
21.00	110.47	2336.2
22.00	110.33	2446.5
23.00	110.19	2556.7
24.00	110.03	2666.7
25.00	109.87	2776.6
26.00	109.69	2886.3
27.00	109.50	2995.8
28.00	109.31	3105.1
29.00	109.10	3214.2
30.00	108.89	3323.1

Polygon 69
Time: .000

Cell	Cgas(g/cu.ft.)	Cliq(g/cu.ft.)	Csol
1	.12448E-02	.26318E-02	.85006E-08
2	.12448E-02	.26318E-02	.85006E-08
3	.12448E-02	.26318E-02	.85006E-08
4	.12448E-02	.26318E-02	.85006E-08
5	.12448E-02	.26318E-02	.85006E-08
6	.12448E-02	.26318E-02	.85006E-08
7	.12619E-02	.26678E-02	.86169E-08
8	.12619E-02	.26678E-02	.86169E-08
9	.12619E-02	.26678E-02	.86169E-08
10	.12619E-02	.26678E-02	.86169E-08
11	.12619E-02	.26678E-02	.86169E-08
12	.12619E-02	.26678E-02	.86169E-08
13	.12784E-02	.27027E-02	.87299E-08
14	.12784E-02	.27027E-02	.87299E-08
15	.12784E-02	.27027E-02	.87299E-08
16	.12784E-02	.27027E-02	.87299E-08
17	.12784E-02	.27027E-02	.87299E-08
18	.12784E-02	.27027E-02	.87299E-08
19	.12954E-02	.27387E-02	.88461E-08
20	.12954E-02	.27387E-02	.88461E-08
21	.12954E-02	.27387E-02	.88461E-08
22	.12954E-02	.27387E-02	.88461E-08
23	.12954E-02	.27387E-02	.88461E-08
24	.12954E-02	.27387E-02	.88461E-08
25	.37893E-02	.80113E-02	.25876E-07
26	.37893E-02	.80113E-02	.25876E-07
27	.37893E-02	.80113E-02	.25876E-07
28	.37893E-02	.80113E-02	.25876E-07
29	.37893E-02	.80113E-02	.25876E-07
30	.37893E-02	.80113E-02	.25876E-07
31	.62799E-02	.13277E-01	.42884E-07
32	.62799E-02	.13277E-01	.42884E-07
33	.62799E-02	.13277E-01	.42884E-07
34	.62799E-02	.13277E-01	.42884E-07
35	.62799E-02	.13277E-01	.42884E-07
36	.62799E-02	.13277E-01	.42884E-07
37	.62799E-02	.13277E-01	.42884E-07
38	.62799E-02	.13277E-01	.42884E-07
39	.62799E-02	.13277E-01	.42884E-07
40	.62799E-02	.13277E-01	.42884E-07
41	.62799E-02	.13277E-01	.42884E-07
42	.62799E-02	.13277E-01	.42884E-07
43	.62799E-02	.13277E-01	.42884E-07
44	.62799E-02	.13277E-01	.42884E-07
45	.62799E-02	.13277E-01	.42884E-07
46	.62799E-02	.13277E-01	.42884E-07
47	.62799E-02	.13277E-01	.42884E-07
48	.62799E-02	.13277E-01	.42884E-07
49	.62799E-02	.13277E-01	.42884E-07
50	.62799E-02	.13277E-01	.42884E-07
51	.62799E-02	.13277E-01	.42884E-07
52	.62799E-02	.13277E-01	.42884E-07
53	.62799E-02	.13277E-01	.42884E-07
54	.62799E-02	.13277E-01	.42884E-07
55	.62799E-02	.13277E-01	.42884E-07
56	.62799E-02	.13277E-01	.42884E-07

57	.62799E-02	.13277E-01	.42884E-07
58	.62799E-02	.13277E-01	.42884E-07
59	.62799E-02	.13277E-01	.42884E-07
60	.62799E-02	.13277E-01	.42884E-07

Polygon 69
Time: 10.000

Cell	Cgas(g/cu.ft.)	Cliq(g/cu.ft.)	Csol
1	.11499E-03	.24311E-03	.78526E-09
2	.29770E-03	.62938E-03	.20329E-08
3	.48578E-03	.10270E-02	.33172E-08
4	.64365E-03	.13608E-02	.43953E-08
5	.76680E-03	.16211E-02	.52363E-08
6	.86357E-03	.18257E-02	.58971E-08
7	.94347E-03	.19947E-02	.64427E-08
8	.10124E-02	.21404E-02	.69134E-08
9	.10734E-02	.22693E-02	.73297E-08
10	.11284E-02	.23856E-02	.77054E-08
11	.11792E-02	.24930E-02	.80523E-08
12	.12274E-02	.25949E-02	.83817E-08
13	.12752E-02	.26960E-02	.87080E-08
14	.13238E-02	.27988E-02	.90401E-08
15	.13740E-02	.29050E-02	.93830E-08
16	.14269E-02	.30167E-02	.97441E-08
17	.14839E-02	.31373E-02	.10133E-07
18	.15468E-02	.32702E-02	.10563E-07
19	.16180E-02	.34208E-02	.11049E-07
20	.16995E-02	.35930E-02	.11605E-07
21	.17927E-02	.37901E-02	.12242E-07
22	.18998E-02	.40164E-02	.12973E-07
23	.20234E-02	.42778E-02	.13817E-07
24	.21669E-02	.45812E-02	.14797E-07
25	.24268E-02	.51306E-02	.16572E-07
26	.27818E-02	.58812E-02	.18996E-07
27	.31389E-02	.66362E-02	.21435E-07
28	.34446E-02	.72825E-02	.23522E-07
29	.36981E-02	.78185E-02	.25254E-07
30	.39199E-02	.82872E-02	.26768E-07
31	.42221E-02	.89263E-02	.28832E-07
32	.45932E-02	.97107E-02	.31366E-07
33	.49443E-02	.10453E-01	.33764E-07
34	.52236E-02	.11044E-01	.35671E-07
35	.54303E-02	.11481E-01	.37082E-07
36	.55840E-02	.11805E-01	.38131E-07
37	.57027E-02	.12057E-01	.38943E-07
38	.57982E-02	.12258E-01	.39595E-07
39	.58769E-02	.12425E-01	.40132E-07
40	.59426E-02	.12564E-01	.40581E-07
41	.59977E-02	.12680E-01	.40957E-07
42	.60438E-02	.12778E-01	.41272E-07
43	.60826E-02	.12860E-01	.41537E-07
44	.61151E-02	.12928E-01	.41758E-07
45	.61423E-02	.12986E-01	.41944E-07
46	.61650E-02	.13034E-01	.42100E-07
47	.61840E-02	.13074E-01	.42229E-07
48	.61999E-02	.13108E-01	.42338E-07
49	.62131E-02	.13136E-01	.42428E-07
50	.62241E-02	.13159E-01	.42503E-07
51	.62332E-02	.13178E-01	.42565E-07
52	.62407E-02	.13194E-01	.42616E-07

53	.62469E-02	.13207E-01	.42659E-07
54	.62519E-02	.13218E-01	.42693E-07
55	.62560E-02	.13226E-01	.42721E-07
56	.62593E-02	.13233E-01	.42743E-07
57	.62618E-02	.13238E-01	.42760E-07
58	.62637E-02	.13242E-01	.42773E-07
59	.62649E-02	.13245E-01	.42782E-07
60	.62657E-02	.13247E-01	.42787E-07

Polygon 69
Time: 20.000

Cell	Cgas(g/cu.ft.)	Cliq(g/cu.ft.)	Csol
1	.46961E-04	.99283E-04	.32069E-09
2	.12359E-03	.26130E-03	.84399E-09
3	.22259E-03	.47060E-03	.15200E-08
4	.33477E-03	.70776E-03	.22861E-08
5	.45078E-03	.95303E-03	.30783E-08
6	.56373E-03	.11918E-02	.38496E-08
7	.67012E-03	.14167E-02	.45761E-08
8	.76915E-03	.16261E-02	.52523E-08
9	.86148E-03	.18213E-02	.58828E-08
10	.94832E-03	.20049E-02	.64758E-08
11	.10309E-02	.21796E-02	.70400E-08
12	.11106E-02	.23479E-02	.75839E-08
13	.11885E-02	.25126E-02	.81157E-08
14	.12658E-02	.26761E-02	.86438E-08
15	.13438E-02	.28410E-02	.91765E-08
16	.14236E-02	.30098E-02	.97216E-08
17	.15064E-02	.31849E-02	.10287E-07
18	.15934E-02	.33688E-02	.10881E-07
19	.16860E-02	.35644E-02	.11513E-07
20	.17854E-02	.37746E-02	.12192E-07
21	.18931E-02	.40023E-02	.12927E-07
22	.20104E-02	.42503E-02	.13729E-07
23	.21388E-02	.45217E-02	.14605E-07
24	.22795E-02	.48193E-02	.15566E-07
25	.24376E-02	.51535E-02	.16646E-07
26	.26193E-02	.55377E-02	.17887E-07
27	.28256E-02	.59739E-02	.19296E-07
28	.30495E-02	.64471E-02	.20824E-07
29	.32802E-02	.69349E-02	.22400E-07
30	.35095E-02	.74196E-02	.23965E-07
31	.37367E-02	.79001E-02	.25517E-07
32	.39671E-02	.83870E-02	.27090E-07
33	.42019E-02	.88835E-02	.28694E-07
34	.44352E-02	.93768E-02	.30287E-07
35	.46575E-02	.98468E-02	.31805E-07
36	.48610E-02	.10277E-01	.33194E-07
37	.50421E-02	.10660E-01	.34431E-07
38	.52011E-02	.10996E-01	.35517E-07
39	.53401E-02	.11290E-01	.36466E-07
40	.54616E-02	.11547E-01	.37296E-07
41	.55680E-02	.11772E-01	.38022E-07
42	.56612E-02	.11969E-01	.38659E-07
43	.57429E-02	.12141E-01	.39217E-07
44	.58144E-02	.12293E-01	.39705E-07
45	.58768E-02	.12424E-01	.40131E-07
46	.59312E-02	.12539E-01	.40502E-07
47	.59784E-02	.12639E-01	.40825E-07
48	.60194E-02	.12726E-01	.41105E-07

49	.60548E-02	.12801E-01	.41347E-07
50	.60853E-02	.12865E-01	.41555E-07
51	.61114E-02	.12921E-01	.41734E-07
52	.61338E-02	.12968E-01	.41886E-07
53	.61527E-02	.13008E-01	.42015E-07
54	.61687E-02	.13042E-01	.42124E-07
55	.61819E-02	.13070E-01	.42215E-07
56	.61928E-02	.13093E-01	.42289E-07
57	.62014E-02	.13111E-01	.42348E-07
58	.62081E-02	.13125E-01	.42393E-07
59	.62128E-02	.13135E-01	.42426E-07
60	.62158E-02	.13141E-01	.42446E-07

Polygon 69
Time: 30.000

Cell	Cgas(g/cu.ft.)	Cliq(g/cu.ft.)	Csol
1	.34535E-04	.73013E-04	.23583E-09
2	.87901E-04	.18584E-03	.60026E-09
3	.15523E-03	.32819E-03	.10601E-08
4	.23327E-03	.49317E-03	.15929E-08
5	.31926E-03	.67496E-03	.21801E-08
6	.41059E-03	.86805E-03	.28038E-08
7	.50488E-03	.10674E-02	.34477E-08
8	.60022E-03	.12690E-02	.40988E-08
9	.69533E-03	.14700E-02	.47482E-08
10	.78954E-03	.16692E-02	.53916E-08
11	.88266E-03	.18661E-02	.60275E-08
12	.97486E-03	.20610E-02	.66571E-08
13	.10665E-02	.22548E-02	.72829E-08
14	.11581E-02	.24484E-02	.79085E-08
15	.12503E-02	.26433E-02	.85380E-08
16	.13437E-02	.28409E-02	.91760E-08
17	.14391E-02	.30426E-02	.98274E-08
18	.15372E-02	.32500E-02	.10497E-07
19	.16388E-02	.34648E-02	.11191E-07
20	.17447E-02	.36886E-02	.11914E-07
21	.18556E-02	.39231E-02	.12672E-07
22	.19724E-02	.41700E-02	.13469E-07
23	.20957E-02	.44308E-02	.14311E-07
24	.22263E-02	.47069E-02	.15203E-07
25	.23649E-02	.49999E-02	.16150E-07
26	.25124E-02	.53117E-02	.17157E-07
27	.26697E-02	.56442E-02	.18231E-07
28	.28369E-02	.59977E-02	.19372E-07
29	.30131E-02	.63702E-02	.20576E-07
30	.31962E-02	.67573E-02	.21826E-07
31	.33837E-02	.71538E-02	.23107E-07
32	.35737E-02	.75554E-02	.24404E-07
33	.37647E-02	.79591E-02	.25708E-07
34	.39554E-02	.83624E-02	.27011E-07
35	.41442E-02	.87615E-02	.28300E-07
36	.43285E-02	.91512E-02	.29558E-07
37	.45058E-02	.95260E-02	.30769E-07
38	.46738E-02	.98812E-02	.31916E-07
39	.48310E-02	.10213E-01	.32990E-07
40	.49765E-02	.10521E-01	.33984E-07
41	.51103E-02	.10804E-01	.34897E-07
42	.52327E-02	.11063E-01	.35733E-07
43	.53440E-02	.11298E-01	.36493E-07
44	.54451E-02	.11512E-01	.37183E-07

45	.55363E-02	.11705E-01	.37806E-07
46	.56186E-02	.11879E-01	.38368E-07
47	.56923E-02	.12035E-01	.38871E-07
48	.57582E-02	.12174E-01	.39322E-07
49	.58169E-02	.12298E-01	.39722E-07
50	.58689E-02	.12408E-01	.40077E-07
51	.59147E-02	.12505E-01	.40390E-07
52	.59549E-02	.12590E-01	.40664E-07
53	.59898E-02	.12663E-01	.40903E-07
54	.60198E-02	.12727E-01	.41108E-07
55	.60454E-02	.12781E-01	.41283E-07
56	.60668E-02	.12826E-01	.41429E-07
57	.60842E-02	.12863E-01	.41548E-07
58	.60979E-02	.12892E-01	.41641E-07
59	.61080E-02	.12913E-01	.41710E-07
60	.61145E-02	.12927E-01	.41755E-07

V-Leach, VER 1.1
Jake Turin, 11/91
PGA V-leach model, polygon screen-TCE-11/4/92-Poly69.INP. New soil, New chem.
1 polygons.
Timestep = 1.00 years. Simulation length = 30.00 years.
Printout every 1.00 years. Vertical profile stored every 10.00 years.
Koc = 123.60 ml/g, .43649E-02cu.ft./g
Kh = .47300 (dimensionless).
Aqueous solubility = 1100.0 mg/l, 31.149 g/cu.ft
Free air diffusion coefficient = .70290 sq. m/day, 2761.7 sq.ft./yr

Polygon 1
Polygon 69
Polygon area = .10250E+06sq. ft.
60 cells, each cell 1.000 ft. thick.
Soil Properties:
Bulk density = 1.6400 g/ml, 46440. g/cu.ft.
Porosity = .3810 Volumetric water content = .2550
Organic carbon content = .00074000
Recharge Rate = .08202100 ft/yr
Conc. in recharge water = .00000 mg/l, .00000 g/cu.ft
Atmospheric concentration = .00000 mg/l, .00000 g/cu.ft
Water table is impermeable to gas diffusion.

System File Edit Window Browse

Change Data If Desired, Hit Ctrl-W when done

Sample Depth (-)	Sample Concentation
-1.00	26.210
-22.00	27.460
-32.00	132.830
-60.00	132.830

List of interpolated concentrations for desired depths

**** Mixing Cell Output ****

PGA Mixcell Input Data

**** Batch 1 ****
Polygon 69

Time Interval (years)	Mass In (grams)	Mass/Area (g/sq m)	GW Concentration (ugrams/l)
1.00	111.620	0.012	1.274
2.00	111.610	0.012	1.986
3.00	111.600	0.012	2.384
4.00	111.590	0.012	2.606
5.00	111.570	0.012	2.730
6.00	111.550	0.012	2.799
7.00	111.520	0.012	2.837
8.00	111.490	0.012	2.858
9.00	111.460	0.012	2.869
10.00	111.410	0.012	2.875
11.00	111.360	0.012	2.878
12.00	111.310	0.012	2.879
13.00	111.250	0.012	2.878
14.00	111.180	0.012	2.877
15.00	111.100	0.012	2.876
16.00	111.020	0.012	2.874
17.00	110.930	0.012	2.872
18.00	110.830	0.012	2.870
19.00	110.720	0.012	2.868
20.00	110.600	0.012	2.865
21.00	110.470	0.012	2.862
22.00	110.330	0.012	2.859
23.00	110.190	0.012	2.855
24.00	110.030	0.012	2.851
25.00	109.870	0.012	2.847
26.00	109.690	0.012	2.843
27.00	109.500	0.011	2.839
28.00	109.310	0.011	2.834
29.00	109.100	0.011	2.829
30.00	108.890	0.011	2.824

**** Batch 2 ****

SUMMARY TABLE PROVIDING CALCULATED TOTAL SOIL GAS CONCENTRATIONS (ppbV) & (ug/L) OF VOC's BASED ON LABORATORY ANALYTICAL REPORTS FOR POLYGON 69

Sample Number: DW-6-22 Polygon 69		
COMPOUND	CONCENTRATION (ppbV)	CONCENTRATION (ug/L)
1,1-DCE	1600	6.2
CHLOROFORM	14	0.067
TRICHLOROETHENE	910	4.8
TOLUENE	23	0.085
TETRACHLOROETHENE	78	0.52
1,1,1-TCA	17	0.091
FREON 113	4300	32
TOTAL CONCENTRATION	**6942**	**43.76**

Sample Number: DW-6-32 Polygon 69		
COMPOUND	CONCENTRATION (ppbV)	CONCENTRATION (ug/L)
1,1-DCE	1500	5.8
TRICHLOROETHENE	900	4.7
TOLUENE	1600	5.9
TETRACHLOROETHENE	66	0.44
FREON 113	3900	29
TOTAL CONCENTRATION	**7966**	**45.84**

SUMMARY TABLE PROVIDING CALCULATED TOTAL SOIL GAS CONCENTRATIONS (ppbV) & (ug/L) OF VOC's BASED ON LABORATORY ANALYTICAL REPORTS FOR POLYGON 69

	Sample Number: DW-6-39		Sample Number: DW-6-39 Duplicate	
COMPOUND	CONCENTRATION (ppbV)	CONCENTRATION (ug/L)	CONCENTRATION (ppbV)	CONCENTRATION (ug/L)
1,1-DCE	5600	22	**6000**	**23**
TRICHLOROETHENE	3400	18	**3400**	**18**
TOLUENE	**68**	**0.25**	ND	ND
TETRACHLOROETHENE	240	1.6	**250**	**1.7**
FREON 113	14000	110	**15000**	**110**
2,2,8-TRIMETHYLDECANE	**2500**	**18**	2400	18
2,2,4-TRIMETHYLHEPTANE	**1300**	**7.4**	1200	6.8
4,6-DIMETHLYUNDECANE	**1000**	**7.4**	ND	ND
DODECANE	**360**	**2.4**	ND	ND
2,2,9-TRIMETHYLDECANE	**2000**	**15**	2000	15
2,2,3-TRIMETHYLPENTANE	ND	ND	**830**	**3.8**
3,6-DIMETHYLUNDECANE	ND	ND	**1100**	**8.1**
2,2,3,4,6,6-HEXAMETHYLHEPTANE	ND	ND	**480**	**3.5**
2,6,7-TRIMETHYLDECANE	ND	ND	**440**	**3.2**
TOTAL CONCENTRATION	30468	202.05	33100	211.1
MAXIMUM CONCENTRATION*	**(ppbV)**	**34728**	**(ug/L)**	**221.75**

* MAXIMUM CONCENTRATION DETERMINED BY ADDING BOLD VALUES OF DETECTED VOC's FOR SAMPLES DW-6-39 AND DW-6-39 DUPLICATE AS A SINGLE HYPOTHETICAL SAMPLE

List of interpolated concentrations for desired depths

At a depth of	:	3.000
Interpolated concentration is:		26.329
At a depth of	:	9.000
Interpolated concentration is:		26.686
At a depth of	:	15.000
Interpolated concentration is:		27.043
At a depth of	:	21.000
Interpolated concentration is:		27.400
At a depth of	:	27.000
Interpolated concentration is:		80.145
At a depth of	:	33.000
Interpolated concentration is:		132.830
At a depth of	:	39.000
Interpolated concentration is:		132.830
At a depth of	:	45.000
Interpolated concentration is:		132.830
At a depth of	:	51.000
Interpolated concentration is:		132.830
At a depth of	:	57.000
Interpolated concentration is:		132.830
At a depth of	:	60.000
Interpolated concentration is:		132.830

DETERMINATION OF INTERP INPUT CONCENTRATIONS USING EQUATION #1 (SVE, DM, 9/10/92) TO CONVERT FROM TOTAL SOIL GAS CONCENTRATION, Cg, TO TOTAL SOIL CONCENTRATIONS (ug/Kg)

Cg * Kgt = Ct where:

Cg = TOTAL GAS CONCENTRATION (ug/L)
Kgt = CONVERSION TERM (L/Kg)
Ct = TOTAL SOIL CONCENTRATION (ug/Kg)

Kgt = 0.599 (L/Kg)

SAMPLE DESIGNATION	TOTAL SOIL GAS CONCENTRATION (ug/L)	Kgt CONVERSION TERM (L/Kg)	TOTAL SOIL CONCENTRATION (ug/Kg)**
DW-6-22	43.76	0.599	**26.21**
DW-6-32	45.84	0.599	**27.46**
DW-6-39*	221.75	0.599	**132.83**

* MAXIMUM CONCENTRATION

** TOTAL SOIL CONCENTRATION VALUES TO BE USED IN INTERP PROGRAM FOR VLEACH VERTICAL DISTRIBUTION DETERMINATION

```
PGA V-leach model, poly screen-TCE-11/10/92-Polygon 12A.inp  Rev Soil, HGC Chem
    1
       1.0          30.          1.0          10.
     123.6         .473        1100.        .7029
lygon 12A
    165000.           1.     .196850         1.64         .381         .255      .00074
        0.           0.          -1.
    60
     1     6        0.02
     7    12        4.84
    13    18       12.07
    19    24       19.30
    25    30       26.53
    31    36       33.77
    37    42       41.00
    43    48       48.23
    49    54       55.46
    55    60       62.69
```

V-Leach, VER 1.1
Jake Turin, 11/91
PGA V-leach model, poly screen-TCE-11/10/92-Polygon 12A.inp Rev Soil, HGC Chem

Polygon 1
At time = .00, total mass in vadose zone = .84678E-01g/sq.ft.
Mass in gas phase = .10862E-01g/sq.ft.
Mass in liquid phase = .46477E-01g/sq.ft.
Mass sorbed = .27339E-01g/sq.ft.

Polygon 1
At time = 1.00, total mass in vadose zone = .83402E-01g/sq.ft.
Mass in gas phase = .10699E-01g/sq.ft.
Mass in liquid phase = .45776E-01g/sq.ft.
Mass sorbed = .26927E-01g/sq.ft.

Since last printout at time = .00
Change in Total Mass = -.12768E-02g/sq.ft.
Advection in from atmosphere = .00000 g/sq.ft.
Advection in from water table = -.12334E-02g/sq.ft.
Diffusion in from atmosphere = -.43381E-04g/sq.ft.
Diffusion in from water table = .00000 g/sq.ft.
Total inflow at boundaries = -.12768E-02g/sq.ft.
Mass discrepancy = .25262E-07g/sq.ft.

Since beginning of run at time = 0.0
Change in Total Mass = -.12768E-02g/sq.ft.
Advection in from atmosphere = .00000 g/sq.ft.
Advection in from water table = -.12334E-02g/sq.ft.
Diffusion in from atmosphere = -.43381E-04g/sq.ft.
Diffusion in from water table = .00000 g/sq.ft.
Total inflow at boundaries = -.12768E-02g/sq.ft.
Mass discrepancy = .25262E-07g/sq.ft.

Polygon 1
At time = 2.00, total mass in vadose zone = .82132E-01g/sq.ft.
Mass in gas phase = .10536E-01g/sq.ft.
Mass in liquid phase = .45079E-01g/sq.ft.
Mass sorbed = .26517E-01g/sq.ft.

Since last printout at time = 1.00
Change in Total Mass = -.12696E-02g/sq.ft.
Advection in from atmosphere = .00000 g/sq.ft.
Advection in from water table = -.12267E-02g/sq.ft.
Diffusion in from atmosphere = -.42894E-04g/sq.ft.
Diffusion in from water table = .00000 g/sq.ft.
Total inflow at boundaries = -.12696E-02g/sq.ft.
Mass discrepancy = .69849E-09g/sq.ft.

Since beginning of run at time = 0.0
Change in Total Mass = -.25464E-02g/sq.ft.
Advection in from atmosphere = .00000 g/sq.ft.
Advection in from water table = -.24601E-02g/sq.ft.
Diffusion in from atmosphere = -.86274E-04g/sq.ft.
Diffusion in from water table = .00000 g/sq.ft.
Total inflow at boundaries = -.25464E-02g/sq.ft.
Mass discrepancy = .26077E-07g/sq.ft.

```
Polygon   1
At time =       3.00, total mass in vadose zone =     .80871E-01g/sq.ft.
Mass in gas phase     =       .10374E-01g/sq.ft.
Mass in liquid phase  =       .44387E-01g/sq.ft.
Mass sorbed           =       .26110E-01g/sq.ft.

Since last printout at time =       2.00
               Change in Total Mass =     -.12609E-02g/sq.ft.
                    Advection in from atmosphere =       .00000    g/sq.ft.
                    Advection in from water table =     -.12186E-02g/sq.ft.
                    Diffusion in from atmosphere =      -.42212E-04g/sq.ft.
                    Diffusion in from water table =      .00000    g/sq.ft.
               Total inflow at boundaries =     -.12608E-02g/sq.ft.
               Mass discrepancy =     -.53551E-08g/sq.ft.

Since beginning of run at time = 0.0
               Change in Total Mass =     -.38072E-02g/sq.ft.
                    Advection in from atmosphere =       .00000    g/sq.ft.
                    Advection in from water table =     -.36788E-02g/sq.ft.
                    Diffusion in from atmosphere =      -.12849E-03g/sq.ft.
                    Diffusion in from water table =      .00000    g/sq.ft.
               Total inflow at boundaries =     -.38073E-02g/sq.ft.
               Mass discrepancy =      .20722E-07g/sq.ft.


Polygon   1
At time =       4.00, total mass in vadose zone =     .79621E-01g/sq.ft.
Mass in gas phase     =       .10214E-01g/sq.ft.
Mass in liquid phase  =       .43701E-01g/sq.ft.
Mass sorbed           =       .25706E-01g/sq.ft.

Since last printout at time =       3.00
               Change in Total Mass =     -.12504E-02g/sq.ft.
                    Advection in from atmosphere =       .00000    g/sq.ft.
                    Advection in from water table =     -.12090E-02g/sq.ft.
                    Diffusion in from atmosphere =      -.41393E-04g/sq.ft.
                    Diffusion in from water table =      .00000    g/sq.ft.
               Total inflow at boundaries =     -.12504E-02g/sq.ft.
               Mass discrepancy =      .73342E-08g/sq.ft.

Since beginning of run at time = 0.0
               Change in Total Mass =     -.50576E-02g/sq.ft.
                    Advection in from atmosphere =       .00000    g/sq.ft.
                    Advection in from water table =     -.48878E-02g/sq.ft.
                    Diffusion in from atmosphere =      -.16988E-03g/sq.ft.
                    Diffusion in from water table =      .00000    g/sq.ft.
               Total inflow at boundaries =     -.50577E-02g/sq.ft.
               Mass discrepancy =      .27940E-07g/sq.ft.


Polygon   1
At time =       5.00, total mass in vadose zone =     .78382E-01g/sq.ft.
Mass in gas phase     =       .10055E-01g/sq.ft.
Mass in liquid phase  =       .43021E-01g/sq.ft.
Mass sorbed           =       .25307E-01g/sq.ft.

Since last printout at time =       4.00
               Change in Total Mass =     -.12384E-02g/sq.ft.
```

```
                Advection in from atmosphere =       .00000    g/sq.ft.
                Advection in from water table =    -.11979E-02g/sq.ft.
                Diffusion in from atmosphere =     -.40478E-04g/sq.ft.
                Diffusion in from water table =      .00000    g/sq.ft.
            Total inflow at boundaries =     -.12384E-02g/sq.ft.
            Mass discrepancy =      .18626E-08g/sq.ft.

Since beginning of run at time = 0.0
            Change in Total Mass =     -.62961E-02g/sq.ft.
                Advection in from atmosphere =       .00000    g/sq.ft.
                Advection in from water table =    -.60857E-02g/sq.ft.
                Diffusion in from atmosphere =     -.21036E-03g/sq.ft.
                Diffusion in from water table =      .00000    g/sq.ft.
            Total inflow at boundaries =     -.62961E-02g/sq.ft.
            Mass discrepancy =      .30268E-07g/sq.ft.


Polygon   1
At time =       6.00, total mass in vadose zone =     .77157E-01g/sq.ft.
Mass in gas phase     =       .98976E-02g/sq.ft.
Mass in liquid phase  =       .42349E-01g/sq.ft.
Mass sorbed           =       .24911E-01g/sq.ft.

Since last printout at time =       5.00
            Change in Total Mass =     -.12251E-02g/sq.ft.
                Advection in from atmosphere =       .00000    g/sq.ft.
                Advection in from water table =    -.11856E-02g/sq.ft.
                Diffusion in from atmosphere =     -.39500E-04g/sq.ft.
                Diffusion in from water table =      .00000    g/sq.ft.
            Total inflow at boundaries =     -.12251E-02g/sq.ft.
            Mass discrepancy =      .10943E-07g/sq.ft.

Since beginning of run at time = 0.0
            Change in Total Mass =     -.75212E-02g/sq.ft.
                Advection in from atmosphere =       .00000    g/sq.ft.
                Advection in from water table =    -.72713E-02g/sq.ft.
                Diffusion in from atmosphere =     -.24986E-03g/sq.ft.
                Diffusion in from water table =      .00000    g/sq.ft.
            Total inflow at boundaries =     -.75212E-02g/sq.ft.
            Mass discrepancy =      .40978E-07g/sq.ft.


Polygon   1
At time =       7.00, total mass in vadose zone =     .75946E-01g/sq.ft.
Mass in gas phase     =       .97423E-02g/sq.ft.
Mass in liquid phase  =       .41684E-01g/sq.ft.
Mass sorbed           =       .24520E-01g/sq.ft.

Since last printout at time =       6.00
            Change in Total Mass =     -.12108E-02g/sq.ft.
                Advection in from atmosphere =       .00000    g/sq.ft.
                Advection in from water table =    -.11723E-02g/sq.ft.
                Diffusion in from atmosphere =     -.38482E-04g/sq.ft.
                Diffusion in from water table =      .00000    g/sq.ft.
            Total inflow at boundaries =     -.12108E-02g/sq.ft.
            Mass discrepancy =      .58208E-09g/sq.ft.

Since beginning of run at time = 0.0
            Change in Total Mass =     -.87320E-02g/sq.ft.
                Advection in from atmosphere =       .00000    g/sq.ft.
```

```
                Advection in from water table =     -.84437E-02g/sq.ft.
                Diffusion in from atmosphere =      -.28834E-03g/sq.ft.
                Diffusion in from water table =      .00000    g/sq.ft.
           Total inflow at boundaries =     -.87320E-02g/sq.ft.
           Mass discrepancy =      .40978E-07g/sq.ft.


Polygon   1
At time =       8.00, total mass in vadose zone =     .74750E-01g/sq.ft.
Mass in gas phase     =       .95889E-02g/sq.ft.
Mass in liquid phase  =       .41028E-01g/sq.ft.
Mass sorbed           =       .24134E-01g/sq.ft.

Since last printout at time =       7.00
           Change in Total Mass =     -.11959E-02g/sq.ft.
                Advection in from atmosphere =       .00000    g/sq.ft.
                Advection in from water table =     -.11585E-02g/sq.ft.
                Diffusion in from atmosphere =      -.37444E-04g/sq.ft.
                Diffusion in from water table =      .00000    g/sq.ft.
           Total inflow at boundaries =     -.11959E-02g/sq.ft.
           Mass discrepancy =      .69849E-09g/sq.ft.

Since beginning of run at time = 0.0
           Change in Total Mass =     -.99279E-02g/sq.ft.
                Advection in from atmosphere =       .00000    g/sq.ft.
                Advection in from water table =     -.96022E-02g/sq.ft.
                Diffusion in from atmosphere =      -.32578E-03g/sq.ft.
                Diffusion in from water table =      .00000    g/sq.ft.
           Total inflow at boundaries =     -.99280E-02g/sq.ft.
           Mass discrepancy =      .41910E-07g/sq.ft.


Polygon   1
At time =       9.00, total mass in vadose zone =     .73570E-01g/sq.ft.
Mass in gas phase     =       .94374E-02g/sq.ft.
Mass in liquid phase  =       .40379E-01g/sq.ft.
Mass sorbed           =       .23753E-01g/sq.ft.

Since last printout at time =       8.00
           Change in Total Mass =     -.11808E-02g/sq.ft.
                Advection in from atmosphere =       .00000    g/sq.ft.
                Advection in from water table =     -.11444E-02g/sq.ft.
                Diffusion in from atmosphere =      -.36399E-04g/sq.ft.
                Diffusion in from water table =      .00000    g/sq.ft.
           Total inflow at boundaries =     -.11808E-02g/sq.ft.
           Mass discrepancy =     -.22119E-08g/sq.ft.

Since beginning of run at time = 0.0
           Change in Total Mass =     -.11109E-01g/sq.ft.
                Advection in from atmosphere =       .00000    g/sq.ft.
                Advection in from water table =     -.10747E-01g/sq.ft.
                Diffusion in from atmosphere =      -.36218E-03g/sq.ft.
                Diffusion in from water table =      .00000    g/sq.ft.
           Total inflow at boundaries =     -.11109E-01g/sq.ft.
           Mass discrepancy =      .39116E-07g/sq.ft.


Polygon   1
At time =      10.00, total mass in vadose zone =     .72404E-01g/sq.ft.
Mass in gas phase     =       .92879E-02g/sq.ft.
```

```
Mass in liquid phase  =        .39740E-01g/sq.ft.
Mass sorbed           =        .23376E-01g/sq.ft.

Since last printout at time =       9.00
               Change in Total Mass =     -.11656E-02g/sq.ft.
                    Advection in from atmosphere =       .00000    g/sq.ft.
                    Advection in from water table =     -.11303E-02g/sq.ft.
                    Diffusion in from atmosphere =      -.35357E-04g/sq.ft.
                    Diffusion in from water table =      .00000    g/sq.ft.
               Total inflow at boundaries =     -.11656E-02g/sq.ft.
               Mass discrepancy =      .11642E-09g/sq.ft.

Since beginning of run at time = 0.0
               Change in Total Mass =     -.12274E-01g/sq.ft.
                    Advection in from atmosphere =       .00000    g/sq.ft.
                    Advection in from water table =     -.11877E-01g/sq.ft.
                    Diffusion in from atmosphere =      -.39754E-03g/sq.ft.
                    Diffusion in from water table =      .00000    g/sq.ft.
               Total inflow at boundaries =     -.12274E-01g/sq.ft.
               Mass discrepancy =      .39116E-07g/sq.ft.


Polygon   1
At time =      11.00, total mass in vadose zone =     .71253E-01g/sq.ft.
Mass in gas phase     =        .91403E-02g/sq.ft.
Mass in liquid phase  =        .39108E-01g/sq.ft.
Mass sorbed           =        .23005E-01g/sq.ft.

Since last printout at time =      10.00
               Change in Total Mass =     -.11506E-02g/sq.ft.
                    Advection in from atmosphere =       .00000    g/sq.ft.
                    Advection in from water table =     -.11163E-02g/sq.ft.
                    Diffusion in from atmosphere =      -.34326E-04g/sq.ft.
                    Diffusion in from water table =      .00000    g/sq.ft.
               Total inflow at boundaries =     -.11507E-02g/sq.ft.
               Mass discrepancy =      .79162E-08g/sq.ft.

Since beginning of run at time = 0.0
               Change in Total Mass =     -.13425E-01g/sq.ft.
                    Advection in from atmosphere =       .00000    g/sq.ft.
                    Advection in from water table =     -.12993E-01g/sq.ft.
                    Diffusion in from atmosphere =      -.43187E-03g/sq.ft.
                    Diffusion in from water table =      .00000    g/sq.ft.
               Total inflow at boundaries =     -.13425E-01g/sq.ft.
               Mass discrepancy =      .46566E-07g/sq.ft.


Polygon   1
At time =      12.00, total mass in vadose zone =     .70117E-01g/sq.ft.
Mass in gas phase     =        .89946E-02g/sq.ft.
Mass in liquid phase  =        .38485E-01g/sq.ft.
Mass sorbed           =        .22638E-01g/sq.ft.

Since last printout at time =      11.00
               Change in Total Mass =     -.11359E-02g/sq.ft.
                    Advection in from atmosphere =       .00000    g/sq.ft.
                    Advection in from water table =     -.11026E-02g/sq.ft.
                    Diffusion in from atmosphere =      -.33311E-04g/sq.ft.
                    Diffusion in from water table =      .00000    g/sq.ft.
               Total inflow at boundaries =     -.11359E-02g/sq.ft.
```

Mass discrepancy = .23283E-09g/sq.ft.

Since beginning of run at time = 0.0
Change in Total Mass = -.14561E-01g/sq.ft.
Advection in from atmosphere = .00000 g/sq.ft.
Advection in from water table = -.14096E-01g/sq.ft.
Diffusion in from atmosphere = -.46518E-03g/sq.ft.
Diffusion in from water table = .00000 g/sq.ft.
Total inflow at boundaries = -.14561E-01g/sq.ft.
Mass discrepancy = .47497E-07g/sq.ft.

Polygon 1
At time = 13.00, total mass in vadose zone = .68996E-01g/sq.ft.
Mass in gas phase = .88507E-02g/sq.ft.
Mass in liquid phase = .37869E-01g/sq.ft.
Mass sorbed = .22276E-01g/sq.ft.

Since last printout at time = 12.00
Change in Total Mass = -.11215E-02g/sq.ft.
Advection in from atmosphere = .00000 g/sq.ft.
Advection in from water table = -.10892E-02g/sq.ft.
Diffusion in from atmosphere = -.32317E-04g/sq.ft.
Diffusion in from water table = .00000 g/sq.ft.
Total inflow at boundaries = -.11215E-02g/sq.ft.
Mass discrepancy = .40745E-08g/sq.ft.

Since beginning of run at time = 0.0
Change in Total Mass = -.15682E-01g/sq.ft.
Advection in from atmosphere = .00000 g/sq.ft.
Advection in from water table = -.15185E-01g/sq.ft.
Diffusion in from atmosphere = -.49749E-03g/sq.ft.
Diffusion in from water table = .00000 g/sq.ft.
Total inflow at boundaries = -.15682E-01g/sq.ft.
Mass discrepancy = .50291E-07g/sq.ft.

Polygon 1
At time = 14.00, total mass in vadose zone = .67889E-01g/sq.ft.
Mass in gas phase = .87086E-02g/sq.ft.
Mass in liquid phase = .37261E-01g/sq.ft.
Mass sorbed = .21919E-01g/sq.ft.

Since last printout at time = 13.00
Change in Total Mass = -.11074E-02g/sq.ft.
Advection in from atmosphere = .00000 g/sq.ft.
Advection in from water table = -.10760E-02g/sq.ft.
Diffusion in from atmosphere = -.31346E-04g/sq.ft.
Diffusion in from water table = .00000 g/sq.ft.
Total inflow at boundaries = -.11074E-02g/sq.ft.
Mass discrepancy = .18626E-08g/sq.ft.

Since beginning of run at time = 0.0
Change in Total Mass = -.16790E-01g/sq.ft.
Advection in from atmosphere = .00000 g/sq.ft.
Advection in from water table = -.16261E-01g/sq.ft.
Diffusion in from atmosphere = -.52884E-03g/sq.ft.
Diffusion in from water table = .00000 g/sq.ft.
Total inflow at boundaries = -.16790E-01g/sq.ft.
Mass discrepancy = .52154E-07g/sq.ft.

```
Polygon   1
At time =      15.00, total mass in vadose zone =     .66795E-01g/sq.ft.
Mass in gas phase     =       .85684E-02g/sq.ft.
Mass in liquid phase  =       .36661E-01g/sq.ft.
Mass sorbed           =       .21566E-01g/sq.ft.

Since last printout at time =      14.00
               Change in Total Mass =     -.10935E-02g/sq.ft.
                    Advection in from atmosphere =       .00000    g/sq.ft.
                    Advection in from water table =     -.10631E-02g/sq.ft.
                    Diffusion in from atmosphere =      -.30400E-04g/sq.ft.
                    Diffusion in from water table =      .00000    g/sq.ft.
               Total inflow at boundaries =     -.10935E-02g/sq.ft.
               Mass discrepancy =      .57044E-08g/sq.ft.

Since beginning of run at time = 0.0
               Change in Total Mass =     -.17883E-01g/sq.ft.
                    Advection in from atmosphere =       .00000    g/sq.ft.
                    Advection in from water table =     -.17324E-01g/sq.ft.
                    Diffusion in from atmosphere =      -.55924E-03g/sq.ft.
                    Diffusion in from water table =      .00000    g/sq.ft.
               Total inflow at boundaries =     -.17883E-01g/sq.ft.
               Mass discrepancy =      .57742E-07g/sq.ft.


Polygon   1
At time =      16.00, total mass in vadose zone =     .65715E-01g/sq.ft.
Mass in gas phase     =       .84298E-02g/sq.ft.
Mass in liquid phase  =       .36068E-01g/sq.ft.
Mass sorbed           =       .21217E-01g/sq.ft.

Since last printout at time =      15.00
               Change in Total Mass =     -.10800E-02g/sq.ft.
                    Advection in from atmosphere =       .00000    g/sq.ft.
                    Advection in from water table =     -.10505E-02g/sq.ft.
                    Diffusion in from atmosphere =      -.29481E-04g/sq.ft.
                    Diffusion in from water table =      .00000    g/sq.ft.
               Total inflow at boundaries =     -.10800E-02g/sq.ft.
               Mass discrepancy =     -.38417E-08g/sq.ft.

Since beginning of run at time = 0.0
               Change in Total Mass =     -.18963E-01g/sq.ft.
                    Advection in from atmosphere =       .00000    g/sq.ft.
                    Advection in from water table =     -.18375E-01g/sq.ft.
                    Diffusion in from atmosphere =      -.58872E-03g/sq.ft.
                    Diffusion in from water table =      .00000    g/sq.ft.
               Total inflow at boundaries =     -.18963E-01g/sq.ft.
               Mass discrepancy =      .54017E-07g/sq.ft.


Polygon   1
At time =      17.00, total mass in vadose zone =     .64648E-01g/sq.ft.
Mass in gas phase     =       .82930E-02g/sq.ft.
Mass in liquid phase  =       .35483E-01g/sq.ft.
Mass sorbed           =       .20872E-01g/sq.ft.

Since last printout at time =      16.00
               Change in Total Mass =     -.10666E-02g/sq.ft.
```

```
                Advection in from atmosphere =       .00000    g/sq.ft.
                Advection in from water table =     -.10380E-02g/sq.ft.
                Diffusion in from atmosphere =      -.28589E-04g/sq.ft.
                Diffusion in from water table =      .00000    g/sq.ft.
           Total inflow at boundaries =     -.10666E-02g/sq.ft.
           Mass discrepancy =      .30268E-08g/sq.ft.

Since beginning of run at time = 0.0
           Change in Total Mass =     -.20030E-01g/sq.ft.
                Advection in from atmosphere =       .00000    g/sq.ft.
                Advection in from water table =     -.19413E-01g/sq.ft.
                Diffusion in from atmosphere =      -.61731E-03g/sq.ft.
                Diffusion in from water table =      .00000    g/sq.ft.
           Total inflow at boundaries =     -.20030E-01g/sq.ft.
           Mass discrepancy =      .55879E-07g/sq.ft.


Polygon   1
At time =      18.00, total mass in vadose zone =     .63595E-01g/sq.ft.
Mass in gas phase     =       .81579E-02g/sq.ft.
Mass in liquid phase  =       .34905E-01g/sq.ft.
Mass sorbed           =       .20532E-01g/sq.ft.

Since last printout at time =      17.00
           Change in Total Mass =     -.10535E-02g/sq.ft.
                Advection in from atmosphere =       .00000    g/sq.ft.
                Advection in from water table =     -.10258E-02g/sq.ft.
                Diffusion in from atmosphere =      -.27724E-04g/sq.ft.
                Diffusion in from water table =      .00000    g/sq.ft.
           Total inflow at boundaries =     -.10535E-02g/sq.ft.
           Mass discrepancy =      .60536E-08g/sq.ft.

Since beginning of run at time = 0.0
           Change in Total Mass =     -.21083E-01g/sq.ft.
                Advection in from atmosphere =       .00000    g/sq.ft.
                Advection in from water table =     -.20438E-01g/sq.ft.
                Diffusion in from atmosphere =      -.64503E-03g/sq.ft.
                Diffusion in from water table =      .00000    g/sq.ft.
           Total inflow at boundaries =     -.21083E-01g/sq.ft.
           Mass discrepancy =      .61467E-07g/sq.ft.


Polygon   1
At time =      19.00, total mass in vadose zone =     .62554E-01g/sq.ft.
Mass in gas phase     =       .80244E-02g/sq.ft.
Mass in liquid phase  =       .34334E-01g/sq.ft.
Mass sorbed           =       .20196E-01g/sq.ft.

Since last printout at time =      18.00
           Change in Total Mass =     -.10405E-02g/sq.ft.
                Advection in from atmosphere =       .00000    g/sq.ft.
                Advection in from water table =     -.10137E-02g/sq.ft.
                Diffusion in from atmosphere =      -.26886E-04g/sq.ft.
                Diffusion in from water table =      .00000    g/sq.ft.
           Total inflow at boundaries =     -.10406E-02g/sq.ft.
           Mass discrepancy =      .11642E-07g/sq.ft.

Since beginning of run at time = 0.0
           Change in Total Mass =     -.22124E-01g/sq.ft.
                Advection in from atmosphere =       .00000    g/sq.ft.
```

```
                    Advection in from water table =     -.21452E-01g/sq.ft.
                    Diffusion in from atmosphere =      -.67192E-03g/sq.ft.
                    Diffusion in from water table =      .00000    g/sq.ft.
               Total inflow at boundaries =     -.22124E-01g/sq.ft.
               Mass discrepancy =      .74506E-07g/sq.ft.


Polygon   1
At time =      20.00, total mass in vadose zone =     .61527E-01g/sq.ft.
Mass in gas phase     =       .78925E-02g/sq.ft.
Mass in liquid phase  =       .33770E-01g/sq.ft.
Mass sorbed           =       .19865E-01g/sq.ft.

Since last printout at time =      19.00
               Change in Total Mass =     -.10278E-02g/sq.ft.
                    Advection in from atmosphere =       .00000    g/sq.ft.
                    Advection in from water table =     -.10017E-02g/sq.ft.
                    Diffusion in from atmosphere =      -.26075E-04g/sq.ft.
                    Diffusion in from water table =      .00000    g/sq.ft.
               Total inflow at boundaries =     -.10278E-02g/sq.ft.
               Mass discrepancy =     -.69849E-08g/sq.ft.

Since beginning of run at time = 0.0
               Change in Total Mass =     -.23152E-01g/sq.ft.
                    Advection in from atmosphere =       .00000    g/sq.ft.
                    Advection in from water table =     -.22454E-01g/sq.ft.
                    Diffusion in from atmosphere =      -.69800E-03g/sq.ft.
                    Diffusion in from water table =      .00000    g/sq.ft.
               Total inflow at boundaries =     -.23152E-01g/sq.ft.
               Mass discrepancy =      .67055E-07g/sq.ft.


Polygon   1
At time =      21.00, total mass in vadose zone =     .60512E-01g/sq.ft.
Mass in gas phase     =       .77623E-02g/sq.ft.
Mass in liquid phase  =       .33212E-01g/sq.ft.
Mass sorbed           =       .19537E-01g/sq.ft.

Since last printout at time =      20.00
               Change in Total Mass =     -.10151E-02g/sq.ft.
                    Advection in from atmosphere =       .00000    g/sq.ft.
                    Advection in from water table =     -.98983E-03g/sq.ft.
                    Diffusion in from atmosphere =      -.25291E-04g/sq.ft.
                    Diffusion in from water table =      .00000    g/sq.ft.
               Total inflow at boundaries =     -.10151E-02g/sq.ft.
               Mass discrepancy =      .17462E-08g/sq.ft.

Since beginning of run at time = 0.0
               Change in Total Mass =     -.24167E-01g/sq.ft.
                    Advection in from atmosphere =       .00000    g/sq.ft.
                    Advection in from water table =     -.23444E-01g/sq.ft.
                    Diffusion in from atmosphere =      -.72329E-03g/sq.ft.
                    Diffusion in from water table =      .00000    g/sq.ft.
               Total inflow at boundaries =     -.24167E-01g/sq.ft.
               Mass discrepancy =      .68918E-07g/sq.ft.


Polygon   1
At time =      22.00, total mass in vadose zone =     .59509E-01g/sq.ft.
Mass in gas phase     =       .76337E-02g/sq.ft.
```

```
Mass in liquid phase  =       .32662E-01g/sq.ft.
Mass sorbed           =       .19213E-01g/sq.ft.

Since last printout at time =      21.00
              Change in Total Mass =     -.10026E-02g/sq.ft.
                   Advection in from atmosphere =       .00000    g/sq.ft.
                   Advection in from water table =     -.97808E-03g/sq.ft.
                   Diffusion in from atmosphere =      -.24533E-04g/sq.ft.
                   Diffusion in from water table =      .00000    g/sq.ft.
              Total inflow at boundaries =     -.10026E-02g/sq.ft.
              Mass discrepancy =      .10710E-07g/sq.ft.

Since beginning of run at time = 0.0
              Change in Total Mass =     -.25169E-01g/sq.ft.
                   Advection in from atmosphere =       .00000    g/sq.ft.
                   Advection in from water table =     -.24422E-01g/sq.ft.
                   Diffusion in from atmosphere =      -.74782E-03g/sq.ft.
                   Diffusion in from water table =      .00000    g/sq.ft.
              Total inflow at boundaries =     -.25170E-01g/sq.ft.
              Mass discrepancy =      .80094E-07g/sq.ft.


Polygon   1
At time =      23.00, total mass in vadose zone =     .58519E-01g/sq.ft.
Mass in gas phase     =       .75067E-02g/sq.ft.
Mass in liquid phase  =       .32119E-01g/sq.ft.
Mass sorbed           =       .18893E-01g/sq.ft.

Since last printout at time =      22.00
              Change in Total Mass =     -.99022E-03g/sq.ft.
                   Advection in from atmosphere =       .00000    g/sq.ft.
                   Advection in from water table =     -.96643E-03g/sq.ft.
                   Diffusion in from atmosphere =      -.23800E-04g/sq.ft.
                   Diffusion in from water table =      .00000    g/sq.ft.
              Total inflow at boundaries =     -.99023E-03g/sq.ft.
              Mass discrepancy =      .61700E-08g/sq.ft.

Since beginning of run at time = 0.0
              Change in Total Mass =     -.26160E-01g/sq.ft.
                   Advection in from atmosphere =       .00000    g/sq.ft.
                   Advection in from water table =     -.25388E-01g/sq.ft.
                   Diffusion in from atmosphere =      -.77162E-03g/sq.ft.
                   Diffusion in from water table =      .00000    g/sq.ft.
              Total inflow at boundaries =     -.26160E-01g/sq.ft.
              Mass discrepancy =      .87544E-07g/sq.ft.


Polygon   1
At time =      24.00, total mass in vadose zone =     .57541E-01g/sq.ft.
Mass in gas phase     =       .73812E-02g/sq.ft.
Mass in liquid phase  =       .31582E-01g/sq.ft.
Mass sorbed           =       .18578E-01g/sq.ft.

Since last printout at time =      23.00
              Change in Total Mass =     -.97796E-03g/sq.ft.
                   Advection in from atmosphere =       .00000    g/sq.ft.
                   Advection in from water table =     -.95487E-03g/sq.ft.
                   Diffusion in from atmosphere =      -.23092E-04g/sq.ft.
                   Diffusion in from water table =      .00000    g/sq.ft.
              Total inflow at boundaries =     -.97796E-03g/sq.ft.
```

```
              Mass discrepancy =      .24447E-08g/sq.ft.

Since beginning of run at time = 0.0
              Change in Total Mass =     -.27138E-01g/sq.ft.
                   Advection in from atmosphere =       .00000    g/sq.ft.
                   Advection in from water table =    -.26343E-01g/sq.ft.
                   Diffusion in from atmosphere =     -.79471E-03g/sq.ft.
                   Diffusion in from water table =      .00000    g/sq.ft.
              Total inflow at boundaries =     -.27138E-01g/sq.ft.
              Mass discrepancy =      .91270E-07g/sq.ft.


Polygon   1
At time =      25.00, total mass in vadose zone =     .56575E-01g/sq.ft.
Mass in gas phase     =       .72573E-02g/sq.ft.
Mass in liquid phase  =       .31052E-01g/sq.ft.
Mass sorbed           =       .18266E-01g/sq.ft.

Since last printout at time =      24.00
              Change in Total Mass =     -.96581E-03g/sq.ft.
                   Advection in from atmosphere =       .00000    g/sq.ft.
                   Advection in from water table =    -.94340E-03g/sq.ft.
                   Diffusion in from atmosphere =     -.22408E-04g/sq.ft.
                   Diffusion in from water table =      .00000    g/sq.ft.
              Total inflow at boundaries =     -.96580E-03g/sq.ft.
              Mass discrepancy =     -.37835E-08g/sq.ft.

Since beginning of run at time = 0.0
              Change in Total Mass =     -.28103E-01g/sq.ft.
                   Advection in from atmosphere =       .00000    g/sq.ft.
                   Advection in from water table =    -.27286E-01g/sq.ft.
                   Diffusion in from atmosphere =     -.81712E-03g/sq.ft.
                   Diffusion in from water table =      .00000    g/sq.ft.
              Total inflow at boundaries =     -.28104E-01g/sq.ft.
              Mass discrepancy =      .87544E-07g/sq.ft.


Polygon   1
At time =      26.00, total mass in vadose zone =     .55621E-01g/sq.ft.
Mass in gas phase     =       .71350E-02g/sq.ft.
Mass in liquid phase  =       .30528E-01g/sq.ft.
Mass sorbed           =       .17958E-01g/sq.ft.

Since last printout at time =      25.00
              Change in Total Mass =     -.95374E-03g/sq.ft.
                   Advection in from atmosphere =       .00000    g/sq.ft.
                   Advection in from water table =    -.93200E-03g/sq.ft.
                   Diffusion in from atmosphere =     -.21747E-04g/sq.ft.
                   Diffusion in from water table =      .00000    g/sq.ft.
              Total inflow at boundaries =     -.95375E-03g/sq.ft.
              Mass discrepancy =      .75670E-08g/sq.ft.

Since beginning of run at time = 0.0
              Change in Total Mass =     -.29057E-01g/sq.ft.
                   Advection in from atmosphere =       .00000    g/sq.ft.
                   Advection in from water table =    -.28218E-01g/sq.ft.
                   Diffusion in from atmosphere =     -.83887E-03g/sq.ft.
                   Diffusion in from water table =      .00000    g/sq.ft.
              Total inflow at boundaries =     -.29057E-01g/sq.ft.
              Mass discrepancy =      .94995E-07g/sq.ft.
```

```
Polygon   1
At time =      27.00, total mass in vadose zone =     .54679E-01g/sq.ft.
Mass in gas phase     =       .70142E-02g/sq.ft.
Mass in liquid phase  =       .30011E-01g/sq.ft.
Mass sorbed           =       .17654E-01g/sq.ft.

Since last printout at time =      26.00
              Change in Total Mass =     -.94179E-03g/sq.ft.
                   Advection in from atmosphere =       .00000    g/sq.ft.
                   Advection in from water table =     -.92068E-03g/sq.ft.
                   Diffusion in from atmosphere =      -.21108E-04g/sq.ft.
                   Diffusion in from water table =      .00000    g/sq.ft.
              Total inflow at boundaries =     -.94179E-03g/sq.ft.
              Mass discrepancy =      .51223E-08g/sq.ft.

Since beginning of run at time = 0.0
              Change in Total Mass =     -.29999E-01g/sq.ft.
                   Advection in from atmosphere =       .00000    g/sq.ft.
                   Advection in from water table =     -.29139E-01g/sq.ft.
                   Diffusion in from atmosphere =      -.85998E-03g/sq.ft.
                   Diffusion in from water table =      .00000    g/sq.ft.
              Total inflow at boundaries =     -.29999E-01g/sq.ft.
              Mass discrepancy =      .10058E-06g/sq.ft.


Polygon   1
At time =      28.00, total mass in vadose zone =     .53749E-01g/sq.ft.
Mass in gas phase     =       .68949E-02g/sq.ft.
Mass in liquid phase  =       .29501E-01g/sq.ft.
Mass sorbed           =       .17354E-01g/sq.ft.

Since last printout at time =      27.00
              Change in Total Mass =     -.92993E-03g/sq.ft.
                   Advection in from atmosphere =       .00000    g/sq.ft.
                   Advection in from water table =     -.90944E-03g/sq.ft.
                   Diffusion in from atmosphere =      -.20491E-04g/sq.ft.
                   Diffusion in from water table =      .00000    g/sq.ft.
              Total inflow at boundaries =     -.92993E-03g/sq.ft.
              Mass discrepancy =     -.11642E-08g/sq.ft.

Since beginning of run at time = 0.0
              Change in Total Mass =     -.30929E-01g/sq.ft.
                   Advection in from atmosphere =       .00000    g/sq.ft.
                   Advection in from water table =     -.30049E-01g/sq.ft.
                   Diffusion in from atmosphere =      -.88047E-03g/sq.ft.
                   Diffusion in from water table =      .00000    g/sq.ft.
              Total inflow at boundaries =     -.30929E-01g/sq.ft.
              Mass discrepancy =      .98720E-07g/sq.ft.


Polygon   1
At time =      29.00, total mass in vadose zone =     .52831E-01g/sq.ft.
Mass in gas phase     =       .67771E-02g/sq.ft.
Mass in liquid phase  =       .28997E-01g/sq.ft.
Mass sorbed           =       .17057E-01g/sq.ft.

Since last printout at time =      28.00
              Change in Total Mass =     -.91816E-03g/sq.ft.
```

Advection in from atmosphere = .00000 g/sq.ft.
Advection in from water table = -.89826E-03g/sq.ft.
Diffusion in from atmosphere = -.19895E-04g/sq.ft.
Diffusion in from water table = .00000 g/sq.ft.
Total inflow at boundaries = -.91815E-03g/sq.ft.
Mass discrepancy = -.41327E-08g/sq.ft.

Since beginning of run at time = 0.0
Change in Total Mass = -.31847E-01g/sq.ft.
Advection in from atmosphere = .00000 g/sq.ft.
Advection in from water table = -.30947E-01g/sq.ft.
Diffusion in from atmosphere = -.90036E-03g/sq.ft.
Diffusion in from water table = .00000 g/sq.ft.
Total inflow at boundaries = -.31847E-01g/sq.ft.
Mass discrepancy = .96858E-07g/sq.ft.

Polygon 1
At time = 30.00, total mass in vadose zone = .51925E-01g/sq.ft.
Mass in gas phase = .66608E-02g/sq.ft.
Mass in liquid phase = .28500E-01g/sq.ft.
Mass sorbed = .16765E-01g/sq.ft.

Since last printout at time = 29.00
Change in Total Mass = -.90646E-03g/sq.ft.
Advection in from atmosphere = .00000 g/sq.ft.
Advection in from water table = -.88714E-03g/sq.ft.
Diffusion in from atmosphere = -.19319E-04g/sq.ft.
Diffusion in from water table = .00000 g/sq.ft.
Total inflow at boundaries = -.90646E-03g/sq.ft.
Mass discrepancy = .31432E-08g/sq.ft.

Since beginning of run at time = 0.0
Change in Total Mass = -.32754E-01g/sq.ft.
Advection in from atmosphere = .00000 g/sq.ft.
Advection in from water table = -.31834E-01g/sq.ft.
Diffusion in from atmosphere = -.91968E-03g/sq.ft.
Diffusion in from water table = .00000 g/sq.ft.
Total inflow at boundaries = -.32754E-01g/sq.ft.
Mass discrepancy = .96858E-07g/sq.ft.

GROUNDWATER IMPACT OF POLYGON 1

Time	Mass per area (g/sq.ft.)	Total Mass (g)
1.00	.12334E-02	203.51
2.00	.12267E-02	202.41
3.00	.12186E-02	201.08
4.00	.12090E-02	199.49
5.00	.11979E-02	197.66
6.00	.11856E-02	195.62
7.00	.11723E-02	193.44
8.00	.11585E-02	191.15
9.00	.11444E-02	188.83
10.00	.11303E-02	186.50
11.00	.11163E-02	184.19
12.00	.11026E-02	181.93
13.00	.10892E-02	179.71
14.00	.10760E-02	177.54
15.00	.10631E-02	175.42

16.00	.10505E-02	173.33
17.00	.10380E-02	171.28
18.00	.10258E-02	169.25
19.00	.10137E-02	167.25
20.00	.10017E-02	165.28
21.00	.98983E-03	163.32
22.00	.97808E-03	161.38
23.00	.96643E-03	159.46
24.00	.95487E-03	157.55
25.00	.94340E-03	155.66
26.00	.93200E-03	153.78
27.00	.92068E-03	151.91
28.00	.90944E-03	150.06
29.00	.89826E-03	148.21
30.00	.88714E-03	146.38

****

****

TOTAL GROUNDWATER IMPACT

Time (yr)	Mass (g)	Cumulative Mass (g)
1.00	203.51	203.51
2.00	202.41	405.92
3.00	201.08	607.00
4.00	199.49	806.49
5.00	197.66	1004.1
6.00	195.62	1199.8
7.00	193.44	1393.2
8.00	191.15	1584.4
9.00	188.83	1773.2
10.00	186.50	1959.7
11.00	184.19	2143.9
12.00	181.93	2325.8
13.00	179.71	2505.5
14.00	177.54	2683.1
15.00	175.42	2858.5
16.00	173.33	3031.8
17.00	171.28	3203.1
18.00	169.25	3372.3
19.00	167.25	3539.6
20.00	165.28	3704.9
21.00	163.32	3868.2
22.00	161.38	4029.6
23.00	159.46	4189.0
24.00	157.55	4346.6
25.00	155.66	4502.3
26.00	153.78	4656.0
27.00	151.91	4808.0
28.00	150.06	4958.0
29.00	148.21	5106.2
30.00	146.38	5252.6

Polygon 12A
Time: .000

Cell	Cgas(g/cu.ft.)	Cliq(g/cu.ft.)	Csol
1	.94556E-06	.19991E-05	.64570E-11
2	.94556E-06	.19991E-05	.64570E-11
3	.94556E-06	.19991E-05	.64570E-11
4	.94556E-06	.19991E-05	.64570E-11
5	.94556E-06	.19991E-05	.64570E-11
6	.94556E-06	.19991E-05	.64570E-11
7	.22883E-03	.48378E-03	.15626E-08
8	.22883E-03	.48378E-03	.15626E-08
9	.22883E-03	.48378E-03	.15626E-08
10	.22883E-03	.48378E-03	.15626E-08
11	.22883E-03	.48378E-03	.15626E-08
12	.22883E-03	.48378E-03	.15626E-08
13	.57065E-03	.12064E-02	.38968E-08
14	.57065E-03	.12064E-02	.38968E-08
15	.57065E-03	.12064E-02	.38968E-08
16	.57065E-03	.12064E-02	.38968E-08
17	.57065E-03	.12064E-02	.38968E-08
18	.57065E-03	.12064E-02	.38968E-08
19	.91247E-03	.19291E-02	.62310E-08
20	.91247E-03	.19291E-02	.62310E-08
21	.91247E-03	.19291E-02	.62310E-08
22	.91247E-03	.19291E-02	.62310E-08
23	.91247E-03	.19291E-02	.62310E-08
24	.91247E-03	.19291E-02	.62310E-08
25	.12543E-02	.26518E-02	.85652E-08
26	.12543E-02	.26518E-02	.85652E-08
27	.12543E-02	.26518E-02	.85652E-08
28	.12543E-02	.26518E-02	.85652E-08
29	.12543E-02	.26518E-02	.85652E-08
30	.12543E-02	.26518E-02	.85652E-08
31	.15966E-02	.33754E-02	.10903E-07
32	.15966E-02	.33754E-02	.10903E-07
33	.15966E-02	.33754E-02	.10903E-07
34	.15966E-02	.33754E-02	.10903E-07
35	.15966E-02	.33754E-02	.10903E-07
36	.15966E-02	.33754E-02	.10903E-07
37	.19384E-02	.40981E-02	.13237E-07
38	.19384E-02	.40981E-02	.13237E-07
39	.19384E-02	.40981E-02	.13237E-07
40	.19384E-02	.40981E-02	.13237E-07
41	.19384E-02	.40981E-02	.13237E-07
42	.19384E-02	.40981E-02	.13237E-07
43	.22802E-02	.48208E-02	.15571E-07
44	.22802E-02	.48208E-02	.15571E-07
45	.22802E-02	.48208E-02	.15571E-07
46	.22802E-02	.48208E-02	.15571E-07
47	.22802E-02	.48208E-02	.15571E-07
48	.22802E-02	.48208E-02	.15571E-07
49	.26220E-02	.55434E-02	.17905E-07
50	.26220E-02	.55434E-02	.17905E-07
51	.26220E-02	.55434E-02	.17905E-07
52	.26220E-02	.55434E-02	.17905E-07
53	.26220E-02	.55434E-02	.17905E-07
54	.26220E-02	.55434E-02	.17905E-07
55	.29639E-02	.62661E-02	.20239E-07
56	.29639E-02	.62661E-02	.20239E-07

57	.29639E-02	.62661E-02	.20239E-07
58	.29639E-02	.62661E-02	.20239E-07
59	.29639E-02	.62661E-02	.20239E-07
60	.29639E-02	.62661E-02	.20239E-07

Polygon 12A
Time: 10.000

Cell	Cgas(g/cu.ft.)	Cliq(g/cu.ft.)	Csol
1	.44960E-05	.95054E-05	.30702E-10
2	.11517E-04	.24348E-04	.78646E-10
3	.20723E-04	.43812E-04	.14151E-09
4	.31873E-04	.67385E-04	.21765E-09
5	.44845E-04	.94809E-04	.30623E-09
6	.59654E-04	.12612E-03	.40736E-09
7	.77225E-04	.16327E-03	.52735E-09
8	.99206E-04	.20974E-03	.67745E-09
9	.12653E-03	.26751E-03	.86405E-09
10	.15853E-03	.33516E-03	.10826E-08
11	.19343E-03	.40894E-03	.13209E-08
12	.22945E-03	.48510E-03	.15669E-08
13	.26677E-03	.56400E-03	.18217E-08
14	.30738E-03	.64986E-03	.20991E-08
15	.35276E-03	.74580E-03	.24089E-08
16	.40221E-03	.85035E-03	.27466E-08
17	.45342E-03	.95860E-03	.30963E-08
18	.50396E-03	.10655E-02	.34414E-08
19	.55363E-03	.11705E-02	.37806E-08
20	.60441E-03	.12778E-02	.41274E-08
21	.65799E-03	.13911E-02	.44932E-08
22	.71400E-03	.15095E-02	.48758E-08
23	.77047E-03	.16289E-02	.52613E-08
24	.82526E-03	.17447E-02	.56355E-08
25	.87839E-03	.18571E-02	.59983E-08
26	.93199E-03	.19704E-02	.63644E-08
27	.98789E-03	.20886E-02	.67461E-08
28	.10458E-02	.22110E-02	.71417E-08
29	.11039E-02	.23338E-02	.75380E-08
30	.11599E-02	.24523E-02	.79210E-08
31	.12141E-02	.25669E-02	.82910E-08
32	.12686E-02	.26820E-02	.86628E-08
33	.13252E-02	.28016E-02	.90491E-08
34	.13836E-02	.29252E-02	.94483E-08
35	.14420E-02	.30487E-02	.98472E-08
36	.14983E-02	.31677E-02	.10232E-07
37	.15526E-02	.32825E-02	.10602E-07
38	.16070E-02	.33975E-02	.10974E-07
39	.16634E-02	.35167E-02	.11359E-07
40	.17215E-02	.36396E-02	.11756E-07
41	.17795E-02	.37621E-02	.12152E-07
42	.18352E-02	.38799E-02	.12532E-07
43	.18887E-02	.39930E-02	.12897E-07
44	.19421E-02	.41059E-02	.13262E-07
45	.19973E-02	.42226E-02	.13639E-07
46	.20539E-02	.43423E-02	.14026E-07
47	.21100E-02	.44610E-02	.14409E-07
48	.21636E-02	.45741E-02	.14774E-07
49	.22144E-02	.46817E-02	.15122E-07
50	.22647E-02	.47880E-02	.15465E-07
51	.23161E-02	.48966E-02	.15816E-07
52	.23682E-02	.50069E-02	.16172E-07

53	.24190E-02	.51141E-02	.16519E-07
54	.24661E-02	.52137E-02	.16840E-07
55	.25093E-02	.53050E-02	.17135E-07
56	.25504E-02	.53919E-02	.17416E-07
57	.25909E-02	.54776E-02	.17693E-07
58	.26301E-02	.55605E-02	.17960E-07
59	.26655E-02	.56353E-02	.18202E-07
60	.26943E-02	.56962E-02	.18399E-07

Polygon 12A
Time: 20.000

Cell	Cgas(g/cu.ft.)	Cliq(g/cu.ft.)	Csol
1	.33417E-05	.70649E-05	.22820E-10
2	.86274E-05	.18240E-04	.58914E-10
3	.15693E-04	.33178E-04	.10717E-09
4	.24450E-04	.51692E-04	.16696E-09
5	.34861E-04	.73702E-04	.23806E-09
6	.46927E-04	.99211E-04	.32045E-09
7	.60680E-04	.12829E-03	.41437E-09
8	.76192E-04	.16108E-03	.52030E-09
9	.93583E-04	.19785E-03	.63906E-09
10	.11302E-03	.23895E-03	.77181E-09
11	.13470E-03	.28478E-03	.91985E-09
12	.15878E-03	.33568E-03	.10843E-08
13	.18533E-03	.39181E-03	.12656E-08
14	.21435E-03	.45316E-03	.14637E-08
15	.24578E-03	.51962E-03	.16784E-08
16	.27958E-03	.59108E-03	.19092E-08
17	.31570E-03	.66745E-03	.21559E-08
18	.35410E-03	.74863E-03	.24181E-08
19	.39466E-03	.83437E-03	.26950E-08
20	.43719E-03	.92428E-03	.29854E-08
21	.48147E-03	.10179E-02	.32878E-08
22	.52730E-03	.11148E-02	.36008E-08
23	.57453E-03	.12147E-02	.39234E-08
24	.62305E-03	.13172E-02	.42546E-08
25	.67270E-03	.14222E-02	.45937E-08
26	.72332E-03	.15292E-02	.49394E-08
27	.77473E-03	.16379E-02	.52905E-08
28	.82681E-03	.17480E-02	.56461E-08
29	.87948E-03	.18594E-02	.60058E-08
30	.93269E-03	.19719E-02	.63691E-08
31	.98638E-03	.20854E-02	.67358E-08
32	.10405E-02	.21997E-02	.71050E-08
33	.10948E-02	.23146E-02	.74761E-08
34	.11493E-02	.24298E-02	.78484E-08
35	.12040E-02	.25454E-02	.82218E-08
36	.12588E-02	.26613E-02	.85961E-08
37	.13137E-02	.27775E-02	.89713E-08
38	.13687E-02	.28937E-02	.93466E-08
39	.14236E-02	.30097E-02	.97215E-08
40	.14784E-02	.31255E-02	.10095E-07
41	.15329E-02	.32409E-02	.10468E-07
42	.15873E-02	.33559E-02	.10840E-07
43	.16415E-02	.34704E-02	.11209E-07
44	.16953E-02	.35842E-02	.11577E-07
45	.17487E-02	.36970E-02	.11941E-07
46	.18015E-02	.38086E-02	.12302E-07
47	.18536E-02	.39189E-02	.12658E-07
48	.19050E-02	.40276E-02	.13009E-07

49	.19556E-02	.41345E-02	.13355E-07
50	.20052E-02	.42393E-02	.13693E-07
51	.20535E-02	.43415E-02	.14023E-07
52	.21004E-02	.44406E-02	.14343E-07
53	.21456E-02	.45362E-02	.14652E-07
54	.21889E-02	.46278E-02	.14948E-07
55	.22301E-02	.47148E-02	.15229E-07
56	.22687E-02	.47964E-02	.15492E-07
57	.23043E-02	.48716E-02	.15735E-07
58	.23364E-02	.49395E-02	.15955E-07
59	.23645E-02	.49990E-02	.16147E-07
60	.23882E-02	.50490E-02	.16308E-07

Polygon 12A
Time: 30.000

Cell	Cgas(g/cu.ft.)	Cliq(g/cu.ft.)	Csol
1	.24722E-05	.52266E-05	.16882E-10
2	.63804E-05	.13489E-04	.43570E-10
3	.11605E-04	.24534E-04	.79246E-10
4	.18083E-04	.38231E-04	.12349E-09
5	.25795E-04	.54535E-04	.17615E-09
6	.34748		

****
Sector not found error reading file
C:\DATA\SPRINGER\BATCH.PRF

```
 V-Leach, VER 1.1
 Jake Turin, 11/91
PGA V-leach model, polygon screen-TCE-11/10/92-Poly11A.INP  New soil, Old chem
  1 polygons.
Timestep =   1.00 years.  Simulation length =   30.00 years.
Printout every   1.00 years.  Vertical profile stored every  10.00 years.
Koc =      123.60    ml/g,       .43649E-02cu.ft./g
Kh =      .47300     (dimensionless).
Aqueous solubility =     1100.0     mg/l,      31.149     g/cu.ft
Free air diffusion coefficient = .70290     sq. m/day,  2761.7     sq.ft./yr


Polygon   1
Polygon 11A
Polygon area =      90000.    sq. ft.
 60 cells, each cell  1.000 ft. thick.
Soil Properties:
 Bulk density =     1.6400    g/ml,       46440.    g/cu.ft.
 Porosity =  .3810 Volumetric water content =  .2550
 Organic carbon content =  .00074000
Recharge Rate =  .19685100 ft/yr
Conc. in recharge water =      .00000    mg/l,       .00000    g/cu.ft
Atmospheric concentration =      .00000    mg/l,       .00000    g/cu.ft
Water table is impermeable to gas diffusion.
```

Calculation of Total TCE Mass and Revised Vertical Distributions in Polygon 12A using HGC Distribution equations and Revised Soil Physical Data

0.027 Cs **	Cz = (74.527z - 371.636)Cs

Cz (ug/L) Vert. Dist. Eq.	Calculated Depth Interval (z)	Total Depth Interval (feet)	Total Soil Conc Ct* (ug/Kg)	Mt (ug/cc)	Volume of Soil (cubic ft)	Mass TCE (grams)	Mass TCE (pounds)
0.027	3	6	0.02	2.65E-05	990000	0.74	0.00
8.08	9	6	4.84	0.01	990000	222.40	0.49
20.15	15	6	12.07	0.02	990000	554.90	1.22
32.22	21	6	19.30	0.03	990000	887.39	1.96
44.30	27	6	26.53	0.04	990000	1219.88	2.69
56.37	33	6	33.77	0.06	990000	1552.37	3.42
68.44	39	6	41.00	0.07	990000	1884.87	4.16
80.52	45	6	48.23	0.08	990000	2217.36	4.89
92.59	51	6	55.46	0.09	990000	2549.85	5.62
104.66	57	6	62.69	0.10	990000	2882.34	6.35
		60				13972.11	30.80

* Ct conversion based on Kgt of 0.599 L/Kg

** Cs Determined as mathematical average of VOC concentrations for polygon(s) listed in Table A-1 of HGC, 1989.

```
PGA V-leach model, poly screen-TCE-11/10/92-Polygon 67.inp  Rev Soil, HGC Chem
    1
       1.0         30.         1.0         10.
     123.6        .473       1100.       .7029
Polygon 67
     86500.          1.    .370735        1.64        .381        .255     .00074
         0.          0.         -1.
   60
    1     6       0.65
    7    12       0.65
   13    18       3.10
   19    24       3.10
   25    30       3.52
   31    36       9.26
   37    42       9.26
   43    48      46.50
   49    54      46.50
   55    60      46.50
```

V-Leach, VER 1.1
Jake Turin, 11/91
PGA V-leach model, poly screen-TCE-11/10/92-Polygon 67.inp Rev Soil, HGC Chem

Polygon 1
At time = .00, total mass in vadose zone = .47100E-01g/sq.ft.
Mass in gas phase = .60419E-02g/sq.ft.
Mass in liquid phase = .25851E-01g/sq.ft.
Mass sorbed = .15207E-01g/sq.ft.

Polygon 1
At time = 1.00, total mass in vadose zone = .45357E-01g/sq.ft.
Mass in gas phase = .58184E-02g/sq.ft.
Mass in liquid phase = .24895E-01g/sq.ft.
Mass sorbed = .14644E-01g/sq.ft.

Since last printout at time = .00
Change in Total Mass = -.17421E-02g/sq.ft.
Advection in from atmosphere = .00000 g/sq.ft.
Advection in from water table = -.17231E-02g/sq.ft.
Diffusion in from atmosphere = -.18995E-04g/sq.ft.
Diffusion in from water table = .00000 g/sq.ft.
Total inflow at boundaries = -.17421E-02g/sq.ft.
Mass discrepancy = .22119E-08g/sq.ft.

Since beginning of run at time = 0.0
Change in Total Mass = -.17421E-02g/sq.ft.
Advection in from atmosphere = .00000 g/sq.ft.
Advection in from water table = -.17231E-02g/sq.ft.
Diffusion in from atmosphere = -.18995E-04g/sq.ft.
Diffusion in from water table = .00000 g/sq.ft.
Total inflow at boundaries = -.17421E-02g/sq.ft.
Mass discrepancy = .22119E-08g/sq.ft.

Polygon 1
At time = 2.00, total mass in vadose zone = .43622E-01g/sq.ft.
Mass in gas phase = .55957E-02g/sq.ft.
Mass in liquid phase = .23942E-01g/sq.ft.
Mass sorbed = .14084E-01g/sq.ft.

Since last printout at time = 1.00
Change in Total Mass = -.17360E-02g/sq.ft.
Advection in from atmosphere = .00000 g/sq.ft.
Advection in from water table = -.17200E-02g/sq.ft.
Diffusion in from atmosphere = -.15974E-04g/sq.ft.
Diffusion in from water table = .00000 g/sq.ft.
Total inflow at boundaries = -.17360E-02g/sq.ft.
Mass discrepancy = -.20955E-08g/sq.ft.

Since beginning of run at time = 0.0
Change in Total Mass = -.34781E-02g/sq.ft.
Advection in from atmosphere = .00000 g/sq.ft.
Advection in from water table = -.34431E-02g/sq.ft.
Diffusion in from atmosphere = -.34968E-04g/sq.ft.
Diffusion in from water table = .00000 g/sq.ft.
Total inflow at boundaries = -.34781E-02g/sq.ft.
Mass discrepancy = .00000 g/sq.ft.

```
Polygon   1
At time =       3.00, total mass in vadose zone =     .41893E-01g/sq.ft.
Mass in gas phase     =       .53739E-02g/sq.ft.
Mass in liquid phase  =       .22993E-01g/sq.ft.
Mass sorbed           =       .13525E-01g/sq.ft.

Since last printout at time =       2.00
               Change in Total Mass =     -.17289E-02g/sq.ft.
                    Advection in from atmosphere =       .00000    g/sq.ft.
                    Advection in from water table =     -.17153E-02g/sq.ft.
                    Diffusion in from atmosphere =      -.13624E-04g/sq.ft.
                    Diffusion in from water table =      .00000    g/sq.ft.
               Total inflow at boundaries =     -.17289E-02g/sq.ft.
               Mass discrepancy =      .39581E-08g/sq.ft.

Since beginning of run at time = 0.0
               Change in Total Mass =     -.52070E-02g/sq.ft.
                    Advection in from atmosphere =       .00000    g/sq.ft.
                    Advection in from water table =     -.51584E-02g/sq.ft.
                    Diffusion in from atmosphere =      -.48593E-04g/sq.ft.
                    Diffusion in from water table =      .00000    g/sq.ft.
               Total inflow at boundaries =     -.52070E-02g/sq.ft.
               Mass discrepancy =      .37253E-08g/sq.ft.


Polygon   1
At time =       4.00, total mass in vadose zone =     .40172E-01g/sq.ft.
Mass in gas phase     =       .51532E-02g/sq.ft.
Mass in liquid phase  =       .22049E-01g/sq.ft.
Mass sorbed           =       .12970E-01g/sq.ft.

Since last printout at time =       3.00
               Change in Total Mass =     -.17203E-02g/sq.ft.
                    Advection in from atmosphere =       .00000    g/sq.ft.
                    Advection in from water table =     -.17085E-02g/sq.ft.
                    Diffusion in from atmosphere =      -.11767E-04g/sq.ft.
                    Diffusion in from water table =      .00000    g/sq.ft.
               Total inflow at boundaries =     -.17203E-02g/sq.ft.
               Mass discrepancy =      .27940E-08g/sq.ft.

Since beginning of run at time = 0.0
               Change in Total Mass =     -.69273E-02g/sq.ft.
                    Advection in from atmosphere =       .00000    g/sq.ft.
                    Advection in from water table =     -.68669E-02g/sq.ft.
                    Diffusion in from atmosphere =      -.60360E-04g/sq.ft.
                    Diffusion in from water table =      .00000    g/sq.ft.
               Total inflow at boundaries =     -.69273E-02g/sq.ft.
               Mass discrepancy =      .60536E-08g/sq.ft.


Polygon   1
At time =       5.00, total mass in vadose zone =     .38463E-01g/sq.ft.
Mass in gas phase     =       .49340E-02g/sq.ft.
Mass in liquid phase  =       .21111E-01g/sq.ft.
Mass sorbed           =       .12418E-01g/sq.ft.

Since last printout at time =       4.00
               Change in Total Mass =     -.17094E-02g/sq.ft.
```

```
                    Advection in from atmosphere =       .00000    g/sq.ft.
                    Advection in from water table =     -.16991E-02g/sq.ft.
                    Diffusion in from atmosphere =      -.10275E-04g/sq.ft.
                    Diffusion in from water table =      .00000    g/sq.ft.
               Total inflow at boundaries =     -.17094E-02g/sq.ft.
               Mass discrepancy =      .11642E-09g/sq.ft.

Since beginning of run at time = 0.0
               Change in Total Mass =     -.86367E-02g/sq.ft.
                    Advection in from atmosphere =       .00000    g/sq.ft.
                    Advection in from water table =     -.85660E-02g/sq.ft.
                    Diffusion in from atmosphere =      -.70635E-04g/sq.ft.
                    Diffusion in from water table =      .00000    g/sq.ft.
               Total inflow at boundaries =     -.86367E-02g/sq.ft.
               Mass discrepancy =      .65193E-08g/sq.ft.


Polygon   1
At time =       6.00, total mass in vadose zone =     .36768E-01g/sq.ft.
Mass in gas phase     =       .47165E-02g/sq.ft.
Mass in liquid phase  =       .20180E-01g/sq.ft.
Mass sorbed           =       .11871E-01g/sq.ft.

Since last printout at time =       5.00
               Change in Total Mass =     -.16953E-02g/sq.ft.
                    Advection in from atmosphere =       .00000    g/sq.ft.
                    Advection in from water table =     -.16862E-02g/sq.ft.
                    Diffusion in from atmosphere =      -.90575E-05g/sq.ft.
                    Diffusion in from water table =      .00000    g/sq.ft.
               Total inflow at boundaries =     -.16953E-02g/sq.ft.
               Mass discrepancy =      .68685E-08g/sq.ft.

Since beginning of run at time = 0.0
               Change in Total Mass =     -.10332E-01g/sq.ft.
                    Advection in from atmosphere =       .00000    g/sq.ft.
                    Advection in from water table =     -.10252E-01g/sq.ft.
                    Diffusion in from atmosphere =      -.79692E-04g/sq.ft.
                    Diffusion in from water table =      .00000    g/sq.ft.
               Total inflow at boundaries =     -.10332E-01g/sq.ft.
               Mass discrepancy =      .13970E-07g/sq.ft.


Polygon   1
At time =       7.00, total mass in vadose zone =     .35091E-01g/sq.ft.
Mass in gas phase     =       .45014E-02g/sq.ft.
Mass in liquid phase  =       .19260E-01g/sq.ft.
Mass sorbed           =       .11329E-01g/sq.ft.

Since last printout at time =       6.00
               Change in Total Mass =     -.16771E-02g/sq.ft.
                    Advection in from atmosphere =       .00000    g/sq.ft.
                    Advection in from water table =     -.16691E-02g/sq.ft.
                    Diffusion in from atmosphere =      -.80500E-05g/sq.ft.
                    Diffusion in from water table =      .00000    g/sq.ft.
               Total inflow at boundaries =     -.16771E-02g/sq.ft.
               Mass discrepancy =     -.15134E-08g/sq.ft.

Since beginning of run at time = 0.0
               Change in Total Mass =     -.12009E-01g/sq.ft.
                    Advection in from atmosphere =       .00000    g/sq.ft.
```

```
                    Advection in from water table =     -.11921E-01g/sq.ft.
                    Diffusion in from atmosphere =      -.87742E-04g/sq.ft.
                    Diffusion in from water table =      .00000    g/sq.ft.
               Total inflow at boundaries =     -.12009E-01g/sq.ft.
               Mass discrepancy =      .12107E-07g/sq.ft.


Polygon   1
At time =       8.00, total mass in vadose zone =     .33436E-01g/sq.ft.
Mass in gas phase     =       .42892E-02g/sq.ft.
Mass in liquid phase  =       .18352E-01g/sq.ft.
Mass sorbed           =       .10795E-01g/sq.ft.

Since last printout at time =       7.00
               Change in Total Mass =     -.16540E-02g/sq.ft.
                    Advection in from atmosphere =       .00000    g/sq.ft.
                    Advection in from water table =     -.16468E-02g/sq.ft.
                    Diffusion in from atmosphere =      -.72052E-05g/sq.ft.
                    Diffusion in from water table =      .00000    g/sq.ft.
               Total inflow at boundaries =     -.16540E-02g/sq.ft.
               Mass discrepancy =      .58208E-08g/sq.ft.

Since beginning of run at time = 0.0
               Change in Total Mass =     -.13663E-01g/sq.ft.
                    Advection in from atmosphere =       .00000    g/sq.ft.
                    Advection in from water table =     -.13568E-01g/sq.ft.
                    Diffusion in from atmosphere =      -.94947E-04g/sq.ft.
                    Diffusion in from water table =      .00000    g/sq.ft.
               Total inflow at boundaries =     -.13663E-01g/sq.ft.
               Mass discrepancy =      .18626E-07g/sq.ft.


Polygon   1
At time =       9.00, total mass in vadose zone =     .31811E-01g/sq.ft.
Mass in gas phase     =       .40807E-02g/sq.ft.
Mass in liquid phase  =       .17460E-01g/sq.ft.
Mass sorbed           =       .10271E-01g/sq.ft.

Since last printout at time =       8.00
               Change in Total Mass =     -.16252E-02g/sq.ft.
                    Advection in from atmosphere =       .00000    g/sq.ft.
                    Advection in from water table =     -.16187E-02g/sq.ft.
                    Diffusion in from atmosphere =      -.64881E-05g/sq.ft.
                    Diffusion in from water table =      .00000    g/sq.ft.
               Total inflow at boundaries =     -.16252E-02g/sq.ft.
               Mass discrepancy =     -.33760E-08g/sq.ft.

Since beginning of run at time = 0.0
               Change in Total Mass =     -.15288E-01g/sq.ft.
                    Advection in from atmosphere =       .00000    g/sq.ft.
                    Advection in from water table =     -.15187E-01g/sq.ft.
                    Diffusion in from atmosphere =      -.10144E-03g/sq.ft.
                    Diffusion in from water table =      .00000    g/sq.ft.
               Total inflow at boundaries =     -.15288E-01g/sq.ft.
               Mass discrepancy =      .14901E-07g/sq.ft.


Polygon   1
At time =      10.00, total mass in vadose zone =     .30221E-01g/sq.ft.
Mass in gas phase     =       .38767E-02g/sq.ft.
```

Mass in liquid phase = .16587E-01g/sq.ft.
Mass sorbed = .97573E-02g/sq.ft.

Since last printout at time = 9.00
Change in Total Mass = -.15900E-02g/sq.ft.
Advection in from atmosphere = .00000 g/sq.ft.
Advection in from water table = -.15841E-02g/sq.ft.
Diffusion in from atmosphere = -.58728E-05g/sq.ft.
Diffusion in from water table = .00000 g/sq.ft.
Total inflow at boundaries = -.15900E-02g/sq.ft.
Mass discrepancy = .37253E-08g/sq.ft.

Since beginning of run at time = 0.0
Change in Total Mass = -.16878E-01g/sq.ft.
Advection in from atmosphere = .00000 g/sq.ft.
Advection in from water table = -.16771E-01g/sq.ft.
Diffusion in from atmosphere = -.10731E-03g/sq.ft.
Diffusion in from water table = .00000 g/sq.ft.
Total inflow at boundaries = -.16878E-01g/sq.ft.
Mass discrepancy = .20489E-07g/sq.ft.

Polygon 1
At time = 11.00, total mass in vadose zone = .28673E-01g/sq.ft.
Mass in gas phase = .36781E-02g/sq.ft.
Mass in liquid phase = .15738E-01g/sq.ft.
Mass sorbed = .92574E-02g/sq.ft.

Since last printout at time = 10.00
Change in Total Mass = -.15482E-02g/sq.ft.
Advection in from atmosphere = .00000 g/sq.ft.
Advection in from water table = -.15428E-02g/sq.ft.
Diffusion in from atmosphere = -.53397E-05g/sq.ft.
Diffusion in from water table = .00000 g/sq.ft.
Total inflow at boundaries = -.15482E-02g/sq.ft.
Mass discrepancy = .12806E-08g/sq.ft.

Since beginning of run at time = 0.0
Change in Total Mass = -.18426E-01g/sq.ft.
Advection in from atmosphere = .00000 g/sq.ft.
Advection in from water table = -.18314E-01g/sq.ft.
Diffusion in from atmosphere = -.11265E-03g/sq.ft.
Diffusion in from water table = .00000 g/sq.ft.
Total inflow at boundaries = -.18427E-01g/sq.ft.
Mass discrepancy = .20489E-07g/sq.ft.

Polygon 1
At time = 12.00, total mass in vadose zone = .27173E-01g/sq.ft.
Mass in gas phase = .34857E-02g/sq.ft.
Mass in liquid phase = .14914E-01g/sq.ft.
Mass sorbed = .87732E-02g/sq.ft.

Since last printout at time = 11.00
Change in Total Mass = -.14999E-02g/sq.ft.
Advection in from atmosphere = .00000 g/sq.ft.
Advection in from water table = -.14950E-02g/sq.ft.
Diffusion in from atmosphere = -.48739E-05g/sq.ft.
Diffusion in from water table = .00000 g/sq.ft.
Total inflow at boundaries = -.14999E-02g/sq.ft.

Mass discrepancy = -.13970E-08g/sq.ft.

Since beginning of run at time = 0.0
Change in Total Mass = -.19926E-01g/sq.ft.
Advection in from atmosphere = .00000 g/sq.ft.
Advection in from water table = -.19809E-01g/sq.ft.
Diffusion in from atmosphere = -.11752E-03g/sq.ft.
Diffusion in from water table = .00000 g/sq.ft.
Total inflow at boundaries = -.19926E-01g/sq.ft.
Mass discrepancy = .20489E-07g/sq.ft.

Polygon 1
At time = 13.00, total mass in vadose zone = .25728E-01g/sq.ft.
Mass in gas phase = .33003E-02g/sq.ft.
Mass in liquid phase = .14121E-01g/sq.ft.
Mass sorbed = .83064E-02g/sq.ft.

Since last printout at time = 12.00
Change in Total Mass = -.14457E-02g/sq.ft.
Advection in from atmosphere = .00000 g/sq.ft.
Advection in from water table = -.14412E-02g/sq.ft.
Diffusion in from atmosphere = -.44636E-05g/sq.ft.
Diffusion in from water table = .00000 g/sq.ft.
Total inflow at boundaries = -.14457E-02g/sq.ft.
Mass discrepancy = .43074E-08g/sq.ft.

Since beginning of run at time = 0.0
Change in Total Mass = -.21372E-01g/sq.ft.
Advection in from atmosphere = .00000 g/sq.ft.
Advection in from water table = -.21250E-01g/sq.ft.
Diffusion in from atmosphere = -.12199E-03g/sq.ft.
Diffusion in from water table = .00000 g/sq.ft.
Total inflow at boundaries = -.21372E-01g/sq.ft.
Mass discrepancy = .24214E-07g/sq.ft.

Polygon 1
At time = 14.00, total mass in vadose zone = .24341E-01g/sq.ft.
Mass in gas phase = .31224E-02g/sq.ft.
Mass in liquid phase = .13360E-01g/sq.ft.
Mass sorbed = .78588E-02g/sq.ft.

Since last printout at time = 13.00
Change in Total Mass = -.13865E-02g/sq.ft.
Advection in from atmosphere = .00000 g/sq.ft.
Advection in from water table = -.13824E-02g/sq.ft.
Diffusion in from atmosphere = -.40998E-05g/sq.ft.
Diffusion in from water table = .00000 g/sq.ft.
Total inflow at boundaries = -.13865E-02g/sq.ft.
Mass discrepancy = -.19791E-08g/sq.ft.

Since beginning of run at time = 0.0
Change in Total Mass = -.22759E-01g/sq.ft.
Advection in from atmosphere = .00000 g/sq.ft.
Advection in from water table = -.22632E-01g/sq.ft.
Diffusion in from atmosphere = -.12609E-03g/sq.ft.
Diffusion in from water table = .00000 g/sq.ft.
Total inflow at boundaries = -.22759E-01g/sq.ft.
Mass discrepancy = .22352E-07g/sq.ft.

```
Polygon   1
At time =      15.00, total mass in vadose zone =     .23017E-01g/sq.ft.
Mass in gas phase     =       .29526E-02g/sq.ft.
Mass in liquid phase  =       .12633E-01g/sq.ft.
Mass sorbed           =       .74314E-02g/sq.ft.

Since last printout at time =      14.00
               Change in Total Mass =     -.13237E-02g/sq.ft.
                    Advection in from atmosphere =       .00000    g/sq.ft.
                    Advection in from water table =     -.13199E-02g/sq.ft.
                    Diffusion in from atmosphere =      -.37753E-05g/sq.ft.
                    Diffusion in from water table =      .00000    g/sq.ft.
               Total inflow at boundaries =     -.13237E-02g/sq.ft.
               Mass discrepancy =      .31432E-08g/sq.ft.

Since beginning of run at time = 0.0
               Change in Total Mass =     -.24082E-01g/sq.ft.
                    Advection in from atmosphere =       .00000    g/sq.ft.
                    Advection in from water table =     -.23952E-01g/sq.ft.
                    Diffusion in from atmosphere =      -.12986E-03g/sq.ft.
                    Diffusion in from water table =      .00000    g/sq.ft.
               Total inflow at boundaries =     -.24082E-01g/sq.ft.
               Mass discrepancy =      .26077E-07g/sq.ft.


Polygon   1
At time =      16.00, total mass in vadose zone =     .21759E-01g/sq.ft.
Mass in gas phase     =       .27912E-02g/sq.ft.
Mass in liquid phase  =       .11943E-01g/sq.ft.
Mass sorbed           =       .70251E-02g/sq.ft.

Since last printout at time =      15.00
               Change in Total Mass =     -.12585E-02g/sq.ft.
                    Advection in from atmosphere =       .00000    g/sq.ft.
                    Advection in from water table =     -.12550E-02g/sq.ft.
                    Diffusion in from atmosphere =      -.34844E-05g/sq.ft.
                    Diffusion in from water table =      .00000    g/sq.ft.
               Total inflow at boundaries =     -.12585E-02g/sq.ft.
               Mass discrepancy =      .20955E-08g/sq.ft.

Since beginning of run at time = 0.0
               Change in Total Mass =     -.25341E-01g/sq.ft.
                    Advection in from atmosphere =       .00000    g/sq.ft.
                    Advection in from water table =     -.25207E-01g/sq.ft.
                    Diffusion in from atmosphere =      -.13334E-03g/sq.ft.
                    Diffusion in from water table =      .00000    g/sq.ft.
               Total inflow at boundaries =     -.25341E-01g/sq.ft.
               Mass discrepancy =      .27940E-07g/sq.ft.


Polygon   1
At time =      17.00, total mass in vadose zone =     .20566E-01g/sq.ft.
Mass in gas phase     =       .26382E-02g/sq.ft.
Mass in liquid phase  =       .11288E-01g/sq.ft.
Mass sorbed           =       .66401E-02g/sq.ft.

Since last printout at time =      16.00
               Change in Total Mass =     -.11924E-02g/sq.ft.
```

```
                    Advection in from atmosphere =       .00000    g/sq.ft.
                    Advection in from water table =     -.11891E-02g/sq.ft.
                    Diffusion in from atmosphere =      -.32222E-05g/sq.ft.
                    Diffusion in from water table =      .00000    g/sq.ft.
               Total inflow at boundaries =     -.11924E-02g/sq.ft.
               Mass discrepancy =     -.69849E-09g/sq.ft.

Since beginning of run at time = 0.0
               Change in Total Mass =     -.26533E-01g/sq.ft.
                    Advection in from atmosphere =       .00000    g/sq.ft.
                    Advection in from water table =     -.26397E-01g/sq.ft.
                    Diffusion in from atmosphere =      -.13657E-03g/sq.ft.
                    Diffusion in from water table =      .00000    g/sq.ft.
               Total inflow at boundaries =     -.26533E-01g/sq.ft.
               Mass discrepancy =      .27940E-07g/sq.ft.


Polygon   1
At time =      18.00, total mass in vadose zone =     .19440E-01g/sq.ft.
Mass in gas phase     =       .24937E-02g/sq.ft.
Mass in liquid phase  =       .10670E-01g/sq.ft.
Mass sorbed           =       .62764E-02g/sq.ft.

Since last printout at time =      17.00
               Change in Total Mass =     -.11265E-02g/sq.ft.
                    Advection in from atmosphere =       .00000    g/sq.ft.
                    Advection in from water table =     -.11235E-02g/sq.ft.
                    Diffusion in from atmosphere =      -.29851E-05g/sq.ft.
                    Diffusion in from water table =      .00000    g/sq.ft.
               Total inflow at boundaries =     -.11265E-02g/sq.ft.
               Mass discrepancy =      .29104E-08g/sq.ft.

Since beginning of run at time = 0.0
               Change in Total Mass =     -.27660E-01g/sq.ft.
                    Advection in from atmosphere =       .00000    g/sq.ft.
                    Advection in from water table =     -.27520E-01g/sq.ft.
                    Diffusion in from atmosphere =      -.13955E-03g/sq.ft.
                    Diffusion in from water table =      .00000    g/sq.ft.
               Total inflow at boundaries =     -.27660E-01g/sq.ft.
               Mass discrepancy =      .29802E-07g/sq.ft.


Polygon   1
At time =      19.00, total mass in vadose zone =     .18378E-01g/sq.ft.
Mass in gas phase     =       .23575E-02g/sq.ft.
Mass in liquid phase  =       .10087E-01g/sq.ft.
Mass sorbed           =       .59336E-02g/sq.ft.

Since last printout at time =      18.00
               Change in Total Mass =     -.10620E-02g/sq.ft.
                    Advection in from atmosphere =       .00000    g/sq.ft.
                    Advection in from water table =     -.10592E-02g/sq.ft.
                    Diffusion in from atmosphere =      -.27697E-05g/sq.ft.
                    Diffusion in from water table =      .00000    g/sq.ft.
               Total inflow at boundaries =     -.10620E-02g/sq.ft.
               Mass discrepancy =      .11642E-08g/sq.ft.

Since beginning of run at time = 0.0
               Change in Total Mass =     -.28722E-01g/sq.ft.
                    Advection in from atmosphere =       .00000    g/sq.ft.
```

```
                Advection in from water table =     -.28579E-01g/sq.ft.
                Diffusion in from atmosphere =      -.14232E-03g/sq.ft.
                Diffusion in from water table =      .00000    g/sq.ft.
           Total inflow at boundaries =     -.28722E-01g/sq.ft.
           Mass discrepancy =      .31665E-07g/sq.ft.


Polygon   1
At time =      20.00, total mass in vadose zone =     .17378E-01g/sq.ft.
Mass in gas phase     =       .22293E-02g/sq.ft.
Mass in liquid phase  =       .95383E-02g/sq.ft.
Mass sorbed           =       .56108E-02g/sq.ft.

Since last printout at time =      19.00
           Change in Total Mass =     -.99965E-03g/sq.ft.
                Advection in from atmosphere =       .00000    g/sq.ft.
                Advection in from water table =     -.99708E-03g/sq.ft.
                Diffusion in from atmosphere =      -.25735E-05g/sq.ft.
                Diffusion in from water table =      .00000    g/sq.ft.
           Total inflow at boundaries =     -.99966E-03g/sq.ft.
           Mass discrepancy =      .22119E-08g/sq.ft.

Since beginning of run at time = 0.0
           Change in Total Mass =     -.29721E-01g/sq.ft.
                Advection in from atmosphere =       .00000    g/sq.ft.
                Advection in from water table =     -.29576E-01g/sq.ft.
                Diffusion in from atmosphere =      -.14490E-03g/sq.ft.
                Diffusion in from water table =      .00000    g/sq.ft.
           Total inflow at boundaries =     -.29721E-01g/sq.ft.
           Mass discrepancy =      .35390E-07g/sq.ft.


Polygon   1
At time =      21.00, total mass in vadose zone =     .16438E-01g/sq.ft.
Mass in gas phase     =       .21087E-02g/sq.ft.
Mass in liquid phase  =       .90223E-02g/sq.ft.
Mass sorbed           =       .53073E-02g/sq.ft.

Since last printout at time =      20.00
           Change in Total Mass =     -.94014E-03g/sq.ft.
                Advection in from atmosphere =       .00000    g/sq.ft.
                Advection in from water table =     -.93775E-03g/sq.ft.
                Diffusion in from atmosphere =      -.23943E-05g/sq.ft.
                Diffusion in from water table =      .00000    g/sq.ft.
           Total inflow at boundaries =     -.94014E-03g/sq.ft.
           Mass discrepancy =      .87311E-09g/sq.ft.

Since beginning of run at time = 0.0
           Change in Total Mass =     -.30661E-01g/sq.ft.
                Advection in from atmosphere =       .00000    g/sq.ft.
                Advection in from water table =     -.30514E-01g/sq.ft.
                Diffusion in from atmosphere =      -.14729E-03g/sq.ft.
                Diffusion in from water table =      .00000    g/sq.ft.
           Total inflow at boundaries =     -.30661E-01g/sq.ft.
           Mass discrepancy =      .37253E-07g/sq.ft.


Polygon   1
At time =      22.00, total mass in vadose zone =     .15554E-01g/sq.ft.
Mass in gas phase     =       .19953E-02g/sq.ft.
```

```
Mass in liquid phase  =       .85372E-02g/sq.ft.
Mass sorbed           =       .50219E-02g/sq.ft.

Since last printout at time =      21.00
              Change in Total Mass =     -.88380E-03g/sq.ft.
                   Advection in from atmosphere =       .00000    g/sq.ft.
                   Advection in from water table =     -.88156E-03g/sq.ft.
                   Diffusion in from atmosphere =      -.22300E-05g/sq.ft.
                   Diffusion in from water table =      .00000    g/sq.ft.
              Total inflow at boundaries =     -.88379E-03g/sq.ft.
              Mass discrepancy =     -.23283E-08g/sq.ft.

Since beginning of run at time = 0.0
              Change in Total Mass =     -.31545E-01g/sq.ft.
                   Advection in from atmosphere =       .00000    g/sq.ft.
                   Advection in from water table =     -.31396E-01g/sq.ft.
                   Diffusion in from atmosphere =      -.14952E-03g/sq.ft.
                   Diffusion in from water table =      .00000    g/sq.ft.
              Total inflow at boundaries =     -.31545E-01g/sq.ft.
              Mass discrepancy =      .29802E-07g/sq.ft.


Polygon   1
At time =      23.00, total mass in vadose zone =     .14724E-01g/sq.ft.
Mass in gas phase     =       .18887E-02g/sq.ft.
Mass in liquid phase  =       .80812E-02g/sq.ft.
Mass sorbed           =       .47537E-02g/sq.ft.

Since last printout at time =      22.00
              Change in Total Mass =     -.83080E-03g/sq.ft.
                   Advection in from atmosphere =       .00000    g/sq.ft.
                   Advection in from water table =     -.82873E-03g/sq.ft.
                   Diffusion in from atmosphere =      -.20792E-05g/sq.ft.
                   Diffusion in from water table =      .00000    g/sq.ft.
              Total inflow at boundaries =     -.83080E-03g/sq.ft.
              Mass discrepancy =      .52387E-09g/sq.ft.

Since beginning of run at time = 0.0
              Change in Total Mass =     -.32376E-01g/sq.ft.
                   Advection in from atmosphere =       .00000    g/sq.ft.
                   Advection in from water table =     -.32224E-01g/sq.ft.
                   Diffusion in from atmosphere =      -.15160E-03g/sq.ft.
                   Diffusion in from water table =      .00000    g/sq.ft.
              Total inflow at boundaries =     -.32376E-01g/sq.ft.
              Mass discrepancy =      .33528E-07g/sq.ft.


Polygon   1
At time =      24.00, total mass in vadose zone =     .13942E-01g/sq.ft.
Mass in gas phase     =       .17885E-02g/sq.ft.
Mass in liquid phase  =       .76525E-02g/sq.ft.
Mass sorbed           =       .45015E-02g/sq.ft.

Since last printout at time =      23.00
              Change in Total Mass =     -.78121E-03g/sq.ft.
                   Advection in from atmosphere =       .00000    g/sq.ft.
                   Advection in from water table =     -.77927E-03g/sq.ft.
                   Diffusion in from atmosphere =      -.19404E-05g/sq.ft.
                   Diffusion in from water table =      .00000    g/sq.ft.
              Total inflow at boundaries =     -.78121E-03g/sq.ft.
```

```
                Mass discrepancy =      .98953E-09g/sq.ft.

Since beginning of run at time = 0.0
                Change in Total Mass =     -.33157E-01g/sq.ft.
                     Advection in from atmosphere =       .00000    g/sq.ft.
                     Advection in from water table =     -.33004E-01g/sq.ft.
                     Diffusion in from atmosphere =      -.15354E-03g/sq.ft.
                     Diffusion in from water table =      .00000    g/sq.ft.
                Total inflow at boundaries =     -.33157E-01g/sq.ft.
                Mass discrepancy =      .33528E-07g/sq.ft.


Polygon   1
At time =      25.00, total mass in vadose zone =     .13208E-01g/sq.ft.
Mass in gas phase     =       .16942E-02g/sq.ft.
Mass in liquid phase  =       .72491E-02g/sq.ft.
Mass sorbed           =       .42642E-02g/sq.ft.

Since last printout at time =      24.00
                Change in Total Mass =     -.73493E-03g/sq.ft.
                     Advection in from atmosphere =       .00000    g/sq.ft.
                     Advection in from water table =     -.73312E-03g/sq.ft.
                     Diffusion in from atmosphere =      -.18125E-05g/sq.ft.
                     Diffusion in from water table =      .00000    g/sq.ft.
                Total inflow at boundaries =     -.73493E-03g/sq.ft.
                Mass discrepancy =      .22701E-08g/sq.ft.

Since beginning of run at time = 0.0
                Change in Total Mass =     -.33892E-01g/sq.ft.
                     Advection in from atmosphere =       .00000    g/sq.ft.
                     Advection in from water table =     -.33737E-01g/sq.ft.
                     Diffusion in from atmosphere =      -.15535E-03g/sq.ft.
                     Diffusion in from water table =      .00000    g/sq.ft.
                Total inflow at boundaries =     -.33892E-01g/sq.ft.
                Mass discrepancy =      .37253E-07g/sq.ft.


Polygon   1
At time =      26.00, total mass in vadose zone =     .12516E-01g/sq.ft.
Mass in gas phase     =       .16055E-02g/sq.ft.
Mass in liquid phase  =       .68694E-02g/sq.ft.
Mass sorbed           =       .40408E-02g/sq.ft.

Since last printout at time =      25.00
                Change in Total Mass =     -.69182E-03g/sq.ft.
                     Advection in from atmosphere =       .00000    g/sq.ft.
                     Advection in from water table =     -.69013E-03g/sq.ft.
                     Diffusion in from atmosphere =      -.16942E-05g/sq.ft.
                     Diffusion in from water table =      .00000    g/sq.ft.
                Total inflow at boundaries =     -.69182E-03g/sq.ft.
                Mass discrepancy =     -.93132E-09g/sq.ft.

Since beginning of run at time = 0.0
                Change in Total Mass =     -.34584E-01g/sq.ft.
                     Advection in from atmosphere =       .00000    g/sq.ft.
                     Advection in from water table =     -.34427E-01g/sq.ft.
                     Diffusion in from atmosphere =      -.15705E-03g/sq.ft.
                     Diffusion in from water table =      .00000    g/sq.ft.
                Total inflow at boundaries =     -.34584E-01g/sq.ft.
                Mass discrepancy =      .37253E-07g/sq.ft.
```

```
Polygon   1
At time =      27.00, total mass in vadose zone =     .11864E-01g/sq.ft.
Mass in gas phase     =       .15219E-02g/sq.ft.
Mass in liquid phase  =       .65117E-02g/sq.ft.
Mass sorbed           =       .38304E-02g/sq.ft.

Since last printout at time =      26.00
               Change in Total Mass =     -.65171E-03g/sq.ft.
                    Advection in from atmosphere =       .00000    g/sq.ft.
                    Advection in from water table =     -.65012E-03g/sq.ft.
                    Diffusion in from atmosphere =      -.15849E-05g/sq.ft.
                    Diffusion in from water table =      .00000    g/sq.ft.
               Total inflow at boundaries =     -.65171E-03g/sq.ft.
               Mass discrepancy =      .19791E-08g/sq.ft.

Since beginning of run at time = 0.0
               Change in Total Mass =     -.35236E-01g/sq.ft.
                    Advection in from atmosphere =       .00000    g/sq.ft.
                    Advection in from water table =     -.35077E-01g/sq.ft.
                    Diffusion in from atmosphere =      -.15863E-03g/sq.ft.
                    Diffusion in from water table =      .00000    g/sq.ft.
               Total inflow at boundaries =     -.35236E-01g/sq.ft.
               Mass discrepancy =      .33528E-07g/sq.ft.


Polygon   1
At time =      28.00, total mass in vadose zone =     .11250E-01g/sq.ft.
Mass in gas phase     =       .14431E-02g/sq.ft.
Mass in liquid phase  =       .61745E-02g/sq.ft.
Mass sorbed           =       .36321E-02g/sq.ft.

Since last printout at time =      27.00
               Change in Total Mass =     -.61438E-03g/sq.ft.
                    Advection in from atmosphere =       .00000    g/sq.ft.
                    Advection in from water table =     -.61289E-03g/sq.ft.
                    Diffusion in from atmosphere =      -.14836E-05g/sq.ft.
                    Diffusion in from water table =      .00000    g/sq.ft.
               Total inflow at boundaries =     -.61438E-03g/sq.ft.
               Mass discrepancy =      .34925E-09g/sq.ft.

Since beginning of run at time = 0.0
               Change in Total Mass =     -.35850E-01g/sq.ft.
                    Advection in from atmosphere =       .00000    g/sq.ft.
                    Advection in from water table =     -.35690E-01g/sq.ft.
                    Diffusion in from atmosphere =      -.16011E-03g/sq.ft.
                    Diffusion in from water table =      .00000    g/sq.ft.
               Total inflow at boundaries =     -.35850E-01g/sq.ft.
               Mass discrepancy =      .37253E-07g/sq.ft.


Polygon   1
At time =      29.00, total mass in vadose zone =     .10670E-01g/sq.ft.
Mass in gas phase     =       .13687E-02g/sq.ft.
Mass in liquid phase  =       .58563E-02g/sq.ft.
Mass sorbed           =       .34449E-02g/sq.ft.

Since last printout at time =      28.00
               Change in Total Mass =     -.57962E-03g/sq.ft.
```

```
                    Advection in from atmosphere =       .00000    g/sq.ft.
                    Advection in from water table =     -.57823E-03g/sq.ft.
                    Diffusion in from atmosphere =      -.13896E-05g/sq.ft.
                    Diffusion in from water table =      .00000    g/sq.ft.
               Total inflow at boundaries =     -.57962E-03g/sq.ft.
               Mass discrepancy =      .18626E-08g/sq.ft.

Since beginning of run at time = 0.0
               Change in Total Mass =     -.36430E-01g/sq.ft.
                    Advection in from atmosphere =       .00000    g/sq.ft.
                    Advection in from water table =     -.36268E-01g/sq.ft.
                    Diffusion in from atmosphere =      -.16150E-03g/sq.ft.
                    Diffusion in from water table =      .00000    g/sq.ft.
               Total inflow at boundaries =     -.36430E-01g/sq.ft.
               Mass discrepancy =      .37253E-07g/sq.ft.


Polygon   1
At time =      30.00, total mass in vadose zone =     .10123E-01g/sq.ft.
Mass in gas phase     =       .12985E-02g/sq.ft.
Mass in liquid phase  =       .55560E-02g/sq.ft.
Mass sorbed           =       .32682E-02g/sq.ft.

Since last printout at time =      29.00
               Change in Total Mass =     -.54724E-03g/sq.ft.
                    Advection in from atmosphere =       .00000    g/sq.ft.
                    Advection in from water table =     -.54593E-03g/sq.ft.
                    Diffusion in from atmosphere =      -.13023E-05g/sq.ft.
                    Diffusion in from water table =      .00000    g/sq.ft.
               Total inflow at boundaries =     -.54724E-03g/sq.ft.
               Mass discrepancy =     -.13970E-08g/sq.ft.

Since beginning of run at time = 0.0
               Change in Total Mass =     -.36977E-01g/sq.ft.
                    Advection in from atmosphere =       .00000    g/sq.ft.
                    Advection in from water table =     -.36814E-01g/sq.ft.
                    Diffusion in from atmosphere =      -.16281E-03g/sq.ft.
                    Diffusion in from water table =      .00000    g/sq.ft.
               Total inflow at boundaries =     -.36977E-01g/sq.ft.
               Mass discrepancy =      .37253E-07g/sq.ft.


GROUNDWATER IMPACT OF POLYGON   1

 Time        Mass per area (g/sq.ft.)      Total Mass (g)
     1.00          .17231E-02                149.05
     2.00          .17200E-02                148.78
     3.00          .17153E-02                148.37
     4.00          .17085E-02                147.79
     5.00          .16991E-02                146.97
     6.00          .16862E-02                145.86
     7.00          .16691E-02                144.38
     8.00          .16468E-02                142.45
     9.00          .16187E-02                140.02
    10.00          .15841E-02                137.03
    11.00          .15428E-02                133.45
    12.00          .14950E-02                129.32
    13.00          .14412E-02                124.66
    14.00          .13824E-02                119.58
    15.00          .13199E-02                114.17
```

16.00	.12550E-02	108.56
17.00	.11891E-02	102.86
18.00	.11235E-02	97.183
19.00	.10592E-02	91.621
20.00	.99708E-03	86.248
21.00	.93775E-03	81.115
22.00	.88156E-03	76.255
23.00	.82873E-03	71.685
24.00	.77927E-03	67.407
25.00	.73312E-03	63.414
26.00	.69013E-03	59.696
27.00	.65012E-03	56.236
28.00	.61289E-03	53.015
29.00	.57823E-03	50.017
30.00	.54593E-03	47.223

****

****

TOTAL GROUNDWATER IMPACT

Time (yr)	Mass (g)	Cumulative Mass (g)
1.00	149.05	149.05
2.00	148.78	297.83
3.00	148.37	446.20
4.00	147.79	593.99
5.00	146.97	740.96
6.00	145.86	886.82
7.00	144.38	1031.2
8.00	142.45	1173.7
9.00	140.02	1313.7
10.00	137.03	1450.7
11.00	133.45	1584.1
12.00	129.32	1713.5
13.00	124.66	1838.1
14.00	119.58	1957.7
15.00	114.17	2071.9
16.00	108.56	2180.4
17.00	102.86	2283.3
18.00	97.183	2380.5
19.00	91.621	2472.1
20.00	86.248	2558.4
21.00	81.115	2639.5
22.00	76.255	2715.7
23.00	71.685	2787.4
24.00	67.407	2854.8
25.00	63.414	2918.2
26.00	59.696	2977.9
27.00	56.236	3034.2
28.00	53.015	3087.2
29.00	50.017	3137.2
30.00	47.223	3184.4

Polygon 67
Time: .000

Cell	Cgas(g/cu.ft.)	Cliq(g/cu.ft.)	Csol
1	.30731E-04	.64970E-04	.20985E-09
2	.30731E-04	.64970E-04	.20985E-09
3	.30731E-04	.64970E-04	.20985E-09
4	.30731E-04	.64970E-04	.20985E-09
5	.30731E-04	.64970E-04	.20985E-09
6	.30731E-04	.64970E-04	.20985E-09
7	.30731E-04	.64970E-04	.20985E-09
8	.30731E-04	.64970E-04	.20985E-09
9	.30731E-04	.64970E-04	.20985E-09
10	.30731E-04	.64970E-04	.20985E-09
11	.30731E-04	.64970E-04	.20985E-09
12	.30731E-04	.64970E-04	.20985E-09
13	.14656E-03	.30986E-03	.10008E-08
14	.14656E-03	.30986E-03	.10008E-08
15	.14656E-03	.30986E-03	.10008E-08
16	.14656E-03	.30986E-03	.10008E-08
17	.14656E-03	.30986E-03	.10008E-08
18	.14656E-03	.30986E-03	.10008E-08
19	.14656E-03	.30986E-03	.10008E-08
20	.14656E-03	.30986E-03	.10008E-08
21	.14656E-03	.30986E-03	.10008E-08
22	.14656E-03	.30986E-03	.10008E-08
23	.14656E-03	.30986E-03	.10008E-08
24	.14656E-03	.30986E-03	.10008E-08
25	.16642E-03	.35184E-03	.11364E-08
26	.16642E-03	.35184E-03	.11364E-08
27	.16642E-03	.35184E-03	.11364E-08
28	.16642E-03	.35184E-03	.11364E-08
29	.16642E-03	.35184E-03	.11364E-08
30	.16642E-03	.35184E-03	.11364E-08
31	.43779E-03	.92557E-03	.29896E-08
32	.43779E-03	.92557E-03	.29896E-08
33	.43779E-03	.92557E-03	.29896E-08
34	.43779E-03	.92557E-03	.29896E-08
35	.43779E-03	.92557E-03	.29896E-08
36	.43779E-03	.92557E-03	.29896E-08
37	.43779E-03	.92557E-03	.29896E-08
38	.43779E-03	.92557E-03	.29896E-08
39	.43779E-03	.92557E-03	.29896E-08
40	.43779E-03	.92557E-03	.29896E-08
41	.43779E-03	.92557E-03	.29896E-08
42	.43779E-03	.92557E-03	.29896E-08
43	.21984E-02	.46478E-02	.15013E-07
44	.21984E-02	.46478E-02	.15013E-07
45	.21984E-02	.46478E-02	.15013E-07
46	.21984E-02	.46478E-02	.15013E-07
47	.21984E-02	.46478E-02	.15013E-07
48	.21984E-02	.46478E-02	.15013E-07
49	.21984E-02	.46478E-02	.15013E-07
50	.21984E-02	.46478E-02	.15013E-07
51	.21984E-02	.46478E-02	.15013E-07
52	.21984E-02	.46478E-02	.15013E-07
53	.21984E-02	.46478E-02	.15013E-07
54	.21984E-02	.46478E-02	.15013E-07
55	.21984E-02	.46478E-02	.15013E-07
56	.21984E-02	.46478E-02	.15013E-07

57	.21984E-02	.46478E-02	.15013E-07
58	.21984E-02	.46478E-02	.15013E-07
59	.21984E-02	.46478E-02	.15013E-07
60	.21984E-02	.46478E-02	.15013E-07

Polygon 67
Time: 10.000

Cell	Cgas(g/cu.ft.)	Cliq(g/cu.ft.)	Csol
1	.57866E-06	.12234E-05	.39515E-11
2	.15160E-05	.32051E-05	.10352E-10
3	.28692E-05	.60659E-05	.19593E-10
4	.47052E-05	.99475E-05	.32131E-10
5	.70709E-05	.14949E-04	.48286E-10
6	.99677E-05	.21073E-04	.68067E-10
7	.13344E-04	.28211E-04	.91123E-10
8	.17110E-04	.36174E-04	.11684E-09
9	.21165E-04	.44747E-04	.14453E-09
10	.25422E-04	.53746E-04	.17360E-09
11	.29827E-04	.63059E-04	.20368E-09
12	.34368E-04	.72660E-04	.23469E-09
13	.39092E-04	.82647E-04	.26695E-09
14	.44130E-04	.93299E-04	.30135E-09
15	.49716E-04	.10511E-03	.33950E-09
16	.56126E-04	.11866E-03	.38327E-09
17	.63580E-04	.13442E-03	.43417E-09
18	.72139E-04	.15251E-03	.49262E-09
19	.81674E-04	.17267E-03	.55773E-09
20	.91908E-04	.19431E-03	.62761E-09
21	.10250E-03	.21670E-03	.69995E-09
22	.11314E-03	.23920E-03	.77261E-09
23	.12361E-03	.26133E-03	.84411E-09
24	.13381E-03	.28291E-03	.91379E-09
25	.14378E-03	.30397E-03	.98182E-09
26	.15363E-03	.32480E-03	.10491E-08
27	.16360E-03	.34588E-03	.11172E-08
28	.17397E-03	.36779E-03	.11880E-08
29	.18502E-03	.39117E-03	.12635E-08
30	.19707E-03	.41665E-03	.13458E-08
31	.21044E-03	.44491E-03	.14371E-08
32	.22557E-03	.47689E-03	.15404E-08
33	.24308E-03	.51391E-03	.16599E-08
34	.26369E-03	.55749E-03	.18007E-08
35	.28801E-03	.60889E-03	.19667E-08
36	.31628E-03	.66866E-03	.21598E-08
37	.34837E-03	.73651E-03	.23789E-08
38	.38385E-03	.81153E-03	.26212E-08
39	.42219E-03	.89258E-03	.28830E-08
40	.46298E-03	.97881E-03	.31616E-08
41	.50607E-03	.10699E-02	.34559E-08
42	.55168E-03	.11663E-02	.37673E-08
43	.60056E-03	.12697E-02	.41011E-08
44	.65458E-03	.13839E-02	.44700E-08
45	.71690E-03	.15156E-02	.48955E-08
46	.79125E-03	.16728E-02	.54033E-08
47	.88034E-03	.18612E-02	.60116E-08
48	.98439E-03	.20812E-02	.67222E-08
49	.11006E-02	.23270E-02	.75161E-08
50	.12240E-02	.25878E-02	.83585E-08
51	.13484E-02	.28506E-02	.92076E-08
52	.14678E-02	.31032E-02	.10023E-07

53	.15779E-02	.33358E-02	.10775E-07
54	.16755E-02	.35423E-02	.11442E-07
55	.17594E-02	.37198E-02	.12015E-07
56	.18296E-02	.38681E-02	.12494E-07
57	.18867E-02	.39889E-02	.12884E-07
58	.19320E-02	.40846E-02	.13193E-07
59	.19668E-02	.41581E-02	.13431E-07
60	.19923E-02	.42120E-02	.13605E-07

Polygon 67
Time: 20.000

Cell	Cgas(g/cu.ft.)	Cliq(g/cu.ft.)	Csol
1	.24585E-06	.51977E-06	.16789E-11
2	.62861E-06	.13290E-05	.42926E-11
3	.11543E-05	.24404E-05	.78825E-11
4	.18328E-05	.38749E-05	.12516E-10
5	.26776E-05	.56609E-05	.18285E-10
6	.37051E-05	.78332E-05	.25301E-10
7	.49346E-05	.10433E-04	.33697E-10
8	.63878E-05	.13505E-04	.43621E-10
9	.80875E-05	.17098E-04	.55227E-10
10	.10057E-04	.21262E-04	.68676E-10
11	.12318E-04	.26043E-04	.84118E-10
12	.14891E-04	.31481E-04	.10169E-09
13	.17791E-04	.37613E-04	.12149E-09
14	.21031E-04	.44462E-04	.14361E-09
15	.24620E-04	.52051E-04	.16813E-09
16	.28567E-04	.60396E-04	.19508E-09
17	.32881E-04	.69515E-04	.22454E-09
18	.37573E-04	.79436E-04	.25658E-09
19	.42662E-04	.90194E-04	.29133E-09
20	.48172E-04	.10184E-03	.32896E-09
21	.54135E-04	.11445E-03	.36968E-09
22	.60586E-04	.12809E-03	.41373E-09
23	.67562E-04	.14284E-03	.46136E-09
24	.75093E-04	.15876E-03	.51279E-09
25	.83205E-04	.17591E-03	.56819E-09
26	.91912E-04	.19432E-03	.62764E-09
27	.10122E-03	.21400E-03	.69121E-09
28	.11113E-03	.23495E-03	.75889E-09
29	.12165E-03	.25718E-03	.83069E-09
30	.13277E-03	.28070E-03	.90667E-09
31	.14453E-03	.30556E-03	.98697E-09
32	.15696E-03	.33185E-03	.10719E-08
33	.17013E-03	.35969E-03	.11618E-08
34	.18413E-03	.38927E-03	.12573E-08
35	.19906E-03	.42084E-03	.13593E-08
36	.21507E-03	.45469E-03	.14687E-08
37	.23233E-03	.49118E-03	.15865E-08
38	.25102E-03	.53070E-03	.17142E-08
39	.27135E-03	.57367E-03	.18530E-08
40	.29351E-03	.62054E-03	.20043E-08
41	.31772E-03	.67172E-03	.21696E-08
42	.34415E-03	.72760E-03	.23501E-08
43	.37296E-03	.78851E-03	.25469E-08
44	.40428E-03	.85471E-03	.27607E-08
45	.43819E-03	.92641E-03	.29923E-08
46	.47477E-03	.10038E-02	.32421E-08
47	.51410E-03	.10869E-02	.35106E-08
48	.55623E-03	.11760E-02	.37984E-08

49	.60128E-03	.12712E-02	.41060E-08
50	.64934E-03	.13728E-02	.44342E-08
51	.70053E-03	.14810E-02	.47838E-08
52	.75489E-03	.15960E-02	.51549E-08
53	.81232E-03	.17174E-02	.55471E-08
54	.87252E-03	.18446E-02	.59582E-08
55	.93491E-03	.19766E-02	.63843E-08
56	.99858E-03	.21112E-02	.68191E-08
57	.10623E-02	.22459E-02	.72543E-08
58	.11246E-02	.23776E-02	.76796E-08
59	.11837E-02	.25025E-02	.80831E-08
60	.12377E-02	.26167E-02	.84519E-08

Polygon 67
Time: 30.000

Cell	Cgas(g/cu.ft.)	Cliq(g/cu.ft.)	Csol
1	.12350E-06	.26109E-06	.84333E-12
2	.31464E-06	.66520E-06	.21486E-11
3	.57582E-06	.12174E-05	.39321E-11
4	.91135E-06	.19268E-05	.62234E-11
5	.13273E-05	.28061E-05	.90636E-11
6	.18311E-05	.38713E-05	.12504E-10
7	.24319E-05	.51415E-05	.16607E-10
8	.31399E-05	.66382E-05	.21441E-10
9	.39666E-05	.83860E-05	.27087E-10
10	.49248E-05	.10412E-04	.33630E-10
11	.60284E-05	.12745E-04	.41166E-10
12	.72923E-05	.15417E-04	.49797E-10
13	.87325E-05	.18462E-04	.59632E-10
14	.10366E-04	.21915E-04	.70786E-10
15	.12210E-04	.25814E-04	.83379E-10
16	.14283E-04	.30197E-04	.97536E-10
17	.16604E-04	.35103E-04	.11338E-09
18	.19191E-04	.40573E-04	.13105E-09
19	.22063E-04	.46645E-04	.15066E-09
20	.25240E-04	.53361E-04	.17236E-09
21	.28739E-04	.60760E-04	.19625E-09
22	.32581E-04	.68881E-04	.22249E-09
23	.36784E-04	.77767E-04	.25119E-09
24	.41367E-04	.87457E-04	.28249E-09
25	.46352E-04	.97995E-04	.31653E-09
26	.51759E-04	.10943E-03	.35345E-09
27	.57612E-04	.12180E-03	.39342E-09
28	.63933E-04	.13517E-03	.43658E-09
29	.70748E-04	.14957E-03	.48312E-09
30	.78082E-04	.16508E-03	.53320E-09
31	.85962E-04	.18174E-03	.58701E-09
32	.94414E-04	.19961E-03	.64473E-09
33	.10347E-03	.21874E-03	.70654E-09
34	.11315E-03	.23921E-03	.77265E-09
35	.12348E-03	.26106E-03	.84324E-09
36	.13451E-03	.28438E-03	.91853E-09
37	.14626E-03	.30921E-03	.99876E-09
38	.15876E-03	.33566E-03	.10842E-08
39	.17207E-03	.36379E-03	.11750E-08
40	.18622E-03	.39371E-03	.12717E-08
41	.20127E-03	.42552E-03	.13744E-08
42	.21727E-03	.45935E-03	.14837E-08
43	.23428E-03	.49530E-03	.15998E-08
44	.25235E-03	.53351E-03	.17232E-08

45	.27155E-03	.57409E-03	.18543E-08
46	.29192E-03	.61717E-03	.19935E-08
47	.31352E-03	.66284E-03	.21410E-08
48	.33638E-03	.71116E-03	.22971E-08
49	.36051E-03	.76218E-03	.24619E-08
50	.38591E-03	.81588E-03	.26353E-08
51	.41254E-03	.87217E-03	.28171E-08
52	.44033E-03	.93092E-03	.30069E-08
53	.46916E-03	.99189E-03	.32038E-08
54	.49890E-03	.10547E-02	.34068E-08
55	.52931E-03	.11191E-02	.36145E-08
56	.56014E-03	.11842E-02	.38250E-08
57	.59102E-03	.12495E-02	.40359E-08
58	.62152E-03	.13140E-02	.42442E-08
59	.65108E-03	.13765E-02	.44461E-08
60	.67903E-03	.14356E-02	.46370E-08

```
 V-Leach, VER 1.1
 Jake Turin, 11/91
PGA V-leach model, poly screen-TCE-11/10/92-Polygon 67.inp  Rev Soil, HGC Chem
 1 polygons.
Timestep =   1.00 years.  Simulation length =   30.00 years.
Printout every   1.00 years.  Vertical profile stored every  10.00 years.
Koc =      123.60    ml/g,       .43649E-02cu.ft./g
Kh =      .47300     (dimensionless).
Aqueous solubility =     1100.0     mg/l,      31.149     g/cu.ft
Free air diffusion coefficient = .70290     sq. m/day,  2761.7     sq.ft./yr


Polygon   1
Polygon 67
Polygon area =      86500.    sq. ft.
 60 cells, each cell  1.000 ft. thick.
Soil Properties:
 Bulk density =     1.6400    g/ml,       46440.    g/cu.ft.
 Porosity =  .3810 Volumetric water content =  .2550
 Organic carbon content =  .00074000
Recharge Rate =  .37073500 ft/yr
Conc. in recharge water =      .00000    mg/l,       .00000    g/cu.ft
Atmospheric concentration =      .00000    mg/l,       .00000    g/cu.ft
Water table is impermeable to gas diffusion.
```

Calculation of Total VOC Mass (as TCE) in Polygon 67 using HGC Distribution and original Depth Intervals

Depth Interval (ft) (HGC, 1989)	Depth (ft)	Total Soil Conc. Ct (ug/Kg) VOC's as TCE (HGC, 1989) (Table D-5)	Mt (ug/cc)	Volume Soil (cu. ft)	Mass of Contaminant (grams)	Mass of Contaminant (pounds)
0-12	12	0.65	0.00	1038000	31.33	0.07
12-22	10	3.10	0.01	865000	124.53	0.27
22-32	10	3.52	0.01	865000	141.40	0.31
32-43.5	11.5	9.26	0.02	994750	427.78	0.94
43.5-62.5	19	46.50	0.08	1643500	3549.06	7.82
Totals:	62.5				4274.10	9.42

```
PGA V-leach model, polygon screen-TCE-11/10/92-Poly66.INP. Poly 92 Vert Dist.
    1
       1.0          30.          1.0          10.
     123.6         .473         1100.        .7029
lygon 66
     64000.           1.     .082021         1.64         .381         .255      .00074
         0.           0.          -1.
   60
    1     6        3.18
    7    12        9.55
   13    18       15.91
   19    24       43.26
   25    30       80.10
   31    36       97.60
   37    42      109.83
   43    48      170.62
   49    54      241.12
   55    60      252.87
```

V-Leach, VER 1.1
Jake Turin, 11/91
PGA V-leach model, polygon screen-TCE-11/10/92-Poly66.INP. Poly 92 Vert Dist.

Polygon 1
At time = .00, total mass in vadose zone = .28533 g/sq.ft.
Mass in gas phase = .36601E-01g/sq.ft.
Mass in liquid phase = .15661 g/sq.ft.
Mass sorbed = .92121E-01g/sq.ft.

Polygon 1
At time = 1.00, total mass in vadose zone = .28312 g/sq.ft.
Mass in gas phase = .36318E-01g/sq.ft.
Mass in liquid phase = .15539 g/sq.ft.
Mass sorbed = .91408E-01g/sq.ft.

Since last printout at time = .00
Change in Total Mass = -.22086E-02g/sq.ft.
Advection in from atmosphere = .00000 g/sq.ft.
Advection in from water table = -.20731E-02g/sq.ft.
Diffusion in from atmosphere = -.13546E-03g/sq.ft.
Diffusion in from water table = .00000 g/sq.ft.
Total inflow at boundaries = -.22086E-02g/sq.ft.
Mass discrepancy = -.56811E-07g/sq.ft.

Since beginning of run at time = 0.0
Change in Total Mass = -.22086E-02g/sq.ft.
Advection in from atmosphere = .00000 g/sq.ft.
Advection in from water table = -.20731E-02g/sq.ft.
Diffusion in from atmosphere = -.13546E-03g/sq.ft.
Diffusion in from water table = .00000 g/sq.ft.
Total inflow at boundaries = -.22086E-02g/sq.ft.
Mass discrepancy = -.56811E-07g/sq.ft.

Polygon 1
At time = 2.00, total mass in vadose zone = .28092 g/sq.ft.
Mass in gas phase = .36036E-01g/sq.ft.
Mass in liquid phase = .15419 g/sq.ft.
Mass sorbed = .90699E-01g/sq.ft.

Since last printout at time = 1.00
Change in Total Mass = -.21962E-02g/sq.ft.
Advection in from atmosphere = .00000 g/sq.ft.
Advection in from water table = -.20640E-02g/sq.ft.
Diffusion in from atmosphere = -.13227E-03g/sq.ft.
Diffusion in from water table = .00000 g/sq.ft.
Total inflow at boundaries = -.21962E-02g/sq.ft.
Mass discrepancy = .62166E-07g/sq.ft.

Since beginning of run at time = 0.0
Change in Total Mass = -.44048E-02g/sq.ft.
Advection in from atmosphere = .00000 g/sq.ft.
Advection in from water table = -.41371E-02g/sq.ft.
Diffusion in from atmosphere = -.26773E-03g/sq.ft.
Diffusion in from water table = .00000 g/sq.ft.
Total inflow at boundaries = -.44048E-02g/sq.ft.
Mass discrepancy = .55879E-08g/sq.ft.

```
Polygon   1
At time =       3.00, total mass in vadose zone =     .27874    g/sq.ft.
Mass in gas phase     =       .35756E-01g/sq.ft.
Mass in liquid phase  =       .15299    g/sq.ft.
Mass sorbed           =       .89994E-01g/sq.ft.

Since last printout at time =       2.00
               Change in Total Mass =     -.21836E-02g/sq.ft.
                    Advection in from atmosphere =       .00000    g/sq.ft.
                    Advection in from water table =     -.20540E-02g/sq.ft.
                    Diffusion in from atmosphere =      -.12961E-03g/sq.ft.
                    Diffusion in from water table =      .00000    g/sq.ft.
               Total inflow at boundaries =     -.21836E-02g/sq.ft.
               Mass discrepancy =      .46566E-09g/sq.ft.

Since beginning of run at time = 0.0
               Change in Total Mass =     -.65884E-02g/sq.ft.
                    Advection in from atmosphere =       .00000    g/sq.ft.
                    Advection in from water table =     -.61911E-02g/sq.ft.
                    Diffusion in from atmosphere =      -.39734E-03g/sq.ft.
                    Diffusion in from water table =      .00000    g/sq.ft.
               Total inflow at boundaries =     -.65884E-02g/sq.ft.
               Mass discrepancy =      .55879E-08g/sq.ft.


Polygon   1
At time =       4.00, total mass in vadose zone =     .27657    g/sq.ft.
Mass in gas phase     =       .35478E-01g/sq.ft.
Mass in liquid phase  =       .15180    g/sq.ft.
Mass sorbed           =       .89293E-01g/sq.ft.

Since last printout at time =       3.00
               Change in Total Mass =     -.21707E-02g/sq.ft.
                    Advection in from atmosphere =       .00000    g/sq.ft.
                    Advection in from water table =     -.20433E-02g/sq.ft.
                    Diffusion in from atmosphere =      -.12738E-03g/sq.ft.
                    Diffusion in from water table =      .00000    g/sq.ft.
               Total inflow at boundaries =     -.21707E-02g/sq.ft.
               Mass discrepancy =     -.11874E-07g/sq.ft.

Since beginning of run at time = 0.0
               Change in Total Mass =     -.87591E-02g/sq.ft.
                    Advection in from atmosphere =       .00000    g/sq.ft.
                    Advection in from water table =     -.82344E-02g/sq.ft.
                    Diffusion in from atmosphere =      -.52472E-03g/sq.ft.
                    Diffusion in from water table =      .00000    g/sq.ft.
               Total inflow at boundaries =     -.87591E-02g/sq.ft.
               Mass discrepancy =     -.65193E-08g/sq.ft.


Polygon   1
At time =       5.00, total mass in vadose zone =     .27441    g/sq.ft.
Mass in gas phase     =       .35201E-01g/sq.ft.
Mass in liquid phase  =       .15061    g/sq.ft.
Mass sorbed           =       .88597E-01g/sq.ft.

Since last printout at time =       4.00
               Change in Total Mass =     -.21573E-02g/sq.ft.
```

```
                Advection in from atmosphere =       .00000    g/sq.ft.
                Advection in from water table =    -.20318E-02g/sq.ft.
                Diffusion in from atmosphere =     -.12552E-03g/sq.ft.
                Diffusion in from water table =      .00000    g/sq.ft.
           Total inflow at boundaries =    -.21573E-02g/sq.ft.
           Mass discrepancy =      .83819E-08g/sq.ft.

Since beginning of run at time = 0.0
           Change in Total Mass =    -.10916E-01g/sq.ft.
                Advection in from atmosphere =       .00000    g/sq.ft.
                Advection in from water table =    -.10266E-01g/sq.ft.
                Diffusion in from atmosphere =     -.65024E-03g/sq.ft.
                Diffusion in from water table =      .00000    g/sq.ft.
           Total inflow at boundaries =    -.10916E-01g/sq.ft.
           Mass discrepancy =      .18626E-08g/sq.ft.


Polygon   1
At time =       6.00, total mass in vadose zone =     .27227    g/sq.ft.
Mass in gas phase     =       .34926E-01g/sq.ft.
Mass in liquid phase  =       .14944    g/sq.ft.
Mass sorbed           =       .87905E-01g/sq.ft.

Since last printout at time =       5.00
           Change in Total Mass =    -.21436E-02g/sq.ft.
                Advection in from atmosphere =       .00000    g/sq.ft.
                Advection in from water table =    -.20196E-02g/sq.ft.
                Diffusion in from atmosphere =     -.12395E-03g/sq.ft.
                Diffusion in from water table =      .00000    g/sq.ft.
           Total inflow at boundaries =    -.21436E-02g/sq.ft.
           Mass discrepancy =      .46566E-08g/sq.ft.

Since beginning of run at time = 0.0
           Change in Total Mass =    -.13060E-01g/sq.ft.
                Advection in from atmosphere =       .00000    g/sq.ft.
                Advection in from water table =    -.12286E-01g/sq.ft.
                Diffusion in from atmosphere =     -.77419E-03g/sq.ft.
                Diffusion in from water table =      .00000    g/sq.ft.
           Total inflow at boundaries =    -.13060E-01g/sq.ft.
           Mass discrepancy =      .55879E-08g/sq.ft.


Polygon   1
At time =       7.00, total mass in vadose zone =     .27014    g/sq.ft.
Mass in gas phase     =       .34653E-01g/sq.ft.
Mass in liquid phase  =       .14827    g/sq.ft.
Mass sorbed           =       .87217E-01g/sq.ft.

Since last printout at time =       6.00
           Change in Total Mass =    -.21294E-02g/sq.ft.
                Advection in from atmosphere =       .00000    g/sq.ft.
                Advection in from water table =    -.20068E-02g/sq.ft.
                Diffusion in from atmosphere =     -.12262E-03g/sq.ft.
                Diffusion in from water table =      .00000    g/sq.ft.
           Total inflow at boundaries =    -.21294E-02g/sq.ft.
           Mass discrepancy =     -.32596E-08g/sq.ft.

Since beginning of run at time = 0.0
           Change in Total Mass =    -.15189E-01g/sq.ft.
                Advection in from atmosphere =       .00000    g/sq.ft.
```

```
                    Advection in from water table =     -.14293E-01g/sq.ft.
                    Diffusion in from atmosphere =      -.89682E-03g/sq.ft.
                    Diffusion in from water table =      .00000    g/sq.ft.
               Total inflow at boundaries =     -.15189E-01g/sq.ft.
               Mass discrepancy =      .27940E-08g/sq.ft.


Polygon   1
At time =       8.00, total mass in vadose zone =     .26802    g/sq.ft.
Mass in gas phase     =       .34382E-01g/sq.ft.
Mass in liquid phase  =       .14711    g/sq.ft.
Mass sorbed           =       .86535E-01g/sq.ft.

Since last printout at time =       7.00
               Change in Total Mass =     -.21148E-02g/sq.ft.
                    Advection in from atmosphere =       .00000    g/sq.ft.
                    Advection in from water table =     -.19934E-02g/sq.ft.
                    Diffusion in from atmosphere =      -.12149E-03g/sq.ft.
                    Diffusion in from water table =      .00000    g/sq.ft.
               Total inflow at boundaries =     -.21149E-02g/sq.ft.
               Mass discrepancy =      .18859E-07g/sq.ft.

Since beginning of run at time = 0.0
               Change in Total Mass =     -.17304E-01g/sq.ft.
                    Advection in from atmosphere =       .00000    g/sq.ft.
                    Advection in from water table =     -.16286E-01g/sq.ft.
                    Diffusion in from atmosphere =      -.10183E-02g/sq.ft.
                    Diffusion in from water table =      .00000    g/sq.ft.
               Total inflow at boundaries =     -.17304E-01g/sq.ft.
               Mass discrepancy =      .22352E-07g/sq.ft.


Polygon   1
At time =       9.00, total mass in vadose zone =     .26592    g/sq.ft.
Mass in gas phase     =       .34112E-01g/sq.ft.
Mass in liquid phase  =       .14596    g/sq.ft.
Mass sorbed           =       .85857E-01g/sq.ft.

Since last printout at time =       8.00
               Change in Total Mass =     -.20998E-02g/sq.ft.
                    Advection in from atmosphere =       .00000    g/sq.ft.
                    Advection in from water table =     -.19793E-02g/sq.ft.
                    Diffusion in from atmosphere =      -.12052E-03g/sq.ft.
                    Diffusion in from water table =      .00000    g/sq.ft.
               Total inflow at boundaries =     -.20999E-02g/sq.ft.
               Mass discrepancy =      .27241E-07g/sq.ft.

Since beginning of run at time = 0.0
               Change in Total Mass =     -.19404E-01g/sq.ft.
                    Advection in from atmosphere =       .00000    g/sq.ft.
                    Advection in from water table =     -.18265E-01g/sq.ft.
                    Diffusion in from atmosphere =      -.11388E-02g/sq.ft.
                    Diffusion in from water table =      .00000    g/sq.ft.
               Total inflow at boundaries =     -.19404E-01g/sq.ft.
               Mass discrepancy =      .50291E-07g/sq.ft.


Polygon   1
At time =      10.00, total mass in vadose zone =     .26384    g/sq.ft.
Mass in gas phase     =       .33845E-01g/sq.ft.
```

```
Mass in liquid phase  =        .14481    g/sq.ft.
Mass sorbed           =        .85184E-01g/sq.ft.

Since last printout at time =        9.00
               Change in Total Mass =     -.20845E-02g/sq.ft.
                    Advection in from atmosphere =        .00000    g/sq.ft.
                    Advection in from water table =     -.19648E-02g/sq.ft.
                    Diffusion in from atmosphere =      -.11969E-03g/sq.ft.
                    Diffusion in from water table =       .00000    g/sq.ft.
               Total inflow at boundaries =     -.20845E-02g/sq.ft.
               Mass discrepancy =     -.12107E-07g/sq.ft.

Since beginning of run at time = 0.0
               Change in Total Mass =     -.21489E-01g/sq.ft.
                    Advection in from atmosphere =        .00000    g/sq.ft.
                    Advection in from water table =     -.20230E-01g/sq.ft.
                    Diffusion in from atmosphere =      -.12585E-02g/sq.ft.
                    Diffusion in from water table =       .00000    g/sq.ft.
               Total inflow at boundaries =     -.21489E-01g/sq.ft.
               Mass discrepancy =      .37253E-07g/sq.ft.


Polygon   1
At time =      11.00, total mass in vadose zone =      .26177    g/sq.ft.
Mass in gas phase     =        .33580E-01g/sq.ft.
Mass in liquid phase  =        .14368    g/sq.ft.
Mass sorbed           =        .84516E-01g/sq.ft.

Since last printout at time =       10.00
               Change in Total Mass =     -.20688E-02g/sq.ft.
                    Advection in from atmosphere =        .00000    g/sq.ft.
                    Advection in from water table =     -.19499E-02g/sq.ft.
                    Diffusion in from atmosphere =      -.11896E-03g/sq.ft.
                    Diffusion in from water table =       .00000    g/sq.ft.
               Total inflow at boundaries =     -.20688E-02g/sq.ft.
               Mass discrepancy =      .21653E-07g/sq.ft.

Since beginning of run at time = 0.0
               Change in Total Mass =     -.23557E-01g/sq.ft.
                    Advection in from atmosphere =        .00000    g/sq.ft.
                    Advection in from water table =     -.22180E-01g/sq.ft.
                    Diffusion in from atmosphere =      -.13775E-02g/sq.ft.
                    Diffusion in from water table =       .00000    g/sq.ft.
               Total inflow at boundaries =     -.23557E-01g/sq.ft.
               Mass discrepancy =      .59605E-07g/sq.ft.


Polygon   1
At time =      12.00, total mass in vadose zone =      .25972    g/sq.ft.
Mass in gas phase     =        .33316E-01g/sq.ft.
Mass in liquid phase  =        .14255    g/sq.ft.
Mass sorbed           =        .83853E-01g/sq.ft.

Since last printout at time =       11.00
               Change in Total Mass =     -.20528E-02g/sq.ft.
                    Advection in from atmosphere =        .00000    g/sq.ft.
                    Advection in from water table =     -.19345E-02g/sq.ft.
                    Diffusion in from atmosphere =      -.11831E-03g/sq.ft.
                    Diffusion in from water table =       .00000    g/sq.ft.
               Total inflow at boundaries =     -.20528E-02g/sq.ft.
```

Mass discrepancy = -.14668E-07g/sq.ft.

Since beginning of run at time = 0.0
Change in Total Mass = -.25610E-01g/sq.ft.
Advection in from atmosphere = .00000 g/sq.ft.
Advection in from water table = -.24114E-01g/sq.ft.
Diffusion in from atmosphere = -.14958E-02g/sq.ft.
Diffusion in from water table = .00000 g/sq.ft.
Total inflow at boundaries = -.25610E-01g/sq.ft.
Mass discrepancy = .44703E-07g/sq.ft.

Polygon 1
At time = 13.00, total mass in vadose zone = .25768 g/sq.ft.
Mass in gas phase = .33055E-01g/sq.ft.
Mass in liquid phase = .14143 g/sq.ft.
Mass sorbed = .83195E-01g/sq.ft.

Since last printout at time = 12.00
Change in Total Mass = -.20365E-02g/sq.ft.
Advection in from atmosphere = .00000 g/sq.ft.
Advection in from water table = -.19188E-02g/sq.ft.
Diffusion in from atmosphere = -.11774E-03g/sq.ft.
Diffusion in from water table = .00000 g/sq.ft.
Total inflow at boundaries = -.20365E-02g/sq.ft.
Mass discrepancy = -.23050E-07g/sq.ft.

Since beginning of run at time = 0.0
Change in Total Mass = -.27647E-01g/sq.ft.
Advection in from atmosphere = .00000 g/sq.ft.
Advection in from water table = -.26033E-01g/sq.ft.
Diffusion in from atmosphere = -.16135E-02g/sq.ft.
Diffusion in from water table = .00000 g/sq.ft.
Total inflow at boundaries = -.27647E-01g/sq.ft.
Mass discrepancy = .22352E-07g/sq.ft.

Polygon 1
At time = 14.00, total mass in vadose zone = .25566 g/sq.ft.
Mass in gas phase = .32796E-01g/sq.ft.
Mass in liquid phase = .14032 g/sq.ft.
Mass sorbed = .82543E-01g/sq.ft.

Since last printout at time = 13.00
Change in Total Mass = -.20200E-02g/sq.ft.
Advection in from atmosphere = .00000 g/sq.ft.
Advection in from water table = -.19028E-02g/sq.ft.
Diffusion in from atmosphere = -.11721E-03g/sq.ft.
Diffusion in from water table = .00000 g/sq.ft.
Total inflow at boundaries = -.20200E-02g/sq.ft.
Mass discrepancy = .51223E-08g/sq.ft.

Since beginning of run at time = 0.0
Change in Total Mass = -.29667E-01g/sq.ft.
Advection in from atmosphere = .00000 g/sq.ft.
Advection in from water table = -.27936E-01g/sq.ft.
Diffusion in from atmosphere = -.17307E-02g/sq.ft.
Diffusion in from water table = .00000 g/sq.ft.
Total inflow at boundaries = -.29667E-01g/sq.ft.
Mass discrepancy = .27940E-07g/sq.ft.

```
Polygon   1
At time =      15.00, total mass in vadose zone =     .25366    g/sq.ft.
Mass in gas phase     =       .32539E-01g/sq.ft.
Mass in liquid phase  =       .13922    g/sq.ft.
Mass sorbed           =       .81896E-01g/sq.ft.

Since last printout at time =      14.00
               Change in Total Mass =     -.20033E-02g/sq.ft.
                    Advection in from atmosphere =       .00000    g/sq.ft.
                    Advection in from water table =     -.18866E-02g/sq.ft.
                    Diffusion in from atmosphere =      -.11674E-03g/sq.ft.
                    Diffusion in from water table =      .00000    g/sq.ft.
               Total inflow at boundaries =     -.20033E-02g/sq.ft.
               Mass discrepancy =     -.10710E-07g/sq.ft.

Since beginning of run at time = 0.0
               Change in Total Mass =     -.31670E-01g/sq.ft.
                    Advection in from atmosphere =       .00000    g/sq.ft.
                    Advection in from water table =     -.29823E-01g/sq.ft.
                    Diffusion in from atmosphere =      -.18475E-02g/sq.ft.
                    Diffusion in from water table =      .00000    g/sq.ft.
               Total inflow at boundaries =     -.31670E-01g/sq.ft.
               Mass discrepancy =      .18626E-07g/sq.ft.


Polygon   1
At time =      16.00, total mass in vadose zone =     .25167    g/sq.ft.
Mass in gas phase     =       .32284E-01g/sq.ft.
Mass in liquid phase  =       .13813    g/sq.ft.
Mass sorbed           =       .81255E-01g/sq.ft.

Since last printout at time =      15.00
               Change in Total Mass =     -.19864E-02g/sq.ft.
                    Advection in from atmosphere =       .00000    g/sq.ft.
                    Advection in from water table =     -.18701E-02g/sq.ft.
                    Diffusion in from atmosphere =      -.11630E-03g/sq.ft.
                    Diffusion in from water table =      .00000    g/sq.ft.
               Total inflow at boundaries =     -.19864E-02g/sq.ft.
               Mass discrepancy =     -.41910E-08g/sq.ft.

Since beginning of run at time = 0.0
               Change in Total Mass =     -.33657E-01g/sq.ft.
                    Advection in from atmosphere =       .00000    g/sq.ft.
                    Advection in from water table =     -.31693E-01g/sq.ft.
                    Diffusion in from atmosphere =      -.19638E-02g/sq.ft.
                    Diffusion in from water table =      .00000    g/sq.ft.
               Total inflow at boundaries =     -.33657E-01g/sq.ft.
               Mass discrepancy =      .11176E-07g/sq.ft.


Polygon   1
At time =      17.00, total mass in vadose zone =     .24970    g/sq.ft.
Mass in gas phase     =       .32031E-01g/sq.ft.
Mass in liquid phase  =       .13705    g/sq.ft.
Mass sorbed           =       .80619E-01g/sq.ft.

Since last printout at time =      16.00
               Change in Total Mass =     -.19694E-02g/sq.ft.
```

```
                    Advection in from atmosphere =       .00000    g/sq.ft.
                    Advection in from water table =     -.18536E-02g/sq.ft.
                    Diffusion in from atmosphere =      -.11588E-03g/sq.ft.
                    Diffusion in from water table =      .00000    g/sq.ft.
               Total inflow at boundaries =     -.19695E-02g/sq.ft.
               Mass discrepancy =      .60070E-07g/sq.ft.

Since beginning of run at time = 0.0
               Change in Total Mass =     -.35626E-01g/sq.ft.
                    Advection in from atmosphere =       .00000    g/sq.ft.
                    Advection in from water table =     -.33546E-01g/sq.ft.
                    Diffusion in from atmosphere =      -.20797E-02g/sq.ft.
                    Diffusion in from water table =      .00000    g/sq.ft.
               Total inflow at boundaries =     -.35626E-01g/sq.ft.
               Mass discrepancy =      .74506E-07g/sq.ft.


Polygon   1
At time =      18.00, total mass in vadose zone =     .24775    g/sq.ft.
Mass in gas phase     =       .31781E-01g/sq.ft.
Mass in liquid phase  =       .13598    g/sq.ft.
Mass sorbed           =       .79989E-01g/sq.ft.

Since last printout at time =      17.00
               Change in Total Mass =     -.19524E-02g/sq.ft.
                    Advection in from atmosphere =       .00000    g/sq.ft.
                    Advection in from water table =     -.18369E-02g/sq.ft.
                    Diffusion in from atmosphere =      -.11548E-03g/sq.ft.
                    Diffusion in from water table =      .00000    g/sq.ft.
               Total inflow at boundaries =     -.19524E-02g/sq.ft.
               Mass discrepancy =      .21188E-07g/sq.ft.

Since beginning of run at time = 0.0
               Change in Total Mass =     -.37578E-01g/sq.ft.
                    Advection in from atmosphere =       .00000    g/sq.ft.
                    Advection in from water table =     -.35383E-01g/sq.ft.
                    Diffusion in from atmosphere =      -.21951E-02g/sq.ft.
                    Diffusion in from water table =      .00000    g/sq.ft.
               Total inflow at boundaries =     -.37578E-01g/sq.ft.
               Mass discrepancy =      .96858E-07g/sq.ft.


Polygon   1
At time =      19.00, total mass in vadose zone =     .24581    g/sq.ft.
Mass in gas phase     =       .31533E-01g/sq.ft.
Mass in liquid phase  =       .13492    g/sq.ft.
Mass sorbed           =       .79364E-01g/sq.ft.

Since last printout at time =      18.00
               Change in Total Mass =     -.19353E-02g/sq.ft.
                    Advection in from atmosphere =       .00000    g/sq.ft.
                    Advection in from water table =     -.18202E-02g/sq.ft.
                    Diffusion in from atmosphere =      -.11510E-03g/sq.ft.
                    Diffusion in from water table =      .00000    g/sq.ft.
               Total inflow at boundaries =     -.19353E-02g/sq.ft.
               Mass discrepancy =     -.93132E-09g/sq.ft.

Since beginning of run at time = 0.0
               Change in Total Mass =     -.39514E-01g/sq.ft.
                    Advection in from atmosphere =       .00000    g/sq.ft.
```

```
                    Advection in from water table =     -.37203E-01g/sq.ft.
                    Diffusion in from atmosphere =      -.23102E-02g/sq.ft.
                    Diffusion in from water table =      .00000    g/sq.ft.
               Total inflow at boundaries =     -.39514E-01g/sq.ft.
               Mass discrepancy =      .93132E-07g/sq.ft.


Polygon   1
At time =      20.00, total mass in vadose zone =     .24390    g/sq.ft.
Mass in gas phase     =       .31287E-01g/sq.ft.
Mass in liquid phase  =       .13387    g/sq.ft.
Mass sorbed           =       .78745E-01g/sq.ft.

Since last printout at time =      19.00
               Change in Total Mass =     -.19181E-02g/sq.ft.
                    Advection in from atmosphere =       .00000    g/sq.ft.
                    Advection in from water table =     -.18034E-02g/sq.ft.
                    Diffusion in from atmosphere =      -.11473E-03g/sq.ft.
                    Diffusion in from water table =      .00000    g/sq.ft.
               Total inflow at boundaries =     -.19181E-02g/sq.ft.
               Mass discrepancy =     -.37369E-07g/sq.ft.

Since beginning of run at time = 0.0
               Change in Total Mass =     -.41432E-01g/sq.ft.
                    Advection in from atmosphere =       .00000    g/sq.ft.
                    Advection in from water table =     -.39007E-01g/sq.ft.
                    Diffusion in from atmosphere =      -.24250E-02g/sq.ft.
                    Diffusion in from water table =      .00000    g/sq.ft.
               Total inflow at boundaries =     -.41432E-01g/sq.ft.
               Mass discrepancy =      .55879E-07g/sq.ft.


Polygon   1
At time =      21.00, total mass in vadose zone =     .24200    g/sq.ft.
Mass in gas phase     =       .31043E-01g/sq.ft.
Mass in liquid phase  =       .13282    g/sq.ft.
Mass sorbed           =       .78131E-01g/sq.ft.

Since last printout at time =      20.00
               Change in Total Mass =     -.19009E-02g/sq.ft.
                    Advection in from atmosphere =       .00000    g/sq.ft.
                    Advection in from water table =     -.17866E-02g/sq.ft.
                    Diffusion in from atmosphere =      -.11437E-03g/sq.ft.
                    Diffusion in from water table =      .00000    g/sq.ft.
               Total inflow at boundaries =     -.19009E-02g/sq.ft.
               Mass discrepancy =      .11874E-07g/sq.ft.

Since beginning of run at time = 0.0
               Change in Total Mass =     -.43333E-01g/sq.ft.
                    Advection in from atmosphere =       .00000    g/sq.ft.
                    Advection in from water table =     -.40793E-01g/sq.ft.
                    Diffusion in from atmosphere =      -.25393E-02g/sq.ft.
                    Diffusion in from water table =      .00000    g/sq.ft.
               Total inflow at boundaries =     -.43333E-01g/sq.ft.
               Mass discrepancy =      .63330E-07g/sq.ft.


Polygon   1
At time =      22.00, total mass in vadose zone =     .24011    g/sq.ft.
Mass in gas phase     =       .30801E-01g/sq.ft.
```

```
Mass in liquid phase  =       .13179    g/sq.ft.
Mass sorbed           =       .77523E-01g/sq.ft.

Since last printout at time =      21.00
              Change in Total Mass =     -.18838E-02g/sq.ft.
                   Advection in from atmosphere =       .00000    g/sq.ft.
                   Advection in from water table =     -.17698E-02g/sq.ft.
                   Diffusion in from atmosphere =      -.11400E-03g/sq.ft.
                   Diffusion in from water table =      .00000    g/sq.ft.
              Total inflow at boundaries =     -.18838E-02g/sq.ft.
              Mass discrepancy =      .22235E-07g/sq.ft.

Since beginning of run at time = 0.0
              Change in Total Mass =     -.45216E-01g/sq.ft.
                   Advection in from atmosphere =       .00000    g/sq.ft.
                   Advection in from water table =     -.42563E-01g/sq.ft.
                   Diffusion in from atmosphere =      -.26533E-02g/sq.ft.
                   Diffusion in from water table =      .00000    g/sq.ft.
              Total inflow at boundaries =     -.45216E-01g/sq.ft.
              Mass discrepancy =      .85682E-07g/sq.ft.


Polygon   1
At time =      23.00, total mass in vadose zone =     .23825    g/sq.ft.
Mass in gas phase     =       .30562E-01g/sq.ft.
Mass in liquid phase  =       .13076    g/sq.ft.
Mass sorbed           =       .76920E-01g/sq.ft.

Since last printout at time =      22.00
              Change in Total Mass =     -.18667E-02g/sq.ft.
                   Advection in from atmosphere =       .00000    g/sq.ft.
                   Advection in from water table =     -.17531E-02g/sq.ft.
                   Diffusion in from atmosphere =      -.11365E-03g/sq.ft.
                   Diffusion in from water table =      .00000    g/sq.ft.
              Total inflow at boundaries =     -.18667E-02g/sq.ft.
              Mass discrepancy =      .30152E-07g/sq.ft.

Since beginning of run at time = 0.0
              Change in Total Mass =     -.47083E-01g/sq.ft.
                   Advection in from atmosphere =       .00000    g/sq.ft.
                   Advection in from water table =     -.44316E-01g/sq.ft.
                   Diffusion in from atmosphere =      -.27670E-02g/sq.ft.
                   Diffusion in from water table =      .00000    g/sq.ft.
              Total inflow at boundaries =     -.47083E-01g/sq.ft.
              Mass discrepancy =      .11921E-06g/sq.ft.


Polygon   1
At time =      24.00, total mass in vadose zone =     .23640    g/sq.ft.
Mass in gas phase     =       .30324E-01g/sq.ft.
Mass in liquid phase  =       .12975    g/sq.ft.
Mass sorbed           =       .76323E-01g/sq.ft.

Since last printout at time =      23.00
              Change in Total Mass =     -.18497E-02g/sq.ft.
                   Advection in from atmosphere =       .00000    g/sq.ft.
                   Advection in from water table =     -.17364E-02g/sq.ft.
                   Diffusion in from atmosphere =      -.11329E-03g/sq.ft.
                   Diffusion in from water table =      .00000    g/sq.ft.
              Total inflow at boundaries =     -.18497E-02g/sq.ft.
```

```
              Mass discrepancy =     -.18976E-07g/sq.ft.

Since beginning of run at time = 0.0
              Change in Total Mass =     -.48933E-01g/sq.ft.
                   Advection in from atmosphere =       .00000    g/sq.ft.
                   Advection in from water table =     -.46053E-01g/sq.ft.
                   Diffusion in from atmosphere =      -.28803E-02g/sq.ft.
                   Diffusion in from water table =      .00000    g/sq.ft.
              Total inflow at boundaries =     -.48933E-01g/sq.ft.
              Mass discrepancy =      .96858E-07g/sq.ft.


Polygon   1
At time =      25.00, total mass in vadose zone =     .23456    g/sq.ft.
Mass in gas phase     =       .30089E-01g/sq.ft.
Mass in liquid phase  =       .12874    g/sq.ft.
Mass sorbed           =       .75731E-01g/sq.ft.

Since last printout at time =      24.00
              Change in Total Mass =     -.18327E-02g/sq.ft.
                   Advection in from atmosphere =       .00000    g/sq.ft.
                   Advection in from water table =     -.17198E-02g/sq.ft.
                   Diffusion in from atmosphere =      -.11292E-03g/sq.ft.
                   Diffusion in from water table =      .00000    g/sq.ft.
              Total inflow at boundaries =     -.18327E-02g/sq.ft.
              Mass discrepancy =      .27008E-07g/sq.ft.

Since beginning of run at time = 0.0
              Change in Total Mass =     -.50765E-01g/sq.ft.
                   Advection in from atmosphere =       .00000    g/sq.ft.
                   Advection in from water table =     -.47772E-01g/sq.ft.
                   Diffusion in from atmosphere =      -.29932E-02g/sq.ft.
                   Diffusion in from water table =      .00000    g/sq.ft.
              Total inflow at boundaries =     -.50766E-01g/sq.ft.
              Mass discrepancy =      .12666E-06g/sq.ft.


Polygon   1
At time =      26.00, total mass in vadose zone =     .23275    g/sq.ft.
Mass in gas phase     =       .29856E-01g/sq.ft.
Mass in liquid phase  =       .12775    g/sq.ft.
Mass sorbed           =       .75145E-01g/sq.ft.

Since last printout at time =      25.00
              Change in Total Mass =     -.18159E-02g/sq.ft.
                   Advection in from atmosphere =       .00000    g/sq.ft.
                   Advection in from water table =     -.17033E-02g/sq.ft.
                   Diffusion in from atmosphere =      -.11256E-03g/sq.ft.
                   Diffusion in from water table =      .00000    g/sq.ft.
              Total inflow at boundaries =     -.18158E-02g/sq.ft.
              Mass discrepancy =     -.91968E-08g/sq.ft.

Since beginning of run at time = 0.0
              Change in Total Mass =     -.52581E-01g/sq.ft.
                   Advection in from atmosphere =       .00000    g/sq.ft.
                   Advection in from water table =     -.49476E-01g/sq.ft.
                   Diffusion in from atmosphere =      -.31058E-02g/sq.ft.
                   Diffusion in from water table =      .00000    g/sq.ft.
              Total inflow at boundaries =     -.52581E-01g/sq.ft.
              Mass discrepancy =      .11921E-06g/sq.ft.
```

```
Polygon   1
At time =      27.00, total mass in vadose zone =     .23095    g/sq.ft.
Mass in gas phase     =       .29626E-01g/sq.ft.
Mass in liquid phase  =       .12676    g/sq.ft.
Mass sorbed           =       .74564E-01g/sq.ft.

Since last printout at time =      26.00
               Change in Total Mass =     -.17991E-02g/sq.ft.
                    Advection in from atmosphere =       .00000    g/sq.ft.
                    Advection in from water table =     -.16869E-02g/sq.ft.
                    Diffusion in from atmosphere =      -.11219E-03g/sq.ft.
                    Diffusion in from water table =      .00000    g/sq.ft.
               Total inflow at boundaries =     -.17991E-02g/sq.ft.
               Mass discrepancy =      .65193E-08g/sq.ft.

Since beginning of run at time = 0.0
               Change in Total Mass =     -.54380E-01g/sq.ft.
                    Advection in from atmosphere =       .00000    g/sq.ft.
                    Advection in from water table =     -.51163E-01g/sq.ft.
                    Diffusion in from atmosphere =      -.32179E-02g/sq.ft.
                    Diffusion in from water table =      .00000    g/sq.ft.
               Total inflow at boundaries =     -.54380E-01g/sq.ft.
               Mass discrepancy =      .12293E-06g/sq.ft.


Polygon   1
At time =      28.00, total mass in vadose zone =     .22917    g/sq.ft.
Mass in gas phase     =       .29397E-01g/sq.ft.
Mass in liquid phase  =       .12578    g/sq.ft.
Mass sorbed           =       .73989E-01g/sq.ft.

Since last printout at time =      27.00
               Change in Total Mass =     -.17825E-02g/sq.ft.
                    Advection in from atmosphere =       .00000    g/sq.ft.
                    Advection in from water table =     -.16707E-02g/sq.ft.
                    Diffusion in from atmosphere =      -.11181E-03g/sq.ft.
                    Diffusion in from water table =      .00000    g/sq.ft.
               Total inflow at boundaries =     -.17825E-02g/sq.ft.
               Mass discrepancy =      .13155E-07g/sq.ft.

Since beginning of run at time = 0.0
               Change in Total Mass =     -.56163E-01g/sq.ft.
                    Advection in from atmosphere =       .00000    g/sq.ft.
                    Advection in from water table =     -.52833E-01g/sq.ft.
                    Diffusion in from atmosphere =      -.33298E-02g/sq.ft.
                    Diffusion in from water table =      .00000    g/sq.ft.
               Total inflow at boundaries =     -.56163E-01g/sq.ft.
               Mass discrepancy =      .13784E-06g/sq.ft.


Polygon   1
At time =      29.00, total mass in vadose zone =     .22740    g/sq.ft.
Mass in gas phase     =       .29170E-01g/sq.ft.
Mass in liquid phase  =       .12481    g/sq.ft.
Mass sorbed           =       .73418E-01g/sq.ft.

Since last printout at time =      28.00
               Change in Total Mass =     -.17660E-02g/sq.ft.
```

```
                    Advection in from atmosphere =       .00000    g/sq.ft.
                    Advection in from water table =     -.16546E-02g/sq.ft.
                    Diffusion in from atmosphere =      -.11144E-03g/sq.ft.
                    Diffusion in from water table =      .00000    g/sq.ft.
               Total inflow at boundaries =     -.17660E-02g/sq.ft.
               Mass discrepancy =     -.72177E-08g/sq.ft.

Since beginning of run at time = 0.0
               Change in Total Mass =     -.57929E-01g/sq.ft.
                    Advection in from atmosphere =       .00000    g/sq.ft.
                    Advection in from water table =     -.54488E-01g/sq.ft.
                    Diffusion in from atmosphere =      -.34412E-02g/sq.ft.
                    Diffusion in from water table =      .00000    g/sq.ft.
               Total inflow at boundaries =     -.57929E-01g/sq.ft.
               Mass discrepancy =      .13039E-06g/sq.ft.


Polygon   1
At time =      30.00, total mass in vadose zone =     .22565    g/sq.ft.
Mass in gas phase     =       .28946E-01g/sq.ft.
Mass in liquid phase  =       .12385    g/sq.ft.
Mass sorbed           =       .72854E-01g/sq.ft.

Since last printout at time =      29.00
               Change in Total Mass =     -.17497E-02g/sq.ft.
                    Advection in from atmosphere =       .00000    g/sq.ft.
                    Advection in from water table =     -.16386E-02g/sq.ft.
                    Diffusion in from atmosphere =      -.11105E-03g/sq.ft.
                    Diffusion in from water table =      .00000    g/sq.ft.
               Total inflow at boundaries =     -.17496E-02g/sq.ft.
               Mass discrepancy =     -.14552E-07g/sq.ft.

Since beginning of run at time = 0.0
               Change in Total Mass =     -.59678E-01g/sq.ft.
                    Advection in from atmosphere =       .00000    g/sq.ft.
                    Advection in from water table =     -.56126E-01g/sq.ft.
                    Diffusion in from atmosphere =      -.35522E-02g/sq.ft.
                    Diffusion in from water table =      .00000    g/sq.ft.
               Total inflow at boundaries =     -.59679E-01g/sq.ft.
               Mass discrepancy =      .11548E-06g/sq.ft.


GROUNDWATER IMPACT OF POLYGON   1

 Time        Mass per area (g/sq.ft.)      Total Mass (g)
     1.00          .20731E-02                 132.68
     2.00          .20640E-02                 132.09
     3.00          .20540E-02                 131.46
     4.00          .20433E-02                 130.77
     5.00          .20318E-02                 130.04
     6.00          .20196E-02                 129.26
     7.00          .20068E-02                 128.44
     8.00          .19934E-02                 127.57
     9.00          .19793E-02                 126.68
    10.00          .19648E-02                 125.75
    11.00          .19499E-02                 124.79
    12.00          .19345E-02                 123.81
    13.00          .19188E-02                 122.80
    14.00          .19028E-02                 121.78
    15.00          .18866E-02                 120.74
```

16.00	.18701E-02	119.69
17.00	.18536E-02	118.63
18.00	.18369E-02	117.56
19.00	.18202E-02	116.49
20.00	.18034E-02	115.42
21.00	.17866E-02	114.34
22.00	.17698E-02	113.27
23.00	.17531E-02	112.20
24.00	.17364E-02	111.13
25.00	.17198E-02	110.07
26.00	.17033E-02	109.01
27.00	.16869E-02	107.96
28.00	.16707E-02	106.92
29.00	.16546E-02	105.89
30.00	.16386E-02	104.87

****

****

TOTAL GROUNDWATER IMPACT

Time (yr)	Mass (g)	Cumulative Mass (g)
1.00	132.68	132.68
2.00	132.09	264.77
3.00	131.46	396.23
4.00	130.77	527.00
5.00	130.04	657.03
6.00	129.26	786.29
7.00	128.44	914.73
8.00	127.57	1042.3
9.00	126.68	1169.0
10.00	125.75	1294.7
11.00	124.79	1419.5
12.00	123.81	1543.3
13.00	122.80	1666.1
14.00	121.78	1787.9
15.00	120.74	1908.6
16.00	119.69	2028.3
17.00	118.63	2147.0
18.00	117.56	2264.5
19.00	116.49	2381.0
20.00	115.42	2496.4
21.00	114.34	2610.8
22.00	113.27	2724.0
23.00	112.20	2836.2
24.00	111.13	2947.4
25.00	110.07	3057.4
26.00	109.01	3166.4
27.00	107.96	3274.4
28.00	106.92	3381.3
29.00	105.89	3487.2
30.00	104.87	3592.1

Polygon 66
Time: .000

Cell	Cgas(g/cu.ft.)	Cliq(g/cu.ft.)	Csol
1	.15034E-03	.31785E-03	.10267E-08
2	.15034E-03	.31785E-03	.10267E-08
3	.15034E-03	.31785E-03	.10267E-08
4	.15034E-03	.31785E-03	.10267E-08
5	.15034E-03	.31785E-03	.10267E-08
6	.15034E-03	.31785E-03	.10267E-08
7	.45151E-03	.95456E-03	.30832E-08
8	.45151E-03	.95456E-03	.30832E-08
9	.45151E-03	.95456E-03	.30832E-08
10	.45151E-03	.95456E-03	.30832E-08
11	.45151E-03	.95456E-03	.30832E-08
12	.45151E-03	.95456E-03	.30832E-08
13	.75219E-03	.15903E-02	.51365E-08
14	.75219E-03	.15903E-02	.51365E-08
15	.75219E-03	.15903E-02	.51365E-08
16	.75219E-03	.15903E-02	.51365E-08
17	.75219E-03	.15903E-02	.51365E-08
18	.75219E-03	.15903E-02	.51365E-08
19	.20452E-02	.43240E-02	.13967E-07
20	.20452E-02	.43240E-02	.13967E-07
21	.20452E-02	.43240E-02	.13967E-07
22	.20452E-02	.43240E-02	.13967E-07
23	.20452E-02	.43240E-02	.13967E-07
24	.20452E-02	.43240E-02	.13967E-07
25	.37870E-02	.80063E-02	.25860E-07
26	.37870E-02	.80063E-02	.25860E-07
27	.37870E-02	.80063E-02	.25860E-07
28	.37870E-02	.80063E-02	.25860E-07
29	.37870E-02	.80063E-02	.25860E-07
30	.37870E-02	.80063E-02	.25860E-07
31	.46143E-02	.97555E-02	.31510E-07
32	.46143E-02	.97555E-02	.31510E-07
33	.46143E-02	.97555E-02	.31510E-07
34	.46143E-02	.97555E-02	.31510E-07
35	.46143E-02	.97555E-02	.31510E-07
36	.46143E-02	.97555E-02	.31510E-07
37	.51925E-02	.10978E-01	.35459E-07
38	.51925E-02	.10978E-01	.35459E-07
39	.51925E-02	.10978E-01	.35459E-07
40	.51925E-02	.10978E-01	.35459E-07
41	.51925E-02	.10978E-01	.35459E-07
42	.51925E-02	.10978E-01	.35459E-07
43	.80666E-02	.17054E-01	.55085E-07
44	.80666E-02	.17054E-01	.55085E-07
45	.80666E-02	.17054E-01	.55085E-07
46	.80666E-02	.17054E-01	.55085E-07
47	.80666E-02	.17054E-01	.55085E-07
48	.80666E-02	.17054E-01	.55085E-07
49	.11400E-01	.24101E-01	.77846E-07
50	.11400E-01	.24101E-01	.77846E-07
51	.11400E-01	.24101E-01	.77846E-07
52	.11400E-01	.24101E-01	.77846E-07
53	.11400E-01	.24101E-01	.77846E-07
54	.11400E-01	.24101E-01	.77846E-07
55	.11955E-01	.25275E-01	.81639E-07
56	.11955E-01	.25275E-01	.81639E-07

57	.11955E-01	.25275E-01	.81639E-07
58	.11955E-01	.25275E-01	.81639E-07
59	.11955E-01	.25275E-01	.81639E-07
60	.11955E-01	.25275E-01	.81639E-07

Polygon 66
Time: 10.000

Cell	Cgas(g/cu.ft.)	Cliq(g/cu.ft.)	Csol
1	.27995E-04	.59187E-04	.19117E-09
2	.69898E-04	.14778E-03	.47732E-09
3	.11585E-03	.24493E-03	.79114E-09
4	.16082E-03	.34000E-03	.10982E-08
5	.20439E-03	.43211E-03	.13957E-08
6	.24812E-03	.52457E-03	.16944E-08
7	.30511E-03	.64506E-03	.20835E-08
8	.37398E-03	.79065E-03	.25538E-08
9	.44443E-03	.93960E-03	.30349E-08
10	.51090E-03	.10801E-02	.34888E-08
11	.57418E-03	.12139E-02	.39210E-08
12	.63769E-03	.13482E-02	.43546E-08
13	.71604E-03	.15138E-02	.48897E-08
14	.80898E-03	.17103E-02	.55243E-08
15	.90715E-03	.19179E-02	.61947E-08
16	.10058E-02	.21264E-02	.68683E-08
17	.11066E-02	.23394E-02	.75564E-08
18	.12138E-02	.25661E-02	.82887E-08
19	.13801E-02	.29178E-02	.94245E-08
20	.15964E-02	.33750E-02	.10901E-07
21	.18157E-02	.38387E-02	.12399E-07
22	.20115E-02	.42526E-02	.13736E-07
23	.21844E-02	.46182E-02	.14917E-07
24	.23462E-02	.49603E-02	.16022E-07
25	.25732E-02	.54403E-02	.17572E-07
26	.28562E-02	.60384E-02	.19504E-07
27	.31330E-02	.66237E-02	.21395E-07
28	.33680E-02	.71206E-02	.22999E-07
29	.35617E-02	.75301E-02	.24322E-07
30	.37290E-02	.78838E-02	.25465E-07
31	.39151E-02	.82771E-02	.26735E-07
32	.41214E-02	.87133E-02	.28144E-07
33	.43223E-02	.91381E-02	.29516E-07
34	.45035E-02	.95211E-02	.30753E-07
35	.46674E-02	.98676E-02	.31872E-07
36	.48232E-02	.10197E-01	.32936E-07
37	.50013E-02	.10574E-01	.34153E-07
38	.52030E-02	.11000E-01	.35530E-07
39	.54111E-02	.11440E-01	.36951E-07
40	.56173E-02	.11876E-01	.38359E-07
41	.58250E-02	.12315E-01	.39778E-07
42	.60432E-02	.12776E-01	.41267E-07
43	.63875E-02	.13504E-01	.43619E-07
44	.68367E-02	.14454E-01	.46686E-07
45	.72854E-02	.15403E-01	.49751E-07
46	.76734E-02	.16223E-01	.52400E-07
47	.80009E-02	.16915E-01	.54636E-07
48	.82923E-02	.17531E-01	.56626E-07
49	.86953E-02	.18383E-01	.59378E-07
50	.91925E-02	.19434E-01	.62773E-07
51	.96644E-02	.20432E-01	.65996E-07
52	.10041E-01	.21229E-01	.68570E-07

53	.10322E-01	.21823E-01	.70489E-07
54	.10533E-01	.22269E-01	.71930E-07
55	.10719E-01	.22663E-01	.73200E-07
56	.10890E-01	.23024E-01	.74367E-07
57	.11033E-01	.23325E-01	.75341E-07
58	.11139E-01	.23550E-01	.76066E-07
59	.11210E-01	.23701E-01	.76553E-07
60	.11252E-01	.23788E-01	.76837E-07

Polygon 66
Time: 20.000

Cell	Cgas(g/cu.ft.)	Cliq(g/cu.ft.)	Csol
1	.22227E-04	.46991E-04	.15178E-09
2	.55928E-04	.11824E-03	.38192E-09
3	.97593E-04	.20633E-03	.66644E-09
4	.14477E-03	.30607E-03	.98862E-09
5	.19580E-03	.41395E-03	.13371E-08
6	.24980E-03	.52811E-03	.17058E-08
7	.30702E-03	.64908E-03	.20965E-08
8	.36842E-03	.77889E-03	.25158E-08
9	.43458E-03	.91878E-03	.29677E-08
10	.50529E-03	.10683E-02	.34505E-08
11	.57998E-03	.12262E-02	.39606E-08
12	.65839E-03	.13919E-02	.44960E-08
13	.74126E-03	.15671E-02	.50619E-08
14	.83005E-03	.17549E-02	.56682E-08
15	.92584E-03	.19574E-02	.63223E-08
16	.10289E-02	.21752E-02	.70259E-08
17	.11390E-02	.24080E-02	.77780E-08
18	.12563E-02	.26561E-02	.85793E-08
19	.13834E-02	.29247E-02	.94467E-08
20	.15238E-02	.32217E-02	.10406E-07
21	.16789E-02	.35495E-02	.11465E-07
22	.18457E-02	.39022E-02	.12604E-07
23	.20196E-02	.42699E-02	.13792E-07
24	.21971E-02	.46450E-02	.15004E-07
25	.23794E-02	.50304E-02	.16248E-07
26	.25709E-02	.54353E-02	.17556E-07
27	.27732E-02	.58629E-02	.18937E-07
28	.29826E-02	.63057E-02	.20367E-07
29	.31930E-02	.67506E-02	.21804E-07
30	.33998E-02	.71877E-02	.23216E-07
31	.36024E-02	.76161E-02	.24600E-07
32	.38037E-02	.80416E-02	.25975E-07
33	.40059E-02	.84691E-02	.27355E-07
34	.42091E-02	.88988E-02	.28743E-07
35	.44123E-02	.93284E-02	.30131E-07
36	.46149E-02	.97566E-02	.31514E-07
37	.48184E-02	.10187E-01	.32903E-07
38	.50260E-02	.10626E-01	.34321E-07
39	.52402E-02	.11079E-01	.35784E-07
40	.54619E-02	.11547E-01	.37298E-07
41	.56910E-02	.12032E-01	.38862E-07
42	.59278E-02	.12532E-01	.40479E-07
43	.61776E-02	.13060E-01	.42185E-07
44	.64482E-02	.13632E-01	.44033E-07
45	.67413E-02	.14252E-01	.46035E-07
46	.70497E-02	.14904E-01	.48141E-07
47	.73620E-02	.15564E-01	.50273E-07
48	.76689E-02	.16213E-01	.52369E-07

49	.79711E-02	.16852E-01	.54433E-07
50	.82757E-02	.17496E-01	.56513E-07
51	.85842E-02	.18149E-01	.58620E-07
52	.88886E-02	.18792E-01	.60698E-07
53	.91753E-02	.19398E-01	.62656E-07
54	.94334E-02	.19944E-01	.64419E-07
55	.96585E-02	.20420E-01	.65956E-07
56	.98512E-02	.20827E-01	.67271E-07
57	.10013E-01	.21170E-01	.68378E-07
58	.10145E-01	.21448E-01	.69278E-07
59	.10246E-01	.21662E-01	.69967E-07
60	.10315E-01	.21807E-01	.70437E-07

Polygon 66
Time: 30.000

Cell	Cgas(g/cu.ft.)	Cliq(g/cu.ft.)	Csol
1	.21327E-04	.45089E-04	.14564E-09
2	.53364E-04	.11282E-03	.36441E-09
3	.92869E-04	.19634E-03	.63418E-09
4	.13803E-03	.29181E-03	.94255E-09
5	.18780E-03	.39704E-03	.12824E-08
6	.24160E-03	.51078E-03	.16498E-08
7	.29915E-03	.63244E-03	.20428E-08
8	.36041E-03	.76197E-03	.24612E-08
9	.42555E-03	.89969E-03	.29060E-08
10	.49482E-03	.10461E-02	.33790E-08
11	.56841E-03	.12017E-02	.38816E-08
12	.64652E-03	.13668E-02	.44149E-08
13	.72931E-03	.15419E-02	.49803E-08
14	.81706E-03	.17274E-02	.55795E-08
15	.91017E-03	.19243E-02	.62154E-08
16	.10091E-02	.21333E-02	.68906E-08
17	.11141E-02	.23554E-02	.76080E-08
18	.12256E-02	.25911E-02	.83694E-08
19	.13439E-02	.28412E-02	.91772E-08
20	.14695E-02	.31067E-02	.10035E-07
21	.16029E-02	.33889E-02	.10946E-07
22	.17446E-02	.36884E-02	.11914E-07
23	.18944E-02	.40051E-02	.12937E-07
24	.20517E-02	.43375E-02	.14010E-07
25	.22156E-02	.46841E-02	.15130E-07
26	.23857E-02	.50438E-02	.16292E-07
27	.25620E-02	.54165E-02	.17495E-07
28	.27443E-02	.58019E-02	.18740E-07
29	.29320E-02	.61987E-02	.20022E-07
30	.31241E-02	.66048E-02	.21334E-07
31	.33194E-02	.70177E-02	.22667E-07
32	.35170E-02	.74355E-02	.24017E-07
33	.37165E-02	.78574E-02	.25379E-07
34	.39181E-02	.82834E-02	.26756E-07
35	.41216E-02	.87138E-02	.28146E-07
36	.43273E-02	.91486E-02	.29550E-07
37	.45351E-02	.95879E-02	.30969E-07
38	.47453E-02	.10032E-01	.32405E-07
39	.49585E-02	.10483E-01	.33861E-07
40	.51753E-02	.10941E-01	.35341E-07
41	.53961E-02	.11408E-01	.36848E-07
42	.56213E-02	.11884E-01	.38386E-07
43	.58512E-02	.12370E-01	.39956E-07
44	.60864E-02	.12868E-01	.41563E-07

45	.63277E-02	.13378E-01	.43210E-07
46	.65751E-02	.13901E-01	.44899E-07
47	.68273E-02	.14434E-01	.46622E-07
48	.70819E-02	.14972E-01	.48361E-07
49	.73361E-02	.15510E-01	.50097E-07
50	.75875E-02	.16041E-01	.51813E-07
51	.78343E-02	.16563E-01	.53498E-07
52	.80747E-02	.17071E-01	.55140E-07
53	.83060E-02	.17560E-01	.56720E-07
54	.85245E-02	.18022E-01	.58212E-07
55	.87261E-02	.18448E-01	.59588E-07
56	.89068E-02	.18831E-01	.60823E-07
57	.90638E-02	.19162E-01	.61894E-07
58	.91947E-02	.19439E-01	.62788E-07
59	.92976E-02	.19657E-01	.63491E-07
60	.93710E-02	.19812E-01	.63992E-07

V-Leach, VER 1.1
Jake Turin, 11/91
PGA V-leach model, polygon screen-TCE-11/10/92-Poly66.INP. Poly 92 Vert Dist.
1 polygons.
Timestep = 1.00 years. Simulation length = 30.00 years.
Printout every 1.00 years. Vertical profile stored every 10.00 years.
Koc = 123.60 ml/g, .43649E-02cu.ft./g
Kh = .47300 (dimensionless).
Aqueous solubility = 1100.0 mg/l, 31.149 g/cu.ft
Free air diffusion coefficient = .70290 sq. m/day, 2761.7 sq.ft./yr

Polygon 1
Polygon 66
Polygon area = 64000. sq. ft.
60 cells, each cell 1.000 ft. thick.
Soil Properties:
Bulk density = 1.6400 g/ml, 46440. g/cu.ft.
Porosity = .3810 Volumetric water content = .2550
Organic carbon content = .00074000
Recharge Rate = .08202100 ft/yr
Conc. in recharge water = .00000 mg/l, .00000 g/cu.ft
Atmospheric concentration = .00000 mg/l, .00000 g/cu.ft
Water table is impermeable to gas diffusion.

Polygon 92 Vertical Distribution (as Percentage Total Mass) Calculations using Phase II Chemical and Physical Soil Data

Ct (ug/Kg) M&E June, 92	Depth Interval Feet	Mt (ug/cc)	Volume Soil (cu. ft)	Mass TCE (grams) over depth interval	Incr. Mass Lbs	% of Total Mass per Interval
15.12	6	0.024797	525000	368.64	0.81	0.003105762
45.35	6	0.074374	525000	1105.68	2.44	0.009315233
75.58	6	0.123951	525000	1842.71	4.06	0.015524703
205.46	6	0.336954	525000	5009.31	11.04	0.042203037
385.16	6	0.631662	525000	9390.56	20.70	0.079114776
463.53	6	0.760189	525000	11301.30	24.92	0.095212566
521.63	6	0.855473	525000	12717.83	28.04	0.107146745
810.35	6	1.328974	525000	19757.09	43.56	0.166452016
1145.19	6	1.878112	525000	27920.81	61.56	0.235230683
1201	6	1.96964	525000	29281.51	64.56	0.246694479
	60			118695.42	**261.68**	**1.00**

Polygon 66 Vertical Distribution Calculations using Phase II Polygon 92 Chemical Data and Physical Soil Data, and Estimated VOC Mass in pounds (as TCE) from HGC (July, 1989)

% Total Mass per 6 ft Interval (from Polygon 92)	Total Mass VOC's (lbs) Polygon 66 (from HGC, 1989) (Table C-2)	Incremental mass (pounds) per 6 ft interval	Incremental mass (grams) per 6 ft interval	Volume Soil per interval (cu. ft)	Calculated Total Soil Conc. Ct (ug/Kg) using Polygon 92 Vert Dist and Revised Physical Soil Data
0.003105762	40.3	0.13	56.77	384000	3.18
0.009315233	40.3	0.38	170.28	384000	9.55
0.015524703	40.3	0.63	283.79	384000	15.91
0.042203037	40.3	1.70	771.46	384000	43.26
0.079114776	40.3	3.19	1446.19	384000	81.10
0.095212566	40.3	3.84	1740.45	384000	97.60
0.107146745	40.3	4.32	1958.61	384000	109.83
0.166452016	40.3	6.71	3042.69	384000	170.62
0.235230683	40.3	9.48	4299.94	384000	241.12
0.246694479	40.3	9.94	4509.50	384000	252.87
1.00		40.3	18279.68		

PGA V-leach model, polygon screen-TCE-11/10/92-Poly38.INP New soil, Old chem

```
    1
       1.0          30.          1.0          10.
     123.6         .473         1100.        .7029
Polygon 38
    120000.           1.     .196851         1.64         .381         .255      .00074
         0.           0.          -1.
    60
     1     6        0.59
     7    12        9.34
    13    18       20.04
    19    24       30.74
    25    30       41.44
    31    36       52.14
    37    42       62.85
    43    48       73.55
    49    54       84.25
    55    60       94.95
```

```
                    V-Leach, VER 1.1
 Jake Turin, 11/91
PGA V-leach model, polygon screen-TCE-11/10/92-Poly38.INP  New soil, Old chem


Polygon   1
At time =        .00, total mass in vadose zone =     .13093    g/sq.ft.
Mass in gas phase     =       .16795E-01g/sq.ft.
Mass in liquid phase  =       .71860E-01g/sq.ft.
Mass sorbed           =       .42271E-01g/sq.ft.


Polygon   1
At time =       1.00, total mass in vadose zone =     .12897    g/sq.ft.
Mass in gas phase     =       .16544E-01g/sq.ft.
Mass in liquid phase  =       .70787E-01g/sq.ft.
Mass sorbed           =       .41640E-01g/sq.ft.

Since last printout at time =        .00
               Change in Total Mass =     -.19549E-02g/sq.ft.
                    Advection in from atmosphere =       .00000    g/sq.ft.
                    Advection in from water table =     -.18681E-02g/sq.ft.
                    Diffusion in from atmosphere =      -.86738E-04g/sq.ft.
                    Diffusion in from water table =      .00000    g/sq.ft.
               Total inflow at boundaries =     -.19549E-02g/sq.ft.
               Mass discrepancy =      .34925E-08g/sq.ft.

Since beginning of run at time = 0.0
               Change in Total Mass =     -.19549E-02g/sq.ft.
                    Advection in from atmosphere =       .00000    g/sq.ft.
                    Advection in from water table =     -.18681E-02g/sq.ft.
                    Diffusion in from atmosphere =      -.86738E-04g/sq.ft.
                    Diffusion in from water table =      .00000    g/sq.ft.
               Total inflow at boundaries =     -.19549E-02g/sq.ft.
               Mass discrepancy =      .34925E-08g/sq.ft.


Polygon   1
At time =       2.00, total mass in vadose zone =     .12703    g/sq.ft.
Mass in gas phase     =       .16295E-01g/sq.ft.
Mass in liquid phase  =       .69721E-01g/sq.ft.
Mass sorbed           =       .41013E-01g/sq.ft.

Since last printout at time =       1.00
               Change in Total Mass =     -.19420E-02g/sq.ft.
                    Advection in from atmosphere =       .00000    g/sq.ft.
                    Advection in from water table =     -.18582E-02g/sq.ft.
                    Diffusion in from atmosphere =      -.83762E-04g/sq.ft.
                    Diffusion in from water table =      .00000    g/sq.ft.
               Total inflow at boundaries =     -.19420E-02g/sq.ft.
               Mass discrepancy =      .20140E-07g/sq.ft.

Since beginning of run at time = 0.0
               Change in Total Mass =     -.38968E-02g/sq.ft.
                    Advection in from atmosphere =       .00000    g/sq.ft.
                    Advection in from water table =     -.37264E-02g/sq.ft.
                    Diffusion in from atmosphere =      -.17050E-03g/sq.ft.
                    Diffusion in from water table =      .00000    g/sq.ft.
               Total inflow at boundaries =     -.38969E-02g/sq.ft.
               Mass discrepancy =      .23749E-07g/sq.ft.
```

```
Polygon   1
At time =       3.00, total mass in vadose zone =     .12510    g/sq.ft.
Mass in gas phase     =       .16048E-01g/sq.ft.
Mass in liquid phase  =       .68663E-01g/sq.ft.
Mass sorbed           =       .40390E-01g/sq.ft.

Since last printout at time =       2.00
               Change in Total Mass =     -.19271E-02g/sq.ft.
                    Advection in from atmosphere =       .00000    g/sq.ft.
                    Advection in from water table =     -.18463E-02g/sq.ft.
                    Diffusion in from atmosphere =      -.80834E-04g/sq.ft.
                    Diffusion in from water table =      .00000    g/sq.ft.
               Total inflow at boundaries =     -.19271E-02g/sq.ft.
               Mass discrepancy =     -.90804E-08g/sq.ft.

Since beginning of run at time = 0.0
               Change in Total Mass =     -.58239E-02g/sq.ft.
                    Advection in from atmosphere =       .00000    g/sq.ft.
                    Advection in from water table =     -.55726E-02g/sq.ft.
                    Diffusion in from atmosphere =      -.25133E-03g/sq.ft.
                    Diffusion in from water table =      .00000    g/sq.ft.
               Total inflow at boundaries =     -.58240E-02g/sq.ft.
               Mass discrepancy =      .14435E-07g/sq.ft.


Polygon   1
At time =       4.00, total mass in vadose zone =     .12319    g/sq.ft.
Mass in gas phase     =       .15803E-01g/sq.ft.
Mass in liquid phase  =       .67615E-01g/sq.ft.
Mass sorbed           =       .39774E-01g/sq.ft.

Since last printout at time =       3.00
               Change in Total Mass =     -.19100E-02g/sq.ft.
                    Advection in from atmosphere =       .00000    g/sq.ft.
                    Advection in from water table =     -.18320E-02g/sq.ft.
                    Diffusion in from atmosphere =      -.77973E-04g/sq.ft.
                    Diffusion in from water table =      .00000    g/sq.ft.
               Total inflow at boundaries =     -.19100E-02g/sq.ft.
               Mass discrepancy =     -.17579E-07g/sq.ft.

Since beginning of run at time = 0.0
               Change in Total Mass =     -.77340E-02g/sq.ft.
                    Advection in from atmosphere =       .00000    g/sq.ft.
                    Advection in from water table =     -.74047E-02g/sq.ft.
                    Diffusion in from atmosphere =      -.32931E-03g/sq.ft.
                    Diffusion in from water table =      .00000    g/sq.ft.
               Total inflow at boundaries =     -.77340E-02g/sq.ft.
               Mass discrepancy =     -.32596E-08g/sq.ft.


Polygon   1
At time =       5.00, total mass in vadose zone =     .12130    g/sq.ft.
Mass in gas phase     =       .15560E-01g/sq.ft.
Mass in liquid phase  =       .66577E-01g/sq.ft.
Mass sorbed           =       .39163E-01g/sq.ft.

Since last printout at time =       4.00
               Change in Total Mass =     -.18908E-02g/sq.ft.
```

```
                Advection in from atmosphere =        .00000    g/sq.ft.
                Advection in from water table =     -.18156E-02g/sq.ft.
                Diffusion in from atmosphere =      -.75194E-04g/sq.ft.
                Diffusion in from water table =       .00000    g/sq.ft.
           Total inflow at boundaries =     -.18908E-02g/sq.ft.
           Mass discrepancy =     -.37253E-08g/sq.ft.

Since beginning of run at time = 0.0
           Change in Total Mass =     -.96248E-02g/sq.ft.
                Advection in from atmosphere =        .00000    g/sq.ft.
                Advection in from water table =     -.92203E-02g/sq.ft.
                Diffusion in from atmosphere =      -.40450E-03g/sq.ft.
                Diffusion in from water table =       .00000    g/sq.ft.
           Total inflow at boundaries =     -.96248E-02g/sq.ft.
           Mass discrepancy =     -.74506E-08g/sq.ft.


Polygon   1
At time =       6.00, total mass in vadose zone =     .11943    g/sq.ft.
Mass in gas phase     =       .15320E-01g/sq.ft.
Mass in liquid phase  =       .65551E-01g/sq.ft.
Mass sorbed           =       .38560E-01g/sq.ft.

Since last printout at time =       5.00
           Change in Total Mass =     -.18698E-02g/sq.ft.
                Advection in from atmosphere =        .00000    g/sq.ft.
                Advection in from water table =     -.17974E-02g/sq.ft.
                Diffusion in from atmosphere =      -.72504E-04g/sq.ft.
                Diffusion in from water table =       .00000    g/sq.ft.
           Total inflow at boundaries =     -.18699E-02g/sq.ft.
           Mass discrepancy =      .29337E-07g/sq.ft.

Since beginning of run at time = 0.0
           Change in Total Mass =     -.11495E-01g/sq.ft.
                Advection in from atmosphere =        .00000    g/sq.ft.
                Advection in from water table =     -.11018E-01g/sq.ft.
                Diffusion in from atmosphere =      -.47700E-03g/sq.ft.
                Diffusion in from water table =       .00000    g/sq.ft.
           Total inflow at boundaries =     -.11495E-01g/sq.ft.
           Mass discrepancy =      .22352E-07g/sq.ft.


Polygon   1
At time =       7.00, total mass in vadose zone =     .11758    g/sq.ft.
Mass in gas phase     =       .15083E-01g/sq.ft.
Mass in liquid phase  =       .64537E-01g/sq.ft.
Mass sorbed           =       .37963E-01g/sq.ft.

Since last printout at time =       6.00
           Change in Total Mass =     -.18476E-02g/sq.ft.
                Advection in from atmosphere =        .00000    g/sq.ft.
                Advection in from water table =     -.17777E-02g/sq.ft.
                Diffusion in from atmosphere =      -.69910E-04g/sq.ft.
                Diffusion in from water table =       .00000    g/sq.ft.
           Total inflow at boundaries =     -.18476E-02g/sq.ft.
           Mass discrepancy =      .81491E-09g/sq.ft.

Since beginning of run at time = 0.0
           Change in Total Mass =     -.13342E-01g/sq.ft.
                Advection in from atmosphere =        .00000    g/sq.ft.
```

```
                Advection in from water table =     -.12795E-01g/sq.ft.
                Diffusion in from atmosphere =      -.54691E-03g/sq.ft.
                Diffusion in from water table =      .00000    g/sq.ft.
           Total inflow at boundaries =     -.13342E-01g/sq.ft.
           Mass discrepancy =      .23283E-07g/sq.ft.


Polygon   1
At time =       8.00, total mass in vadose zone =     .11576    g/sq.ft.
Mass in gas phase     =       .14849E-01g/sq.ft.
Mass in liquid phase  =       .63535E-01g/sq.ft.
Mass sorbed           =       .37374E-01g/sq.ft.

Since last printout at time =       7.00
           Change in Total Mass =     -.18247E-02g/sq.ft.
                Advection in from atmosphere =       .00000    g/sq.ft.
                Advection in from water table =     -.17573E-02g/sq.ft.
                Diffusion in from atmosphere =      -.67413E-04g/sq.ft.
                Diffusion in from water table =      .00000    g/sq.ft.
           Total inflow at boundaries =     -.18247E-02g/sq.ft.
           Mass discrepancy =     -.25262E-07g/sq.ft.

Since beginning of run at time = 0.0
           Change in Total Mass =     -.15167E-01g/sq.ft.
                Advection in from atmosphere =       .00000    g/sq.ft.
                Advection in from water table =     -.14553E-01g/sq.ft.
                Diffusion in from atmosphere =      -.61433E-03g/sq.ft.
                Diffusion in from water table =      .00000    g/sq.ft.
           Total inflow at boundaries =     -.15167E-01g/sq.ft.
           Mass discrepancy =     -.18626E-08g/sq.ft.


Polygon   1
At time =       9.00, total mass in vadose zone =     .11396    g/sq.ft.
Mass in gas phase     =       .14618E-01g/sq.ft.
Mass in liquid phase  =       .62547E-01g/sq.ft.
Mass sorbed           =       .36792E-01g/sq.ft.

Since last printout at time =       8.00
           Change in Total Mass =     -.18014E-02g/sq.ft.
                Advection in from atmosphere =       .00000    g/sq.ft.
                Advection in from water table =     -.17364E-02g/sq.ft.
                Diffusion in from atmosphere =      -.65013E-04g/sq.ft.
                Diffusion in from water table =      .00000    g/sq.ft.
           Total inflow at boundaries =     -.18014E-02g/sq.ft.
           Mass discrepancy =      .88476E-08g/sq.ft.

Since beginning of run at time = 0.0
           Change in Total Mass =     -.16968E-01g/sq.ft.
                Advection in from atmosphere =       .00000    g/sq.ft.
                Advection in from water table =     -.16289E-01g/sq.ft.
                Diffusion in from atmosphere =      -.67934E-03g/sq.ft.
                Diffusion in from water table =      .00000    g/sq.ft.
           Total inflow at boundaries =     -.16968E-01g/sq.ft.
           Mass discrepancy =      .74506E-08g/sq.ft.


Polygon   1
At time =      10.00, total mass in vadose zone =     .11218    g/sq.ft.
Mass in gas phase     =       .14390E-01g/sq.ft.
```

```
Mass in liquid phase  =        .61571E-01g/sq.ft.
Mass sorbed           =        .36218E-01g/sq.ft.

Since last printout at time =       9.00
               Change in Total Mass =     -.17782E-02g/sq.ft.
                    Advection in from atmosphere =        .00000    g/sq.ft.
                    Advection in from water table =     -.17155E-02g/sq.ft.
                    Diffusion in from atmosphere =      -.62709E-04g/sq.ft.
                    Diffusion in from water table =       .00000    g/sq.ft.
               Total inflow at boundaries =     -.17782E-02g/sq.ft.
               Mass discrepancy =     -.65193E-08g/sq.ft.

Since beginning of run at time = 0.0
               Change in Total Mass =     -.18747E-01g/sq.ft.
                    Advection in from atmosphere =        .00000    g/sq.ft.
                    Advection in from water table =     -.18005E-01g/sq.ft.
                    Diffusion in from atmosphere =      -.74205E-03g/sq.ft.
                    Diffusion in from water table =       .00000    g/sq.ft.
               Total inflow at boundaries =     -.18747E-01g/sq.ft.
               Mass discrepancy =      .18626E-08g/sq.ft.


Polygon   1
At time =      11.00, total mass in vadose zone =      .11042    g/sq.ft.
Mass in gas phase     =        .14165E-01g/sq.ft.
Mass in liquid phase  =        .60607E-01g/sq.ft.
Mass sorbed           =        .35651E-01g/sq.ft.

Since last printout at time =      10.00
               Change in Total Mass =     -.17553E-02g/sq.ft.
                    Advection in from atmosphere =        .00000    g/sq.ft.
                    Advection in from water table =     -.16948E-02g/sq.ft.
                    Diffusion in from atmosphere =      -.60500E-04g/sq.ft.
                    Diffusion in from water table =       .00000    g/sq.ft.
               Total inflow at boundaries =     -.17553E-02g/sq.ft.
               Mass discrepancy =     -.22119E-08g/sq.ft.

Since beginning of run at time = 0.0
               Change in Total Mass =     -.20502E-01g/sq.ft.
                    Advection in from atmosphere =        .00000    g/sq.ft.
                    Advection in from water table =     -.19699E-01g/sq.ft.
                    Diffusion in from atmosphere =      -.80255E-03g/sq.ft.
                    Diffusion in from water table =       .00000    g/sq.ft.
               Total inflow at boundaries =     -.20502E-01g/sq.ft.
               Mass discrepancy =     -.18626E-08g/sq.ft.


Polygon   1
At time =      12.00, total mass in vadose zone =      .10869    g/sq.ft.
Mass in gas phase     =        .13943E-01g/sq.ft.
Mass in liquid phase  =        .59656E-01g/sq.ft.
Mass sorbed           =        .35092E-01g/sq.ft.

Since last printout at time =      11.00
               Change in Total Mass =     -.17329E-02g/sq.ft.
                    Advection in from atmosphere =        .00000    g/sq.ft.
                    Advection in from water table =     -.16745E-02g/sq.ft.
                    Diffusion in from atmosphere =      -.58383E-04g/sq.ft.
                    Diffusion in from water table =       .00000    g/sq.ft.
               Total inflow at boundaries =     -.17329E-02g/sq.ft.
```

Mass discrepancy = .14552E-07g/sq.ft.

Since beginning of run at time = 0.0
Change in Total Mass = -.22235E-01g/sq.ft.
Advection in from atmosphere = .00000 g/sq.ft.
Advection in from water table = -.21374E-01g/sq.ft.
Diffusion in from atmosphere = -.86093E-03g/sq.ft.
Diffusion in from water table = .00000 g/sq.ft.
Total inflow at boundaries = -.22235E-01g/sq.ft.
Mass discrepancy = .13039E-07g/sq.ft.

Polygon 1
At time = 13.00, total mass in vadose zone = .10698 g/sq.ft.
Mass in gas phase = .13723E-01g/sq.ft.
Mass in liquid phase = .58717E-01g/sq.ft.
Mass sorbed = .34540E-01g/sq.ft.

Since last printout at time = 12.00
Change in Total Mass = -.17110E-02g/sq.ft.
Advection in from atmosphere = .00000 g/sq.ft.
Advection in from water table = -.16547E-02g/sq.ft.
Diffusion in from atmosphere = -.56354E-04g/sq.ft.
Diffusion in from water table = .00000 g/sq.ft.
Total inflow at boundaries = -.17110E-02g/sq.ft.
Mass discrepancy = .74506E-08g/sq.ft.

Since beginning of run at time = 0.0
Change in Total Mass = -.23946E-01g/sq.ft.
Advection in from atmosphere = .00000 g/sq.ft.
Advection in from water table = -.23029E-01g/sq.ft.
Diffusion in from atmosphere = -.91729E-03g/sq.ft.
Diffusion in from water table = .00000 g/sq.ft.
Total inflow at boundaries = -.23946E-01g/sq.ft.
Mass discrepancy = .20489E-07g/sq.ft.

Polygon 1
At time = 14.00, total mass in vadose zone = .10529 g/sq.ft.
Mass in gas phase = .13506E-01g/sq.ft.
Mass in liquid phase = .57789E-01g/sq.ft.
Mass sorbed = .33994E-01g/sq.ft.

Since last printout at time = 13.00
Change in Total Mass = -.16896E-02g/sq.ft.
Advection in from atmosphere = .00000 g/sq.ft.
Advection in from water table = -.16352E-02g/sq.ft.
Diffusion in from atmosphere = -.54410E-04g/sq.ft.
Diffusion in from water table = .00000 g/sq.ft.
Total inflow at boundaries = -.16896E-02g/sq.ft.
Mass discrepancy = -.16647E-07g/sq.ft.

Since beginning of run at time = 0.0
Change in Total Mass = -.25636E-01g/sq.ft.
Advection in from atmosphere = .00000 g/sq.ft.
Advection in from water table = -.24664E-01g/sq.ft.
Diffusion in from atmosphere = -.97170E-03g/sq.ft.
Diffusion in from water table = .00000 g/sq.ft.
Total inflow at boundaries = -.25636E-01g/sq.ft.
Mass discrepancy = .55879E-08g/sq.ft.

```
Polygon   1
At time =      15.00, total mass in vadose zone =     .10362    g/sq.ft.
Mass in gas phase     =       .13292E-01g/sq.ft.
Mass in liquid phase  =       .56874E-01g/sq.ft.
Mass sorbed           =       .33455E-01g/sq.ft.

Since last printout at time =     14.00
               Change in Total Mass =     -.16687E-02g/sq.ft.
                    Advection in from atmosphere =       .00000    g/sq.ft.
                    Advection in from water table =     -.16161E-02g/sq.ft.
                    Diffusion in from atmosphere =      -.52548E-04g/sq.ft.
                    Diffusion in from water table =      .00000    g/sq.ft.
               Total inflow at boundaries =     -.16687E-02g/sq.ft.
               Mass discrepancy =     -.10477E-08g/sq.ft.

Since beginning of run at time = 0.0
               Change in Total Mass =     -.27304E-01g/sq.ft.
                    Advection in from atmosphere =       .00000    g/sq.ft.
                    Advection in from water table =     -.26280E-01g/sq.ft.
                    Diffusion in from atmosphere =      -.10242E-02g/sq.ft.
                    Diffusion in from water table =      .00000    g/sq.ft.
               Total inflow at boundaries =     -.27304E-01g/sq.ft.
               Mass discrepancy =      .37253E-08g/sq.ft.


Polygon   1
At time =      16.00, total mass in vadose zone =     .10197    g/sq.ft.
Mass in gas phase     =       .13081E-01g/sq.ft.
Mass in liquid phase  =       .55969E-01g/sq.ft.
Mass sorbed           =       .32923E-01g/sq.ft.

Since last printout at time =      15.00
               Change in Total Mass =     -.16482E-02g/sq.ft.
                    Advection in from atmosphere =       .00000    g/sq.ft.
                    Advection in from water table =     -.15974E-02g/sq.ft.
                    Diffusion in from atmosphere =      -.50764E-04g/sq.ft.
                    Diffusion in from water table =      .00000    g/sq.ft.
               Total inflow at boundaries =     -.16482E-02g/sq.ft.
               Mass discrepancy =      .91968E-08g/sq.ft.

Since beginning of run at time = 0.0
               Change in Total Mass =     -.28952E-01g/sq.ft.
                    Advection in from atmosphere =       .00000    g/sq.ft.
                    Advection in from water table =     -.27877E-01g/sq.ft.
                    Diffusion in from atmosphere =      -.10750E-02g/sq.ft.
                    Diffusion in from water table =      .00000    g/sq.ft.
               Total inflow at boundaries =     -.28952E-01g/sq.ft.
               Mass discrepancy =      .13039E-07g/sq.ft.


Polygon   1
At time =      17.00, total mass in vadose zone =     .10035    g/sq.ft.
Mass in gas phase     =       .12872E-01g/sq.ft.
Mass in liquid phase  =       .55075E-01g/sq.ft.
Mass sorbed           =       .32398E-01g/sq.ft.

Since last printout at time =      16.00
               Change in Total Mass =     -.16280E-02g/sq.ft.
```

```
                    Advection in from atmosphere =       .00000    g/sq.ft.
                    Advection in from water table =     -.15790E-02g/sq.ft.
                    Diffusion in from atmosphere =      -.49055E-04g/sq.ft.
                    Diffusion in from water table =       .00000    g/sq.ft.
               Total inflow at boundaries =     -.16280E-02g/sq.ft.
               Mass discrepancy =     -.48894E-08g/sq.ft.

Since beginning of run at time = 0.0
               Change in Total Mass =     -.30580E-01g/sq.ft.
                    Advection in from atmosphere =       .00000    g/sq.ft.
                    Advection in from water table =     -.29456E-01g/sq.ft.
                    Diffusion in from atmosphere =      -.11241E-02g/sq.ft.
                    Diffusion in from water table =       .00000    g/sq.ft.
               Total inflow at boundaries =     -.30580E-01g/sq.ft.
               Mass discrepancy =      .74506E-08g/sq.ft.


Polygon   1
At time =      18.00, total mass in vadose zone =     .98737E-01g/sq.ft.
Mass in gas phase     =       .12666E-01g/sq.ft.
Mass in liquid phase  =       .54193E-01g/sq.ft.
Mass sorbed           =       .31878E-01g/sq.ft.

Since last printout at time =      17.00
               Change in Total Mass =     -.16082E-02g/sq.ft.
                    Advection in from atmosphere =       .00000    g/sq.ft.
                    Advection in from water table =     -.15608E-02g/sq.ft.
                    Diffusion in from atmosphere =      -.47416E-04g/sq.ft.
                    Diffusion in from water table =       .00000    g/sq.ft.
               Total inflow at boundaries =     -.16082E-02g/sq.ft.
               Mass discrepancy =      .89640E-08g/sq.ft.

Since beginning of run at time = 0.0
               Change in Total Mass =     -.32189E-01g/sq.ft.
                    Advection in from atmosphere =       .00000    g/sq.ft.
                    Advection in from water table =     -.31017E-01g/sq.ft.
                    Diffusion in from atmosphere =      -.11715E-02g/sq.ft.
                    Diffusion in from water table =       .00000    g/sq.ft.
               Total inflow at boundaries =     -.32189E-01g/sq.ft.
               Mass discrepancy =      .14901E-07g/sq.ft.


Polygon   1
At time =      19.00, total mass in vadose zone =     .97148E-01g/sq.ft.
Mass in gas phase     =       .12462E-01g/sq.ft.
Mass in liquid phase  =       .53321E-01g/sq.ft.
Mass sorbed           =       .31365E-01g/sq.ft.

Since last printout at time =      18.00
               Change in Total Mass =     -.15887E-02g/sq.ft.
                    Advection in from atmosphere =       .00000    g/sq.ft.
                    Advection in from water table =     -.15429E-02g/sq.ft.
                    Diffusion in from atmosphere =      -.45845E-04g/sq.ft.
                    Diffusion in from water table =       .00000    g/sq.ft.
               Total inflow at boundaries =     -.15887E-02g/sq.ft.
               Mass discrepancy =     -.25611E-08g/sq.ft.

Since beginning of run at time = 0.0
               Change in Total Mass =     -.33777E-01g/sq.ft.
                    Advection in from atmosphere =       .00000    g/sq.ft.
```

```
                Advection in from water table =     -.32560E-01g/sq.ft.
                Diffusion in from atmosphere =      -.12173E-02g/sq.ft.
                Diffusion in from water table =      .00000    g/sq.ft.
           Total inflow at boundaries =     -.33777E-01g/sq.ft.
           Mass discrepancy =      .11176E-07g/sq.ft.


Polygon   1
At time =      20.00, total mass in vadose zone =     .95579E-01g/sq.ft.
Mass in gas phase     =       .12261E-01g/sq.ft.
Mass in liquid phase  =       .52459E-01g/sq.ft.
Mass sorbed           =       .30859E-01g/sq.ft.

Since last printout at time =      19.00
           Change in Total Mass =     -.15695E-02g/sq.ft.
                Advection in from atmosphere =       .00000    g/sq.ft.
                Advection in from water table =     -.15252E-02g/sq.ft.
                Diffusion in from atmosphere =      -.44339E-04g/sq.ft.
                Diffusion in from water table =      .00000    g/sq.ft.
           Total inflow at boundaries =     -.15695E-02g/sq.ft.
           Mass discrepancy =     -.11642E-07g/sq.ft.

Since beginning of run at time = 0.0
           Change in Total Mass =     -.35347E-01g/sq.ft.
                Advection in from atmosphere =       .00000    g/sq.ft.
                Advection in from water table =     -.34085E-01g/sq.ft.
                Diffusion in from atmosphere =      -.12617E-02g/sq.ft.
                Diffusion in from water table =      .00000    g/sq.ft.
           Total inflow at boundaries =     -.35347E-01g/sq.ft.
           Mass discrepancy =      .00000    g/sq.ft.


Polygon   1
At time =      21.00, total mass in vadose zone =     .94028E-01g/sq.ft.
Mass in gas phase     =       .12062E-01g/sq.ft.
Mass in liquid phase  =       .51608E-01g/sq.ft.
Mass sorbed           =       .30358E-01g/sq.ft.

Since last printout at time =      20.00
           Change in Total Mass =     -.15505E-02g/sq.ft.
                Advection in from atmosphere =       .00000    g/sq.ft.
                Advection in from water table =     -.15076E-02g/sq.ft.
                Diffusion in from atmosphere =      -.42894E-04g/sq.ft.
                Diffusion in from water table =      .00000    g/sq.ft.
           Total inflow at boundaries =     -.15505E-02g/sq.ft.
           Mass discrepancy =      .23749E-07g/sq.ft.

Since beginning of run at time = 0.0
           Change in Total Mass =     -.36897E-01g/sq.ft.
                Advection in from atmosphere =       .00000    g/sq.ft.
                Advection in from water table =     -.35593E-01g/sq.ft.
                Diffusion in from atmosphere =      -.13046E-02g/sq.ft.
                Diffusion in from water table =      .00000    g/sq.ft.
           Total inflow at boundaries =     -.36897E-01g/sq.ft.
           Mass discrepancy =      .26077E-07g/sq.ft.


Polygon   1
At time =      22.00, total mass in vadose zone =     .92496E-01g/sq.ft.
Mass in gas phase     =       .11865E-01g/sq.ft.
```

```
Mass in liquid phase  =       .50768E-01g/sq.ft.
Mass sorbed           =       .29863E-01g/sq.ft.

Since last printout at time =      21.00
              Change in Total Mass =     -.15317E-02g/sq.ft.
                   Advection in from atmosphere =       .00000    g/sq.ft.
                   Advection in from water table =    -.14902E-02g/sq.ft.
                   Diffusion in from atmosphere =     -.41507E-04g/sq.ft.
                   Diffusion in from water table =      .00000    g/sq.ft.
              Total inflow at boundaries =     -.15317E-02g/sq.ft.
              Mass discrepancy =      .84983E-08g/sq.ft.

Since beginning of run at time = 0.0
              Change in Total Mass =     -.38429E-01g/sq.ft.
                   Advection in from atmosphere =       .00000    g/sq.ft.
                   Advection in from water table =    -.37083E-01g/sq.ft.
                   Diffusion in from atmosphere =     -.13461E-02g/sq.ft.
                   Diffusion in from water table =      .00000    g/sq.ft.
              Total inflow at boundaries =     -.38429E-01g/sq.ft.
              Mass discrepancy =      .33528E-07g/sq.ft.


Polygon   1
At time =      23.00, total mass in vadose zone =     .90983E-01g/sq.ft.
Mass in gas phase     =       .11671E-01g/sq.ft.
Mass in liquid phase  =       .49937E-01g/sq.ft.
Mass sorbed           =       .29375E-01g/sq.ft.

Since last printout at time =      22.00
              Change in Total Mass =     -.15131E-02g/sq.ft.
                   Advection in from atmosphere =       .00000    g/sq.ft.
                   Advection in from water table =    -.14730E-02g/sq.ft.
                   Diffusion in from atmosphere =     -.40176E-04g/sq.ft.
                   Diffusion in from water table =      .00000    g/sq.ft.
              Total inflow at boundaries =     -.15131E-02g/sq.ft.
              Mass discrepancy =     -.14319E-07g/sq.ft.

Since beginning of run at time = 0.0
              Change in Total Mass =     -.39942E-01g/sq.ft.
                   Advection in from atmosphere =       .00000    g/sq.ft.
                   Advection in from water table =    -.38556E-01g/sq.ft.
                   Diffusion in from atmosphere =     -.13862E-02g/sq.ft.
                   Diffusion in from water table =      .00000    g/sq.ft.
              Total inflow at boundaries =     -.39942E-01g/sq.ft.
              Mass discrepancy =      .18626E-07g/sq.ft.


Polygon   1
At time =      24.00, total mass in vadose zone =     .89488E-01g/sq.ft.
Mass in gas phase     =       .11479E-01g/sq.ft.
Mass in liquid phase  =       .49117E-01g/sq.ft.
Mass sorbed           =       .28892E-01g/sq.ft.

Since last printout at time =      23.00
              Change in Total Mass =     -.14947E-02g/sq.ft.
                   Advection in from atmosphere =       .00000    g/sq.ft.
                   Advection in from water table =    -.14558E-02g/sq.ft.
                   Diffusion in from atmosphere =     -.38897E-04g/sq.ft.
                   Diffusion in from water table =      .00000    g/sq.ft.
              Total inflow at boundaries =     -.14947E-02g/sq.ft.
```

```
              Mass discrepancy =      .83819E-08g/sq.ft.

Since beginning of run at time = 0.0
              Change in Total Mass =     -.41437E-01g/sq.ft.
                   Advection in from atmosphere =       .00000    g/sq.ft.
                   Advection in from water table =     -.40012E-01g/sq.ft.
                   Diffusion in from atmosphere =      -.14251E-02g/sq.ft.
                   Diffusion in from water table =      .00000    g/sq.ft.
              Total inflow at boundaries =     -.41437E-01g/sq.ft.
              Mass discrepancy =      .29802E-07g/sq.ft.


Polygon   1
At time =      25.00, total mass in vadose zone =     .88012E-01g/sq.ft.
Mass in gas phase     =       .11290E-01g/sq.ft.
Mass in liquid phase  =       .48306E-01g/sq.ft.
Mass sorbed           =       .28416E-01g/sq.ft.

Since last printout at time =      24.00
              Change in Total Mass =     -.14765E-02g/sq.ft.
                   Advection in from atmosphere =       .00000    g/sq.ft.
                   Advection in from water table =     -.14388E-02g/sq.ft.
                   Diffusion in from atmosphere =      -.37669E-04g/sq.ft.
                   Diffusion in from water table =      .00000    g/sq.ft.
              Total inflow at boundaries =     -.14765E-02g/sq.ft.
              Mass discrepancy =     -.22119E-08g/sq.ft.

Since beginning of run at time = 0.0
              Change in Total Mass =     -.42913E-01g/sq.ft.
                   Advection in from atmosphere =       .00000    g/sq.ft.
                   Advection in from water table =     -.41451E-01g/sq.ft.
                   Diffusion in from atmosphere =      -.14628E-02g/sq.ft.
                   Diffusion in from water table =      .00000    g/sq.ft.
              Total inflow at boundaries =     -.42913E-01g/sq.ft.
              Mass discrepancy =      .26077E-07g/sq.ft.


Polygon   1
At time =      26.00, total mass in vadose zone =     .86553E-01g/sq.ft.
Mass in gas phase     =       .11103E-01g/sq.ft.
Mass in liquid phase  =       .47506E-01g/sq.ft.
Mass sorbed           =       .27945E-01g/sq.ft.

Since last printout at time =      25.00
              Change in Total Mass =     -.14585E-02g/sq.ft.
                   Advection in from atmosphere =       .00000    g/sq.ft.
                   Advection in from water table =     -.14220E-02g/sq.ft.
                   Diffusion in from atmosphere =      -.36488E-04g/sq.ft.
                   Diffusion in from water table =      .00000    g/sq.ft.
              Total inflow at boundaries =     -.14585E-02g/sq.ft.
              Mass discrepancy =     -.11991E-07g/sq.ft.

Since beginning of run at time = 0.0
              Change in Total Mass =     -.44372E-01g/sq.ft.
                   Advection in from atmosphere =       .00000    g/sq.ft.
                   Advection in from water table =     -.42873E-01g/sq.ft.
                   Diffusion in from atmosphere =      -.14993E-02g/sq.ft.
                   Diffusion in from water table =      .00000    g/sq.ft.
              Total inflow at boundaries =     -.44372E-01g/sq.ft.
              Mass discrepancy =      .14901E-07g/sq.ft.
```

```
Polygon   1
At time =      27.00, total mass in vadose zone =     .85113E-01g/sq.ft.
Mass in gas phase     =       .10918E-01g/sq.ft.
Mass in liquid phase  =       .46715E-01g/sq.ft.
Mass sorbed           =       .27480E-01g/sq.ft.

Since last printout at time =      26.00
               Change in Total Mass =     -.14406E-02g/sq.ft.
                    Advection in from atmosphere =       .00000    g/sq.ft.
                    Advection in from water table =     -.14052E-02g/sq.ft.
                    Diffusion in from atmosphere =      -.35353E-04g/sq.ft.
                    Diffusion in from water table =      .00000    g/sq.ft.
               Total inflow at boundaries =     -.14406E-02g/sq.ft.
               Mass discrepancy =      .00000    g/sq.ft.

Since beginning of run at time = 0.0
               Change in Total Mass =     -.45812E-01g/sq.ft.
                    Advection in from atmosphere =       .00000    g/sq.ft.
                    Advection in from water table =     -.44278E-01g/sq.ft.
                    Diffusion in from atmosphere =      -.15346E-02g/sq.ft.
                    Diffusion in from water table =      .00000    g/sq.ft.
               Total inflow at boundaries =     -.45813E-01g/sq.ft.
               Mass discrepancy =      .14901E-07g/sq.ft.


Polygon   1
At time =      28.00, total mass in vadose zone =     .83690E-01g/sq.ft.
Mass in gas phase     =       .10736E-01g/sq.ft.
Mass in liquid phase  =       .45934E-01g/sq.ft.
Mass sorbed           =       .27020E-01g/sq.ft.

Since last printout at time =      27.00
               Change in Total Mass =     -.14228E-02g/sq.ft.
                    Advection in from atmosphere =       .00000    g/sq.ft.
                    Advection in from water table =     -.13885E-02g/sq.ft.
                    Diffusion in from atmosphere =      -.34261E-04g/sq.ft.
                    Diffusion in from water table =      .00000    g/sq.ft.
               Total inflow at boundaries =     -.14228E-02g/sq.ft.
               Mass discrepancy =     -.46566E-08g/sq.ft.

Since beginning of run at time = 0.0
               Change in Total Mass =     -.47235E-01g/sq.ft.
                    Advection in from atmosphere =       .00000    g/sq.ft.
                    Advection in from water table =     -.45666E-01g/sq.ft.
                    Diffusion in from atmosphere =      -.15689E-02g/sq.ft.
                    Diffusion in from water table =      .00000    g/sq.ft.
               Total inflow at boundaries =     -.47235E-01g/sq.ft.
               Mass discrepancy =      .11176E-07g/sq.ft.


Polygon   1
At time =      29.00, total mass in vadose zone =     .82285E-01g/sq.ft.
Mass in gas phase     =       .10555E-01g/sq.ft.
Mass in liquid phase  =       .45163E-01g/sq.ft.
Mass sorbed           =       .26567E-01g/sq.ft.

Since last printout at time =      28.00
               Change in Total Mass =     -.14052E-02g/sq.ft.
```

```
                Advection in from atmosphere =       .00000    g/sq.ft.
                Advection in from water table =     -.13720E-02g/sq.ft.
                Diffusion in from atmosphere =      -.33211E-04g/sq.ft.
                Diffusion in from water table =      .00000    g/sq.ft.
           Total inflow at boundaries =     -.14052E-02g/sq.ft.
           Mass discrepancy =     -.34925E-08g/sq.ft.

Since beginning of run at time = 0.0
           Change in Total Mass =     -.48641E-01g/sq.ft.
                Advection in from atmosphere =       .00000    g/sq.ft.
                Advection in from water table =     -.47038E-01g/sq.ft.
                Diffusion in from atmosphere =      -.16021E-02g/sq.ft.
                Diffusion in from water table =      .00000    g/sq.ft.
           Total inflow at boundaries =     -.48641E-01g/sq.ft.
           Mass discrepancy =      .74506E-08g/sq.ft.


Polygon   1
At time =      30.00, total mass in vadose zone =     .80897E-01g/sq.ft.
Mass in gas phase     =       .10377E-01g/sq.ft.
Mass in liquid phase  =       .44401E-01g/sq.ft.
Mass sorbed           =       .26119E-01g/sq.ft.

Since last printout at time =      29.00
           Change in Total Mass =     -.13877E-02g/sq.ft.
                Advection in from atmosphere =       .00000    g/sq.ft.
                Advection in from water table =     -.13555E-02g/sq.ft.
                Diffusion in from atmosphere =      -.32200E-04g/sq.ft.
                Diffusion in from water table =      .00000    g/sq.ft.
           Total inflow at boundaries =     -.13877E-02g/sq.ft.
           Mass discrepancy =      .18859E-07g/sq.ft.

Since beginning of run at time = 0.0
           Change in Total Mass =     -.50028E-01g/sq.ft.
                Advection in from atmosphere =       .00000    g/sq.ft.
                Advection in from water table =     -.48394E-01g/sq.ft.
                Diffusion in from atmosphere =      -.16343E-02g/sq.ft.
                Diffusion in from water table =      .00000    g/sq.ft.
           Total inflow at boundaries =     -.50028E-01g/sq.ft.
           Mass discrepancy =      .29802E-07g/sq.ft.


GROUNDWATER IMPACT OF POLYGON   1

 Time        Mass per area (g/sq.ft.)      Total Mass (g)
     1.00          .18681E-02                224.18
     2.00          .18582E-02                222.99
     3.00          .18463E-02                221.55
     4.00          .18320E-02                219.85
     5.00          .18156E-02                217.88
     6.00          .17974E-02                215.68
     7.00          .17777E-02                213.33
     8.00          .17573E-02                210.87
     9.00          .17364E-02                208.37
    10.00          .17155E-02                205.86
    11.00          .16948E-02                203.38
    12.00          .16745E-02                200.95
    13.00          .16547E-02                198.56
    14.00          .16352E-02                196.22
    15.00          .16161E-02                193.94
```

16.00	.15974E-02	191.69
17.00	.15790E-02	189.48
18.00	.15608E-02	187.30
19.00	.15429E-02	185.15
20.00	.15252E-02	183.02
21.00	.15076E-02	180.91
22.00	.14902E-02	178.82
23.00	.14730E-02	176.75
24.00	.14558E-02	174.70
25.00	.14388E-02	172.66
26.00	.14220E-02	170.64
27.00	.14052E-02	168.63
28.00	.13885E-02	166.63
29.00	.13720E-02	164.64
30.00	.13555E-02	162.66

****

****

TOTAL GROUNDWATER IMPACT

Time (yr)	Mass (g)	Cumulative Mass (g)
1.00	224.18	224.18
2.00	222.99	447.16
3.00	221.55	668.71
4.00	219.85	888.56
5.00	217.88	1106.4
6.00	215.68	1322.1
7.00	213.33	1535.5
8.00	210.87	1746.3
9.00	208.37	1954.7
10.00	205.86	2160.5
11.00	203.38	2363.9
12.00	200.95	2564.9
13.00	198.56	2763.4
14.00	196.22	2959.7
15.00	193.94	3153.6
16.00	191.69	3345.3
17.00	189.48	3534.8
18.00	187.30	3722.1
19.00	185.15	3907.2
20.00	183.02	4090.2
21.00	180.91	4271.1
22.00	178.82	4450.0
23.00	176.75	4626.7
24.00	174.70	4801.4
25.00	172.66	4974.1
26.00	170.64	5144.7
27.00	168.63	5313.3
28.00	166.63	5480.0
29.00	164.64	5644.6
30.00	162.66	5807.3

Polygon 38
Time: .000

Cell	Cgas(g/cu.ft.)	Cliq(g/cu.ft.)	Csol
1	.27894E-04	.58973E-04	.19048E-09
2	.27894E-04	.58973E-04	.19048E-09
3	.27894E-04	.58973E-04	.19048E-09
4	.27894E-04	.58973E-04	.19048E-09
5	.27894E-04	.58973E-04	.19048E-09
6	.27894E-04	.58973E-04	.19048E-09
7	.44158E-03	.93357E-03	.30154E-08
8	.44158E-03	.93357E-03	.30154E-08
9	.44158E-03	.93357E-03	.30154E-08
10	.44158E-03	.93357E-03	.30154E-08
11	.44158E-03	.93357E-03	.30154E-08
12	.44158E-03	.93357E-03	.30154E-08
13	.94745E-03	.20031E-02	.64699E-08
14	.94745E-03	.20031E-02	.64699E-08
15	.94745E-03	.20031E-02	.64699E-08
16	.94745E-03	.20031E-02	.64699E-08
17	.94745E-03	.20031E-02	.64699E-08
18	.94745E-03	.20031E-02	.64699E-08
19	.14533E-02	.30726E-02	.99244E-08
20	.14533E-02	.30726E-02	.99244E-08
21	.14533E-02	.30726E-02	.99244E-08
22	.14533E-02	.30726E-02	.99244E-08
23	.14533E-02	.30726E-02	.99244E-08
24	.14533E-02	.30726E-02	.99244E-08
25	.19592E-02	.41421E-02	.13379E-07
26	.19592E-02	.41421E-02	.13379E-07
27	.19592E-02	.41421E-02	.13379E-07
28	.19592E-02	.41421E-02	.13379E-07
29	.19592E-02	.41421E-02	.13379E-07
30	.19592E-02	.41421E-02	.13379E-07
31	.24651E-02	.52116E-02	.16833E-07
32	.24651E-02	.52116E-02	.16833E-07
33	.24651E-02	.52116E-02	.16833E-07
34	.24651E-02	.52116E-02	.16833E-07
35	.24651E-02	.52116E-02	.16833E-07
36	.24651E-02	.52116E-02	.16833E-07
37	.29714E-02	.62821E-02	.20291E-07
38	.29714E-02	.62821E-02	.20291E-07
39	.29714E-02	.62821E-02	.20291E-07
40	.29714E-02	.62821E-02	.20291E-07
41	.29714E-02	.62821E-02	.20291E-07
42	.29714E-02	.62821E-02	.20291E-07
43	.34773E-02	.73516E-02	.23746E-07
44	.34773E-02	.73516E-02	.23746E-07
45	.34773E-02	.73516E-02	.23746E-07
46	.34773E-02	.73516E-02	.23746E-07
47	.34773E-02	.73516E-02	.23746E-07
48	.34773E-02	.73516E-02	.23746E-07
49	.39832E-02	.84211E-02	.27200E-07
50	.39832E-02	.84211E-02	.27200E-07
51	.39832E-02	.84211E-02	.27200E-07
52	.39832E-02	.84211E-02	.27200E-07
53	.39832E-02	.84211E-02	.27200E-07
54	.39832E-02	.84211E-02	.27200E-07
55	.44890E-02	.94906E-02	.30655E-07
56	.44890E-02	.94906E-02	.30655E-07

57	.44890E-02	.94906E-02	.30655E-07
58	.44890E-02	.94906E-02	.30655E-07
59	.44890E-02	.94906E-02	.30655E-07
60	.44890E-02	.94906E-02	.30655E-07

Polygon 38
Time: 10.000

Cell	Cgas(g/cu.ft.)	Cliq(g/cu.ft.)	Csol
1	.81549E-05	.17241E-04	.55688E-10
2	.21172E-04	.44762E-04	.14458E-09
3	.38525E-04	.81449E-04	.26308E-09
4	.59638E-04	.12609E-03	.40726E-09
5	.83997E-04	.17758E-03	.57360E-09
6	.11132E-03	.23535E-03	.76018E-09
7	.14305E-03	.30244E-03	.97687E-09
8	.18205E-03	.38488E-03	.12432E-08
9	.22994E-03	.48613E-03	.15702E-08
10	.28547E-03	.60352E-03	.19494E-08
11	.34536E-03	.73015E-03	.23584E-08
12	.40634E-03	.85908E-03	.27748E-08
13	.46824E-03	.98994E-03	.31975E-08
14	.53388E-03	.11287E-02	.36457E-08
15	.60549E-03	.12801E-02	.41348E-08
16	.68223E-03	.14423E-02	.46588E-08
17	.76084E-03	.16085E-02	.51956E-08
18	.83792E-03	.17715E-02	.57219E-08
19	.91328E-03	.19308E-02	.62366E-08
20	.98994E-03	.20929E-02	.67601E-08
21	.10705E-02	.22632E-02	.73100E-08
22	.11544E-02	.24406E-02	.78832E-08
23	.12388E-02	.26191E-02	.84597E-08
24	.13206E-02	.27920E-02	.90183E-08
25	.13999E-02	.29595E-02	.95593E-08
26	.14797E-02	.31283E-02	.10104E-07
27	.15628E-02	.33041E-02	.10672E-07
28	.16489E-02	.34861E-02	.11260E-07
29	.17351E-02	.36682E-02	.11848E-07
30	.18183E-02	.38442E-02	.12417E-07
31	.18987E-02	.40141E-02	.12966E-07
32	.19794E-02	.41848E-02	.13517E-07
33	.20632E-02	.43620E-02	.14089E-07
34	.21498E-02	.45450E-02	.14680E-07
35	.22363E-02	.47278E-02	.15271E-07
36	.23197E-02	.49041E-02	.15840E-07
37	.24000E-02	.50740E-02	.16389E-07
38	.24806E-02	.52444E-02	.16939E-07
39	.25641E-02	.54209E-02	.17510E-07
40	.26502E-02	.56029E-02	.18097E-07
41	.27360E-02	.57843E-02	.18683E-07
42	.28184E-02	.59586E-02	.19246E-07
43	.28976E-02	.61261E-02	.19787E-07
44	.29767E-02	.62933E-02	.20327E-07
45	.30584E-02	.64660E-02	.20885E-07
46	.31423E-02	.66433E-02	.21458E-07
47	.32254E-02	.68190E-02	.22025E-07
48	.33046E-02	.69864E-02	.22566E-07
49	.33799E-02	.71456E-02	.23080E-07
50	.34543E-02	.73029E-02	.23589E-07
51	.35304E-02	.74638E-02	.24108E-07
52	.36075E-02	.76269E-02	.24635E-07

53	.36826E-02	.77857E-02	.25148E-07
54	.37523E-02	.79330E-02	.25624E-07
55	.38162E-02	.80682E-02	.26060E-07
56	.38771E-02	.81969E-02	.26476E-07
57	.39371E-02	.83237E-02	.26885E-07
58	.39951E-02	.84463E-02	.27282E-07
59	.40475E-02	.85570E-02	.27639E-07
60	.40901E-02	.86472E-02	.27931E-07

Polygon 38
Time: 20.000

Cell	Cgas(g/cu.ft.)	Cliq(g/cu.ft.)	Csol
1	.57079E-05	.12067E-04	.38978E-10
2	.14765E-04	.31215E-04	.10082E-09
3	.26907E-04	.56886E-04	.18374E-09
4	.41997E-04	.88789E-04	.28679E-09
5	.59979E-04	.12680E-03	.40958E-09
6	.80847E-04	.17092E-03	.55209E-09
7	.10463E-03	.22121E-03	.71452E-09
8	.13141E-03	.27783E-03	.89738E-09
9	.16133E-03	.34107E-03	.11017E-08
10	.19460E-03	.41142E-03	.13289E-08
11	.23148E-03	.48938E-03	.15807E-08
12	.27216E-03	.57539E-03	.18585E-08
13	.31669E-03	.66954E-03	.21626E-08
14	.36499E-03	.77164E-03	.24924E-08
15	.41684E-03	.88128E-03	.28465E-08
16	.47207E-03	.99803E-03	.32236E-08
17	.53050E-03	.11216E-02	.36226E-08
18	.59196E-03	.12515E-02	.40423E-08
19	.65623E-03	.13874E-02	.44813E-08
20	.72302E-03	.15286E-02	.49373E-08
21	.79199E-03	.16744E-02	.54083E-08
22	.86287E-03	.18242E-02	.58923E-08
23	.93545E-03	.19777E-02	.63880E-08
24	.10096E-02	.21345E-02	.68943E-08
25	.10851E-02	.22942E-02	.74102E-08
26	.11619E-02	.24563E-02	.79340E-08
27	.12395E-02	.26205E-02	.84643E-08
28	.13179E-02	.27863E-02	.89999E-08
29	.13971E-02	.29536E-02	.95402E-08
30	.14768E-02	.31223E-02	.10085E-07
31	.15572E-02	.32921E-02	.10634E-07
32	.16380E-02	.34629E-02	.11185E-07
33	.17190E-02	.36343E-02	.11739E-07
34	.18003E-02	.38061E-02	.12294E-07
35	.18817E-02	.39782E-02	.12850E-07
36	.19632E-02	.41506E-02	.13406E-07
37	.20449E-02	.43232E-02	.13964E-07
38	.21265E-02	.44958E-02	.14521E-07
39	.22080E-02	.46681E-02	.15078E-07
40	.22892E-02	.48398E-02	.15633E-07
41	.23702E-02	.50110E-02	.16186E-07
42	.24509E-02	.51815E-02	.16736E-07
43	.25311E-02	.53513E-02	.17285E-07
44	.26109E-02	.55199E-02	.17829E-07
45	.26900E-02	.56871E-02	.18369E-07
46	.27682E-02	.58525E-02	.18903E-07
47	.28455E-02	.60158E-02	.19431E-07
48	.29216E-02	.61768E-02	.19951E-07

49	.29966E-02	.63352E-02	.20463E-07
50	.30700E-02	.64904E-02	.20964E-07
51	.31415E-02	.66418E-02	.21453E-07
52	.32110E-02	.67885E-02	.21927E-07
53	.32779E-02	.69300E-02	.22384E-07
54	.33420E-02	.70656E-02	.22822E-07
55	.34030E-02	.71944E-02	.23238E-07
56	.34601E-02	.73152E-02	.23628E-07
57	.35128E-02	.74266E-02	.23988E-07
58	.35603E-02	.75271E-02	.24313E-07
59	.36020E-02	.76152E-02	.24597E-07
60	.36370E-02	.76891E-02	.24836E-07

Polygon 38
Time: 30.000

Cell	Cgas(g/cu.ft.)	Cliq(g/cu.ft.)	Csol
1	.41301E-05	.87317E-05	.28204E-10
2	.10669E-04	.22556E-04	.72855E-10
3	.19420E-04	.41057E-04	.13262E-09
4	.30283E-04	.64023E-04	.20679E-09
5	.43222E-04	.91379E-04	.29515E-09
6	.58253E-04	.12316E-03	.39779E-09
7	.75420E-04	.15945E-03	.51503E-09
8	.94794E-04	.20041E-03	.64733E-09
9	.11646E-03	.24621E-03	.79526E-09
10	.14050E-03	.29704E-03	.95945E-09
11	.16702E-03	.35311E-03	.11406E-08
12	.19612E-03	.41464E-03	.13393E-08
13	.22790E-03	.48182E-03	.15563E-08
14	.26245E-03	.55487E-03	.17922E-08
15	.29985E-03	.63394E-03	.20476E-08
16	.34016E-03	.71915E-03	.23229E-08
17	.38340E-03	.81056E-03	.26181E-08
18	.42956E-03	.90815E-03	.29333E-08
19	.47860E-03	.10118E-02	.32682E-08
20	.53045E-03	.11215E-02	.36223E-08
21	.58503E-03	.12368E-02	.39950E-08
22	.64221E-03	.13577E-02	.43855E-08
23	.70185E-03	.14838E-02	.47927E-08
24	.76380E-03	.16148E-02	.52158E-08
25	.82789E-03	.17503E-02	.56535E-08
26	.89397E-03	.18900E-02	.61047E-08
27	.96187E-03	.20335E-02	.65684E-08
28	.10314E-02	.21806E-02	.70433E-08
29	.11024E-02	.23307E-02	.75283E-08
30	.11748E-02	.24837E-02	.80224E-08
31	.12483E-02	.26392E-02	.85245E-08
32	.13229E-02	.27968E-02	.90336E-08
33	.13983E-02	.29563E-02	.95488E-08
34	.14745E-02	.31174E-02	.10069E-07
35	.15514E-02	.32798E-02	.10594E-07
36	.16287E-02	.34433E-02	.11122E-07
37	.17064E-02	.36077E-02	.11653E-07
38	.17844E-02	.37725E-02	.12185E-07
39	.18626E-02	.39378E-02	.12719E-07
40	.19407E-02	.41030E-02	.13253E-07
41	.20188E-02	.42682E-02	.13786E-07
42	.20967E-02	.44328E-02	.14318E-07
43	.21743E-02	.45968E-02	.14848E-07
44	.22514E-02	.47598E-02	.15374E-07

45	.23278E-02	.49214E-02	.15896E-07
46	.24035E-02	.50814E-02	.16413E-07
47	.24782E-02	.52394E-02	.16923E-07
48	.25518E-02	.53949E-02	.17426E-07
49	.26240E-02	.55476E-02	.17919E-07
50	.26946E-02	.56968E-02	.18401E-07
51	.27633E-02	.58420E-02	.18870E-07
52	.28298E-02	.59826E-02	.19324E-07
53	.28938E-02	.61179E-02	.19761E-07
54	.29548E-02	.62470E-02	.20178E-07
55	.30125E-02	.63690E-02	.20572E-07
56	.30664E-02	.64828E-02	.20940E-07
57	.31158E-02	.65874E-02	.21277E-07
58	.31602E-02	.66813E-02	.21581E-07
59	.31989E-02	.67631E-02	.21845E-07
60	.32311E-02	.68310E-02	.22064E-07

V-Leach, VER 1.1
Jake Turin, 11/91
PGA V-leach model, polygon screen-TCE-11/10/92-Poly38.INP New soil, Old chem
1 polygons.
Timestep = 1.00 years. Simulation length = 30.00 years.
Printout every 1.00 years. Vertical profile stored every 10.00 years.
Koc = 123.60 ml/g, .43649E-02cu.ft./g
Kh = .47300 (dimensionless).
Aqueous solubility = 1100.0 mg/l, 31.149 g/cu.ft
Free air diffusion coefficient = .70290 sq. m/day, 2761.7 sq.ft./yr

Polygon 1
Polygon 38
Polygon area = .12000E+06sq. ft.
60 cells, each cell 1.000 ft. thick.
Soil Properties:
Bulk density = 1.6400 g/ml, 46440. g/cu.ft.
Porosity = .3810 Volumetric water content = .2550
Organic carbon content = .00074000
Recharge Rate = .19685100 ft/yr
Conc. in recharge water = .00000 mg/l, .00000 g/cu.ft
Atmospheric concentration = .00000 mg/l, .00000 g/cu.ft
Water table is impermeable to gas diffusion.

Calculation of Total TCE Mass and Revised Vertical Distributions in Polygon 38 using HGC Distribution equations and Revised Soil Physical Data

0.985 (Cs) **	Cz = (3.023z - 11.38)Cs

Cz (ug/L) Vert. Dist. Eq.	Calculated Depth Interval (z)	Total Depth Interval (feet)	Total Soil Conc Ct* (ug/Kg)	Mt (ug/cc)	Volume of Soil (cubic ft)	Mass TCE (grams)	Mass TCE (pounds)
0.985	3	6	0.59	9.68E-04	720000	19.73	0.04
15.59	9	6	9.34	0.02	720000	312.24	0.69
33.46	15	6	20.04	0.03	720000	670.07	1.48
51.32	21	6	30.74	0.05	720000	1027.90	2.27
69.19	27	6	41.44	0.07	720000	1385.73	3.06
87.05	33	6	52.14	0.09	720000	1743.56	3.84
104.92	39	6	62.85	0.10	720000	2101.38	4.63
122.79	45	6	73.55	0.12	720000	2459.21	5.42
140.65	51	6	84.25	0.14	720000	2817.04	6.21
158.52	57	6	94.95	0.16	720000	3174.87	7.00
		60				15711.73	34.64

* Ct conversion based on Kgt of 0.599 L/Kg

**Cs Determined as mathematical average for VOC concentrations of polygon listed in Table A-1 of HGC, 1989.

PGA V-leach model, polygon screen-TCE-11/18/92-Poly68.INP. New soil, Old chem.

```
    1
       1.0          30.          1.0          10.
     123.6         .473         1100.        .7029
olygon 68
    102500.           1.     .082021         1.64         .381         .255      .00074
         0.           0.          -1.
   60
    1     6      26.90
    7    12      27.27
   13    18      27.63
   19    24      28.00
   25    30      81.90
   31    36     135.72
   37    42     135.72
   43    48     135.72
   49    54     135.72
   55    60     135.72
```

V-Leach, VER 1.1
Jake Turin, 11/91
PGA V-leach model, polygon screen-TCE-11/18/92-Poly68.INP. New soil, Old chem.

Polygon 1
At time = .00, total mass in vadose zone = .24249 g/sq.ft.
Mass in gas phase = .31106E-01g/sq.ft.
Mass in liquid phase = .13309 g/sq.ft.
Mass sorbed = .78291E-01g/sq.ft.

Polygon 1
At time = 1.00, total mass in vadose zone = .24075 g/sq.ft.
Mass in gas phase = .30882E-01g/sq.ft.
Mass in liquid phase = .13214 g/sq.ft.
Mass sorbed = .77727E-01g/sq.ft.

Since last printout at time = .00
Change in Total Mass = -.17465E-02g/sq.ft.
Advection in from atmosphere = .00000 g/sq.ft.
Advection in from water table = -.11127E-02g/sq.ft.
Diffusion in from atmosphere = -.63377E-03g/sq.ft.
Diffusion in from water table = .00000 g/sq.ft.
Total inflow at boundaries = -.17464E-02g/sq.ft.
Mass discrepancy = -.14435E-07g/sq.ft.

Since beginning of run at time = 0.0
Change in Total Mass = -.17465E-02g/sq.ft.
Advection in from atmosphere = .00000 g/sq.ft.
Advection in from water table = -.11127E-02g/sq.ft.
Diffusion in from atmosphere = -.63377E-03g/sq.ft.
Diffusion in from water table = .00000 g/sq.ft.
Total inflow at boundaries = -.17464E-02g/sq.ft.
Mass discrepancy = -.14435E-07g/sq.ft.

Polygon 1
At time = 2.00, total mass in vadose zone = .23905 g/sq.ft.
Mass in gas phase = .30666E-01g/sq.ft.
Mass in liquid phase = .13121 g/sq.ft.
Mass sorbed = .77181E-01g/sq.ft.

Since last printout at time = 1.00
Change in Total Mass = -.16909E-02g/sq.ft.
Advection in from atmosphere = .00000 g/sq.ft.
Advection in from water table = -.11126E-02g/sq.ft.
Diffusion in from atmosphere = -.57834E-03g/sq.ft.
Diffusion in from water table = .00000 g/sq.ft.
Total inflow at boundaries = -.16909E-02g/sq.ft.
Mass discrepancy = .16997E-07g/sq.ft.

Since beginning of run at time = 0.0
Change in Total Mass = -.34374E-02g/sq.ft.
Advection in from atmosphere = .00000 g/sq.ft.
Advection in from water table = -.22253E-02g/sq.ft.
Diffusion in from atmosphere = -.12121E-02g/sq.ft.
Diffusion in from water table = .00000 g/sq.ft.
Total inflow at boundaries = -.34374E-02g/sq.ft.
Mass discrepancy = .27940E-08g/sq.ft.

```
Polygon   1
At time =       3.00, total mass in vadose zone =     .23741    g/sq.ft.
Mass in gas phase     =       .30455E-01g/sq.ft.
Mass in liquid phase  =       .13031    g/sq.ft.
Mass sorbed           =       .76651E-01g/sq.ft.

Since last printout at time =       2.00
               Change in Total Mass =     -.16430E-02g/sq.ft.
                    Advection in from atmosphere =       .00000    g/sq.ft.
                    Advection in from water table =     -.11125E-02g/sq.ft.
                    Diffusion in from atmosphere =      -.53047E-03g/sq.ft.
                    Diffusion in from water table =      .00000    g/sq.ft.
               Total inflow at boundaries =     -.16430E-02g/sq.ft.
               Mass discrepancy =      .43074E-08g/sq.ft.

Since beginning of run at time = 0.0
               Change in Total Mass =     -.50803E-02g/sq.ft.
                    Advection in from atmosphere =       .00000    g/sq.ft.
                    Advection in from water table =     -.33378E-02g/sq.ft.
                    Diffusion in from atmosphere =      -.17426E-02g/sq.ft.
                    Diffusion in from water table =      .00000    g/sq.ft.
               Total inflow at boundaries =     -.50803E-02g/sq.ft.
               Mass discrepancy =      .69849E-08g/sq.ft.


Polygon   1
At time =       4.00, total mass in vadose zone =     .23581    g/sq.ft.
Mass in gas phase     =       .30249E-01g/sq.ft.
Mass in liquid phase  =       .12943    g/sq.ft.
Mass sorbed           =       .76134E-01g/sq.ft.

Since last printout at time =       3.00
               Change in Total Mass =     -.16014E-02g/sq.ft.
                    Advection in from atmosphere =       .00000    g/sq.ft.
                    Advection in from water table =     -.11124E-02g/sq.ft.
                    Diffusion in from atmosphere =      -.48898E-03g/sq.ft.
                    Diffusion in from water table =      .00000    g/sq.ft.
               Total inflow at boundaries =     -.16013E-02g/sq.ft.
               Mass discrepancy =     -.19791E-07g/sq.ft.

Since beginning of run at time = 0.0
               Change in Total Mass =     -.66817E-02g/sq.ft.
                    Advection in from atmosphere =       .00000    g/sq.ft.
                    Advection in from water table =     -.44501E-02g/sq.ft.
                    Diffusion in from atmosphere =      -.22316E-02g/sq.ft.
                    Diffusion in from water table =      .00000    g/sq.ft.
               Total inflow at boundaries =     -.66817E-02g/sq.ft.
               Mass discrepancy =     -.13039E-07g/sq.ft.


Polygon   1
At time =       5.00, total mass in vadose zone =     .23424    g/sq.ft.
Mass in gas phase     =       .30049E-01g/sq.ft.
Mass in liquid phase  =       .12857    g/sq.ft.
Mass sorbed           =       .75629E-01g/sq.ft.

Since last printout at time =       4.00
               Change in Total Mass =     -.15651E-02g/sq.ft.
```

```
                Advection in from atmosphere =       .00000    g/sq.ft.
                Advection in from water table =     -.11122E-02g/sq.ft.
                Diffusion in from atmosphere =      -.45290E-03g/sq.ft.
                Diffusion in from water table =      .00000    g/sq.ft.
           Total inflow at boundaries =     -.15651E-02g/sq.ft.
           Mass discrepancy =      .88476E-08g/sq.ft.

Since beginning of run at time = 0.0
           Change in Total Mass =     -.82468E-02g/sq.ft.
                Advection in from atmosphere =       .00000    g/sq.ft.
                Advection in from water table =     -.55623E-02g/sq.ft.
                Diffusion in from atmosphere =      -.26845E-02g/sq.ft.
                Diffusion in from water table =      .00000    g/sq.ft.
           Total inflow at boundaries =     -.82468E-02g/sq.ft.
           Mass discrepancy =     -.37253E-08g/sq.ft.


Polygon   1
At time =       6.00, total mass in vadose zone =     .23271    g/sq.ft.
Mass in gas phase     =       .29852E-01g/sq.ft.
Mass in liquid phase  =       .12773    g/sq.ft.
Mass sorbed           =       .75134E-01g/sq.ft.

Since last printout at time =       5.00
           Change in Total Mass =     -.15334E-02g/sq.ft.
                Advection in from atmosphere =       .00000    g/sq.ft.
                Advection in from water table =     -.11120E-02g/sq.ft.
                Diffusion in from atmosphere =      -.42141E-03g/sq.ft.
                Diffusion in from water table =      .00000    g/sq.ft.
           Total inflow at boundaries =     -.15334E-02g/sq.ft.
           Mass discrepancy =      .16065E-07g/sq.ft.

Since beginning of run at time = 0.0
           Change in Total Mass =     -.97801E-02g/sq.ft.
                Advection in from atmosphere =       .00000    g/sq.ft.
                Advection in from water table =     -.66743E-02g/sq.ft.
                Diffusion in from atmosphere =      -.31059E-02g/sq.ft.
                Diffusion in from water table =      .00000    g/sq.ft.
           Total inflow at boundaries =     -.97801E-02g/sq.ft.
           Mass discrepancy =      .12107E-07g/sq.ft.


Polygon   1
At time =       7.00, total mass in vadose zone =     .23121    g/sq.ft.
Mass in gas phase     =       .29659E-01g/sq.ft.
Mass in liquid phase  =       .12690    g/sq.ft.
Mass sorbed           =       .74647E-01g/sq.ft.

Since last printout at time =       6.00
           Change in Total Mass =     -.15055E-02g/sq.ft.
                Advection in from atmosphere =       .00000    g/sq.ft.
                Advection in from water table =     -.11117E-02g/sq.ft.
                Diffusion in from atmosphere =      -.39384E-03g/sq.ft.
                Diffusion in from water table =      .00000    g/sq.ft.
           Total inflow at boundaries =     -.15055E-02g/sq.ft.
           Mass discrepancy =      .31665E-07g/sq.ft.

Since beginning of run at time = 0.0
           Change in Total Mass =     -.11286E-01g/sq.ft.
                Advection in from atmosphere =       .00000    g/sq.ft.
```

```
                    Advection in from water table =     -.77860E-02g/sq.ft.
                    Diffusion in from atmosphere =      -.34997E-02g/sq.ft.
                    Diffusion in from water table =      .00000    g/sq.ft.
               Total inflow at boundaries =     -.11286E-01g/sq.ft.
               Mass discrepancy =      .43772E-07g/sq.ft.


Polygon   1
At time =       8.00, total mass in vadose zone =     .22973    g/sq.ft.
Mass in gas phase     =       .29469E-01g/sq.ft.
Mass in liquid phase  =       .12609    g/sq.ft.
Mass sorbed           =       .74169E-01g/sq.ft.

Since last printout at time =       7.00
               Change in Total Mass =     -.14810E-02g/sq.ft.
                    Advection in from atmosphere =       .00000    g/sq.ft.
                    Advection in from water table =     -.11114E-02g/sq.ft.
                    Diffusion in from atmosphere =      -.36961E-03g/sq.ft.
                    Diffusion in from water table =      .00000    g/sq.ft.
               Total inflow at boundaries =     -.14810E-02g/sq.ft.
               Mass discrepancy =      .15716E-07g/sq.ft.

Since beginning of run at time = 0.0
               Change in Total Mass =     -.12767E-01g/sq.ft.
                    Advection in from atmosphere =       .00000    g/sq.ft.
                    Advection in from water table =     -.88973E-02g/sq.ft.
                    Diffusion in from atmosphere =      -.38693E-02g/sq.ft.
                    Diffusion in from water table =      .00000    g/sq.ft.
               Total inflow at boundaries =     -.12767E-01g/sq.ft.
               Mass discrepancy =      .59605E-07g/sq.ft.


Polygon   1
At time =       9.00, total mass in vadose zone =     .22827    g/sq.ft.
Mass in gas phase     =       .29282E-01g/sq.ft.
Mass in liquid phase  =       .12529    g/sq.ft.
Mass sorbed           =       .73698E-01g/sq.ft.

Since last printout at time =       8.00
               Change in Total Mass =     -.14593E-02g/sq.ft.
                    Advection in from atmosphere =       .00000    g/sq.ft.
                    Advection in from water table =     -.11110E-02g/sq.ft.
                    Diffusion in from atmosphere =      -.34824E-03g/sq.ft.
                    Diffusion in from water table =      .00000    g/sq.ft.
               Total inflow at boundaries =     -.14593E-02g/sq.ft.
               Mass discrepancy =     -.39465E-07g/sq.ft.

Since beginning of run at time = 0.0
               Change in Total Mass =     -.14226E-01g/sq.ft.
                    Advection in from atmosphere =       .00000    g/sq.ft.
                    Advection in from water table =     -.10008E-01g/sq.ft.
                    Diffusion in from atmosphere =      -.42176E-02g/sq.ft.
                    Diffusion in from water table =      .00000    g/sq.ft.
               Total inflow at boundaries =     -.14226E-01g/sq.ft.
               Mass discrepancy =      .19558E-07g/sq.ft.


Polygon   1
At time =      10.00, total mass in vadose zone =     .22683    g/sq.ft.
Mass in gas phase     =       .29097E-01g/sq.ft.
```

```
Mass in liquid phase  =       .12450    g/sq.ft.
Mass sorbed           =       .73233E-01g/sq.ft.

Since last printout at time =       9.00
               Change in Total Mass =     -.14399E-02g/sq.ft.
                    Advection in from atmosphere =       .00000    g/sq.ft.
                    Advection in from water table =     -.11106E-02g/sq.ft.
                    Diffusion in from atmosphere =      -.32932E-03g/sq.ft.
                    Diffusion in from water table =      .00000    g/sq.ft.
               Total inflow at boundaries =     -.14399E-02g/sq.ft.
               Mass discrepancy =      .38650E-07g/sq.ft.

Since beginning of run at time = 0.0
               Change in Total Mass =     -.15666E-01g/sq.ft.
                    Advection in from atmosphere =       .00000    g/sq.ft.
                    Advection in from water table =     -.11119E-01g/sq.ft.
                    Diffusion in from atmosphere =      -.45469E-02g/sq.ft.
                    Diffusion in from water table =      .00000    g/sq.ft.
               Total inflow at boundaries =     -.15666E-01g/sq.ft.
               Mass discrepancy =      .57742E-07g/sq.ft.


Polygon   1
At time =      11.00, total mass in vadose zone =     .22540    g/sq.ft.
Mass in gas phase     =       .28914E-01g/sq.ft.
Mass in liquid phase  =       .12371    g/sq.ft.
Mass sorbed           =       .72774E-01g/sq.ft.

Since last printout at time =      10.00
               Change in Total Mass =     -.14227E-02g/sq.ft.
                    Advection in from atmosphere =       .00000    g/sq.ft.
                    Advection in from water table =     -.11101E-02g/sq.ft.
                    Diffusion in from atmosphere =      -.31251E-03g/sq.ft.
                    Diffusion in from water table =      .00000    g/sq.ft.
               Total inflow at boundaries =     -.14226E-02g/sq.ft.
               Mass discrepancy =     -.21537E-07g/sq.ft.

Since beginning of run at time = 0.0
               Change in Total Mass =     -.17088E-01g/sq.ft.
                    Advection in from atmosphere =       .00000    g/sq.ft.
                    Advection in from water table =     -.12229E-01g/sq.ft.
                    Diffusion in from atmosphere =      -.48594E-02g/sq.ft.
                    Diffusion in from water table =      .00000    g/sq.ft.
               Total inflow at boundaries =     -.17088E-01g/sq.ft.
               Mass discrepancy =      .37253E-07g/sq.ft.


Polygon   1
At time =      12.00, total mass in vadose zone =     .22400    g/sq.ft.
Mass in gas phase     =       .28734E-01g/sq.ft.
Mass in liquid phase  =       .12294    g/sq.ft.
Mass sorbed           =       .72320E-01g/sq.ft.

Since last printout at time =      11.00
               Change in Total Mass =     -.14071E-02g/sq.ft.
                    Advection in from atmosphere =       .00000    g/sq.ft.
                    Advection in from water table =     -.11096E-02g/sq.ft.
                    Diffusion in from atmosphere =      -.29753E-03g/sq.ft.
                    Diffusion in from water table =      .00000    g/sq.ft.
               Total inflow at boundaries =     -.14071E-02g/sq.ft.
```

```
              Mass discrepancy =      .38184E-07g/sq.ft.

Since beginning of run at time = 0.0
              Change in Total Mass =     -.18496E-01g/sq.ft.
                   Advection in from atmosphere =       .00000    g/sq.ft.
                   Advection in from water table =     -.13339E-01g/sq.ft.
                   Diffusion in from atmosphere =      -.51569E-02g/sq.ft.
                   Diffusion in from water table =      .00000    g/sq.ft.
              Total inflow at boundaries =     -.18496E-01g/sq.ft.
              Mass discrepancy =      .74506E-07g/sq.ft.


Polygon   1
At time =      13.00, total mass in vadose zone =     .22260    g/sq.ft.
Mass in gas phase     =       .28555E-01g/sq.ft.
Mass in liquid phase  =       .12218    g/sq.ft.
Mass sorbed           =       .71870E-01g/sq.ft.

Since last printout at time =      12.00
              Change in Total Mass =     -.13931E-02g/sq.ft.
                   Advection in from atmosphere =       .00000    g/sq.ft.
                   Advection in from water table =     -.11090E-02g/sq.ft.
                   Diffusion in from atmosphere =      -.28413E-03g/sq.ft.
                   Diffusion in from water table =      .00000    g/sq.ft.
              Total inflow at boundaries =     -.13931E-02g/sq.ft.
              Mass discrepancy =     -.30850E-07g/sq.ft.

Since beginning of run at time = 0.0
              Change in Total Mass =     -.19889E-01g/sq.ft.
                   Advection in from atmosphere =       .00000    g/sq.ft.
                   Advection in from water table =     -.14448E-01g/sq.ft.
                   Diffusion in from atmosphere =      -.54411E-02g/sq.ft.
                   Diffusion in from water table =      .00000    g/sq.ft.
              Total inflow at boundaries =     -.19889E-01g/sq.ft.
              Mass discrepancy =      .44703E-07g/sq.ft.


Polygon   1
At time =      14.00, total mass in vadose zone =     .22122    g/sq.ft.
Mass in gas phase     =       .28378E-01g/sq.ft.
Mass in liquid phase  =       .12142    g/sq.ft.
Mass sorbed           =       .71424E-01g/sq.ft.

Since last printout at time =      13.00
              Change in Total Mass =     -.13804E-02g/sq.ft.
                   Advection in from atmosphere =       .00000    g/sq.ft.
                   Advection in from water table =     -.11083E-02g/sq.ft.
                   Diffusion in from atmosphere =      -.27210E-03g/sq.ft.
                   Diffusion in from water table =      .00000    g/sq.ft.
              Total inflow at boundaries =     -.13804E-02g/sq.ft.
              Mass discrepancy =      .20838E-07g/sq.ft.

Since beginning of run at time = 0.0
              Change in Total Mass =     -.21269E-01g/sq.ft.
                   Advection in from atmosphere =       .00000    g/sq.ft.
                   Advection in from water table =     -.15556E-01g/sq.ft.
                   Diffusion in from atmosphere =      -.57132E-02g/sq.ft.
                   Diffusion in from water table =      .00000    g/sq.ft.
              Total inflow at boundaries =     -.21269E-01g/sq.ft.
              Mass discrepancy =      .65193E-07g/sq.ft.
```

```
Polygon   1
At time =      15.00, total mass in vadose zone =     .21985    g/sq.ft.
Mass in gas phase     =       .28203E-01g/sq.ft.
Mass in liquid phase  =       .12067    g/sq.ft.
Mass sorbed           =       .70982E-01g/sq.ft.

Since last printout at time =      14.00
               Change in Total Mass =     -.13688E-02g/sq.ft.
                    Advection in from atmosphere =       .00000    g/sq.ft.
                    Advection in from water table =     -.11075E-02g/sq.ft.
                    Diffusion in from atmosphere =      -.26125E-03g/sq.ft.
                    Diffusion in from water table =      .00000    g/sq.ft.
               Total inflow at boundaries =     -.13688E-02g/sq.ft.
               Mass discrepancy =     -.26776E-08g/sq.ft.

Since beginning of run at time = 0.0
               Change in Total Mass =     -.22638E-01g/sq.ft.
                    Advection in from atmosphere =       .00000    g/sq.ft.
                    Advection in from water table =     -.16663E-01g/sq.ft.
                    Diffusion in from atmosphere =      -.59744E-02g/sq.ft.
                    Diffusion in from water table =      .00000    g/sq.ft.
               Total inflow at boundaries =     -.22638E-01g/sq.ft.
               Mass discrepancy =      .61467E-07g/sq.ft.


Polygon   1
At time =      16.00, total mass in vadose zone =     .21850    g/sq.ft.
Mass in gas phase     =       .28028E-01g/sq.ft.
Mass in liquid phase  =       .11992    g/sq.ft.
Mass sorbed           =       .70544E-01g/sq.ft.

Since last printout at time =      15.00
               Change in Total Mass =     -.13581E-02g/sq.ft.
                    Advection in from atmosphere =       .00000    g/sq.ft.
                    Advection in from water table =     -.11067E-02g/sq.ft.
                    Diffusion in from atmosphere =      -.25145E-03g/sq.ft.
                    Diffusion in from water table =      .00000    g/sq.ft.
               Total inflow at boundaries =     -.13581E-02g/sq.ft.
               Mass discrepancy =      .11525E-07g/sq.ft.

Since beginning of run at time = 0.0
               Change in Total Mass =     -.23996E-01g/sq.ft.
                    Advection in from atmosphere =       .00000    g/sq.ft.
                    Advection in from water table =     -.17770E-01g/sq.ft.
                    Diffusion in from atmosphere =      -.62259E-02g/sq.ft.
                    Diffusion in from water table =      .00000    g/sq.ft.
               Total inflow at boundaries =     -.23996E-01g/sq.ft.
               Mass discrepancy =      .74506E-07g/sq.ft.


Polygon   1
At time =      17.00, total mass in vadose zone =     .21715    g/sq.ft.
Mass in gas phase     =       .27855E-01g/sq.ft.
Mass in liquid phase  =       .11918    g/sq.ft.
Mass sorbed           =       .70108E-01g/sq.ft.

Since last printout at time =      16.00
               Change in Total Mass =     -.13483E-02g/sq.ft.
```

```
                Advection in from atmosphere =       .00000    g/sq.ft.
                Advection in from water table =     -.11058E-02g/sq.ft.
                Diffusion in from atmosphere =      -.24256E-03g/sq.ft.
                Diffusion in from water table =      .00000    g/sq.ft.
           Total inflow at boundaries =     -.13483E-02g/sq.ft.
           Mass discrepancy =     -.24680E-07g/sq.ft.

Since beginning of run at time = 0.0
           Change in Total Mass =     -.25344E-01g/sq.ft.
                Advection in from atmosphere =       .00000    g/sq.ft.
                Advection in from water table =     -.18876E-01g/sq.ft.
                Diffusion in from atmosphere =      -.64684E-02g/sq.ft.
                Diffusion in from water table =      .00000    g/sq.ft.
           Total inflow at boundaries =     -.25344E-01g/sq.ft.
           Mass discrepancy =      .48429E-07g/sq.ft.


Polygon   1
At time =      18.00, total mass in vadose zone =     .21581    g/sq.ft.
Mass in gas phase     =       .27684E-01g/sq.ft.
Mass in liquid phase  =       .11845    g/sq.ft.
Mass sorbed           =       .69676E-01g/sq.ft.

Since last printout at time =      17.00
           Change in Total Mass =     -.13392E-02g/sq.ft.
                Advection in from atmosphere =       .00000    g/sq.ft.
                Advection in from water table =     -.11048E-02g/sq.ft.
                Diffusion in from atmosphere =      -.23447E-03g/sq.ft.
                Diffusion in from water table =      .00000    g/sq.ft.
           Total inflow at boundaries =     -.13392E-02g/sq.ft.
           Mass discrepancy =      .27358E-07g/sq.ft.

Since beginning of run at time = 0.0
           Change in Total Mass =     -.26683E-01g/sq.ft.
                Advection in from atmosphere =       .00000    g/sq.ft.
                Advection in from water table =     -.19981E-01g/sq.ft.
                Diffusion in from atmosphere =      -.67029E-02g/sq.ft.
                Diffusion in from water table =      .00000    g/sq.ft.
           Total inflow at boundaries =     -.26684E-01g/sq.ft.
           Mass discrepancy =      .76368E-07g/sq.ft.


Polygon   1
At time =      19.00, total mass in vadose zone =     .21448    g/sq.ft.
Mass in gas phase     =       .27513E-01g/sq.ft.
Mass in liquid phase  =       .11772    g/sq.ft.
Mass sorbed           =       .69246E-01g/sq.ft.

Since last printout at time =      18.00
           Change in Total Mass =     -.13307E-02g/sq.ft.
                Advection in from atmosphere =       .00000    g/sq.ft.
                Advection in from water table =     -.11037E-02g/sq.ft.
                Diffusion in from atmosphere =      -.22708E-03g/sq.ft.
                Diffusion in from water table =      .00000    g/sq.ft.
           Total inflow at boundaries =     -.13307E-02g/sq.ft.
           Mass discrepancy =     -.54715E-08g/sq.ft.

Since beginning of run at time = 0.0
           Change in Total Mass =     -.28014E-01g/sq.ft.
                Advection in from atmosphere =       .00000    g/sq.ft.
```

```
                    Advection in from water table =     -.21084E-01g/sq.ft.
                    Diffusion in from atmosphere =      -.69300E-02g/sq.ft.
                    Diffusion in from water table =      .00000    g/sq.ft.
               Total inflow at boundaries =     -.28014E-01g/sq.ft.
               Mass discrepancy =      .70781E-07g/sq.ft.


Polygon   1
At time =      20.00, total mass in vadose zone =     .21315    g/sq.ft.
Mass in gas phase     =       .27343E-01g/sq.ft.
Mass in liquid phase  =       .11699    g/sq.ft.
Mass sorbed           =       .68819E-01g/sq.ft.

Since last printout at time =      19.00
               Change in Total Mass =     -.13228E-02g/sq.ft.
                    Advection in from atmosphere =       .00000    g/sq.ft.
                    Advection in from water table =     -.11025E-02g/sq.ft.
                    Diffusion in from atmosphere =      -.22030E-03g/sq.ft.
                    Diffusion in from water table =      .00000    g/sq.ft.
               Total inflow at boundaries =     -.13228E-02g/sq.ft.
               Mass discrepancy =     -.14668E-07g/sq.ft.

Since beginning of run at time = 0.0
               Change in Total Mass =     -.29337E-01g/sq.ft.
                    Advection in from atmosphere =       .00000    g/sq.ft.
                    Advection in from water table =     -.22187E-01g/sq.ft.
                    Diffusion in from atmosphere =      -.71503E-02g/sq.ft.
                    Diffusion in from water table =      .00000    g/sq.ft.
               Total inflow at boundaries =     -.29337E-01g/sq.ft.
               Mass discrepancy =      .55879E-07g/sq.ft.


Polygon   1
At time =      21.00, total mass in vadose zone =     .21184    g/sq.ft.
Mass in gas phase     =       .27174E-01g/sq.ft.
Mass in liquid phase  =       .11627    g/sq.ft.
Mass sorbed           =       .68395E-01g/sq.ft.

Since last printout at time =      20.00
               Change in Total Mass =     -.13152E-02g/sq.ft.
                    Advection in from atmosphere =       .00000    g/sq.ft.
                    Advection in from water table =     -.11012E-02g/sq.ft.
                    Diffusion in from atmosphere =      -.21408E-03g/sq.ft.
                    Diffusion in from water table =      .00000    g/sq.ft.
               Total inflow at boundaries =     -.13153E-02g/sq.ft.
               Mass discrepancy =      .59721E-07g/sq.ft.

Since beginning of run at time = 0.0
               Change in Total Mass =     -.30652E-01g/sq.ft.
                    Advection in from atmosphere =       .00000    g/sq.ft.
                    Advection in from water table =     -.23288E-01g/sq.ft.
                    Diffusion in from atmosphere =      -.73643E-02g/sq.ft.
                    Diffusion in from water table =      .00000    g/sq.ft.
               Total inflow at boundaries =     -.30652E-01g/sq.ft.
               Mass discrepancy =      .11548E-06g/sq.ft.


Polygon   1
At time =      22.00, total mass in vadose zone =     .21053    g/sq.ft.
Mass in gas phase     =       .27007E-01g/sq.ft.
```

```
Mass in liquid phase  =       .11555    g/sq.ft.
Mass sorbed           =       .67972E-01g/sq.ft.

Since last printout at time =      21.00
              Change in Total Mass =     -.13082E-02g/sq.ft.
                   Advection in from atmosphere =       .00000    g/sq.ft.
                   Advection in from water table =     -.10999E-02g/sq.ft.
                   Diffusion in from atmosphere =      -.20834E-03g/sq.ft.
                   Diffusion in from water table =      .00000    g/sq.ft.
              Total inflow at boundaries =     -.13082E-02g/sq.ft.
              Mass discrepancy =      .19674E-07g/sq.ft.

Since beginning of run at time = 0.0
              Change in Total Mass =     -.31960E-01g/sq.ft.
                   Advection in from atmosphere =       .00000    g/sq.ft.
                   Advection in from water table =     -.24388E-01g/sq.ft.
                   Diffusion in from atmosphere =      -.75727E-02g/sq.ft.
                   Diffusion in from water table =      .00000    g/sq.ft.
              Total inflow at boundaries =     -.31961E-01g/sq.ft.
              Mass discrepancy =      .13784E-06g/sq.ft.


Polygon   1
At time =      23.00, total mass in vadose zone =     .20923    g/sq.ft.
Mass in gas phase     =       .26840E-01g/sq.ft.
Mass in liquid phase  =       .11484    g/sq.ft.
Mass sorbed           =       .67552E-01g/sq.ft.

Since last printout at time =      22.00
              Change in Total Mass =     -.13015E-02g/sq.ft.
                   Advection in from atmosphere =       .00000    g/sq.ft.
                   Advection in from water table =     -.10984E-02g/sq.ft.
                   Diffusion in from atmosphere =      -.20303E-03g/sq.ft.
                   Diffusion in from water table =      .00000    g/sq.ft.
              Total inflow at boundaries =     -.13014E-02g/sq.ft.
              Mass discrepancy =     -.41560E-07g/sq.ft.

Since beginning of run at time = 0.0
              Change in Total Mass =     -.33262E-01g/sq.ft.
                   Advection in from atmosphere =       .00000    g/sq.ft.
                   Advection in from water table =     -.25486E-01g/sq.ft.
                   Diffusion in from atmosphere =      -.77757E-02g/sq.ft.
                   Diffusion in from water table =      .00000    g/sq.ft.
              Total inflow at boundaries =     -.33262E-01g/sq.ft.
              Mass discrepancy =      .96858E-07g/sq.ft.


Polygon   1
At time =      24.00, total mass in vadose zone =     .20793    g/sq.ft.
Mass in gas phase     =       .26674E-01g/sq.ft.
Mass in liquid phase  =       .11413    g/sq.ft.
Mass sorbed           =       .67134E-01g/sq.ft.

Since last printout at time =      23.00
              Change in Total Mass =     -.12949E-02g/sq.ft.
                   Advection in from atmosphere =       .00000    g/sq.ft.
                   Advection in from water table =     -.10968E-02g/sq.ft.
                   Diffusion in from atmosphere =      -.19811E-03g/sq.ft.
                   Diffusion in from water table =      .00000    g/sq.ft.
              Total inflow at boundaries =     -.12949E-02g/sq.ft.
```

```
          Mass discrepancy =      .21071E-07g/sq.ft.

Since beginning of run at time = 0.0
          Change in Total Mass =     -.34557E-01g/sq.ft.
               Advection in from atmosphere =       .00000    g/sq.ft.
               Advection in from water table =     -.26583E-01g/sq.ft.
               Diffusion in from atmosphere =      -.79738E-02g/sq.ft.
               Diffusion in from water table =      .00000    g/sq.ft.
          Total inflow at boundaries =     -.34557E-01g/sq.ft.
          Mass discrepancy =      .11921E-06g/sq.ft.


Polygon   1
At time =      25.00, total mass in vadose zone =     .20665    g/sq.ft.
Mass in gas phase     =       .26508E-01g/sq.ft.
Mass in liquid phase  =       .11342    g/sq.ft.
Mass sorbed           =       .66718E-01g/sq.ft.

Since last printout at time =      24.00
          Change in Total Mass =     -.12887E-02g/sq.ft.
               Advection in from atmosphere =       .00000    g/sq.ft.
               Advection in from water table =     -.10952E-02g/sq.ft.
               Diffusion in from atmosphere =      -.19353E-03g/sq.ft.
               Diffusion in from water table =      .00000    g/sq.ft.
          Total inflow at boundaries =     -.12887E-02g/sq.ft.
          Mass discrepancy =     -.13271E-07g/sq.ft.

Since beginning of run at time = 0.0
          Change in Total Mass =     -.35846E-01g/sq.ft.
               Advection in from atmosphere =       .00000    g/sq.ft.
               Advection in from water table =     -.27678E-01g/sq.ft.
               Diffusion in from atmosphere =      -.81673E-02g/sq.ft.
               Diffusion in from water table =      .00000    g/sq.ft.
          Total inflow at boundaries =     -.35846E-01g/sq.ft.
          Mass discrepancy =      .10431E-06g/sq.ft.


Polygon   1
At time =      26.00, total mass in vadose zone =     .20536    g/sq.ft.
Mass in gas phase     =       .26344E-01g/sq.ft.
Mass in liquid phase  =       .11272    g/sq.ft.
Mass sorbed           =       .66304E-01g/sq.ft.

Since last printout at time =      25.00
          Change in Total Mass =     -.12827E-02g/sq.ft.
               Advection in from atmosphere =       .00000    g/sq.ft.
               Advection in from water table =     -.10934E-02g/sq.ft.
               Diffusion in from atmosphere =      -.18925E-03g/sq.ft.
               Diffusion in from water table =      .00000    g/sq.ft.
          Total inflow at boundaries =     -.12827E-02g/sq.ft.
          Mass discrepancy =      .26892E-07g/sq.ft.

Since beginning of run at time = 0.0
          Change in Total Mass =     -.37128E-01g/sq.ft.
               Advection in from atmosphere =       .00000    g/sq.ft.
               Advection in from water table =     -.28772E-01g/sq.ft.
               Diffusion in from atmosphere =      -.83566E-02g/sq.ft.
               Diffusion in from water table =      .00000    g/sq.ft.
          Total inflow at boundaries =     -.37128E-01g/sq.ft.
          Mass discrepancy =      .13039E-06g/sq.ft.
```

```
Polygon   1
At time =      27.00, total mass in vadose zone =     .20409    g/sq.ft.
Mass in gas phase     =       .26180E-01g/sq.ft.
Mass in liquid phase  =       .11202    g/sq.ft.
Mass sorbed           =       .65892E-01g/sq.ft.

Since last printout at time =      26.00
               Change in Total Mass =     -.12768E-02g/sq.ft.
                    Advection in from atmosphere =       .00000    g/sq.ft.
                    Advection in from water table =     -.10916E-02g/sq.ft.
                    Diffusion in from atmosphere =      -.18526E-03g/sq.ft.
                    Diffusion in from water table =      .00000    g/sq.ft.
               Total inflow at boundaries =     -.12768E-02g/sq.ft.
               Mass discrepancy =      .34343E-07g/sq.ft.

Since beginning of run at time = 0.0
               Change in Total Mass =     -.38405E-01g/sq.ft.
                    Advection in from atmosphere =       .00000    g/sq.ft.
                    Advection in from water table =     -.29863E-01g/sq.ft.
                    Diffusion in from atmosphere =      -.85419E-02g/sq.ft.
                    Diffusion in from water table =      .00000    g/sq.ft.
               Total inflow at boundaries =     -.38405E-01g/sq.ft.
               Mass discrepancy =      .16391E-06g/sq.ft.


Polygon   1
At time =      28.00, total mass in vadose zone =     .20282    g/sq.ft.
Mass in gas phase     =       .26017E-01g/sq.ft.
Mass in liquid phase  =       .11132    g/sq.ft.
Mass sorbed           =       .65481E-01g/sq.ft.

Since last printout at time =      27.00
               Change in Total Mass =     -.12712E-02g/sq.ft.
                    Advection in from atmosphere =       .00000    g/sq.ft.
                    Advection in from water table =     -.10896E-02g/sq.ft.
                    Diffusion in from atmosphere =      -.18151E-03g/sq.ft.
                    Diffusion in from water table =      .00000    g/sq.ft.
               Total inflow at boundaries =     -.12711E-02g/sq.ft.
               Mass discrepancy =     -.78464E-07g/sq.ft.

Since beginning of run at time = 0.0
               Change in Total Mass =     -.39676E-01g/sq.ft.
                    Advection in from atmosphere =       .00000    g/sq.ft.
                    Advection in from water table =     -.30953E-01g/sq.ft.
                    Diffusion in from atmosphere =      -.87234E-02g/sq.ft.
                    Diffusion in from water table =      .00000    g/sq.ft.
               Total inflow at boundaries =     -.39676E-01g/sq.ft.
               Mass discrepancy =      .85682E-07g/sq.ft.


Polygon   1
At time =      29.00, total mass in vadose zone =     .20155    g/sq.ft.
Mass in gas phase     =       .25854E-01g/sq.ft.
Mass in liquid phase  =       .11062    g/sq.ft.
Mass sorbed           =       .65073E-01g/sq.ft.

Since last printout at time =      28.00
               Change in Total Mass =     -.12655E-02g/sq.ft.
```

Advection in from atmosphere = .00000 g/sq.ft.
Advection in from water table = -.10876E-02g/sq.ft.
Diffusion in from atmosphere = -.17799E-03g/sq.ft.
Diffusion in from water table = .00000 g/sq.ft.
Total inflow at boundaries = -.12656E-02g/sq.ft.
Mass discrepancy = .50990E-07g/sq.ft.

Since beginning of run at time = 0.0
Change in Total Mass = -.40942E-01g/sq.ft.
Advection in from atmosphere = .00000 g/sq.ft.
Advection in from water table = -.32041E-01g/sq.ft.
Diffusion in from atmosphere = -.89014E-02g/sq.ft.
Diffusion in from water table = .00000 g/sq.ft.
Total inflow at boundaries = -.40942E-01g/sq.ft.
Mass discrepancy = .13784E-06g/sq.ft.

Polygon 1
At time = 30.00, total mass in vadose zone = .20029 g/sq.ft.
Mass in gas phase = .25693E-01g/sq.ft.
Mass in liquid phase = .10993 g/sq.ft.
Mass sorbed = .64666E-01g/sq.ft.

Since last printout at time = 29.00
Change in Total Mass = -.12601E-02g/sq.ft.
Advection in from atmosphere = .00000 g/sq.ft.
Advection in from water table = -.10854E-02g/sq.ft.
Diffusion in from atmosphere = -.17466E-03g/sq.ft.
Diffusion in from water table = .00000 g/sq.ft.
Total inflow at boundaries = -.12601E-02g/sq.ft.
Mass discrepancy = -.16298E-07g/sq.ft.

Since beginning of run at time = 0.0
Change in Total Mass = -.42202E-01g/sq.ft.
Advection in from atmosphere = .00000 g/sq.ft.
Advection in from water table = -.33126E-01g/sq.ft.
Diffusion in from atmosphere = -.90760E-02g/sq.ft.
Diffusion in from water table = .00000 g/sq.ft.
Total inflow at boundaries = -.42202E-01g/sq.ft.
Mass discrepancy = .11921E-06g/sq.ft.

GROUNDWATER IMPACT OF POLYGON 1

Time	Mass per area (g/sq.ft.)	Total Mass (g)
1.00	.11127E-02	114.05
2.00	.11126E-02	114.04
3.00	.11125E-02	114.03
4.00	.11124E-02	114.02
5.00	.11122E-02	114.00
6.00	.11120E-02	113.98
7.00	.11117E-02	113.95
8.00	.11114E-02	113.92
9.00	.11110E-02	113.88
10.00	.11106E-02	113.84
11.00	.11101E-02	113.79
12.00	.11096E-02	113.73
13.00	.11090E-02	113.67
14.00	.11083E-02	113.60
15.00	.11075E-02	113.52

16.00	.11067E-02	113.43
17.00	.11058E-02	113.34
18.00	.11048E-02	113.24
19.00	.11037E-02	113.13
20.00	.11025E-02	113.01
21.00	.11012E-02	112.87
22.00	.10999E-02	112.74
23.00	.10984E-02	112.59
24.00	.10968E-02	112.43
25.00	.10952E-02	112.26
26.00	.10934E-02	112.08
27.00	.10916E-02	111.89
28.00	.10896E-02	111.69
29.00	.10876E-02	111.48
30.00	.10854E-02	111.26

****

****

TOTAL GROUNDWATER IMPACT

Time (yr)	Mass (g)	Cumulative Mass (g)
1.00	114.05	114.05
2.00	114.04	228.09
3.00	114.03	342.12
4.00	114.02	456.14
5.00	114.00	570.13
6.00	113.98	684.11
7.00	113.95	798.06
8.00	113.92	911.98
9.00	113.88	1025.9
10.00	113.84	1139.7
11.00	113.79	1253.5
12.00	113.73	1367.2
13.00	113.67	1480.9
14.00	113.60	1594.5
15.00	113.52	1708.0
16.00	113.43	1821.4
17.00	113.34	1934.8
18.00	113.24	2048.0
19.00	113.13	2161.1
20.00	113.01	2274.1
21.00	112.87	2387.0
22.00	112.74	2499.8
23.00	112.59	2612.3
24.00	112.43	2724.8
25.00	112.26	2837.0
26.00	112.08	2949.1
27.00	111.89	3061.0
28.00	111.69	3172.7
29.00	111.48	3284.2
30.00	111.26	3395.4

Polygon 68
Time: .000

Cell	Cgas(g/cu.ft.)	Cliq(g/cu.ft.)	Csol
1	.12718E-02	.26888E-02	.86847E-08
2	.12718E-02	.26888E-02	.86847E-08
3	.12718E-02	.26888E-02	.86847E-08
4	.12718E-02	.26888E-02	.86847E-08
5	.12718E-02	.26888E-02	.86847E-08
6	.12718E-02	.26888E-02	.86847E-08
7	.12893E-02	.27257E-02	.88041E-08
8	.12893E-02	.27257E-02	.88041E-08
9	.12893E-02	.27257E-02	.88041E-08
10	.12893E-02	.27257E-02	.88041E-08
11	.12893E-02	.27257E-02	.88041E-08
12	.12893E-02	.27257E-02	.88041E-08
13	.13063E-02	.27617E-02	.89204E-08
14	.13063E-02	.27617E-02	.89204E-08
15	.13063E-02	.27617E-02	.89204E-08
16	.13063E-02	.27617E-02	.89204E-08
17	.13063E-02	.27617E-02	.89204E-08
18	.13063E-02	.27617E-02	.89204E-08
19	.13238E-02	.27987E-02	.90398E-08
20	.13238E-02	.27987E-02	.90398E-08
21	.13238E-02	.27987E-02	.90398E-08
22	.13238E-02	.27987E-02	.90398E-08
23	.13238E-02	.27987E-02	.90398E-08
24	.13238E-02	.27987E-02	.90398E-08
25	.38721E-02	.81862E-02	.26441E-07
26	.38721E-02	.81862E-02	.26441E-07
27	.38721E-02	.81862E-02	.26441E-07
28	.38721E-02	.81862E-02	.26441E-07
29	.38721E-02	.81862E-02	.26441E-07
30	.38721E-02	.81862E-02	.26441E-07
31	.64166E-02	.13566E-01	.43817E-07
32	.64166E-02	.13566E-01	.43817E-07
33	.64166E-02	.13566E-01	.43817E-07
34	.64166E-02	.13566E-01	.43817E-07
35	.64166E-02	.13566E-01	.43817E-07
36	.64166E-02	.13566E-01	.43817E-07
37	.64166E-02	.13566E-01	.43817E-07
38	.64166E-02	.13566E-01	.43817E-07
39	.64166E-02	.13566E-01	.43817E-07
40	.64166E-02	.13566E-01	.43817E-07
41	.64166E-02	.13566E-01	.43817E-07
42	.64166E-02	.13566E-01	.43817E-07
43	.64166E-02	.13566E-01	.43817E-07
44	.64166E-02	.13566E-01	.43817E-07
45	.64166E-02	.13566E-01	.43817E-07
46	.64166E-02	.13566E-01	.43817E-07
47	.64166E-02	.13566E-01	.43817E-07
48	.64166E-02	.13566E-01	.43817E-07
49	.64166E-02	.13566E-01	.43817E-07
50	.64166E-02	.13566E-01	.43817E-07
51	.64166E-02	.13566E-01	.43817E-07
52	.64166E-02	.13566E-01	.43817E-07
53	.64166E-02	.13566E-01	.43817E-07
54	.64166E-02	.13566E-01	.43817E-07
55	.64166E-02	.13566E-01	.43817E-07
56	.64166E-02	.13566E-01	.43817E-07

57	.64166E-02	.13566E-01	.43817E-07
58	.64166E-02	.13566E-01	.43817E-07
59	.64166E-02	.13566E-01	.43817E-07
60	.64166E-02	.13566E-01	.43817E-07

Polygon 68
Time: 10.000

Cell	Cgas(g/cu.ft.)	Cliq(g/cu.ft.)	Csol
1	.11749E-03	.24839E-03	.80229E-09
2	.30415E-03	.64302E-03	.20770E-08
3	.49631E-03	.10493E-02	.33892E-08
4	.65761E-03	.13903E-02	.44906E-08
5	.78343E-03	.16563E-02	.53499E-08
6	.88230E-03	.18653E-02	.60250E-08
7	.96395E-03	.20379E-02	.65826E-08
8	.10344E-02	.21868E-02	.70635E-08
9	.10967E-02	.23186E-02	.74890E-08
10	.11529E-02	.24374E-02	.78729E-08
11	.12048E-02	.25472E-02	.82275E-08
12	.12541E-02	.26514E-02	.85640E-08
13	.13030E-02	.27547E-02	.88976E-08
14	.13527E-02	.28597E-02	.92369E-08
15	.14040E-02	.29683E-02	.95875E-08
16	.14580E-02	.30825E-02	.99565E-08
17	.15163E-02	.32057E-02	.10354E-07
18	.15805E-02	.33415E-02	.10793E-07
19	.16533E-02	.34954E-02	.11290E-07
20	.17366E-02	.36714E-02	.11859E-07
21	.18318E-02	.38728E-02	.12509E-07
22	.19412E-02	.41041E-02	.13256E-07
23	.20676E-02	.43712E-02	.14119E-07
24	.22142E-02	.46812E-02	.15120E-07
25	.24797E-02	.52426E-02	.16934E-07
26	.28425E-02	.60096E-02	.19411E-07
27	.32074E-02	.67810E-02	.21903E-07
28	.35197E-02	.74413E-02	.24035E-07
29	.37788E-02	.79890E-02	.25804E-07
30	.40053E-02	.84679E-02	.27351E-07
31	.43142E-02	.91209E-02	.29460E-07
32	.46932E-02	.99223E-02	.32049E-07
33	.50520E-02	.10681E-01	.34499E-07
34	.53373E-02	.11284E-01	.36447E-07
35	.55485E-02	.11730E-01	.37889E-07
36	.57055E-02	.12062E-01	.38961E-07
37	.58268E-02	.12319E-01	.39790E-07
38	.59244E-02	.12525E-01	.40456E-07
39	.60048E-02	.12695E-01	.41006E-07
40	.60719E-02	.12837E-01	.41464E-07
41	.61282E-02	.12956E-01	.41848E-07
42	.61754E-02	.13056E-01	.42170E-07
43	.62149E-02	.13139E-01	.42440E-07
44	.62481E-02	.13210E-01	.42667E-07
45	.62759E-02	.13268E-01	.42857E-07
46	.62992E-02	.13317E-01	.43016E-07
47	.63186E-02	.13359E-01	.43148E-07
48	.63348E-02	.13393E-01	.43259E-07
49	.63483E-02	.13421E-01	.43351E-07
50	.63595E-02	.13445E-01	.43428E-07
51	.63688E-02	.13465E-01	.43491E-07
52	.63765E-02	.13481E-01	.43544E-07

53	.63828E-02	.13494E-01	.43587E-07
54	.63880E-02	.13505E-01	.43622E-07
55	.63921E-02	.13514E-01	.43650E-07
56	.63954E-02	.13521E-01	.43673E-07
57	.63980E-02	.13526E-01	.43691E-07
58	.63999E-02	.13531E-01	.43704E-07
59	.64013E-02	.13533E-01	.43713E-07
60	.64020E-02	.13535E-01	.43718E-07

Polygon 68
Time: 20.000

Cell	Cgas(g/cu.ft.)	Cliq(g/cu.ft.)	Csol
1	.47982E-04	.10144E-03	.32765E-09
2	.12628E-03	.26697E-03	.86233E-09
3	.22743E-03	.48083E-03	.15531E-08
4	.34204E-03	.72313E-03	.23357E-08
5	.46057E-03	.97373E-03	.31452E-08
6	.57598E-03	.12177E-02	.39332E-08
7	.68468E-03	.14475E-02	.46755E-08
8	.78586E-03	.16614E-02	.53665E-08
9	.88021E-03	.18609E-02	.60107E-08
10	.96894E-03	.20485E-02	.66167E-08
11	.10534E-02	.22270E-02	.71932E-08
12	.11347E-02	.23990E-02	.77489E-08
13	.12143E-02	.25673E-02	.82923E-08
14	.12934E-02	.27344E-02	.88320E-08
15	.13731E-02	.29029E-02	.93763E-08
16	.14546E-02	.30753E-02	.99334E-08
17	.15393E-02	.32542E-02	.10511E-07
18	.16282E-02	.34422E-02	.11118E-07
19	.17227E-02	.36421E-02	.11764E-07
20	.18243E-02	.38569E-02	.12458E-07
21	.19344E-02	.40895E-02	.13209E-07
22	.20543E-02	.43430E-02	.14028E-07
23	.21854E-02	.46203E-02	.14924E-07
24	.23293E-02	.49244E-02	.15906E-07
25	.24907E-02	.52658E-02	.17009E-07
26	.26764E-02	.56584E-02	.18277E-07
27	.28873E-02	.61041E-02	.19716E-07
28	.31160E-02	.65877E-02	.21278E-07
29	.33517E-02	.70861E-02	.22888E-07
30	.35859E-02	.75813E-02	.24488E-07
31	.38182E-02	.80723E-02	.26073E-07
32	.40535E-02	.85698E-02	.27680E-07
33	.42934E-02	.90770E-02	.29319E-07
34	.45318E-02	.95811E-02	.30947E-07
35	.47589E-02	.10061E-01	.32498E-07
36	.49668E-02	.10501E-01	.33917E-07
37	.51519E-02	.10892E-01	.35181E-07
38	.53143E-02	.11235E-01	.36290E-07
39	.54563E-02	.11536E-01	.37260E-07
40	.55805E-02	.11798E-01	.38108E-07
41	.56892E-02	.12028E-01	.38850E-07
42	.57844E-02	.12229E-01	.39501E-07
43	.58679E-02	.12406E-01	.40070E-07
44	.59409E-02	.12560E-01	.40569E-07
45	.60047E-02	.12695E-01	.41004E-07
46	.60602E-02	.12812E-01	.41384E-07
47	.61085E-02	.12914E-01	.41714E-07
48	.61504E-02	.13003E-01	.41999E-07

49	.61865E-02	.13079E-01	.42246E-07
50	.62177E-02	.13145E-01	.42459E-07
51	.62444E-02	.13202E-01	.42642E-07
52	.62672E-02	.13250E-01	.42797E-07
53	.62866E-02	.13291E-01	.42930E-07
54	.63029E-02	.13325E-01	.43041E-07
55	.63164E-02	.13354E-01	.43133E-07
56	.63275E-02	.13377E-01	.43209E-07
57	.63363E-02	.13396E-01	.43269E-07
58	.63431E-02	.13410E-01	.43316E-07
59	.63480E-02	.13421E-01	.43349E-07
60	.63511E-02	.13427E-01	.43370E-07

Polygon 68
Time: 30.000

Cell	Cgas(g/cu.ft.)	Cliq(g/cu.ft.)	Csol
1	.35286E-04	.74601E-04	.24096E-09
2	.89814E-04	.18988E-03	.61332E-09
3	.15861E-03	.33533E-03	.10831E-08
4	.23834E-03	.50389E-03	.16276E-08
5	.32620E-03	.68964E-03	.22275E-08
6	.41952E-03	.88693E-03	.28648E-08
7	.51586E-03	.10906E-02	.35227E-08
8	.61328E-03	.12966E-02	.41879E-08
9	.71046E-03	.15020E-02	.48515E-08
10	.80672E-03	.17055E-02	.55089E-08
11	.90187E-03	.19067E-02	.61587E-08
12	.99608E-03	.21059E-02	.68020E-08
13	.10897E-02	.23038E-02	.74414E-08
14	.11833E-02	.25017E-02	.80807E-08
15	.12775E-02	.27009E-02	.87239E-08
16	.13730E-02	.29027E-02	.93759E-08
17	.14705E-02	.31088E-02	.10042E-07
18	.15707E-02	.33208E-02	.10726E-07
19	.16745E-02	.35403E-02	.11435E-07
20	.17827E-02	.37690E-02	.12174E-07
21	.18961E-02	.40086E-02	.12948E-07
22	.20154E-02	.42609E-02	.13763E-07
23	.21414E-02	.45273E-02	.14623E-07
24	.22749E-02	.48095E-02	.15535E-07
25	.24165E-02	.51088E-02	.16502E-07
26	.25672E-02	.54275E-02	.17531E-07
27	.27279E-02	.57672E-02	.18628E-07
28	.28987E-02	.61284E-02	.19795E-07
29	.30787E-02	.65090E-02	.21024E-07
30	.32658E-02	.69045E-02	.22302E-07
31	.34575E-02	.73096E-02	.23610E-07
32	.36516E-02	.77200E-02	.24936E-07
33	.38467E-02	.81325E-02	.26268E-07
34	.40416E-02	.85446E-02	.27599E-07
35	.42344E-02	.89523E-02	.28916E-07
36	.44228E-02	.93505E-02	.30202E-07
37	.46039E-02	.97335E-02	.31439E-07
38	.47756E-02	.10096E-01	.32611E-07
39	.49362E-02	.10436E-01	.33708E-07
40	.50849E-02	.10750E-01	.34723E-07
41	.52216E-02	.11039E-01	.35657E-07
42	.53466E-02	.11304E-01	.36510E-07
43	.54604E-02	.11544E-01	.37288E-07
44	.55636E-02	.11762E-01	.37992E-07

45	.56568E-02	.11960E-01	.38629E-07
46	.57408E-02	.12137E-01	.39203E-07
47	.58162E-02	.12296E-01	.39717E-07
48	.58836E-02	.12439E-01	.40177E-07
49	.59435E-02	.12566E-01	.40587E-07
50	.59966E-02	.12678E-01	.40950E-07
51	.60434E-02	.12777E-01	.41269E-07
52	.60845E-02	.12864E-01	.41549E-07
53	.61201E-02	.12939E-01	.41793E-07
54	.61508E-02	.13004E-01	.42002E-07
55	.61769E-02	.13059E-01	.42181E-07
56	.61988E-02	.13105E-01	.42330E-07
57	.62166E-02	.13143E-01	.42452E-07
58	.62306E-02	.13172E-01	.42547E-07
59	.62409E-02	.13194E-01	.42617E-07
60	.62476E-02	.13208E-01	.42663E-07

V-Leach, VER 1.1
Jake Turin, 11/91
PGA V-leach model, polygon screen-TCE-11/18/92-Poly68.INP. New soil, Old chem.
1 polygons.
Timestep = 1.00 years. Simulation length = 30.00 years.
Printout every 1.00 years. Vertical profile stored every 10.00 years.
Koc = 123.60 ml/g, .43649E-02cu.ft./g
Kh = .47300 (dimensionless).
Aqueous solubility = 1100.0 mg/l, 31.149 g/cu.ft
Free air diffusion coefficient = .70290 sq. m/day, 2761.7 sq.ft./yr

Polygon 1
Polygon 68
Polygon area = .10250E+06sq. ft.
60 cells, each cell 1.000 ft. thick.
Soil Properties:
Bulk density = 1.6400 g/ml, 46440. g/cu.ft.
Porosity = .3810 Volumetric water content = .2550
Organic carbon content = .00074000
Recharge Rate = .08202100 ft/yr
Conc. in recharge water = .00000 mg/l, .00000 g/cu.ft
Atmospheric concentration = .00000 mg/l, .00000 g/cu.ft
Water table is impermeable to gas diffusion.

Polygon 68 Vertical Distribution using Polygon 69 Vertical Investigation Data, Averaged Soil Physical Properties, and Estimated VOC Mass (pounds) from HGC (July, 1989)

% Total Mass per 6 foot interval (from Polygon 69)	Total VOC Mass Table C-2	Incremental Mass (lbs) per 6 ft	Incremental Mass (gram) per 6 ft	Volume Soil per interval (cu. feet)	Calculated Total Soil Conc (ug/Kg)
0.030912464	54.8	1.69	768.38	615000	26.90
0.031335118	54.8	1.72	778.89	615000	27.27
0.031746032	54.8	1.74	789.10	615000	27.63
0.032168686	54.8	1.76	799.61	615000	28.00
0.094099277	54.8	5.16	2339.00	615000	81.90
0.155947685	54.8	8.55	3876.35	615000	135.72
0.155947685	54.8	8.55	3876.35	615000	135.72
0.155947685	54.8	8.55	3876.35	615000	135.72
0.155947685	54.8	8.55	3876.35	615000	135.72
0.155947685	54.8	8.55	3876.35	615000	135.72
1		54.80	24856.73		

```
PGA V-leach model, polygon screen-TCE-11/10/92-Poly11A.INP  New soil, Old chem
    1
       1.0          30.          1.0          10.
     123.6         .473         1100.        .7029
olygon 11A
     90000.          1.     .196851         1.64         .381         .255      .00074
         0.          0.          -1.
   60
    1     6        0.02
    7    12        5.73
   13    18       14.30
   19    24       22.88
   25    30       31.45
   31    36       40.02
   37    42       48.59
   43    48       57.16
   49    54       65.73
   55    60       74.30
```

V-Leach, VER 1.1
Jake Turin, 11/91
PGA V-leach model, polygon screen-TCE-11/10/92-Poly11A.INP New soil, Old chem

Polygon 1
At time = .00, total mass in vadose zone = .10036 g/sq.ft.
Mass in gas phase = .12874E-01g/sq.ft.
Mass in liquid phase = .55082E-01g/sq.ft.
Mass sorbed = .32401E-01g/sq.ft.

Polygon 1
At time = 1.00, total mass in vadose zone = .98844E-01g/sq.ft.
Mass in gas phase = .12680E-01g/sq.ft.
Mass in liquid phase = .54251E-01g/sq.ft.
Mass sorbed = .31913E-01g/sq.ft.

Since last printout at time = .00
Change in Total Mass = -.15131E-02g/sq.ft.
Advection in from atmosphere = .00000 g/sq.ft.
Advection in from water table = -.14618E-02g/sq.ft.
Diffusion in from atmosphere = -.51319E-04g/sq.ft.
Diffusion in from water table = .00000 g/sq.ft.
Total inflow at boundaries = -.15132E-02g/sq.ft.
Mass discrepancy = .25495E-07g/sq.ft.

Since beginning of run at time = 0.0
Change in Total Mass = -.15131E-02g/sq.ft.
Advection in from atmosphere = .00000 g/sq.ft.
Advection in from water table = -.14618E-02g/sq.ft.
Diffusion in from atmosphere = -.51319E-04g/sq.ft.
Diffusion in from water table = .00000 g/sq.ft.
Total inflow at boundaries = -.15132E-02g/sq.ft.
Mass discrepancy = .25495E-07g/sq.ft.

Polygon 1
At time = 2.00, total mass in vadose zone = .97339E-01g/sq.ft.
Mass in gas phase = .12487E-01g/sq.ft.
Mass in liquid phase = .53426E-01g/sq.ft.
Mass sorbed = .31427E-01g/sq.ft.

Since last printout at time = 1.00
Change in Total Mass = -.15047E-02g/sq.ft.
Advection in from atmosphere = .00000 g/sq.ft.
Advection in from water table = -.14539E-02g/sq.ft.
Diffusion in from atmosphere = -.50754E-04g/sq.ft.
Diffusion in from water table = .00000 g/sq.ft.
Total inflow at boundaries = -.15047E-02g/sq.ft.
Mass discrepancy = -.13737E-07g/sq.ft.

Since beginning of run at time = 0.0
Change in Total Mass = -.30178E-02g/sq.ft.
Advection in from atmosphere = .00000 g/sq.ft.
Advection in from water table = -.29158E-02g/sq.ft.
Diffusion in from atmosphere = -.10207E-03g/sq.ft.
Diffusion in from water table = .00000 g/sq.ft.
Total inflow at boundaries = -.30178E-02g/sq.ft.
Mass discrepancy = .11874E-07g/sq.ft.

```
Polygon   1
At time =       3.00, total mass in vadose zone =     .95845E-01g/sq.ft.
Mass in gas phase     =       .12295E-01g/sq.ft.
Mass in liquid phase  =       .52605E-01g/sq.ft.
Mass sorbed           =       .30945E-01g/sq.ft.

Since last printout at time =       2.00
               Change in Total Mass =     -.14943E-02g/sq.ft.
                    Advection in from atmosphere =       .00000    g/sq.ft.
                    Advection in from water table =     -.14443E-02g/sq.ft.
                    Diffusion in from atmosphere =      -.49958E-04g/sq.ft.
                    Diffusion in from water table =      .00000    g/sq.ft.
               Total inflow at boundaries =     -.14943E-02g/sq.ft.
               Mass discrepancy =     -.11642E-08g/sq.ft.

Since beginning of run at time = 0.0
               Change in Total Mass =     -.45121E-02g/sq.ft.
                    Advection in from atmosphere =       .00000    g/sq.ft.
                    Advection in from water table =     -.43601E-02g/sq.ft.
                    Diffusion in from atmosphere =      -.15203E-03g/sq.ft.
                    Diffusion in from water table =      .00000    g/sq.ft.
               Total inflow at boundaries =     -.45121E-02g/sq.ft.
               Mass discrepancy =      .10710E-07g/sq.ft.


Polygon   1
At time =       4.00, total mass in vadose zone =     .94363E-01g/sq.ft.
Mass in gas phase     =       .12105E-01g/sq.ft.
Mass in liquid phase  =       .51792E-01g/sq.ft.
Mass sorbed           =       .30466E-01g/sq.ft.

Since last printout at time =       3.00
               Change in Total Mass =     -.14819E-02g/sq.ft.
                    Advection in from atmosphere =       .00000    g/sq.ft.
                    Advection in from water table =     -.14329E-02g/sq.ft.
                    Diffusion in from atmosphere =      -.48996E-04g/sq.ft.
                    Diffusion in from water table =      .00000    g/sq.ft.
               Total inflow at boundaries =     -.14819E-02g/sq.ft.
               Mass discrepancy =      .10710E-07g/sq.ft.

Since beginning of run at time = 0.0
               Change in Total Mass =     -.59940E-02g/sq.ft.
                    Advection in from atmosphere =       .00000    g/sq.ft.
                    Advection in from water table =     -.57930E-02g/sq.ft.
                    Diffusion in from atmosphere =      -.20103E-03g/sq.ft.
                    Diffusion in from water table =      .00000    g/sq.ft.
               Total inflow at boundaries =     -.59941E-02g/sq.ft.
               Mass discrepancy =      .21420E-07g/sq.ft.


Polygon   1
At time =       5.00, total mass in vadose zone =     .92895E-01g/sq.ft.
Mass in gas phase     =       .11916E-01g/sq.ft.
Mass in liquid phase  =       .50986E-01g/sq.ft.
Mass sorbed           =       .29992E-01g/sq.ft.

Since last printout at time =       4.00
               Change in Total Mass =     -.14677E-02g/sq.ft.
```

```
                    Advection in from atmosphere =       .00000    g/sq.ft.
                    Advection in from water table =     -.14198E-02g/sq.ft.
                    Diffusion in from atmosphere =      -.47919E-04g/sq.ft.
                    Diffusion in from water table =      .00000    g/sq.ft.
               Total inflow at boundaries =     -.14677E-02g/sq.ft.
               Mass discrepancy =      .15134E-08g/sq.ft.

Since beginning of run at time = 0.0
               Change in Total Mass =     -.74617E-02g/sq.ft.
                    Advection in from atmosphere =       .00000    g/sq.ft.
                    Advection in from water table =     -.72128E-02g/sq.ft.
                    Diffusion in from atmosphere =      -.24895E-03g/sq.ft.
                    Diffusion in from water table =      .00000    g/sq.ft.
               Total inflow at boundaries =     -.74618E-02g/sq.ft.
               Mass discrepancy =      .22817E-07g/sq.ft.


Polygon   1
At time =       6.00, total mass in vadose zone =     .91443E-01g/sq.ft.
Mass in gas phase     =       .11730E-01g/sq.ft.
Mass in liquid phase  =       .50190E-01g/sq.ft.
Mass sorbed           =       .29523E-01g/sq.ft.

Since last printout at time =       5.00
               Change in Total Mass =     -.14519E-02g/sq.ft.
                    Advection in from atmosphere =       .00000    g/sq.ft.
                    Advection in from water table =     -.14052E-02g/sq.ft.
                    Diffusion in from atmosphere =      -.46766E-04g/sq.ft.
                    Diffusion in from water table =      .00000    g/sq.ft.
               Total inflow at boundaries =     -.14519E-02g/sq.ft.
               Mass discrepancy =     -.81491E-08g/sq.ft.

Since beginning of run at time = 0.0
               Change in Total Mass =     -.89137E-02g/sq.ft.
                    Advection in from atmosphere =       .00000    g/sq.ft.
                    Advection in from water table =     -.86180E-02g/sq.ft.
                    Diffusion in from atmosphere =      -.29571E-03g/sq.ft.
                    Diffusion in from water table =      .00000    g/sq.ft.
               Total inflow at boundaries =     -.89137E-02g/sq.ft.
               Mass discrepancy =      .14901E-07g/sq.ft.


Polygon   1
At time =       7.00, total mass in vadose zone =     .90008E-01g/sq.ft.
Mass in gas phase     =       .11546E-01g/sq.ft.
Mass in liquid phase  =       .49402E-01g/sq.ft.
Mass sorbed           =       .29060E-01g/sq.ft.

Since last printout at time =       6.00
               Change in Total Mass =     -.14350E-02g/sq.ft.
                    Advection in from atmosphere =       .00000    g/sq.ft.
                    Advection in from water table =     -.13894E-02g/sq.ft.
                    Diffusion in from atmosphere =      -.45565E-04g/sq.ft.
                    Diffusion in from water table =      .00000    g/sq.ft.
               Total inflow at boundaries =     -.14350E-02g/sq.ft.
               Mass discrepancy =     -.69849E-09g/sq.ft.

Since beginning of run at time = 0.0
               Change in Total Mass =     -.10349E-01g/sq.ft.
                    Advection in from atmosphere =       .00000    g/sq.ft.
```

```
                    Advection in from water table =     -.10007E-01g/sq.ft.
                    Diffusion in from atmosphere =      -.34128E-03g/sq.ft.
                    Diffusion in from water table =      .00000    g/sq.ft.
               Total inflow at boundaries =     -.10349E-01g/sq.ft.
               Mass discrepancy =      .14901E-07g/sq.ft.


Polygon   1
At time =       8.00, total mass in vadose zone =     .88591E-01g/sq.ft.
Mass in gas phase     =       .11364E-01g/sq.ft.
Mass in liquid phase  =       .48624E-01g/sq.ft.
Mass sorbed           =       .28603E-01g/sq.ft.

Since last printout at time =       7.00
               Change in Total Mass =     -.14174E-02g/sq.ft.
                    Advection in from atmosphere =       .00000    g/sq.ft.
                    Advection in from water table =     -.13730E-02g/sq.ft.
                    Diffusion in from atmosphere =      -.44340E-04g/sq.ft.
                    Diffusion in from water table =      .00000    g/sq.ft.
               Total inflow at boundaries =     -.14174E-02g/sq.ft.
               Mass discrepancy =     -.41910E-08g/sq.ft.

Since beginning of run at time = 0.0
               Change in Total Mass =     -.11766E-01g/sq.ft.
                    Advection in from atmosphere =       .00000    g/sq.ft.
                    Advection in from water table =     -.11380E-01g/sq.ft.
                    Diffusion in from atmosphere =      -.38562E-03g/sq.ft.
                    Diffusion in from water table =      .00000    g/sq.ft.
               Total inflow at boundaries =     -.11766E-01g/sq.ft.
               Mass discrepancy =      .10245E-07g/sq.ft.


Polygon   1
At time =       9.00, total mass in vadose zone =     .87191E-01g/sq.ft.
Mass in gas phase     =       .11185E-01g/sq.ft.
Mass in liquid phase  =       .47856E-01g/sq.ft.
Mass sorbed           =       .28151E-01g/sq.ft.

Since last printout at time =       8.00
               Change in Total Mass =     -.13994E-02g/sq.ft.
                    Advection in from atmosphere =       .00000    g/sq.ft.
                    Advection in from water table =     -.13563E-02g/sq.ft.
                    Diffusion in from atmosphere =      -.43105E-04g/sq.ft.
                    Diffusion in from water table =      .00000    g/sq.ft.
               Total inflow at boundaries =     -.13994E-02g/sq.ft.
               Mass discrepancy =      .67521E-08g/sq.ft.

Since beginning of run at time = 0.0
               Change in Total Mass =     -.13166E-01g/sq.ft.
                    Advection in from atmosphere =       .00000    g/sq.ft.
                    Advection in from water table =     -.12737E-01g/sq.ft.
                    Diffusion in from atmosphere =      -.42872E-03g/sq.ft.
                    Diffusion in from water table =      .00000    g/sq.ft.
               Total inflow at boundaries =     -.13166E-01g/sq.ft.
               Mass discrepancy =      .16764E-07g/sq.ft.


Polygon   1
At time =      10.00, total mass in vadose zone =     .85810E-01g/sq.ft.
Mass in gas phase     =       .11008E-01g/sq.ft.
```

```
Mass in liquid phase  =       .47098E-01g/sq.ft.
Mass sorbed           =       .27705E-01g/sq.ft.

Since last printout at time =       9.00
               Change in Total Mass =     -.13815E-02g/sq.ft.
                    Advection in from atmosphere =       .00000    g/sq.ft.
                    Advection in from water table =     -.13396E-02g/sq.ft.
                    Diffusion in from atmosphere =      -.41873E-04g/sq.ft.
                    Diffusion in from water table =      .00000    g/sq.ft.
               Total inflow at boundaries =     -.13815E-02g/sq.ft.
               Mass discrepancy =      .59372E-08g/sq.ft.

Since beginning of run at time = 0.0
               Change in Total Mass =     -.14547E-01g/sq.ft.
                    Advection in from atmosphere =       .00000    g/sq.ft.
                    Advection in from water table =     -.14076E-01g/sq.ft.
                    Diffusion in from atmosphere =      -.47059E-03g/sq.ft.
                    Diffusion in from water table =      .00000    g/sq.ft.
               Total inflow at boundaries =     -.14547E-01g/sq.ft.
               Mass discrepancy =      .23283E-07g/sq.ft.


Polygon   1
At time =      11.00, total mass in vadose zone =     .84446E-01g/sq.ft.
Mass in gas phase     =       .10833E-01g/sq.ft.
Mass in liquid phase  =       .46349E-01g/sq.ft.
Mass sorbed           =       .27264E-01g/sq.ft.

Since last printout at time =      10.00
               Change in Total Mass =     -.13637E-02g/sq.ft.
                    Advection in from atmosphere =       .00000    g/sq.ft.
                    Advection in from water table =     -.13231E-02g/sq.ft.
                    Diffusion in from atmosphere =      -.40654E-04g/sq.ft.
                    Diffusion in from water table =      .00000    g/sq.ft.
               Total inflow at boundaries =     -.13637E-02g/sq.ft.
               Mass discrepancy =     -.46566E-08g/sq.ft.

Since beginning of run at time = 0.0
               Change in Total Mass =     -.15911E-01g/sq.ft.
                    Advection in from atmosphere =       .00000    g/sq.ft.
                    Advection in from water table =     -.15399E-01g/sq.ft.
                    Diffusion in from atmosphere =      -.51125E-03g/sq.ft.
                    Diffusion in from water table =      .00000    g/sq.ft.
               Total inflow at boundaries =     -.15911E-01g/sq.ft.
               Mass discrepancy =      .18626E-07g/sq.ft.


Polygon   1
At time =      12.00, total mass in vadose zone =     .83100E-01g/sq.ft.
Mass in gas phase     =       .10660E-01g/sq.ft.
Mass in liquid phase  =       .45610E-01g/sq.ft.
Mass sorbed           =       .26830E-01g/sq.ft.

Since last printout at time =      11.00
               Change in Total Mass =     -.13462E-02g/sq.ft.
                    Advection in from atmosphere =       .00000    g/sq.ft.
                    Advection in from water table =     -.13068E-02g/sq.ft.
                    Diffusion in from atmosphere =      -.39454E-04g/sq.ft.
                    Diffusion in from water table =      .00000    g/sq.ft.
               Total inflow at boundaries =     -.13463E-02g/sq.ft.
```

```
            Mass discrepancy =      .97789E-08g/sq.ft.

Since beginning of run at time = 0.0
            Change in Total Mass =     -.17257E-01g/sq.ft.
                 Advection in from atmosphere =       .00000    g/sq.ft.
                 Advection in from water table =     -.16706E-01g/sq.ft.
                 Diffusion in from atmosphere =      -.55070E-03g/sq.ft.
                 Diffusion in from water table =      .00000    g/sq.ft.
            Total inflow at boundaries =     -.17257E-01g/sq.ft.
            Mass discrepancy =      .27940E-07g/sq.ft.


Polygon   1
At time =      13.00, total mass in vadose zone =     .81771E-01g/sq.ft.
Mass in gas phase     =       .10489E-01g/sq.ft.
Mass in liquid phase  =       .44881E-01g/sq.ft.
Mass sorbed           =       .26401E-01g/sq.ft.

Since last printout at time =      12.00
            Change in Total Mass =     -.13292E-02g/sq.ft.
                 Advection in from atmosphere =       .00000    g/sq.ft.
                 Advection in from water table =     -.12909E-02g/sq.ft.
                 Diffusion in from atmosphere =      -.38278E-04g/sq.ft.
                 Diffusion in from water table =      .00000    g/sq.ft.
            Total inflow at boundaries =     -.13292E-02g/sq.ft.
            Mass discrepancy =     -.12689E-07g/sq.ft.

Since beginning of run at time = 0.0
            Change in Total Mass =     -.18586E-01g/sq.ft.
                 Advection in from atmosphere =       .00000    g/sq.ft.
                 Advection in from water table =     -.17997E-01g/sq.ft.
                 Diffusion in from atmosphere =      -.58898E-03g/sq.ft.
                 Diffusion in from water table =      .00000    g/sq.ft.
            Total inflow at boundaries =     -.18586E-01g/sq.ft.
            Mass discrepancy =      .14901E-07g/sq.ft.


Polygon   1
At time =      14.00, total mass in vadose zone =     .80458E-01g/sq.ft.
Mass in gas phase     =       .10321E-01g/sq.ft.
Mass in liquid phase  =       .44160E-01g/sq.ft.
Mass sorbed           =       .25977E-01g/sq.ft.

Since last printout at time =      13.00
            Change in Total Mass =     -.13124E-02g/sq.ft.
                 Advection in from atmosphere =       .00000    g/sq.ft.
                 Advection in from water table =     -.12753E-02g/sq.ft.
                 Diffusion in from atmosphere =      -.37129E-04g/sq.ft.
                 Diffusion in from water table =      .00000    g/sq.ft.
            Total inflow at boundaries =     -.13124E-02g/sq.ft.
            Mass discrepancy =     -.71013E-08g/sq.ft.

Since beginning of run at time = 0.0
            Change in Total Mass =     -.19899E-01g/sq.ft.
                 Advection in from atmosphere =       .00000    g/sq.ft.
                 Advection in from water table =     -.19272E-01g/sq.ft.
                 Diffusion in from atmosphere =      -.62611E-03g/sq.ft.
                 Diffusion in from water table =      .00000    g/sq.ft.
            Total inflow at boundaries =     -.19899E-01g/sq.ft.
            Mass discrepancy =      .93132E-08g/sq.ft.
```

```
Polygon   1
At time =      15.00, total mass in vadose zone =     .79162E-01g/sq.ft.
Mass in gas phase     =       .10155E-01g/sq.ft.
Mass in liquid phase  =       .43449E-01g/sq.ft.
Mass sorbed           =       .25558E-01g/sq.ft.

Since last printout at time =      14.00
               Change in Total Mass =     -.12960E-02g/sq.ft.
                    Advection in from atmosphere =       .00000    g/sq.ft.
                    Advection in from water table =     -.12600E-02g/sq.ft.
                    Diffusion in from atmosphere =      -.36010E-04g/sq.ft.
                    Diffusion in from water table =      .00000    g/sq.ft.
               Total inflow at boundaries =     -.12960E-02g/sq.ft.
               Mass discrepancy =      .13504E-07g/sq.ft.

Since beginning of run at time = 0.0
               Change in Total Mass =     -.21195E-01g/sq.ft.
                    Advection in from atmosphere =       .00000    g/sq.ft.
                    Advection in from water table =     -.20532E-01g/sq.ft.
                    Diffusion in from atmosphere =      -.66212E-03g/sq.ft.
                    Diffusion in from water table =      .00000    g/sq.ft.
               Total inflow at boundaries =     -.21195E-01g/sq.ft.
               Mass discrepancy =      .22352E-07g/sq.ft.


Polygon   1
At time =      16.00, total mass in vadose zone =     .77882E-01g/sq.ft.
Mass in gas phase     =       .99906E-02g/sq.ft.
Mass in liquid phase  =       .42747E-01g/sq.ft.
Mass sorbed           =       .25145E-01g/sq.ft.

Since last printout at time =      15.00
               Change in Total Mass =     -.12799E-02g/sq.ft.
                    Advection in from atmosphere =       .00000    g/sq.ft.
                    Advection in from water table =     -.12450E-02g/sq.ft.
                    Diffusion in from atmosphere =      -.34922E-04g/sq.ft.
                    Diffusion in from water table =      .00000    g/sq.ft.
               Total inflow at boundaries =     -.12799E-02g/sq.ft.
               Mass discrepancy =      .19791E-08g/sq.ft.

Since beginning of run at time = 0.0
               Change in Total Mass =     -.22475E-01g/sq.ft.
                    Advection in from atmosphere =       .00000    g/sq.ft.
                    Advection in from water table =     -.21777E-01g/sq.ft.
                    Diffusion in from atmosphere =      -.69704E-03g/sq.ft.
                    Diffusion in from water table =      .00000    g/sq.ft.
               Total inflow at boundaries =     -.22475E-01g/sq.ft.
               Mass discrepancy =      .24214E-07g/sq.ft.


Polygon   1
At time =      17.00, total mass in vadose zone =     .76618E-01g/sq.ft.
Mass in gas phase     =       .98285E-02g/sq.ft.
Mass in liquid phase  =       .42053E-01g/sq.ft.
Mass sorbed           =       .24737E-01g/sq.ft.

Since last printout at time =      16.00
               Change in Total Mass =     -.12641E-02g/sq.ft.
```

```
                Advection in from atmosphere =       .00000    g/sq.ft.
                Advection in from water table =     -.12303E-02g/sq.ft.
                Diffusion in from atmosphere =      -.33866E-04g/sq.ft.
                Diffusion in from water table =      .00000    g/sq.ft.
           Total inflow at boundaries =     -.12641E-02g/sq.ft.
           Mass discrepancy =     -.23283E-08g/sq.ft.

Since beginning of run at time = 0.0
           Change in Total Mass =     -.23739E-01g/sq.ft.
                Advection in from atmosphere =       .00000    g/sq.ft.
                Advection in from water table =     -.23008E-01g/sq.ft.
                Diffusion in from atmosphere =      -.73091E-03g/sq.ft.
                Diffusion in from water table =      .00000    g/sq.ft.
           Total inflow at boundaries =     -.23739E-01g/sq.ft.
           Mass discrepancy =      .20489E-07g/sq.ft.


Polygon   1
At time =      18.00, total mass in vadose zone =     .75370E-01g/sq.ft.
Mass in gas phase     =       .96683E-02g/sq.ft.
Mass in liquid phase  =       .41367E-01g/sq.ft.
Mass sorbed           =       .24334E-01g/sq.ft.

Since last printout at time =      17.00
           Change in Total Mass =     -.12486E-02g/sq.ft.
                Advection in from atmosphere =       .00000    g/sq.ft.
                Advection in from water table =     -.12157E-02g/sq.ft.
                Diffusion in from atmosphere =      -.32842E-04g/sq.ft.
                Diffusion in from water table =      .00000    g/sq.ft.
           Total inflow at boundaries =     -.12486E-02g/sq.ft.
           Mass discrepancy =      .52387E-08g/sq.ft.

Since beginning of run at time = 0.0
           Change in Total Mass =     -.24987E-01g/sq.ft.
                Advection in from atmosphere =       .00000    g/sq.ft.
                Advection in from water table =     -.24223E-01g/sq.ft.
                Diffusion in from atmosphere =      -.76375E-03g/sq.ft.
                Diffusion in from water table =      .00000    g/sq.ft.
           Total inflow at boundaries =     -.24987E-01g/sq.ft.
           Mass discrepancy =      .27940E-07g/sq.ft.


Polygon   1
At time =      19.00, total mass in vadose zone =     .74136E-01g/sq.ft.
Mass in gas phase     =       .95101E-02g/sq.ft.
Mass in liquid phase  =       .40691E-01g/sq.ft.
Mass sorbed           =       .23936E-01g/sq.ft.

Since last printout at time =      18.00
           Change in Total Mass =     -.12332E-02g/sq.ft.
                Advection in from atmosphere =       .00000    g/sq.ft.
                Advection in from water table =     -.12014E-02g/sq.ft.
                Diffusion in from atmosphere =      -.31851E-04g/sq.ft.
                Diffusion in from water table =      .00000    g/sq.ft.
           Total inflow at boundaries =     -.12332E-02g/sq.ft.
           Mass discrepancy =     -.10710E-07g/sq.ft.

Since beginning of run at time = 0.0
           Change in Total Mass =     -.26220E-01g/sq.ft.
                Advection in from atmosphere =       .00000    g/sq.ft.
```

```
                    Advection in from water table =     -.25425E-01g/sq.ft.
                    Diffusion in from atmosphere =      -.79560E-03g/sq.ft.
                    Diffusion in from water table =      .00000    g/sq.ft.
               Total inflow at boundaries =     -.26220E-01g/sq.ft.
               Mass discrepancy =      .16764E-07g/sq.ft.


Polygon   1
At time =      20.00, total mass in vadose zone =     .72918E-01g/sq.ft.
Mass in gas phase     =       .93539E-02g/sq.ft.
Mass in liquid phase  =       .40022E-01g/sq.ft.
Mass sorbed           =       .23543E-01g/sq.ft.

Since last printout at time =      19.00
               Change in Total Mass =     -.12181E-02g/sq.ft.
                    Advection in from atmosphere =       .00000    g/sq.ft.
                    Advection in from water table =     -.11872E-02g/sq.ft.
                    Diffusion in from atmosphere =      -.30891E-04g/sq.ft.
                    Diffusion in from water table =      .00000    g/sq.ft.
               Total inflow at boundaries =     -.12181E-02g/sq.ft.
               Mass discrepancy =      .12806E-08g/sq.ft.

Since beginning of run at time = 0.0
               Change in Total Mass =     -.27439E-01g/sq.ft.
                    Advection in from atmosphere =       .00000    g/sq.ft.
                    Advection in from water table =     -.26612E-01g/sq.ft.
                    Diffusion in from atmosphere =      -.82649E-03g/sq.ft.
                    Diffusion in from water table =      .00000    g/sq.ft.
               Total inflow at boundaries =     -.27439E-01g/sq.ft.
               Mass discrepancy =      .18626E-07g/sq.ft.


Polygon   1
At time =      21.00, total mass in vadose zone =     .71715E-01g/sq.ft.
Mass in gas phase     =       .91995E-02g/sq.ft.
Mass in liquid phase  =       .39362E-01g/sq.ft.
Mass sorbed           =       .23154E-01g/sq.ft.

Since last printout at time =      20.00
               Change in Total Mass =     -.12031E-02g/sq.ft.
                    Advection in from atmosphere =       .00000    g/sq.ft.
                    Advection in from water table =     -.11731E-02g/sq.ft.
                    Diffusion in from atmosphere =      -.29962E-04g/sq.ft.
                    Diffusion in from water table =      .00000    g/sq.ft.
               Total inflow at boundaries =     -.12031E-02g/sq.ft.
               Mass discrepancy =      .81491E-09g/sq.ft.

Since beginning of run at time = 0.0
               Change in Total Mass =     -.28642E-01g/sq.ft.
                    Advection in from atmosphere =       .00000    g/sq.ft.
                    Advection in from water table =     -.27785E-01g/sq.ft.
                    Diffusion in from atmosphere =      -.85645E-03g/sq.ft.
                    Diffusion in from water table =      .00000    g/sq.ft.
               Total inflow at boundaries =     -.28642E-01g/sq.ft.
               Mass discrepancy =      .18626E-07g/sq.ft.


Polygon   1
At time =      22.00, total mass in vadose zone =     .70527E-01g/sq.ft.
Mass in gas phase     =       .90471E-02g/sq.ft.
```

```
Mass in liquid phase  =       .38710E-01g/sq.ft.
Mass sorbed           =       .22770E-01g/sq.ft.

Since last printout at time =      21.00
              Change in Total Mass =     -.11883E-02g/sq.ft.
                   Advection in from atmosphere =       .00000    g/sq.ft.
                   Advection in from water table =     -.11592E-02g/sq.ft.
                   Diffusion in from atmosphere =      -.29065E-04g/sq.ft.
                   Diffusion in from water table =      .00000    g/sq.ft.
              Total inflow at boundaries =     -.11883E-02g/sq.ft.
              Mass discrepancy =      .30268E-08g/sq.ft.

Since beginning of run at time = 0.0
              Change in Total Mass =     -.29830E-01g/sq.ft.
                   Advection in from atmosphere =       .00000    g/sq.ft.
                   Advection in from water table =     -.28944E-01g/sq.ft.
                   Diffusion in from atmosphere =      -.88552E-03g/sq.ft.
                   Diffusion in from water table =      .00000    g/sq.ft.
              Total inflow at boundaries =     -.29830E-01g/sq.ft.
              Mass discrepancy =      .22352E-07g/sq.ft.


Polygon   1
At time =      23.00, total mass in vadose zone =     .69353E-01g/sq.ft.
Mass in gas phase     =       .88966E-02g/sq.ft.
Mass in liquid phase  =       .38065E-01g/sq.ft.
Mass sorbed           =       .22392E-01g/sq.ft.

Since last printout at time =      22.00
              Change in Total Mass =     -.11736E-02g/sq.ft.
                   Advection in from atmosphere =       .00000    g/sq.ft.
                   Advection in from water table =     -.11454E-02g/sq.ft.
                   Diffusion in from atmosphere =      -.28197E-04g/sq.ft.
                   Diffusion in from water table =      .00000    g/sq.ft.
              Total inflow at boundaries =     -.11736E-02g/sq.ft.
              Mass discrepancy =     -.36089E-08g/sq.ft.

Since beginning of run at time = 0.0
              Change in Total Mass =     -.31003E-01g/sq.ft.
                   Advection in from atmosphere =       .00000    g/sq.ft.
                   Advection in from water table =     -.30090E-01g/sq.ft.
                   Diffusion in from atmosphere =      -.91372E-03g/sq.ft.
                   Diffusion in from water table =      .00000    g/sq.ft.
              Total inflow at boundaries =     -.31003E-01g/sq.ft.
              Mass discrepancy =      .18626E-07g/sq.ft.


Polygon   1
At time =      24.00, total mass in vadose zone =     .68194E-01g/sq.ft.
Mass in gas phase     =       .87479E-02g/sq.ft.
Mass in liquid phase  =       .37429E-01g/sq.ft.
Mass sorbed           =       .22017E-01g/sq.ft.

Since last printout at time =      23.00
              Change in Total Mass =     -.11590E-02g/sq.ft.
                   Advection in from atmosphere =       .00000    g/sq.ft.
                   Advection in from water table =     -.11317E-02g/sq.ft.
                   Diffusion in from atmosphere =      -.27359E-04g/sq.ft.
                   Diffusion in from water table =      .00000    g/sq.ft.
              Total inflow at boundaries =     -.11590E-02g/sq.ft.
```

```
              Mass discrepancy =      .15600E-07g/sq.ft.

Since beginning of run at time = 0.0
              Change in Total Mass =     -.32162E-01g/sq.ft.
                   Advection in from atmosphere =       .00000    g/sq.ft.
                   Advection in from water table =     -.31221E-01g/sq.ft.
                   Diffusion in from atmosphere =      -.94108E-03g/sq.ft.
                   Diffusion in from water table =      .00000    g/sq.ft.
              Total inflow at boundaries =     -.32162E-01g/sq.ft.
              Mass discrepancy =      .33528E-07g/sq.ft.


Polygon   1
At time =      25.00, total mass in vadose zone =     .67050E-01g/sq.ft.
Mass in gas phase     =       .86010E-02g/sq.ft.
Mass in liquid phase  =       .36801E-01g/sq.ft.
Mass sorbed           =       .21648E-01g/sq.ft.

Since last printout at time =      24.00
              Change in Total Mass =     -.11446E-02g/sq.ft.
                   Advection in from atmosphere =       .00000    g/sq.ft.
                   Advection in from water table =     -.11181E-02g/sq.ft.
                   Diffusion in from atmosphere =      -.26548E-04g/sq.ft.
                   Diffusion in from water table =      .00000    g/sq.ft.
              Total inflow at boundaries =     -.11446E-02g/sq.ft.
              Mass discrepancy =     -.68685E-08g/sq.ft.

Since beginning of run at time = 0.0
              Change in Total Mass =     -.33307E-01g/sq.ft.
                   Advection in from atmosphere =       .00000    g/sq.ft.
                   Advection in from water table =     -.32340E-01g/sq.ft.
                   Diffusion in from atmosphere =      -.96762E-03g/sq.ft.
                   Diffusion in from water table =      .00000    g/sq.ft.
              Total inflow at boundaries =     -.33307E-01g/sq.ft.
              Mass discrepancy =      .29802E-07g/sq.ft.


Polygon   1
At time =      26.00, total mass in vadose zone =     .65919E-01g/sq.ft.
Mass in gas phase     =       .84560E-02g/sq.ft.
Mass in liquid phase  =       .36181E-01g/sq.ft.
Mass sorbed           =       .21283E-01g/sq.ft.

Since last printout at time =      25.00
              Change in Total Mass =     -.11303E-02g/sq.ft.
                   Advection in from atmosphere =       .00000    g/sq.ft.
                   Advection in from water table =     -.11046E-02g/sq.ft.
                   Diffusion in from atmosphere =      -.25765E-04g/sq.ft.
                   Diffusion in from water table =      .00000    g/sq.ft.
              Total inflow at boundaries =     -.11303E-02g/sq.ft.
              Mass discrepancy =      .38417E-08g/sq.ft.

Since beginning of run at time = 0.0
              Change in Total Mass =     -.34437E-01g/sq.ft.
                   Advection in from atmosphere =       .00000    g/sq.ft.
                   Advection in from water table =     -.33444E-01g/sq.ft.
                   Diffusion in from atmosphere =      -.99339E-03g/sq.ft.
                   Diffusion in from water table =      .00000    g/sq.ft.
              Total inflow at boundaries =     -.34437E-01g/sq.ft.
              Mass discrepancy =      .33528E-07g/sq.ft.
```

```
Polygon   1
At time =      27.00, total mass in vadose zone =     .64803E-01g/sq.ft.
Mass in gas phase     =       .83129E-02g/sq.ft.
Mass in liquid phase  =       .35568E-01g/sq.ft.
Mass sorbed           =       .20922E-01g/sq.ft.

Since last printout at time =      26.00
               Change in Total Mass =     -.11162E-02g/sq.ft.
                    Advection in from atmosphere =       .00000    g/sq.ft.
                    Advection in from water table =     -.10912E-02g/sq.ft.
                    Diffusion in from atmosphere =      -.25009E-04g/sq.ft.
                    Diffusion in from water table =      .00000    g/sq.ft.
               Total inflow at boundaries =     -.11162E-02g/sq.ft.
               Mass discrepancy =     -.36089E-08g/sq.ft.

Since beginning of run at time = 0.0
               Change in Total Mass =     -.35554E-01g/sq.ft.
                    Advection in from atmosphere =       .00000    g/sq.ft.
                    Advection in from water table =     -.34535E-01g/sq.ft.
                    Diffusion in from atmosphere =      -.10184E-02g/sq.ft.
                    Diffusion in from water table =      .00000    g/sq.ft.
               Total inflow at boundaries =     -.35554E-01g/sq.ft.
               Mass discrepancy =      .29802E-07g/sq.ft.


Polygon   1
At time =      28.00, total mass in vadose zone =     .63701E-01g/sq.ft.
Mass in gas phase     =       .81715E-02g/sq.ft.
Mass in liquid phase  =       .34963E-01g/sq.ft.
Mass sorbed           =       .20567E-01g/sq.ft.

Since last printout at time =      27.00
               Change in Total Mass =     -.11021E-02g/sq.ft.
                    Advection in from atmosphere =       .00000    g/sq.ft.
                    Advection in from water table =     -.10778E-02g/sq.ft.
                    Diffusion in from atmosphere =      -.24278E-04g/sq.ft.
                    Diffusion in from water table =      .00000    g/sq.ft.
               Total inflow at boundaries =     -.11021E-02g/sq.ft.
               Mass discrepancy =      .25611E-08g/sq.ft.

Since beginning of run at time = 0.0
               Change in Total Mass =     -.36656E-01g/sq.ft.
                    Advection in from atmosphere =       .00000    g/sq.ft.
                    Advection in from water table =     -.35613E-01g/sq.ft.
                    Diffusion in from atmosphere =      -.10427E-02g/sq.ft.
                    Diffusion in from water table =      .00000    g/sq.ft.
               Total inflow at boundaries =     -.36656E-01g/sq.ft.
               Mass discrepancy =      .33528E-07g/sq.ft.


Polygon   1
At time =      29.00, total mass in vadose zone =     .62613E-01g/sq.ft.
Mass in gas phase     =       .80319E-02g/sq.ft.
Mass in liquid phase  =       .34366E-01g/sq.ft.
Mass sorbed           =       .20215E-01g/sq.ft.

Since last printout at time =      28.00
               Change in Total Mass =     -.10882E-02g/sq.ft.
```

```
                    Advection in from atmosphere =       .00000    g/sq.ft.
                    Advection in from water table =    -.10646E-02g/sq.ft.
                    Diffusion in from atmosphere =     -.23572E-04g/sq.ft.
                    Diffusion in from water table =      .00000    g/sq.ft.
               Total inflow at boundaries =     -.10882E-02g/sq.ft.
               Mass discrepancy =      .23283E-08g/sq.ft.

Since beginning of run at time = 0.0
               Change in Total Mass =     -.37744E-01g/sq.ft.
                    Advection in from atmosphere =       .00000    g/sq.ft.
                    Advection in from water table =    -.36678E-01g/sq.ft.
                    Diffusion in from atmosphere =     -.10662E-02g/sq.ft.
                    Diffusion in from water table =      .00000    g/sq.ft.
               Total inflow at boundaries =     -.37744E-01g/sq.ft.
               Mass discrepancy =      .37253E-07g/sq.ft.


Polygon   1
At time =      30.00, total mass in vadose zone =     .61539E-01g/sq.ft.
Mass in gas phase     =       .78941E-02g/sq.ft.
Mass in liquid phase  =       .33776E-01g/sq.ft.
Mass sorbed           =       .19868E-01g/sq.ft.

Since last printout at time =      29.00
               Change in Total Mass =     -.10743E-02g/sq.ft.
                    Advection in from atmosphere =       .00000    g/sq.ft.
                    Advection in from water table =    -.10514E-02g/sq.ft.
                    Diffusion in from atmosphere =     -.22889E-04g/sq.ft.
                    Diffusion in from water table =      .00000    g/sq.ft.
               Total inflow at boundaries =     -.10743E-02g/sq.ft.
               Mass discrepancy =     -.53551E-08g/sq.ft.

Since beginning of run at time = 0.0
               Change in Total Mass =     -.38818E-01g/sq.ft.
                    Advection in from atmosphere =       .00000    g/sq.ft.
                    Advection in from water table =    -.37729E-01g/sq.ft.
                    Diffusion in from atmosphere =     -.10891E-02g/sq.ft.
                    Diffusion in from water table =      .00000    g/sq.ft.
               Total inflow at boundaries =     -.38818E-01g/sq.ft.
               Mass discrepancy =      .29802E-07g/sq.ft.


GROUNDWATER IMPACT OF POLYGON   1

 Time        Mass per area (g/sq.ft.)      Total Mass (g)
     1.00          .14618E-02                 131.57
     2.00          .14539E-02                 130.85
     3.00          .14443E-02                 129.99
     4.00          .14329E-02                 128.96
     5.00          .14198E-02                 127.78
     6.00          .14052E-02                 126.47
     7.00          .13894E-02                 125.05
     8.00          .13730E-02                 123.57
     9.00          .13563E-02                 122.07
    10.00          .13396E-02                 120.56
    11.00          .13231E-02                 119.08
    12.00          .13068E-02                 117.61
    13.00          .12909E-02                 116.18
    14.00          .12753E-02                 114.78
    15.00          .12600E-02                 113.40
```

16.00	.12450E-02	112.05
17.00	.12303E-02	110.72
18.00	.12157E-02	109.42
19.00	.12014E-02	108.12
20.00	.11872E-02	106.85
21.00	.11731E-02	105.58
22.00	.11592E-02	104.33
23.00	.11454E-02	103.08
24.00	.11317E-02	101.85
25.00	.11181E-02	100.63
26.00	.11046E-02	99.412
27.00	.10912E-02	98.205
28.00	.10778E-02	97.005
29.00	.10646E-02	95.813
30.00	.10514E-02	94.627

****

****

TOTAL GROUNDWATER IMPACT

Time (yr)	Mass (g)	Cumulative Mass (g)
1.00	131.57	131.57
2.00	130.85	262.42
3.00	129.99	392.41
4.00	128.96	521.37
5.00	127.78	649.15
6.00	126.47	775.62
7.00	125.05	900.67
8.00	123.57	1024.2
9.00	122.07	1146.3
10.00	120.56	1266.9
11.00	119.08	1386.0
12.00	117.61	1503.6
13.00	116.18	1619.7
14.00	114.78	1734.5
15.00	113.40	1847.9
16.00	112.05	1960.0
17.00	110.72	2070.7
18.00	109.42	2180.1
19.00	108.12	2288.2
20.00	106.85	2395.1
21.00	105.58	2500.7
22.00	104.33	2605.0
23.00	103.08	2708.1
24.00	101.85	2809.9
25.00	100.63	2910.6
26.00	99.412	3010.0
27.00	98.205	3108.2
28.00	97.005	3205.2
29.00	95.813	3301.0
30.00	94.627	3395.6

Polygon 11A
Time: .000

Cell	Cgas(g/cu.ft.)	Cliq(g/cu.ft.)	Csol
1	.94556E-06	.19991E-05	.64570E-11
2	.94556E-06	.19991E-05	.64570E-11
3	.94556E-06	.19991E-05	.64570E-11
4	.94556E-06	.19991E-05	.64570E-11
5	.94556E-06	.19991E-05	.64570E-11
6	.94556E-06	.19991E-05	.64570E-11
7	.27090E-03	.57273E-03	.18499E-08
8	.27090E-03	.57273E-03	.18499E-08
9	.27090E-03	.57273E-03	.18499E-08
10	.27090E-03	.57273E-03	.18499E-08
11	.27090E-03	.57273E-03	.18499E-08
12	.27090E-03	.57273E-03	.18499E-08
13	.67608E-03	.14293E-02	.46168E-08
14	.67608E-03	.14293E-02	.46168E-08
15	.67608E-03	.14293E-02	.46168E-08
16	.67608E-03	.14293E-02	.46168E-08
17	.67608E-03	.14293E-02	.46168E-08
18	.67608E-03	.14293E-02	.46168E-08
19	.10817E-02	.22869E-02	.73868E-08
20	.10817E-02	.22869E-02	.73868E-08
21	.10817E-02	.22869E-02	.73868E-08
22	.10817E-02	.22869E-02	.73868E-08
23	.10817E-02	.22869E-02	.73868E-08
24	.10817E-02	.22869E-02	.73868E-08
25	.14869E-02	.31435E-02	.10154E-07
26	.14869E-02	.31435E-02	.10154E-07
27	.14869E-02	.31435E-02	.10154E-07
28	.14869E-02	.31435E-02	.10154E-07
29	.14869E-02	.31435E-02	.10154E-07
30	.14869E-02	.31435E-02	.10154E-07
31	.18921E-02	.40001E-02	.12920E-07
32	.18921E-02	.40001E-02	.12920E-07
33	.18921E-02	.40001E-02	.12920E-07
34	.18921E-02	.40001E-02	.12920E-07
35	.18921E-02	.40001E-02	.12920E-07
36	.18921E-02	.40001E-02	.12920E-07
37	.22972E-02	.48567E-02	.15687E-07
38	.22972E-02	.48567E-02	.15687E-07
39	.22972E-02	.48567E-02	.15687E-07
40	.22972E-02	.48567E-02	.15687E-07
41	.22972E-02	.48567E-02	.15687E-07
42	.22972E-02	.48567E-02	.15687E-07
43	.27024E-02	.57133E-02	.18454E-07
44	.27024E-02	.57133E-02	.18454E-07
45	.27024E-02	.57133E-02	.18454E-07
46	.27024E-02	.57133E-02	.18454E-07
47	.27024E-02	.57133E-02	.18454E-07
48	.27024E-02	.57133E-02	.18454E-07
49	.31076E-02	.65699E-02	.21221E-07
50	.31076E-02	.65699E-02	.21221E-07
51	.31076E-02	.65699E-02	.21221E-07
52	.31076E-02	.65699E-02	.21221E-07
53	.31076E-02	.65699E-02	.21221E-07
54	.31076E-02	.65699E-02	.21221E-07
55	.35128E-02	.74266E-02	.23988E-07
56	.35128E-02	.74266E-02	.23988E-07

57	.35128E-02	.74266E-02	.23988E-07
58	.35128E-02	.74266E-02	.23988E-07
59	.35128E-02	.74266E-02	.23988E-07
60	.35128E-02	.74266E-02	.23988E-07

Polygon 11A
Time: 10.000

Cell	Cgas(g/cu.ft.)	Cliq(g/cu.ft.)	Csol
1	.53235E-05	.11255E-04	.36353E-10
2	.13635E-04	.28826E-04	.93108E-10
3	.24531E-04	.51863E-04	.16752E-09
4	.37728E-04	.79763E-04	.25763E-09
5	.53081E-04	.11222E-03	.36248E-09
6	.70613E-04	.14929E-03	.48220E-09
7	.91420E-04	.19328E-03	.62428E-09
8	.11745E-03	.24832E-03	.80207E-09
9	.14982E-03	.31675E-03	.10231E-08
10	.18773E-03	.39690E-03	.12820E-08
11	.22908E-03	.48431E-03	.15643E-08
12	.27177E-03	.57456E-03	.18558E-08
13	.31599E-03	.66806E-03	.21578E-08
14	.36412E-03	.76981E-03	.24865E-08
15	.41791E-03	.88352E-03	.28538E-08
16	.47652E-03	.10074E-02	.32541E-08
17	.53722E-03	.11358E-02	.36685E-08
18	.59713E-03	.12624E-02	.40777E-08
19	.65602E-03	.13869E-02	.44798E-08
20	.71623E-03	.15142E-02	.48910E-08
21	.77976E-03	.16485E-02	.53248E-08
22	.84619E-03	.17890E-02	.57784E-08
23	.91316E-03	.19306E-02	.62357E-08
24	.97813E-03	.20679E-02	.66794E-08
25	.10411E-02	.22011E-02	.71097E-08
26	.11047E-02	.23355E-02	.75437E-08
27	.11710E-02	.24756E-02	.79963E-08
28	.12396E-02	.26208E-02	.84652E-08
29	.13084E-02	.27663E-02	.89350E-08
30	.13749E-02	.29068E-02	.93889E-08
31	.14391E-02	.30425E-02	.98274E-08
32	.15036E-02	.31790E-02	.10268E-07
33	.15707E-02	.33207E-02	.10726E-07
34	.16399E-02	.34670E-02	.11199E-07
35	.17091E-02	.36133E-02	.11671E-07
36	.17758E-02	.37544E-02	.12127E-07
37	.18401E-02	.38903E-02	.12566E-07
38	.19046E-02	.40266E-02	.13006E-07
39	.19714E-02	.41679E-02	.13462E-07
40	.20403E-02	.43135E-02	.13933E-07
41	.21090E-02	.44587E-02	.14402E-07
42	.21750E-02	.45982E-02	.14852E-07
43	.22383E-02	.47322E-02	.15285E-07
44	.23017E-02	.48661E-02	.15717E-07
45	.23670E-02	.50043E-02	.16164E-07
46	.24342E-02	.51463E-02	.16622E-07
47	.25007E-02	.52869E-02	.17077E-07
48	.25642E-02	.54210E-02	.17510E-07
49	.26244E-02	.55485E-02	.17922E-07
50	.26840E-02	.56745E-02	.18329E-07
51	.27450E-02	.58033E-02	.18745E-07
52	.28068E-02	.59339E-02	.19167E-07

53	.28669E-02	.60611E-02	.19577E-07
54	.29227E-02	.61791E-02	.19959E-07
55	.29739E-02	.62873E-02	.20308E-07
56	.30227E-02	.63904E-02	.20641E-07
57	.30707E-02	.64919E-02	.20969E-07
58	.31171E-02	.65902E-02	.21286E-07
59	.31591E-02	.66788E-02	.21573E-07
60	.31933E-02	.67511E-02	.21806E-07

Polygon 11A
Time: 20.000

Cell	Cgas(g/cu.ft.)	Cliq(g/cu.ft.)	Csol
1	.39587E-05	.83693E-05	.27033E-10
2	.10220E-04	.21607E-04	.69791E-10
3	.18590E-04	.39303E-04	.12695E-09
4	.28963E-04	.61233E-04	.19778E-09
5	.41295E-04	.87305E-04	.28199E-09
6	.55587E-04	.11752E-03	.37959E-09
7	.71878E-04	.15196E-03	.49084E-09
8	.90252E-04	.19081E-03	.61631E-09
9	.11085E-03	.23436E-03	.75699E-09
10	.13388E-03	.28305E-03	.91426E-09
11	.15957E-03	.33735E-03	.10896E-08
12	.18809E-03	.39765E-03	.12844E-08
13	.21955E-03	.46416E-03	.14992E-08
14	.25393E-03	.53685E-03	.17340E-08
15	.29118E-03	.61561E-03	.19884E-08
16	.33123E-03	.70028E-03	.22619E-08
17	.37405E-03	.79079E-03	.25543E-08
18	.41955E-03	.88700E-03	.28650E-08
19	.46762E-03	.98863E-03	.31933E-08
20	.51803E-03	.10952E-02	.35375E-08
21	.57052E-03	.12062E-02	.38959E-08
22	.62485E-03	.13210E-02	.42669E-08
23	.68084E-03	.14394E-02	.46493E-08
24	.73835E-03	.15610E-02	.50420E-08
25	.79721E-03	.16854E-02	.54440E-08
26	.85723E-03	.18123E-02	.58538E-08
27	.91819E-03	.19412E-02	.62701E-08
28	.97993E-03	.20717E-02	.66917E-08
29	.10424E-02	.22037E-02	.71181E-08
30	.11054E-02	.23371E-02	.75488E-08
31	.11691E-02	.24717E-02	.79835E-08
32	.12332E-02	.26072E-02	.84212E-08
33	.12976E-02	.27433E-02	.88610E-08
34	.13622E-02	.28800E-02	.93023E-08
35	.14270E-02	.30170E-02	.97448E-08
36	.14920E-02	.31543E-02	.10188E-07
37	.15571E-02	.32919E-02	.10633E-07
38	.16222E-02	.34296E-02	.11078E-07
39	.16873E-02	.35672E-02	.11522E-07
40	.17522E-02	.37043E-02	.11965E-07
41	.18168E-02	.38411E-02	.12407E-07
42	.18813E-02	.39773E-02	.12847E-07
43	.19455E-02	.41130E-02	.13285E-07
44	.20092E-02	.42479E-02	.13721E-07
45	.20725E-02	.43816E-02	.14152E-07
46	.21350E-02	.45138E-02	.14580E-07
47	.21968E-02	.46445E-02	.15002E-07
48	.22578E-02	.47733E-02	.15418E-07

49	.23177E-02	.49001E-02	.15827E-07
50	.23765E-02	.50243E-02	.16228E-07
51	.24338E-02	.51454E-02	.16620E-07
52	.24893E-02	.52628E-02	.16999E-07
53	.25429E-02	.53761E-02	.17365E-07
54	.25942E-02	.54846E-02	.17715E-07
55	.26430E-02	.55878E-02	.18048E-07
56	.26888E-02	.56845E-02	.18361E-07
57	.27310E-02	.57737E-02	.18649E-07
58	.27690E-02	.58542E-02	.18909E-07
59	.28024E-02	.59247E-02	.19137E-07
60	.28304E-02	.59839E-02	.19328E-07

Polygon 11A
Time: 30.000

Cell	Cgas(g/cu.ft.)	Cliq(g/cu.ft.)	Csol
1	.29290E-05	.61925E-05	.20002E-10
2	.75594E-05	.15982E-04	.51622E-10
3	.13749E-04	.29068E-04	.93890E-10
4	.21425E-04	.45296E-04	.14630E-09
5	.30561E-04	.64612E-04	.20870E-09
6	.41169E-04	.87038E-04	.28113E-09
7	.53284E-04	.11265E-03	.36386E-09
8	.66959E-04	.14156E-03	.45724E-09
9	.82260E-04	.17391E-03	.56173E-09
10	.99264E-04	.20986E-03	.67785E-09
11	.11806E-03	.24959E-03	.80617E-09
12	.13872E-03	.29328E-03	.94731E-09
13	.16136E-03	.34115E-03	.11019E-08
14	.18607E-03	.39338E-03	.12706E-08
15	.21292E-03	.45015E-03	.14540E-08
16	.24199E-03	.51161E-03	.16525E-08
17	.27334E-03	.57788E-03	.18666E-08
18	.30698E-03	.64901E-03	.20963E-08
19	.34293E-03	.72502E-03	.23418E-08
20	.38118E-03	.80587E-03	.26030E-08
21	.42168E-03	.89149E-03	.28795E-08
22	.46437E-03	.98175E-03	.31711E-08
23	.50917E-03	.10765E-02	.34770E-08
24	.55599E-03	.11754E-02	.37967E-08
25	.60470E-03	.12784E-02	.41294E-08
26	.65519E-03	.13852E-02	.44741E-08
27	.70731E-03	.14954E-02	.48301E-08
28	.76095E-03	.16088E-02	.51963E-08
29	.81596E-03	.17251E-02	.55720E-08
30	.87220E-03	.18440E-02	.59560E-08
31	.92954E-03	.19652E-02	.63476E-08
32	.98787E-03	.20885E-02	.67459E-08
33	.10470E-02	.22136E-02	.71500E-08
34	.11070E-02	.23403E-02	.75591E-08
35	.11675E-02	.24683E-02	.79725E-08
36	.12285E-02	.25973E-02	.83894E-08
37	.12900E-02	.27273E-02	.88091E-08
38	.13518E-02	.28579E-02	.92309E-08
39	.14137E-02	.29889E-02	.96540E-08
40	.14758E-02	.31201E-02	.10078E-07
41	.15379E-02	.32513E-02	.10502E-07
42	.15998E-02	.33823E-02	.10925E-07
43	.16616E-02	.35128E-02	.11346E-07
44	.17230E-02	.36426E-02	.11766E-07

45	.17839E-02	.37715E-02	.12182E-07
46	.18443E-02	.38991E-02	.12594E-07
47	.19039E-02	.40251E-02	.13001E-07
48	.19626E-02	.41492E-02	.13402E-07
49	.20202E-02	.42711E-02	.13796E-07
50	.20766E-02	.43903E-02	.14181E-07
51	.21315E-02	.45063E-02	.14556E-07
52	.21847E-02	.46187E-02	.14918E-07
53	.22358E-02	.47268E-02	.15268E-07
54	.22846E-02	.48300E-02	.15601E-07
55	.23308E-02	.49276E-02	.15916E-07
56	.23738E-02	.50187E-02	.16210E-07
57	.24134E-02	.51023E-02	.16480E-07
58	.24489E-02	.51774E-02	.16723E-07
59	.24799E-02	.52428E-02	.16934E-07
60	.25056E-02	.52972E-02	.17110E-07

V-Leach, VER 1.1
Jake Turin, 11/91
PGA V-leach model, polygon screen-TCE-11/10/92-Poly11A.INP New soil, Old chem
1 polygons.
Timestep = 1.00 years. Simulation length = 30.00 years.
Printout every 1.00 years. Vertical profile stored every 10.00 years.
Koc = 123.60 ml/g, .43649E-02cu.ft./g
Kh = .47300 (dimensionless).
Aqueous solubility = 1100.0 mg/l, 31.149 g/cu.ft
Free air diffusion coefficient = .70290 sq. m/day, 2761.7 sq.ft./yr

Polygon 1
Polygon 11A
Polygon area = 90000. sq. ft.
60 cells, each cell 1.000 ft. thick.
Soil Properties:
Bulk density = 1.6400 g/ml, 46440. g/cu.ft.
Porosity = .3810 Volumetric water content = .2550
Organic carbon content = .00074000
Recharge Rate = .19685100 ft/yr
Conc. in recharge water = .00000 mg/l, .00000 g/cu.ft
Atmospheric concentration = .00000 mg/l, .00000 g/cu.ft
Water table is impermeable to gas diffusion.

Calculation of Total TCE Mass and Revised Vertical Distributions in Polygon 11A using HGC Distribution equations and Revised Soil Physical Data

0.032 Cs **	Cz = (74.527z - 371.636)Cs

Cz (ug/L) Vert. Dist. Eq.	Calculated Depth Interval (z)	Total Depth Interval (feet)	Total Soil Conc Ct* (ug/Kg)	Mt (ug/cc)	Volume of Soil (cubic ft)	Mass TCE (grams)	Mass TCE (pounds)
0.032	3	6	0.02	3.14E-05	540000	0.48	0.00
9.57	9	6	5.73	0.01	540000	143.78	0.32
23.88	15	6	14.30	0.02	540000	358.72	0.79
38.19	21	6	22.88	0.04	540000	573.67	1.26
52.50	27	6	31.45	0.05	540000	788.61	1.74
66.81	33	6	40.02	0.07	540000	1003.56	2.21
81.12	39	6	48.59	0.08	540000	1218.50	2.69
95.43	45	6	57.16	0.09	540000	1433.44	3.16
109.74	51	6	65.73	0.11	540000	1648.39	3.63
124.04	57	6	74.30	0.12	540000	1863.33	4.11
		60				9032.48	19.91

* Ct conversion based on Kgt of 0.599 L/Kg

** Cs Determined as mathematical average of VOC concentrations for polygon(s) listed in Table A-1 of HGC, 1989.

```
PGA V-leach model, poly screen-TCE-11/10/92-Polygon 62.inp  New soil, Old chem
   1
      1.0        30.        1.0        10.
    123.6       .473      1100.      .7029
olygon 62
   80000.         1.    .196850       1.64       .381       .255     .00074
       0.         0.        -1.
  60
   1    6       2.25
   7   12       2.25
  13   18      10.61
  19   24      10.61
  25   30      13.60
  31   36      22.30
  37   42      22.30
  43   48      78.67
  49   54      78.67
  55   60      78.67
```

V-Leach, VER 1.1
Jake Turin, 11/91
PGA V-leach model, poly screen-TCE-11/10/92-Polygon 62.inp New soil, Old chem

Polygon 1
At time = .00, total mass in vadose zone = .89142E-01g/sq.ft.
Mass in gas phase = .11435E-01g/sq.ft.
Mass in liquid phase = .48927E-01g/sq.ft.
Mass sorbed = .28781E-01g/sq.ft.

Polygon 1
At time = 1.00, total mass in vadose zone = .87529E-01g/sq.ft.
Mass in gas phase = .11228E-01g/sq.ft.
Mass in liquid phase = .48041E-01g/sq.ft.
Mass sorbed = .28260E-01g/sq.ft.

Since last printout at time = .00
Change in Total Mass = -.16132E-02g/sq.ft.
Advection in from atmosphere = .00000 g/sq.ft.
Advection in from water table = -.15479E-02g/sq.ft.
Diffusion in from atmosphere = -.65331E-04g/sq.ft.
Diffusion in from water table = .00000 g/sq.ft.
Total inflow at boundaries = -.16132E-02g/sq.ft.
Mass discrepancy = -.66357E-08g/sq.ft.

Since beginning of run at time = 0.0
Change in Total Mass = -.16132E-02g/sq.ft.
Advection in from atmosphere = .00000 g/sq.ft.
Advection in from water table = -.15479E-02g/sq.ft.
Diffusion in from atmosphere = -.65331E-04g/sq.ft.
Diffusion in from water table = .00000 g/sq.ft.
Total inflow at boundaries = -.16132E-02g/sq.ft.
Mass discrepancy = -.66357E-08g/sq.ft.

Polygon 1
At time = 2.00, total mass in vadose zone = .85925E-01g/sq.ft.
Mass in gas phase = .11022E-01g/sq.ft.
Mass in liquid phase = .47161E-01g/sq.ft.
Mass sorbed = .27742E-01g/sq.ft.

Since last printout at time = 1.00
Change in Total Mass = -.16043E-02g/sq.ft.
Advection in from atmosphere = .00000 g/sq.ft.
Advection in from water table = -.15455E-02g/sq.ft.
Diffusion in from atmosphere = -.58816E-04g/sq.ft.
Diffusion in from water table = .00000 g/sq.ft.
Total inflow at boundaries = -.16043E-02g/sq.ft.
Mass discrepancy = .11409E-07g/sq.ft.

Since beginning of run at time = 0.0
Change in Total Mass = -.32175E-02g/sq.ft.
Advection in from atmosphere = .00000 g/sq.ft.
Advection in from water table = -.30934E-02g/sq.ft.
Diffusion in from atmosphere = -.12415E-03g/sq.ft.
Diffusion in from water table = .00000 g/sq.ft.
Total inflow at boundaries = -.32175E-02g/sq.ft.
Mass discrepancy = .48894E-08g/sq.ft.

```
Polygon   1
At time =       3.00, total mass in vadose zone =     .84329E-01g/sq.ft.
Mass in gas phase     =       .10818E-01g/sq.ft.
Mass in liquid phase  =       .46285E-01g/sq.ft.
Mass sorbed           =       .27226E-01g/sq.ft.

Since last printout at time =       2.00
               Change in Total Mass =     -.15957E-02g/sq.ft.
                    Advection in from atmosphere =       .00000    g/sq.ft.
                    Advection in from water table =     -.15423E-02g/sq.ft.
                    Diffusion in from atmosphere =      -.53406E-04g/sq.ft.
                    Diffusion in from water table =      .00000    g/sq.ft.
               Total inflow at boundaries =     -.15957E-02g/sq.ft.
               Mass discrepancy =      .38417E-08g/sq.ft.

Since beginning of run at time = 0.0
               Change in Total Mass =     -.48133E-02g/sq.ft.
                    Advection in from atmosphere =       .00000    g/sq.ft.
                    Advection in from water table =     -.46357E-02g/sq.ft.
                    Diffusion in from atmosphere =      -.17755E-03g/sq.ft.
                    Diffusion in from water table =      .00000    g/sq.ft.
               Total inflow at boundaries =     -.48133E-02g/sq.ft.
               Mass discrepancy =      .88476E-08g/sq.ft.


Polygon   1
At time =       4.00, total mass in vadose zone =     .82742E-01g/sq.ft.
Mass in gas phase     =       .10614E-01g/sq.ft.
Mass in liquid phase  =       .45414E-01g/sq.ft.
Mass sorbed           =       .26714E-01g/sq.ft.

Since last printout at time =       3.00
               Change in Total Mass =     -.15873E-02g/sq.ft.
                    Advection in from atmosphere =       .00000    g/sq.ft.
                    Advection in from water table =     -.15384E-02g/sq.ft.
                    Diffusion in from atmosphere =      -.48867E-04g/sq.ft.
                    Diffusion in from water table =      .00000    g/sq.ft.
               Total inflow at boundaries =     -.15873E-02g/sq.ft.
               Mass discrepancy =     -.10477E-08g/sq.ft.

Since beginning of run at time = 0.0
               Change in Total Mass =     -.64005E-02g/sq.ft.
                    Advection in from atmosphere =       .00000    g/sq.ft.
                    Advection in from water table =     -.61741E-02g/sq.ft.
                    Diffusion in from atmosphere =      -.22642E-03g/sq.ft.
                    Diffusion in from water table =      .00000    g/sq.ft.
               Total inflow at boundaries =     -.64005E-02g/sq.ft.
               Mass discrepancy =      .79162E-08g/sq.ft.


Polygon   1
At time =       5.00, total mass in vadose zone =     .81163E-01g/sq.ft.
Mass in gas phase     =       .10411E-01g/sq.ft.
Mass in liquid phase  =       .44547E-01g/sq.ft.
Mass sorbed           =       .26204E-01g/sq.ft.

Since last printout at time =       4.00
               Change in Total Mass =     -.15786E-02g/sq.ft.
```

```
                Advection in from atmosphere =       .00000    g/sq.ft.
                Advection in from water table =     -.15335E-02g/sq.ft.
                Diffusion in from atmosphere =      -.45023E-04g/sq.ft.
                Diffusion in from water table =      .00000    g/sq.ft.
           Total inflow at boundaries =     -.15786E-02g/sq.ft.
           Mass discrepancy =      .00000    g/sq.ft.

Since beginning of run at time = 0.0
           Change in Total Mass =     -.79791E-02g/sq.ft.
                Advection in from atmosphere =       .00000    g/sq.ft.
                Advection in from water table =     -.77077E-02g/sq.ft.
                Diffusion in from atmosphere =      -.27144E-03g/sq.ft.
                Diffusion in from water table =      .00000    g/sq.ft.
           Total inflow at boundaries =     -.79791E-02g/sq.ft.
           Mass discrepancy =      .74506E-08g/sq.ft.


Polygon   1
At time =       6.00, total mass in vadose zone =     .79594E-01g/sq.ft.
Mass in gas phase     =       .10210E-01g/sq.ft.
Mass in liquid phase  =       .43686E-01g/sq.ft.
Mass sorbed           =       .25698E-01g/sq.ft.

Since last printout at time =       5.00
           Change in Total Mass =     -.15694E-02g/sq.ft.
                Advection in from atmosphere =       .00000    g/sq.ft.
                Advection in from water table =     -.15277E-02g/sq.ft.
                Diffusion in from atmosphere =      -.41734E-04g/sq.ft.
                Diffusion in from water table =      .00000    g/sq.ft.
           Total inflow at boundaries =     -.15694E-02g/sq.ft.
           Mass discrepancy =      .93132E-08g/sq.ft.

Since beginning of run at time = 0.0
           Change in Total Mass =     -.95485E-02g/sq.ft.
                Advection in from atmosphere =       .00000    g/sq.ft.
                Advection in from water table =     -.92354E-02g/sq.ft.
                Diffusion in from atmosphere =      -.31318E-03g/sq.ft.
                Diffusion in from water table =      .00000    g/sq.ft.
           Total inflow at boundaries =     -.95485E-02g/sq.ft.
           Mass discrepancy =      .16764E-07g/sq.ft.


Polygon   1
At time =       7.00, total mass in vadose zone =     .78034E-01g/sq.ft.
Mass in gas phase     =       .10010E-01g/sq.ft.
Mass in liquid phase  =       .42830E-01g/sq.ft.
Mass sorbed           =       .25194E-01g/sq.ft.

Since last printout at time =       6.00
           Change in Total Mass =     -.15597E-02g/sq.ft.
                Advection in from atmosphere =       .00000    g/sq.ft.
                Advection in from water table =     -.15208E-02g/sq.ft.
                Diffusion in from atmosphere =      -.38894E-04g/sq.ft.
                Diffusion in from water table =      .00000    g/sq.ft.
           Total inflow at boundaries =     -.15597E-02g/sq.ft.
           Mass discrepancy =     -.14785E-07g/sq.ft.

Since beginning of run at time = 0.0
           Change in Total Mass =     -.11108E-01g/sq.ft.
                Advection in from atmosphere =       .00000    g/sq.ft.
```

```
                    Advection in from water table =     -.10756E-01g/sq.ft.
                    Diffusion in from atmosphere =      -.35207E-03g/sq.ft.
                    Diffusion in from water table =      .00000    g/sq.ft.
               Total inflow at boundaries =     -.11108E-01g/sq.ft.
               Mass discrepancy =      .27940E-08g/sq.ft.


Polygon   1
At time =       8.00, total mass in vadose zone =     .76485E-01g/sq.ft.
Mass in gas phase     =       .98113E-02g/sq.ft.
Mass in liquid phase  =       .41979E-01g/sq.ft.
Mass sorbed           =       .24694E-01g/sq.ft.

Since last printout at time =       7.00
               Change in Total Mass =     -.15491E-02g/sq.ft.
                    Advection in from atmosphere =       .00000    g/sq.ft.
                    Advection in from water table =     -.15127E-02g/sq.ft.
                    Diffusion in from atmosphere =      -.36419E-04g/sq.ft.
                    Diffusion in from water table =      .00000    g/sq.ft.
               Total inflow at boundaries =     -.15491E-02g/sq.ft.
               Mass discrepancy =      .19791E-07g/sq.ft.

Since beginning of run at time = 0.0
               Change in Total Mass =     -.12657E-01g/sq.ft.
                    Advection in from atmosphere =       .00000    g/sq.ft.
                    Advection in from water table =     -.12269E-01g/sq.ft.
                    Diffusion in from atmosphere =      -.38849E-03g/sq.ft.
                    Diffusion in from water table =      .00000    g/sq.ft.
               Total inflow at boundaries =     -.12657E-01g/sq.ft.
               Mass discrepancy =      .21420E-07g/sq.ft.


Polygon   1
At time =       9.00, total mass in vadose zone =     .74947E-01g/sq.ft.
Mass in gas phase     =       .96141E-02g/sq.ft.
Mass in liquid phase  =       .41136E-01g/sq.ft.
Mass sorbed           =       .24198E-01g/sq.ft.

Since last printout at time =       8.00
               Change in Total Mass =     -.15376E-02g/sq.ft.
                    Advection in from atmosphere =       .00000    g/sq.ft.
                    Advection in from water table =     -.15034E-02g/sq.ft.
                    Diffusion in from atmosphere =      -.34244E-04g/sq.ft.
                    Diffusion in from water table =      .00000    g/sq.ft.
               Total inflow at boundaries =     -.15376E-02g/sq.ft.
               Mass discrepancy =      .12806E-08g/sq.ft.

Since beginning of run at time = 0.0
               Change in Total Mass =     -.14195E-01g/sq.ft.
                    Advection in from atmosphere =       .00000    g/sq.ft.
                    Advection in from water table =     -.13772E-01g/sq.ft.
                    Diffusion in from atmosphere =      -.42273E-03g/sq.ft.
                    Diffusion in from water table =      .00000    g/sq.ft.
               Total inflow at boundaries =     -.14195E-01g/sq.ft.
               Mass discrepancy =      .22352E-07g/sq.ft.


Polygon   1
At time =      10.00, total mass in vadose zone =     .73422E-01g/sq.ft.
Mass in gas phase     =       .94185E-02g/sq.ft.
```

```
Mass in liquid phase  =       .40298E-01g/sq.ft.
Mass sorbed           =       .23705E-01g/sq.ft.

Since last printout at time =       9.00
               Change in Total Mass =     -.15251E-02g/sq.ft.
                    Advection in from atmosphere =       .00000    g/sq.ft.
                    Advection in from water table =     -.14928E-02g/sq.ft.
                    Diffusion in from atmosphere =      -.32316E-04g/sq.ft.
                    Diffusion in from water table =      .00000    g/sq.ft.
               Total inflow at boundaries =     -.15251E-02g/sq.ft.
               Mass discrepancy =      .12922E-07g/sq.ft.

Since beginning of run at time = 0.0
               Change in Total Mass =     -.15720E-01g/sq.ft.
                    Advection in from atmosphere =       .00000    g/sq.ft.
                    Advection in from water table =     -.15265E-01g/sq.ft.
                    Diffusion in from atmosphere =      -.45505E-03g/sq.ft.
                    Diffusion in from water table =      .00000    g/sq.ft.
               Total inflow at boundaries =     -.15720E-01g/sq.ft.
               Mass discrepancy =      .35390E-07g/sq.ft.


Polygon   1
At time =      11.00, total mass in vadose zone =     .71910E-01g/sq.ft.
Mass in gas phase     =       .92246E-02g/sq.ft.
Mass in liquid phase  =       .39469E-01g/sq.ft.
Mass sorbed           =       .23217E-01g/sq.ft.

Since last printout at time =      10.00
               Change in Total Mass =     -.15115E-02g/sq.ft.
                    Advection in from atmosphere =       .00000    g/sq.ft.
                    Advection in from water table =     -.14809E-02g/sq.ft.
                    Diffusion in from atmosphere =      -.30594E-04g/sq.ft.
                    Diffusion in from water table =      .00000    g/sq.ft.
               Total inflow at boundaries =     -.15115E-02g/sq.ft.
               Mass discrepancy =     -.11176E-07g/sq.ft.

Since beginning of run at time = 0.0
               Change in Total Mass =     -.17232E-01g/sq.ft.
                    Advection in from atmosphere =       .00000    g/sq.ft.
                    Advection in from water table =     -.16746E-01g/sq.ft.
                    Diffusion in from atmosphere =      -.48564E-03g/sq.ft.
                    Diffusion in from water table =      .00000    g/sq.ft.
               Total inflow at boundaries =     -.17232E-01g/sq.ft.
               Mass discrepancy =      .24214E-07g/sq.ft.


Polygon   1
At time =      12.00, total mass in vadose zone =     .70414E-01g/sq.ft.
Mass in gas phase     =       .90326E-02g/sq.ft.
Mass in liquid phase  =       .38647E-01g/sq.ft.
Mass sorbed           =       .22734E-01g/sq.ft.

Since last printout at time =      11.00
               Change in Total Mass =     -.14967E-02g/sq.ft.
                    Advection in from atmosphere =       .00000    g/sq.ft.
                    Advection in from water table =     -.14676E-02g/sq.ft.
                    Diffusion in from atmosphere =      -.29045E-04g/sq.ft.
                    Diffusion in from water table =      .00000    g/sq.ft.
               Total inflow at boundaries =     -.14967E-02g/sq.ft.
```

```
                Mass discrepancy =      .10710E-07g/sq.ft.

Since beginning of run at time = 0.0
                Change in Total Mass =     -.18728E-01g/sq.ft.
                     Advection in from atmosphere =       .00000    g/sq.ft.
                     Advection in from water table =     -.18214E-01g/sq.ft.
                     Diffusion in from atmosphere =      -.51469E-03g/sq.ft.
                     Diffusion in from water table =      .00000    g/sq.ft.
                Total inflow at boundaries =     -.18728E-01g/sq.ft.
                Mass discrepancy =      .33528E-07g/sq.ft.


Polygon   1
At time =      13.00, total mass in vadose zone =     .68933E-01g/sq.ft.
Mass in gas phase     =       .88426E-02g/sq.ft.
Mass in liquid phase  =       .37835E-01g/sq.ft.
Mass sorbed           =       .22256E-01g/sq.ft.

Since last printout at time =      12.00
                Change in Total Mass =     -.14806E-02g/sq.ft.
                     Advection in from atmosphere =       .00000    g/sq.ft.
                     Advection in from water table =     -.14530E-02g/sq.ft.
                     Diffusion in from atmosphere =      -.27643E-04g/sq.ft.
                     Diffusion in from water table =      .00000    g/sq.ft.
                Total inflow at boundaries =     -.14806E-02g/sq.ft.
                Mass discrepancy =      .22119E-08g/sq.ft.

Since beginning of run at time = 0.0
                Change in Total Mass =     -.20209E-01g/sq.ft.
                     Advection in from atmosphere =       .00000    g/sq.ft.
                     Advection in from water table =     -.19667E-01g/sq.ft.
                     Diffusion in from atmosphere =      -.54233E-03g/sq.ft.
                     Diffusion in from water table =      .00000    g/sq.ft.
                Total inflow at boundaries =     -.20209E-01g/sq.ft.
                Mass discrepancy =      .37253E-07g/sq.ft.


Polygon   1
At time =      14.00, total mass in vadose zone =     .67470E-01g/sq.ft.
Mass in gas phase     =       .86549E-02g/sq.ft.
Mass in liquid phase  =       .37032E-01g/sq.ft.
Mass sorbed           =       .21783E-01g/sq.ft.

Since last printout at time =      13.00
                Change in Total Mass =     -.14633E-02g/sq.ft.
                     Advection in from atmosphere =       .00000    g/sq.ft.
                     Advection in from water table =     -.14369E-02g/sq.ft.
                     Diffusion in from atmosphere =      -.26366E-04g/sq.ft.
                     Diffusion in from water table =      .00000    g/sq.ft.
                Total inflow at boundaries =     -.14633E-02g/sq.ft.
                Mass discrepancy =     -.97789E-08g/sq.ft.

Since beginning of run at time = 0.0
                Change in Total Mass =     -.21672E-01g/sq.ft.
                     Advection in from atmosphere =       .00000    g/sq.ft.
                     Advection in from water table =     -.21103E-01g/sq.ft.
                     Diffusion in from atmosphere =      -.56870E-03g/sq.ft.
                     Diffusion in from water table =      .00000    g/sq.ft.
                Total inflow at boundaries =     -.21672E-01g/sq.ft.
                Mass discrepancy =      .27940E-07g/sq.ft.
```

```
Polygon   1
At time =      15.00, total mass in vadose zone =     .66025E-01g/sq.ft.
Mass in gas phase     =       .84696E-02g/sq.ft.
Mass in liquid phase  =       .36239E-01g/sq.ft.
Mass sorbed           =       .21317E-01g/sq.ft.

Since last printout at time =      14.00
               Change in Total Mass =     -.14447E-02g/sq.ft.
                    Advection in from atmosphere =       .00000    g/sq.ft.
                    Advection in from water table =     -.14195E-02g/sq.ft.
                    Diffusion in from atmosphere =      -.25196E-04g/sq.ft.
                    Diffusion in from water table =      .00000    g/sq.ft.
               Total inflow at boundaries =     -.14447E-02g/sq.ft.
               Mass discrepancy =      .87311E-08g/sq.ft.

Since beginning of run at time = 0.0
               Change in Total Mass =     -.23117E-01g/sq.ft.
                    Advection in from atmosphere =       .00000    g/sq.ft.
                    Advection in from water table =     -.22523E-01g/sq.ft.
                    Diffusion in from atmosphere =      -.59389E-03g/sq.ft.
                    Diffusion in from water table =      .00000    g/sq.ft.
               Total inflow at boundaries =     -.23117E-01g/sq.ft.
               Mass discrepancy =      .37253E-07g/sq.ft.


Polygon   1
At time =      16.00, total mass in vadose zone =     .64600E-01g/sq.ft.
Mass in gas phase     =       .82868E-02g/sq.ft.
Mass in liquid phase  =       .35457E-01g/sq.ft.
Mass sorbed           =       .20857E-01g/sq.ft.

Since last printout at time =      15.00
               Change in Total Mass =     -.14248E-02g/sq.ft.
                    Advection in from atmosphere =       .00000    g/sq.ft.
                    Advection in from water table =     -.14007E-02g/sq.ft.
                    Diffusion in from atmosphere =      -.24119E-04g/sq.ft.
                    Diffusion in from water table =      .00000    g/sq.ft.
               Total inflow at boundaries =     -.14248E-02g/sq.ft.
               Mass discrepancy =     -.60536E-08g/sq.ft.

Since beginning of run at time = 0.0
               Change in Total Mass =     -.24542E-01g/sq.ft.
                    Advection in from atmosphere =       .00000    g/sq.ft.
                    Advection in from water table =     -.23924E-01g/sq.ft.
                    Diffusion in from atmosphere =      -.61801E-03g/sq.ft.
                    Diffusion in from water table =      .00000    g/sq.ft.
               Total inflow at boundaries =     -.24542E-01g/sq.ft.
               Mass discrepancy =      .31665E-07g/sq.ft.


Polygon   1
At time =      17.00, total mass in vadose zone =     .63197E-01g/sq.ft.
Mass in gas phase     =       .81068E-02g/sq.ft.
Mass in liquid phase  =       .34686E-01g/sq.ft.
Mass sorbed           =       .20404E-01g/sq.ft.

Since last printout at time =      16.00
               Change in Total Mass =     -.14038E-02g/sq.ft.
```

```
                Advection in from atmosphere =       .00000    g/sq.ft.
                Advection in from water table =     -.13807E-02g/sq.ft.
                Diffusion in from atmosphere =      -.23123E-04g/sq.ft.
                Diffusion in from water table =       .00000    g/sq.ft.
           Total inflow at boundaries =     -.14038E-02g/sq.ft.
           Mass discrepancy =      .93132E-08g/sq.ft.

Since beginning of run at time = 0.0
           Change in Total Mass =     -.25945E-01g/sq.ft.
                Advection in from atmosphere =       .00000    g/sq.ft.
                Advection in from water table =     -.25304E-01g/sq.ft.
                Diffusion in from atmosphere =      -.64114E-03g/sq.ft.
                Diffusion in from water table =       .00000    g/sq.ft.
           Total inflow at boundaries =     -.25945E-01g/sq.ft.
           Mass discrepancy =      .40978E-07g/sq.ft.


Polygon   1
At time =      18.00, total mass in vadose zone =     .61815E-01g/sq.ft.
Mass in gas phase     =       .79295E-02g/sq.ft.
Mass in liquid phase  =       .33928E-01g/sq.ft.
Mass sorbed           =       .19958E-01g/sq.ft.

Since last printout at time =      17.00
           Change in Total Mass =     -.13816E-02g/sq.ft.
                Advection in from atmosphere =       .00000    g/sq.ft.
                Advection in from water table =     -.13594E-02g/sq.ft.
                Diffusion in from atmosphere =      -.22199E-04g/sq.ft.
                Diffusion in from water table =       .00000    g/sq.ft.
           Total inflow at boundaries =     -.13816E-02g/sq.ft.
           Mass discrepancy =     -.54715E-08g/sq.ft.

Since beginning of run at time = 0.0
           Change in Total Mass =     -.27327E-01g/sq.ft.
                Advection in from atmosphere =       .00000    g/sq.ft.
                Advection in from water table =     -.26664E-01g/sq.ft.
                Diffusion in from atmosphere =      -.66333E-03g/sq.ft.
                Diffusion in from water table =       .00000    g/sq.ft.
           Total inflow at boundaries =     -.27327E-01g/sq.ft.
           Mass discrepancy =      .35390E-07g/sq.ft.


Polygon   1
At time =      19.00, total mass in vadose zone =     .60457E-01g/sq.ft.
Mass in gas phase     =       .77553E-02g/sq.ft.
Mass in liquid phase  =       .33182E-01g/sq.ft.
Mass sorbed           =       .19519E-01g/sq.ft.

Since last printout at time =      18.00
           Change in Total Mass =     -.13583E-02g/sq.ft.
                Advection in from atmosphere =       .00000    g/sq.ft.
                Advection in from water table =     -.13370E-02g/sq.ft.
                Diffusion in from atmosphere =      -.21338E-04g/sq.ft.
                Diffusion in from water table =       .00000    g/sq.ft.
           Total inflow at boundaries =     -.13584E-02g/sq.ft.
           Mass discrepancy =      .14668E-07g/sq.ft.

Since beginning of run at time = 0.0
           Change in Total Mass =     -.28685E-01g/sq.ft.
                Advection in from atmosphere =       .00000    g/sq.ft.
```

```
                    Advection in from water table =     -.28001E-01g/sq.ft.
                    Diffusion in from atmosphere =      -.68467E-03g/sq.ft.
                    Diffusion in from water table =      .00000    g/sq.ft.
               Total inflow at boundaries =     -.28685E-01g/sq.ft.
               Mass discrepancy =      .50291E-07g/sq.ft.


Polygon   1
At time =      20.00, total mass in vadose zone =     .59123E-01g/sq.ft.
Mass in gas phase     =       .75841E-02g/sq.ft.
Mass in liquid phase  =       .32450E-01g/sq.ft.
Mass sorbed           =       .19088E-01g/sq.ft.

Since last printout at time =      19.00
               Change in Total Mass =     -.13341E-02g/sq.ft.
                    Advection in from atmosphere =       .00000    g/sq.ft.
                    Advection in from water table =     -.13136E-02g/sq.ft.
                    Diffusion in from atmosphere =      -.20532E-04g/sq.ft.
                    Diffusion in from water table =      .00000    g/sq.ft.
               Total inflow at boundaries =     -.13341E-02g/sq.ft.
               Mass discrepancy =     -.31432E-08g/sq.ft.

Since beginning of run at time = 0.0
               Change in Total Mass =     -.30020E-01g/sq.ft.
                    Advection in from atmosphere =       .00000    g/sq.ft.
                    Advection in from water table =     -.29314E-01g/sq.ft.
                    Diffusion in from atmosphere =      -.70520E-03g/sq.ft.
                    Diffusion in from water table =      .00000    g/sq.ft.
               Total inflow at boundaries =     -.30020E-01g/sq.ft.
               Mass discrepancy =      .46566E-07g/sq.ft.


Polygon   1
At time =      21.00, total mass in vadose zone =     .57813E-01g/sq.ft.
Mass in gas phase     =       .74162E-02g/sq.ft.
Mass in liquid phase  =       .31732E-01g/sq.ft.
Mass sorbed           =       .18666E-01g/sq.ft.

Since last printout at time =      20.00
               Change in Total Mass =     -.13091E-02g/sq.ft.
                    Advection in from atmosphere =       .00000    g/sq.ft.
                    Advection in from water table =     -.12893E-02g/sq.ft.
                    Diffusion in from atmosphere =      -.19777E-04g/sq.ft.
                    Diffusion in from water table =      .00000    g/sq.ft.
               Total inflow at boundaries =     -.13091E-02g/sq.ft.
               Mass discrepancy =     -.30268E-08g/sq.ft.

Since beginning of run at time = 0.0
               Change in Total Mass =     -.31329E-01g/sq.ft.
                    Advection in from atmosphere =       .00000    g/sq.ft.
                    Advection in from water table =     -.30604E-01g/sq.ft.
                    Diffusion in from atmosphere =      -.72498E-03g/sq.ft.
                    Diffusion in from water table =      .00000    g/sq.ft.
               Total inflow at boundaries =     -.31329E-01g/sq.ft.
               Mass discrepancy =      .44703E-07g/sq.ft.


Polygon   1
At time =      22.00, total mass in vadose zone =     .56530E-01g/sq.ft.
Mass in gas phase     =       .72516E-02g/sq.ft.
```

```
Mass in liquid phase  =       .31027E-01g/sq.ft.
Mass sorbed           =       .18251E-01g/sq.ft.

Since last printout at time =      21.00
              Change in Total Mass =     -.12833E-02g/sq.ft.
                   Advection in from atmosphere =       .00000    g/sq.ft.
                   Advection in from water table =     -.12643E-02g/sq.ft.
                   Diffusion in from atmosphere =      -.19066E-04g/sq.ft.
                   Diffusion in from water table =      .00000    g/sq.ft.
              Total inflow at boundaries =     -.12833E-02g/sq.ft.
              Mass discrepancy =      .83819E-08g/sq.ft.

Since beginning of run at time = 0.0
              Change in Total Mass =     -.32612E-01g/sq.ft.
                   Advection in from atmosphere =       .00000    g/sq.ft.
                   Advection in from water table =     -.31868E-01g/sq.ft.
                   Diffusion in from atmosphere =      -.74405E-03g/sq.ft.
                   Diffusion in from water table =      .00000    g/sq.ft.
              Total inflow at boundaries =     -.32612E-01g/sq.ft.
              Mass discrepancy =      .52154E-07g/sq.ft.


Polygon   1
At time =      23.00, total mass in vadose zone =     .55273E-01g/sq.ft.
Mass in gas phase     =       .70903E-02g/sq.ft.
Mass in liquid phase  =       .30337E-01g/sq.ft.
Mass sorbed           =       .17846E-01g/sq.ft.

Since last printout at time =      22.00
              Change in Total Mass =     -.12570E-02g/sq.ft.
                   Advection in from atmosphere =       .00000    g/sq.ft.
                   Advection in from water table =     -.12386E-02g/sq.ft.
                   Diffusion in from atmosphere =      -.18396E-04g/sq.ft.
                   Diffusion in from water table =      .00000    g/sq.ft.
              Total inflow at boundaries =     -.12570E-02g/sq.ft.
              Mass discrepancy =      .23283E-09g/sq.ft.

Since beginning of run at time = 0.0
              Change in Total Mass =     -.33869E-01g/sq.ft.
                   Advection in from atmosphere =       .00000    g/sq.ft.
                   Advection in from water table =     -.33107E-01g/sq.ft.
                   Diffusion in from atmosphere =      -.76244E-03g/sq.ft.
                   Diffusion in from water table =      .00000    g/sq.ft.
              Total inflow at boundaries =     -.33869E-01g/sq.ft.
              Mass discrepancy =      .52154E-07g/sq.ft.


Polygon   1
At time =      24.00, total mass in vadose zone =     .54043E-01g/sq.ft.
Mass in gas phase     =       .69325E-02g/sq.ft.
Mass in liquid phase  =       .29662E-01g/sq.ft.
Mass sorbed           =       .17448E-01g/sq.ft.

Since last printout at time =      23.00
              Change in Total Mass =     -.12303E-02g/sq.ft.
                   Advection in from atmosphere =       .00000    g/sq.ft.
                   Advection in from water table =     -.12125E-02g/sq.ft.
                   Diffusion in from atmosphere =      -.17763E-04g/sq.ft.
                   Diffusion in from water table =      .00000    g/sq.ft.
              Total inflow at boundaries =     -.12303E-02g/sq.ft.
```

```
              Mass discrepancy =      .20955E-08g/sq.ft.

Since beginning of run at time = 0.0
              Change in Total Mass =     -.35099E-01g/sq.ft.
                   Advection in from atmosphere =       .00000    g/sq.ft.
                   Advection in from water table =     -.34319E-01g/sq.ft.
                   Diffusion in from atmosphere =      -.78021E-03g/sq.ft.
                   Diffusion in from water table =      .00000    g/sq.ft.
              Total inflow at boundaries =     -.35099E-01g/sq.ft.
              Mass discrepancy =      .52154E-07g/sq.ft.


Polygon   1
At time =      25.00, total mass in vadose zone =     .52840E-01g/sq.ft.
Mass in gas phase     =       .67782E-02g/sq.ft.
Mass in liquid phase  =       .29002E-01g/sq.ft.
Mass sorbed           =       .17060E-01g/sq.ft.

Since last printout at time =      24.00
              Change in Total Mass =     -.12032E-02g/sq.ft.
                   Advection in from atmosphere =       .00000    g/sq.ft.
                   Advection in from water table =     -.11861E-02g/sq.ft.
                   Diffusion in from atmosphere =      -.17164E-04g/sq.ft.
                   Diffusion in from water table =      .00000    g/sq.ft.
              Total inflow at boundaries =     -.12032E-02g/sq.ft.
              Mass discrepancy =     -.46566E-09g/sq.ft.

Since beginning of run at time = 0.0
              Change in Total Mass =     -.36302E-01g/sq.ft.
                   Advection in from atmosphere =       .00000    g/sq.ft.
                   Advection in from water table =     -.35505E-01g/sq.ft.
                   Diffusion in from atmosphere =      -.79737E-03g/sq.ft.
                   Diffusion in from water table =      .00000    g/sq.ft.
              Total inflow at boundaries =     -.36303E-01g/sq.ft.
              Mass discrepancy =      .55879E-07g/sq.ft.


Polygon   1
At time =      26.00, total mass in vadose zone =     .51664E-01g/sq.ft.
Mass in gas phase     =       .66273E-02g/sq.ft.
Mass in liquid phase  =       .28356E-01g/sq.ft.
Mass sorbed           =       .16680E-01g/sq.ft.

Since last printout at time =      25.00
              Change in Total Mass =     -.11761E-02g/sq.ft.
                   Advection in from atmosphere =       .00000    g/sq.ft.
                   Advection in from water table =     -.11595E-02g/sq.ft.
                   Diffusion in from atmosphere =      -.16595E-04g/sq.ft.
                   Diffusion in from water table =      .00000    g/sq.ft.
              Total inflow at boundaries =     -.11761E-02g/sq.ft.
              Mass discrepancy =      .46566E-09g/sq.ft.

Since beginning of run at time = 0.0
              Change in Total Mass =     -.37479E-01g/sq.ft.
                   Advection in from atmosphere =       .00000    g/sq.ft.
                   Advection in from water table =     -.36665E-01g/sq.ft.
                   Diffusion in from atmosphere =      -.81397E-03g/sq.ft.
                   Diffusion in from water table =      .00000    g/sq.ft.
              Total inflow at boundaries =     -.37479E-01g/sq.ft.
              Mass discrepancy =      .52154E-07g/sq.ft.
```

```
Polygon   1
At time =      27.00, total mass in vadose zone =     .50515E-01g/sq.ft.
Mass in gas phase     =       .64799E-02g/sq.ft.
Mass in liquid phase  =       .27725E-01g/sq.ft.
Mass sorbed           =       .16309E-01g/sq.ft.

Since last printout at time =      26.00
               Change in Total Mass =     -.11489E-02g/sq.ft.
                    Advection in from atmosphere =       .00000    g/sq.ft.
                    Advection in from water table =     -.11329E-02g/sq.ft.
                    Diffusion in from atmosphere =      -.16054E-04g/sq.ft.
                    Diffusion in from water table =      .00000    g/sq.ft.
               Total inflow at boundaries =     -.11489E-02g/sq.ft.
               Mass discrepancy =      .59372E-08g/sq.ft.

Since beginning of run at time = 0.0
               Change in Total Mass =     -.38628E-01g/sq.ft.
                    Advection in from atmosphere =       .00000    g/sq.ft.
                    Advection in from water table =     -.37798E-01g/sq.ft.
                    Diffusion in from atmosphere =      -.83002E-03g/sq.ft.
                    Diffusion in from water table =      .00000    g/sq.ft.
               Total inflow at boundaries =     -.38628E-01g/sq.ft.
               Mass discrepancy =      .59605E-07g/sq.ft.


Polygon   1
At time =      28.00, total mass in vadose zone =     .49393E-01g/sq.ft.
Mass in gas phase     =       .63360E-02g/sq.ft.
Mass in liquid phase  =       .27110E-01g/sq.ft.
Mass sorbed           =       .15947E-01g/sq.ft.

Since last printout at time =      27.00
               Change in Total Mass =     -.11219E-02g/sq.ft.
                    Advection in from atmosphere =       .00000    g/sq.ft.
                    Advection in from water table =     -.11064E-02g/sq.ft.
                    Diffusion in from atmosphere =      -.15539E-04g/sq.ft.
                    Diffusion in from water table =      .00000    g/sq.ft.
               Total inflow at boundaries =     -.11219E-02g/sq.ft.
               Mass discrepancy =     -.58208E-09g/sq.ft.

Since beginning of run at time = 0.0
               Change in Total Mass =     -.39749E-01g/sq.ft.
                    Advection in from atmosphere =       .00000    g/sq.ft.
                    Advection in from water table =     -.38904E-01g/sq.ft.
                    Diffusion in from atmosphere =      -.84556E-03g/sq.ft.
                    Diffusion in from water table =      .00000    g/sq.ft.
               Total inflow at boundaries =     -.39749E-01g/sq.ft.
               Mass discrepancy =      .59605E-07g/sq.ft.


Polygon   1
At time =      29.00, total mass in vadose zone =     .48298E-01g/sq.ft.
Mass in gas phase     =       .61955E-02g/sq.ft.
Mass in liquid phase  =       .26509E-01g/sq.ft.
Mass sorbed           =       .15593E-01g/sq.ft.

Since last printout at time =      28.00
               Change in Total Mass =     -.10951E-02g/sq.ft.
```

```
                    Advection in from atmosphere =       .00000    g/sq.ft.
                    Advection in from water table =     -.10801E-02g/sq.ft.
                    Diffusion in from atmosphere =      -.15049E-04g/sq.ft.
                    Diffusion in from water table =      .00000    g/sq.ft.
               Total inflow at boundaries =     -.10951E-02g/sq.ft.
               Mass discrepancy =      .86147E-08g/sq.ft.

Since beginning of run at time = 0.0
               Change in Total Mass =     -.40845E-01g/sq.ft.
                    Advection in from atmosphere =       .00000    g/sq.ft.
                    Advection in from water table =     -.39984E-01g/sq.ft.
                    Diffusion in from atmosphere =      -.86061E-03g/sq.ft.
                    Diffusion in from water table =      .00000    g/sq.ft.
               Total inflow at boundaries =     -.40845E-01g/sq.ft.
               Mass discrepancy =      .70781E-07g/sq.ft.


Polygon   1
At time =      30.00, total mass in vadose zone =     .47229E-01g/sq.ft.
Mass in gas phase     =       .60584E-02g/sq.ft.
Mass in liquid phase  =       .25922E-01g/sq.ft.
Mass sorbed           =       .15248E-01g/sq.ft.

Since last printout at time =     29.00
               Change in Total Mass =     -.10687E-02g/sq.ft.
                    Advection in from atmosphere =       .00000    g/sq.ft.
                    Advection in from water table =     -.10541E-02g/sq.ft.
                    Diffusion in from atmosphere =      -.14580E-04g/sq.ft.
                    Diffusion in from water table =      .00000    g/sq.ft.
               Total inflow at boundaries =     -.10687E-02g/sq.ft.
               Mass discrepancy =     -.12806E-08g/sq.ft.

Since beginning of run at time = 0.0
               Change in Total Mass =     -.41913E-01g/sq.ft.
                    Advection in from atmosphere =       .00000    g/sq.ft.
                    Advection in from water table =     -.41038E-01g/sq.ft.
                    Diffusion in from atmosphere =      -.87519E-03g/sq.ft.
                    Diffusion in from water table =      .00000    g/sq.ft.
               Total inflow at boundaries =     -.41913E-01g/sq.ft.
               Mass discrepancy =      .70781E-07g/sq.ft.


GROUNDWATER IMPACT OF POLYGON   1

 Time        Mass per area (g/sq.ft.)      Total Mass (g)
     1.00          .15479E-02                 123.83
     2.00          .15455E-02                 123.64
     3.00          .15423E-02                 123.39
     4.00          .15384E-02                 123.07
     5.00          .15335E-02                 122.68
     6.00          .15277E-02                 122.22
     7.00          .15208E-02                 121.66
     8.00          .15127E-02                 121.02
     9.00          .15034E-02                 120.27
    10.00          .14928E-02                 119.43
    11.00          .14809E-02                 118.47
    12.00          .14676E-02                 117.41
    13.00          .14530E-02                 116.24
    14.00          .14369E-02                 114.95
    15.00          .14195E-02                 113.56
```

16.00	.14007E-02	112.06
17.00	.13807E-02	110.45
18.00	.13594E-02	108.75
19.00	.13370E-02	106.96
20.00	.13136E-02	105.09
21.00	.12893E-02	103.15
22.00	.12643E-02	101.14
23.00	.12386E-02	99.089
24.00	.12125E-02	97.000
25.00	.11861E-02	94.887
26.00	.11595E-02	92.760
27.00	.11329E-02	90.630
28.00	.11064E-02	88.509
29.00	.10801E-02	86.405
30.00	.10541E-02	84.327

****

****

TOTAL GROUNDWATER IMPACT

Time (yr)	Mass (g)	Cumulative Mass (g)
1.00	123.83	123.83
2.00	123.64	247.47
3.00	123.39	370.86
4.00	123.07	493.93
5.00	122.68	616.61
6.00	122.22	738.83
7.00	121.66	860.49
8.00	121.02	981.51
9.00	120.27	1101.8
10.00	119.43	1221.2
11.00	118.47	1339.7
12.00	117.41	1457.1
13.00	116.24	1573.3
14.00	114.95	1688.3
15.00	113.56	1801.8
16.00	112.06	1913.9
17.00	110.45	2024.3
18.00	108.75	2133.1
19.00	106.96	2240.1
20.00	105.09	2345.2
21.00	103.15	2448.3
22.00	101.14	2549.4
23.00	99.089	2648.5
24.00	97.000	2745.5
25.00	94.887	2840.4
26.00	92.760	2933.2
27.00	90.630	3023.8
28.00	88.509	3112.3
29.00	86.405	3198.7
30.00	84.327	3283.0

Polygon 62
Time: .000

Cell	Cgas(g/cu.ft.)	Cliq(g/cu.ft.)	Csol
1	.10638E-03	.22490E-03	.72641E-09
2	.10638E-03	.22490E-03	.72641E-09
3	.10638E-03	.22490E-03	.72641E-09
4	.10638E-03	.22490E-03	.72641E-09
5	.10638E-03	.22490E-03	.72641E-09
6	.10638E-03	.22490E-03	.72641E-09
7	.10638E-03	.22490E-03	.72641E-09
8	.10638E-03	.22490E-03	.72641E-09
9	.10638E-03	.22490E-03	.72641E-09
10	.10638E-03	.22490E-03	.72641E-09
11	.10638E-03	.22490E-03	.72641E-09
12	.10638E-03	.22490E-03	.72641E-09
13	.50162E-03	.10605E-02	.34254E-08
14	.50162E-03	.10605E-02	.34254E-08
15	.50162E-03	.10605E-02	.34254E-08
16	.50162E-03	.10605E-02	.34254E-08
17	.50162E-03	.10605E-02	.34254E-08
18	.50162E-03	.10605E-02	.34254E-08
19	.50162E-03	.10605E-02	.34254E-08
20	.50162E-03	.10605E-02	.34254E-08
21	.50162E-03	.10605E-02	.34254E-08
22	.50162E-03	.10605E-02	.34254E-08
23	.50162E-03	.10605E-02	.34254E-08
24	.50162E-03	.10605E-02	.34254E-08
25	.64298E-03	.13594E-02	.43908E-08
26	.64298E-03	.13594E-02	.43908E-08
27	.64298E-03	.13594E-02	.43908E-08
28	.64298E-03	.13594E-02	.43908E-08
29	.64298E-03	.13594E-02	.43908E-08
30	.64298E-03	.13594E-02	.43908E-08
31	.10543E-02	.22290E-02	.71996E-08
32	.10543E-02	.22290E-02	.71996E-08
33	.10543E-02	.22290E-02	.71996E-08
34	.10543E-02	.22290E-02	.71996E-08
35	.10543E-02	.22290E-02	.71996E-08
36	.10543E-02	.22290E-02	.71996E-08
37	.10543E-02	.22290E-02	.71996E-08
38	.10543E-02	.22290E-02	.71996E-08
39	.10543E-02	.22290E-02	.71996E-08
40	.10543E-02	.22290E-02	.71996E-08
41	.10543E-02	.22290E-02	.71996E-08
42	.10543E-02	.22290E-02	.71996E-08
43	.37194E-02	.78633E-02	.25399E-07
44	.37194E-02	.78633E-02	.25399E-07
45	.37194E-02	.78633E-02	.25399E-07
46	.37194E-02	.78633E-02	.25399E-07
47	.37194E-02	.78633E-02	.25399E-07
48	.37194E-02	.78633E-02	.25399E-07
49	.37194E-02	.78633E-02	.25399E-07
50	.37194E-02	.78633E-02	.25399E-07
51	.37194E-02	.78633E-02	.25399E-07
52	.37194E-02	.78633E-02	.25399E-07
53	.37194E-02	.78633E-02	.25399E-07
54	.37194E-02	.78633E-02	.25399E-07
55	.37194E-02	.78633E-02	.25399E-07
56	.37194E-02	.78633E-02	.25399E-07

57	.37194E-02	.78633E-02	.25399E-07
58	.37194E-02	.78633E-02	.25399E-07
59	.37194E-02	.78633E-02	.25399E-07
60	.37194E-02	.78633E-02	.25399E-07

Polygon 62
Time: 10.000

Cell	Cgas(g/cu.ft.)	Cliq(g/cu.ft.)	Csol
1	.46775E-05	.98889E-05	.31941E-10
2	.12981E-04	.27444E-04	.88643E-10
3	.24888E-04	.52617E-04	.16995E-09
4	.39614E-04	.83751E-04	.27052E-09
5	.55895E-04	.11817E-03	.38169E-09
6	.72546E-04	.15338E-03	.49540E-09
7	.88840E-04	.18782E-03	.60667E-09
8	.10457E-03	.22107E-03	.71406E-09
9	.11990E-03	.25350E-03	.81880E-09
10	.13525E-03	.28594E-03	.92358E-09
11	.15108E-03	.31941E-03	.10317E-08
12	.16791E-03	.35499E-03	.11466E-08
13	.18757E-03	.39656E-03	.12809E-08
14	.21295E-03	.45021E-03	.14542E-08
15	.24550E-03	.51903E-03	.16765E-08
16	.28380E-03	.59999E-03	.19380E-08
17	.32436E-03	.68574E-03	.22149E-08
18	.36364E-03	.76879E-03	.24832E-08
19	.39937E-03	.84434E-03	.27272E-08
20	.43082E-03	.91082E-03	.29419E-08
21	.45838E-03	.96909E-03	.31302E-08
22	.48302E-03	.10212E-02	.32984E-08
23	.50587E-03	.10695E-02	.34545E-08
24	.52799E-03	.11163E-02	.36055E-08
25	.55079E-03	.11645E-02	.37612E-08
26	.57595E-03	.12177E-02	.39331E-08
27	.60458E-03	.12782E-02	.41285E-08
28	.63670E-03	.13461E-02	.43479E-08
29	.67162E-03	.14199E-02	.45863E-08
30	.70866E-03	.14982E-02	.48393E-08
31	.74901E-03	.15835E-02	.51148E-08
32	.79557E-03	.16820E-02	.54327E-08
33	.85024E-03	.17975E-02	.58061E-08
34	.91216E-03	.19285E-02	.62289E-08
35	.97848E-03	.20687E-02	.66818E-08
36	.10463E-02	.22121E-02	.71450E-08
37	.11141E-02	.23555E-02	.76081E-08
38	.11821E-02	.24991E-02	.80721E-08
39	.12515E-02	.26459E-02	.85461E-08
40	.13245E-02	.28001E-02	.90445E-08
41	.14034E-02	.29669E-02	.95831E-08
42	.14906E-02	.31513E-02	.10179E-07
43	.15976E-02	.33776E-02	.10910E-07
44	.17430E-02	.36850E-02	.11902E-07
45	.19358E-02	.40926E-02	.13219E-07
46	.21654E-02	.45780E-02	.14787E-07
47	.24076E-02	.50900E-02	.16441E-07
48	.26374E-02	.55760E-02	.18010E-07
49	.28386E-02	.60013E-02	.19384E-07
50	.30050E-02	.63531E-02	.20520E-07
51	.31379E-02	.66340E-02	.21428E-07
52	.32424E-02	.68549E-02	.22141E-07

53	.33241E-02	.70278E-02	.22700E-07
54	.33884E-02	.71637E-02	.23139E-07
55	.34391E-02	.72708E-02	.23485E-07
56	.34791E-02	.73554E-02	.23758E-07
57	.35104E-02	.74216E-02	.23972E-07
58	.35344E-02	.74723E-02	.24136E-07
59	.35520E-02	.75095E-02	.24256E-07
60	.35639E-02	.75346E-02	.24337E-07

Polygon 62
Time: 20.000

Cell	Cgas(g/cu.ft.)	Cliq(g/cu.ft.)	Csol
1	.26691E-05	.56430E-05	.18227E-10
2	.69402E-05	.14673E-04	.47393E-10
3	.12724E-04	.26900E-04	.86887E-10
4	.19993E-04	.42268E-04	.13653E-09
5	.28750E-04	.60782E-04	.19633E-09
6	.38987E-04	.82426E-04	.26624E-09
7	.50657E-04	.10710E-03	.34593E-09
8	.63661E-04	.13459E-03	.43472E-09
9	.77863E-04	.16461E-03	.53171E-09
10	.93120E-04	.19687E-03	.63589E-09
11	.10931E-03	.23111E-03	.74648E-09
12	.12638E-03	.26718E-03	.86300E-09
13	.14431E-03	.30510E-03	.98548E-09
14	.16321E-03	.34504E-03	.11145E-08
15	.18323E-03	.38739E-03	.12513E-08
16	.20466E-03	.43269E-03	.13976E-08
17	.22777E-03	.48154E-03	.15554E-08
18	.25274E-03	.53434E-03	.17259E-08
19	.27961E-03	.59114E-03	.19094E-08
20	.30817E-03	.65153E-03	.21044E-08
21	.33807E-03	.71474E-03	.23086E-08
22	.36887E-03	.77986E-03	.25189E-08
23	.40016E-03	.84600E-03	.27326E-08
24	.43165E-03	.91257E-03	.29476E-08
25	.46321E-03	.97930E-03	.31631E-08
26	.49490E-03	.10463E-02	.33796E-08
27	.52694E-03	.11140E-02	.35984E-08
28	.55968E-03	.11833E-02	.38219E-08
29	.59355E-03	.12549E-02	.40532E-08
30	.62897E-03	.13297E-02	.42951E-08
31	.66636E-03	.14088E-02	.45504E-08
32	.70610E-03	.14928E-02	.48218E-08
33	.74855E-03	.15826E-02	.51117E-08
34	.79411E-03	.16789E-02	.54228E-08
35	.84317E-03	.17826E-02	.57578E-08
36	.89608E-03	.18945E-02	.61191E-08
37	.95306E-03	.20149E-02	.65082E-08
38	.10142E-02	.21441E-02	.69256E-08
39	.10794E-02	.22820E-02	.73709E-08
40	.11486E-02	.24283E-02	.78435E-08
41	.12218E-02	.25831E-02	.83434E-08
42	.12991E-02	.27465E-02	.88713E-08
43	.13808E-02	.29193E-02	.94294E-08
44	.14676E-02	.31028E-02	.10022E-07
45	.15605E-02	.32991E-02	.10656E-07
46	.16607E-02	.35111E-02	.11341E-07
47	.17697E-02	.37415E-02	.12085E-07
48	.18880E-02	.39915E-02	.12893E-07

49	.20148E-02	.42597E-02	.13759E-07
50	.21480E-02	.45412E-02	.14668E-07
51	.22839E-02	.48286E-02	.15596E-07
52	.24185E-02	.51130E-02	.16515E-07
53	.25475E-02	.53857E-02	.17396E-07
54	.26675E-02	.56395E-02	.18216E-07
55	.27760E-02	.58690E-02	.18957E-07
56	.28715E-02	.60709E-02	.19609E-07
57	.29533E-02	.62437E-02	.20167E-07
58	.30211E-02	.63871E-02	.20630E-07
59	.30752E-02	.65014E-02	.21000E-07
60	.31157E-02	.65871E-02	.21276E-07

Polygon 62
Time: 30.000

Cell	Cgas(g/cu.ft.)	Cliq(g/cu.ft.)	Csol
1	.18731E-05	.39600E-05	.12791E-10
2	.48425E-05	.10238E-04	.33068E-10
3	.88222E-05	.18652E-04	.60245E-10
4	.13769E-04	.29110E-04	.94025E-10
5	.19670E-04	.41586E-04	.13432E-09
6	.26535E-04	.56098E-04	.18120E-09
7	.34383E-04	.72692E-04	.23479E-09
8	.43245E-04	.91427E-04	.29531E-09
9	.53148E-04	.11236E-03	.36293E-09
10	.64115E-04	.13555E-03	.43783E-09
11	.76163E-04	.16102E-03	.52010E-09
12	.89297E-04	.18879E-03	.60979E-09
13	.10352E-03	.21885E-03	.70689E-09
14	.11882E-03	.25120E-03	.81138E-09
15	.13520E-03	.28583E-03	.92324E-09
16	.15267E-03	.32276E-03	.10425E-08
17	.17124E-03	.36202E-03	.11693E-08
18	.19095E-03	.40369E-03	.13039E-08
19	.21184E-03	.44787E-03	.14466E-08
20	.23398E-03	.49467E-03	.15978E-08
21	.25740E-03	.54418E-03	.17577E-08
22	.28214E-03	.59649E-03	.19266E-08
23	.30820E-03	.65160E-03	.21047E-08
24	.33558E-03	.70947E-03	.22916E-08
25	.36421E-03	.77001E-03	.24871E-08
26	.39405E-03	.83310E-03	.26909E-08
27	.42505E-03	.89863E-03	.29026E-08
28	.45717E-03	.96652E-03	.31219E-08
29	.49040E-03	.10368E-02	.33488E-08
30	.52480E-03	.11095E-02	.35838E-08
31	.56046E-03	.11849E-02	.38272E-08
32	.59749E-03	.12632E-02	.40801E-08
33	.63608E-03	.13448E-02	.43436E-08
34	.67639E-03	.14300E-02	.46189E-08
35	.71865E-03	.15194E-02	.49075E-08
36	.76306E-03	.16132E-02	.52108E-08
37	.80984E-03	.17121E-02	.55302E-08
38	.85919E-03	.18165E-02	.58672E-08
39	.91128E-03	.19266E-02	.62229E-08
40	.96629E-03	.20429E-02	.65986E-08
41	.10243E-02	.21656E-02	.69949E-08
42	.10855E-02	.22949E-02	.74124E-08
43	.11498E-02	.24308E-02	.78514E-08
44	.12172E-02	.25734E-02	.83121E-08

45	.12878E-02	.27227E-02	.87943E-08
46	.13616E-02	.28786E-02	.92980E-08
47	.14384E-02	.30411E-02	.98228E-08
48	.15184E-02	.32101E-02	.10369E-07
49	.16013E-02	.33854E-02	.10935E-07
50	.16871E-02	.35668E-02	.11521E-07
51	.17754E-02	.37534E-02	.12124E-07
52	.18656E-02	.39441E-02	.12740E-07
53	.19568E-02	.41370E-02	.13363E-07
54	.20479E-02	.43295E-02	.13984E-07
55	.21372E-02	.45184E-02	.14594E-07
56	.22230E-02	.46999E-02	.15181E-07
57	.23035E-02	.48699E-02	.15730E-07
58	.23766E-02	.50245E-02	.16229E-07
59	.24404E-02	.51595E-02	.16665E-07
60	.24933E-02	.52711E-02	.17026E-07

V-Leach, VER 1.1
Jake Turin, 11/91
PGA V-leach model, poly screen-TCE-11/10/92-Polygon 62.inp New soil, Old chem
1 polygons.
Timestep = 1.00 years. Simulation length = 30.00 years.
Printout every 1.00 years. Vertical profile stored every 10.00 years.
Koc = 123.60 ml/g, .43649E-02cu.ft./g
Kh = .47300 (dimensionless).
Aqueous solubility = 1100.0 mg/l, 31.149 g/cu.ft
Free air diffusion coefficient = .70290 sq. m/day, 2761.7 sq.ft./yr

Polygon 1
Polygon 62
Polygon area = 80000. sq. ft.
60 cells, each cell 1.000 ft. thick.
Soil Properties:
Bulk density = 1.6400 g/ml, 46440. g/cu.ft.
Porosity = .3810 Volumetric water content = .2550
Organic carbon content = .00074000
Recharge Rate = .19685000 ft/yr
Conc. in recharge water = .00000 mg/l, .00000 g/cu.ft
Atmospheric concentration = .00000 mg/l, .00000 g/cu.ft
Water table is impermeable to gas diffusion.

Calculation of Total VOC Mass (as TCE) in Polygon 62 using HGC Distribution and original Depth Intervals

Depth Interval (ft) (HGC, 1989)	Depth (ft)	Total Soil Conc. Ct (ug/Kg) VOC's as TCE (HGC, 1989) (Table D-5)	Mt (ug/cc)	Volume Soil (cu. ft)	Mass of Contaminant (grams)	Mass of Contaminant (pounds)
0-12	12	2.25	0.00	960000	100.31	0.22
12-22	10	10.61	0.02	800000	394.18	0.87
22-32	10	13.60	0.02	800000	505.27	1.11
32-43.5	11.5	22.30	0.04	920000	952.76	2.10
43.5-62.5	19	78.67	0.13	1520000	5553.21	12.24
Totals:	62.5				7505.72	16.55

```
PGA V-leach model, polygon screen-TCE-11/10/92-Poly153.INP. Poly 79 Vert Dist
   1
      1.0        30.        1.0        10.
    123.6       .473      1100.      .7029
olygon 153
  112000.         1.    .082021       1.64       .381       .255     .00074
       0.         0.        -1.
  60
   1    6       0.68
   7   12       2.04
  13   18       3.40
  19   24      10.06
  25   30      17.79
  31   36      37.54
  37   42      59.69
  43   48     113.69
  49   54     174.06
  55   60     174.06
```

V-Leach, VER 1.1
Jake Turin, 11/91
PGA V-leach model, polygon screen-TCE-11/10/92-Poly153.INP. Poly 79 Vert Dist

Polygon 1
At time = .00, total mass in vadose zone = .16523 g/sq.ft.
Mass in gas phase = .21195E-01g/sq.ft.
Mass in liquid phase = .90688E-01g/sq.ft.
Mass sorbed = .53346E-01g/sq.ft.

Polygon 1
At time = 1.00, total mass in vadose zone = .16377 g/sq.ft.
Mass in gas phase = .21009E-01g/sq.ft.
Mass in liquid phase = .89889E-01g/sq.ft.
Mass sorbed = .52876E-01g/sq.ft.

Since last printout at time = .00
Change in Total Mass = -.14568E-02g/sq.ft.
Advection in from atmosphere = .00000 g/sq.ft.
Advection in from water table = -.14270E-02g/sq.ft.
Diffusion in from atmosphere = -.29845E-04g/sq.ft.
Diffusion in from water table = .00000 g/sq.ft.
Total inflow at boundaries = -.14568E-02g/sq.ft.
Mass discrepancy = -.22119E-08g/sq.ft.

Since beginning of run at time = 0.0
Change in Total Mass = -.14568E-02g/sq.ft.
Advection in from atmosphere = .00000 g/sq.ft.
Advection in from water table = -.14270E-02g/sq.ft.
Diffusion in from atmosphere = -.29845E-04g/sq.ft.
Diffusion in from water table = .00000 g/sq.ft.
Total inflow at boundaries = -.14568E-02g/sq.ft.
Mass discrepancy = -.22119E-08g/sq.ft.

Polygon 1
At time = 2.00, total mass in vadose zone = .16232 g/sq.ft.
Mass in gas phase = .20822E-01g/sq.ft.
Mass in liquid phase = .89092E-01g/sq.ft.
Mass sorbed = .52408E-01g/sq.ft.

Since last printout at time = 1.00
Change in Total Mass = -.14512E-02g/sq.ft.
Advection in from atmosphere = .00000 g/sq.ft.
Advection in from water table = -.14218E-02g/sq.ft.
Diffusion in from atmosphere = -.29444E-04g/sq.ft.
Diffusion in from water table = .00000 g/sq.ft.
Total inflow at boundaries = -.14512E-02g/sq.ft.
Mass discrepancy = .31432E-08g/sq.ft.

Since beginning of run at time = 0.0
Change in Total Mass = -.29081E-02g/sq.ft.
Advection in from atmosphere = .00000 g/sq.ft.
Advection in from water table = -.28488E-02g/sq.ft.
Diffusion in from atmosphere = -.59289E-04g/sq.ft.
Diffusion in from water table = .00000 g/sq.ft.
Total inflow at boundaries = -.29081E-02g/sq.ft.
Mass discrepancy = .93132E-09g/sq.ft.

Polygon 1
At time = 3.00, total mass in vadose zone = .16088 g/sq.ft.
Mass in gas phase = .20637E-01g/sq.ft.
Mass in liquid phase = .88299E-01g)sq.ft.
Mass sorbed = .51941E-01g/sq.ft.

Since last printout at time = 2.00
Change in Total Mass = -.14451E-02g/sq.ft.
Advection in from atmosphere = .00000 g/sq.ft.
Advection in from water table = -.14159E-02g/sq.ft.
Diffusion in from atmosphere = -.29168E-04g)sq.ft.
Diffusion in from water table = .00000 g/sq.ft.
Total inflow at boundaries = -.14451E-02g/sq.ft.
Mass discrepancy = .23283E-08g/sq.ft.

Since beginning of run at time = 0.0
Change in Total Mass = -.43532E-02g/sq.ft.
Advection in from atmosphere = .00000 g/sq.ft.
Advection in from water table = -.42647E-02g/sq.ft.
Diffusion in from atmosphere = -.88457E-04g/sq.ft.
Diffusion in from water table = .00000 g)sq.ft.
Total inflow at boundaries = -.43532E-02g/sq.ft.
Mass discrepancy = .32596E-08g/sq.ft.

Polygon 1
At time = 4.00, total mass in vadose zone = .15944 g/sq.ft.
Mass in gas phase = .20453E-01g/sq.ft.
Mass in liquid phase = .87510E-01g/sq.ft.
Mass sorbed = .51477E-01g/sq.ft.

Since last printout at time = 3.00
Change in Total Mass = -.14385E-02g/sq.ft.
Advection in from atmosphere = .00000 g/sq.ft.
Advection in from water table = -.14095E-02g/sq.ft.
Diffusion in from atmosphere = -.28994E-04g/sq.ft.
Diffusion in from water table = .00000 g/sq.ft.
Total inflow at boundaries = -.14385E-02g)sq.ft.
Mass discrepancy = .00000 g/sq.ft.

Since beginning of run at time = 0.0
Change in Total Mass = -.57916E-02g/sq.ft.
Advection in from atmosphere = .00000 g/sq.ft.
Advection in from water table = -.56742E-02g/sq.ft.
Diffusion in from atmosphere = -.11745E-03g)sq.ft.
Diffusion in from water table = .00000 g/sq.ft.
Total inflow at boundaries = -.57917E-02g/sq.ft.
Mass discrepancy = .27940E-08g/sq.ft.

Polygon 1
At time = 5.00, total mass in vadose zone = .15801 g/sq.ft.
Mass in gas phase = .20269E-01g/sq.ft.
Mass in liquid phase = .86724E-01g/sq.ft.
Mass sorbed = .51014E-01g)sq.ft.

Since last printout at time = 4.00
Change in Total Mass = -.14312E-02g/sq.ft.

```
                Advection in from atmosphere =        .00000    g/sq.ft.
                Advection in from water table =     -.14023E-02g/sq.ft.
                Diffusion in from atmosphere =      -.28905E-04g/sq.ft.
                Diffusion in from water table =       .00000    g/sq.ft.
           Total inflow at boundaries =     -.14313E-02g/sq.ft.
           Mass discrepancy =      .39116E-07g/sq.ft.

Since beginning of run at time = 0.0
           Change in Total Mass =     -.72229E-02g/sq.ft.
                Advection in from atmosphere =        .DDDDD    g/sq.ft.
                Advection in from water table =     -.70765E-02g/sq.ft.
                Diffusion in from atmosphere =      -.14636E-03g/sq.ft.
                Diffusion in from water table =       .00000    g/sq.ft.
           Total inflow at boundaries =     -.72229E-02g/sq.ft.
           Mass discrepancy =      .41910E-07g/sq.ft.


Polygon   1
At time =       6.00, total mass in vadose zone =      .15658    g/sq.ft.
Mass in gas phase     =       .20086E-01g/sq.ft.
Mass in liquid phase  =       .85943E-01g/sq.ft.
Mass sorbed           =       .50555E-01g/sq.ft.

Since last printout at time =       5.00
           Change in Total Mass =     -.14236E-02g/sq.ft.
                Advection in from atmosphere =        .00000    g/sq.ft.
                Advection in from water table =     -.13946E-02g/sq.ft.
                Diffusion in from atmosphere =      -.28886E-04g/sq.ft.
                Diffusion in from water table =       .DDDDD    g/sq.ft.
           Total inflow at boundaries =     -.14235E-02g/sq.ft.
           Mass discrepancy =     -.54482E-07g/sq.ft.

Since beginning of run at time = 0.0
           Change in Total Mass =     -.86464E-02g/sq.ft.
                Advection in from atmosphere =        .00000    g/sq.ft.
                Advection in from water table =     -.84712E-02g/sq.ft.
                Diffusion in from atmosphere =      -.17524E-03g/sq.ft.
                Diffusion in from water table =       .00000    g/sq.ft.
           Total inflow at boundaries =     -.86464E-02g/sq.ft.
           Mass discrepancy =     -.13039E-07g/sq.ft.


Polygon   1
At time =       7.00, total mass in vadose zone =      .15517    g/sq.ft.
Mass in gas phase     =       .19905E-01g/sq.ft.
Mass in liquid phase  =       .85166E-01g/sq.ft.
Mass sorbed           =       .50098E-01g/sq.ft.

Since last printout at time =       6.00
           Change in Total Mass =     -.14152E-02g/sq.ft.
                Advection in from atmosphere =        .00000    g/sq.ft.
                Advection in from water table =     -.13863E-02g/sq.ft.
                Diffusion in from atmosphere =      -.28925E-04g/sq.ft.
                Diffusion in from water table =       .00000    g/sq.ft.
           Total inflow at boundaries =     -.14153E-02g/sq.ft.
           Mass discrepancy =      .43539E-07g/sq.ft.

Since beginning of run at time = 0.0
           Change in Total Mass =     -.10062E-01g/sq.ft.
                Advection in from atmosphere =        .00000    g/sq.ft.
```

Advection in from water table = -.98575E-02g/sq.ft.
Diffusion in from atmosphere = -.20417E-03g/sq.ft.
Diffusion in from water table = .00000 g/sq.ft.
Total inflow at boundaries = -.10062E-01g/sq.ft.
Mass discrepancy = .30734E-07g/sq.ft.

Polygon 1
At time = 8.00, total mass in vadose zone = .15376 g/sq.ft.
Mass in gas phase = .19724E-01g/sq.ft.
Mass in liquid phase = .84394E-01g/sq.ft.
Mass sorbed = .49644E-01g/sq.ft.

Since last printout at time = 7.00
Change in Total Mass = -.14065E-02g/sq.ft.
Advection in from atmosphere = .00000 g/sq.ft.
Advection in from water table = -.13775E-02g/sq.ft.
Diffusion in from atmosphere = -.29110E-04g/sq.ft.
Diffusion in from water table = .00000 g/sq.ft.
Total inflow at boundaries = -.14065E-02g/sq.ft.
Mass discrepancy = -.23865E-07g/sq.ft.

Since beginning of run at time = 0.0
Change in Total Mass = -.11468E-01g/sq.ft.
Advection in from atmosphere = .00000 g/sq.ft.
Advection in from water table = -.11235E-01g/sq.ft.
Diffusion in from atmosphere = -.23318E-03g/sq.ft.
Diffusion in from water table = .00000 g/sq.ft.
Total inflow at boundaries = -.11468E-01g/sq.ft.
Mass discrepancy = .74506E-08g/sq.ft.

Polygon 1
At time = 9.00, total mass in vadose zone = .15236 g/sq.ft.
Mass in gas phase = .19545E-01g/sq.ft.
Mass in liquid phase = .83627E-01g/sq.ft.
Mass sorbed = .49193E-01g/sq.ft.

Since last printout at time = 8.00
Change in Total Mass = -.13972E-02g/sq.ft.
Advection in from atmosphere = .00000 g/sq.ft.
Advection in from water table = -.13681E-02g/sq.ft.
Diffusion in from atmosphere = -.29133E-04g/sq.ft.
Diffusion in from water table = .00000 g/sq.ft.
Total inflow at boundaries = -.13972E-02g/sq.ft.
Mass discrepancy = .16531E-07g/sq.ft.

Since beginning of run at time = 0.0
Change in Total Mass = -.12865E-01g/sq.ft.
Advection in from atmosphere = .00000 g/sq.ft.
Advection in from water table = -.12603E-01g/sq.ft.
Diffusion in from atmosphere = -.26231E-03g/sq.ft.
Diffusion in from water table = .00000 g/sq.ft.
Total inflow at boundaries = -.12865E-01g/sq.ft.
Mass discrepancy = .23283E-07g/sq.ft.

Polygon 1
At time = 10.00, total mass in vadose zone = .15098 g/sq.ft.
Mass in gas phase = .19367E-01g/sq.ft.

Mass in liquid phase = .82866E-01g/sq.ft.
Mass sorbed = .48745E-01g/sq.ft.

Since last printout at time = 9.00
Change in Total Mass = -.13875E-02g/sq.ft.
Advection in from atmosphere = .00000 g/sq.ft.
Advection in from water table = -.13582E-02g/sq.ft.
Diffusion in from atmosphere = -.29187E-04g/sq.ft.
Diffusion in from water table = .00000 g/sq.ft.
Total inflow at boundaries = -.13875E-02g/sq.ft.
Mass discrepancy = -.60536E-08g/sq.ft.

Since beginning of run at time = 0.0
Change in Total Mass = -.14253E-01g/sq.ft.
Advection in from atmosphere = .00000 g/sq.ft.
Advection in from water table = -.13961E-01g/sq.ft.
Diffusion in from atmosphere = -.29160E-03g/sq.ft.
Diffusion in from water table = .00000 g/sq.ft.
Total inflow at boundaries = -.14253E-01g/sq.ft.
Mass discrepancy = .17695E-07g/sq.ft.

Polygon 1
At time = 11.00, total mass in vadose zone = .14960 g/sq.ft.
Mass in gas phase = .19190E-01g/sq.ft.
Mass in liquid phase = .82110E-01g/sq.ft.
Mass sorbed = .48300E-01g/sq.ft.

Since last printout at time = 10.00
Change in Total Mass = -.13773E-02g/sq.ft.
Advection in from atmosphere = .00000 g/sq.ft.
Advection in from water table = -.13479E-02g/sq.ft.
Diffusion in from atmosphere = -.29466E-04g/sq.ft.
Diffusion in from water table = .00000 g/sq.ft.
Total inflow at boundaries = -.13773E-02g/sq.ft.
Mass discrepancy = .23167E-07g/sq.ft.

Since beginning of run at time = 0.0
Change in Total Mass = -.15630E-01g/sq.ft.
Advection in from atmosphere = .00000 g/sq.ft.
Advection in from water table = -.15309E-01g/sq.ft.
Diffusion in from atmosphere = -.32106E-03g/sq.ft.
Diffusion in from water table = .00000 g/sq.ft.
Total inflow at boundaries = -.15630E-01g/sq.ft.
Mass discrepancy = .40978E-07g/sq.ft.

Polygon 1
At time = 12.00, total mass in vadose zone = .14823 g/sq.ft.
Mass in gas phase = .19015E-01g/sq.ft.
Mass in liquid phase = .81359E-01g/sq.ft.
Mass sorbed = .47859E-01g/sq.ft.

Since last printout at time = 11.00
Change in Total Mass = -.13668E-02g/sq.ft.
Advection in from atmosphere = .00000 g/sq.ft.
Advection in from water table = -.13371E-02g/sq.ft.
Diffusion in from atmosphere = -.29665E-04g/sq.ft.
Diffusion in from water table = .00000 g/sq.ft.
Total inflow at boundaries = -.13668E-02g/sq.ft.

Mass discrepancy = -.16764E-07g/sq.ft.

Since beginning of run at time = 0.0
Change in Total Mass = -.16997E-01g/sq.ft.
Advection in from atmosphere = .00000 g/sq.ft.
Advection in from water table = -.16646E-01g/sq.ft.
Diffusion in from atmosphere = -.35073E-03g/sq.ft.
Diffusion in from water table = .00000 g/sq.ft.
Total inflow at boundaries = -.16997E-01g/sq.ft.
Mass discrepancy = .24214E-07g/sq.ft.

Polygon 1
At time = 13.00, total mass in vadose zone = .14688 g/sq.ft.
Mass in gas phase = .18841E-01g/sq.ft.
Mass in liquid phase = .80615E-01g/sq.ft.
Mass sorbed = .47421E-01g/sq.ft.

Since last printout at time = 12.00
Change in Total Mass = -.13558E-02g/sq.ft.
Advection in from atmosphere = .00000 g/sq.ft.
Advection in from water table = -.13259E-02g/sq.ft.
Diffusion in from atmosphere = -.29879E-04g/sq.ft.
Diffusion in from water table = .00000 g/sq.ft.
Total inflow at boundaries = -.13558E-02g/sq.ft.
Mass discrepancy = .22585E-07g/sq.ft.

Since beginning of run at time = 0.0
Change in Total Mass = -.18353E-01g/sq.ft.
Advection in from atmosphere = .00000 g/sq.ft.
Advection in from water table = -.17972E-01g/sq.ft.
Diffusion in from atmosphere = -.38061E-03g/sq.ft.
Diffusion in from water table = .00000 g/sq.ft.
Total inflow at boundaries = -.18353E-01g/sq.ft.
Mass discrepancy = .46566E-07g/sq.ft.

Polygon 1
At time = 14.00, total mass in vadose zone = .14553 g/sq.ft.
Mass in gas phase = .18669E-01g/sq.ft.
Mass in liquid phase = .79877E-01g/sq.ft.
Mass sorbed = .46987E-01g/sq.ft.

Since last printout at time = 13.00
Change in Total Mass = -.13445E-02g/sq.ft.
Advection in from atmosphere = .00000 g/sq.ft.
Advection in from water table = -.13144E-02g/sq.ft.
Diffusion in from atmosphere = -.30104E-04g/sq.ft.
Diffusion in from water table = .00000 g/sq.ft.
Total inflow at boundaries = -.13445E-02g/sq.ft.
Mass discrepancy = -.75670E-08g/sq.ft.

Since beginning of run at time = 0.0
Change in Total Mass = -.19697E-01g/sq.ft.
Advection in from atmosphere = .00000 g/sq.ft.
Advection in from water table = -.19287E-01g/sq.ft.
Diffusion in from atmosphere = -.41071E-03g/sq.ft.
Diffusion in from water table = .00000 g/sq.ft.
Total inflow at boundaries = -.19697E-01g/sq.ft.
Mass discrepancy = .39116E-07g/sq.ft.

```
Polygon   1
At time =      15.00, total mass in vadose zone =      .14420    g/sq.ft.
Mass in gas phase     =       .18498E-01g/sq.ft.
Mass in liquid phase  =       .79146E-01g/sq.ft.
Mass sorbed           =       .46557E-01g/sq.ft.

Since last printout at time =      14.00
               Change in Total Mass =     -.13329E-02g/sq.ft.
                    Advection in from atmosphere =       .00000    g/sq.ft.
                    Advection in from water table =     -.13025E-02g/sq.ft.
                    Diffusion in from atmosphere =      -.30339E-04g/sq.ft.
                    Diffusion in from water table =      .00000    g/sq.ft.
               Total inflow at boundaries =     -.13329E-02g/sq.ft.
               Mass discrepancy =     -.18626E-08g/sq.ft.

Since beginning of run at time = 0.0
               Change in Total Mass =     -.21030E-01g/sq.ft.
                    Advection in from atmosphere =       .00000    g/sq.ft.
                    Advection in from water table =     -.20589E-01g/sq.ft.
                    Diffusion in from atmosphere =      -.44105E-03g/sq.ft.
                    Diffusion in from water table =      .00000    g/sq.ft.
               Total inflow at boundaries =     -.21030E-01g/sq.ft.
               Mass discrepancy =      .37253E-07g/sq.ft.


Polygon   1
At time =      16.00, total mass in vadose zone =      .14288    g/sq.ft.
Mass in gas phase     =       .18328E-01g/sq.ft.
Mass in liquid phase  =       .78421E-01g/sq.ft.
Mass sorbed           =       .46130E-01g/sq.ft.

Since last printout at time =      15.00
               Change in Total Mass =     -.13209E-02g/sq.ft.
                    Advection in from atmosphere =       .00000    g/sq.ft.
                    Advection in from water table =     -.12904E-02g/sq.ft.
                    Diffusion in from atmosphere =      -.30579E-04g/sq.ft.
                    Diffusion in from water table =      .00000    g/sq.ft.
               Total inflow at boundaries =     -.13209E-02g/sq.ft.
               Mass discrepancy =     -.31437E-08g/sq.ft.

Since beginning of run at time = 0.0
               Change in Total Mass =     -.22351E-01g/sq.ft.
                    Advection in from atmosphere =       .00000    g/sq.ft.
                    Advection in from water table =     -.21879E-01g/sq.ft.
                    Diffusion in from atmosphere =      -.47163E-03g/sq.ft.
                    Diffusion in from water table =      .00000    g/sq.ft.
               Total inflow at boundaries =     -.22351E-01g/sq.ft.
               Mass discrepancy =      .33528E-07g/sq.ft.


Polygon   1
At time =      17.00, total mass in vadose zone =      .14157    g/sq.ft.
Mass in gas phase     =       .18160E-01g/sq.ft.
Mass in liquid phase  =       .77702E-01g/sq.ft.
Mass sorbed           =       .45708E-01g/sq.ft.

Since last printout at time =      16.00
               Change in Total Mass =     -.13088E-02g/sq.ft.
```

Advection in from atmosphere = .00000 g/sq.ft.
Advection in from water table = -.12779E-02g/sq.ft.
Diffusion in from atmosphere = -.30823E-04g/sq.ft.
Diffusion in from water table = .00000 g/sq.ft.
Total inflow at boundaries = -.13088E-02g/sq.ft.
Mass discrepancy = .48894E-08g/sq.ft.

Since beginning of run at time = 0.0
Change in Total Mass = -.23660E-01g/sq.ft.
Advection in from atmosphere = .00000 g/sq.ft.
Advection in from water table = -.23157E-01g/sq.ft.
Diffusion in from atmosphere = -.50245E-03g/sq.ft.
Diffusion in from water table = .00000 g/sq.ft.
Total inflow at boundaries = -.23660E-01g/sq.ft.
Mass discrepancy = .39116E-07g/sq.ft.

Polygon 1
At time = 18.00, total mass in vadose zone = .14027 g/sq.ft.
Mass in gas phase = .17994E-01g/sq.ft.
Mass in liquid phase = .76991E-01g/sq.ft.
Mass sorbed = .45289E-01g/sq.ft.

Since last printout at time = 17.00
Change in Total Mass = -.12963E-02g/sq.ft.
Advection in from atmosphere = .00000 g/sq.ft.
Advection in from water table = -.12655E-02g/sq.ft.
Diffusion in from atmosphere = -.31069E-04g/sq.ft.
Diffusion in from water table = .00000 g/sq.ft.
Total inflow at boundaries = -.12963E-02g/sq.ft.
Mass discrepancy = .82655E-08g/sq.ft.

Since beginning of run at time = 0.0
Change in Total Mass = -.24956E-01g/sq.ft.
Advection in from atmosphere = .00000 g/sq.ft.
Advection in from water table = -.24423E-01g/sq.ft.
Diffusion in from atmosphere = -.53352E-03g/sq.ft.
Diffusion in from water table = .00000 g/sq.ft.
Total inflow at boundaries = -.24956E-01g/sq.ft.
Mass discrepancy = .46566E-07g/sq.ft.

Polygon 1
At time = 19.00, total mass in vadose zone = .13899 g/sq.ft.
Mass in gas phase = .17829E-01g/sq.ft.
Mass in liquid phase = .76286E-01g/sq.ft.
Mass sorbed = .44875E-01g/sq.ft.

Since last printout at time = 18.00
Change in Total Mass = -.12837E-02g/sq.ft.
Advection in from atmosphere = .00000 g/sq.ft.
Advection in from water table = -.12524E-02g/sq.ft.
Diffusion in from atmosphere = -.31316E-04g/sq.ft.
Diffusion in from water table = .00000 g/sq.ft.
Total inflow at boundaries = -.12837E-02g/sq.ft.
Mass discrepancy = .80327E-08g/sq.ft.

Since beginning of run at time = 0.0
Change in Total Mass = -.26240E-01g/sq.ft.
Advection in from atmosphere = .00000 g/sq.ft.

Advection in from water table = -.25675E-01g/sq.ft.
Diffusion in from atmosphere = -.56484E-03g/sq.ft.
Diffusion in from water table = .00000 g/sq.ft.
Total inflow at boundaries = -.26240E-01g/sq.ft.
Mass discrepancy = .55879E-07g/sq.ft.

Polygon 1
At time = 20.00, total mass in vadose zone = .13772 g/sq.ft.
Mass in gas phase = .17666E-01g/sq.ft.
Mass in liquid phase = .75589E-01g/sq.ft.
Mass sorbed = .44464E-01g/sq.ft.

Since last printout at time = 19.00
Change in Total Mass = -.12710E-02g/sq.ft.
Advection in from atmosphere = .00000 g/sq.ft.
Advection in from water table = -.12394E-02g/sq.ft.
Diffusion in from atmosphere = -.31562E-04g/sq.ft.
Diffusion in from water table = .00000 g/sq.ft.
Total inflow at boundaries = -.12710E-02g/sq.ft.
Mass discrepancy = .41910E-08g/sq.ft.

Since beginning of run at time = 0.0
Change in Total Mass = -.27511E-01g/sq.ft.
Advection in from atmosphere = .00000 g/sq.ft.
Advection in from water table = -.26914E-01g/sq.ft.
Diffusion in from atmosphere = -.59640E-03g/sq.ft.
Diffusion in from water table = .00000 g/sq.ft.
Total inflow at boundaries = -.27511E-01g/sq.ft.
Mass discrepancy = .59605E-07g/sq.ft.

Polygon 1
At time = 21.00, total mass in vadose zone = .13646 g/sq.ft.
Mass in gas phase = .17505E-01g/sq.ft.
Mass in liquid phase = .74898E-01g/sq.ft.
Mass sorbed = .44058E-01g/sq.ft.

Since last printout at time = 20.00
Change in Total Mass = -.12581E-02g/sq.ft.
Advection in from atmosphere = .00000 g/sq.ft.
Advection in from water table = -.12263E-02g/sq.ft.
Diffusion in from atmosphere = -.31805E-04g/sq.ft.
Diffusion in from water table = .00000 g/sq.ft.
Total inflow at boundaries = -.12581E-02g/sq.ft.
Mass discrepancy = -.39581E-08g/sq.ft.

Since beginning of run at time = 0.0
Change in Total Mass = -.28769E-01g/sq.ft.
Advection in from atmosphere = .00000 g/sq.ft.
Advection in from water table = -.28141E-01g/sq.ft.
Diffusion in from atmosphere = -.62820E-03g/sq.ft.
Diffusion in from water table = .00000 g/sq.ft.
Total inflow at boundaries = -.28769E-01g/sq.ft.
Mass discrepancy = .55879E-07g/sq.ft.

Polygon 1
At time = 22.00, total mass in vadose zone = .13511 g/sq.ft.
Mass in gas phase = .17345E-01g/sq.ft.

Mass in liquid phase = .74215E-01g/sq.ft.
Mass sorbed = .43656E-01g/sq.ft.

Since last printout at time = 21.00
Change in Total Mass = -.12450E-02g/sq.ft.
Advection in from atmosphere = .00000 g/sq.ft.
Advection in from water table = -.12130E-02g/sq.ft.
Diffusion in from atmosphere = -.32046E-04g/sq.ft.
Diffusion in from water table = .00000 g/sq.ft.
Total inflow at boundaries = -.12450E-02g/sq.ft.
Mass discrepancy = -.32596E-08g/sq.ft.

Since beginning of run at time = 0.0
Change in Total Mass = -.30014E-01g/sq.ft.
Advection in from atmosphere = .00000 g/sq.ft.
Advection in from water table = -.29354E-01g/sq.ft.
Diffusion in from atmosphere = -.66025E-03g/sq.ft.
Diffusion in from water table = .00000 g/sq.ft.
Total inflow at boundaries = -.30014E-01g/sq.ft.
Mass discrepancy = .54017E-07g/sq.ft.

Polygon 1
At time = 23.00, total mass in vadose zone = .13398 g/sq.ft.
Mass in gas phase = .17187E-01g/sq.ft.
Mass in liquid phase = .73539E-01g/sq.ft.
Mass sorbed = .43258E-01g/sq.ft.

Since last printout at time = 22.00
Change in Total Mass = -.12319E-02g/sq.ft.
Advection in from atmosphere = .00000 g/sq.ft.
Advection in from water table = -.11996E-02g/sq.ft.
Diffusion in from atmosphere = -.32283E-04g/sq.ft.
Diffusion in from water table = .00000 g/sq.ft.
Total inflow at boundaries = -.12319E-02g/sq.ft.
Mass discrepancy = .30268E-08g/sq.ft.

Since beginning of run at time = 0.0
Change in Total Mass = -.31246E-01g/sq.ft.
Advection in from atmosphere = .00000 g/sq.ft.
Advection in from water table = -.30553E-01g/sq.ft.
Diffusion in from atmosphere = -.69253E-03g/sq.ft.
Diffusion in from water table = .00000 g/sq.ft.
Total inflow at boundaries = -.31246E-01g/sq.ft.
Mass discrepancy = .55879E-07g/sq.ft.

Polygon 1
At time = 24.00, total mass in vadose zone = .13277 g/sq.ft.
Mass in gas phase = .17031E-01g/sq.ft.
Mass in liquid phase = .72870E-01g/sq.ft.
Mass sorbed = .42865E-01g/sq.ft.

Since last printout at time = 23.00
Change in Total Mass = -.12188E-02g/sq.ft.
Advection in from atmosphere = .00000 g/sq.ft.
Advection in from water table = -.11862E-02g/sq.ft.
Diffusion in from atmosphere = -.32515E-04g/sq.ft.
Diffusion in from water table = .00000 g/sq.ft.
Total inflow at boundaries = -.12188E-02g/sq.ft.

Mass discrepancy = .10827E-07g/sq.ft.

Since beginning of run at time = 0.0
Change in Total Mass = -.32465E-01g/sq.ft.
Advection in from atmosphere = .00000 g/sq.ft.
Advection in from water table = -.31740E-01g/sq.ft.
Diffusion in from atmosphere = -.72505E-03g/sq.ft.
Diffusion in from water table = .00000 g/sq.ft.
Total inflow at boundaries = -.32465E-01g/sq.ft.
Mass discrepancy = .70781E-07g/sq.ft.

Polygon 1
At time = 25.00, total mass in vadose zone = .13156 g/sq.ft.
Mass in gas phase = .16876E-01g/sq.ft.
Mass in liquid phase = .72208E-01g/sq.ft.
Mass sorbed = .42476E-01g/sq.ft.

Since last printout at time = 24.00
Change in Total Mass = -.12055E-02g/sq.ft.
Advection in from atmosphere = .00000 g/sq.ft.
Advection in from water table = -.11728E-02g/sq.ft.
Diffusion in from atmosphere = -.32743E-04g/sq.ft.
Diffusion in from water table = .00000 g/sq.ft.
Total inflow at boundaries = -.12056E-02g/sq.ft.
Mass discrepancy = .14552E-07g/sq.ft.

Since beginning of run at time = 0.0
Change in Total Mass = -.33670E-01g/sq.ft.
Advection in from atmosphere = .00000 g/sq.ft.
Advection in from water table = -.32912E-01g/sq.ft.
Diffusion in from atmosphere = -.75779E-03g/sq.ft.
Diffusion in from water table = .00000 g/sq.ft.
Total inflow at boundaries = -.33670E-01g/sq.ft.
Mass discrepancy = .85682E-07g/sq.ft.

Polygon 1
At time = 26.00, total mass in vadose zone = .13037 g/sq.ft.
Mass in gas phase = .16723E-01g/sq.ft.
Mass in liquid phase = .71554E-01g/sq.ft.
Mass sorbed = .42091E-01g/sq.ft.

Since last printout at time = 25.00
Change in Total Mass = -.11924E-02g/sq.ft.
Advection in from atmosphere = .00000 g/sq.ft.
Advection in from water table = -.11594E-02g/sq.ft.
Diffusion in from atmosphere = -.32965E-04g/sq.ft.
Diffusion in from water table = .00000 g/sq.ft.
Total inflow at boundaries = -.11924E-02g/sq.ft.
Mass discrepancy = -.22585E-07g/sq.ft.

Since beginning of run at time = 0.0
Change in Total Mass = -.34863E-01g/sq.ft.
Advection in from atmosphere = .00000 g/sq.ft.
Advection in from water table = -.34072E-01g/sq.ft.
Diffusion in from atmosphere = -.79076E-03g/sq.ft.
Diffusion in from water table = .00000 g/sq.ft.
Total inflow at boundaries = -.34863E-01g/sq.ft.
Mass discrepancy = .63330E-07g/sq.ft.

Polygon 1
At time = 27.00, total mass in vadose zone = .12919 g/sq.ft.
Mass in gas phase = .16572E-01g/sq.ft.
Mass in liquid phase = .70907E-01g/sq.ft.
Mass sorbed = .41710E-01g/sq.ft.

Since last printout at time = 26.00
Change in Total Mass = -.11791E-02g/sq.ft.
Advection in from atmosphere = .00000 g/sq.ft.
Advection in from water table = -.11460E-02g/sq.ft.
Diffusion in from atmosphere = -.33181E-04g/sq.ft.
Diffusion in from water table = .00000 g/sq.ft.
Total inflow at boundaries = -.11792E-02g/sq.ft.
Mass discrepancy = .97789E-08g/sq.ft.

Since beginning of run at time = 0.0
Change in Total Mass = -.36042E-01g/sq.ft.
Advection in from atmosphere = .00000 g/sq.ft.
Advection in from water table = -.35218E-01g/sq.ft.
Diffusion in from atmosphere = -.82394E-03g/sq.ft.
Diffusion in from water table = .00000 g/sq.ft.
Total inflow at boundaries = -.36042E-01g/sq.ft.
Mass discrepancy = .74506E-07g/sq.ft.

Polygon 1
At time = 28.00, total mass in vadose zone = .12802 g/sq.ft.
Mass in gas phase = .16423E-01g/sq.ft.
Mass in liquid phase = .70267E-01g/sq.ft.
Mass sorbed = .41334E-01g/sq.ft.

Since last printout at time = 27.00
Change in Total Mass = -.11660E-02g/sq.ft.
Advection in from atmosphere = .00000 g/sq.ft.
Advection in from water table = -.11326E-02g/sq.ft.
Diffusion in from atmosphere = -.33391E-04g/sq.ft.
Diffusion in from water table = .00000 g/sq.ft.
Total inflow at boundaries = -.11660E-02g/sq.ft.
Mass discrepancy = .12340E-07g/sq.ft.

Since beginning of run at time = 0.0
Change in Total Mass = -.37208E-01g/sq.ft.
Advection in from atmosphere = .00000 g/sq.ft.
Advection in from water table = -.36350E-01g/sq.ft.
Diffusion in from atmosphere = -.85733E-03g/sq.ft.
Diffusion in from water table = .00000 g/sq.ft.
Total inflow at boundaries = -.37208E-01g/sq.ft.
Mass discrepancy = .85682E-07g/sq.ft.

Polygon 1
At time = 29.00, total mass in vadose zone = .12687 g/sq.ft.
Mass in gas phase = .16275E-01g/sq.ft.
Mass in liquid phase = .69634E-01g/sq.ft.
Mass sorbed = .40961E-01g/sq.ft.

Since last printout at time = 28.00
Change in Total Mass = -.11529E-02g/sq.ft.

Advection in from atmosphere = .00000 g/sq.ft.
Advection in from water table = -.11193E-02g/sq.ft.
Diffusion in from atmosphere = -.33595E-04g/sq.ft.
Diffusion in from water table = .00000 g/sq.ft.
Total inflow at boundaries = -.11529E-02g/sq.ft.
Mass discrepancy = -.11758E-07g/sq.ft.

Since beginning of run at time = 0.0
Change in Total Mass = -.38361E-01g/sq.ft.
Advection in from atmosphere = .00000 g/sq.ft.
Advection in from water table = -.37470E-01g/sq.ft.
Diffusion in from atmosphere = -.89092E-03g/sq.ft.
Diffusion in from water table = .00000 g/sq.ft.
Total inflow at boundaries = -.38361E-01g/sq.ft.
Mass discrepancy = .74506E-07g/sq.ft.

Polygon 1
At time = 30.00, total mass in vadose zone = .12573 g/sq.ft.
Mass in gas phase = .16128E-01g/sq.ft.
Mass in liquid phase = .69008E-01g/sq.ft.
Mass sorbed = .40593E-01g/sq.ft.

Since last printout at time = 29.00
Change in Total Mass = -.11398E-02g/sq.ft.
Advection in from atmosphere = .00000 g/sq.ft.
Advection in from water table = -.11060E-02g/sq.ft.
Diffusion in from atmosphere = -.33792E-04g/sq.ft.
Diffusion in from water table = .00000 g/sq.ft.
Total inflow at boundaries = -.11398E-02g/sq.ft.
Mass discrepancy = .13853E-07g/sq.ft.

Since beginning of run at time = 0.0
Change in Total Mass = -.39500E-01g/sq.ft.
Advection in from atmosphere = .00000 g/sq.ft.
Advection in from water table = -.38576E-01g/sq.ft.
Diffusion in from atmosphere = -.92471E-03g/sq.ft.
Diffusion in from water table = .00000 g/sq.ft.
Total inflow at boundaries = -.39500E-01g/sq.ft.
Mass discrepancy = .89407E-07g/sq.ft.

GROUNDWATER IMPACT OF POLYGON 1

Time	Mass per area (g/sq.ft.)	Total Mass (g)
1.00	.14270E-02	159.82
2.00	.14218E-02	159.24
3.00	.14159E-02	158.59
4.00	.14095E-02	157.86
5.00	.14023E-02	157.06
6.00	.13946E-02	156.20
7.00	.13863E-02	155.27
8.00	.13775E-02	154.28
9.00	.13681E-02	153.23
10.00	.13582E-02	152.12
11.00	.13479E-02	150.96
12.00	.13371E-02	149.75
13.00	.13259E-02	148.50
14.00	.13144E-02	147.21
15.00	.13025E-02	145.88

16.00	.12904E-02	144.52
17.00	.12779E-02	143.13
18.00	.12653E-02	141.71
19.00	.12524E-02	140.27
20.00	.12394E-02	138.81
21.00	.12263E-02	137.34
22.00	.12130E-02	135.85
23.00	.11996E-02	134.36
24.00	.11862E-02	132.86
25.00	.11728E-02	131.36
26.00	.11594E-02	129.85
27.00	.11460E-02	128.35
28.00	.11326E-02	126.85
29.00	.11193E-02	125.36
30.00	.11060E-02	123.87

****

****

TOTAL GROUNDWATER IMPACT

Time (yr)	Mass (g)	Cumulative Mass (g)
1.00	159.82	159.82
2.00	159.24	319.06
3.00	158.59	477.65
4.00	157.86	635.51
5.00	157.06	792.57
6.00	156.20	948.77
7.00	155.27	1104.0
8.00	154.28	1258.3
9.00	153.23	1411.5
10.00	152.12	1563.7
11.00	150.96	1714.6
12.00	149.75	1864.4
13.00	148.50	2012.9
14.00	147.21	2160.1
15.00	145.88	2306.0
16.00	144.52	2450.5
17.00	143.13	2593.6
18.00	141.71	2735.3
19.00	140.27	2875.6
20.00	138.81	3014.4
21.00	137.34	3151.8
22.00	135.85	3287.6
23.00	134.36	3422.0
24.00	132.86	3554.8
25.00	131.36	3686.2
26.00	129.85	3816.0
27.00	128.35	3944.4
28.00	126.85	4071.2
29.00	125.36	4196.6
30.00	123.87	4320.5

Polygon 153
Time: .000

Cell	Cgas(g/cu.ft.)	Cliq(g/cu.ft.)	Csol
1	.32149E-04	.67968E-04	.21954E-09
2	.32149E-04	.67968E-04	.21954E-09
3	.32149E-04	.67968E-04	.21954E-09
4	.32149E-04	.67968E-04	.21954E-09
5	.32149E-04	.67968E-04	.21954E-09
6	.32149E-04	.67968E-04	.21954E-09
7	.96447E-04	.20391E-03	.65861E-09
8	.96447E-04	.20391E-03	.65861E-09
9	.96447E-04	.20391E-03	.65861E-09
10	.96447E-04	.20391E-03	.65861E-09
11	.96447E-04	.20391E-03	.65861E-09
12	.96447E-04	.20391E-03	.65861E-09
13	.16075E-03	.33984E-03	.10977E-08
14	.16075E-03	.33984E-03	.10977E-08
15	.16075E-03	.33984E-03	.10977E-08
16	.16075E-03	.33984E-03	.10977E-08
17	.16075E-03	.33984E-03	.10977E-08
18	.16075E-03	.33984E-03	.10977E-08
19	.47562E-03	.10055E-02	.32479E-08
20	.47562E-03	.10055E-02	.32479E-08
21	.47562E-03	.10055E-02	.32479E-08
22	.47562E-03	.10055E-02	.32479E-08
23	.47562E-03	.10055E-02	.32479E-08
24	.47562E-03	.10055E-02	.32479E-08
25	.84108E-03	.17782E-02	.57435E-08
26	.84108E-03	.17782E-02	.57435E-08
27	.84108E-03	.17782E-02	.57435E-08
28	.84108E-03	.17782E-02	.57435E-08
29	.84108E-03	.17782E-02	.57435E-08
30	.84108E-03	.17782E-02	.57435E-08
31	.17748E-02	.37523E-02	.12120E-07
32	.17748E-02	.37523E-02	.12120E-07
33	.17748E-02	.37523E-02	.12120E-07
34	.17748E-02	.37523E-02	.12120E-07
35	.17748E-02	.37523E-02	.12120E-07
36	.17748E-02	.37523E-02	.12120E-07
37	.28220E-02	.59662E-02	.19271E-07
38	.28220E-02	.59662E-02	.19271E-07
39	.28220E-02	.59662E-02	.19271E-07
40	.28220E-02	.59662E-02	.19271E-07
41	.28220E-02	.59662E-02	.19271E-07
42	.28220E-02	.59662E-02	.19271E-07
43	.53750E-02	.11364E-01	.36705E-07
44	.53750E-02	.11364E-01	.36705E-07
45	.53750E-02	.11364E-01	.36705E-07
46	.53750E-02	.11364E-01	.36705E-07
47	.53750E-02	.11364E-01	.36705E-07
48	.53750E-02	.11364E-01	.36705E-07
49	.82292E-02	.17398E-01	.56195E-07
50	.82292E-02	.17398E-01	.56195E-07
51	.82292E-02	.17398E-01	.56195E-07
52	.82292E-02	.17398E-01	.56195E-07
53	.82292E-02	.17398E-01	.56195E-07
54	.82292E-02	.17398E-01	.56195E-07
55	.82292E-02	.17398E-01	.56195E-07
56	.82292E-02	.17398E-01	.56195E-07

57	.82292E-02	.17398E-01	.56195E-07
58	.82292E-02	.17398E-01	.56195E-07
59	.82292E-02	.17398E-01	.56195E-07
60	.82292E-02	.17398E-01	.56195E-07

Polygon 153
Time: 10.000

Cell	Cgas(g/cu.ft.)	Cliq(g/cu.ft.)	Csol
1	.65330E-05	.13812E-04	.44612E-10
2	.16222E-04	.34297E-04	.11078E-09
3	.26887E-04	.56844E-04	.18361E-09
4	.37438E-04	.79150E-04	.25565E-09
5	.47802E-04	.10106E-03	.32643E-09
6	.58344E-04	.12335E-03	.39842E-09
7	.71899E-04	.15201E-03	.49098E-09
8	.88214E-04	.18650E-03	.60239E-09
9	.10515E-03	.22230E-03	.71804E-09
10	.12157E-03	.25702E-03	.83019E-09
11	.13773E-03	.29118E-03	.94052E-09
12	.15443E-03	.32649E-03	.10546E-08
13	.17499E-03	.36977E-03	.11944E-08
14	.19920E-03	.42115E-03	.13603E-08
15	.22547E-03	.47668E-03	.15397E-08
16	.25285E-03	.53457E-03	.17267E-08
17	.28189E-03	.59597E-03	.19250E-08
18	.31374E-03	.66330E-03	.21425E-08
19	.34935E-03	.73896E-03	.23876E-08
20	.42269E-03	.89364E-03	.28865E-08
21	.48659E-03	.10287E-02	.33228E-08
22	.54688E-03	.11562E-02	.37345E-08
23	.60421E-03	.12772E-02	.41255E-08
24	.66165E-03	.13988E-02	.45182E-08
25	.73635E-03	.15568E-02	.50284E-08
26	.82722E-03	.17489E-02	.56489E-08
27	.92219E-03	.19497E-02	.62974E-08
28	.10148E-02	.21455E-02	.69299E-08
29	.11064E-02	.23392E-02	.75552E-08
30	.12014E-02	.25399E-02	.82040E-08
31	.13792E-02	.28722E-02	.92449E-08
32	.15142E-02	.32012E-02	.10340E-07
33	.16932E-02	.35798E-02	.12563E-07
34	.18579E-02	.39279E-02	.12687E-07
35	.20094E-02	.42481E-02	.13721E-07
36	.21569E-02	.45600E-02	.14729E-07
37	.23486E-02	.49654E-02	.16038E-07
38	.25810E-02	.54566E-02	.17625E-07
39	.28186E-02	.59589E-02	.19247E-07
40	.30419E-02	.64310E-02	.20772E-07
41	.32533E-02	.68781E-02	.22216E-07
42	.34643E-02	.73241E-02	.23657E-07
43	.37811E-02	.79940E-02	.25821E-07
44	.41869E-02	.88518E-02	.28591E-07
45	.45890E-02	.97019E-02	.31337E-07
46	.49343E-02	.10432E-01	.33695E-07
47	.52233E-02	.11043E-01	.35668E-07
48	.54774E-02	.11580E-01	.37404E-07
49	.58240E-02	.12313E-01	.39771E-07
50	.62484E-02	.13210E-01	.42669E-07
51	.66485E-02	.14056E-01	.45401E-07
52	.69645E-02	.14724E-01	.47559E-07

53	.71956E-02	.15213E-01	.49137E-07
54	.73637E-02	.15568E-01	.50285E-07
55	.74894E-02	.15834E-01	.51143E-07
56	.75857E-02	.16038E-01	.51801E-07
57	.76597E-02	.16194E-01	.52306E-07
58	.77149E-02	.16311E-01	.52683E-07
59	.77537E-02	.16393E-01	.52948E-07
60	.77771E-02	.16442E-01	.53108E-07

Polygon 153
Time: 20.000

Cell	Cgas(g/cu.ft.)	Clig(g/cu.ft.)	Csol
1	.59294E-05	.12536E-04	.40491E-10
2	.14797E-04	.31282E-04	.10104E-09
3	.25674E-04	.54279E-04	.17532E-09
4	.37974E-04	.80283E-04	.25932E-09
5	.51336E-04	.10853E-03	.35056E-09
6	.65603E-04	.13870E-03	.44799E-09
7	.80879E-04	.17099E-03	.55231E-09
8	.97434E-04	.20599E-03	.66535E-09
9	.11547E-03	.24412E-03	.78850E-09
10	.13502E-03	.28545E-03	.92202E-09
11	.15607E-03	.32995E-03	.10657E-08
12	.17867E-03	.37773E-03	.12201E-08
13	.20310E-03	.42939E-03	.13869E-08
14	.22983E-03	.48589E-03	.15694E-08
15	.25924E-03	.54807E-03	.17703E-08
16	.29156E-03	.61640E-03	.19910E-08
17	.32697E-03	.69126E-03	.22328E-08
18	.36572E-03	.77319E-03	.24974E-08
19	.40865E-03	.86396E-03	.27906E-08
20	.45694E-03	.96604E-03	.31203E-08
21	.51114E-03	.10806E-02	.34905E-08
22	.57088E-03	.12069E-02	.38984E-08
23	.63538E-03	.13433E-02	.43389E-08
24	.70419E-03	.14888E-02	.48088E-08
25	.77799E-03	.16448E-02	.53127E-08
26	.85822E-03	.18144E-02	.58606E-08
27	.94585E-03	.19997E-02	.64590E-08
28	.10408E-02	.22004E-02	.71073E-08
29	.11425E-02	.24154E-02	.78019E-08
30	.12508E-02	.26444E-02	.85413E-08
31	.13674E-02	.28910E-02	.93378E-08
32	.14954E-02	.31615E-02	.10212E-07
33	.16360E-02	.34587E-02	.11172E-07
34	.17875E-02	.37791E-02	.12207E-07
35	.19473E-02	.41169E-02	.13297E-07
36	.21132E-02	.44676E-02	.14430E-07
37	.22864E-02	.48338E-02	.15613E-07
38	.24702E-02	.52225E-02	.16869E-07
39	.26665E-02	.56373E-02	.18209E-07
40	.28738E-02	.60757E-02	.19624E-07
41	.30894E-02	.65315E-02	.21097E-07
42	.33113E-02	.70007E-02	.22612E-07
43	.35429E-02	.74902E-02	.24193E-07
44	.37905E-02	.80138E-02	.25884E-07
45	.40559E-02	.85748E-02	.27697E-07
46	.43326E-02	.91598E-02	.29586E-07
47	.46106E-02	.97476E-02	.31485E-07
48	.48819E-02	.10321E-01	.33337E-07

49	.51469E-02	.10881E-01	.35147E-07
50	.54115E-02	.11441E-01	.36954E-07
51	.56774E-02	.12003E-01	.38770E-07
52	.59376E-02	.12553E-01	.40546E-07
53	.61806E-02	.13067E-01	.42206E-07
54	.63972E-02	.13525E-01	.43685E-07
55	.65829E-02	.13917E-01	.44953E-07
56	.67375E-02	.14244E-01	.46009E-07
57	.68625E-02	.14509E-01	.46863E-07
58	.69603E-02	.14715E-01	.47530E-07
59	.70323E-02	.14867E-01	.48022E-07
60	.70798E-02	.14968E-01	.48347E-07

Polygon 153
Time: 30.000

Cell	Cgas(g/cu.ft.)	Cliq(g/cu.ft.)	Csol
1	.63297E-05	.13382E-04	.43224E-10
2	.15736E-04	.33268E-04	.10745E-09
3	.27255E-04	.57621E-04	.18611E-09
4	.40380E-04	.85371E-04	.27575E-09
5	.54859E-04	.11598E-03	.37462E-09
6	.70581E-04	.14922E-03	.48198E-09
7	.87532E-04	.18506E-03	.59774E-09
8	.10577E-03	.22362E-03	.72229E-09
9	.12542E-03	.26515E-03	.85643E-09
10	.14661E-03	.30995E-03	.10011E-08
11	.16949E-03	.35833E-03	.11574E-08
12	.19423E-03	.41063E-03	.13263E-08
13	.22098E-03	.46718E-03	.15090E-08
14	.24994E-03	.52842E-03	.17068E-08
15	.28136E-03	.59485E-03	.19214E-08
16	.31550E-03	.66701E-03	.21545E-08
17	.35262E-03	.74549E-03	.24079E-08
18	.39299E-03	.83084E-03	.26836E-08
19	.43691E-03	.92370E-03	.29835E-08
20	.48473E-03	.10248E-02	.33101E-08
21	.53686E-03	.11350E-02	.36661E-08
22	.59365E-03	.12551E-02	.40539E-08
23	.65535E-03	.13855E-02	.44753E-08
24	.72214E-03	.15267E-02	.49313E-08
25	.79416E-03	.16790E-02	.54231E-08
26	.87164E-03	.18428E-02	.59522E-08
27	.95493E-03	.20189E-02	.65210E-08
28	.10444E-02	.22081E-02	.71320E-08
29	.11404E-02	.24110E-02	.77874E-08
30	.12431E-02	.26281E-02	.84886E-08
31	.13527E-02	.28598E-02	.92373E-08
32	.14697E-02	.31071E-02	.10036E-07
33	.15944E-02	.33709E-02	.10888E-07
34	.17274E-02	.36521E-02	.11796E-07
35	.18687E-02	.39508E-02	.12761E-07
36	.20180E-02	.42664E-02	.13781E-07
37	.21750E-02	.45983E-02	.14852E-07
38	.23394E-02	.49460E-02	.15975E-07
39	.25115E-02	.53097E-02	.17150E-07
40	.26911E-02	.56895E-02	.18377E-07
41	.28783E-02	.60851E-02	.19655E-07
42	.30723E-02	.64953E-02	.20980E-07
43	.32726E-02	.69188E-02	.22348E-07
44	.34789E-02	.73549E-02	.23756E-07

45	.36911E-02	.78037E-02	.25206E-07
46	.39089E-02	.82641E-02	.26693E-07
47	.41308E-02	.87332E-02	.28208E-07
48	.43544E-02	.92059E-02	.29735E-07
49	.45770E-02	.96766E-02	.31255E-07
50	.47964E-02	.10140E-01	.32754E-07
51	.50110E-02	.10594E-01	.34219E-07
52	.52191E-02	.11034E-01	.35640E-07
53	.54183E-02	.11455E-01	.37001E-07
54	.56056E-02	.11851E-01	.38279E-07
55	.57773E-02	.12214E-01	.39452E-07
56	.59302E-02	.12537E-01	.40496E-07
57	.60616E-02	.12815E-01	.41393E-07
58	.61699E-02	.13044E-01	.42133E-07
59	.62537E-02	.13221E-01	.42705E-07
60	.63123E-02	.13345E-01	.43105E-07

V-Leach, VER 1.1
Jake Turin, 11/91
PGA V-leach model, polygon screen-TCE-11/10/92-Poly153.INP. Poly 79 Vert Dist
1 polygons.
Timestep = 1.00 years. Simulation length = 30.00 years.
Printout every 1.00 years. Vertical profile stored every 10.00 years.
Koc = 123.60 ml/g, .43649E-02cu.ft./g
Kh = .47300 (dimensionless).
Aqueous solubility = 1100.0 mg/l, 31.149 g/cu.ft
Free air diffusion coefficient = .70290 sq. m/day, 2761.7 sq.ft./yr

Polygon 1
Polygon 153
Polygon area = .11200E+06sq. ft.
60 cells, each cell 1.000 ft. thick.
Soil Properties:
Bulk density = 1.6400 g/ml, 46440. g/cu.ft.
Porosity = .3810 Volumetric water content = .2550
Organic carbon content = .00074000
Recharge Rate = .08202100 ft/yr
Conc. in recharge water = .00000 mg/l, .00000 g/cu.ft
Atmospheric concentration = .00000 mg/l, .00000 g/cu.ft
Water table is impermeable to gas diffusion.

Polygon 153 Vertical Distribution Calculations using Phase II Polygon 79 Chemical Data and Physical Soil Data, and Estimated VOC Mass in pounds (as TCE) from HGC (July, 1989)					
% Total Mass per 6 ft Interval (from Polygon 79)	Total Mass VOC's (lbs) Polygon 153 (from HGC, 1989) (Table C-2)	Incremental mass (pounds) per 6 ft interval	Incremental mass (grams) per 6 ft interval	Volume Soil per interval (cu. ft)	Calculated Soil Concentration (ug/Kg) using Polygon 116 Distribution and Revised Soil Physical Data
0.001145244	40.8	0.05	21.19	672000	0.68
0.003435916	40.8	0.14	63.59	672000	2.04
0.005726404	40.8	0.23	105.98	672000	3.40
0.016970733	40.8	0.69	314.07	672000	10.06
0.03000572	40.8	1.22	555.30	672000	17.79
0.063301217	40.8	2.58	1171.48	672000	37.54
0.100648817	40.8	4.11	1862.65	672000	59.69
0.191715213	40.8	7.82	3547.97	672000	113.69
0.293525368	40.8	11.98	5432.12	672000	174.06
0.293525368	40.8	11.98	5432.12	672000	174.06
1.00		40.80	18506.47		

Polygon 79 Vertical Distribution (as Percentage Total Mass) Calculations using Phase II Chemical and Physical Soil Data

Ct (ug/Kg) M&E June, 92*	Depth Interval Feet	Mt (ug/cc)	Volume Soil (cu. ft)	Mass TCE (grams) over depth interval	Incr. Mass pounds	% of Total Mass per Interval
6.191	6	0.01015324	510000	146.63	0.32	0.001145244
18.574	6	0.03046136	510000	439.91	0.97	0.003435916
30.956	6	0.05076784	510000	733.17	1.62	0.005726404
91.741	6	0.15045524	510000	2172.82	4.79	0.016970733
162.206	6	0.26601784	510000	3841.74	8.47	0.03000572
342.196	6	0.56120144	510000	8104.69	17.87	0.063301217
544.091	6	0.89230924	510000	12886.44	28.41	0.100648817
1036.381	6	1.69966484	510000	24546.00	54.11	0.191715213
1586.75	6	2.60227	510000	37581.12	82.85	0.293525368
1586.75	6	2.60227	510000	37581.12	82.85	0.293525368
	60	8.87		128033.65	**282.27**	**1.00**

*From INTERP output of Polygon 79 (10/92)

APPENDIX J

MAY, 1992 SVE DESIGN MEMORANDUM FIELD AND ANALYTICAL DATA

@ AIR TOXICS LTD.

AN ENVIRONMENTAL ANALYTICAL LABORATORY

WORK ORDER #: 9206123A

Work Order Summary

CLIENT: Mr. Scott Zachary
Metcalf & Eddy
450 B Street, Ste. 1900
San Diego, CA 92101

BILL TO: Same

PHONE: 619-233-7855
FAX: 619-233-7861
DATE RECEIVED: 6/22/92
DATE COMPLETED: 7/20/92

INVOICE # 8143
P.O. #
AMOUNT: $2,864.83
PROJECT#: 6791-0001

FRACTION #	NAME	RECEIPT VAC./PRES.	TEST	PRICE
01A	VS-VP92-47	21 "Hg	TO-14/TIC's	$240.00
02A	VS-VP92-52	22.5 "Hg	TO-14/TIC's	$240.00
03A	VS-VP117-44	5.0 "Hg	TO-14/TIC's	$240.00
04A	VS-VP116-53	4.0 "Hg	TO-14/TIC's	$240.00
05A	EQUIP BLANK 6/16/92	5.0 psi	TO-14/TIC's	$240.00
06A	VS-VP-116-16	4.0 "Hg	TO-14/TIC's	$240.00
07A	VS-VP116-41	4.0 "Hg	TO-14/TIC's	$240.00
08A	VS-VP116-28	3.0 "Hg	TO-14/TIC's	$240.00
08B	VS-VP116-28	3.0 "Hg	TO-14/TIC's	NC
09A	VS-VP117-30	5.0 "Hg	TO-14/TIC's	$240.00
10A	VS-VP117-55	5.0 "Hg	TO-14/TIC's	$240.00
12A	Lab Blank	NA	TO-14/TIC's	NC
12B	Lab Blank	NA	TO-14/TIC's	NC

Misc Charges	6 Liter SUMMA Canister Rental (2) @ $10.00 each.	$20.00
	1 Liter SUMMA Canister Rental (18) @ $10.00 each.	$180.00
	Shipping (6/12/92)	$202.95
	Shipping (6/16/92)	$61.88

REVIEWED BY:_____ DATE:_____

CERTIFIED BY: Linda L. Fuerst DATE: 9/4/92

AIR TOXICS LTD.

SAMPLE NAME: VS-VP92-52

ID#: 9206123A-02A

Summa CANISTER EPA METHOD TO-14 GC/MS Full Scan

File Name:	5062715	**Date of Collection:**	6/17/92
Dil. Factor:	570	**Date of Analysis:**	6/27/92

Compound	MDL (ppbv)	MDL (uG/L)	Amount (ppbv)	Amount (uG/L)
Vinyl Chloride	570	1.4	Not Detected	Not Detected
1,1-Dichloroethene	570	2.2	35000	140
Methylene Chloride	570	1.9	260 J	0.88 J
1,1-Dichloroethane	570	2.3	6600	26
cis-1,2-Dichloroethene	570	2.2	Not Detected	Not Detected
trans-1,2-Dichloroethene	570	2.2	Not Detected	Not Detected
Chloroform	570	2.7	Not Detected	Not Detected
Carbon Tetrachloride	570	3.5	Not Detected	Not Detected
Benzene	570	1.8	2700	8.4
1,2-Dichloroethane	570	2.3	Not Detected	Not Detected
Trichloroethene	570	3.0	1000	5.3
Toluene	570	2.1	Not Detected	Not Detected
Tetrachloroethene	570	3.8	320 J	2.1 J
Chlorobenzene	570	2.6	Not Detected	Not Detected
m,p-Xylene	570	2.4	Not Detected	Not Detected
o-Xylene	570	2.4	Not Detected	Not Detected
1,1,1-Trichloroethane	570	3.0	21000 J	110 J

Comments:

J=Below detection limit, but supported by Mass Spectra.

Container Type: SUMMA Canister

Surrogates	% Recovery	Method Limits
Octafluorotoluene	102	70-130
4-Bromofluorobenzene	108	70-130
Toluene-d8	100	70-120

AIR TOXICS LTD.

SAMPLE NAME: VS-VP116-53

ID#: 9206123A-04A

Summa CANISTER EPA METHOD TO-14 GC/MS Full Scan

File Name:	5062B05	**Date of Collection:**	6/16/92
Dil. Factor:	9.4	**Date of Analysis:**	6/26/92

Compound	MDL (ppbv)	MDL (uG/L)	Amount (ppbv)	Amount (uG/L)
Vinyl Chloride	9.4	0.024	Not Detected	Not Detected
1,1-Dichloroethene	9.4	0.036	3.4 J	0.013 J
Methylene Chloride	9.4	0.032	Not Detected	Not Detected
1,1-Dichloroethane	9.4	0.037	Not Detected	Not Detected
cis-1,2-Dichloroethene	9.4	0.036	2.5 J	0.01 J
trans-1,2-Dichloroethene	9.4	0.036	Not Detected	Not Detected
Chloroform	9.4	0.045	2.3 J	0.011 J
Carbon Tetrachloride	9.4	0.058	Not Detected	Not Detected
Benzene	9.4	0.029	3.6 J	0.011 J
1,2-Dichloroethane	9.4	0.037	Not Detected	Not Detected
Trichloroethene	9.4	0.049	1300 E	6.8 E
Toluene	9.4	0.035	3.6 J	0.013 J
Tetrachloroethene	9.4	0.062	4.4 J	0.029 J
Chlorobenzene	9.4	0.042	Not Detected	Not Detected
m,p-Xylene	9.4	0.040	1.4 J	0.006 J
o-Xylene	9.4	0.040	1.1 J	0.005 J
1,1,1-Trichloroethane	9.4	0.050	200 J	1.1 J

Comments:

E=Exceeds instrument calibration range, but within linear range.

J=Below detection limit, but supported by Mass Spectra.

Container Type: SUMMA Canister

Surrogates	% Recovery	Method Limits
Octafluorotoluene	101	70-130
4-Bromofluorobenzene	103	70-130
Toluene-d8	100	70-130

AIR TOXICS LTD.

SAMPLE NAME: VS-VP-116-16

ID#: 9206123A-06A

Summa CANISTER EPA METHOD TO-14 GC/MS Full Scan

File Name:	5062809	**Date of Collection:**	6/15/92
Dil. Factor:	9.4	**Date of Analysis:**	6/26/92

Compound	MDL (ppbv)	MDL (uG/L)	Amount (ppbv)	Amount (uG/L)
Vinyl Chloride	9.4	0.024	Not Detected	Not Detected
1,1-Dichloroethene	9.4	0.036	Not Detected	Not Detected
Methylene Chloride	9.4	0.032	Not Detected	Not Detected
1,1-Dichloroethane	9.4	0.037	Not Detected	Not Detected
cis-1,2-Dichloroethene	9.4	0.036	Not Detected	Not Detected
trans-1,2-Dichloroethene	9.4	0.036	Not Detected	Not Detected
Chloroform	9.4	0.045	Not Detected	Not Detected
Carbon Tetrachloride	9.4	0.058	Not Detected	Not Detected
Benzene	9.4	0.029	19	0.059
1,2-Dichloroethane	9.4	0.037	Not Detected	Not Detected
Trichloroethene	9.4	0.049	5.1 J	0.027 J
Toluene	9.4	0.035	34	0.13
Tetrachloroethene	9.4	0.062	22	0.15
Chlorobenzene	9.4	0.042	Not Detected	Not Detected
m,p-Xylene	9.4	0.040	28	0.12
o-Xylene	9.4	0.040	19	0.081
1,1,1-Trichloroethane	9.4	0.050	Not Detected	Not Detected

Comments:

J=Below detection limit, but supported by Mass Spectra.

Container Type: SUMMA Canister

Surrogates	% Recovery	Method Limits
Octafluorotoluene	98	70-130
4-Bromofluorobenzene	97	70-130
Toluene-d8	103	70-130

AIR TOXICS LTD.

SAMPLE NAME: VS-VP116-28

ID#: 9206123A-08A

Summa CANISTER EPA METHOD TO-14 GC/MS Full Scan

File Name:	5062810	**Date of Collection:**	6/15/92
Dil. Factor:	9.0	**Date of Analysis:**	6/28/92

Compound	MDL (ppbv)	MDL (uG/L)	Amount (ppbv)	Amount (uG/L)
Vinyl Chloride	9.0	0.023	Not Detected	Not Detected
1,1-Dichloroethene	9.0	0.035	Not Detected	Not Detected
Methylene Chloride	9.0	0.031	Not Detected	Not Detected
1,1-Dichloroethane	9.0	0.036	Not Detected	Not Detected
cis-1,2-Dichloroethene	9.0	0.035	Not Detected	Not Detected
trans-1,2-Dichloroethene	9.0	0.035	Not Detected	Not Detected
Chloroform	9.0	0.043	Not Detected	Not Detected
Carbon Tetrachloride	9.0	0.055	Not Detected	Not Detected
Benzene	9.0	0.028	21	0.066
1,2-Dichloroethane	9.0	0.036	Not Detected	Not Detected
Trichloroethene	9.0	0.047	54	0.28
Toluene	9.0	0.033	48	0.18
Tetrachloroethene	9.0	0.060	33	0.22
Chlorobenzene	9.0	0.041	Not Detected	Not Detected
m,p-Xylene	9.0	0.038	62	0.26
o-Xylene	9.0	0.038	31	0.13
1,1,1-Trichloroethane	9.0	0.048	Not Detected	Not Detected

Comments:

J=Below detection limit, but supported by Mass Spectra.

Container Type: SUMMA Canister

Surrogates	% Recovery	Method Limits
Octafluorotoluene	98	70-130
4-Bromofluorobenzene	96	70-130
Toluene-d8	102	70-130

AIR TOXICS LTD.

SAMPLE NAME: VS-VP117-30

ID#: 9206123A-09A

Summa CANISTER EPA METHOD TO-14 GC/MS Full Scan

File Name:	5062811	**Date of Collection:**	6/15/92
Dil. Factor:	24	**Date of Analysis:**	6/28/92

Compound	MDL (ppbv)	MDL (uG/L)	Amount (ppbv)	Amount (uG/L)
Vinyl Chloride	24	0.060	Not Detected	Not Detected
1,1-Dichloroethene	24	0.093	Not Detected	Not Detected
Methylene Chloride	24	0.082	Not Detected	Not Detected
1,1-Dichloroethane	24	0.095	Not Detected	Not Detected
cis-1,2-Dichloroethene	24	0.093	Not Detected	Not Detected
trans-1,2-Dichloroethene	24	0.093	Not Detected	Not Detected
Chloroform	24	0.11	Not Detected	Not Detected
Carbon Tetrachloride	24	0.15	Not Detected	Not Detected
Benzene	24	0.075	61	0.19
1,2-Dichloroethane	24	0.095	Not Detected	Not Detected
Trichloroethene	24	0.13	Not Detected	Not Detected
Toluene	24	0.088	140	0.52
Tetrachloroethene	24	0.16	22 J	0.15 J
Chlorobenzene	24	0.11	Not Detected	Not Detected
m,p-Xylene	24	0.10	70	0.30
o-Xylene	24	0.10	27	0.11
1,1,1-Trichloroethane	24	0.13	67 J	0.36 J

Comments:

J=Below detection limit, but supported by Mass Spectra.

Container Type: SUMMA Canister

Surrogates	% Recovery	Method Limits
Octafluorotoluene	104	70-130
4-Bromofluorobenzene	110	70-130
Toluene-d8	99	70-120

AIR TOXICS LTD.

SAMPLE NAME: Lab Blank

ID#: 9206123A-12A

Summa CANISTER EPA METHOD TO-14 GC/MS Full Scan

File Name:	5062703	**Date of Collection:**	NA
Dil Factor:	1.0	**Date of Analysis:**	6/27/92

Compound	MDL (ppbv)	MDL (uG/L)	Amount (ppbv)	Amount (uG/L)
Vinyl Chloride	1.0	0.003	Not Detected	Not Detected
1,1-Dichloroethene	1.0	0.004	Not Detected	Not Detected
Methylene Chloride	1.0	0.003	Not Detected	Not Detected
1,1-Dichloroethane	1.0	0.004	Not Detected	Not Detected
cis-1,2-Dichloroethene	1.0	0.004	Not Detected	Not Detected
trans-1,2-Dichloroethene	1.0	0.004	Not Detected	Not Detected
Chloroform	1.0	0.005	Not Detected	Not Detected
Carbon Tetrachloride	1.0	0.006	Not Detected	Not Detected
Benzene	1.0	0.003	Not Detected	Not Detected
1,2-Dichloroethane	1.0	0.004	Not Detected	Not Detected
Trichloroethene	1.0	0.005	Not Detected	Not Detected
Toluene	1.0	0.004	Not Detected	Not Detected
Tetrachloroethene	1.0	0.007	Not Detected	Not Detected
Chlorobenzene	1.0	0.005	Not Detected	Not Detected
m,p-Xylene	1.0	0.004	Not Detected	Not Detected
o-Xylene	1.0	0.004	Not Detected	Not Detected
1,1,1-Trichloroethane	1.0	0.005	Not Detected	Not Detected

Container Type: NA

Surrogates	% Recovery	Method Limits
Octafluorotoluene	108	70-130
4-Bromofluorobenzene	102	70-130
Toluene-d8	96	70-130

AIR TOXICS LTD.

AN ENVIRONMENTAL ANALYTICAL LABORATORY

WORK ORDER #: 9206123B

Work Order Summary

CLIENT: Mr. Scott Zachary
Metcalf & Eddy
450 B Street, STE 1900
San Diego, CA 92101

BILL TO: Same

PHONE: 619-233-7855
FAX:
DATE RECEIVED: 6/22/92
DATE COMPLETED: 7/20/92

INVOICE # 8143
P.O. #
AMOUNT: $2,400.00
PROJECT#: 6791-0001

FRACTION #	NAME	RECEIPT VAC./PRES.	TEST	PRICE
01A	VS-VP79-16	4.5 "Hg	TO-14/TIC's	$240.00
02A	VS-VP79-40	4.5 "Hg	TO-14/TIC's	$240.00
03A	VS-VP79-51	5.0 "Hg	TO-14/TIC's	$240.00
04A	VS-VP92-17	4.0 "Hg	TO-14/TIC's	$240.00
05A	VS-VP92-28	5.0 "Hg	TO-14/TIC's	$240.00
06A	VS-VP79-28	5.5 "Hg	TO-14/TIC's	$240.00
07A	VS-VP117-16	3.0 "Hg	TO-14/TIC's	$240.00
08A	VS-VP92-40	4.0 "Hg	TO-14/TIC's	$240.00
08B	VS-VP92-40	4.0 "Hg	TO-14/TIC's	NC
09A	VS-VP116-27	5.0 "Hg	TO-14/TIC's	$240.00
10A	Equip. Blank 2 6/17/92	7 psi	TO-14/TIC's	$240.00
12A	Lab Blank	NA	TO-14/TIC's	NC
12B	Lab Blank	NA	TO-14/TIC's	NC

REVIEWED BY:_____ DATE:_____

CERTIFIED BY: Linda D. Truman DATE: 9/4/92

AIR TOXICS LTD.

SAMPLE NAME: VS-VP79-40

ID#: 9206123B-02A

Summa CANISTER EPA METHOD TO-14 GC/MS Full Scan

File Name:	**5062611**	**Date of Collection:**	**6/16/92**
Dil Factor:	**2400**	**Date of Analysis:**	**6/26/92**

Compound	MDL (ppbv)	MDL (uG/L)	Amount (ppbv)	Amount (uG/L)
Vinyl Chloride	2400	6.0	Not Detected	Not Detected
1,1-Dichloroethene	2400	9.3	2300 J	8.9 J
Methylene Chloride	2400	8.2	Not Detected	Not Detected
1,1-Dichloroethane	2400	9.5	Not Detected	Not Detected
cis-1,2-Dichloroethene	2400	9.3	Not Detected	Not Detected
trans-1,2-Dichloroethene	2400	9.3	Not Detected	Not Detected
Chloroform	2400	11	200 J	0.96 J
Carbon Tetrachloride	2400	15	Not Detected	Not Detected
Benzene	2400	7.5	Not Detected	Not Detected
1,2-Dichloroethane	2400	9.5	Not Detected	Not Detected
Trichloroethene	2400	13	180000	950
Toluene	2400	8.8	Not Detected	Not Detected
Tetrachloroethene	2400	16	850 J	5.6 J
Chlorobenzene	2400	11	Not Detected	Not Detected
m,p-Xylene	2400	10	630 J	2.7 J
o-Xylene	2400	10	270 J	1.1 J
1,1,1-Trichloroethane	2400	13	Not Detected	Not Detected

J=Below detection limit, but supported by Mass Spectra.

Container Type: SUMMA Canister

Surrogates	% Recovery	Method Limits
Octofluorotoluene	103	70-130
4-Bromofluorobenzene	106	70-130
Toluene-d8	99	70-130

AIR TOXICS LTD.

SAMPLE NAME: VS-VP92-17
ID#: 9206123B-04A
Summa CANISTER EPA METHOD TO-14 GC/MS Full Scan

File Name:	5062617	**Date of Collection:**	6/17/92
Dil. Factor:	470	**Date of Analysis:**	6/25/92

Compound	MDL (ppbv)	MDL (uG/L)	Amount (ppbv)	Amount (uG/L)
Vinyl Chloride	470	1.2	Not Detected	Not Detected
1,1-Dichloroethene	470	1.8	30000	116
Methylene Chloride	470	1.6	Not Detected	Not Detected
1,1-Dichloroethane	470	1.9	830 J	3.3
cis-1,2-Dichloroethene	470	1.8	Not Detected	Not Detected
trans-1,2-Dichloroethene	470	1.8	Not Detected	Not Detected
Chloroform	470	2.2	Not Detected	Not Detected
Carbon Tetrachloride	470	2.9	Not Detected	Not Detected
Benzene	470	1.5	150 J	0.47 J
1,2-Dichloroethane	470	1.9	Not Detected	Not Detected
Trichloroethene	470	2.5	4300	23
Toluene	470	1.7	Not Detected	Not Detected
Tetrachloroethene	470	3.1	530	3.5
Chlorobenzene	470	2.1	Not Detected	Not Detected
m,p-Xylene	470	2.0	50 J	0.21
o-Xylene	470	2.0	Not Detected	Not Detected
1,1,1-Trichloroethane	470	2.5	96	0.51

J=Below detection limit, but supported by Mass Spectra.

Container Type: SUMMA Canister

Surrogates	% Recovery	Method Limits
Octofluorotoluene	103	76-130
4-Bromofluorobenzene	106	76-130
Toluene-d8	101	76-130

AIR TOXICS LTD.

SAMPLE NAME: VS-VP79-28
ID#: 9206123B-06A
Summa CANISTER EPA METHOD TO-14 GC/MS Full Scan

File Name:	5062519	Date of Collection:	6/16/92
Dil Factor:	2500	Date of Analysis:	6/26/92

Compound	MDL (ppbv)	MDL (uG/L)	Amount (ppbv)	Amount (uG/L)
Vinyl Chloride	2500	6.3	Not Detected	Not Detected
1,1-Dichloroethene	2500	9.7	2100 J	8.1 J
Methylene Chloride	2500	8.5	Not Detected	Not Detected
1,1-Dichloroethane	2500	9.9	Not Detected	Not Detected
cis-1,2-Dichloroethene	2500	9.7	Not Detected	Not Detected
trans-1,2-Dichloroethene	2500	9.7	Not Detected	Not Detected
Chloroform	2500	12	Not Detected	Not Detected
Carbon Tetrachloride	2500	15	Not Detected	Not Detected
Benzene	2500	7.8	Not Detected	Not Detected
1,2-Dichloroethane	2500	9.9	Not Detected	Not Detected
Trichloroethene	2500	13	54000	280
Toluene	2500	9.2	Not Detected	Not Detected
Tetrachloroethene	2500	16.6	340 J	2.3 J
Chlorobenzene	2500	11	Not Detected	Not Detected
m,p-Xylene	2500	11	Not Detected	Not Detected
o-Xylene	2500	11	Not Detected	Not Detected
1,1,1-Trichloroethane	2500	13	Not Detected	Not Detected

J=Below detection limit, but supported by Mass Spectra.

Container Type: SUMMA Canister

Surrogates	% Recovery	Method Limits
Bromofluorotoluene	103	70-130
4-Bromofluorobenzene	104	70-130
Toluene-d8	96	70-130

AIR TOXICS LTD.

SAMPLE NAME: VS-VP92-40
ID#: 9206123B-08A
Summa CANISTER EPA METHOD TO-14 GC/MS Full Scan

File Name:	5062707	Date of Collection: 6/15/92	
Dil. Factor:	2300	Date of Analysis: 6/27/92	

Compound	MDL (ppbv)	MDL (uG/L)	Amount (ppbv)	Amount (uG/L)
Vinyl Chloride	2300	5.8	Not Detected	Not Detected
1,1-Dichloroethene	2300	8.9	160000	620
Methylene Chloride	2300	7.8	Not Detected	Not Detected
1,1-Dichloroethane	2300	9.1	9000	36
cis-1,2-Dichloroethene	2300	8.9	Not Detected	Not Detected
trans-1,2-Dichloroethene	2300	8.9	Not Detected	Not Detected
Chloroform	2300	11	Not Detected	Not Detected
Carbon Tetrachloride	2300	14	Not Detected	Not Detected
Benzene	2300	7.2	710 J	2.2 J
1,2-Dichloroethane	2300	9.1	Not Detected	Not Detected
Trichloroethene	2300	12	22000	120
Toluene	2300	8.5	Not Detected	Not Detected
Tetrachloroethene	2300	15	3100	21
Chlorobenzene	2300	10	Not Detected	Not Detected
m,p-Xylene	2300	9.8	Not Detected	Not Detected
o-Xylene	2300	9.8	Not Detected	Not Detected
1,1,1-Trichloroethane	2300	12	14000	75

J=Below detection limit, but supported by Mass Spectra.

Container Type: SUMMA Canister

Surrogates	% Recovery	Method Limits
Octafluorotoluene	96	70-130
4-Bromofluorobenzene	103	70-130
Toluene-d8	97	70-130

AIR TOXICS LTD.

SAMPLE NAME: VS-VP116-27
ID#: 9206123B-09A
Summa CANISTER EPA METHOD TO-14 GC/MS Full Scan

File Name:	5062711	**Date of Collection:**	6/16/92
Dil. Factor:	17	**Date of Analysis:**	6/27/92

Compound	MDL (ppbv)	MDL (uG/L)	Amount (ppbv)	Amount (uG/L)
Vinyl Chloride	17	0.043	Not Detected	Not Detected
1,1-Dichloroethene	17	0.066	Not Detected	Not Detected
Methylene Chloride	17	0.058	Not Detected	Not Detected
1,1-Dichloroethane	17	0.067	Not Detected	Not Detected
cis-1,2-Dichloroethene	17	0.066	Not Detected	Not Detected
trans-1,2-Dichloroethene	17	0.066	Not Detected	Not Detected
Chloroform	17	0.081	Not Detected	Not Detected
Carbon Tetrachloride	17	0.10	Not Detected	Not Detected
Benzene	17	0.053	21	0.066
1,2-Dichloroethane	17	0.067	Not Detected	Not Detected
Trichloroethene	17	0.089	30	0.16
Toluene	17	0.063	40	0.15
Tetrachloroethene	17	0.11	21	0.14
Chlorobenzene	17	0.077	Not Detected	Not Detected
m,p-Xylene	17	0.072	42	0.18
o-Xylene	17	0.072	19	0.081
1,1,1-Trichloroethane	17	0.091	Not Detected	Not Detected

Container Type: SUMMA Canister

Surrogate	% Recovery	Method Limits
Octafluorotoluene	103	70-130
4-Bromofluorobenzene	109	70-130
Toluene-d8	94	70-130

AIR TOXICS LTD.

SAMPLE NAME: Lab Blank
ID#: 9206123B-12A
Summa CANISTER EPA METHOD TO-14 GC/MS Full Scan

File Name:	5062503	**Date of Collection:**	NA
Dil. Factor:	1.0	**Date of Analysis:**	6.26/92

Compound	MDL (ppbv)	MDL (uG/L)	Amount (ppbv)	Amount (uG/L)
Vinyl Chloride	1.0	0.003	Not Detected	Not Detected
1,1-Dichloroethene	1.0	0.004	Not Detected	Not Detected
Methylene Chloride	1.0	0.003	Not Detected	Not Detected
1,1-Dichloroethane	1.0	0.004	Not Detected	Not Detected
cis-1,2-Dichloroethene	1.0	0.004	Not Detected	Not Detected
trans-1,2-Dichloroethene	1.0	0.004	Not Detected	Not Detected
Chloroform	1.0	0.005	Not Detected	Not Detected
Carbon Tetrachloride	1.0	0.006	Not Detected	Not Detected
Benzene	1.0	0.003	Not Detected	Not Detected
1,2-Dichloroethane	1.0	0.004	Not Detected	Not Detected
Trichloroethene	1.0	0.005	Not Detected	Not Detected
Toluene	1.0	0.004	Not Detected	Not Detected
Tetrachloroethene	1.0	0.007	Not Detected	Not Detected
Chlorobenzene	1.0	0.005	Not Detected	Not Detected
m,p-Xylene	1.0	0.004	Not Detected	Not Detected
o-Xylene	1.0	0.004	Not Detected	Not Detected
1,1,1-Trichloroethane	1.0	0.005	Not Detected	Not Detected

Container Type: NA

Surrogates	% Recovery	Method Limits
Octafluorotoluene	105	70-130
4-Bromofluorobenzene	106	70-130
Toluene-d8	95	70-130

COMPUCHEM
WESTERN DIVISION
(CHEMWEST)

June 30, 1992

Metcalf & Eddy
450 B Street, Suite 1900
San Diego, CA 92101

Attention: Scott Zachary

Subject: Report of Data - Case Number 9701

Dear Mr. Zachary:

One soil sample for Project Phoenix-Goodyear, Project Number 006791-0001-002 was received June 10, 1992 in good condition.

Included in this report are the results for one soil sample analyzed for Volatile Organics. Results of the analysis along with the analytical methodology and appropriate reporting limits are presented on the following page(s).

This report is being presented in EPA-CLP format. If you have any questions regarding the method of reporting please feel free to contact your project manager.

Please refer to the enclosed case narratives for comments regarding these analyses.

Thank you for choosing ChemWest Laboratories. Should you have questions concerning this data report or the analytical methods employed, please do not hesitate to contact your Project Manager. We hope that you will consider ChemWest Laboratories for your future analytical support and service requirements.

Sincerely,

Vince Schmidt
Project Manager

VS:ds
cc: File

600W North Market Boulevard • Sacramento, CA 95834 • Phone (916) 923-0840 • FAX (916) 923-1938

CHEMWEST ANALYTICAL LABORATORIES
6[redacted] W. North Market Blvd.
S[redacted]ramento, California 95834
(916) 923-0840 FAX (916) 923-1938

Order No.: 9701
Date Rec'd:06-10-92 @ 17:00
Compl Date:
Section: VINCE SCHMIDT

CLIENT:
METCALF & EDDY
450 B STREET, SUITE 1900
SAN DIEGO, CA 92101

Project : PHOENIX-GOOD YEAR
Project No.: 006791-0001-002
P.O. NO.
Contact: SCOTT ZACHARY
Phone:

ONE SOIL SAMPLE REC'D UNDER CHAIN OF CUSTODY IN 6" BRASS CORE TUBE (1) TO BE ANALYZED FOR VOLATILE ORGANICS (EPA METHOD 8240). FULL CLP DELIVERABLES LEVEL D-6. SEE CHAIN OF CUSTODY FOR PROBLEMS.

CW ID.	SAMPLE ID.	LOC.	DATE/TIME SAMPLED	ANALYSIS	MATRIX	CONT.
9701	S-79-55	POLYGON 79	06-08-92 13:06	8240	SOIL	1 TUBE

SAMPLE (S) WILL BE HELD 30 DAYS UNLESS LONGER TIME IS ARRANGED

2-2
BMc
BILL McGENSE

Am. West Airlines
#5294-6286

CHEMWEST ANALYTICAL LABORATORIES
PERCENT MOISTURE, SOLIDS AND pH

DATE: 06/27/92 TICKET: 97
CHEMIST: FTK Jr SDG: 9701

SAMPLE ID	CLIENT ID	pH	% MOISTURE	% SOLIDS
9701		8.31	12.5	87.5

Chemwest Analytical Laboratories, Inc.
GC/MS INSTRUMENT LOG
VOA

030

CASE NO._____

DATE	TIME	OP	CW ID	SAMPLE ID	AMT PURGED	OUTPUT	S	W	DSD	COMMENTS
6-18-92	18:12	DP	BF30618A	50ng BFB II 42C 42D a	—	6-13-92				
6-18-92	18:38	DP	VV30618	VSTD050; 43A 43B II 42C 42D	5ml	6-18-92				
6-18-92	19:09	DP	VV30618A	VSTD020; 43A 43B II 42C 42D	5ml	6-18-92				
6-18-92	19:39	DP	VV30618B	VSTD100; 43A 43B II 42C 42D	5ml	6-18-92				use
6-18-92	20:09	DP	VV30618C	VSTD020; 43A 43B II 42C 42D	5ml	6-18-92				use
6-18-92	20:47	DP	VV30618D	VSTD150; 43A 43B II 42C 42D	5ml	6-18-92				use
6-18-92	21:17	DP	VV30618E	VSTD200; 43A 43B II 42C 42D	5ml	6-18-92				use
6-18-92	21:47	DP	VVB30618	VBIK	5ml	6-18-92				
6-18-92	22:18	DP	VV30618G	VSTD050; 43A 43B II 42C 42D	5ml	6-18-92				use
6-18-92	22:49	DP	VVB30618A	VBIK H3	5g/5ml	6-18-92				
6-18-92	23:31	DP	9684105VV	SB041A -021 (15.0)	5g/5ml	6-18-92	1			
6-18-92	0:01	DP	4684104VV	SB041A -02 (10.0)	5g/5ml	6-19-92	2			
										ASCII: CVV30618G
										VV30618G
										TV 30618
										EW 6-19-92

Chemwest Analytical Laboratories, Inc.
GC/MS INSTRUMENT LOG
VOA

032

CASE NO._____

DATE	TIME	OP	CW ID	SAMPLE ID	AMT PURGED	OUTPUT	S	W	DSD	COMMENTS
6-19-92	17:55	DP	96840191.V	SB041A-025 (10.6)	50/5ml	6-19-92	17			
6-19-92	18:26	DP	96840202.V	SB041A-025 (11.0)	50/5ml	6-19-92	18			
6-19-92	18:56	DP	97012V.MSD1	S-79-55 MSD	5g/5ml	6-19-92				II 43C

DP
6-19-92

1A
VOLATILE ORGANICS ANALYSIS DATA SHEET

EPA SAMPLE NO.
S7955

Lab Name: CHEMWEST LABS Contract: (2-88)-REVS

Lab Code: CHEMW Case No.: 9701 SAS No.: _____ SDG No.: 9701

Matrix: (soil/water) SOIL Lab Sample ID: 9701

Sample wt/vol: 5.0 (g/mL) G Lab File ID: 9701VV

Level: (low/med) LOW Date Received: 06/10/92

% Moisture: not dec. 12 Date Analyzed: 06/19/92

Column: (pack/cap) PACK Dilution Factor: 1.0

CAS NO.	COMPOUND	CONCENTRATION UNITS: (ug/L or ug/Kg) UG/KG	Q
74-87-3	Chloromethane	11	U
74-83-9	Bromomethane	11	U
75-01-4	Vinyl Chloride	11	U
75-00-3	Chloroethane	11	U
75-09-2	Methylene Chloride	6	U
67-64-1	Acetone	19	B
75-15-0	Carbon Disulfide	6	U
75-35-4	1,1-Dichloroethene	6	U
75-34-3	1,1-Dichloroethane	6	U
540-59-0	1,2-Dichloroethene (total)	6	U
67-66-3	Chloroform	6	U
107-06-2	1,2-Dichloroethane	6	U
78-93-3	2-Butanone	11	U
71-55-6	1,1,1-Trichloroethane	6	U
56-23-5	Carbon Tetrachloride	6	U
108-05-4	Vinyl Acetate	11	U
75-27-4	Bromodichloromethane	6	U
78-87-5	1,2-Dichloropropane	6	U
10061-01-5	cis-1,3-Dichloropropene	6	U
79-01-6	Trichloroethene	1	J
124-48-1	Dibromochloromethane	6	U
79-00-5	1,1,2-Trichloroethane	6	U
71-43-2	Benzene	6	U
10061-02-6	Trans-1,3-Dichloropropene	6	U
75-25-2	Bromoform	6	U
108-10-1	4-Methyl-2-Pentanone	11	U
591-78-6	2-Hexanone	11	U
127-18-4	Tetrachloroethene	6	U
79-34-5	1,1,2,2-Tetrachloroethane	6	U
108-88-3	Toluene	6	U
108-90-7	Chlorobenzene	6	U
100-41-4	Ethylbenzene	6	U
100-42-5	Styrene	6	U
1330-20-7	Total Xylenes	6	U

1A
VOLATILE ORGANICS ANALYSIS DATA SHEET

EPA SAMPLE NO.
VBLKJ3

Lab Name: CHEMWEST LABS Contract: (2-88)-REVS

Lab Code: CHEMW Case No.: 9701 SAS No.: _____ SDG No.: 9701

Matrix: (soil/water) SOIL Lab Sample ID: VVB30619A

Sample wt/vol: 5.0 (g/mL) G Lab File ID: VVB30619A

Level: (low/med) LOW Date Received: _____

% Moisture: not dec. _____ Date Analyzed: 06/19/92

Column: (pack/cap) PACK Dilution Factor: 1.0

CAS NO.	COMPOUND	CONCENTRATION UNITS: (ug/L or ug/Kg) UG/KG	Q
74-87-3	Chloromethane	10	U
74-83-9	Bromomethane	10	U
75-01-4	Vinyl Chloride	10	U
75-00-3	Chloroethane	10	U
75-09-2	Methylene Chloride	5	U
67-64-1	Acetone	2	J
75-15-0	Carbon Disulfide	5	U
75-35-4	1,1-Dichloroethene	5	U
75-34-3	1,1-Dichloroethane	5	U
540-59-0	1,2-Dichloroethene (total)	5	U
67-66-3	Chloroform	5	U
107-06-2	1,2-Dichloroethane	5	U
78-93-3	2-Butanone	10	U
71-55-6	1,1,1-Trichloroethane	5	U
56-23-5	Carbon Tetrachloride	5	U
108-05-4	Vinyl Acetate	10	U
75-27-4	Bromodichloromethane	5	U
78-87-5	1,2-Dichloropropane	5	U
10061-01-5	cis-1,3-Dichloropropene	5	U
79-01-6	Trichloroethene	5	U
124-48-1	Dibromochloromethane	5	U
79-00-5	1,1,2-Trichloroethane	5	U
71-43-2	Benzene	5	U
10061-02-6	Trans-1,3-Dichloropropene	5	U
75-25-2	Bromoform	5	U
108-10-1	4-Methyl-2-Pentanone	10	U
591-78-6	2-Hexanone	10	U
127-18-4	Tetrachloroethene	5	U
79-34-5	1,1,2,2-Tetrachloroethane	5	U
108-88-3	Toluene	5	U
108-90-7	Chlorobenzene	5	U
100-41-4	Ethylbenzene	5	U
100-42-5	Styrene	5	U
1330-20-7	Total Xylenes	5	U

1A
VOLATILE ORGANICS ANALYSIS DATA SHEET

EPA SAMPLE NO.
VBLKL3

Lab Name: CHEMWEST LABS Contract: (2-88)-REVS

Lab Code: CHEMW Case No.: 9701 SAS No.: _____ SDG No.: 9701

Matrix: (soil/water) SOIL Lab Sample ID: VVB30622

Sample wt/vol: 5.0 (g/mL) G Lab File ID: VVB30622

Level: (low/med) LOW Date Received: _____

% Moisture: not dec. _____ Date Analyzed: 06/22/92

Column: (pack/cap) PACK Dilution Factor: 1.0

CAS NO.	COMPOUND	CONCENTRATION UNITS: (ug/L or ug/Kg) UG/KG	Q
74-87-3	Chloromethane	10	U
74-83-9	Bromomethane	10	U
75-01-4	Vinyl Chloride	10	U
75-00-3	Chloroethane	10	U
75-09-2	Methylene Chloride	5	U
67-64-1	Acetone	2	J
75-15-0	Carbon Disulfide	5	U
75-35-4	1,1-Dichloroethene	5	U
75-34-3	1,1-Dichloroethane	5	U
540-59-0	1,2-Dichloroethene (total)	5	U
67-66-3	Chloroform	5	U
107-06-2	1,2-Dichloroethane	5	U
78-93-3	2-Butanone	10	U
71-55-6	1,1,1-Trichloroethane	5	U
56-23-5	Carbon Tetrachloride	5	U
108-05-4	Vinyl Acetate	10	U
75-27-4	Bromodichloromethane	5	U
78-87-5	1,2-Dichloropropane	5	U
10061-01-5	cis-1,3-Dichloropropene	5	U
79-01-6	Trichloroethene	5	U
124-48-1	Dibromochloromethane	5	U
79-00-5	1,1,2-Trichloroethane	5	U
71-43-2	Benzene	5	U
10061-02-6	Trans-1,3-Dichloropropene	5	U
75-25-2	Bromoform	5	U
108-10-1	4-Methyl-2-Pentanone	10	U
591-78-6	2-Hexanone	10	U
127-18-4	Tetrachloroethene	5	U
79-34-5	1,1,2,2-Tetrachloroethane	5	U
108-88-3	Toluene	5	U
108-90-7	Chlorobenzene	5	U
100-41-4	Ethylbenzene	5	U
100-42-5	Styrene	5	U
1330-20-7	Total Xylenes	5	U

1A
VOLATILE ORGANICS ANALYSIS DATA SHEET

EPA SAMPLE NO.
S7955MS

Lab Name: CHEMWEST LABS Contract: (2-88)-REVS

Lab Code: CHEMW Case No.: 9701 SAS No.: _____ SDG No.: 9701

Matrix: (soil/water) SOIL Lab Sample ID: 9701MS

Sample wt/vol: 5.0 (g/mL) G Lab File ID: 9701VVMS

Level: (low/med) LOW Date Received: 06/10/92

% Moisture: not dec. 12 Date Analyzed: 06/19/92

Column: (pack/cap) PACK Dilution Factor: 1.0

CAS NO.	COMPOUND	CONCENTRATION UNITS: (ug/L or ug/Kg) UG/KG	Q
74-87-3	Chloromethane	11	U
74-83-9	Bromomethane	11	U
75-01-4	Vinyl Chloride	11	U
75-00-3	Chloroethane	11	U
75-09-2	Methylene Chloride	1	J
67-64-1	Acetone	27	B
75-15-0	Carbon Disulfide	6	U
75-35-4	1,1-Dichloroethene	6	U
75-34-3	1,1-Dichloroethane	6	U
540-59-0	1,2-Dichloroethene (total)	6	U
67-66-3	Chloroform	6	U
107-06-2	1,2-Dichloroethane	6	U
78-93-3	2-Butanone	11	U
71-55-6	1,1,1-Trichloroethane	6	U
56-23-5	Carbon Tetrachloride	6	U
108-05-4	Vinyl Acetate	11	U
75-27-4	Bromodichloromethane	6	U
78-87-5	1,2-Dichloropropane	6	U
10061-01-5	cis-1,3-Dichloropropene	6	U
79-01-6	Trichloroethene	6	U
124-48-1	Dibromochloromethane	6	U
79-00-5	1,1,2-Trichloroethane	6	U
71-43-2	Benzene	6	U
10061-02-6	Trans-1,3-Dichloropropene	6	U
75-25-2	Bromoform	6	U
108-10-1	4-Methyl-2-Pentanone	11	U
591-78-6	2-Hexanone	11	U
127-18-4	Tetrachloroethene	6	U
79-34-5	1,1,2,2-Tetrachloroethane	6	U
108-88-3	Toluene	6	U
108-90-7	Chlorobenzene	6	U
100-41-4	Ethylbenzene	6	U
100-42-5	Styrene	6	U
1330-20-7	Total Xylenes	6	U

1A
VOLATILE ORGANICS ANALYSIS DATA SHEET

EPA SAMPLE NO.
VBLKL3MBS

Lab Name: CHEMWEST LABS Contract: (2-88)-REVS

Lab Code: CHEMW Case No.: 9701 SAS No.: _____ SDG No.: 9701

Matrix: (soil/water) SOIL Lab Sample ID: VV30622MBS

Sample wt/vol: 5.0 (g/mL) G Lab File ID: VV30622MS

Level: (low/med) LOW Date Received: _____

% Moisture: not dec. _____ Date Analyzed: 06/22/92

Column: (pack/cap) PACK Dilution Factor: 1.0

CAS NO.	COMPOUND	CONCENTRATION UNITS: (ug/L or ug/Kg) UG/KG	Q
74-87-3	Chloromethane	10	U
74-83-9	Bromomethane	10	U
75-01-4	Vinyl Chloride	10	U
75-00-3	Chloroethane	10	U
75-09-2	Methylene Chloride	5	U
67-64-1	Acetone	3	BJ
75-15-0	Carbon Disulfide	5	U
75-35-4	1,1-Dichloroethene	5	U
75-34-3	1,1-Dichloroethane	5	U
540-59-0	1,2-Dichloroethene (total)	5	U
67-66-3	Chloroform	5	U
107-06-2	1,2-Dichloroethane	5	U
78-93-3	2-Butanone	10	U
71-55-6	1,1,1-Trichloroethane	5	U
56-23-5	Carbon Tetrachloride	5	U
108-05-4	Vinyl Acetate	10	U
75-27-4	Bromodichloromethane	5	U
78-87-5	1,2-Dichloropropane	5	U
10061-01-5	cis-1,3-Dichloropropene	5	U
79-01-6	Trichloroethene	5	U
124-48-1	Dibromochloromethane	5	U
79-00-5	1,1,2-Trichloroethane	5	U
71-43-2	Benzene	5	U
10061-02-6	Trans-1,3-Dichloropropene	5	U
75-25-2	Bromoform	5	U
108-10-1	4-Methyl-2-Pentanone	10	U
591-78-6	2-Hexanone	10	U
127-18-4	Tetrachloroethene	5	U
79-34-5	1,1,2,2-Tetrachloroethane	5	U
108-88-3	Toluene	5	U
108-90-7	Chlorobenzene	5	U
100-41-4	Ethylbenzene	5	U
100-42-5	Styrene	5	U
1330-20-7	Total Xylenes	5	U

COMPUCHEM
WESTERN DIVISION
(CHEMWEST)

June 11, 1992

Metcalf & Eddy
450 B Street, Suite 1900
San Diego, CA 92101

Attention: Scott Zachary

Subject: Report of Data - Case Number 9676

Dear Mr. Zachary:

One soil sample for Project Phoenix-Good Year, Project Number 006791-0001-002 was received June 3, 1992 in good condition.

Included in this report are the results for one soil sample analyzed for Volatile Organics. Results of the analysis along with the analytical methodology and appropriate reporting limits are presented on the following page(s).

Thank you for choosing ChemWest Laboratories. Should you have questions concerning this data report or the analytical methods employed, please do not hesitate to contact your Project Manager. We hope that you will consider ChemWest Laboratories for your future analytical support and service requirements.

Sincerely,

Vince Schmidt

Vince Schmidt
Project Manager

VS:ds

cc: File

500W North Market Boulevard • Sacramento, CA 95834 • Phone (916) 923-0840 • FAX (916) 923-1938

CHEMWEST ANALYTICAL LABORATORIES
500 W. North Market Blvd.
[redacted]ento, California 95834
(916) 923-0840 FAX (916) 923-1938

Order No.: 9676
Date Rec'd: 06/03/92 @ 15:00
Compl Date:
Section: VINCE SCHMIDT

CLIENT:
METCALF & EDDY
150 B STREET, SUITE 1900
SAN DIEGO, CA 92101

Project : PHOENIX-GOOD YEAR
Project No.: 006791-0001-002
P.O. NO.
Contact: SCOTT ZACHARY
Phone:

ONE SOIL SAMPLE REC'D UNDER CHAIN OF CUSTODY IN 9 INCH PLASTIC CORE TUBE (1) TO BE ANALYZED FOR VOLATILE ORGANICS (EPA METHOD 8240). FULL CLP DELIVERABLES. PLEASE SEE CHAIN OF CUSTODY. D-6

CW ID.	SAMPLE ID.	LOC.	DATE/TIME SAMPLED	ANALYSIS	MATRIX	CONT.
9676	5-92-37		05/26/92	8240 MS/MSD	SOIL	1 TUBE

SAMPLE (S) WILL BE HELD 30 DAYS UNLESS LONGER TIME IS ARRANGED

SUSAN GILBERT

O.T.C.

CHEMWEST ANALYTICAL LABORATORIES
PERCENT MOISTURE, SOLIDS AND pH

DATE: 06/09/92
CHEMIST: SWP

TICKETS: 9676
SDG: 9676

SAMPLE ID	CLIENT ID	pH	% MOISTURE	% SOLIDS
9676		8.4	8.4	91.6

Chemwest Analytical Laboratories, Inc.

GC/MS INSTRUMENT LOG

VOA

CASE NO. _____

DATE	TIME	OP	CW ID	SAMPLE ID	AMT PURGED	OUTPUT	S	W	DSD	COMMENTS
5-13-92	15:44	DP	BF30513A	50 ng BFB	—	5-13-92			DSD920519	
5-13-92	17:01	DP	VV30513	VSTD050, II. 35D 39BE 40C	5ml	5-13-92				
5-13-92	17:42	DP	VV30513A	VSTD020, II. 35D 39BE 40C	5ml	5-13-92				VV30513D
5-13-92	18:15	DP	VV30513B	VSTD100, II. 35D 39BE 40C	5ml	5-13-92				
5-13-92	18:49	DP	VV30513C	VSTD150, II 35D 39BE 40C	5ml	5-13-92				
5-13-92	19:51	DP	VV30513D	VSTD200, II 35D 39BE 40C	5ml	5-13-92				
5-13-92	20:26	DP	VVB0513	VBIK 3Y	5µl/5ml	5-13-92				
5-13-92	20:57	DP	VV30513E	VSTD200, II. 35D 39BE 40C	5ml	5-13-92				
5-13-92	21:32	DP	VVB30513H	VBIK 3Z	5µl/5ml	5-13-92				
5-13-92	22:03	DP	VVB30513B	VBIK A3	5µl/5ml	5-13-92				
5-13-92	22:33	DP	953702V	4,5,6	20ul/5ml	5-13-92				0.10 ml (of 1.0µg/10ml mix) / 10 ml
5-13-92	23:06	DP	953703V	7,8,9	20ul/5ml	5-14-92				0.10 ml / 10ml of 1.0µg/10ml mix
5-13-92	23:36	DP	954603VVBI	SBC4A-004(14.0)	5µl/5ml	5-14-92				RI - carry over
5-13-92	0:07	DP	954604VVB	SBC4A-005(14.0)	5µl/5ml	5-14-92				
				5-15-92 pm					ASCII: CVV30513	

Chemwest Analytical Laboratories, Inc.
GC/MS INSTRUMENT LOG
VOA

008

CASE NO._____

DATE	TIME	OP	CW ID	SAMPLE ID	AMT PURGED	OUTPUT	S	W	DSD	COMMENTS
6-5-92	9:33	EW	BF30605	50 ng BFB	--	6-5-92				
6-5-92	10:06	EW	VV30605	VVSTD050 II-41A,C II-40D,F	5ml	6-5-92				
6-5-92	11:02	EW	~~VVB30605~~ VVB30605 3rd	VBLK3K	5g/5ml	6-5-92				VVB30605
6-5-92	11:36	EW	9676MSRR	5-92-37 MSD	5g/5ml	6-6-92				II-41B
6-5-92	12:10	EW	9676MSR	5-92-37 MS	5g/5ml	6-5-92				II-41B
6-5-92	12:42	EW	9676R	5-92-37	5g/5ml	6-5-92				
6-5-92	14:22	EW	9679011VVR	SB04A-009(07.5)	5g/5ml	6-5-92				
6-5-92	14:53	DP	9676VVR	5-92-37	5g/5ml	6-5-92				
6-5-92	15:26	DP	9676VVD	5-92-37	1g/5ml	6-5-92				
6-5-92	15:56	DP	9679006VV	SB04A-009 (43.0)	5g/5ml	6-5-92	17			
6-5-92	16:28	DP	9679007VV	SB04A-008 (11.0)	5g/5ml	6-5-92	18			
6-5-92	16:58	DP	9679009VV	SB04A-008 (16.5)	5g/5ml	6-5-92	19			
6-5-92	17:29	DP	9679010VV	SB04A-011 (10.0)	5g/5ml	6-5-92	20			
6-5-92	18:01	DP	9679011VV	SB04A-011 (13.5)	5g/5ml	6-5-92	1			
6-5-92	18:32	DP	9679012VV	SB04A-011 (16.0)	5g/5ml	6-5-92	2			
6-5-92	19:02	DP	9679013VV	SB04A-011 (29.0)	5g/5ml	6-5-92	3			
6-5-92	19:33	DP	9679014VV	SB04A-011 (42.5)	5g/5ml	6-5-92	4			
6-5-92	20:06	DP	9679015VV	SB04A-011 (49.5)	5g/5ml	6-5-92	5			
6-5-92	20:39	DP	9679005VV	SB04A-009 (31.0)	5g/5ml	6-5-92	6			
6-5-92	21:10	DP	9679008VV	SB04A-008 (13.0)	1g/5ml	6-5-92	7			

Ascii: VV30605
VV30605

1E

VOLATILE ORGANICS ANALYSIS DATA SHEET
TENTATIVELY IDENTIFIED COMPOUNDS

EPA SAMPLE NO.

5-92-37

Lab Name: CHEMWEST LABS Contract: (2-88)-REVS

Lab Code: CHEMW Case No.: 9676 SAS No.: _____ SDG No.: 9676

Matrix: (soil/water) SOIL Lab Sample ID: 9676

Sample wt/vol: 5.0 (g/mL) G Lab File ID: 9676VVR

Level: (low/med) LOW Date Received: 06/03/92

% Moisture: not dec. 8 Date Analyzed: 06/05/92

Column (pack/cap) PACK Dilution Factor: 1.0

Number TICs found: 2 CONCENTRATION UNITS: (ug/L or ug/Kg) UG/KG

	CAS NUMBER	COMPOUND NAME	RT	EST. CONC.	Q
1.	108-20-3	DIISOPROPYL ETHER (DOT) OR	5.50	160	J
2.		UNKNOWN ALKANE	23.85	15	J

1E

VOLATILE ORGANICS ANALYSIS DATA SHEET
TENTATIVELY IDENTIFIED COMPOUNDS

EPA SAMPLE NO.

5-92-37DL

Lab Name: CHEMWEST LABS Contract: (2-88)-REVS

Lab Code: CHEMW Case No.: 9676 SAS No.: _____ SDG No.: 9676

Matrix: (soil/water) SOIL Lab Sample ID: 9676DL

Sample wt/vol: 1.0 (g/mL) G Lab File ID: 9676VVD

Level: (low/med) LOW Date Received: 06/03/92

% Moisture: not dec. 8 Date Analyzed: 06/05/92

Column (pack/cap) PACK Dilution Factor: 1.0

Number TICs found: 1 CONCENTRATION UNITS: (ug/L or ug/Kg) UG/KG

CAS NUMBER	COMPOUND NAME	RT	EST. CONC.	Q
1. 108-20-3	DIISOPROPYL ETHER OR ISOMER	5.45	560	J

1E

VOLATILE ORGANICS ANALYSIS DATA SHEET
TENTATIVELY IDENTIFIED COMPOUNDS

EPA SAMPLE NO.

VBLK3H

Lab Name: CHEMWEST LABS Contract: (2-88)-REVS

Lab Code: CHEMW Case No.: 9676 SAS No.: _____ SDG No.: 9676

Matrix: (soil/water) SOIL Lab Sample ID: VVB30603

Sample wt/vol: 5.0 (g/mL) G Lab File ID: VVB30603

Level: (low/med) LOW Date Received: _____

% Moisture: not dec. ____ Date Analyzed: 06/03/92

Column (pack/cap) PACK Dilution Factor: 1.0

Number TICs found: 0 CONCENTRATION UNITS: (ug/L or ug/Kg) UG/KG

CAS NUMBER	COMPOUND NAME	RT	EST. CONC.	Q

1E

VOLATILE ORGANICS ANALYSIS DATA SHEET
TENTATIVELY IDENTIFIED COMPOUNDS

EPA SAMPLE NO.

VBLK3K

Lab Name: CHEMWEST LABS Contract: (2-88)-REVS

Lab Code: CHEMW Case No.: 9676 SAS No.: _____ SDG No.: 9676

Matrix: (soil/water) SOIL Lab Sample ID: VVB30605

Sample wt/vol: 5.0 (g/mL) G Lab File ID: VVB30605

Level: (low/med) LOW Date Received: _____

% Moisture: not dec. ____ Date Analyzed: 06/05/92

Column (pack/cap) PACK Dilution Factor: 1.0

Number TICs found: 0 CONCENTRATION UNITS: (ug/L or ug/Kg) UG/KG

CAS NUMBER	COMPOUND NAME	RT	EST. CONC.	Q

1A
VOLATILE ORGANICS ANALYSIS DATA SHEET

EPA SAMPLE NO.
5-92-37MD

Lab Name: CHEMWEST LABS Contract: (2-88)-REVS

Lab Code: CHEMW Case No.: 9676 SAS No.: _____ SDG No.: 9676

Matrix: (soil/water) SOIL Lab Sample ID: 9676-MD

Sample wt/vol: 5.0 (g/mL) G Lab File ID: 9676MSDR

Level: (low/med) LOW Date Received: 06/03/92

% Moisture: not dec. 8 Date Analyzed: 06/05/92

Column: (pack/cap) PACK Dilution Factor: 1.0

CAS NO.	COMPOUND	CONCENTRATION UNITS: (ug/L or ug/Kg) UG/KG	Q
74-87-3	Chloromethane	11	U
74-83-9	Bromomethane	11	U
75-01-4	Vinyl Chloride	11	U
75-00-3	Chloroethane	11	U
75-09-2	Methylene Chloride	5	U
67-64-1	Acetone	490	BE
75-15-0	Carbon Disulfide	5	U
75-35-4	1,1-Dichloroethene	5	U
75-34-3	1,1-Dichloroethane	5	U
540-59-0	1,2-Dichloroethene (total)	5	U
67-66-3	Chloroform	5	U
107-06-2	1,2-Dichloroethane	5	U
78-93-3	2-Butanone	11	U
71-55-6	1,1,1-Trichloroethane	5	U
56-23-5	Carbon Tetrachloride	5	U
108-05-4	Vinyl Acetate	11	U
75-27-4	Bromodichloromethane	5	U
78-87-5	1,2-Dichloropropane	5	U
10061-01-5	cis-1,3-Dichloropropene	5	U
79-01-6	Trichloroethene	5	U
124-48-1	Dibromochloromethane	5	U
79-00-5	1,1,2-Trichloroethane	5	U
71-43-2	Benzene	5	U
10061-02-6	Trans-1,3-Dichloropropene	5	U
75-25-2	Bromoform	5	U
108-10-1	4-Methyl-2-Pentanone	11	U
591-78-6	2-Hexanone	11	U
127-18-4	Tetrachloroethene	5	U
79-34-5	1,1,2,2-Tetrachloroethane	5	U
108-88-3	Toluene	5	U
108-90-7	Chlorobenzene	5	U
100-41-4	Ethylbenzene	5	U
100-42-5	Styrene	5	U
1330-20-7	Total Xylenes	5	U

1A
VOLATILE ORGANICS ANALYSIS DATA SHEET

EPA SAMPLE NO.
VBLK3HMBSD

Lab Name: CHEMWEST LABS Contract: (2-88)-REVS

Lab Code: CHEMW Case No.: 9676 SAS No.: _____ SDG No.: 9676

Matrix: (soil/water) SOIL Lab Sample ID: VVB30603MBSD

Sample wt/vol: 5.0 (g/mL) G Lab File ID: VVB30603MSD

Level: (low/med) LOW Date Received: _____

% Moisture: not dec. ____ Date Analyzed: 06/03/92

Column: (pack/cap) PACK Dilution Factor: 1.0

CAS NO.	COMPOUND	CONCENTRATION UNITS: (ug/L or ug/Kg) UG/KG	Q
74-87-3	Chloromethane	10	U
74-83-9	Bromomethane	10	U
75-01-4	Vinyl Chloride	10	U
75-00-3	Chloroethane	10	U
75-09-2	Methylene Chloride	1	J
67-64-1	Acetone	10	U
75-15-0	Carbon Disulfide	5	U
75-35-4	1,1-Dichloroethene	5	U
75-34-3	1,1-Dichloroethane	5	U
540-59-0	1,2-Dichloroethene (total)	5	U
67-66-3	Chloroform	5	U
107-06-2	1,2-Dichloroethane	5	U
78-93-3	2-Butanone	10	U
71-55-6	1,1,1-Trichloroethane	5	U
56-23-5	Carbon Tetrachloride	5	U
108-05-4	Vinyl Acetate	10	U
75-27-4	Bromodichloromethane	5	U
78-87-5	1,2-Dichloropropane	5	U
10061-01-5	cis-1,3-Dichloropropene	5	U
79-01-6	Trichloroethene	5	U
124-48-1	Dibromochloromethane	5	U
79-00-5	1,1,2-Trichloroethane	5	U
71-43-2	Benzene	5	U
10061-02-6	Trans-1,3-Dichloropropene	5	U
75-25-2	Bromoform	5	U
108-10-1	4-Methyl-2-Pentanone	10	U
591-78-6	2-Hexanone	10	U
127-18-4	Tetrachloroethene	5	U
79-34-5	1,1,2,2-Tetrachloroethane	5	U
108-88-3	Toluene	5	U
108-90-7	Chlorobenzene	5	U
100-41-4	Ethylbenzene	5	U
100-42-5	Styrene	5	U
1330-20-7	Total Xylenes	5	U

COMPUCHEM
WESTERN DIVISION
(CHEMWEST)

June 17, 1992

Metcalf & Eddy
450 B Street, Suite 1900
San Diego, CA 92101

Attention: Scott Zachary

Subject: Report of Amended Data: 9676

Dear Mr. Zachary:

Enclosed you will find the amended data sheets for the Volatile Organics Analysis.

The client ID has been corrected.

Project Name: PHOENIX-GOOD YEAR Project Number: 006791-0001-002

I hope this has not caused you any inconvenience. Should you have questions concerning this data report or the analytical methods employed, please do not hesitate to contact your Project Manager. We hope that you will consider ChemWest Laboratories for your future analytical support and service requirements.

Sincerely,

Vince Schmidt
Project Manager

VS:ds

600W North Market Boulevard • Sacramento, CA 95834 • Phone (916) 923-0840 • FAX (916) 923-1938

AMENDED

1A

VOLATILE ORGANICS ANALYSIS DATA SHEET

EPA SAMPLE NO.

S-92-37

Lab Name: CHEMWEST LABS Contract: (2-88)-REVS

Lab Code: CHEMW Case No.: 9676 SAS No.: _____ SDG No.: 9676

Matrix: (soil/water) SOIL Lab Sample ID: 9676

Sample wt/vol: 5.0 (g/mL) G Lab File ID: 9676VVR

Level: (low/med) LOW Date Received: 06/03/92

% Moisture: not dec. 8 Date Analyzed: 06/05/92

Column: (pack/cap) PACK Dilution Factor: 1.0

CAS NO.	COMPOUND	CONCENTRATION UNITS: (ug/L or ug/Kg) UG/KG	Q
74-87-3	Chloromethane	11	U
74-83-9	Bromomethane	11	U
75-01-4	Vinyl Chloride	11	U
75-00-3	Chloroethane	11	U
75-09-2	Methylene Chloride	5	U
67-64-1	Acetone	400	BE
75-15-0	Carbon Disulfide	5	U
75-35-4	1,1-Dichloroethene	5	U
75-34-3	1,1-Dichloroethane	5	U
540-59-0	1,2-Dichloroethene (total)	5	U
67-66-3	Chloroform	5	U
107-06-2	1,2-Dichloroethane	5	U
78-93-3	2-Butanone	11	U
71-55-6	1,1,1-Trichloroethane	5	U
56-23-5	Carbon Tetrachloride	5	U
108-05-4	Vinyl Acetate	11	U
75-27-4	Bromodichloromethane	5	U
78-87-5	1,2-Dichloropropane	5	U
10061-01-5	cis-1,3-Dichloropropene	5	U
79-01-6	Trichloroethene	5	U
124-48-1	Dibromochloromethane	5	U
79-00-5	1,1,2-Trichloroethane	5	U
71-43-2	Benzene	5	U
10061-02-6	Trans-1,3-Dichloropropene	5	U
75-25-2	Bromoform	5	U
108-10-1	4-Methyl-2-Pentanone	11	U
591-78-6	2-Hexanone	11	U
127-18-4	Tetrachloroethene	5	U
79-34-5	1,1,2,2-Tetrachloroethane	5	U
108-88-3	Toluene	5	U
108-90-7	Chlorobenzene	5	U
100-41-4	Ethylbenzene	5	U
100-42-5	Styrene	5	U
1330-20-7	Total Xylenes	5	U

AMENDED

1A

VOLATILE ORGANICS ANALYSIS DATA SHEET

EPA SAMPLE NO.

S-92-37DL

Name: CHEMWEST LABS Contract: (2-88)-REVS

Code: CHEMW Case No.: 9676 SAS No.: _____ SDG No.: 9676

Matrix: (soil/water) SOIL Lab Sample ID: 9676DL

Sample wt/vol: 1.0 (g/mL) G Lab File ID: 9676VVD

Level: (low/med) LOW Date Received: 06/03/92

% Moisture: not dec. 8 Date Analyzed: 06/05/92

Column: (pack/cap) PACK Dilution Factor: 1.0

CONCENTRATION UNITS:
(ug/L or ug/Kg) UG/KG

CAS NO.	COMPOUND		Q
74-87-3	Chloromethane	54	U
74-83-9	Bromomethane	54	U
75-01-4	Vinyl Chloride	54	U
75-00-3	Chloroethane	54	U
75-09-2	Methylene Chloride	27	U
67-64-1	Acetone	330	BD
75-15-0	Carbon Disulfide	27	U
75-35-4	1,1-Dichloroethene	27	U
75-34-3	1,1-Dichloroethane	27	U
540-59-0	1,2-Dichloroethene (total)	27	U
67-66-3	Chloroform	27	U
107-06-2	1,2-Dichloroethane	27	U
78-93-3	2-Butanone	54	U
71-55-6	1,1,1-Trichloroethane	27	U
56-23-5	Carbon Tetrachloride	27	U
108-05-4	Vinyl Acetate	54	U
75-27-4	Bromodichloromethane	27	U
78-87-5	1,2-Dichloropropane	27	U
10061-01-5	cis-1,3-Dichloropropene	27	U
79-01-6	Trichloroethene	27	U
124-48-1	Dibromochloromethane	27	U
79-00-5	1,1,2-Trichloroethane	27	U
71-43-2	Benzene	27	U
10061-02-6	Trans-1,3-Dichloropropene	27	U
75-25-2	Bromoform	27	U
108-10-1	4-Methyl-2-Pentanone	54	U
591-78-6	2-Hexanone	54	U
127-18-4	Tetrachloroethene	27	U
79-34-5	1,1,2,2-Tetrachloroethane	27	U
108-88-3	Toluene	27	U
108-90-7	Chlorobenzene	27	U
100-41-4	Ethylbenzene	27	U
100-42-5	Styrene	27	U
1330-20-7	Total Xylenes	27	U

AMENDED

1A
VOLATILE ORGANICS ANALYSIS DATA SHEET

EPA SAMPLE NO.

S-92-37MS

Name: CHEMWEST LABS Contract: (2-88)-REVS

Lab Code: CHEMW Case No.: 9676 SAS No.: _____ SDG No.: 9676

Matrix: (soil/water) SOIL Lab Sample ID: 9676-MS

Sample wt/vol: 5.0 (g/mL) G Lab File ID: 9676MSR

Level: (low/med) LOW Date Received: 06/03/92

% Moisture: not dec. 8 Date Analyzed: 06/05/92

Column: (pack/cap) PACK Dilution Factor: 1.0

CAS NO.	COMPOUND	CONCENTRATION UNITS: (ug/L or ug/Kg) UG/KG	Q
74-87-3	Chloromethane	11	U
74-83-9	Bromomethane	11	U
75-01-4	Vinyl Chloride	11	U
75-00-3	Chloroethane	11	U
75-09-2	Methylene Chloride	5	U
67-64-1	Acetone	570	BE
75-15-0	Carbon Disulfide	5	U
75-35-4	1,1-Dichloroethene	5	U
75-34-3	1,1-Dichloroethane	5	U
540-59-0	1,2-Dichloroethene (total)	5	U
67-66-3	Chloroform	5	U
107-06-2	1,2-Dichloroethane	5	U
78-93-3	2-Butanone	11	U
71-55-6	1,1,1-Trichloroethane	5	U
56-23-5	Carbon Tetrachloride	5	U
108-05-4	Vinyl Acetate	11	U
75-27-4	Bromodichloromethane	5	U
78-87-5	1,2-Dichloropropane	5	U
10061-01-5	cis-1,3-Dichloropropene	5	U
79-01-6	Trichloroethene	5	U
124-48-1	Dibromochloromethane	5	U
79-00-5	1,1,2-Trichloroethane	5	U
71-43-2	Benzene	5	U
10061-02-6	Trans-1,3-Dichloropropene	5	U
75-25-2	Bromoform	5	U
108-10-1	4-Methyl-2-Pentanone	11	U
591-78-6	2-Hexanone	11	U
127-18-4	Tetrachloroethene	5	U
79-34-5	1,1,2,2-Tetrachloroethane	5	U
108-88-3	Toluene	5	U
108-90-7	Chlorobenzene	5	U
100-41-4	Ethylbenzene	5	U
100-42-5	Styrene	5	U
1330-20-7	Total Xylenes	5	U

AMENDED

2B

SOIL VOLATILE SURROGATE RECOVERY

Lab Name: CHEMWEST LABS Contract: (2-88)-REVS

Lab Code: CHEMW Case No.: 9676 SAS No.: _____ SDG No.: 9676

Level: (low/med) LOW

	EPA SAMPLE NO.	S1 (TOL) #	S2 (BFB) #	S3 (DCE) #	OTHER	TOT OUT
01	S-92-37	101	104	98	0	0
02	S-92-37DL	97	106	97	0	0
03	S-92-37MD	97	103	94	0	0
04	S-92-37MS	96	94	90	0	0
05	VBLK3HMBS	100	110	83	0	0
06	VBLK3HS1	102	115	87	0	0
07	VBLK3H	101	104	79	0	0
08	VBLK3K	98	99	92	0	0

	QC LIMITS
S1 (TOL) = Toluene-d8	(81-117)
S2 (BFB) = Bromofluorobenzene	(74-121)
S3 (DCE) = 1,2-Dichloroethane-d4	(70-121)

Column to be used to flag recovery values

* Values outside of contract required QC limits

D Surrogates diluted out

AMENDED

1

4A

VOLATILE METHOD BLANK SUMMARY

Lab Name: CHEMWEST LABS Contract: (2-88)-REVS

Lab Code: CHEMW Case No.: 9676 SAS No.: _____ SDG No.: 9676

Lab File ID: VVB30605 Lab Sample ID: VVB30605

Date Analyzed: 06/05/92 Time Analyzed: 1102

Matrix: (soil/water) SOIL Level: (low/med) LOW

Instrument ID: CW3

THIS METHOD BLANK APPLIES TO THE FOLLOWING SAMPLES, MS AND MSD:

	EPA SAMPLE NO.	LAB SAMPLE ID	LAB FILE ID	TIME ANALYZED
01	S-92-37	9676	9676VVR	1453
02	S-92-37DL	9676DL	9676VVD	1526
03	S-92-37MD	9676-MD	9676MSDR	1136
04	S-92-37MS	9676-MS	9676MSR	1210

COMMENTS: VBLK3K 5G/5ML
CW3 1% SP1000 6'X1/4"

AMENDED

8A

VOLATILE INTERNAL STANDARD AREA SUMMARY

Lab Name: CHEMWEST LABS Contract: (2-88)-REVS

Lab Code: CHEMW Case No.: 9676 SAS No.: _____ SDG No.: 9676

Lab File ID (Standard): VV30605 Date Analyzed: 06/05/92

Instrument ID: CW3 Time Analyzed: 1006

Matrix:(soil/water) SOIL Level:(low/med) LOW Column:(pack/cap) PACK

		IS1(BCM) AREA #	RT	IS2(DFB) AREA #	RT	IS3(CBZ) AREA #	RT
	12 HOUR STD	53400	6.55	232000	13.95	221000	17.85
	UPPER LIMIT	106800		464000		442000	
	LOWER LIMIT	26700		116000		110500	
	EPA SAMPLE NO.						
01	S-92-37	46100	6.60	219000	14.05	216000	18.00
02	S-92-37DL	49800	6.55	234000	14.10	239000	18.00
03	S-92-37MD	49500	6.55	223000	14.00	217000	17.90
04	S-92-37MS	50900	6.55	237000	14.05	222000	17.90
05	VBLK3K	53100	6.60	233000	14.00	226000	17.90

IS1 (BCM) = Bromochloromethane
IS2 (DFB) = 1,4-Difluorobenzene
IS3 (CBZ) = Chlorobenzene

UPPER LIMIT = + 100% of internal standard area.
LOWER LIMIT = - 50% of internal standard area.

= Column used to flag internal standard area values with an asterisk

FORM VIII VOA 1/87 Rev.

AMENDED

1E

VOLATILE ORGANICS ANALYSIS DATA SHEET
TENTATIVELY IDENTIFIED COMPOUNDS

EPA SAMPLE NO.

S-92-37

Lab Name: CHEMWEST LABS Contract: (2-88)-REVS

Lab Code: CHEMW Case No.: 9676 SAS No.: _____ SDG No.: 9676

Matrix: (soil/water) SOIL Lab Sample ID: 9676

Sample wt/vol: 5.0 (g/mL) G Lab File ID: 9676VVR

Level: (low/med) LOW Date Received: 06/03/92

% Moisture: not dec. 8 Date Analyzed: 06/05/92

Column (pack/cap) PACK Dilution Factor: 1.0

Number TICs found: 2

CONCENTRATION UNITS:
(ug/L or ug/Kg) UG/KG

	CAS NUMBER	COMPOUND NAME	RT	EST. CONC.	Q
1.	108-20-3	DIISOPROPYL ETHER (DOT) OR	5.50	160	J
2.		UNKNOWN ALKANE	23.85	15	J

AMENDED

antitation Report File: 9676VVR

ta: 9676VVR.TI
2 14:53:00
mple: 5/5-92-37 5G/5ML
nds.: CW3 1% SP1000 6'X1/4"
rmula: Instrument: CW3 Weight: 0.021
bmitted by: M & E Analyst: DP Acct. No.: 9676

OUNT=AREA * REF AMNT/(REF AREA * RESP FACT)
sp. fac. from Library Entry

lo	Name
1	CI01 BROMOCHLOROMETHANE (INTERNAL STANDARD)
2	C010 CHLOROMETHANE
3	C015 BROMOMETHANE
4	C020 VINYL CHLORIDE
5	C025 CHLOROETHANE
6	C030 METHYLENE CHLORIDE
7	C035 ACETONE
8	C040 CARBON DISULFIDE
9	C045 1,1-DICHLOROETHENE
0	C050 1,1-DICHLOROETHANE
1	C053 1,2-DICHLOROETHENE(TOTAL)
2	C060 CHLOROFORM
3	C065 1,2-DICHLOROETHANE
4	C110 2-BUTANONE
5	CS15 1,2-DICHLOROETHANE-D4 (SURROGATE)
	I10 1,4-DIFLUOROBENZENE (INTERNAL STANDARD)
	115 1,1,1-TRICHLOROETHANE
8	C120 CARBON TETRACHLORIDE
9	C125 VINYL ACETATE
0	C130 BROMODICHLOROMETHANE
1	C140 1,2-DICHLOROPROPANE
2	C143 CIS-1,3-DICHLOROPROPENE
3	C150 TRICHLOROETHENE
4	C165 BENZENE
5	C155 DIBROMOCHLOROMETHANE
6	C160 1,1,2-TRICHLOROETHANE
7	C172 TRANS-1,3-DICHLOROPROPENE
8	C180 BROMOFORM
9	CI20 CHLOROBENZENE-D5 (INTERNAL STANDARD)
0	C205 4-METHYL-2-PENTANONE
1	C210 2-HEXANONE
2	C220 TETRACHLOROETHENE
3	C225 1,1,2,2-TETRACHLOROETHANE
4	C230 TOLUENE
5	C235 CHLOROBENZENE
6	C240 ETHYLBENZENE
7	C245 STYRENE
8	C250 TOTAL XYLENES
9	CS05 TOLUENE-D8 (SURROGATE)
0	CS10 4-BROMOFLUOROBENZENE (SURROGATE)

	z	Scan	Time	Ref	RRT	Meth	Area(Hght)	Amount	%Tot
1		128	132	6:36	1	1.000	A BB	46085.	50.000 PPB	7.49
2	NOT FOUND								
3	NOT FOUND								

30

AMENDED

LIBRARY SEARCH
06/05/92 14:53:00 + 5:30
SAMPLE: ~~50~~-92-37 5G/5ML 6-15-92
CONDS.: CW3 1% SP1000 6'X1/4"

DATA: 9676VUR # 110
CALI: 9676VUR # 2

BASE M/Z: 45
RIC: 347135.

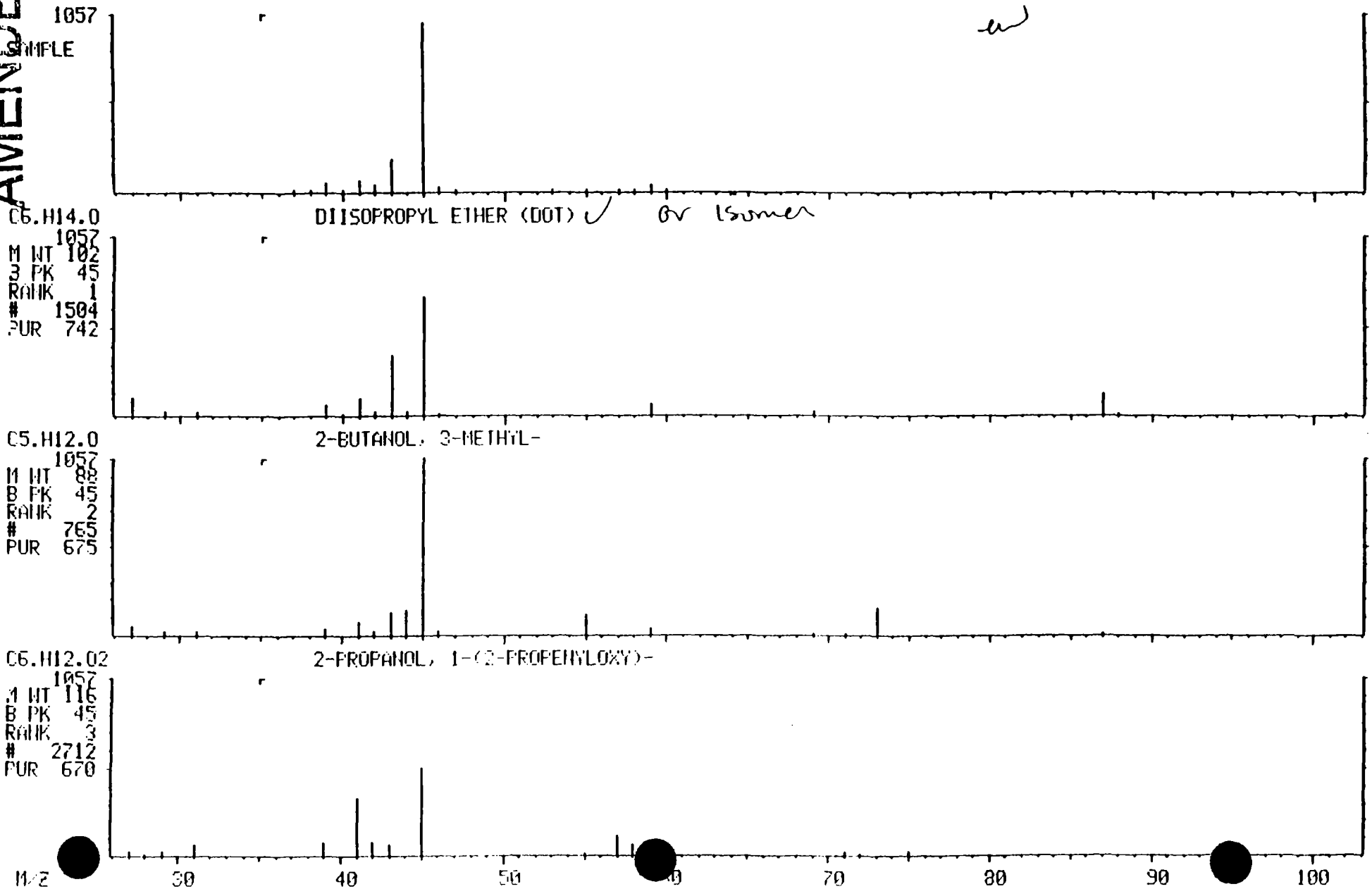

AMENDED 32

1A

VOLATILE ORGANICS ANALYSIS DATA SHEET

EPA SAMPLE NO.

S-92-37DL

Lab Name: CHEMWEST LABS Contract: (2-88)-REVS

Lab Code: CHEMW Case No.: 9676 SAS No.: _____ SDG No.: 9676

Matrix: (soil/water) SOIL Lab Sample ID: 9676DL

Sample wt/vol: 1.0 (g/mL) G Lab File ID: 9676VVD

Level: (low/med) LOW Date Received: 06/03/92

% Moisture: not dec. 8 Date Analyzed: 06/05/92

Column: (pack/cap) PACK Dilution Factor: 1.0

CAS NO.	COMPOUND	CONCENTRATION UNITS: (ug/L or ug/Kg) UG/KG	Q
74-87-3	Chloromethane	54	U
74-83-9	Bromomethane	54	U
75-01-4	Vinyl Chloride	54	U
75-00-3	Chloroethane	54	U
75-09-2	Methylene Chloride	27	U
67-64-1	Acetone	330	BD
75-15-0	Carbon Disulfide	27	U
75-35-4	1,1-Dichloroethene	27	U
75-34-3	1,1-Dichloroethane	27	U
540-59-0	1,2-Dichloroethene (total)	27	U
67-66-3	Chloroform	27	U
107-06-2	1,2-Dichloroethane	27	U
78-93-3	2-Butanone	54	U
71-55-6	1,1,1-Trichloroethane	27	U
56-23-5	Carbon Tetrachloride	27	U
108-05-4	Vinyl Acetate	54	U
75-27-4	Bromodichloromethane	27	U
78-87-5	1,2-Dichloropropane	27	U
10061-01-5	cis-1,3-Dichloropropene	27	U
79-01-6	Trichloroethene	27	U
124-48-1	Dibromochloromethane	27	U
79-00-5	1,1,2-Trichloroethane	27	U
71-43-2	Benzene	27	U
10061-02-6	Trans-1,3-Dichloropropene	27	U
75-25-2	Bromoform	27	U
108-10-1	4-Methyl-2-Pentanone	54	U
591-78-6	2-Hexanone	54	U
127-18-4	Tetrachloroethene	27	U
79-34-5	1,1,2,2-Tetrachloroethane	27	U
108-88-3	Toluene	27	U
108-90-7	Chlorobenzene	27	U
100-41-4	Ethylbenzene	27	U
100-42-5	Styrene	27	U
1330-20-7	Total Xylenes	27	U

AMENDED

RIC
06/05/92 15:26:00 JA 6-15-92
SAMPLE: 5B-92-37 1G/5ML
CONDS.: CW3 1% SP1000 6'X1/4"
RANGE: G 1, 500 LABEL: N 0, 4.0 QUAN: A 0, 1.0 J 0 BASE: U 20, 3

DATA: 9676VVD #1
CALI: 9676VVD #2

SCANS 25 TO 480

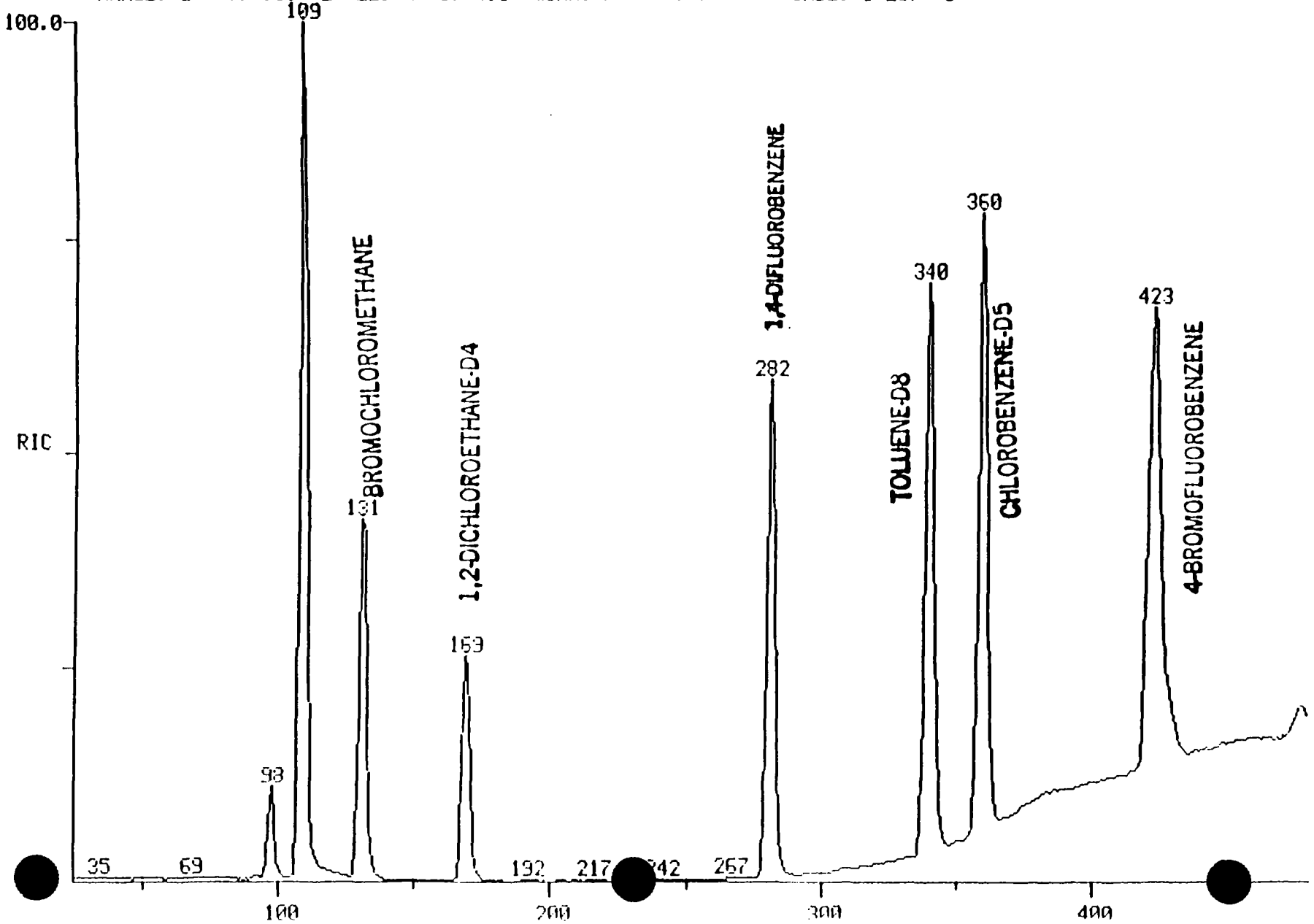

CA FINISHED, 7 FOUND
INISHED AT: 6/05/92 16:01:38

37

AMENDED

DUAL MASS SPECTRUM
06/05/92 15:26:00 + 4:54
SAMPLE: SB-92-37 1G/5ML SB 6-15-92
CONDS.: CW3 1% SP1000 6'X1/4"
GC TEMP: 109 DEG. C
ENHANCED (S 15B 2N 0T)

DATA: 967EVVD #98
CALI: 967EVVD #2

BASE M/Z: 43/ 43
RIC: 26047./ 30719.

Acetone
DP

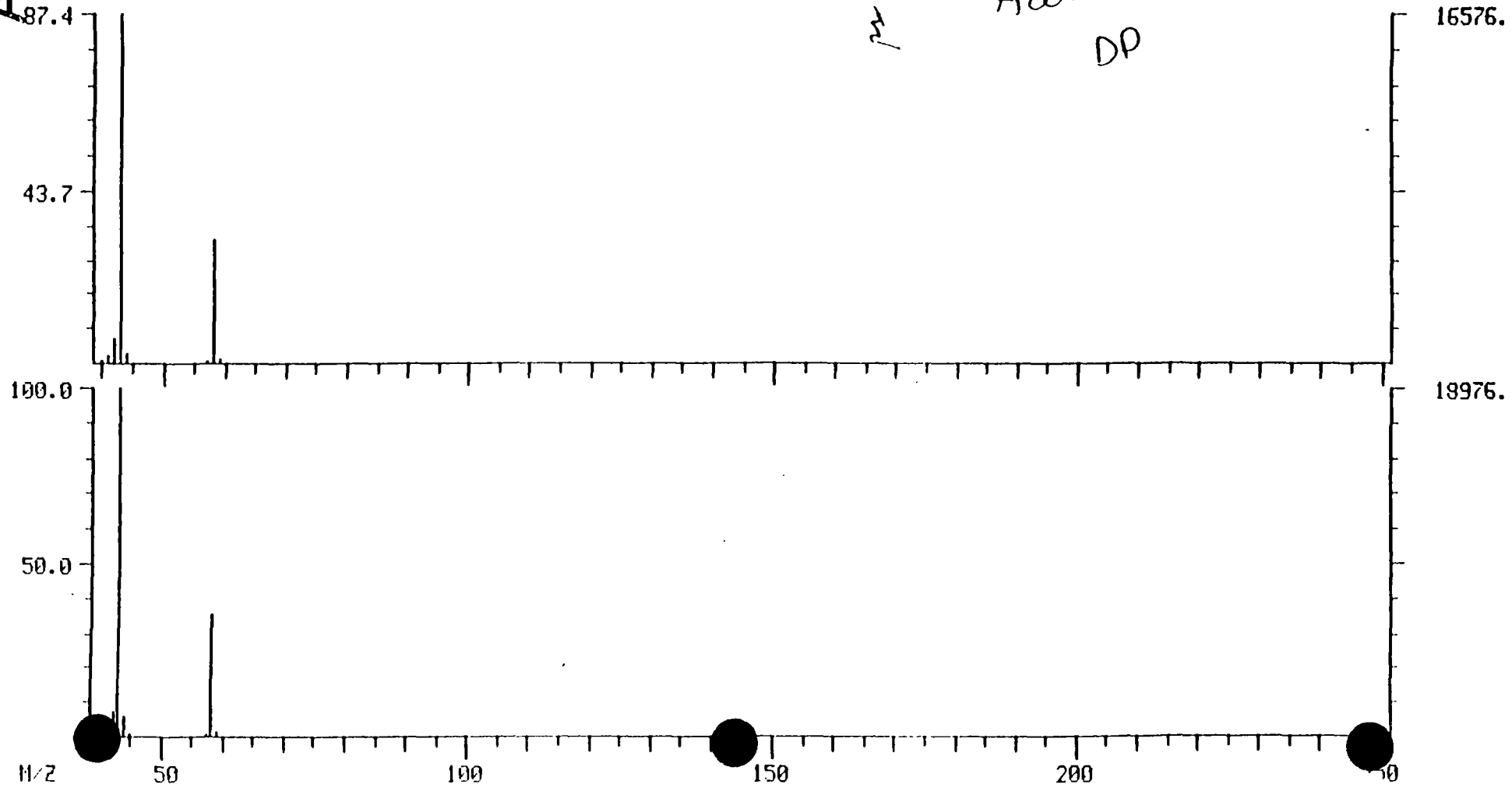

AMENDED 72

8A

VOLATILE INTERNAL STANDARD AREA SUMMARY

Name: CHEMWEST LABS Contract: (2-88)-REVS

Lab Code: CHEMW Case No.: 9676 SAS No.: _____ SDG No.: 9676

Lab File ID (Standard): VV30605 Date Analyzed: 06/05/92

Instrument ID: CW3 Time Analyzed: 1006

Matrix:(soil/water) SOIL Level:(low/med) LOW Column:(pack/cap) PACK

		IS1(BCM) AREA #	RT	IS2(DFB) AREA #	RT	IS3(CBZ) AREA #	RT
	12 HOUR STD	53400	6.55	232000	13.95	221000	17.85
	UPPER LIMIT	106800		464000		442000	
	LOWER LIMIT	26700		116000		110500	
	EPA SAMPLE NO.						
01	S-92-37	46100	6.60	219000	14.05	216000	18.00
02	S-92-37DL	49800	6.55	234000	14.10	239000	18.00
03	S-92-37MD	49500	6.55	223000	14.00	217000	17.90
04	S-92-37MS	50900	6.55	237000	14.05	222000	17.90
05	VBLK3K	53100	6.60	233000	14.00	226000	17.90

IS1 (BCM) = Bromochloromethane
IS2 (DFB) = 1,4-Difluorobenzene
IS3 (CBZ) = Chlorobenzene

UPPER LIMIT = + 100% of internal standard area.
LOWER LIMIT = - 50% of internal standard area.

Column used to flag internal standard area values with an asterisk

AMENDED

104

CA FINISHED, 13 FOUND
INISHED AT: 6/05/92 14:15:33

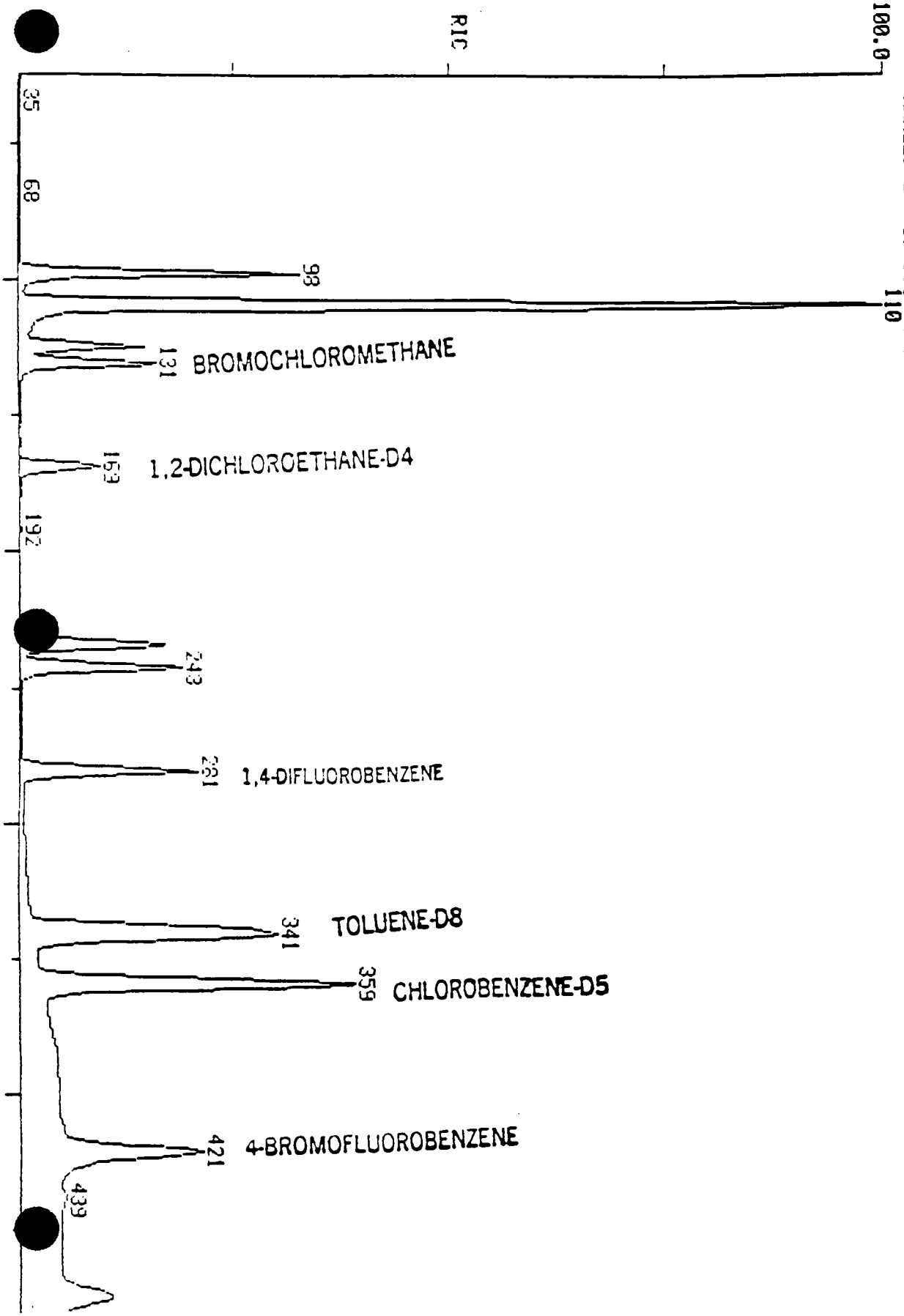

RIC
06/05/92 12:10:00 6-15-92
SAMPLE: 5-8-92-37 MS 5C/5ML
CONDS.: CW3 12 SP1000 6'X1/4"
RANGE: G 1, 500 LABEL: N 0, 4.0 QUAN: A 0, 1.0 J 0 BASE: U 20, 3

DATA: 5676NSR #1
CHLI: 5676NSR #2

SCANS 25 TO 480

7312(

AMENDED

1A

VOLATILE ORGANICS ANALYSIS DATA SHEET

EPA SAMPLE NO.

S-92-37MD

Name: CHEMWEST LABS Contract: (2-88)-REVS

Lab Code: CHEMW Case No.: 9676 SAS No.: _____ SDG No.: 9676

Matrix: (soil/water) SOIL Lab Sample ID: 9676-MD

Sample wt/vol: 5.0 (g/mL) G Lab File ID: 9676MSDR

Level: (low/med) LOW Date Received: 06/03/92

% Moisture: not dec. 8 Date Analyzed: 06/05/92

Column: (pack/cap) PACK Dilution Factor: 1.0

CAS NO.	COMPOUND	CONCENTRATION UNITS: (ug/L or ug/Kg) UG/KG	Q
74-87-3	Chloromethane	11	U
74-83-9	Bromomethane	11	U
75-01-4	Vinyl Chloride	11	U
75-00-3	Chloroethane	11	U
75-09-2	Methylene Chloride	5	U
67-64-1	Acetone	490	BE
75-15-0	Carbon Disulfide	5	U
75-35-4	1,1-Dichloroethene	5	U
75-34-3	1,1-Dichloroethane	5	U
540-59-0	1,2-Dichloroethene (total)	5	U
67-66-3	Chloroform	5	U
107-06-2	1,2-Dichloroethane	5	U
78-93-3	2-Butanone	11	U
71-55-6	1,1,1-Trichloroethane	5	U
56-23-5	Carbon Tetrachloride	5	U
108-05-4	Vinyl Acetate	11	U
75-27-4	Bromodichloromethane	5	U
78-87-5	1,2-Dichloropropane	5	U
10061-01-5	cis-1,3-Dichloropropene	5	U
79-01-6	Trichloroethene	5	U
124-48-1	Dibromochloromethane	5	U
79-00-5	1,1,2-Trichloroethane	5	U
71-43-2	Benzene	5	U
10061-02-6	Trans-1,3-Dichloropropene	5	U
75-25-2	Bromoform	5	U
108-10-1	4-Methyl-2-Pentanone	11	U
591-78-6	2-Hexanone	11	U
127-18-4	Tetrachloroethene	5	U
79-34-5	1,1,2,2-Tetrachloroethane	5	U
108-88-3	Toluene	5	U
108-90-7	Chlorobenzene	5	U
100-41-4	Ethylbenzene	5	U
100-42-5	Styrene	5	U
1330-20-7	Total Xylenes	5	U

AMENDED

ntitation Report File: 9676MSDR

: 9676MSDR.TI
11:36:00 JB 6-15-92
ple: 5-92-37 MSD 5G/5ML
ds.: CW3 1% SP1000 6'X1/4"
mula: Instrument: CW3 Weight: 0.021
mitted by: M & E Analyst: EW Acct. No.: 9676

UNT=AREA * REF AMNT/(REF AREA * RESP FACT)
sp. fac. from Library Entry

	Name
1	CI01 BROMOCHLOROMETHANE (INTERNAL STANDARD)
2	C010 CHLOROMETHANE
3	C015 BROMOMETHANE
4	C020 VINYL CHLORIDE
5	C025 CHLOROETHANE
6	C030 METHYLENE CHLORIDE
7	C035 ACETONE
8	C040 CARBON DISULFIDE
9	C045 1,1-DICHLOROETHENE
10	C050 1,1-DICHLOROETHANE
11	C053 1,2-DICHLOROETHENE(TOTAL)
12	C060 CHLOROFORM
13	C065 1,2-DICHLOROETHANE
14	C110 2-BUTANONE
15	CS15 1,2-DICHLOROETHANE-D4 (SURROGATE)
[illegible]10	1,4-DIFLUOROBENZENE (INTERNAL STANDARD)
[illegible]15	1,1,1-TRICHLOROETHANE
18	C120 CARBON TETRACHLORIDE
19	C125 VINYL ACETATE
20	C130 BROMODICHLOROMETHANE
21	C140 1,2-DICHLOROPROPANE
22	C143 CIS-1,3-DICHLOROPROPENE
23	C150 TRICHLOROETHENE
24	C165 BENZENE
25	C155 DIBROMOCHLOROMETHANE
26	C160 1,1,2-TRICHLOROETHANE
27	C172 TRANS-1,3-DICHLOROPROPENE
28	C180 BROMOFORM
29	CI20 CHLOROBENZENE-D5 (INTERNAL STANDARD)
30	C205 4-METHYL-2-PENTANONE
31	C210 2-HEXANONE
32	C220 TETRACHLOROETHENE
33	C225 1,1,2,2-TETRACHLOROETHANE
34	C230 TOLUENE
35	C235 CHLOROBENZENE
36	C240 ETHYLBENZENE
37	C245 STYRENE
38	C250 TOTAL XYLENES
39	CS05 TOLUENE-D8 (SURROGATE)
40	CS10 4-BROMOFLUOROBENZENE (SURROGATE)

	[illegible]z	Scan	Time	Ref	RRT	Meth	Area(Hght)	Amount	%Tot
1	128	131	6:33	1	1.000	A BB	49536.-	50.000 PPB	4.98
2	NOT FOUND								
3	NOT FOUND								

COMPUCHEM
WESTERN DIVISION
(CHEMWEST)

June 19, 1992

Metcalf & Eddy
450 B Street, Suite 1900
San Diego, CA 92101

Attention: Scott Zachary

Subject: Report of Data - Case Number 9691

Dear Mr. Zachary:

Two soil samples for Project Phoenix-Good Year, Project Number 006791-0001-002 were received June 6, 1992 in good condition.

Included in this report are the results for two soil samples analyzed for Volatile Organics. Results of the analysis along with the analytical methodology and appropriate reporting limits are presented on the following page(s).

Thank you for choosing ChemWest Laboratories. Should you have questions concerning this data report or the analytical methods employed, please do not hesitate to contact your Project Manager. We hope that you will consider ChemWest Laboratories for your future analytical support and service requirements.

Sincerely,

Vince Schmidt
Project Manager

VS:ds

cc: File

600W North Market Boulevard • Sacramento, CA 95834 • Phone (916) 923-0840 • FAX (916) 923-1938

CHEMWEST ANALYTICAL LABORATORIES
600 W. North Market Blvd.
Sacramento, California 95834
(916) 923-0840 FAX (916) 923-1938

Order No.: 9691
Date Rec'd: 06/06/92 @ 10:40
Compl Date:
Section: 7INCE SCHMIDT

CLIENT:
METCALF & EDDY
450 B STREET, SUITE 1900
SAN DIEGO, CA 92101

Project : PHOENIX-GOOD YEAR
Project No.: 006791-0001-002
P.O. NO.
Contact: SCOTT ZACHARY
Phone:

TWO SOIL SAMPLE REC'D UNDER CHAIN OF CUSTODY IN 9 INCH PLASTIC CORE TUBE (2) TO BE ANALYZED FOR VOLATILE ORGANICS (EPA METHOD 8240). FULL CLP DELIVERABLES.
D-6

CW ID.	SAMPLE ID.	LOC.	DATE/TIME SAMPLED	ANALYSIS	MATRIX	CONT.
9691-01	S-116-3.5		06/01/92 08:15	8240	SOIL	1 TUBE
9691-02	S-117-47.5		06/03/92 11:59	8240	SOIL	1 TUBE

SAMPLE (S) WILL BE HELD 30 DAYS UNLESS LONGER TIME IS ARRANGED

12

4162594236

CHEMWEST ANALYTICAL LABORATORIES
PERCENT MOISTURE, SOLIDS AND pH

DATE: 06/18/92 TICKETS: 9679, 9691
CHEMIST: TBH

SAMPLE ID	CLIENT ID	pH	% MOISTURE	% SOLIDS
9679-1		8.7	20.9	79.1
-2		8.6	9.2	90.8
-3		8.6	16.5	83.5
-4		8.6	14.9	85.1
-5		8.8	17.5	82.5
-6		8.8	19.2	80.8
-7		8.6	16.8	83.2
-8		8.5	10.3	89.7
-9		8.6	18.7	81.3
-10		8.0	23.5	76.5
-11		7.9	21.5	78.5
-12		8.5	21.8	78.2
-13		8.3	15.3	84.7
-14		8.8	18.0	82.0
-15		8.7	12.3	87.7
691-1		8.0	19.4	80.6
-2		8.0	5.4	94.6

Chemwest Analytical Laboratories, Inc.
GC/MS INSTRUMENT LOG
VOA

CASE NO._____

DATE	TIME	OP	CW ID	SAMPLE ID	AMT PURGED	OUTPUT	S	W	DSD	COMMENTS
6-10-92	8:37	EW	BFB0610	50ng BFB	—	6-10-92				
6-10-92	9:00	EW	VV30610	VSTD050 II-40D,F I-41A,C	5ml	6-10-92				
6-10-92	9:31	DP	VVB30610	VBLK 30	5g/5ml	6-10-92				
6-10-92	10:04	DP	VVB30610B	VBLK 30	5g/5ml	6-10-92				
6-10-92	10:35	DP	9679017VV	SB04A-010 (09.0)	5g/5ml	6-10-92	15			
6-10-92	11:07	DP	9679012VMS	SB04A-010 (09.0) MS	5g/5ml	6-10-92	/			II 41B
6-10-92	11:37	DP	9679012VMSD	SB04A-010 (09.0) MSD	5g/5ml	6-10-92	/			II41B
6-10-92	12:08	DP	9679019VV	SB04A-010 (25.0)	5g/5ml	6-10-92	16			
6-10-92	12:39	DP	9679020VV	SB04A-010 (25.0) DP	5g/5ml	6-10-92	17			
6-10-92	~~12:08~~ 13:10	DP	9684019VV	SB04A-010 (25.0)	5g/5ml	6-10-92	18			
6-10-92	13:40	DP	9684020VV	TB04A-010 (10.0)	5ml	6-10-92	19			
6-10-92	14:11	DP	9684031VV	EB01A-010 (00.0)	5ml	6-10-92	20			
6-10-92	14:42	EW	969101VV	S-116-3.5	5g/5ml	6-10-92	1			
6-10-92	15:13	EW	969102VV	S-117-47.5	5g/5ml	6-10-92	2			
6-10-92	15:43	EW	969101MSV	S-116-3.5 MS	5g/5ml	6-10-92	/			II-41B
6-10-92	16:14	EW	969101MSDV	S-116-3.5 MSD	5g/5ml	6-10-92	/			II-41B
6-10-92	16:45	EW	969201VV	922311241	5g/5ml	6-10-92	3			
6-10-92	17:17	EW	969202VV	922.3H242	5g/5ml	6-10-92	4			
6-10-92	17:50	EW	VVB30610MS	VBLK 3P MS	5g/5ml	6-10-92	/			
6-10-92	18:21	EW	VVB30610MSD	VBLK30MSD	5g/5ml	6-10-92	/			

—continued next page.—

ACSII: VV30610

1E

VOLATILE ORGANICS ANALYSIS DATA SHEET
TENTATIVELY IDENTIFIED COMPOUNDS

EPA SAMPLE NO.

S-116-35

Lab Name: CHEMWEST LABS Contract: (2-88)-REVS

Lab Code: CHEMW Case No.: 9691 SAS No.: _____ SDG No.: 9691

Matrix: (soil/water) SOIL Lab Sample ID: 9691-1

Sample wt/vol: 5.0 (g/mL) G Lab File ID: 969101VV

Level: (low/med) LOW Date Received: 06/06/92

% Moisture: not dec. 19 Date Analyzed: 06/10/92

Column (pack/cap) PACK Dilution Factor: 1.0

Number TICs found: 0

CONCENTRATION UNITS:
(ug/L or ug/Kg) UG/KG

CAS NUMBER	COMPOUND NAME	RT	EST. CONC.	Q

1E

VOLATILE ORGANICS ANALYSIS DATA SHEET
TENTATIVELY IDENTIFIED COMPOUNDS

EPA SAMPLE NO.

S-117-475

Lab Name: CHEMWEST LABS Contract: (2-88)-REVS

Lab Code: CHEMW Case No.: 9691 SAS No.: _____ SDG No.: 9691

Matrix: (soil/water) SOIL Lab Sample ID: 9691-2

Sample wt/vol: 5.0 (g/mL) G Lab File ID: 969102VV

Level: (low/med) LOW Date Received: 06/06/92

% Moisture: not dec. 5 Date Analyzed: 06/10/92

Column (pack/cap) PACK Dilution Factor: 1.0

Number TICs found: 0 CONCENTRATION UNITS: (ug/L or ug/Kg) UG/KG

CAS NUMBER	COMPOUND NAME	RT	EST. CONC.	Q

1E

VOLATILE ORGANICS ANALYSIS DATA SHEET
TENTATIVELY IDENTIFIED COMPOUNDS

EPA SAMPLE NO.

VBLK30

Lab Name: CHEMWEST LABS Contract: (2-88)-REVS

Lab Code: CHEMW Case No.: 9691 SAS No.: _____ SDG No.: 9691

Matrix: (soil/water) SOIL Lab Sample ID: VVB30610B

Sample wt/vol: 5.0 (g/mL) G Lab File ID: VVB30610B

Level: (low/med) LOW Date Received: _____

% Moisture: not dec. _____ Date Analyzed: 06/10/92

Column (pack/cap) PACK Dilution Factor: 1.0

Number TICs found: 0 CONCENTRATION UNITS: (ug/L or ug/Kg) UG/KG

CAS NUMBER	COMPOUND NAME	RT	EST. CONC.	Q

1A
VOLATILE ORGANICS ANALYSIS DATA SHEET

EPA SAMPLE NO.
S-116-35MD

Lab Name: CHEMWEST LABS Contract: (2-88)-REVS

Lab Code: CHEMW Case No.: 9691 SAS No.: _____ SDG No.: 9691

Matrix: (soil/water) SOIL Lab Sample ID: 9691-1MD

Sample wt/vol: 5.0 (g/mL) G Lab File ID: 969101MSDV

Level: (low/med) LOW Date Received: 06/06/92

% Moisture: not dec. 19 Date Analyzed: 06/10/92

Column: (pack/cap) PACK Dilution Factor: 1.0

CAS NO.	COMPOUND	CONCENTRATION UNITS: (ug/L or ug/Kg) UG/KG	Q
74-87-3	Chloromethane	12	U
74-83-9	Bromomethane	12	U
75-01-4	Vinyl Chloride	12	U
75-00-3	Chloroethane	12	U
75-09-2	Methylene Chloride	6	U
67-64-1	Acetone	6	BJ
75-15-0	Carbon Disulfide	6	U
75-35-4	1,1-Dichloroethene	6	U
75-34-3	1,1-Dichloroethane	6	U
540-59-0	1,2-Dichloroethene (total)	6	U
67-66-3	Chloroform	6	U
107-06-2	1,2-Dichloroethane	6	U
78-93-3	2-Butanone	12	U
71-55-6	1,1,1-Trichloroethane	6	U
56-23-5	Carbon Tetrachloride	6	U
108-05-4	Vinyl Acetate	12	U
75-27-4	Bromodichloromethane	6	U
78-87-5	1,2-Dichloropropane	6	U
10061-01-5	cis-1,3-Dichloropropene	6	U
79-01-6	Trichloroethene	6	U
124-48-1	Dibromochloromethane	6	U
79-00-5	1,1,2-Trichloroethane	6	U
71-43-2	Benzene	6	U
10061-02-6	Trans-1,3-Dichloropropene	6	U
75-25-2	Bromoform	6	U
108-10-1	4-Methyl-2-Pentanone	12	U
591-78-6	2-Hexanone	12	U
127-18-4	Tetrachloroethene	6	U
79-34-5	1,1,2,2-Tetrachloroethane	6	U
108-88-3	Toluene	6	U
108-90-7	Chlorobenzene	6	U
100-41-4	Ethylbenzene	6	U
100-42-5	Styrene	6	U
1330-20-7	Total Xylenes	6	U

1A
VOLATILE ORGANICS ANALYSIS DATA SHEET

EPA SAMPLE NO.
VBLK30S1

Lab Name: CHEMWEST LABS Contract: (2-88)-REVS

Lab Code: CHEMW Case No.: 9691 SAS No.: _____ SDG No.: 9691

Matrix: (soil/water) SOIL Lab Sample ID: VVB30610S1

Sample wt/vol: 5.0 (g/mL) G Lab File ID: VVB30610MSD

Level: (low/med) LOW Date Received: _____

% Moisture: not dec. ____ Date Analyzed: 06/10/92

Column: (pack/cap) PACK Dilution Factor: 1.0

CAS NO.	COMPOUND	CONCENTRATION UNITS: (ug/L or ug/Kg) UG/KG	Q
74-87-3	Chloromethane	10	U
74-83-9	Bromomethane	10	U
75-01-4	Vinyl Chloride	10	U
75-00-3	Chloroethane	10	U
75-09-2	Methylene Chloride	5	U
67-64-1	Acetone	2	BJ
75-15-0	Carbon Disulfide	5	U
75-35-4	1,1-Dichloroethene	5	U
75-34-3	1,1-Dichloroethane	5	U
540-59-0	1,2-Dichloroethene (total)	5	U
67-66-3	Chloroform	5	U
107-06-2	1,2-Dichloroethane	5	U
78-93-3	2-Butanone	10	U
71-55-6	1,1,1-Trichloroethane	5	U
56-23-5	Carbon Tetrachloride	5	U
108-05-4	Vinyl Acetate	10	U
75-27-4	Bromodichloromethane	5	U
78-87-5	1,2-Dichloropropane	5	U
10061-01-5	cis-1,3-Dichloropropene	5	U
79-01-6	Trichloroethene	5	U
124-48-1	Dibromochloromethane	5	U
79-00-5	1,1,2-Trichloroethane	5	U
71-43-2	Benzene	5	U
10061-02-6	Trans-1,3-Dichloropropene	5	U
75-25-2	Bromoform	5	U
108-10-1	4-Methyl-2-Pentanone	10	U
591-78-6	2-Hexanone	10	U
127-18-4	Tetrachloroethene	5	U
79-34-5	1,1,2,2-Tetrachloroethane	5	U
108-88-3	Toluene	5	U
108-90-7	Chlorobenzene	5	U
100-41-4	Ethylbenzene	5	U
100-42-5	Styrene	5	U
1330-20-7	Total Xylenes	5	U

SCS ANALYTICAL LABORATORY
2840 WALNUT AVENUE
LONG BEACH, CALIFORNIA 90
(213) 595-9324
FAX (213) 595-6709

Metcalf & Eddy Inc.
450 "B" Street, Suite 1900
San Diego, CA 92101

ATTN: Scott Zachary

August 3, 1992

JOB NO.: 0687001.03

LABORATORY REPORT

Samples: Sixteen (16) soil samples from Phoenix Goodyear Airport, received 07/28/92 and analyzed 07/30/92 and 07/31/92. (3 DAY RUSH ANALYSIS requested 07/29/92)

Sample ID	TOC (Walkley Black) %
PS-79-11	0.03
PS-79-25.5	0.08
PS-79-35	0.09
PS-116-15	0.02
PS-116-25.5	0.07
PS-116-50	0.13
PS-117-14.5	0.06
PS-117-28.5	0.15
PS-117-37.5	0.02
PS-117-55	0.09
PS-92-11.5-14	0.05
PS-92-24	0.15
PS-92-39	0.04
PS-92-44	0.02
PS-116-35.5	0.05
PS-79-44	0.13

Lam V. Ho

Lam V. Ho PhD, REP
Vice President

eartec62.rep

TABLE 1
SUMMARY OF LABORATORY TEST RESULTS

PROJECT NAME: Phoenix-Goodyear Airport
PROJECT NO.: 6791-0001-002
DATE: July 17, 1992
CLIENT: Metcalf & Eddy
TETC NO.: 92-371-17801
SUMMARIZED BY: S. Sayawatana

SAMPLE ID	MOISTURE ASTM D2216 (%)	DENSITY ASTM D2937 (pcf)	ORGANIC MATTER CONTENT ASTM D2974 (%)	PERMEABILITY VERTICLE SAMPLES EPA 9100	
				EFFEC-TIVE STRESS (psi)	HYDRAULIC CONDUCTIVITY (cm/sec)
PS-79-11	9.0	102.0	5.7	6	4.6×10^{-6}
PS-79-25.5	21.0	93.0	1.9	14	1.9×10^{-8}
PS-79-35	9.0	104.5	0.4	19	1.1×10^{-4}
PS-79-44	7.0	101.0	1.0	3	5.0×10^{-4}*
PS-116-15	31.0	84.0	6.4	6	6.4×10^{-7}
PS-116-25.5	27.0	91.0	2.2	13	5.0×10^{-7}
PS-116-35.5	6.0	117.0	1.3	20	2.1×10^{-6}
PS-116-50	6.0	119.0	1.1	3	3.6×10^{-3}*
PS-117-14.5	23.0	97.5	2.5	8	2.4×10^{-8}
PS-117-28.5	13.5	100.5	0.9	14	4.3×10^{-5}
PS-117-37.5	13.5	102.0	1.7	21	1.5×10^{-4}
PS-117-55	7.5	116.0	1.0	3	1.2×10^{-4}*
PS-92-14	11.0	111.5	1.5	8	1.8×10^{-7}
PS-92-24	19.0	94.5	12.1	13	7.3×10^{-5}
PS-92-39	27.0	100.5	3.1	22	3.4×10^{-7}
PS-92-44	19.0	105.0	1.2	25	6.4×10^{-5}

* Constant Head Permeability

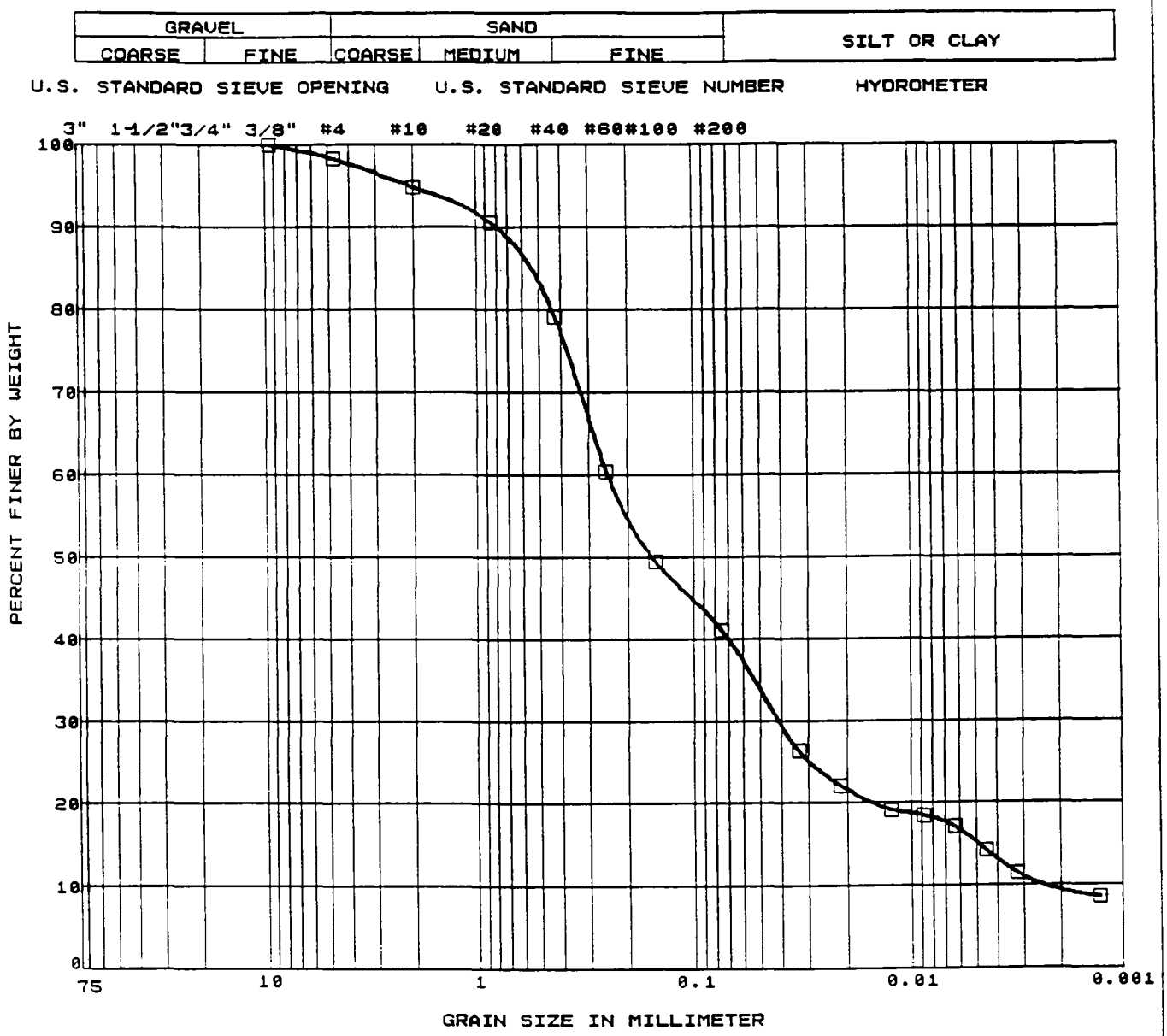

SYMBOL	SAMPLE ID.	SAMPLE TYPE	SOIL TYPE	LIQUID LIMIT	PLASTI-CITY INDEX
□	PS-79-11	Tube			

The Earth Technology Corporation

PROJECT NAME: Phoenix-Goodyear Airport Phase II

GRAIN SIZE DISTRIBUTION CURVE

7/92

FIGURE

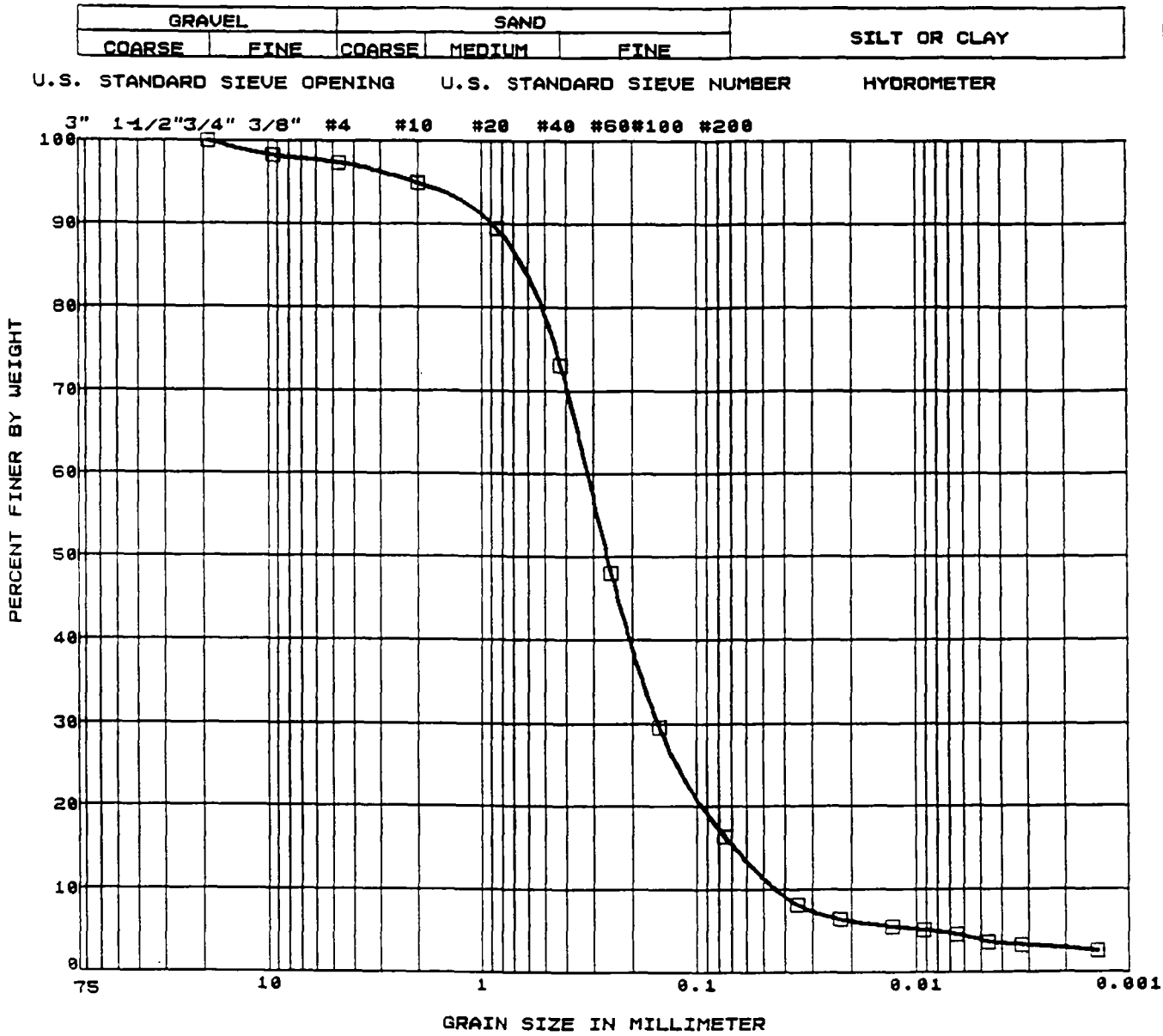

SYMBOL	SAMPLE ID.	SAMPLE TYPE	SOIL TYPE	LIQUID LIMIT	PLASTICITY INDEX
□	PS-79-35.0	TUBE			

The Earth Technology Corporation

PROJECT NAME: Phoenix-Goodyear Airport Phase II

GRAIN SIZE DISTRIBUTION CURVE

7/92

FIGURE

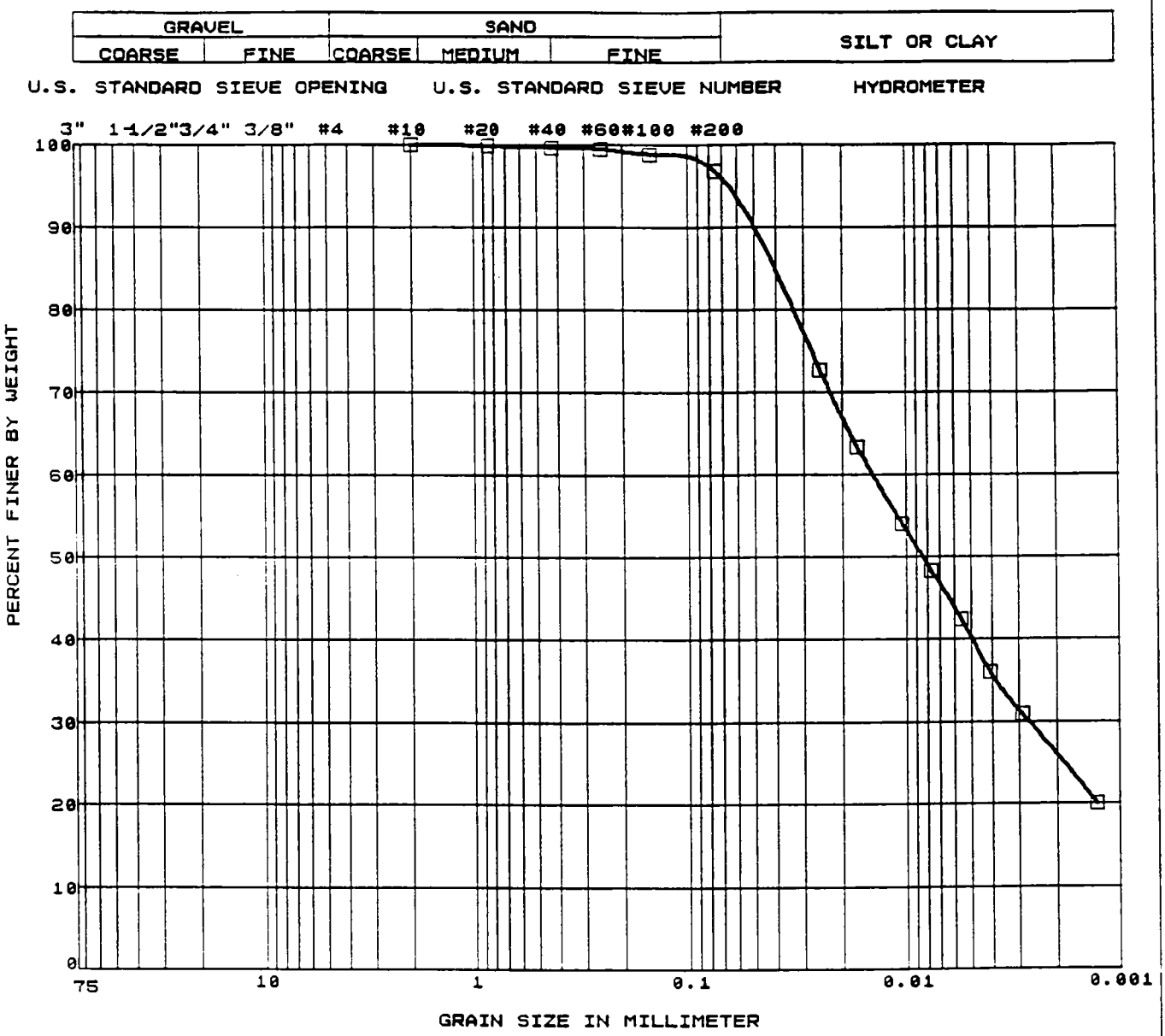

SYMBOL	SAMPLE ID.	SAMPLE TYPE	SOIL TYPE	LIQUID LIMIT	PLASTICITY INDEX
□	PS-116-15	Tube			

The Earth Technology Corporation

PROJECT NAME: Phoenix-Goodyear Airport Phase II

GRAIN SIZE DISTRIBUTION CURVE

7/92

FIGURE

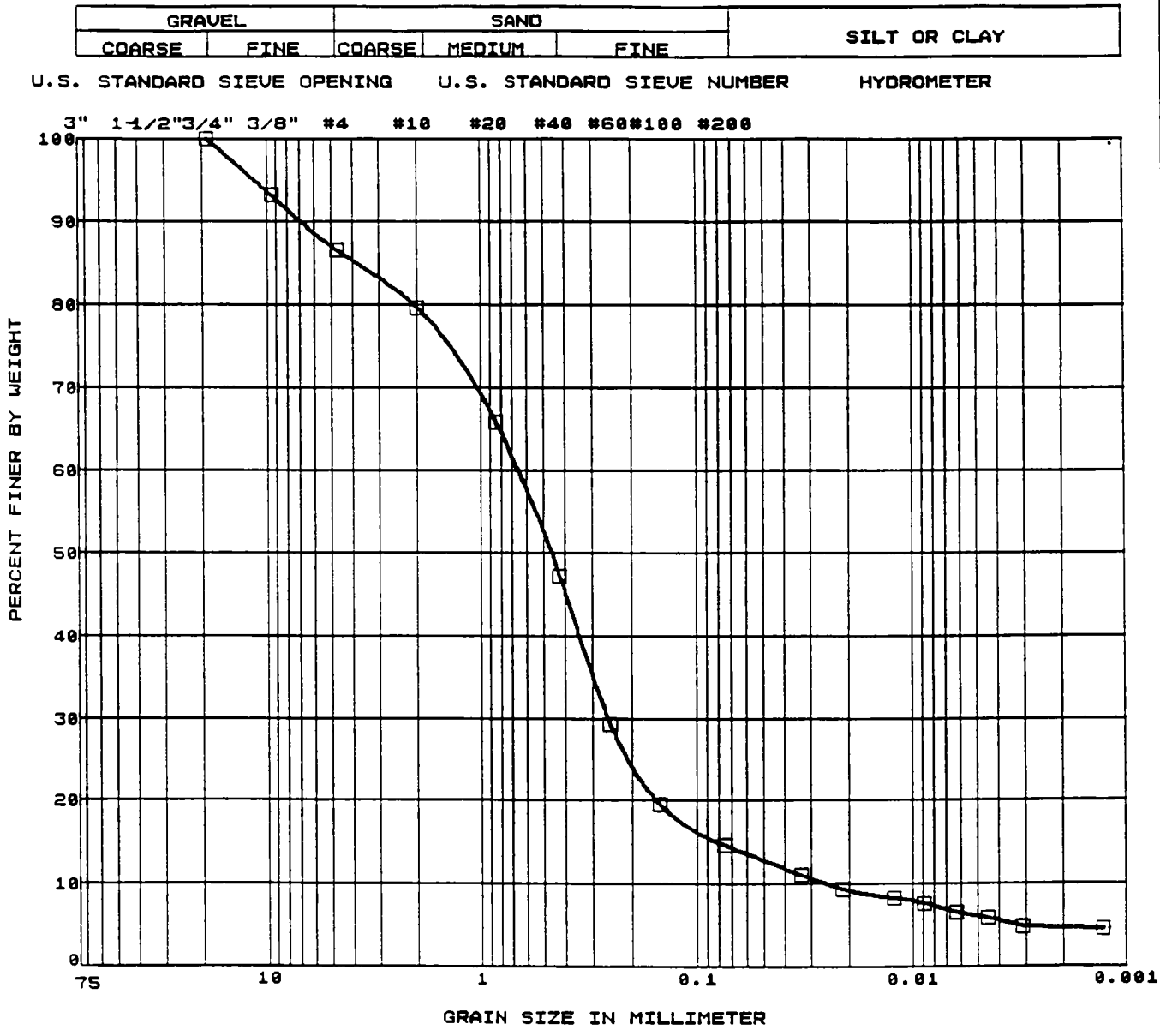

SYMBOL	SAMPLE ID.	SAMPLE TYPE	SOIL TYPE	LIQUID LIMIT	PLASTICITY INDEX
□	PS-116-35.5	TUBE			

The Earth Technology Corporation

PROJECT NAME: Phoenix-Goodyear Airport Phase II

GRAIN SIZE DISTRIBUTION CURVE

7/92

FIGURE

GRAVEL		SAND			SILT OR CLAY
COARSE	FINE	COARSE	MEDIUM	FINE	

U.S. STANDARD SIEVE OPENING U.S. STANDARD SIEVE NUMBER HYDROMETER

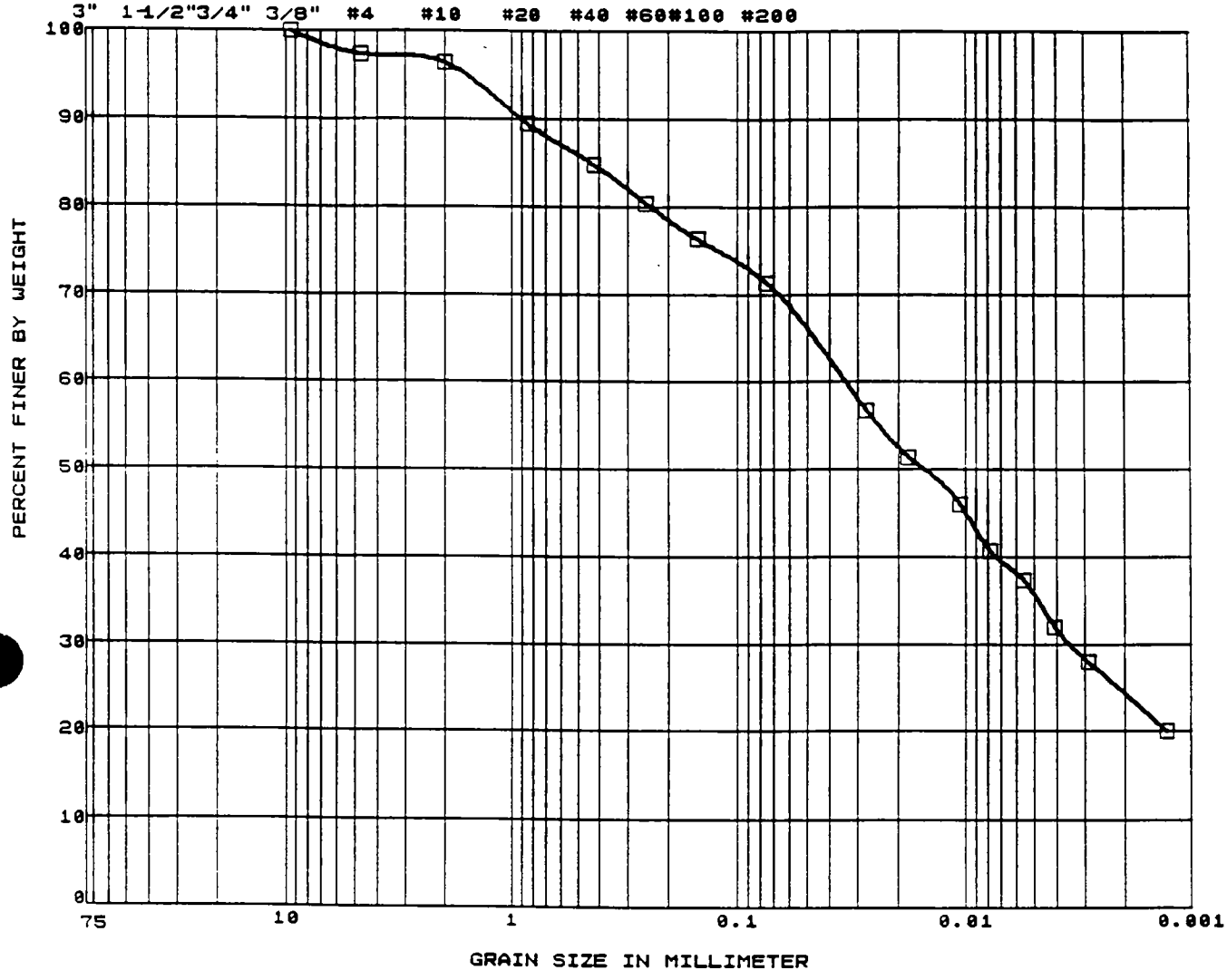

SYMBOL	SAMPLE ID.	SAMPLE TYPE	SOIL TYPE	LIQUID LIMIT	PLASTICITY INDEX
□	PS-117-14.5	TUBE			

The Earth Technology Corporation

PROJECT NAME: Phoenix-Goodyear Airport Phase II

GRAIN SIZE DISTRIBUTION CURVE

7/92

FIGURE

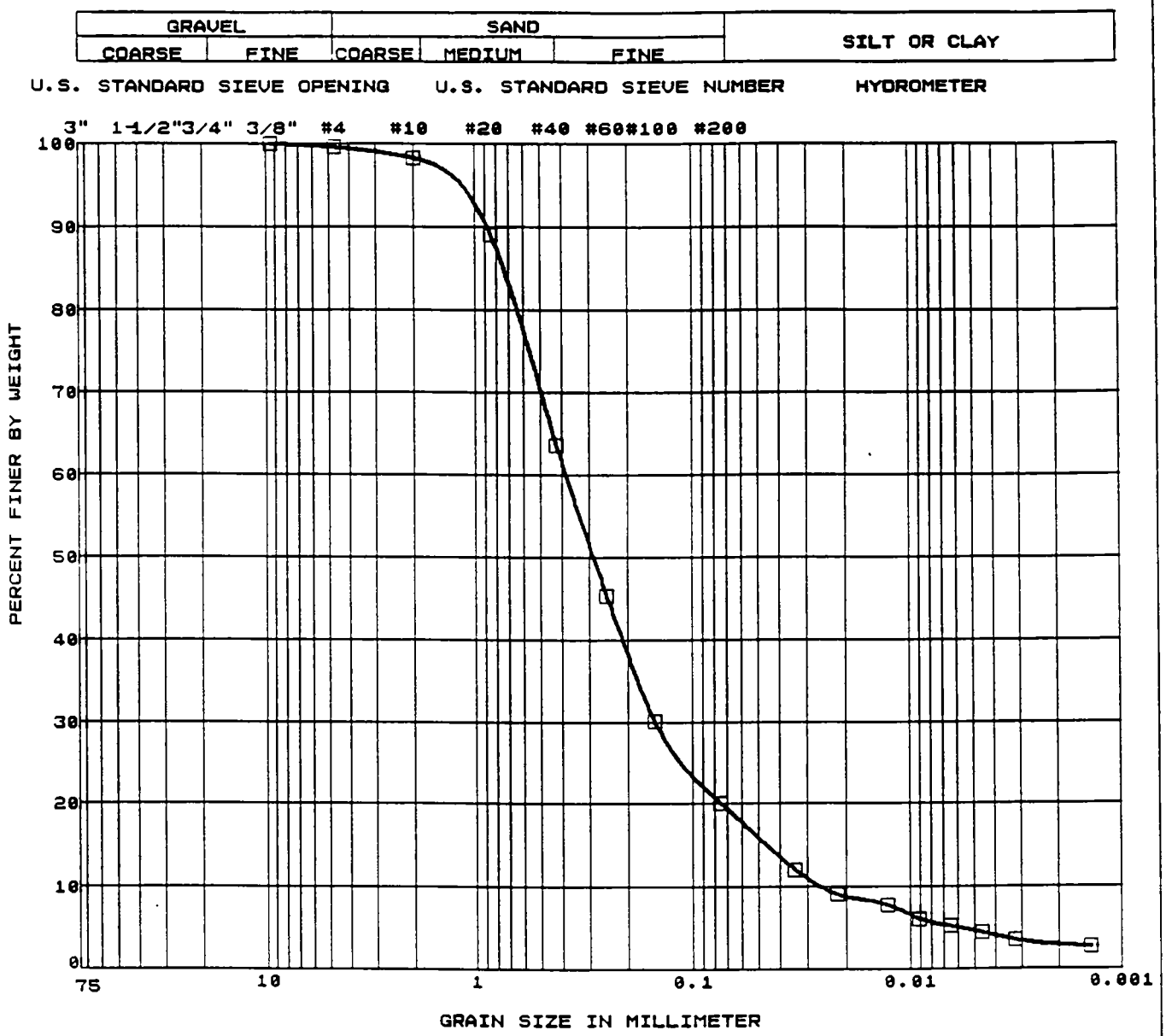

SYMBOL	SAMPLE ID.	SAMPLE TYPE	SOIL TYPE	LIQUID LIMIT	PLASTICITY INDEX
□	PS-117-37.5	Tube			

The Earth Technology Corporation

PROJECT NAME: Phoenix-Goodyear Airport Phase II

GRAIN SIZE DISTRIBUTION CURVE

7/92

FIGURE

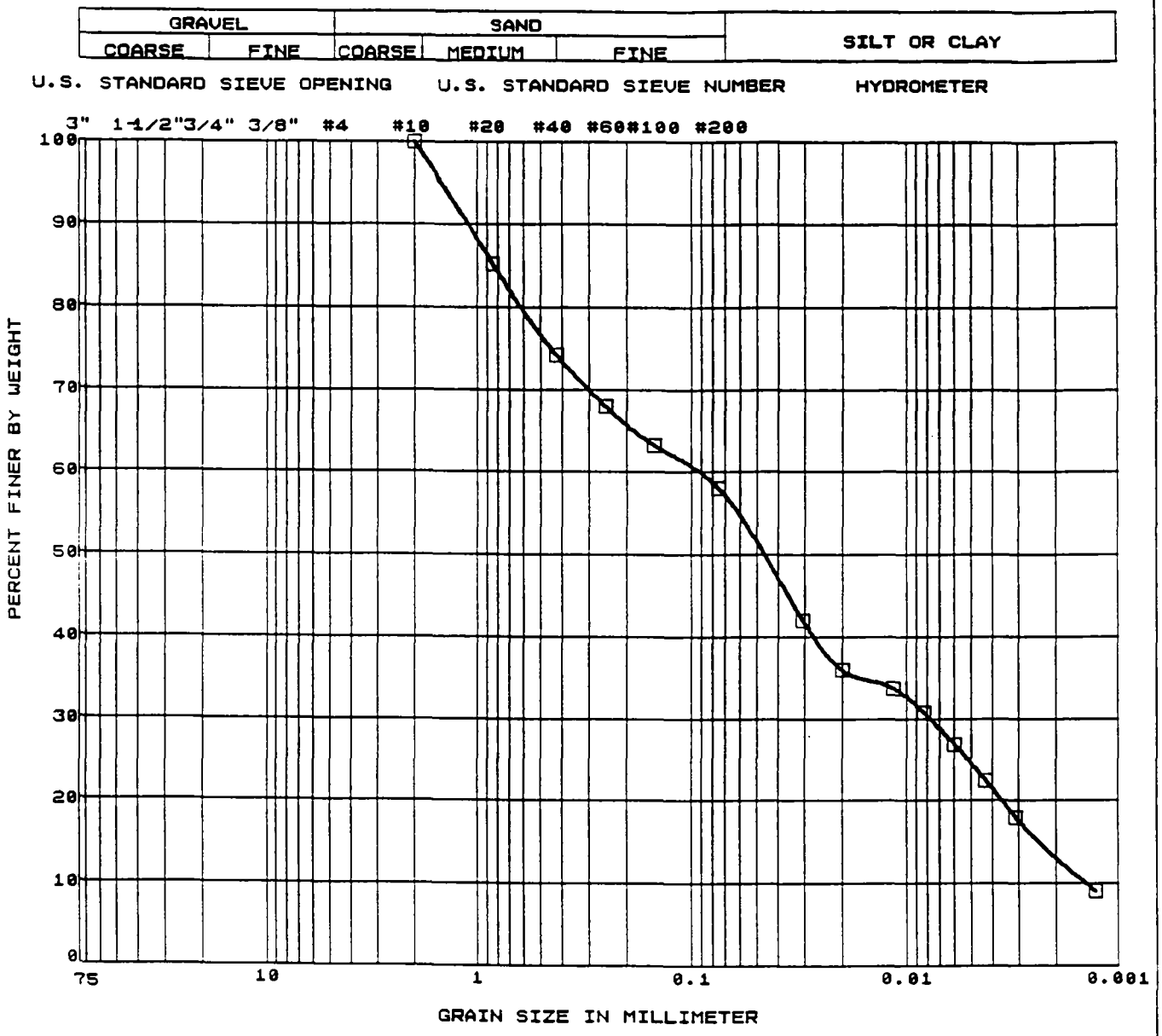

SYMBOL	SAMPLE ID.	SAMPLE TYPE	SOIL TYPE	LIQUID LIMIT	PLASTICITY INDEX
□	PS-92-24	core			

The Earth Technology Corporation

PROJECT NAME: Phoenix-Goodyear Airport Phase II

GRAIN SIZE DISTRIBUTION CURVE

7/92

FIGURE

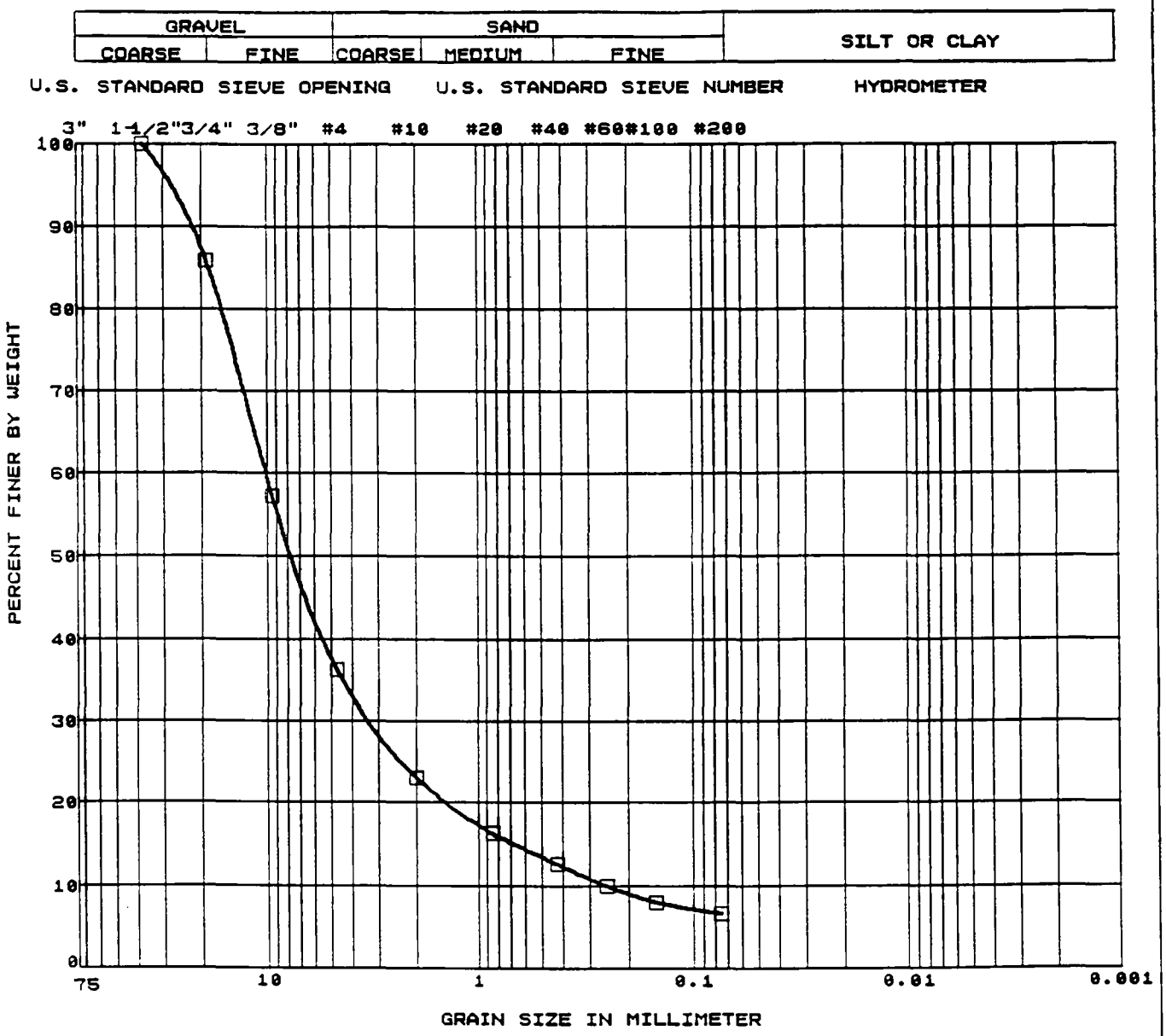

SYMBOL	SAMPLE ID.	SAMPLE TYPE	SOIL TYPE	LIQUID LIMIT	PLASTICITY INDEX
□	PS-117-55	TUBE			

The Earth Technology Corporation

PROJECT NAME: Phoenix-Goodyear Airport Phase II

GRAIN SIZE DISTRIBUTION CURVE

7/92

FIGURE

July 23, 1992

Metcalf & Eddy, Inc.
450 B Street, Suite 1900
San Diego, CA 92101

Attention: Mr. Scott Zachary

Subject: Report/Laboratory Testing Results
Project Name: Phoenix-Goodyear Airport
Project No.: 006791-0001-002
TETC Project No.: 92-371-017801

Dear Mr. Zachary:

Enclosed are results of the laboratory testing program conducted on the samples from the Phoenix Goodyear Airport project. The testing performed for this program was conducted in general accordance with ASTM, API testing procedures as follows:

TYPE OF TEST	TEST PROCEDURE
Dry Density	ASTM D2937
Moisture Content	ASTM D2216
Particle Size Analysis	ASTM D422
Organic Matter Content	ASTM D2974
Constant Head Permeability	ASTM D2434
Falling Head Permeability	EPA 9100

Test results are presented in the Tables and Figures attached.

ASTM: American Society for Testing and Materials, Annual Book of ASTM Standard, Section 4, Volume Soil and Rock; Dimension Stone; Geosysthetics, 1991.

API: American Petroleum Institute routine procedure 40.

EPA: United States Environmental Protection Agency, Test Methods for Evaluating Solid Waste, SW 846 Volume 1C, Labortory Manual Physical/Chemical Methods, November 1986.

We appreciate the opportunity to provide testing services to Metcalf & Eddy, Inc. If you have any questions regarding the test results, please contact us.

Very truly yours,

THE EARTH TECHNOLOGY CORPORATION (Commercial)

S. Sayawatana

Somboon Sayawatana
Staff Engineer

Kean Tan
Manager, Geomechanics Laboratories

APPENDIX K

SVE OPERABLE UNIT DRAFT PLANS AND SPECIFICATIONS (REAR POCKET)

Phoenix - Goodyear Airport
Superfund Site

Soil Vapor Extraction Operable Unit
Final Design

Goodyear, Arizona

For:
Goodyear Tire and Rubber Company
Akron, Ohio

September 10, 1992
Revised: November 25, 1992

LIST OF DRAWINGS

SHEET NO.	DRAWING TITLE
	COVER
P-1	SITE MAP
C-1	POLYGON 79 LAYOUT
M-1	TREATMENT SYSTEM LAYOUT, PIPING AND WELL DETAILS
M-2	EXTRACTION WELLS AND PIPING DETAILS I
M-3	EXTRACTION WELLS AND PIPING DETAILS II
M-4	EXTRACTION WELLS AND PIPING DETAILS III
E-1	ELECTRICAL AND INSTRUMENTATION SYMBOLS
E-2	PROCESS & INSTRUMENTATION DIAGRAM 1
E-3	PROCESS & INSTRUMENTATION DIAGRAM 2
E-4	ELECTRICAL ONE LINE AND INTERCONNECTION DIAGRAM
E-5	ELECTRICAL CONTROL WIRING DIAGRAM
E-6	ELECTRICAL CONTROL PANELS
S-1	EXTRACTION SYSTEM OVERHEAD PIPE RACK AND DETAILS
S-2	OVERHEAD PIPE RACK CONSTRUCTION AND INSTALLATION SPECIFICATIONS

M&E
Metcalf + Eddy

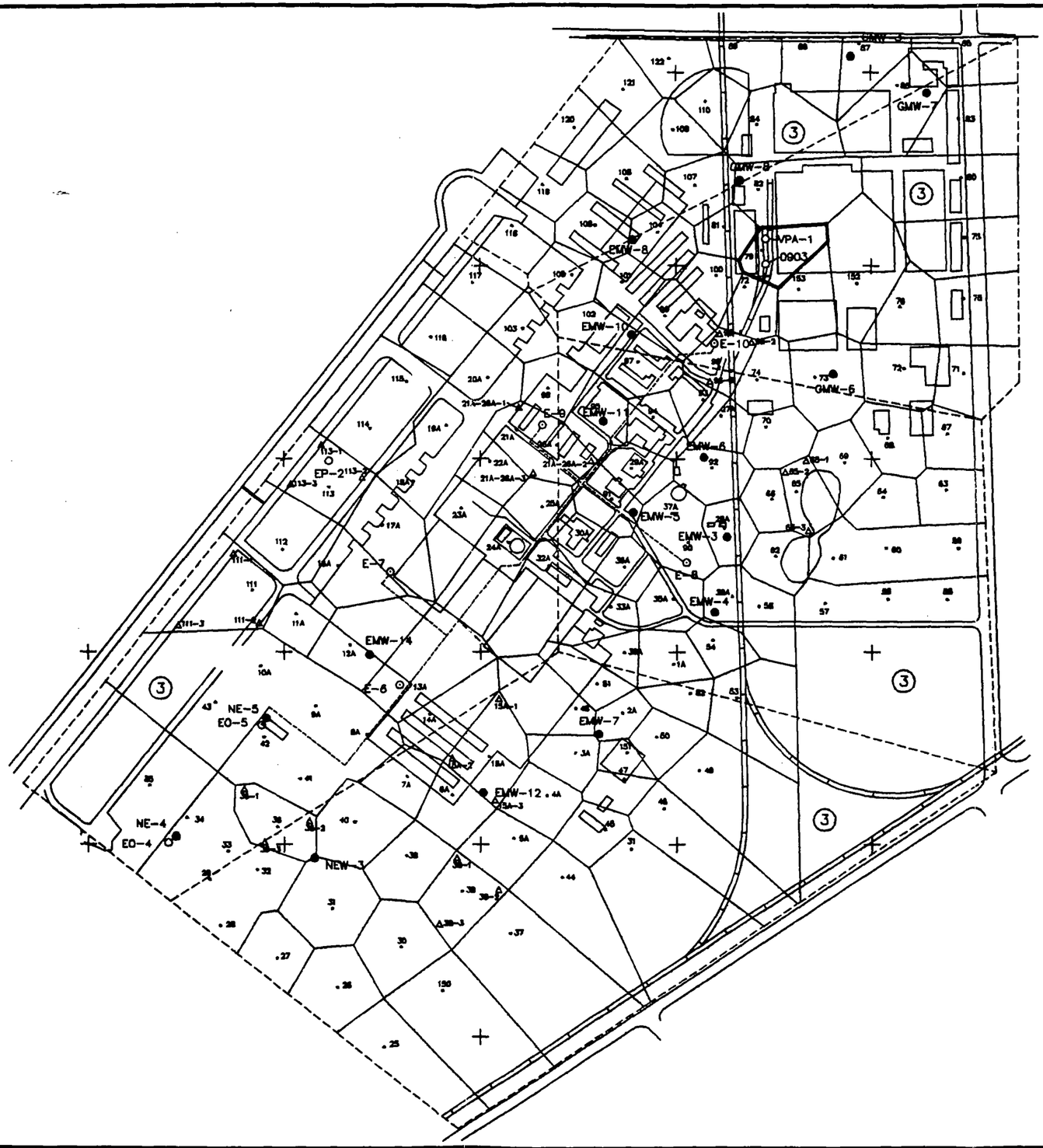

NORTH

LEGEND

- EXTRACTION WELLS
- PHASE I SOIL GAS LOCATION
- NEW MONITORING WELLS
- OBSERVATION WELLS
- 20 SOIL GAS SURVEY LOCATIONS
- AREA OF INFLUENCE FOR VERTICAL DISTRIBUTION DATA
- AREA OF INFLUENCE FOR SOIL GAS SURVEY DATA
- (4) REGION DELINEATION
- TARGET AREA FINAL SVE DESIGN POLYGON

NUMBER	DATE	MADE BY	CHECKED	REVISION DESCRIPTION

METCALF & EDDY

DESIGNED
DRAWN
CHECKED

SCALE: 1"=600' GRID=2000'

MAP
CALIF. R.E. No.
DATE

PGA – Goodyear

APPROVED DATE

SOIL VAPOR EXTRACTION SYSTEM
FINAL DESIGN – POLYGON 79

FINAL SVE DESIGN
POLYGON SITE MAP

DRAWING NO. P-1

SHEET 2 OF 15 SHEETS

6791P-1

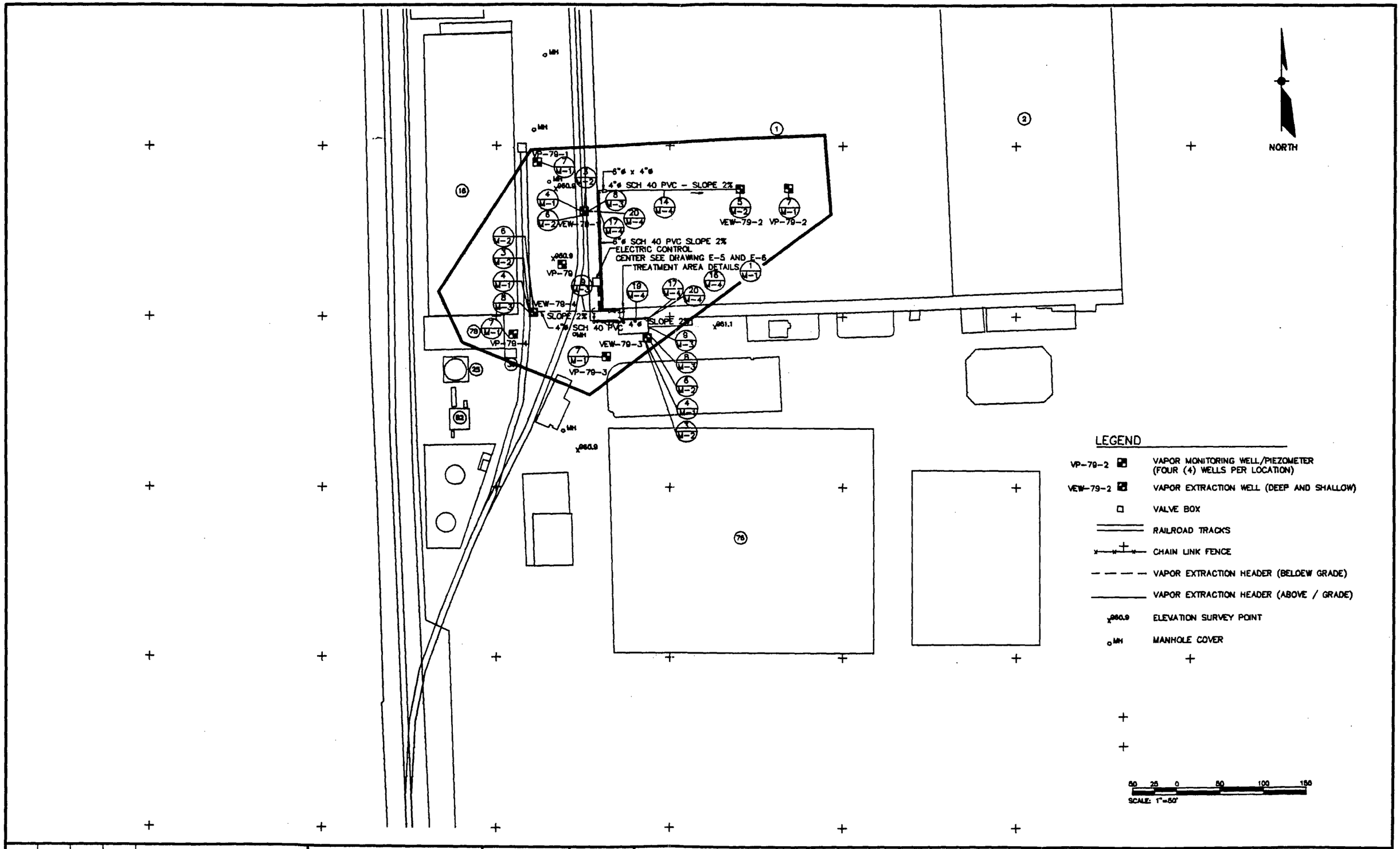

NUMBER	DATE	MADE BY	CHECKED	REVISION DESCRIPTION

METCALF & EDDY

DESIGNED
DRAWN
CHECKED

SCALE: 1"=50'

M.E.
CALIF. R.E. No.
DATE

PGA - Goodyear

APPROVED
DATE

SOIL VAPOR EXTRACTION SYSTEM
FINAL DESIGN - POLYGON 79

POLYGON 79 LAYOUT

DRAWING NO. C-1

SHEET 3 OF 15 SHEETS

679IBASE

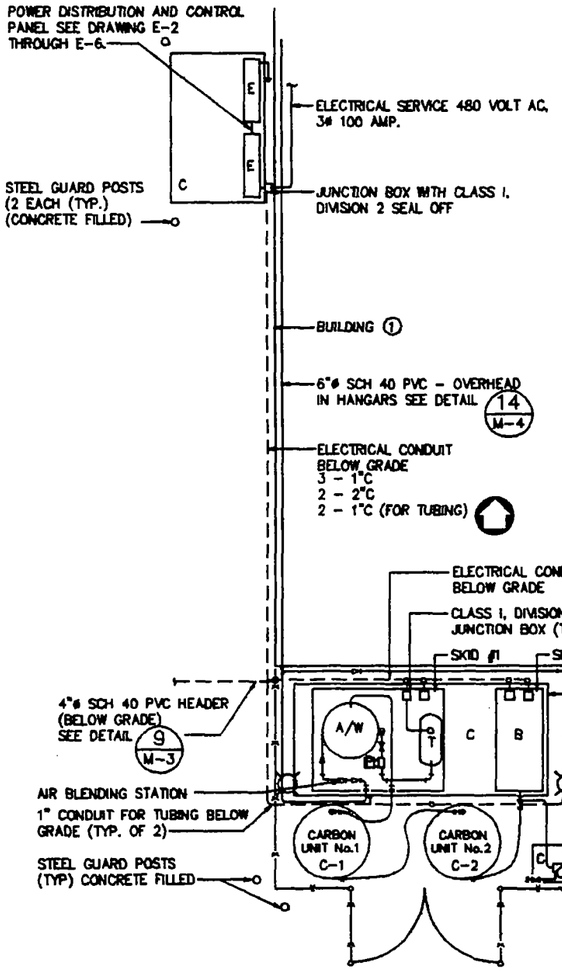

TREATMENT PLANT DETAIL 1/-
SCALE: 1/4"=1'-0"

NOTES:

1. ALL PIPING ON SKIDS #1 AND #2 TO BE 6"ø CARBON STEEL
2. ALL PIPING BETWEEN SKIDS OR WELL HEADERS TO BE SCHEDULE 80 PVC (6"ø) UNLESS OTHERWISE NOTED.
3. ELECTRICAL PANEL LOCATED OUTSIDE CLASS I DIV 2 AREA.
4. PIPING CONNECTIONS BETWEEN SKID #1 TO C-1, C-1 TO C-2, AND C-2 TO B TO BE 6"ø FLEXIBLE SPIRALITE HOSE W/ALUMINUM CAMLOCK FITTINGS
5. FENCE AROUND TREATMENT COMPOUND TO BE 6' HIGH WITH WHITE LATTICE.

LEGEND

A/W= AIR/WATER SEPARATOR
B = BLOWER
C = CONCRETE PAD
C-1 = CARBON VESSEL
T = WATER TANK
P = PUMP
E = ELECTRICAL PAD

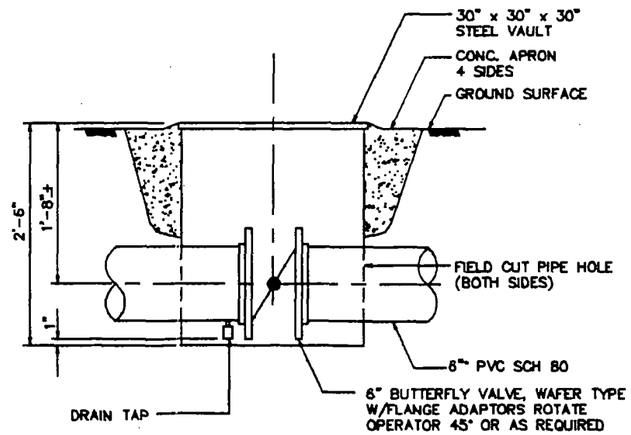

NOTE:
BACKFILL REQUIREMENTS SIMILAR TO EXTRACTION WELL VAULT

VALVE VAULT DETAIL 2/-
SCALE: NONE

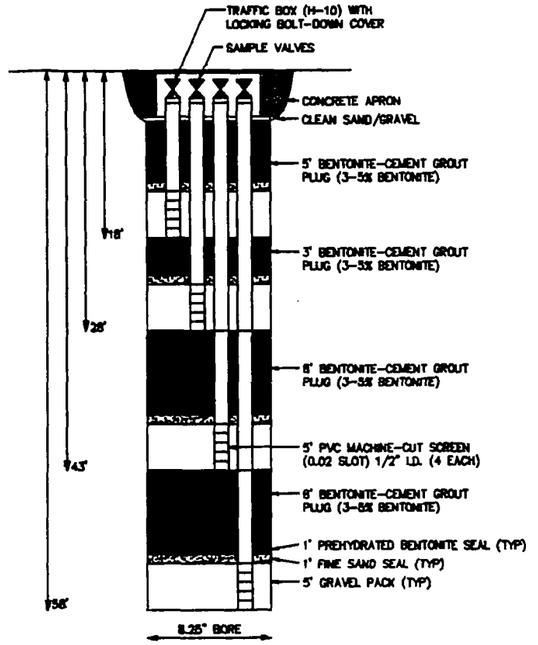

SOIL VAPOR MONITORING WELL DETAIL 7/-
SCALE: NONE (CLUSTER CONSTRUCTION)

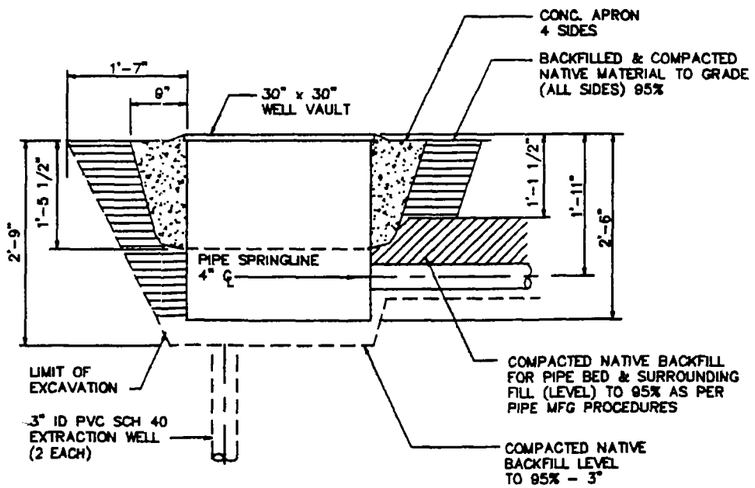

VAULT INSTALLATION DETAIL 4/-
SCALE: NONE

NUMBER	DATE	MADE BY	CHECKED	REVISION DESCRIPTION

METCALF & EDDY

DESIGNED
DRAWN
CHECKED
SCALE:
M&E
CALIF. R.E. No.
DATE

PGA - Goodyear
APPROVED DATE

SOIL VAPOR EXTRACTION SYSTEM
FINAL DESIGN - POLYGON 79
TREATMENT SYSTEM LAYOUT
PIPING AND WELL DETAILS

DRAWING NO. M-1
SHEET 4 OF 15 SHEETS

5791M-1

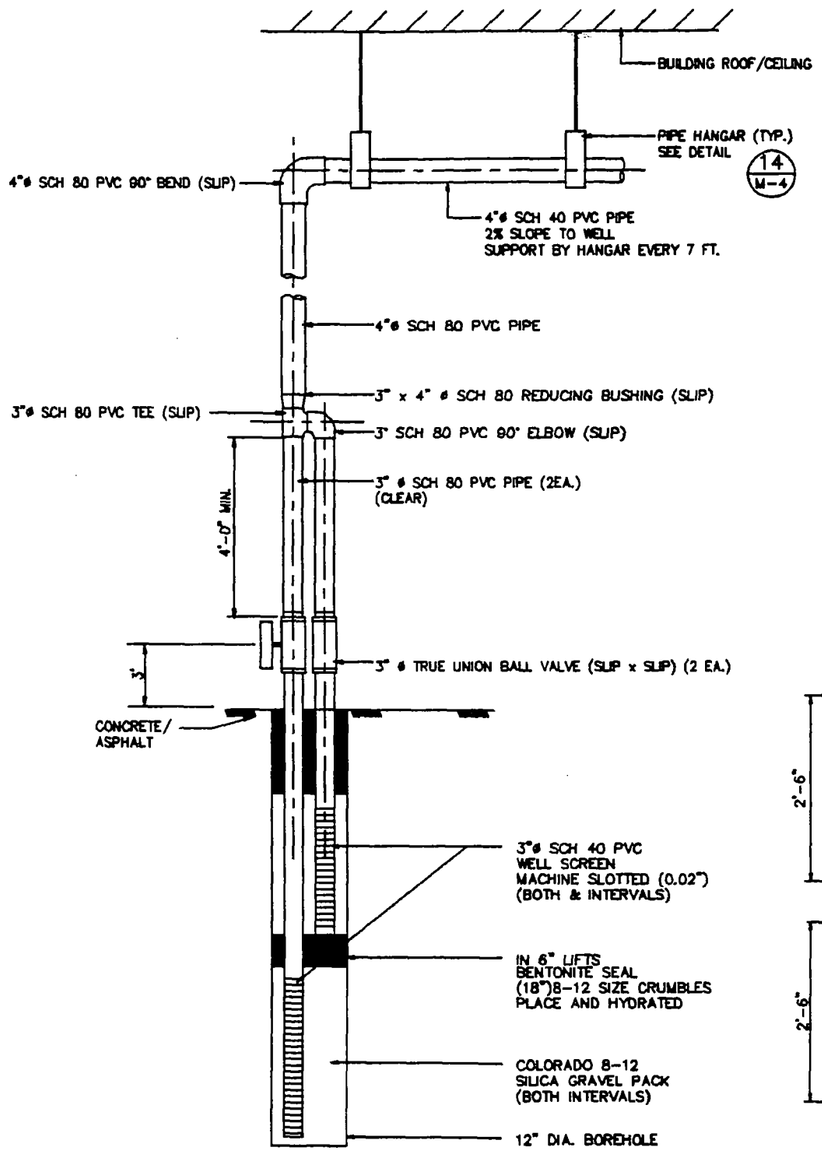

EXTRACTION WELL DETAIL (5)
SCALE: NONE

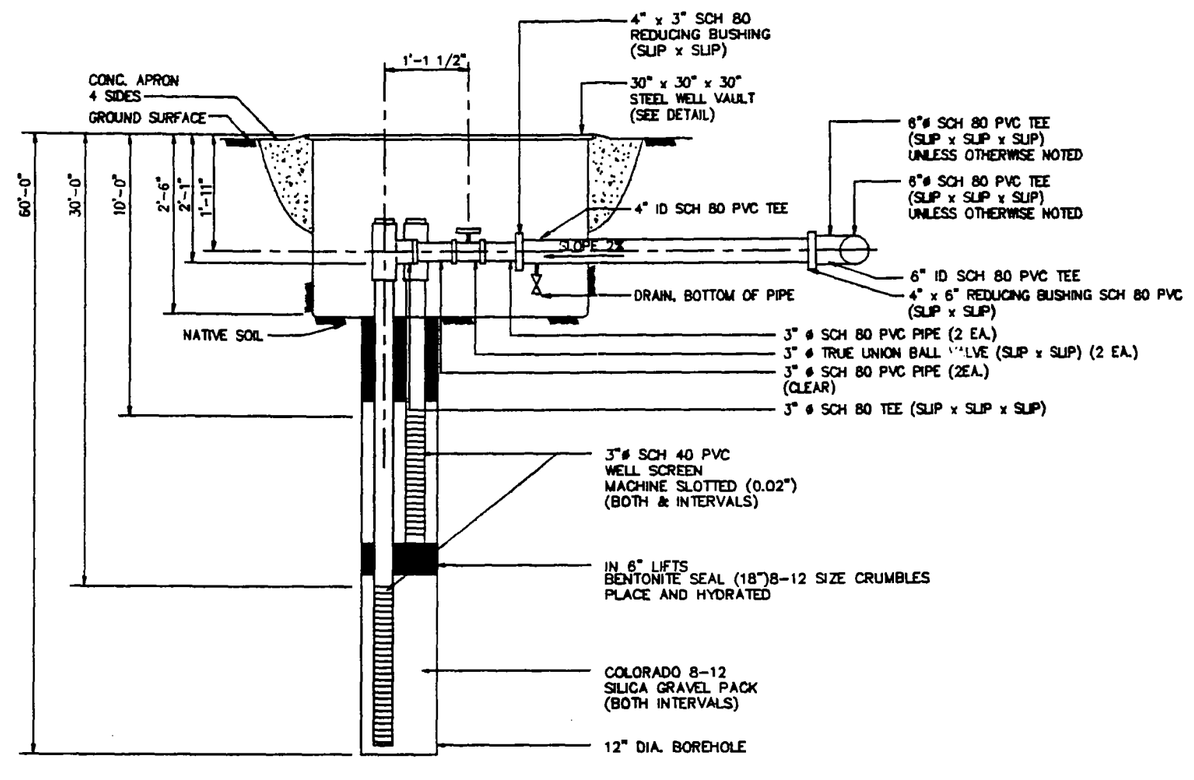

EXTRACTION WELL DETAIL (6)
SCALE: NONE

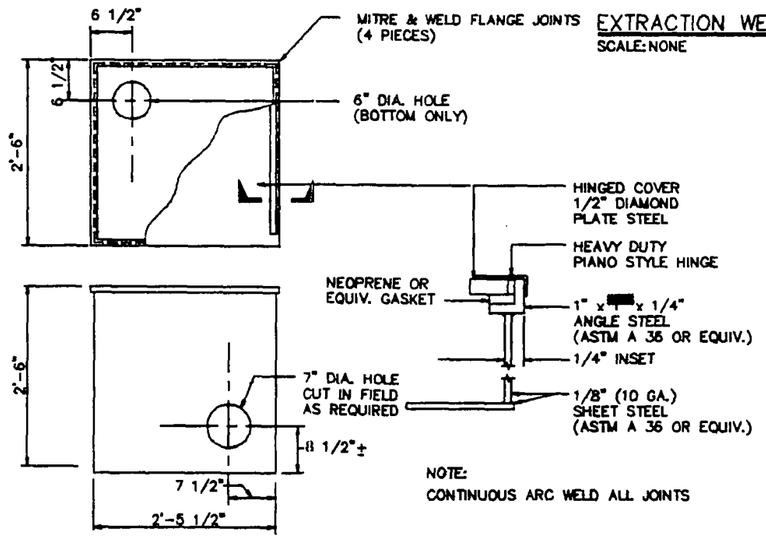

STEEL ROADWAY VAULT DETAIL (3)
SCALE: NONE

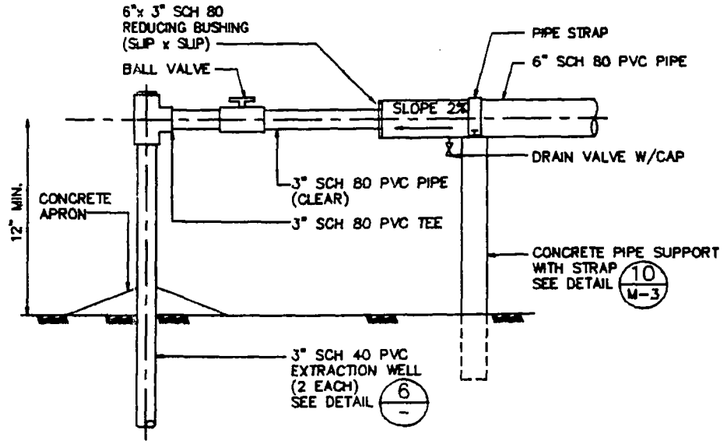

EXTRACTION WELL CONNECTION ABOVE GROUND DETAIL (11)
SCALE: NONE

NUMBER	DATE	MADE BY	CHECKED	REVISION DESCRIPTION

METCALF & EDDY

DESIGNED
DRAWN
CHECKED
SCALE:

HOLE
CALIF. R.E. No.
DATE

PGA – Goodyear

APPROVED
DATE

SOIL VAPOR EXTRACTION SYSTEM
FINAL DESIGN – POLYGON 79

EXTRACTION WELLS AND
PIPING DETAILS I

DRAWING NO. M-2
SHEET 5 OF 15 SHEETS

6781M-2

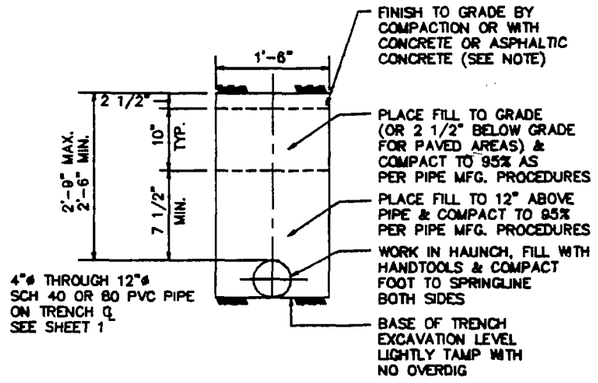

NOTES:

1. ALL TRENCHES NOT REQUIRING ASPHALT CUTTING WILL BE COMPLETED WITH COMPACTED FILL.
2. TRENCHES REQUIRING CONCRETE OR ASPHALTIC CONCRET WILL USE THE FOLLOWING:
   - A – ASPHALTIC CONCRETE: MINERAL AGGREGATE & ASPHALT BINDER, PENETRATION AR4000, AGGREGATE TYPE B, 1/2" MAX., MEDIUM GRADING, CONFORM WITH CALTRANS SEC 29.
   - B – CONCRETE: 3000 PSI COMMERCIAL W/NO ADDITIVES.
3. ALL PIPING TO SLOPE TO WELL OR VALVE BOXES.

TYPICAL TRENCH SECTION DETAIL 9
SCALE: NONE

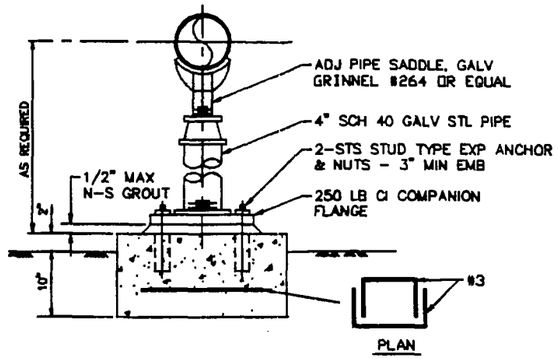

PIPE SUPPORT DETAIL 18
SCALE: NONE

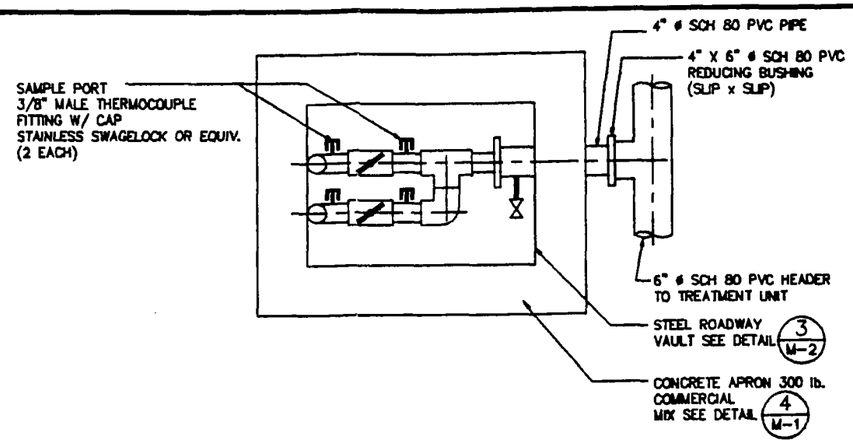

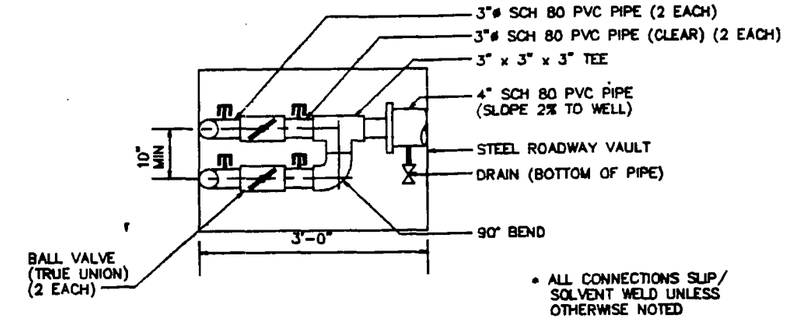

* ALL CONNECTIONS SLIP/SOLVENT WELD UNLESS OTHERWISE NOTED

DUAL EXTRACTION WELL VAULT DETAIL 8
SCALE: NONE

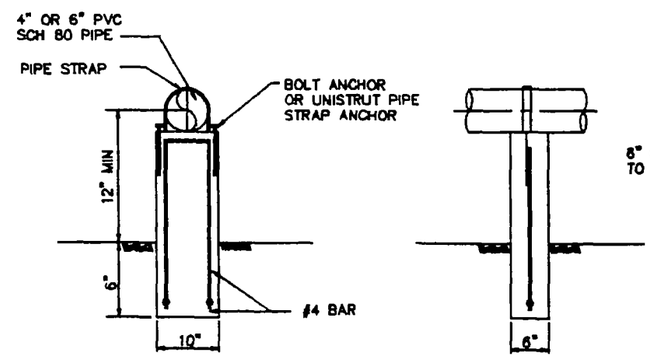

PIPE SUPPORT DETAIL 10
SCALE: NONE

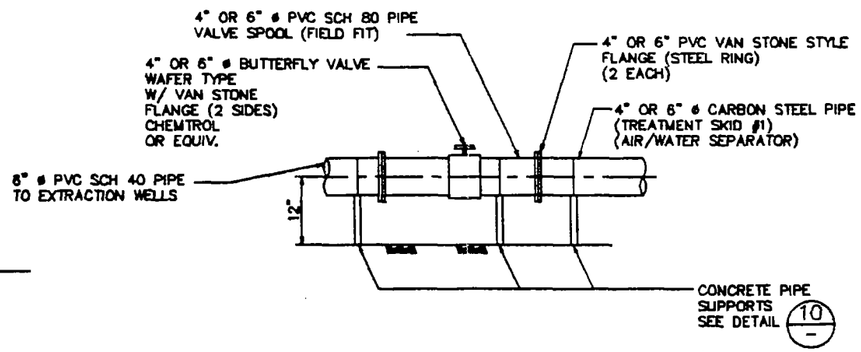

TREATMENT PLANT CONNECTION DETAIL 12
SCALE: NONE

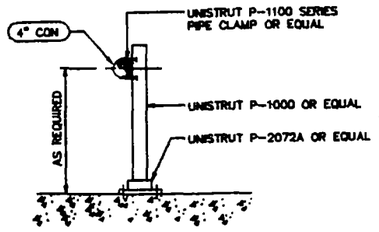

PIPE SUPPORT 13
SCALE: 3/4"=1'–0"

NUMBER	DATE	MADE BY	CHECKED	REVISION DESCRIPTION

METCALF & EDDY

DESIGNED
DRAWN
CHECKED
SCALE
MGR.
CALIF. R.E. No.
DATE

PGA – Goodyear

APPROVED DATE

SOIL VAPOR EXTRACTION SYSTEM
FINAL DESIGN – POLYGON 79

EXTRACTION WELLS AND PIPING DETAILS II

DRAWING NO. M–3
SHEET 6 OF 15 SHEETS

6791M–3

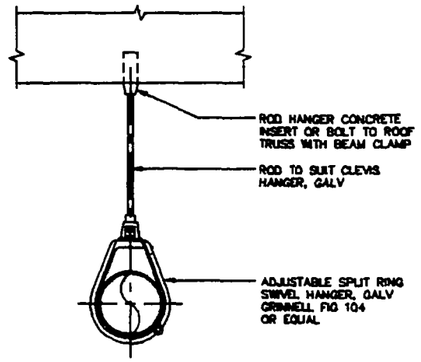

NOTE:

SUPPORT SPAN	6" DIA SCH 80 PVC = 12 FT
	6" DIA SCH 40 PVC = 9 FT
	4" DIA SCH 80 PVC = 10 FT
	4" DIA SCH 40 PVC = 7 FT

PIPE HANGER (14)
SCALE: NONE

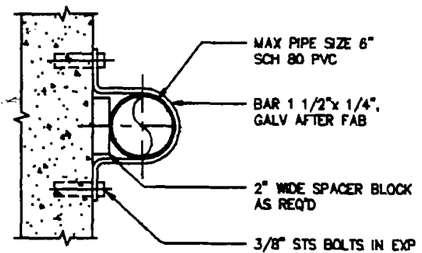

PIPE SUPPORT (15)
SCALE: NONE

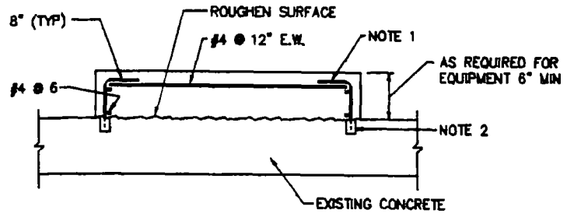

NOTES:
1. 1/2" ø ROD THREADED ONE END AT 12 INCHES O.C. MIN OR AS SIZED ON THE STRUCTURAL SHHETS.
2. AT EACH VERTICAL ROD PROVIDE STAR SLUGIN (2-UNIT THREADED SET FOR 1/2"ø ROD OR 3-UNIT THREADED SET FOR 5/8"ø ROD AND LARGER) COMPOUNDED ANCHOR OR AN ACCEPTABLE EQUIVALENT ACHOR.
3. EQUIPMENT ANCHORS TO BE SET WITH MIN 3" EMB PATTERN BY MFG.

CONCRETE PEDESTAL (16)
SCALE: NONE

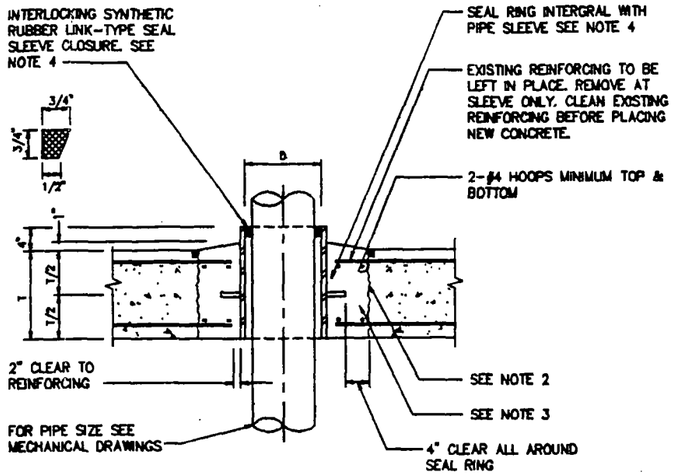

1. THE USE OF HEAVEY-DUTY PNEUMATIC HAMMERS ARE NOT PERMITTED TO REMOVE EXISTING CONCRETE FOR NEW PIPE OPENING.
2. APPLY BONDING AGENT TO ROUGHENED PREPARED CONCRETE SURFACE IN ACCORDANCE WITH MANUFACTURER'S PRINTED INSTRUCTIONS. BONDING AGENT TO BE. LARSEN WELD-CRETE AS MANUFACTURED BY LARSON PRODUCTS CORPORATION OF ROCHVILLE, MARYLAND OR AN ACCEPTABLE EQUIVALENT PRODUCT.
3. AFTER PIPE SLEEVE IS SET, FILL PENETRATION WITH CONCRETE HAVING A MINIMUM COMPRESSIVE STRENGTH OF 4000 LBS. PER SQ INCH AT THE END OF 28 DAYS
4. FOR FLOOR SLEEVES WHERE GASTIGHT OR WATERTIGHT SEALS ARE NOT REQUIRED, THE SEAL MAY BE OMITTED, WHERE IT IS REQUIRED SEE MANUFACTURER'S RECOMMENDATIONS FOR DIAMETER OF PIPE SLEEVE. FOR FLUSH MOUNT APPLICATIONS, USE ROADWAY VAULT 8" DIA. DIVERSIFIED WELL PRODUCTS OR EQUIVALENT.
5. WHEN SEAL IS OMITTED, PACK AND SEAL WITH JOINT COMPOUND SEE NOTE 4.

WALL SLEEVE (17)
SCALE: NONE

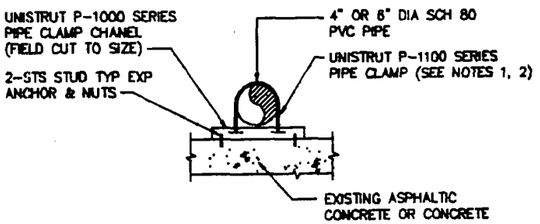

NOTE:
1. DIMENSIONS AND UNISTRUT PART NUMBERS TYPICAL FOR ALL SUPPORTS UNLESS OTHERWISE INDICATED
2. SUPPORT SPAN
   - 6" DIA SCH 80 PVC = 12 FT
   - 6" DIA SCH 40 PVC = 9 FT
   - 4" DIA SCH 80 PVC = 10 FT
   - 4" DIA SCH 40 PVC = 7 FT

PIPE ANCHOR DETAIL (19)
SCALE: NONE

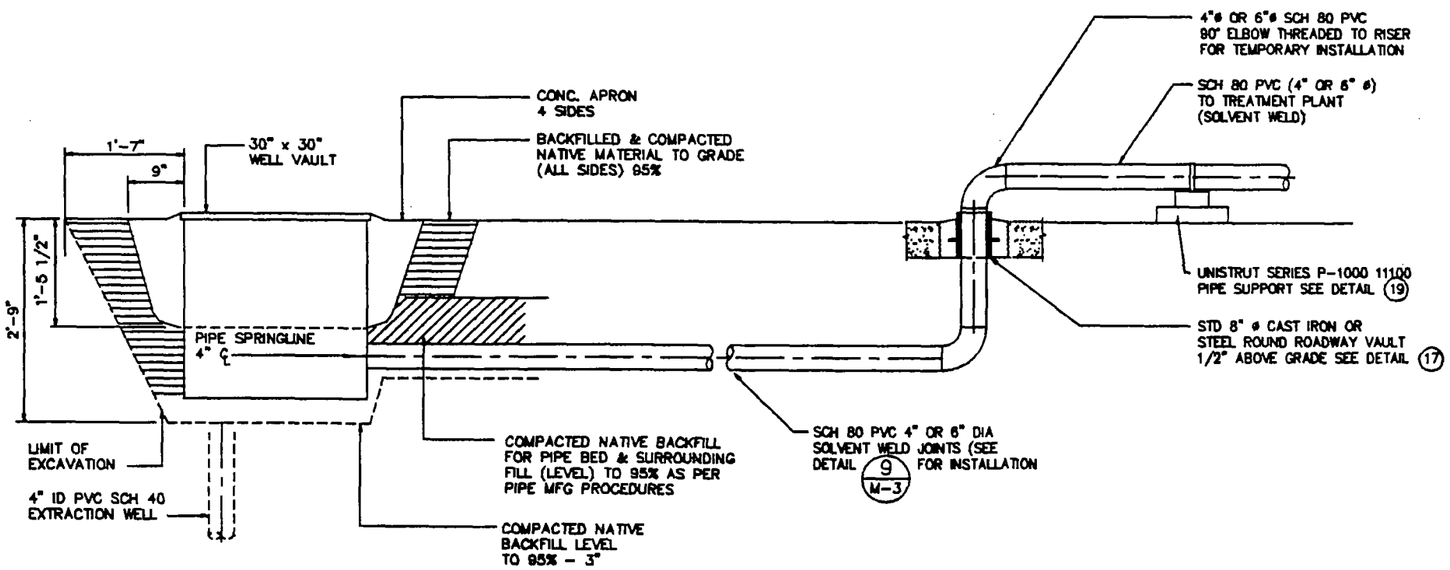

WELL HEADER CONSTRUCTION DETAIL (20)
SCALE: NONE

NUMBER	DATE	MADE BY	CHECKED	REVISION DESCRIPTION

METCALF & EDDY

DESIGNED
DRAWN
CHECKED
SCALE
FILE
CALIF. R.E. No.
DATE

PGA - Goodyear
APPROVED DATE

SOIL VAPOR EXTRACTION SYSTEM
FINAL DESIGN - POLYGON 79
EXTRACTION WELLS AND PIPING DETAILS III

DRAWING NO. M-4
SHEET 7 OF 15 SHEETS

6701M-4

PROCESS FLOW AND INSTRUMENTATION DIAGRAM SYMBOLS

MEANINGS OF IDENTIFICATION LETTERS

THIS TABLE APPLIES ONLY TO THE FUNCTIONAL IDENTIFICATION OF INSTRUMENTS

INSTRUMENT & DEVICE LETTERING TABLE

LETTER	FIRST LETTER VARIABLE	SECOND AND SUCCEEDING LETTERS
A	ANALYSIS	ALARM
B	BURNER FLAME	CLOSE OR DECREASE
C	CONDUCTIVITY	CONTROL
D	DENSITY	OPEN OR INCREASE
E	VOLTAGE (EMF)	PRIMARY ELEMENT
F	FLOW RATE	FAILURE
G	USER CHOICE	
H	HAND (MANUAL)	HIGH
I	CURRENT (ELECT)	INDICATE
J	POWER	LIGHT
K	TIME	CONTROL STATION
L	LEVEL	LOW
M	MOTOR	OPERATE OR ON/OFF
N	MOISTURE	START/STOP OR OPEN/CLOSE
O	TORQUE	OVERLOAD
P	PRESSURE OR VACUUM	
Q	COMMON	TOTALIZE
R	RADIOACTIVITY	RECORDER
S	SPEED OR FREQUENCY	SWITCH
T	TEMPERATURE	TRANSMITTER
U	MULTIVARIABLE	MULTIFUNCTION
V	VALVE OR DAMPER	
W	WEIGHT OR FORCE	
X	VIBRATION, MOTION	EXCESS
Y	COMPUTER	RELAY OR CONTROL
Z	POSITION	DRIVE, ACTUATE OR FINAL CONTROL ELEMENT

INSTRUMENT LINES

- CONNECTION TO PROCESS, OR MECHANICAL LINK, OR INSTRUMENT SUPPLY
- ELECTRICAL SIGNAL
- ELECTRICAL POWER, 115 V, 60 Hz
- PNEUMATIC SIGNAL
- ELECTRICAL INTERLOCK SEE ELECTRICAL WIRING DIAGRAM

- CHECK VALVE
- GATE VALVE
- GLOBE VALVE
- SWING CHECK VALVE
- BUTTERFLY VALVE
- NEEDLE VALVE
- VACUUM RELIEF VALVE
- MOTOR
- REDUCER
- NIC — NOT IN CONTRACT
- NO — NORMALLY OPEN
- NC — NORMALLY CLOSED
- PITOT TUBE
- CENTRIFUGAL PUMP
- POSITIVE DISPLACEMENT BLOWER
- TELEMETRY ANALOG INPUT
- TELEMETRY ANALOG OUTPUT
- TELEMETRY CONTACT INPUT
- TELEMETRY CONTACT OUTPUT
- AIR FILTER
- SG 506 — SITE GLASS
- SAMPLE TAP
- FIRST LETTER
- SUCCEEDING LETTERS (SEE TABLE ABOVE)
- AIC 506 — LOOP NUMBER
- AT 506 — FIELD MOUNTED INSTRUMENT
- AR pH 506 — PANEL MOUNTED INSTRUMENT
- PANEL MOUNTED BEHIND THE BOARD
- HOA — HAND-OFF-AUTOMATIC
- SS — START-STOP

ONE LINE & CONTROL DIAGRAM SYMBOLS

- 15/100 — MOLDED CASE CIRCUIT BREAKER, THERMAL MAGNETIC TRIP, 3 - POLE UNO, UPPER NUMERAL INDICATES TRIP SETTING, LOWER NUMERAL INDICATES FRAME SIZE.
- 3/MCP — MOTOR CIRCUIT PROTECTOR, NUMERAL INDICATES CONTINUOUS CURRENT RATING.
- 3 — CT = CURRENT TRANSFORMER, NUMERAL DENOTES QUANTITY
- TRANSFORMER, RATING AND VOLTAGE AS SHOWN

MAGNETIC STARTER

FVNR 2

- FVNR = FULL VOLTAGE, NON-REVERSING
- FVR = FULL VOLTAGE, REVERSING
- RVAT = REDUCED VOLTAGE, NON-REVERSING AUTO-TRANSFORMER TYPE
- RVSS = REDUCED VOLTAGE SOLID STATE
- VFD = VARIABLE FREQUENCY DRIVE
- C = MAGNETIC CONTACTOR (WITHOUT O.L.)
- NUMERAL INDICATES NEMA SIZE

- COMPONENT OUTLINE
- (5) — SQUIRREL CAGE INDUCTION MOTOR, HORSEPOWER INDICATED
- GROUND
- CONDUCTOR CROSSING - NOT CONNECTED
- CONDUCTOR CROSSING - CONNECTED
- OVERLOAD HEATERS
- FUSE
- CONTROL POWER TRANSFORMER
- THREE POSITION SWITCH H-O-A HAND-OFF-AUTOMATIC

- NORMALLY OPEN CONTACT - COIL DEENERGIZED
- NORMALLY CLOSED CONTACT - COIL DEENERGIZED
- FIELD MOUNTED EQUIPMENT
- POWER DISTRIBUTION MODULE TERMINALS
- INSTRUMENT TERMINALS
- TELEMETRY TERMINALS
- LIMIT SWITCH
- LOCKOUT STOP MOMENTARY TYPE PUSHBUTTON
- MOMENTARY PUSHBUTTON--NORMALLY CLOSED
- MOMENTARY PUSHBUTTON--NORMALLY OPEN
- NORMALLY OPEN, TIME DELAY CLOSE - ON DELAY
- NORMALLY CLOSED, TIME DELAY OPEN - OFF DELAY
- FLOAT SWITCH
- PRESSURE SWITCH, NORMALLY CLOSED OPENS ON RISING PRESSURE
- (G) — INDICATING LAMP A=AMBER, G=GREEN, R=RED, W=WHITE
- (M) OLS — MAGNETIC CONTACTOR COIL WITH OVERLOAD CONTACTS
- (TDR) — TIME DELAY RELAY COIL
- ETM — ELAPSED TIME METER
- FUSE, RATING INDICATED
- 200A — DISCONNECT SWITCH, NUMERAL INDICATES RATING
- EYS (EXPLOSION PROOF) SEAL

PLAN SYMBOLS

- (M) — INDUCTION MOTOR - FOR HORSEPOWER RATING SEE PANELBOARD SCHEDULE OR ONE LINE DIAGRAM
- PUSHBUTTON OR CONTROL SWITCH IN NEMA 4 ENCLOSURE. SEE CONTROL DIAGRAMS. SEE DETAILS FOR MOUNTING. (4 = NEMA 4 ENCLOSURE, ETC)
- CONDUIT RUN. IF UNMARKED, CONDUIT IS 3/4" 2#12 CIRCUIT WIRES, 1#12 GROUND WIRE. CROSS LINES INDICATE NUMBER OF #12 WIRES IF MORE THAN TWO. LONG CROSS LINE INDICATES GROUND. SIZE CONDUIT PER NEC.
- LA-2 — HOME RUN FROM DEVICE TO PANEL LA. CIRCUIT NO. 2
- CONDUIT TURNING UP OR TOWARD OBSERVER
- CONDUIT TURNING DOWN OR AWAY FROM OBSERVER
- CONDUIT RUNS EXPOSED

- —T— CONDUIT FOR TELEPHONE COMPANY'S WIRING
- CONCEALED CONDUIT UNLESS NOTED OTHERWISE
- —G— GROUND WIRE
- —E— CONCEALED CONDUIT IN CONCRETE DUCT BANK
- CONDUIT (EMPTY) STUBBED OUT AND CAPPED
- LIQUID TIGHT FLEXIBLE CONDUIT
- GROUND ROD
- JUNCTION BOX - NEMA 1, NEMA 4 OUTDOORS
- PIT 508 — INSTRUMENT CALLOUT - SEE INSTRUMENTATION SYMBOL LIST FOR IDENTIFICATION. **
- ** WIRING ONLY BY ELECTRICAL CONTRACTOR

NUMBER	DATE	MADE BY	CHECKED	REVISION DESCRIPTION

M&E METCALF & EDDY

DESIGNED ____ DRAWN ____ CHECKED ____ SCALE: NONE

M&E ____ DATE ____ CALIF. R.E. No. ____

PGA - Goodyear

APPROVED ____ DATE ____

SOIL VAPOR EXTRACTION SYSTEM
FINAL DESIGN - POLYGON 79

ELECTRICAL AND INSTRUMENTATION SYMBOLS

DRAWING NO. E-1

SHEET 8 OF 15 SHEETS

8791E-1

REMOTE

TELEMETRY SYSTEM

POWER DISTRIBUTION MODULE

FSL 07

AAH 08

HCY

E — AE 08

FAL 07

LAHH 03

HOA

HS 03

MS 03

LAHH 05

TO E-3

AAH 11

HCy

E — AE 11

CX

SKID No. 1

DILUTION AIR FILTER SILENCER

6"

E — FE 07

DILUTION AIR BLENDING VALVE

HEADER FROM WELLS

500 SCFM
70° F

6"
NO

30-0"Hg
PI 02

6"

SAMPLE TAP (TYP)

FE 01

FI 01

3/4"

NO

LSHH 03

LG 04

LSH 03

LSL 03

3/4"

NO

2"

NO

NC

CAPPED DRAIN

AIR/WATER SEPARATOR
150 GAL
29" Hg

M

PUMP P1
20 GPM
20 FT
1.5 Hp
120V 1ø

1 1/2"

NO

LSHH 05

NO

LG 08

NO

CONDENSED LIQUID STORAGE, 250 GAL

0-50" H_2O
DPI 23

NO

NO

FILTER

30-0" Hg
PI 09

TI 15
0-250° F

6" ø REINFORCED FLEXIBLE SPIRALITE OR EQUIV. TUBING

PSV 10
15" Hg
500 SCFM

CARBON BED GAC 1
4'-0" DIAM x 7'-3"
2000# CARBON
16" Hg (MIN)

6" ø REINFORCED FLEXIBLE SPIRALITE OR EQUIV. TUBING

RIGID CARBON STEEL SPOOL FOR ANALYTICAL INSTRUMENT AE-11

PSV 12
15" Hg
500 SCFM

CARBON BED GAC 2
4'-0" DIAM x 7'-3"
2000# CARBON
16" Hg (MIN)

30-0" Hg
PI 13

6"

TO E-3

NOTE:
ALUMINUM CAMLOCK FITTINGS TO CONNECT 6" ø SPIRALITE TUBING TO CARBON VESSELS AND SKID MOUNTED PIPING.
(CAMLOCKS TO HAVE DOG TIES - 2 EACH)

NUMBER	DATE	MADE BY	CHECKED	REVISION DESCRIPTION

6791PID2

M&E METCALF & EDDY

DESIGNED
DRAWN
CHECKED

SCALE: NONE

M.E. DATE
CALIF. RE. No. DATE

PGA - Goodyear

APPROVED DATE

SOIL VAPOR EXTRACTION SYSTEM
FINAL DESIGN - POLYGON 79

PROCESS & INSTRUMENTATION DIAGRAM 1

DRAWING NO. E-2

SHEET 9 OF 15 SHEETS

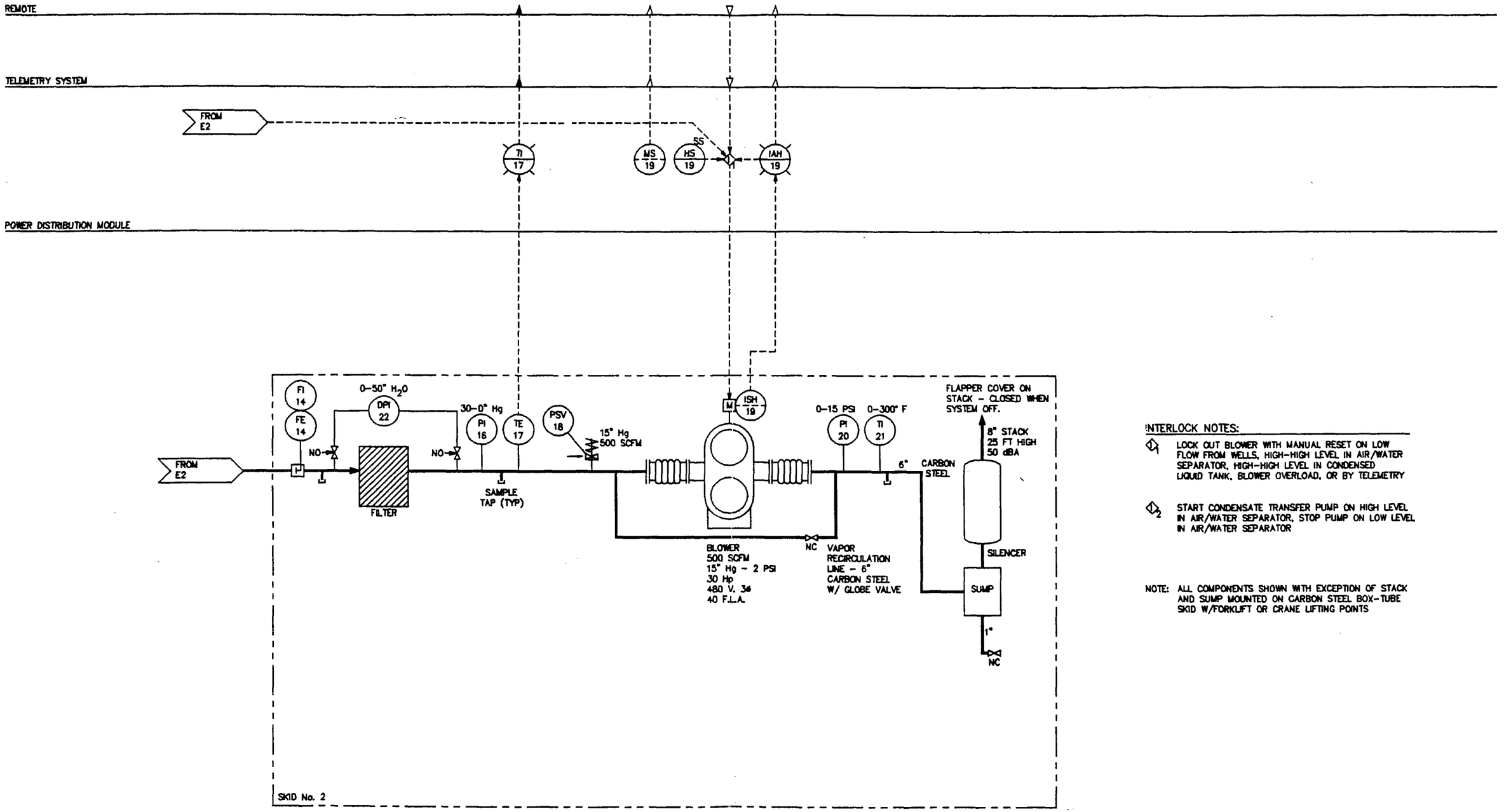

INTERLOCK NOTES:

1. LOCK OUT BLOWER WITH MANUAL RESET ON LOW FLOW FROM WELLS, HIGH-HIGH LEVEL IN AIR/WATER SEPARATOR, HIGH-HIGH LEVEL IN CONDENSED LIQUID TANK, BLOWER OVERLOAD, OR BY TELEMETRY

2. START CONDENSATE TRANSFER PUMP ON HIGH LEVEL IN AIR/WATER SEPARATOR, STOP PUMP ON LOW LEVEL IN AIR/WATER SEPARATOR

NOTE: ALL COMPONENTS SHOWN WITH EXCEPTION OF STACK AND SUMP MOUNTED ON CARBON STEEL BOX-TUBE SKID W/FORKLIFT OR CRANE LIFTING POINTS

NUMBER	DATE	MADE BY	CHECKED	REVISION DESCRIPTION

METCALF & EDDY

DESIGNED
DRAWN
CHECKED

SCALE: NONE

M.E. DATE
CALIF. R.E. No. DATE

PGA - Goodyear

APPROVED DATE

SOIL VAPOR EXTRACTION SYSTEM
FINAL DESIGN - POLYGON 79

PROCESS & INSTRUMENTATION DIAGRAM 2

DRAWING NO. E-3

SHEET 10 OF 15 SHEETS

6791E-3

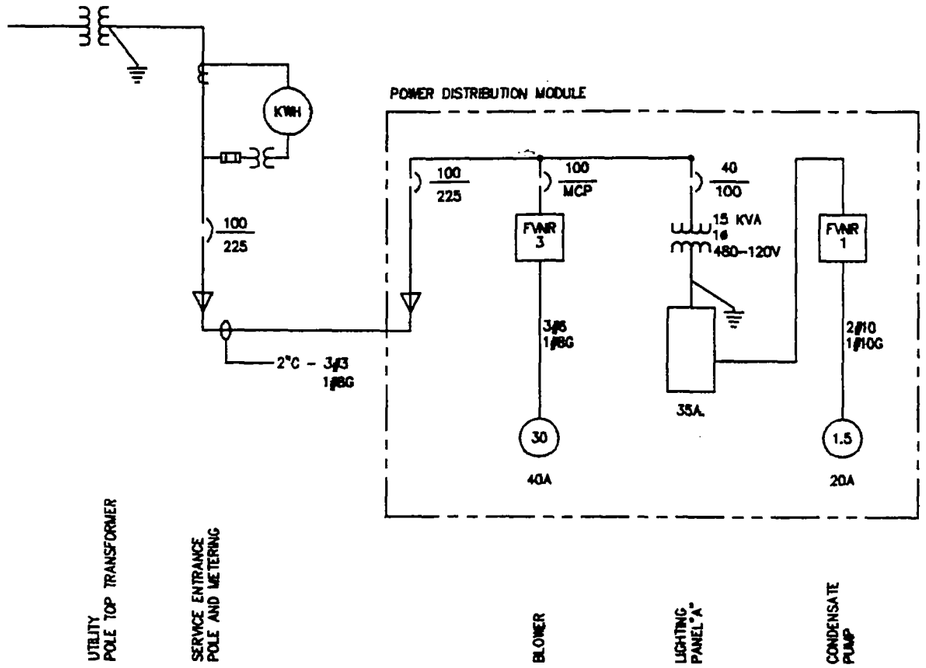

ONE LINE DIAGRAM

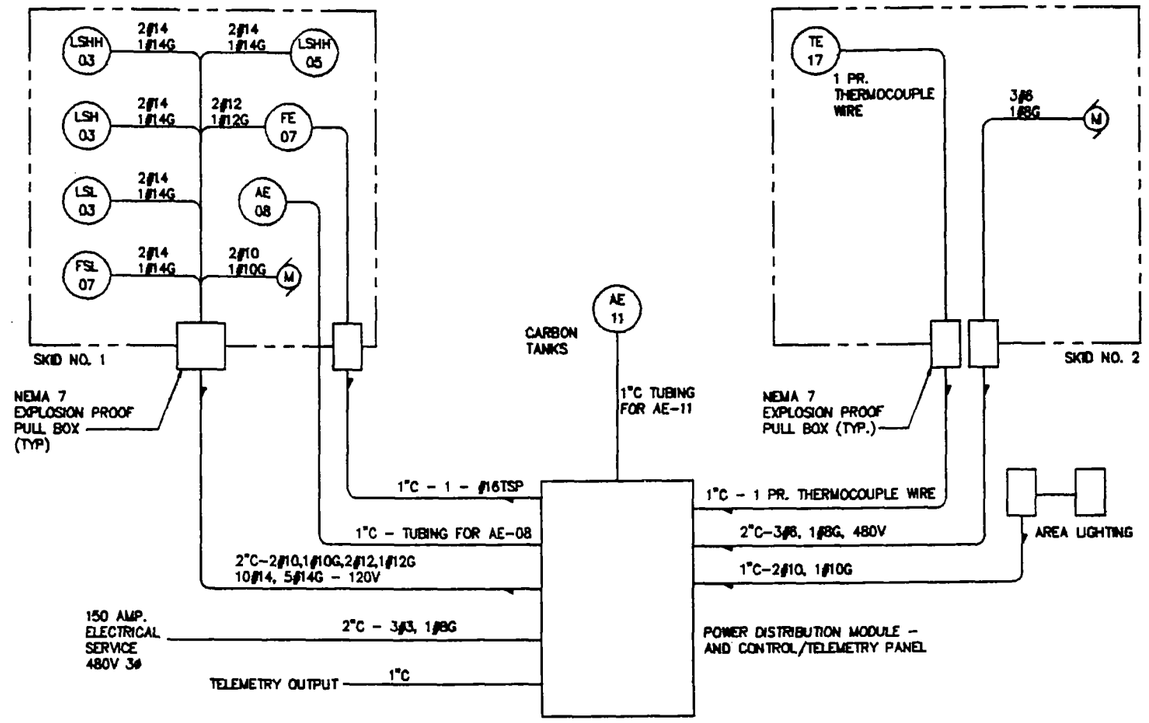

ELECTRICAL INTERCONNECTION DIAGRAM

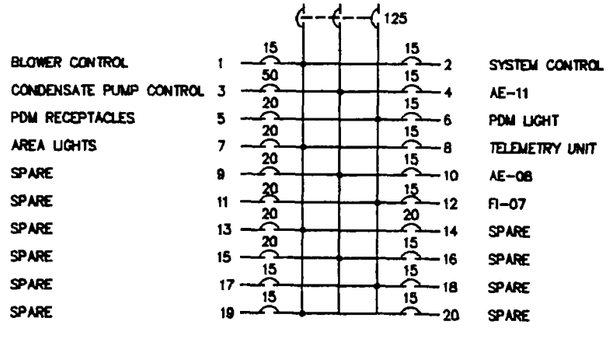

PANEL "A" SCHEDULE

- ALL RECEPTACLE CIRCUITS TO HAVE GROUND FAULT CIRCUIT INTERUPTER TYPE CIRCUIT BREAKER

NUMBER	DATE	MADE BY	CHECKED	REVISION DESCRIPTION

M&E METCALF & EDDY

DESIGNED ____ SCALE:
DRAWN ____
CHECKED ____

FILE ____ DATE ____
CALIF. R.E. No. ____

PGA – Goodyear

APPROVED ____ DATE

SOIL VAPOR EXTRACTION SYSTEM
FINAL DESIGN – POLYGON 79

ELECTRICAL
ONE LINE AND INTERCONNECTION DIAGRAM

DRAWING NO. E-4
SHEET 11 OF 15 SHEETS

67915-4

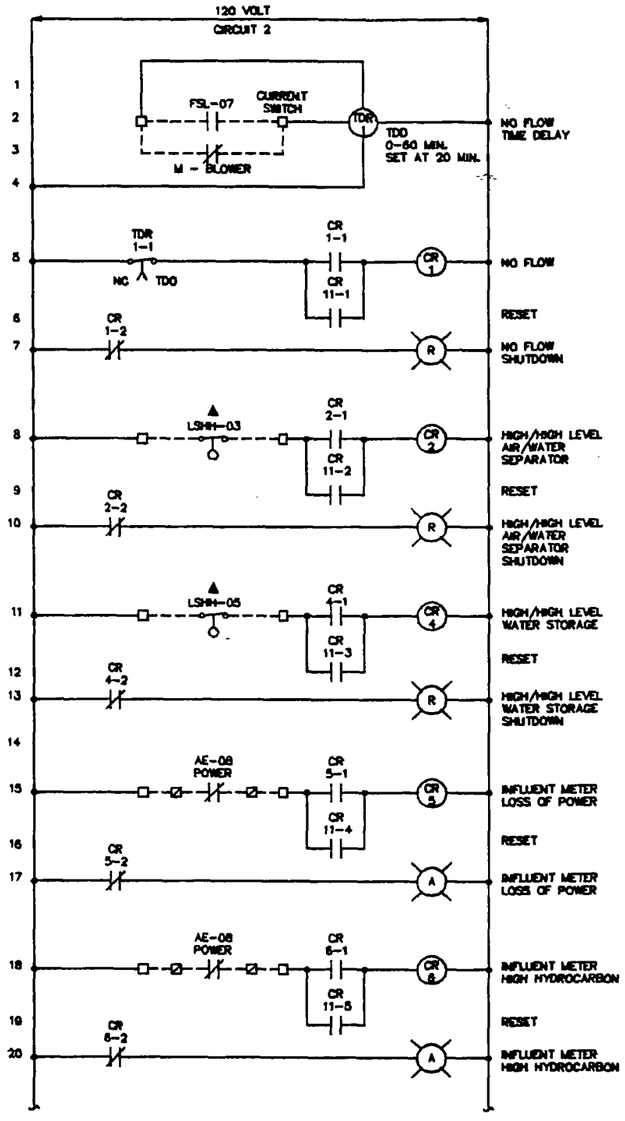

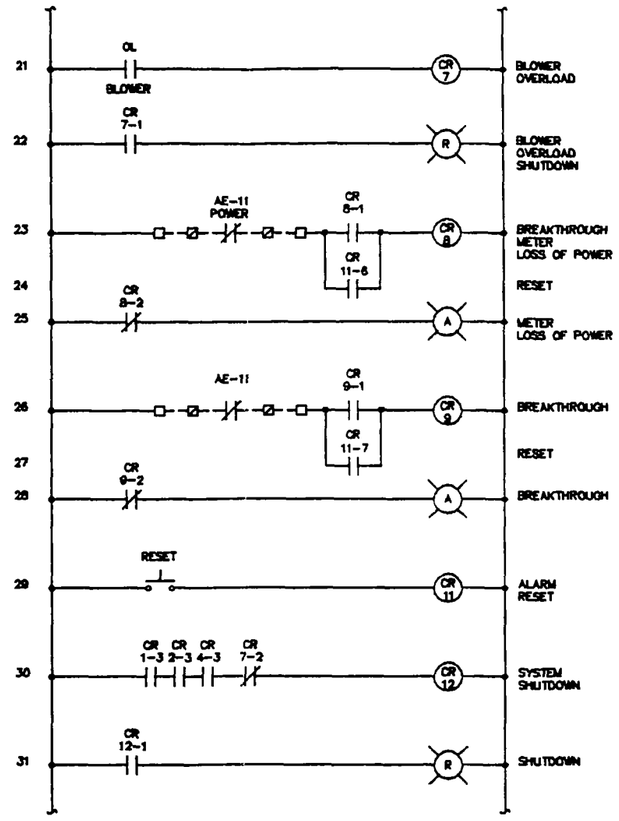

SYSTEM CONTROL DIAGRAM

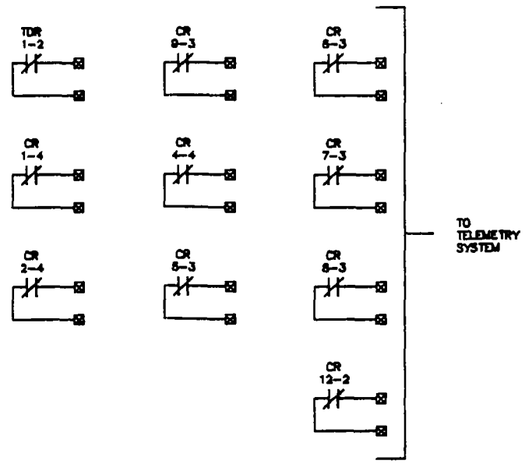

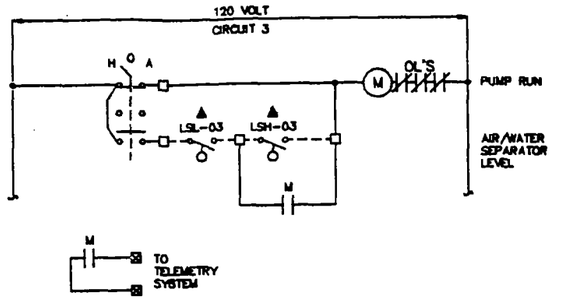

CONDENSATE TRANSFER PUMP WIRING DIAGRAM

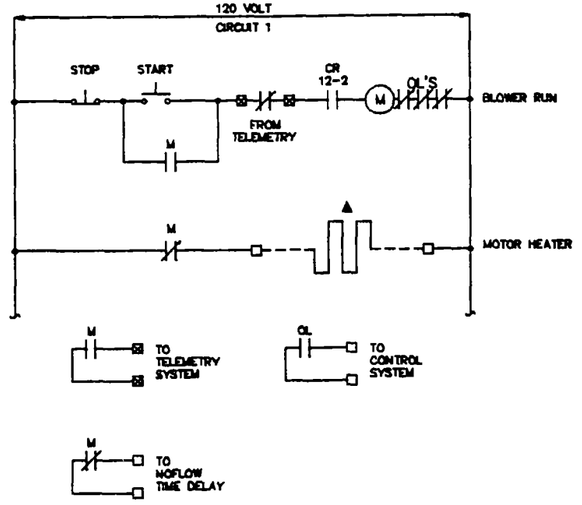

BLOWER WIRING DIAGRAM

NUMBER	DATE	MADE BY	CHECKED	REVISION DESCRIPTION

METCALF & EDDY

DESIGNED
DRAWN
CHECKED
SCALE:
DATE
CALIF. R.E. No.

PGA – Goodyear

APPROVED DATE

SOIL VAPOR EXTRACTION SYSTEM
FINAL DESIGN – POLYGON 79

ELECTRICAL CONTROL WIRING DIAGRAM

DRAWING NO. E-5

SHEET 12 OF 15 SHEETS

6781E-5

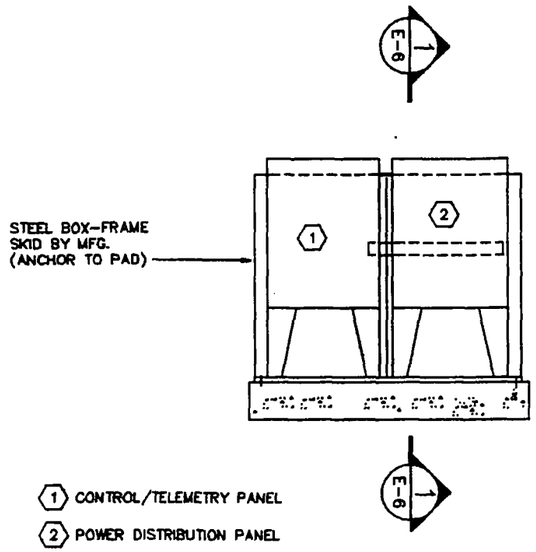

ELEVATION

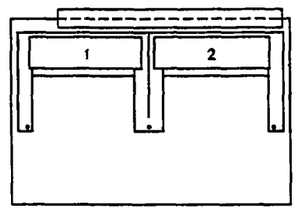

PLAN

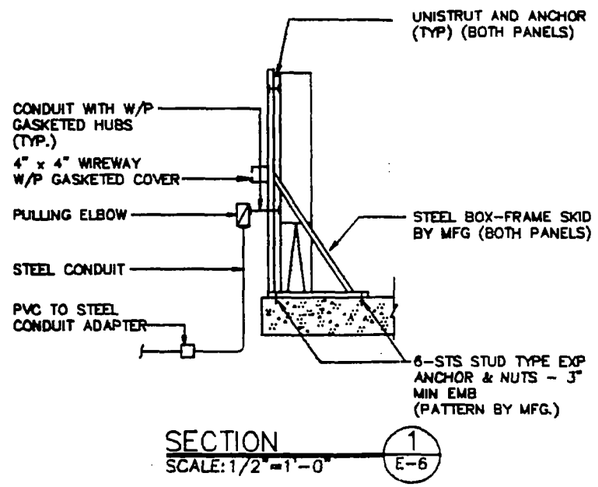

SECTION 1/E-6
SCALE: 1/2"=1'-0"

ELECTRICAL CONTROL PANELS

SCALE: NONE

NUMBER	DATE	MADE BY	CHECKED	REVISION DESCRIPTION

METCALF & EDDY

DESIGNED
DRAWN
CHECKED
SCALE
NAME
CALIF. R.E. No.
DATE
APPROVED
DATE

PGA – Goodyear

SOIL VAPOR EXTRACTION SYSTEM
FINAL DESIGN – POLYGON 79

ELECTRICAL CONTROL PANELS

DRAWING NO. E-6
SHEET 13 OF 15 SHEETS

6791E-6

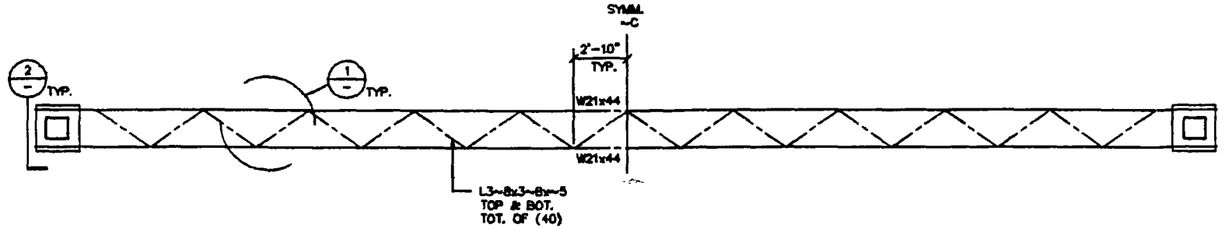

FRAMING PLAN
SCALE: 1/4" = 1'-0"

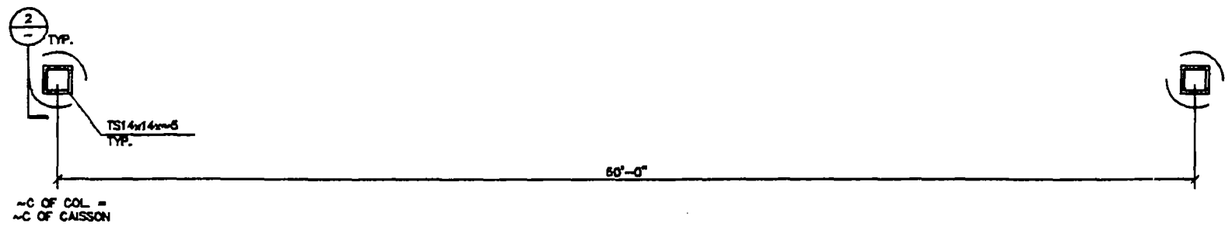

FOUNDATION PLAN
SCALE: 1/4" = 1'-0"

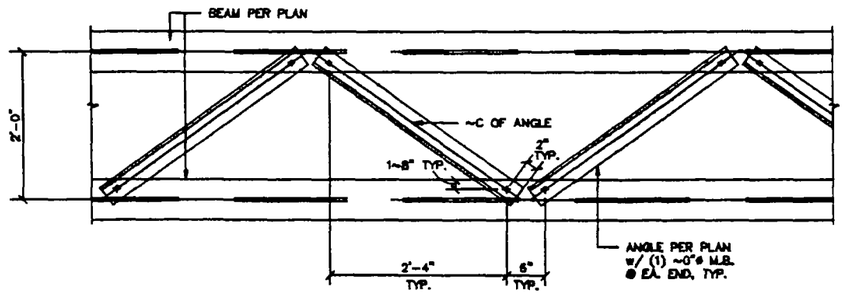

DETAIL 1
SCALE: 1" = 1'-0"

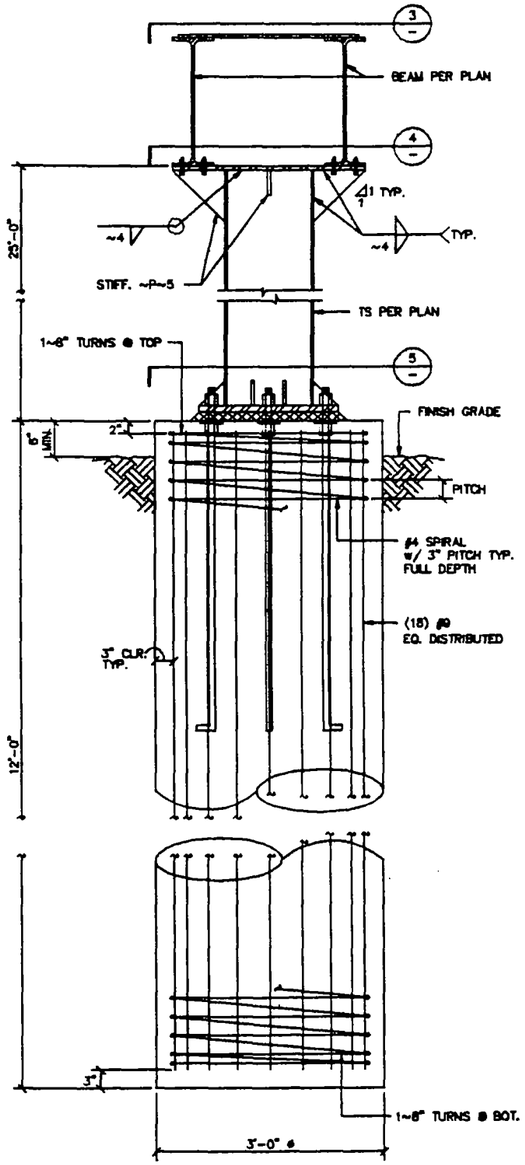

DETAIL 2
SCALE: 1" = 1'-0"

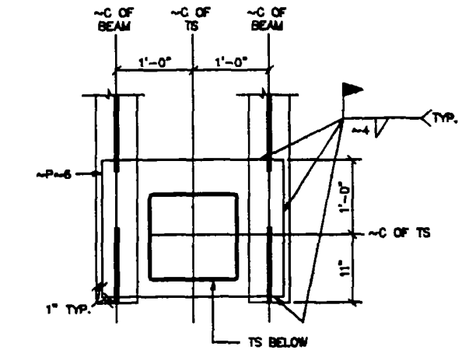

DETAIL 3
SCALE: 1" = 1'-0"

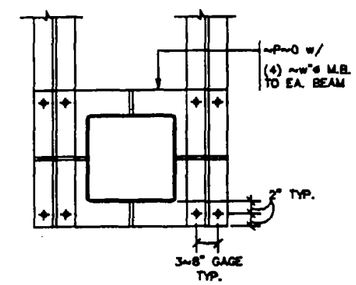

DETAIL 4
SCALE: 1" = 1'-0"

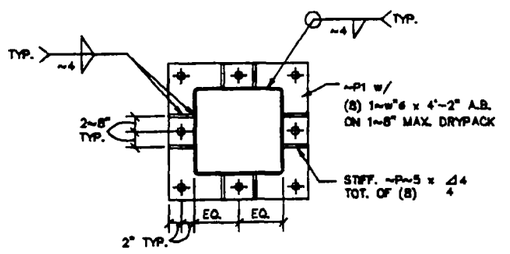

DETAIL 5
SCALE: 1" = 1'-0"

NUMBER	DATE	MADE BY	CHECKED	REVISION DESCRIPTION

M&E METCALF & EDDY

DESIGNED
DRAWN
CHECKED
SCALE:

HDE
CALIF. R.E. No.
DATE

PGA – Goodyear

APPROVED
DATE

SOIL VAPOR EXTRACTION SYSTEM
FINAL DESIGN – POLYGON 79

EXTRACTION SYSTEM OVERHEAD PIPE RACK AND DETAILS

DRAWING NO. S-1
SHEET 14 OF 15 SHEETS

6791S-1

REINFORCING STEEL

1. FABRICATION AND PLACEMENT SHALL CONFORM TO WCRSI "MANUAL OF STANDARD PRACTICE" AND "CRSI RECOMMENDED PRACTICE FOR PLACING REINFORCING BARS".
2. REINFORCING STEEL TO BE INTERMEDIATE GRADE COMPLYING WITH ASTM A 615, GRADE 60 FOR CONCRETE. BEND BARS COLD.
3. REINFORCING STEEL IN CONCRETE TO LAP WHERE SPLICED 36 DIAMETERS BUT NOT LESS THAN 2'-0".
4. WALL STEEL IN CAST CONCRETE TO LAP AROUND CORNERS 36 DIAMETERS BUT NOT LESS THAN 2-0".
5. STAGGER ADJACENT SPLICE LOCATIONS AT LEAST 24 INCHES.
6. FOR FOOTINGS AND SLABS THE MINIMUM CLEAR DISTANCE BETWEEN PARALLEL BARS SHALL BE AT LEAST THE DIAMETER OF THE BAR, 1-1/3 TIMES THE AGGEGATE SIZE BUT IN NO CASE LESS THAN TWO INCHES.

STRUCTURAL STEEL

1. FABRICATION AND ERECTION TO CONFORM TO AMERICAN INSTITUTE OF STEEL CONSTRUCTION EIGHTH EDITION "SPECIFICATION FOR THE DESIGN, FABRICATION AND ERECTION OF STRUCTURAL STEEL BUILDINGS" AND "CODE OF STANDARD PRACTICE FOR STEEL BUILDINGS AND BRIDGES" EXCEPT AS OTHERWISE SHOWN OR SPECIFIED. BURNING OF HOLES NOT ALLOWED.
2. QUALIFIED AND CERTIFIED WELDERS TO BE USED FOR ALL WELDING. WELDING TO BE PERFORMED IN THE SHOP OF A STATE LICENSED FABRICATOR. ALL WELDING TO CONFORM TO THE LATEST EDITION OF THE AMERICAN WELDING SOCIETY STRUCTURAL WELDING CODE D1.1.
3. MATERIALS :

A. STRUCTURAL STEEL SHAPES AND PLATES :	ASTM A 36
B. WELDING ELECTRODES :	ASTM A 5.1 OR A 5.5
C. NUTS AND BOLTS :	ASTM A 307
D. HIGH-STRENGTH BOLTS :	ASTM A 325-X
E. GALVANIZING :	ASTM A 123
F. RUST-INHIBITING PRIMER :	TT-P-645
G. STEEL TUBING :	ASTM A500 GRADE B (fy = 46 ksi)

4. GALVANIZE AFTER FABRICATION ALL STRUCTURAL STEEL AND FASTENINGS EXPOSED TO WEATHER. TOUCH UP DAMAGED GALVANIZING WITH GALVALLOY AFTER ERECTION IS COMPLETE.
5. CONNECTED MEMBERS SHALL BEAR ONLY UPON UNTHREADED PORTION OF BOLTS.

GENERAL NOTES

1. THE CONTRACTOR SHALL REVIEW EXISTING CONDITIONS ON THE SITE DURING THE BIDDING. THE CONTRACTOR SHALL VERIFY ALL DIMENSIONS PRIOR TO STARTING WORK AND THE ARCHITECT AND ENGINEER SHALL BE NOTIFIED OF ANY DISCREPANCIES OR INCONSISTENCIES PRIOR TO PROCEEDING.
2. UNLESS OTHERWISE SHOWN OR NOTED, ALL PHASES OF WORK ARE TO CONFORM TO THE MINIMUM STANDARDS OF THE UNIFORM BUILDING CODE (1988 EDITION UBC), RELATED UNIFORM BUILDING CODE STANDARDS (1988 EDITION), AND THOSE ASTM SPECIFICATIONS UPON WHICH THE STANDARDS ARE BASED. WHERE CONFLICT BETWEEN BUILDING CODES AND SPECIFICATIONS OCCUR, THE MOST STRINGENT REQUIREMENTS SHALL GOVERN.
3. ALL ASTM DESIGNATIONS REFERRED TO ON THESE DRAWINGS SHALL BE THE LATEST ADOPTED OR REVISED SPECIFICATION, AS OF THE DATE OF THESE DRAWINGS.
4. ALL DIMENSIONS TO TAKE PRECEDENCE OVER SCALE SHOWN ON PLANS, SECTIONS AND DETAILS.
5. NOTES AND DETAILS ON DRAWINGS SHALL TAKE PRECEDENCE OVER GENERAL NOTES AND TYPICAL DETAILS.
6. THE CONTRACT STRUCTURAL DRAWINGS AND SPECIFICATIONS REPRESENT THE FINISHED STRUCTURE. UNLESS OTHERWISE INDICATED, THEY DO NOT INDICATE THE METHOD OF CONSTRUCTION. THE CONTRACTOR SHALL PROVIDE ALL MEASURES NECESSARY TO PROTECT LIFE AND THE STRUCTURE DURING CONSTRUCTION. SUCH MEASURES SHALL INCLUDE, BUT NOT BE LIMITED TO BRACING AND SHORING OF LOADS DUE TO CONSTRUCTION, EQUIPMENT, WIND, EARTHQUAKE, ETC. CONTRACTOR AT HIS OWN EXPENSE SHALL ENGAGE PROPERLY QUALIFIED PERSONS TO DETERMINE WHERE AND HOW TEMPORARY PRECAUTIONARY MEASURES SHALL BE USED AND INSPECT SAME IN FIELD. CONTRACTOR SHALL CONFORM TO ALL SAFETY ORDINANCES, RULES AND CODES. OBSERVATION VISITS TO THE SITE BY THE STRUCTURAL ENGINEER SHALL NOT INCLUDE INSPECTION OF THE ABOVE SAFETY ITEMS.
7. SATISFACTORY EXECUTION OF CONSTRUCTION IS DEPENDENT UPON CONFORMANCE WITH THE INTENT OF THESE PLANS. OWNER OR CONTRACTOR IS TO RETAIN A CIVIL OR STRUCTURAL ENGINEER DURING CONSTRUCTION TO OBSERVE THE CONSTRUCTION AND STATE THAT THE STRUCTURE HAS BEEN BUILT IN GENERAL CONFORMANCE WITH THE INTENT OF THESE DRAWINGS.
8. THIS FIRM DOES NOT PRACTICE OR CONSULT IN THE FIELD OF SAFETY ENGINEERING. WE DO NOT DIRECT THE CONTRACTOR'S OPERATIONS, AND WE CANNOT BE RESPONSIBLE FOR THE SAFETY OF PERSONNEL OTHER THAN OUR OWN ON THE SITE; THE SAFETY OF OTHERS IS THE RESPONSIBILITY OF THE CONTRACTOR. THE CONTRACTOR SHOULD NOTIFY THE OWNER IF HE CONSIDERS ANY OF THE RECOMMENDED ACTIONS PRESENTED HEREIN TO BE UNSAFE.
9. CONSTRUCTION MATERIALS SHALL BE SPREAD OUT IF PLACED ON FRAMED FLOORS OR ROOF. LOAD SHALL NOT EXCEED DESIGN LIVE LOAD FOR EACH PARTICULAR LEVEL. WHEN WEIGHT OF MATERIALS OR EQUIPMENT MAY EXCEED DESIGN LOAD, STRUCTURAL SYSTEMS SHALL BE SHORED.

REINFORCED CONCRETE

1. ALL CONCRETE WORK SHALL CONFORM TO ALL REQUIREMENTS OF ACI 301-81 "SPECIFICATIONS FOR STRUCTURAL CONCRETE FOR BUILDINGS", EXCEPT AS MODIFIED BY THE SUPPLEMENTAL REQUIREMENTS CONTAINED HEREIN OR SHOWN ON THE DRAWINGS.
2. ALL CONCRETE SHALL BE 150 PCF HARDROCK, MIXED PER ASTM C 94, AND SHALL HAVE A MINIMUM COMPRESSIVE STRENGTH OF 3000 PSI AT 28 DAYS.
3. THE MAXIMUM SIZE AGGREGATE IN FOUNDATION AND MASS CONCRETE WORK SHALL BE 1 INCH. THE MAXIMUM SIZE AGGREGATE IN SLABS ON GRADE, WALLS AND ALL OTHER CONCRETE SHALL BE 3/4 INCH.
4. CEMENT SHALL CONFORM TO ASTM C 150, TYPE I. AGGERGATES ASTM C 33.
5. ADMIXTURES AND COLORS (EXCEPT AS NOTED HEREIN) SHALL NOT BE USED UNLESS SUBSTANTIATING DATA IS SUBMITTED TO AND ACCEPTED BY THE ENGINEER AND ARCHITECT.
6. ALL EXPOSED CONCRETE SHALL HAVE A SMOOTH FORM FINISH USING B-B PLYFORM, CLASS I, EXT-APA PLYWOOD.
7. ALL SLABS SHALL HAVE A TROWELED FINISH EXCEPT AS NOTED ON THE DRAWINGS.
8. ALL REINFORCING STEEL, ANCHOR BOLTS, DOWELS AND INSERTS SHALL BE WELL SECURED IN POSITION PRIOR TO PLACING CONCRETE.
9. REFER TO DETAILS ON DRAWINGS FOR MOLDS, ORNAMENTS, GROOVERS, CLIPS, GROUNDS, ETC., TO BE CAST IN THE CONCRETE.
10. UNLESS SHOWN OTHERWISE IN DETAILS, FURNISH NO. 2 SPACER TIES AT APPROXIMATELY 2'-6" ON CENTER AND ANY ADDITIONAL TIES OR CHAIRS REQUIRED TO KEEP REINFORCING IN PLACE DURING CASTING OF THE CONCRETE.
11. IF THE CONTRACTOR DESIRES TO MAKE ANY CONSTRUCTION JOINTS OTHER THAN THOSE SHOWN ON THESE DRAWINGS, HE SHALL SUBMIT DETAILS OF SAME TO THE ENGINEER FOR REVIEW BEFORE STARTING WORK.
12. NO BRICK OR POROUS MATERIAL SHALL BE USED TO SUPPORT FOOTING STEEL OFF THE GROUND.
13. LAP SPLICE CONTINUOUS REINFORCEMENT A MINIMUM OF 36 DIAMETERS OR 2'-0" MINIMUM, UNLESS OTHERWISE NOTED.
14. COVER FOR REINFORCING STEEL :

FOOTINGS :	INCHES
AGAINST EARTH (FORMED)	2
PLACED AGAINST EARTH	3
SLABS & JOINTS NOT EXPOSED TO WEATHER	3/4

15. ALL REINFORCING SHALL BE PLACED IN ACCORDANCE WITH THE RECOMMENDED PRACTICE FOR PLACING REINFORCING BARS (LATEST EDITION) OF THE CONCRETE REINFORCING STEEL INSTITUTE.
16. REINFORCING STEEL SHALL BE ASTM A 615, GRADE 60 EXCEPT WHEN OTHERWISE SHOWN ON PLANS. WELDED WIRE MESH SHALL CONFORM TO ASTM A 185.
17. PROVIDE 3/4 INCH CHAMFER ON ALL EXPOSED CORNERS.
18. ADEQUATE BARCING AND SHORING SHALL BE INSTALLED AND MAINTAINED BY THE CONTRACTOR UNTIL PERMANENT CONNECTIONS TO THE STRUCTURE ARE EFFECTIVE.
19. SLEEVE PLUMBING OPENINGS IN SLABS BEFORE PLACING CONCRETE AND BEND REINFORCING AROUND SLEEVES.
20. CONCRETE CURING : TYPICALLY REQUIRED FOR 10 DAYS.

NUMBER	DATE	MADE BY	CHECKED	REVISION DESCRIPTION

6791S-2

METCALF & EDDY

DESIGNED _____ SCALE:
DRAWN _____
CHECKED _____

M&E _____ DATE
CALIF. R.E. No. _____

PGA – Goodyear

APPROVED _____ DATE

SOIL VAPOR EXTRACTION SYSTEM
FINAL DESIGN – POLYGON 79

OVERHEAD PIPE RACK
CONSTRUCTION AND INSTALLATION SPECIFICATIONS

DRAWING NO. S-2

SHEET 15 OF 15 SHEETS

APPENDIX L

BORING LOGS AND VAPOR MONITORING WELL CONSTRUCTION LOGS

UNIFIED SOIL CLASSIFICATION SYSTEM

MAJOR DIVISION			GRAPHIC SYMBOL	LETTER SYMBOL	TYPICAL DESCRIPTION Description Order: Color, Soil Type, Letter Symbol, Density, Moisture, Modifiers
COARSE GRAINED SOILS More Than 50% Of Material Is *LARGER* Than No. 200 Sieve	GRAVEL AND GRAVELLY SOILS More Than 50% Of Coarse Fraction *RETAINED* On No.4 Sieve	Clean Gravels (Little Or No Fines)	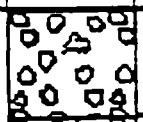	GW	WELL-GRADED GRAVELS, GRAVEL-SAND MIXTURES, LITTLE OR NO FINES.
			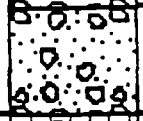	GP	POORLY-GRADED GRAVELS, GRAVEL-SAND MIXTURES, *LITTLE OR NO FINES.*
		Gravels With Fines (Appreciable Amount of Fines)		GM	SILTY GRAVELS, GRAVEL-SAND-SILT MIXTURES.
			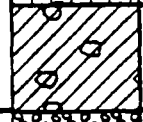	GC	CLAYEY GRAVELS, GRAVEL-SAND-CLAY MIXTURES.
	SAND AND SANDY SOILS More Than 50% Of Coarse Fraction *PASSING* No.4 Sieve	Clean Sand (Little or No Fines)	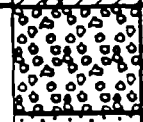	SW	WELL-GRADED SANDS, GRAVELLY SANDS, LITTLE OR NO FINES.
			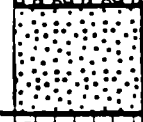	SP	POORLY-GRADED SANDS, GRAVELLY SANDS, LITTLE OR NO FINES.
		Sands with Fines (Appreciable Amount of Fines)	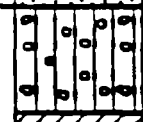	SM	SILTY SANDS, SAND-SILT MIXTURES.
			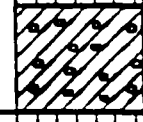	SC	CLAYEY SANDS, SAND-CLAY MIXTURES.
FINE GRAINED SOILS More Than 50% Of Material Is *SMALLER* Than No. 200 Sieve	SILT AND CLAYS Liquid Limit *LESS* Than 50%			ML	INORGANIC SILTS AND VERY FINE SANDS, ROCK FLOUR, SILTY OR CLAYEY FINE SANDS OR CLAYEY SILTS WITH SLIGHT PLASTICITY.
			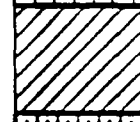	CL	INORGANIC CLAYS OF LOW TO MEDIUM PLASTICITY, GRAVELLY CLAYS, SANDY CLAYS, SILTY CLAYS, LEAN CLAYS.
				OL	ORGANIC SILTS AND ORGANIC SILTY CLAYS OF LOW PLASTICITY.
	SILT AND CLAYS Liquid Limit *GREATER* Than 50%		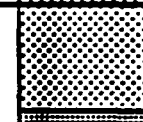	MH	INORGANIC SILTS, MICACEOUS OR DIATOMACEOUS FINE SAND OR SILTY SOILS.
			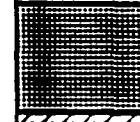	CH	INORGANIC CLAYS OF HIGH PLASTICITY, FAT CLAYS.
			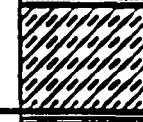	OH	ORGANIC CLAYS OF MEDIUM TO HIGH PLASTICITY, ORGANIC SILTS.
HIGHLY ORGANIC SOILS				PT	PEAT, HUMUS, SWAMP SOILS WITH HIGH ORGANIC CONTENTS.

VP-92

PAGE 2 OF 2

JOB NUMBER	CLIENT	LOCATION
006791-0001	GOODYEAR TIRE AND RUBBER	VB-92

DRILLING METHOD	SAMPLING METHOD
8.25" I.D. HOLLOW STEM AUGER	2.5" O.D. CME CONTINUOUS CORE BARREL - IN AUGER

CONTRACTOR HEBER MINING AND EXPLORATION - CME 75HT

DRILLER RANDY ENGINEER ZACHARY WEATHER SUNNY 95°F

START DATE: 5/26/92 TIME: 0845

FINISH DATE: 5/26/92 TIME: 1505

DEPTH (FEET)	SAMPLER TYPE	IN. DRIVEN/RECOVERED	RECOVERED INTERVAL	SAMPLE NUMBER(DEPTH)	TIME	BLOWS PER 6 INCHES	SAMPLE VAPORS (PID IN PPM)	SOIL GRAPH	DESCRIPTION
35–38								SM / CL	DK. BROWN (10YR 3/3), SILTY CLAY WITH TRACE CRS. GRAVEL SUB-ANGULAR TO SUB-ROUNDED, MOIST
39–43	SOIL	60/48		N/A	1150	N/A	N/A	SP / GP	BROWN (10YR 6/8), CRS. SAND WITH TRACE FINE TO MED. GRAVEL SUB-ANGULAR TO SUB-ROUNDED, MOIST TO VERY MOIST
									SOME CRS. GRAVELS AT 43' BGS
44–48	SOIL	60/27		N/A	1215	N/A	N/A	GM	LT. BROWN TO MED. BROWN (10YR 8/3 TO 10YR 6/8), SILTY TO FINE TO MED. SANDY GRAVELS (0.2-3 CM) SUB-ANGULAR TO SUB-ROUNDED, TRACE SILT, MOIST TO VERY MOIST, FRIABLE
49–56	SOIL	60/9		N/A	1230	N/A	N/A	GP	DK. BROWN (10YR 3/3), WITH BANDS OF RED (10R 3/6) AND GREEN (5G 6/1), VERY CRS. GRAVEL (0.2-5 CM) SUB-ANGULAR, AND SANDS WITH TRACE MED. SANDS, GRAVEL HIGHLY WEATHERED AND FRIABLE
									MED. BROWN TO DK. BROWN (10YR 6/8 TO 10YR 3/3), CRS. TO VERY CRS. GRAVLES (0.2-5 CM) ANGULAR, AND CRS. SAND WITH SOME FINE COBBLES, VERY MOIST
57–58	SOIL	10/10		57	1407	43/72(4")	N/A		MED. BROWN (10YR 3/3), CRS. GRAVEL (0.2-5 CM) ANGULAR TO SUB-ANGULAR, AND CRS. TO MED. SAND, GRAVELS FRIABLE, SATURATED
59–70									WATER LEVEL AT 54.45' BGS AT 1500 ON 5/26/92

▽ DENOTES MEASURED WATER TABLE DEPTH

VP-79

PAGE 2 OF 2

JOB NUMBER	CLIENT	LOCATION
006791-0001	GOODYEAR TIRE AND RUBBER	VB-79

DRILLING METHOD	SAMPLING METHOD
8.25" I.D. HOLLOW STEM AUGER	2" ID X 18" CAL. MODIFIED SPLIT SPOON SAMPLER

CONTRACTOR HEBER MINING AND EXPLORATION - CME 75HT

DRILLER RANDY ENGINEER ZACHARY WEATHER SUNNY 100°F

START DATE: 6/8/92 TIME: 0755

FINISH DATE: 6/8/92 TIME: 1325

DEPTH (FEET)	SAMPLER TYPE	IN. DRIVEN/RECOVERED	RECOVERED INTERVAL	SAMPLE NUMBER(DEPTH)	TIME	BLOWS PER 6 INCHES	SAMPLE VAPORS (PID IN PPM)	SOIL GRAPH	DESCRIPTION
35–36	SOIL	18/16.5		35.5	1123	21/33/44	5/35	SM / SW	LT. BROWN (10YR 8/3), CRS. SAND WITH TRACE TO SOME MED. SAND, TRACE TO SOME FINE TO CRS. GRAVELS (0.5-2.5 CM) SUB-ANGULAR TO SUB-ROUNDED, MOIST TO DRY, VERY DENSE
39–40	SOIL	18/18		39	1142	23/35/37	19/10	GW	RED TO LT. BROWN (10YR 3/6 TO 10YR 8/3), CRS. SAND AND FINE TO CRS. GRAVELS, TRANSITION TO MED. TO CRS. GRAVELS WITH SOME MED. SAND, GRAVEL ANGULAR WITH BLACK MATERIAL COATING, DRY TO MOIST, VERY DENSE, NO ODOR NOTED
43–44	SOIL	18/15		43	1209	32/80/43	5/10		LT. BROWN TO WHITE (10YR 8/3), MED. TO CRS. SAND AND FINE TO CRS. GRAVELS (0.5-2 CM), TRACE TO SOME SILT AND CLAY, GRAVELS ANGULAR TO SUB-ROUNDED, DRY TO MOIST, VERY DENSE
48–49	SOIL	18/6		48	1236	20/42/50	NA/11	GC	LT. BROWN TO RED BROWN, VERY CRS. SAND AND FINE GRAVEL, SOME SILT AND CLAY, MOIST, VERY DENSE, MATRIX VERY WEATHERED
54–55	SOIL	18/15.5		54	1306	30/80/92	10/14.9	GW	MED. BROWN (10YR 6/8), MED. TO CRS. SAND AND FINE TO CRS. GRAVELS (0.5-1.5 CM) ANGULAR TO SUB-ROUNDED, WET, GRADES TO FINE TO VERY CRS. GRAVELS AND CRS. TO VERY CRS. SAND, WET, VERY DENSE WATER LEVEL AT 54.38' BGS AT 0655 ON 6/9/92
									▽ DENOTES MEASURED WATER TABLE DEPTH

35 36 37 38 39 40 41 42 43 44 45 46 47 48 49 50 51 52 53 54 55 56 57 58 59 60 61 62 63 64 65 66 67 68 69 70

VP-116

PAGE 2 OF 2

JOB NUMBER	CLIENT	LOCATION
006791-0001	GOODYEAR TIRE AND RUBBER	VB-116

DRILLING METHOD	SAMPLING METHOD
8.25" I.D. HOLLOW STEM AUGER	2" ID X 18" CAL. MODIFIED SPLIT SPOON SAMPLER

CONTRACTOR HEBER MINING AND EXPLORATION - CME 75HT

DRILLER RANDY ENGINEER ZACHARY WEATHER SUNNY 100°F

START DATE: 6/1/92 TIME: 0753

FINISH DATE: 6/1/92 TIME: 1605

DEPTH (FEET)	SAMPLER TYPE	IN. DRIVEN/RECOVERED	RECOVERED INTERVAL	SAMPLE NUMBER(DEPTH)	TIME	BLOWS PER 6 INCHES	SAMPLE VAPORS (PID IN PPM)	SOIL GRAPH	DESCRIPTION
35								SM/SC	(CONTINUED FROM LAST PAGE) SILTY/CLAYEY FINE SAND, ALL MOIST, VERY HARD
36	SOIL	16/16	■	35.5	1055	31/52/50(4")	0/0		MED. TO RED BROWN (10YR 6/8 TO 10R 3/6), VERY CRS. SAND AND FINE TO VERY CRS. GRAVEL (0.5-4 CM) SUB-ANGULAR TO SUB-ROUNDED, MOIS
37						0/0			TO DRY
38									
39	SOIL	18/17	■	39	1117	10/14/21	0/0	GP	LT. TO MED. BROWN (10 YR 8/3 TO 10YR 6/8), CRS. TO VERY CRS. SAND
40									AND FINE TO MED. GRAVEL ROUNDED, TRACE MED. SAND, DRY, DENSE
41	SOIL	15/15	■	40.5	1133	27/32/50(3")	0/0		LT. BROWN TO RED BROWN (10YR 8/3 TO 10R 3/6), CRS. TO VERY CRS. SAND AND MED. TO VERY CRS. GRAVEL (0.5-5 CM), DRY TO MOIST, VER
42									DENSE
43									
44	SOIL	17/17	■	44	1154	27/38/50(5")	0/0	GM	MED. TO RED BROWN (10YR 6/8 TO 10R 3/6), CRS. TO VERY CRS. SAND AND MED. TO CRS. GRAVELS ANGULAR TO SUB-ROUNDED, WITH TRACE TO SOME SILT AND FINE SAND, MOIST TO DRY, VERY DENSE
45									
46									
47									
48									
49	SOIL	18/15	■	49	1223	47/40/45	0/0	GP/GM	RED BROWN TO LT. BROWN (10R 3/6 TO 10YR 8/3), FINE TO VERY CRS. GRAVEL AND VERY CRS. SAND WITH SOME MED. SAND AND TRACE SILT
50									AND FINE SAND, MOIST TO DRY , VERY DENSE
51									
52									
53									
54	SOIL	16/12	■	54	1250	40/57/50(4")	0/0	GP	MED. TO DK. BROWN (10YR 6/8 TO 3/3), MED. TO VERY CRS. GRAVEL
55									ANGULAR TO SUB-ROUNDED, AND VERY CRS. SAND WITH TRACE FINE
56									TO MED. SAND, DRY TO MOIST, GRAVELS LIGHTLY WEATHERED, VERY
57									DENSE
58									
59	SOIL	15/15	■	59	1320	12/27/50(3")	0/0	SP	MED. TO DK. BROWN (10YR 6/8 TO 3/3), MED. TO CRS. SAND WITH
60									TRACE TO SOME SILT AND FINE GRAVEL, SATURATED (WET), VERY DENSE
61									WATER LEVEL AT 58.63' BGS AT 1501 ON 6/1/92
62									
63									
64									▽ DENOTES MEASURED WATER TABLE DEPTH
65									
66									
67									
68									
69									
70									

VP-117

PAGE 2 OF 2

JOB NUMBER	CLIENT	LOCATION
006791-0001	GOODYEAR TIRE AND RUBBER	VB-117

DRILLING METHOD	SAMPLING METHOD
8.25" I.D. HOLLOW STEM AUGER	2" ID X 18" CAL. MODIFIED SPLIT SPOON SAMPLER

CONTRACTOR HEBER MINING AND EXPLORATION - CME 75HT

DRILLER RANDY ENGINEER ZACHARY WEATHER SUNNY 104°F

START DATE: 6/3/92 TIME: 0650

FINISH DATE: 6/3/92 TIME: 1800

DEPTH (FEET)	SAMPLER TYPE	IN. DRIVEN/RECOVERED	RECOVERED INTERVAL	SAMPLE NUMBER(DEPTH)	TIME	BLOWS PER 6 INCHES	SAMPLE VAPORS (PID IN PPM)	SOIL GRAPH	DESCRIPTION
35–41	SOIL	18/18	■	37	1138	11/21/46	0/20.5	ML / GW	MED. BROWN (10YR 6/8), MED. TO CRS. SAND AND FINE TO VERY CRS. GRAVEL, GRAVELS SUB-ANGULAR TO SUB-ROUNDED (0.5-3 CM), SLIGHTLY WEATHERED, MOIST TO DRY , VERY DENSE
42–46	SOIL	16/15	■	42	1159	27/50/50(4")	0/0	GM	MED. BROWN AND LT. REDISH BROWN (10YR 6/8 TO10R 3/6), CRS. SAND AND FINE TO VERY CRS. GRAVEL WITH TRACE TO SOME MED. TO FINE SAND AND SILT, GRAVELS ANGULAR TO SUB-ROUNDED (0.5-4 CM), MOIST, VERY DENSE
47–48	SOIL	15/11.5	■	47	1214	56/52/50(3")	0/0	GM	MED. BROWN TO LT. REDISH BROWN (10YR 6/8 TO 10R 3/6), CRS. SAND AND FINE TO VERY CRS. GRAVEL WITH TRACE TO SOME MED. TO FINE SAND AND SILT, MOIST, VERY DENSE, GRADES TO FINE TO VERY CRS. GRAVEL AND CRS. SAND WITH TRACE FINE SAND, SILT AND CLAY
49–52	SOIL	17/17	■	48.5	1253	22/50/50(5")	0/0	GP	
53–57	SOIL	18/18	■	53	1301	16/29/49	0/0	GM	MED. BROWN TO REDISH BROWN (10YR 6/8 TO 10R 3/6), CRS. SAND AND FINE TO VERY CRS. GRAVEL WITH SOME TO TRACE FINE SAND AND SILT, GRAVELS (0.5-4 CM) ANGULAR TO SUB-ROUNDED, MOIST, VERY DENSE
58–60	SOIL	18/18	■	58	1730	26/52/28	0/0	SP	MED. BROWN (10YR 6/8), FINE SILTY SAND WITH SOME MED. SAND AND SOME FINE TO CRS. GRAVELS (1-4 CM) SUB-ANGULAR TO SUB-ROUNDED, WET, VERY DENSE
61–70									WATER LEVEL AT 58.5' BGS AT 0710 ON 6/4/92

▽ DENOTES MEASURED WATER TABLE DEPTH

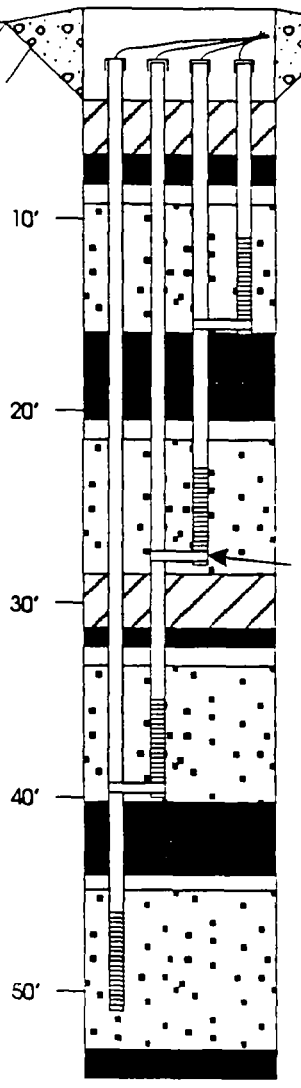

VAPOR PIEZOMETERS:

VP-79-51
VP-79-40
VP-79-28
VP-79-16

PIEZOMETER SPACER/CENTRALIZER (3 EACH)

VERTICAL SCALE: 1" = 10'

EXPLANATION

- GROUT - PORTLAND CEMENT AND 5% VOCLAY BENTONITE
- BENTONITE SEAL - 75% 8-12 BENTONITE CHIPS AND 25% 8-12 SAND
- SAND SEAL - COLORADO #30 SILICA
- GRAVEL PACK - COLORADO 8-12 SILICA

* ALL PIEZOMETERS CONSTRUCTED OF 1/2" ID SCH 40 PVC WITH 5 FT. LENGTH OF 0.02" MACHINE SLOT SCREEN

PROJECT: Phoenix - Goodyear Airport

TITLE: Well Construction Log VP-79

CLIENT: Goodyear Tire & Rubber

LOCATION: VB-79

JOB NUMBER: 6791-0001

Metcalf & Eddy

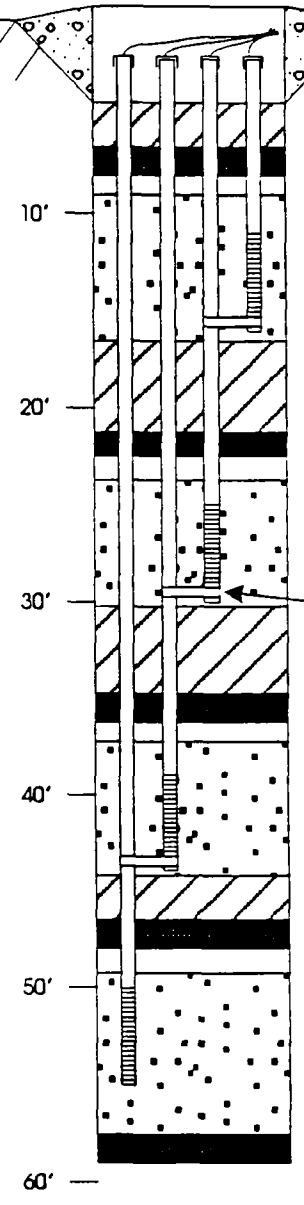

VAPOR PIEZOMETERS:

VP-117-55
VP-117-44
VP-117-30
VP-117-16

PIEZOMETER SPACER/CENTRALIZER (3 EACH)

VERTICAL SCALE: 1" = 10'

EXPLANATION

- GROUT - PORTLAND CEMENT AND 5% VOCLAY BENTONITE
- BENTONITE SEAL - 75% 8-12 BENTONITE CHIPS AND 25% 8-12 SAND
- SAND SEAL - COLORADO #30 SILICA
- GRAVEL PACK - COLORADO 8-12 SILICA

* ALL PIEZOMETERS CONSTRUCTED OF 1/2" ID SCH 40 PVC WITH 5 FT. LENGTH OF 0.02" MACHINE SLOT SCREEN

PROJECT: Phoenix - Goodyear Airport

TITLE: Well Construction Log VP-117

CLIENT: Goodyear Tire & Rubber

LOCATION: VB-117

JOB NUMBER: 6791-0001

Metcalf & Eddy

APPENDIX M

VLEACH, MIXING CELL, AND INTERP MODEL ALGORITHMS

```
*************************************************************
*   Ground Water Mixing Cell Model for VLEACH Output V1.00  *
*************************************************************
* Written by: Metcalf & Eddy Inc.                           *
              Luis Castleman, Scott Zachary, David Springer *
*  te      : January 9, 1992                                *
* Copyright : Metcalf & Eddy Inc.                           *
* Revised   : August 17, 1992                               *
* Revised   : October 30, 1992 - bug in ksat calculation    *
*************************************************************



SET TALK OFF
DECLARE mass(100), time_int(100), polys(100)
IF FILE('mixcell.inp')
  fhin  = FOPEN('mixcell.inp')
ELSE
  ? 'Input File MIXCELL.INP not found'
  RETURN
ENDIF
IF FILE('mixcell.out')
  DELETE FILE mixcell.out
ENDIF
fhout = FOPEN('mixcell.out',1)
IF fhout < 0
  fhout = FCREATE('mixcell.out')
ENDIF
IF fhout < 0
  ? "Can't open output file"
  CLOSE ALL
  RETURN
ENDIF

= FPUTS(fhout,'****  Mixing Cell Output ****')
= FPUTS(fhout,'')
job_header  = FGETS(fhin)
= FPUTS(fhout,job_header)
= FPUTS(fhout,'')
= FPUTS(fhout,'')
= FPUTS(fhout,'')
?
?
batch = 0

CLEAR

DO WHILE(!FEOF(fhin))
   batch = batch +1
   = FPUTS(fhout,'****  Batch'+STR(batch,3)+' ****')
   ? '****  Batch'+STR(batch,3)+' ****'

   gw_impact   = ALLTRIM(FGETS(fhin))
   IF FILE(gw_impact+'.OUT')
     fhgi = FOPEN(gw_impact+'.OUT')
   ELSE
     ? 'File '+gw_impact+'.OUT not found'
     CLOSE ALL
     RETURN
   ENDIF


   num_polys   = VAL(FGETS(fhin))
   FOR i = 1 TO num_polys
     poly_name   = FGETS(fhin)
     flow        = 1.630e-2    && centimeters/second
*    ksat        = VAL(FGETS(fhin))
*    ksat        = 35 * 52 * 10
*    ksat        = (flow/100) * (60*60*24*365*10)
*    ksat        = (flow/100) * (60*60*24*7) (weekly)
*    ksat        = (flow/100) * (60*60*24) &&(Daily)
     ksat        = (flow/100) * (60*60*24) / 10  &&(1/10 of a day)
     width       = VAL(FGETS(fhin))  && Meters
     depth       = VAL(FGETS(fhin))
     depth       = 18.3
*    gradient    = VAL(FGETS(fhin))
     gradient    = .00421
     area        = VAL(FGETS(fhin))  && Meters^2
     width       = SQRT(area)
     vol_gw      = area*depth*.381*1000
```

```
      back_concen = 0
      back_mass   = back_concen*vol_gw

      = FPUTS(fhout,poly_name)
      ? poly_name
      line = FGETS(fhgi)
      DO WHILE RTRIM(line) != 'GROUNDWATER IMPACT OF POLYGON'+STR(i,4)
        line = FGETS(fhgi)
      ENDDO
      line = FGETS(fhgi)
      line = FGETS(fhgi)
      line = FGETS(fhgi)
      num_times = 0
      DO WHILE LEFT(line,3) != '***'
        num_times = num_times + 1
        time_int(num_times) = VAL(line)
        mass(num_times)     = VAL(RIGHT(RTRIM(line),10))
        line = FGETS(fhgi)
      ENDDO

      = FPUTS(fhout,'Time Interval   Mass In      Mass/Area      GW Concentration')
      = FPUTS(fhout,'   (years)      (grams)      (g/sq m)          (ugrams/l)')
      = FPUTS(fhout,'--------------   -------   -------------   ----------------')
      ? 'Time Interval   Mass In    New Mass/Area    GW Concentration'
      ? '   (years)      (grams)      (g/sq m)          (ugrams/l)'
      ? '--------------   -------   -------------   ----------------'
      q_flux = ksat*gradient
      q_vol  = q_flux*width*depth
*     Make sure ksat is set to the correct time step so that qout is set
*     to increment correctly in the below depostion loop.
      qout   = (q_vol*1000)
      FOR t = 1 TO num_times
        day_mass = mass(t)/(10*365)
        FOR days = 1 TO 10*365
          gw_concentration = (day_mass+back_mass)/vol_gw
          mout             = qout*gw_concentration

          mass_there_now   = day_mass+back_mass
          ccell            = MAX((mass_there_now-mout)/vol_gw,0)*1.0e6
          back_mass        = MAX((mass_there_now-mout),0)
        ENDFOR
        out_str = STR(time_int(t),10,2)+SPACE(3)+STR(mass(t),10,3)+SPACE(3)+STR(mass(t)/area,10,3)+SPACE(7)+STR(ccell,10,3)
        = FPUTS(fhout,out_str)
        ? out_str
      ENDFOR
      = FPUTS(fhout,'')
      = FPUTS(fhout,'')
      ?
      ?
    ENDFOR
    = FCLOSE(fhgi)
    = FPUTS(fhout,'')
    = FPUTS(fhout,'')
    = FPUTS(fhout,'')
    = FPUTS(fhout,'')
    = FPUTS(fhout,'')
    ?
    ?
    ?
    ?
    ?
ENDDO
= FCLOSE(fhin)
= FCLOSE(fhout)
SET TALK ON
```

DCL# 117 1990
FILE NO. _____
CC: _____
PM ___ DPM ___ IN ___ D/SCM ___ FILE ___

VLEACH
A ONE-DIMENSIONAL FINITE DIFFERENCE VADOSE ZONE LEACHING MODEL

DISCLAIMER

The program VLEACH was written by CH2M HILL for EPA for use specifically on the Phoenix-Goodyear Airport project. Because software is inherently complex and may not be completely free of errors, the user is advised to verify all work performed using this program. CH2M HILL makes no warranties, express or implied, regarding the program or documentation, their fitness for any purpose, their quality, their merchantability or otherwise. In no event will CH2M HILL be liable for direct, indirect, special, incidental, or consequential damages arising out of the use or inability to use the program or documentation. Its applicability to other sites and conditions has not been evaluated.

VLEACH
A ONE-DIMENSIONAL FINITE DIFFERENCE VADOSE ZONE LEACHING MODEL

Prepared By
CH2M HILL
Redding, California

RDD63600.PM

August 1990

CONTENTS

	Page
Model Description	1
Introduction	1
Data Requirements	2
Theory of Operation	2
Initial Calculations	4
Liquid Advection	4
Gas Diffusion	4
Equilibration	5
Output	6
User's Guide	6
Introduction	6
Output Files	6
Special Notes and Cautions	7
Interactive and Batch Operating Modes	7
VLEACH Input File Format	8
Simulation Data	8
Polygon Data	9
Table 1	3
Appendix A. VLEACH Program listing	
Appendix B. Sample VLEACH Input File	

VLEACH
A ONE-DIMENSIONAL FINITE DIFFERENCE VADOSE ZONE LEACHING MODEL

MODEL DESCRIPTION

INTRODUCTION

VLEACH is a one-dimensional finite difference model designed to simulate the leaching of a volatile, sorbed contaminant through the vadose zone. (Although the term "contaminant" is used throughout this guide, VLEACH could be used to model the transport of any non-reactive chemical that displays linear partitioning behavior). It models four main processes: liquid-phase advection, solid-phase sorption, vapor-phase diffusion, and three-phase equilibration. In its current version, VLEACH is subject to a number of major assumptions:

- Contaminant partitioning between phases follow linear relationships, i.e., both K_D and K_H are constants.
- The three phases present (liquid, vapor, sorbed) are in a state of equilibrium in each cell.
- The moisture content profile within the vadose zone is constant, i.e., the vadose zone is in a steady state with respect to water.
- Liquid-phase dispersion is neglected.
- No "free product" is present.
- The contaminant is not subject to in situ production or degradation.
- The vadose zone soil within a particular model polygon is completely homogeneous, and behaves as a uniform porous medium, with no preferential pathways to flow.
- Volatilization from the soil surface is either completely unimpeded or completely restricted.

Some of these limitations may be relaxed in future versions of VLEACH.

DATA REQUIREMENTS

The data requirements fall into four main categories.

Chemical Parameters

These parameters describe the behavior of the contaminant in question. The parameters include the organic carbon distribution coefficient (K_{OC}), Henry's constant (K_H), the aqueous solubility, and the free air diffusion coefficient.

Soil Properties

Dry bulk density, total porosity, volumetric water content, and organic carbon fraction.

Site Properties

Recharge rate, depth to water, and the area of the polygon in question.

Model Parameters

These parameters affect the way the calculations are performed, and include the time step length, cell dimensions, and output intervals.

THEORY OF OPERATION

VLEACH is a relatively simple one-dimensional finite difference model. The code can simulate leaching in a number of distinct "polygons" during each run. The polygons may differ in soil properties, recharge rate, depth to water, or initial conditions. Each polygon is treated separately, and at the end of the run, an overall area-weighted groundwater impact is presented.

Each polygon is represented by a vertical stack of cells, reaching from the land surface to the water table. The mass of contaminant within each cell is partitioned among three phases: liquid (dissolved in water), vapor, and sorbed to solid surfaces. For simulation purposes, time is divided into user-specified discrete time steps. During each time step, three separate processes take place. Contaminant in the liquid phase is subject to downward advection; contaminant in the vapor phase is subject to gas diffusion; and finally each cell is re-equilibrated according to the distribution coefficients. Each process will be described in greater detail. All symbols used in the following equations are defined in Table 1.

Table 1 Equation Variable Definitions		
M_T	=	Total mass of contamination in a model cell [M]
ΔZ	=	Thickness of cells in VLEACH calculation [L]
n	=	Total porosity of soil [dimensionless]
θ	=	Water-filled porosity of soil [dimensionless]
ρ_b	=	Bulk density of soil [M/L^3]
K_D	=	Distribution coefficient for soil-water partitioning [L^3/M]
K_H	=	Henry's constant for air-water partitioning [dimensionless]
C_s	=	Contaminant concentration in sorbed phase [M/M]
C_l	=	Contaminant concentration in the liquid phase [M/L^3]
C_z	=	Contaminant concentration in the gas phase [M/L^3]
C_{INF}	=	Contaminant concentration in infiltrating water [M/L^3]
C_{NCELL}	=	Contaminant concentration in water in bottom cell [M/L^3]
C_{ATM}	=	Contaminant concentration in atmospheric air above soil surface [M/L^3]
C_{gw}	=	Contaminant concentration in groundwater (with respect to gas phase exchange between water table and vadose zone [M/L^3]
f_{oc}	=	Fraction organic carbon in soil [dimensionless]
K_{oc}	=	Organic carbon partition coefficient [L^3/M]
D	=	Effective diffusion coefficient [L^2/T]
D_{AIR}	=	Free air diffusion coefficient [L^2/T]
q	=	Darcian flux of percolating water [L/T]
In finite difference equations:		
$C_{i-1}^{t+\Delta t}$		
C	=	Refers to concentration of gas or liquid, depending on the equation [M/L^3].
$t+\Delta t$	=	Refers to the time step at which the concentration is calculated.
i-1	=	Refers to the cell number in which the concentration is calculated.

INITIAL CALCULATIONS

The first calculations performed include unit conversions (all internal calculations are conducted in consistent units of grams, feet, and years) and calculations of K_D and D, the effective diffusion coefficient. The equations are as follows:

$$K_D = K_{oc} \times f_{oc}$$

$$D = D_{AIR} \times \frac{(n-\theta)^{10/3}}{n^2}$$

LIQUID ADVECTION

Liquid advection is driven by the downward flux of recharging groundwater, according to the following equation:

$$\frac{\partial C}{\partial t} = \frac{-q}{\theta} \frac{\partial C}{\partial z}$$

For modeling purposes, the partial differential equation (PDE) is approximated by the following finite difference equation (FDE). The FDE is space-upward (in keeping with the asymmetric nature of advection), and time-centered (Crank-Nicholson).

$$\frac{C_i^{t+\Delta t} - C_i^t}{\Delta t} = \frac{-q}{2\theta\Delta z} \left[\left(C_i^{t+\Delta t} - C_{i-1}^{t+\Delta t}\right) + \left(C_i^t - C_{i-1}^t\right) \right]$$

One FDE results for each cell, so NCELL similar equations must be solved simultaneously. VLEACH solves these equations in matrix form using the Thomas algorithm.

The mass fluxes at the top and bottom of the vadose zone are derived from the following equations:

$$J_{TOP} = Cq|_{z=o} = q\ C_{INF}$$

$$J_{BOTTOM} = Cq|_{z=DTW} = qC_{NCELL}$$

GAS DIFFUSION

Gas diffusion is described by Fick's Second Law:

$$\frac{\partial C}{\partial t} = D \frac{\partial^2 C}{\partial z^2}$$

This PDE is converted to a space-centered, backward-difference FDE:

$$\frac{C_i^{t+\Delta t} - C_i^t}{\Delta t} = \frac{D}{(\Delta z)^2} \left(C_{i-1}^{t+\Delta t} - 2\, C_i^{t+\Delta t} + C_{i+1}^{t+\Delta t} \right)$$

Although space-centered (Crank-Nicholson) equation is intuitively more appealing, it led to unexpected stability problems not encountered with the backward-difference formulation.

The mass fluxes at the top and bottom of the vadose zone are derived from the following equations:

$$J_{TOP} = (n-\theta)\, D \left.\frac{\partial C}{\partial z}\right|_{z=0} = (n-\theta)\, D \frac{(C_{ATM} - C_1)}{\Delta z}$$

$$J_{BOTTOM} = (n-\theta)\, D \left.\frac{\partial C}{\partial z}\right|_{z=DTW} = (n-\theta)\, D\, K_H \frac{(C_{NCELL} - C_{sw})}{\Delta z}$$

EQUILIBRATION

Equilibration among the three phases within each cell is performed by first converting the three phase concentrations to mass, summing to determine total mass, partitioning this mass among three phases, and finally converting back to concentrations. The equations are as follows:

$$M_T = \Delta z \left(\theta C_l + C_g (n-\theta) + \rho_b C_s \right)$$

$$C_g = \frac{M_T}{\Delta z \left(\frac{\theta}{K_H} + (n-\theta) + \rho_b \left(\frac{K_D}{K_H} \right) \right)}$$

$$C_l = \frac{M_T}{\Delta z \left(\theta + K_H (n-\theta) + \rho_b K_D \right)}$$

$$C_s = \frac{M_T}{\Delta z \left(\frac{\theta}{K_D} + (n-\theta) \left(\frac{K_H}{K_D} \right) + \rho_b \right)}$$

NOTE: l = liquid phase; g = gas phase; and s = sorbed phase.

OUTPUT

The output consists of mass balance calculations and groundwater impact estimates. The mass balance calculations compare the change in mass within the profile to the calculated boundary fluxes, while the groundwater impact calculations are based on the downward flux at the water table, due to diffusion and advection.

USER'S GUIDE

INTRODUCTION

VLEACH is written in MS-Fortran and compiled under FORTRAN Version 4.0. A program listing is attached as Appendix A. The program reads one input file, and writes up to three different output files.

Input File (_____.inp)

The user must prepare this file prior to the run, in accordance with the attached directions.

OUTPUT FILES

Parameter File (_____.prm)

This file "reads back" the input data in an easy-to-read, annotated form. This file will be primarily used for troubleshooting problems with the input file.

Profile File (_____.prf)

This file contains complete vertical concentration profiles for the vadose zone for all three phases. These profiles are printed out at user-selected intervals throughout the run.

Main Output File (_____.out)

This is the primary output file and contains mass balance data and groundwater impact data. These data are also printed out at user-selected intervals throughout the run.

SPECIAL NOTES AND CAUTIONS

- K_h, Henry's constant, must be in dimensionless form, for example:

$$\frac{[M/L^3_{AIR}]}{[M/L^3_{WATER}]}$$

- Groundwater impacts are not annual rates--they are cumulative over the printout interval or the entire run. If you are using a 10-year printout interval, the impact indicates how many grams of contaminant have entered the groundwater during those 10 years.

INTERACTIVE AND BATCH OPERATING MODES

Like its predecessor LEACHCAL, VLEACH can solicit file name information in either an interactive or batch mode. If a file name "BATCH.INP" exists in the current directory, VLEACH will enter batch mode processing, using BATCH.INP as the input file, and creating BATCH.PRM, BATCH.PRF, and BATCH.OUT for output. This feature allows the user to create a simple batch file that will call on VLEACH to perform a series of runs unattended. The batch file would take a series of input files, and one by one, rename the input file to BATCH.INP, call VLEACH, and then rename the output files before starting with another input file.

An example batch file is attached. If this file were named RUN.BAT, and a series of VLEACH input files were named AREAA.INP, AREAB.INP, and AREAC.INP, they could be executed in sequence by typing "RUN AREAA AREAB AREAC."

If VLEACH does not find a file named "BATCH.INP," it enters an interactive mode, and asks the user for filenames for the input file and each output file.

Example Batch File:

```
ECHO OFF
IF NOT EXIST BATCH.*GOTO START
DEL BATCH.*
:START
IF NOT EXIST%1.INP GOTO END
```

```
ECHO processing File %1
REN %1.INP BATCH.INP
VLEACH
IF NOT EXIST %1.OUT GOTO A
DEL %1.OUT
:A
IF NOT EXIST %1.PRM GOTO B
DEL %1.PRM
:B
IF NOT EXIST %1.PRF GOTO C
DEL %1.PRF
:C
REN BATCH.* %1.*
SHIFT
GOTO START
:END
```

VLEACH INPUT FILE FORMAT

The input file for VLEACH consists of two groups of data: simulation data, presented once per run; and polygon-specific data, presented once for each polygon.

SIMULATION DATA (this set appears only once, at the top of the file)

Card 1: TITLE (A80)
80 characters of project identification information that will be stamped on each output file. VLEACH does not use this information.

Card 2: NPOLY (I5)

NPOLY: Number of polygons to be considered in this run.

Card 3: DELT,STIME,PTIME,PRTIME (4F10.5)

DELT: Computational timestep (years)
STIME: Total length of simulation (years)
PTIME: Interval at which groundwater impact and mass balance results are printed to .OUT file (years)
PRTIME: Interval at which vertical concentration profile results are printed to .PRF file (years)

Card 4: KOC,KH,CMAX,DAIR (4F10.5)

KOC: Organic carbon distribuiton coefficient (ml/g)
KH: Henry's constant (dimensionless)

CMAX: Aqueous solubility (mg/l)
DAIR: Free air diffusion coefficient (m^2/day)

POLYGON DATA (this set is repeated NPOLY times)

Card 1: TITLE (A80)
80 characters of polygon identification information that will be stamped on each output file. VLEACH does not use this information.

Card 2: AREA,DELZ,Q,RHOB,POR,THETA,FOC (7F10.5)

AREA: Area of polygon (sq. ft.)
DELZ: Vertical cell spacing (ft)
Q: Groundwater recharge rate (ft/yr)
RHOB: Dry bulk density of soil (g/cc)
POR: Total effective porosity (dimensionless)
THETA: Volumetric water content (dimensionless)
FOC: Soil organic carbon content (dimensionless - NOT percent)

Card 3: CINF,CATM,CGW (3F10.5)

CINF: Concentration of contaminant in recharge water (mg/l)

CATM: Determines upper boundary condition for gas diffusion. If CATM is negative, the soil surface is impermeable to gas diffusion. If CATM is non-negative it indicates the fixed concentration of contaminant in the atmosphere above the soil surface (mg/l).

CGW: Determines lower boundary condition for gas diffusion. If CGW is negative, the water table is impermeable to gas diffusion. If CGW is non-negative, it indicates the (fixed) concentration of contaminant in groundwater (mg/l) below the water table, affecting gas diffusion only.

Card 4: NCELL (I5)

NCELL: Number of vertical cells in simulation. Note that NCELL*DELZ should equal the depth to water.

Card 5: J1,J2,XCON (2I5,F10.5)

J1: Top cell described by couplet
J2: Bottom cell described by couplet

XCON: Initial concentration of contaminant in each of cells J1 through J2 ~~(mg/kg)~~ ug/Kg

REPEAT Card 5 as necessary, until each cell has been described and J2 equals NCELL.

An example input file is attached as Appendix B.

URS
CONSULTANTS

TRANSMITTAL FORM

Originating URS Office

2710 Gateway Oaks Drive, Suite 250 Nor
Sacramento, California 95834
(916) 929-2346

To: Mr. Scott Zachary
Metcalf and Eddy
816 State Street, Suite 500
Santa Barbara, CA. 93101

Attention:

To:

Project No. 62190.63

Subject: PGA - South
Ulcash input

We Are Transmitting:

X Herewith
___ Under Separate Cover

Number of Copies:

1 Sets
___ Sheets

The Following:

___ Letter(s)
___ Report
___ Schedule
___ Estimate
___ Approved Bills/Invoices
___ Prints or ___ Tracings
___ Legal Descriptions
___ Shop Drawings
___ Change Order
X Model input

For:

___ Review and Comment
___ Approval/Signature
___ Files
___ Your Use/Information
___ Quotation
___ Payment
X As Requested
___ Action Noted Below

Remarks:

cc. Craig Cooper

Sincerely Yours,

[signature]

URS Consultants

SIMULATION DATA

PGA V-leach model -- TCE: 26 MOST CONTAMINATED POLYGONS CARD 1

26

1.0	100.	20.	50.				
126.	.473	1100.	0.7029				
gon number 92							
87500.	0.5	.02667	1.45	.52	.19	.0004	
0.	0.	-1.					
125							
1	24	5818.58					
25	44	28394.67					
45	64	56731.15					
65	87	133827.33					
88	125	198845.15					
polygon number 79							
85000.	0.5	.0226	1.45	.52	.19	.0004	
0.	0.	-1.					
125							
1	12	1646.03					
13	24	148.14					
25	44	181.06					
45	64	148.14					
65	82	790.10					
83	95	2501.97					
96	105	872.40					
106	115	460.89					
116	125	790.10					
polygon number 84							
171000.	0.5	.0226	1.45	.52	.19	.0004	
0.	0.	-1.					
25							
1	15	348.00					
16	25	1367.62					
26	35	772.55					
36	45	354.95					
46	125	0.00					
polygon number 87							
75000.	0.5	.0226	1.45	.52	.19	.0004	
0.	0.	-1.					
125							
1	15	709.49					
16	25	2788.31					
26	35	1575.07					
36	45	723.68					
46	125	0.00					
polygon number 69							
102500.	0.5	.081	1.45	.52	.19	.0004	
0.	0.	-1.					
125							
1	24	13.64					
25	44	66.55					
45	64	132.97					
65	87	313.66					
88	125	465.99					
polygon number 96							
83000.	0.5	.197	1.45	.52	.19	.0004	
0.	0.	-1.					
125							
1	12	587.75					
13	24	52.90					
25	44	64.65					

recharge rate

- µg/kg

```
   45    64      52.90
   65    82     282.12
   83    95     893.38
   96   105     311.51
    6   115     164.57
  116   125     282.12
polygon number  88
    97500.         0.5      .0226       1.45        .52        .19     .0004
        0.          0.        -1.
  125
    1    15     417.77
   16    25    1641.84
   26    35     927.45
   36    45     426.13
   46   125       0.00
polygon number  70
    91500.         0.5      .0233       1.45        .52        .19     .0004
        0.          0.        -1.
  125
    1    24      13.05
   25    44      63.70
   45    64     127.28
   65    87     300.24
   88   125     446.06
polygon number  93
    52500.         0.5      .0234       1.45        .52        .19     .0004
        0.          0.        -1.
  125
    1    24      14.75
   25    44      71.96
   45    64     143.77
   65    87     339.14
   88   125     503.91
polygon number  65
    80500.         0.5      .0226       1.45        .52        .19     .0004
        0.          0.        -1.
  125
    1    24       8.14
   25    44      39.73
   45    64      79.38
   65    87     187.26
   88   125     278.20
polygon number  27A
    50000.         0.5      .0234       1.45        .52        .19     .0004
        0.          0.        -1.
  125
    1    24      12.84
   25    44      62.65
   45    64     125.18
   65    87     295.30
   88   125     438.77
polygon number 116
   130000.         0.5       0.081      1.45        .52        .19     .0004
        0.          0.        -1.
  125
    1    12       1.48
   13    24     553.60
   25    44    1105.73
   45    64    2209.98
   65    82    3314.22
```

```
  83    95    4418.47
  96   105    4970.60
 106   115    5522.72
 116   125    6074.84
 gon number 117
 143500.        0.5      0.081      1.45       .52       .19     .0004
      0.         0.        -1.
 125
   1    12       1.12
  13    24     418.91
  25    44     836.71
  45    64    1672.29
  65    82    2507.88
  83    95    3343.46
  96   105    3761.26
 106   115    4179.05
 116   125    4596.84
polygon number 113
 155000.        0.5      0.197      1.45       .52       .19     .0004
      0.         0.        -1.
 125
   1    12        .31
  13    24     117.23
  25    44     234.14
  45    64     467.97
  65    82     701.80
  83    95     935.62
  96   105    1052.54
 106   115    1169.45
 116   125    1286.36
p. ygon number 111
 192500.        0.5      0.197      1.45       .52       .19     .0004
      0.         0.        -1.
 125
   1    12        .15
  13    24      56.84
  25    44     113.54
  45    64     226.92
  65    82     340.31
  83    95     453.69
  96   105     510.38
 106   115     567.08
 116   125     623.77
polygon number  13A
 192500.        0.5      0.197      1.45       .52       .19     .0004
      0.         0.        -1.
 125
   1    12        .16
  13    24      60.95
  25    44     121.74
  45    64     243.33
  65    82     364.91
  83    95     486.49
  96   105     547.28
 106   115     608.07
   6   125     668.86
polygon number  14A
 127500.        0.5      0.081      1.45       .52       .19     .0004
      0.         0.        -1.
 125
```

```
   1   12        .14
  13   24      53.19
  25   44     106.24
  45   64     212.34
  65   82     318.44
  83   95     424.54
  96  105     477.59
 106  115     530.64
 116  125     583.69
polygon number  24A
  162500.        0.5      0.081       1.45        .52        .19     .0004
       0.         0.        -1.
 125
   1   12        .12
  13   24      45.66
  25   44      91.19
  45   64     182.27
  65   82     273.34
  83   95     364.41
  96  105     409.95
 106  115     455.48
 116  125     501.02
polygon number  41+
  848000.        0.5      0.197       1.45        .52        .19     .0004
       0.         0.        -1.
 125
   1   12        .02
  13   24       7.53
  25   44      15.05
  45   64      30.07
  65   82      45.10
  83   95      60.13
  96  105      67.64
 106  115      75.15
 116  125      82.67
polygon number 28,29,32-35
  875000.        0.5      0.197       1.45        .52        .19     .0004
       0.         0.        -1.
 125
   1   12        .02
  13   24       6.62
  25   44      13.23
  45   64      26.43
  65   82      39.63
  83   95      52.84
  96  105      59.44
 106  115      66.04
 116  125      72.65
polygon number  36
  107500.        0.5      0.197       1.45        .52        .19     .0004
       0.         0.        -1.
 125
   1   12        .14
  13   24      53.65
  25   44     107.15
  45   64     214.16
  65   82     321.17
  83   95     428.18
  96  105     481.69
 106  115     535.19
```

```
   88  125    1054.36
polygon number  27A
    50000.          0.5       0.0234          1.45          .52          .19
.0004
         0.          0.         -1.
  125
    1    24        0.01
   25    44        0.14
   45    64        0.03
   65    87        0.16
   88   125        3.39
polygon number 116
   130000.          0.5       0.081          1.45          .52          .19
.0004
         0.          0.         -1.
  125
    1    12       0.19
   13   125       0.19
polygon number 117
   143500.          0.5       0.081          1.45          .52          .19
.0004
         0.          0.         -1.
  125
    1   125       0.18
polygon number 113
   155000.          0.5       0.197          1.45          .52          .19
.0004
         0.          0.         -1.
  125
    1   125       0.02
polygon number 111
   192500.          0.5       0.197          1.45          .52          .19
.0004
         0.          0.         -1.
  125
    1   125       0.01
polygon number  13A
   192500.          0.5       0.197          1.45          .52          .19
.0004
         0.          0.         -1.
  125
    1   125        0.00
polygon number  14A
   127500.          0.5       0.081          1.45          .52          .19
.0004
         0.          0.         -1.
  125
    1   125       0.016
polygon number  24A
   162500.          0.5       0.081          1.45          .52          .19
.0004
         0.          0.         -1.
  125
    1   125       0.00
```

```
polygon number  41+
   848000.        0.5      0.197       1.45        .52        .19
.0004
        0.         0.        -1.
  125
    1  125      0.01
polygon number 28,29,32-35
   875000.        0.5      0.197       1.45        .52        .19
.0004
        0.         0.        -1.
  125
    1  125      0.01
polygon number 15A
   147500.        0.5      0.081       1.45        .52        .19
.0004
        0.         0.        -1.
  125
    1  125      0.01
polygon number 114,115
   251700.        0.5      0.197       1.45        .52        .19
.0004
        0.         0.        -1.
  125
    1  125       0.03
polygon number  32A
   169500.        0.5      0.081       1.45        .52        .19
.0004
        0.         0.        -1.
  125
    1  125       0.00
polygon number 21A,26A
   148500.        0.5      0.369       1.45        .52        .19
.0004
        0.         0.        -1.
  125
    1  125       0.34
polygon number 23A
   129000.        0.5      0.081       1.45        .52        .19
.0004
        0.         0.        -1.
  125
    1  125       0.01
```

```
  116  125     588.70
polygon number 15A
   147500.        0.5      0.081        1.45         .52         .19     .0004
        0.         0.        -1.
     5
     1   12       9.54
    13   24      48.14
    25   44      86.75
    45   64     163.95
    65   82     241.16
    83   95     318.37
    96  105     356.97
   106  115     395.57
   116  125     434.18
polygon number 114,115
   251700.        0.5      0.197        1.45         .52         .19     .0004
        0.         0.        -1.
   125
     1   12        .04
    13   24      15.07
    25   44      30.09
    45   64      60.15
    65   82      90.20
    83   95     120.26
    96  105     135.28
   106  115     150.31
   116  125     165.34
polygon number  32A
   169500.        0.5      0.081        1.45         .52         .19     .0004
        0.         0.        -1.
    25
     1   12        .05
    13   24      18.26
    25   44      36.48
    45   64      72.91
    65   82     109.34
    83   95     145.76
    96  105     163.98
   106  115     182.19
   116  125     200.41
polygon number 21A,26A
   148500.        0.5      0.369        1.45         .52         .19     .0004
        0.         0.        -1.
   125
     1   12        .03
    13   24      12.33
    25   44      24.62
    45   64      49.21
    65   82      73.80
    83   95      98.39
    96  105     110.69
   106  115     122.98
   116  125     135.27
polygon number 23A
   129000.        0.5      0.081        1.45         .52         .19     .0004
        0.         0.        -1.
   125
     1   12        .04
    13   24      15.98
    25   44      31.92
```

45	64	63.79
65	82	95.67
83	95	127.54
96	105	143.48
06	115	159.42
116	125	175.36

```
PGA V-leach model, -- 1,1,1-TCA: 26 MOST CONTAMINATED POLYGONS
   11
       1.0        100.        20.        50.
      152.        .589      1500.     0.6893
polygon number 92
    87500.         0.5     .02667        1.45         .52         .19
.0004
         0.          0.        -1.
  125
    1   24    7698.06
   25   64       0.00
   65   87      76.98
   88  125      76.98
polygon number  69
   102500.         0.5     0.0226        1.45         .52         .19
.0004
         0.          0.        -1.
  125
    1   24       4.18
   25   44       0.00
   45   64       0.00
   65   87       0.04
   88  125       0.04
polygon number  27A
    50000.         0.5     0.0234        1.45         .52         .19
.0004
         0.          0.        -1.
  125
    1   24       0.00
   25   44       0.00
   45   64       0.00
   65   87       0.00
   88  125       0.00
polygon number 113
   155000.         0.5      0.197        1.45         .52         .19
.0004
         0.          0.        -1.
  125
    1  125       0.02
polygon number  13A
   192500.         0.5      0.197        1.45         .52         .19
.0004
         0.          0.        -1.
  125
    1  125      0.00
polygon number  24A
   162500.         0.5      0.081        1.45         .52         .19
.0004
         0.          0.        -1.
  125
    1  125      0.00
polygon number  41+
   848000.         0.5      0.197        1.45         .52         .19
.0004
```

```
        0.          0.        -1.
  125
    1  125       0.01
polygon number 28,29,32-35
   875000.          0.5      0.197         1.45          .52          .19
.0004
        0.          0.        -1.
  125
    1  125      0.02
polygon number  32A
   169500.          0.5      0.081         1.45          .52          .19
.0004
        0.          0.        -1.
  125
    1  125      0.00
polygon number 21A,26A
   148500.          0.5      0.369         1.45          .52          .19
.0004
        0.          0.        -1.
  125
    1  125      0.00
polygon number 23A
   129000.          0.5      0.081         1.45          .52          .19
.0004
        0.          0.        -1.
  125
    1  125      0.00
```

```
PGA V-leach model, -- PCE: 26 MOST CONTAMINATED POLYGONS
   25
       1.0       100.        20.        50.
      364.      1.105       150.     0.6243
polygon number 92
    87500.         0.5     .02667       1.45        .52        .19
.0004
        0.          0.        -1.
  125
    1   24      58.97
   25   44     884.87
   45   64     176.89
   65   87     982.94
   88  125   20883.40
polygon number 79
    85000.         0.5     0.0226       1.45        .52        .19
.0004
        0.          0.        -1.
  125
    1   12      58.41
   13   24       5.26
   25   44       5.84
   45   64       7.01
   65   82      12.85
   83   95       2.34
   96  105       2.34
  106  115       2.34
  116  125       2.34
polygon number  84
   171000.         0.5     0.0226       1.45        .52        .19
.0004
        0.          0.        -1.
  125
    1   15      32.46
   16   25       0.00
   26   35       0.00
   36   45       0.00
   46  125       0.00
polygon number  87
    75000.         0.5     0.0226       1.45        .52        .19
.0004
        0.          0.        -1.
  125
    1   15      49.19
   16   25       0.00
   26   35       0.00
   36   45       0.00
   46  125       0.00
polygon number  69
   102500.         0.5      0.081       1.45        .52        .19
.0004
        0.          0.        -1.
  125
    1   24        .33
```

```
PGA V-leach model, -- DCE: 26 MOST CONTAMINATED POLYGONS
     3
        1.0        100.         20.         50.
      126.         .473       1100.      0.7904
polygon number  65
    80500.          0.5      0.0226        1.45         .52         .19
.0004
          0.          0.         -1.
  125
    1    24      36.46
   25    44     175.76
   45    64     257.81
   65    87     323.08
   88   125     416.79
polygon number  41+
   848000.          0.5       0.197        1.45         .52         .19
.0004
          0.          0.         -1.
  125
    1   125       0.01
polygon number 28,29,32-35
   875000.          0.5       0.197        1.45         .52         .19
.0004
          0.          0.         -1.
  125
    1   125       0.01
```

Interpolation Program INTERP

```
*************************************************************************
*************************************************************************
* PROGRAM: INTERP                                                       *
*                                                                       *
* PURPOSE: INTERP will allow the inputting of depth & concentration*
*          data.  The program will then prompt the user for a depth*
*          and then display and print the corresponding                 *
*          interpolated concentration based on the input data.          *
*          If the requested depth is below the deepest input data       *
*          point, the deepest known concentration is returned.          *
*          If the requested depth is above the shallowest data          *
*          point, the shallowest known concentration is returned.       *
*          The interpolation method is the standard linear              *
*          interpolation.                                               *
*          The use of this program assumes basic knowledge of how       *
*          to add, modify, and delete records in a browse window.       *
*                                                                       *
* Written by: Dave Springer & Luis Castleman                            *
*         of: Metcalf & Eddy                                            *
*                                                                       *
* Date      : 07/17/92                                                  *
*************************************************************************
*************************************************************************

SET TALK OFF

DECLARE data[100,2]

SET SYSMENU AUTOMATIC

USE interp ORDER TAG depth

* Use BROWSE as an easy vehicle to add/modify/delete sample points
BROWSE TITLE ' Change Data If Desired, Hit Ctrl-W when done' ;
       FIELDS depth      :H='Sample Depth (-)', ;
              concentrat :H='Sample Concentation'

* Clean up unused records
i = 0
SCAN FOR !DELETED()
  i = i + 1
  IF depth = 0 .AND.  i > 1
```

```
    DELETE
  ENDIF
ENDSCAN
SET SAFETY OFF
PACK
SET SAFETY ON

* put the samples into an array
COPY TO ARRAY data

num_data = RECCOUNT()

CLEAR

* Only use the printer if it is available
IF PRINTSTATUS()
  SET PRINTER ON
  SET CONSOLE OFF

  ?
  ?
  ? PADC('List of interpolated concentrations for desired depths',80)
  ?
  ?

  SET CONSOLE ON
ENDIF

m.depth = 0
@23,10 SAY "Hit <Esc> to exit this interpolation program"

* Do an infinite loop until user signals he's done with an ESCAPE
DO WHILE .T.


  @12,10 SAY "Enter interpolated depth:" GET m.depth
  READ

  IF LASTKEY() = 27     && Exit if user is done
    SET TALK ON
    SET PRINTER OFF
    EJECT
    USE
    CLEAR
    RETURN
  ELSE
    IF m.depth > 0      && If user forgot the '-' sign, be kind
      m.depth = m.depth * -1
    ENDIF
  ENDIF
```

```
* Begin actual interolation

* Find bracketing data point
  FOR i = 1 to num_data
    IF data[i,1] < m.depth
      EXIT
    ENDIF
  ENDFOR

* Interpolate
  DO CASE
    CASE i > num_data
      extrapolated_value = data[num_data,2]
    CASE i = 1
      extrapolated_value = data[1,2]
    OTHERWISE
      extrapolated_value = data[i-1,2] - (data[i-1,2]-data[i,2])*;
                           (data[i-1,1] - m.depth) /;
                           (data[i-1,1] - data[i,1])
  ENDCASE

* Print result to printer if available
  IF PRINTSTATUS()
    SET CONSOLE OFF

    ? "At a depth of                 : "+STR(ABS(m.depth),6)
    ? "Interpolated concentration is: "+STR(extrapolated_value,6)
    ?
    ?

    SET CONSOLE ON
  ENDIF

* Print result to the screen
  @16,10 SAY "At a depth of                 : "+STR(ABS(m.depth),6)
  @17,10 SAY "Interpolated concentration is: "+STR(extrapolated_value,6)


ENDDO


* That's it
```

APPENDIX N

DRAFT SOIL VAPOR EXTRACTION (SVE) TREATMENT SYSTEM AND EXTRACTION/MONITORING WELL FIELD SAMPLING PLAN (FSP) AND QUALITY ASSURANCE PROJECT PLAN (QAPP)

1.0 INTRODUCTION

Comprehensive Quality Assurance (QA) objectives for the sampling of the Soil Vapor Extraction (SVE) treatment system and extraction/monitoring wells for the SVE operable unit remedy at the Phoenix-Goodyear Airport site (PGA) have been developed to provide guidelines for all field and laboratory procedures. The intention of the sampling and analysis effort is to produce data of acceptable quality to allow for an accurate evaluation of SVE efficiency and progress, and to ensure representative sampling of soil vapor from the SVE treatment system and associated extraction/monitoring wells. This Field Sampling Plan (FSP) and Quality Assurance Project Plan (QAPP) presents protocols to be followed in ensuring the quality and integrity of the SVE treatment system and extraction/monitoring well sampling and analysis, accuracy and precision of the laboratory and field analyses, representativeness of the results, and completeness of the information.

The main QA objective for this work is to ensure that all measurements are representative of actual site conditions and that all data resulting from sampling and analysis activities are comparable. The use of accepted, published, sampling and analysis methods, as well as the use of standardized units, shall aid in ensuring the comparability of the data.

1.1 PROJECT ORGANIZATION AND RESPONSIBILITIES

This section identifies the key personnel proposed for this project and the support staff expected to be needed (see Figure 1-1).

Key personnel include the following staff members:

The Project Manager, Scott Zachary is responsible for ensuring that all activities are conducted in accordance with the work plans and within the overall contractual obligations. Mr. Zachary will: 1) monitor the project budget and schedule; 2) ensure the availability of personnel, equipment, subcontractors, and services; and 3) participate in all phases of the project including the development of the SVE operable unit program, SVE remedial efficiency and progress, and report on the technical and financial status of the project.

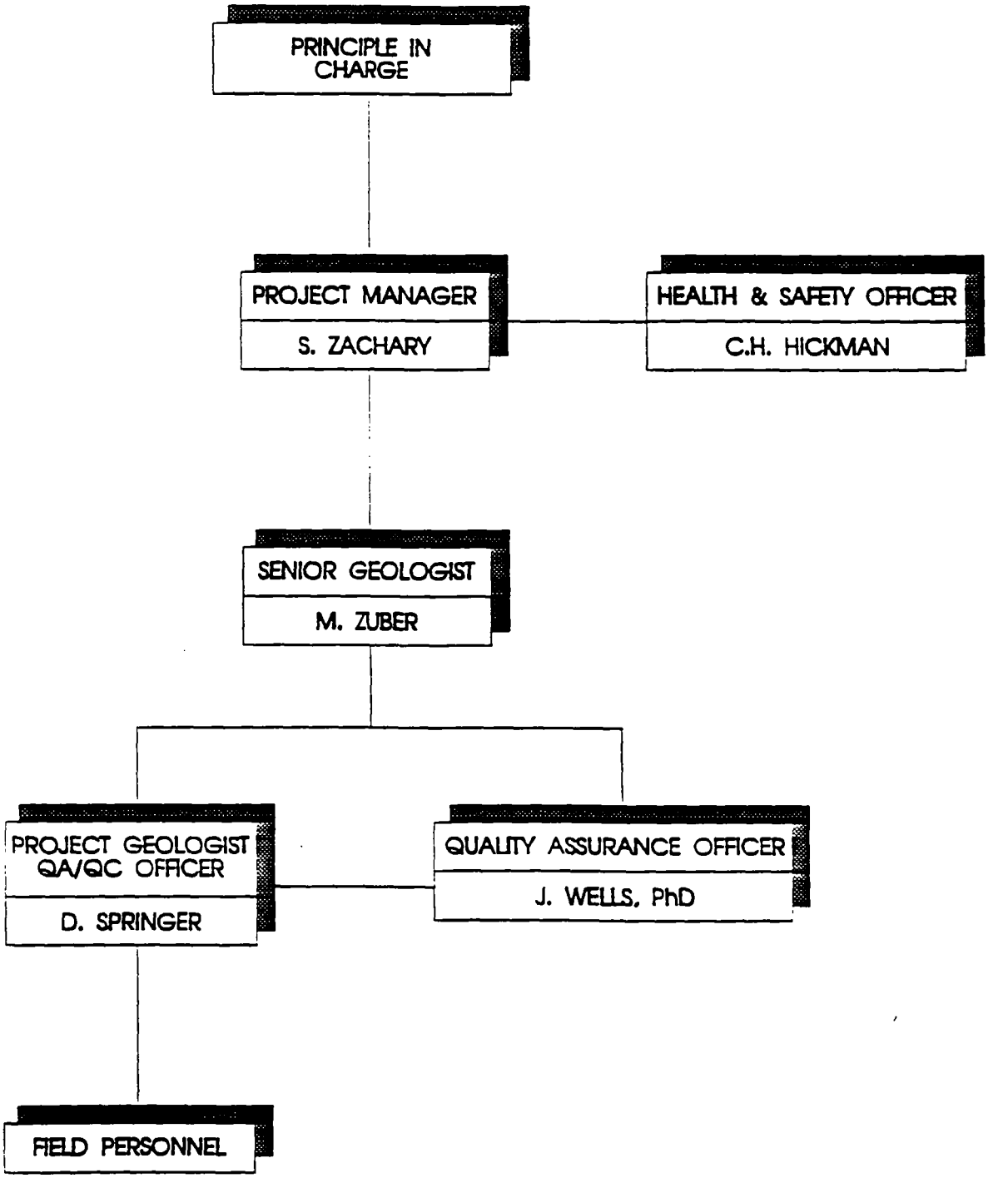

PROJECT ORGANIZATION

M&E Metcalf & Eddy

Drawn by: J. Weidmann	Job Number: 006791	Date: September 1992
Checked by: S. Zachary		Figure Number: 1-1

Mr. Struttmann also will provide technical coordination with the Goodyear Tire and Rubber Company (Goodyear) and direct M&E's technical staff.

The Project Geologist, Mr. David Springer, will conduct the field investigation activities described in this sampling section. Mr. Springer will function as the site Quality Assurance Officer and will be on site during all field activities and oversee operations. Any logistical problems hindering field activities such as equipment malfunctions or availability, personnel conflicts, or weather-dependent working conditions will be relayed and resolved by the Project Manager. Mr. Springer will be responsible for maintaining communication with the off-site and on-site analytical laboratory, as well as logging communications and site entries and departures by personnel.

The Quality Assurance Officer (QAO), Mr. James Wells, Ph.D. is responsible for implementing and administering the Quality Assurance Project Plan (QAPP) to ensure that all QA objectives of the project are met, to review selected field and analytical data, and to verify the quality of analytical data to be used in the SAP. The QAO is responsible for ongoing surveillance of project activities and has the authority to recommend that work be stopped when that work appears to jeopardize data quality.

The Health and Safety Officer (HSO), Mr. Herb Hickman, will review and approve the Health and Safety Plan prepared for this specific investigation, and ensure that an adequate level of personal protection exists for hazards anticipated in the field. The HSO is responsible for the daily supervision and documentation of all safety, decontamination, environmental monitoring, and field medical monitoring activities. The HSO has the authority to stop work which may result in an imminent safety hazard, emergency condition, or other potentially dangerous situation. Authorization to resume work will be issued by the HSO in conjunction with the Project Manager subsequent to such action.

2.0 DATA QUALITY OBJECTIVES

Data Quality Objectives (DQOs) are based on the concept that different data uses may require varying minimum levels of data quality. Data quality is defined as the degree of certainty of a data set with respect to precision, accuracy, reproducibility, comparability, and completeness. DQOs are qualitative and quantitative statements specifying the required quality of data needed to support SFI activities. The five established levels of data are:

1) Screening (DQO Level 1): This level provides the lowest data quality, but the most rapid results. It is often used for health and safety monitoring at the site, initial site characterization to locate areas for subsequent and more accurate analyses, and for engineering screening of alternatives.

2) Field Analyses (DQO Level 2): This level provides rapid results and better data quality than Level 1. Analyses may include mobile laboratory generated data. This level is used to verify a select portion of analytical results obtained from DQO Level 1.

3) Engineering (DQO Level 3): This level provides a high intermediate level of data quality and is used for site characterization. Engineering analyses may include mobile laboratory generated data and some EPA approved analytical laboratory methods (e.g., laboratory data with quick turnaround used for screening but without full quality control documentation).

4) Conformational (DQO Level 4): This level provides the highest level of data quality and is used for purposes of risk assessment, engineering design, and cost analyses. These analyses require full laboratory analytical and data validation procedures in accordance with U.S. EPA recognized protocols.

5) Non-Standard (DQO Level 5): This level refers to analyses by non-standard protocols (e.g., when exacting detection limits or analysis of an unusual compound). These analyses often require method development or adaptation. The level of quality control is usually similar to DQO Level 4 data.

M&E will generate DQO Levels 1, 2, 3, and 4 analytical data during the SFI sampling activities, as detailed below:

- DQO Levels 1 and 2: Field Gas Chromatograph (GC) analyses performed, for health & safety monitoring, and field screening of samples using portable field equipment.

- DQO Level 3: Laboratory analyses performed on soil vapor samples collected during sampling of the SVE treatment system and SVE extraction/monitoring wells.
- DQO Level 4 and Level 5: No Level 4 or 5 requirements have currently been identified.

2.1 DATA QUALITY CHARACTERISTICS

This project requires that five major characteristics of data quality be addressed during development of the project-specific environmental sampling and analytical plans.

2.1.1 Accuracy

Accuracy is defined as the degree of agreement of a measurement (or measurement average) with an accepted reference or true value. It is a measure of system bias and is usually expressed as a percentage of the true value.

Accuracy shall be determined in the laboratory through the use of matrix spike and matrix spike duplicate (MS/MSD) analyses. The laboratory shall perform these analyses in conformance with U.S. EPA protocols. For soil vapor analyses, the accuracy is defined in Section 5.0. Accuracy, or percent recovery, is calculated as follows:

$$\% \ Recovery = \frac{Concentration \ (amount) \ found \in sample}{Concentration \ (amount) \ spiked \in matric} \ X \ 100$$

Sampling accuracy shall be maintained by the implementation and adherence to strict procedural protocols. Trip blanks and equipment blanks shall be collected and analyzed to ensure that samples are representative of site conditions and not contaminated by transportation or sampling methods, respectively.

2.1.2 Precision

Precision is a measure of agreement among individual measurements of the same property under similar conditions. It is expressed in terms of relative percent difference (RPD) between replicates or in terms of the standard deviation when three or more replicate analyses are performed.

Precision is calculated as the relative percent difference (RPD) of the recoveries of each compound in the matrix spike and the matrix spike duplicate. The formula for calculating RPD is as follows:

$$RPD = 1\ MSR - MSDR\ 1\ X\ 100$$

$$RPD = \frac{1\ MSR - MSDR\ 1}{(½)\ (MSR + MSDR)\ X\ 100}$$

Where:

MSR = Matrix Spike Recovery

MSDR = Matrix Spike Duplicate Recovery

RPD is always expressed as a positive value

MSR is further defined as:

$$MSR = \frac{SSR - SR}{SA}\ X\ 100$$

Where:

SSR = Spiked Sample Result

= SR Sample Result

SA = Spike Added

Precision shall be determined through the use of MS/MSD analyses. The RPD between the two results shall be calculated as a measure of analytical precision.

2.1.3 Completeness

Completeness is a measure of the amount of valid data obtained compared to the amount expected to be collected under normal correct conditions. It is usually expressed as a percentage.

The objectives of the field sampling events at the PGA facility are to obtain samples for all analyses required at each individual site, to provide a sufficient quantity of sample for each of the required analyses, and to obtain quality control samples representative of all possible contamination sources (e.g., sample collection, storage, transportation, etc.). It is expected that the analytical laboratory will provide data that meet quality control acceptance criteria of 100 percent (see Table 2-1A). Tables 2-1B provides targeted acceptance criteria for the field laboratory.

Completeness is calculated as the percentage of valid data points compared to the quantities of valid data that was to be collected to achieve particular project requirements. Data points may not be valid if samples exceeded holding times, if quality control sample criteria were not met and reanalysis of samples was not possible, or if samples containers were broken or otherwise destroyed. The overall completeness objective for this project is 100%.

The percent completeness is calculated as:

$$\%C = \frac{NA}{NI} \; X \; 100$$

Where:

N_A = Actual number of valid analytical results obtained.

N_I = Theoretical number of results obtainable under ideal conditions.

TABLE 2-1A
DATA QUALITY OBJECTIVES
PHOENIX-GOODYEAR AIRPORT SUPERFUND SITE
UMMARY OF PRECISION, ACCURACY, COMPLETENESS OBJECTIVES
(SOIL VAPOR REBOUND ANALYSES - LAB)

PARAMETER Target Compound List	Method No.(1) Reference Modified	Detection Limits	Precision (a) (as RPD)	Accuracy(b) (Recovery)	Completeness
Benzene	EPA TO-14	.2-.5ppbv	15%	80-120%	100%
Carbon Tetrachloride	EPA TO-14	.2-.5ppbv	15%	80-120%	100%
Chlorobenzene	EPA TO-14	.2-.5ppbv	15%	80-120%	100%
Chloroform	EPA TO-14	.2-.5ppbv	15%	80-120%	100%
1,1-Dichloroethane	EPA TO-14	.2-.5ppbv	15%	80-120%	100%
1,2-Dichloroethane	EPA TO-14	.2-.5ppbv	15%	80-120%	100%
1,1-Dichloroethene	EPA TO-14	.2-.5ppbv	15%	80-120%	100%
cis 1,2-Dichloroethene	EPA TO-14	.2-.5ppbv	15%	80-120%	100%
trans 1,2-Dichloroethene	EPA TO-14	.2-.5ppbv	15%	80-120%	100%
Methylene Chloride	EPA TO-14	.2-.5ppbv	15%	80-120%	100%
Tetrachloroethene	EPA TO-14	.2-.5ppbv	15%	80-120%	100%
Toluene	EPA TO-14	.2-.5ppbv	15%	80-120%	100%
Trichloroethene	EPA TO-14	.2-.5ppbv	15%	80-120%	100%
Vinyl Chloride	EPA TO-14	.2-.5ppbv	20%	60-140%	100%
Total Xylenes	EPA TO-14	.2-.5ppbv	15%	80-120%	100%
1,1,1-Trichloroethane	EPA TO-14	.2-.5ppbv	15%	80-120%	100%

a) Precision-Relative Percent Difference (RPD) between duplicate matrix spike recoveries, or duplicate analyses.

b) Accuracy-Percent matrix spike recovery.

1) Soil vapor will be analyzed under U.S. EPA Method Modified TO-2 and speciated for the above compounds as a subset of U.S. EPA Method 8240 compound list.

TABLE 2-1 B
DATA QUALITY OBJECTIVES
PHOENIX-GOODYEAR AIRPORT SUPERFUND SITE
MMARY OF PRECISION, ACCURACY, COMPLETENESS OBJECTIVES
(SOIL VAPOR REBOUND ANALYSES - FIELD GC)

Parameter	Method No. Reference	Detection Limit	Precision (a) (as RPD)	Accuracy (b) Recovery	Completeness
Trichloroethene	Modified TO-14 IND	50 ug/L	20%	80-120%	100%
1,1-Dichloroethene	Modified TO-14 IND	50 ug/L	20%	80-120%	100%
Tetrachloroethene	Modified TO-14 IND	50 ug/L	20%	80-120%	100%
1,1,1-Trichloroethane	Modified TO-14 IND	50 ug/L	20%	80-120%	100%

(a) Precision - Relative Percent Difference (PRD), between duplicate matrix spike recoveries or duplicate analysis.
(b) Accuracy - Percent matrix spike recovery.
IND - Quantifies indicator compounds (TCE, PCE 1,1-DCE AND 1,1,1-TCA

2.1.4 Representativeness

Representativeness expresses the degree to which data accurately and precisely represent a characteristic of a data population, process condition, a sampling point, or an environment. For this project, grab samples shall be taken, and such samples are, by definition, representative of the conditions only at the point in time collected, within sampling and analytical error. The sampling network rationale was designed to provide data representative of affected site conditions and unaffected background condition. Consideration was given to past site practices, existing analytical data, the physical setting at the PGA facility, and constraints inherent to performance of specific objectives.

2.1.5 Comparability

Comparability expresses the confidence with which one data set can be compared to another. To achieve comparability in this project, the data generated shall be reported using units of micrograms per liter (μg/l) for field blank water samples, and parts per billion of volume of air (ppbv) for soil vapor analysis. By using sampling and analysis procedures consistent with US EPA protocols, all data sets shall be comparable within a specific site and between sites to ensure that a consistent data base is used from which decisions concerning remedial action are made. To ensure data comparability, standard analytical reference materials traceable to NBS, U.S. EPA, or equivalent standards shall be used to establish that analytical procedures are generating valid data. The procedures used to obtain the planned analytical data, however, may not be directly comparable to existing data due to differences in analytical procedures and quality assurance objectives. Additionally, different quantities of a compound may be reported from the same sample by the same laboratory using different analytical techniques. This may result from variability within a non-homogenous sample, such as soil, or from extraction efficiency variation among methods.

2.2 DATA QUALITY OBJECTIVES FOR FIELD ACTIVITIES

The DQOs that have been developed for field activities to be conducted at the PGA facility take into consideration specific requirements of the SAP. The requirements are intended to provide acceptable

technical data and tracking procedures to accurately obtain, describe, and evaluate representative samples of the subsurface environment. These quality assurance requirements are intended to ensure the validity and certainty of analytical results.

The summary of DQOs and data collection methods developed for the PGA facility SVE operable unit remedy are summarized as the following:

a. The objectives of collecting data from the media associated with each field activity;

b. The analytical and physical data types required to determine the type, degree, and migration characteristics of the contaminants and the required site characteristics. Included is the estimated number of data points or samples that will be collected to meet the data objective;

c. A description of the sampling method being employed for each type of data;

d. The use(s) for which data are being collected. This has been described by using general purpose categories which represent different data uses (e.g., Health and Environmental Assessment, Evaluation of SVE remedial progress);

e. The analytical method that will be employed to analyze samples. Depending on the analytical DQO level of the associated data, this item may specify an instrument or an analytical method number;

f. The detection limit requirements for the chosen analytical methods. Detection limits will always be lower than the levels of concern or action ranges for the site;

g. The types and numbers of quality control samples that will be collected in association with each sampling event/media.

3.0 QUALITY ASSURANCE METHODOLOGY FOR SAMPLING

Sampling methods for this SAP are based on M&E and U.S. EPA procedures. Step by step sample collection procedures are presented in detail in the sampling section.

3.1 QUALITY CONTROL SAMPLE TYPES

During sampling, a number of QC samples will be collected and submitted for laboratory analysis. The number and frequency of QC sample collection is determined by the individual project requirements and is outlined in this section.

A list of the types of QC samples that will be collected along with a brief description of each sample type is outlined in the following sections.

3.1.1 Trip Blanks

Trip blanks will be collected for chemical analysis of volatile organics. The analytical results serve as a baseline measurement of volatile organic contamination that samples may be exposed to during transport and laboratory storage prior to analysis.

Trip blanks originate in the analytical laboratory. For soils, they will be comprised of ASTM Type II reagent water for organic analyses. The water is placed in the appropriate sample containers by the subcontracting laboratory, transported to the sample collection site, stored along with the samples, and returned to the laboratory along with soil samples collected for volatile organic analysis. The trip blank containers will not to be opened in the field.

Trip blanks will not be used for soil vapor samples collected in SUMMA canisters. The canisters are constructed of electropolished stainless steel and afford no ability for sample cross contamination. The sample inlet port cover will be tightened in the field and custody tape will be placed over the valve and sample inlet prior to shipment.

One trip blank will be included in each shipping cooler containing samples for volatile organics. The sample containers will later be stored in the laboratory with the samples and analyzed for the appropriate parameters.

Field blanks will also be collected for analysis of volatile organic compounds. Field blanks serve as a measurement or indicator of contamination which may be introduced during actual sample collection. For soil vapor samples, field blanks will be comprised of ambient air samples which will be collected in the field and transported to the laboratory along with subsurface soil vapor samples for analysis. One (1) field blank will be prepared for every ten (10) soil vapor samples which are collected.

3.1.2 Equipment Blanks

Equipment blanks will be collected from the sampling train used in the collection of soil vapor samples. The analysis of these blanks serves to verify the cleanliness of the sampling equipment. Equipment blanks will be collected in either Tedlar bags or SUMMA canisters. The container will be opened and a sufficient amount of ultra zero air transferred into the sampling device after passing through the entire sampling train following equipment decontamination procedures. The equipment blanks will be analyzed for the same parameters as the associated samples. One equipment blank will be collected for each day of sample collection.

3.1.3 Field Duplicates

Field duplicates are defined as additional samples collected independently of each other at a single sampling location during a single episode of sampling. Analysis of these duplicates provides statistical information relating to sample variability and serves as a check on the precision of sample collection methods as well as analytical procedures.

Ten percent of all samples will be collected in duplicate and submitted for laboratory analysis. Field duplicates will be labeled so that persons performing laboratory analyses cannot distinguish duplicates from other samples. This type of duplicate has also been referred to as a blind duplicate.

3.1.4 Laboratory Quality Control Samples

Laboratory quality control samples indicate laboratory specific problems and provide indices relating to matrix recovery. Method blanks determine the existence and magnitude of contamination problems. Matrix and laboratory spikes provide information about matrix recovery limits. Duplicate analyses (for matrix and blank spikes) are indicators of both the precision and the accuracy of the sample results. M&E will direct the laboratory in the selection of matrix spikes and duplicate analyses.

3.2 SAMPLE PRESERVATION AND QUANTITIES

Table 3-1 lists the type of containers and preservatives required by the laboratory and the maximum holding time allotted for each analysis. The field crew or site manager will make arrangements to procure sample preservatives and decontaminated sample containers, including those necessary for field quality assurance samples, from the laboratory.

3.3 SAMPLE CUSTODY AND IDENTIFICATION

An overriding consideration essential for the validation of environmental measurement data is the necessity to demonstrate that samples have been obtained from the locations stated and that they have reached the laboratory without alteration. Evidence of the sample traceability from collection to shipment, laboratory receipt, and laboratory custody (until proper sample disposal) must be documented. A sample is considered to be in a person's custody if the sample is:

- In a person's actual possession;
- In view after being in a person's possession;
- Locked so that no one can tamper with it after having been in physical custody; and
- In a secured area, restricted to authorized personnel.

TABLE 3-1

LIST OF CONTAINER TYPE, RQUIRED SAMPLE PRESERVATIVE, AND MAXIMUM HOLDING TIME

Matrix	Container Type	Parameters	Preservative	Holding Time
Soil Vapor - Routine Monitoring	Tedlar Bag	Total VOCs	4 Deg C Light Tight Container	24 Hours
Soil Vapor - Rebound Monitoring (1)	Tedlar Bag	Indicator VOCs	4 Deg C Light Tight Container	24 Hours
Soil Vapor - Rebound Monitoring	Summa Canister	VOCs	4 Deg C	14 Days

(1) Field laboratory GC analysis - Direct inject
(2) CLP - laboratory analysis - TO-14

The Project Geologist is responsible for overseeing and supervising the implementation of proper sample custody procedures in the field. He/she is also designated as the field sample custodian and is responsible for ensuring sample custody until the samples have been transferred to a courier and sent directly to the laboratory.

Once the samples have been received by the laboratory, samples proceed through an orderly processing sequence specifically designed to ensure continuous integrity of both the sample and its documentation.

3.3.1 Chain of Custody

The chain of custody procedures are initiated in the field following sample collection. The procedures consist of: 1) preparing and attaching a unique sample label to each sample collected, 2) completing the chain of custody form, and 3) preparing and packing the samples for shipment. These procedures are further described in the following sections.

3.3.2 Sample Labels and Tags

Field personnel are responsible for uniquely identifying, labeling, and tagging, all samples collected during a field investigation. All labeling and tagging must be done in indelible/waterproof ink. Any errors are crossed out with a single line, dated, and initialled. Each sample label securely affixed to the appropriate sample container and sample tag attached to the neck of each sample container must contain the following information:

- Client/site name;
- Unique project-specific sample identification number (i.e., station number);
- Sample location/description number;
- Type of analysis to be performed and the name of the laboratory to whom the samples are being sent;
- Sample volume, container type, and the type of chemical preservation used;

- Sampling date and time; and
- Initials of the person obtaining the sample.

3.3.3 Chain of Custody Record

A chain of custody form (see Figure 3-1) must be completed for each sample set collected at a sampling location. The form is maintained as a record of sample collection, transfer, shipment, and receipt by the laboratory. The forms must also contain pertinent information concerning sampling location, date, and times; signatures of the sampling team members; types of samples collected along with a unique sample identification number; the number of samples collected and shipped for analysis in each lot; the project name and number; and the name of the laboratory to which the samples are being sent.

3.3.4 Transfer of Custody

Samples shall be accompanied by an approved and completed chain of custody form during each step of custody, transfer, and shipment. When physical possession of samples is transferred, both the individual relinquishing the samples and the individual receiving them shall sign, date, and record the time on the chain of custody form. In the case of sample shipment by an overnight courier, a properly prepared air bill shall serve as an extension of the chain of custody form while the samples are in transit.

3.3.5 Sample Packaging and Shipping

Following sample collection, all samples shall be brought to an on-site location for batching and paperwork checks. At this central location, like sample types are matched (i.e., solids, liquids, gasses, etc.) with similar sample types from all sample locations. Labels and log information are checked to ensure there is no error in sample identification. The samples are packaged to prevent breakage and/or leakage, and the shipping containers are labeled in accordance with the DOT regulations for transport.

M&E Metcalf & Eddy

CHAIN OF CUSTODY FORM

Job/Project Name:	Job/Project Location:	Job/Project Number:
Samplers: (Signatures)	Recorder: (Signature)	Date:
Lab (Samples Sent To):		

SAMPLING		SAMPLE NUMBER	SAMPLE LOCATION	MATRIX					COMPOSITE/GRAB	PRESERVATIVE (Y/N)	ANALYSIS REQUESTED								COMMENTS
Date	Time			Water	Soil													Total #	

Relinguished By: (Signature)	Date: Time:	Received By: (Signature)	Relinguished By: (Signature)	Date: Time:	Received By: (Signature)
Relinguished By: (Signature)	Date: Time:	Received By: (Signature)	Relinguished By: (Signature)	Date: Time:	Received By: (Signature)
Relinguished By: (Signature)	Date: Time:	Received for Lab By: (Signature)	Date: Time:	Comments:	
Method of Shipment:					

Distribution: **Original** to Lab. **Copy 1** to Field Files, **Copy 2** to Project Manager

Form 274 (Rev. 5/89)

FIGURE 3-1

Sample Chain of Custody Form

As soon as field personnel are ready to transport samples from the field to the laboratory, the laboratory shall be notified by telephone of the shipment along with the estimated time of arrival. All samples shall be shipped directly to the laboratory via an overnight carrier. The field team shall determine whether it is best to directly transport the packages to the shipping office or to arrange for on-site pick-up. For each sample shipment to a specific subcontracting laboratory, an overnight air ill must be properly completed.

Unless field collected information indicates otherwise, all environmental samples collected shall be treated as non-hazardous aqueous liquids and non-hazardous gasses.

Because of the expected non-hazardous nature of the collected samples, packaging and shipping criteria have been designed only to maintain chain of custody protocol as well as to prevent breakage of the sample containers. The packaging and shipping procedures shall be as follows:

- Place a layer of cushioning material (e.g., vermiculite) in the bottom of the watertight insulated metal or equivalent strength plastic shipping containers;
- Wrap the properly labeled and secured glass sample bottles and purgeable vials with plastic bubble wrap. Place the wrapped containers into watertight zip lock bags and seal the bags closed;
- Place sample bottles/containers (top side up) into the shipping container arranging the bottles so that the glass bottles are surrounded by plastic bottles;
- Using the necessary packing material, pack the sample containers to ensure that they do not shift during transport;
- Fill any void spaces of the shipping container, around and on top of the sample bottles, with ice cubes or chips sealed in plastic bags or with blue ice;
- Seal the appropriate chain of custody form(s) in a zip-lock plastic bag, and tape it securely to the inside of the shipping container lid;
- Close and lock/latch the shipping container. Seal the space between the container body and lid with waterproof tape. (If the shipping container used is a picnic cooler, tape the drain plug closed to prevent any leakage of water as the ice packs melt during transport.);

- Apply several wraps of chain of custody tape around the shipping containers perpendicular to the seal to ensure that the lid remains closed if the latch is accidentally released or damaged during shipment. Do not obscure any stickers or labels on the shipping container with the chain of custody tape;

- Place a completed overnight carrier air bill on the lid of the shipping container. Include the name, address, and telephone number of the receiving laboratory and the return address and telephone number of the shipper on the air bill;

- Place a "This End Up" label on the lid and on all four sides of the shipping container; and

- Each shipping container must not weigh more than 150 pounds if it is to be shipped overnight by Federal Express or similar carrier.

3.4 SAMPLE DOCUMENTATION

In all cases, the Field Geologist/Quality Assurance Officer shall maintain a concise, detailed field logbook containing accounts of all field activities and actions taken as well as documentation of observations made.

All sampling procedures, instrument calibration, and information pertinent to sampling conditions, progress, and field data collection must be documented following a prescribed set of guidelines. The documentation serves as a permanent and traceable record of all activities related to a specific field investigation project. The record must be legible and accessible to allow ease in verifying sampling activities and addressing future questions which may arise concerning such issues as sample integrity, and sample traceability.

3.4.1 Sample Designation/Identification

All samples shall be identified by a unique sample identification number which includes the project number hyphenated with a consecutive numbering system specific to the samples collected for that project. For example: 006791-053 identifies this as the 53rd sample collected for project number 006791. The location and sample matrix may be further identified with descriptive information. For example: SV79-1A would describe a soil vapor sample collected at location 1A from Polygon 79.

This identification number is used to ensure sample traceability and identifies this particular sample as to its site origin, type, location, sample matrix, and sample data within a specific project; all samples shall be identified using a numbering system cross-referenced to descriptive sample information. The cross-index is to be designed and maintained by the field team leader.

The unique sample identification number shall be recorded on the chain of custody forms accompanying each sample to the laboratory for sample analysis.

3.4.2 Daily Log

The field team leader has the responsibility to maintain the daily field documents pertaining to sample identification and control. Special emphasis is placed on log book completeness and accuracy. Field log books, field data forms, and chain of custody forms must contain entries made with indelible ink and must be dated and signed. All statements in the logbook must be legible, accurate, and include documentation of all project activities. At a minimum, entries into the log book shall include weather conditions, date and time of each sample collection, and references to any difficulties encountered and how such difficulties were resolved.

3.4.3 Records

The following section describes the type of records that will be maintained by project staff members.

3.4.3.1 Field Log Books

A field log book shall be maintained by each field team member for this hazardous waste field investigation project. The log book shall be comprised of a bound book with consecutively numbered pages; no pages must be skipped when filling in the log books. The integrity of field documentation is further ensured by the use of field log books containing paper treated to repel the rain or any other aqueous splashings experienced during field documentation. Should more than one field log book be required, they shall be numbered sequentially.

The front of each field log book shall contain the following information:

- Project name and number;
- Name of the contract under which the investigation is being conducted; and
- Date(s) of use.

The field log book shall contain a diary of all pertinent project activities. Standard information recorded in the field log book includes: general observations made in the field, identification and calibration of instruments used, and field data.

The field log book shall contain the following information:

- Date and time of personnel entries on-site, weather conditions, temperature;
- List of start/stop times of all subcontractors hired for activities such as drilling, steam cleaning, well development;
- List of the personnel present on-site during each sampling day to include all M&E personnel, subcontractors, and visitors;
- List of the equipment decontaminated along with a reference to the procedures used;
- Description of the sampling locations in reference to permanent landmarks;
- List of any changes from standard operating procedures, decisions made in the field, and other pertinent information;
- QA/QC samples associated with the samples collected;
- Equipment and/or instrument identification numbers (if available) for those used;
- Sample preservation techniques performed;
- Air monitoring information gathered (e.g., PID, OVA readings, etc.);
- Level of personal protection mandated (e.g., Level B, C, D) and record of pertinent time intervals spent by each field team member at each level (e.g., time spent in Level C developing a well, time spent in Level C sampling soil from a backhoe, etc.);
- Other logs/paperwork used to document activities,

- Instrument calibration information including the instruments calibrated during the day and the individual who performed the calibration (Note: Instrument calibration information should be documented in the field logbook as well as on the instrument calibration log kept with each instrument, serving to document instrument response over time.);

- List of the samples collected by media (i.e., soil, gas, etc.); and

- Comments relative to any problem areas that occurred during the day's activities, their final resolution, and any anticipated impact on the outcome of the field investigation.

The last item to be entered at the bottom of each page of the field log book shall be the signature of the person responsible for completing the data entry.

3.4.3.2 Project Log Book

A unique project-specific log book shall be maintained for the Phoenix-Goodyear Airport environmental investigation. The log book shall be comprised of a bound book with consecutively numbered pages. Should more than one project log book be required, they shall be numbered sequentially.

The primary purpose of this log book is to contain all the data specific to the project in one central location. In general, the project log book shall contain essentially the same information as the field log book. However, the project log book need not list all the actual field data and instrument calibration information generated during a sampling episode. References to other documents that contain specific field activity descriptions, outlines of any administrative occurrences that have affected the field work for any given sampling activity, as well as a summary of the field activities, must be documented in the project log book and kept up-to-date on a daily basis.

3.4.3.3 Field Equipment Log Book

A unique field equipment log book is required for each piece of field equipment (i.e., OVA, PID meter, etc.). This log book is used for the documentation of the proper use, maintenance, and

calibration of the field equipment as well as for any information concerning the conformance and decontamination status of each piece of equipment.

The field log book is maintained and kept up-to-date following every use, maintenance, inspection, repair, and/or calibration of the equipment. Entries into the log book should contain the following information:

- Signature of the person making the entry;
- Date of entry;
- Status of equipment in terms of its operational and decontamination standing;
- Reference to the procedures used for calibration or maintenance as well as the procedural results and/or description;
- Name of person(s) using the equipment and a brief description of the nature of the work; and
- Calibration log forms used to record all on-site calibrations.

The field equipment log book must be a bound book with consecutively numbered pages. Every page in the log book must be signed by the field equipment maintenance person responsible for keeping each piece of equipment in proper repair and maintained for field use as a reflection of their review and approval of each entry.

3.4.3.4 Field Data Forms

Along with the completion of data entry in each of the above-mentioned log books, field data forms should also be completed and filed in a 3-ring notebook maintained at the sampling site for all field activities.

These forms may include the following:

- Site Health and Safety Log - to maintain accurate health and safety records for each field team member;

- Geologic Boring Log - to document soil boring operations related to SVE extraction/monitoring well construction;
- Monitoring Well Installation Form;
- Monitoring Well Soil Vapor Sampling Worksheet; and
- Field parameter forms (including site I.D., sampling and time, field sample number, sample depth (if applicable), and sampling technique).

3.4.3.5 Chain of Custody Record

Possession of samples shall be traceable from the time a sample is collected until it is used as evidence in legal proceedings, if applicable. To adequately track sample possession, a documented chain of custody must be maintained. See Section 3.3 for more detailed guidelines concerning sample custody.

3.4.3.6 Materials Certification

Documentation concerning the quality of all materials used on site shall be retained on site for the duration of the Site Investigation at the Phoenix-Goodyear Airport. The following list of documentation for materials certification serves as an example:

- Sieve analysis of sand pack material for monitoring wells;
- Sample and manufacturer's certification of bentonite used for grout in monitoring and extraction wells;
- Sample and manufacturer's certification of cement (Type II or V) used for grout in monitoring and extraction wells;
- Manufacturer and lot number for calibration standards;
- Labels from materials used for well construction;
- Labels from distilled water used in decontamination; and
- Certificates of cleaning or decontamination furnished by the laboratory (the certificate shall detail the cleaning procedure).

Documentation and samples of the materials used in well construction and decontamination procedures will be archived for future reference. Material samples are required for sand pack material, bentonite, and cement used during the site investigation.

These materials shall be sampled and labeled in a similar fashion as described for the environmental and field QC samples. Approximately 2 pounds of dry material is required per sample.

The archived samples shall be stored in clean containers and protected from exposure to the elements for the duration of the site investigation. The Project Manager shall determine the length of time material blanks are to be stored following completion of the site investigation.

3.4.4 Variances

A variance is a deviation from project requirements. All variances from procedural, planning, and design documents, and other project requirements, shall be documented in a Field Change Request.

Field changes and deviations from project planning documents shall be reviewed and approved by the M&E Project Manager or Project Quality Assurance Officer. All deviations from procedural and planning documents shall be recorded in the field log book. Project reports shall detail all field changes and deviations.

4.0 SOIL VAPOR SAMPLING - SVE TREATMENT SYSTEM AND SVE EXTRACTION/MONITORING WELLS

4.1 SCOPE AND APPLICATION

This section covers the materials, equipment and procedures utilized by M&E for collecting soil vapor samples from the SVE treatment system and/or SVE extraction/monitoring cluster wells in the field, and soil vapor samples from SVE monitoring cluster wells for CLP laboratory analysis.

4.2 SAMPLING TRAIN AND EQUIPMENT

4.2.1 Soil Vapor Containers

Laboratory soil vapor samples will be collected using 1-liter capacity SUMMA canisters. SUMMA canisters are constructed of electropolished stainless steel. The canisters are precleaned in the laboratory and are shipped pre-evacuated to approximately 27 inches of mercury vacuum. Each canister contains its own sample inlet needle valve onto which is threaded a precleaned, mass flow controller calibrated to 200 ml/min sampling rate. Full laboratory decontamination certification will be provided for each SUMMA canister used at the site.

Atmospheric or soil vapor samples for field analyses will be collected in 3-liter capacity Tedlar bags. Each sample bag contains its own sample inlet valve and port for sample tubing. Vapor sample is drawn into the sample bag through the opening of the valve. The flow rate of the sample into the bag will be controlled by placing a calibrated mass flow controller inline between the sample pump and the bag valve.

4.2.2 Sampling Adapters

Soil vapor samples will be collected using adapters constructed of stainless steel swage-lok fittings attached to new 1/4-inch diameter Teflon tubing.

4.2.3 Soil Vapor Sampling Train (Field Analyses)

The vacuum pump M&E will use to collect all soil vapor samples from the SVE treatment system and SVE extraction/monitoring wells for field analyses is a programmable, mass flow controlled vacuum pump (see Figure 4-1). The vacuum pump is a regulated oilless diaphragm type pump. The total volume of soil vapor sample to be purged or collected is pre-programmed using the keypad on the front of the housing. When the specified flow volume has been obtained, a solenoid valve is automatically closed and sampling is discontinued. Following sample collection, the total volume of sample obtained appears on the LCD screen on the front of the housing in units of milliliters. An analog vacuum guage and volumetric rotameter are provided on the unit to confirm electronic readings. The flow rate for purging and/or sampling using the flow controller will be preset at a rate of 200 ml/min. Total purging and/or sampling volumes will vary depending on the volumes of the specific sampling locations.

In order to maintain the integrity of collected samples and to avoid potential cross-contamination of samples that may come in contact with the vacuum pump, all samples will be collected upstream from the programmable vacuum pump using a soil vapor vacuum box. Figure 4-2 provides a schematic illustration of the sample train including the programmable pump and soil vapor vacuum box. The vacuum box operates on the principle that as ambient pressure air is evacuated from the sealed box, the vacuum generated around the sample bag induces vapor flow into the bag without contacting any pumping device.

The rate at which are is evacuated from the vacuum box is equivalent to the rate at which soil vapor flow is induced into the sample bag. As previously stated, the programmed evacuation rate will be set at 200 ml/min. When the sample bag is filled, the sample inlet line is off between the source and the sample bag, the vacuum release valve on the vacuum box is opened, and the valve on the sample bag is closed, ending the sampling event. All tubing connections utilize stainless steel swage-lok fittings and new, 1/4-inch Teflon tubing. All used segments of Teflon tubing are replaced with new segments following each sampling event.

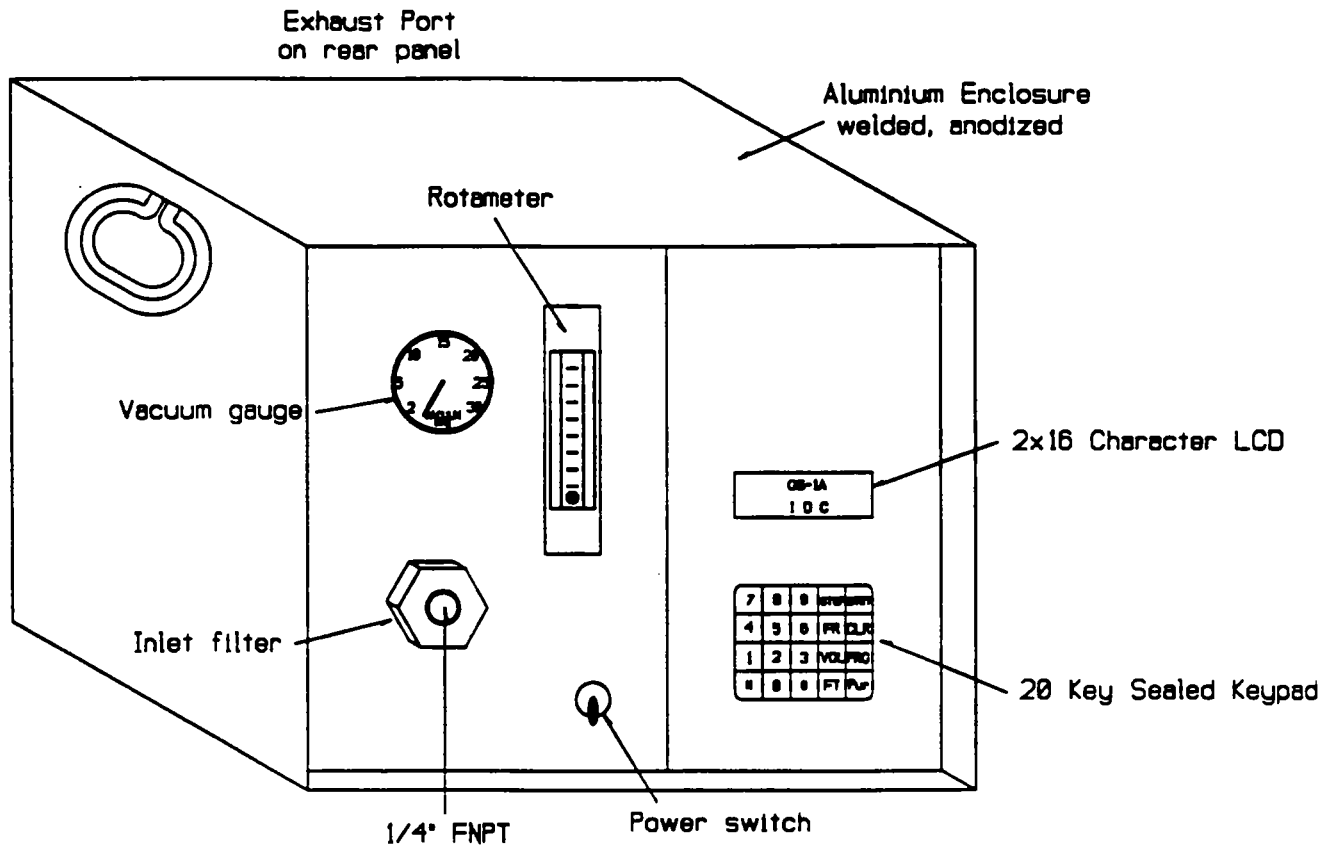

Source: IDC (1991)

FIGURE 4-1

Schematic of Programmable Mass Flow
Controlled Vacuum Pump

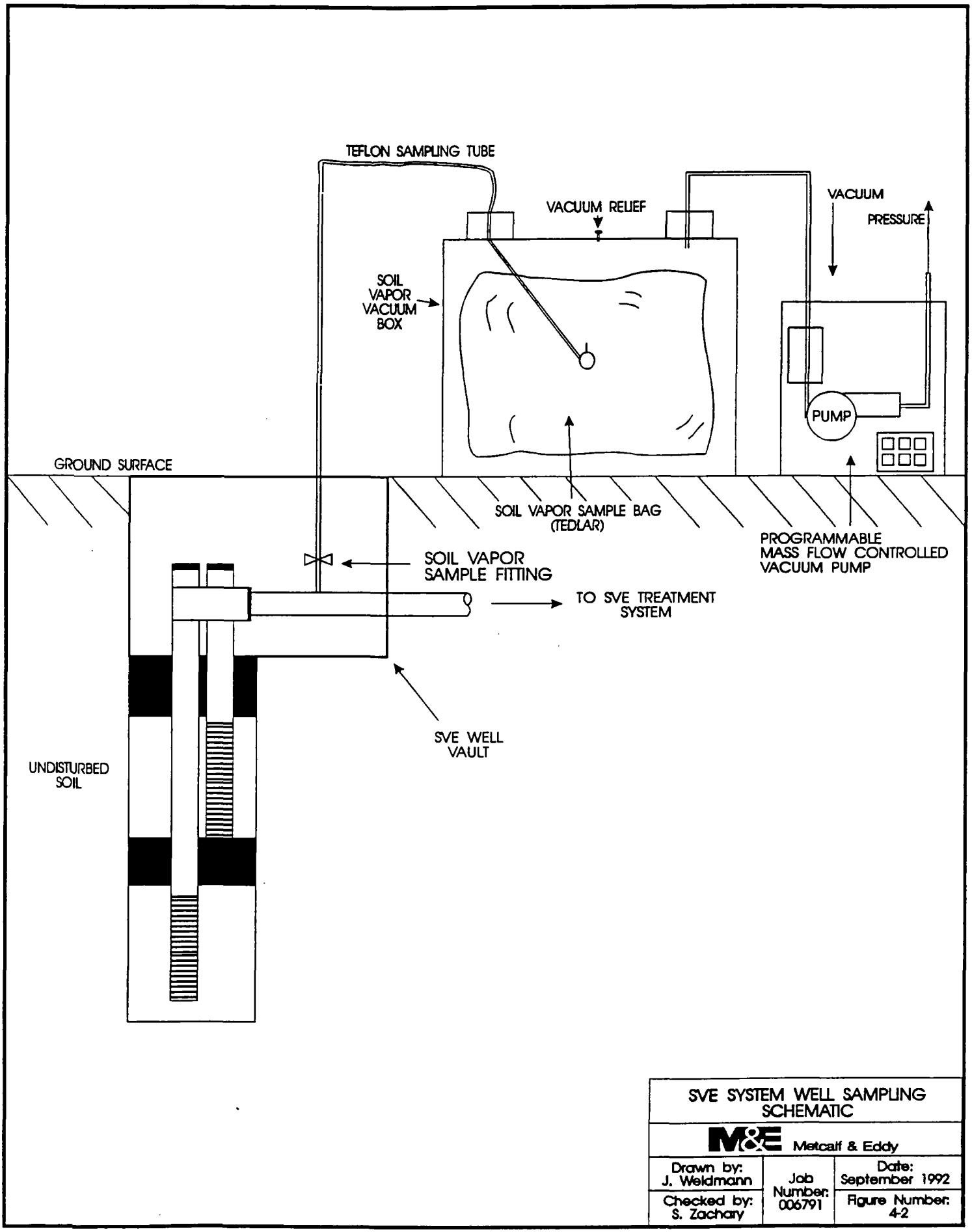

SVE SYSTEM WELL SAMPLING SCHEMATIC		
M&E Metcalf & Eddy		
Drawn by: J. Weidmann	Job Number: 006791	Date: September 1992
Checked by: S. Zachary		Figure Number: 4-2

4.3 SOIL VAPOR SAMPLING - (FIELD MONITORING)

This section describes the methodologies that will be employed to collect soil vapor samples from the SVE system for routine monitoring and for evaluation of when to commence rebound sampling.

4.3.1 Pre-sample Purging

Prior to collecting samples, all soil vapor sampling locations are initially purged of static air residing in the sampling system. Drawing M-3, Detail 8 provides sampling locations on SVE extraction wells, and Drawings E-2 and E-3 provide sampling locations on the SVE treatment systems (see Appendix K, SVE Final Design Document, November, 1992). In the case of SVE extraction and monitoring wells that have been switched off, static air is calculated as the open area of the targeted well.

The formula used to quantify this volume is as follows:

$$V = \Pi r^2 h$$

Where:

V = Volume of well (cm^3)

Π = 3.1416 (unitless)

r = radius of well (cm)

h = height of well (cm)

In the case of SVE treatment system locations, since sample will commence when the system is running, no soil vapor pre-purging is necessary due to the absence of static vapor (e.g. extracted vapors will be dynamically flowing).

The sampling methodology for SVE wells that have been switched off consists of initially purging two (2) well volumes using the programmable vacuum pump or until peak VOC concentrations occur, whichever comes first. During purging, VOC concentrations are continuously monitored and

recorded using a photoionization detector (Photovac Microtip 200, or equivalent) positioned at the exhaust port on the purge pump.

4.3.2 Soil Vapor Sample Collection (Field Monitoring)

Following purging, the sampling location is allowed to return to its ambient pressure reading (pressure prior to pumping). At this time, the programmable pump will be preset to collect a 3-liter (3,000 cm^3) volume sample at a flow rate of 200 ml/min. The soil vapor vacuum box is incorporated into the sampling train as shown in Figure 4-2.

A 3-liter capacity Tedlar bag will be positioned inside of the vacuum box and the bag valve will be opened after pre-evacuating the sample tubing. Sampling will commence by evacuating the vacuum box with the programmable mass flow controlled vacuum pump instrument. The pump controller will be set at a pump rate of 200 ml/min, with a pre-set vacuum at least 20% greater than the vacuum measured in the system to be sampled. Following sample collection, the pump will be turned off and the sample bag valve closed.

4.4 SOIL VAPOR SAMPLING FOR REBOUND (LABORATORY ANALYSIS)

This section describes the methodologies that will be employed to conduct periodic rebound monitoring on SVE monitoring cluster wells for CLP laboratory analysis and subsequent VLEACH and Mixing Cell Screening.

4.4.1 Presample Purging

Prior to collecting samples, all SVE operable unit monitoring well locations are initially purged of static air residing in the sampling system. Drawing M-3, Detail 8 provides sampling locations on SVE extraction wells, and Drawings E-2 and E-3 provide sampling locations on the SVE treatment systems (see Appendix K, SVE Final Design Document, November, 1992). The static air volume is calculated as the open area of the targeted well. The formula used to quantify this volume is as follows:

$$V = \Pi r^2 h$$

Where:

V = Volume of well (cm^3)

Π = 3.1416 (unitless)

r = radius of well (cm)

h = height of well (cm)

The sampling methodology for SVE wells that have been switched off consists of initially purging two (2) well volumes using the programmable vacuum pump or until peak VOC concentrations occur, whichever comes first. During purging, VOC concentrations are continuously monitored and recorded using a photoionization detector (Photovac Microtip 200, or equivalent) positioned at the exhaust port on the purge pump.

4.4.2 Rebound Soil Vapor Sample Collection (Laboratory Analysis)

Following the merging protocol described in the previous section, the sampling location is allowed to return to its ambient pressure reading (pressure prior to pumping). At this time, the programmable mass controlled vacuum pump will be disconnected from the sample line and replaced with a pre-evacuated, stainless steel SUMMA canister. Figure 4-3 illustrates the sampling schematic for rebound soil vapor sample collection. To initiate sampling, the downstream end of the Teflon tubing will be attached to the intake of the mass flow controller mounted to the SUMMA canister (see Figure 4-3). After ensuring that all fittings are gas tight, the needle valve on the SUMMA canister will be opened to begin sample collection. Total sampling time will be five minutes which is sufficient duration to collect one liter of soil gas at a controlled flow rate of 200 ml/min. All used segments of Teflon tubing will be replaced with new segments following sampling.

4.5 DECONTAMINATION OF EQUIPMENT

Prior to each use and reuse all stainless steel mass flow controllers and swage-lok fittings will be oven baked at a temperature of 105°C for at least thirty minutes. Nitrile or latex surgical gloves are worn during handling and assembly of the sampling apparatus.

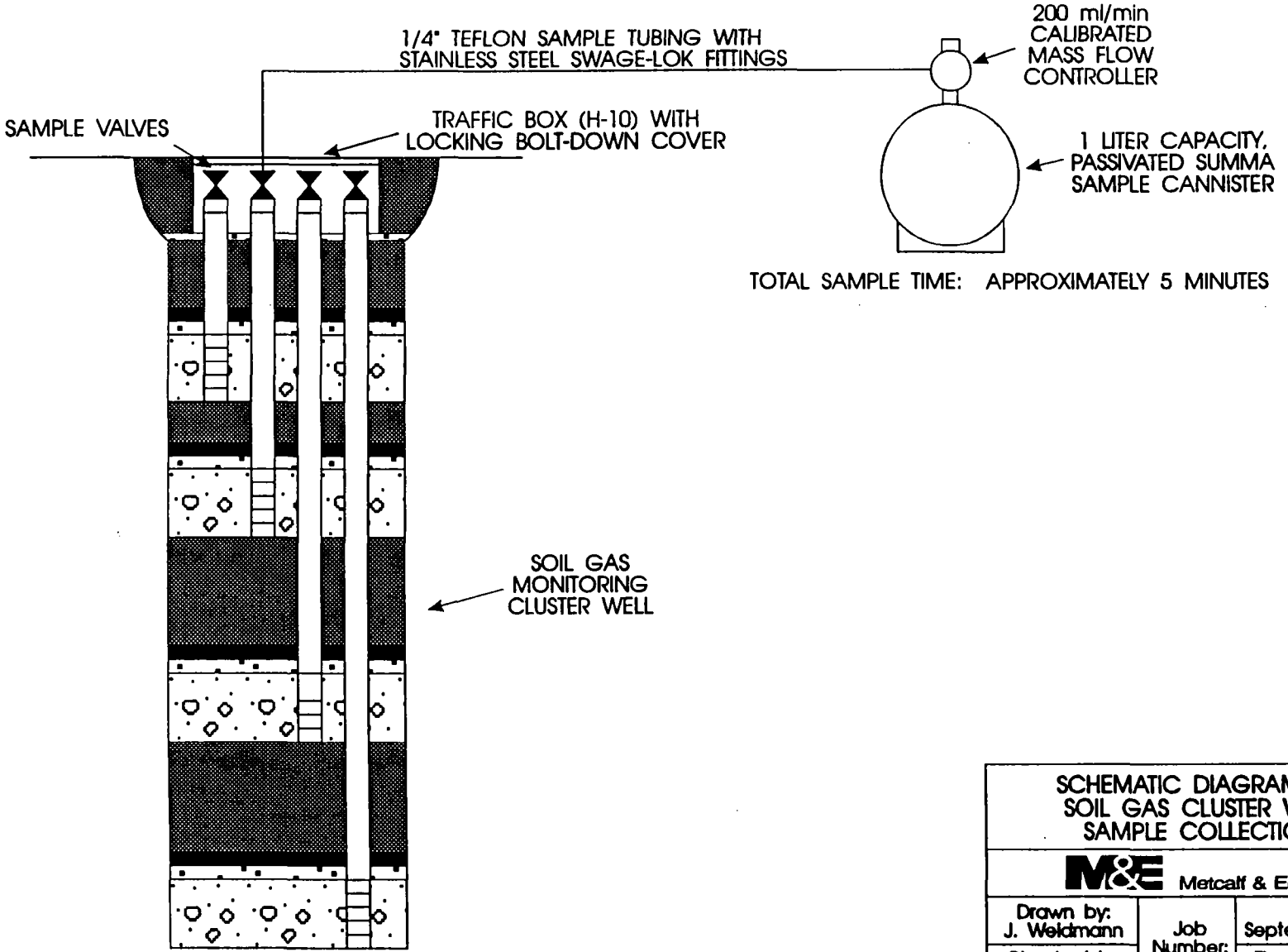

SCHEMATIC DIAGRAM OF SOIL GAS CLUSTER WELL SAMPLE COLLECTION		
M&E Metcalf & Eddy		
Drawn by: J. Weidmann	Job Number: 006791	Date: September 1992
Checked by: S. Zachary		Figure Number: 4-3

5.0 SOIL VAPOR ANALYSIS

5.1 SCOPE

This section covers the equipment, materials, and procedures used to determine the concentrations of various volatile organic compounds in soil vapor samples collected from the SVE operable unit treatment system and/or SVE extraction and monitoring wells. Field SVE operable unit monitoring soil vapor samples will be analyzed using a photoionization detector. Field SVE rebound soil vapor sampled will be analyzed using a field GC, while laboratory SVE rebound soil vapor samples will be analyzed using EPA Method TO-14. Table 5-1 summarizes the analytical schedule for each type of soil vapor sample collected.

5.2 DETECTION LIMITS

Method detection limits (MDLs) are matrix dependent. For Tedlar bag soil vapor samples, the MDL for GC analysis is estimated at 50 ppbV. For laboratory soil vapor samples, the MDL is specified as lower than 1 ppbV (see Table 2-1A). The applicable concentration ranges of these methods are influenced by sample size and instrument limitations.

5.3 APPARATUS AND EQUIPMENT

5.3.1 Gas Chromatographs

For analysis of SVE operable unit field rebound soil vapor samples collected at clustered monitoring wells, a Photovac 10S70 (or equivalent) will be configured with a 10.6eV output photoionization detector. Analytical results obtained from this instrument will be used for VOC species identification and semi-quantitation, and as a means of evaluating when to commence with quantitative laboratory rebound monitoring. It is anticipated that the Photovac GC will be operated with a single injection port using the backflush mode configuration from rapid sample analytical turnaround. A 1/8-inch

Table 5-1
Summary of Soil Gas Analytical Activities

Parameter/Sample Type	Analytical Method	Targeted Analysis	Detection Limits	DQO Level
Phase I Soil Gas Survey	On-site GC # HP5890	IND*	50 ppbv	2
SVE Operable Unit Routine Field Monitoring	Hand Held Photoionization Detector	Total VOCs	1 ppmv	1
SVE Operable Unit Rebound Field Monitoring	On-site GC Photovac 10S70 (or Equivalent)	IND**	50 ppbv	2
SVE Operable Unit Rebound Laboratory Monitoring	Off-site Certified Laboratory EPA TO-14	TO-14 Full Scan	< 1 ppbv	3

EXPLANATION

IND * = Denotes quantitation of indicator parameters (TCE, PCE, 1,1-DCE, and 1,1,1-TCA

IND** = Denotes semi-quantitation of indicator parameters (TCE,PCE and 1,1-DCE)

diameter, four-foot length SE-30 packed column will be connected in series with a 1/8-inch diameter, 6-inch length SE-30 precolumn for separation of the analytes of interest. Ultra zero grade air will be used as the carrier gas supplied at a flow rate of approximately 40 ml/min. The analytical temperature will be run at ambient temperature. Once the operating conditions are established, all subsequent analyses will proceed according to set parameters. All operating conditions and instrument specifications will be recorded in a sequentially bound laboratory notebook.

5.3.2 Tedlar Bag Analysis

A measured volume will be drawn from the Tedlar bag using a gas-tight syringe and immediately injected into the GC.

5.3.3 Calibration Standards

Calibration standards will be obtained from commercial sources (AccuStandard, or equivalent). A measured volume of the standard mixture will be injected into a nitrogen-filled 1-liter gas bottle through a septum side port. The bottle will be heated to achieve volatilization and mixing of the standards. For Tedlar bag analyses, a measured volume will be directly injected into the GC using a gas-tight syringe. The calibration standard will contain the following:

- 1,1,1-Trichloroethane
- 1,1-Dichloroethene
- Trichloroethene
- Tetrachloroethene

The initial calibrations will use at least three different concentrations expected to bracket the concentrations of the samples. For the Photovac 10S70 GC, a targeted linear regression coefficient will be set at 0.97 or greater.

Quantitation of sample concentrations will be performed by using the external standard technique, i.e., comparing instrument response against the initial calibration curve.

5.3.4 Continuing Calibration

At the beginning of each day, or every twelve hours, a continuing calibration in concentrations at mid-range of the initial calibration curve will be analyzed. The measured concentration, as determined from the initial calibration curve, will not vary more than plus or minus twenty percent. In the event the twenty percent criterion is exceeded, a new initial calibration curve must be generated and the continuing calibration reanalyzed.

5.3.5 Quality Control

5.3.6.1 System Bank

A randomly selected Tedlar bag will be analyzed daily to demonstrate interferences from the sampling device or the analytical system. If interferences are found at unacceptable levels, the contents of an unpacked cartridge or a new Tedlar bag will be analyzed to determine if the interference is due to the sampling device or to the analytical system. Appropriate measures will be taken to eliminate such interferences.

5.3.6.2 Field Blanks

Prior to each days soil vapor or atmospheric sampling, field blanks of the entire sampling train will be taken and analyzed to check background contamination in the sampling system. Tedlar bag samples will be obtained by drawing ultra zero grade air through the sampling train and injecting an aliquot for analysis. Additional field blanks will be collected prior to any reuse of recleaned sampling equipment.

5.3.6.3 Duplicate Samples

Duplicate soil vapor or atmospheric, samples are collected from each sampling location. Duplicate analyses will be performed on at least 10% of the samples collected.

5.3.6.4 Trip Blanks

A Tedlar bag partially filled with ultra zero grade air will be transported into the field with the sampling equipment. The trip blank bag will be handled in the same manner as the collected samples. The trip blank will be returned to the lab with the other samples and analyzed. If VOC's are detected, sample handling and transport procedures will be subsequently reviewed.

5.3.7 Sample Handling

When each sample arrives in the mobile laboratory area the or bag number and the arrival time will be entered in waterproof ink in a sequentially numbered bound laboratory notebook. The injection number, as it corresponds to the chromatogram number from the integrators, will also be entered.

5.3.8 Records

The laboratory notebook will include all information necessary to trace analytical work, including sample calculations, injection order, sample numbers, instrument parameters, and any and all deviations or variances from the standard protocols. Observations of extraordinary circumstances will also be noted. The analyst's name will appear at the top of each page, the words "continued to page" and "continued from page" will be added along with the appropriate page number. A table of contents will be constructed at the beginning of the notebook. Chromatograms will remain in a continuous roll throughout the day and the sample ID added. If a roll of paper is torn or a new roll is used, an explanation will be included at the beginning. The integrator sample number, time, and date will be checked each morning and verified by entry into the laboratory notebook.

6.0 SVE TREATMENT SYSTEM STACK SUMP

This section describes the sampling and analytical methodology for monitoring the SVE treatment stack sump liquids.

6.1 STACK SUMP SAMPLING

The sampling location for accessing the SVE treatment stack sump valve is illustrated on Drawing E-3, Appendix K, SVE Final Design Document, November, 1992. The stack sump is positioned below the SVE treatment stack. A valve is positioned at the terminus of a one-inch diameter steel line running from below the sump. Periodically, the valve will be opened to inventory and record the presence of liquids in the line. Sampling will be carried out by filling 40 milliliter capacity VOA septum vials (2 quantity) from the drain line valve.

6.2 STACK SUMP AQUEOUS ANALYSIS

The presence of indicator VOCs (TCE, PCE, 1,1-DCE, and 1,1,1-TCA) will be screened for using the field GC. Fifty percent (20 milliliters) of the VOA vial contents will be decanted and the septum cap replaced. The vials will be placed in a water bath heated to 50°C. After a minimum of 30 minutes, the vial will be removed from the water bath and a headspace aliquot will be removed from the vials by piercing the septum with an analytical hypodermic syringe. The headspace sample will be directly injected into the field GC. Refer to Section 5 for analytical protocol and QA/QC.