PUBLIC SERVICE ELECTRIC AND GAS COMPANY'S ("PSE&G") INITIAL RESPONSE TO USEPA REQUEST FOR INFORMATION DIAMOND ALKALI SUPERFUND SITE PASSAIC RIVER STUDY

PSE&G FORMER HARRISON GAS PLANT

TABLE OF CONTENTS

1.0 BACKGROUND . . . 3
- 1.1 INTRODUCTION . . . 3
- 1.2 CORPORATE HISTORY . . . 5

2.0 SITE BACKGROUND . . . 7
- 2.1 LOCATION . . . 7
- 2.2 OWNERSHIP . . . 7
- 2.3 INFRASTRUCTURE . . . 8
  - 2.3.1 FUEL AND PRODUCT STORAGE . . . 8
  - 2.3.2 GAS MANUFACTURING . . . 10
  - 2.3.3 DEMOLITION . . . 14

3.0 SITE OPERATIONS . . . 15
- 3.1 GAS MANUFACTURING PROCESSES . . . 15
  - 3.1.1 CARBURETTED WATER GAS PROCESS . . . 16
  - 3.1.2 OTHER MANUFACTURED GAS PROCESSES . . . 34
    - 3.1.2.1 REFORMED NATURAL GAS . . . 35
    - 3.1.2.2 MODIFIED AIR JET GAS . . . 37
    - 3.1.2.3 COLD ENRICHMENT GAS . . . 38
    - 3.1.2.4 CYCLIC CATALYTIC REFORMED GAS . . . 39
    - 3.1.2.5 LIQUEFIED PETROLEUM AIR GAS . . . 42
    - 3.1.2.6 COKE OVEN GAS . . . 44
    - 3.1.2.7 OIL GAS . . . 45
    - 3.1.2.8 SYNTHETIC NATURAL GAS . . . 49
- 3.2 FUEL AND PRODUCT STORAGE . . . 58
- 3.3 AUXILIARY PROCESSES . . . 65
  - 3.3.1 STEAM GENERATION . . . 65
  - 3.3.2 COOLING WATER SYSTEM . . . 82
  - 3.3.3 TARRY WATER EFFLUENT COLLECTION SYSTEM . . . 86
  - 3.3.4 ASH/CLINKER HANDLING . . . 89
  - 3.3.5 SANITARY SEWER SYSTEM . . . 91
  - 3.3.6 COAL PILE RUNOFF . . . 91
  - 3.3.7 NO. 3 GAS HOLDER TAR CONDITIONER SYSTEM . . . 92
- 3.4 SUPPORT SYSTEMS . . . 94
  - 3.4.1 ELECTRICAL SYSTEMS . . . 94
  - 3.4.2 LABORATORY . . . 95
- 3.5 MISCELLANEOUS MATERIALS . . . 95

4.0 REGULATORY PROGRAMS . . . 96
- 4.1 NPDES PERMIT . . . 96

849900002

4.2 PASSAIC VALLEY SEWERAGE COMMISSION PERMIT 103
4.3 DPCC/DCR/SPCC PROGRAMS 105
4.4 AIR PERMITS 108
4.5 SPILL DISCHARGE HISTORY 108
4.6 EXPLOSIONS, FIRES, FLOODS OR OTHER INCIDENTS 116
4.7 MANUFACTURED GAS PLANT REMEDIATION PROGRAM 117
4.8 IMPACTS TO MEDIA 119
4.9 DREDGING OPERATIONS 125
4.10 UNDERGROUND STORAGE TANKS 126
4.11 PCB CONDENSATES 127
4.12 HAZARDOUS WASTE MANAGEMENT 128

5.0 REFERENCES 130

849900003

1.0 BACKGROUND

1.1 INTRODUCTION

The United States Environmental Protection Agency ("USEPA") served Public Service Electric and Gas Company ("PSE&G") with a Request For Information Diamond Alkali Superfund Site, Passaic River Study Area, dated April 30, 1996 under the Comprehensive Environmental Response, Compensation and Liability Act of 1998, as amended, 42 U.S.C. Section 9601 et seq. ("Request For Information"). By this Request For Information, USEPA seeks information and records concerning industrial operations conducted at two PSE&G facilities: the former Harrison Gas Plant in Harrison, New Jersey, and the Essex Generating Station in Newark, New Jersey.

PSE&G's response to this Request For Information was originally scheduled to be provided to USEPA within thirty calendar days of receipt of same. USEPA has extended the time for the submission of this response until August 13, 1996.

PSE&G has prepared this submission as its response to the Request For Information. PSE&G submits that this submission is responsive and, further, it commits to make all relevant records referenced herein available for inspection at the USEPA's request. PSE&G wishes to apprise USEPA of certain background information to consider in connection with evaluating this response.

Industrial operations at the Harrison Site commenced in 1902. Initially, the Site was used as a satellite storage facility for a manufactured gas plant. In 1926, construction of a manufactured gas plant was completed at the Site and commercial operations of this facility began. Base load gas manufacturing operations ceased in 1965. Thereafter, the Site was utilized as a peak-shaving facility operating on average approximately 100 hours per year. Peak-shaving operations were generally terminated after the 1986/87 winter. The gas plant has been dismantled. After operations ceased, there was no concerted effort made to preserve or maintain Plant operating records.

A steam electric generating station commenced commercial operations at the Essex Site in 1915. A substantial portion of the steam generating facility was removed from service in the early 1970s and the entire steam plant was removed from service in 1978. The steam plant was dismantled in 1990. The Site still houses a fleet of combustion turbines which generate electricity on peak demand days in the summer and winter. After steam electric generating operations ceased there was no concerted effort made to preserve or maintain Station operating records.

PSE&G has attempted in good faith to locate and review documents potentially relevant and responsive to the Request For Information. The absence of any organized records has made this task extremely difficult. This difficulty has been compounded by the long history of the operations, the nature and scope of the Request For Information and the limited period within which to respond. This response should be considered in this context.

PSE&G recognizes its continuing obligation to supplement this response if responsive information not known or not available as of the date of this response should later become known or available to it.

Finally, PSE&G advises USEPA that this response was prepared by a team of PSE&G employees with assistance from certain external resources. A Project Manager was designated to coordinate its response to the Request for Information for each facility and each Project Manager worked with a small team including Company counsel to prepare a response for that facility. The Project Manager for each such facility is designated as the knowledgeable person for such facility and has executed the required certification.

1.2 CORPORATE HISTORY

Public Service Enterprise Group Incorporated ("Enterprise"), was incorporated in 1985 under the laws of the State of New Jersey. Its principal executive offices are located at 80 Park Plaza, Newark, New Jersey 07101. It is a public utility holding company that neither owns nor operates any physical properties. A copy of the Certificate of Incorporation of Enterprise is produced herewith as Appendix A. Enterprise has two direct wholly-owned subsidiaries, Public Service Electric and Gas Company ("PSE&G") and Enterprise Diversified Holdings Incorporated ("EDHI"). Enterprise's principal subsidiary, PSE&G, is an operating public utility engaged principally in the generation, transmission, distribution and sale of electric energy service and in the transmission, distribution and sale of gas energy

service in New Jersey. The agent for service of process for PSE&G is E. J. Biggins, Jr., Corporate Secretary.

PSE&G was formed in 1924 by the merger, inter alia, of the Public Service Gas Company and the Public Service Electric Company. The Public Service Gas Company and the Public Service Electric Company were also New Jersey corporations organized in 1873 and 1910, respectively. Both entities were, at the time of the merger, wholly owned subsidiaries of The Public Service Corporation of New Jersey, organized in 1903. PSE&G was, as a result of the merger, and remained until 1948, a wholly-owned subsidiary of the Public Service Corporation of New Jersey. The Public Service Corporation of New Jersey was dissolved in 1948 and as part of the Plan for Dissolution, PSE&G became a publicly owned utility.

EDHI is the parent of Enterprise's non-utility businesses: Community Energy Alternatives Incorporated ("CEA"), an investor in and developer and operator of cogeneration and independent power production facilities; Public Service Resources Corporation ("PSRC"), which makes primarily passive investments; Enterprise Group Development Corporation ("EGDC"), a diversified nonresidential real estate development and investment business; PSE&G Capital Corporation ("Capital"), which provides debt financing on the basis of a minimum net worth maintenance agreement from Enterprise; and Enterprise Capital Funding Corporation ("Funding"), which provides privately placed debt financing.

849900007

Enterprise Form 10-K for the year ended 1995 is enclosed as Appendix A.

2.0 SITE BACKGROUND

2.1 LOCATION

The former Harrison Gas Plant (hereinafter referred to as the "Plant"), encompassing approximately 30 acres (the "Site"), is located at 2000 Frank E. Rodgers Boulevard (formerly South Fourth Street) in the Town of Harrison, Hudson County, New Jersey and is designated as Block 78, Lot 1 on the tax maps of the Town of Harrison.

The Site is located on the east side of the Passaic River between Frank E. Rodgers Boulevard and the former Newark Penn-Central Railroad Line. The boundaries of the Site form an approximate triangle bordered on the west/northwest by the railroad line, on the east by Frank E. Rodgers Boulevard and on the south/southwest by the Passaic River. This southern/southwestern boundary consists of approximately 1,600 feet of shoreline. Figure 2-1 depicts the general location of the Site.

2.2 OWNERSHIP

The Site was generally acquired in separate transactions over a period from 1884 through 1924 by the Newark Consolidated Gas Company ("Newark Gas"). Figure 2-2

presents a summary of these transactions. Available instruments of transfer are available for inspection.

Newark Gas leased its Plant properties and franchises to the United Gas Improvement Company in 1898 which assigned the lease that same year to the Essex and Hudson Gas Company. Public Service Corporation of New Jersey acquired in 1903 the plant, property and franchises of the Essex and Hudson Gas Company, which included the Site. The Essex and Hudson Gas Company and Newark Gas Company merged with and into PSE&G in 1939.

2.3 INFRASTRUCTURE

This section presents a description of Plant equipment layout associated with industrial operations at the Site from 1902 until circa 1992, when industrial operations were terminated at the Site.

2.3.1 FUEL AND PRODUCT STORAGE

Commencing in 1902 through September 1926, when the Plant commenced commercial operations, the Site was a satellite facility utilized solely for the storage of oil and manufactured gas. Available information suggests that this was the first industrial operation conducted at the Site.

A Sanborn Map dated 1907 presents a layout of the structures related to the raw material and product storage operation at the Site. This depiction is confirmed by a 1926 inventory of Plant equipment. The 1926 inventory also reflects that additional raw material and product storage equipment were installed and utilized at the Site prior to construction of the Plant in 1926. These structures may be summarized as follows:

- Boiler House - no construction date available
- Gas Holder #1 (3 million cubic feet capacity) - constructed in 1906
- Two Oil Storage Tanks
  - Tank No. 1 (500,000 gallon capacity) constructed in 1902
  - Tank No. 2 (600,000 gallon capacity) constructed in 1906
- Coke storage and handling facility - no construction date available
- Gas Holder #2 (5 million cubic feet capacity) - constructed in 1910
- Oil Storage Tank #3 (2 million gallons capacity) - constructed in 1911

Circa 1915, a tunnel was constructed under the river connecting the Site with the Market Street Gas Works in Newark, New Jersey. The tunnel contained four six-inch steel lines at the bottom encased in concrete. The lines were used for tar and oil transfer between the Site and the manufactured gas plant in Newark. The tar and oil lines have been abandoned for many years. The tunnel also contained two thirty-inch cast iron gas mains with drip pots on the Newark side. In 1925 an eight-inch water line was installed on top of the down river cast iron main.

Plant records concerning the generation and management of effluents prior to 1924 have not been located.

2.3.2 GAS MANUFACTURING

A gas manufacturing plant was constructed at the Site during the period from 1924-1926. The gas plant commenced commercial operation in October 1926. Major Plant equipment related to the manufactured gas plant operation may be summarized by operational category as follows:

Gas Generation

- Generator house with eight (8) carburetted water gas sets each consisting of a generator, carburetor, superheater, washbox, and ancillary equipment
- Cooling purification system consisting of primary and secondary condensers, relief holder, exhausters/compressors, after-coolers, tar precipitators, absorbers and oxide boxes

Steam Generation

- Boiler house with stoker boilers and ancillary mechanical and chemical addition equipment

- Eight (8) waste heat boilers and two (2) steam accumulators
- Ash handling system (ash sluiceway and ash pit)

Cooling and Waste Water Management

- Non-contact cooling water system and related piping systems and equipment
- Tarry water collection system and related piping and equipment including tar separators, sedimentation basin and sand filters
- Filter house water softener equipment

Storage Facilities

- Gas holders
- Oil tanks and related equipment including oil pumphouse and auxiliary piping
- Tar tanks and related equipment including auxiliary piping, stills and condensers

Miscellaneous Plant Facilities

- Coal and coke handling facility
- Electric substation
- Meter house
- Office building

849900012

- Machine shop

Subsequent to commencement of commercial operations, the Plant's baseload gas manufacturing operation was expanded by the addition of the following major equipment:

- Two (2) carburetted water gas sets
- Two (2) gas cooling condensers
- Five (5) oxide boxes
- Two (2) sulfur absorbers
- Two (2) precipitators
- Three (3) naphthalene scrubbers
- Eight (8) thionizers
- Three (3) fire stills
- Two (2) steam stills
- Tar and drip oil storage tanks
- Tar settling tanks
- Oil storage tanks
- Gas mixing tank

Miscellaneous Plant facilities were added later including an employee building and laboratory.

849900013

The carburetted water gas process was the only process utilized at the Plant to manufacture gas until circa 1950. Commencing circa 1950, natural gas supplies were made available to the Plant. Natural gas supplies changed the mixture of raw materials available for the gas manufacturing process, thereby enabling the Plant to employ a number of additional gas manufacturing processes to increase production capacity. These processes included the reformed natural gas process, modified air jet gas process, cold enrichment gas process and cyclic catalytic reformed gas process. The Plant reached its greatest production capacity circa 1955. Circa 1955, the Plant installed liquefied petroleum gas/air production facilities providing the Plant with the capability to supplement gas production capacity during periods of peak demand.

Figure 2-3 depicts the layout of Plant circa 1955 at the peak of Plant baseload production capacity.

By 1965, PSE&G baseload gas requirements were being provided primarily by natural gas. This change was occasioned by the increased availability of natural gas and the completion of a program for conversion of customer appliances for natural gas use. With this change, the Plant was converted in 1965 to peak shaving status. Additionally, given the system's reliance on natural gas as the primary source of supply, the Plant's generating equipment needed to be retrofitted to employ the oil gas manufacturing process. Oil gas and liquefied petroleum gas had a BTU content similar to natural gas, and as a result were generally interchangeable for system supply. Carburetted water gas, which had a much lower

BTU content, was not interchangeable with natural gas for system supply. Accordingly, the carburetted water gas manufacturing process ceased and the carburetted water gas sets were converted to oil gas sets.

A synthetic natural gas (SNG) facility was installed at the Site and commenced commercial operation in 1973. The SNG facility provided the Plant with additional capability to supplement send out capacity during periods of peak demand. The SNG facility ceased operations in 1980.

Gas manufacturing operations ceased in 1992. From its conversion to peak shaving status in 1965, the Plant operated thereafter on a limited basis each year, manufacturing gas only during periods of peak demand. From 1965 until the Plant was taken out of service in 1992, the Plant conducted manufacturing operations approximately 100 hours/year. The SNG Plant, however, operated more frequently. As will be discussed below, the SNG Plant was a self-contained independent complex.

2.3.3 DEMOLITION

The Plant has been in the process of dismantlement since 1988. The Site remains in operation as a natural gas metering and regulating station and continues to receive liquefied petroleum gas/air peak shaving gases to supplement natural gas supplies during periods of peak demand. The Site also houses a gas distribution subheadquarters. Present site

conditions are depicted in Figure 2-4.

3.0 SITE OPERATIONS

3.1 GAS MANUFACTURING PROCESSES

The Plant commenced commercial operation in October 1926 and was retired from service after the 1986/1987 winter. The liquefied petroleum gas air process continued in operation until 1992. The Plant operated as a baseload plant (i.e., continuous operating facility) until 1963-1965 when it was converted to peak shaving status (i.e., operating only on days when customer gas demand exceeded available natural gas supplies). The Plant utilized the following gas manufacturing processes while operating in a baseload mode: the carburetted water gas ("CWG") process; the reformed natural gas ("RNG") process; the cyclic catalytic reformed ("CCR") gas process; the liquefied petroleum gas/air ("LPA") gas process; the modified air-jet gas process; and the cold enrichment gas process. Once the Plant was converted to peak shaving status, it utilized the LPA gas process, oil gas process, and synthetic natural gas ("SNG") process. Figure 3-1 is a time line identifying the periods during which the Plant utilized these processes. Appendix B presents the total quantity of gas produced by process by year from the period 1926-1992. Process flow diagrams for each process are presented in Figures 3-2 to 3-9.

This section presents a description of each of the manufacturing processes utilized at

the Plant to manufacture gas including a description of the raw materials utilized, the products, by-products and residuals generated, and if available, the chemical composition of these materials based on available records and/or relevant literature.

3.1.1 CARBURETTED WATER GAS PROCESS

Process Materials

The raw materials utilized in the manufacture of carburetted water gas included coke, carburetion oil and steam. (See Appendix B). Further, Appendix B presents the quantity of raw materials by type by year utilized in the gas manufacturing processes. Raw materials utilized in the purification of carburetted water gas include carburetion oil, soda ash, caustic soda, nickel sulfate, ferrous sulfate, manganous sulfate, finished salts, arsenic trioxide, iron oxide and lime. Appendix B generally presents the quantity of the raw materials utilized in the gas purification process by type by year. By-products generated in the purification of carburetted water gas, tar, light oil and sulfur, were recovered for sale. Appendix B presents the quantity of these by-products generated by type by year. Other by-products generated which were recovered for reuse in the process included naphthalene enriched oil and liquid purification solution. Records documenting the quantity of reused by-products have not been located. Residuals generated in the manufacture of carburetted water gas included clinkers, tar sludges and spent iron oxide. These residuals were managed as wastes. Records concerning the quantities generated and/or their disposition have not been located.

Process and Equipment

The equipment utilized in the generation of carburetted water gas consisted of three vessels, the generator, carburetor and superheater. Figure 3-10 depicts this equipment. All three vessels were refractory brick-lined steel vessels. The carburetor and superheater were also filled with checker bricks placed in "honeycomb fashion".

Process

The carburetted water gas process was a cyclic process consisting of periods of "blows" or blasting periods and "runs" ("up-run", a "back-run" and a "second up-run") or gas making periods.

Coke was loaded from conveyors into the generator via hoppers. During the "blow period", air was introduced into the base of the generator via air blowers and passed through the bed of coke where the coke was combusted. Secondary air was introduced at the top of the generator to ensure complete combustion of the gases. Combustion gases were then passed to the top of the carburetor vessel and were forced down through the checker brick in the carburetor and then passed to the bottom of the superheater vessel where the gases passed up through the checker bricks in the superheater thereby heating the carburetor and superheater chambers. The combustion gases were then routed to a waste heat boiler to generate steam and then exhausted to the atmosphere.

849900018

After the "blow" was completed, an "up-run" period began by the introduction of steam at the base of the generator which was passed up and through the incandescent bed of coke. This resulted in the production of a water gas. The water gas was then enriched by carburetion oil which was sprayed from the top of the generator and carburetor, as the water gas passed through each of these vessels. The heat contained in the mass of brick in the carburetor and superheater caused the oil vapors to thermally crack producing a carburetted water gas. The carburetted water gas produced was then passed to a washbox where it was cooled by being bubbled through continuously circulating water routed to the washbox from the next to last pass of the tar separators. The washbox was a steel vessel which had inlet and outlet liquid connections and inlet and outlet gas connections. Tar and water vapors were condensed from the gas as the gas was cooled by the water. The condensate was routed out of the washbox as a tarry water through the outlet liquid connection. The gas was routed via the outlet gas connection to the primary gas condensers and the tarry water was routed to the tar separators via the tarry water collection system.

After the "up-run" cycle of the process was completed, a "back-run" cycle was conducted by introducing steam at the top of the superheater. The steam became superheated when it passed counter-current to the "up-run" down through the checker brick in the superheater and up through the checker brick in the carburetor. The steam reacted with any carbon which may have been deposited in these chambers during the "up-run" producing water gas. Steam and water gas passed to the generator where the mixture was sprayed with oil from the top of the generator. The resultant oil vapors were thermally cracked as they

849900019

passed through the hot bed of coke in the generator. The resultant carburetted water gas was then passed to the washbox where it was cooled again by being bubbled through continuous circulating water. The gas and tarry water were routed in the same manner as the products generated during the "up-run" cycle.

Following the "back-run" cycle, a second "up-run" cycle of short duration was then completed in the same sequence and manner as the initial "up-run" again producing a carburetted water gas that was routed to the washbox. This gas and the tarry water were routed in the same manner as the products generated in the "up-run" and "back-run" cycles.

The final cycle involved a blow or blast consisting of the introduction of a stream of air through the coke bed at the base of the generator to purge the chambers of residual carburetted water gas. The residual gas was routed to the washbox and the combustion gases to the waste heat boiler. This stream of air rekindled the coke bed resulting in the beginning of a new gas generation cycle.

The carburetted water gas was routed from the washbox to primary gas condensers. The primary gas condensers were steel boxes comprised of several components including: an inlet gas pipe; an inlet water box (containing river cooling water); condenser tubes supported by tube sheets (through which river cooling water was routed to condense the tars and water vapor from the gas); an outlet box (where the river cooling water was collected and routed to the discharge lines of the Plant's Drain System [as defined below - See Section 3.3.2] for

discharge to the river); and an outlet gas pipe (through which the gas was routed to the relief holder). The river cooling water used in the primary condensers came from the secondary condensers. Gas was passed in the primary condenser over water filled condenser tubes producing a further decrease in the temperature of the gas. This resulted in a further condensation of tar and water vapors from the gas. The tarry water was routed to the tar separators via the tarry water collection system. The non-contact cooling river water exiting the primary condensers was in part routed to the ash sluiceway where it was used to quench bottom ash from the boilers and the balance of these waters was routed via the Plant Drain System to the discharge flume where it commingled with other non-contact cooling waters and was discharged to the Passaic River. The gas was next routed to the relief holder.

The relief holder served to smooth the cyclic flows associated with the gas making process thereby ensuring the uniform flow of gas through the downstream purification system process. The movement of the gas in and out of the relief holder via the inlet and outlet pipes caused further condensation of the tar and water vapors from the gas. The resultant tarry water mixture was collected in drip pots located at low points in the gas piping system. The tarry water was pumped to tar separators via the tarry water collection system.

Gas from the relief holder was routed to the secondary condensers for further cooling. The secondary condensers were also steel boxes that were comprised of the same components as the primary condensers. The secondary condensers employed the same process to generate condensates similar to those of the primary condensers which were also routed to

the tar separators via the tarry water collection system. The sole difference between the primary and secondary condensers was that the non-contact river cooling water in the secondary condensers came directly from the Passaic River. As indicated above, after exiting the secondary condensers, this river cooling water was routed to the primary condensers for cooling there, so that the hottest gases were cooled by the warmest water. As discussed below, river water used for Plant cooling was not chemically treated.

The gas was pumped from the secondary condensers by exhausters. This activity raised the pressure of the gas so that it could move through the balance of the purification process. The compression of the gas caused an increase in temperature. The heat of compression in the gas was removed by passing the gas through the after-coolers. The after-coolers were heat exchanger-type equipment of similar design to the condensers. The water used for cooling in the after-coolers was well water and also was not chemically treated. The well water was obtained from an on-site well. Condensates generated by this cooling process, typically tar and water, were also routed to the tar separators via the tarry water collection system. The cooling water was routed to the discharge flume via the Plant Drain System and discharged to the Passaic River with other non-contact cooling river waters.

The gas was then routed to the tar precipitators. The tar precipitators were steel cylinders containing electrically charged plates, where the tars that remained entrained in the gas, were precipitated out of the gas stream by the electrical fields generated by the plates. These tars were also routed to the tar separators via the tarry water collection system.

Figure 3-11 depicts the tarry water collection system that was used to route tars and the condensates generated in the cooling/purification system to the tar separators. As discussed below, the system was also used to route tarry water drips generated in the Plant gas transmission lines to the tar separator (See Figure 3-11).

From the tar precipitators, the gas was routed to the liquid purification system. The liquid purification system consisted of a series of steel cylindrical packed towers, called absorber towers, where the gas was scrubbed with an activated sodium carbonate solution to remove hydrogen sulfide. The sodium carbonate solution was prepared in a chemical mixing tank. It consisted primarily of water, sodium carbonate and nickel sulphate. Ferrous sulphate and manganous sulphate were also used in lieu of nickel sulphate. Commencing in the mid 1940's, the solution used consisted of sodium carbonate, ferrous sulphate and arsenic trioxide. The towers were packed vertically with wooden lattice-type trays. Solution was sprayed from the top of the towers on to the wooden trays in a counter current direction to the flow of the gas, which entered at the bottom of the tower. The tower was designed to create a large surface area that maximized the interaction of the gas with the sodium carbonate solution.

The spent sodium carbonate solution was sent to the thionizers for sulfur recovery and regeneration of the carbonate solution for reuse in the absorber tower. The thionizers were steel tanks with steel baffles installed to lengthen the distance the solution had to travel in its passage. Near the bottom of the thionizer were frames over which canvas tubes were stretched and into which compressed air was piped. The air came through the wall of the

849900023

canvas tubes and bubbled upward through the solution producing a sulfur froth and a regenerated solution. The froth generated was pumped to a slurry pit and then to a filter press where a sulfur paste was recovered from the froth and packaged for sale. A residual solution generated from the filter press was collected in a concrete in-ground structure and then routed back to the absorber towers for reuse in the gas scrubbing process. Most of the regenerated solution from the thionizer was routed to the absorber towers for reuse in the gas scrubbing process; and the excess solution was pumped to a purification sedimentation basin. A flocculation agent was added to the purification sedimentation basin to cause colloidal solids to settle to the bottom. The solids were pumped as a slurry to the tar separators. The effluent in the purification sedimentation basin was discharged to the discharge flume, commingled with non-contact cooling water and discharged to the Passaic River.
The thionizer equipment was upgraded in the late 1940's to increase capacity and enhance sulfur recovery capability.

Circa 1948, the Plant gas purification system was modified with the installation of naphthalene scrubbers. After 1948, the gas was routed from the tar precipitators to the naphthalene scrubbers prior to being processed in the liquid purification system. The naphthalene scrubbers were above-ground steel cylindrical packed towers designed to remove naphthalene from the gas by spraying the gas with a carburetion oil. The towers had a bottom connection for the inlet of gas and top connections for the inlet of oil. The gas flowed up through the packed towers in a counter current flow to the descending oil and exited the scrubbers through an outlet at the top. The oil dissolved the naphthalene in the

gas. Naphthalene enriched carburetion oil was collected at the bottom of the tower and routed to a carburetion oil tank located adjacent to the naphthalene scrubbers. The oil was used as feedstock in the gas generation process. It is believed that naphthalene was removed from the manufactured gas stream prior to 1948. Plant records documenting where and how the removal was conducted have not been located.

Gas purified in the absorber towers was routed to the oxide boxes for final purification. The oxide boxes were circular steel tank structures arranged in a series/parallel piping configuration with inlet and outlet gas connections. The oxide boxes were equipped with horizontal wooden trays packed with wood chips coated with iron oxide. Iron oxide (a red dust) was mixed with the wood chips on-site and the resultant mixture packed on the horizontal wood trays. Lime or sodium carbonate were also used in the mixture to create an alkaline environment. The gas was passed through the iron oxide wood chip mixture producing a chemical reaction that caused the remaining traces of hydrogen sulfide to be removed from the gas. The gas was then piped to station meters for measurement and then to the gas storage holders for on-site storage.

Over time, the chemical reaction process caused a depletion in the available iron oxide in the wood chip iron oxide mixture which was transformed into iron sulfide. The material was periodically regenerated on-line by introducing a prescribed amount of air. The oxygen in the air reacted with the iron sulfide, regenerating the iron oxide and forming elemental sulfur both of which remained in the box. The regeneration process could be

carried out a few times before the iron oxide could no longer be regenerated and needed to be replaced. Spent oxide which includes the elemental sulfur was removed from the oxide boxes and discarded as a waste.

The Plant transmission gas piping system design provided for the collection of condensates (i.e. light oils and water) from the manufactured gas stream at various points throughout the Plant piping system. These condensates dropped from the gas stream as a result of the cooling of the gas and the decrease in gas flow velocity.[1] Drip pots, which were metal receptacles, were installed at low points for the specific purpose of collecting these condensates and providing a means for their removal (See Figure 3-12). The drip pots were equipped with pumps to remove the condensates and transport them via the tarry water collection system to the tar separators.

The condensates collected in the area of the plant beyond the liquid purification system (e.g. oxide boxes, station meters, gas storage holders) were pumped to an underground vault for separation of the water from the light (drip) oils. The water was pumped through the tarry water collection system to the tar separators and the light (drip) oils were pumped to a storage tank. (See Figure 3-13). After the Plant was converted to a peak-shaving operation and the Plant's use of kerosene as a scrubbing oil in the naphthalene

[1]These condensates were not limited to the carburetted water gas process. These condensates were also generated in the reformed natural gas and oil gas processes. See Sections 3.1.2.1 and 3.1.2.7.

scrubbers, the quantities of light (drip) oils decreased significantly. Given the use of kerosene and the decrease in drip oils, the condensates from the drip pots were routed to the tar separators without separation of water condensate from the minor quantities of light (drip) oils.

Chemical Composition of Raw Materials

The primary raw materials used to manufacture carburetted water gas were coke and carburetion oil. See, Table 3-1. These raw materials were consumed on site.

Coke

When coal is heated to temperatures above 350°C (662°F) in the absence of free oxygen, it pyrolyzes into volatile chemicals and a solid residue, called coke (Neavel, 1981). There are two main types of coking processes, high-temperature coking and low-temperature coking. (Wilson and Wells, 1950). The coal reaches a temperature of 900°C (1,652°F) or higher during high-temperature coking; in low-temperature coking, the coal temperature usually does not exceed about 700°C (1,292°F). High-temperature coke is used in metallurgy (e.g., iron reduction) and for gas manufacture. Low-temperature coke is used primarily as a smokeless fuel for domestic and industrial uses. No coke was produced at the Plant. High-temperature coke was used for gas manufacture at the Plant. Most of the coke used was produced by the Camden Coke Works in Camden, New Jersey, or the Koppers

Coke Works located in Kearny, New Jersey.

High-temperature cokes vary considerably in physical appearance and physical/chemical properties, depending on the coal used for carbonization, as well as the coking process and conditions used to manufacture the coke (Wilson and Wells, 1950; Thibaut, 1963; Neavel, 1981). Typical U.S. cokes contain 2.1 to 7.7 percent moisture, 7.4 to 17.7 percent ash, 0.6 to 1.3 percent volatile matter, and 0.5 to 1.1 percent total sulfur (Thibaut, 1963).

Data are available for coke supplied to the Paterson Gas Plant in 1941 and 1944 (Table 3-2; Philipps, 1947). It is assumed that the coke supplied to both PSE&G gas plants were the same. As is typical for high-temperature cokes (Howard, 1981), the Paterson coke contained more than 90 percent carbon. Oxygen, sulfur and nitrogen were present at low concentrations. Many cokes also contain traces of chlorine compounds (0.15 to 0.60 percent) and phosphorus (0.01 to 0.25 percent) (Thibaut, 1963).

Most of the polynuclear aromatic hydrocarbons (PAHs) in high-temperature cokes are in polymer form with molecular weights greater than about 600 daltons and are completely insoluble and immobile (Zander and Collin, 1993). Because these PAH polymers are toxicologically inert, the lower molecular weight, more mobile PAHs that were in the original bituminous coal or that were generated during coal carbonization to produce coke were evaporated during the coking process and condensed in the light oils and coal tars

produced at that time. Thus, high-temperature cokes can be concluded to contain little if any of the mobile PAHs that appear on the CERCLA hazardous substances list or any of the low molecular weight organic chemicals, including PAHs.

All the metals and metalloids that appear on the CERCLA hazardous substance list can be found in coal. No data to date on the metal concentrations in high-temperature coke have been found. However, the trace metals concentrations in cokes should be similar to or slightly higher than their concentrations in the coal from which the coke was manufactured, with the exception of volatile metals and metalloids, such as arsenic, mercury and lead, since a typical high-temperature coke has about 75 percent of the mass of the coal from which it was produced (Wilson and Wells, 1950). The metal and metalloid concentrations of coals used at the Plant are discussed in Section 3.3 of this report.

Carburetion Oil (Gas Oil)

Plant records indicate that the gas oil used for gas production at the Plant was a heavy gas oil equivalent to the residuum from a catalytically cracked petroleum. Heavy gas oil has a boiling point range from about 250°C to about 600°C (Bingham et al., 1979; National Research Council, 1985). Typical gas oils used in the early 1930s for gas manufacture had distillation curves in which 60 to 85 percent by volume of the oil distilled below 600°F (316°C) and 14 to 38 percent was distilled at temperatures above 600°F (Morgan, 1931). These data are generally consistent with data contained in available Plant records.

Relevant literature does not contain data concerning the chemical composition of gas oil used during the period the carburetted water gas process was employed. There is, however, data available relative to the concentration of PAHs and metals that may be representative of the chemical composition of the gas oil utilized in the carburetted water gas process.

Three gas oils refined from Indian crude oils were analyzed by Ramaswamy (1987) for PAHs of interest. The concentrations of PAHs of interest found in these gas oils are summarized in Table 3-3.

Gas oils undoubtedly also contain higher molecular weight PAHs, such as fluoranthene, chrysene, benz(a)anthracene, benzofluoranthene, benzo(a)pyrene, indeno (1,2,3-cd)pyrene, benzo(ghi)perylene, and dibenz(a,h)anthracene based on analysis of No. 6 fuel oil. (See Table 3-4). Concentrations of these higher molecular weight PAHs in gas oils can be expected to be comparable to or lower than their concentrations in No. 6 fuel oils.

The metals in gas oil would be similar to those in other middle and heavy refined petroleum products. Distillate and residual fuel oils typically have low concentration of metals. Typical metals concentrations in No. 6 fuel oil are summarized in Table 3-5.

Nickel and vanadium usually are the most abundant metals in crude and refined oils. They are present as high molecular weight nickel and vanadium porphyrins derived from

849900030

fossil chlorophylls. Most other metals of interest are present at low concentrations. Sulfur was present in four samples of gas oil analyzed by Lindsey and Wagstaffe (1983) at concentrations of 0.091 to 1.04 percent. Plant records documenting sulfur levels in gas oil are generally consistent with those data.

Chemical Composition of Products and By-Products

The product and by-products of the carburetted water gas process at the Plant were carburetted water gas, tar, light oils, and sulfur (See Table 3-1). This section presents available information on the chemical composition of these by-products. Unless stated otherwise available data has been obtained from relevant literature.

Gas

Carburetted water gas of the type produced at the Plant was a mixture of water gas, generated by passing superheated steam over high-temperature incandescent coke, and the gases produced by thermally cracking gas oil in the carburetor and superheater. Water gas contains mainly carbon monoxide and hydrogen, with small amounts of carbon dioxide, nitrogen, and methane. It has a heating value of just under 300 BTU/ft^3.

Carburetted water gas manufactured at the Plant between 1926 and 1952 had a heating value generally ranging between 500 and 600 BTU/ft^3. These low BTU carburetted

849900031

water gases were composed primarily of hydrogen and carbon monoxide, with small amounts of methane and illuminants (low molecular weight unsaturated hydrocarbon gases) (Table 3.6). Illuminants in the gas may have included small amounts of BTEXs and low molecular weight PAHs.

Tar

Large amounts of tar were produced as a by-product of the carburetted water gas process. (See Appendix B). The reformed natural gas process and the oil gas processes also produced tar. Tar was received at the Plant from other PSE&G gas plants for use as a fuel and as a raw material to produce specialty tars and tar products for sale.

Manufactured gas tars are extremely complex mixtures of literally thousands of organic compounds and small amounts of several inorganic elements (Gangwal and Nichols, 1989; Novotny et al. 1981; Zander 1987; Sebor et al., 1989; EPRI, 1993). Their major ingredients are hydrocarbons, PAHs and related nitrogen (N), oxygen (O), and sulfur (S) substituted compounds. Plant records do not contain a description of the chemical composition of the carburetted water gas tars generated. Relevant literature contain certain useful data which may serve as a reference for a description of the chemical composition of carburetted water gas tar. These data are presented in Tables 3.7, 3.8 and 3.9. The tars collected at the three sites were collected from underground structures and probably contain a mixture of tars from different sources and non-tar materials, such as soil. They may have

been weathered to different degrees. Natural weathering from evaporation/dissolution and bacterial degradation tends to decrease the concentration of low molecular weight components, such as benzene, and increase the concentration of high molecular weight components, such as benzo(ghi)perylene, in the tar. Nevertheless, these tars contain a wide variety of monocyclic aromatic hydrocarbons and PAHs at elevated concentrations. Monocyclic aromatic hydrocarbons (BTEXs) may have been depleted from the sample from Site 3 (See Table 3-8), indicating that this sample may have been exposed to the air and weathered. Carburetted water gas tars also contain several metals and metalloids (Table 3-9).

Light (Drip) Oils

Plant records do not contain a description of the chemical composition of light (drip) oils. Relevant literature contains certain useful data that may serve as a reference for a description of the chemical composition of light (drip) oils. These data may be summarized as follows: Light (drip) oils are composed of low molecular weight organic chemicals, mostly hydrocarbons, distilling below 200°C. They are often called drip oils because they collect in and are collected from drip pots located at low points in the gas processing piping system at the gas plant from where they are pumped. Thus, most of the drip oil produced at the Plant was produced as a by-product of the carburetted water gas process. The drip oil produced was either sold or mixed with fuel on-site and consumed or mixed with the heavier fractions of tar for production of a variety of tar products for sale.

Major ingredients of light (drip) oils are the so-called BTEX compounds, benzene, toluene, ethylbenzene, and xylenes (Edison Electric Institute, 1984). Benzene often is the most abundant hydrocarbon, with concentrations in the range of 45 to 72 percent by weight (Muder, 1963). Light (drip) oils also may contain 0.5 to 5 percent naphthalene, but rarely contain more than trace concentrations of higher molecular weight PAHs because they have low vapor pressures (Muder, 1963; Neff, 1979). Saturated hydrocarbons ranging from as low as pentane to possibly as high as decane or undecane are present in light oils.

Sulfur, primarily as hydrogen sulfide, contained in the manufactured gas is highly corrosive, odiferous, and toxic. The hydrogen sulfide must be removed from the manufactured gas before it can be sold to customers. Most of the hydrogen sulfide at the Plant was removed from the gas and was converted to elemental sulfur, which has commercial value. Whenever there was a market for the sulfur, it was sold, mostly for crop treatments and for manufacture of sulfuric acid.

Residuals

The carburetted water gas process produced tar residuals, clinkers and spent oxide. Tar residuals were mixed with ash and dirt and disposed of as a waste. Clinkers, which are fused spent coke, were placed in the ash pit. Ash pit solids were periodically removed and sold and/or disposed of as a waste. Iron oxide that could no longer be regenerated was removed and replaced and the spent iron oxide was disposed of off-site as a waste. Since the

849900034

conversion of the Plant from a baseload operation to a peak-shaving operation circa 1963-1965, no iron oxide replacement was required. When the Plant dry purification equipment was taken out of service in 1987-1988, the iron oxide was removed and disposed of off-site.

Tar Residual. The characteristics of tar residual, including the range of concentrations of hazardous substances in it, are summarized in Section 3.1.1.

Clinkers. Relevant literature does not contain chemical data on clinkers. It can be expected that the composition of these residuals would be similar to that of coal bottom ash which is discussed in Section 3.3.4.

Spent Oxide. Spent oxide contains elemental sulfur, iron and sulfate.

3.1.2 OTHER MANUFACTURED GAS PROCESSES

As indicated above, the availability of natural gas supplies changed the mixture of raw materials used in the gas manufacturing process and enabled the Plant to employ a number of supplemental manufactured gas processes to increase production capacity. These processes included: reformed natural gas; modified air-jet gas; cold enrichment gas; cyclic catalytic reformed gas and liquefied petroleum air gas. The gases generated by these additional processes were commingled with manufactured gases to provide a uniform quality of gas to customers. This commingling was performed in a mixing tank located downstream

of the station meters. The mixing tank was an above-ground horizontal steel tank with a series of pipes connected to it to accept the different gases for mixing and to convey the mixed gas to the gas storage holders.

3.1.2.1 REFORMED NATURAL GAS

The reformed natural gas manufacturing process began in 1951. The equipment utilized in the manufacture of carburetted water gas was also used for the generation of reformed natural gas. A process flow diagram is depicted in Figure 3-3. Like the carburetted water gas process, the reformed natural gas process was a cyclic process consisting of periods of "blows" or blasting periods and "runs" or gas-making periods. By-products and residuals generated were essentially the same in type but substantially less in volume than in the carburetted water gas process. See Table 3-10. The basic difference in the manufacturing process was that natural gas replaced the gas oil as feedstock. Natural gas was passed up through the coke bed in the generator on the "up-run" cycle with the steam and routed through the carburetted and superheater. On the "back-run" cycle natural gas was injected with a small amount of steam into the superheater. The reformed natural gas manufactured was routed through the same cooling and purification equipment and processes as the carburetted water gas. The condensates generated in the cooling process were water and a minor amount of tar and drip oil. Small quantities of sulfur were also generated in connection with the processing of the gas through the Plant's liquid purification system. These by-products were managed in the same manner as the carburetted water gas by-

849900036

products. Non-contact river water utilized in the cooling process originated from the same sources as in the carburetted water gas process and were managed collected and discharged in the same manner.

Raw Material

Natural Gas. The sources of natural gas supplied to the Plant were from Transcontinental Gas Pipeline Corporation (Transco) and Texas Eastern Transmission Corporation (TETCO). Deliveries of Transco natural gas began in 1950. Deliveries of TETCO natural gas began in 1953.

Natural gas has a relatively simple composition, dominated by methane. Three hydrocarbons, methane, ethane and propane make up more than 95 percent of the total volume of natural gas. Small amounts of other low molecular weight and volatile hydrocarbons, as well as carbon dioxide, oxygen, and nitrogen also are present. Table 3-11 presents the chemical composition of natural gas received from TETCO at the Plant as compared with the typical chemical composition of natural gas.

Natural gas may also contain traces of higher molecular weight hydrocarbons in the vapor phase or in aerosols. Some of these hydrocarbons may condense in the pipeline or be delivered to customers and be burned with the natural gas.

Product

Reformed Natural Gas. Reformed natural gas was a mixture of water gas and the pyrolysis products of the thermal cracking of natural gas. Table 3-12 presents the chemical composition of reformed natural gas.

By-Products

Small amounts of tar and sulfur were generated as by-products of the reformed natural gas process. The typical compositional data for these materials are presented in Tables 3.7 and 3.8.

3.1.2.2 MODIFIED AIR JET GAS

The modified air jet gas manufacturing process began in 1951. A process flow diagram is depicted in Figure 3-4. Natural gas under high pressure was fed through a nozzle or jet into a pipe. The resulting rapid expansion of the natural gas in the pipe increased the velocity of the gas which in turn created a partial vacuum in the pipe. This partial vacuum allowed a controlled quantity of air to be aspirated into the natural gas stream producing modified air jet gas. This manufacturing process did not involve a thermal/chemical reaction and thus did not generate any by-products or residuals requiring management. The gas bypassed the Plant cooling and purification systems and was fed directly to the gas mixing

849900038

tank for mixture with other manufactured gases.

Modified air jet gas is composed of a mixture of the gases contained in natural gas (Table 3-11) and air. The major gases in air are nitrogen (≈80 percent) and oxygen (≈20 percent). Thus, concentrations of oxygen and nitrogen in modified air jet gas would be higher than their concentrations in natural gas; concentrations of gaseous hydrocarbons would be lower than those in natural gas.

3.1.2.3 COLD ENRICHMENT GAS

The Cold Enrichment Gas manufacturing process began in 1951. A process flow diagram is depicted in Figure 3-5. This process simply involved the introduction of natural gas directly into other manufactured gases in the gas mixing tank. Cold enrichment gas was manufactured by mixing a low-BTU water gas or reformed gas with natural gas to produce a gas with a higher heating value. The cold enrichment gas was designed to have a heating value ranging from 500 to 600 BTU/ft^3. Final gas composition varied depending on the mixture used to obtain the desired heating value. This manufacturing process did not involve a thermal/chemical reaction and thus did not generate any by-products or residuals requiring management. The gas bypassed the Plant cooling and purification systems and was fed directly to the station meters or the gas mixing tank for mixing with other manufactured gases.

849900039

3.1.2.4 CYCLIC CATALYTIC REFORMED GAS

The Cyclic Catalytic Reformed ("CCR") Gas manufacturing process began in 1954. This process required modification of certain Plant generation equipment. A process flow diagram is depicted in Figure 3-6. One generator set was converted to a CCR gas set and two new CCR gas sets were installed. A CCR gas set was comprised of two refractory brick lined steel vessels interconnected at the bottom. The first vessel was called a combustion shell and the second vessel was called a reforming shell. Figure 3-14 depicts a CCR set. The combustion shell contained an inlet for air and a burner system capable of combusting natural gas, kerosene or liquefied petroleum gas. The reforming shell contained a bed of nickel catalyst impregnated in alumina balls near the bottom of the chamber.

Like the carburetted gas manufacturing process, the CCR gas process is a cyclic process consisting of periods of "blows" and "runs". Heated gases were generated in the combustion shell by combusting natural gas or kerosene or liquefied petroleum gas and air. The heated gases were directed to the reforming shell where the gases heated the catalyst bed, were exhausted to a waste heat boiler (to generate steam) and then exhausted to the atmosphere, completing the "blow" cycle. Natural gas and steam were then introduced at the interconnection between the combustion and reforming shells. The natural gas and steam mixture passed through the catalyst bed where the natural gas and the steam mixture were catalytically cracked into water gas. The water gas was routed through the waste heat boiler (generating steam) to a washbox and then to a gas condenser for cooling. This gas condenser

was substantially similar in design to the primary and secondary gas condensers utilized in the carburetted water gas process. The condensates generated in the washbox and/or condenser were primarily water vapor and were routed via the tarry water collection system to the tar separators. Virtually no tar was generated in this gas manufacturing process. The gas was then routed without further cooling or purification directly to the mixing tank to be commingled with other manufactured gas supplies.

Raw Materials

Raw materials utilized in this process included kerosene, natural gas, liquefied petroleum gas and nickel catalyst. (See Table 3-13).

Natural Gas: The composition of natural gas is presented in Section 3.1.2.1.

Kerosene: Kerosene was one of the first middle distillate fuels refined from crude oil. It was originally used as an illuminating oil, but subsequently became popular for home and industrial heating. As a light refined product with little or no sulfur, it was well suited as a feedstock for the cyclic catalytic reformed gas process.

Kerosene has a PAH composition similar to that of most middle distillate products (See Table 3-14). Low molecular weight PAHs are most abundant. High molecular weight PAHs are not detectable or are present at very low concentrations. Plant records indicate that

kerosene used at the Plant contained lower concentration of PAHs than the samples described in Table 3-14. Low aromatic kerosenes of the type used at the Plant contain less than 5 percent aromatic hydrocarbons. These may include a small amount of BTEX (benzene, toluene, ethylbenzene, and xylenes) compounds, all of which appear on CERCLA's hazardous substance list. These low aromatic kerosenes also contain 80 to 85 percent saturated hydrocarbons. The remainder of the hydrocarbons are olefins.

Liquefied Petroleum Gas: Propane and butane, collectively known as liquefied petroleum gas, are hydrocarbon gases produced from natural gas and crude oil. They are gases at room temperature and normal atmospheric pressure, but become liquid at low temperatures and slightly elevated pressures.

As discussed above, propane of the type used at the Plant contained slightly more than 90 percent propane and nearly 9 percent ethane (Table 3-15). Butane contained about 78 percent butane and 22 percent propane. Although the vapors of these gases are dense (specific gravity of 1.51 and 2.0), any gas released to the environment would immediately be diluted in the atmosphere where it would be photo oxidized.

Nickel Catalyst

The nickel catalyst used to catalyze the conversion of hydrocarbon gases to inorganic gases, such as carbon monoxide and hydrogen, with lower energy content contained about 3

to 8 percent nickel and was supported on solid alumina, an inert material.

Product

CCR Gas: The feedstock for manufacture of cyclic catalytic reformed gas was natural gas, butane and/or kerosene. These are fairly clean, low molecular weight fuels. Therefore, significant amounts of by-products were not produced. The cyclic catalytic reformed gas was manufactured and enriched to produce a gas with a heating value ranging from 500 to 600 BTU/ft^3. This gas contained primarily methane, hydrogen, and carbon monoxide as combustibles (Table 3-16). The major noncombustible gases were nitrogen and carbon dioxide.

Residual

Spent Nickel Catalyst: Spent low nickel catalyst from the CCR gas generation process was the only residual in the cyclic catalytic reformed gas process. Periodically, the spent catalyst was removed and disposed of off-site. The catalyst contained a low concentration of nickel and as such was not suitable for sale as a source of nickel. The catalyst degraded very little during use and did not need to be replaced often (Morris, 1950).

3.1.2.5 LIQUEFIED PETROLEUM AIR GAS

849900043

The liquefied petroleum gas manufacturing process began in 1954. A process flow diagram is depicted in Figure 3-7. The process was utilized during peak periods of demand to supplement the Plant's baseload manufactured gas production. Liquefied petroleum gas was received from off-site via pipeline. The liquefied petroleum gas was fed by pipeline to a vaporizer house which contained four steam vaporizers, cylindrical heat exchange-type vessels. Steam from the Plant's high pressure steam system was injected into a series of tubes in these vessels. The liquefied petroleum gas was introduced into the vessel at ambient temperature making contact with the steam filled tubes. This resulting heat transfer caused the liquid to vaporize and the steam to condense. As the pressure of the liquid petroleum vapors increased, the vapors moved out of the vaporizer to a nozzle header. The liquid petroleum vapor under pressure was then fed through a nozzle into a pipe. The resultant rapid expansion of the vapor in the pipe increased the velocity of the vapor which in turn created a partial vacuum in the pipe. This partial vacuum allowed a controlled quantity of air to be aspirated into the vapor stream. The liquid petroleum air gas was routed to the mixing tank where it was commingled with other manufactured gases and then directed to the gas storage holders. The condensed steam drained from the vessel was routed to a hot well and then to the Plant Drain System for discharge to the Passaic River via the discharge flume.

This manufacturing process did not involve a thermal/chemical reaction and thus did not generate any residuals requiring management. The gas bypassed the Plant cooling and purification system and was fed directly to the gas mixing tank for mixing with other manufactured gases.

The liquefied petroleum gas manufacturing process continued until 1992, approximately five (5) years after termination of the oil gas manufacturing process (See discussion below). For the period 1987-1992, the liquefied petroleum gas manufacturing process was the only gas manufacturing process remaining in operation at the Plant. The continuation of this process required that certain Plant operations remain in use to manufacture this type of gas including the boiler house to generate steam, the vaporizer house, the non-contact cooling water system, and gas compressors to pump the gas from the storage holders to the gas distribution system.

A chemical composition of liquefied petroleum air gas and LPA natural gas mixture are shown in Table 3-17.

3.1.2.6 COKE OVEN GAS

Coke oven gas from the Koppers Company coke oven gas plant in Kearny, New Jersey, became available to and was used at the Site from 1951 to 1965 to supplement manufactured gas supplies. The gas was transported to the Plant by pipeline and routed via Plant piping to the mixing tank where it was commingled with other manufactured gases. This process did not involve a thermal/chemical reaction on-site and thus did not generate any residuals requiring management. The gas bypassed the Plant cooling and purification system and was fed directly to the gas mixing tank for mixture with other manufactured gases.

Coke oven gas of the type delivered to the Plant from the Koppers Coke Plant in Kearny, NJ had a composition similar to that of other coal gases (Table 3-18). The most abundant flammable gases in it were hydrogen and methane. Small amounts of carbon monoxide and illuminants also were present.

3.1.2.7 OIL GAS

As indicated above, circa 1963-1965, the Plant was converted to a peak shaving facility and the gas generating equipment was converted to utilize the oil gas manufacturing process: four (4) gas generator sets were converted to twin parallel vaporizer high BTU oil gas units; two (2) more gas generator sets were also converted but only utilized single vaporizer units; and the cyclic catalytic reformed gas sets and remaining carburetted water gas sets were removed from service. Figure 3-15 depicts an oil gas set. A process flow diagram is depicted in Figure 3-8. The oil gas manufacturing process was terminated after the 1986/1987 winter.

The oil gas sets consisted of a vaporizer vessel and a superheater. The conversion to high BTU oil gas units generally involved the following changes to the carbureted water gas sets: the connection between the generator and carburetor at the top of the vessels was removed and replaced with a new connection installed at the base of the vessels; an air injection system was installed at the top of the generator and carburetor, replacing the air injection connection at the bottom of the generator; process steam and oil feedstock

connections were installed at the top of these vessels; checker brick was substituted for the coke bed at the base of the generator vessel; a small stack was installed at the stack valve of the superheater; and waste heat boilers and auxiliary equipment were removed.

Like the carburetted water gas process, the oil gas process was a cyclic process comprised of a "blow" and "run" cycle. During the blow period, oil (naphthalene enriched oil or spent oil) was introduced for combustion at the top of the vaporizer vessels (formerly the generator and carburetor vessels) and sprayed into a current of air also being injected at the top of these vessels where the mixture was ignited. Combustion gases traveled down through the checker brick in the vaporizers and up through the checker brick in the superheater. The stack valve was opened and the combustion gases were exhausted up the stack to the atmosphere. The passage of the combustion gases through the vaporizers and superheater heated the refractory brick. The stack valve was then closed commencing the run period. Kerosene was sprayed from the top of the vaporizers. The resultant vapors traveled down through the heated checker brick in the vaporizers and up through checker brick in the superheater. The kerosene vapors were thermocracked into permanent gases by the heat contained in the refractory brick.

The manufactured gas was then routed through the Plant's cooling system. The gas was routed through the naphthalene scrubbers but was not, however, processed through the liquid purification system. The liquid purification process was not necessary due to the low sulfur content of the kerosene. Hydrogen sulfide was removed in the oxide boxes.

849900047

Condensates generated from the cooling of the gas were managed in the same manner as were the condensates from the carburetted water gas process. Non-contact cooling water and steam were supplied and managed as in the carburetted water gas process.

Raw Material

Kerosene: The chemical composition of kerosene was discussed above in Section 3.1.2.4 of this report. The concentrations of PAHs in typical kerosenes are summarized in Table 3.14. Relevant literature does not contain information on the metals content of kerosene. Metals concentrations in kerosene should be lower than those in heavier distillate fuels and residual fuel oils (e.g., No. 6 Fuel Oil) (See Table 3-5).

Naphthalene Enriched Oil (Spent Oil): Kerosene used for scrubbing became enriched with napthalene and low molecular weight aromatic compounds.

Products

Oil Gas

Oil gas, manufactured from kerosene at the Plant had a heating value of about 1000 to 1250 BTU/ft^3 and was composed primarily of methane (35 to 38 percent), ethane (3 to 15 percent), ethylene (13 to 26 percent), and hydrogen (19 to 24 percent) (See Table 3-19). The

only chemicals of interest present in the Plant's oil gas are benzene and toluene. Acetylene, which was listed by EPA in its letter of April 30, 1996 to PSE&G was not detected in 12 Plant oil gas samples at concentrations greater than 0.01 percent.

By-Products

Tar

The oil gas process produced oil gas, light oil and tar. (See Table 3-20). The amount of tar produced during the oil gas process depended on the composition and weight of the distillate fuel that was thermally cracked. The tar produced as a by-product of the oil gas process was sold or used on-site as a fuel. Tars produced in the oil gas process probably are similar to the tars produced in the carburetted water gas process. (See Tables 3.7, 3.8 and 3.9).

Light Oil

Light oils generated by the oil gas process were similar to light oils produced in the CWG process (See Section 3.2.1). The light oils were mixed with the tar.

3.1.2.8 SYNTHETIC NATURAL GAS

A synthetic natural gas ("SNG") plant was constructed in 1972-1973. The SNG Plant was a self-contained complex consisting of a series of heaters, heat exchangers, reactors and associated equipment including a high pressure steam boiler all constructed on a concrete slab surrounded by a concrete containment curb. Naphtha, hydrogen and steam were the primary feedstocks used in the SNG process (See Table 3-21). The naphtha was stored in a 2,200,000 gallon above-ground storage tank encircled by an earthen berm. The naphtha was supplied to the SNG Plant via above ground piping. Hydrogen required for process start-up was supplied by hydrogen trailers located in the vicinity of the process area. The hydrogen was piped via above-ground piping to the process area. Steam was provided for the process by a package steam boiler and a process steam drum waste heat exchanger system. Figure 3-9 presents a schematic of the SNG process.

Naphtha was introduced at the beginning of the process through a pre-heat exchanger to a desulfurization feed heater. Hydrogen was also introduced to the process stream at the inlet to the desulfurization heater. The desulfurization heater was a steel enclosure containing fuel oil burners and a series of steel tubes. No. 6 fuel oil was the fuel used in the heater.

A preheated hydrogen/naphtha mixture was fed through the heater tubes where hot combusted gases vaporized the hydrogen/naphtha mixture. The combusted gas was vented

out a stack to the atmosphere. The hydrogen/naphtha vapor was passed through the desulfurization section of the plant consisting of a low nickel molybdenum catalyst sulfur hydrogenerator (to convert the organic sulfur in the naphtha to hydrogen sulfide) and a hydrogen sulfide absorber containing zinc oxide (where the hydrogen sulfide was removed from the vapor) resulting in a sulfur free naphtha vapor.

Fifty percent of the naptha vapor was mixed with steam and routed to the first stage reactor feed heater, a piece of equipment similar to the desulfurization feedheater. The combusted gases from this heater were vented out a stack to the atmosphere and the heated vapor routed to the first stage Catalytic Rich Gas ("CRG") reactor that contained a high nickel catalyst bed. The steam and naphtha vapor was passed through the catalyst bed and reacted to form a methane and carbon dioxide rich gas. Ninety percent of this stream was routed to the second stage CRG reactor and the other ten percent to the reformer for hydrogen production.

The other fifty percent of the naphtha vapor was commingled with steam and the methane and carbon dioxide gas from the first stage CRG reactor and routed directly to the second stage CRG reactor where further methanation occurred by passing the gases and vapors through a high nickel content catalyst bed. The outlet gases from this reactor were sent to the third stage CRG reactor where further methanation occurred by passing the gases again over a high nickel catalyst. The resultant gases were then routed to the rich gas absorber tower where the gases were bubbled through an activated potassium carbonate

849900051

solution where the carbon dioxide was removed and the methane gas passed through a cooler and routed to the high pressure natural gas system.

As indicated above, ten percent of the methane and carbon dioxide rich gas produced in the first stage CRG reactor was routed to the reformer, the initial stage in the recycle system that produced hydrogen. The reformer was a heater. High pressure steam was injected into the gas stream prior to entering the reformer, where the gas and high pressure steam mixture reacted at high temperature over a low nickel catalyst to form a carbon monoxide and hydrogen gas mixture. This gas mixture was then routed to a carbon monoxide shift converter where it passed through an iron chromium catalyst that converted the carbon monoxide to carbon dioxide. The resultant carbon dioxide rich hydrogen gas mixture was routed to the recycle absorber tower where it bubbled through an activated potassium carbonate solution where the carbon dioxide was removed. The hydrogen was passed to recycle compressors for use in the desulfurization portion of the SNG process as indicated above.

As indicated, carbon dioxide was removed from the methane rich and hydrogen rich gases in the rich gas absorber and recycle absorber, respectively. The carbon dioxide was removed in both instances by bubbling the gases through an activated potassium carbonate rich mixture. Potassium carbonate solution for the absorbers was mixed in a tank. The solution was comprised of potassium carbonate, diethanolamine, vanadium pentoxide and an anti foam agent (Union Carbide UCON 50-HB-5100). The carbon dioxide reacted with the

849900052

solution forming a bi-carbonate solution. This solution was routed to a carbonate regenerator tower where the solution was heated producing a carbon dioxide gas and carbonate solution. The gas was vented to the atmosphere and the carbonate solution was routed to the absorbers for reuse in the carbon dioxide removal process.

Heat exchangers were located at various stages of the process to reduce the temperature of the gases in order to generate steam and optimize the chemical reaction in the catalyst. The heat exchangers were comprised of a steel tube bundle in a tank. Treated city water was fed through the tubes for cooling the gas. The steam generated was routed through a process steam drum for use in the process. Condensates from the cooling of the gases were collected in knockout drums. These condensates were routed to a conventional oily water separator. The oily water separator was used to manage gas stream condensate and stormwater collected in the process area. The oil was routed to a waste oil tank and used on-site as boiler fuel. The water was routed directly to the last pass of the Plant's tar separators, overflowed to the sedimentation basin, passed through the sand filters and discharged to the discharge canal where it was commingled with the non-contact cooling water prior to being discharged to the Passaic River. After January 1979, the discharge from the sand filters was directed to the Passaic Valley Sewerage Commission ("PVSC") sewer system. A diagram of the SNG wastewater system is depicted in Figure 3-16.

Off-specification gases generated during SNG process start up, shut down and/or upset periods along with any releases from safety valves were routed through a knockout

drum where any condensate was removed. The remaining gases were routed to a flare where the gases were ignited and combusted. The products of combustion went to the atmosphere.

Steam requirements for the SNG process were provided by a package steam boiler and process steam drum waste heat exchanger system. The package steam boiler was a conventional steam boiler fueled by No. 6 fuel oil with a rated capacity of 50,000 pounds of steam per hour at 600 psig. The fuel oil was atomized into the boiler and ignited by a torch. A forced draft fan provided the air required to support combustion. Treated city water was fed to the boiler and steam generated as combusted gases passed over water filled boiler tubes. The combusted gases were vented to the atmosphere. The steam was routed to a header where it was combined with steam generated from the process steam drum and utilized in the SNG process.

City water was used for steam generation. It was initially routed to the filter house for softening (removing calcium and magnesium salts) and then to the demineralizer treatment package. Minerals were removed from the water by ion exchange. The demineralized water was chemically treated in the line to the feedwater pumps for the boilers and the process drums. A chemical solution of hydrazine (0.5 lbs./week) and phosphate (5 lbs./week) was used to treat the water. Monosodium phosphate was used for pH and scale control and hydrazine was added to scavenge oxygen.

The demineralizer package unit was regenerated with solutions of sulphuric acid and

849900054

caustic soda. The spent solution was routed to the neutralization tank for pH adjustment as required with either sulphuric acid or caustic soda. The neutralized solution was routed to the last pass of the tar separators and managed in the same manner as was the carbonate solution and the boiler blowdown water.

Steam was generated throughout the process by removing excess heat from the gases via heat exchangers. The steam generated was routed to a process steam drum. Steam was separated from the water in the drum. The steam went to a steam header for use in the process in conjunction with the steam generated in the boiler. The water was circulated back to the heat exchangers for cooling of the process gases and steam generation.

Three percent of the water used in the boiler was blown down each day from the 50,000 lbs/hr boiler used in the SNG steam generation system, which was in operation from 1973 to 1980. This system was only used on an intermittent peak-shaving basis and as a result only generated a very small amount of blowdown residual water over the year. Approximately 4,000 gallons of boiler blowdown water would be expected to be generated daily when the SNG process was in operation.

The types of chemicals that would be associated with the boiler blowdown water result from reactions of raw material chemicals (pH controller) and hydrazine which react in the boiler water to form ammonia.

849900055

Blowdown from the SNG generation system was discharged into the oily water separator and then to the last pass of the tar separators where it overflowed to the sedimentation basin and then through the sand filters prior to being discharged to the discharge canal where it was commingled with non-contact cooling water prior to discharge to the Passaic River. After 1979, it was discharged to the PVSC sewer system.

The catalysts in the reactors deactivated over time. Spent catalysts were removed by contractor and disposed of off-site. The zinc oxide depleted over time by conversion to zinc sulfide. Zinc sulfide was removed by a contractor and disposed of off-site.

Carbonate solution was periodically drained to a neutralization tank so as to maintain the efficiency of the carbon dioxide removal process. The solution was neutralized with sulphuric acid and then routed to the last pass of the tar separators, overflowed to the sedimentation basin and then routed through sand filters to the discharge canal where it was commingled with non-contact cooling water prior to discharge to the Passaic River. After 1979, it was discharged to the PVSC sewer system.

Raw Materials

Naphtha. The main raw material for synthetic natural gas manufacture was a light virgin (uncracked) naphtha. The quantity of naphtha by year used in the SNG process is presented in Appendix B. Naphtha is a low-boiling distillate of crude oil. Naphtha distills below

230°C (446°F) (Table 3-22). Ninety percent of the virgin naphtha distilled at a temperature of 340°F and the rest distilled below 365°F with no more than 1 percent residue. Naphtha consisted primarily of hydrocarbons with 4 to 12 carbon atoms. The naphtha supplied to the Plant in 1972 from Texaco contained a minimum of 65 percent paraffins, no more than 1 percent olefins, 30 percent naphthenes (cycloparaffins), and 10 percent aromatic hydrocarbons. Specifications also required that the naphtha contain no more than 2 mg/L total chloride, 1 mg/L total lead, 1 mg/L total arsenic, 1 mg/L total copper, and 5 mg/L total nitrogen. A detailed chemical composition of virgin light naphtha has not been located in Plant records or the relevant literature.

Nimox. Nimox was a commercially available catalyst that contained low concentrations of nickel and molybdenum.

Zinc Oxide. A chemical compound used to remove the hydrogen sulfide from the naphtha vapors.

Nickel Oxide Catalyst. A reformer catalyst used to produce hydrogen from the methane rich gas.

Ferric Oxide and Chromium Oxide Catalyst. A shift converter catalyst composed of 85 percent iron oxide and 7.5 to 10 percent chromium oxide was used. Spent catalyst was disposed of off-site.

849900057

High Nickel Catalyst. This catalyst was sold for recovery of nickel or regeneration of high nickel catalyst because of its high nickel content. Available Plant records do not contain the quantity of Nimox, Zinc Oxide, Nickel Oxide, Ferric Oxide and Ferric Oxide and Chromium Oxide or high nickel catalyst used at the Plant.

Product

The chemical composition of synthetic natural gas has not been located in available Plant records or relevant literature. It is believed, however, that the gas was composed primarily of methane and trace amounts of carbon dioxide and hydrogen.

Residuals

Sulfur was removed from the vaporized naphtha to protect the process catalysts and captured as zinc sulfide. The zinc sulfide and spent catalysts (Spent Nimox, Spent Ferric Oxide and Chromium Oxide Catalyst) were disposed of off-site. The spent nickel catalysts were sold. The spent potassium carbonate was routed to the last pass in the tar separators for processing in the tarry water collection system.

849900058

3.2 FUEL AND PRODUCT STORAGE

Storage Process

The Plant possessed numerous above-ground and a limited number of below-ground structures for the storage of raw materials used in the gas and steam generation processes and for the storage of gas and the products and by-products of the gas generation processes. Table 3-23 presents available information as to the list of above-ground storage structures situated at the Plant as of 1974. As indicated in Section 2, certain of these structures were used for the same storage purpose from 1902-1926. This table also presents data concerning storage capacity and contents as of the same date. Available information concerning structure containment as of 1974 is also presented in Table 3-23. Circa 1974, PSE&G began a program to upgrade spill containment measures for above-ground storage structures that remained in operation. Table 3-24 presents a list of the structures in service circa 1980 and describes the upgraded containment measures for such structures as of that time. Figure 3-17 depicts available information with respect to the location of these structures. Table 3-25 presents available information as to the list of below-ground storage structures (including storage capacity and contents as of 1974).

The Plant also utilized outdoor yard areas for the storage of certain raw materials, i.e. coal and coke utilized as fuel in the gas and steam generation processes. These areas are also depicted in Figure 3-17.

849900059

Gas product stored in the holders was ultimately transported via underground piping to off-site underground transmission pipelines for distribution to customers.

Raw Materials Storage

The primary liquid and solid raw materials utilized at the Plant initially included coal for steam generation, coke and carburetion oil for gas generation and various chemicals for purification. Coal was used as the primary fuel for steam generation from 1926 until 1963. After 1938, tar from the Plant and oil were also used as fuel for steam generation. Coke was used as the primary feedstock for gas generation from 1926 until 1963. After 1950, natural gas, kerosene and liquefied petroleum gas were used in the gas generation process. Appendix B presents by year the quantities of the primary raw materials consumed in the Plant processes.

Coal and coke were shipped to the Plant by rail and off-loaded in outdoor yard storage areas. These raw materials were loaded from the on-site storage piles by crane and off-loaded into hopper rail cars for transport to dedicated hoppers situated at the base of the coal/coke conveyor system. The coal and coke were fed independently through the conveyor system to a screening tower. Coke fines screened from the coke in the screening tower and coal were conveyed to and consumed in the boilers. The coke was conveyed to and consumed in the gas generator sets.

849900060

Liquid fuels including carburetion oil, No. 6 fuel oil, kerosene and naphtha were generally delivered to the Plant by barge or oil tanker. The liquid fuels were off-loaded and routed via Plant piping to above-ground tanks for storage. The liquid fuels were piped from the storage tank for combustion in the boilers (No. 6 fuel oil and carburetion oil), combustion in the gas generators (carburetion oil and kerosene) and as a feedstock in the SNG Plant (naphtha).

Tar generated at the Plant was also used in the boilers as a boiler fuel. It was moved from on-site tar storage tanks to the boilers via below-ground piping.

The chemicals used for purification were received by rail and truck and stored in outdoor yard areas (e.g. iron oxide) and inside Plant buildings (e.g. liquid purification chemicals).

As discussed below, Gas Holder No. 3 had a tar conditioning system to maintain dehydration. Viscosity was maintained by mixing the tar with a tar solvent. Plant records concerning the chemical composition of the tar solvent were not maintained.

Gas Storage Holders No. 1 and No. 2 were water-sealed holders. The water in these holders was treated with sodium carbonate and sodium dichromate to prevent corrosion of the steel water tank. Circa 1984 the use of sodium carbonate and sodium dichromate was discontinued and the concentrations of these chemicals allowed to deplete. The holder water

was then treated with Alken V-20, a proprietary anti-microbial organic bromine material to control bacterial corrosion.

Products and By-Products Storage

The primary product produced was gas. Gas transported from generation processes via underground and above-ground pipelines to above-ground gas holders for storage. The Plant contained four gas holders, one relief holder and three gas storage holders. The three storage holders were of two types -- water sealed holders and a tar sealed holder.

Two of the gas storage holders and the relief holder were water-sealed holders. The water-filled type holder consisted of two primary components -- an above-ground steel tank filled with water and a smaller diameter inverted steel tank positioned inside of the above-ground steel tank by means of a guide frame and ancillary equipment. All the water-sealed gas holders were of the telescopic or multiple lift gas holder type. (See Figure 3-18). The gas entered and left the relief holder through inlet and outlet pipes that entered and exited the relief holder through the bottom of the steel tank so as not to interfere with the movement of the gas holder. The openings of the inlet and outlet pipes were located slightly above the top of the above-ground steel tank. The inner steel tank was capable of rising or falling in response to the flow of gas that entered or left the relief holder. The relief holder served to smooth the cyclic flows associated with the gas-making process.

849900062

The tar sealed gas holder (No. 3 Gas Holder) also consisted of two primary components -- an above-ground waterless steel shell and an inside piston which was moved up and down by the pressure of the gas under it. (See Figure 3-19). The joint between the piston and the steel shell wall was made tight by a tar seal. The tar seal also consisted of two essential components: a rubbing plate so constructed as to cause it to glide smoothly as the piston moved up and down; and the volume of tar necessary to prevent the escape of gas from the steel shell. Gas entered and left the gas holder via inlet and outlet pipes that entered the side wall of the gas holder immediately above the floor of the gas holder. Special care was required to maintain the proper viscosity and dehydrated (i.e. water free) condition of the tar. That special care was accomplished by the No. 3 Gas Holder Tar Conditioner System described below.

The tar used as part of the seal required periodic conditioning to dehydrate the tar and maintain the desired viscosity. Intermittently, discrete amounts of tar from the seal were routed to a conditioner for water removal. The tar conditioner was a heat exchanger where tar was heated by steam-filled steel tubes. The steam was exhausted to the atmosphere. The resultant water and light oils vapor from the tar was routed to the No. 3 Gas Holder Tar Conditioner condenser for cooling. The estimated water and light oil vapor was less than 100 gallons a day. Non-contact cooling water was used in the condensers for cooling the vapor. The condensate was routed to a decanter while the light oils were separated from the water. The light oils were recovered. The water was routed to an outlet pipe, commingled with non-contact cooling water and discharged to the Passaic River. After 1976, the water was routed

to the ash pit where it overflowed to a catch basin and commingled with non-contact cooling water prior to discharge to the River. The conditioned tar was returned to the No. 3 Gas Holder to be utilized as a seal.

Tar and water vapors were condensed from manufactured gases throughout the gas cooling process. These condensates were collected and pumped and flowed by gravity to the tar separators. Tars were separated from the water in the tar separator and routed to settling tanks and steam stills for further dehydration. This dehydration process resulted in the removal of light oils from the tar. The tar and light oils were separately routed to above-ground steel tanks for storage. Appendix B presents by year the quantities of tar and light oils generated by the Plant.

In addition, as indicated above, naphthalene enriched carburetion oil was recovered from the naphthalene scrubbers and collected in an above-ground tank for storage and subsequent reuse. The oil was used as a feedstock in the gas generation process.

Sulfur was recovered from the spent carbonate solution used to purify carburetted water gas and reformed natural gas. As indicated above, a sulfur paste was made in filter presses from a froth generated from the spent carbonate solution in the thionizers. The sulfur paste was barreled and sold. Appendix B presents by year the quantities of sulfur sold by the Plant.

849900064

Tar and light oils, like the sulfur, had value in the marketplace. Tar and light oils, however, also had value to the Plant and other gas plants in the Public Service gas system as a feedstock. This Plant and other gas manufacturing plants in the Public Service gas system were required to maintain detailed inventories not only with respect to material generation but also material disposition. Annual reports were required to be filed in the New Jersey Board of Public Utilities presenting these data. These reports contain a Residual Stock Account that presents detailed information on the generation and disposition of these materials. Available documentation for the period 1926 through 1975 demonstrates that all volumes of tar and drip oil generated within the system were either marketed or used as fuel feedstock. Copies of Residual Stock Account for these years are contained in Appendix C.

Storage Process Residuals/Effluents

Excess water emanating from the No. 3 Gas Holder Tar Conditioner system condensate was commingled with other non-contact cooling water and discharged to the Passaic River. Gas Holder No. 3 was a waterless holder and as such there was no contact with any water from precipitation.

The water in Gas Holder Nos. 1 and 2 was not replaced and the only effluent resulted from periods of high precipitation at which times the rain water ran down the outer shell of the holder into the water tank from where the excess water overflowed to grade. The water overflow from the Gas Relief Holder was routed to the tar separators due to the possibility of

containing light oils and/or tars. Accordingly, after passing through the tarry water collection and treatment system it was commingled with non-contact cooling waters in the Plant's discharge canal and discharged to the Passaic River.

Coal and coke were stored in outdoor yard areas at the Plant for use in the gas manufacturing and steam production processes. The Plant did not have a runoff collection system; the runoff discharged to the ground.

3.3 AUXILIARY PROCESSES

3.3.1 STEAM GENERATION

Steam constitutes a feedstock for gas manufacturing and an energy source for operation of prime mover and auxiliary plant equipment, e.g. exhausters, compressors, blowers and pumps. The steam required for Plant operations was generated on-site utilizing conventional boilers and waste heat boilers. The Plant utilized a once-through steam generation system, i.e. steam condensate was not recovered for reuse as feedwater. The condensed steam was discharged to the Plant drain system for discharge to the Passaic River via the discharge canal.

The Plant's conventional boilers initially consisted of four (4) Babcock and Wilcox chain grate stoker-fired boilers (Boiler Nos. 1-4). These boilers were equipped to burn coal

and/or coke and each had a rated capacity of 40,000 pounds of steam per hour. These boilers were modified in 1963 to burn liquid fuels. Two (2) additional boilers were added, one in 1938 (Boiler No. 5) with a rated capacity of 100,000 pounds per hour and one in 1948 (Boiler No. 6) with a rated capacity of 139,000 pounds per hour. The boiler installed in 1938 was capable of burning solid and liquid fuel. The boiler installed in 1948 was equipped to burn only liquid fuels.

Coal was used as a boiler fuel until circa 1963. For boilers Nos. 1-4, coal was fed by conveyor to the boiler house and fed to the boilers at the bottom of the furnace by stokers as a coarse coal. The boilers were ignited and air supplied to the furnace via a duct at the bottom of the furnace using forced draft fans to facilitate combustion and aid in the movement of combustion gases within the boiler. The hot combustion gases traveled up and around boiler tubes in the upper portion of the boiler heating the water in the tubes to generate steam. The steam and water circulated to a steam drum where the steam separated from the water and the steam passed through superheater boiler tubes to add more heat and then to the Plant's high pressure steam system for use in Plant operations. The water was recirculated in the boiler. The combustion gases exited the boiler and were exhausted to the atmosphere through a stack. The stack was 250 feet in height and equipped with dust catchers for particulate removal. The particulate was collected in the bottom of the stack which was periodically cleaned and deposited in the ash pit.

Boiler Nos. 1-4 were converted to burn liquid fuels in 1963. The liquid fuels were

primarily No. 6 fuel oil and tar. The fuel was piped to the boilers and atomized in the furnace. The steam generation process remained unchanged with the utilization of liquid fuels. A small amount of ash was generated and the ash generated was primarily a fly ash.

Boiler No. 5 was of similar design to Boiler Nos. 1-4 although the steam generation capacity was larger. Main design differences were that boiler No. 5 had the capability to burn pulverized coal and liquid fuels. Liquid fuels were burned exclusively after 1963. This design difference minimized the generation of a bottom ash residual but resulted in the generation of a fly ash residual. The boiler design also included an air preheater and an induced draft fan. The air preheater was a heat exchanger in the form of revolving plates. This device captured the heat from the combustion gases to preheat incoming air used for combustion. The velocity of the combustion gases was reduced as a result of the heat exchange, resulting in the generation of a fly ash residual in the preheaters. The preheaters were periodically cleaned. It is believed that the cleaning residuals were disposed of off-site.

Boiler No. 6 was of similar design to Boiler No. 5 although the steam generation was larger than in Boiler No. 5. The main design difference was that Boiler No. 6 was designed to burn liquid fuels but not coal, thereby minimizing ash as a residual from its combustion process.

849900068

Boiler Water Chemistry

The boiler water circulation and steam generation processes were essentially the same in all boilers. City water was used in the conventional boilers to generate steam. The water was pumped into the boiler via the steam drum where water was continuously circulated through the boiler for steam generation. Minerals and oxygen in city water had the potential to cause buildup of scale and corrosion within the inner walls of the boiler tubes, which in turn reduced the heat transfer efficiency and deterioration of the boiler respectively. City water was treated to address these operating concerns. First, the water was routed to the filter house where zeolite resin softeners were used to reduce hardness by the removal of magnesium and calcium salts. The water was then routed to deaerator/feedwater heaters where steam was used to preheat the water and decrease its oxygen content. Chemicals were injected to control pH, scavenge oxygen, and prevent tube scaling, corrosion, and embrittlement as the heated water was routed to feedwater pumps for introduction to the boilers. Table 3-28 lists the chemicals used for the treatment of boiler water. Plant records indicating the quantities of chemicals used have not been located.

Proper boiler water chemistry was continuously maintained by a process of adding and removing chemicals from the system. Chemical removal was accomplished through the mechanism of a continuous blowdown of boiler water. The blowdown was required to extract suspended chemicals precipitated in the boiler water as a result of the boiler water chemical treatment process. Approximately 10 percent of the water used for steam

849900069

generation was blown down from the boilers from the main steam generation system from 1926 to 1965 on a continuous basis. Depending on which units were in operation, from 1926 to 1951, approximately 18,000 gallons of blowdown water (estimated steam production was 70,000 lbs per hour) was discharged per day; from 1951 to 1965, the daily blowdown amount increased to approximately 30,000 gallons (120,000 lbs per hour estimated steam production rate); after 1965, the boiler water blowdown amounts were much smaller because of a considerable reduction in steam production needs. The treated boiler water blowdown, usually containing an oxygen scavenger, corrosion inhibitor, scale inhibitor, a water softener, and pH control agent, and their degradation products was directed to a dry well and then routed to the Plant drain system where it was routed to and commingled with the non-contacting cooling water and discharged to the Passaic River.

The vast majority of the plant's total hourly steam requirements were generated by the Plant's conventional boilers. The Plant also used, however, waste heat boilers to meet operating steam requirements. The Plant's waste heat boilers consisted of eight (8) inclined waste heat boilers which operated utilizing waste blast gases routed from the gas generator sets. The waste heat boilers had an aggregate rated capacity of approximately 24,000 pounds of steam per hour. Steam was generated by passing the blast gases over water-filled steam generator tubes. Softened city water was supplied to the waste heat boiler tubes from the filter house. No other chemical treatment was performed and, therefore, no blowdown was necessary. Waste blast gases were exhausted to the atmosphere after passing through the waste heat boilers. The steam generated was routed to the Plant's high pressure steam system

for use in Plant operations.

The vast majority of the steam generated was initially routed to prime moving equipment and other auxiliary equipment for use as a source of energy. This equipment exhausted steam to the Plant's low pressure steam system which routed it to the exhaust steam accumulators. A portion of the steam generated in the conventional and waste heat boilers was routed directly to a reducing valve and then to the exhaust steam accumulators. Low pressure steam from the exhaust steam accumulators was routed to the gas generators where it was chemically/thermally converted or consumed into water gas as previously described. A certain portion of the high pressure steam was routed to auxiliary Plant equipment, e.g. tar stills, gas storage holder heating equipment and soot blowers. The steam used for this equipment was exhausted to the atmosphere. Figure 3-20 presents a steam utilization flow diagram for the Plant.

Boiler Cleaning

The 225 psig boilers (No. 1-6) were taken out of service, opened and mechanically cleaned once a year in preparation for the annual boiler inspection made by an insurance inspector to satisfy insurance requirements. The water in the boiler was drained, the boiler was then rinsed with city water and subsequently the boiler was dried out with air to avoid corrosion.

849900071

A powdered chemical Alken Fireside Treatment was introduced in the boiler with the fuel for about 24 hours prior to taking the boiler out of service. This chemical additive reacted with the acidity and corrosion and deposit buildup on boiler tubes surfaces. The products of the reaction were removed with the cleaning residuals.

After all necessary isolation precautions were made, the furnace and the outside of the boiler tubes were washed with city water. Minor scale deposits in the inside of the tubes were cleaned mechanically by turbining the tubes. The boiler was then hosed down with city water to flush out the loose scale dislodged by the turbining, dried out and made ready for the insurance inspector's inspection.

It is believed that the cleaning residuals were directed to the ash sluiceway and routed to the ash pit.

Chemical cleaning was done only once on Boiler 5. The chemical clearing was done by an outside contractor under the supervision of PSE&G personnel. All chemical solutions and washings were removed and disposed of off-site by the contractor.

Neither the furnace nor the boiler tubes in the 600 psig SNG process boiler was subject to the cleaning process described above.

849900072

The furnace side of the boiler tubes were cleaned once a day with steam from the soot blowers while the boiler was in operation. It entailed a current of steam to be passed over the outside of the boiler tubes for the purpose of removing any deposits that may have adhered to the tubes. The operation was limited to a few minutes per day per boiler.

Raw Materials

The raw materials for the steam generation process are listed in Table 3-28. The primary raw materials were bituminous coal, coke and No. 6 fuel oil. Tar was also used as a fuel.

Bituminous Coal

Bituminous coal is a medium hard coal usually containing between 75 and 90 percent fixed carbon on a dry weight basis (Wilson and Wells, 1950). Harder coals, containing a higher percent fixed carbon are called anthracite coals; softer coals often containing less than about 70 percent fixed carbon are called lignites, brown coals, or peats. Bituminous coals also typically contain about 10 percent moisture, 4.5 to 5.5 percent hydrogen, and 5 to 20 percent oxygen. Eighteen to as much as 40 percent of bituminous coal is volatile at a temperature of 900°C (1,652°F). Bituminous coals have a heating value in the range of 10,500 to 14,000 BTU/lb (Ensminger, 1977). Coals from the U.S. Appalachian Province are primarily high volatile A and B, medium-volatile, and low-volatile bituminous coals of

849900073

carboniferous age (300 million years) (Ensminger, 1977). Most of the bituminous coal used as boiler fuel at the Plant was Appalachian coal from West Virginia and Pennsylvania.

Bituminous coal, with more than 70 percent fixed carbon and about 5 percent fixed hydrogen, is primarily an aromatic structure, with small amounts of saturated hydrocarbon substituents (Neff, 1979; Elliott and Yohe, 1981). If coal was composed primarily of saturated hydrocarbons, it would contain about 14 percent hydrogen; if it was entirely aromatic, it would contain about 4 percent hydrogen or less. The aromatic units in bituminous coal probably are present as high molecular weight polymeric sheets of condensed PAH units with aliphatic and hetero (nitrogen, oxygen, and sulfur) substituents. These high molecular weight PAH polymers are completely insoluble, immobile and inert. However, pyrolytic reactions during the burning or carbonization of coal can produce a wide variety of lower molecular weight PAHs with two to about eight benzene rings. These lower molecular weight PAHs are slightly soluble and mobile, and some appear on the CERCLA hazardous substance list.

Relatively few recent analyses have been performed of the low molecular weight PAHs and related heterocyclic compounds in bituminous coal. An Electric Power Research Institute (EPRI) database contains a summary of PAHs found in bituminous coals from the eastern Appalachian Province of the U.S. (Table 3-29).

849900074

The most abundant PAHs in these coals are naphthalene and phenanthrene. Concentrations of five and six ring PAHs are quite low. Di(2-ethylhexyl)phthalate also was detected once at a concentration of 0.58 mg/kg in an eastern bituminous coal. This undoubtedly was a laboratory artifact. Phthalates, particularly di(2-ethlhexyl)phthalate, are synthetic plasticizers in commercial plastics and migrate readily into all environmental media, including analytical laboratory reagents (Lopezavila et al., 1990). Wo et al. (1978) detected several PAHs, including phenanthrene, benz(a)anthracene, benzo(a)pyrene, perylene, benzo(g,h,i)perylene, and dibenzopyrene in coal by X-ray excited optical luminescence.

More than 65 elements are present in coal, including several metals and metalloids that are CERCLA listed hazardous substances in some chemical forms. Typical Pennsylvania and West Virginia bituminous coals of the types used as boiler fuels at the Plant contain 17 elements that appear on the CERCLA hazardous substance list (Table 3-30). Most of the metals, metalloids, and inorganic chemicals in bituminous coals are not in forms that would be considered hazardous. They are present primarily as inclusions in various minerals that are present in the coals. However, small amounts of some of these metals and metalloids can leach from coal into water.

The most abundant of the elements of interest in bituminous coal from Pennsylvania and West Virginia is sulfur. In the EPRI sample, sulfur is present at concentrations ranging from 0.5 to 6.2 percent. This is in the range of sulfur concentrations in 101 samples of coal

analyzed by Ruch et al. (1974) (0.42 to 6.47 percent). Most of the sulfur in the coal is either organic or pyritic (FeS_2); only a small fraction is present as sulfate.

The metals and metalloids that are present in these coals at the highest concentrations relative to their average natural concentrations in the earth's crust are arsenic, cadmium, chromium, and sometimes mercury and selenium (Gehrs et al., 1981). The other metals and metalloids frequently found in coals are present at concentrations similar to or lower than their average concentrations in the earth's crust. The metals in coal are present primarily in heavy mineral inclusions in the coal. The elements chlorine, fluorine, and phosphorus may also be present in bituminous coal. These anions probably are present as salts of various metallic cations.

COKE

The other major solid fuel used as boiler fuel at the Plant was coke. The coke used as boiler fuel had the same physical and chemical characteristics to those of the coke used for gas manufacture at the Plant (See Section 3.2.1).

NO. 6 FUEL OIL

No. 6 fuel oil is the heavy undistilled residue that remains after crude oil is refined to produce a variety of refined petroleum products (CRCS, 1985; IARC, 1989). This residual

fuel comes primarily from the atmospheric tower residue, vacuum residue, or thermally cracked residue produced at the oil refinery. It is composed primarily of high molecular weight saturated, unsaturated, and nitrogen, sulfur and oxygen substituted hydrocarbons as well as variable fractions of poorly characterized resin and asphaltene fractions. No. 6 fuel oil often is very viscous and requires heating to make it sufficiently liquid so that it can be pumped. Therefore, it is frequently blended with lighter distillate fuels to produce fuels with lower viscosity and better pumpability. No. 6 fuel oil is used primarily as a boiler fuel in commercial and industrial heating or as a bunker fuel for steam ships.

No. 6 fuel oils vary widely in physical properties and chemical composition, depending on the sources of the residues and the types of blending stocks added to the fuel. A typical No. 6 fuel oil contains roughly equal concentrations of saturated, aromatic, polar aromatic hydrocarbons and asphaltenes. Residual fuels may contain 0.3 to about 5 percent sulfur.

Specifications for No. 6 fuel oil delivered to the Plant for boiler fuel in 1972 included an °API gravity of 25 to 30 (specific gravity 0.876 to 0.904 g/mL), a universal saybolt viscosity range from 60 to 300 seconds at 100°F, sulfur no higher than 0.3 percent, and a pour point between 30 and 60°F (Di Rienzo, 1969 and 1972). This indicates that the No. 6 fuel oil used at the Plant was a light product probably blended with a light distillate product to enhance pumpability.

849900077

The chemicals of interest in No. 6 fuel oils are PAHs and related heterocyclic compounds (Table 3.4). Concentrations of monocyclic and polycyclic aromatic hydrocarbons vary widely in different residual fuel oils as shown in Table 3.4.

No. 6 fuel oil and the heavy distillate fuel oils sometimes used as boiler fuels also contain several metals, metalloids, and inorganic chemicals (Table 3-31). The metals most often present at elevated concentrations, relative to their concentrations in crustal rocks and soils, are nickel, vanadium, and cadmium. Nearly always, metal and metalloid concentrations are much higher in residual fuels, such as No. 6 fuel oil, than even heavy distillate products. This is because the No. 6 fuel oil contains all or most of the undistillable chemicals that were in the original crude oil feedstock.

Chlorine, probably in the form of various inorganic chlorides, may be present in residual fuel, though concentrations are much lower than in sea water or in the saline produced water produced with most crude oils. Fluorene may be present at low concentrations. Sulfur concentrations vary widely in No. 6 fuel oils from 0.25 to more than 5.7 percent (Table 3-31). The No. 6 fuel oil used at the Plant as boiler fuel had a low sulfur concentration of less than 0.3 percent (Di Rienzo, 1969 and 1972).

Boiler Water Chemicals

Sodium sulfite was the major oxygen scavenger used in boiler water at a dosage rate

849900078

of 0.15 lbs per 10,000 gals (2 ppm). Alken 52, a proprietary product, was also used at approximately 1 quart per 6,000 gals (40 ppm). Sodium nitrate was used to prevent metal embrittlement and added at about 0.25 lbs per 10,000 gals (3 ppm). Approximately 1 pint per 10,000 gals (12.5 ppm) of Disperse 332, an anionic polyelectrolyte, was added as a scale inhibitor to fluidize phosphate sludge, disperse iron oxides, and inhibit calcium carbonate formation. The corrosion inhibitor Alken J-671 was another additive in the treatment of the feedwater. This proprietary volatile amine, used to remove carbon dioxide, was added at a dosage of approximately 0.5 pint per 10,000 gals 6.25 ppm).

Target ranges of boiler water quality acceptability were 0-2 ppm water hardness, pH of 10-11 for boiler water, pH of 8-9 for condensate, 20-40 ppm phosphate in boiler water, 25-50 ppm sulfite, and conductivity of 2,000-2,400 mmho (Plant records 1987). The zeolite resins were regenerated periodically with a brine solution which after use was routed to the last pass of the tar separators.

The types of chemicals that would be associated with the blowdown waters are the major cations (sodium), anions (nitrates, sulfates, chlorides, phosphates), and from the reaction products of the raw material chemicals (oxygen scavengers, embrittlement preventers, pH controllers, corrosion inhibitors, boiler scale inhibitors - See Table 3-28). The concentrations of chemical residuals were not determined in the blowdown water; however, some boiler water properties were measured on a regular basis to monitor boiler water quality. Based on the additions of chemicals made to the boiler water during operation, the

concentrations of the major ion residuals in the blowdown water would be in the range of 20-50 ppm.

By-Products

Bottom Ash

Combustion of the coal/coke in the furnace produced an ash residual that fell into an ash sluiceway. The ash sluiceway consisted of a cast iron lined trough in which water was continuously fed from a portion of the overflow of the non-contact cooling water discharged from the primary condensers. The ashes from the boilers fell into the ash sluiceway from where they were then routed to the ash settling pit, an in-ground concrete structure containing baffles, located near the west end of the generator house. The baffle system facilitated the settlement of the ashes in the ash pit. The ashes were periodically removed by a crane, placed in truck hoppers or railway cars for removal from the Site for sale and/or disposal. Plant records concerning the sale or disposal have not been located. Excess water in the ash pit was routed via an overflow pipe to a storm water catch basin where it was routed to and commingled with Plant non-contact cooling water and discharged to the Passaic River.

Although no measurements were made of the amounts of bottom ash generated or its composition at the Plant, bottom ash usually represents about 5 to 15 percent of bituminous coal and coke ash (GRI, 1996). EPRI (1996) has summarized typical metal concentrations in

849900080

bottom ash from Pennsylvania and West Virginia bituminous coals (Table 3-32). The most abundant metals in the bottom ash from the Pennsylvania and West Virginia coals are arsenic, barium, chromium, copper, nickel and zinc.

Bottom ash from bituminous coal burned in steam boilers also contains a wide variety of organic chemicals. Junk and Ford (1980) identified 76 organic chemicals mostly PAHs and heterocyclic compounds, in coal bottom ash. No chlorinated compounds were detected. EPRI has summarized the concentrations of a large number of organic chemicals in bottom ash from Pennsylvania and West Virginia coals. None of the organic chemicals (90 organic compounds analyzed) were present in the coals at concentrations higher than the detection limits (1-5 mg/kg dry wt.). Thus, bituminous coal bottom ash was not a significant source of organic chemicals at the Plant.

Coal ash slurry waters that transport bottom ash from the boilers contain metals and metalloids in solution or in suspension (Table 3-33). Concentrations of metals and metalloids in bottom ash slurry water coming into an ash pond generally are quite low. Highest concentrations are typically for aluminum, boron, iron, magnesium, strontium, and titanium, all of which are not metals of interest in the forms in which they ordinarily occur in the environment.

849900081

Residual

Fly ash from the Plant boilers were emitted up the boiler stack into the atmosphere. There are no records documenting fly ash emission. Relevant literature indicates that the production of total ash ranges from 4 to 18 pounds/million BTU of coal feedstock consumed to 0.01 to 1.0 pound/million BTU of oil consumed. The proportion of the ash that is fly ash and bottom ash varies widely, depending on the chemical and physical characteristics of the coal or oil burned and the design of the boiler. Boilers 1-4 used coarse coal.

The typical metal concentrations in fly ash from burning of Pennsylvania and West Virginia bituminous coal are summarized in Table 3-34. The metals and metalloids most likely to be present in bituminous coal fly ash at concentrations substantially higher than their crustal abundance include antimony, arsenic, barium, chromium, copper, lead, mercury, nickel, selenium, silver and zinc. Iron, potassium and sulfur may be present at very high concentrations (Taylor et al., 1982).

Fly ash from combustion of bituminous coal in boilers contains a wide variety of organic chemicals. Junk and Ford (1980) identified (unquantified) 22 organic compounds, mostly PAHs and related heterocyclic compounds, from 307 compounds sought, in coal fly ash. No chlorinated dioxins were detected. The most abundant PAHs were middle and high molecular weight PAHs (See Table 3-35). Concentrations of PAHs were very low (16 to 132 parts per billion). The fly ash from coke burning would be expected to have much lower

concentrations of organic materials, because much of the volatile /fine material from the fuel that is emitted in the fly ash would have been removed during the coking process. A residual not captured in the steam generation process is the flue gas resulting from fuel combustion. This residual is released via the boiler stack to the atmosphere. The compositoin of the flue gas emitted varies dependent upon the fuel fired, the equipment design and the level of emission control. Plant-specific data on emission characteristics are not available. The EPRI PISCES Database provides information on the identity of the trace constituents in the flue gas from boilers fired by either coal or oil which have been idengified by USEPA under the Clean Air Act Amendment of 1990 as hazardous air pollutants. This database also presents emission factors for these trace constituents. Appendix D provides the list of these trace constituents and their associated emission factors.

3.3.2 COOLING WATER SYSTEM

The Plant used brackish water from the Passaic River for non-contact cooling. River water was utilized primarily in gas condensers for cooling the manufactured gas, in the exhausters/compressors to condense steam and other heat exchange equipment for cooling tar and water vapors. The Plant cooling water system was a once-through system with an initial withdrawal capacity of approximately 10,000 gpm. The withdrawal capacity was subsequently increased to approximately 12,000 gpm. The Plant non-contact cooling water was not chemically treated. Untreated process waste waters and sanitary waste waters were not discharged to the Plant cooling water system.

The cooling water system depicted in Figure 3-21 was comprised of an intake structure, inlet piping, yard drain piping, discharge piping and associated equipment. The inlet structure consisted of two inlets from the river equipped with trash racks and a common traveling screen. The inlet piping, yard drain piping and discharge piping system was comprised of five discrete components -- inlet lines, feeder lines, ancillary lines, outlet lines and a discharge flume. The inlet line component was comprised of a 48 inch reinforced concrete pipe and a 24 inch steel pipe. These lines ran from the Plant intake structure to the boiler house area. Water withdrawn from the Passaic River via the intake was routed through the inlet line and then pumped through a system of 24 inch feeder lines to the Plant equipment that required water for cooling. Once the cooling process was complete, the cooling water was routed from this Plant equipment through ancillary lines to one of three major outlet lines (the "Plant Drain System") that were connected to the Plant's discharge flume. The discharge flume was a concrete canal that ran along the length of the Plant parallel to Frank E. Rodgers Boulevard and terminated at the Passaic River.

As indicated above, non-contact river cooling water was utilized in the primary and secondary condensers for cooling the manufactured gas. The non-contact river water was passed through metal tubes within the condensers for cooling and then discharged from the primary condensers to a storm sewer and directed to the discharge canal for discharge to the Passaic River. A portion of the non-contact cooling water from the primary condensers was directed to the Boiler House ash sluiceway.

Non-contacting cooling water was also required for operations of the exhausters and compressors in the Exhauster/Compressor House.

The exhauster, a blower-type device, was connected via a shaft to and driven by a steam turbine. High pressure steam was fed to the turbine causing the shaft to rotate the exhauster. This rotation caused an increase in pressure in the gas stream so that the gas could move through the purification system. The rotation of the steam turbine caused a reduction in the pressure of the steam. The resultant low pressure steam was exhausted partially to the Plant's low pressure steam system and partially aspirated into the water flow of the barometric or jet condensers. The steam condensed as a result of this contact with the water. The water and the condensed steam were routed to the discharge canal and discharged to the Passaic River.

Like the exhauster, turbo compressors were connected via a shaft to, and driven by, a steam turbine causing the shaft to rotate the compressor. This rotation resulted in an increase in the pressure in the gas stream to move the gas from the storage holder to the gas distribution system. The rotation of the steam turbine caused a reduction in the pressure of the steam. The resultant low pressure steam was exhausted partially to the Plant's low pressure steam system and partially aspirated into the water flow of a barometric or jet condenser. The steam condensed as a result of this contact with the water. The water used in the condenser was from the Plant's cooling water system. This water and the condensed steam were routed to the discharge canal and discharged to the Passaic River.

Non-contact river cooling water was also utilized in the tar/steam still condenser and No. 3 gas holder tar conditioner condenser for cooling. Both condensers were steel boxes comprised of the following components: an inlet waterbox (where river cooling water enters the condenser), condenser tubes (supported by tube sheets) where river cooling water was routed through the condenser, an outlet water box (where river cooling water leaves the condenser) an inlet pipe for water vapor, and an outlet condensate pipe. The non-contact cooling water used in tar/steam still condenser was routed to the Plant cooling water system for discharge to the discharge flume and discharged to the Passaic River. The non-contact cooling water from the No. 3 gas holder tar conditioner condenser was routed to a discharge pipe for discharge to the Passaic River.

This system was also designed to accept Plant storm water runoff through a series of catch basins located across the Plant as well as storm water from the City of Harrison. (See Figure 3-22). Storm water collected by these basins was routed to the ancillary lines or outlet lines of the Plant discharge system and routed to the Plant's discharge flume for discharge to the Passaic River. Storm water runoff from the City of Harrison was routed to the discharge flume via a 21 inch pipeline feeder line tie in on Frank E. Rodgers Boulevard.

Overflows of water from the ash settling pit and the purification sedimentation basin, and discharges from the sand filters in the filter house were routed through the ancillary lines to the discharge flume where they were commingled with the non-contact cooling water for discharge to the Passaic River.

River water was also used as the water source for the Plant's fire protection system until circa 1974 when the fire protection system was upgraded. Circa 1974, tank no. 20 was converted for water storage and an automatic pumping system was installed. City water was substituted for river water.

3.3.3 TARRY WATER EFFLUENT COLLECTION SYSTEM

As indicated above, the manufactured gas was routed through various Plant equipment (e.g. washboxes, primary and secondary condensers, gas relief holder, electrostatic precipitators) for cooling and purification. Condensates produced from the cooling and purification process consisted of a tarry water. Tarry water condensates were also collected in drip pots as the gas moved through the system and cooled. The tarry water was routed through a dedicated piping collection system to tar separators. The tar separator also received effluents from other areas of the Plant for treatment. These were: solids from the purification sedimentation basin; blowdown water from the SNG boiler; effluent from the SNG oil/water separator; and effluent from the SNG neutralization tank. After 1975, effluent from the Plant Corrugated Plate Interceptor ("CPI") oil/water separator was also routed to the tar separators for treatment. (See Figure 3-23).

The tar separators were in-ground concrete basins with a series of baffles to allow for the separation of the tar from the water. The water was returned to the washboxes by

circulating pumps for cooling and purification of the gas stream. This water was injected with a chemical emulsion breaker solution of Fatchemco diluted in ethanol or methanol to facilitate the separation of tar and water. Excess water in the tar separators overflowed into a sedimentation basin. The sedimentation basin was a structure similar in construction to the tar separators. At the inlet of the basin, soda ash (sodium carbonate) and alum (aluminum sulfate) were added. Soda ash was added to control pH and alum to facilitate flocculation and the removal of any suspended solids or dispersed particulates from the water. The residual that settled to the bottom of this sedimentation basin could be used as a fuel when mixed with tar in the boilers or was disposed of off-site as a waste. The water was routed from the outlet of the sedimentation basin through sand filters and the effluent from the sand filters was routed to the discharge canal where it was commingled with the non-contact cooling water and discharged to the Passaic River. Commencing in 1979, this discharge was routed to the PVSC sewer system. (See Figure 3-24).

The tar settled to the bottom of the separators and was pumped to settling tanks. The settling tanks were above ground steel tanks equipped with steam coils containing steam fed from the Plant's low pressure steam system. The heat from the steam in steam coils caused water to further separate from the tar. The water was returned to the tar separators. The tars were either routed to the tar steam stills for further dehydration, if necessary, and/or to tar storage tanks for sale to industry and/or use as a liquid fuel in the Plant's boilers. Tar was again heated by steam coils containing steam. The steam was exhausted to the atmosphere. The tar was routed to tar tanks and the water and light oil vapors were routed to condensers

849900088

where they were condensed. The condensate was routed to a decanter where light oils were separated from the water. The light oils were routed to drip oil or tar tanks and the water was returned via the tarry water collection system to the tar separator.

The residuals of the system were water and tar. The chemical composition of the tar has been discussed above. No Plant records have been located on the chemical composition of these waters. GRI (1987, 1996), however, reports the chemical composition of representative untreated quench water from several coal gasification plants (Table 3-36). Mean concentrations of mono and polycyclic aromatic hydrocarbons ranged from 0.02 to 9.7 mg/L. While phenols were reported in this quench water, phenols are not generated in the CWG process. The only other phenol detected was dimethylphenol. Many of the polycyclic aromatic hydrocarbons were present at concentrations much higher than their solubilities (Neff et al., 1994). Therefore, the quench waters probably contained dispersed tar droplets.

Generally, concentrations of metals, except arsenic and selenium, were low in these quench waters. Concentration ranges of arsenic and selenium in several quench waters were 0.008 to 35.5 mg/L and 0.01 to 51.9 mg/L, respectively (GRI, 1987). Concentrations of these organic chemicals and metals would be considerably lower as a result of treatment in the Plant's system.

The aluminum sulfate would promote precipitation of most of the particulate and dispersed materials with the wastewater maintained at a pH of around 7 in the sedimentation

849900089

basin. The metals such as arsenic and vanadium would be expected to coprecipitate with particulate material, particularly iron oxides and sulfides, in the system (Neff, 1996). Sulfur and sulfides associated with particulate metals such as iron would also be expected to precipitate out and remain in the sedimentation basin.

Chemicals in the effluent water from the sand filters eventually discharged into the Passaic River may have included dissolved salts and small amounts of suspended particulate matter. Most of the volatile monoaromatic compounds (e.g., BTEX) would be lost to the atmosphere by evaporation during processing. Concentrations of polycyclic aromatic hydrocarbons in the dissolved phase of the wastewater would not exceed their low solubility of 30 to 0.003 mg/L (naphthalene to benzo(a)pyrene) (Neff, 1979).

Plant records of concentrations of chemicals in the particulate or dissolved phase of this effluent stream and the volume of treated effluent discharged into the Passaic River have not been located. Concentrations of suspended particulates would be expected to be low, similar to that of the river water that ranged from 1 to 6 mg/L.

3.3.4 ASH/CLINKER HANDLING

Combustion of coal and coke in the conventional boilers and coke in the gas generators generated bottom ash and ash/clinker, respectively. Bottom ash was directed to a sluiceway where it was quenched with a portion of the river cooling water overflow from the

849900090

primary condensers and routed as a slurry to the ash settling pit, an in-ground concrete pit with baffles. The ash/clinkers were manually removed from the gas generator sets and carried to the ash settling pit. The ash/clinkers settled out and were removed by a crane and loaded into truck hoppers or railway cars for off-site disposition. The overflow was routed to the Plant Drain System and then to the discharge canal where it was commingled with non-contact cooling water and discharged to the Passaic River. After 1964, little or no ash was generated at the Plant.

Plant records of the quantity and/or chemical composition of the ash and overflow waters have not been located. Relevant literature, however, does provide data with respect to the chemical composition of these materials. Based on the composition of clinkers and bottom ash discussed above, the contents of the wastewater and solids could have been comprised of mostly carbon residual and trace metals. In an EPRI, 1996 database, concentrations of trace metals and suspended solids were determined in ash pond effluents, where the source of the ash was western Pennsylvania coal (Table 3-37). Trace metal concentrations in both filtered and unfiltered water were low, generally less than 1 part per billion. Except for iron, most of the targeted trace metals resided in the dissolved phase of the ash pond effluent. The trace metal concentrations in the suspended particulates (filtered solids) were comparable to the concentrations in bottom ash (Table 3-32). Comparison of the concentrations of trace metals in the bottom ash slurry discharged into the ash pit (Table 3-33) and the ash pond effluent discharged <u>out</u> of the pit (Table 3-37), and the low total suspended solids content of the effluent indicates that most of ash was retained as settled

particulates in the ash pit. The concentrations and behavior (fate) of chemicals in bottom ash and clinkers in the Plant ash pit system would be expected to be similar to that illustrated by the EPRI document.

3.3.5 SANITARY SEWER SYSTEM

Plant sanitary wastes were routed from the Plant's sanitary facilities to a series of feeder pipes that were connected to the City's sanitary sewer line situated at Frank E. Rodgers Boulevard and the former Cumberland Street. Figure 3-25 depicts the Plant's sanitary sewer line system.

3.3.6 COAL PILE RUNOFF

Coal and coke were stored in outdoor yard areas at the Plant for use in gas manufacturing and steam production (See Figure 2-3). The Plant did not have a runoff collection system. Runoff generated would have been discharged to the ground.

Estimating runoff quantities is difficult because runoff is dependent upon stockpile size and configuration, coal particle size, amount of precipitation, type of meteorological event, and moisture content of the coal stored. Runoff from rainfall on a pile may range from 50 percent to 95 percent; the remainder evaporates (Cox et al. 1977; Davis and Kimmitt, 1982).

849900092

Relevant literature indicates that coal, fine particles, and various inorganic and organic elements may leach from the pile from rainwater contact. Coal pile leachate would be similar in quality to acid mine drainage (Davis and Kimmitt, 1982). The pH of coal runoff may be as low as 2.0 to 2.5. Iron concentrations may be higher than 10,000 mg/L. Concentrations of metals and other properties in runoff have been measured at a variety of coal pile locations to illustrate the variability of runoff composition and concentrations (Tables 3-26 and 3-27). Concentrations of most metals in the coal pile drainage appear at trace levels. Iron is the only metal that is present at significantly higher concentration in the unfiltered than in the filtered leachate samples (Table 3-26). This indicates that, at the acid pH of the drainage, most metals are in the dissolved state. Oxidized iron species have a low aqueous solubility even under acidic conditions.

3.3.7 NO. 3 GAS HOLDER TAR CONDITIONER SYSTEM

As previously discussed above, the No. 3 Gas Holder was a waterless tar-sealed holder with two primary components -- an above-ground waterless steel shell and an inside piston which was moved up and down by the pressure of the gas under it. (See Figure 3-19). The joint between the piston and the steel shell wall was made tight by a tar seal. The tar seal also consisted of two essential components: a rubbing plate so constructed as to cause it to glide smoothly as the piston moved up and down; and the volume of tar necessary to prevent the escape of gas from the steel shell. Gas entered and left the holder via inlet and outlet pipes that entered the side wall of the gas holder immediately above the floor of the holder.

849900093

Special care was required to maintain the proper viscosity and dehydrated (i.e. water free) condition of the tar. That special care was accomplished by the No. 3 Gas Holder Tar Conditioner System described below.

The tar used as part of the seal required periodic conditioning to dehydrate the tar and maintain the desired viscosity. Intermittently, discrete amounts of tar from the seal were routed to a conditioner for water removal. The tar conditioner was a heat exchanger where tar was heated by steam-filled steel tubes. The steam was exhausted to the atmosphere. The resultant water and light oils vapor was routed to the No. 3 gas holder tar conditioner condenser for cooling. The estimated water and light oil vapor was less than 100 gallons a day. Non-contact cooling water was used in the condensers for cooling the vapor. The condensate was routed to a decanter while the light oils were separated from the water. The light oils were recovered. The water was routed to an outlet pipe, commingled with non-contact cooling water and discharged to the Passaic River. After 1976, the water was routed to the ash pit where it overflowed to a catch basin and commingled with the non-contact cooling water prior to discharg to the River. The conditioned tar was returned to the No. 3 Gas Holder to be utilized as a seal.

3.4 SUPPORT SYSTEMS

3.4.1 ELECTRICAL SYSTEMS

The Plant power requirements were supplied from the PSE&G electric distribution system through two (2) 26,400 volt feeders and two (2) 4,160 volt feeders. The feeders came to an electric substation located to the west and directly across the road from the Generator House and to a switch room located directly to the north of the generator house, respectively. Electrical equipment included four oil filled electric transformers to step down the voltage, including an oil-filled electric transformer which reduced the voltage from 26, 400 to 4,160 volts.

There were two oil-filled electrical transformers to reduce the voltage from 4,160 to 480 volts. The electric power requirements for the two electric-driven river water pumps located adjacent to the river water intakes were drawn from the 4,160 volts side of this switchroom via an oil-filled electrical transformer (dedicated to the river water pumps) where the voltage was reduced from 4,160 to 480 volts and then routed to the river water pumps mentioned above.

The plant also had a steam-driven electric generator to supply the basic electric power requirements for plant operations in case of emergency (loss of external electric power supply). This steam-driven electric generator was located in the Generator House.

849900095

3.4.2 LABORATORY

The Plant had a laboratory equipped for the testing of raw materials received at the plant (e.g. coal, cokes, oils and gases); the quality of the gases and by-products produced by the plant; and the control analyses required by the operation of the Plant including effluent testing. Available records concerning the laboratory are available for inspection.

3.5 MISCELLANEOUS MATERIALS

Section 3 presents a description of the industrial activities and processes that have been conducted at the Site since 1902. The described activities included material storage, gas manufacturing, and auxiliary processes supporting those activities. Section 3 also presents a discussion of the primary raw materials utilized in these activities and related processes as well as the products, by-products and residuals generated.

It is believed that the Plant utilized a number of other materials and may also have generated a number of other residuals. Given the duration of these industrial activities and the fact that the industrial activities have been out of service for a substantial period of time, PSE&G is not able to develop a comprehensive list of materials used and residuals generated, since Plant records documenting all such material use and residual generation are no longer available.

849900096

4.0 REGULATORY PROGRAMS

This section presents a summary of relevant and available information concerning certain PSE&G regulatory programs/activities and/or contacts with environmental regulatory agencies related thereto. Correspondence by and between PSE&G and environmental regulatory agencies concerning regulatory programs/activities are available for inspection.

4.1 NPDES PERMIT

The Plant had two outfalls. The first outfall was in the southeast corner of the Plant immediately west of the Jackson Street Bridge, at the terminus of the Plant discharge flume ("Discharge Flume Outfall"). Effluent streams routed to this Discharge Flume Outfall were generally non-contact cooling water, treated process water, miscellaneous process and non-process effluent streams and storm water from the City of Harrison. The second outfall was located approximately 1,000 feet southeast of the southwest corner of the Site. Effluent streams routed to this outfall included non-contact cooling water and water vapor condensate from the No. 3 Gas Holder tar conditioner system.

The effluent streams to the Discharge Flume Outfall can be more particularly identified as follows:

- Filter House sand filter effluent

- Non-contact river cooling water from the gas condensers
- Non-contact river cooling water and condensed steam from the barometric and jet condensers
- Boiler water blowdown
- Ash pit overflow
- After-coolers non-contact deep well cooling water
- Condensed steam from the LPG steam vaporizers
- Non-contact river cooling water from the tar still condensers
- Purification sedimentation basin overflow
- Storm water from catch basins

Plant sources for process waste waters routed to the tarry water collection system for treatment in the tar separator, sedimentation basin and sand filter treatment system may be summarized as follows:

- Wash boxes
- Primary condensers
- Secondary condensers
- After-coolers
- Tar precipitators
- Drip pots
- SNG oil water separator effluent
- Decanted waters from tar tanks

849900098

The effluent discharge from No. 3 Gas Holder Tar Conditioner System consisted of the non-contact cooling water used to condense the light oil/water vapors from the No. 3 gas holder tar conditioner and the decanted water from the light oil water condensate.

On June 25, 1971, PSE&G submitted an application to the Department of the Army, New York District, Corps of Engineers ("ACOE") for a permit to Discharge in Navigable Waters effluents from the Plant into the Passaic River pursuant to the Rivers and Harbors Act of 1899. The permit application (Application Number 2SD-OXW-2-000148) was subsequently modified by letter dated September 29, 1971 and revised to incorporate comments and additional information described in correspondence by and between PSE&G and the ACOE. PSE&G supplemented the information previously provided to the ACOE.

On January 28, 1972, PSE&G in response to an ACOE comment letter dated August 30, 1971, resubmitted its permit application to the ACOE stating that the permit application had been changed in accordance with the ACOE's comments. On October 18, 1972, PSE&G responded to an ACOE request of July 20, 1972 and provided the estimated number of days per year discharge to the river would occur.

Pursuant to the 1972 amendments to the Federal Water Pollution Control Act, PSE&G's application to the ACOE was transferred to the USEPA. Subsequent to communications with the USEPA's Chief, Industrial Water Facilities Branch, PSE&G, on March 4, 1974, submitted revised applications for river discharge to the USEPA. The revised

applications were for outfall numbers 004 and 005, "Plant Outlet Flume" and "Tar Conditioner Cooling and Steam Condensate Drain to River", respectively. Data summarizing annual averages of material and product quantities representative of the last five years and average bi-monthly chemical analyses representative of the last two years, were also submitted with the revised applications.

Water usage in the plant was also identified in the permit application for the summer and winter periods. The estimated volumes of water usage in million gallons a day ("MGD") or fraction thereof of water usage identified in the permit application are:

Usage	Summer	Winter
Cooling water	8.164	17.101
Boiler feed water	0.142	0.748
Process water	0.014	0.072
Sanitary sewer	0.040	0.040

The discharges were reported to have a combined estimated flow of 8.3 MGD (average) during non-production periods and 17.9 MGD average during production periods.

On May 1, 1974, the USEPA issued a Draft Permit, with tentative Determination and Fact Sheet. On August 14, 1974, the USEPA issued a National Pollutant Discharge Elimination System (NPDES) permit (Permit No. NJ0000566) substantially the same as the

849900100

Draft Permit for the Plant. The effective date for the NPDES permit was September 30, 1974. The permit established interim effluent limitations and sample collection frequencies and reporting schedules for NPDES compliance and a second set of effluent limitations and monitoring requirements with an effective date of September 30, 1976 (See Tables 4-1 and 4-2). The permit also required the design, construction and operation of a treatment facility to enable the facility to achieve the second set of effluent limitations on or by the effective date contained in the permit.

Circa 1975, PSE&G installed a new line from the No. 3 Gas Holder Tar Conditioner System to the former ash pit to manage the effluent via the Plant Drain System formerly being discharged at outfall 005. By letter dated February 23, 1976, PSE&G notified the USEPA that there would be no further discharge from outfall 005 and requested the USEPA to modify NPDES Permit NJ0000566 to reflect the abandonment of outfall 005. PSE&G installed the Corrugated Plate Interceptor (CPI), an oil/water separator type device in or about November 1975, and rerouted additional sources of potential contaminated waste waters from the Plant to this system. The CPI oil/water separator was designed to separate oil from the waste water sources identified above. The oil was directed to a storage tank. The waste water was directed to the tar separators, treated by the tarry water effluent collection and treatment system and then discharged at outfall 004. The CPI oil/water separator was designed to receive waste waters from the following sources:

- Compressor house floor drains

- Purification building floor drains
- High pressure oil pump house floor drains
- Generator house floor drains
- Water and oil from No. 3 oil tank containment trench

PSE&G advised the USEPA during mid-1976 that it was investigating the acceptability of discharging Plant process waters to the PVSC sanitary sewer system as an alternate method for meeting the secondary effluent limitations set forth in the NPDES permit. After prolonged but unsuccessful discussions with the PVSC, PSE&G filed a Declaratory Judgment action against the PVSC seeking a court order directing the PVSC to accept Plant process waste waters. The court entered an order in October 1978 permitting PVSC to accept PSE&G's application to discharge Plant process waste waters to the PVSC Sewer System.

By letter dated January 31, 1979, PSE&G advised the USEPA that all discharges from the Plant, with the exception of non-contact cooling water, were being directed to the PVSC sewer system. PSE&G also indicated that its NPDES renewal application for the Plant was being revised to reflect this change and that the renewal application would be submitted to USEPA on or by March 30, 1979.

On March 27, 1979, PSE&G submitted its NPDES permit renewal application to USEPA. The permit was for the discharge of non-contact cooling water to the Passaic River

at outfall 004. The permit renewal application identified the sources and quantities of intake water, water usage and discharge quantities of non-contact cooling water for both production and non-production periods. The permit renewal application provided physical and chemical characteristics of influent and effluent and a sketch depicting the flow chart of the effluents from the Plant (see Figure 3-23).

On September 5, 1980, USEPA issued the final NPDES permit for the Plant with an effective date of October 21, 1980. The permit specified the sampling requirements and frequency for the outfall to the Passaic River designated as 001 and internal monitoring point designated as 002 to monitor the storm water run-off component of the discharge.

PSE&G submitted an application on April 26, 1985 to the NJDEP to renew the NJPDES permit for the discharge of non-contact cooling water for the Plant. The NJDEP issued a draft permit for review and comment on October 1, 1985, and the final NJPDES permit for the Plant was issued to PSE&G on December 21, 1985, with an effective date of February 1, 1986.

PSE&G submitted an application to the NJDEP for renewal on August 3, 1990 to renew the NJPDES permit for discharge of non-contact cooling water. This application is currently under review. PSE&G submitted an application to NJDEP in September 1994 to terminate that portion of the NJPDES permit and application that covers non-contact cooling water discharge, since the Plant had ceased discharging any non-contact cooling water by

September 13, 1994. PSE&G's revised permit renewal application is currently under review by the NJDEP's Bureau of Storm Water Permits.

The Plant's DMRs for the period 1974 to date are available for inspection.

4.2 PASSAIC VALLEY SEWERAGE COMMISSION PERMIT

PSE&G submitted a letter request to the PVSC in 1976 for a permit to discharge the Plant's industrial wastewater effluents. A formal PVSC Industrial Sewer Connection Application was submitted in 1977. The PVSC considered said application but failed to take action because of their uncertainty as to their statutory authority to accept industrial waste water effluents from "gas works". PSE&G filed a lawsuit against the PVSC in 1978 seeking a declaratory judgment that applicable law did not prohibit the PVSC from accepting the Plant's waste water effluents. The New Jersey Superior Court Law Division entered an order in October 1978 authorizing the PVSC to accept PSE&G's application for the discharge of the Plant's wastewater effluents to the PVSC system. Later that same month, PVSC issued PSE&G an Industrial Sewer Connection Permit authorizing the Plant to connect its wastewater effluents piping to the PVSC system. PSE&G continued to discharge non-contact cooling water through outfall 004 to the Passaic River. This connection was completed in January 1979. Consistent with PVSC requirements, PSE&G submitted a Waste Effluent Survey to the PVSC in March 1979.

The PVSC issued the Plant a formal Industrial Waste Permit in 1981 that provided final terms and conditions for the discharge of both sanitary and industrial wastewater effluents to the PVSC system. The permit was for a term of five years.

PSE&G submitted an application for renewal of the PVSC permit in 1986. The application contained the analytical results for requisite sampling requirements and completed tables listing Priority Pollutants potentially present in the Plant discharge. The PVSC issued PSE&G a permit for a new five-year term effective July 14, 1986. The 1986 permit contained modified conditions including a change in the frequency for monitoring of BOD and TSS from quarterly to weekly, the measurement of LEL on a continuous basis with a recorder and the requirement that all analyses be performed by an NJDEP certified laboratory.

PSE&G submitted applications for renewal of the PVSC permit in 1991. The application contained the analytical results for requisite sampling requirements and completed tables listing Priority Pollutants potentially present in the Plant's discharge including 2, 3, 7, 8, tetrachlorodibenzo p-dioxin (dioxin). This priority pollutant was not listed as potentially present in the Plant's discharge in prior application submissions. Simply stated, the disclosure was an error. There was no industrial activity being conducted at the Plant at that time that could have or would have resulted in the generation of dioxin and its presence in the Plant's effluent discharge to the PVSC sewer system. This conclusion is confirmed by the information provided by the Plant's 1986 application wherein this priority

pollutant was not disclosed as being potentially present.

PSE&G submitted a request for modification of its existing PVSC Permit in July 1996 to include termination of the process waste water portion of the permit including relief from monitoring and reporting requirements associated with a process waste water discharge. The modification was requested due to elimination of certain operations at the Site. In August 1996, PSE&G was informed that PVSC would not renew PSE&G's permit since the facility no longer meets the criteria to be classified as an industrial user. PSE&G's last monthly monitoring report will cover the period through July 31, 1996.

4.3 DPCC/DCR/SPCC PROGRAMS

Beginning in the mid 1970s, with the promulgation by the USEPA of regulations pursuant to Section 311 of the Clean Water Act, the Plant was required to prepare a Spill Prevention Control and Countermeasures ("SPCC") Plan. Pursuant to these USEPA regulations, the Plant developed and implemented an SPCC Plan. The SPCC Plan set forth specific information with respect to the Plant facilities, equipment and personnel relating to the on-site storage of hazardous substances and the measures taken to prevent, and plans made to respond to, a spill of any such substance at the Site.

Commencing in the mid 1970s, the Plant implemented a program to upgrade spill prevention and containment measures. This program included installation of above ground

tank containments and installation of high level visual and audible alarms for the tanks. In addition, PSE&G installed an oil spill containment boom at and surrounding the discharge flume outfall 004 to permanently contain an oil sheen and any large oil spills which may discharge into the Passaic River by way of the City of Harrison's Frank E. Rodgers Boulevard storm water system trunk line. The containment boom consisted of approximately 250 feet of 14 inch wide boom, capable of rising and falling with the tide, suitably buoyed and anchored and designed to retain oil under all circumstances.

The NJDEP subsequently developed a substantially similar regulatory program to the USEPA's regulatory program, pursuant to its authority under the New Jersey Spill Compensation and Control Act, N.J.S.A. 58:10A-23 et seq. This state regulatory program, which is codified in NJDEP regulations which appear at N.J.A.C. 7:1E-1 et seq., required PSE&G to prepare and to file with the NJDEP a Discharge Prevention, Containment and Countermeasures Plan ("DPCC") and a Discharge Cleanup and Removal Plan ("DCR"). The substance and purpose of the DPCC and DCR Plans required by the NJDEP and the SPCC Plan required by USEPA were essentially similar.

PSE&G consolidated its SPCC plans with its DPCC/DCR plans for its operating facilities including the Plant. This consolidated SPCC/DPCC/DCR Plan was submitted to the NJDEP in the late 1970s to satisfy NJDEP regulatory requirements. Circa 1983, the consolidated document, the Oil and Hazardous Material Spill Manual was accepted by the NJDEP. PSE&G has periodically updated, amended and supplemented its

SPCC/DPCC/DCR Plan for its facilities including the Plant in accordance with applicable regulatory requirements.

On January 29, 1993, PSE&G requested the approval of the NJDEP to a proposed alternative to the preparation of a new DPCC/DCR Plan for the Plant. PSE&G's proposal recommended reliance on the existing DPCC/DCR Plan while PSE&G continued to reduce storage capacity to a level below the capacity which defines a "major facility" under N.J.A.C. 7:1E-1.6. PSE&G indicated that all storage tank fill ports had been blocked, tanks had been emptied where possible and the contents were being classified. It was anticipated that the tank clean-out program implemented by PSE&G would result in less than 200,000 gallons of storage capacity by June 1, 1993, at which time the Plant would no longer be a "major facility". Based on PSE&G's schedule for tank clean-outs, all 25 tanks would be cleaned by the end of 1993. PSE&G provided an inventory of above-ground storage tank capacity and current product volume.

The NJDEP response to PSE&G's January 29, 1993 request, dated March 12, 1993, granted approval for PSE&G to rely upon its 1991 DPCC/DCR Plan subject to the following conditions:

1. All storage tank fill ports were to remain blocked during plan implementation;

2. Above-ground storage tank inventory would be reduced below 200,000 gallons by June 1, 1993; and,

3. A registered cleanup contractor would be retained to assist in the event of an incident until the facility was no longer a "major facility".

Available correspondence by and between PSE&G and relevant regulatory agencies relating to SPCC/DPCC/DCR issues is available for review as are copies of the SPCC/DPCC/DCR Plans for the Site.

4.4 AIR PERMITS

PSE&G has not completed a search and review of available records to identify initiatives and contacts with relevant regulatory agencies concerning compliance with applicable air permitting requirements related to the Plant. Once this search and review is complete, PSE&G will supplement its response as necessary consistent with its on-going obligation to supplement and amend its response to this Section 104(e) Request for Information.

4.5 SPILL DISCHARGE HISTORY

The Plant was an industrial operation that involved the handling and storage of

materials (primarily oil and tar) through the use of a myriad of equipment and associated above and below ground piping. Spills and leaks that may have involved releases to the ground did occur. Housekeeping policy and practice was directed at prevention, early detection and expeditious corrective action. Documentation of these incidents was not generally performed prior to the adoption of applicable environmental regulatory requirements. This section presents a summary of leak and spill incidents for which documentation has been located to date where releases to the ground occurred.

- Circa 1927, a water leak from the water tank associated with Gas Storage Holder No. 2 was detected. The water leak was determined to be discharging to the ground. The gas holder was removed from service for repair. The oil on the surface of the water in the gas holder was skimmed. The water in the tank was removed by routing it via Plant piping to the condenser overflow in the Exhauster/Compressor House where it was directed to the Plant sewer system commingled with non-contact cooling water for discharge to the Passaic River via the discharge flume. River muck in the bottom of the tank was removed, repairs made and the gas holder returned to service.

- A 1932 Harrison Laboratory Report indicates that a spill of drip oil may have occurred at a drip pump located in the vicinity of the oxide boxes. The report indicates that the ground may have been contaminated with coke breeze, ash dust and drippings of grease from the bearings of the drip pump. No other information concerning this event was located.

- In 1961 a contract was awarded to Chem-kote Service Co., Inc. for the cleaning of the deposits in No. 4 oil tank. An unspecified quantity of material was released during the conduct of this work into the steel-lined space between the tank's outside wall and fire wall. The area between the tank and fire wall was cleaned up. The discharge line burst three times during pumping operations to remove the material in the tank. In addition, steam hoses were utilized to soften the material in the tank to make it more pumpable. Water was added continuously in order to maintain suction. Approximately 335,000 gallons of excess clear water which separated in the tank, was drained to a diked area.

- In July, 1969, two representatives from the New Jersey Department of Health (NJDOH) inspected the site relative to a series of ponds located in an area south of Gas Storage Holder No. 3. PSE&G had been collecting an oily/water mixture attributable to historical leaks in a containment trench around No. 3 oil tank. The oil was skimmed from the surface and the water directed to the ponds. NJDOH representatives advised PSE&G that during a previous inspection (of unspecified date), no water was flowing and that stones on the ground in the area were covered with oil. The NJDOH representatives also observed an oil slick on the river's surface during the inspection and expressed the view that the Site was the source of the slick. Available information suggest that the NJDOH issued PSE&G a notice of violation. PSE&G has not located a copy of this notice and is presently unaware of the NJDOH's findings, if any, and/or recommendation for corrective action.

- In April, 1970, a spill of an unspecified quantity of No. 6 fuel oil to the ground surface occurred during the filling of a 4,800 gallon underground storage tank. This spill occurred in the oil unloading area located in the vicinity of No. 82 underground storage tank. The spill was contained and measures implemented to clean up the spill. The material was contained and cleaned up preventing any discharge to the river.

- In January, 1977, a discolored water discharge to the discharge flume to the Passaic River was observed emanating from the tar separator. The operations of the tar separator discharge were temporarily discontinued. United States Coast Guard Service (USCGS), PVSC, and the New Jersey Department of Environmental Protection (NJDEP) were notified. A USCGS Finding of Fact in its Notice of Violation quantified the discharge as two to three gallons of oily water to the Passaic River. The oily water discharge was contained by an absorbent boom at the flume outfall. The discharge was cleaned up to the satisfaction of the USCGS. The source of the leak was determined and corrected.

- In December 1979, a six-inch underground fuel line developed a leak causing a discharge of kerosene to the subsurface soils. The kerosene migrated to a storm drain and flowed through the Plant's Drain System to the discharge flume and discharged to the Passaic River. The fuel line was isolated, eliminating the source. The discharge to the Passaic River was contained by the containment boom at the discharge flume

outfall. The quantity of kerosene discharged was estimated at 50-75 gallons. The discharge was reported, the USCGS responded, corrective actions were implemented and the fuel line was repaired, all with USCGS oversight. The USCGS issued a violation which was resolved. The case remained open through January 1981 due to the periodic observation of kerosene sheens in and within the vicinity of the containment boom. Corrective actions were implemented during this period with USCGS oversight.

- In July 1981, an aboveground transfer line for Tar Tank 21 developed a leak causing a discharge of tar to the ground surface. The volume of tar discharged was estimated at approximately 10 gallons. A portion of the tar flowed into a catch basin and flowed via the Plant Drain System to the discharge flume, discharging to the Passaic River. The discharge was contained inside the containment boom for the discharge flume outfall. The source of the discharge was eliminated and the line repaired. The discharge was reported, the USCGS responded and corrective actions were implemented with USCGS oversight. The USCGS issued a violation which was resolved.

- In October 1983, tar was observed within the containment boom for the outfall flume. The source of the leak was traced to a six-inch transfer line conveying tarry water to the tar separators. Tarry water that leaked from the line flowed into the Plant Drain System to the discharge flume, discharging to the Passaic River. The quantity of tar

discharged was estimated at approximately ten gallons. Necessary repairs were completed. The discharge was reported, the PVSC and USCGS responded, and corrective actions were implemented with USCGS oversight. The USCGS issued a violation which was resolved.

- In June 1984, an oil-based product was observed within the containment boom at the Plant's discharge outfall. The matter was reported. The presence of the material at the outfall was determined to be attributable to a source external to the Plant. No violation was issued.

- In April 1988, a 20 inch underground natural gas pipeline installation project was in progress at the Station. As excavation progressed , ground water entering the excavation was observed to contain a kerosene sheen. The pipeline installation project was temporarily suspended. PSE&G worked with the NJDEP to develop a work plan for the management of environmental issues anticipated to be encountered in connection with completion of the project. The work plan provided for the management of both excavated soils and encountered ground water. When the project resumed, excavated soils were staged on site, classified and subsequently disposed of off site as a RCRA non-hazardous waste. Laboratory reports of analyses were prepared and are available for inspection. Encountered ground water was collected, routed to the Plant's waste water treatment system and, after authorization was received, discharged to the PVSC sewer system.

- In May, and again in August 1994, an oil seep was observed on the banks of the Passaic River adjacent to the Plant. The seep was determined to be emanating from the Plant. The discharge was reported. PSE&G worked with the USCGS and the NJDEP to develop a program for appropriate response actions. The program developed involved implementation of certain interim mitigation measures including the installation of a containment boom along the water front section of the Plant to contain and collect an oily discharge from the Plant. The boom was later extended to encompass the entire river front portion of the Plant. In addition, PSE&G entered into a Memorandum of Agreement with NJDEP pursuant to which a site remedial program would be designed, developed and implemented with the NJDEP oversight. The program developed will involve the identification and mitigation of potential sources of discharges from the Site to the Passaic River. The containment boom remains in place and field work activities associated with the initial phase of the remedial program have been completed. The USCGS issued a violation which was resolved. The USCGS retained jurisdiction for the purpose of monitoring the PSE&G remedial program. Monitoring has primarily consisted of periodic USCGS site visits and USCGS' review of PSE&G quarterly progress reports documenting the progress of PSE&G's remedial program.

In addition, PSE&G's records search to date has disclosed the existence of Hazardous Waste Manifests where the waste description identified is set forth as "oil spill cleanup residues" or similar description for the following dates and volumes:

Manifest Date	Volume	Description	Disposal Location
5/16/90	50,544 lb	Oil Contaminated Wood	Chemical Waste Management P. O. Box 55 Emelle, Alabama 35459 EPA ID# ALD 000 622464
11/29/90	4,800 lb	State Hazardous Waste Solid - X725	Advanced Environmental Technology Corporation
1/14/91	4,000 lb	Spill Clean-up debris	Advanced Environmental Technology Corporation 1 Eden Lane Flanders, NJ 07836 EPA ID#NJD980536593
1/14/91	2,000 lb	Oil Contaminated Solids - Spill Clean-up	Advanced Environmental Technology Corporation
3/5/91	800 lb	Oil Contaminated Solids - Spill Clean-up	Advanced Environmental Technology Corporation
10/29/91	161 lb	Oil Contaminated Solids - Spill Clean-up	Advanced Environmental Technology Corporation
4/9/92	42,160 lb	Oil Spill Clean-up Residue	Laidlaw Environmental Services 3527 Whiskey Bottom Road Laurel, Maryland 20724 EPA ID#MDD980554653
4/9/92	4,398 lb	Oil Spill Clean-up Residue	Laidlaw Environmental Services
10/21/92	150 lb	Oil Spill Clean-up Residue	Laidlaw Environmental Services
2/7/93	1,800 lb	Speedi Dri and Oil	Laidlaw Environmental Services
5/5/93	163 lb	Speedi Dri and Oil	Laidlaw Environmental Services

Plant records have not disclosed any other specific information regarding the incidents cited in the manifests above.

4.6 EXPLOSIONS, FIRES, FLOODS OR OTHER INCIDENTS

Information from available Plant records and other writings relating to the referenced incidents may be summarized as follows:

- In April 1947, a media article reported the occurrence of a fire in the Generator House. Plant records concerning the fire have not been located.

- A Spill Prevention Control and Countermeasure ("SPCC") Study Plan dated 1974 references the occurrence of six floods at the site on the following dates: November 25, 1950; November 7, 1953; September 12, 1960; April 3, 1961; March 6, 1962; and January 23, 1966. The referenced SPCC Study does not contain any information regarding any leaks, spills, discharges or disposal activities associated with these six floods. Plant records concerning these flood events have not been located.

- An internal PSE&G memorandum reports that on November 25, 1950, a "Noreaster", commonly referred to as the "Big Blow", caused flooding and other extraordinary weather conditions at the Site. The memorandum summarizing the event reported that sulfur from the top of the thionizers was blown around the area in great quantities

and that ashes were dug out from the ash pit and sluiceway.

- Plant records indicate that during the late 1970's, PSE&G possessed 136 barrels of arsenic trioxide that were in a PSE&G warehouse in Newark, New Jersey. The Plant had previously used the materials to remove hydrogen sulfide from the gas produced at the Plant. Due to changes in the Plant purification process, the material was no longer required for the Plant purification process. While PSE&G was investigating disposal options, the City of Newark issued PSE&G a notice of violation relating to the storage of the material without a permit. The City initiated a civil action against PSE&G which required PSE&G to, among other things, remove the arsenic trioxide from the property. PSE&G subsequently shipped the material to the Koppers Company. The Civil Action was dismissed.

In July 1992, PSE&G was served with a Notice of Violation alleging that PSE&G violated the Clean Air Act and the National Emissions Standards for Hazardous Air Pollutants for asbestos. In 1995, a Consent Decree was entered in the United States District Court for the District of New Jersey pursuant to which the Notice of Violation was resolved. Copies of relevant pleadings are available for inspection.

4.7 MANUFACTURED GAS PLANT REMEDIATION PROGRAM

The NJDEP informed PSE&G in August 1983, that it was investigating the potential

health and environmental effects of former coal gasification plants that operated throughout New Jersey. NJDEP's contact requested that PSE&G provide certain information to the NJDEP concerning sites that PSE&G may have used for coal gasification.

PSE&G undertook a number of initiatives to respond to this request. First, PSE&G conducted a preliminary assessment of then known former coal gasification sites. This assessment presented a general description of gas manufacturing processes; a description of by-products and waste generation; and a description of certain information with respect to the then known former coal gasification sites including a general discussion of property acquisitions, current site ownership and use, and site characteristics. A report of this assessment was prepared and submitted to the NJDEP.

The second initiative involved the establishment of a task force comprised of employees knowledgeable of manufactured gas plant operations. This task force conducted interviews of current and former employees concerning operating and disposal practices at former coal gasification sites. The task force prepared a report summarizing the results of these interviews.

The third and final initiative involved the preparation of a more comprehensive preliminary site assessment of a discrete number of former coal gasification sites including the Plant. It was anticipated that these assessments would be used as background information to develop site investigation plans for each of these sites. This report was also submitted to

the NJDEP together with a proposed site sampling plan for the Plant.

Copies of these reports and the Plant site sampling plan are available for inspection.

4.8 IMPACTS TO MEDIA

This section summarizes information from available environmental surveys of the Plant.

- In 1972, Mueser, Rutledge, Wentworth & Johnston, Consulting Engineers of New York, New York, conducted a subsurface investigation to develop design criteria for the construction of the proposed SNG Plant. The investigation consisted of the drilling of five soil borings to depths of approximately 60 ft below ground surface (bgs) and the excavation of eight test pits to the encountered groundwater table (approximately 5 ft. bgs).

  Fill materials were described as ranging from 9 ft to 11 ft in thickness and containing, among other things, oily cinders. Visual examination of subsurface materials exposed during test pit excavation indicated the presence at certain sampling locations of spent oxide material and hydrocarbon contaminated soils. A report of the investigation was prepared.

849900120

- In June 1987, geophysical investigations were conducted by Weston Geophysical Corporation of Westboro, Massachusetts at the Plant. The purpose of these investigations were to determine the location and extent of buried tar and oxide deposits and to locate and map the continuity of a clay layer thought to occur in the area. Two Plant areas were investigated. One area was located north of Holder No. 2 and one area was located south of the water treatment tanks (see Figure 4-1). These areas were investigated using ground penetrating radar, electromagnetic terrain conductivity and electrical resistivity survey methods of subsurface exploration.

  The findings of these investigations are presented in a report entitled "Geophysical Investigations, Harrison Gas Plant, Harrison, New Jersey, dated October 1987. The results of these investigations are summarized as follows:

  - Tars were reported to be present in the near surface soils in the area northwest of Holder No. 2. The interpreted location and lateral extent of the tar is depicted in Figure 4-2.

  - Oxides were reported to be present in the near surface soils in the area south of the water treatment plant. The interpreted location and lateral extent of the oxides is depicted in Figure 4.3.

- In November 1987, Weston Geophysical Corp. conducted additional geophysical investigations at the Plant. The purpose of these additional investigations was to determine the location and extent of buried tar and oxide thought to be present in the subsurface soils in the vicinity of No. 4 and No. 8 Oil Tanks. (See Figure 4-1). These investigations were conducted using the same exploratory techniques utilized during the June 1987 studies. The findings and conclusions of these additional investigations are presented in a draft report entitled "Geophysical Investigations, Harrison Gas Plant, Harrison, New Jersey", dated January 1988. The findings presented in this report identified two possible areas of subsurface contamination. The interpreted location and lateral extent of these areas of potential contamination are depicted in Figure 4-4.

- In September 1987, a soil gas survey was conducted on a portion of the Site. The purpose of the soil gas survey was to obtain and analyze soil gas samples to locate subsurface areas of tar. The soil gas survey area was located to the north and east of the vaporizer house and Holder No. 2. (See Figure 4-5).

The soil gas survey was conducted by Target Environmental Services of Columbia, Maryland. The findings of this survey are presented in a report entitled, "Soil Gas Survey, Harrison Gas Plant, Harrison, New Jersey", dated October 1987. The results of the soil gas survey indicated the presence of tar product in the subsurface soils to

the north, east and southeast of the former vaporizer house. An isolated occurrence of buried tar product was also detected at an area northeast of the vaporizer house. The locations and lateral extent of these areas are depicted in Figure 4-5.

- PSE&G and the Electric Power Research Institute worked in concert in connection with a research project related to the feasibility of treating tar contaminated soils utilizing the coal tar agglomeration process developed by the Alberta Research Corporation, Devon, Alberta, Canada. As part of this project, PSE&G excavated a quantity of tar contaminated soils at the Plant for processing utilizing the coal tar agglomeration process to ascertain the feasibility of the process. Prior to shipment of the soil to the Alberta Research Corporation, PSE&G took representative samples for laboratory analysis of the tar contaminated soils. The soils were analyzed by the PSE&G Research and Testing Laboratory. The soils were transported to Canada and processed utilizing the coal tar agglomeration process. Reports relating to the laboratory analyses of the soil samples and the processing of the soils were prepared.

- In 1988, PSE&G conducted a bioremediation experiment on tar contaminated soils at the Plant. The experiment involved the excavation of tar contaminated soils and the placement of the soils in a compost pile in a discrete area of the Plant. Soil samples were taken and submitted to the laboratory for chemical analysis to develop baseline data. The composting pile was inoculated with manure and sewer activated sludge. The composting pile was continuously aerated. The experiment was conducted over

an approximate 12 month period. Samples were taken periodically and submitted to the laboratory for chemical analysis. Internal memoranda concerning the progress of the experiment were prepared.

- Various soil samples were collected from the Plant in connection with the demolition of the SNG Plant in 1991. The samples were collected and analyzed by Accredited Laboratories, Inc. A report of the analytical results of the samples were prepared.

- In 1995, PSE&G initiated construction activities at the Plant. These activities consisted of upgrades to the natural gas distribution system. This installation required the excavation of soil along the gas main alignment. The approximate limit of gas main excavation is depicted in Figure 4-6. The excavated soils were temporarily staged on site, samples collected for classification, and disposed of off-site.

Examination of the construction photographs provides indications of the presence of contamination associated with the soil along the gas main alignment. These indications include: multicolored and dull gray oily sheens on the surface of the encountered groundwater; brownish- colored liquid suggestive of non-aqueous phase liquid on the surface of the encountered groundwater; and, construction workers within the gas main alignment trench using respirators for protection from organic vapors.

849900124

Soil excavation activities associated with the installation of the gas mains resulted in the formation of two soil stockpiles: Soil stockpile A in which approximately 2,500 tons of soil were placed and soil stockpile B in which approximately 3,040 tons of soil were placed. Analytical testing of the stockpiled soils provides a general assessment of environmental conditions along the gas main alignment and not an assessment of environmental conditions at a specific on-site location.

Samples from stockpile A were analyzed for TCLP volatile and semi-volatile organics, pesticides, herbicides, and metals. The samples were also analyzed for pH, cyanide and sulfide reactivity, ignitability, percent solids, hexavalent chromium, total petroleum hydrocarbons, PCB's, the PAH fraction of the semivolatile organic compounds and chromium. The results of these analyses indicated the presence of volatile organic compounds (e.g. benzene), semivolatile organic compounds (e.g. PAHs) and total petroleum hydrocarbons in the excavated soils. The results of the waste classification analysis indicated that these petroleum contaminated soils are RCRA non-hazardous.

Samples from stockpile B were analyzed for TCLP volatile organic and semivolatile organics and metals as well as analyses for pH, cyanide and sulfide reactivity, ignitability, percent solids, hexavalent chromium, total petroleum hydrocarbons, PCB's and the PAH fraction of the semivolatile organic compounds. All soil samples were analyzed to determine the TCLP characteristic for benzene. The results of these

analyses indicated the presence of volatile organic compounds (e.g. benzene), semivolatile organic compounds (PAHs) and total petroleum hydrocarbons in the excavated soils. The results of the waste classification analysis indicated that some of the petroleum contaminated soils are RCRA hazardous for benzene.

4.9 DREDGING OPERATIONS

It is anticipated that dredging operations were routinely performed within the Passaic River adjacent to the Plant to ensure adequate depth for barge ingress and egress to and from the dock fuel unloading area and to maintain clearance in the area in front of the inlet of the non-contact cooling water intake structure to the Plant.

Preliminary results of PSE&G's file search may be summarized as follows:

1969	No recorded information is available to estimate quantities. (No notations on disposal.)
May 1975	Approximately 18,000 cubic yards (cy) of material were dredged. (Contract documents indicated dredged materials were to have been disposed of at sea.)
Dec 1979	Approximately 15,000 cy of material were dredged. Approximately 6,300 cy of dredged materials were disposed of at the Municipal Sanitary Landfill

Authority disposal facility in Kearny, New Jersey and approximately 8,700 cy were placed at a PSE&G satellite facility with the approval of the NJDEP and used for fill.

PSE&G correspondence with the NJDEP in 1974 suggests that since the mid 1950s, PSE&G dredged the area in front of the Plant every five years.

4.10 UNDERGROUND STORAGE TANKS

The USEPA promulgated rules and regulations under 40 CFR Part 280 which required that appropriate state agencies be advised of the existence of Underground Storage Tanks (USTs) by May 8, 1986. Subsequently, the NJDEP adopted and amended the federal regulations.

In accordance with the federal and state rules and regulations, PSE&G submitted UST registration documentation to the NJDEP in 1986. The UST Registration Questionnaire submitted in 1986 reported 12 USTs at the Plant with a total facility UST capacity of 41,500 gallons. Table 3-25 presents a listing of relevant information relating to these tanks.

By correspondence dated January 4, 1996, PSE&G presented to the NJDEP a proposal for the phased closure of the twelve USTs at the Plant. PSE&G requested that remedial activities associated with the closure of the USTs be addressed under the July 1994

Memorandum of Agreement for the Site.

4.11 PCB CONDENSATES

Circa 1981, PSE&G received notice that the gas condensate collected at PSE&G gas system interconnections with certain of its natural gas suppliers was contaminated with polychlorinated biphenyls ("PCBs"). PSE&G initiated a program to sample the gas condensate collected at these locations and analyzed same for PCBs. This sampling program was conducted with EPA oversight. The analytical data confirmed that the gas condensate at certain of these system interconnections was contaminated with PCBs.

Accordingly, PSE&G initiated a gas condensate management program for these system interconnections. This program included the collection of all gas condensate at these interconnections for transportation and consolidation at designated regional locations, including the Plant. The gas condensates were then analyzed and classified and thereafter managed in accordance with classification data.

Circa 1987, the USEPA inspected and evaluated PSE&G's then existing gas condensate management program. The USEPA cited PSE&G for certain violations which were resolved by a Consent Agreement and Consent Order with the USEPA. PSE&G chose to implement certain alternative procedures, including the cessation of gas condensate storage at M&R stations, in an attempt to simplify compliance with the applicable regulatory

requirements. These alternative procedures resulted in the consolidation of PSE&G's gas condensate management program at the Plant.

Circa 1990, the NJDEP adopted regulations imposing supplemental requirements related to the on-site storage of PCB contaminated materials. Pursuant to the NJDEP regulations, PSE&G filed with the NJDEP a Notice of Intent relative to the on-going storage of PCB hazardous waste at the Plant.

Available records and correspondence concerning PCB contaminated gas condensate storage at the Plant are available for inspection.

4.12 HAZARDOUS WASTE MANAGEMENT

The Resource Conservation and Recovery Act ("RCRA") provides the basic framework for regulation of hazardous waste. It introduced a nationwide program for management of hazardous wastes by controlling the generation, transportation, treatment, storage and/or disposal of hazardous waste through a comprehensive system of hazardous waste management requirements. RCRA directed USEPA to develop, inter alia, standards for tracking and disposing of wastes.

USEPA adopted certain implementing regulations in 1980. The regulations create an elaborate system for tracking hazardous waste from the time it is generated until ultimate

disposal. RCRA divides the universe of entities that shepherd hazardous waste through its life cycle into categories. Generators are one such category and include "[a]ny person, by site, whose act or process produces hazardous waste." Generators bear responsibility for determining whether their solid waste is hazardous. Upon making such a determination, they must obtain a hazardous waste identification number from USEPA, carefully package and label wastes and ship them to an authorized TSD facility. Finally, a generator must prepare a manifest which tracks the waste from the generator's site to its ultimate disposal site and biennially submit reports on waste generating activities.

RCRA provides that States may establish their own hazardous waste programs so long as they meet or exceed minimum USEPA requirements. Over period from 1978 - 1981, New Jersey adopted regulations implementing a hazardous waste program consistent with federal requirements. (See N.J.A.C. 7:26-1 et seq.). The regulations were promulgated pursuant to the New Jersey Solid Waste Management Act (N.J.S.A. 13:1E-1 et seq.) and imposed requirements on generators associated with inter alia, the management for off-site disposal of hazardous wastes. These regulations require, inter alia, that generators have an USEPA generator I.D. No., complete an NJDEP-approved hazardous waste manifest form in connection with the off-site disposal of hazardous wastes and file with the NJDEP an annual report of such shipments. Applicable regulations also require the retention of manifests and annual reports for a period of three years.

Circa 1981, the Station obtained a USEPA I.D. No. NJD000768028. Commencing for the year 1981, the Plant submitted Hazardous Waste Generator Annual Reports to the NJDEP. With the exception of the report for 1982, all reports for the period 1981 through 1995 are available for inspection.

5.0 REFERENCES

Barker, J.F., R.W. Gillham, L. Lemon, C.I. Mayfield, M. Poulsen, and E.A. Sudicky. 1991. Chemical fate and impact of oxygenates in ground water: solubility of BTEX from gasoline-oxygenate compounds. Publication No. 4531, Health and Environmental Sciences Dept., American Petroleum Institute, Washington, DC.

Boehm, P.D., J. Brown, and A.G. Requejo. 1989. The fate and partitioning of hydrocarbon additives to drilling muds as determined in laboratory studies. Pages 545-576 In: F.R./ Engelhardt, J.P. Ray and A. H. Gillam, Eds., Drilling Wastes. Elsevier Applied Science Publishers, London.

Bingham, E., R.P. Trosset, and D. Warshawsky. 1979. Carcinogenic potential of petroleum hydrocarbons. A critical review of the literature. J. Environ. Pathol. Toxicol. 3:483-563.

Chu, T.-Y.J., R.J. Ruane, and G.K. Steiner. 1976. Characteristics of wastewater discharges from coal-fired power plants. Pages 690-712 In:Proceedings of the 31st Industrial Waste Conference, Ann Arbor Science Publishers, Ann Arbor, MI.

Cox, D.B., T.-Y.J. Chu, and R.J. Ruane. 1977. Quality and treatment of coal pile runoff. pp. 252-277. In Proceedings of the Third Symposium on Coal Preparation NCA/BCR Coal Conference and Expo IV. National Coal Association and Bituminous Coal Research, Inc. Washington, D.C.

Dailey, N.S. 1977. Process effluents: quantities and control technologies. Pages 4-1 - 4-157 In: H.M. Braunstein, E.D. Copenhaver, aand H.A. Pfuderer, Eds., Environmental, Health, and Control Aspects of Coal Conversion: An Information Overview. Energy Research and Development Administration, Oak Ridge National Laboratory, Oak Ridge, TN.

Davani, B., W. Sanders and G. Jungclaus. 1989. Residual fuel oil as potential source of ground water contamination. Pages I-259-I-273 In: Proceedings U.S. EPA Symposium on Waste Testing and Quality Assurance, July 24-27, 1989, Washington, DC. American Chemical Society, Washington, DC.

Davis, E.C. and R.R. Kimmitt. 1982. Coal pile leachate treatment. Environmental Sciences Division, Oak Ridge National Laboratory, Oak Ridge, Tennessee. Publ. No. 1925. 25p.

Di Reinzo, J.B. 1972. Specifications for Fuel Oil, Grade No. 6. Memorandum to plant superintendents at PSE&G, Newark, NJ.

Dzidic, I., M.D. Balicki, I.A.L. Rhodes, and H.V. Hart. 1988. Identification and quantification of nitrogen and sulfur compounds in catalytically cracked heavy gas oil by isobutane/CI GC/MS and GC using selective detectors. J. Chromatogr. Sci. 26:236-240.

Ediston Electric Instutute. 1984. Handbook of Manufactured Gas Plant Sites. Edison Electric Institute, Washington, DC.

Eiceman, G.A., B. Davani, M.E. Wilcox, J.L. Gardea, and J.A. Dodson. 1985. High molecular weight hydrocarbons including polycyclic aromatic hydrocarbons in natural gas from consumer distribution pipelines and in pipeline residue. Environ. Sci. Technol. 19:603-608.

Ensminger, J.T. 1977. Coal: origin, classification, and physical and chemical properties. Pages 2-1 - 2-104 In: H.M. Braunstein, E.D. Copenhaver, aand H.A. Pfuderer, Eds., Environmental, Health, and Control Aspects of Coal Conversion: An Information Overview. Energy Research and Development Administration, Oak Ridge National Laboratory, Oak Ridge, TN.

EPRI (Electric Power Research Institute). 1993. Chemical and Physical Characteristics of Tar Samples from Selected Manufactured Gas Plant (MGP) Sites. EPRI TR-102184. Electric Power Research Institute, Palo Alto, CA.

EPRI (Electric Power Research Institute). 1996. Data obtained from the EPRI PISCES database of coal trace substances analyses. Electric Power Research Institute, Palo Alto, CA.

Gangwal, S.K. and D.G. Nichols. 1980. Chemical characterization of tars from fixed bed gasification of eastern and western coals. Pages 16-33In: Coal Conversion and the Environment. Chemical, Biological, and Ecological Considerations. DOE Symposium Series 54, Dept. of Energy, Richland, WA.

Gehrs, C.W., D.S. Shriner, S.E. Herbes, E.J. Salmon, and H. Perry. 1981. Environmental, health and safety implications of increased coal utilization. Pages 2159- 2223 In: M.A. Elliott, Ed., Chemistry of Coal Utilization. Second Supplemental Volume. John Wiley & Sons, New York.

Goodman, D.R. and R.D. Harbison, 1980. Toxicity of the major constituents and additives of gasoline, kerosene and No. 2 fuel oil. Division of Interdisciplinary Toxicology, University of Arkansas for Medical Sciences, Little Rock, AR.

GRI (Gas Research Institute). 1987. Management of Manufactured Gas Plant Sites. Volume 1. Wastes and Chemicals of Interest. Gas Research Institute, Chicago, IL.

GRI (Gas Research Institute). 1996. Management of Manufactured Gas Plant Sites. Volume 1. Wastes and Chemicals of Interest. Draft Revised Edition. Gas Research Institute, Chicago, IL.

Grimmer, G., J. Jacob and K.-W. Naujack. 1981. Profile of polycyclic aromatic hydrocarbons from lubricating oils inventory by GC/MS - PAH in environmental materials, Part 1. Fres. Z.Anal. Chem. 306:347-355.

Guerin, M.R. 1978. Energy sources of polycyclic aromatic hydrocarbons. Pages 3-42 In: H.V.Gelboin and P.O.P.Ts'o, Eds., Polycyclic Hydrocarbons and Cancer. Volume 1. Academic Press, New York.

Harrison, F.L., D.J.Bishop, and B.J.Mallon. 1985. Comparison of organic combustion products in fly ash collectd by a Venturi wet scrubber and an electrostatic precipitator at a coal-fired power station. Environ. Sci. Technol. 19:186-193.

Hill, W.H. 1945. Recovery of ammonia, cyanogen, pyridine and other nitrogenous compounds from industrial gases. Pages 1008-1135 In: H.H. Lowry, Ed., Chemistry of Coal Utilization. Volume 2. John Wiley & Sons, New York.

Howard, J.B. 1981. Fundamentals of coal pyrolysis and hydropyrolysis. Pages 665-684 In: M.A. Elliott, Ed., Chemistry of Coal Utilization. Second Supplemental Volume. John Wiley & Sons, New York.

IARC (International Agency for Research on Cancer). 1989. Occupational Exposures in Petroleum Refining: Crude Oil and Major Petroleum Fuels. World Health Organization, International Agency for Research on Cancer, Lyon, France.

Junk, G.A. and C.S. Ford. 1980. A review of organic emissions from selected combustion processes. Chemosphere 9:187-230.

Laudani, H. 1952. Report of tar dehydration subcommittee. PC-52-23. Malden and Melrose Gas Light Co. Malden, MA.3 pp.

Lee, L.S., P.S.C. Rao, and I. Okuda. 1992. Equilibrium partitioning of polycyclic aromatic hydrocarbons from coal tar into water. Environ. Sci. Technol. 26:2110-2115.

Lindsey, A.S. and P.J. Wagstaffe. 1983. Sulfur-in-oil reference materials for the determination of sulfur in gas oils. Report IP 83-007. Institute of Petroleum, London, England. 11 pp.

Lopezavila, V., J. Milanes, F. Constantine, and W.F. Beckert. 1990. Typical phthalate ester contamination incurred using EPA Method 8060. J. Assoc. Off. Anal. Chem. 73:709-720.

Luthy, R.G., D.A. Dzombak, C.A. Peters, S.B. Roy, A. Ramaswami, D.V. Nakles, and B.R. Nott. 1994. Remediating tar-contaminated soils at manufactured gas plant sites. Environ. Sci. Technol. 28:266A-276A.

Morgan, J.J. 1931. A Textbook of American Gas Practice. Volume 1. Production of Manufactured Gas. Lancaster Press, Lancaster, PA.

Morris, W.R. 1950. The coke oven in war. American Gas Association, Operating Section. 21 pp.

Muder, R.E. 1963. Light oil and other products of coal carbonization. Pages 629-674 In: H.H. Lowry, Ed., Chemistry of Coal Utilization. Suplementary Volume. John Wiley & Sons, New York.

Neavel, R.C. 1981. Origin, petrography, and classification of coal. Pages 91-158 In: M.A. Elliott, Ed., Chemistry of Coal Utilization. Second Supplemental Volume. John Wiley & Sons, New York.

Neff, J.M. 1979.Polycyclic aromatic hydrocarbons in the aquatic environment. Sources, Fates, and Biological Effects. Applied Science Publishers, Barking, Essex, England. 262 pp.

Neff, J.M. 1996. Ecotoxicology of arsenic in the marine environment. A review. Toxicol. Environ. Chem. (In press).

Neff, J.M. and J.W. Anderson. 1981. Response of Marine Animals to Petroleum and Specific Petroleum Hydrocarbons. Applied Science Publishers, Barking Essex, England. 177 pp.

Neff, J.M., D.E. Langseth, E.M. Graham, T.C. Sauer, and S.C. Gnewuch. 1994. Transport and Fate of Non-BTEX Petroleum Chemicals in Soil and Groundwater. API Publication 4593. American Petroleum Institute, Washington, DC.

Nichols, C.R. 1974. Development document for the proposed effluent limitations, guidelines, and new source performance standards for the steam-electric power generating point source category. EPA 440/1-73/-029. U.S. Environmental Protection Agency, Washington, D.C.

Novotny, M., J.W. Strand, S.L. Smith, D. Wiesler, and F.J. Schwende. 1981. Compositional studies of coal tar by capillary gas chromatography/mass spectrometry. Fuel 60:212-220.

Page, D.S., P.D. Boehm, G.S. Douglas, and A.E. Bence. 1995. Identification of hydrocarbons sources in the benthic sediments of Prince William Sound and the Gulf of Alaska following the *Exxon Valdez* oil spill. Pages 41-83 In: P.G. Wells, J.N. Butler, and J.S. Hughes, Eds., Exxon Valdez Oil Spill: Fate and Effects in Alaskan Waters. ASTM STP 1219. American Society for Testing and Materials, Philadelphia, PA.

Pancirov, R.J. and R.A. Brown. 1975. Analytical methods for polynuclear aromatic hydrocarbons in crude oils, heating oils, and marine tissues. Pages 103-113 In: Proceedings of the 1975 Conference on Prevention and Control of Oil Pollution. American Petroleum Institute, Washington, DC.

Pearce, B. and M. Dupart. 1987. Corrosion in gas conditioning plants - An overview. Pp. 232-238. Dow Chemical Co. Freeport, TX.

Philipps, R.H. 1947. Letter dated Feb. 20, 1947 from R.H. Philipps, Asst. Manager Gas Dept., PSE&G, Newark, NJ, to E.L. Hall, Secretary - Coordinator, Gas Production Research Committee, American Gas Association, New York, NY.

Ramaswamy, V. 1987. Polynuclear aromatic hydrocarbons (PAH) in typical gas oil fractions. Separation, identification and estimation by gas chromatography. Erdöl und Kohle - Erdgas - Petrochemie Vereingt mit Brennstoff-Chemie. 40:447-448.

Ruch, R.R., H.J. Gluskoter, and N.F. Shimp. 1974. Occurrence and Distribution of Potentially Volatile Trace Elements in Coal: A Final Report. Environ. Geol. Notes 72. Illinois State Geological Survey, Springfield, IL.

Šebor, G., P. Smidl, and J. Mitera. 1989. Determination of polyaromatic hydrocarbons in high-boiling fractions of bituminous coal tar. Fuel 68:1285-1289.

Taylor, D.R., M.A. Tomkins, S.E. Kirton, T. Mauney, and D.F. S. Natusch. 1982. Analysis of fly ash produced from combustion of refuse-derived fuel and coal mixtures. Environ. Sci. Technol. 16:148-154.

Thibaut, C.G. 1963. Solid products of carbonization. Pages 494-538 In: H.H. Lowry, Ed., Chemistry of Coal Utilization. Supplementary Volume. John Wiley & Sons, New York.

Tomkins, B.A., R.R. Reagam, M.P. Maskarinec, S.H. Harmon, W.H. Griest, and J.E.Caton.1983. Pages 1173-1187 In: M. Cooke and A.J. Dennis, Eds., Polynuclear Aromatic Hydrocarbons: Formation, Metabolism and Measurement. Battelle Press, Columbus, OH.

Villaume, J.F., P.C. Lowe, and D.F. Unites. 1983. Recovery of coal gasification wastes: an innovative approach. Proceedings of the Third National Symposium on Aquifer Restoration and Ground Water-Monitoring. Columbus, OH.

Whiticar, S., M. Bobra, S. Callaghan, P. Liuzzo, M. Fingas, P. Jokuty, F. Ackerman, and J. Cao. 1992. A Catalogue of Crude Oil and Oil Product Properties (1992 Version). Environment Canada, Ottawa, Canada.

Wilson, P.J. and J.H. Wells. 1950. Coal, Coke, and Coal Chemicals. McGraw-Hill Book Co., New York.

Wise, S.A., B.A. Benner, G.D. Byrd, S.N. Shesler, R.E. Rebbert, and M.M. Schantz. 1988. Determination of polycyclic aromatic hydrocarbons in a coal tar standard reference material. Environ. Sci. Technol. 60:887-894.

Wo, C.S., A.P. D'Silva, V.A. Fassel, and G.J. Oestreich. 1978. Polynuclear aromatic hydrocarbons in coal - identification by their X-ray excited optical luminexcence. Environ. Sci. Technol. 12:173-174.

Zander, M. 1987. On the composition of pitches. Fuel 66:1536-1539.

Zander, M. And G. Collin. 1993. A review of the significance of polycyclic aromatic chemistry for pitch science. Fuel 72:1281-1285.

HARRISON GAS PLANT
LIST OF TABLES

Table 3-1 Carbureted Water Gas Process at the Harrison Gas Plant.

Table 3-2 Elemental composition in percent dry weight of coke delivered to the Paterson Gas Works in 1941 and 1944. From Philipps (1947).

Table 3-3 Concentrations of PAHs in three samples of Indian gas oils. From Ramaswamy (1987).

Table 3-4 Hydrocarbons and heterocyclic compounds listed as hazardous substances under CERCLA or in USEPA's letter of April 30, 1996 to PSE&G that were detected in No. 6 fuel oil samples. Concentrations are in mg/kg.

Table 3-5 Concentrations of several metals in No. 6 fuel oil. Metals concentrations in heavy gas oils should be similar to these. Concentrations are in mg/L. From Whiticar et al. (1992).

Table 3-6 Typical chemical compositions of carbureted water gas (CWG) samples manufactured at the Harrison Gas Plant during all of 1941 and during four months in 1944. Concentrations are in volume percent. From Philipps (1947).

Table 3-7 Comparative concentrations of several PAHs in a samples of coke oven coal tar and carbureted water gas tar. Concentrations are in weight percent. From GRI (1996).

Table 3-8 Hydrocarbons and heterocyclic compounds listed as hazardous substances under CERCLA or in USEPA's letter of April 30, 1996 to PSE&G that were reported by EPRI (1993) in tars found at 3 gas plant sites where the CWG and OG processes were used. Concentrations are in mg/kg.

Table 3-9 Metals, metalloids, and inorganic chemicals listed as hazardous substances under CERCLA or in USEPA's letter of April 30, 1996 to PSE&G that were reported by EPRI (1993) in tars found at 3 power plant sites where the CWG and OG processes were used. Concentrations are in mg/kg.

Table 3-10 Reformed Natural Gas Process at the Harrison Gas Plant.

Table 3-11 Composition in percent by volume of chemicals in a typical natural gas (Morris, 1950) and a sample of TETCO natural gas from the Harrison Gas Plant in April, 1969.

Table 3-12 Chemical composition in volume percent and physical properties of a typical blue gas and a low-BTU reformed natural gas. From Morris (1950).

Table 3-13 Cyclic Catalytic Reformed Gas Process at the Harrison Gas Plant.

HARRISON GAS PLANT
LIST OF TABLES (Continued)

Table 3-14 Hydrocarbons and heterocyclic compounds listed as hazardous substances under CERCLA or in USEPA's letter of April 30, 1996 to PSE&G that were detected in kerosene. Concentrations are in mg/L.

Table 3-15 Composition and properties of commercial propane and butane in the 1940s and 1950s. Compositions are in percent volume. From Morris (1950).

Table 3-16 Chemical composition of three samples of enriched cyclic catalytic reformed gas. Concentrations are in volume percent. From Morris (1950).

Table 3-17 Chemical composition of liquefied petroleum air gas (LPA) and a LPA/natural gas mixture delivered to customers, analyzed by the Harrison Gas Plant Laboratory on May 6, 1969. Concentrations are in volume percent.

Table 3-18 Chemical composition of a typical coke oven gas. Concentrations are in volume percent. From Edison Electric Institute (1984).

Table 3-19 Concentrations of organic and inorganic gases in 12 samples of oil gas manufactured at the Harrison Gas Plant between December 23, 1981 and December 7, 1982. Concentrations are in volume percent.

Table 3-20 Oil Gas Process at the Harrison Gas Plant.

Table 3-21 Synthetic Natural Gas Process at the Harrison Gas Plant.

Table 3-22 Straight-run products of atmospheric distillation of crude oil. From Bingham et al., (1979).

Table 3-23 Raw Material/By-Product Storage Tanks.

Table 3-24 Harrison Gas Plant Storage Facilities.

Table 3-25 Raw Material/By-Product Underground Storage Tanks.

Table 3-26 Metals listed as hazardous substances under CERCLA or in USEPA's letter of April 30, 1996 to PSE&G that were detected in coal pile runoff from Western Pennsylvania Bituminous Coal. Concentrations are in mg/L.

Table 3-27 Quality of coal pile leachates, based on USEPA surveys. Concentrations are in mg/L of leachate water. From Nichols (1974) and Chu et al. (1976).

Table 3-28 Steam Generation Process at the Harrison Gas Plant.

HARRISON GAS PLANT
LIST OF TABLES (Continued)

Table 3-29 Hydrocarbons and heterocyclic compounds listed as hazardous substances under CERCLA or in USEPA's letter of April 30, 1996 to PSE&G that were reported in the PISCES database of EPRI in bituminous coal from the Eastern USGS Province.

Table 3-30 Metals, metalloids, and inorganic chemicals listed as hazardous substances under CERCLA or in USEPA's letter of April 30, 1996 to PSE&G that were reported in Pennsylvania and West Virginia bituminous coals in the PISCES database of EPRI. Concentration ranges and means are in ppm.

Table 3-31 Metals, metalloids, and inorganic chemicals listed as hazardous substances under CERCLA or in USEPA's letter of April 30, 1996 to PSE&G that were reported in the PISCES database of EPRI in No. 6 fuel oils and heavy distillate fuels used as boiler fuels. Concentrations ranges and means are in mg/kg.

Table 3-32 Metals, metalloids, and inorganic chemicals listed as hazardous substances under CERCLA or in USEPA's letter of April 30, 1996 to PSE&G that were reported in bottom ash from coal burning in the PISCES database of EPRI. Concentrations ranges and means are in mg/kg.

Table 3-33 Metals listed as hazardous substances under CERCLA or in USEPA's letter of April 30, 1996 to PSE&G that were detected in bottom ash sluice water from western Pennsylvania bituminous coals. Concentrations are in mg/L.

Table 3-34 Metals, metalloids, and inorganic chemicals listed as hazardous substances under CERCLA or in USEPA's letter of April 30, 1996 to PSE&G that were reported in the PISCES database of EPRI in fly ash. Concentrations ranges and means are in mg/kg.

Table 3-35 Hydrocarbons and heterocyclic compounds listed as hazardous substances under CERCLA or in USEPA's letter of April 30, 1996 to PSE&G that were detected in fly ash. Concentrations are in mg/kg.

Table 3-36 Hydrocarbons and heterocyclic compounds listed as hazardous substances under CERCLA or in USEPA's letter of April 30, 1996 to PSE&G that were detected in gasification quench water as reported by GRI (1996). Concentrations are in mg/L.

Table 3-37 Metals listed as hazardous substances under CERCLA or in USEPA's letter of April 30, 1996 to PSE&G that were detected in ash pond effluent from Western Pennsylvania Coal. Concentrations are in mg/L.

Table 4-1 NPDES Effluent Limitations and Monitoring Requirements.

Table 4-2 NPDES Effluent Limitations and Monitoring Requirements.

HARRISON GAS PLANT
LIST OF FIGURES

Figure 2-1	Location Map
Figure 2-2	Map of Property [Transactions]
Figure 2-3	Plant Layout Circa 1955
Figure 2-4	Current Site Conditions
Figure 3-1	Site Time Line
Figure 3-2	Carburetted Water Gas Process Flow Diagram
Figure 3-3	Reformed Natural Gas Process Flow Diagram
Figure 3-4	Modified Air Jet Gas Process Flow Diagram
Figure 3-5	Cold Enrichment Gas Process Flow Diagram
Figure 3-6	Cyclic Catalytic Reformed Gas Process Flow Diagram
Figure 3-7	Liquefied Petroleum Air Gas Process Flow Diagram
Figure 3-8	Oil Gas Process Flow Diagram
Figure 3-9	Synthetic Natural Gas Process Flow Diagram
Figure 3-10	Sectional View of a Carburetted Water Gas Set
Figure 3-11	Tarry Water Lines
Figure 3-12	Drip Pot Detail
Figure 3-13	Drip Oil Lines
Figure 3-14	Cyclic Catalytic Reformed Gas Set
Figure 3-15	Oil Gas Set

HARRISON GAS PLANT

LIST OF FIGURES (Continued)

Figure 3-16	Synthetic Natural Gas Wastewater Piping System
Figure 3-17	Underground/Above Ground Storage Tank Locations
Figure 3-18	Cross-Section View of Three Lift Water Sealed Holder
Figure 3-19	Cross-Section View of a Waterless Tar Sealed Holder
Figure 3-20	Steam Utilization Flow Diagram
Figure 3-21	Salt Water/Cooling Water Effluent System
Figure 3-22	Stormwater Piping System
Figure 3-23	Plant Effluent and Treatment Facilities Circa 1974-1975
Figure 3-24	Plant Effluent Flow Chart Circa 1979
Figure 3-25	Plant Sanitary Sewer System
Figure 4-1	Areas of Geophysical Investigations
Figure 4-2	Results of Geophysical Investigations Conducted in June 1987
Figure 4-3	Results of Geophysical Investigations Conducted in June 1987
Figure 4-4	Results of Geophysical Investigations Conducted in November 1987
Figure 4-5	Results of Soil Gas Survey
Figure 4-6	Gas Main Excavation/Construction Area

CERTIFICATION OF ANSWERS TO REQUEST FOR INFORMATION

State of New Jersey :
: ss.
County of Essex :

I certify under penalty of law that I have personally examined and am familiar with the information submitted in this document (response to EPA Request for Information) and all documents submitted herewith, and that based on my inquiry of those individuals immediately responsible for obtaining the information, I believe that the submitted information is true, accurate, and complete, and that all documents submitted herewith are complete and authentic unless otherwise indicated. I am aware that there are significant penalties for submitting false information, including the possibility of fine and imprisonment. I am also aware that my company is under a continuing obligation to supplement its response to EPA's Request for Information if any additional information relevant to the matters addressed in EPA's Request for Information or the company's response thereto should become known or available to the company.

Donald G. Baxter
NAME (print or type)

Manager, Site Remediation, Project Development - Gas
TITLE (print or type)

Donald G Baxter
SIGNATURE

Sworn to before me this 13th day
of August, 1996.

Rosann DelTufo-Diforio
Notary Public

Rosann DelTufo-Diforio
NOTARY PUBLIC OF NEW JERSEY
My Commission Expires May 14, 1999

TABLES

Table 3-1. Carbureted Water Gas Process at the Harrison Gas Plant

Material	Use and Description
Raw Material	
Coke	primarily Camden and Koppers coke for gas manufacturing
Gas oil	carburetion oil
Water	water from city
Liquid purification of gas	
Soda ash (sodium carbonate)	hydrogen sulfide removal
Caustic soda (sodium hydroxide)	pH control
Nickel sulfate, ferrous sulfate, manganous sulfate	hydrogen sulfide removal
Finished salts	hydrogen sulfide removal
Arsenic trioxide (As_2O_3)	hydrogen sulfide removal
Flocculant (probably aluminum sulfate)	solids precipitation of excess regeneration solution in purification sedimentation basin of thionizers
Dry purification of gas	
Iron oxide	oxide boxes (hydrogen sulfide removal)
Red mud (mixed Fe oxides)	oxide boxes
Wood shavings	oxide boxes
Lime (CaO), anhydrous ammonia	pH control in oxide boxes
Naphthalene scrubbers	
Light oil	used to scrub naphthalene
Products/By-Products	
Carbureted water gas	product: carbon monoxide and hydrogen (coke and steam reaction) and oil gases (thermocracking of carburetion oil)
Tar	sold for multiple uses or used as fuel in the boilers

Table 3-1 (Continued). Carbureted Water Gas Process at the Harrison Gas Plant

Material	Use and Description
Products/By-Products	
Drip (light) oils	condensates from low points in process or light hydrocarbons of tar, sold or used as fuel combined with the tar
Sulfur paste from liquid purification of gas system	hydrogen sulfide removed by raw materials in absorption towers, sulfur formed in thionizers, most metals (e.g., arsenic) lost with sulfur paste; sold as fungicide
Residuals	
Clinkers	spent coke from CWG generation; disposed of in ash pit
Liquid purification of gas	
Dissolved raw materials (major cations and anions) in excess regenerated water from thionizers	discharged from purification sedimentation basin into non-contact water system
Solids from purification sedimentation basin	routed to the tarry water collection system
Dry purification of gas	
Iron sulfide and elemental sulfur	reaction of iron oxide and sulfide hydrogen in oxide boxes; spent oxides and elemental sulfur disposed of off-site

Table 3-2. Elemental composition in percent dry weight of coke delivered to the Paterson Gas Works in 1941 and 1944. From Philipps (1947).

Element	Percent Dry Weight of Coke
Carbon	91.6
Hydrogen	0.07
Oxygen	trace
Sulfur	0.57
Nitrogen	1.03

Table 3-3. Concentrations of PAHs in three samples of Indian gas oils. From Ramaswamy (1987).

Compound	Concentration (mg/kg)
Acenaphthene	ND - 1,910
Acenaphthylene	ND
Fluorene	140 - 3,680
Phenanthrene	4,700 - 15,130
Pyrene	ND - 3,200

ND = not detected.

Table 3-4. Hydrocarbons and heterocyclic compounds listed as hazardous substances under CERCLA or in USEPA's letter of April 30,1996 to PSE&G that were detected in No. 6 fuel oil samples. Concentrations are in mg/kg.

Monocyclic Aromatic Hydrocarbons	Pancirov and Brown, 1975	Davani et al., 1989	Sauer, 1996 (unpublished)**
Benzene*	NA	NA	NA
Toluene*	NA	NA	NA
Ethylbenzene*	NA	NA	NA
m-Xylene*	NA	NA	NA
p-Xylene*	NA	NA	NA
o-Xylene*	NA	NA	NA
Total Monocyclic Aromatic Hydrocarbons	60,000	NA	NA
Polycyclic Aromatic Hydrocarbons			
Naphthalene*	1,000	NA	585 - 589
Acenaphthene	NA	NA	110 - 112
Fluorene*	2,400	NA	133 - 151
Anthracene*	NA	NA	35 - 54
Phenanthrene	482	450	526 - 607
Pyrene*	23	NA	167 - 331
Fluoranthene	240	NA	30 - 61
Benz(a)anthracene*	90	1,520	104 - 299
Benzo(b)fluoranthene*	NA	NA	30 - 97
Benzo(k)fluoranthene*	NA	NA	4.4 - 15
Benzo(a)pyrene*	44	436 (with Benzo(k)fluor.)	66 - 158
Indeno(1,2,3-cd)pyrene	NA	101	5.5 - 13
Dibenz(a,h)anthracene*	NA	NA	13 - 37
Benzo(g,h,i)perylene	NA	NA	24 -50
Total Polycyclic Aromatic Hydrocarbons	34,009	NA	38,691-43,765

* Chemicals cited in USEPA's letter of April 30, 1996 to PSE&G.
** Concentration ranges
NA = Not analyzed

Table 3-5. Concentrations of several metals in No. 6 fuel oil. Metals concentrations in heavy gas oils should be similar to these. Concentrations are in mg/L. From Whiticar et al. (1992).

Metal	No. 6 Fuel Oil
Nickel	8.6 - 89
Vanadium	25 - 272
Molybdenum	0.27
Zinc	1.2 - 1.6
Lead	<3.0
Chromium	0.44
Copper	0.6 - 1.2
Barium	<0.3

Table 3-6. Typical chemical compositons of carbureted water gas (CWG) samples manufactured at the Harrison Gas Plant during all of 1941 and during four months in 1944. Concentrations are in volume percent. From Philipps (1947).

Chemical	1941 CWG	1944 CWG
Carbon Monoxide	24.2	25.9
Hydrogen	28.8	27.8
Illuminants	8.8	9.4
Ethane	0.0	0.0
Methane	16.6	13.9
Carbon Dioxide	5.1	4.3
Oxygen	0.5	0.8
Nitrogen	16.0	17.9
Heating Value (BTU/ft^3)	530	528

Table 3-7. Comparative concentrations of several PAHs in samples of coke oven coal tar and carbureted water gas tar. Concentrations are in weight percent. From GRI (1996).

Compound	Coke Oven Coal Tar**	Carbureted Water Gas Tar
Naphthalene*	2.8 - 3.5	3.6
Fluoranthene	1.1	3.2
Benz(a)anthracene*	0.42 - 0.46	0.31
Benzo(a)pyrene*	0.18 - 0.29	0.10
Chrysene*	0.37 - 0.41	0.31
Acenaphthylene	0.63 - 0.89	0.74
Anthracene*	0.60 - 0.70	2.3
Phenanthrene	2.0 - 2.1	2.3
Pyrene*	0.77 - 0.80	0.56

* Chemicals cited in USEPA's letter of April 30, 1996 to PSE&G.
** Concentration ranges except for fluoranthene which has a single value

Table 3-8. Hydrocarbons and heterocyclic compounds listed as hazardous substances under CERCLA or in USEPA's letter of April 30,1996 to PSE&G that were reported by EPRI (1993) in tars found at 3 gas plant sites where the CWG and OG processes were used. Concentrations are in mg/kg.

Monocyclic Aromatic Hydrocarbons	Site 1	Site 2	Site 3
Benzene	550	460	14.0
Toluene* (Methylbenzene)	2,120	1,050	9.0
Ethylbenzene*	1,860	450	37.0
m/p-Xylene*	3,370	940	83.0
o-Xylene*	1,750	510	75.0
Total Xylenes	5,120	1,450	158.0
Styrene (Ethenylbenzene)	60	100	63.0
Polynuclear Aromatic Hydrocarbons			
Acenaphthylene	610	260	300
Acenaphthene	11,900	340	1,150
Naphthalene*	70,700	13,300	4,030
Fluorene*	11,600	1,350	1,100
Anthracene*	8,570	390	690
Phenanthrene	32,600	5,210	3,470
Pyrene*	13,200	2,410	2,070
ranthene	13,400	1,500	1,360
Chrysene*	5,100	1,050	750
Benz(a)anthracene*	4,900	750	450
Benzo(b)fluoranthene*	2,150	1,240	270
Benzo(k)fluoranthene*	2,950	1,050	130
Benzo(a)pyrene*	3,900	1,820	390
Indeno(1,2,3-cd)pyrene	2,610	1,400	690
Benzo(ghi)perylene	3,110	1,640	940
Dibenz(a,h)anthracene*	490	U	250
Total Polynuclear aromatic hydrocarbons	187,300	33,690	18,010

* Chemicals cited in USEPA's letter of April 30, 1996 to PSE&G.
U = Undeleted

Table 3-9. Metals, metalloids, and inorganic chemicals listed as hazardous substances under CERCLA or in USEPA's letter of April 30,1996 to PSE&G that were reported by EPRI (1993) in tars found at 3 gas plant sites where the CWG and OG processes were used. Concentrations are in mg/kg.

Compound	Site 1	Site 2	Site 3
Arsenic*	20	6.4	7.8
Beryllium	<1	<1	<1
Cadmium*	<1	<1	1.2
Chromium*	1.1	11	28
Cyanides*	<1	2.6	5.7
Lead*	1.0	50	44
Nickel*	2.1	74	52
Selenium	1.7	1.1	3.2
Vanadium	6.9	230	27

* Chemicals cited in USEPA's letter of April 30, 1996 to PSE&G.

Table 3-10. Reformed Natural Gas Process at the Harrison Gas Plant

Material	Use and Description
Raw Material	
Coke	primarily Camden and Koppers coke for gas manufacturing
Natural gas	replaced gas oil as the carburetion fuel
Liquid purification of gas	
Soda ash (sodium carbonate)	hydrogen sulfide removal
Caustic soda (sodium hydroxide)	pH control
Nickel sulfate, ferrous sulfate, manganous sulfate	hydrogen sulfide removal
Finished salts	hydrogen sulfide removal
Arsenic trioxide (As_2O_3)	hydrogen sulfide removal
Flocculant (probably aluminum sulfate)	solids precipitation of excess regeneration solution in purification sedimentation basin of thionizers
Dry purification of gas	
Iron oxide, red mud, wood shavings	oxide boxes (hydrogen sulfide removal)
Lime (CaO), anhydrous ammonia	pH control in oxide boxes
Naphthalene scrubbers	
Light oil	used to scrub naphthalene
Products/By-Products	
Reformed natural gas	Product: hydrogen, carbon monoxide, and methane
Tar	minor amount, sold for multiple uses
Drip (light) oils	condensates from low points in process or light hydrocarbons of tar, sold or used as fuel combined with the tar

Material	Use and Description
Sulfur paste from liquid purification of gas system	hydrogen sulfide removed by raw materials in absorption towers, sulfur formed in thionizers, most metals (e.g., arsenic) lost with sulfur paste; sold as fungicide
Residuals	
Clinkers	spent coke from RNG generation; disposed of in ash pit
Liquid purification of gas	
Dissolved raw materials (major cations and anions) in excess regenerated water from thionizers	discharged from purification sedimentation basin into non-contact water system
Solids from purification sedimentation basin	routed to the tarry water collection system
Dry purification of gas	
Iron sulfide and elemental sulfur	reaction of iron oxides and hydrogen sulfide in oxide boxes; spent oxides and elemental sulfur disposed of off-site

Table 3-11. Composition in percent by volume of chemicals in a typical natural gas (Morris, 1950) and a sample of TETCO natural gas from the Harrison Gas Plant in April, 1969.

Chemical	Typical Natural Gas	TETCO Natural Gas
Methane	91	95.18
Ethane	3.1	2.73
Propane	1.7	0.41
n-Butane	0.7	0.1
iso-Butane	NA	0.09
n-Pentane	NA	0.09
iso-Pentane	NA	0.09
Carbon Dioxide	0.8	0.8
Oxygen	NA	0.01
Nitrogen	2.7	0.5

NA = not analyzed.

Table 3-12. Chemical composition in volume percent and physical properties of a typical blue gas and a low-BTU reformed natural gas. From Morris (1950).

Chemical	Blue Gas	Low-BTU Reformed Gas
Carbon Dioxide	5.5	4
Carbon Monoxide	37.3	12.2
Hydrogen	47.6	51.6
Methane	1.2	15.2
Nitrogen	8.4	16.9
Oxygen	0	0.1
BTU/ft^3	287	355
Specific Gravity	0.57	0.46

Table 3-13. Cyclic Catalytic Reformed Gas Process at the Harrison Gas Plant

Material	Use and Description
Raw Material	
Liquefied petroleun gas (mostly propane)	feedstock
Kerosene	feedstock
Natural gas	feedstock
Nickel catalyst	low (3-8 percent) Ni catalyst on alumina to crack fuel
Products/By-Products	
CCR Gas	Product: hydrogen, carbon monoxide, and methane
No by-products	
Residuals	
Condensates (water vapor and very small amounts of tar)	routed into tarry water collection system
Spent catalyst	low nickel catalyst from CCR gas generation; disposed of off-site

Table 3-14. Hydrocarbons and heterocyclic compounds listed as hazardous substances under CERCLA or in USEPA's letter of April 30,1996 to PSE&G that were detected in kerosene. Concentrations are in mg/L.

Polynuclear Aromatic Hydrocarbons	Goodman & Harbison, 1980 (Wt/Vol)**	Guerin, 1978 (Wt/Wt)
Acenaphthylene	25, 38	NA
Acenaphthene	40, 51	NA
Naphthalene*	1,286, 2,000	NA
Fluorene*	<2.0, 36	NA
Anthracene*	<2.0, 7.3	0.04
Phenanthrene	1.9, 493	U
Pyrene*	<2.0, 2.0	0.16
Fluoranthene	<4.0, 1.0	0.09
Chrysene*	<2.0, <0.11	U
Benz(a)anthracene*	<0.75, <0.09	<0.01
Benzo(b)fluoranthene*	<0.75, <0.20	NA
Benzo(k)fluoranthene*	<0.50. <0.04	NA
Benzo(a)pyrene*	<0.50, <0.30	<0.01
7,12-Dimethylbenz(a) anthracene	--, 17.0	NA
3-Methylcholanthrene	<0.1, <0.08	NA
Indeno(1,2,3-cd)pyrene	<2.0, <0.30	NA
Benzo(ghi)perylene	<2.0, <0.30	NA
Dibenz(a,h)anthracene*	<0.75, <0.50	NA

* Chemicals cited in USEPA's letter of April 30, 1996 to PSE&G.

**Results of analyses of two samples except for 7,12 dimethylbenz(a)anthracene where there was only one analysis

NA = Not analyzed

U = Undetected

Table 3-15. Composition and properties of commercial propane and butane in the 1940s and 1950s. Compositions are in percent by volume. From Morris (1950).

Compound/Property	Propane	Butane
Ethane	8.8	0
Propane	91.2	22.1
Butane	0	77.9
BTU/ft^3 of Vapor	2,503	3,207
Specific Gravity of Vapor	1.51	2

Table 3-16. Chemical composition of three samples of enriched cyclic catalytic reformed gas. Concentrations are in volume percent. From Morris (1950).

Chemical	Sample 1	Sample 2	Sample 3
Carbon Dioxide	3.3	3.7	4.0
Illuminants	0.0	0.1	0.0
Oxygen	0.4	0.6	0.6
Carbon Monoxide	9.1	7.9	6.1
Hydrogen	38.7	25.7	18.3
Methane	35.0	40.6	42.8
Ethane	0.2	0.4	0.4
Propane	0.7	1.0	1.0
Nitrogen	12.6	20.0	26.8
Heating Value (BTU/ft^3)	530	530	530

Table 3-17. Chemical composition of liquefied petroleum air gas (LPA) and a LPA/natural gas mixture delivered to customers, analyzed by the Harrison Gas Plant Laboratory on May 6, 1969. Concentrations are in volume percent.

Chemical	Liquified Petroleum Air	Liquified Petroleum Air/Natural Gas
Methane	0.01	89.06
Ethane	0.44	2.29
Propane	36.5	2.93
Iso-Butane	0.83	0.13
n-Butane	0.34	0.09
Iso-Pentane	0.01	0.05
n-Pentane	0	0.07
Propylene	0.59	0.05
Carbon Dioxide	0.02	0.64
Oxygen	12.7	0.98
Nitrogen	48.48	3.71
Heating Value (BTU/ft^3)	997	1,030

Table 3-18. Chemical composition of a typical coke oven gas. Concentrations are in volume percent. From Edison Electric Institute (1984).

Chemical	Concentration
Carbon Dioxide	2.0
Illuminants	3.0
Oxygen	0.6
Carbon Monoxide	6.9
Hydrogen	55.0
Methane	27.5
Nitrogen	5.0
BTU/ft^3	544
Specific Gravity (g/cm^4)	0.38

Table 3-19. Concentrations of organic and inorganic gases in 12 samples of oil gas manufactured at the Harrison Gas Plant between December 23, 1981 and December 7, 1982. Concentrations are in volume percent.

Chemical	Mean Concentration	Concentration Range
Methane	37.05	35.52 - 38.22
Ethane	4.68	3.36 - 14.83
Propane	0.22	0.14 - 0.39
iso-Butane	0.02	0 - 0.07
n-Butane	0.07	0.05 - 0.08
Cyclopentane	0.04	0.01 - 0.17
iso-Pentane	0.002	0 - 0.02
n-Pentane	0.004	0 - 0.03
2-Methylpentane	0.01	0 - 0.04
2,2-Dimethylpentane	0.02	0 - 0.05
n-hexane	0.0	0.00
Methylcyclopentane	0.0	0.00
2,4-Dimethylpentane	0.03	0 - 0.06
3-Methylpentane	0.11	0.01 - 0.18
Unknowns (C_8+)	0.06	0.03 - 0.08
Acetylene*	0.0	0.00
Ethylene	23.52	13.27 - 25.58
Propylene	5.10	4.01 - 6.28

Table 3-19 (Continued). Concentrations of organic and inorganic gases in 12 samples of oil gas manufactured at the Harrison Gas Plant between 12/23/81 and 12/7/82. Concentrations are in volume percent (Continued).

Chemical	Mean Concentration	Concentration Range
1,3-Butadiene	1.79	0.77 - 2.35
1-Butene	0.61	0.33 - 0.95
trans-2-Butene	0.20	0.07 - 0.26
cis-2-Butene	0.09	0.06 - 0.14
1-Pentene	0.04	0.01 - 0.08
2-Methyl-1-butene	0.01	0.0 - 0.02
Benzene*	1.40	0.80 - 3.07
Toluene*	0.10	0.0 - 0.47
Carbon Dioxide	0.23	0.0 - 0.70
Carbon Monoxide	0.47	0.40 - 0.58
Oxygen & Argon	0.30	0.16 - 1.03
Hydrogen	20.90	19.03 - 23.99
Nitrogen	2.93	2.31 - 7.45
BTU/ft^3	1178	1075 - 1242

*Chemicals listed on the CERCLA hazardous substances list or identified in EPA's letter of April 30, 1996 to PSE&G.

Table 3-20. Oil Gas Process at the Harrison Gas Plant

Material	Use and Description
Raw Material	
Kerosene	carburetion fuel and in naphthalene scrubber
Dry purification of gas	
Iron oxide, red mud, wood shavings	oxide boxes (sulfide removal)
Lime (CaO), anhydrous ammonia	pH control in oxide boxes
Naphthalene scrubbers	
Kerosene	used to scrub naphthalene
Products/By-Products	
Oil gas	Product: hydrogen, methane, and volatile hydrocarbons
Tar	sold for multiple uses
Drip (light) oil	condensates from low points in process or light hydrocarbons of tar, mixed with tar
Spent oil	naphthalene-enriched carburetion oil
Residuals	
Tar	residue in the separators/sedimentation basin was disposed of off-site
Dry purification of gas	
Iron sulfide	reaction of iron oxide and hydrogen sulfide in oxide boxes, spent oxides disposed of off-site

Table 3-21. Synthetic Natural Gas Process at the Harrison Gas Plant

Material	Use and Description
Raw Material	
Light virgin naphtha	straight cut, high paraffin feedstock
Hydrogen	start up, shutdown and process upsets
NiMox	catalyst (from Katalco) containing low concentrations of nickel and molybdenum (hydrodesulfurization catalyst) to convert organic sulfur to hydrogen sulfide
Zinc oxide with chloride guard	hydrogen sulfide removal
Nickel oxide	reformer catalyst (NiO: 10-14%) on alumina for H_2 production
Ferric oxide and chromium oxide	shift converter catalyst (Fe_2O_3: min 85%; Cr_2O_3: 7.5-10%) for carbon monoxide to carbon dioxide conversion
Nickel catalyst	high Ni catalyst on alumina to crack fuel
Gas purification	
Water	city water
Potassium carbonate (K_2CO_3)	carbon dioxide removal
Diethanolamine	carbon dioxide removal
Vanadium pentoxide (V_2O_5)	corrosion inhibitor
Antifoam agent	Union Carbide UCON50HB-5100 for gas/water treatment
Boiler water	
Sulfuric acid (H_2SO_4), caustic soda (NaOH)	regenerates resin beds that removes cations and anions in water of high pressure boiler
Hydrazine	oxygen scavenger in SNG boiler water
Monosodium phosphate	scale (hardness) and pH control in SNG boiler water

Table 3-21 (Continued). Synthetic Natural Gas Process at the Harrison Gas Plant

Material	Use and Description
Products/By-Products	
SNG Gas	Product: methane (~98%) and gaseous hydrocarbons
No by-products	
Residuals	
High-nickel catalyst	spent catalyst, sold for nickel recovery
Zinc sulfide and spent NiMox, NiO, Fe_2O_3, and Cr_2O_3 catalysts	Not regenerated, disposed of off-site
Salts from cation exchange resin	disposed in tar separators
Gas purification	
$KHCO_3K_2CO_3$	reaction of potassium carbonate and carbon dioxide (Benfield Potassium Carbonate Process); disposed in tar separators
RNH_2	reaction diethanolamine $(RNH_3)_2CO_3$ and carbon dioxide (amine purification process); disposed in tar separators
V_2O_5 in solution	corrosion inhibitor (vanadium pentoxide); disposed in tar separators
Boiler water	
Ammonia in blowdown boiler water	reaction of oxygen and hydrazine (N_2H_4); discharged into tar separators
Reaction products and unreacted raw materials (sodium ion, phosphate ion) in blowdown boiler water	discharged into tar separators

Table 3-22. Straight-run products of atmospheric distillation of crude oil. From Bingham et al., 1979.

Refined Product	Carbon Number Range	Boiling Range	
		°C	°F
Naphtha	4 - 12	<230	<446
Kerosene	9 - 16	150 - 290	302 - 554
Middle Distillate	11 - 20	205 - 345	401 - 653
Gas Oil	11 - 25	205 - 400	401 - 752
Atmospheric Tower Residuum	>20	>350	>662

TABLE 3-23
RAW MATERIAL/BY-PRODUCT STORAGE TANKS

TANK NO.	CAPACITY IN GALLONS	YEAR INSTALLED	CONTENTS (as of 1974)
1[1]	500,000	1902	Carburetion Oil
2[2]	600,000	1906	Carburetion Oil
3[3]	2,004,207	1911	No. 6 Fuel Oil
4[4]	3,000,000	1929	Kerosene
5	14,000	1938	No. 6 Fuel Oil
6	14,000	1938	No. 6 Fuel Oil
7[5]	9,283	1972	Waste Oil (SNG)
8[6]	230,000	Unknown	Tar
8A[7]	1,890,000	1955	Kerosene

[1]Removed circa 1948. Tank equipped with brick firewall.

[2]Removed circa 1948. Tank equipped with brick firewall.

[3]Tank equipped with steel retaining wall.

[4]Tank equipped with steel retaining wall.

[5]Tank equipped with steel retaining wall.

[6]Removed -- removal date unknown.

[7]Tank equipped with steel retaining wall.

849900170

TABLE 3-23
RAW MATERIAL/BY-PRODUCT STORAGE TANKS

TANK NO.	CAPACITY IN GALLONS	YEAR INSTALLED	CONTENTS (as of 1974)
8B[8]	2,200,000	1972	Naphtha
9[9] [10]	300,000	1962	Naphthalene Enriched (Spent) Oil
15	104,734	Unknown	Tar
18	412,757	Unknown	Tar
19	62,539	Unknown	Tar
20	280,000	1913	Water Storage
21	500,000	1926	Tar
22	500,000	1931	Tar
23	500,000	1931	Tar
24	100,000	1931	Tar
25	100,000	1931	Tar
26	95,000	1926	Tar
27	100,000	1931	Tar

[8]Tank equipped with earthen dike.

[9]There is no information available to explain the gap in the sequence of tank numbering from 9 through 15.

[10]Tank equiped with steel retaining wall.

849900171

TABLE 3-23
RAW MATERIAL/BY-PRODUCT STORAGE TANKS

TANK NO.	CAPACITY IN GALLONS	YEAR INSTALLED	CONTENTS (as of 1974)
28	500,000	1931	Tar
29	500,000	1931	Tar
30	20,000	1931	Tar
31	20,000	1931	Tar
32	1,800	1929	Tar
33	1,800	1929	Tar
34	3,100	1929	Tar
35	5,700	Unknown	Tar
36	20,000	1931	Tar
37	20,000	1931	Tar
38	17,000	1931	Tar
39	17,000	1932	Tar
40	2,000	1933	Unknown
41	20,000	1932	Drip Oil
42	32,000	1932	Drip Oil
43	17,000	1932	Tar
44	17,000	1932	Tar

849900172

TABLE 3-23
RAW MATERIAL/BY-PRODUCT STORAGE TANKS

TANK NO.	CAPACITY IN GALLONS	YEAR INSTALLED	CONTENTS (as of 1974)
45	17,000	1932	Light Oil
47	235,000	1927	Tar
48	75,000	1931	Tar
49	75,000	1931	Tar
50	75,000	1931	Tar
51	75,000	1931	Tar
52	Unknown	Unknown	Drip Oil
54[11]	1,500	1933	Light Oil
55[12]	1,500	1933	Light Oil
56	17,000	1935	Tar
57	17,000	1935	Tar
59[13]	100,000	1935	Drip Oil
60	50,000	1938	Tar

[11]Removed prior to 1974. Removal date unknown.

[12]Removed prior to 1974. Removal date unknown.

[13]Tank equipped with earthen dike.

849900173

TABLE 3-23
RAW MATERIAL/BY-PRODUCT STORAGE TANKS

TANK NO.	CAPACITY IN GALLONS	YEAR INSTALLED	CONTENTS (as of 1974)
61	50,000	1938	Tar
62	50,000	1938	Tar Solvent
63	40,000	1941	Tar
64	5,000	Unknown	Storage for blowback from fuel oil line
65	75,000	1944	Tar
66	75,000	1944	Tar
67	75,000	1944	Tar
68[14]	2,350,000	1945	Kerosene
69	3,000	Unknown	Diesel Oil
70	20,000	1950	Kerosene
72	Unknown	Circa 1950	Natural Gas Surge Tank
73	9,000	1951	Calodorant Tank
74	12,000	1951	Fog Oil
75	250	1951	Fog Oil
76	250	1951	Fog Oil

[14]Tank equipped with steel retaining wall.

849900174

TABLE 3-23
RAW MATERIAL/BY-PRODUCT STORAGE TANKS

TANK NO.	CAPACITY IN GALLONS	YEAR INSTALLED	CONTENTS (as of 1974)
77	47,475	1954	Gas Mixing
78	56,250	1954	Natural Gas Surge Tank
81	Drip Oil	Unknown	Drip Oil
Tar Refuse Tank	Unknown	1939	Waste Oil
Sump X	Unknown	Unknown	Drip Oil
D-20	5,000	Circa 1972	Sulfuric Acid
D-21	5,000	Circa 1972	Caustic
26KV/4KV Transformer	2,950	Unknown	Circa 1956 Transil Oil
4KV/480V Transformer	425	Unknown	Transil Oil
4KV/480V Transformer	425	Unknown	Transil Oil
4KV/480V Transformer	205	Unknown	Transil Oil

* * *

GAS HOLDER	CAPACITY (CU. FT.)	INSTALLED	CONTENTS
1	3,200,000	1905	Gas
2	5,000,000	1909	Gas

849900175

TABLE 3-23
RAW MATERIAL/BY-PRODUCT STORAGE TANKS

GAS HOLDER	CAPACITY (CU. FT.)	INSTALLED	CONTENTS
3	15,000,000	1926	Gas
Relief Holder	750,000	1925	Gas

849900176

TABLE 3-24
HARRISON GAS PLANT STORAGE FACILITIES

TANK NO.	CAPACITY IN GALLONS	CONTAINMENT	
		Type	Capacity in Gallons
3	2,004,207	Steel Retaining Wall	2,071,000
4	3,000,000	Steel Retaining Wall	3,076,000
5	14,000	Cement Dike	19,000
6	14,000	Cement Dike	19,000
7	9,283	Steel Retaining Wall	11,400
8A	1,890,000	Steel Retaining Wall	2,440,000
8B	2,200,000	Earthen Dike	3,000,000
9	300,000	Steel Retaining Wall	301,000
21	500,000	Cement Dike	500,000
22	500,000	Cement Dike	500,000
23	500,000	Cement Dike	500,000
24	100,000	Cement Dike	118,000
25	100,000	Cement Dike	118,000
26	95,000	Cement Dike	500,000
27	100,000	Cement Dike	500,000
28	500,000	Cement Dike	610,000
29	500,000	Cement Dike	610,000

8499001177

TABLE 3-24
HARRISON GAS PLANT STORAGE FACILITIES

TANK NO.	CAPACITY IN GALLONS	CONTAINMENT	
		Type	Capacity in Gallons
38	17,000	Crushed Stone	***
39	17,000	Crushed Stone	***
43	17,000	Crushed Stone	***
44	17,000	Crushed Stone	***
45	17,000	Cement Dike	118,000
47	235,000	Cement Dike	75,000
49	75,000	Cement Dike	70,000
51	75,000	Cement Dike	70,000
56	17,000	Cement Dike	42,000
57	17,000	Cement Dike	42,000
59	100,000	Earthen Dike	210,000
62	50,000	Cement Dike	500,000
63	40,000	Concrete Slab	
65	75,000	Cement Dike	118,000
66	75,000	Cement Dike	118,000
67	75,000	Cement Dike	118,000

849900178

TABLE 3-24
HARRISON GAS PLANT STORAGE FACILITIES

TANK NO.	CAPACITY IN GALLONS	CONTAINMENT	
		Type	Capacity in Gallons
68	2,350,000	Steel Retaining Wall	2,800,000
69	3,000	Cement Dike	3,500
70	20,000	Cement Dike	24,000
73	9,000	Crushed Stone	***
74	12,000	Cement Dike	24,000
75	250	Cement Pad Crushed Stone	***
76	250	Cement Pad	***
77	47,475	Cement Pad Crushed Stone	***
81	500	Crushed Stone	***

*** These items are on a cement foundation surrounded by crushed stone.

849900179

TABLE 3-25
RAW MATERIAL/BY-PRODUCT UNDERGROUND STORAGE TANKS

TANK NO.	CAPACITY IN GALLONS	CONTENTS
46	1,000	Light Oil
53[1]	Undetermined	Drip Oil
58	550	No. 6 Fuel Oil
71	20,000	Naphthalene Enriched (Spent) Oil
82	4,800	No. 6 Fuel Oil
---	1,000	Tar
---	250	Waste Oil
---	3,000	Potassium Carbonate
---	2,000	Waste Oil
---	500	LPG Condensate
---	8,600	Thylox
---	2,000	Gasoline

[1]Tank 53 is an in-ground vault.

849900180

Table 3-26. Metals listed as hazardous substances under CERCLA or in USEPA's letter of April 30, 1996 to PSE&G that were detected in coal pile runoff from Western Pennsylvania Bituminous Coal. Concentrations are in mg/L.

Metal	Filtered Samples	Unfiltered Samples
Beryllium	0.0079	0.0098
Cadmium*	0.057	0.053
Chromium*	0.018	0.019
Copper*	0.20	0.21
Lead*	0.06	0.046
Manganese	2.5	2.7
Nickel*	0.40	0.40
Zinc	0.97	0.98

* Chemicals cited in USEPA's letter of April 30, 1996 to PSE&G.

Table 3-27. Quality of coal pile leachates, based on USEPA surveys. Concentrations are in mg/L of leachate water. From Nichols (1974) and Chu et al. (1976).

Parameter	Number of Observations	Range	Arithmetic Mean
pH	11	2.1 - 7.8	---
Iron	9	0.06 - 93,000	10,800
Sulfate	8	525 - 21,920	6,880
Arsenic	2	0.009 - 0.01	0.01
Mercury	2	<0.0002 - 0.027	0.001
Selenium	2	0.003 - 0.003	0.02
Zinc	7	0.006 - 23.0	5.89
Copper	4	1.6 - 3.4	2.1
Chromium	6	0.0 - 15.7	2.74
Total Dissolved Solids	7	247 - 44,050	12,600
Total Suspended Solids	2	550 - 810	680

Table 3-28. Steam Generation Process at the Harrison Gas Plant

Material	Use and Description
Raw Material	
Coal	boiler fuel, WV or PA bituminous coal
Coke	boiler fuel
No. 6 fuel oil	boiler fuel
Tar	boiler fuel
Calgon	water softener for boiler water (sodium hexametaphosphate)
Sodium nitrate	embrittlement preventer in boilers
Sodium chloride	used to regenerate boiler water softeners
Sodium sulfite (Na_2SO_3), Alken 52	oxygen scavenger in boiler water
Alken 479, di- & trisodium phosphate	pH control in boiler water
Alken J-671 and sodium hyposulfite	corrosion inhibitor in boiler and condensate water (volatile amines)
Alken Disperse 332	boiler scale inhibitor (anionic polyelectrolyte)
Products/By-Products	
Bottom ash	from coal and coke burning; disposed of through sluiceway into ash pit; ash pit solids sold or disposed of off-site
Residuals	
Fly ash	from coal and coke burning; unrecovered ash was released to atmosphere
Sodium sulfate (Na_2SO_4) in blowdown boiler water	reaction of oxygen and sodium sulfite; discharged into non-contact cooling water
Reaction products and unreacted raw materials (sodium ion, chloride ion, sulfate ion, nitrate ion, phosphate ion) in blowdown boiler water	discharged into non-contact cooling water system

Table 3-29. Hydrocarbons and heterocyclic compounds listed as hazardous substances under CERCLA or in USEPA's letter of April 30,1996 to PSE&G that were reported in the PISCES database of EPRI in bituminous coal from the Eastern USGS Province.

Polycyclic Aromatic Hydrocarbons	Concentration in mg/kg dry weight**
Acenaphthylene	0.01
Acenaphthene	0.07 - 0.23 (0.15)**
Naphthalene*	1.6 - 2.7 (2.0)
Fluorene*	0.06 - 0.12 (0.09)
Phenanthrene	0.45 - 1 (0.71)
Pyrene*	0.07 - 0.2 (0.13)
Fluoranthene	0.05 - 0.13 (0.1)
Chrysene*	0.15 - 0.23 (0.18)
Benzo(a)pyrene*	0.06 - 0.12 (0.09)
Benzo(ghi)perylene	0.07 - 0.21 (0.16)
Dibenz(a,h)anthracene*	0.02
Other Compounds Detected	
Di(2-ethylhexyl)phthalate	0.58

* Chemicals cited in USEPA's letter of April 30, 1996 to PSE&G.
**Reported as range and mean except Acenaphthylene, Dibenz(a,h)anthracene and di(2-ethylhexylphthalate one value.

Table 3-30. Metals, metalloids, and inorganic chemicals listed as hazardous substances under CERCLA or in USEPA's letter of April 30,1996 to PSE&G that were reported in Pennsylvania and West Virginia bituminous coals in the PISCES database of EPRI. Concentration ranges and means are in ppm.

Element	Pennsylvania Bituminous	West Virginia Bituminous
Antimony and compounds	0.24 - 1.4 (0.76)	0.53 -1.4 (0.91)
Arsenic* and compounds	1 - 58 (17)	1.8 - 32 (14)
Barium*	24 - 270 (126)	28 -270 (124)
Beryllium and compounds	0.07 - 0.9 (0.6)	0.07 - 0.9 (0.7)
Cadmium* and compounds	0.03 - 3.4 (1.0)	0.05 - 0.6 (0.29)
Chlorine (Chloride*)	740 - 910 (843)	66 - 910 (615)
Chromium* and compounds	8.4 - 35 (21)	10 - 35 (20)
Copper* and compounds	31 - 160 (52)	5.2 - 160 (27)
Fluorine (Fluoride)	56 - 107 (72)	53 -128 (96)
Lead* and compounds	1.8 - 17 (6.9)	2.5 - 17 (7.4)
Mercury* and compounds	0.03 - 0.85 (0.23)	0.05 - 0.41 (0.16)
Nickel* and compounds	8 - 42 (17)	8 - 42 (16)
Phosphorus*	4.5 - 37 (19)	NA
Selenium and compounds	1 - 7.8 (3.0)	0.9 - 7.8 (3.5)
Silver and compounds	0.01 - 1.25 (0.44)	0.06 - 0.57 (0.27)
Sulfur*	5,000 - 62,500 (23,540)	8,200 - 19,200 (13,250)
Zinc and compounds	4.6 - 46 (24)	2.3 - 62 (30)

* Chemicals cited in USEPA's letter of April 30, 1996 to PSE&G.
NA = Not Analyzed

Table 3-31. Metals, metalloids, and inorganic chemicals listed as hazardous substances under CERCLA or in USEPA's letter of April 30,1996 to PSE&G that were reported in the PISCES database of EPRI in No. 6 fuel oils and heavy distillate fuels used as boiler fuels. Concentration ranges and means are in mg/kg.

Compound	No.6 Fuel Oil	Distillate Fuel Oil
Antimony	0.03 - 0.52 (0.23)	NA
Arsenic*	0.09 - 2 (0.41)	< 0.25
Barium*	2.5 - 5.9 (3.9)	NA
Beryllium	0.01 - 0.22 (0.04)	< 0.05
Cadmium*	0.21 -130 (58)	< 0.05
Chlorine (Chloride*)	12 - 800 (145)	30 - 50 (39)
Chromium*	0.18 - 5 (0.91)	0.05 - 0.06 (0.05)
Copper*	0.01 -13 (5.6)	0.1 - 0.5 (0.2)
Fluorine (Fluoride)	6 - 12 (7.8)	NA
Lead*	0.01 -20 (2.7)	0.25 - 0.5 (0.34)
Mercury*	0.01 - 0.1 (0.04)	< 0.1
Nickel*	11 - 44 (32)	0.05 - 0.08 (0.06)
Phosphorus*	0.36 - 7.7 (1.8)	NA
Selenium	0.05 - 1.1 (0.28)	< 0.25
Silver	0.05 - 0.09 (0.06)	NA
Sulfur*	2,500 - 57,900 (7,850)	500 - 800 (550)
Vanadium	4 - 69 (12)	NA
Zinc	0.03 - 3.1 (0.92)	0.06 - 0.26 (0.15)

* Chemicals cited in USEPA's letter of April 30, 1996 to PSE&G.

Table 3-32. Metals, metalloids, and inorganic chemicals listed as hazardous substances under CERCLA or in USEPA's letter of April 30, 1996 to PSE&G that were reported in bottom ash from coal burning in the PISCES database of EPRI. Concentration ranges and means are in mg/kg.

Chemical	Pennsylvania Bituminous	West Virginia Bituminous
Antimony and compounds	0.24 - 1.4 (0.76)	0.53 -1.4 (0.91)
Arsenic* and compounds	1 - 58 (17)	1.8 - 32 (14)
Barium*	24 - 270 (126)	28 -270 (124)
Beryllium and compounds	0.07 - 0.9 (0.6)	0.07 - 0.9 (0.7)
Cadmium* and compounds	0.03 - 3.4 (1.0)	0.05 - 0.6 (0.29)
Chlorine (Chloride*)	740 - 910 (843)	66 - 910 (615)
Chromium* and compounds	8.4 - 35 (21)	10 - 35 (20)
Copper* and compounds	31 - 160 (52)	5.2 - 160 (27)
Fluorine (Fluoride)	56 - 107 (72)	53 -128 (96)
Lead* and compounds	1.8 - 17 (6.9)	2.5 - 17 (7.4)
Mercury* and compounds	0.03 - 0.85 (0.23)	0.05 - 0.41 (0.16)
Nickel* and compounds	8 - 42 (17)	8 - 42 (16)
Phosphorus*	4.5 - 37 (19)	NA
Selenium and compounds	1 - 7.8 (3.0)	0.9 - 7.8 (3.5)
Silver and compounds	0.01 - 1.25 (0.44)	0.06 - 0.57 (0.27)
Sulfur*	5,000 - 62,500 (23,540)	8,200 - 19,200 (13,250)
Zinc and compounds	4.6 - 46 (24)	2.3 - 62 (30)

* Chemicals cited in USEPA's letter of April 30, 1996 to PSE&G.
** Single Analysis

Table 3-33. Metals listed as hazardous substances under CERCLA or in USEPA's letter of April 30, 1996 to PSE&G that were detected in bottom ash sluice water from western Pennsylvania bituminous coals. Concentrations are in mg/L.

Chemical	Concentration Range**	Mean
Antimony	<0.1	<0.1
Arsenic*	0.01 - 0.029	0.023
Barium*	0.25 - 0.54	0.40
Beryllium	0.002 - 0.0032	0.0025
Cadmium*	<0.001	<0.001
Chromium*	0.01 - 0.033	0.024
Copper*	<0.020	<0.020
Lead*	0.0048 - 0.0092	0.0073
Manganese	0.04 - 0.16	0.12
Mercury*	<0.0002	<0.0002
Molybdenum	0.066 - 0.077	0.072
Nickel*	0.027 - 0.042	0.035
Selenium	<0.005	<0.005
Silver	<0.01	<0.01
Vanadium	0.036 - 0.09	0.068
Zinc	0.02 - 0.05	0.037

* Chemicals cited in USEPA's letter of April 30, 1996 to PSE&G.
** Concentration ranges; < values are below detection limits (no concentration ranges)

Table 3-34. Metals, metalloids, and inorganic chemicals listed as hazardous substances under CERCLA or in USEPA's letter of April 30,1996 to PSE&G that were reported in the PISCES database of EPRI in fly ash.
Concentration ranges and means are in mg/kg.

Chemical	Pennsylvania Bituminous	West Virginia Bituminous
Antimony and compounds	4 - 240 (28)	1.1 - 11 (6.8)
Arsenic* and compounds	12- 1180 (209)	26 - 308 (134)
Barium*	0.2 -2200 (1204)	618 -2200 (1061)
Beryllium and compounds	0.2 - 7.9 (4.8)	8.7 - 27 (14)
Cadmium* and compounds	0.1 -6.9 (1.47)	0.1 - 3.8 (1.1)
Chlorine (Chloride*)	6.5 - 87 (38)	2.5 - 610 (104)
Chromium* and compounds	130 - 500 (215)	97 - 259 (168)
Copper* and compounds	57 - 327 (146)	85 - 532 (196)
Fluorine (Fluoride)	1.8 - 35 (12)	1.7 - 14 (33)
Lead* and compounds	4.8 - 1154 (146)	8 - 800 (104)
Mercury* and compounds	0.02 - 0.7 (.16)	0 - 88 (.25)
Nickel* and compounds	6.6 - 259 (153)	8.6 - 299 (127)
Phosphorus*	500 - 2630 (2010)	2551**
Selenium and compounds	0.5 - 70 (22)	5.4 - 1193 (72)
Silver and compounds	4.9 - 24 (12.2)	0.3 - 107 (22)
Sulfur*	2,000 - 86,000 (9378)	1,400 - 66,000 (10511)
Zinc and compounds	16 - 357 (199)	16 - 750 (235)

* Chemicals cited in USEPA's letter of April 30, 1996 to PSE&G.
**One value reported.

Table 3-35. Hydrocarbons and heterocyclic compounds listed as hazardous substances under CERCLA or in USEPA's letter of April 30, 1996 to PSE&G that were detected in fly ash. Concentrations are in mg/kg.

Polycyclic Aromatic Hydrocarbons	Harrison et al., 1985	Tomkins et al., 1983
Acenaphthene	16	NA
Naphthalene*	93	NA
Fluorene*	72	NA
Phenanthrene	NA	61
Pyrene*	20	74
Fluoranthene	23	NA
Chrysene*	NA	132
Benz(a)anthracene*	NA	47
Other Compounds Detected		
Cresol	13	NA
Dioctyl Phthalate	45	NA

* Chemicals cited in USEPA's letter of April 30, 1996 to PSE&G.
NA= Not analyzed

Table 3-36. Hydrocarbons and heterocyclic compounds listed as hazardous substances under CERCLA or in USEPA's letter of April 30,1996 to PSE&G that were detected in gasification quench water as reported by GRI (1996). Concentrations are in mg/L.

Monocyclic Aromatic Hydrocarbons	Range	Mean
Benzene*	0.12**	0.12
Toluene*	0.70**	0.70
Ethylbenzene*	0.02 - 14.9	0.26
Polynuclear Aromatic Hydrocarbons		
Acenaphthylene	0.12 - 2.82	1.23
Acenaphthene	0.004 - 2.58	0.55
Fluorene*	0.01 - 9.36	3.16
Anthracene*	0.01 - 2.83	0.56
Phenanthrene	0.03 - 10.3	1.78
Pyrene*	0.02 - 9.5	1.18
Fluoranthene	0.03 - 3.49	2.18
Chrysene*	0.01 - 86.6	9.68
Benz(a)anthracene*	0.01 - 88.0	8.87
Benzo(a)pyrene*	0.01 - 0.05	0.02
Other Compound Detected		
Phenol*	3.22 - 754	161

* Chemicals cited in USEPA's letter of April 30, 1996 to PSE&G
** One value

Table 3-37. Metals listed as hazardous substances under CERCLA or in USEPA's letter of April 30, 1996 to PSE&G that were detected in ash pond effluent from Western Pennsylvania Coal. Concentrations are in mg/L.

Chemical	Filtered Samples	Unfiltered Samples
Barium*	0.91	0.1
Beryllium	<0.0001	<0.0001
Cadium*	<0.0001	0.00015
Chromium*	0.0015	0.0025
Copper*	0.0015	0.0015
Nickel*	0.007	0.008
Zinc	0.007	0.015

* Chemicals cited in USEPA's letter of April 30, 1996 to PSE&G.

TABLE 4-1

NPDES Effluent Limitations and Monitoring Requirements

Discharge Serial Number	Parameter	Discharge Limitation in kg/day (lbs/day) - Net Non-Production Periods: Daily Average	Daily Maximum	Other Limitations: Average	Maximum
Total for all Discharges	Oil & Grease	2.27 (5.0)			
	TOC*				
	TSS*				
All Discharges 004	pH Range				6.0-9.0
	Temperature °C(°F)				17.2 (63)
		Production Periods			
Total for all Discharges	Oil & Grease*				
	TOC*				
	TSS*				
	Phenols	8.87 (19.5)			
All Discharges 004	pH Range				6.0-9.0
	Temperature °C(°F)				22.2 (72)

* Since reliable data for these parameters during production and non-production periods were not available, it was determined that review of the monitoring results would be necessary for finalization.

TABLE 4-2

NPDES Effluent Limitations and Monitoring Requirements

Discharge Serial Number	Parameter	Discharge Limitation in kg/day (lbs/day) - Net: Daily Average	Daily Maximum	Other Limitations: Average	Maximum
		Non-Production Periods			
Total for all Discharges	Oil & Grease	2.27 (5.0)	4.55 (10.0)		
	TOC	9.1 (19.9)	18.2 (40.0)		
	TSS	13.1 (28.9)	26.2 (57.8)		
All Discharges	Oil & Grease				1 mg/L
		Production Periods			
Total for all Discharges	Oil & Grease	9.48 (20.8)	18.2 (40.0)		
	TOC	40.0 (88.2)	75.5 (16.6)		
	TSS	26.6 (58.4)	44.0 (99.0)		
	Phenols	0.44 (0.98)	0.98 (2.16)		
All Discharges	Oil & Grease				6.0-9.0 22.2 (72)

FIGURES

file /usr/re/sm/harrisgas.p3y plotted on 12-AUG-1996 07:38 by lsnxd

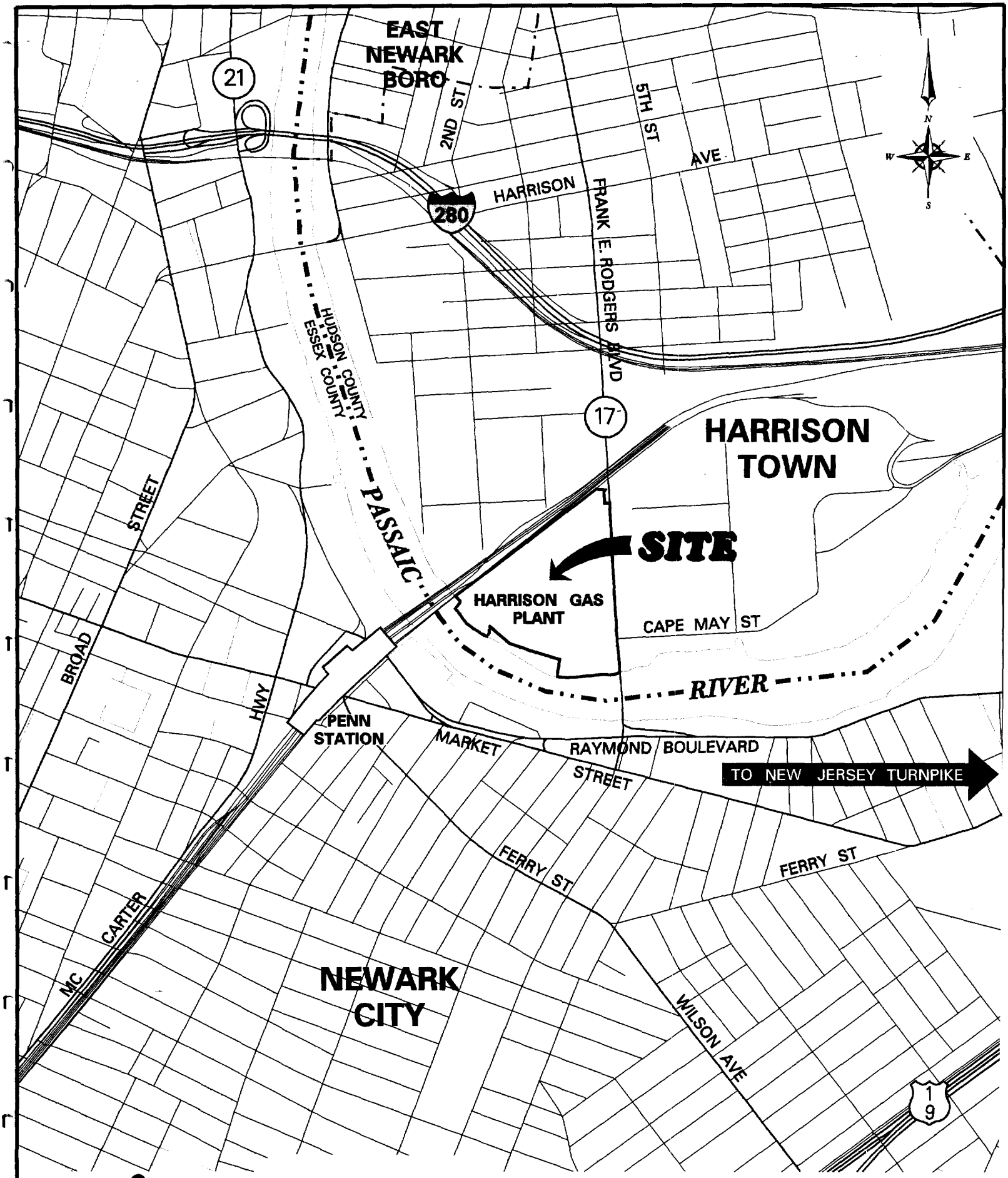

PSE&G

CREATED ON

REIS II COMPUTER MAPPING SYSTEM

HARRISGAS.P3Y

849900196

"HARRISON GAS PLANT"

LOCATION MAP

SITUATED IN THE

TOWN OF HARRISON HUDSON COUNTY, N.J.

NOT-TO-SCALE JUNE 4,1987

FIGURE 2-1

NO.	GRANTOR	GRANTEE	DATE	R.E.F.	REMARKS
1	HENRY L. YOUNG,ETAL	THE NEWARK GAS LIGHT CO.	1-15-1884	D-537	
2	GEORGE L. BLAKE,ETUX	THE NEWARK GAS CO.	3-31-1898	D-505	
3	WILLIAM J. DAVIS	NEWARK CONSOLIDATED GAS CO.	1-30-1900	D-532	
4	WILLIAM J. DAVIS	NEWARK CONSOLIDATED GAS CO.	1-30-1900	D-533	
5	WILLIAM J. DAVIS	NEWARK CONSOLIDATED GAS CO.	1-30-1900	D-878	
6	WILLIAM J. DAVIS	NEWARK CONSOLIDATED GAS CO.	1-30-1900	D-879	
7	WILLIAM J. DAVIS	NEWARK CONSOLIDATED GAS CO.	1-30-1900	D-880	
8	WILLIAM H. PETTES,ETUX	NEWARK CONSOLIDATED GAS CO.	7-8-1901	D-1916	
9	GEORGE A. READ,ETUX	NEWARK CONSOLIDATED GAS CO.	12-20-1902	D-538	
10	THE HOLLAND CO.	P.S.E.&G.CO.	10-21-1924	D-1831	
	(ACT OF LEGISLATURE OF THE STATE OF N.J., GRANTING DAVID RIPLEY TO BUILD & MAINTAIN A DOCK,3-18-1851)				
11	THE U.N.J.R.R.&C.CO.	NEWARK CONSOLIDATED GAS CO.	8-9-1937	D-2722	
12	NEWARK CONSOLIDATED GAS CO.	THE U.N.J.R.R.&C.CO.	9-27-1937	D-2722	
13	THE U.N.J.R.R.&C.CO.	P.S.E.&G.CO.	4-5-1943	D-2843	
14	P.S.E.&G.CO.	PORT AUTHORITY TRANS-HUDSON CORP.	5-24-1971	D-7296	
15	P.S.E.&G.CO.	STATE OF NEW JERSEY DEPT. OF TRANSPORTATION	11-17-1987	S-87-0001	

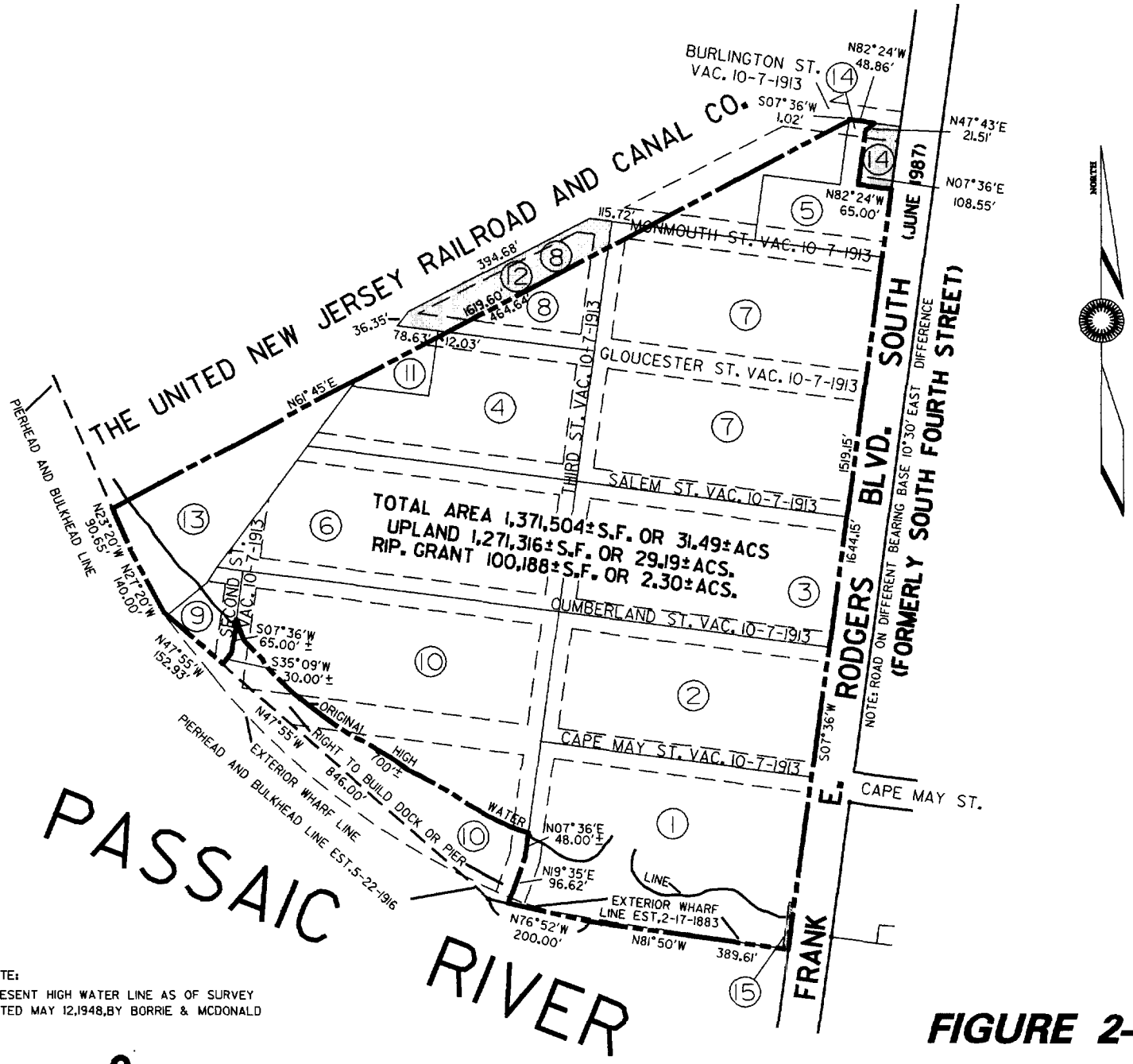

NOTE:
PRESENT HIGH WATER LINE AS OF SURVEY DATED MAY 12,1948,BY BORRIE & MCDONALD

FIGURE 2-2

PSE&G

CREATED ON
REIS II COMPUTER MAPPING SYSTEM

"HARRISON GAS PLANT"
MAP OF PROPERTY
SITUATED IN THE
TOWN OF HARRISON HUDSON COUNTY,N.J.
SCALE:1"- 300' JUNE 4,1987

HARRISGAS.P3Y [30.30]

849900197

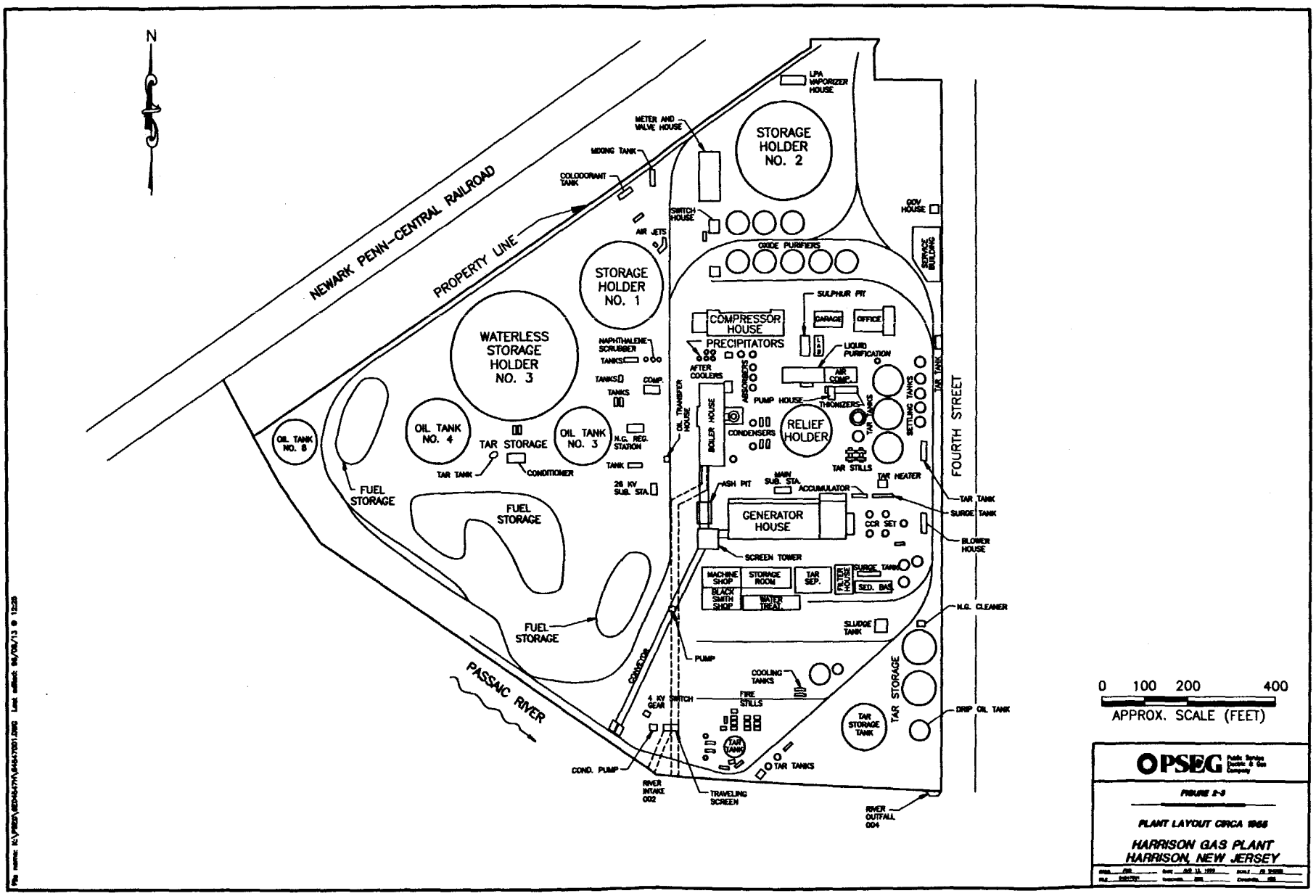
N
NEWARK PENN-CENTRAL RAILROAD
PROPERTY LINE
PASSAIC RIVER
FOURTH STREET
STORAGE HOLDER NO. 2
STORAGE HOLDER NO. 1
WATERLESS STORAGE HOLDER NO. 3
OIL TANK NO. 6
OIL TANK NO. 4
OIL TANK NO. 3
TAR STORAGE
TAR TANK
CONDITIONER
N.G. REG. STATION
26 KV SUB. STA.
FUEL STORAGE
FUEL STORAGE
FUEL STORAGE
METER AND VALVE HOUSE
MIXING TANK
COLODORANT TANK
AIR JETS
SWITCH HOUSE
LPA VAPORIZER HOUSE
GOV HOUSE
SERVICE BUILDING
OXIDE PURIFIERS
SULPHUR PIT
COMPRESSOR HOUSE
GARAGE
OFFICE
PRECIPITATORS
NAPHTHALENE SCRUBBER
TANKS
COMP.
AFTER COOLERS
ABSORBERS
LIQUID PURIFICATION
AIR COMP.
PUMP HOUSE
THIONIZERS
TAR TANKS
SETTLING TANKS
TAR TANK
OIL TRANSFER HOUSE
BOILER HOUSE
CONDENSERS
RELIEF HOLDER
TAR STILLS
TAR HEATER
ASH PIT
MAIN SUB. STA.
ACCUMULATOR
GENERATOR HOUSE
CCR SET
TAR TANK
SURGE TANK
BLOWER HOUSE
SCREEN TOWER
MACHINE SHOP
STORAGE ROOM
TAR SEP.
BLACK SMITH SHOP
WATER TREAT.
SURGE TANK
SED. BAS.
N.G. CLEANER
SLUDGE TANK
PUMP
CONDUCTOR
COOLING TANKS
4 KV SWITCH GEAR
FIRE STILLS
TAR STORAGE TANK
TAR STORAGE
DRIP OIL TANK
TAR TANK
TAR TANKS
COND. PUMP
RIVER INTAKE 002
TRAVELING SCREEN
RIVER OUTFALL 004
0 100 200 400
APPROX. SCALE (FEET)
OPSEG
FIGURE 2-3
PLANT LAYOUT CIRCA 1966
HARRISON GAS PLANT
HARRISON, NEW JERSEY

849900198

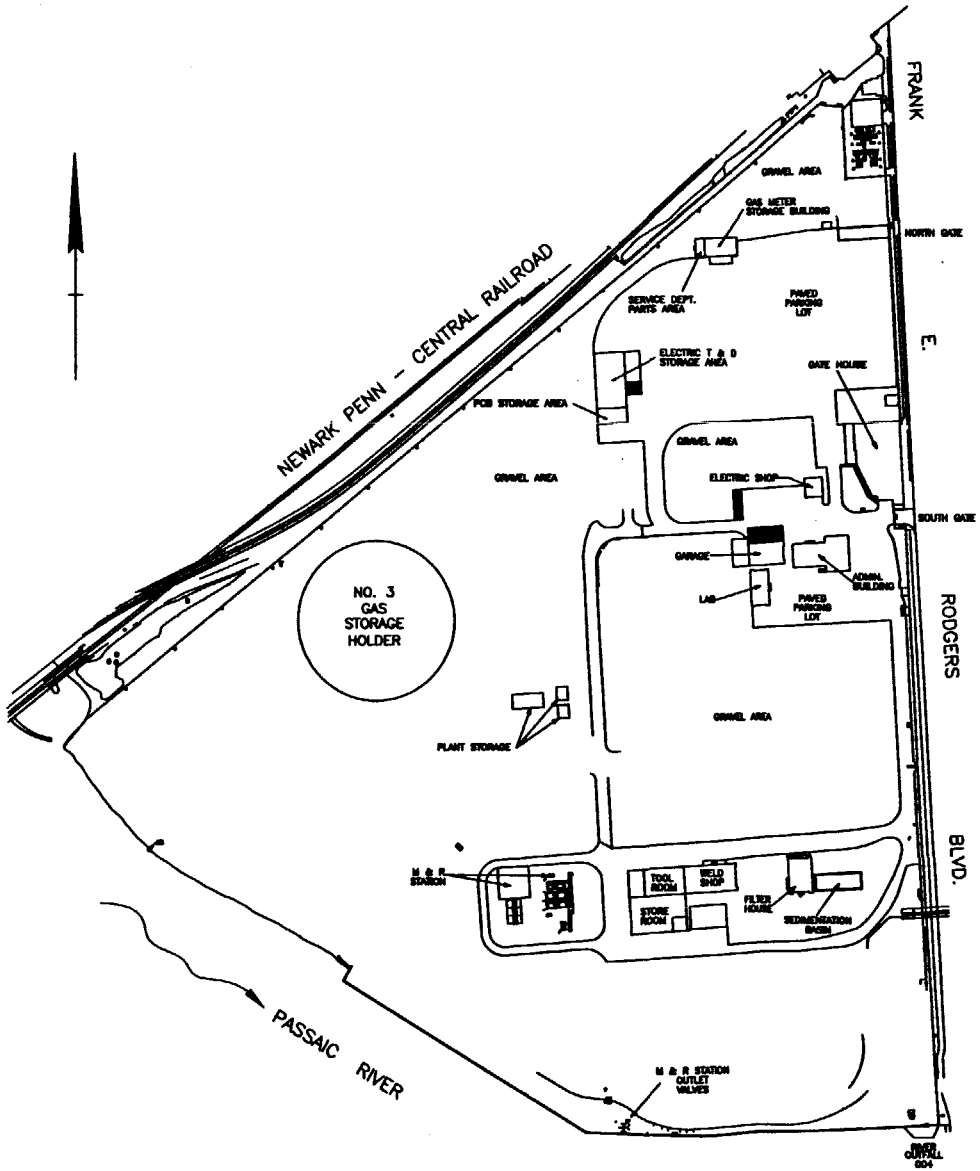

PSEG Public Service Electric & Gas Company

FIGURE 2-4

CURRENT SITE CONDITIONS

HARRISON GAS PLANT
HARRISON, NEW JERSEY

849900199

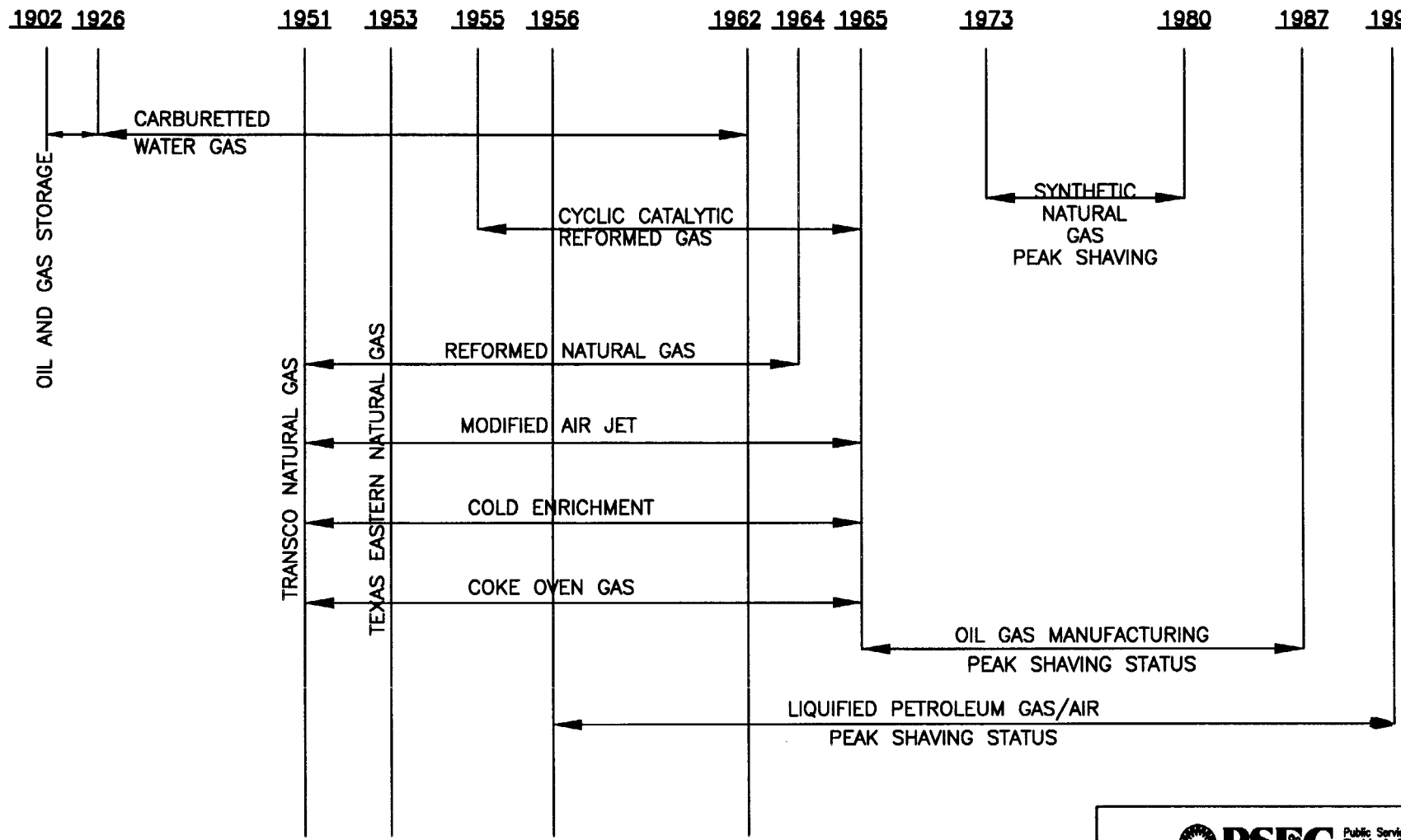

PSEG Public Service Electric & Gas Company

FIGURE 3-1

SITE TIME LINE

HARRISON GAS PLANT
HARRISON, NEW JERSEY

CADD JL DATE AUG 12, 1996 SCALE N.T.S.
FILE 84847010 CHECKED KDS EXAMINED KDS

File name: K:\PSEG\8E04547H\84547010.DWG Last edited: 96/08/13 @ 14:17

849900200

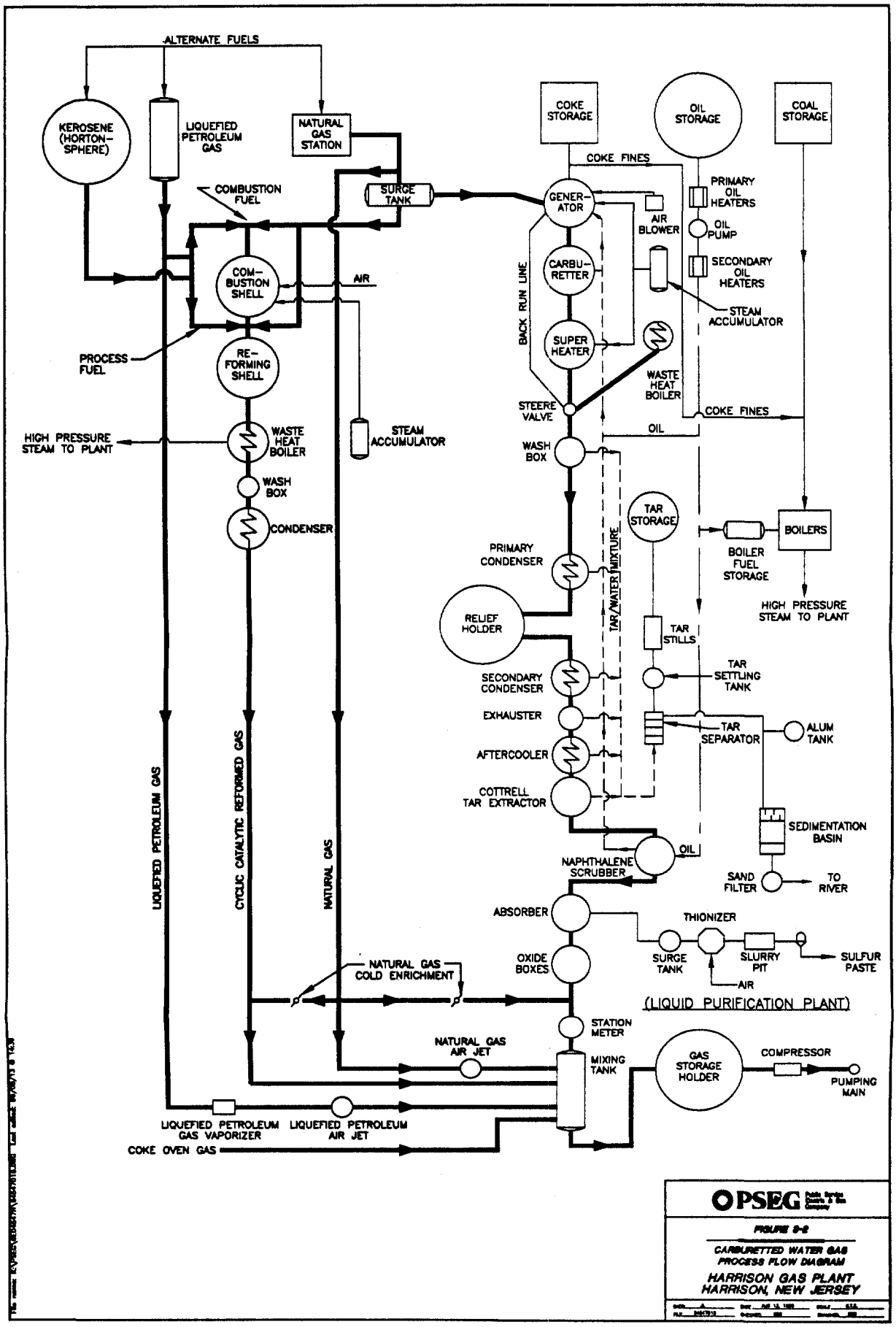
ALTERNATE FUELS
KEROSENE (HORTON-SPHERE)
LIQUEFIED PETROLEUM GAS
NATURAL GAS STATION
COMBUSTION FUEL
SURGE TANK
COM-BUSTION SHELL
AIR
PROCESS FUEL
RE-FORMING SHELL
HIGH PRESSURE STEAM TO PLANT
WASTE HEAT BOILER
WASH BOX
CONDENSER
STEAM ACCUMULATOR
LIQUEFIED PETROLEUM GAS
CYCLIC CATALYTIC REFORMED GAS
NATURAL GAS
COKE STORAGE
OIL STORAGE
COAL STORAGE
COKE FINES
GENER-ATOR
AIR BLOWER
PRIMARY OIL HEATERS
OIL PUMP
SECONDARY OIL HEATERS
STEAM ACCUMULATOR
CARBU-RETTER
BACK RUN LINE
SUPER HEATER
WASTE HEAT BOILER
STEERE VALVE
COKE FINES
OIL
WASH BOX
TAR STORAGE
BOILERS
BOILER FUEL STORAGE
HIGH PRESSURE STEAM TO PLANT
PRIMARY CONDENSER
TAR/WATER MIXTURE
RELIEF HOLDER
TAR STILLS
TAR SETTLING TANK
SECONDARY CONDENSER
EXHAUSTER
TAR SEPARATOR
ALUM TANK
AFTERCOOLER
COTTRELL TAR EXTRACTOR
SEDIMENTATION BASIN
OIL
NAPHTHALENE SCRUBBER
SAND FILTER
TO RIVER
ABSORBER
THIONIZER
OXIDE BOXES
SURGE TANK
SLURRY PIT
SULFUR PASTE
AIR
NATURAL GAS COLD ENRICHMENT
(LIQUID PURIFICATION PLANT)
STATION METER
NATURAL GAS AIR JET
MIXING TANK
GAS STORAGE HOLDER
COMPRESSOR
PUMPING MAIN
LIQUEFIED PETROLEUM GAS VAPORIZER
LIQUEFIED PETROLEUM AIR JET
COKE OVEN GAS
PSEG
FIGURE 3-2
CARBURETTED WATER GAS PROCESS FLOW DIAGRAM
HARRISON GAS PLANT
HARRISON, NEW JERSEY

8499002011

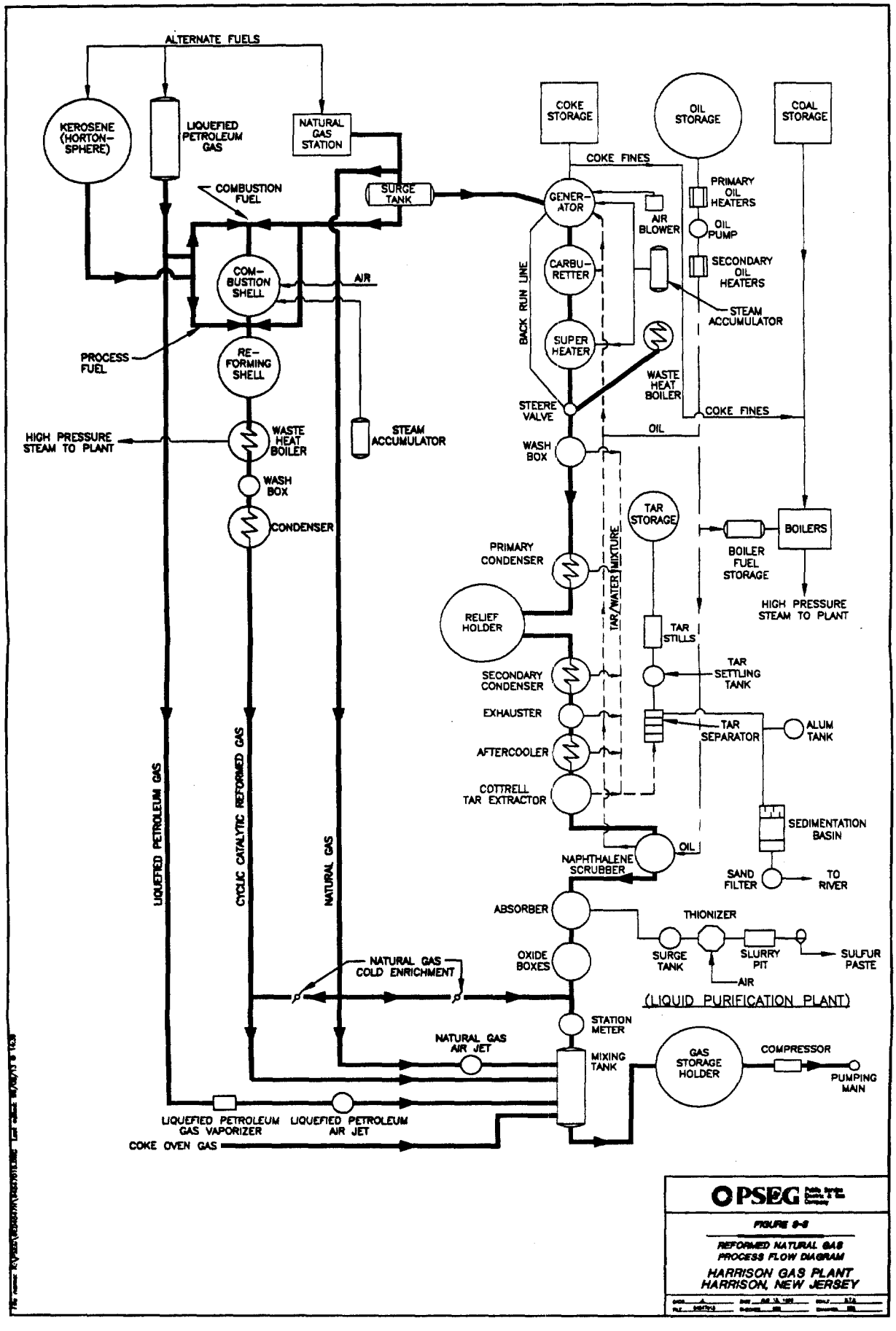

PSEG

FIGURE 8-8

REFORMED NATURAL GAS PROCESS FLOW DIAGRAM

HARRISON GAS PLANT
HARRISON, NEW JERSEY

8499000202

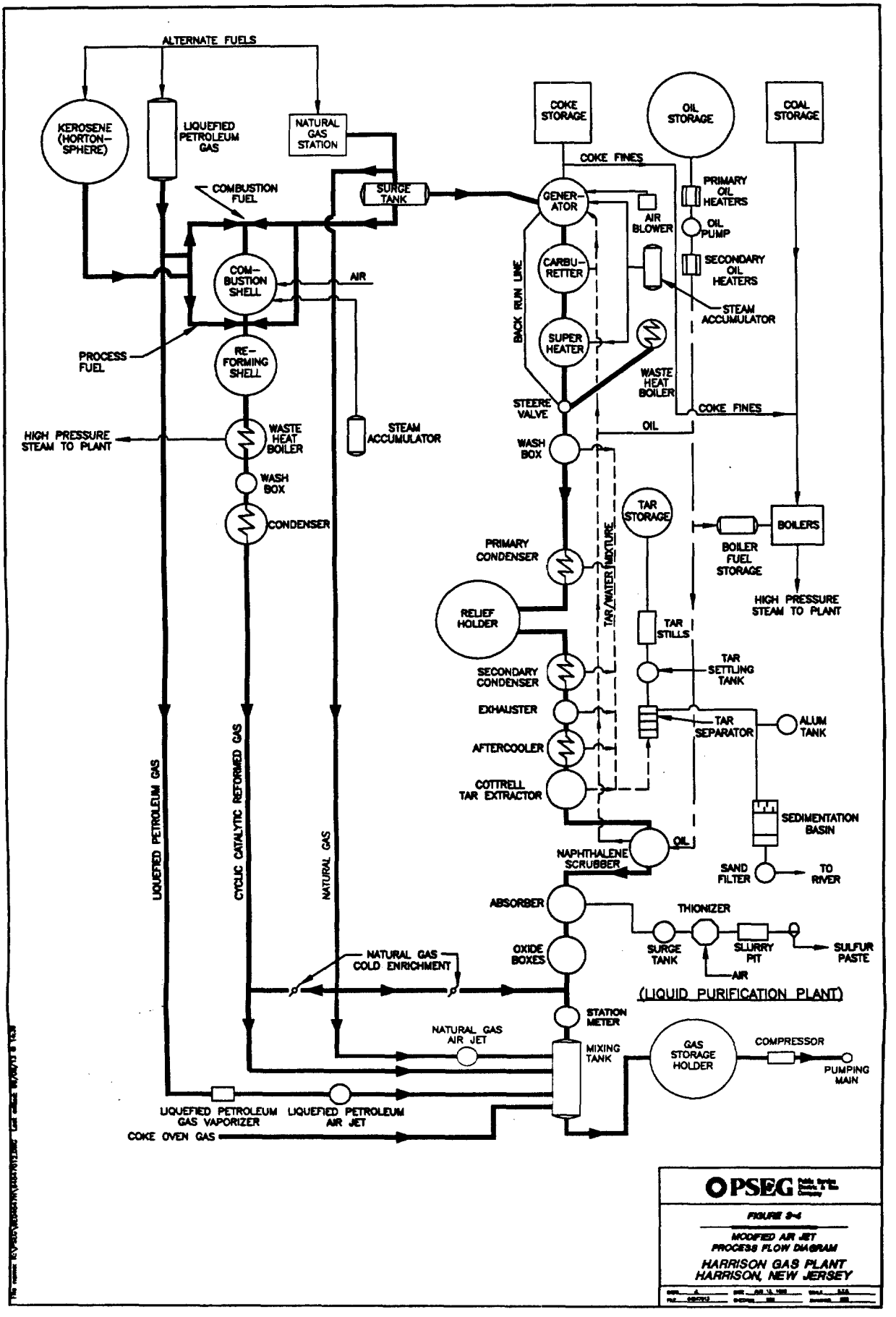
ALTERNATE FUELS
KEROSENE (HORTON-SPHERE)
LIQUEFIED PETROLEUM GAS
NATURAL GAS STATION
COMBUSTION FUEL
SURGE TANK
COM-BUSTION SHELL
AIR
PROCESS FUEL
RE-FORMING SHELL
HIGH PRESSURE STEAM TO PLANT
WASTE HEAT BOILER
WASH BOX
CONDENSER
STEAM ACCUMULATOR
LIQUEFIED PETROLEUM GAS
CYCLIC CATALYTIC REFORMED GAS
NATURAL GAS
COKE STORAGE
OIL STORAGE
COAL STORAGE
COKE FINES
GENER-ATOR
AIR BLOWER
PRIMARY OIL HEATERS
OIL PUMP
SECONDARY OIL HEATERS
STEAM ACCUMULATOR
CARBU-RETTER
BACK RUN LINE
SUPER HEATER
WASTE HEAT BOILER
STEERE VALVE
COKE FINES
OIL
WASH BOX
TAR STORAGE
BOILERS
BOILER FUEL STORAGE
HIGH PRESSURE STEAM TO PLANT
PRIMARY CONDENSER
TAR/WATER MIXTURE
RELIEF HOLDER
TAR STILLS
TAR SETTLING TANK
SECONDARY CONDENSER
EXHAUSTER
TAR SEPARATOR
ALUM TANK
AFTERCOOLER
COTTRELL TAR EXTRACTOR
SEDIMENTATION BASIN
OIL
NAPHTHALENE SCRUBBER
SAND FILTER
TO RIVER
ABSORBER
THIONIZER
OXIDE BOXES
SURGE TANK
SLURRY PIT
SULFUR PASTE
AIR
NATURAL GAS COLD ENRICHMENT
(LIQUID PURIFICATION PLANT)
STATION METER
NATURAL GAS AIR JET
MIXING TANK
GAS STORAGE HOLDER
COMPRESSOR
PUMPING MAIN
LIQUEFIED PETROLEUM GAS VAPORIZER
LIQUEFIED PETROLEUM AIR JET
COKE OVEN GAS
PSEG
FIGURE 3-4
MODIFIED AIR JET PROCESS FLOW DIAGRAM
HARRISON GAS PLANT
HARRISON, NEW JERSEY

849900203

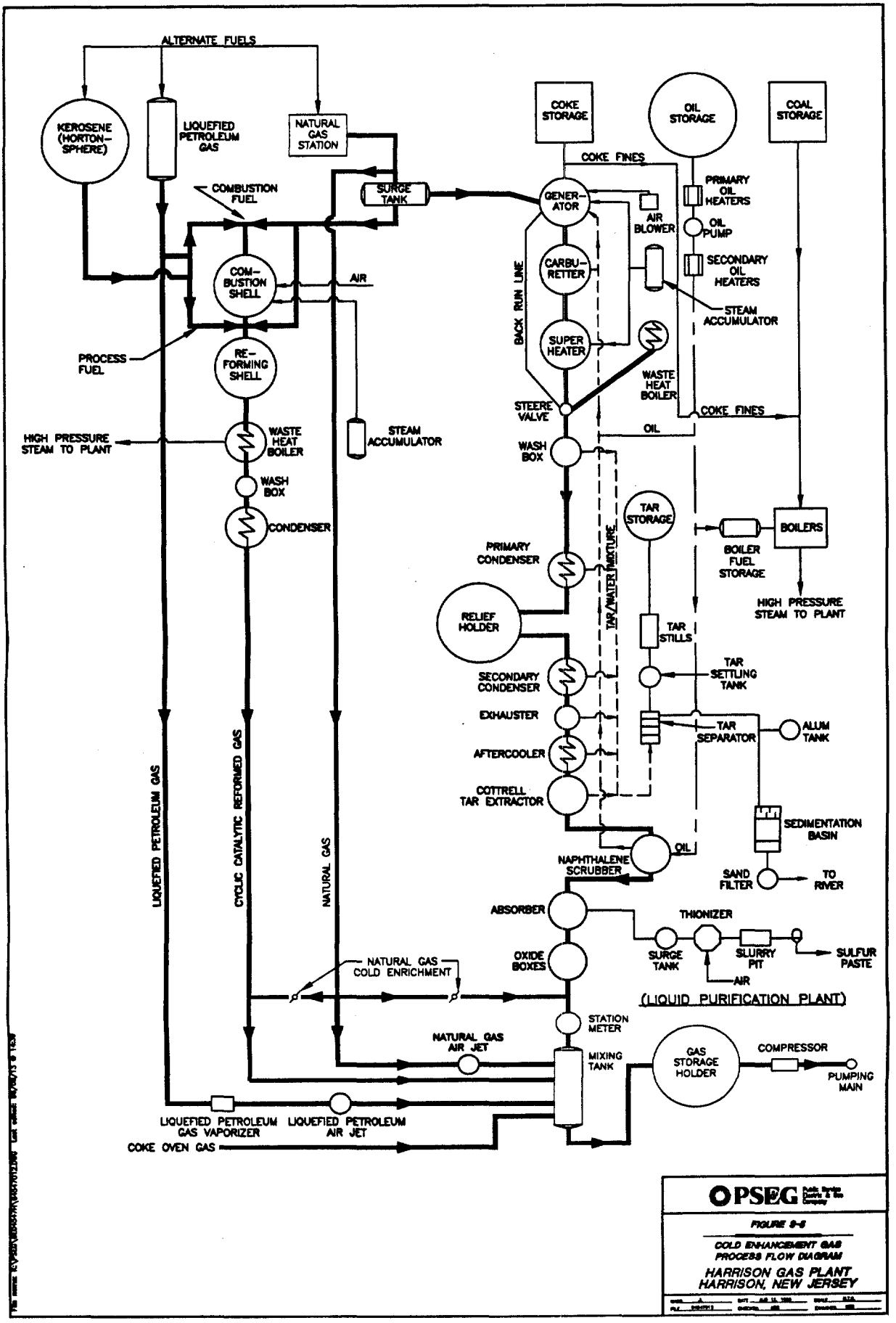
ALTERNATE FUELS
KEROSENE (HORTON-SPHERE)
LIQUEFIED PETROLEUM GAS
NATURAL GAS STATION
COMBUSTION FUEL
SURGE TANK
COM-BUSTION SHELL
AIR
PROCESS FUEL
RE-FORMING SHELL
HIGH PRESSURE STEAM TO PLANT
WASTE HEAT BOILER
WASH BOX
CONDENSER
STEAM ACCUMULATOR
LIQUEFIED PETROLEUM GAS
CYCLIC CATALYTIC REFORMED GAS
NATURAL GAS
COKE STORAGE
OIL STORAGE
COAL STORAGE
COKE FINES
GENER-ATOR
AIR BLOWER
PRIMARY OIL HEATERS
OIL PUMP
SECONDARY OIL HEATERS
STEAM ACCUMULATOR
CARBU-RETTER
BACK RUN LINE
SUPER HEATER
WASTE HEAT BOILER
STEERE VALVE
COKE FINES
OIL
WASH BOX
TAR STORAGE
BOILERS
BOILER FUEL STORAGE
HIGH PRESSURE STEAM TO PLANT
PRIMARY CONDENSER
TAR/WATER MIXTURE
RELIEF HOLDER
TAR STILLS
TAR SETTLING TANK
SECONDARY CONDENSER
EXHAUSTER
TAR SEPARATOR
ALUM TANK
AFTERCOOLER
COTTRELL TAR EXTRACTOR
SEDIMENTATION BASIN
OIL
NAPHTHALENE SCRUBBER
SAND FILTER
TO RIVER
ABSORBER
THIONIZER
OXIDE BOXES
SURGE TANK
SLURRY PIT
SULFUR PASTE
AIR
NATURAL GAS COLD ENRICHMENT
(LIQUID PURIFICATION PLANT)
STATION METER
NATURAL GAS AIR JET
MIXING TANK
GAS STORAGE HOLDER
COMPRESSOR
PUMPING MAIN
LIQUEFIED PETROLEUM GAS VAPORIZER
LIQUEFIED PETROLEUM AIR JET
COKE OVEN GAS
PSEG
FIGURE 9-6
COLD ENHANCEMENT GAS PROCESS FLOW DIAGRAM
HARRISON GAS PLANT
HARRISON, NEW JERSEY

849000204

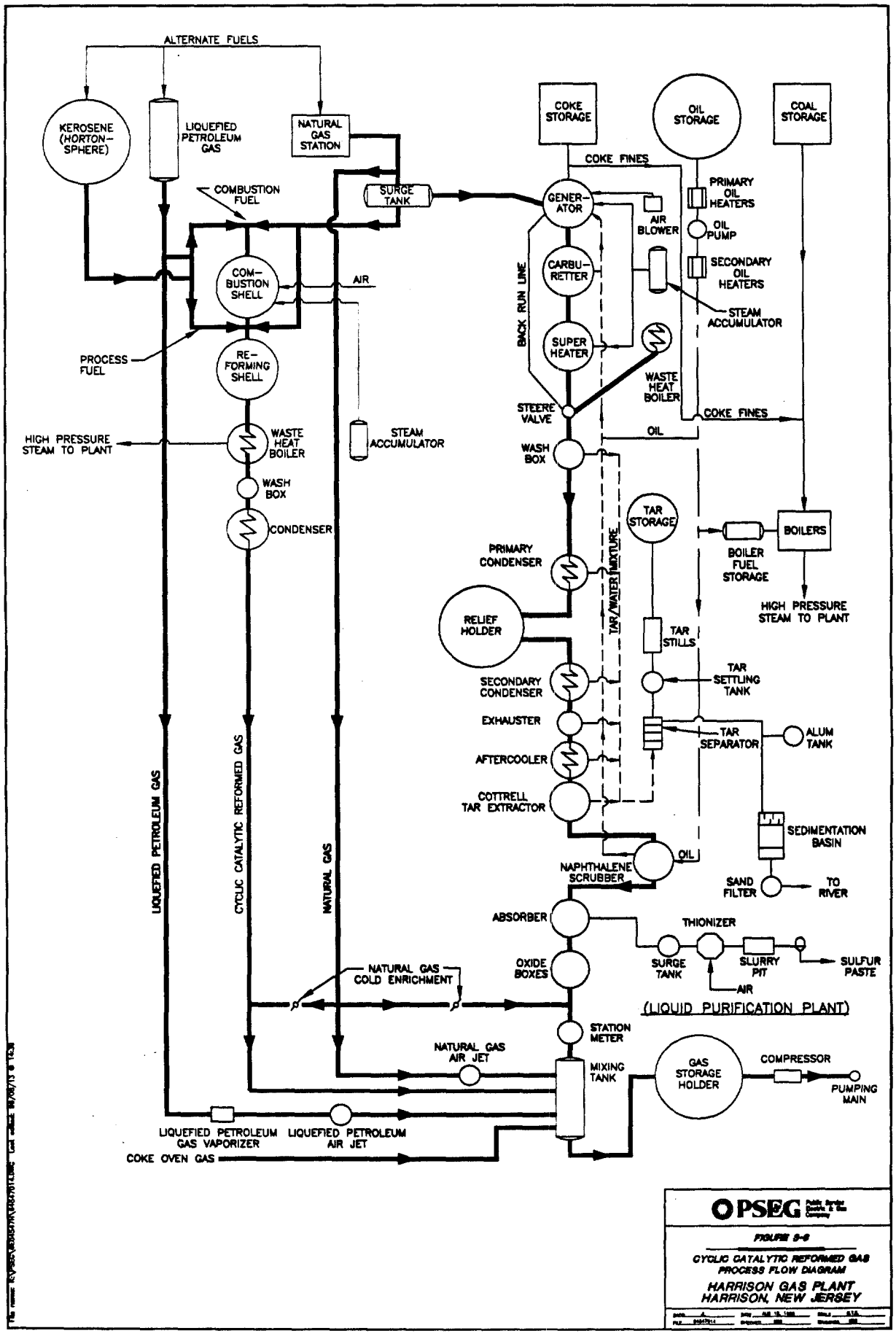
ALTERNATE FUELS
KEROSENE (HORTON-SPHERE)
LIQUEFIED PETROLEUM GAS
NATURAL GAS STATION
COMBUSTION FUEL
SURGE TANK
COM-BUSTION SHELL
AIR
PROCESS FUEL
RE-FORMING SHELL
HIGH PRESSURE STEAM TO PLANT
WASTE HEAT BOILER
WASH BOX
CONDENSER
STEAM ACCUMULATOR
LIQUEFIED PETROLEUM GAS
CYCLIC CATALYTIC REFORMED GAS
NATURAL GAS
COKE STORAGE
OIL STORAGE
COAL STORAGE
COKE FINES
GENER-ATOR
AIR BLOWER
PRIMARY OIL HEATERS
OIL PUMP
SECONDARY OIL HEATERS
STEAM ACCUMULATOR
CARBU-RETTER
BACK RUN LINE
SUPER HEATER
WASTE HEAT BOILER
STEERE VALVE
COKE FINES
OIL
WASH BOX
TAR STORAGE
BOILERS
BOILER FUEL STORAGE
HIGH PRESSURE STEAM TO PLANT
PRIMARY CONDENSER
TAR/WATER MIXTURE
RELIEF HOLDER
TAR STILLS
TAR SETTLING TANK
SECONDARY CONDENSER
EXHAUSTER
TAR SEPARATOR
ALUM TANK
AFTERCOOLER
COTTRELL TAR EXTRACTOR
SEDIMENTATION BASIN
OIL
NAPHTHALENE SCRUBBER
SAND FILTER
TO RIVER
ABSORBER
THIONIZER
OXIDE BOXES
SURGE TANK
SLURRY PIT
SULFUR PASTE
AIR
NATURAL GAS COLD ENRICHMENT
(LIQUID PURIFICATION PLANT)
STATION METER
NATURAL GAS AIR JET
MIXING TANK
GAS STORAGE HOLDER
COMPRESSOR
PUMPING MAIN
LIQUEFIED PETROLEUM GAS VAPORIZER
LIQUEFIED PETROLEUM AIR JET
COKE OVEN GAS
PSEG
FIGURE 5-6
CYCLIC CATALYTIC REFORMED GAS PROCESS FLOW DIAGRAM
HARRISON GAS PLANT
HARRISON, NEW JERSEY

8490000205

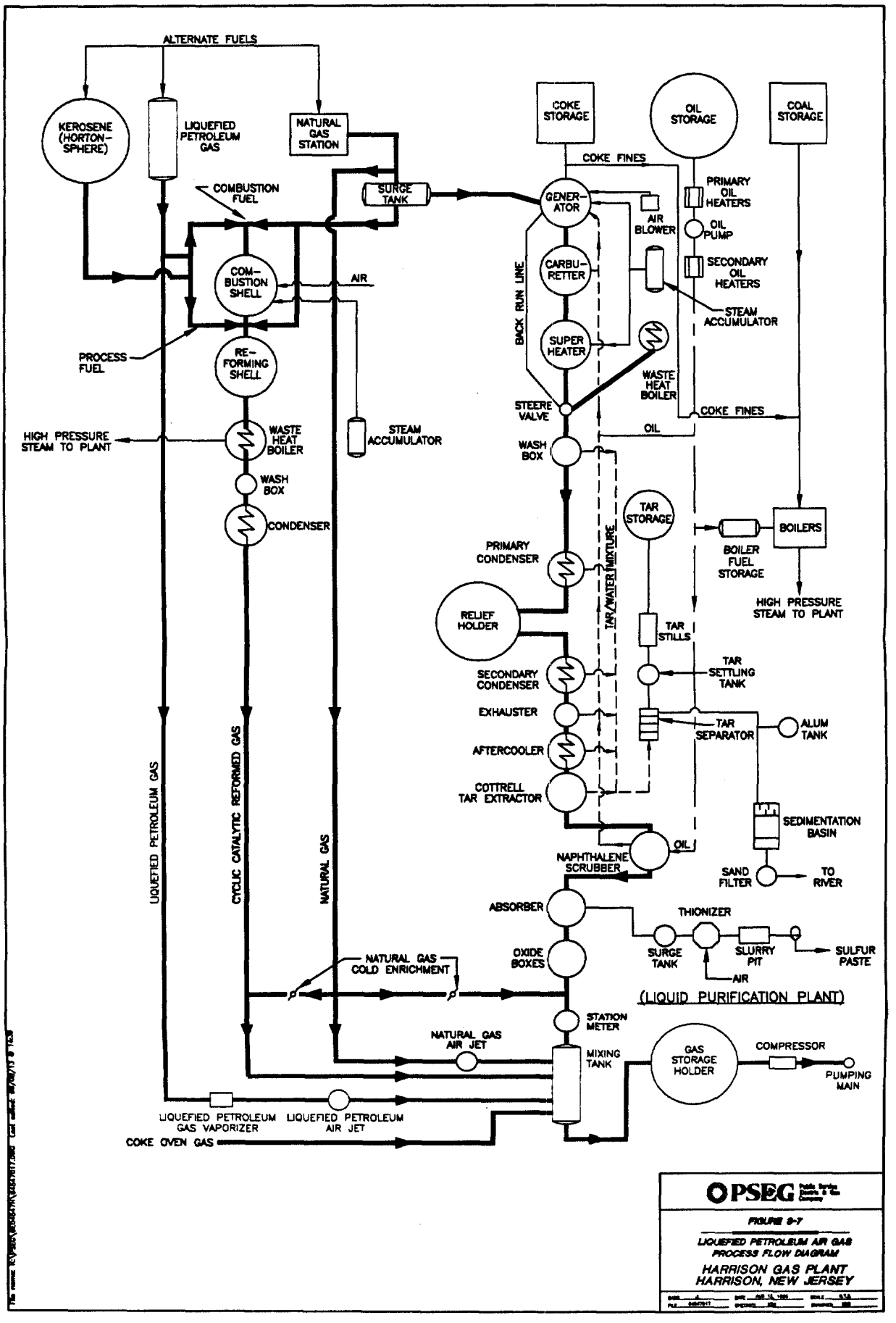
ALTERNATE FUELS
KEROSENE (HORTON-SPHERE)
LIQUEFIED PETROLEUM GAS
NATURAL GAS STATION
COMBUSTION FUEL
SURGE TANK
COM-BUSTION SHELL
AIR
PROCESS FUEL
RE-FORMING SHELL
HIGH PRESSURE STEAM TO PLANT
WASTE HEAT BOILER
STEAM ACCUMULATOR
WASH BOX
CONDENSER
LIQUEFIED PETROLEUM GAS
CYCLIC CATALYTIC REFORMED GAS
NATURAL GAS
COKE STORAGE
OIL STORAGE
COAL STORAGE
COKE FINES
GENER-ATOR
AIR BLOWER
PRIMARY OIL HEATERS
OIL PUMP
SECONDARY OIL HEATERS
STEAM ACCUMULATOR
CARBU-RETTER
BACK RUN LINE
SUPER HEATER
WASTE HEAT BOILER
STEERE VALVE
COKE FINES
OIL
WASH BOX
TAR STORAGE
BOILERS
BOILER FUEL STORAGE
HIGH PRESSURE STEAM TO PLANT
PRIMARY CONDENSER
TAR/WATER MIXTURE
RELIEF HOLDER
TAR STILLS
TAR SETTLING TANK
SECONDARY CONDENSER
EXHAUSTER
TAR SEPARATOR
ALUM TANK
AFTERCOOLER
COTTRELL TAR EXTRACTOR
SEDIMENTATION BASIN
OIL
NAPHTHALENE SCRUBBER
SAND FILTER
TO RIVER
ABSORBER
THIONIZER
SURGE TANK
SLURRY PIT
SULFUR PASTE
AIR
OXIDE BOXES
NATURAL GAS COLD ENRICHMENT
(LIQUID PURIFICATION PLANT)
STATION METER
NATURAL GAS AIR JET
MIXING TANK
GAS STORAGE HOLDER
COMPRESSOR
PUMPING MAIN
LIQUEFIED PETROLEUM GAS VAPORIZER
LIQUEFIED PETROLEUM AIR JET
COKE OVEN GAS
PSEG
FIGURE 9-7
LIQUEFIED PETROLEUM AIR GAS PROCESS FLOW DIAGRAM
HARRISON GAS PLANT
HARRISON, NEW JERSEY

8490000206

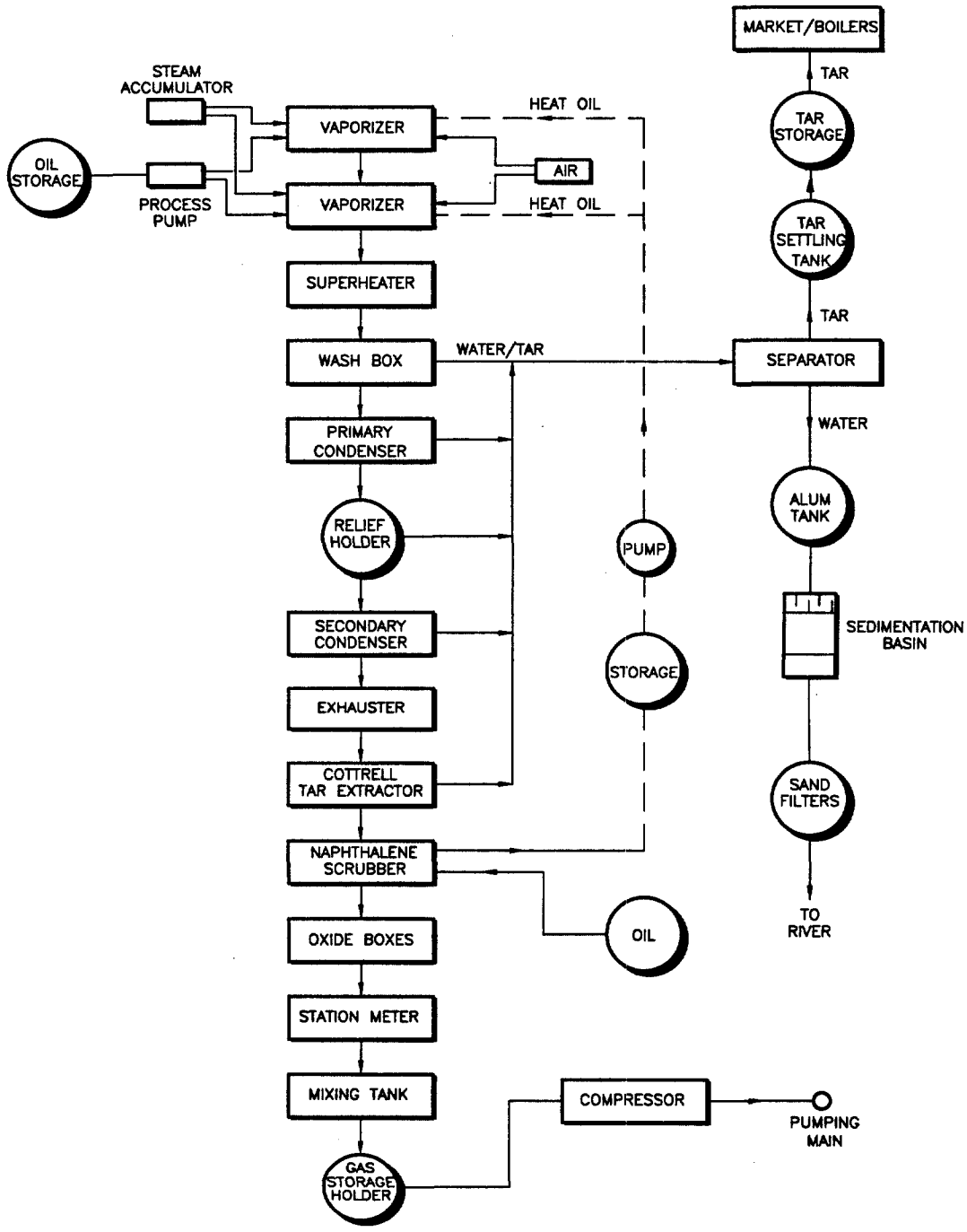

PSEG

FIGURE 3-8

OIL GAS PROCESS FLOW DIAGRAM

HARRISON GAS PLANT
HARRISON, NEW JERSEY

849000207

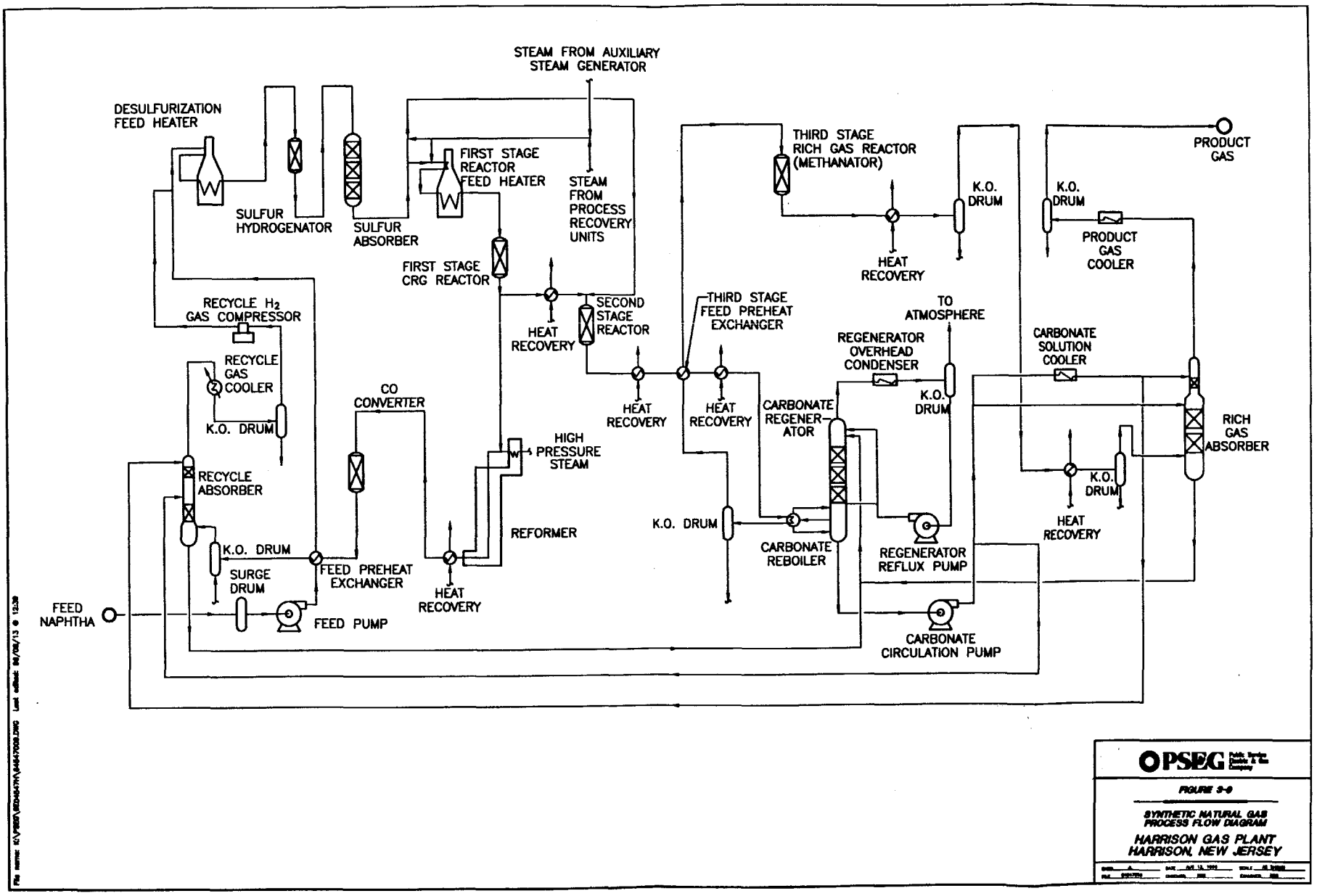

OPSEG

FIGURE 3-9

SYNTHETIC NATURAL GAS PROCESS FLOW DIAGRAM

HARRISON GAS PLANT
HARRISON, NEW JERSEY

849900208

LEGEND

A = GENERATOR
B = STEAM CONNECTIONS
C = CARBURETTER
D = OIL SPRAY
E = CHECKER BRICK
F = AIR CONNECTIONS
G = SUPERHEATER
H = WASH BOX
I = STACK VALVE
J = CONNECTION FOR WASTE HEAT BOILER
K = GAS CONNECTIONS

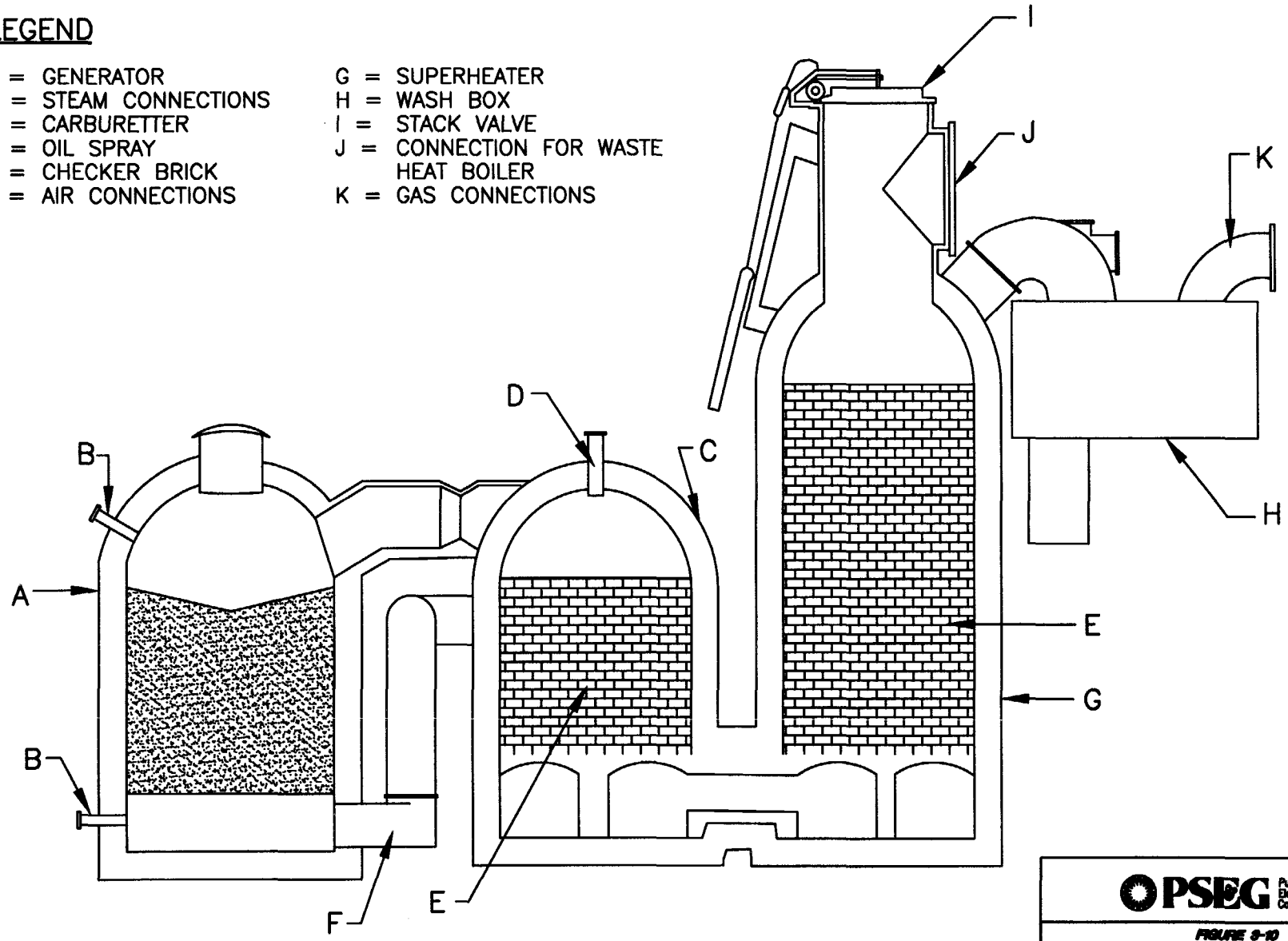

PSEG Public Service Electric & Gas Company

FIGURE 3-10

SECTIONAL VIEW OF A CARBURETTED WATER GAS SET

HARRISON GAS PLANT
HARRISON, NEW JERSEY

CADD JL DATE AUG 12, 1996 SCALE N.T.S.
FILE 84847023 CHECKED NBS EXAMINED NBS

File name: K:\PSEG\SED4547H\84847023.DWG Last edited: 96/08/13 @ 12:50

849900209

THIS MAP CAN BE FOUND IN THE SITE FILE LOCATED AT: U.S. EPA SUPERFUND RECORDS CENTER, 290 BROADWAY, 18TH FLOOR, NY,NY 10007

NO	DATE	DESCRIPTION	DWN	CKD

REVISION

PSEG Public Service Electric & Gas Company

SURVEYS & MAPPING

HARRISON GAS PLANT

TOWN OF HARRISON

HUDSON CO. N.J.

© Copyright Public Service Electric & Gas Co. 1996

FIGURE - 3 - 11

TARRY WATER LINES

USEPA RESPONSE

CADD MXS DATE AUG 9, 1996 SCALE 1" = 50'

FILE harrtar.dgn CHECKED W.MAX EXAMINED G.MON

849900210

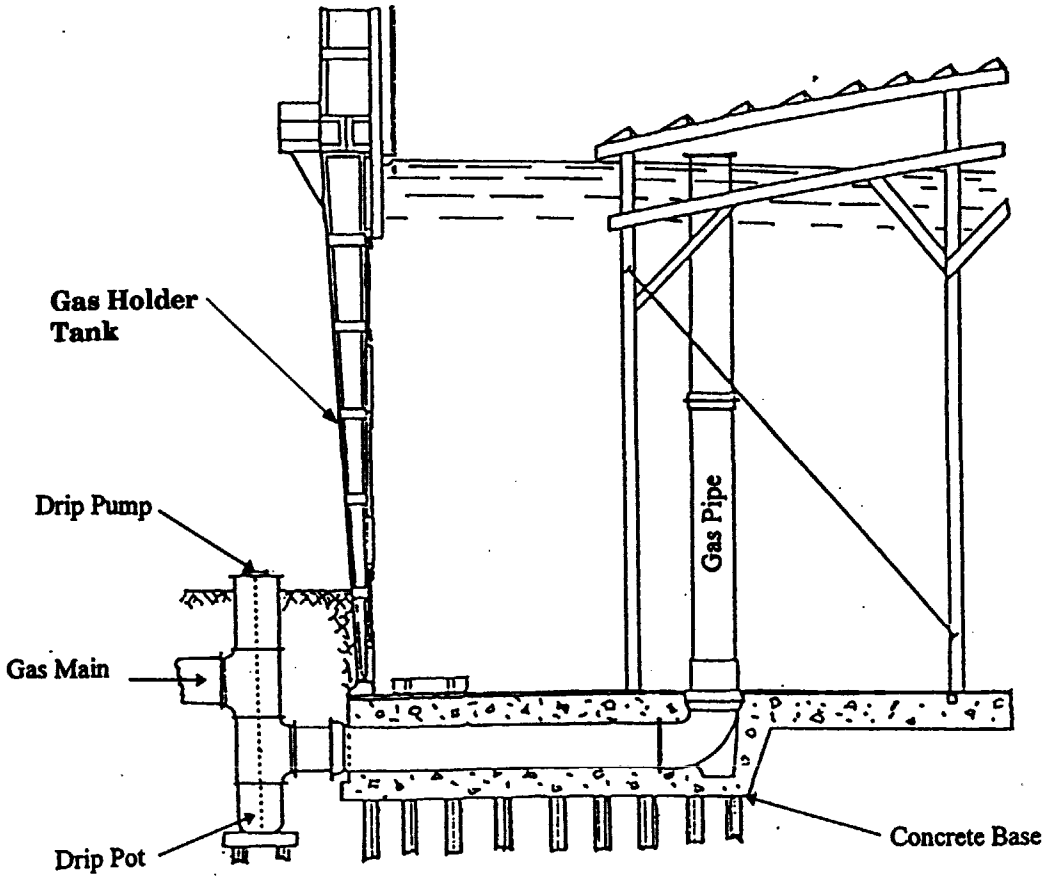

PSEG Public Service Electric & Gas Company

FIGURE 3-12

DRIP POT DETAIL

HARRISON GAS PLANT
HARRISON, NEW JERSEY

8499002 11

THIS MAP CAN BE FOUND IN THE SITE FILE LOCATED AT: U.S. EPA SUPERFUND RECORDS CENTER, 290 BROADWAY, 18TH FLOOR, NY,NY 10007

NO	DATE	DESCRIPTION	DWN	CKD

REVISION

PSEG Public Service Electric & Gas Company

SURVEYS & MAPPING

HARRISON GAS PLANT

TOWN OF HARRISON

HUDSON CO, N.J.

© Copyright Public Service Electric & Gas Co. 1996

FIGURE - 3 - 13

DRIP OIL LINES

USEPA RESPONSE

CADD MXS DATE AUG 9, 1996 SCALE 1" = 50'

FILE harrdrip.dgn CHECKED W.MAX EXAMINED G.MON

849900212

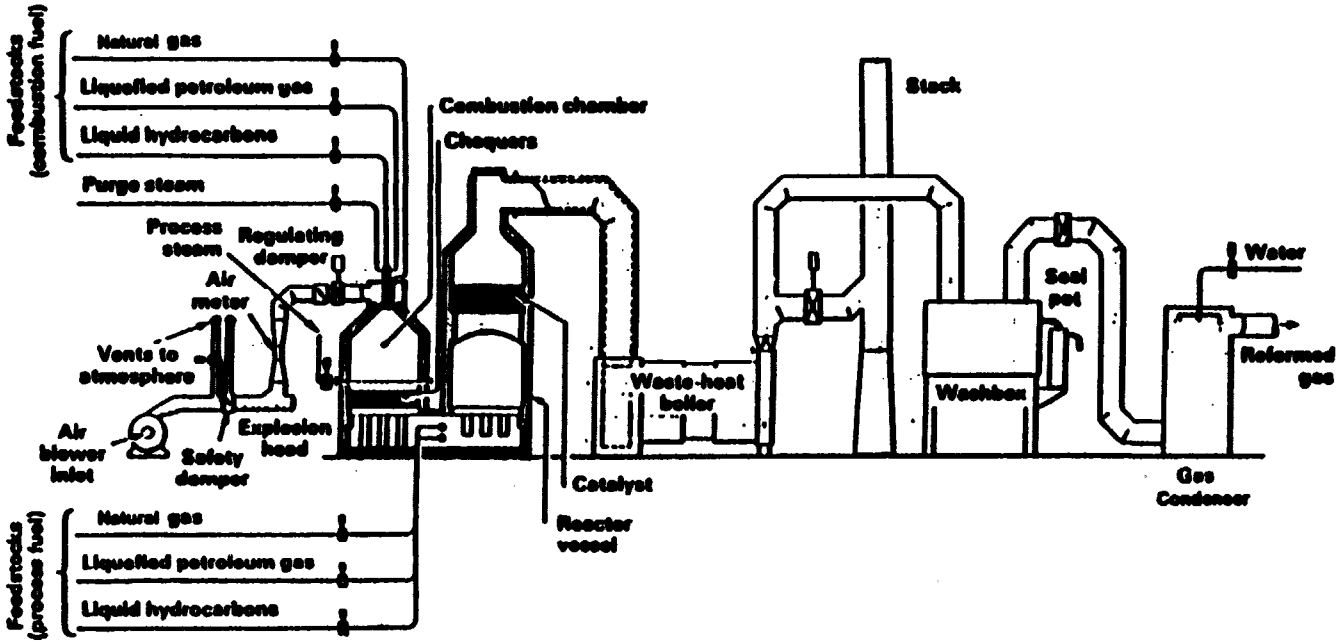

PSEG Public Service Electric & Gas Company

FIGURE 3-14

CYCLIC CATALYTIC REFORMED GAS SET

HARRISON GAS PLANT
HARRISON, NEW JERSEY

CADD: J. DATE: AUG 6, 1999 SCALE: N.T.S.
FILE: 84547026 CHECKED: KDS EXAMINED: KDS

File name: K:\PSEG\9E04547H\84547026.DWG Last edited: 98/08/12 @ 10:15

849900213

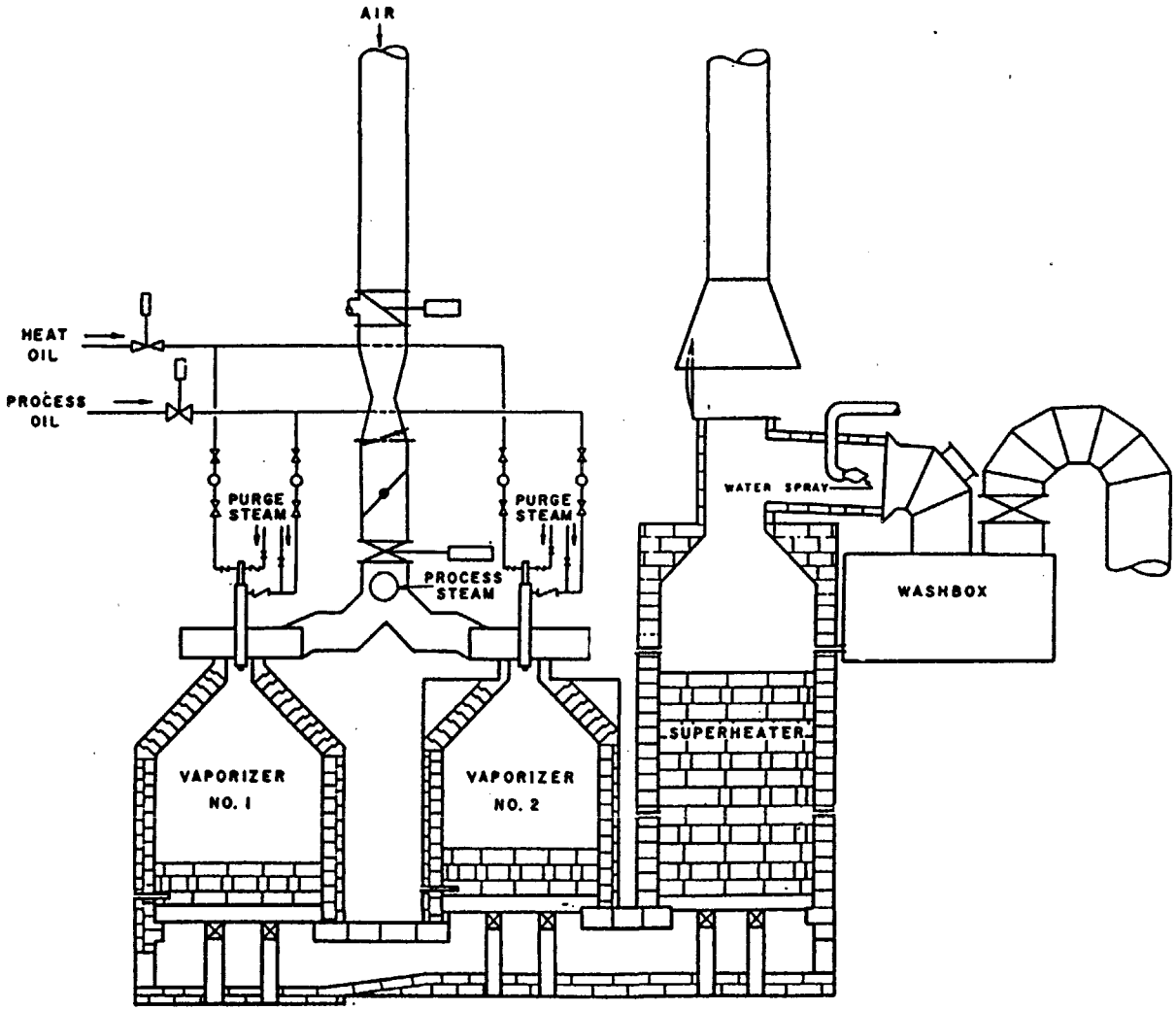

PSEG Public Service Electric & Gas Company

FIGURE 3-15

OIL GAS SET

HARRISON GAS PLANT
HARRISON, NEW JERSEY

CADD: JL DATE: AUG 8, 1988 SCALE: N.T.S.
FILE: 84847084 CHECKED: KDS EXAMINED: KDS

849900214

THIS MAP CAN BE FOUND IN THE SITE FILE LOCATED AT: U.S. EPA SUPERFUND RECORDS CENTER, 290 BROADWAY, 18TH FLOOR, NY,NY 10007

NO	DATE	DESCRIPTION	DWN	CKD

REVISION

PSEG Public Service Electric & Gas Company

SURVEYS & MAPPING

HARRISON GAS PLANT

TOWN OF HARRISON

HUDSON CO. N.J.

© Copyright Public Service Electric & Gas Co. 1996

FIGURE - 3 - 16

SNG WASTE WATER LINES

USEPA RESPONSE

CADD	MXS	DATE	AUG 9, 1996	SCALE	1" = 50'
FILE	harrsng.dgn	CHECKED	W.MAX	EXAMINED	G.MON

849900215

THIS MAP CAN BE FOUND IN THE SITE FILE LOCATED AT: U.S. EPA SUPERFUND RECORDS CENTER, 290 BROADWAY, 18TH FLOOR, NY,NY 10007

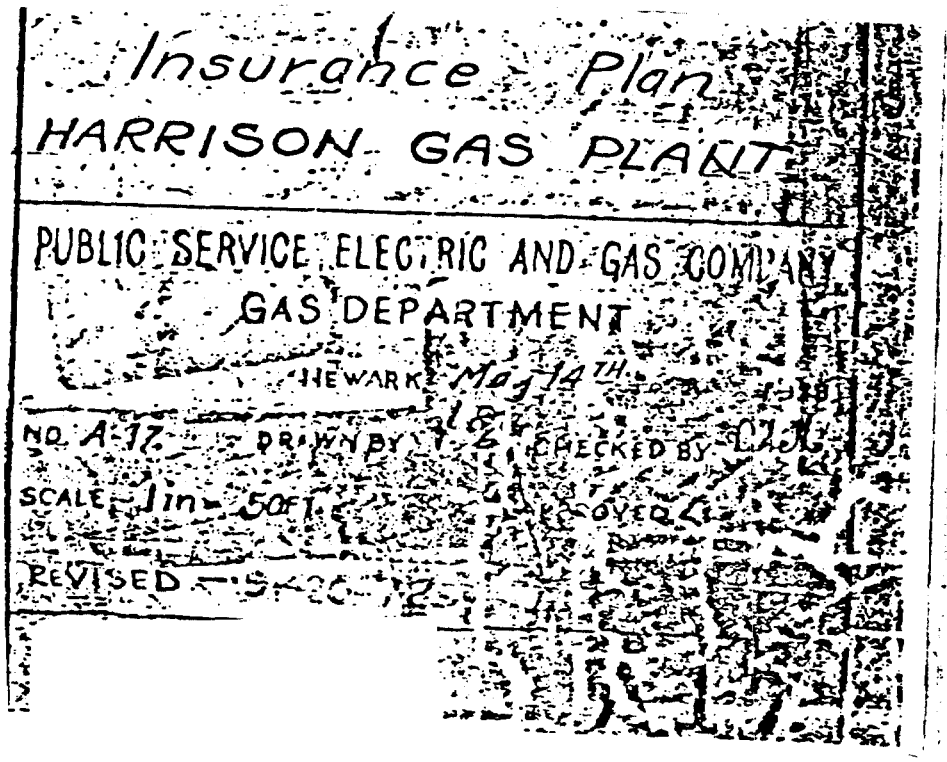

849900216

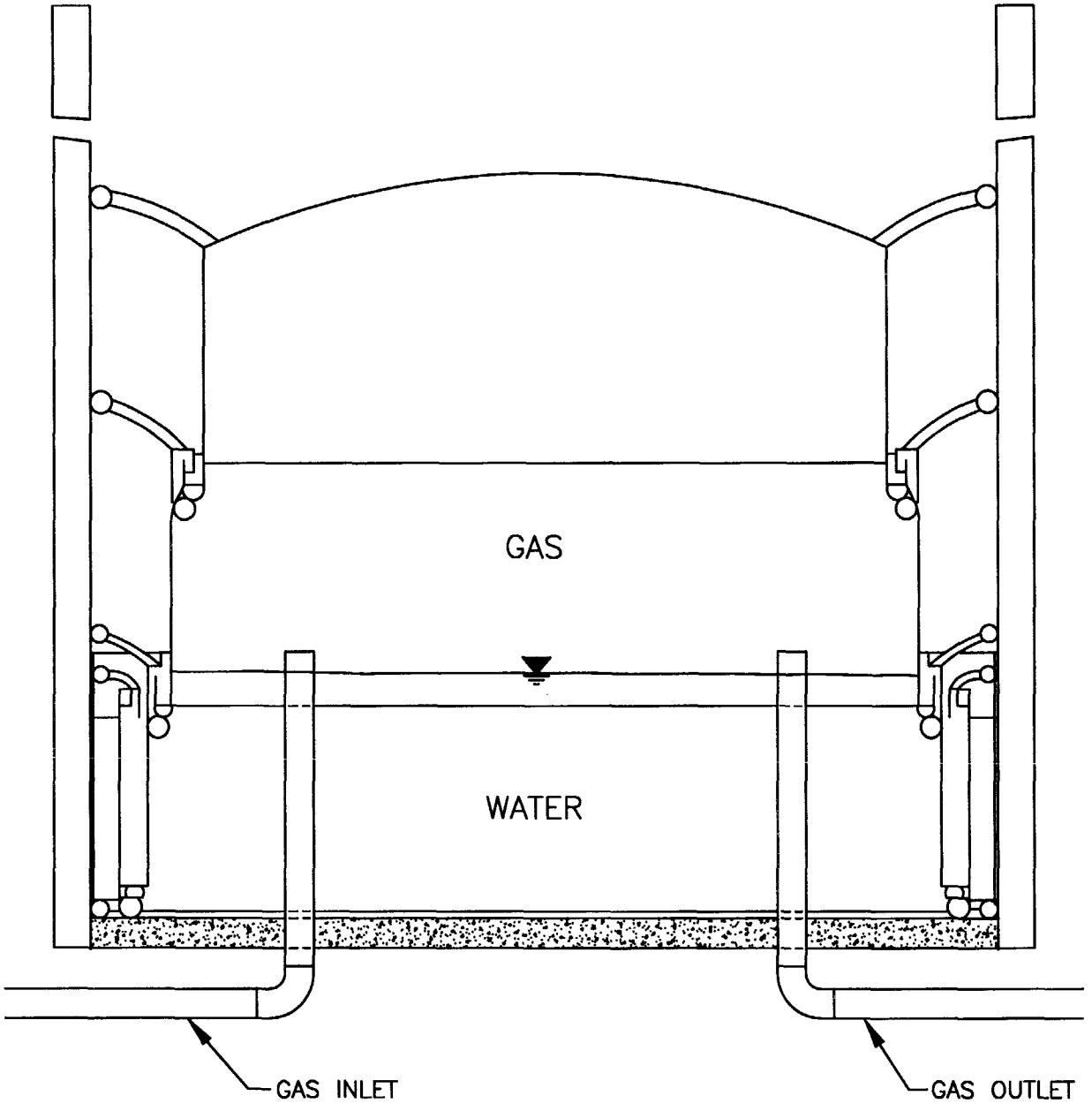

PSEG Public Service Electric & Gas Company

FIGURE 3-18

CROSS-SECTION VIEW OF THREE LIFT WATER SEALED HOLDER

HARRISON GAS PLANT
HARRISON, NEW JERSEY

CADD	JL	DATE	AUG 12, 1996	SCALE	N.T.S.
FILE	64547011	CHECKED	KDS	EXAMINED	KDS

File name: K:\PSEG\SED4547H\64547011.DWG Last edited: 96/08/11 @ 22:21

849900217

849900218

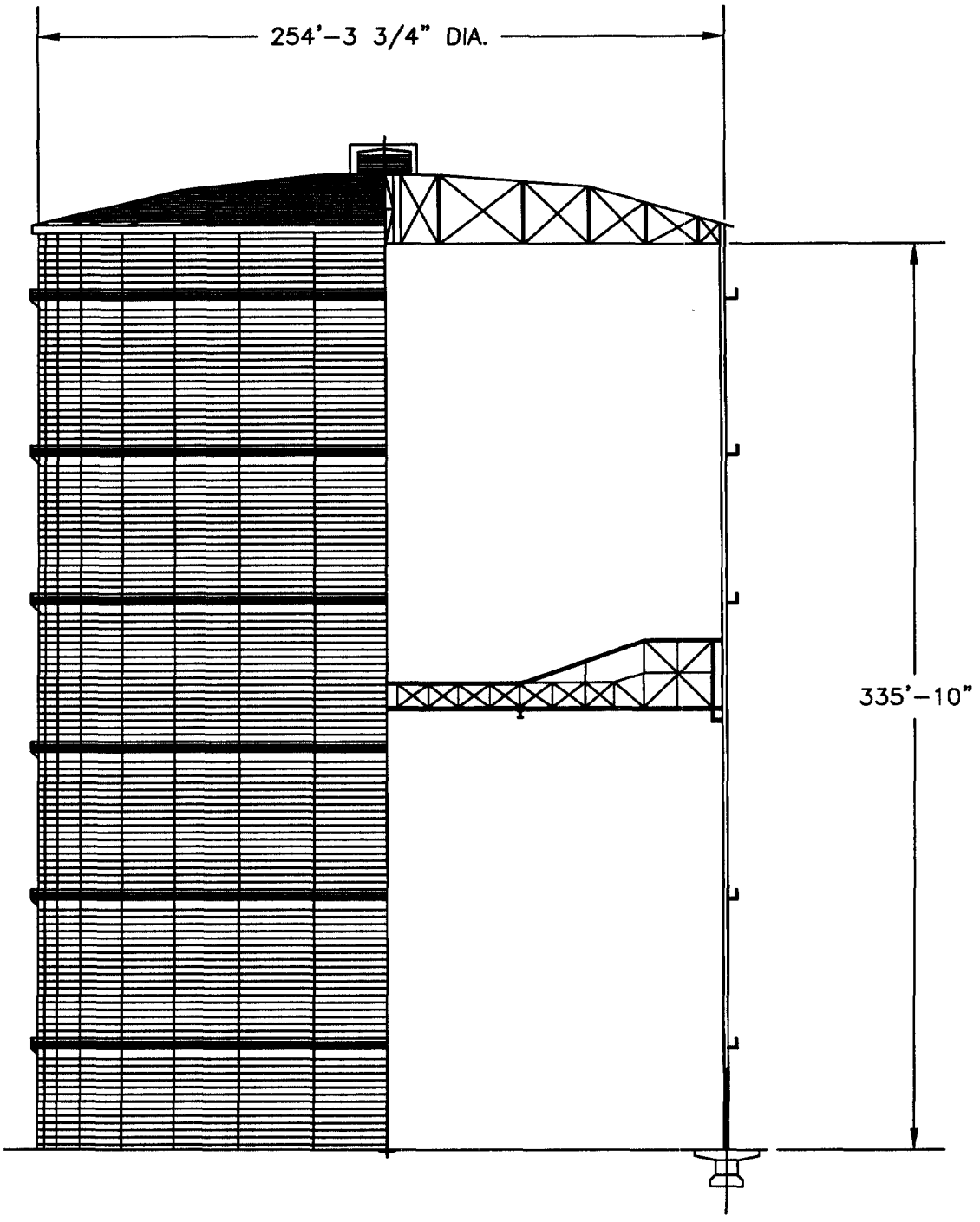

PSEG Public Service Electric & Gas Company

FIGURE 3-19

CROSS-SECTION VIEW OF A WATERLESS TAR-SEALED HOLDER

HARRISON GAS PLANT
HARRISON, NEW JERSEY

CADD	JL	DATE	AUG 12, 1996	SCALE	N.T.S.
FILE	84547020	CHECKED	KDS	EXAMINED	KDS

File name: K:\PSEG\8E04547H\84547020.DWG Last edited: 96/08/11 @ 22:33

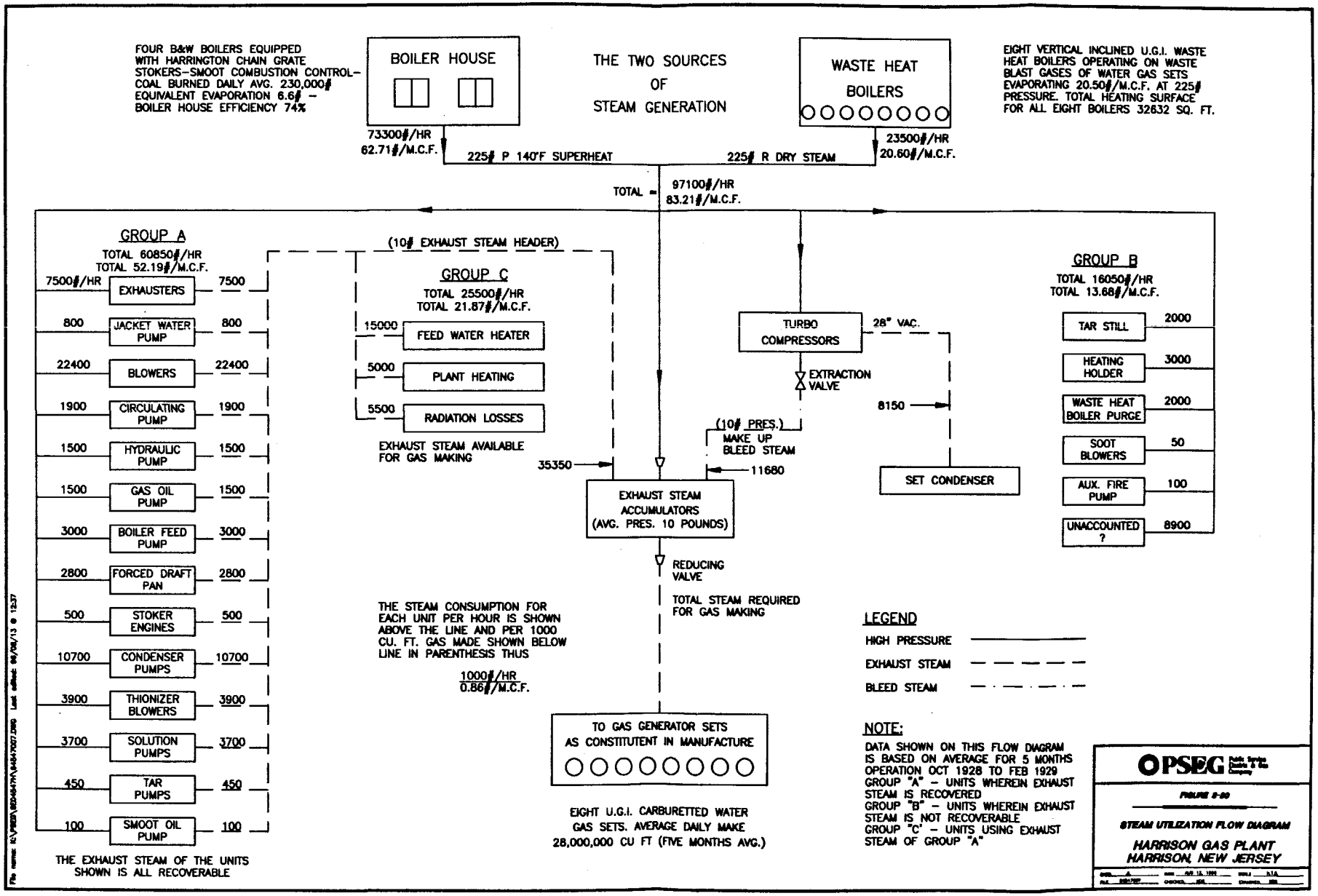
FOUR B&W BOILERS EQUIPPED WITH HARRINGTON CHAIN GRATE STOKERS–SMOOT COMBUSTION CONTROL–COAL BURNED DAILY AVG. 230,000# EQUIVALENT EVAPORATION 6.6# – BOILER HOUSE EFFICIENCY 74%
BOILER HOUSE
THE TWO SOURCES OF STEAM GENERATION
WASTE HEAT BOILERS
EIGHT VERTICAL INCLINED U.G.I. WASTE HEAT BOILERS OPERATING ON WASTE BLAST GASES OF WATER GAS SETS EVAPORATING 20.50#/M.C.F. AT 225# PRESSURE. TOTAL HEATING SURFACE FOR ALL EIGHT BOILERS 32632 SQ. FT.
73300#/HR
62.71#/M.C.F.
225# P 140°F SUPERHEAT
225# R DRY STEAM
23500#/HR
20.60#/M.C.F.
TOTAL = 97100#/HR
83.21#/M.C.F.
GROUP A
TOTAL 60850#/HR
TOTAL 52.19#/M.C.F.
7500#/HR EXHAUSTERS 7500
800 JACKET WATER PUMP 800
22400 BLOWERS 22400
1900 CIRCULATING PUMP 1900
1500 HYDRAULIC PUMP 1500
1500 GAS OIL PUMP 1500
3000 BOILER FEED PUMP 3000
2800 FORCED DRAFT PAN 2800
500 STOKER ENGINES 500
10700 CONDENSER PUMPS 10700
3900 THIONIZER BLOWERS 3900
3700 SOLUTION PUMPS 3700
450 TAR PUMPS 450
100 SMOOT OIL PUMP 100
THE EXHAUST STEAM OF THE UNITS SHOWN IS ALL RECOVERABLE
(10# EXHAUST STEAM HEADER)
GROUP C
TOTAL 25500#/HR
TOTAL 21.87#/M.C.F.
15000 FEED WATER HEATER
5000 PLANT HEATING
5500 RADIATION LOSSES
EXHAUST STEAM AVAILABLE FOR GAS MAKING
35350
TURBO COMPRESSORS
28" VAC.
EXTRACTION VALVE
8150
SET CONDENSER
(10# PRES.) MAKE UP BLEED STEAM
11680
EXHAUST STEAM ACCUMULATORS (AVG. PRES. 10 POUNDS)
REDUCING VALVE
TOTAL STEAM REQUIRED FOR GAS MAKING
THE STEAM CONSUMPTION FOR EACH UNIT PER HOUR IS SHOWN ABOVE THE LINE AND PER 1000 CU. FT. GAS MADE SHOWN BELOW LINE IN PARENTHESIS THUS
1000#/HR
0.86#/M.C.F.
TO GAS GENERATOR SETS AS CONSTITUTENT IN MANUFACTURE
EIGHT U.G.I. CARBURETTED WATER GAS SETS. AVERAGE DAILY MAKE 28,000,000 CU FT (FIVE MONTHS AVG.)
GROUP B
TOTAL 16050#/HR
TOTAL 13.68#/M.C.F.
TAR STILL 2000
HEATING HOLDER 3000
WASTE HEAT BOILER PURGE 2000
SOOT BLOWERS 50
AUX. FIRE PUMP 100
UNACCOUNTED ? 8900
LEGEND
HIGH PRESSURE
EXHAUST STEAM
BLEED STEAM
NOTE:
DATA SHOWN ON THIS FLOW DIAGRAM IS BASED ON AVERAGE FOR 5 MONTHS OPERATION OCT 1928 TO FEB 1929
GROUP "A" – UNITS WHEREIN EXHAUST STEAM IS RECOVERED
GROUP "B" – UNITS WHEREIN EXHAUST STEAM IS NOT RECOVERABLE
GROUP "C" – UNITS USING EXHAUST STEAM OF GROUP "A"
PSEG
FIGURE 8-20
STEAM UTILIZATION FLOW DIAGRAM
HARRISON GAS PLANT
HARRISON, NEW JERSEY

849900219

THIS MAP CAN BE FOUND IN THE SITE FILE LOCATED AT: U.S. EPA SUPERFUND RECORDS CENTER, 290 BROADWAY, 18TH FLOOR, NY,NY 10007

NO	DATE	DESCRIPTION	DWN	CKD

REVISION

PSEG Public Service Electric & Gas Company

SURVEYS & MAPPING

HARRISON GAS PLANT

TOWN OF HARRISON

HUDSON CO. N.J.

© Copyright Public Service Electric & Gas Co. 1996

FIGURE - 3 - 21

COOLING WATER EFFLUENT & SALT WATER LINES

USEPA RESPONSE

CADD MXS DATE AUG 9, 1996 SCALE 1" = 50'

FILE harrcool.dgn CHECKED W.MAX EXAMINED G.MON

849900220

THIS MAP CAN BE FOUND IN THE SITE FILE LOCATED AT: U.S. EPA SUPERFUND RECORDS CENTER, 290 BROADWAY, 18TH FLOOR, NY,NY 10007

NO	DATE	DESCRIPTION	DWN	CKD

REVISION

PSEG Public Service Electric & Gas Company

SURVEYS & MAPPING

HARRISON GAS PLANT

TOWN OF HARRISON

HUDSON CO. N.J.

© Copyright Public Service Electric & Gas Co. 1996

FIGURE 3-22

STORM SEWER LINES

USEPA RESPONSE

CADD MXS DATE AUG 9, 1996 SCALE 1" = 50'

FILE harrstorm.dgn CHECKED W.MAX EXAMINED G.MON

849900221

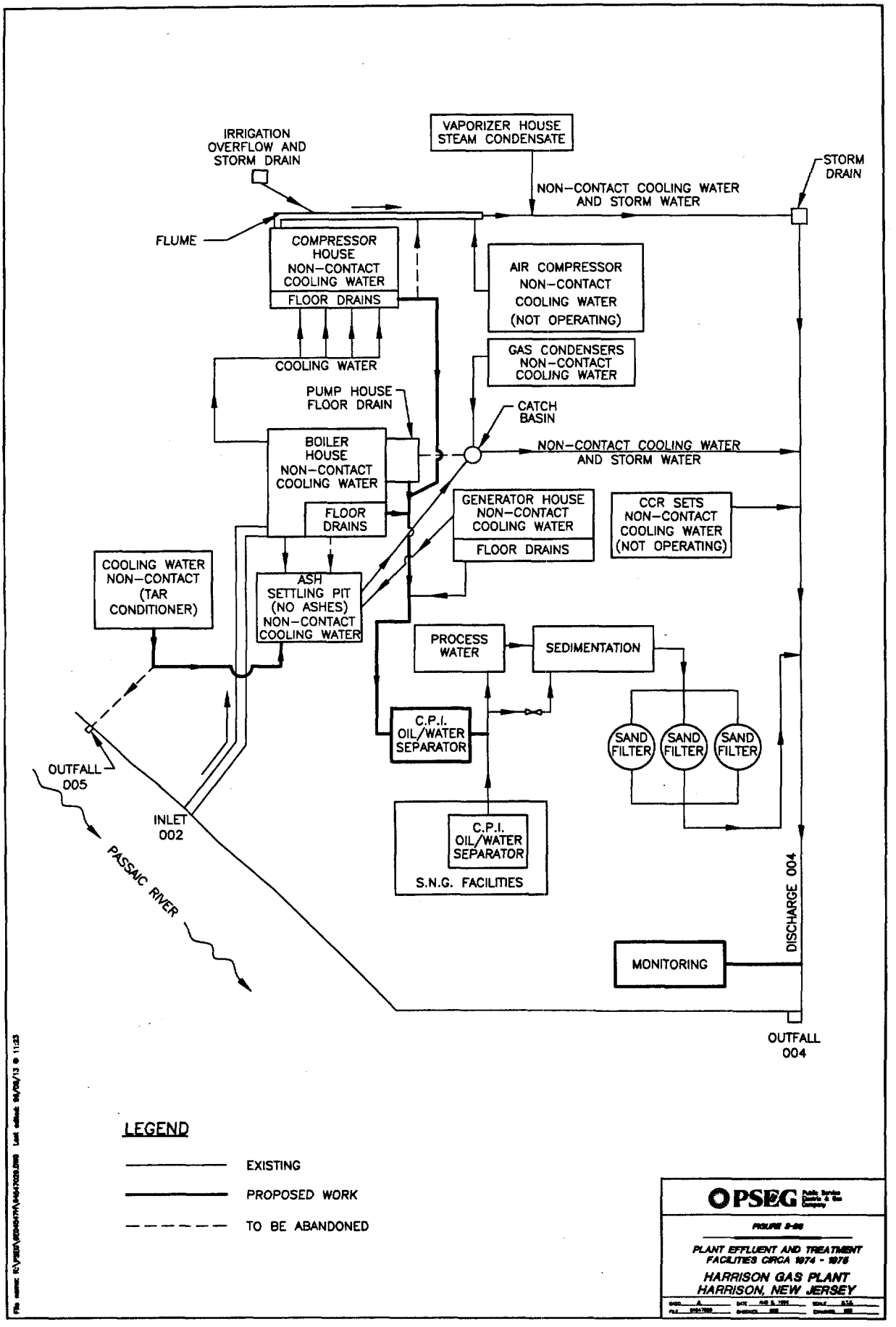
IRRIGATION OVERFLOW AND STORM DRAIN
VAPORIZER HOUSE STEAM CONDENSATE
STORM DRAIN
NON-CONTACT COOLING WATER AND STORM WATER
FLUME
COMPRESSOR HOUSE NON-CONTACT COOLING WATER
FLOOR DRAINS
AIR COMPRESSOR NON-CONTACT COOLING WATER (NOT OPERATING)
GAS CONDENSERS NON-CONTACT COOLING WATER
COOLING WATER
PUMP HOUSE FLOOR DRAIN
CATCH BASIN
BOILER HOUSE NON-CONTACT COOLING WATER
NON-CONTACT COOLING WATER AND STORM WATER
FLOOR DRAINS
GENERATOR HOUSE NON-CONTACT COOLING WATER
FLOOR DRAINS
CCR SETS NON-CONTACT COOLING WATER (NOT OPERATING)
COOLING WATER NON-CONTACT (TAR CONDITIONER)
ASH SETTLING PIT (NO ASHES) NON-CONTACT COOLING WATER
PROCESS WATER
SEDIMENTATION
C.P.I. OIL/WATER SEPARATOR
SAND FILTER
SAND FILTER
SAND FILTER
OUTFALL 005
INLET 002
PASSAIC RIVER
C.P.I. OIL/WATER SEPARATOR
S.N.G. FACILITIES
DISCHARGE 004
MONITORING
OUTFALL 004
LEGEND
EXISTING
PROPOSED WORK
TO BE ABANDONED
PSEG
FIGURE 2-99
PLANT EFFLUENT AND TREATMENT FACILITIES CIRCA 1974 - 1976
HARRISON GAS PLANT
HARRISON, NEW JERSEY

8499002222

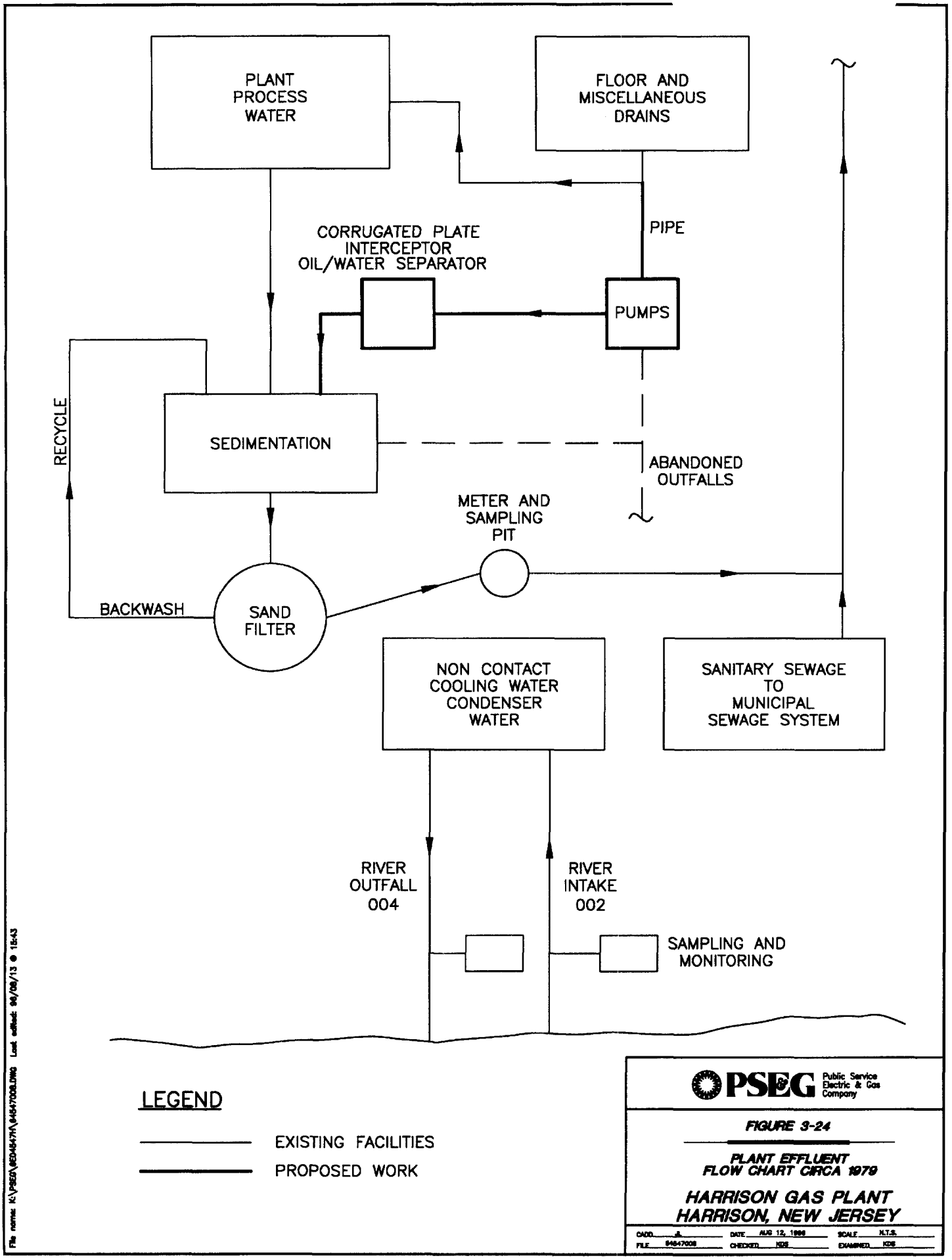
PLANT PROCESS WATER
FLOOR AND MISCELLANEOUS DRAINS
PIPE
CORRUGATED PLATE INTERCEPTOR OIL/WATER SEPARATOR
PUMPS
RECYCLE
SEDIMENTATION
ABANDONED OUTFALLS
METER AND SAMPLING PIT
BACKWASH
SAND FILTER
NON CONTACT COOLING WATER CONDENSER WATER
SANITARY SEWAGE TO MUNICIPAL SEWAGE SYSTEM
RIVER OUTFALL 004
RIVER INTAKE 002
SAMPLING AND MONITORING
LEGEND
EXISTING FACILITIES
PROPOSED WORK
PSEG Public Service Electric & Gas Company
FIGURE 3-24
PLANT EFFLUENT FLOW CHART CIRCA 1979
HARRISON GAS PLANT
HARRISON, NEW JERSEY
CADD JL
DATE AUG 12, 1996
SCALE N.T.S.
FILE 84647008
CHECKED KDS
EXAMINED KDS

THIS MAP CAN BE FOUND IN THE SITE FILE LOCATED AT: U.S. EPA SUPERFUND RECORDS CENTER, 290 BROADWAY, 18TH FLOOR, NY,NY 10007

NO	DATE	DESCRIPTION	DWN	CKD

REVISION

PSEG Public Service Electric & Gas Company

SURVEYS & MAPPING

HARRISON GAS PLANT

TOWN OF HARRISON

HUDSON CO. N.J.

© Copyright Public Service Electric & Gas Co. 1996

FIGURE - 3 - 25

SANITARY SEWER LINES

USEPA RESPONSE

CADD MXS DATE AUG 9, 1996 SCALE 1" = 50'

FILE harrson.dgn CHECKED W.MAX EXAMINED G.MON

849900224

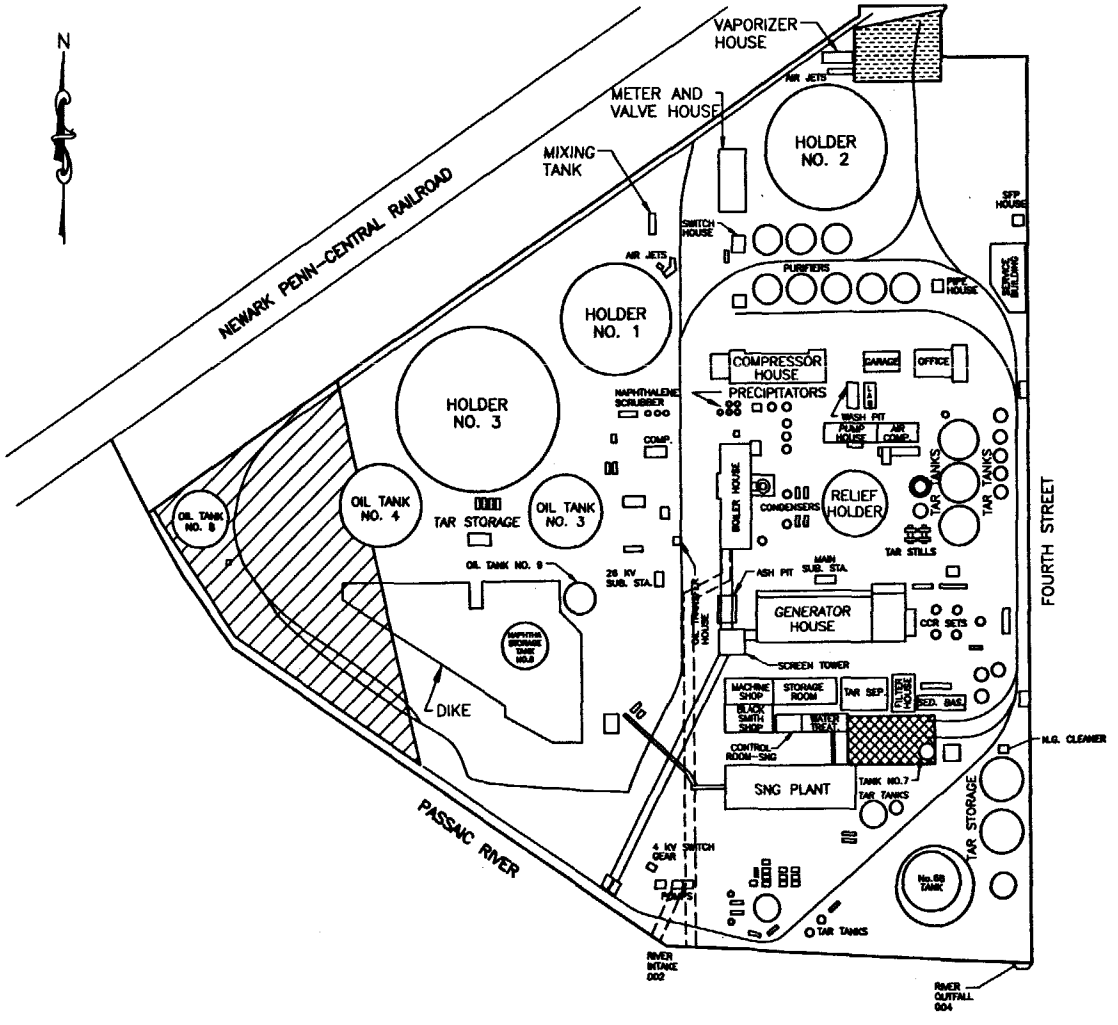

AREAS OF INVESTIGATION

- TAR DEPOSIT AREA
- METALLIC OXIDE DEPOSIT AREA
- TAR AND METALLIC OXIDE DEPOSIT AREA

NOTE:

SOURCE "GEOPHYSICAL INVESTIGATIONS, HARRISON GAS PLANT, HARRISON, NEW JERSEY", DATED OCTOBER 1987 AND "GEOPHYSICAL INVESTIGATIONS, HARRISON GAS PLANT, HARRISON, NEW JERSEY", DATED JANUARY 1988, PREPARED BY WESTON GEOPHYSICAL CORPORATION.

PSEG Public Service Electric & Gas Company

FIGURE 4-1

AREAS OF GEOPHYSICAL INVESTIGATIONS

HARRISON GAS PLANT
HARRISON, NEW JERSEY

File name: K:\PSEG\8024847\8484702 Last edited: 06/08/12 @ 15:16

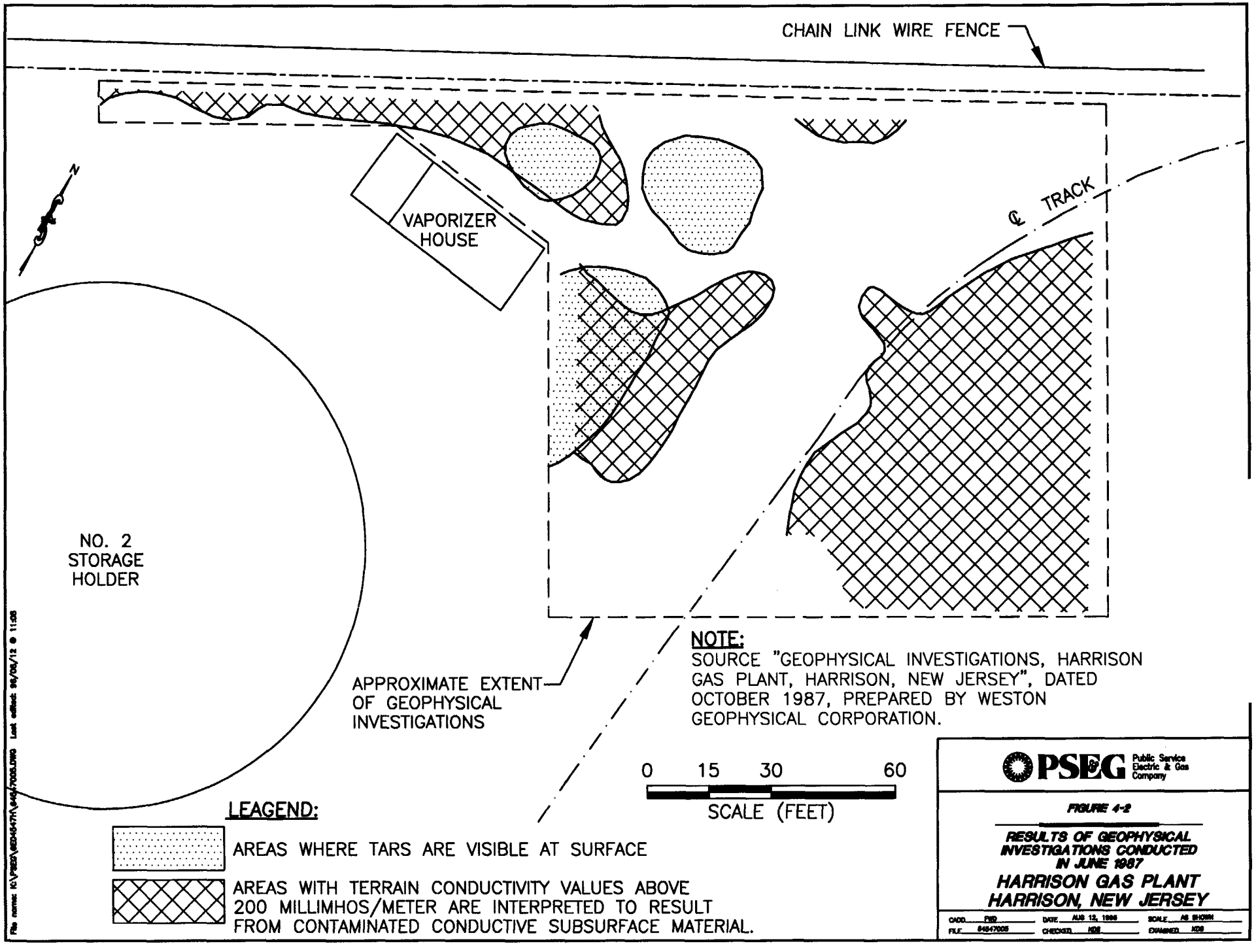

NOTE:
SOURCE "GEOPHYSICAL INVESTIGATIONS, HARRISON GAS PLANT, HARRISON, NEW JERSEY", DATED OCTOBER 1987, PREPARED BY WESTON GEOPHYSICAL CORPORATION.

849900226

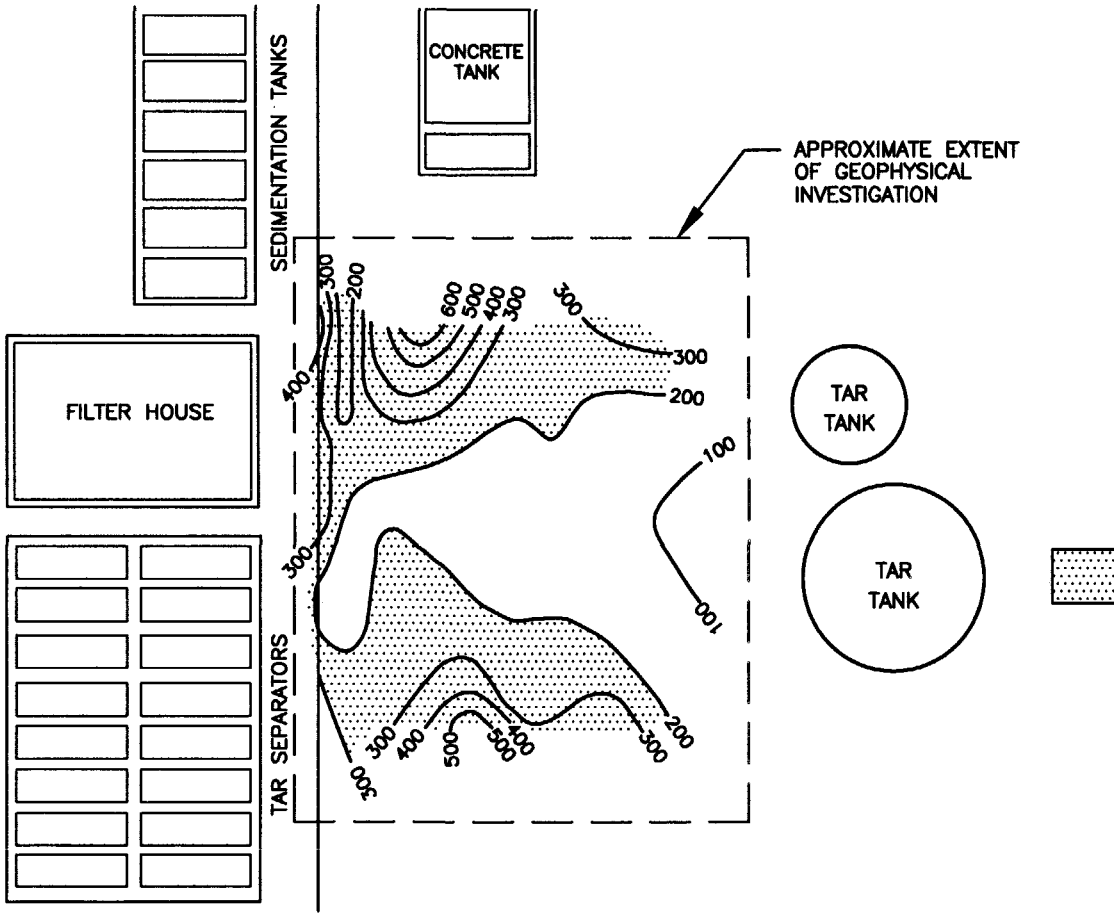

LEGEND:

AREAS WITH TERRAIN CONDUCTIVITY VALUES ABOVE 200 MILLIMHOS/METER ARE INTERPRETED TO POTENTIAL RESULT FROM IRON OXIDE MATERIALS.

NOTE:

SOURCE "GEOPHYSICAL INVESTIGATIONS, HARRISON GAS PLANT, HARRISON, NEW JERSEY", DATED OCTOBER 1987, PREPARED BY WESTON GEOPHYSICAL CORPORATION.

0 10 20 40

SCALE (FEET)

PSEG Public Service Electric & Gas Company

FIGURE 4-3

RESULTS OF GEOPHYSICAL INVESTIGATIONS CONDUCTED IN JUNE 1987

HARRISON GAS PLANT
HARRISON, NEW JERSEY

CADD FWD DATE AUG 12, 1996 SCALE AS SHOWN
FILE 84547003 CHECKED KDS EXAMINED KDS

File name: K:\PSEG\6E04547H\84547003.DWG Last edited: 96/08/13 @ 12:42

849900227

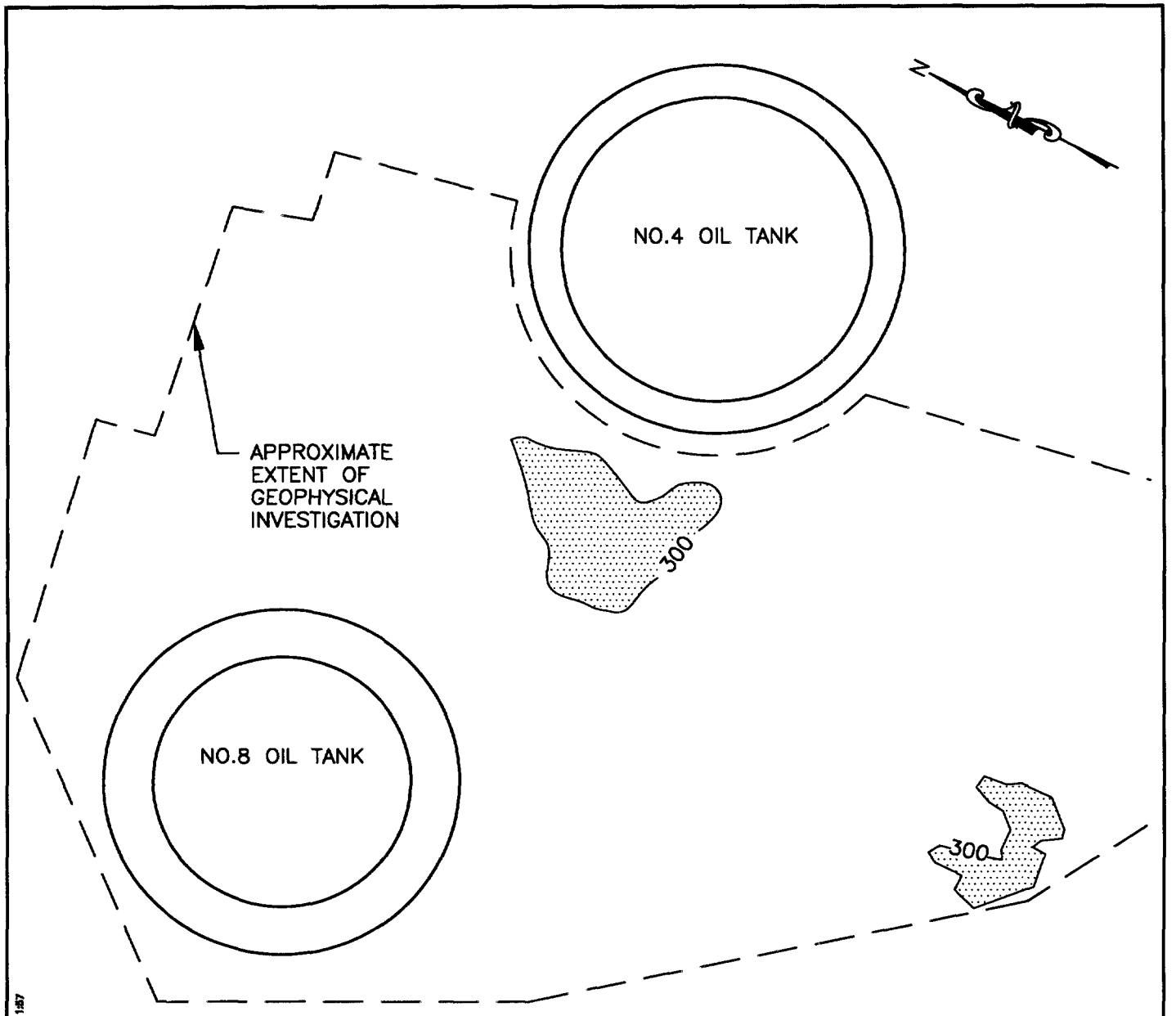

LEGEND:

AREAS WITH TERRAIN CONDUCTIVITY VALUES ABOVE 300 MILLIMHOS/METER ARE INTERPRETED TO RESULT FROM CONTAMINATED CONDUCTIVE SUBSURFACE MATERIALS.

NOTE:

SOURCE "GEOPHYSICAL INVESTIGATIONS, HARRISON GAS PLANT, HARRISON, NEW JERSEY", DATED JANUARY 1988 PREPARED BY WESTON GEOPHYSICAL CORPORATION.

0 30 60 120

SCALE (FEET)

PSEG Public Service Electric & Gas Company

FIGURE 4-4

RESULTS OF GEOPHYSICAL INVESTIGATIONS CONDUCTED IN NOVEMBER 1987

HARRISON GAS PLANT
HARRISON, NEW JERSEY

CADD FWD	DATE AUG 12, 1996	SCALE AS SHOWN
FILE 84547002	CHECKED KDS	EXAMINED KDS

File name: K:\PSEG\SED4547H\84547002.DWG Last edited: 96/08/12 @ 11:57

849900228

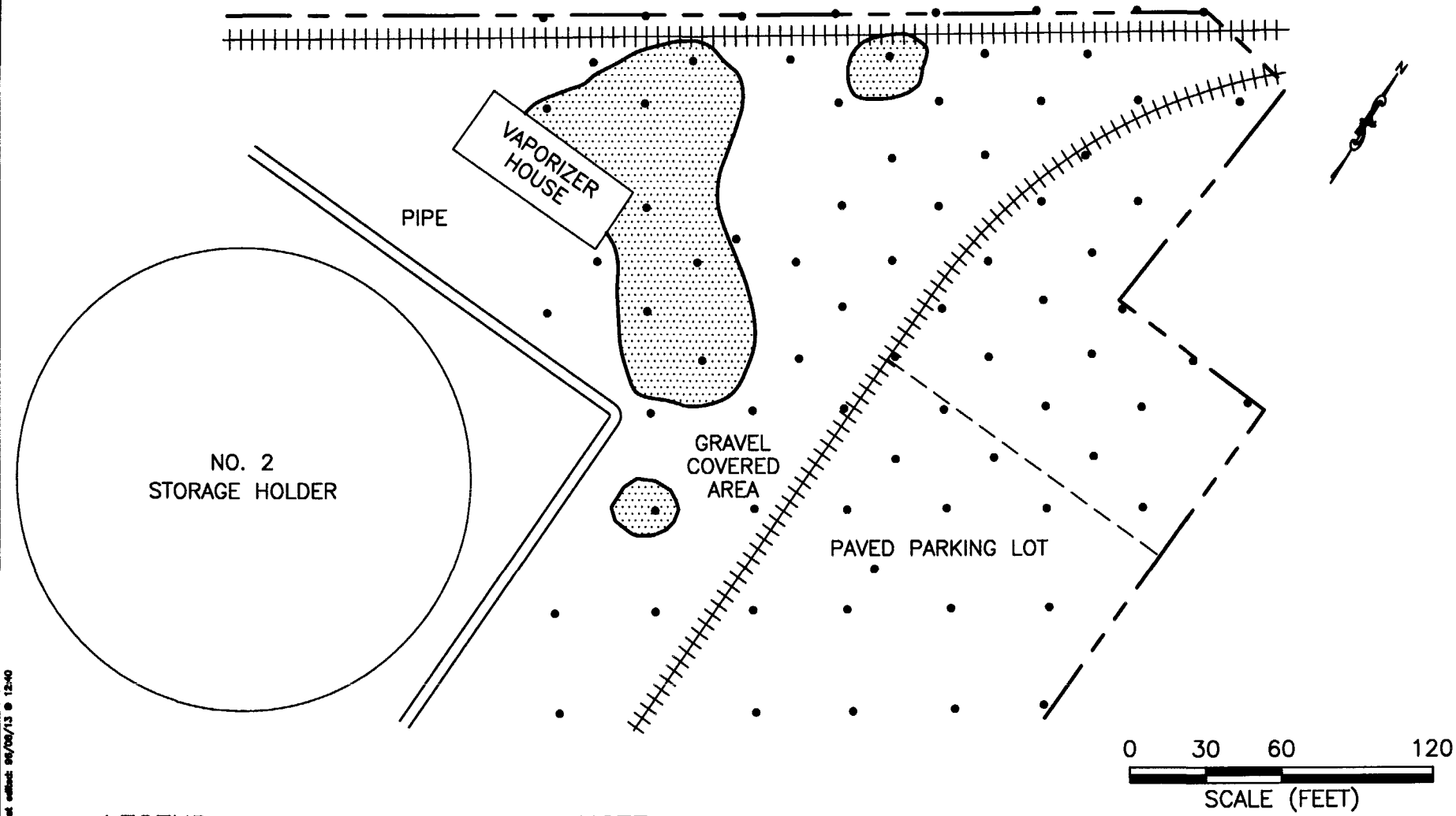

LEGEND

- APPROXIMATE EXTENT OF TAR DEPOSITS
- SOIL GAS SAMPLING LOCATION
- PROPERTY LINE
- RAILROAD

NOTE:

SOURCE "SOIL GAS SURVEY, HARRISON GAS PLANT, HARRISON, NEW JERSEY" DATED OCTOBER 1987, PREPARED BY TARGET ENVIROMENTAL SERVICES, INC. ARIAL EXTENT OF TAR DEPOSITS BASED ON AN INTERPRETATION OF DATA PRESENTED IN THE ABOVE REFERRENCED REPORT.

PSEG Public Service Electric & Gas Company

FIGURE 4-5

RESULTS OF SOIL GAS SURVEY

HARRISON GAS PLANT
HARRISON, NEW JERSEY

CADD	JL	DATE	AUG 12, 1996	SCALE	AS SHOWN
FILE	64547016	CHECKED	KDS	EXAMINED	KDS

File name: K:\PSEG\6204547A\64547016.DWG Last edited: 96/08/13 @ 12:40

849900229

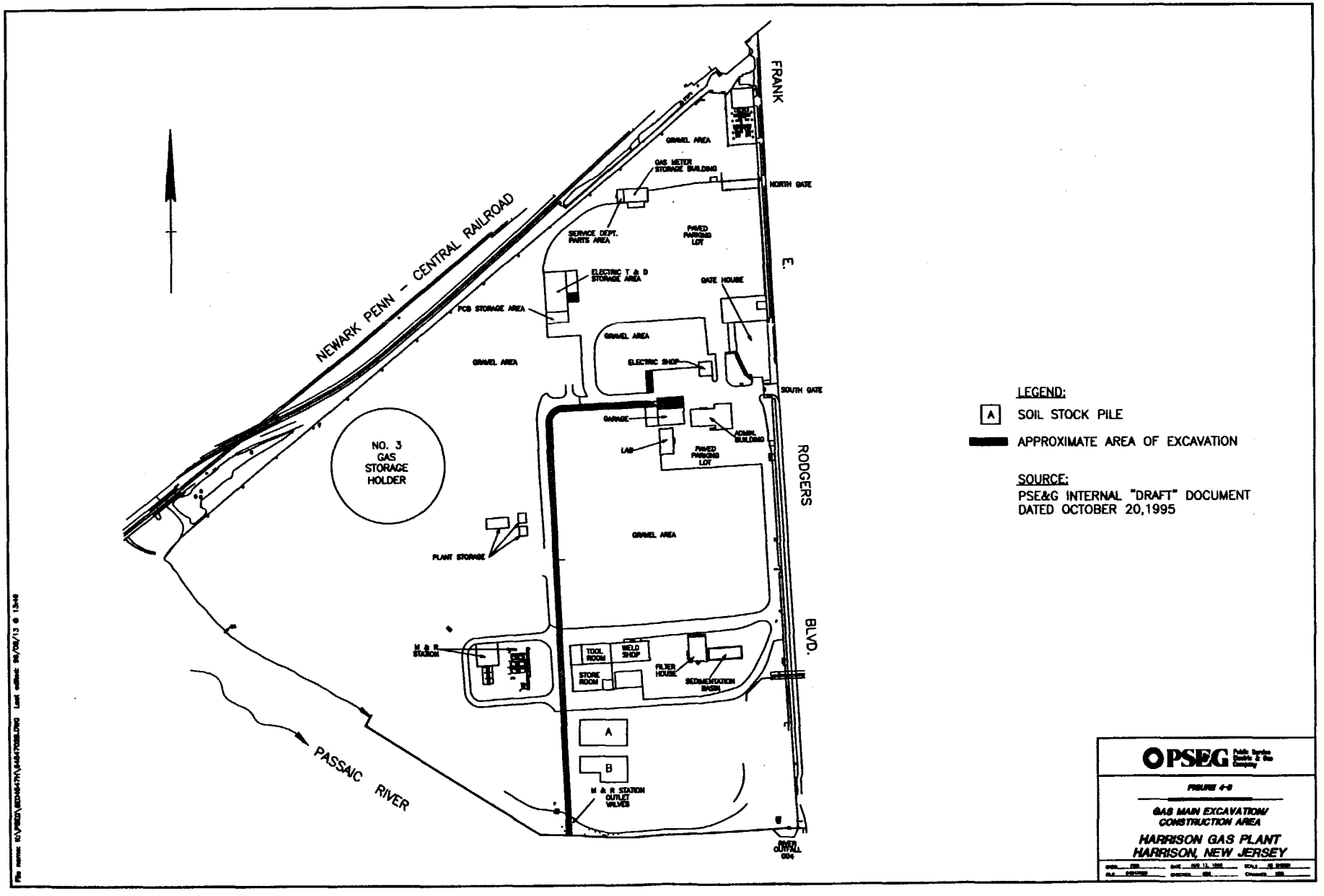
NEWARK PENN - CENTRAL RAILROAD
FRANK
E.
RODGERS
BLVD.
NORTH GATE
SOUTH GATE
GRAVEL AREA
GAS METER STORAGE BUILDING
SERVICE DEPT. PARTS AREA
PAVED PARKING LOT
ELECTRIC T & D STORAGE AREA
GATE HOUSE
PCB STORAGE AREA
ELECTRIC SHOP
GARAGE
ADMIN. BUILDING
LAB
NO. 3 GAS STORAGE HOLDER
PLANT STORAGE
M & R STATION
TOOL ROOM
WELD SHOP
STORE ROOM
FILTER HOUSE
SEDIMENTATION BASIN
A
B
M & R STATION OUTLET VALVES
PASSAIC RIVER
OUTFALL 004
LEGEND:
SOIL STOCK PILE
APPROXIMATE AREA OF EXCAVATION
SOURCE:
PSE&G INTERNAL "DRAFT" DOCUMENT
DATED OCTOBER 20,1995
PSEG
FIGURE 4-9
GAS MAIN EXCAVATION/
CONSTRUCTION AREA
HARRISON GAS PLANT
HARRISON, NEW JERSEY

APPENDIX A

FILED
JUL 25 1985
JANE BURGIO
Secretary of State

CERTIFICATE OF INCORPORATION

of

PUBLIC SERVICE ENTERPRISE GROUP INCORPORATED

849900232

Certificate of Incorporation
of
PUBLIC SERVICE ENTERPRISE GROUP INCORPORATED

The undersigned, a corporation of the State of New Jersey, for the purpose of forming a corporation pursuant to the provisions of the New Jersey Business Corporation Act, does hereby certify as follows:

1. NAME:

The name of the corporation is PUBLIC SERVICE ENTERPRISE GROUP INCORPORATED.

2. PURPOSE:

The purpose for which the corporation is organized is to engage in any activity within the purposes for which corporations may be organized under the New Jersey Business Corporation Act, as from time to time amended or supplemented.

3. STOCK:

The aggregate number of shares which the corporation shall have authority to issue is 150,000,000 shares of Common Stock, without par value.

4. PRE-EMPTIVE RIGHTS:

No holder of shares of stock of any class of the corporation shall be entitled as of right to subscribe for, purchase, or receive any part of any new or additional issue of any class of stock of the corporation or any bonds, debentures, or other securities convertible into any such stock; provided, however, that the corporation shall not issue for cash any shares of Common Stock or securities convertible into Common Stock, in any manner other than by a public offering by competitive bidding or by an offering to or through underwriters or investment bankers who shall have agreed to make a public offering thereof promptly or by a plan for the benefit of employees of the corporation or any subsidiary thereof, without first offering the same to the holders of Common Stock then outstanding.

5. RESTRICTION ON DIVIDENDS:

No dividends shall be paid on any shares of any class of stock of the corporation except out of its earned surplus.

6. CUMULATIVE VOTING:

At all elections of directors each holder of Common Stock shall be entitled to as many votes as shall equal the number of his shares of Common Stock multiplied by the number of directors to be elected, and the stockholder may cast all of such votes for a single director or may distribute them among the number to be voted for, or any two or more of them as he may see fit.

849900233

7. CERTAIN VOTING REQUIREMENTS:

Except as otherwise required by law or this Certificate of Incorporation, action by the stockholders to adopt a proposed amendment to this Certificate of Incorporation or to approve a proposed plan of merger or consolidation involving the corporation or to approve a proposed sale, lease, exchange or other disposition of all, or substantially all, the assets of the corporation, if not in the usual and regular course of its business as conducted by it, or to dissolve, may be taken by the affirmative vote of a majority of the votes cast by the holders of stock of the corporation entitled to vote thereon and, in addition, if any class or series of stock is entitled to vote thereon as a class, by the affirmative vote of a majority of the votes cast in each class vote.

8. INDEMNIFICATION OF DIRECTORS, OFFICERS AND EMPLOYEES:

The corporation shall idemnify to the full extent from time to time permitted by law any person made, or threatened to be made, a party to any pending, threatened or completed civil, criminal, administrative or arbitrative action, suit or proceeding and any appeal therein (and any inquiry or investigation which could lead to such action, suit or proceeding) by reason of the fact that he is or was a director, officer or employee of the corporation or serves or served any other enterprise as a director, officer or employee at the request of the corporation. Such right of indemnification shall inure to the benefit of the legal representative of any such person.

9. CHANGES IN NUMBER OF DIRECTORS; FILLING NEWLY CREATED DIRECTORSHIP:

The number of directors at any time may be increased or (in the event of an existing vacancy) diminished by vote of the Board of Directors, and in case of any such increase the Board of Directors shall have power to elect each such additional director to hold office until the next succeeding annual meeting of stockholders and until his successor shall have been elected and qualified.

10. REMOVAL AND SUSPENSION OF DIRECTORS:

The Board of Directors, by the affirmative vote of a majority of the directors in office, may remove a director or directors for cause where, in the judgment of such majority, the continuation of the director or directors in office would be harmful to the corporation and may suspend the director or directors for a reasonable period pending final determination that cause exists for such removal.

11. QUORUM OF STOCKHOLDERS:

At any meeting of the stockholders of the corporation, the holders of stock entitled to cast a majority of the votes at the meeting, present in person or represented by proxy, shall constitute a quorum of the stockholders for all purposes unless the representation of a larger number shall be required by law, and in that case the representation of the number so required shall constitute a quorum.

849900234

If the holders of the amount of stock necessary to constitute a quorum shall fail to attend in person or by proxy at the time and place fixed for any meeting of stockholders, the meeting may be adjourned from time to time by the vote of a majority of the votes cast by the holders of stock present in person or represented by proxy at such meeting, without notice other than by announcement at the meeting, and at any such adjourned meeting held more than one week after such time the holders of stock entitled to cast 40% of the votes at such meeting, present in person or represented by proxy, shall constitute a quorum of the stockholders for all purposes unless the representation of a larger number shall be required by law, and in that case the representation of the number so required shall constitute a quorum. At any such adjourned meeting, whenever held, at which a quorum shall be present, any business may be transacted which might have been transacted at the meeting as originally called.

12. REGISTERED OFFICE AND AGENT:

The address of the corporation's initial registered office is 80 Park Plaza, Newark, New Jersey 07101, and the name of the corporation's initial registered agent at such address is Robert S. Smith.

13. DIRECTORS:

The number of directors constituting the first Board of Directors of the corporation is four, and the names and addresses of the persons who are to serve as such directors are as follows:

Everett L. Morris	80 Park Plaza, Newark, New Jersey 07101
Frederick W. Schneider	80 Park Plaza, Newark, New Jersey 07101
R. Edwin Selover	80 Park Plaza, Newark, New Jersey 07101
Harold W. Sonn	80 Park Plaza, Newark, New Jersey 07101

14. INCORPORATOR:

The name and address of the incorporator is Public Service Electric and Gas Company, 80 Park Plaza, Newark, New Jersey 07101.

849900235

IN WITNESS WHEREOF, the undersigned, the incorporator of the above-named corporation, has caused this Certificate of Incorporation to be executed this 25th day of July, 1985.

PUBLIC SERVICE ELECTRIC
AND GAS COMPANY

By /s/ HAROLD W. SONN
(Harold W. Sonn)
Chairman of the Board,
President and
Chief Executive Officer

849900236

Certificate of Amendment
FILED
APRIL 23, 1987
JANE BURGIO
Secretary of State

Certificate of Amendment

of

Certificate of Incorporation

of

PUBLIC SERVICE ENTERPRISE GROUP INCORPORATED

Increasing authorized Common Stock from 150,000,000 shares to 500,000,000 shares, authorizing a new class of 50,000,000 shares of Preferred Stock, requiring 80% shareholder approval of certain mergers and other business combinations under certain conditions, classifying the Board of Directors into three classes of Directors, requiring 80% shareholder approval for certain By-Law amendments and limiting personal liability of directors and officers.

Effective April 23, 1987

849900237

849900238

Certificate of Amendment
of
Certificate of Incorporation
of
Public Service Enterprise Group Incorporated

Public Service Enterprise Group Incorporated, a New Jersey corporation, does hereby certify, pursuant to subsection 14A:9-4(3) of the New Jersey Business Corporation Act, as amended, that:

1. The name of this corporation is "Public Service Enterprise Group Incorporated".

2. The date of adoption of the amendments set forth in this Certificate of Amendment by the stockholders was April 21, 1987.

3. The number of shares entitled to vote on the amendments set forth in this Certificate of Amendment was 134,981,136 shares of Common Stock.

4. (a) Article 3 of the Certificate of Incorporation dated July 25, 1985 of this corporation has been amended, by vote of the stockholders of this corporation, so as to increase the authorized Common Stock from 150,000,000 shares to 500,000,000 shares.

(b) The number of votes cast by the holders of Common Stock for and against said amendment were as follows:

For	Against
94,590,268	10,575,620

5. (a) Article 3 of the Certificate of Incorporation dated July 25, 1985 of this corporation has been further amended, by vote of the stockholders of this corporation, to authorize a new class of 50,000,000 shares of Preferred Stock.

(b) The number of votes cast by the holders of Common Stock for and against said amendment were as follows:

For	Against
78,616,663	18,109,174

6. (a) Article 8 of the Certificate of Incorporation dated July 25, 1985 of this corporation has been amended, by vote of the stockholders of this corporation, so as to add a provision to limit the personal liability of directors and officers.

(b) The number of votes cast by the holders of Common Stock for and against said amendment were as follows:

For	Against
94,974,819	8,797,560

7. (a) The Certificate of Incorporation dated July 25, 1985 of this corporation has been amended by adding new Articles 9, 10 and 11 to (i) require 80% shareholder approval of certain mergers and other business combinations unless certain fair price voting and procedural requirements are met or the transaction is approved by a majority of disinterested directors, (ii) classify the Board of Directors, (iiii) require 80% shareholder approval for certain by-law amendments, and (iv) make related changes; and as a result of said amendments, existing Articles 9 and 10 of the Certificate of Incorporation dated July 25, 1985 of this corporation have been deleted and existing Articles 11 through 14 of said Certificate of Incorporation have been renumbered as Articles 12 through 15.

(b) The number of votes cast by the holders of Common Stock for and against said amendments were as follows:

For	Against
75,011,767	22,322,471

8. The amendments of the Certificate of Incorporation dated July 25, 1985 of this corporation, which were adopted by the stockholders of this corporation on April 21, 1987 as aforesaid, are as follows:

(a) Article 3 was amended to read as follows:

" 3. STOCK:

SECTION 1. Capital Stock. The corporation shall have the authority to issue 500,000,000 shares of Common Stock, without par value, and 50,000,000 shares of Preferred Stock, without par value.

SECTION 2. Preferred Stock. The Board of Directors shall have authority to issue the shares of Preferred Stock from time to time on such terms as it may determine, and to divide the Preferred Stock into one or more classes or series and in connection with the creation of any such class or series to fix, by resolution or resolutions providing for the issue thereof, the designation, the number of shares, and the relative rights, preferences and limitations thereof, to the full extent now or hereafter permitted by law. "

(b) Article 8 was amended to read as follows:

" 8. INDEMNIFICATION; LIMITATION OF LIABILITY:

SECTION 1. Indemnification. The corporation shall indemnify to the full extent from time to time permitted by law any person made, or threatened to be made, a party to any pending, threatened or completed civil, criminal, administrative or arbitrative action, suit or proceeding and any appeal therein (and any inquiry or investigation which could lead to such action, suit or proceeding) by reason of the fact that he is or was a director, officer or employee of the corporation or serves or served any other enterprise as a director, officer or employee at the request of the corporation. Such right of indemnification shall inure to the benefit of the legal representative of any such person.

SECTION 2. Limitation of Liability. To the full extent from time to time permitted by law, directors and officers of the corporation shall not be personally liable to the corporation or its shareholders for damages for breach of any duty owed to the corporation or its shareholders. No amendment or repeal of this provision shall adversely affect any right or protection of a director or officer of the corporation existing at the time of such amendment or repeal. "

(c) New Articles 9, 10 and 11 were added, existing Articles 9 and 10 were deleted, and existing Articles 11 through 14 were renumbered as Articles 12 through 15. New Articles 9, 10 and 11 read as follows:

" 9. CERTAIN BUSINESS COMBINATIONS:

SECTION 1. Vote Required for Certain Business Combinations. In addition to any affirmative vote required by law and except as otherwise expressly provided in Section 2 of this Article 9:

(a) any merger or consolidation of the corporation or any Subsidiary (hereinafter defined) with (i) any Interested Shareholder (hereinafter defined) or (ii) any other corporation (whether or not itself an Interested Shareholder) which is, or after such merger or consolidation would be, an Affiliate (hereinafter defined) of an Interested Shareholder; or

(b) any sale, lease, exchange, mortgage, pledge, transfer or other disposition (in one transaction or a series of transactions) to or with any Interested Shareholder or any Affiliate of any Interested Shareholder of any assets of the corporation or any Subsidiary having an aggregate Fair Market Value (hereinafter defined) of $25,000,000 or more; or

(c) the issuance or transfer by the corporation or any Subsidiary (in one transaction or a series of transactions) of any securities of the corporation or any Subsidiary to any Interested Shareholder or Affiliate of any Interested Shareholder in exchange for cash, securities or other property (or a combination thereof) having an aggregate Fair Market Value of $25,000,000 or more; or

(d) the adoption of any plan or proposal for the liquidation or dissolution of the corporation proposed by or on behalf of any Interested Shareholder or any Affiliate of any Interested Shareholder; or

(e) any reclassification of securities (including any reverse stock split), recapitalization of the corporation, any merger or consolidation of the corporation with any of its Subsidiaries or any other transaction (whether or not with or into or otherwise involving an Interested Shareholder) which has the effect, directly or indirectly, of increasing the proportionate share of the outstanding shares of any class of equity or convertible securities of the corporation or any Subsidiary which is directly or indirectly owned by any Interested Shareholder or any Affiliate of any Interested Shareholder;

shall require prior approval by the affirmative vote of 80% of the votes which the holders of the then outstanding shares of capital stock of the corporation are entitled to vote in the election of directors (the "Voting Stock"), voting together as a single class (each share of the Voting Stock having a number of votes duly fixed by the Board of Directors pursuant to Article 3 of the Certificate of Incorporation or provided by the By-Laws). Such affirmative vote shall be required notwithstanding the fact that no vote may be required, or that a lesser percentage may be specified, by law or in any agreement with any national securities exchange or otherwise. The term "Business Combination" as used in this Article 9 shall mean any transaction which is referred to in any one or more of paragraphs (a) through (e) of this Section 1.

SECTION 2. Exceptions to 80% Vote. The provisions of Section 1 of this Article 9 shall not be applicable to any particular Business Combination (and such Business Combination shall require only such affirmative vote which may be required by law or otherwise) if all of the conditions specified in either of the following paragraphs (a) or (b) are met:

(a) The Businesss Combination shall have been approved by majority vote of the Disinterested Directors (hereinafter defined).

(b) All of the following conditions shall have been met:

(i) The aggregate amount of the cash and the Fair Market Value, as of the date of the consummation of the Business Combination, of consideration other than cash to be received per share by holders of Common Stock in such Business Combination shall be at least equal to the higher of:

(1) if applicable, the highest per share price (including any brokerage commissions, transfer taxes and soliciting dealers' fees) paid by the Interested Shareholder for any shares of Common Stock acquired by it (x) within the two-year period immediately prior to the first public announcement of the proposal of the Business Combination (the "Announcement Date") or (y) in the transaction in which it became an Interested Shareholder, whichever is higher; or

(2) the Fair Market Value per share of Common Stock on the Announcement Date or on the date (the "Determination Date") on which the Interested Shareholder became an Interested Shareholder, whichever is higher.

(ii) The aggregate amount of the cash and the Fair Market Value, as of the date of the consummation of the Business Combination, of consideration other than cash to be received per share by holders of shares of any class or series of outstanding Voting Stock other than Common Stock shall be at least equal to the highest of the following (it being intended that the requirements of this paragraph (b)(ii) shall be

met with respect to every such class or series whether or not the Interested Shareholder has previously acquired any shares thereof):

(1) if applicable, the highest per share price (including any brokerage commissions, transfer taxes and soliciting dealers' fees) paid by the Interested Shareholder for any shares of such class or series acquired by it (x) within the two-year period immediately prior to the Announcement Date or (y) in the transaction in which it became an Interested Shareholder, whichever is higher; or

(2) if applicable, the highest preferential amount per share to which the holders of shares of such class or series are entitled in the event of any voluntary or involuntary liquidation, dissolution or winding up of the corporation; or

(3) the Fair Market Value per share of such class or series on the Announcement Date or on the Determination Date, whichever is higher.

(iii) The consideration to be received by holders of a particular class or series of outstanding Voting Stock (including Common Stock) shall be in cash or in the same form as the Interested Shareholder has previously paid for shares of such class or series of Voting Stock. If the Interested Shareholder has paid for shares of any class or series of Voting Stock with varying forms of considerations, the form of consideration for such class or series shall be either cash or the form used to acquire the largest number of shares of such class or series previously acquired by it. The price determined in accordance with paragraphs (b)(i) and (b)(ii) of this Section 2 shall be subject to appropriate adjustment in the event of any stock dividend, stock split, combination of shares or similar event.

(iv) After such Interested Shareholder has become an Interested Shareholder and prior to the consummation of such Business Combination: (1) except as approved by a majority of the Disinterested Directors, there shall have been no failure to declare and pay at the regular date therefor any dividends (whether or not cumulative) on any outstanding series of Preferred Stock; (2) there shall have been (x) no reduction in the annual rate of dividends paid on the Common Stock (except as necessary to reflect any subdivisions of the Common Stock), except as approved by a majority of the Disinterested Directors, and (y) an increase in such annual rate of dividends as nescessary to reflect any reclassification (including any reverse stock split), recapitalization, reorganization or any similar transaction which has the effect of reducing the number of outstanding shares of Common Stock, unless the failure to so increase such annual rate is approved by a majority of the Disinterested Directors; and (3) such Interested Shareholder shall have not become the beneficial owner of any additional shares of Voting Stock except as part of the transaction which results in such Interested Shareholder becoming an Interested Shareholder.

(v) After such Interested Shareholder has become an Interested Shareholder, such Interested Shareholder shall not have received the benefit, directly or indirectly (except proportionately as a shareholder), of any loans, advances, guarantees, pledges or other financial assistance, or any tax credits or other tax advantages, provided by the corporation, whether in anticipation of or in connection with such Business Combination or otherwise.

(vi) A proxy or information statement describing the proposed Business Combination and complying with the requirements of the Securities Exchange Act of 1934 and the rules and regulations thereunder (or any subsequent provisions replacing such act, rules or regulations) shall be mailed to shareholders of the corporation at least 30 days prior to the consummation of such Business Combination (whether or not such proxy or information statement is required to be mailed pursuant to such act, rules and regulations or subsequent provisions).

SECTION 3. Certain Definitions. For the purposes of this Article 9:

(a) "Person" shall mean any individual, firm, corporation or other entity.

(b) "Interested Shareholder" shall mean any person (other than the corporation or any Subsidiary) who or which:

(i) is the beneficial owner, directly or indirectly, of shares having 10% or more of the votes of the then outstanding Voting Stock; or

(ii) is an Affiliate of the corporation and at any time within the two-year period immediately prior to the date in question was the beneficial owner, directly or indirectly, of shares having 10% or more of the votes of the then outstanding Voting Stock; or

(iii) is an assignee of or has otherwise succeeded to any shares of Voting Stock which were at any time within the two-year period immediately prior to the date in question beneficially owned by any Interested Shareholder, if such assignment or succession shall have occurred in the course of a transaction or series of transactions not involving a public offering within the meaning of the Securities Act of 1933.

(c) A person shall be a "beneficial owner" of any Voting Stock:

(i) which such person, or any of its Affiliates or Associates (as hereinafter defined), beneficially owns, directly or indirectly; or

(ii) which such person, or any of its Affiliates or Associates, has (1) the right to acquire (whether such right is exercisable immediately or only after the passage of time) pursuant to any agreement, arrangement or understanding or upon the exercise of conversion rights, exchange rights, warrants or options or otherwise, or (2) the right to vote pursuant to any agreement, arrangement or understanding; or

(iii) which is beneficially owned, directly or indirectly, by any other person with which such person or any of its Affiliates or Associates has any agreement, arrangement or understanding for the purpose of acquiring, holding, voting or disposing of any shares of Voting Stock.

For the purposes of determining whether a person is an Interested Shareholder, the number of shares of Voting Stock deemed to be outstanding shall include shares deemed owned through application of this paragraph (c) of Section 3 but shall not include any other shares of Voting Stock which may be issuable pursuant to any agreement, arrangement or understanding, or upon exercise of conversion rights, warrants or options or otherwise.

(d) "Affiliate" or "Associate" shall have the respective meanings given for such terms in Rule 12b-2 of the General Rules and Regulations under the Securities Exchange Act of 1934, as in effect on January 1, 1987.

(e) "Subsidiary" shall mean any corporation of which a majority of the voting shares is owned, directly or indirectly, by the corporation.

(f) "Disinterested Director" shall mean any member of the Board of Directors of the corporation who is not an Affiliate, Associate or representative of the Interested Shareholder and was a member of the Board of Directors prior to the time that the Interested Shareholder became an Interested Shareholder, and any successor of a Disinterested Director who is not an Affiliate, Associate or representative of the Interested Shareholder and was recommended or elected to succeed a Disinterested Director by a majority of Disinterested Directors then on the Board of Directors.

(g) "Fair Market Value" shall mean:

(i) in the case of stock, the highest closing sale price during the 30-day period immediately preceding the date in question on the Composite Tape for New York Stock Exchange-Listed Stocks, or, if such stock is not quoted on the Composite Tape, on the New York Stock Exchange, or, if such stock is not listed on such exchange, on the principal United States securities exchange registered under the Securities Exchange Act of 1934 on which such stock is listed, or, if such stock is not listed on any such exchange, the highest closing bid quotation with respect to a share of such stock during the 30-day

period preceding the date in question on the National Asssociation of Securities Dealers, Inc. Automated Quotations System or any system then in use, or if no such quotations are available, the fair market value on the date in question as determined by a majority of the Disinterested Directors in good faith; or

(ii) in the case of property other than stock, the fair market value of such property on the date in question as determined by a majority of the Disinterested Directors in good faith.

(h) In the event of any Business Combination in which the corporation survives, the phrase "consideration other than cash to be received" as used in paragraphs (b)(i) and (ii) of Section 2 of this Article 9 shall include the shares of Common Stock and/or the shares of any other class of outstanding Voting Stock retained by the holders of such shares.

SECTION 4. Powers of the Board of Directors. The Board of Directors shall have the power and duty, by majority vote of the Disinterested Directors, to determine for the purposes of this Article 9, on the basis of information known to them after reasonable inquiry, (a) whether a person is an Interested Shareholder, (b) the number of shares of Voting Stock beneficially owned by any person, (c) whether a person is an Affiliate or Associate of another, and (d) whether the assets which are the subject of any Business Combination have, or the consideration to be received for the issuance or transfer of securities by the corporation or any Subsidiary in any Business Combination has, an aggregate Fair Market Value of $25,000,000 or more. A majority of the Disinterested Directors shall also have the power to interpret all of the other terms and provisions of this Article 9 and to make any other factual determinations in regard to the applicability of this Article 9. Any interpretations or determination made in good faith by majority vote of the Disinterested Directors with regard to application of this Article 9 on the basis of such information as was then available for such purpose shall be conclusive and binding on the corporation and on all of its shareholders, including any Interested Shareholder.

SECTION 5. No Effect on Fiduciary Obligations of Interested Shareholders. Nothing contained in this Article 9 shall be construed to relieve any Interested Shareholder from any fiduciary obligations imposed by law.

SECTION 6. Severability. In the event any provision (or part thereof) of this Article 9 should be determined to be invalid, prohibited or unenforceable for any reason, the remaining provisions, and parts thereof, shall remain in full force and effect and enforceable against the corporation and its shareholders, including any Interested Shareholder, to the fullest extent permitted by law.

SECTION 7. Amendment. Notwithstanding any other provisions of this Certificate of Incorporation, the By-Laws of the corporation or applicable law, the affirmative vote of 80% of the votes of the then outstanding Voting Stock, voting together as a single class, shall be required (a) to amend, modify or repeal this Article 9, (b) adopt any provision to this Certificate of Incorporation or By-Laws which is inconsistent with this Article 9, or (c) prior to the fixing by the

Board of Directors of any right or preference of any series of Preferred Stock which is inconsistent with the provisions of this Article 9."

" 10. BOARD OF DIRECTORS:

SECTION 1. Number, election and terms. Except as otherwise fixed by or pursuant to the provisions of Article 3 hereof relating to the rights of the holders of any class or series of stock having a preference over the Common Stock as to dividends or upon liquidation to elect additional directors under specified circumstances, the number of the directors of the corporation shall be fixed from time to time by or pursuant to the By-Laws of the corporation. The directors, other than those who may be elected by the holders of any class of series of stock having a preference over the Common Stock as to dividends or upon liquidation, shall be classified, with respect to the time for which they severally hold office, into three classes, as nearly equal in number as possible, as shall be provided in the manner specified in the By-Laws of the corporation, one class to be originally elected for a term expiring at the annual meeting of stockholders to be held in 1988, another class to be originally elected for a term expiring at the annual meeting of stockholders to be held in 1989, and another class to be originally elected for a term expiring at the annual meeting of stockholders to be held in 1990, with the directors in each class to hold office until their respective successors are elected and qualified. At each annual meeting of the stockholders of the corporation, the successors of the class of directors whose term expires at that meeting shall be elected to hold office for a term expiring at the annual meeting of stockholders held in the third year following the year of their election and until their respective successors are elected and qualified.

SECTION 2. Stockholder nomination of director candidates. Advance notice of shareholder nominations for the election of directors shall be given in the manner provided in the By-Laws of the corporation.

SECTION 3. Newly created directorships and vacancies. Except as otherwise provided for or fixed by or pursuant to the provisions of Article 3 hereof relating to the rights of the holders of any class or series of stock having a preference over the Common Stock as to dividends or upon liquidation to elect directors under specified circumstances, newly created directorships resulting from any increase in the number of directors and any vacancies on the Board of Directors resulting from death, resignation, disqualification, removal or other cause shall be filled by the affirmative vote of a majority of the remaining directors then in office, even though less than a quorum of the Board of Directors. Any director elected in accordance with the preceding sentence shall hold office until the next succeeding annual meeting of shareholders and until such director's successor, who shall be elected for the remainder of the full term of the class of directors in which the new directorship was created or the vacancy occurred, shall have been elected and qualified. No decrease in the number of directors constituting the Board of Directors shall shorten the term of any incumbent director.

SECTION 4. Removal and Suspension. Subject to the rights of any class or series of stock having a preference over the Common Stock as to dividends or upon liquidation to elect directors under specified circumstances, any director may be removed from office without cause only by the affirmative vote of the holders of 80% of the combined voting power of the then outstanding shares of stock entitled to vote generally in the election of directors, voting together as a single class. The Board of Directors, by the affirmative vote of a majority of the directors in office, may remove a director or directors for cause where, in the judgment of such majority, the continuation of the director or directors in office would be harmful to the corporation and may suspend the director or directors for a reasonable period pending final determination that cause exists for such removal.

SECTION 5. Amendment, repeal, etc. Notwithstanding anything in this Certificate of Incorporation to the contrary, the affirmative vote of the holders of at least 80% of the voting power of all shares of the corporation entitled to vote generally in the election of directors, voting together as a single class, shall be required to alter, amend, adopt any provision inconsistent with or repeal this Article 10."

" 11. BY-LAW AMENDMENTS:

The Board of Directors shall have power to make, alter, amend and repeal the By-Laws of the corporation (except so far as the By-Laws of the corporation adopted by the shareholders shall otherwise provide). Any By-Laws made by the Directors under the powers conferred hereby may be altered, amended or repealed by the directors or by the shareholders. Notwithstanding the foregoing and anything contained in this Certificate of Incorporation to the contrary, Article I, Section 1; Article IX, Section 9; and Article XVI of the By-Laws shall not be altered, amended or repealed and no provision inconsistent therewith shall be adopted without the affirmative vote of the holders of at least 80 % of the voting power of all the shares of the corporation entitled to vote generally in the election of directors, voting together as a single class. Notwithstanding anything contained in this Certificate of Incorporation to the contrary, the affirmative vote of the holders of at least 80% of the voting power of all the shares of the corporation entitled to vote generally in the election of directors, voting together as a single class, shall be required to alter, amend, or adopt any provision inconsistent with or repeal this Article 11."

IN WITNESS WHEREOF, said Public Service Enterprise Group Incorporated has made this Certificate this 23rd day of April, 1987.

PUBLIC SERVICE ENTERPRISE GROUP INCORPORATED

By E. JAMES FERLAND

E. James Ferland

Chairman of the Board, President
and Chief Executive Officer

Attest:

D. S. POCIUS

Assistant Secretary

(Corporate Seal)

849900248

UNITED STATES
SECURITIES AND EXCHANGE COMMISSION
WASHINGTON, D.C. 20549

FORM 10-K

☒ ANNUAL REPORT PURSUANT TO SECTION 13 OR 15(d) OF THE SECURITIES EXCHANGE ACT OF 1934
For the fiscal year ended December 31, 1995

Commission file number 1-9120

Public Service Enterprise Group Incorporated

(Exact name of registrant as specified in its charter)

New Jersey (State or other jurisdiction of incorporation or organization)	22-2625848 (I.R.S. Employer Identification No.)
80 Park Plaza, P.O. Box 1171 Newark, New Jersey (Address of principal executive offices)	07101-1171 (Zip Code)

Registrant's telephone number, including area code: 201 430-7000

Securities registered pursuant to Section 12(b) of the Act:

Title of Each Class	Name of Each Exchange on Which Registered
Common Stock without par value	New York Stock Exchange Philadelphia Stock Exchange

Commission file number 1-973

Public Service Electric and Gas Company

(Exact name of registrant as specified in its charter)

New Jersey (State or other jurisdiction of incorporation or organization)	22-1212800 (I.R.S. Employer Identification No.)
80 Park Plaza, P.O. Box 570 Newark, New Jersey (Address of principal executive offices)	07101-0570 (Zip Code)

Registrant's telephone number, including area code: 201 430-7000

DOCUMENTS INCORPORATED BY REFERENCE

Part of Form 10-K	Documents Incorporated by Reference
III	Portions of the definitive Proxy Statement for the Annual Meeting of Stockholders of Public Service Enterprise Group Incorporated to be held April 16, 1996, which definitive Proxy Statement is expected to be filed with the Securities and Exchange Commission on or about March 1, 1996, as specified herein.

Securities registered pursuant to Section 12(b) of the Act:

Title of Each Class	Title of Each Class	Name of Each Exchange on Which Registered
Cumulative Preferred Stock $100 par value Series:	First and Refunding Mortgage Bonds Series Due:	
4.08%	8¾% Z 1999	New York Stock Exchange
4.18%	9⅛% BB 2005	
4.30%	9¼% CC 2021	
5.05%	8⅞% DD 2003	
5.28%	8¾% EE 2021	
5.97%	7⅞% FF 2001	
6.80%	7⅛% GG 1997	
7.40%	8¾% HH 2022	
7.44%	7⅝% II 2000	
7.52%	6⅞% KK 1997	
7.70%	8½% LL 2022	
	6⅞% MM 2003	
	6 % NN 1998	
Cumulative Preferred Stock $25 par value Series:	7½% OO 2023	
	6½% PP 2004	
	6 % QQ 2000	
6.75%	6⅛% RR 2002	
	7 % SS 2024	
	7⅜% TT 2014	
	6¾% UU 2006	
	6¾% VV 2016	
	6¼% WW 2007	
	8 % 2037	
	5 % 2037	
Monthly Income Preferred Securities $25 par Value Series:		
9.375%		
8.00%		

Securities registered pursuant to Section 12(g) of the Act:

Registrant	Title of Class
Public Service Enterprise Group Incorporated	None
Public Service Electric and Gas Company	6.92% Cumulative Preferred Stock $100 par value Medium-Term Notes, Series A

Indicate by check mark whether the registrants (1) have filed all reports required to be filed by Section 13 or 15(d) of the Securities Exchange Act of 1934 during the preceding 12 months (or for such shorter period that the registrants were required to file such reports) and (2) have been subject to such filing requirements for the past 90 days. Yes X No __.

Indicate by check mark if disclosure of delinquent filers pursuant to Item 405 of Regulation S-K is not contained herein, and will not be contained, to the best of registrant's knowledge, in definitive proxy or information statements incorporated by reference in Part III of this Form 10-K or any amendment to this Form 10-K. X

The aggregate market value of the Common Stock of Public Service Enterprise Group Incorporated held by non-affiliates as of January 31, 1996 was $7,642,239,750 based upon the New York Stock Exchange Composite Transaction closing price.

The number of shares outstanding of Enterprise's sole class of common stock, as of the latest practicable date, was as follows:

Class	Outstanding at January 31, 1996
Common Stock, without par value	244,697,930

As of January 31, 1996, Public Service Electric and Gas Company had issued and outstanding 132,450,344 shares of Common Stock, without nominal or par value, all of which were privately held, beneficially and of record by Public Service Enterprise Group Incorporated (Enterprise).

TABLE OF CONTENTS

	Page
Table of Contents	i
Glossary of Terms	v
PART I	
Item 1. Business	1
General	1
Enterprise	1
PSE&G	1
Industry Issues	2
Competition	2
Overview	2
Electric	3
Gas	4
Construction and Capital Requirements	5
Financing Activities	5
Federal Income Taxes	5
Credit Ratings	5
PSE&G	5
Rate Matters	5
Nuclear Performance Standard	6
Customers	6
Integrated Resource Plan	7
Pennsylvania—New Jersey—Maryland Interconnection	7
Power Purchases	8
Demand Side Management	9
Electric Generating Capacity	9
Nuclear Operations	10
Salem	10
Hope Creek	12
Peach Bottom	13
Other Nuclear Matters	14
Nuclear Decommissioning	14
Electric Fuel Supply and Disposal	15
Nuclear Fuel	15
Coal	16
Natural Gas	16
Oil	16
Nuclear Fuel Disposal	17
Low Level Radioactive Waste (LLRW)	17
Gas Operations and Supply	18
Employee Relations	19
Regulation	19
Environmental Controls	21
Air Pollution Control	22
Water Pollution Control	24
Control of Hazardous Substances	26
PSE&G Manufactured Gas Plant Remediation Program	26

849900251

		Page
	Other Sites	26
	Hazardous Substances	26
	Other Potential Liability	30
	Consolidated Financial Statistics of Enterprise	32
	Operating Statistics of PSE&G	33
	EDHI	34
	EDC	34
	CEA	34
	PSRC	35
	EGDC	35
	Capital	35
	Funding	35
Item 2.	Properties	36
	PSE&G	36
	Electric Properties	37
	Gas Properties	38
	Office Buildings and Facilities	38
Item 3.	Legal Proceedings	39
Item 4.	Submission of Matters to a Vote of Security Holders	39
Item 10.	Executive Officers of the Registrants	39
PART II		
Item 5.	Market for Registrant's Common Equity and Related Stockholder Matters	40
Item 6.	Selected Financial Data	41
	Enterprise	41
	PSE&G	41
Item 7.	Management's Discussion and Analysis of Financial Condition and Results of Operations	42
	Enterprise	42
	Overview	42
	Competition	42
	Accounting for the Effects of Regulation	45
	PSE&G Energy and Fuel Adjustment Clauses	45
	Accounting for Stock Compensation	46
	Corporate Policy for the Use of Derivatives	46
	Nuclear Operations	46
	Results of Operations	46
	PSE&G—Earnings Available to Enterprise	47
	PSE&G—Revenues	47
	Electric	47
	Gas	47
	PSE&G—Expenses	48
	Fuel Expenses	48
	Other Operation Expenses	48
	Maintenance Expenses	48
	Depreciation and Amortization Expenses	48
	Federal Income Taxes	48
	Interest Charges	49
	Allowance for Funds Used During Construction	49
	Preferred Securities	49
	EDHI—Net Income	49
	Dividends	49

849900252

		Page
	Liquidity and Capital Resources	50
	PSE&G	50
	EDHI	50
	Long-Term Investments and Real Estate	51
	Construction, Investments and Other Capital Requirements Forecast	52
	Internal Generation of Cash from Operations	52
	External Financings	52
	PSE&G	52
	EDHI	53
	PSE&G	53
Item 8.	Financial Statements and Supplementary Data	54
	Financial Statement Responsibility (Enterprise)	54
	Financial Statement Responsibility (PSE&G)	55
	Independent Auditors' Report (Enterprise)	56
	Independent Auditors' Report (PSE&G)	57
	Consolidated Statements of Income (Enterprise)	59
	Consolidated Balance Sheets (Enterprise)	60
	Consolidated Statements of Cash Flows (Enterprise)	62
	Consolidated Statements of Retained Earnings (Enterprise)	63
	Consolidated Statements of Income (PSE&G)	65
	Consolidated Balance Sheets (PSE&G)	66
	Consolidated Statements of Cash Flows (PSE&G)	68
	Consolidated Statements of Retained Earnings (PSE&G)	69
	Notes to Consolidated Financial Statements (Enterprise)	70
	Notes to Consolidated Financial Statements (PSE&G)	102
PART III		
Item 9.	Changes in and Disagreements with Accountants on Accounting and Financial Disclosure	106
Item 10.	Directors and Executive Officers of the Registrants	106
	Directors of the Registrants	106
	Enterprise	106
	PSE&G	106
	Executive Officers of the Registrants	107
Item 11.	Executive Compensation	109
	Enterprise	109
	PSE&G	109
	Summary Compensation Table	109
	Option Grants in Last Fiscal Year (1995)	111
	Aggregated Option Exercises in Last Fiscal Year and Fiscal Year-End Option Values (12/31/95)	111
	Employment Contracts and Arrangements	112
	Compensation Committee Interlocks and Insider Participation	112
	Compensation of Directors and Certain Business Relationships	112
	Compensation Pursuant to Pension Plans	113
Item 12.	Security Ownership of Certain Beneficial Owners and Management	113
	Enterprise	113
	PSE&G	113
Item 13.	Certain Relationships and Related Transactions	114
	Enterprise	114
	PSE&G	114

849900253

		Page
PART IV		
Item 14.	Exhibits, Financial Statement Schedules, and Reports on Form 8-K	115
	Schedule II — Valuation and Qualifying Accounts (Enterprise)	117
	Schedule II — Valuation and Qualifying Accounts (PSE&G)	118
	Signatures—Public Service Enterprise Group Incorporated	119
	Signatures—Public Service Electric and Gas Company	120
	Exhibit Index	121
	Enterprise	122
	PSE&G	129

849900254

GLOSSARY OF TERMS

The following is a glossary of frequently used abbreviations or acronyms that are found in this report:

Term	Meaning
ACO	Administrative Consent Order
AFDC	Allowance for Funds used During Construction
Alternative Rate Plan	New Jersey Partners in Power Plan
AMT	Alternative Minimum Tax
BCFE	Billion Cubic Feet Equivalent
Bonds	First and Refunding Mortgage Bonds
BPU	New Jersey Board of Public Utilities
BTA	Best Technology Available
BWR	Boiling Water Reactor
CAA	Federal Clean Air Act
Capital	PSEG Capital Corporation
CEA	Community Energy Alternatives Incorporated
CEA USA	CEA USA, Inc.
CEA New Jersey	CEA New Jersey, Inc.
CERCLA	Federal Comprehensive Environmental Response, Compensation and Liability Act of 1980
Certificate of Need	Certificate of Need under the NJNAA
CORP	New Jersey Commission on Radiation Protection
DGW	Discharge to Ground Water
DOE	United States Department of Energy
DRBC	Delaware River Basin Commission
DRIP	Enterprise's Dividend Reinvestment and Stock Purchase Plan
DSM	Demand Side Management
DSW	Discharge to Surface Water
Eagle Point	CEA Eagle Point, Inc.
EBIT	Earnings before interest and taxes
ECRA	New Jersey Environmental Cleanup Responsibility Act
EDC	Energy Development Corporation
EDHI	Enterprise Diversified Holdings Incorporated
EGDC	Enterprise Group Development Corporation
EITF	FASB's Emerging Issues Task Force
EMF	Electric and Magnetic Fields
Enterprise	Public Service Enterprise Group Incorporated
EPA	United States Environmental Protection Agency
EPAct	National Energy Policy Act of 1992
EPC	Eagle Point Cogeneration Facility
EWGs	Exempt Wholesale Generators
FASB	Financial Accounting Standards Board
Fault Act	New Jersey Public Utility Accident Fault Determination Act
FERC	Federal Energy Regulatory Commission
Fuelco	PSE&G Fuel Corporation
Funding	Enterprise Capital Funding Corporation
FWPCA	Federal Water Pollution Control Act
GE	General Electric
GEMS	Gloucester Environmental Management Services, Inc.
Hope Creek	Hope Creek Nuclear Generating Station
IPP	Independent Power Producers

849900255

Term	Meaning
IRP	Integrated Resource Plan
IRS	Internal Revenue Service
ISO	Independent System Operator
KWH	Kilowatthours
LEAC	Electric Levelized Energy Adjustment Clause
LGAC	Levelized Gas Adjustment Charge
LLRW	Low Level Radioactive Waste
LNG	Liquefied Natural Gas
LPG	Liquid Petroleum Air Gas
LTIP	Long-Term Incentive Plan
MAAC	Mid-Atlantic Area Reliability Council
MD&A	Management's Discussion and Analysis of Financial Condition and Results of Operations
MICP	Management Incentive Compensation Plan
mmbtu	Millions of British Thermal Units
MOA	Memorandum of Agreement
Mortgage	First and Refunding Mortgage of PSE&G
MTNs	Medium-Term Notes
MW	Megawatts
MWH	Megawatthours
NAAQS	National Ambient Air Quality Standards
NEIL	Nuclear Electric Insurance Limited
NJAPCC	New Jersey Air Pollution Control Code
NJDEP	New Jersey Department of Environmental Protection
NJGRT	New Jersey Gross Receipts and Franchise Tax
NJNAA	New Jersey Need Assessment Act
NJPDES	New Jersey Pollution Discharge Elimination System
NJWPCA	New Jersey Water Pollution Control Act
NML	Nuclear Mutual Limited
NOC	Nuclear Oversight Committee
NOPR	Notice of Proposed Rulemaking
NOV	Notice of Violation
NOx	Nitrogen Oxides
NPDES	National Pollutant Discharge Elimination System
NPS	The BPU's nuclear performance standard established for nuclear generating stations owned by New Jersey electric utilities
NRC	Nuclear Regulatory Commission
NUGs	Nonutility Generators
NWPA	Nuclear Waste Policy Act of 1982, as amended
OAL	Office of Administrative Law of the State of New Jersey
OPEB	Other Postretirement Benefits
OTAG	Ozone Transport Assessment Group
Partnership	Public Service Electric and Gas Capital, L.P.
Peach Bottom	Peach Bottom Atomic Power Station, Units 2 and 3
PECO	PECO Energy Inc.
PJM	Pennsylvania—New Jersey—Maryland Interconnection
PJP	PJP Landfill in Jersey City, New Jersey
POTW	Publicly Owned Treatment Works
PPUC	Pennsylvania Public Utility Commission
Price Anderson	Price-Anderson liability provisions of the Atomic Energy Act of 1954, as amended

849900256

Term	Meaning
PRAP	Proposed Remedial Action Plan
PRPs	Potentially Responsible Parties
PSE&G	Public Service Electric and Gas Company
PSCRC	Public Service Conservation Resources Corporation
PSRC	Public Service Resources Corporation
PUHCA	Public Utility Holding Company Act of 1935
PURPA	Public Utility Regulatory Policies Act of 1978
PWR	Pressurized Water Reactor
QFs	Qualifying Facilities
RAC	Remediation Adjustment Charge
RACT	Reasonable Available Control Technologies
RAR	Revenue Agent's Report
RCRA	Federal Resource Conservation and Recovery Act of 1976
Remediation Program	PSE&G Gas Plant Remediation Program
RI	Remedial Investigation
RI/FS	Remedial Investigation and Feasibility Study
RIPW	Remedial Investigation Work Plan
ROD	Record of Decision
Salem	Salem Nuclear Generating Station, Units 1 and 2
SALP	Systematic Assessment of Licensee Performance
SEC	Securities and Exchange Commission
SFAS 71	Statement of Financial Accounting Standards No. 71, "Accounting for the Effects of Certain Types of Regulation"
SFAS 106	Statement of Financial Accounting Standards No. 106, "Employers' Accounting for Postretirement Benefits Other than Pensions"
SFAS 107	Statement of Financial Accounting Standards No. 107, "Disclosures About Fair Value of Financial Instruments"
SFAS 109	Statement of Financial Accounting Standards No. 109, "Accounting for Income Taxes"
SFAS 121	Statement of Financial Accounting Standards No. 121, "Accounting for the Impairment of Long-Lived Assets"
SFAS 123	Statement of Financial Accounting Standards No. 123, "Accounting for Stock Based Compensation"
SIU	Significant Industrial Users
SNG Plant	Synthetic Natural Gas Plant
Spill Act	New Jersey Spill Compensation and Control Act
SPPP	Stormwater Pollution Prevention Plans
USDOT	United States Department of Transportation
USEC	United States Enrichment Corporation
USEP	U.S. Energy Partners
Ventures	Enterprise Ventures & Services
VOC	Volatile Organic Compound

849900257

PART I

Item 1. Business

General

Enterprise

Public Service Enterprise Group Incorporated (Enterprise), incorporated under the laws of the State of New Jersey with its principal executive offices located at 80 Park Plaza, Newark, New Jersey 07101, is a public utility holding company that neither owns nor operates any physical properties. Enterprise has two direct wholly-owned subsidiaries, Public Service Electric and Gas Company (PSE&G) and Enterprise Diversified Holdings Incorporated (EDHI). Enterprise's principal subsidiary, PSE&G, is an operating public utility providing electric and gas service in certain areas in the State of New Jersey. Enterprise has claimed an exemption from regulation by the Securities and Exchange Commission (SEC) as a registered holding company under the Public Utility Holding Company Act of 1935 (PUHCA), except for Section 9(a)(2) thereof which relates to the acquisition of voting securities of an electric or gas utility company. PSE&G is subject to direct regulation by the New Jersey Board of Public Utilities (BPU) and the Federal Energy Regulatory Commission (FERC). EDHI is the parent of Enterprise's nonutility businesses: Energy Development Corporation (EDC), an oil and gas exploration and production and marketing company; Community Energy Alternatives Incorporated (CEA), an investor in and developer and operator of cogeneration and independent power production facilities; Public Service Resources Corporation (PSRC), which makes primarily passive investments; Enterprise Group Development Corporation (EGDC), a diversified nonresidential real estate development and investment business; PSEG Capital Corporation (Capital), which provides debt financing on the basis of a minimum net worth maintenance agreement from Enterprise; and Enterprise Capital Funding Corporation (Funding), which provides privately placed debt financing on the basis of the consolidated financial position of EDHI without direct support from Enterprise. As of December 31, 1995 and 1994, PSE&G comprised 85% of Enterprise's assets. PSE&G's 1995, 1994 and 1993 revenues were 93% of Enterprise's revenues and PSE&G's earnings available to Enterprise for such years were 88%, 91% and 96%, respectively, of Enterprise's net income. Production of electricity and electric and gas distribution will continue as the principal business of Enterprise for the foreseeable future. Enterprise has announced that it intends to divest EDC in 1996. See EDHI—EDC and Item 7. Management's Discussion and Analysis of Financial Condition and Results of Operations (MD&A).

Financial information with respect to business segments of PSE&G and Enterprise is set forth in Note 15—Financial Information by Business Segments of Notes to Consolidated Financial Statements (Notes).

PSE&G

PSE&G, a New Jersey corporation with its principal executive offices at 80 Park Plaza, Newark, New Jersey 07101, is an operating public utility company engaged principally in the generation, transmission, distribution and sale of electric energy service and in the transmission, distribution and sale of gas service in New Jersey. PSE&G supplies electric and gas service in areas of New Jersey in which approximately 5,500,000 persons, about 70% of the State's population, reside. (See General—Enterprise.)

PSE&G's electric and gas service area is a corridor of approximately 2,600 square miles running diagonally across New Jersey from Bergen County in the northeast to an area below the City of Camden in the southwest. The greater portion of this area is served with both electricity and gas, but some parts are served with electricity only and other parts with gas only. This heavily populated, commercialized and industrialized territory encompasses most of New Jersey's largest municipalities, including its six largest cities—Newark, Jersey City, Paterson, Elizabeth, Trenton and Camden—in addition to approximately 300 suburban and rural communities. It contains a diversified mix of commerce and industry, including major facilities of many corporations of national prominence.

Under the general laws of New Jersey, PSE&G has the right to use the public highways, streets and alleys in New Jersey for erecting, laying and maintaining poles, conduits and wires necessary for its electric operations.

849900258

PSE&G must, however, first obtain the consent in writing of the owners of the soil for the purpose of erecting poles. In incorporated cities and towns, PSE&G must obtain from the municipality a designation of the streets in which the poles are to be placed and the manner of placing them. PSE&G's rights are also subject to regulation by municipal authorities with respect to street openings and the use of streets for erecting poles in incorporated cities and towns.

PSE&G, by virtue of a special charter granted by the State of New Jersey to one of its predecessors, has the right to use the roads, streets, highways and public grounds in New Jersey for pipes and conduits for distributing gas.

PSE&G believes that it has all the franchises (including consents) necessary for its electric and gas operations in the territory it serves. Such franchises are non-exclusive.

For discussion of the significant changes which PSE&G's electric and gas utility businesses have been and are undergoing, see Competition and Regulation.

Industry Issues

Enterprise and PSE&G are affected by many issues that are common to the electric and gas industries, such as: deregulation and the unbundling of energy supplies and services; an increasingly competitive energy marketplace, sales retention and growth potential in a mature service territory and a need to contain costs (see Competition, Regulation and MD&A—Competition); ability to operate nuclear plants in a cost effective way (see PSE&G—Nuclear Operations); ability to obtain adequate and timely rate relief, cost recovery, including the potential impact of stranded assets, and other necessary regulatory approvals (see PSE&G—Rate Matters; Regulation and Item 7. MD&A—Competition); costs of construction (see Construction and Capital Requirements); operating restrictions, increased costs and construction delays attributable to environmental regulations (see Environmental Controls); controversies regarding electric and magnetic fields (EMF) (see Environmental Controls); nuclear decommissioning and the availability of reprocessing and storage facilities for spent nuclear fuel (see Electric Fuel Supply and Disposal); and credit market concerns with these issues.

Competition

Overview

The energy utility industry is in transition. Changes in Federal and state law and regulation are encouraging new entrants to the traditional markets of electric and gas utilities. New technologies are creating opportunities for new energy services. Customers, more aware and sophisticated about their choices and dissatisfied with prices and the often limited range of options available from the local utility, are increasingly turning elsewhere for energy supplies and services. As a consequence of competition, the traditional utility structure—consisting of a vertically integrated system and functioning as a natural monopoly—is being dramatically altered. Further, PSE&G's ability to meet competition and change prices to meet customer's needs is impacted by state regulation, including the historic utility mandate to serve all customers. (See MD&A—Competition.) For a discussion of PSE&G's alternative plan of rate regulation, "New Jersey Partners in Power" (Alternative Rate Plan) as a response to these demands, see MD&A and Note 2—Rate Matters of Notes.

Non health and safety related Federal energy laws and regulations are designed to make more efficient use of all energy, introduce price competition, encourage the use of nonconventional energy sources and limit oil imports by increasing production of domestic energy resources. Among other things, these actions (1) encourage development of alternative energy generation, (2) require wheeling of power for wholesale transactions, (3) require state regulatory authorities to consider certain standards on rate design and certain other utility practices, (4) encourage conservation of energy through certain financial incentives, including incentives by individual utilities to customers to help them to conserve energy and (5) deregulate prices on natural gas.

849900259

Also, Federal and State laws designed to reduce air and water pollution and control hazardous substances have had the effect of increasing the costs of operation and replacement of existing utility plants and other facilities. (See Environmental Controls.)

Competition from nonutility generators (NUGs), such as cogenerators, independent power producers (IPP) and exempt wholesale generators (EWGs), as permitted by the Public Utility Regulatory Policies Act of 1978 (PURPA) and the National Energy Policy Act of 1992 (EPAct), continues to impact PSE&G. As a result of changes brought about by EPAct, along with proposals in some states to authorize retail wheeling, discussed below, electric customers and suppliers, including PSE&G and its customers, have increased opportunities for purchase and sale of electricity from and to sellers and buyers outside of traditional franchised territories. Retention of existing customers and potential sales growth will depend upon the ability of PSE&G to contain costs, meet customer expectations and respond to changing economic conditions and energy regulation. As a result of such competitive forces, Enterprise Ventures & Services Corporation (Ventures) has been established as a subsidiary of PSE&G to develop and market new energy-related products and services beyond traditional geographic and/or industry boundaries. Competition may also adversely impact upon the economics of certain regulatory-created incentives, such as Demand Side Management (DSM) and conservation. For additional information, including a discussion of the potential effects of competition upon rates, cost recovery and assets, see MD&A—Competition. For information relating to the Alternative Rate Plan see MD&A and Note 1—Organization and Summary of Significant Accounting Policies, Note 2—Rate Matters and Note 5—Deferred Items of Notes.

Electric

In the electric utility industry, competitive pressures began with the enactment of PURPA. This law, together with subsequent changes in Federal regulation, has increasingly opened the electric utility industry to competition. PURPA created a class of generating facilities exempt from Federal and State public utility regulation—cogeneration and small power producers known as "qualifying facilities" (QFs)—and created an instant market for them by requiring regulated utilities to purchase their excess power production. EPAct, by facilitating the development of the wholesale power market, has led to even stronger competition. The increasing competitiveness of the electric wholesale markets, along with consideration of retail wheeling or "direct retail access" within utility franchise areas in several states, has brought to the forefront the issue of potential stranded costs within the electric utility industry (see MD&A—Competition).

EPAct provides FERC with increased authority to order "wheeling" of wholesale, but not retail, electric power on the transmission systems of electric utilities, provided that certain requirements are met. In order to facilitate the transition to increased competition in wholesale power markets made possible by EPAct, in March 1995, FERC issued a Notice of Proposed Rulemaking (NOPR) which, if adopted, would require electric utilities, including PSE&G, to provide open access to the interstate transmission network pursuant to non-discriminatory tariffs available to all wholesale sellers and buyers of electric energy. Utilities would be required to offer transmission to eligible customers comparable to the service they provide themselves and to take service under the tariffs for their own wholesale sales and purchases. Further, transmission and ancillary service components would be unbundled and, when buying or selling power, utilities would have to rely on the same network for transmission system information as their customers.

The NOPR states FERC's general principle that utilities should be entitled to full recovery of legitimate and verifiable stranded costs at the Federal and State levels and reiterates its prior proposal that such costs be directly assigned to departing customers. The NOPR further provides that stranded costs due to retail wheeling are a state matter, while stranded costs due to wholesale wheeling, municipalization or a change from retail to wholesale customer class are within FERC's jurisdiction. PSE&G cannot predict the impact of any regulations that may be adopted. See MD&A—Competition. For discussion of the Pennsylvania, New Jersey and Maryland Interconnection (PJM) proposal in response to the FERC NOPR, see Pennsylvania—New Jersey—Maryland Interconnection. For a discussion of PSE&G's actions and comments related to the potential environmental impact of the NOPR, see Environmental Controls—Air Pollution Control.

849900260

EPAct also amended PUHCA to create a new category of generation owners known as EWGs, which are not subject to PUHCA regulation. EPAct permits both independent companies and utility affiliates to participate in the development of EWG projects regardless of the location and ownership of other generating resources. The transmission access provisions apply to wholesale, but not retail, "wheeling" of power, subject to FERC review. See PSE&G—Integrated Resource Plan, Construction and Capital Requirements, Financing Activities and PSE&G—Customers. For information concerning the activities of CEA, which is an owner-developer of QFs and EWGs, see EDHI—CEA.

Another key factor in determining how competition will affect PSE&G's electric business is the extent to which New Jersey public utility regulation may be modified to be reflective of these new competitive realities. The BPU presented the first phase of the New Jersey Energy Master Plan to Governor Whitman on March 8, 1995. This Phase I Plan acknowledged the need for regulatory flexibility as competition unfolds and called for legislation that would allow New Jersey utilities to propose, subject to BPU approval, alternatives to existing rate base/rate of return pricing, allow for pricing flexibility under certain standards for customers with competitive options and equalize the impact of tax policies, such as New Jersey Gross Receipts and Franchise Tax (NJGRT) which is currently assessed only on utility retail energy sales. On July 20, 1995, Governor Whitman signed into law legislation which provides utilities the flexibility to propose alternative regulatory pricing and to offer negotiated off-tariff agreements (See PSE&G—Customers). On January 16, 1996, PSE&G filed a petition with the BPU for its Alternative Rate Plan designed to fulfill the objectives of this new regulatory reform legislation. This Alternative Rate Plan represents a regulatory transition designed to provide PSE&G with the mechanisms and incentives to compete more effectively on several fronts, including the ability to develop revenue from non-regulated products and services, accelerate or modify depreciation schedules to help mitigate any potential stranded asset issue and more aggressively manage costs. For more information regarding the Alternative Rate Plan see MD&A and Note 1—Organization and Summary of Significant Accounting Policies, Note 2—Rate Matters and Note 5—Deferred Items of Notes.

On June 1, 1995, the BPU issued its Order initiating a formal Phase II proceeding to the New Jersey Energy Master Plan. This proceeding is intended to investigate and consider the future long term structure of the electric power industry in New Jersey. The proceeding will address wholesale and retail competition, ownership of generation, transmission and distribution facilities, operation of the transmission system and stranded investments. A Phase II report proposing policy restructuring is expected by March 1996. PSE&G cannot predict what impact, if any, the Phase II report will have.

Gas

Over the last decade the natural gas industry has experienced a dramatic transformation as several FERC initiatives have subjected the industry to competitive market forces. On the interstate level, the pipeline suppliers that serve PSE&G have unbundled gas supply and service and now offer transportation services that move gas purchased from numerous natural gas producers and marketers to PSE&G's service territory.

This unbundling effort has moved to the local level and, in late 1994, the BPU approved unbundled transport tariffs for PSE&G. These tariffs allow any non-residential customer, regardless of size, to purchase its own gas, transport it to PSE&G and require PSE&G to deliver such gas to the customer's facility. To date, over 5,000 commercial and industrial customers out of a potential of 180,000 customers have decided to utilize this service. It is expected that this number will continue to grow as marketers become more active in New Jersey and encourage customers to convert from sales service. The transportation rate schedules produce the same non-fuel revenue per therm as existing sales service rate schedules. Thus, PSE&G's earnings are unaffected whether the customers remain on sales service or convert to transportation service. See Gas Operations and Supply. In meeting the challenges and opportunities presented by this unbundling of gas supply and service, Enterprise initiated a gas marketing company, U.S. Energy Partners (USEP). For more information see EDHI—PSRC.

849900261

Construction and Capital Requirements

For information concerning investments, construction and capital requirements see MD&A, Note 6—Schedule of Consolidated Debt, Note 7—Long-Term Investments and Note 12—Commitments and Contingent Liabilities—Construction and Fuel Supplies of Notes.

Financing Activities

For a discussion of issuance, book value and market value of Enterprise's Common Stock and external financing activities of Enterprise, PSE&G and EDHI for the year 1995, see MD&A—Liquidity and Capital Resources and Item 5. Market for Registrant's Common Equity and Related Stockholder Matters.

For a discussion of Capital and Funding, see EDHI—Capital and EDHI—Funding. For further discussion of long-term debt and short-term debt, see Note 6—Schedule of Consolidated Debt of Notes.

Federal Income Taxes

For information regarding Federal income taxes, see Note 1—Organization and Summary of Significant Accounting Policies, Note 2—Rate Matters and Note 10—Federal Income Taxes of Notes.

Credit Ratings

The current ratings of securities of Enterprise's subsidiaries set forth below reflect the respective views of the rating agency furnishing the same, from whom an explanation of the significance of such ratings may be obtained. There is no assurance that such ratings will continue for any given period of time or that they will not be revised downward or withdrawn entirely by such rating agencies, if, in their respective judgments, circumstances so warrant. Any such downward revision or withdrawal of any of such ratings may have an adverse effect on the market price of Enterprise's Common Stock and PSE&G's securities and serve to increase the cost of capital of PSE&G and EDHI.

	Moody's	Standard & Poor's	Duff & Phelps	Fitch
PSE&G				
Mortgage Bonds	A3	A−	A	A−
Debenture Bonds	Baa1	BBB+	A−	BBB+
Preferred Stock	Baa1	BBB+	A−	BBB+
Commercial Paper	P2	A2	Duff 1	
Fuelco: Commercial Paper	P2	A2	Duff 1	

As a component of the ratings noted above, each rating agency issues its opinion of the credit trend or outlook for the entity being rated. For PSE&G, each of the four rating agencies currently evaluate that outlook as stable.

EDHI			
Capital: Senior Debt	Baa2	BBB	BBB+
Funding: Commercial Paper(A)	P1	A1+	Duff 1+

(A) Supported by commercial bank letter of credit (see MD&A—Liquidity and Capital Resources and Note 6—Schedule of Consolidated Debt—Short-Term of Notes.)

PSE&G

Rate Matters

For information concerning PSE&G's Alternative Rate Plan, rate matters, and environmental remediation and fuel adjustment clauses see Note 1—Organization and Summary of Significant Accounting Policies and

849900262

Note 2—Rate Matters of Notes. For information concerning PSE&G's Under (Over) recovered Electric Energy and Gas Fuel Costs, see Note 5—Deferred Items of Notes.

Nuclear Performance Standard

The BPU has established a nuclear performance standard (NPS) for nuclear generating stations owned by New Jersey electric utilities, including the five nuclear units in which PSE&G has an ownership interest: Salem Nuclear Generating Station, Units 1 and 2 (Salem 1 and 2)—42.59%; Hope Creek Nuclear Generating Station (Hope Creek)—95%; and Peach Bottom Atomic Power Station, Units 2 and 3 (Peach Bottom 2 and 3)—42.49%. PSE&G operates Salem and Hope Creek, while Peach Bottom is operated by PECO Energy, Inc. (PECO). The following table sets forth the capacity factor in accordance with the NPS of each of PSE&G's nuclear units for the years indicated:

Nuclear Units	1995	1994	1993
Capacity Factors:			
Salem 1	26%	59%	60%
Salem 2	21	58	57
Hope Creek	76	77	95
Peach Bottom 2	96	80	84
Peach Bottom 3	78	98	70
Aggregate capacity factor of nuclear units	62	74	77

For information concerning the NPS, see Nuclear Operations and Note 12—Commitments and Contingent Liabilities of Notes.

Customers

As of December 31, 1995, PSE&G provided service to approximately 1,900,000 electric customers and 1,500,000 gas customers. PSE&G is not dependent on a single customer or a few customers for its electric or gas sales. For the year ended December 31, 1995, PSE&G's operating revenues aggregated $5.7 billion, of which 70% was from its electric operations and 30% from its gas operations. PSE&G's business is seasonal in that sales of electricity are higher during the summer months because of air conditioning requirements and sales of gas are greater in the winter months due to the use of gas for space-heating purposes.

These revenues were derived as follows:

	Revenues	
	Electric	Gas
	(Millions of Dollars)	
Residential	$1,275	$ 823
Commercial	1,854	501
Industrial	705	275
Transportation Service—Gas	—	54
Other	187	33
Total	$4,021	$1,686

Customers of PSE&G, as well as those of other New Jersey electric and gas utilities, pay the NJGRT which, in effect, adds approximately 13% to their bills. The NJGRT is a unit tax based on electric kilowatthour and gas therm sales. This tax differential provides an incentive to large-volume electric and gas customers to seek to obtain their energy supplies from nonutility sources not subject to NJGRT. To the extent PSE&G experiences a loss of customers seeking to avoid this cost, it could result in a significant decrease in PSE&G's revenues and earnings.

849900263

On November 17, 1995, the BPU issued an order approving a Stipulation regarding PSE&G's proposed Experimental Hourly Energy Pricing Tariff and the first service agreement thereunder with its second largest customer. Under the agreement, the tariff will result in a bill reduction for the customer of approximately $7 million or about 27%. This reduction in revenues will be partially offset by a decrease of $1.25 million in PSE&G's NJGRT liability. Under the agreement between the customer and PSE&G, the customer will forego an opportunity to relocate to another state and remain a PSE&G customer for ten years. On January 2, 1996, an appeal seeking to overturn the BPU's November 17, 1995 Decision and Order was filed by a third party in the Appellate Division of the Superior Court of New Jersey. PSE&G cannot predict the outcome of this matter.

PSE&G has signed each of its three existing wholesale electric customers, aggregating 40 mw of load, to 5-year full service agreements with mid-term extension options. In addition, under the terms of a previously negotiated 10-year wholesale power transaction, PSE&G receives $12.5 million in annual revenues from an out of state electric cooperative. For further information on the impact of competition on PSE&G's customer and revenue base—See Competition and MD&A—Competition.

Integrated Resource Plan

PSE&G's construction program focuses on upgrading electric and gas transmission and distribution systems and constructing new transmission and distribution facilities to serve new load.

Pursuant to its Integrated Resource Plan (IRP), PSE&G periodically reevaluates its forecasted customer load and peak growth and the sources of electric generating capacity and DSM to meet such projected growth (see Demand Side Management below). The IRP takes into account assumptions concerning future customer demand, future cost trends, especially fuel and purchased power expenses, the effectiveness of conservation and load management activities, the long-term condition of and projected additions to PSE&G's plants and capacity available from other electric utilities and nonutility suppliers. PSE&G's IRP consists principally of plant additions, power purchases through PJM and from NUGs and DSM.

Pennsylvania—New Jersey—Maryland Interconnection

PSE&G is a member of the PJM which integrates the bulk power generation and transmission supply operations of 11 utilities in Pennsylvania, New Jersey, Delaware, Maryland, Virginia and the District of Columbia, and, in turn, is interconnected with other major electric utility companies in the northeastern part of the United States. The PJM is operated as one system and provides for the purchase and sale of power among members on the basis of reliability of service and operating economy. As a result, the most economical mix of generating capability available is used to meet PJM daily load requirements. PSE&G's output, as shown under Electric Fuel Supply and Disposal, reflects significant amounts of purchased power because at times it is more economical for PSE&G to purchase power from PJM and others than to produce it. As of December 31, 1995, the aggregate installed generating capacity of the PJM companies was 56,098 megawatts (MW). The all time record peak one-hour demand experienced by the PJM power pool was 48,524 MW which occurred on August 2, 1995. The 1995 peak was 2,532 MW higher than the record-setting 1994 summer peak of 45,992 MW which occurred on July 8, 1994. PSE&G's capacity obligations to the PJM system vary from year to year due to changes in system characteristics. PSE&G expects to have sufficient installed capacity to meet its obligations during the 1996-2000 period.

PJM has developed a comprehensive proposal intended to meet or exceed the goals expressed by FERC in its open access NOPR, including a number of innovations that were designed to harmonize the requirements of the NOPR with the benefits of power pooling. In this proposal, PJM intends to satisfy the NOPR's goals by building upon the foundation of PJM's power pooling operations. The member companies of PJM intend to file this proposal with FERC by May 1996 and implement a restructured pool by year-end 1996.

Under this proposal, the current members of PJM and other load-serving entities in the PJM control area will purchase regional "network" transmission rights that are intended to enable them to reliably and

849900264

economically integrate generation and load. For deliveries to retail customers, this service will remain part of the bundled rates for retail electric service, subject to state jurisdiction, but with terms and conditions comparable to the service provided for wholesale users. Because this service will cover all deliveries to loads located in the pool, generators selling power to serve pool load will not have to purchase transmission service independently. This is intended to create a regional wholesale power market in which all sellers and buyers operate on a level playing field.

Under the proposal, transmission service will be provided under a regional point-to-point transmission service tariff. This tariff will apply a uniform ratemaking methodology to all wholesale transactions involving deliveries outside the pool, including off-system sales by the current members of PJM and other load-serving entities in the pool. Accordingly, all transmission service associated with sales outside the pool will be provided on a comparable basis.

In order to meet the requirements to functionally unbundle transmission, PJM has proposed to reorganize into an independent System Operator (ISO) with responsibility for operating the bulk power system, administering the regional transmission service tariffs and managing the pool's competitive energy market. The ISO will be governed by a Board of Directors that is not controlled by the transmission-owning members of PJM or their affiliates, and its responsibilities will be set forth in contracts filed with the FERC. The ISO will contract with the various pool participants to supply control area services, administer the transmission service tariffs and be responsible for maintaining the reliable operation of the system throughout each day.

One of the key elements of PJM's restructuring proposal is the creation of an expanded regional market for energy transactions. PJM will replace the existing system of cost-based centralized dispatch with an expanded, hourly bid/price pool in which all sellers will be able to bid their energy into the pool and all load-serving entities will be able to buy energy from the pool. The energy market will "clear" in each hour at the highest bid price for energy that must be dispatched to serve load.

Further, under the proposal, PJM will retain most of the existing pool procedures for ensuring reliable electric service, but will create new contractual mechanisms to ensure participation by all entities responsible for serving load in decisions affecting reliability. Each load-serving entity that chooses to operate in the PJM control area will be required to execute an agreement to maintain adequate generation reserves and to share those reserves on a reciprocal basis. PJM will establish an enhanced regional planning process, under the supervision of the ISO, to meet Mid-Atlantic Area Reliability Council (MAAC) reliability requirements applicable to both generation and transmission. In short, all load-serving entities in the pool will be subject to the same reliability standards and will participate in decisions relating to the establishment of regional reliability requirements.

Power Purchases

A component of PSE&G's IRP consists of expected capacity additions from NUGs. These additions are projected to aggregate 46 MW and are scheduled for service by 1998. NUG projects are expected to comprise approximately 6.5% of energy resources by 2004. This availability of NUG generation will reduce the need for PSE&G to build or acquire additional generation.

PSE&G is also a party to the MAAC which provides for review and evaluation of plans for generation and transmission facilities and other matters relevant to reliability of the bulk electric supply systems in the Mid-Atlantic area.

PSE&G expects to be able to continue to meet the demand for electricity on its system through operation of available equipment and by power purchases. However, if periods of unusual demand should coincide with outages of equipment, PSE&G could find it necessary at times to reduce voltage or curtail load in order to safeguard the continued operation of its system.

849900265

Demand Side Management

Integrated resource planning brings together demand-side and supply-side strategies. In order to encourage DSM, the BPU adopted rules in 1991 providing special incentives to encourage utilities to offer these load management conservation services. The rules are designed to place DSM on an equal regulatory footing with supply side or energy production investments. Both EPAct and Phase I of the Energy Master Plan call for conservation to play a significant role in meeting New Jersey's energy needs over the coming decade. PSE&G's DSM Plan has been approved by the BPU. The IRP calls for PSE&G to utilize conservation and DSM to meet most of the incremental resource needs for the next decade (see Competition).

PSE&G's DSM Plan is designed to encourage investment in energy-saving DSM activities in New Jersey. These activities involve new techniques and technologies, such as high-efficiency lighting and motors, that help reduce customer demand for energy. The DSM Plan consists of two major program areas for both electric and gas: (1) a core program which includes many specialized programs such as energy audits, seal-ups and rebates for high efficiency heating and cooling equipment; and (2) a standard offer program which is performance based and provides payment for measurable energy savings resulting from the installation of qualified measures that improve the energy efficiency of end-uses. PSE&G's most recent IRP includes a demand forecast average compound annual rate of growth through the year 2004 of electric system peak demand of 1.3%. PSE&G's IRP projects 597 MW of passive DSM and 815 MW of active DSM by the year 2004.

PSE&G has established a wholly owned subsidiary, Public Service Conservation Resources Corporation (PSCRC), to offer DSM services. PSCRC has its principal office at 9 Campus Drive, Parsippany, N.J. 07054. PSCRC finances, markets and develops energy conservation projects, mostly within the PSE&G service territory. At December 31, 1995, its assets totaled $110 million, of which $88.2 million were project assets and work in progress.

Electric Generating Capacity

The following table sets forth certain information as to PSE&G's installed generating capacity as of December 31, 1995:

Source	Installed Capacity(MW)	Percentage
Conventional Steam Electric		
Oil-fired(a)	1,723	17
Coal-fired New Jersey(b)	1,242	12
Coal-fired Pennsylvania (mine mouth)(c)	770	7
Combustion Turbine(d)	2,724	26
Combined Cycle	890	9
Diesel(c)	5	—
Nuclear(c)		
New Jersey	1,921	18
Pennsylvania	930	9
Pumped Storage(c)(d)	195	2
Total(e)	10,400	100

(a) Units with aggregate capacity of 836 MW can also burn gas.
(b) Can also burn gas.
(c) PSE&G share of jointly owned facilities.
(d) Primarily used for peaking purposes.
(e) Excludes 664 MW of nonutility generation and temporary capacity sales of 200 MW to General Public Utilities Corporation.

For additional information, see Item 2. Properties—PSE&G—Electric Properties.

849900266

The capacity available at any time may be less than the installed capacity because of temporary outages for inspection, maintenance, repairs, legal and regulatory requirements or unforeseen circumstances.

The maximum one-hour demand (peak load) which PSE&G experienced in 1995 was 9,467 MW, an all time record which occurred on August 2, 1995, when the day's output was 182,404 Megawatthours (MWH) of electricity. (For information concerning sales, output and capacity factors, see Operating Statistics.) The peak load in 1994 was 9,001 MW which occurred on June 15, 1994, when the day's output was 172,362 MWH of electricity.

Nuclear Operations

Operation of nuclear generating units involves continuous close regulation by the Nuclear Regulatory Commission (NRC). Such regulation involves testing, evaluation and modification of all aspects of plant operation in light of NRC safety and environmental requirements and continuous demonstrations to the NRC that plant operations meet applicable requirements. The NRC has the ultimate authority to determine whether any nuclear generating unit may operate. For information concerning the performance of the nuclear units, see Nuclear Performance Standard and Note 12—Commitments and Contingent Liabilities of Notes.

The scheduled 1996, 1997, and 1998 refueling outages, each estimated at eight to ten weeks duration, for PSE&G's five licensed nuclear units are expected to commence in the following months:

	Refueling Outages		
	1996	1997	1998
Salem 1	—	—	—
Salem 2	—	—	February
Hope Creek	—	April	October
Peach Bottom 2	September	—	September
Peach Bottom 3	—	September	—

Salem

Salem Generating Station consists of two 1100 MW pressurized water nuclear reactors (PWR) located in southern New Jersey on the Delaware River. PSE&G owns 42.59% of the Salem units and operates them on behalf of itself and three other owners: PECO—42.59%: Atlantic Electric Company—7.41%; and Delmarva Power and Light Company—7.41%. As of January 31, 1996, PSE&G's net book value for Salem nuclear production units is approximately $285 million for Salem 1, $250 million for Salem 2 and $93 million in common plant between the two units. Each Salem unit represents approximately 4% of PSE&G's installed electric generating capacity and approximately 2% of its total assets.

Salem 1 and 2 have been out of service since May 16, 1995 and June 7, 1995, respectively. Since that time, PSE&G has been engaged in a thorough assessment of each unit to identify and complete the work necessary to achieve safe, sustained, reliable and economic operation. PSE&G has stated that it will keep each unit off line until it is satisfied that the unit is ready to return to service and to operate reliably over the long term and the NRC has agreed that the unit is sufficiently prepared to restart. On June 9, 1995, the NRC issued a Confirmatory Action Letter documenting these commitments of PSE&G.

On December 11, 1995, PSE&G presented its restart plan for both units to the NRC at a public meeting. On February 13, 1996, the NRC staff issued a letter to PSE&G indicating that it had concluded that PSE&G's overall restart plan, if implemented effectively, should adequately address the numerous Salem issues to support a safe plant restart, and describing further actions the NRC will undertake to confirm that PSE&G's actions have resulted in the necessary performance improvements to support safe plant restart.

As a part of PSE&G's comprehensive review, an extensive examination is being performed on the steam generators, which are large heat exchangers used to produce steam to drive the turbines. Within the industry,

849900267

certain PWRs other than Salem have experienced cracking in a sufficient number of the steam generator tubes to require various modifications to these tubes and replacement of the steam generators in some cases. Until the current outage, regular periodic inspections of the steam generators for each Salem unit have resulted in repairs of a small number of tubes well within NRC limits. As a result of the experience of other utilities with cracking in steam generator tubes, in April 1995 the NRC issued a generic letter to all utilities with pressurized water reactors. This generic letter requested utilities with pressurized water reactors to conduct steam generator examinations with more sensitive inspection devices capable of detecting evidence of degradation. Subsequently, PSE&G conducted steam generator inspections of the Salem units using the latest technology available, including a new, more sensitive, eddy current testing device.

With respect to Salem 1, the most recent inspection of the steam generators is not complete, but partial results from eddy current inspections in February 1996 using this new technology show indications of degradation in a significant number of tubes. The inspections are continuing and PSE&G has decided to remove several tubes for laboratory examination to confirm the results of the inspections. Removal of the tubes should be completed in March and preliminary results of the state of the Salem 1 tubes from the subsequent laboratory examinations should be known in April. However, based on the results of inspections to date, PSE&G has concluded that the Salem 1 outage, which was expected to be completed in the second quarter of 1996, will be required to be extended for a substantial additional period to evaluate the state of the steam generators and to subsequently determine an appropriate course of action. Degradation of steam generators in PWRs has become of increasing concern for the nuclear industry. Nationally and internationally, utilities have undertaken actions to repair or replace steam generators. In the extreme, degradation of steam generators has contributed to the retirement of several American nuclear power reactors. After the Salem 1 tubes are fully examined, PSE&G will be able to evaluate its course of action in light of NRC and other industry requirements.

The examination of the Salem 2 steam generators was completed in January 1996 using the same testing device used in Salem 1. The results of the Salem 2 inspection are being reviewed again to confirm their results in light of the experience with Salem 1. Although this review has not yet been completed, results to date appear to confirm that the condition of the Salem 2 steam generators is well within current repair limits at the present time. PSE&G will also remove tubes from the Salem 2 steam generators for laboratory analysis to further confirm the results of this testing.

PSE&G had planned to return Salem 1 to service in the second quarter of 1996 and Salem 2 in the third quarter of 1996. As a result of the extent of the recently discovered degradation in the Salem 1 steam generators, PSE&G is focusing its efforts on the return of Salem 2 to service in the third quarter. The conduct of the additional steam generator inspections and testing on Salem 2 is not expected to adversely affect the timing of its restart. However, the timing of the restart is subject to completion of the requirements of the restart plan to the satisfaction of PSE&G and the NRC as well as to the normal uncertainties associated with such a substantial review and improvement of the systems of a large nuclear unit, so that no assurance can be given that the projected return date will be met.

PSE&G's share of additional operating and maintenance expenses associated with Salem restart activities in 1995 was $16 million, and capital was $1.9 million. PSE&G's share of total operating and maintenance expenses for both Salem units for the year was $111 million and capital costs were $50.8 million. For 1996, PSE&G does not presently expect its share of operating and maintenance expenses or capital costs for Salem station to exceed 1995 amounts; however this could change as a result of the steam generator inspection results referred to above. The outage of a Salem unit causes PSE&G to incur replacement power costs of approximately $4 to $6 million per month. Such amounts vary, however, depending on the availability of other generation, the cost of purchased energy and other factors, including modifications to maintenance schedules of other units.

PSE&G's 1995 aggregate capacity factor for its five nuclear units was 62%, below the 65% minimum annual standard established by the BPU (see Nuclear Performance Standard), resulting in a penalty of approximately $3.5 million. Based upon current projections and assumptions regarding PSE&G's five nuclear units during 1996, including the return of Hope Creek to service in early March, the return of Salem 2 in the

849900268

third quarter, and the continued outage of Salem 1 for the remainder of the year, the 1996 aggregate capacity factor would be approximately 57%, which would result in a penalty ranging from $11 to $12 million. For a discussion of the proposed elimination of the NPS under the proposed Alternate Rate Plan, see Note 2—Rate Matters of Notes.

An NRC enforcement conference was held on July 28, 1995 related to certain violations of NRC requirements at Salem. The violations included valves that were incorrectly positioned following a plant modification in May 1993, non-conservatisms in setpoints for a pressurizer overpressure protection system and several examples of inadequate root cause determination of events, leading to insufficient corrective actions. On October 16, 1995, the NRC imposed cumulative civil penalties of $600,000 related to these violations. PSE&G did not contest the penalties.

On January 3, 1995, the NRC provided PSE&G with its latest Systematic Assessment of Licensee Performance (SALP) report on Salem for the period between June 20, 1993 and November 5, 1994. SALP is a process pursuant to which the NRC periodically reviews the performance of nuclear power plant operations. SALP reports rate licensee performance in four assessment areas: Operations, Maintenance, Engineering and Plant Support (the Plant Support area includes security, emergency preparedness, radiological controls, fire protection, chemistry and housekeeping). Ratings range from a high of "1" to a low of "3" for each assessment area. Salem received a rating of "3" in the Operations and Maintenance areas, a rating of "2" in Engineering, and a rating of "1" in the Plant Support area. The NRC noted an overall decline in performance and evidenced particular concern with plant and operator challenges caused by repetitive equipment problems and personnel errors. The NRC also noted that although PSE&G has initiated several comprehensive actions within the past year to improve plant performance, and some recent incremental gains have been made, these efforts have yet to noticeably change overall performance at Salem.

On March 21, 1995, representatives of the NRC Staff met with the Boards of Directors of Enterprise and PSE&G to reiterate the previously expressed concerns with regard to Salem's operations. The NRC staff acknowledged that PSE&G had made efforts to improve Salem's operations, including making senior management changes, but indicated that demonstrated sustained results have not yet been achieved.

PSE&G's own assessments, as well as those by the NRC and the Institute of Nuclear Power Operations, indicate that additional efforts are required to further improve operating performance, as reflected in the restart plans referred to above. PSE&G is committed to taking the necessary actions to address Salem's performance needs. It is anticipated that the NRC will continue to maintain a close watch on Salem's restart activities and subsequent operational performance. No assurance can be given as to what, if any, further or additional actions may be taken or required by the NRC to improve Salem's performance.

For certain litigation and potential claims relating to Salem, see Item 3. Legal Proceedings and Note 12—Commitments and Contingent Liabilities of Notes.

Hope Creek

An outage at Hope Creek causes PSE&G to incur replacement energy costs of approximately $10 to $16 million per month. Such amounts vary, however, depending upon the availability of other generation, the cost of purchased energy and other factors including modifications to maintenance schedules of other units.

Hope Creek is currently undergoing a refueling and maintenance outage which commenced November 11, 1995. Replacement power costs incurred during the outage are expected to be approximately $10 million per month. Hope Creek is presently scheduled to return to service in early March 1996.

As a result of an internal allegation report, PSE&G submitted a Licensee Event Report to the NRC on October 14, 1994 which stated that in 1992, the Hope Creek control room was understaffed for approximately three minutes and a decision was made by those involved that the incident did not warrant initiation of NRC

849900269

reporting documentation. A meeting with Region I NRC personnel was held on October 18, 1994 in which the NRC expressed a high degree of concern over the issue. Both the NRC and PSE&G investigated the validity of the allegation and, on September 19, 1995, the NRC issued two Level IV violations with no civil penalty for this incident.

A small amount of low-level radioactive material was released to the atmosphere at Hope Creek on April 5, 1995. The release did not exceed federal limits nor pose any danger to the public or plant employees; however, a trailer driven offsite had exceeded the limit for releasing materials and was later cleaned. PSE&G and the NRC have investigated the event, and on June 16, 1995 an enforcement conference was held. On July 20, 1995, the NRC issued a Notice Of Violation for the Hope Creek unplanned release which noted four violations. No fine was issued, partly because of the comprehensive corrective actions taken following the event and the plant's history of limited enforcement action.

On June 29, 1995, the NRC provided PSE&G with the latest periodic SALP report for Hope Creek for the period between June 20, 1993 and April 22, 1995. The Operations, Maintenance and Engineering areas each received a rating of "2", while the Plant Support area received a rating of "1". However, the NRC noted an overall decline in performance in the Operations, Maintenance and Engineering areas compared to the previous SALP period and cited weak root cause analysis as a dominant factor.

On July 8, 1995, during a manual shutdown of Hope Creek in order to repair control room ventilation equipment, operators partially opened a valve for a period of time and inadvertently reduced the effectiveness of the shutdown cooling system. Although the impact of the event to plant safety was minimal, the positioning of the valve and the resulting temperature change violated plant procedures and technical specifications. On July 31, 1995, NRC staff met with plant management concerning this issue and subsequently determined to assign a special inspection team to independently evaluate this event as well as PSE&G's response to it, including PSE&G's procedures and training for operator handling of abnormal conditions. An NRC enforcement conference was held on November 6, 1995. On December 12, 1995, the NRC issued a Level III violation for this event, with a civil penalty of $100,000. PSE&G did not challenge the fine.

By letter dated January 29, 1996, the NRC requested a meeting with PSE&G senior management to discuss its concerns regarding declining trends in performance at Hope Creek. The meeting has not yet been scheduled but is expected to occur after the restart of Hope Creek from its current refueling and maintenance outage.

Peach Bottom

The outage of a Peach Bottom unit causes PSE&G to incur additional replacement energy costs of approximately $4 to $6 million per month per unit. Such amounts vary, however, depending upon the availability of other generation, the cost of purchased energy and other factors including modifications to maintenance schedules of other units.

PSE&G has been advised by PECO that on January 19, 1996, the NRC issued its periodic SALP Report for Peach Bottom for the period May 1, 1994 to October 14, 1995. Peach Bottom received a rating of "1" in the areas of Plant Operations, Maintenance, and Plant Support. Engineering received a rating of "2". The NRC found continued improvement in performance during the period. Operator performance continued to be a strength as well as operations management oversight. Effective engineering management actions to improve the overall self assessment and system performance evaluation programs were noted, as well as good management oversight activities. Response to emerging issues, equipment problems and event related issues were noted as particularly strong. However, lapses in the quality of technical work and in modification implementation indicated inconsistent performance, and resulted in a repeat rating of "2" for the Engineering area. PECO has advised PSE&G that it will be taking actions to address weaknesses discussed in the SALP Report.

PSE&G has been advised by PECO that, by letter dated October 18, 1994, the NRC has approved PECO's request to re-rate the authorized maximum reactor core power levels of both Peach Bottom units by 5% to

849900270

3,458 MW from the current limits of 3,293 MW. The amendment of the Peach Bottom 2 facility operating license was effective upon the date of the NRC approval letter and the hardware changes were completed during the Fall 1994 refueling outage. The amendment of the Peach Bottom 3 facility operating license became effective when the hardware changes for Unit 3 were completed during its Fall 1995 refueling outage.

PSE&G has been advised by PECO that on August 2, 1995, the NRC held an enforcement conference regarding three alleged violations identified by the NRC at Peach Bottom. The NRC's findings included alleged violations in control and design activities and technical specification requirements regarding operability of the emergency diesel generators. As a result, on August 17, 1995, the NRC issued PECO a Level III violation with no civil penalty.

Other Nuclear Matters

In 1990, General Electric (GE) reported that crack indications were discovered near the seam welds of the core shroud assembly in a GE Boiling Water Reactor (BWR) located outside the United States. As a result, GE issued a letter requesting that the owners of GE BWR plants take interim corrective actions, including a review of fabrication records and visual examinations of accessible areas of the core shroud seam welds. PSE&G (Hope Creek) and PECO (Peach Bottom) participated in a GE BWR Owners' Group to evaluate this issue and develop long-term corrective actions.

During the Spring 1994 refueling outage, PSE&G inspected the shroud of Hope Creek in accordance with GE's recommendations and found no cracks. In June 1994, an industry group was formed and subsequently established generic inspection guidelines which were approved by the NRC. Due to the age and materials of the Hope Creek shroud and the historical maintenance of low conductivity water chemistry, Hope Creek has been placed in the lowest susceptibility category under these guidelines. Hope Creek must do another shroud inspection during its next refueling outage in 1997, or install a preemptive repair that would maintain the structural integrity of the shroud under all normal and design basis accident conditions for the remaining life of the plant.

PECO has advised PSE&G that Peach Bottom 3 was last examined during its Fall 1995 refueling outage and the extent of cracking identified was determined to be within industry-established guidelines. In a letter to the NRC dated November 3, 1995, PECO concluded that there is a substantial margin for each core shroud weld to allow for continued operation of Unit 3. PECO has also advised that Peach Bottom 2 was examined in October 1994 during its refueling outage. Although some crack indications were identified, PECO advised that they were considered to be much less severe than those found on Unit 3, and no repairs were required to operate Unit 2 for another two-year cycle.

As a separate matter, as a result of several BWR's experiencing clogging of some emergency core cooling system suction strainers, which supply water from the suppression pool for emergency cooling of the core and related structures, the NRC is drafting rules which tentatively require compliance by December 1997. Alternative resolution options will be subject to NRC approval. PSE&G cannot predict what other actions, if any, the NRC may take on this matter.

Nuclear Decommissioning

In accordance with Nuclear Waste Policy Act of 1992, as amended (NWPA), utilities owning an interest in nuclear generating facilities are required to determine the costs and funding methods necessary to decommission such facilities upon termination of operation. As a general practice, each nuclear utility places funds in independent external trust accounts it maintains to provide for decommissioning. PSE&G currently recovers from its customers the amounts paid into the trust fund over a period of years and would continue to do so under its proposed Alternative Rate Plan (see Note 2—Rate Matters of Notes). For information concerning enrichment of nuclear fuel and nuclear decommissioning costs, see Note 3—PSE&G Nuclear Decommissioning and Amortization of Nuclear Fuel of Notes.

849900271

Electric Fuel Supply and Disposal

The following table indicates PSE&G's KWH output by source of energy:

Source	Actual 1995	Estimated 1996
Nuclear		
New Jersey facilities	21%	23%
Pennsylvania facilities	16	15
Fossil		
Coal		
New Jersey facilities	7	9
Pennsylvania facilities	12	13
Natural Gas	8	10
Residual Oil	1	0
Net PJM Interchange and Utility Purchases and NUGs	35	30
Total	100%	100%

PSE&G's cost of fuel used to generate electricity in the periods shown below was as follows:

	NUCLEAR	COAL				NATURAL GAS	OIL	
		NEW JERSEY FACILITIES		PENNSYLVANIA FACILITIES				
Year	cents/ Million BTU	$/Ton	cents/ Million BTU	$/Ton	cents/ Million BTU	cents/ Million BTU	$/ Barrel	cents/ Million BTU
1993	59.3	55.45	203.8	33.73	136.6	221.7	23.44	384.5
1994	62.3	56.31	213.8	34.78	140.7	197.8	22.19	361.02
1995	60.8	58.29	214.0	33.30	134.4	176.6	20.17	324.50

Substantially all of PSE&G's electric sales are made under rates which are currently designed to permit the recovery of increases in energy costs over base costs on a current annual basis. The Alternative Rate Plan filed by PSE&G proposes discontinuing the Levelized Energy Adjustment Clause (LEAC) and NPS and would substantially shift the risks and opportunities involved in managing changes in fuel and replacement power costs from customers to PSE&G. (see Note 2—Rate Matters of Notes.)

Nuclear Fuel

The supply of fuel for nuclear generating units involves the mining and milling of uranium ore to uranium concentrate, conversion of the uranium concentrate to uranium hexafluoride, enrichment of the uranium hexafluoride gas, conversion of the enriched gas to fuel pellets and fabrication of fuel assemblies.

PSE&G has several long-term contracts with ore operators to process uranium ore to uranium concentrate to meet the currently projected requirements for the Salem and Hope Creek units fully through the year 2000 and, thereafter, 60% of their requirements through the year 2002.

Present contracts for conversion, enrichment and fabrication services to meet the fuel cycle requirements for Salem and Hope Creek units through the years shown in the following table:

Nuclear Unit	Conversion	Enrichment	Fabrication
Salem 1	2000	(1)	2004
Salem 2	2000	(1)	2005
Hope Creek	2000	(1)	2000

(1) 100% coverage through 1998; approximately 50% through 2002; and approximately 30% through 2004. PSE&G does not anticipate any difficulties in obtaining necessary enrichment service for its Salem and Hope Creek units.

849900272

PSE&G has been advised by PECO that it has contracts for the purchase of uranium which will satisfy the fuel requirements of Peach Bottom 2 and 3 through 2002. PSE&G has also been advised by PECO that it has contracts for the conversion of uranium concentrates which will be allocated to Peach Bottom 2 and 3 and two other nuclear generating units in which PSE&G does not have an interest, on an as-needed basis.

PECO has also advised PSE&G that it has contracted for the following segments of the nuclear fuel supply cycle for Peach Bottom 2 and 3 through the following years:

Nuclear Unit	Conversion	Enrichment	Fabrication
Peach Bottom 2	1997	2008	1999
Peach Bottom 3	1997	2008	1998

For information regarding the decontamination and decommissioning funds, see Note 3—PSE&G Nuclear Decommissioning and Amortization of Nuclear Fuel of Notes.

Coal

Approximately 40% of PSE&G's coal supply for its New Jersey facilities is obtained under a contract which expires in 1999. The balance of the supply is contracted annually from various suppliers, many of whom PSE&G has dealt with on a continuing basis for a number of years, and is supplemented by spot market purchases. The New Jersey Air Pollution Control Code (NJAPCC) permits the burning of coal with a sulfur content of up to 1% at existing coal-fired generating stations including PSE&G's three coal-fired New Jersey units, Hudson 2 and Mercer 1 and 2. The weighted monthly average sulfur content of the coal received at Hudson Station and at Mercer Station must not exceed 1.0% (dry weight basis). PSE&G has been able to obtain sufficient quantities of 1% (or less) sulfur coal and does not presently anticipate any difficulties in obtaining adequate coal supplies to replace expiring contracts. (See Environmental Controls—Air Pollution Control).

PSE&G has approximately a 23% interest in the Keystone and Conemaugh coal-fired generating stations located in Western Pennsylvania and operated by Pennsylvania Electric Company. At least 71% of the fuel required by the Keystone station is supplied by one coal company under a contract which expires December 31, 2004. At least 30% of the fuel required by Conemaugh station is supplied by another coal company under a contract which expires on December 31, 1997. In addition, approximately 18% of Conemaugh's coal requirements is supplied by a short-term contract which expires on November 30, 1996. The balance of the fuel requirements for each station is supplied through spot purchases obtained from local suppliers. The Keystone Conemaugh Projects Office, which runs project administration at these plants on a day to day basis, has advised PSE&G that it does not expect any difficulties in obtaining adequate coal supplies. (See Environmental Controls).

Natural Gas

PSE&G utilizes natural gas available from various spot, short-term and long-term gas contracts, to replace other fuels for electric generation. Presently, there are no effective legal restrictions on the use of natural gas for electric generation in existing plants. However, approval by FERC is required for the interstate transportation of natural gas, either by virtue of existing blanket authority or through individual proceedings. PSE&G does not expect any difficulties in obtaining natural gas supplies.

Oil

PSE&G uses residual oil in its conventional fossil-fired, steam-electric units. The supply of residual oil is furnished by contract suppliers, supplemented by occasional spot market purchases. PSE&G uses distillate fuel in its combustion turbines which is acquired by spot market purchases. PSE&G does not presently anticipate any difficulties in obtaining oil supplies.

849900273

Nuclear Fuel Disposal

After spent fuel is removed from a nuclear reactor, it is placed in temporary storage for cooling in a spent fuel pool at the nuclear station site. Under NWPA, the Federal government has entered into contracts for transportation and ultimate disposal of the spent fuel. The Federal government's present policy is that spent nuclear fuel will be accepted for long-term storage at government-owned and operated repositories. However, at present, no such repositories are in service or under construction. In December 1989, the U.S. Department of Energy (DOE) announced that it would not be able to open a permanent, high-level nuclear waste storage facility until 2010, at the earliest. However, the DOE has also indicated that progress on the repository will be delayed beyond 2010 if sufficient funds are not appropriated by the Congress for this program.

In conformity with the NWPA, PSE&G entered into contracts with the DOE for the disposal of spent nuclear fuel from Salem and Hope Creek. Similarly, PECO contracted with the DOE in connection with Peach Bottom 2 and 3. Under these contracts, the DOE is required to take title to the spent fuel at the site, then transport it and provide for its permanent disposal at a cost of one mil per KWH of nuclear generation, subject to such escalation as may be required to assure full cost recovery by the Federal government. In addition, a one-time payment was made to the DOE for permanently discharged spent fuels irradiated prior to 1983.

On April 28, 1995, the DOE published its final interpretation on the nuclear waste acceptance issues in which it stated that it had no legal obligation to begin waste acceptance in 1998, in the absence of a repository or other storage facility. PSE&G's contracts with DOE call for DOE to begin accepting spent fuel from PSE&G in 1998. As a result, on September 7, 1995, PSE&G, along with 24 other utilities and a combination of 48 States, state regulatory agencies and municipal power agencies, filed a lawsuit in the US District Court of Appeals for the District of Columbia Circuit against the DOE to protect its contractual rights.

Pursuant to NRC rules, spent nuclear fuel generated in any reactor can be stored safely and without significant environmental impact in reactor facility storage pools or in independent spent fuel storage installations located at reactor or away-from-reactor sites for at least 30 years beyond the licensed life for reactor operation (which may include the term of a revised or renewed license).

As a result of reracking the two spent fuel pools at Salem, the availability of adequate spent fuel storage capacity is conservatively estimated through 2008 for Salem 1 and 2012 for Salem 2, prior to losing an operational full core discharge reserve. The Hope Creek pool is also fully racked and it is conservatively expected to provide storage capacity until 2006, again prior to losing an operational full core discharge reserve. The units can be safely operated for many years beyond these dates, as pool storage capacity will continue to be available. These dates simply assist in planning the need for additional storage capacity that may be needed to operate the units until the expiration of their operating license. In addition, PECO has advised PSE&G that spent fuel racks at Peach Bottom have storage capacity until 2000 for Unit 2 and 2001 for Unit 3, prior to losing full core reserve capability, and that expansion of storage capacity beyond such dates is being investigated.

Low Level Radioactive Waste (LLRW)

As a by-product of their operations, nuclear generating units, including those in which PSE&G owns an interest, produce LLRW. Such wastes include paper, plastics, protective clothing, water purification materials and other materials. Such materials are accumulated on site and disposed of at a federally licensed permanent disposal facility in Barnwell, South Carolina.

In 1991, New Jersey enacted legislation providing for funding of the estimated $90 million cost of establishing a LLRW disposal facility. The State would recover the costs through fees paid by LLRW generators. PSE&G's overall share is expected to be about 40% of the total cost and has provided about $4.8 million to date. New Jersey has introduced a volunteer siting process to establish a LLRW disposal facility by the year 2000. Public meetings have been held across the state in an effort to provide information to and obtain feedback from the public. To date, there have been no volunteers identified.

849900274

Because of the uncertainties in disposal, PSE&G built an on-site facility completed in September 1994. This facility provides five years storage for LLRW from Hope Creek and Salem. The facility was used from July 1994 through June 1995, while the Barnwell facility was temporarily unavailable, and emptied when Barnwell re-opened in 1995. It will be used for interim storage of radioactive materials and waste, and if it proves necessary in the future, to temporarily store waste until New Jersey provides a permanent disposal facility.

PECO has advised PSE&G that it has an on-site LLRW storage facility for Peach Bottom, which will provide at least 5 years of temporary storage. PECO has also advised PSE&G that Pennsylvania is pursuing its own LLRW site development via state-selected candidate sites, along with a volunteer plan option. PSE&G has paid $2.5 million as its share of siting costs due to its ownership in the Peach Bottom units.

Gas Operations and Supply

PSE&G supplies its gas customers principally with natural gas. PSE&G supplements natural gas with purchased refinery gas and liquefied petroleum gas produced from propane. The adequacy of supply of all types of gas is affected by the nationwide availability of all sources for energy production.

As of December 31, 1995, the daily gas capacity of PSE&G was as follows:

Type of Gas	Therms Per Day
Natural gas	23,191,270
Liquefied petroleum gas	2,200,000
Refinery gas	400,000
Total	25,791,270

About 40% of the daily gas capacity is high load factor natural gas and is available every day of the year. The remainder comes from field storage, liquefied natural gas, seasonal sales, contract peaking supply, propane and refinery gas.

PSE&G's total gas sold to and transported for its various customer classes in 1995 was 3.9 billion therms which consisted of approximately 96% natural gas. Included in this amount is 1.6 billion therms of gas delivered to customers under PSE&G's transportation tariffs and individual cogeneration contracts. (See Operating Statistics of PSE&G). During 1995, PSE&G purchased approximately 3.3 billion therms of gas for its combined gas and electric operations directly from natural gas producers and marketers and the balance from interstate pipeline suppliers. These supplies were transported to New Jersey by PSE&G's four interstate pipeline suppliers. This diversification of supply sources provides PSE&G with reliability of supply, purchasing flexibility and lower overall costs.

PSE&G's gas supply contracts expire at various times over the next two to ten years. PSE&G does not presently anticipate any difficulty in negotiating replacement contracts. Since the quantities of gas available to PSE&G under its supply contracts are more than adequate in warm months, PSE&G nominates part of such quantities for storage, to be withdrawn during the winter season, under storage contracts with its principal suppliers. Underground storage capacity currently is approximately 770 million therms. PSE&G does not presently anticipate any difficulty in obtaining adequate supplies of natural gas.

PSE&G's annual average cost of natural gas sendout is shown below:

Year	Cents Per Million BTU(A)
1995	308.00
1994	318.09
1993	327.00

(A) Excludes contribution by PSE&G's electric operating units for a gas reservation charge and natural gas refunds from suppliers.

849900275

Substantially all of PSE&G's gas sales are made under rates which are currently designed to permit the recovery of projected increases in the cost of natural gas and gas from supplemental sources, when compared to levels included in base rates, on a current annual basis. (See Note 2—Rate Matters of Notes.)

The demand for gas by PSE&G's customers is affected by customer conservation, economic conditions, weather, the price relationship between gas and alternative fuels and other factors not within PSE&G's control. Presently, the majority of gas sold in interstate commerce has become deregulated. The ability of gas prices to respond to market conditions has improved in recent years because of actions taken by the FERC. Pipeline companies are able to adjust their gas rates up or down through their purchased gas adjustment mechanism more often than the semi-annual filings of prior years. As discussed above in Competition, FERC actions provided pipeline customers, such as PSE&G, with the opportunity to convert a portion of their pipeline sales contracts to transportation agreements and purchase natural gas supplies directly from a producer or other seller of natural gas. This has increased competition in the gas market by encouraging pipeline companies to act as non-discriminatory transporters of natural gas. PSE&G has taken advantage of these actions to lower its overall gas costs through the displacement of higher cost contract supplies with lower cost spot gas purchases and long-term producer contract supplies. (See Competition.)

PSE&G was able to meet all of the demands of its firm customers during the 1994-95 winter season and expects to continue to meet such energy-related demands of its firm customers during the 1995-96 winter season. However, the sufficiency of supply could be affected by several factors not within PSE&G's control, including curtailments of natural gas by its suppliers, the severity of the winter, the extent of energy conservation by its customers and the availability of feedstocks for the production of supplements to its natural gas supply. During the 1995-96 heating season through February 14, 1996, it was necessary for PSE&G to interrupt service to "interruptible" customers for 25 days as permitted by the applicable tariff. During the 1994-95 heating season, service to such customers was interrupted for eight days.

Employee Relations

Enterprise has no employees. As of December 31, 1995, PSE&G and its subsidiaries employed 11,452 persons. Four-year bargaining agreements between PSE&G and its unions, representing 6,746 employees, will expire April 30, 1996. Also at December 31, 1995, EDHI and its subsidiaries employed 523 persons, of which 38 were represented by unions. PSE&G, EDHI and their subsidiaries believe that they maintain satisfactory relationships with their employees.

For information concerning the employee pension plan and other postretirement benefits, see Note 1—Organization and Summary of Significant Accounting Policies, Note 13—Postretirement Benefits Other Than Pensions and Note 14—Pension Plan of Notes.

Regulation

Enterprise has claimed an exemption from regulation by the SEC as a registered holding company under PUHCA, except for Section 9(a)(2) thereof, which relates to the acquisition of 5% or more of the voting securities of an electric or gas utility company. Enterprise is not subject to direct regulation by the BPU, except potentially with respect to certain transfers of control and reporting requirements, and is not subject to regulation by the FERC. The BPU may also impose certain requirements with respect to affiliate transactions between and among PSE&G, Enterprise and Enterprise's nonutility subsidiaries. (See EDHI.)

As a New Jersey public utility, PSE&G is subject to comprehensive regulation by the BPU including, among other matters, regulation of intrastate rates and service and the issuance and sale of securities. As a participant in the ownership and operation of certain generation and transmission facilities in Pennsylvania, PSE&G is subject to regulation by the Pennsylvania Public Utility Commission (PPUC) in limited respects in regard to such facilities.

849900276

PSE&G is subject to regulation by FERC and by the Economic Regulatory Administration, both within DOE, with respect to certain matters, including regulation by FERC with respect to interstate sales and exchanges of electric transmission, capacity and energy, including cogeneration and small power production projects being constructed pursuant to PURPA, and accounts, records and reports. PSE&G is also subject to regulation by the United States Department of Transportation (USDOT) with respect to safety standards for pipeline facilities and the transportation of gas under the Natural Gas Pipeline Safety Act of 1968.

In addition, the New Jersey Need Assessment Act (NJNAA) provides that no public utility shall commence construction of any electric facility (as defined in the NJNAA) without having first obtained a Certificate of Need (Certificate of Need) from the Division of Energy Planning and Conservation within the New Jersey Department of Environmental Protection (NJDEP). A Certificate of Need, if granted, is valid for three years, renewable subject to review by the Commissioner of the NJDEP. Under the NJNAA, no state or local agency may issue any license or permit required for any such construction or substantial expansion prior to the issuance of the Certificate of Need. An electric facility is defined under the NJNAA as any electric power generating unit or combination of units at a single site with a capacity of 100 MW or more or any such units added to an existing electric generating facility which will increase its installed capacity by 25% or by more than 100 MW, whichever is smaller. Under NJNAA, a Certificate of Need will be issued only if the NJDEP Commissioner determines that the proposed facility is necessary to meet the projected need for electricity in the area to be served and that no more efficient, economical or environmentally sound alternative is available.

For information concerning nuclear insurance coverages, the BPU's NPS and assessments and the Price-Anderson Amendments Act of 1988, as amended, (Price Anderson) see Note 12—Commitments and Contingent Liabilities of Notes.

The New Jersey Public Utility Accident Fault Determination Act (Fault Act) requires the BPU to make a determination of fault with regard to any accident at any electric generating or transmission facility prior to granting a request by any utility for a rate increase to cover accident-related costs in excess of $10 million. Fault, as defined in the Fault Act, means any negligent action or omission of any party which either contributed substantially to causing the accident or failed to mitigate its severity.

However, the Fault Act allows the affected utility to file for non-accident related rate increases during such fault determination hearings and to recover contributions to federally mandated or voluntary cost-sharing plans and allows the BPU to authorize the recovery of certain fault-related repair, clean-up, power replacement and damage costs if substantiated by the evidence presented and if authorized in writing by the BPU. The Fault Act could have a material adverse effect on PSE&G's financial position if such an accident were to occur at a PSE&G facility, it was ultimately determined that the accident was due to the fault of PSE&G and the BPU were to deny recovery of all or a portion of the costs related thereto. The Alternative Rate Plan filed by PSE&G proposes discontinuing LEAC and NPS and would substantially shift the risks and opportunities involved in managing changes in fuel and replacement power costs from customers to PSE&G. See Note 2—Rate Matters—Alternative Rate Plan and LEAC of Notes.

Under New Jersey law, the BPU is required to audit all or a portion of the operating procedures and other internal workings of every gas or electric utility subject to its jurisdiction, including PSE&G, at least once every six years. Under the law, the audit may be performed either by the BPU Staff or under the supervision of designated members of such Staff by an independent management consulting firm, chosen by the utility from a list provided by the BPU. The BPU may, upon completion of the audit and after notice and hearing, order the utility to adopt such new practices and procedures that it shall find reasonable and necessary to promote efficient and adequate service to meet public convenience and necessity. The last such management audit of PSE&G was completed in 1991.

In 1992, as a follow-up to its 1991 management audit, the BPU conducted a focused audit of Enterprise's nonutility businesses to ascertain whether nonutility activities had harmed PSE&G. Enterprise has consistently maintained a clear and distinct separation of its utility and nonutility operations and believes that its nonutility

849900277

activities have not in any way adversely affected the utility. The results of the focused audit confirmed that there has been no harm to PSE&G as a result of Enterprise's nonutility activities. However, as a result of recommendations made by the BPU's auditors regarding operations and intercompany relationships between PSE&G and EDHI's nonutility businesses, the BPU approved a plan which, among other things, provides: (1) that Enterprise will not permit EDHI's nonutility investments to exceed 20% of Enterprise's consolidated assets without prior notice to the BPU (such assets at December 31, 1995 were approximately 15%); (2) for a restructuring of the PSE&G Board to include nonemployee Enterprise directors with an annual certification by such Board that the business and financing plans of EDHI will not adversely affect PSE&G; (3) for an Enterprise agreement to (a) limit debt supported by the minimum net worth maintenance agreement between Enterprise and Capital to $750 million, and (b) make a good-faith effort to eliminate such support over a six to ten year period from April 1993; and (4) the payment by EDHI to PSE&G of an affiliation fee of up to $2 million a year which will be applied by PSE&G through its LGAC and LEAC to reduce utility rates. Effective January 31, 1995, the debt supported by the minimum net worth maintenance agreement will be limited to $650 million and such affiliation fee will be proportionately reduced as such supported debt is reduced. In addition, Enterprise and EDHI and its subsidiaries continue to reimburse PSE&G for all costs of services provided by employees of PSE&G.

The issue of Enterprise sharing the benefits of consolidated tax savings with PSE&G or its ratepayers was not resolved by the plan approved as a result of the focused audit and remains open. Enterprise believes that PSE&G's taxes should be treated on a stand-alone basis for rate-making purposes, based on the separate nature of the utility and nonutility businesses. However, neither Enterprise nor PSE&G is able to predict what action, if any, the BPU may take concerning consolidation of tax benefits in future proceedings. On July 28, 1995, the BPU reported to PSE&G that it had fully evaluated all available information regarding the 18 recommendations of the Focused Audit conducted by the BPU's consultant and determined that 17 have been implemented pursuant to the BPU's Order Approving Audit Implementation Plans. The remaining issue regarding Enterprise sharing the benefits of consolidated taxes with PSE&G or its ratepayers may be considered in the context of a future base rate case, or in a filing that considers an alternative form of regulation. PSE&G cannot predict what actions, if any, the BPU may take regarding the consolidated tax issue. (See Note 2—Rate Matters—Consolidated Tax Benefits of Notes.)

Construction and operation of nuclear generating facilities are regulated by the NRC. For additional information relating to regulation by the NRC, see Nuclear Operations. In addition, the Federal Emergency Management Agency is responsible for the review in conjunction with the NRC of certain aspects of emergency planning relating to the operation of nuclear plants.

CEA invests in and participates in the development and operation of domestic and foreign cogeneration and power production facilities, which include QFs and EWGs. For additional information, see EDHI—CEA.

The BPU has authority to regulate power sales agreements within the BPU's pricing guidelines to utilities in the State of New Jersey and ascertain that the terms and conditions of agreements with New Jersey utilities are fair and reasonable. For additional information, see EDHI.

Environmental Controls

PSE&G, like most industrial enterprises, is subject to regulation with respect to the environmental impacts of its operations, including air and water quality control, limitations on land use, disposal of wastes, aesthetics and other matters, by various federal, regional, state and local authorities, including the United States Environmental Protection Agency (EPA), the United States Department of Transportation (USDOT), NJDEP, the New Jersey Department of Health, the BPU, the Interstate Sanitation Commission, the Hackensack Meadowlands Development Commission, the Pinelands Commission, the Delaware River Basin Commission, the United States Coast Guard and the United States Army Corps of Engineers. EDC, CEA and EGDC are also subject to similar regulation with respect to operation of their facilities. (See EDHI)

849900278

Environmental laws generally require air emissions and water discharges to meet specified limits. They also impose potential joint and several liability, without regard to fault, on the generators of various hazardous substances to manage these materials properly and to clean up property affected by the production and discharge of such substances. Compliance with environmental requirements has caused PSE&G to modify the day-to-day operation of its facilities, to participate in the cleanup of various properties that have been contaminated and to modify, supplement and replace existing equipment and facilities. During 1995, PSE&G expended approximately $148 million for capital related expenditures to improve the environment and comply with changing regulations. It is estimated that PSE&G will expend approximately $81 million, $43 million, $35 million, $30 million and $13 million in the years 1996 through 2000, respectively, for such purposes. Such amounts are included in PSE&G's estimates of construction expenditures. (See MD&A—Liquidity and Capital Resources.)

Preconstruction analyses and projections of the environmental impacts of contemplated activities, discharges and emissions are frequently required by the permitting agency. Before licensing approvals and permits are granted, the agency usually requests a modeling analysis of the effects of a specific action, and of its effect in combination with other existing and permitted activities, and may request the applicant to address emerging environmental issues. Such environmental reviews have caused delays in the proceedings for licensing facilities and similar delays can be expected in the future.

An industry issue with respect to the construction and operation of electric transmission and distribution lines is the alleged adverse health effects of EMF exposure. In 1990, the New Jersey Commission on Radiation Protection (CORP) decided against setting a limit on magnetic fields produced by high-voltage power lines citing the lack of convincing evidence required to determine dangerous levels. Proposed power regulations are currently under study by CORP to cover new power lines and allow existing power lines to continue to function regardless of new rule changes. If revised, the rules would authorize the NJDEP to screen all new power line projects of 100 kilovolts or more using a principle of "as low as reasonably achievable" to demonstrate that all steps within reason, including modest cost, were taken to reduce EMFs. The outcome of EMF study and/or regulations and the public concerns will affect PSE&G's design and location of future electric power lines and facilities and the cost thereof. Such amounts as may be necessary to comply with these new EMF rules and address public concerns cannot be determined at this time, but such amounts could be material.

The New Jersey Environmental Rights Act provides that any person may maintain a court action against any other person to enforce, or to restrain the violation of any statute, regulation or ordinance which is designed to prevent or minimize pollution, impairment or destruction of the environment, or where no such violation exists, to protect the environment from pollution, impairment or destruction. Certain Federal legislation confers similar rights on individuals. The principal laws and regulations relating to the protection of the environment which affect PSE&G's operations are described below.

Air Pollution Control

The Federal Clean Air Act (CAA) imposes emission control requirements across the United States, including requirements related to the emissions of sulfur dioxide and Nitrogen Oxides (NO_x) and requires attainment of National Ambient Air Quality Standards (NAAQS).

PSE&G's two wholly-owned and operated coal-fired generating stations in New Jersey are presently expected to be able to meet CAA sulfur dioxide requirements with only modest expenditures.

PSE&G also has approximately a 23% interest in Conemaugh and Keystone, coal-fired generating stations located in western Pennsylvania. With respect to Conemaugh, in order to comply with the CAA Sulfur Dioxide Requirements, the station's co-owners, including PSE&G, approved the installation of scrubbers (flue gas desulfurization systems). PSE&G's share of the remaining Conemaugh scrubber cost is less than $1.0 million and is included in PSE&G's estimate of construction expenditures. Scrubber construction at Conemaugh Unit 2 was completed in November 1995. Keystone is presently expected to comply with the Sulfur Dioxide Requirements by utilizing excess emission allowances from the over-scrubbing of the Conemaugh units.

849900279

The CAA established a national emission trading system for Sulfur Dioxide allowances. Yearly allowances have been allocated according to a formula specified by the CAA and applicable to owner/operators of large boilers and power generating equipment.

New Jersey and other Northeastern states have imposed Reasonably Available Control Technology (RACT) requirements on each major source of NO_x. Additionally, these states have committed to additional overall NO_x emission reductions on power plants and large industrial boilers of .2 pounds per million BTUs by 1999 with potential additional reductions of .15 pounds per million BTUs by 2003. All of PSE&G's Fossil Generating units are currently in compliance with RACT requirements.

The NJDEP, in concert with other states in the Northeast, is implementing a regional CAA NO_x allowance emission trading system for power plants and large industrial boilers. This includes the allocation of emission allowances to these sources in 1996. The NO_x allowance trading system is scheduled to be operational by the beginning of 1999 and could result in additional changes to equipment, methods of operation or fuel.

EPA has promulgated six NAAQS. PSE&G's Fossil Generating Stations are all located in areas of non-attainment for ozone. Each state has the responsibility under the CAA to adopt a plan, and regulations, to attain and maintain compliance to these standards.

In New Jersey, NJDEP is using the New Jersey Air Pollution Control Code (NJAPCC) to achieve compliance with, and maintenance of, the NAAQS. The NJAPCC provides stringent requirements restricting the sulfur content in coal and oil fuels. (See PSE&G—Electric Fuel Supply and Disposal—Coal.) The increased cost of purchasing low-sulfur fuel is offset by rates which are designed to permit the recovery of fuel costs on a current annual basis. In accordance with the proposed Alternative Rate Plan, separate mechanisms would be established to ensure continued recovery of costs associated with activities mandated or approved by state or federal agencies or otherwise out of PSE&G's control. (See PSE&G—Electric Fuel Supply and Disposal and Note 2—Rate Matters of Notes.)

The CAA also requires that each major facility apply for and receive a facility-wide operating permit. The facility-wide operating permit terms and conditions are enforceable by both the EPA and NJDEP. PSE&G filed permit applications for its major facilities in New Jersey in 1995. The operating permit program will require some PSE&G facilities to assess emissions, which could require the installation of emission monitoring equipment and changes to facility operations or technology. To the extent estimates of the costs of complying with these requirements through the year 2000 are quantifiable, they are included in PSE&G's construction expenditures. In accordance with the filed Alternative Rate Plan, PSE&G has requested to have separate mechanisms to ensure continued recovery of costs associated with activities mandated or approved by State or Federal agencies, although no assurances can be given as to what action may be taken by the BPU. In addition, the revised CAA requirements will increase the cost of producing electricity for the Pennsylvania and Ohio Valley Region Generating units supplying electricity to the PJM and New Jersey. All of PSE&G's current purchased power costs are included in PSE&G's LEAC. (See Note 2—Rate Matters of Notes.)

In non-attainment areas, one of the effects of the CAA is to allow construction or expansion of a facility only upon a showing that any additional emissions from the source will be more than offset by reductions in similar emissions from existing sources. In prevention of significant deterioration areas, construction or expansion of a facility would be permitted only if emissions from the source, together with emissions from other expected new sources, would not violate air quality increments for particulates and sulfur dioxide that are more stringent than NAAQS. All of these requirements may affect PSE&G's ability to locate, construct or expand generating facilities in the future.

PSE&G has been working collaboratively with environmentalists, a select number of other electric utilities in the Northeast, NJDEP and other Northeast environmental regulators, EPA, and a number of large manufacturing companies to achieve significant emission reductions from power plants in the Midwest. PSE&G has also been working with these respective groups to establish a flexible NO_x and Volatile Organic Compound

849900280

("VOC") emissions trading system as a compliance alternative to CAA compliance requirements for industrial facilities, highway and off-highway emission sources, state transportation CAA conformity and automobile inspection and maintenance. Significant emission reductions from Midwest are expected to improve New Jersey's and the Northeast's air quality thereby lessening the need for additional New Jersey emission controls over and beyond those already regulatorily adopted.

These collaborative efforts, coupled with growing environmental regulator and industry concerns for cost-effective compliance with CAA requirements, have resulted in the creation of a thirty-seven state environment forum called Ozone Transport Assessment Group (OTAG). This includes Midwest, Northeast and Southern states east of the Mississippi River. OTAG's charter is to produce consensus recommendations concerning the need for additional emission controls and to identify the level and sources to which those controls should be applied. OTAG is expected to conclude its work by the fall of 1996. If the OTAG process fails to produce consensus that leads to an agreement by individual states to undertake timely necessary control actions, affected downwind states such as those in the Northeast are required as part of their EPA approved 1994 CAA State Implementation Plans to submit petitions to EPA seeking EPA's imposition of controls on upwind states. It is difficult to determine at this time the likely outcome of this process.

Recently, the issue of transported air pollution from the Midwest power plants and their negative impact on air quality in the Northeast has become the subject of concern before the FERC. The FERC has performed a draft environmental impact statement to assess the environmental impact of developing a generic rule by which electric utilities will be required to provide full non-discriminatory transmission access to all wholesale power providers. PSE&G and a number of other utilities, environmental groups and regulators have submitted comments seeking FERC's mitigation of expected additional power plant emissions resulting from the implementation of FERC's open access policies. It is too soon to determine to what extent FERC will act on the concerns raised.

Water Pollution Control

The Federal Water Pollution Control Act (FWPCA) authorizes the imposition of technology and water-quality based effluent limitations to regulate the discharge of pollutants into the surface waters of the United States through the issuance of National Pollutant Discharge Elimination System (NPDES) permits. The New Jersey Water Pollution Control Act (NJWPCA) authorizes the NJDEP to regulate discharges to surface waters and ground waters of the State through the New Jersey Pollutant Discharge Elimination System (NJPDES) permits. NJDEP also administers the NPDES/NJPDES permit program. Certain PSE&G facilities are directly regulated by NJPDES permits issued pursuant to FWPCA and the NJWPCA.

In addition, the FWPCA also imposes additional requirements with respect to the control of toxic discharges to degraded waterbodies under Section 304(1). Although five PSE&G electric generating stations (Bergen, Hudson, Kearny, Linden and Sewaren) were originally subject to requirements imposed pursuant to Section 304(l), the NJDEP and EPA have proposed delisting these stations from the 304(l) program for the present time.

The FWPCA also authorizes the imposition of less stringent thermal limits pursuant to a variance procedure set forth in Section 316(a) and the regulation of cooling water intake structures pursuant to Section 316(b). PSE&G has filed information with the NJDEP in support of Section 316(a) variance requests and Section 316(b) best technology available determinations for several of its electric generating stations which are pending before the NJDEP presently and may be required to submit information for other stations as a result of the permit renewal process. With respect to Section 316(b) requirements, the EPA initiated a rulemaking procedure in 1994 to develop regulations implementing this provision. Pursuant to a Consent Decree entered by a Federal District Court resolving an action to compel the rulemaking brought by a number of environmental groups including certain of those who opposed the 1994 Salem NJPDES permit, EPA must propose draft regulations on or before July 2, 1999 and promulgate final regulations by August 2001. While the content and scope of these regulations can not be predicted at this time, they may have a considerable effect on agency review of section 316(b) determinations pending in 1999 or after. (see discussions on Hudson, Mercer, and Salem NJPDES permits below.)

849900281

The FWPCA and the NJWPCA also authorize the discharge of stormwater from certain facilities including steam electric generating stations. In many instances, this is accomplished through the development of Stormwater Pollution Prevention Plans (SPPP). Similarly, both laws authorize Publicly Owned Treatment Works (POTW) to issue permits for significant industrial users (SIU) of the treatment facility. Certain of PSE&G's facilities have permits under the SPPP and SIU programs.

A brief discussion on pending permit proceedings which have the potential to impose new or more stringent terms or conditions which could require changes to operations or significant expenditures follows:

Hudson Station's NJPDES permit is in the process of being renewed by the NJDEP. As part of that renewal, the NJDEP has requested updated information in connection with PSE&G's 316(a) and 316(b) demonstrations, in part, to address issues identified by a consultant hired by NJDEP. The consultant recommended that Hudson be retrofit to operate with closed cycle cooling to address alleged adverse impacts associated with the thermal discharge and intake structure. PSE&G is in the process of collecting additional data which will be used in the updated demonstrations. PSE&G anticipates submitting these documents to NJDEP in the first quarter of 1998. It is impossible to predict the NJDEP's determinations on these demonstrations; however, PSE&G presently estimates that the cost of retrofitting Hudson to operate with closed cycle cooling could be in excess of $59 million in 1998 dollars.

NJDEP has advised PSE&G that it is preparing a renewal permit for Mercer Station and, in connection with that renewal, will also be reexamining Mercer's compliance with Section 316(a) and 316(b). This may result in PSE&G's being required to submit updated 316(a) and 316(b) demonstrations for NJDEP review. It is impossible to predict at this time the outcome of such review.

PSE&G is implementing the 1994 NJPDES permit issued for Salem Station which requires, among other things, water intake screen modifications and wetlands restoration. In addition, PSE&G is seeking permits and approvals from various agencies needed to fully implement the special conditions of the permit. No assurances can be given as to receipt of any such additional permits or approvals. The estimated capital cost of compliance with the final permit is approximately $100 million, of which PSE&G's share is 42.59% and is included in PSE&G's 1996-2000 construction program. In accordance with the filed Alternative Rate Plan, PSE&G has requested to have separate mechanisms to ensure continued recovery of costs associated with activities mandated or approved by State or Federal agencies, although no assurances can be given as to what action may be taken by the BPU. PSE&G must apply to renew the Salem permit in March 1999 which renewal application must provide updated Section 316(a) and 316(b) demonstrations for the NJDEP's review. (See the discussion above regarding EPA's Section 316(b) rulemaking.) (See MD&A—Liquidity and Capital Resources—Construction, Investments and Other Capital Requirements Forecast.)

In June, 1995, PSE&G filed an application with the Delaware River Basin Commission (DRBC) seeking a modification to the heat dissipation area previously established based upon the NJDEP's grant of a Section 316(a) variance for Salem Station. DRBC issued a modified Docket in September 1995 granting PSE&G's request. PSE&G must reapply to the DRBC in 1999 for a continuation of this heat dissipation area.

PSE&G anticipates that NJDEP will issue a draft renewal permit for Hope Creek Station in 1996 which will not propose effluent limitations or other requirements significantly more stringent than those in the existing permit.

CEA Eagle Point, Inc. (Eagle Point), an indirect subsidiary of CEA, is a partner in a partnership which owns the Eagle Point Cogeneration Facility (EPC), located in West Deptford, New Jersey. EPC is operated by an affiliate of Eagle Point's partner and provides electricity and steam for an adjacent petroleum refinery (owned and operated by another affiliate of Eagle Point's partner) and sells excess electricity to PSE&G. On January 15, 1995, Eagle Point received a Notice of Violation (NOV) from Region II of EPA alleging violations of certain CAA requirements and limitations related to the air permit at EPC and the adjacent refinery and demanding that such violations be corrected. Eagle Point, its partner and the operator of the refinery are contesting the EPA

849900282

conclusion that violations have occurred and have met with staff of EPA and NJDEP to discuss issues related to the NOV. Eagle Point cannot predict whether EPA will take action with respect to the NOV and, if so, what action it may take. Applicable regulations provide EPA with the power to seek to collect criminal and civil penalties for continued violation of the provisions of air permits.

Control of Hazardous Substances

PSE&G Manufactured Gas Plant Remediation Program

For information regarding PSE&G's Manufactured Gas Plant Remediation Program, see Note 12—Commitments and Contingent Liabilities of Notes.

Other Sites

A preliminary review of possible mercury contamination at the Kearny Station concluded that an additional study and investigations are required. In 1995, PSE&G entered into a Memorandum of Agreement (MOA) with NJDEP for the Kearny Generating Station pursuant to which PSE&G will conduct a Remedial Investigation (RI) of the site. A Remedial Investigation Work Plan (RIWP) has been filed and is currently under review by the NJDEP. Field work activities associated with the RI will begin after NJDEP approval of the RIWP.

Hazardous Substances

The Federal Comprehensive Environmental Response, Compensation and Liability Act of 1980 (CERCLA), as amended by the Superfund Amendments and Reauthorization Act of 1986 and the Federal Resource Conservation and Recovery Act of 1976 (RCRA), authorize EPA to issue orders and/or to bring an enforcement action to compel responsible parties to take investigative and/or cleanup actions at any site that is determined to present an imminent and substantial danger to the public or to the environment because of an actual or threatened release of one or more hazardous substances. The New Jersey Spill Compensation and Control Act (Spill Act) provides similar authority to NJDEP. Because of the nature of PSE&G's business, including the production of electricity, the distribution of gas and, formerly, the manufacture of gas, various by-products and substances are or were produced or handled which contain constituents classified as hazardous under one or more of the above laws.

PSE&G generally provides for the disposal or processing of such substances through licensed independent contractors. However, these statutory provisions impose joint and several liability without regard to fault on all allegedly responsible parties, including the generators of the hazardous substances for certain investigative and cleanup costs at sites where these substances were disposed or processed. These statutes also authorize private rights of action for recovery of these costs.

PSE&G has been notified with respect to a number of such sites and the cleanup of these potentially hazardous sites is receiving greater attention from the government agencies involved. Generally, actions directed at funding such site investigations and cleanups include suspected or known allegedly responsible parties. PSE&G's past operations suggest that some remedial action may be required. PSE&G does not expect its expenditures for any such site to have a material effect on its financial position, results of operations or net cash flows.

EPA has determined that a portion of the Passaic River from a point at its confluence with Hackensack River to a point six miles up-river (the Site) is a "facility" within the meaning of that term as defined under CERCLA. EPA has also determined that five corporations are persons within the meaning of CERCLA for purposes of liability under CERCLA with respect to remedial actions at the Site. EPA has publicly indicated that it is continuing an assessment of available information with respect to the identification of other responsible parties. One of these corporations has entered into a consent order with EPA pursuant to which it is obligated to conduct a remedial investigation, human and ecological risk assessment and feasibility study relating to the Site. Field work activities associated with these actions were initiated in the spring of 1995. A report presenting the results of the remedial investigation and risk assessment is scheduled to be filed in the fall of 1997.

849900283

PSE&G and certain of its predecessors conducted operations at properties along the Passaic River both within and outside the Site. EPA has not named PSE&G as a responsible party. PSE&G cannot predict what, if any, action EPA or others may take against PSE&G with respect to the Site or, in such event, what contributions PSE&G may be required to make to the costs of these initiatives.

Presently, significant CERCLA/Spill Act actions involving PSE&G include the following:

(1) Claim made in 1985 by U. S. Department of the Interior under CERCLA with respect to the Pennsylvania Avenue and Fountain Avenue municipal landfills in Brooklyn, New York for damages to natural resources. The U.S. Government alleges damages of approximately $200 million. To PSE&G's knowledge, there has been no action on this matter since 1988.

(2) Claim by EPA, Region III, under CERCLA with respect to a site operated by Sealand Ltd. in Mount Pleasant Township, New Castle County, Delaware. PSE&G and other companies have entered into an Administrative Consent Order (ACO) obligating the signatories thereto to fund a Remedial Investigation and Feasibility Study (RI/FS). PSE&G's share of the costs of actions taken at this site have approximated 25% of such costs. In 1991, EPA entered a Record of Decision (ROD) which determined that no further action was required at the site. The State of Delaware filed comments objecting to this ROD and hired a consultant which has recommended that additional actions be taken at the site based on its review of EPA's files. The State of Delaware required the potentially responsible parties (PRPs) to conduct additional groundwater analyses during 1994. Based on its review of the monitoring data, in 1995, the State of Delaware proposed to require the PRPs to conduct additional groundwater monitoring for a five year period and to reimburse it for its past and future oversight costs associated with this site. Delaware has not yet provided an estimate on its oversight costs.

(3) At the Duane Marine Salvage Corporation Superfund Site in Perth Amboy, Middlesex County, New Jersey, PRPs including PSE&G, had completed an EPA-approved surface removal action during 1986 and EPA had required no further response actions. However, NJDEP ordered that an RI/FS be performed to address or disprove an alleged subsurface contamination and, following negotiations with the PRPs, including PSE&G, an ACO was executed. The PRPs have submitted an RI/FS and a second revised Draft Feasibility Study. In 1994, NJDEP selected a remedy for the site, the total cost of which is estimated to be $1,500,000. Based upon the claims made and activities taken to date, PSE&G anticipates that its obligations with respect to this site will be de minimis.

(4) Spill Act Directive issued by NJDEP in 1987 to PRPs, including PSE&G, with respect to a site formerly owned and operated by Borne Chemical Company in Elizabeth, Union County, New Jersey, ordering certain interim actions directed at both site security and the off-site removal of certain hazardous substances. Certain PRPs, including PSE&G, signed an ACO with NJDEP to secure the site, which has been completed. After further negotiations, certain other PRPs, including PSE&G, signed a further ACO requiring them to perform a removal action at the site, which was completed in 1992. In 1994, NJDEP issued a third Directive requiring the performance of an RI/FS. Following negotiations with certain PRPs including PSE&G, an MOA regarding the conduct of the RI/FS was executed in 1995. Based upon the claims made and activities taken to date, PSE&G anticipates that its obligations with respect to this site will be de minimis.

(5) A second Directive pursuant to the Spill Act was issued by NJDEP in 1989 to PRPs, including PSE&G, with respect to the PJP Landfill in Jersey City, Hudson County, New Jersey (PJP), ordering payment of operating and maintenance costs of approximately $150,000 and reasserting claims made in an initial Directive for all past and future costs associated with investigations and remediation of the alleged contamination. Additionally, in 1990, also pursuant to the Spill Act, NJDEP issued a Multi-Site Directive concerning four sites, including PJP. With respect to the PJP site, NJDEP reasserted demands for payment made in earlier Directives. The NJDEP alleges that it has spent approximately $23 million in interim remedial measures at the PJP site. The NJDEP also alleges that it will incur approximately $2 million in costs to complete a remedial investigation of the PJP site. PSE&G has made a good-faith payment of approximately $21,000 to NJDEP pursuant to the Multi-Site Directive in accordance with actions taken by

certain other PRPs named in these Directives. The NJDEP has filed a cost recovery action in Superior Court against certain of the other PRPs named in the Directives. Based upon the claims made and activities taken to date, PSE&G anticipates that its obligations with respect to this site will be de minimis.

(6) Claim by EPA, Region III, under CERCLA with respect to a Superfund Site in Philadelphia, Pennsylvania, owned and formerly operated by Metal Bank, Inc., as a non-ferrous scrap reclamation facility. PSE&G, together with several other utilities, is alleged to be liable either to conduct an RI/FS and undertake the necessary cleanup, if any, or to reimburse EPA for the cost of performing these functions. In 1991 these utilities, including PSE&G, entered into an ACO with the EPA to perform an RI/FS, Docket No. III-91-34-DC. The RI/FS was completed and the RI/FS Report was submitted to EPA in October 1994. The RI/FS Report proposes various remedial alternatives for consideration by EPA in its selection of a remedy for the site. In July 1995, the EPA issued its Proposed Remedial Action Plan (PRAP) for the site. The PRAP details the EPA's intention to select a remedy that will cost between $17 and $30 million. It is anticipated that EPA will assert a claim against PSE&G and the other utility companies, and perhaps others as well, for the performance or funding of the selected remedy. PSE&G's share of the costs of the proposed remedy is between $4 and $8 million or approximately 26% of the total.

(7) The Klockner Road site is located in Hamilton Township, Mercer County, New Jersey and occupies approximately two acres on the Trenton Switching Station property. In May 1995, the NJDEP formally notified PSE&G that the Klockner Road site is an open case and that absent voluntary action by PSE&G, the NJDEP would prioritize the site and thereafter take appropriate enforcement action. As a result of this notice, PSE&G is in the process of filing an application for a MOA. Preliminary investigations indicate the potential presence of soil and groundwater contamination at the site. PSE&G's preliminary estimate is that an environmental characterization of the site will cost approximately $800,000. The cost of any remediation of potential site contamination is not presently estimable.

(8) In U.S. v. CDMG Realty Co., et al., Civil Action No. 89-4246 (NHP) (RJH), pending in the United States District Court for the District of New Jersey, PSE&G and over 60 other entities were joined in January 1995 as additional third-party defendants. Third-party plaintiffs, an association of 44 entities, are essentially seeking contribution and/or indemnification for the expenses they have incurred and will incur as a result of having settled the direct claims of the NJDEP and EPA related to the investigation and remediation of Sharkey's Landfill, located in Parsippany-Troy Hills, Morris County, New Jersey. The claims are all alleged to be brought pursuant to CERCLA and PSE&G is alleged to have arranged for the disposal of industrial wastes at Sharkey's Landfill. The claims with respect to this matter are presently the subject of an alternative dispute resolution proceeding. Based upon the claims made and activities to date, PSE&G estimates that its obligations for this site will be de minimis.

(9) In 1991, the NJDEP issued Directive and Notice to Insurers Number Two (Directive Two) to 24 Insurers and 52 Respondents, including PSE&G in connection with an investigation and remediation of the Global Landfill Site in Old Bridge Township, Middlesex County, New Jersey (Global Site). Directive Two seeks recovery of past and anticipated future NJDEP response costs ($37.4 million). PSE&G's alleged liability is based on assertions that it generated asbestos-containing materials which were disposed of at the Global Site. In 1991, PSE&G entered into an agreement with the NJDEP and 29 other Directive Two Respondents effecting a partial settlement of the foregoing costs subject to a subsequent reallocation based upon the parties' further development of information concerning their respective proportionate waste contributions to the Global Site. Negotiations are ongoing regarding resolution of the balance of the response costs sought pursuant to Directive Two. In 1993, the NJDEP and various participating PRPs, including PSE&G, executed a Consent Decree whereby the participating PRPs agreed to perform the remedial design and remedial action for the operable unit one remedy as specified in a 1991 ROD (approximate total cost $30 million). The Consent Decree was executed and entered by the United States District Court for the District of New Jersey in 1993. Subject to a subsequent reallocation, the various parties to the Consent Decree have agreed that PSE&G's contribution under the Consent Decree settlement will be $300,000 (approximately 1% of the total cost).

(10) In 1991, the New Jersey Department of Law and Public Safety, Division of Law, issued Directive and Notice To Insurers Number One (Directive One) to 50 Insurers and 20 Respondents, including PSE&G,

seeking from the Respondents payment of $5.5 million of NJDEP's anticipated costs of remedial action and of administrative oversight at the Combe Fill South Sanitary Landfill in Washington and Chester Townships, Morris County, New Jersey (Combe Site). The $5.5 million represents the NJDEP's 10% share of such anticipated costs pursuant to a cooperative agreement with the United States regarding the selected remedial action. Therefore, total site remediation costs approximate $50 million. Further, the Directive One Respondents are directed to perform the operation and maintenance of the remedial action including all remedial facilities on the Combe Site. PSE&G's alleged liability is based on the assertion that PSE&G-generated waste oil and water, containing hazardous substances, was transported to the Combe Site and applied to Combe Site roads for dust control. Based upon the claims made and PSE&G's investigation and response to same, PSE&G anticipates that its obligations, if any, with respect to this site will be de minimis.

(11) In United States of America v. Superior Tube Company, et al., Docket No. 89-7421 in the U.S. District Court for the Eastern District of Pennsylvania, PSE&G was served in 1990 with a Third-Party Complaint. Pursuant to CERCLA, the United States filed suit against Superior Tube Company (Superior) and others seeking recovery of past and future costs incurred or to be incurred in the cleanup of the Moyer Landfill located in Collegeville, Pennsylvania. Superior filed a Third-Party Complaint naming approximately 150 third-party defendants, including PSE&G. Superior alleges that PSE&G generated, transported, arranged for the disposal of and/or caused to be deposited certain hazardous substances at the Moyer Landfill. On the basis of those allegations, Superior seeks contribution and/or indemnification from the third-party defendants, including PSE&G, on the United States' action against it. PSE&G has participated in negotiations concerning resolution of the United States' and Superior Tube's claims. Pursuant to settlement negotiations amongst certain direct defendants, certain third party defendants and the plaintiffs, the defending parties participating in said negotiations are currently pursuing the possibility of resolving all potential liability concerning the above referenced matter (excluding any potential liability associated with a future claim, if any, for natural resource damages) on behalf of certain de minimis defending parties, including PSE&G. Based upon the claims made and the above referenced negotiations, PSE&G anticipates that its obligations with respect to this site will be de minimis.

(12) Spill Act Multi-Site Directive (Directive) issued by the NJDEP to PRPs, including PSE&G, listing four separate sites, including the former bulking and transfer facility called the Marvin Jonas Transfer Station (Sewell Site) in Deptford Township, Gloucester County, New Jersey. With regard to the Sewell Site, this Directive ordered approximately 350 PRPs, including PSE&G, to enter into an ACO with NJDEP, requiring them to remediate the Sewell Site. Certain PRPs, including PSE&G, have completed the interim actions directed at both site security and off-site disposal of containers, trailers and contaminated surface soils. PRPs, including PSE&G, are currently fulfilling the terms of a MOA entered into with NJDEP in 1993 to conduct an RI/FS and, if necessary, take remedial action. Based upon the claims made and activities taken to date, PSE&G anticipates that its obligations with respect to this site will be de minimis.

(13) In Transtech Industries, Inc. et al v. A&Z Septic Clean et al., Docket No. 2-90-2578(HAA), filed on October 5, 1992, in the U.S. District Court for the District of New Jersey, PSE&G has been named a defendant in a Complaint which has been filed pursuant to CERCLA, against several hundred parties seeking recovery of past and future response costs incurred or to be incurred in the investigation and/or remediation of the Kin-Buc Landfill, located in Edison Township, Middlesex County, New Jersey. Plaintiffs allege that all named defendants, including PSE&G, are PRPs as generators and/or transporters of various hazardous substances ultimately deposited at the Kin-Buc Landfill. Based upon the claims made and activities taken to date, PSE&G anticipates that its obligations with respect to this site will be de minimis.

(14) In 1993, PSE&G acknowledged service of Plaintiff's Summons and Complaint in a matter entitled The Fishbein Family Partnership v. PPG Industries, Inc. and Public Service Electric and Gas Company. Pursuant to CERCLA, the Spill Act and various common law theories of liability, the Plaintiff filed an action seeking declaratory relief regarding responsibility for and recovery of damages and response costs incurred and/or to be incurred as a result of the release or threatened release of hazardous substances at property located in Jersey City, Hudson County, New Jersey. Plaintiff named PPG Industries, Inc. (PPG) and PSE&G as defendants in the above-referenced action. The Plaintiff alleges that defendants are liable

for the damages and relief sought based on their past conduct of industrial operations at the site. The industrial operations referenced in Plaintiff's Complaint include chromium ore processing operations (PPG and its predecessors) and coal gasification operations (PSE&G and its predecessors). PSE&G filed its response to the Plaintiff's Complaint including cross-claims for indemnity and contribution against co-defendant PPG. PSE&G also filed a Third Party Complaint against UGI Utilities, Inc. (UGI) seeking indemnification and contribution as to any liability imposed upon PSE&G attributable to UGI's past conduct of industrial operations on a portion of the site. In March 1995, PSE&G filed an Amended Third Party Complaint extending the time period of PSE&G's allegations concerning UGI's past conduct of industrial operations at the site. In May 1995, an Administrative Stay of this matter was entered pending either an agreement between the NJDEP and PPG as to a cleanup plan for the site or a determination of certain cross-motions for summary judgement filed by Plaintiff and PPG. Based upon the claims made and activities taken to date, PSE&G's potential liability in this matter, if any, is not currently estimable.

Other Potential Liability

In addition to the sites individually listed above, PSE&G has received 14 claims and/or inquiries concerning prospective enforcement actions by the EPA and/or NJDEP. Such claims/inquiries relate to alleged properties/sites where it has been alleged that an imminent and substantial danger to the public or to the environment exists as a result of an actual or threatened release of one or more hazardous substances. PSE&G's investigation and initial response concerning each such claim and/or inquiry suggests that PSE&G's potential liability, if any, is de minimis.

849900287

[THIS PAGE INTENTIONALLY LEFT BLANK.]

849900288

Consolidated Financial Statistics (A)

ENTERPRISE

	1995	1994	1993	1992	1991
	(Thousands of Dollars where applicable)				
Selected Income Information					
Operating Revenues					
Electric	$ 4,020,842	$ 3,739,713	$ 3,696,114	$ 3,407,830	$ 3,519,806
Gas	1,686,403	1,778,528	1,594,341	1,586,181	1,307,849
Nonutility Activities	456,908	404,202	418,135	362,781	283,766
Total Operating Revenues	$ 6,164,153	$ 5,922,443	$ 5,708,590	$ 5,356,792	$ 5,111,421
Net Income	$ 662,323	$ 679,033	$ 600,933	$ 504,117	$ 543,035
Earnings per average share of Common Stock	$ 2.71	$ 2.78	$ 2.50	$ 2.17	$ 2.43
Dividends Paid per Share	$ 2.16	$ 2.16	$ 2.16	$ 2.16	$ 2.13
Payout Ratio	80%	78%	86%	100%	88%
Rate of Return on Average Common Equity (B)	12.31%	12.94%	11.91%	10.69%	12.24%
Ratio of Earnings to Fixed Charges	2.77	2.76	2.59	2.30	2.54
Book Value per Common Share (C)	$ 22.25	$ 21.70	$ 21.07	$ 20.32	$ 20.04
Gross Utility Plant	$16,925,280	$16,566,058	$15,861,484	$15,081,907	$14,426,560
Accumulated Depreciation and Amortization of Utility Plant	$ 5,737,849	$ 5,467,813	$ 5,057,104	$ 4,610,595	$ 4,243,979
Total Assets	$17,171,439	$16,717,440	$16,329,656	$14,777,732	$14,804,354
Consolidated Capitalization Common Stock	$ 3,801,157	$ 3,801,157	$ 3,772,662	$ 3,499,183	$ 3,262,138
Retained Earnings	1,643,785	1,510,010	1,361,018	1,282,931	1,282,029
Common Equity	5,444,942	5,311,167	5,133,680	4,782,114	4,544,167
Long-Term Debt	5,189,791	5,180,657	5,256,321	4,977,579	5,128,373
Preferred Stock without Mandatory Redemption	324,994	384,994	429,994	429,994	429,994
Preferred Stock with Mandatory Redemption	150,000	150,000	150,000	75,000	—
Monthly Income Preferred Securities	210,000	150,000	—	—	—
Total Capitalization	$11,319,727	$11,176,818	$10,969,995	$10,264,687	$10,102,534

(A) See Management's Discussion and Analysis of Financial Condition and Results of Operations and Notes to Consolidated Financial Statements.

(B) Net Income for a twelve-month period divided by the thirteen-month average of Common Equity.

(C) Total Common Equity divided by end-of-period Common Shares outstanding.

849900289

Operating Statistics

PSE&G

	1995	1994	1993	1992	1991
	(Thousands of Dollars where applicable)				
Electric					
Revenues from Sales of Electricity:					
Residential	$1,274,712	$1,187,099	$1,175,875	$1,037,099	$1,116,699
Commercial	1,853,855	1,734,894	1,678,011	1,554,956	1,575,547
Industrial	704,861	686,065	710,206	683,750	728,411
Public Street Lighting	54,730	52,353	51,019	47,729	46,400
Total Revenues from Sales to Customers	3,888,158	3,660,411	3,615,111	3,323,534	3,467,057
Interdepartmental	1,862	1,710	1,737	1,544	1,599
Non-Required Energy and Capacity Revenues.(a)	37,179	35,223	48,625	51,313	19,763
Wholesale Energy and Capacity Revenues.(b)	19,446	7,481	—	—	—
Total Revenues from Sales of Electricity	3,946,645	3,704,825	3,665,473	3,376,391	3,488,419
Other Electric Revenues	74,197	34,888	30,641	31,439	31,387
Total Operating Revenues	$4,020,842	$3,739,713	$3,696,114	$3,407,830	$3,519,806
Sales of Electricity—megawatthours:					
Residential	10,885,479	10,594,134	10,631,402	9,816,046	10,505,547
Commercial	18,761,863	18,466,863	18,096,312	17,454,352	17,596,569
Industrial	9,026,838	9,109,998	9,203,839	9,298,741	9,406,109
Public Street Lighting	339,164	334,726	329,828	325,545	320,900
Total Sales to Customers	39,013,344	38,505,721	38,261,381	36,894,684	37,829,125
Interdepartmental	20,095	17,755	18,514	19,012	19,719
Non-Required Energy Sales.(a)	1,047,996	1,320,170	2,245,884	2,116,049	1,858,590
Wholesale Energy Sales.(b)	201,610	139,235	—	—	—
Total Sales of Electricity	40,283,045	39,982,881	40,525,779	39,029,745	39,707,434
Gas					
Revenues from Sales of Gas:					
Residential	$ 823,302	$ 889,541	$ 780,195	$ 809,559	$ 699,696
Commercial	501,102	510,829	460,340	481,960	426,110
Industrial	274,937	312,405	299,762	243,527	138,394
Street Lighting	468	491	467	468	468
Total Revenues from Sales to Customers	1,599,809	1,713,266	1,540,764	1,535,514	1,264,668
Interdepartmental	2,636	3,976	3,078	2,572	2,689
Total Revenues from Sales of Gas	1,602,445	1,717,242	1,543,842	1,538,086	1,267,357
Transportation Service Revenues	54,427	35,057	37,081	34,739	27,036
Other Gas Revenues	29,531	26,229	13,418	13,356	13,456
Total Operating Revenues	$1,686,403	$1,778,528	$1,594,341	$1,586,181	$1,307,849
Sales of Gas—kilotherms:					
Residential	1,258,181	1,337,267	1,280,128	1,265,270	1,140,887
Commercial	971,243	945,950	943,054	939,021	893,069
Industrial	942,846	912,689	876,421	739,508	399,385
Street Lighting	670	668	666	668	666
Total Sales to Customers	3,172,940	3,196,574	3,100,269	2,944,467	2,434,007
Interdepartmental	6,139	9,316	7,509	5,967	6,174
Total Sales of Gas	3,179,079	3,205,890	3,107,778	2,950,434	2,440,181
Transportation Service	682,693	544,539	557,403	543,097	381,497
Total Gas Sold and Transported	3,861,772	3,750,429	3,665,181	3,493,531	2,821,678

(a) Non-Required—The sale of excess generation both energy and capacity to other power producers.

(b) Wholesale—Consists of sales for resale to municipalities and to an out of state electric cooperative under negotiated contracts. Prior to 1994, these sales for resale were treated as industrial sales.

849900290

EDHI

EDHI, a wholly owned, direct subsidiary of Enterprise, is incorporated under the laws of New Jersey and is the parent company of EDC, CEA, PSRC, EGDC, Capital and Funding. EDHI's principal executive offices are located at One Riverfront Plaza, Newark, New Jersey 07102. EDHI's focus is on investment in the independent energy market. For a discussion of the impact on EDHI of Enterprise's agreement with the BPU regarding utility/nonutility activities, see Regulation.

EDC

On December 6, 1995, Enterprise announced that EDHI is pursuing the divestiture of EDC. Enterprise anticipates that, subject to satisfying certain conditions, EDHI will divest EDC during 1996, but no formal plan of divestiture has been approved. The decision stems from Enterprise's belief that EDC is not fully recognized in the value of Enterprise's Common Stock and that, with the advent of the energy futures market, it is not necessary for Enterprise to own large volumes of oil and gas.

EDC, a New Jersey corporation, has its principal executive offices at 1000 Louisiana Street, Suite 2900, Houston, Texas 77002. EDC is an oil and gas exploration and production and marketing company with principal operations both onshore and offshore in the southern United States and a growing international production base. EDC will continue to pursue a program to grow its reserve base through a combination of strategic acquisitions, high potential exploration activities and exploitation of its acquired properties and new discoveries. EDC's worldwide 1995 production totaled 99 BCFE. Year-end 1995 proved reserves were 630 billion cubic feet of gas and 48 million barrels of oil, an increase of 6% and a decrease of 1%, respectively, compared to 1994. As of December 31, 1995 and 1994, EDC's consolidated assets aggregated $756 million and $729 million, respectively. EDC has operations encompassing about 5.6 million net acres in 13 states, offshore in the Gulf of Mexico and both onshore and offshore in the United Kingdom, Argentina, Senegal, Ireland, Tunisia and China. EDC is exempt from direct regulation by the BPU and FERC except that certain FERC approval is required to transport its gas interstate from its discovery fields. (See Note 1—Summary of Significant Accounting Policies of Notes.)

CEA

CEA, a New Jersey corporation, has its principal executive offices at 1200 East Ridgewood Avenue, Ridgewood, New Jersey 07450. CEA invests and participates in the development and operation of cogeneration, thermal and power production facilities, which include domestic QFs, two foreign EWGs and one foreign utility company. CEA is expected to be the primary vehicle for EDHI's business growth for the foreseeable future, with emphasis on international projects. CEA's two direct subsidiaries, CEA New Jersey, Inc. (CEA New Jersey) and CEA USA, Inc. (CEA USA), hold certain of its investments. CEA New Jersey's subsidiaries invest in projects in New Jersey selling power to PSE&G. CEA USA's subsidiaries invest in projects selling power to other domestic and foreign entities. CEA and/or its subsidiaries and affiliates have investments in 22 commercially operating cogeneration or independent power projects, one anthracite coal mine and one project under construction. CEA continuously evaluates the status of project development and construction in light of the realities of timely completion and the costs incurred.

CEA's investments in QF projects have been undertaken with other participants because CEA, together with any other utility affiliate, may not own more than 50% of a QF under applicable law subsequent to the in-service date. Projects involving EWGs are not restricted to a 50% investment limitation. CEA's projects are diversified internationally and technologically and are generally financed through non-recourse debt. CEA is an investor in these projects and the electricity produced by the facilities is not part of PSE&G's installed capacity. However, some of such power is being purchased by PSE&G pursuant to long-term contracts with the applicable projects.

As of December 31, 1995 and 1994, CEA's consolidated assets aggregated $271 million and $232 million, respectively. (See Note 7—Long-Term Investments of Notes.)

849900291

PSRC

PSRC, a New Jersey corporation, has its principal executive offices at One Riverfront Plaza, Newark, New Jersey 07102. PSRC makes primarily passive investments in assets that can provide funds for future growth as well as provide incremental earnings for Enterprise. Investments have been made in leveraged and direct financing leases, project financings, venture capital funds, leveraged buyout funds, real estate limited partnerships and securities. The maturities of the portfolio's investments are also fairly diverse, with some having terms exceeding 30 years. PSRC's leveraged lease investments include a wide range of asset sectors. Some of the transactions in which PSRC and its subsidiaries participate involve other equity investors. PSRC plans to limit new investments to existing commitments and investments related to the energy business.

PSRC has a gas marketing subsidiary which markets natural gas and associated services on an unregulated basis to commercial and industrial gas consumers nationwide.

PSRC is a limited partner in various partnerships and is committed to make investments from time to time, upon the request of the respective general partners. On December 31, 1995, $58 million remained as PSRC's unfunded commitment subject to call. As of year-end 1995 and 1994, PSRC's long-term investments aggregated $1.4 and $1.3 billion, respectively.

EGDC

EGDC, a New Jersey corporation having its principal executive offices at One Riverfront Plaza, Newark, New Jersey 07102, is a nonresidential real estate development and investment business. EGDC has investments in ten commercial real estate properties (two of which are developed) in several states. EGDC's strategy is to preserve and build the value of its assets to allow for the controlled disposition of its properties as the real estate market improves. As of December 31, 1995 and 1994, EGDC's consolidated assets aggregated $116 million and $189 million, respectively.

Capital

Capital, a New Jersey corporation, has its principal executive offices at 80 Park Plaza, Newark, New Jersey 07101. Capital serves as a financing vehicle for EDHI's businesses, borrowing on their behalf on the basis of a minimum net worth maintenance agreement with Enterprise. That agreement provides, among other things, that Enterprise (i) maintain its ownership, directly or indirectly, of all outstanding common stock of Capital, (ii) cause Capital to have at all times a positive tangible net worth of at least $100,000 and (iii) make sufficient contributions of liquid assets to Capital in order to permit it to pay its debt obligations. In 1993, Enterprise agreed with the BPU to make a good-faith effort to eliminate such Enterprise support within six to ten years. Intercompany borrowing rates are established based upon Capital's cost of funds. Effective January 31, 1995, Capital will not have more than $650 million of debt outstanding at any time. Capital's assets consist principally of demand notes of EDC, CEA and PSRC. As of December 31, 1995 and 1994, Capital had outstanding $477.5 million and $632 million, respectively, of its long-term debt. For additional information, see Construction and Capital Requirements—Financing Activities and MD&A—Liquidity and Capital Resources—EDHI.

Funding

Funding, a New Jersey corporation, has its principal executive offices at 80 Park Plaza, Newark, New Jersey 07101. Funding serves as a financing vehicle for EDHI's businesses (excluding EGDC), borrowing on their behalf, as well as investing their short-term funds. Short-term investments are made only if the funds cannot be employed in intercompany loans. Intercompany borrowing rates are established based upon Funding's cost of funds. Funding is providing both long and short-term capital for the nonutility businesses other than EGDC on the basis of an unconditional guaranty from EDHI, but without direct support from Enterprise. As of December 31, 1995 and 1994, Funding's assets consisted principally of demand notes of EDC, CEA and PSRC, all of which are pledged to Funding's lenders and which aggregated $492 million and $334 million, respectively. For additional information, see MD&A—Liquidity and Capital Resources—EDHI.

849900292

Item 2. Properties

PSE&G

The statements under this Item as to ownership of properties are made without regard to leases, tax and assessment liens, judgments, easements, rights of way, contracts, reservations, exceptions, conditions, immaterial liens and encumbrances and other outstanding rights affecting such properties, none of which is considered to be significant in the operations of PSE&G, except that PSE&G's First and Refunding Mortgage (Mortgage), securing the bonds issued thereunder, constitutes a direct first mortgage lien on substantially all of such property.

PSE&G maintains insurance coverage against loss or damage to its principal plants and properties, subject to certain exceptions, to the extent such property is usually insured and insurance is available at a reasonable cost. For a discussion of nuclear insurance, see Note 12—Commitments and Contingent Liabilities of Notes to Consolidated Financial Statements.

The electric lines and gas mains of PSE&G are located over or under public highways, streets, alleys or lands, except where they are located over or under property owned by PSE&G or occupied by it under easements or other rights. These easements and rights are deemed by PSE&G to be adequate for the purposes for which they are being used. Generally, where payments are minor in amount, no examinations of underlying titles as to the rights of way for transmission or distribution lines or mains have been made.

849900293

Electric Properties

As of December 31, 1995, PSE&G's share of installed generating capacity was 10,400 MW, as shown in the following table:

Name and Location	Installed Megawatt Capacity	Principal Fuel Used	Heat Rate	Net Generation (000 mwh)	Capacity Factor(a)
Fossil					
Burlington, Burlington, NJ	180	Oil	17,742	30	1.9
Conemaugh, New Florence, PA—22.50%(b)(c)	382	Coal	9,380	2,650	79.2
Hudson, Jersey City, NJ	983	Coal	11,351	1,861	21.6
Kearny, Kearny, NJ	292	Oil	16,221	46	1.8
Keystone, Shelocta, PA—22.84%(b)(c)	388	Coal	9,635	2,643	77.8
Linden, Linden, NJ	415	Oil	18,007	117	3.2
Mercer, Hamilton, NJ	642	Coal	10,279	2,087	37.1
Sewaren, Woodbridge Twp., NJ	453	Gas	13,808	360	9.1
Total Fossil	3,735		10,343	9,794	29.9
Nuclear (Capacity factor calculated in accordance with industries maximum dependable capability standards)					
Hope Creek, Lower Alloways Creek, NJ 95%(b)(c)	979	Nuclear	10,801	6,694	78.9
Peach Bottom, Peach Bottom, PA—42.49%(b)	930	Nuclear	10,809	6,976	93.3
Salem, Lower Alloways Creek, NJ 42.59%(b)	942	Nuclear	11,088	1,923	23.4
Total Nuclear(b)(c)	2,851		10,843	15,593	62.9
Combined Cycle					
Bergen, Ridgefield, NJ	650	Gas	8,034	1,533	26.9
Burlington, Burlington, NJ	240	Gas	9,255	513	23.5
Total Combined Cycle	890		8,340	2,046	26.5
Combustion Turbine					
Bayonne, Bayonne, NJ	42	Oil	35,297	0.4	0.1
Bergen, Ridgefield, NJ	21	Oil	111,665	0.8	0.1
Burlington, Burlington, NJ	389	Gas	18,937	7.1	0.2
Edison, Edison Township, NJ	504	Gas	16,532	8.5	0.2
Essex, Newark, NJ	617	Gas	13,270	279.1	5.2
Hudson, Jersey City, NJ	129	Oil	68,666	0.6	—
Kearny, Kearny, NJ	504	Oil	18,352	1.7	0.4
Linden, Linden, NJ	223	Oil	12,635	135.0	3.7
Mercer, Hamilton, NJ	129	Oil	72,912	0.4	—
National Park, National Park, NJ	21	Oil	0	0.0	—
Salem, Lower Alloways Creek, NJ 42.59%(b)	16	Oil	25,189	0.3	0.1
Sewaren, Woodbridge Township, NJ	129	Oil	45,613	0.8	—
Total Combustion Turbine	2,724		13,761	434.7	10.4
Diesel					
Conemaugh, New Florence, PA—22.50%(b)	3	Oil	10,101	2.1	0.1
Keystone, Shelocta, PA—22.84%(b)	2	Oil	10,448	5.5	3.1
Total Diesel	5		10,354	7.6	1.7
Pumped Storage					
Yards Creek, Blairstown, NJ—50%(b)(c)	195		—	227	13.3
Total PSE&G	10,400(d)		10,531	28,102(e)	30.8

(a) Net generation divided by the product of weighted average generating capacity times total hours.
(b) PSE&G's share of jointly owned facility.
(c) Excludes energy for pumping and synchronous condensers.
(d) Excludes 664 MW of nonutility generation and 200 MW of capacity sales to General Public Utilities Corporation.
(e) Excludes 5,136 MW of nonutility generation.

849900294

For information regarding construction see MD&A—Construction and Capital Expenditures.

In addition to the generating facilities in New Jersey and Pennsylvania as indicated in the table above, as of December 31, 1995, PSE&G owned 41 switching stations with an aggregate installed capacity of 31,591,000 kilovolt-amperes, and 222 substations with an aggregate installed capacity of 7,313,000 kilovolt-amperes. In addition, 6 substations having an aggregate installed capacity of 139,250 kilovolt-amperes were operated on leased property. All of these facilities are located in New Jersey.

As of December 31, 1995, PSE&G's transmission and distribution system included 151,449 circuit miles, of which 36,007 miles were underground, and 789,106 poles, of which 534,106 poles were jointly owned. Approximately 99% of this property is located in New Jersey.

In addition, as of December 31, 1995, PSE&G owned 4 electric distribution headquarters and five subheadquarters in four operating divisions all located in New Jersey.

Gas Properties

As of December 31, 1995, the daily gas capacity of PSE&G's 100%-owned peaking facilities (the maximum daily gas delivery available during the three peak winter months) consisted of liquid petroleum air gas (LPG) and liquefied natural gas (LNG) and aggregated 2,973,000 therms (approximately 297,300 Mcf. on an equivalent basis of 1,000 Btu/cubic foot) as shown in the following table:

Plant	Location	Daily Capacity (Therms)
Burlington LNG	Burlington, N.J.	773,000
Camden LPG	Camden, N.J.	280,000
Central LPG	Edison Twp., N.J.	960,000
Harrison LPG	Harrison, N.J.	960,000
Total		2,973,000

As of December 31, 1995, PSE&G owned and operated approximately 15,467 miles of gas mains, owned 12 gas distribution headquarters and one subheadquarters and leased one other subheadquarters all in two operating regions located in New Jersey and owned one meter shop in New Jersey serving all such areas. In addition, PSE&G operated 61 natural gas metering or regulating stations, all located in New Jersey, of which 28 were located on land owned by customers or natural gas pipeline companies supplying PSE&G with natural gas and were operated under lease, easement or other similar arrangement. In some instances, portions of the metering and regulating facilities were owned by the pipeline companies.

Office Buildings and Facilities

PSE&G leases substantially all of a 26-story office tower for its corporate headquarters at 80 Park Plaza, Newark, New Jersey, together with an adjoining three-story building. PSE&G also leases other office space at various locations throughout New Jersey for district offices and offices for various corporate groups and services. PSE&G also owns various other sites for training, testing, parking, records storage, research, repair and maintenance, warehouse facilities and for other purposes related to its business.

EDHI owns no real property. EDHI leases its corporate headquarters at One Riverfront Plaza, Newark, New Jersey. For a brief general description of the properties of the subsidiaries of EDHI, see Item 1. Business—EDHI.

849900295

Item 3. Legal Proceedings

In October 1995, Enterprise received a letter from a representative of a purported shareholder demanding that it commence legal action against certain of its officers and directors with regard to nuclear operations and the current shutdown of the Salem generating station. In January, 1996, Enterprise and each of its directors except Forrest J. Remick were served with a civil complaint in a shareholder derivative action by such purported shareholder on behalf of Enterprise shareholders (Public Service Enterprise Group Incorporated by G.E. Stricklin, derivatively vs. E. James Ferland, et al., Docket No. L1068395, Superior Court of New Jersey, Law Division, Camden County filed December 27, 1995). The complaint seeks removal of certain executive officers of PSE&G and Enterprise, certain changes in the composition of Enterprise's Board of Directors, recovery of damages and certain other relief for alleged losses purportedly arising out of PSE&G's operation of the Salem and Hope Creek generating stations. The Board of Directors has commenced an investigation of the matters raised in the October demand letter, and that investigation has not yet been completed. Following conclusion of the investigation, the Board will meet to determine what action, if any, should be taken with respect to the complaint filed in the shareholder derivative action.

In addition, see the following, at the pages indicated:

(1) Page 3. Proceedings before FERC relating to competition and electric wholesale power markets. (Inquiry Concerning the Pricing Policy for Transmission Services Provided by Utilities Under the Federal Power Act, Docket No. RM93-19.)

(2) Page 7. Proceedings before the BPU relating to PSE&G's second largest customer, filed January 6, 1995, in Docket No. ER95010005.

(3) Page 24. Requests filed in 1974 and later supplemented, to EPA and NJDEP to establish thermal discharges and intake structures for PSE&G's electric generating stations (Sewaren Generating Station, NJ 0000680; Hudson Generating Station, NJ 0000647; Kearny Generating Station, NJ 0000655; Salem Generating Station, NJ 0005622; Linden Generating Station, NJ 0000663).

(4) Page 25. Notice of Violation issued by EPA against Eagle Point Cogeneration Partnership regarding alleged violations of air permit.

(5) Pages 27 through 30. Various administrative actions, claims, litigation and requests for information by federal and/or state agencies, and/or private parties, under CERCLA, RCRA, and state environmental laws to compel PRPs, which may include PSE&G, to provide information with respect to transportation and disposal of hazardous substances and wastes, and/or to undertake or contribute to the costs of investigative and/or cleanup actions at various locations because of actual or threatened releases of one or more potentially hazardous substances and/or wastes.

(6) Page 73. Proceedings before the BPU relating to New Jersey Partners in Power Plan filed January 16, 1996, in Docket No. E096010028.

(7) Page 75. Proceedings before the BPU relating to PSE&G's LGAC, filed October 2, 1995, in Docket No. GR9510456.

(8) Page 75. Proceedings before the BPU relating to recovery of replacement power costs in connection with the Salem 1 shutdown, May 5, 1995, Docket No. ER94070293.

(9) Page 76. Proceedings before the BPU relating to PSE&G's LEAC Remediation Program Costs (RAC), filed July 21, 1995, in Docket No. GR95070344.

(10) Page 76. Generic proceeding before the BPU relating to recovery of capacity costs associated with power purchases from cogenerators, September 16, 1994, in Docket No. EX93060255.

Item 4. Submission of Matters to a Vote of Security Holders

Enterprise and PSE&G, inapplicable.

Item 10. Executive Officers of the Registrants

Enterprise and PSE&G. Information regarding executive officers required by this Item is set forth in Part III, Item 10 hereof.

849900296

PART II

Item 5. Market for Registrant's Common Equity and Related Stockholder Matters

Enterprise's Common Stock is listed on the New York Stock Exchange, Inc. and the Philadelphia Stock Exchange, Inc. All of PSE&G's common stock is owned by Enterprise, its corporate parent. As of December 31, 1995, there were 175,831 holders of record of Enterprise Common Stock.

The following table indicates the high and low sale prices for Enterprise's Common Stock, as reported in The Wall Street Journal as Composite Transactions and dividends paid for the periods indicated:

	High	Low	Dividend Per Share
Common Stock:			
1995			
First Quarter	29⅞	26	.54
Second Quarter	30¼	26¾	.54
Third Quarter	29¾	26¾	.54
Fourth Quarter	30⅝	28¾	.54
1994			
First Quarter	32	27¼	.54
Second Quarter	29¼	25	.54
Third Quarter	28⅝	23⅞	.54
Fourth Quarter	27⅛	25	.54

Since 1986, PSE&G has made regular cash payments to Enterprise in the form of dividends on outstanding shares of PSE&G's Common Stock. PSE&G has paid quarterly dividends on its common stock in each year commencing in 1948, the year of the distribution of PSE&G's common stock by Public Service Corporation of New Jersey, the former parent of PSE&G. Since 1992, EDHI has made regular cash payments to Enterprise in the form of dividends on outstanding shares of EDHI's common stock. Enterprise has paid quarterly dividends in each year commencing with the corporate restructuring of PSE&G when Enterprise became the owner of all the outstanding common stock of PSE&G. While the Board of Directors of Enterprise intends to continue the practice of paying dividends quarterly, amounts and dates of such dividends as may be declared will necessarily be dependent upon Enterprise's future earnings, financial requirements and other factors. See MD&A—Dividends.

The ability of Enterprise to declare and to pay dividends is contingent upon its receipt of dividend payments from its subsidiaries. PSE&G has restrictions on the payments of dividends which are contained in its Restated Certificate of Incorporation, as amended, certain of the indentures supplemental to its Mortgage and certain debenture bond indentures. Under these restrictions, dividends on PSE&G's common stock may be paid only out of PSE&G's earned surplus and may not reduce PSE&G's earned surplus to less than $10 million. PSE&G dividends on common stock would be limited to 75% of Earnings Available for Public Service Enterprise Group Incorporated if payment thereof would reduce PSE&G's Stock Equity to less than 33 1/3% of PSE&G's Total Capitalization and would be limited to 50% of Earnings Available for Public Service Enterprise Group Incorporated if payment thereof would reduce Stock Equity to less than 25% of PSE&G's Total Capitalization, as each of said terms is defined in said PSE&G's debenture bond indentures. Further, under an indenture relating to the loan to PSE&G of the proceeds of the Monthly Income Preferred Securities of Public Service Electric and Gas Capital, L.P. (see Note 4.—Schedule of Consolidated Capital Stock and Other Securities of Notes), dividends may not be paid on PSE&G's capital stock as long as any payments on PSE&G's deferrable interest subordinated debentures issued under said indenture have been deferred or there is a default under said indenture or PSE&G's guarantee relating to the Monthly Income Preferred Securities. None of these restrictions presently limits the payment of dividends out of current earnings. The amount of Enterprise's and PSE&G's consolidated retained earnings not subject to these restrictions at December 31, 1995 was $1.6 billion and $1.4 billion, respectively.

849900297

Item 6. Selected Financial Data

Enterprise

The information presented below should be read in conjunction with Enterprise Consolidated Financial Statements and Notes thereto.

	Years Ended December 31,				
	1995	1994	1993	1992	1991
	(Thousands of Dollars, where applicable)				
Total Operating Revenues	$ 6,164,153	$ 5,922,443	$ 5,708,590	$ 5,356,792	$ 5,111,421
Net Income	$ 662,323	$ 679,033	$ 600,933	$ 504,117	$ 543,035
Earnings per average share of Common Stock	$ 2.71	$ 2.78	$ 2.50	$ 2.17	$ 2.43
Dividends paid per share of Common Stock	$ 2.16	$ 2.16	$ 2.16	$ 2.16	$ 2.13
As of December 31:					
Total Assets	$17,170,068	$16,717,440	$16,329,656	$14,777,732	$14,804,354
Long-Term Liabilities:					
Long-Term Debt	$ 5,189,791	$ 5,180,657	$ 5,256,321	$ 4,977,579	$ 5,128,373
Other Long-Term Liabilities	$ 199,832	$ 215,603	$ 220,159	$ 146,785	$ 162,064
Preferred Stock with mandatory redemption	$ 150,000	$ 150,000	$ 150,000	$ 75,000	$ —
Monthly Income Preferred Securities	$ 210,000	$ 150,000	$ —	$ —	$ —
Ratio of Earnings to Fixed Charges plus Preferred Securities Dividend Requirements(A)	2.77	2.76	2.59	2.30	2.54

(A) Fixed charges include the preferred securities dividend requirements of PSE&G.

PSE&G

The information presented below should be read in conjunction with PSE&G Consolidated Financial Statements and Notes thereto.

	Years Ended December 31,				
	1995	1994	1993	1992	1991
	(Thousands of Dollars, where applicable)				
Total Operating Revenues	$ 5,707,245	$ 5,518,241	$ 5,290,455	$ 4,994,011	$ 4,827,655
Net Income	$ 616,964	$ 659,406	$ 614,868	$ 475,936	$ 545,479
As of December 31:					
Total Assets	$14,555,577	$14,264,398	$13,984,298	$12,273,857	$12,027,970
Long-Term Liabilities:					
Long-Term Debt	$ 4,586,268	$ 4,486,787	$ 4,364,437	$ 3,978,138	$ 3,933,389
Other Long-Term Liabilities	$ 199,832	$ 215,603	$ 220,159	$ 146,785	$ 162,064
Preferred Stock with mandatory redemption	$ 150,000	$ 150,000	$ 150,000	$ 75,000	$ —
Monthly Income Preferred Securities	$ 210,000	$ 150,000	$ —	$ —	$ —
Ratio of Earnings to Fixed Charges	3.25	3.35	3.30	2.70	3.20
Ratio of Earnings to Fixed Charges plus Preferred Securities Dividend Requirements	2.77	2.92	2.89	2.43	2.86

849900298

Item 7. Management's Discussion and Analysis of Financial Condition and Results of Operations

ENTERPRISE

Significant factors affecting the consolidated financial condition and the results of operations of Public Service Enterprise Group Incorporated (Enterprise) and its subsidiaries are described below. This discussion refers to the Consolidated Financial Statements and related Notes of Enterprise and should be read in conjunction with such statements and notes.

Overview

Enterprise has two direct wholly owned subsidiaries, Public Service Electric and Gas Company (PSE&G) and Enterprise Diversified Holdings Incorporated (EDHI). Enterprise's principal subsidiary, PSE&G, is an operating public utility providing electric and gas service in certain areas in the State of New Jersey.

EDHI is the parent of Enterprise's nonutility businesses: Energy Development Corporation (EDC), an oil and gas exploration and production and marketing company; Community Energy Alternatives Incorporated (CEA), an investor in and developer and operator of cogeneration and independent power production (IPP) facilities and exempt wholesale generators (EWGs); Public Service Resources Corporation (PSRC), which has made primarily passive investments; and Enterprise Group Development Corporation (EGDC), a diversified nonresidential real estate development and investment business. EDHI also has two finance subsidiaries: PSEG Capital Corporation (Capital), which provides privately placed debt financing on the basis of a minimum net worth maintenance agreement from Enterprise and Enterprise Capital Funding Corporation (Funding), which provides privately placed debt financing guaranteed by EDHI but without direct support from Enterprise. Enterprise has been conducting a controlled exit from the real estate business since 1993 and, in December 1995, announced that it intends to divest EDC.

As of December 31, 1995 and December 31, 1994, PSE&G comprised 85% of Enterprise assets. For each of the years 1995, 1994 and 1993, PSE&G revenues were 93% of Enterprise's revenues and PSE&G's earnings available to Enterprise for such years were 88%, 91% and 96%, respectively, of Enterprise's net income.

The major factors which will affect Enterprise's future results include general and regional economic conditions, PSE&G's customer retention and growth, the ability of PSE&G and EDHI to meet competitive pressures and to contain costs, the ability to respond to and take advantage of opportunities arising from increasing competition in the utility business, the adequacy and timeliness of rate relief, cost recovery and necessary regulatory approvals, the ability to continue to operate and maintain nuclear programs in accordance with Nuclear Regulatory Commission (NRC) and New Jersey Board of Public Utilities (BPU) requirements, the impact of environmental regulations, continued access to the capital markets and continued favorable regulatory treatment of consolidated tax benefits. (See Note 2—Rate Matters, Note 10—Federal Income Taxes and Note 12 —Commitments and Contingent Liabilities of Notes to Consolidated Financial Statements (''Notes'').)

Competition

The regulatory structure which has historically embraced the electric and gas industry is in the process of transition. Legislative and regulatory initiatives, at both the federal and state levels, are designed to promote competition and will continue to impose additional pressures on PSE&G's ability to retain customers. In addition, new technology and interest in self generation and cogeneration have provided customers with alternative sources of energy.

Over the last several years, the gas industry has been transformed. Today, commercial and industrial customers can negotiate their own gas purchases directly with producers or brokers, while PSE&G is required to provide intrastate transportation of such purchased gas to the customers' facilities. Although PSE&G is not providing gas sales service to certain commercial and industrial customers, to date there has been no negative impact on earnings since sales service and transportation service tariffs result in the same non-fuel revenue per

849900299

therm. Additionally, as a result of this restructuring, PSE&G has been able to negotiate lower cost gas supplies for those customers who continue to be part of its bundled rate schedules. A potential significant competitive challenge could emerge if interstate pipeline companies are permitted to expand their facilities into PSE&G territory and provide intrastate transportation to customers. However, this type of expansion would require federal and state regulatory approvals not currently in existence.

The restructuring of the electric industry is more complex and evolving at a slower pace than that of the gas industry. Federal legislation, such as the National Energy Policy Act (EPAct) has eased restrictions on independent power producers (IPP) in an effort to increase competition in the wholesale electric generation market. As the barriers to entry in the power production business have been lowered, the construction of cogeneration facilities and independent power production facilities has been growing, with the result of creating lower cost alternatives for large commercial and industrial customers. Presently, PSE&G is in the process of assessing the potential for individual arrangements with commercial and industrial customers which have such competitive alternatives, but PSE&G believes that it does not currently have a material exposure with respect to such customers.

Further, EPAct authorized the Federal Energy Regulatory Commission (FERC) to mandate utilities to transport and deliver or "wheel" energy for the supply of bulk power to wholesale customers. In March 1995, FERC issued a Notice of Proposed Rulemaking (NOPR) that would require utilities to (1) establish open access to all wholesale sellers and buyers, (2) offer transmission service comparable to service they provide themselves and (3) take transmission service under the same tariffs offered to other buyers and sellers. FERC's stated position is that it will ensure that utilities have a fair opportunity to recover prudently incurred investments that could become stranded costs as a result of the NOPR.

In the wholesale electric market, other competitive pressures, such as municipalization, may also have an impact on utilities in the evolving electric power industry. Municipalization involves the acquisition and operation of existing investor-owned facilities by a municipal utility (MUNI) through condemnation, purchase or lease or the construction and operation of duplicate, parallel facilities within a municipal boundary. As a result, utilities, such as PSE&G, could lose customers (residential, commercial and industrial) in the municipality that is served by the MUNI, as well as lose the municipal entity itself as a customer.

EPAct granted the states sole authority to mandate retail wheeling. New Jersey regulators have been reviewing existing regulations in an effort to develop a revised regulatory structure that would afford public utilities, such as PSE&G, increased flexibility to meet the competitive challenges of the future. Phase I of the New Jersey Energy Master Plan (Phase I), a two-phase plan to better manage the future energy needs of the State, has been completed. Phase I called for legislation that would allow New Jersey utilities to propose, subject to BPU approval, alternatives to rate base/rate of return pricing, allow for pricing flexibility under certain standards for customers with competitive options and equalize the impact of tax policies, such as the New Jersey Gross Receipts and Franchise Tax (NJGRT) currently assessed on retail energy utility sales, upon all energy producers. On July 20, 1995, Governor Whitman signed into law legislation which provides utilities the flexibility to propose, subject to BPU approval, alternatives to existing rate base/rate of return pricing and offer negotiated off-tariff agreements to customers with competitive options. On June 1, 1995, the BPU issued its order initiating a formal Phase II proceeding of the Master Plan. The proceeding will address wholesale and retail competition in New Jersey.

Recoverability of stranded costs is largely dependent on the transition rules established by regulators, including FERC and the BPU. Stranded costs that could result as the industry moves to a more competitive environment include investments in generating facilities, transmission assets, purchase power agreements where the price being paid under such an agreement exceeds the market price for electricity and regulatory assets for which recovery is based solely on continued cost based regulation. At this time, management cannot predict the level of stranded costs, if any, or the extent to which regulators will allow recovery of such costs.

849900300

Increased competition and the shift of risks and opportunities between rate payers and PSE&G resulting from PSE&G's filing of its proposed Alternative Rate Plan (discussed below) will increase the emphasis upon electric operational reliability, efficiency and cost. While the incremental cost of nuclear production is less expensive than PSE&G's other sources of generation, comparatively high embedded costs for nuclear plants increase the need for PSE&G to optimize the utilization of its nuclear generating capacity in order to make its actual generation output cost competitive.

In order to succeed in this increasingly competitive environment, Enterprise and its subsidiaries have taken the following steps designed to retain customers, reduce costs, improve operations and strategically position itself for future operation:

(1) On January 16, 1996, PSE&G filed its proposed alternative rate plan, the "New Jersey Partners in Power" Plan (Alternative Rate Plan). This seven-year proposed Alternative Rate Plan allows for a transition to a competitive energy marketplace while substantially shifting the business and financial risks and opportunities involved in such transition away from customers to PSE&G. Some of the key features of the proposal are: (a) an indexed or price-capped approach to replace the rate base/rate of return form of regulation including the discontinuance of the electric Levelized Energy Adjustment Clause (LEAC) and the BPU's Nuclear Performance Standard (NPS), (b) a productivity gains sharing mechanism with electric and gas customers, (c) continued recovery of costs associated with activities mandated by state or federal agencies and (d) a program of rewards and penalties based on the performance of certain key overall service indicators, such as the duration of customer power outages compared to a five year average. For a full discussion of the Alternative Rate Plan, see Note 2—Rate Matters of Notes.

(2) PSE&G reorganized its senior nuclear leadership team to address operation and performance issues at PSE&G operated nuclear facilities and completed a thorough work scope assessment of Salem 1 and Salem 2 in order to return these units to safe, reliable operation over the long-term.

(3) PSE&G reorganized to reflect the evolution toward stand-alone energy and energy services businesses designed to compete successfully in the future. The reorganization "unbundled" the services previously provided by the electric and gas businesses. The focus is now on areas of business: Generation, Transmission and Distribution and Customer Services.

(4) Also as part of the corporate reorganization, a new business was created, Enterprise Ventures & Services Corporation, to pursue products and services which can be marketed beyond traditional geographic and industry boundaries. Among these are: natural gas marketing in the wake of deregulation of that industry, conservation and energy management services and a product development venture with AT&T Corp. to pilot and eventually market two-way customer communications systems and services.

(5) PSE&G developed initiatives, including the announced closure of five older, less efficient generating units, to reduce annual fossil generation operating and maintenance expenses, as well as to reduce annual fossil capital expenditures.

(6) PSE&G has established a deleveraging plan to retire more than $1 billion of outstanding debt over the next five years and to fund its current five-year construction program entirely through internally generated cash.

(7) PSE&G became the first utility in the Northeast to implement a service guarantee program. It covers nine key service areas and provides direct bill credits to customers should PSE&G fail to live up to its promises.

(8) The Strategic Account Marketing Organization was created within PSE&G to provide more individualized service to its 200 largest customers.

(9) PSE&G received BPU approval for its proposed Experimental Hourly Energy Pricing Tariff and the first service agreement thereunder with its second largest customer. This type of agreement serves as an incentive to retain customers with other energy alternatives in PSE&G's customer base, as well as in New Jersey.

849900301

(10) Also in 1995, PSE&G completed the Bergen Repowering Project which improved the efficiency and environmental effectiveness of the facility. Fuel costs for the facility will be reduced by approximately $30 million annually.

(11) CEA pursued business opportunities in certain international markets. During 1995, CEA closed on three projects and a strategic alliance in China and South America.

(12) Enterprise announced that EDHI will pursue the divestiture of EDC. The decision to divest EDC stems from Enterprise's conclusion that ownership of large oil and natural gas reserves is no longer necessary to provide efficient energy solutions to customers and that the true market value of EDC is not reflected in the price of Enterprise Common Stock.

Enterprise and its subsidiaries remain committed to the pursuit of initiatives to contain costs and retain customers.

Accounting for the Effects of Regulation

Currently, PSE&G accounts for the effects of regulation in accordance with Statement of Financial Accounting Standards No. 71 "Accounting for the Effects of Certain Types of Regulation" (SFAS 71). In accordance with the provisions of SFAS 71, PSE&G defers certain expenses (regulatory assets) on the basis that they will be recovered from customers as part of the ratemaking process. PSE&G believes that if its proposed Alternative Rate Plan is approved essentially as proposed, it would continue to meet the criteria to account for certain utility revenues and expenses in accordance with SFAS 71. However, if future events or regulatory changes limit PSE&G's ability to establish prices to recover its costs, PSE&G might conclude that it no longer meets the application criteria to defer certain expenses in accordance with SFAS 71. If PSE&G were to discontinue the application of SFAS 71, the accounting impact would be an extraordinary, non-cash charge to operations that could be material to the financial position and results of operations of Enterprise and PSE&G.

PSE&G has certain regulatory assets resulting from the use of a level of depreciation expense in the rate making process that is less than the amount that would be recorded under Generally Accepted Accounting Principles (GAAP) for non-regulated companies. PSE&G cannot presently quantify what the financial statement impact may be if depreciation expense were required to be determined absent regulation, but the impact on the financial position and results of operations of PSE&G and Enterprise could be material.

Statement of Financial Accounting Standards No. 121 "Accounting for the Impairment of Long-Lived Assets" (SFAS 121) effective for 1996, establishes accounting standards for the impairment of long-lived assets. SFAS 121 also requires that regulatory assets which are no longer probable of recovery through future revenues be charged to earnings. The adoption of SFAS 121 is not expected to have a material impact on the financial position or results of operations of PSE&G and Enterprise.

PSE&G Energy and Fuel Adjustment Clauses

Under the existing regulatory framework, PSE&G has fuel and energy tariff rate adjustment clauses, the Levelized Gas Adjustment Charge (LGAC) and the LEAC, which are designed to permit adjustments for changes in electric energy and gas supply costs and certain other costs as approved by the BPU, when compared to cost recovery included in base rates. Presently, charges under the clauses are primarily based on energy and gas supply costs which are normally projected over twelve-month periods except for large gas commercial and industrial customers for which commencing January 1, 1996, gas supply costs are projected monthly. The changes in the clauses do not directly affect earnings because such costs are adjusted monthly to match amounts recovered through revenues except for the financing costs of carrying underrecovered balances and required interest payments on net overrecovered balances. Under the clauses, if actual costs differ from the costs recovered, the amount of the underrecovery or overrecovery is deferred. Actual costs otherwise includable in the LEAC are subject to adjustment by the BPU in accordance with the NPS. (See Note 2—Rate Matters and Note 12—Commitments and Contingent Liabilities of Notes.) The Alternative Rate Plan proposes discontinuing

849900302

LEAC and NPS and would substantially shift the risks and opportunities involved in managing changes in fuel and replacement power costs from customers to PSE&G.

Accounting for Stock Compensation

Statement of Financial Accounting Standards No. 123 "Accounting for Stock-Based Compensation" (SFAS 123) is effective for fiscal years that begin after December 15, 1995. SFAS 123 establishes financial accounting and reporting standards for stock based compensation plans and includes all arrangements by which employees receive shares of stock or other equity instruments of the employer or by which the employer incurs liabilities to employees in amounts based on the price of the employer's stock. The adoption of SFAS 123 is not expected to have a material impact on the financial position or results of operations of PSE&G and Enterprise.

Corporate Policy for the Use of Derivatives

Enterprise and its subsidiaries have established a policy to use derivatives only for the purpose of managing financial risk and not for speculative purposes. EDHI currently uses derivatives to manage financial risk for EDC and PSRC, including its subsidiary United States Energy Partners (USEP). The derivatives are used to mitigate the impact on earnings of volatile gas prices for EDC and USEP and volatile security prices for PSRC's investing activities. For details, see Note 8—Financial Instruments and Risk Management of Notes. Although PSE&G does not currently use derivatives, if the Alternative Rate Plan is approved as proposed, PSE&G could find derivatives to be a useful and appropriate tool in managing the volatility of fuel prices, among other things.

Nuclear Operations

Operation of the Salem units has continued to present challenges to PSE&G. The units have experienced equipment failures which, combined with personnel errors, have precipitated or contributed to plant events or trips which have led to a number of outages over the lifetime of the units.

Both of the Salem units are currently out of service and their return dates are subject to completion of testing, analysis, repair activity and NRC concurrence that they are prepared to restart. Restart of Salem 1, which had originally been scheduled for the second quarter of 1996, will be delayed for a substantial period as a result of the ongoing steam generator inspection and analysis. Salem 2, which is also undergoing steam generator inspection and analysis is still scheduled to return to service in the third quarter of 1996. The inability to successfully return these units to continuous, safe operation could have a material effect on the financial position, results of operation and net cash flows of Enterprise and PSE&G.

Results of Operations

Earnings per share of Enterprise Common Stock were $2.71 in 1995, $2.78 in 1994 and $2.50 in 1993.

In 1995, Enterprise earnings decreased principally due to increased operating expenses and lower gas sales from PSE&G. These decreases in earnings were partially offset by improved electric sales, EDC revenues resulting from the settlement of litigation related to a take or pay sales contract and from gains realized on sales of properties by EDC.

In 1994, the increase in Enterprise earnings was driven primarily by increased weather related electric and gas sales. Enterprise earnings also benefited from higher investment income from PSRC.

849900303

PSE&G—Earnings Available to Enterprise

	1995 vs. 1994		1994 vs. 1993	
	Amount	Per Share	Amount	Per Share
	(Millions, except Per Share Data)			
PSE&G				
Revenues (net of fuel costs and gross receipts taxes)	$ 38	$ .16	$147	$ .60
Other operation expenses	10	.04	(77)	(.32)
Maintenance expenses	(4)	(.02)	(4)	(.02)
Depreciation and amortization expenses	(39)	(.16)	(41)	(.17)
Federal income taxes	(27)	(.11)	14	.06
Interest charges	(11)	(.05)	(6)	(.02)
Allowance for Funds used During Construction (AFDC)	(2)	(.01)	11	.05
Preferred Securities Dividend Requirements	(8)	(.03)	(4)	(.02)
Other income and expenses	7	.03	2	.01
Earnings Available to Enterprise	$(36)	$(.15)	$ 42	$ .17

PSE&G—Revenues

Electric

Revenues increased $281 million, or 7.5%, in 1995 from 1994; 1994 revenues increased $44 million, or 1.2%, compared to 1993. The significant components of these changes follow:

	Increase or (Decrease)	
	1995 vs. 1994	1994 vs. 1993
	(Millions)	
Kilowatthour sales	$ 38	$ 69
Recovery of energy costs	189	(26)
NJGRT	12	(4)
Other operating revenues	42	5
Total Electric Revenues	$281	$ 44

Gas

During 1995, revenues decreased $92 million, or 5.2%, from 1994; 1994 revenues increased $184 million, or 11.6%, over 1993. The significant components of these changes follow:

	Increase or (Decrease)	
	1995 vs. 1994	1994 vs. 1993
	(Millions)	
Therm sales	$ (35)	$ 61
Recovery of fuel costs	(78)	121
NJGRT	19	(12)
Other operating revenues	2	14
Total Gas Revenues	$ (92)	$ 184

During 1995, electric revenues were impacted by higher residential and commercial sales resulting from a recovering economy, warm summer weather and a modest increase in customer base. In addition, other electric revenues increased principally due to higher miscellaneous revenues from increased capacity sales to unaffiliated utilities and to wholesale customers, service reconnections, temporary services and revenues from Public Service Conservation Resources Corporation (PSCRC), PSE&G's energy services subsidiary. Capacity sales are sales

849900304

for the reservation of a specified quantity of PSE&G system generating capacity and must be paid even when the energy is not taken.

In 1995, gas revenues decreased due to the mild winter weather, partially offset by revenues resulting from the rapidly growing off system sales and higher gas service contract revenues. Off system sales are sales of excess gas to brokers and other utilities which are not part of PSE&G's firm customer base. Earnings on these sales are shared between the firm customer and PSE&G on an 80/20 split, respectively.

In 1994, electric and gas revenues benefited from weather related sales which primarily impacted electric commercial sales and all firm gas rate schedules. Other electric revenues increased principally due to increased capacity sales to unaffiliated utilities and increased miscellaneous revenues, partially offset by lower energy sales to the unaffiliated utilities. Other gas revenues were significantly impacted by a one time $10 million legal settlement of a gas contract.

PSE&G—Expenses

Fuel Expenses

As discussed in the PSE&G Energy and Fuel Adjustment Clauses section, variances in fuel expenses do not directly affect earnings because of the adjustment clause mechanism. However, if the proposed Alternative Rate Plan is adopted as filed, future changes in electric fuel and replacement power costs could impact earnings.

Other Operation Expenses

During 1995, other operation expenses decreased $10 million from 1994 levels. PSE&G had lower nuclear and miscellaneous production expenses. Nuclear production expenses decreased during 1995 due in part to the extended outage of Salem Units 1 and 2. PSE&G also secured savings in miscellaneous expenditures, such as clerical and office supplies in its steam production area. These savings were partially offset by increased marketing expenditures for customer related programs initiated in 1995.

During 1994, other operation expenses increased $77 million when compared to 1993 principally due to increased nuclear production expenses which were higher than 1993 levels when Salem had a refueling outage, increased transmission and distribution expenses incurred during the bitter 1994 winter and increased administrative and general expenses primarily due to a rise in personal and property damage claim expenses. The increase in personal and property damage claims was directly related to storm damage and other weather related occurrences.

Maintenance Expenses

Maintenance expense increased $4 million in 1995 in comparison to 1994 due to the extended outage at Salem Units 1 and 2, partially offset by decreased expenses for electric and gas distribution facilities. Maintenance expense for 1994 was $4 million higher than in 1993 primarily due to the 1994 Hope Creek refueling outage and increased expenses for gas distribution facilities which resulted from the extremely cold weather during January and February 1994.

Depreciation and Amortization Expenses

Depreciation and Amortization expenses increased $39 million in 1995 when compared to 1994 and $41 million in 1994 when compared to 1993. The increases in 1995 and 1994 are attributable to increased depreciation expenses directly related to increases in plant in service.

Federal Income Taxes

In 1995, Federal Income Taxes increased $27 million from 1994 and 1994 Federal Income Taxes decreased $14 million from 1993. The 1995 taxes were higher than 1994 principally due to the receipt of a non-taxable

849900305

insurance benefit in 1994 and to higher pre-tax operating income. Federal Income Taxes decreased in 1994 due to the receipt of a non-taxable insurance benefit, partially offset by higher pre-tax operating income.

Interest Charges

In 1995, interest charges were $11 million higher than in 1994 and, in 1994, interest charges were $6 million higher than in 1993. The primary reason for the 1995 increase was higher interest charges on miscellaneous liabilities, while the driving force behind the 1994 increase was a higher average daily balance of short-term debt outstanding at higher interest rates.

Allowance for Funds Used During Construction

In 1995, there was a $2 million decrease in AFDC income principally due to a decrease in construction expenditures. In 1994, AFDC income was $11 million higher than the 1993 level due to increased construction resulting from the repowering of the Bergen Generating Station.

Preferred Securities

Dividend requirements on preferred securities increased $8 million in 1995 compared to 1994 and $4 million in 1994 compared to 1993. The increases are the result of the issuance of higher rate Monthly Income Preferred Securities used to redeem certain issues of PSE&G Preferred Stock.

EDHI—Net Income

	1995 vs. 1994		1994 vs. 1993	
	Amount	Per Share	Amount	Per Share
	(Millions, except Per Share Data)			
PSRC	—	—	14	.06
CEA	(4)	(.02)	2	.01
EDC	23	.10	(34)	(.14)
EGDC	1	—	54	.22
Total	$20	$.08	$36	$.15

The net income of EDHI was $80 million in 1995, a $20 million increase over 1994. EDC's income increased $23 million primarily due to the realization of a settlement related to a take-or-pay sales contract. EDC's gains from property sales, higher oil prices and volumes and reduced depreciation, depletion and amortization (DD&A) expenses also contributed to higher earnings but were substantially offset by lower gas prices and volumes. CEA's earnings decreased $4 million compared to 1994 due to higher interest and development expenses.

The net income of EDHI was $60 million in 1994. Excluding the impact of an impairment of assets of $51 million, after tax, by EGDC in 1993, EDHI's earnings in 1994 decreased $15 million in comparison to 1993. Increased income from PSRC (higher investment income, lower income taxes compared to 1993 which included the effects of a Federal income tax increase and lower interest charges) and CEA (higher income from operating plants) was offset by lower EDC earnings (lower gas volumes and prices and higher exploration and development expenditures due to increased drilling activities).

Dividends

The ability of Enterprise to declare and pay dividends is contingent upon its receipt of dividend payments from its subsidiaries. PSE&G has made regular payments to Enterprise in the form of dividends on outstanding shares of its common stock since Enterprise was formed in 1986. In addition, commencing in 1992, EDHI has also made payments to Enterprise in the form of dividends on its outstanding common stock. Since 1992,

849900306

Enterprise has maintained a constant rate of common stock dividends. Management believes that gradually reducing the common stock dividend payout ratio is a prudent policy.

Dividends paid to holders of Enterprise Common Stock increased $.5 million during 1995 compared to 1994 and increased $6 million during 1994 compared to 1993. Such increases were due to the issuance of additional shares of Enterprise Common Stock.

Dividends paid to holders of PSE&G's Preferred Stock decreased $6.7 million during 1995 compared to 1994 and increased $2 million during 1994 compared to 1993. The 1995 decrease in such dividends was due to the redemption of certain series of Preferred Stock. The increase in 1994 was due to the issuance of additional shares of Preferred Stock. (See Liquidity and Capital Resources.)

Dividends paid to holders of Monthly Income Preferred Securities of Public Service Electric and Gas Capital, L.P. (Partnership), a limited partnership of which PSE&G is the general partner, increased $14 million during 1995 compared to 1994. The Partnership's Monthly Income Preferred Securities were first issued in 1994 and were not outstanding for the entire year. The increase in 1995 was due to the issuance of additional securities coupled with the fact that Monthly Income Preferred Securities were outstanding for the entire year. (See Note 4 —Schedule of Consolidated Capital Stock and Other Securities of Notes.)

Liquidity and Capital Resources

Enterprise's liquidity is affected by maturing debt, investment and acquisition activities, the capital requirements of PSE&G's and EDHI's construction and investment programs, permitted regulatory recovery of expenses and collection of revenues. Capital resources available to meet such requirements depend upon general and regional economic conditions, PSE&G's customer retention and growth, the ability of PSE&G and EDHI to meet competitive pressures and to contain costs, the adequacy and timeliness of rate relief, cost recovery and necessary regulatory approvals, the ability to continue to operate and maintain nuclear programs in accordance with NRC and BPU requirements, the impact of environmental regulations, continued access to the capital markets and continued favorable regulatory treatment of consolidated tax benefits. (For additional information see the discussion of Competition above and Note 12, Commitments and Contingencies of the Notes.)

PSE&G

PSE&G had utility plant additions of $686 million, $887 million and $890 million, for 1995, 1994 and 1993, respectively, including AFDC of $36 million, $38 million and $27 million, respectively. Construction expenditures were related to improvements in PSE&G's existing power plants, transmission and distribution system, gas system and common facilities. PSE&G also expended $30 million, $34 million and $48 million for the cost of plant removal (net of salvage) in 1995, 1994 and 1993, respectively. Construction expenditures from 1996 through 2000 are expected to aggregate $2.8 billion, including AFDC. Forecasted construction expenditures are related to improvements in PSE&G's existing power plants (including nuclear fuel), transmission and distribution system, gas system and common facilities. (See Construction, Investments and Other Capital Requirements Forecast below.)

PSE&G expects that it will be able to internally generate all of its capital requirements, including construction expenditures, over the next five years and reduce its debt outstanding by approximately $1 billion, assuming adequate and timely recovery of costs, as to which no assurances can be given. (See Note 2—Rate Matters and Note 12—Commitments and Contingent Liabilities of Notes.)

EDHI

During the next five years, a majority of EDHI's capital requirements are expected to be provided from operational cash flows. (See Construction, Investments and Other Capital Requirements Forecast below.) CEA is expected to be the primary vehicle for EDHI's business growth. A significant portion of CEA's growth is expected to occur in the international arena due to the current and anticipated growth in electric capacity required

849900307

in certain regions of the world. EDC will continue to pursue a program to grow its reserve base through a combination of strategic acquisitions, high potential exploration activities and exploitation of its acquired properties and new discoveries. EDC's worldwide 1995 production totaled 99 BCFE and, at year end, EDC had proved reserves of 920 BCFE. EDC expended approximately $153 million, $188 million and $109 million in 1995, 1994 and 1993, respectively, to acquire, discover or develop domestic and international reserves. Of these expenditures, $132 million, $160 million and $92 million in 1995, 1994 and 1993, respectively, were capitalized. These amounts included capitalized interest of $4 million, $4 million and $3 million, respectively. For discussion regarding the potential divestiture of EDC, see Competition.

PSRC will continue to limit new investments to those related to the energy businesses, while EGDC will exit the real estate business in a prudent manner. Over the next several years, EDHI and its subsidiaries will also be required to refinance a portion of their maturing debt in order to meet their capital requirements. In addition, any divestiture of EDC will require the renegotiation of existing loan agreements of Funding. Any inability to extend or replace maturing debt and or existing agreements at current levels and interest rates may affect future earnings and result in an increase in EDHI's cost of capital.

PSRC is a limited partner in various limited partnerships and is committed to make investments from time to time, upon the request of the respective general partners. At December 31, 1995, $58 million remained as PSRC's unfunded commitment subject to call.

EDHI and each of its subsidiaries are subject to restrictive business and financial covenants contained in existing debt agreements and are required to not exceed various debt to equity ratios which vary from 3:1 to 1.75:1. EDHI is also required to maintain a twelve-months earnings before interest and taxes to interest (EBIT) coverage ratio of at least 1.35:1. As of December 31, 1995 and 1994, EDHI had a consolidated debt to equity ratio of 1.15:1 and, for the years ended December 31, 1995, 1994 and 1993, EBIT coverage ratios, as defined to exclude the effects of EGDC, of 2.47:1, 1.94:1 and 2.13:1, respectively. Compliance with applicable financial covenants will depend upon future financial position and levels of earnings, as to which no assurance can be given. (See Note 6—Schedule of Consolidated Debt and Note 16—Property Impairment of Enterprise Group Development Corporation of Notes.)

Long-Term Investments and Real Estate

Long-term investments and real estate increased $82 million in 1995 and decreased $58 million and $67 million in 1994 and 1993, respectively. The increase in 1995 was primarily due to an increase in PSCRC's long-term investments of $49 million, PSRC's increase in investments in partnerships and leases of $52 million and CEA's increase in partnership investments of $27 million, partially offset by EGDC's property sales of $53 million. The decrease in 1994 was primarily due to a $73 million net decrease in PSE&G's investment in an insurance contract, partially offset by an increase in long-term investments of $23 million. The decrease in 1993 was due primarily to EDHI's decrease in long-term investments of $63 million. (For more details, see Note 7—long-term investments and Note 11—Leasing Activities—As Lessor of Notes.)

849900308

Construction, Investments and Other Capital Requirements Forecast

	1996	1997	1998	1999	2000	TOTAL
			(Millions of Dollars)			
PSE&G (including AFDC)						
Electric (including Nuclear)	$ 464	$ 408	$ 383	$356	$ 342	$1,953
Gas	128	117	110	106	102	563
Miscellaneous Corporate	70	56	50	41	35	252
Total PSE&G Construction Requirements	662	581	543	503	479	2,768
EDHI	272	148	229	206	225	1,080
MANDATORY RETIREMENT OF SECURITIES:						
PSE&G	345	400	118	100	400	1,363
EDHI	91	125	195	200	78	689
	436	525	313	300	478	2,052
WORKING CAPITAL AND OTHER—NET	16	(26)	70	(21)	59	98
Total Capital Requirements	$1,386	$1,228	$1,155	$988	$1,241	$5,998

While the above forecast includes capital costs to comply with revised Federal Clean Air Act (CAA) requirements through 2000, it does not include additional requirements being developed under the CAA by Federal and State agencies. Such additional costs cannot be reasonably estimated at this time. PSE&G believes that such CAA costs would be recoverable from electric customers. In accordance with the proposed Alternative Rate Plan, separate mechanisms would be established to ensure continued recovery of costs associated with activities mandated or approved by state or federal agencies or otherwise out of PSE&G's control.

Internal Generation of Cash from Operations

Enterprise's cash from operations is generated primarily from the operating activities of PSE&G.

Enterprise's cash provided by operations for 1995 increased $261 million to $1.493 billion from 1994. This increase was primarily due to the increase in PSE&G's revenues (partially offset by an increase in accounts receivable and unbilled revenues), an increase in the recovery of electric energy and gas costs through PSE&G's LEAC and LGAC and a decrease in PSE&G's gross receipts taxes. For additional information see Results of Operations.

Enterprise's cash provided by operations for 1994 increased $200 million to $1.232 billion from 1993. This increase was primarily due to the increase in PSE&G's revenues (plus a decrease in accounts receivable and unbilled revenues) and an increase in the recovery of electric energy and gas costs through PSE&G's LEAC and LGAC. For additional information see Results of Operations.

External Financings—PSE&G

In 1995, PSE&G issued $156 million of its First and Refunding Mortgage Bonds (Bonds)/Medium-Term Notes (MTNs) for the purpose of redeeming $56 million of its higher cost Bonds and to pay a portion of its maturing bonds.

In 1995, Partnership issued $60 million of Monthly Income Preferred Securities, the proceeds of which were used to redeem $60 million of PSE&G's Preferred Stock.

The BPU has authorized PSE&G to issue approximately $4.375 billion aggregate amount of additional Bonds/MTNs/Preferred Stock/Monthly Income Preferred Securities through 1997 for refunding purposes. Under its Mortgage, PSE&G may issue new Bonds against retired Bonds and as of December 31, 1995, up to

849900309

$2.840 billion aggregate amount of new Bonds against previous additions and improvements to utility plant, provided that the ratio of earnings to fixed charges is at least 2:1. At December 31, 1995 the ratio was 2.77:1.

In January 1996, PSE&G issued $350 million of Bonds. In February 1996, the net proceeds from the sale were deposited in an escrow account for the purpose of refunding certain higher cost bonds at their respective first optional redemption dates in November 1996 and February 1997.

The BPU has authorized PSE&G to issue and have outstanding at any one time not more than $1 billion of its short-term obligations, consisting of commercial paper and other unsecured borrowings from banks and other lenders through January 1, 1997. On December 31, 1995, PSE&G had $449 million of short-term debt outstanding.

To provide liquidity for its commercial paper program, PSE&G has a $500 million one year revolving credit agreement expiring in August 1996 and a $500 million five year revolving credit agreement expiring in August 2000 with a group of commercial banks, which provides for borrowing up to one year. On December 31, 1995, there were no borrowings outstanding under these credit agreements. PSE&G expects to be able to renew the credit agreement expiring in 1996.

PSCRC has a $30 million revolving credit facility supported by a PSE&G subscription agreement in an aggregate amount of $30 million which terminates on March 7, 1996. PSCRC is presently in the process of negotiating a one year extension for this facility. As of December 31, 1995, PSCRC had $30 million outstanding under this facility.

PSE&G Fuel Corporation (Fuelco) has a $150 million commercial paper program to finance a 42.49% share of Peach Bottom nuclear fuel, supported by a $150 million revolving credit facility with a group of banks, which expires on June 28, 1996. PSE&G has guaranteed repayment of Fuelco's respective obligations. As of December 31, 1995, Fuelco had commercial paper of $88 million outstanding under such program.

External Financings—EDHI

Funding has a commercial paper program, supported by a commercial bank letter of credit and credit facility, in the amount of $225 million expiring in March 1998. As of December 31, 1995, Funding had $182 million of borrowings outstanding under this commercial paper program.

Additionally, Funding has a $225 million revolving credit facility expiring in March 1998. As of December 31, 1995, Funding had $100 million of borrowings outstanding under this facility.

Capital's MTN program has previously provided for an aggregate principal amount of up to $750 million of MTNs so that its total debt outstanding at any time, including MTNs, would not exceed such amount. Effective January 31, 1995, Capital will not have more than $650 million of debt outstanding at any time. In 1995, Capital repaid $112 million of its MTNs. At December 31, 1995, Capital had total debt outstanding of $478 million, including $355 million of MTNs.

PSE&G

The information required by this item is incorporated herein by reference to the following portions of Enterprise's Management's Discussion and Analysis of Financial Condition and Results of Operations, insofar as they relate to PSE&G and its subsidiaries: Overview; Competition; PSE&G Energy and Fuel Adjustment Clauses; Accounting for Stock Compensation; Corporate Policy for the Use of Derivatives; Nuclear Operations; Results of Operations; Dividends; Liquidity and Capital Resources; Long-Term Investments and Real Estate; Construction; Investments and Other Capital Requirements Forecast; and External Financings.

849900310

Item 8. Financial Statements and Supplementary Data

FINANCIAL STATEMENT RESPONSIBILITY—ENTERPRISE

Management of Enterprise is responsible for the preparation, integrity and objectivity of the consolidated financial statements and related notes of Enterprise. The consolidated financial statements and related notes are prepared in accordance with generally accepted accounting principles. The financial statements reflect estimates based upon the judgment of management where appropriate. Management believes that the consolidated financial statements and related notes present fairly Enterprise's financial position and results of operations. Information in other parts of this Annual Report is also the responsibility of management and is consistent with these consolidated financial statements and related notes.

The firm of Deloitte & Touche LLP, independent auditors, is engaged to audit Enterprise's consolidated financial statements and related notes and issue a report thereon. Deloitte & Touche's audit is conducted in accordance with generally accepted auditing standards. Management has made available to Deloitte & Touche, all the corporation's financial records and related data, as well as the minutes of directors' meetings. Furthermore, management believes that all representations made to Deloitte & Touche, during its audit were valid and appropriate.

Management has established and maintains a system of internal accounting controls to provide reasonable assurance that assets are safeguarded, and that transactions are executed in accordance with management's authorization and recorded properly for the prevention and detection of fraudulent financial reporting, so as to maintain the integrity and reliability of the financial statements. The system is designed to permit preparation of consolidated financial statements and related notes in accordance with generally accepted accounting principles. The concept of reasonable assurance recognizes that the costs of a system of internal accounting controls should not exceed the related benefits. Management believes the effectiveness of this system is enhanced by an ongoing program of continuous and selective training of employees. In addition, management has communicated to all employees its policies on business conduct, safeguarding assets and internal controls.

The Internal Auditing Department of PSE&G conducts audits and appraisals of accounting and other operations of Enterprise and its subsidiaries and evaluates the effectiveness of cost and other controls and recommends to management, where appropriate, improvements thereto. Management has considered the internal auditors' and Deloitte & Touche's recommendations concerning the corporation's system of internal accounting controls and has taken actions that, in its opinion, are cost-effective in the circumstances to respond appropriately to these recommendations. Management believes that, as of December 31, 1995, the corporation's system of internal accounting controls is adequate to accomplish the objectives discussed herein.

The Board of Directors of Enterprise carries out its responsibility of financial overview through its Audit Committee, which presently consists of six directors who are not employees of Enterprise or any of its affiliates. The Audit Committee meets periodically with management as well as with representatives of the internal auditors and Deloitte & Touche. The Audit Committee reviews the work of each to ensure that its respective responsibilities are being carried out and discusses related matters. Both the internal auditors and Deloitte & Touche periodically meet alone with the Audit Committee and have free access to the Audit Committee, and its individual members, at any time.

E. JAMES FERLAND
Chairman of the Board,
President and Chief Executive Officer

ROBERT C. MURRAY
Vice President and
Chief Financial Officer

PATRICIA A. RADO
Vice President and Controller
Principal Accounting Officer

February 14, 1996

849900311

FINANCIAL STATEMENT RESPONSIBILITY—PSE&G

Management of PSE&G is responsible for the preparation, integrity and objectivity of the consolidated financial statements and related notes of PSE&G. The consolidated financial statements and related notes are prepared in accordance with generally accepted accounting principles. The financial statements reflect estimates based upon the judgment of management where appropriate. Management believes that the consolidated financial statements and related notes present fairly PSE&G's financial position and results of operations. Information in other parts of this Annual Report is also the responsibility of management and is consistent with these consolidated financial statements and related notes.

The firm of Deloitte & Touche LLP, independent auditors, is engaged to audit PSE&G's consolidated financial statements and related notes and issue a report thereon. Deloitte & Touche's audit is conducted in accordance with generally accepted auditing standards. Management has made available to Deloitte & Touche, all the corporation's financial records and related data, as well as the minutes of directors' meetings. Furthermore, management believes that all representations made to Deloitte & Touche, during its audit were valid and appropriate.

Management has established and maintains a system of internal accounting controls to provide reasonable assurance that assets are safeguarded, and that transactions are executed in accordance with management's authorization and recorded properly for the prevention and detection of fraudulent financial reporting, so as to maintain the integrity and reliability of the financial statements. The system is designed to permit preparation of consolidated financial statements and related notes in accordance with generally accepted accounting principles. The concept of reasonable assurance recognizes that the costs of a system of internal accounting controls should not exceed the related benefits. Management believes the effectiveness of this system is enhanced by an ongoing program of continuous and selective training of employees. In addition, management has communicated to all employees its policies on business conduct, safeguarding assets and internal controls.

The Internal Auditing Department conducts audits and appraisals of accounting and other operations and evaluates the effectiveness of cost and other controls and recommends to management, where appropriate, improvements thereto. Management has considered the internal auditors' and Deloitte & Touche's recommendations concerning the corporation's system of internal accounting controls and has taken actions that are cost-effective in the circumstances to respond appropriately to these recommendations. Management believes that, as of December 31, 1995, the corporation's system of internal accounting controls is adequate to accomplish the objectives discussed herein.

The Board of Directors carries out its responsibility of financial overview through the Audit Committee of Enterprise, which presently consists of six directors who are not employees of Enterprise or any of its affiliates. The Enterprise Audit Committee meets periodically with management as well as with representatives of the internal auditors and Deloitte & Touche. The Audit Committee reviews the work of each to ensure that their respective responsibilities are being carried out and discusses related matters. Both the internal auditors and Deloitte & Touche, periodically meet alone with the Audit Committee and have free access to the Audit Committee, and its individual members, at any time.

E. JAMES FERLAND
Chairman of the Board and
Chief Executive Officer

ROBERT C. MURRAY
Senior Vice President and
Chief Financial Officer

PATRICIA A. RADO
Vice President and Controller
Principal Accounting Officer

February 14, 1996

849900312

INDEPENDENT AUDITORS' REPORT

To the Stockholders and Board of Directors of
Public Service Enterprise Group Incorporated:

We have audited the consolidated balance sheets of Public Service Enterprise Group Incorporated and its subsidiaries (the "Company") as of December 31, 1995 and 1994, and the related consolidated statements of income, retained earnings, and cash flows for each of the three years in the period ended December 31, 1995. Our audits also included the consolidated financial statement schedules listed in the Index in Item 14(b)(1). These consolidated financial statements and the consolidated financial statement schedules are the responsibility of the Company's management. Our responsibility is to express an opinion on these consolidated financial statements and consolidated financial statement schedules based on our audits.

We conducted our audits in accordance with generally accepted auditing standards. Those standards require that we plan and perform the audits to obtain reasonable assurance about whether the financial statements are free of material misstatement. An audit includes examining, on a test basis, evidence supporting the amounts and disclosures in the financial statements. An audit also includes assessing the accounting principles used and significant estimates made by management, as well as evaluating the overall financial statement presentation. We believe that our audits provide a reasonable basis for our opinion.

In our opinion, such consolidated financial statements present fairly, in all material respects, the financial position of Public Service Enterprise Group Incorporated and its subsidiaries at December 31, 1995 and 1994, and the results of their operations and their cash flows for each of the three years in the period ended December 31, 1995 in conformity with generally accepted accounting principles. Also, in our opinion, such consolidated financial statement schedules, when considered in relation to the basic consolidated financial statements taken as a whole, present fairly in all material respects the information set forth therein.

We have also previously audited, in accordance with generally accepted auditing standards, the consolidated balance sheets as of December 31, 1993, 1992, and 1991, and the related consolidated statements of income, retained earnings and cash flows for the years ended December 31, 1992 and 1991 (none of which are presented herein) and we expressed unqualified opinions on those consolidated financial statements. In our opinion, the information set forth in the Selected Financial Data for each of the five years in the period ended December 31, 1995 for the Company, presented in Item 6, is fairly stated in all material respects, in relation to the consolidated financial statements from which it has been derived.

DELOITTE & TOUCHE LLP

February 14, 1996
Parsippany, New Jersey

849900313

INDEPENDENT AUDITORS' REPORT

To the Board of Directors of
Public Service Electric and Gas Company:

We have audited the consolidated balance sheets of Public Service Electric & Gas Company and its subsidiaries (the "Company") as of December 31, 1995 and 1994, and the related consolidated statements of income, retained earnings, and cash flows for each of the three years in the period ended December 31, 1995. Our audits also included the consolidated financial statement schedules listed in the Index in Item 14(b)(2). These consolidated financial statements and the consolidated financial statement schedules are the responsibility of the Company's management. Our responsibility is to express an opinion on these consolidated financial statements and consolidated financial statement schedules based on our audits.

We conducted our audits in accordance with generally accepted auditing standards. Those standards require that we plan and perform the audits to obtain reasonable assurance about whether the financial statements are free of material misstatement. An audit includes examining, on a test basis, evidence supporting the amounts and disclosures in the financial statements. An audit also includes assessing the accounting principles used and significant estimates made by management, as well as evaluating the overall financial statement presentation. We believe that our audits provide a reasonable basis for our opinion.

In our opinion, such consolidated financial statements present fairly, in all material respects, the financial position of Public Service Electric & Gas Company and its subsidiaries at December 31, 1995 and 1994, and the results of their operations and their cash flows for each of the three years in the period ended December 31, 1995 in conformity with generally accepted accounting principles. Also, in our opinion, such consolidated financial statement schedules, when considered in relation to the basic consolidated financial statements taken as a whole, present fairly in all material respects the information set forth therein.

We have also previously audited, in accordance with generally accepted auditing standards, the consolidated balance sheets as of December 31, 1993, 1992, and 1991, and the related consolidated statements of income, retained earnings and cash flows for the years ended December 31, 1992 and 1991 (none of which are presented herein) and we expressed unqualified opinions on those consolidated financial statements. In our opinion, the information set forth in the Selected Financial Data for each of the five years in the period ended December 31, 1995 for the Company, presented in Item 6, is fairly stated in all material respects, in relation to the consolidated financial statements from which it has been derived.

DELOITTE & TOUCHE LLP

February 14, 1996
Parsippany, New Jersey

849900314

[THIS PAGE INTENTIONALLY LEFT BLANK]

849900315

PUBLIC SERVICE ENTERPRISE GROUP INCORPORATED

CONSOLIDATED STATEMENTS OF INCOME

	For the Years Ended December 31,		
	1995	1994	1993
	(Thousands of Dollars)		
OPERATING REVENUES			
Electric	$ 4,020,842	$ 3,739,713	$ 3,696,114
Gas	1,686,403	1,778,528	1,594,341
Nonutility Activities	456,908	404,202	418,135
Total Operating Revenues	6,164,153	5,922,443	5,708,590
OPERATING EXPENSES			
Operation			
Fuel for Electric Generation and Interchanged Power	891,782	695,763	717,136
Gas Purchased and Materials for Gas Produced	961,539	1,023,956	897,885
Other	1,118,758	1,118,523	1,014,455
Maintenance	312,610	308,080	304,403
Depreciation and Amortization	674,231	634,028	601,597
Property Impairment (note 16)	—	—	77,637
Taxes			
Federal Income Taxes (note 10)	353,997	312,551	313,680
New Jersey Gross Receipts Taxes	612,961	583,167	597,898
Other	80,565	82,282	77,052
Total Operating Expenses	5,006,443	4,758,350	4,601,743
OPERATING INCOME	1,157,710	1,164,093	1,106,847
OTHER INCOME			
Allowance for Funds Used During Construction — Equity	5,324	12,789	12,265
Miscellaneous — net	8,041	6,430	(3,778)
Total Other Income	13,365	19,219	8,487
INCOME BEFORE INTEREST CHARGES AND DIVIDENDS ON PREFERRED SECURITIES	1,171,075	1,183,312	1,115,334
INTEREST CHARGES (note 6)			
Long-Term Debt	434,066	459,158	469,120
Short-Term Debt	32,822	23,962	13,860
Other	29,172	12,805	19,554
Total Interest Charges	496,060	495,925	502,534
Allowance for Funds Used During Construction — Debt and Capitalized Interest	(37,208)	(33,793)	(20,833)
Net Interest Charges	458,852	462,132	481,701
Preferred Securities Dividend Requirements (note 4)	49,426	42,147	38,114
Preferred Stock Redemption Premium	474	—	—
Income before cumulative effect of accounting change	662,323	679,033	595,519
Cumulative effect of change in accounting for income taxes (note 10)	—	—	5,414
Net Income	$ 662,323	$ 679,033	$ 600,933
SHARES OF COMMON STOCK OUTSTANDING			
End of Year	244,697,930	244,697,930	243,688,256
Average for Year	244,697,930	244,470,794	240,663,599
EARNINGS PER AVERAGE SHARE OF COMMON STOCK			
Before cumulative effect of accounting change	$ 2.71	$ 2.78	$ 2.48
Cumulative effect of change in accounting for income taxes	—	—	.02
Total Earnings Per Average Share of Common Stock	$ 2.71	$ 2.78	$ 2.50
DIVIDENDS PAID PER SHARE OF COMMON STOCK	$ 2.16	$ 2.16	$ 2.16

See Notes to Consolidated Financial Statements.

849900316

PUBLIC SERVICE ENTERPRISE GROUP INCORPORATED

CONSOLIDATED BALANCE SHEETS

ASSETS

	December 31, 1995	December 31, 1994
	(Thousands of Dollars)	
UTILITY PLANT—ORIGINAL COST (note 15)		
Electric	$13,095,103	$12,345,919
Gas	2,442,572	2,318,233
Common	517,104	545,131
Total	16,054,779	15,209,283
Less: accumulated depreciation and amortization	5,440,414	5,147,105
Net	10,614,365	10,062,178
Nuclear Fuel in Service, net of accumulated amortization—1995, $297,435; 1994, $302,906	180,018	205,273
Net Utility Plant in Service	10,794,383	10,267,451
Construction Work in Progress, including Nuclear Fuel in Process—1995, $104,743; 1994, $65,429	369,082	806,934
Plant Held for Future Use	23,966	23,860
Net Utility Plant	11,187,431	11,098,245
INVESTMENTS AND OTHER NONCURRENT ASSETS (notes 3, 7, 8, 11, 12 and 16)		
Long-Term Investments, net of amortization—1995, $7,213; 1994, $2,365, and net of valuation allowances—1995, $21,302; 1994, $17,104, respectively	1,822,160	1,625,952
Oil and Gas Property, Plant and Equipment, net of accumulated depreciation and amortization—1995, $786,736; 1994, $748,245	608,015	577,913
Real Estate, Property and Equipment, net of accumulated depreciation—1995, $5,063; 1994, $14,242, and net of valuation allowances—1995, $8,228; 1994, $23,264, respectively	75,558	115,210
Other Plant, net of accumulated depreciation and amortization—1995, $6,531; 1994, $4,653	27,997	36,063
Nuclear Decommissioning and Other Special Funds	276,348	233,022
Other Assets—net	55,974	85,478
Total Investments and Other Noncurrent Assets	2,866,052	2,673,638
CURRENT ASSETS		
Cash and Cash Equivalents (note 9)	76,233	67,866
Accounts Receivable:		
Customer Accounts Receivable	525,404	434,207
Other Accounts Receivable	260,713	211,779
Less: allowance for doubtful accounts	37,641	40,915
Unbilled Revenues	246,876	204,056
Fuel, at average cost	253,360	268,927
Materials and Supplies, net of inventory valuation reserves—1995, $20,100; 1994, $18,200, respectively	144,970	148,285
Deferred Income Taxes (note 10)	27,571	25,311
Miscellaneous Current Assets	62,631	37,356
Total Current Assets	1,560,117	1,356,872
DEFERRED DEBITS (note 5)		
Property Abandonments—net	70,120	88,269
Oil and Gas Property Write-Down	36,078	41,232
Unamortized Debt Expense	123,833	134,599
Deferred OPEB Costs (notes 1 and 13)	167,189	116,476
Underrecovered Electric Energy and Gas Costs—net	170,565	172,563
Unrecovered Environmental Costs (notes 2 and 12)	130,070	138,435
Unrecovered Plant and Regulatory Study Costs	35,150	37,128
Unrecovered SFAS 109 Deferred Income Taxes (note 10)	769,136	791,393
Deferred Decontamination and Decommissioning Costs (note 3)	49,872	53,016
Other	5,826	15,574
Total Deferred Debits	1,557,839	1,588,685
Total	$17,171,439	$16,717,440

See Notes to Consolidated Financial Statements.

849900317

PUBLIC SERVICE ENTERPRISE GROUP INCORPORATED

CONSOLIDATED BALANCE SHEETS

CAPITALIZATION AND LIABILITIES

	December 31, 1995	December 31, 1994
	(Thousands of Dollars)	
CAPITALIZATION (notes 4 and 6)		
Common Equity		
Common Stock	$ 3,801,157	$ 3,801,157
Retained Earnings	1,643,785	1,510,010
Total Common Equity	5,444,942	5,311,167
SUBSIDIARIES' SECURITIES AND OBLIGATIONS		
Preferred Securities		
Preferred Stock Without Mandatory Redemption	324,994	384,994
Preferred Stock With Mandatory Redemption	150,000	150,000
Monthly Income Preferred Securities	210,000	150,000
Long-Term Debt	5,189,791	5,180,657
Total Capitalization	11,319,727	11,176,818
OTHER LONG-TERM LIABILITIES		
Decontamination, Decommissioning and Low Level Radwaste Costs (note 3)	50,449	56,149
Environmental Costs (notes 2 and 12)	96,272	105,684
Capital Lease Obligations	53,111	53,770
Total Other Long-Term Liabilities	199,832	215,603
CURRENT LIABILITIES		
Long-Term Debt due within one year	90,630	499,738
Commercial Paper and Loans (note 6)	849,567	491,586
Book Overdrafts	70,014	86,576
Accounts Payable	567,787	433,471
Other Taxes Accrued	34,678	44,149
Interest Accrued	108,245	107,962
Estimated Liability for Vacation Pay	17,089	27,080
Customer Deposits	32,785	33,698
Liability for Injuries and Damages	38,141	29,814
Miscellaneous Environmental Liabilities	16,954	15,365
Other	95,907	87,480
Total Current Liabilities	1,921,797	1,856,919
DEFERRED CREDITS		
Accumulated Deferred Income Taxes (note 10)	3,094,620	2,905,390
Accumulated Deferred Investment Tax Credits	392,324	412,466
Deferred OPEB Costs (notes 1 and 13)	167,189	116,476
Other	75,950	33,768
Total Deferred Credits	3,730,083	3,468,100
COMMITMENTS AND CONTINGENT LIABILITIES (note 12)		
Total	$17,171,439	$16,717,440

849900318

PUBLIC SERVICE ENTERPRISE GROUP INCORPORATED

CONSOLIDATED STATEMENTS OF CASH FLOWS

	For the Years Ended December 31,		
	1995	1994	1993
	(Thousands of Dollars)		
CASH FLOWS FROM OPERATING ACTIVITIES:			
Net Income	$ 662,323	$ 679,033	$ 600,933
Adjustments to reconcile net income to net cash flows from operating activities:			
Depreciation and Amortization	674,231	634,028	601,597
Amortization of Nuclear Fuel	75,028	95,173	102,718
Recovery (Deferral) of Electric Energy and Gas Costs—net	1,998	(110,529)	(184,770)
Loss from Property Impairments	—	—	77,637
Cumulative Effect of Change in Accounting for Income Taxes	—	—	(5,414)
Unrealized Gains on Investments—net	(46,668)	(26,329)	(8,694)
Provision for Deferred Income Taxes—net	145,092	138,919	168,406
Investment Tax Credits—net	(20,142)	(20,247)	(11,655)
Allowance for Funds Used During Construction—Debt and Equity and Capitalized Interest	(42,532)	(46,582)	(33,098)
Proceeds from Leasing Activities—net	37,652	27,682	14,780
Changes in certain current assets and liabilities:			
Net (increase) decrease in Accounts Receivable and Unbilled Revenues	(186,225)	84,440	(68,382)
Net decrease in Inventory—Fuel and Materials and Supplies	18,882	41,169	16,438
Net increase (decrease) in Accounts Payable	134,316	(85,790)	95,331
Net decrease in Accrued Taxes	(17,279)	(258,818)	(293,919)
Net change in Other Current Assets and Liabilities	(12,005)	36,748	(19,505)
Other	68,244	42,893	(20,732)
Net cash provided by operating activities	1,492,915	1,231,790	1,031,671
CASH FLOWS FROM INVESTING ACTIVITIES:			
Additions to Utility Plant, excluding AFDC	(649,883)	(849,174)	(863,294)
Additions to Oil and Gas Property, Plant and Equipment, excluding Capitalized Interest	(127,729)	(156,302)	(88,864)
Net (increase) decrease in Long-Term Investments and Real Estate	(81,264)	58,416	66,659
Increase in Decommissioning and Other Special Funds, excluding interest	(29,617)	(35,394)	(45,508)
Cost of Plant Removal—net	(29,674)	(33,962)	(47,791)
Other	29,899	13,933	(14,042)
Net cash used in investing activities	(888,268)	(1,002,483)	(992,840)
CASH FLOWS FROM FINANCING ACTIVITIES:			
Net increase (decrease) in Short-Term Debt	357,981	(86,050)	185,654
(Decrease) increase in Book Overdrafts	(16,562)	23,584	(10,078)
Issuance of Long-Term Debt	156,320	849,800	2,137,700
Redemption of Long-Term Debt	(556,294)	(593,790)	(2,083,453)
Long-Term Debt Issuance and Redemption Costs	(9,177)	(29,811)	(72,114)
Issuance of Preferred Stock	—	75,000	75,000
Redemption of Preferred Stock	(60,000)	(120,000)	—
Issuance of Monthly Income Preferred Securities	60,000	150,000	—
Issuance of Common Stock	—	28,495	273,479
Cash Dividends Paid on Common Stock	(528,548)	(528,071)	(521,572)
Other	—	(1,970)	(6,772)
Net cash used in financing activities	(596,280)	(232,813)	(22,156)
Net increase (decrease) in Cash and Cash Equivalents	8,367	(3,506)	16,675
Cash and Cash Equivalents at Beginning of Year	67,866	71,372	54,697
Cash and Cash Equivalents at End of Year	$ 76,233	$ 67,866	$ 71,372
Income Taxes Paid	$ 185,376	$ 155,104	$ 140,172
Interest Paid	$ 481,264	$ 432,873	$ 458,956

See Notes to Consolidated Financial Statements.

849900319

PUBLIC SERVICE ENTERPRISE GROUP INCORPORATED

CONSOLIDATED STATEMENTS OF RETAINED EARNINGS

	For the Years Ended December 31,		
	1995	1994	1993
		(Thousands of Dollars)	
Balance January 1	$1,510,010	$1,361,018	$1,282,931
Add Net Income	662,323	679,033	600,933
Total	2,172,333	2,040,051	1,883,864
Deduct			
Dividends on Common Stock(A)	528,548	528,071	521,572
Capital Stock Expenses	—	1,970	1,274
Total Deductions	528,548	530,041	522,846
Balance December 31	$1,643,785	$1,510,010	$1,361,018

(A) The ability of Enterprise to declare and pay dividends is contingent upon its receipt of dividend payments from its subsidiaries. PSE&G, Enterprise's principal subsidiary, has restrictions on the payment of dividends which are contained in its Restated Certificate of Incorporation, as amended, certain of the indentures supplemental to its Mortgage and certain other indentures. However, none of these restrictions presently limits the payment of dividends out of current earnings. The amount of PSE&G's restricted retained earnings at December 31, 1995, 1994 and 1993 was $10 million.

See Notes to Consolidated Financial Statements.

849900320

[THIS PAGE INTENTIONALLY LEFT BLANK]

849900321

PUBLIC SERVICE ELECTRIC AND GAS COMPANY

CONSOLIDATED STATEMENTS OF INCOME

	For the Years Ended December 31,		
	1995	1994	1993
	(Thousands of Dollars)		
OPERATING REVENUES			
Electric	$4,020,842	$3,739,713	$3,696,114
Gas	1,686,403	1,778,528	1,594,341
Total Operating Revenues	5,707,245	5,518,241	5,290,455
OPERATING EXPENSES			
Operation			
Fuel for Electric Generation and Interchanged Power	891,782	695,763	717,136
Gas Purchased and Materials for Gas Produced	961,539	1,036,701	919,870
Other	949,400	959,859	882,641
Maintenance	312,610	308,080	304,403
Depreciation and Amortization	591,114	551,372	510,539
Taxes			
Federal Income Taxes (note 10)	321,433	294,529	308,790
New Jersey Gross Receipts Taxes	612,961	583,167	597,898
Other	70,904	76,100	67,593
Total Operating Expenses	4,711,743	4,505,571	4,308,870
OPERATING INCOME	995,502	1,012,670	981,585
OTHER INCOME			
Allowance for Funds Used During Construction — Equity	5,324	12,789	12,265
Miscellaneous — net	7,728	6,233	(3,841)
Total Other Income	13,052	19,022	8,424
INCOME BEFORE INTEREST CHARGES AND DIVIDENDS ON PREFERRED SECURITIES	1,008,554	1,031,692	990,009
INTEREST CHARGES (note 6)			
Long-Term Debt	357,584	366,894	364,252
Short-Term Debt	20,740	18,175	6,414
Other	28,545	10,856	19,290
Total Interest Charges	406,869	395,925	389,956
Allowance for Funds Used During Construction — Debt	(30,943)	(25,319)	(14,815)
Net Interest Charges	375,926	370,606	375,141
Monthly Income Preferred Securities Dividend Requirements (note 4)	15,664	1,680	—
Net Income	616,964	659,406	614,868
Preferred Stock Dividend Requirements (note 4)	33,762	40,467	38,114
Preferred Stock Redemption Premium (note 4)	474	—	—
EARNINGS AVAILABLE TO PUBLIC SERVICE ENTERPRISE GROUP INCORPORATED	$ 582,728	$ 618,939	$ 576,754

See Notes to Consolidated Financial Statements.

849900322

PUBLIC SERVICE ELECTRIC AND GAS COMPANY

CONSOLIDATED BALANCE SHEETS

ASSETS

	December 31, 1995	December 31, 1994
	(Thousands of Dollars)	
UTILITY PLANT—ORIGINAL COST (note 15)		
Electric	$13,095,103	$12,345,919
Gas	2,442,572	2,318,233
Common	517,104	545,131
Total	16,054,779	15,209,283
Less accumulated depreciation and amortization	5,440,414	5,147,105
Net	10,614,365	10,062,178
Nuclear Fuel in Service, net of accumulated amortization—1995, $297,435; 1994, $302,906	180,018	205,273
Net Utility Plant in Service	10,794,383	10,267,451
Construction Work in Progress, including Nuclear Fuel in Process—1995, $104,743; 1994, $65,429	369,082	806,934
Plant Held for Future Use	23,966	23,860
Net Utility Plant	11,187,431	11,098,245
INVESTMENTS AND OTHER NONCURRENT ASSETS		
Long-Term Investments, net of amortization—1995, $6,009; 1994, $2,365, respectively	119,474	65,886
Nuclear Decommissioning and Other Special Funds (note 3)	276,348	233,022
Other Plant, net of accumulated depreciation and amortization—1995, $1,905; 1994, $1,127	24,976	32,879
Total Investments and Other Noncurrent Assets	420,798	331,787
CURRENT ASSETS		
Cash and Cash Equivalents (note 9)	32,373	27,498
Accounts Receivable:		
Customer Accounts Receivable	525,404	434,207
Other Accounts Receivable	163,976	151,684
Less: allowance for doubtful accounts	37,641	40,915
Unbilled Revenues	246,876	204,056
Fuel, at average cost	253,360	268,927
Materials and Supplies, net of inventory valuation reserves—1995, $20,100; 1994, $18,200, respectively	143,741	146,763
Deferred Income Taxes (note 10)	27,571	25,311
Miscellaneous Current Assets	37,130	30,407
Total Current Assets	1,392,790	1,247,938
DEFERRED DEBITS (note 5)		
Property Abandonments—net	70,120	88,269
Oil and Gas Property Write-Down	36,078	41,232
Unamortized Debt Expense	122,049	132,342
Deferred OPEB Costs (notes 1 and 13)	167,189	116,476
Underrecovered Electric Energy and Gas Costs—net	170,565	172,563
Unrecovered Environmental Costs (notes 2 and 12)	130,070	138,435
Unrecovered Plant and Regulatory Study Costs	35,150	37,128
Deferred Decontamination and Decommissioning Costs (note 3)	49,872	53,016
Unrecovered SFAS 109 Deferred Income Taxes (note 10)	769,136	791,393
Other	5,700	15,574
Total Deferred Debits	1,555,929	1,586,428
Total	$14,556,948	$14,264,398

See Notes to Consolidated Financial Statements.

849900323

PUBLIC SERVICE ELECTRIC AND GAS COMPANY

CONSOLIDATED BALANCE SHEETS

CAPITALIZATION AND LIABILITIES

	December 31, 1995	December 31, 1994
	(Thousands of Dollars)	
CAPITALIZATION (notes 4 and 6)		
Common Equity		
Common Stock	$ 2,563,003	$ 2,563,003
Contributed Capital from Enterprise	594,395	534,395
Retained Earnings	1,372,729	1,292,201
Total Common Equity	4,530,127	4,389,599
Preferred Stock without mandatory redemption	324,994	384,994
Preferred Stock with mandatory redemption	150,000	150,000
Monthly Income Preferred Securities of Subsidiary	210,000	150,000
Long-Term Debt	4,586,268	4,486,787
Total Capitalization	9,801,389	9,561,380
OTHER LONG-TERM LIABILITIES		
Decontamination, Decommissioning and Low Level Radwaste Costs (note 3)	50,449	56,149
Environmental Costs (notes 2 and 12)	96,272	105,684
Capital Lease Obligations (note 11)	53,111	53,770
Total Other Long-Term Liabilities	199,832	215,603
CURRENT LIABILITIES		
Long-Term Debt due within one year	—	310,200
Commercial Paper and Loans (note 6)	567,316	401,759
Book Overdrafts	70,014	86,576
Accounts Payable	481,632	370,005
Accounts Payable—Associated Companies (note 19)	8,011	16,677
Other Taxes Accrued	32,767	36,030
Interest Accrued	95,811	95,721
Estimated Liability for Vacation Pay	17,089	27,080
Customer Deposits	32,785	33,698
Liability for Injuries and Damages	38,141	29,814
Miscellaneous Environmental Liabilities	16,954	15,365
Other	50,751	50,778
Total Current Liabilities	1,411,271	1,473,703
DEFERRED CREDITS		
Accumulated Deferred Income Taxes (note 10)	2,535,603	2,478,539
Accumulated Deferred Investment Tax Credits	370,610	389,721
Deferred OPEB Costs (notes 1 and 13)	167,189	116,476
Other	71,054	28,976
Total Deferred Credits	3,144,456	3,013,712
COMMITMENTS AND CONTINGENT LIABILITIES (note 12)		
Total	$14,556,948	$14,264,398

849900324

PUBLIC SERVICE ELECTRIC AND GAS COMPANY

CONSOLIDATED STATEMENTS OF CASH FLOWS

	For the Years Ended December 31,		
	1995	1994	1993
	(Thousands of Dollars)		
CASH FLOWS FROM OPERATING ACTIVITIES:			
Net Income	$ 616,964	$ 659,406	$ 614,868
Adjustments to reconcile net income to net cash flows from operating activities:			
Depreciation and Amortization	591,114	551,372	510,539
Amortization of Nuclear Fuel	75,028	95,173	102,718
Recovery (Deferral) of Electric Energy and Gas Costs—net	1,998	(110,529)	(184,770)
Provision for Deferred Income Taxes—net	79,321	108,163	175,868
Investment Tax Credits—net	(19,111)	(19,208)	(18,408)
Allowance for Funds Used During Construction—Debt and Equity	(36,267)	(38,108)	(27,080)
Changes in certain current assets and liabilities:			
Net (increase) decrease in Accounts Receivable and Unbilled Revenues	(149,583)	74,891	(78,953)
Net decrease in Inventory—Fuel and Materials and Supplies	18,589	41,163	16,920
Net increase (decrease) in Accounts Payable	102,961	(99,788)	83,421
Net decrease in Accrued Taxes	(11,071)	(261,037)	(286,119)
Net change in Other Current Assets and Liabilities	(2,100)	36,245	(27,790)
Other	57,158	22,763	(49,006)
Net cash provided by operating activities	1,325,001	1,060,506	832,208
CASH FLOWS FROM INVESTING ACTIVITIES:			
Additions to Utility Plant, excluding AFDC	(649,883)	(849,174)	(863,294)
Net (increase) decrease in Long-Term Investments	(65,189)	50,668	(26,980)
Net increase in Decommissioning Funds and Other Special Funds, excluding interest	(29,617)	(35,394)	(45,508)
Cost of Plant Removal—net	(29,674)	(33,962)	(47,791)
Other	859	1,692	(13,607)
Net cash used in investing activities	(773,504)	(866,170)	(997,180)
CASH FLOWS FROM FINANCING ACTIVITIES:			
Net increase (decrease) in Short-Term Debt	165,557	(130,969)	275,192
(Decrease) increase in Book Overdrafts	(16,562)	23,584	(10,078)
Issuance of Long-Term Debt	156,320	849,800	1,972,700
Redemption of Long-Term Debt	(367,039)	(478,950)	(1,716,401)
Long-Term Debt Issuance and Redemption Costs	(8,462)	(29,731)	(68,227)
Issuance of Preferred Stock	—	75,000	75,000
Redemption of Preferred Stock	(60,000)	(120,000)	—
Issuance of Monthly Income Preferred Securities	60,000	150,000	—
Contributed Capital by Enterprise	60,000	—	174,670
Cash Dividends Paid	(535,962)	(545,767)	(531,314)
Other	(474)	(1,970)	(754)
Net cash (used in) provided by financing activities	(546,622)	(209,003)	170,788
Net increase (decrease) in Cash and Cash Equivalents	4,875	(14,667)	5,816
Cash and Cash Equivalents at Beginning of Year	27,498	42,165	36,349
Cash and Cash Equivalents at End of Year	$ 32,373	$ 27,498	$ 42,165
Income Taxes Paid	$ 279,873	$ 209,196	$ 172,869
Interest Paid	$ 399,509	$ 345,867	$ 356,620

See Notes to Consolidated Financial Statements.

849900325

PUBLIC SERVICE ELECTRIC AND GAS COMPANY

CONSOLIDATED STATEMENTS OF RETAINED EARNINGS

	For the Years Ended December 31,		
	1995	1994	1993
	(Thousands of Dollars)		
Balance January 1	$1,292,201	$1,180,532	$1,097,734
Add Net Income	616,964	659,406	614,868
Total	1,909,165	1,839,938	1,712,602
Deduct Cash Dividends(A)			
Preferred Stock, at required rates	33,762	40,467	38,114
Common Stock	502,200	505,300	493,200
Adjustment to Retained Earnings	474	1,970	756
Total Deductions	536,436	547,737	532,070
Balance December 31	$1,372,729	$1,292,201	$1,180,532

(A) The Company has restrictions on the payment of dividends which are contained in its Restated Certificate of Incorporation, as amended, and certain of the indentures supplemental to its Mortgage and certain other indentures. However, none of these restrictions presently limits the payment of dividends out of current earnings. The amount of the Company's restricted retained earnings at December 31, 1995, 1994 and 1993 was $10 million.

See Notes to Consolidated Financial Statements.

849900326

PUBLIC SERVICE ENTERPRISE GROUP INCORPORATED

NOTES TO CONSOLIDATED FINANCIAL STATEMENTS

Note 1. Organization and Summary of Significant Accounting Policies

Organization

Public Service Enterprise Group (Enterprise) has two direct wholly owned subsidiaries, Public Service Electric and Gas Company (PSE&G) and Enterprise Diversified Holdings Incorporated (EDHI). Enterprise's principal subsidiary, PSE&G, is an operating public utility providing electric and gas service to customers in certain areas in the State of New Jersey. As of December 31, 1995, PSE&G comprised 85% of Enterprise's assets and for the year ending on that date, 93% of its revenues. Of the 150,000,000 authorized shares of PSE&G common stock at December 31, 1995, there were 132,450,344 shares outstanding, with an aggregate book value of $2.6 billion.

PSE&G has a finance subsidiary, PSE&G Fuel Corporation (Fuelco), providing financing, unconditionally guaranteed by PSE&G, of up to $150 million aggregate principal amount at any one time of a 42.49% interest in the nuclear fuel acquired for Peach Bottom Atomic Power Station Units 2 and 3 (Peach Bottom). PSE&G also has a subsidiary, Public Service Conservation Resources Corporation (PSCRC) which offers demand side management (DSM) services to utility customers. In 1994, Public Service Electric and Gas Capital, L.P. (Partnership), a limited partnership in which PSE&G is the general partner, was formed for the purpose of issuing Monthly Income Preferred Securities. (See Note 4—Schedule of Consolidated Capital Stock and Other Securities). In 1995, PSE&G created a new subsidiary, Enterprise Ventures and Services, to pursue products and services beyond traditional geographic and industry boundaries.

EDHI is the parent of Enterprise's nonutility businesses: Energy Development Corporation (EDC), an oil and gas exploration and production and marketing company; Community Energy Alternatives Incorporated (CEA), an investor in and developer and operator of cogeneration and independent power production facilities; Public Service Resources Corporation (PSRC), which makes primarily passive investments; and Enterprise Group Development Corporation (EGDC), a nonresidential real estate development and investment business. EDHI also has two finance subsidiaries: PSEG Capital Corporation (Capital) and Enterprise Capital Funding Corporation (Funding).

Consolidation Policy

The consolidated financial statements include the accounts of Enterprise and its subsidiaries. All significant intercompany accounts and transactions have been eliminated in consolidation. Certain reclassifications of prior years' data have been made to conform with the current presentation.

Regulation—PSE&G

The accounting and rates of PSE&G are subject, in certain respects, to the requirements of the New Jersey Board of Public Utilities (BPU) and the Federal Energy Regulatory Commission (FERC). As a result, PSE&G maintains its accounts in accordance with their prescribed Uniform Systems of Accounts, which are the same. The applications of Generally Accepted Accounting Principles (GAAP) by PSE&G differ in certain respects from applications by non-regulated businesses. PSE&G prepares its financial statements in accordance with the provisions of Statement of Financial Accounting Standards No. 71—"Accounting for the Effects of Certain Types of Regulation" (SFAS 71). In general, SFAS 71 recognizes that accounting for rate-regulated enterprises should reflect the relationship of costs and revenues. As a result, a regulated utility may defer recognition of cost (a regulatory asset) or recognize an obligation (a regulatory liability) if it is probable that, through the rate-making process, there will be a corresponding increase or decrease in revenues. Accordingly, PSE&G has deferred certain costs, which will be amortized over various periods. To the extent that collection of such costs or payment of liabilities is no longer probable as a result of changes in regulation and/or PSE&G's competitive position, the associated regulatory asset or liability will be reversed with a charge or credit to income. (See Note

849900327

5—Deferred Items). If PSE&G were to discontinue the application of SFAS 71, the accounting impact would be an extraordinary, non-cash charge to operations that could be material to the financial position and results of operations of Enterprise and PSE&G.

Amounts charged to operations for depreciation expense reflect estimated useful lives and methods, which include estimates of cost of removal and salvage, prescribed and approved by regulators rather than those that might otherwise apply to non-regulated enterprises. PSE&G cannot presently quantify what the financial statement impact may be if depreciation expense were to be determined absent regulation.

Utility Plant and Related Depreciation—PSE&G

Additions to utility plant and replacements of units of property are capitalized at original cost. The cost of maintenance, repairs and replacements of minor items of property is charged to appropriate expense accounts. At the time units of depreciable property are retired or otherwise disposed of, the original cost less net salvage value is charged to accumulated depreciation.

Depreciation is computed under the straight-line method. Depreciation is based on estimated average remaining lives of the several classes of depreciable property. These estimates are reviewed on a periodic basis and necessary adjustments are made as approved by the BPU. Depreciation provisions stated in percentages of original cost of depreciable property were 3.52% in 1995, 3.51% in 1994 and 3.46% in 1993.

Use of Estimates

The process of preparing financial statements in conformity with GAAP requires the use of estimates and assumptions regarding certain types of assets, liabilities, revenues and expenses. Such estimates primarily relate to unsettled transactions and events as of the date of the financial statements. Accordingly, upon settlement, actual results may differ from estimated amounts.

Decontamination and Decommissioning—PSE&G

In 1993, FERC issued Order No. 557 on the accounting and rate-making treatment of special assessments levied under the National Energy Policy Act of 1992 (EPAct). Order No. 557 provides that special assessments are a necessary and reasonable current cost of fuel and shall be fully recoverable in rates in the same manner as other fuel costs. In accordance with its filed Alternative Rate Plan, PSE&G has requested to have separate mechanisms to ensure continued recovery of costs associated with activities mandated or approved by state or federal agencies, but no assurances can be given that the BPU will authorize such recovery from customers. (See Note 2—Rate Matters and Note 3—PSE&G Nuclear Decommissioning and Amortization of Nuclear Fuel—Uranium, Decontamination and Decommissioning Fund).

Amortization of Nuclear Fuel—PSE&G

Nuclear energy burnup costs are charged to fuel expense on a units-of-production basis over the estimated life of the fuel. Rates for the recovery of fuel used at all nuclear units include a provision of one mill per kilowatthour (KWH) of nuclear generation for spent fuel disposal costs. (See Note 3—PSE&G Nuclear Decommissioning and Amortization of Nuclear Fuel).

Revenues and Fuel Costs—PSE&G

Revenues are recorded based on services rendered to customers during each accounting period. PSE&G records unbilled revenues representing the estimated amount customers will be billed for services rendered from the time meters were last read to the end of the respective accounting period. Rates include projected fuel costs for electric generation, purchased and interchanged power, gas purchased and materials used for gas production.

849900328

Any under or overrecoveries, together with interest (in the case of net overrecoveries), are deferred and included in operations in the period in which they are reflected in rates.

Long-Term Investments

PSRC has invested in securities and limited partnerships investing in securities, which are recorded at fair value, and various leases and other limited partnerships. EGDC is a participant in the nonresidential real estate markets. CEA is an investor in and developer and operator of cogeneration and power production facilities. (See Note 7—Long-Term Investments).

Derivatives

Gains and losses on hedges of existing assets or liabilities are included in the carrying amounts of those assets and liabilities and are ultimately recognized in income as part of those carrying amounts. Gains and losses related to qualifying hedges of firm commitments or anticipated transactions also are deferred and recognized in income or as adjustments of carrying amounts when the hedged transaction occurs. (See Note 8—Financial Instruments and Risk Management).

Oil and Gas Accounting—EDC

EDC uses the successful efforts method of accounting under which proved leasehold costs are capitalized and amortized over the proved developed and undeveloped reserves on a unit-of-production basis. Drilling and equipping costs, except exploratory dry holes, are capitalized and depreciated over the proved developed reserves on a unit-of-production basis. Estimated future abandonment costs of offshore proved properties are depreciated on a unit-of-production basis over the proved developed reserves. Estimated future abandonment costs of onshore properties are estimated to be offset by the salvage value of the tangible equipment. Unproved leasehold costs are capitalized and not amortized, pending an evaluation of the exploration results. Unproved leasehold and producing properties costs are assessed periodically to determine if an impairment of the cost of significant individual properties has occurred. The cost of an impairment is charged to expense. Costs incurred for exploratory dry holes, exploratory geological and geophysical work and delay rentals are charged to expense as incurred.

Income Taxes

Enterprise and its subsidiaries file a consolidated Federal income tax return and income taxes are allocated to Enterprise's subsidiaries based on taxable income or loss of each. Investment tax credits are deferred and amortized over the useful lives of the related property, including nuclear fuel.

Effective January 1, 1993, Enterprise and its subsidiaries adopted Statement of Financial Accounting Standards No. 109 "Accounting for Income Taxes" (SFAS 109). Under SFAS 109, deferred income taxes are provided for all temporary differences between the financial statement carrying amounts and the tax bases of existing assets and liabilities irrespective of the treatment for rate-making purposes. For periods prior to January 1, 1993, PSE&G provided deferred income taxes to the extent permitted for rate-making purposes. (See Note 10 —Federal Income Taxes).

Allowance for Funds Used During Construction (AFDC) and Capitalized Interest

PSE&G—AFDC represents the cost of debt and equity funds used to finance the construction of new utility facilities. The amount of AFDC capitalized is reported in the Consolidated Statements of Income as a reduction of interest charges for the borrowed funds component and as other income for the equity funds component. The rates used for calculating AFDC in 1995, 1994 and 1993 were 6.98%, 6.48% and 6.96%, respectively. These rates were within the limits set by FERC.

849900329

EDHI—The operating subsidiaries of EDHI capitalize interest costs allocable to construction expenditures at the average cost of borrowed funds.

Pension Plan and Other Postretirement Benefits

The employees of PSE&G, other than non represented employees commencing service after January 1, 1996, as well as those of participating affiliates, are covered by a noncontributory trusteed pension plan (Pension Plan) from the date of hire. New represented employees of PSE&G who commence service after January 1, 1996 are covered by a Cash Balance Pension Plan. The policy is to fund pension costs accrued. PSE&G also provides certain health care and life insurance benefits to active and retired employees. The portion of such costs pertaining to retirees amounted to $33 million, $29 million, and $28 million in 1995, 1994 and 1993, respectively. The current cost of these benefits is charged to expense when paid and is currently being recovered from ratepayers.

On January 1, 1993, Enterprise and PSE&G adopted Statement of Financial Accounting Standards No. 106, "Employers Accounting for Postretirement Benefits Other Than Pensions" (SFAS 106), which requires that the expected cost of employees' postretirement health care benefits be charged to expense during the years in which employees render service. Prior to 1993, Enterprise and PSE&G recognized postretirement health care costs in the year in which the benefits were paid. PSE&G elected to amortize over 20 years its unfunded obligation at January 1, 1993. (See Note 13—Postretirement Benefits Other Than Pensions and Note 14—Pension Plan).

Note 2. Rate Matters

Alternative Rate Plan

On January 16, 1996, PSE&G proposed to the BPU major changes in utility regulation that include an immediate $50 million rate reduction for its electric customers, various types of rate freezes, assurances that future price increases related to controllable costs will be lower than the rate of inflation and funding of up to an aggregate of $55 million in two economic development initiatives.

The seven-year "New Jersey Partners in Power" Plan (Plan), if approved, would give PSE&G the mechanisms and incentives to compete more effectively on several fronts, including the ability to develop revenue from non-regulated products and services, accelerate or modify depreciation schedules to help mitigate any potential stranded asset issue and more aggressively manage the control of costs. In addition, the Plan would provide the foundation for ongoing price flexibility without the need for prolonged, adversarial regulatory proceedings.

The Plan begins the process for a transition to a more competitive energy marketplace while substantially shifting the business and financial risks and opportunities involved in this transition away from customers to PSE&G and enhancing PSE&G's ability to make the necessary human, intellectual and financial investments required to stimulate innovation and productivity.

Key energy pricing features of the proposed Plan are as follows:

Upon the BPU's approval of the Plan, PSE&G will reduce electric rates across the board by $50 million annually as an upfront guaranteed share of the productivity improvements that it expects to achieve over the life of the Plan.

New rates for all PSE&G electric customers reflecting the reduction would be established through a merger of existing base tariffs and the electric Levelized Energy Adjustment Clause (LEAC) and would be frozen at these levels through December 31, 1996. In addition, the Plan proposes the elimination of the BPU's existing Nuclear Performance Standard (NPS). This discontinuance of the LEAC and NPS would result in substantially

849900330

shifting the risks and opportunities involved in managing changes in fuel and replacement power costs from customers to PSE&G. Gas fuel costs will continue to be recovered on a dollar for dollar basis from customers under the existing Levelized Gas Adjustment Charge (LGAC).

In order to create incentives to lower costs and improve efficiency and productivity, the Plan would rely on a comprehensive external price cap index based upon changes in the Gross Domestic Product Price Index (GDPPI) and a separate fuel price index mechanism, reduced by a fixed productivity offset of 0.30% to establish optional annual price changes each January 1st for electricity. In addition, the Plan would rely on an index for non-fuel gas prices calculated on the basis of changes in the GDPPI, reduced by a fixed productivity offset of 0.35%, to establish optional annual price changes each January 1st. The price cap mechanisms would become effective on January 1, 1997 and would assure that any rate increase related to controllable costs would be below the rate of inflation, guaranteeing that these costs would decline in real terms.

Under the Plan, PSE&G would establish an initial service block equal to the first 150 kilowatthours (KWH) of usage for residential electric customers who would be protected from price cap index increases through December 31, 2002, the proposed expiration date of the Plan. Similarly, an initial service block equal to 40 therms would be set for residential gas customers and protected from index increases over the same period of time. In addition, public street lighting prices would not be subject to index increases for the life of the Plan.

The Plan includes a productivity gains sharing mechanism. This mechanism has been designed to provide incentives to maximize efficiency and productivity improvements and ensure that electric and gas customers receive an increasing share of productivity gains using returns on equity as a proxy for these gains. The gains, which would be awarded through bill credits, would be based on a threshold earnings level defined as PSE&G's established return on equity of 12% plus a 100 basis points neutral zone above that level. Customers would receive a 10% share of the gains from the first 50 basis points above the threshold level. Their share would increase by an additional 10% for each subsequent increase of 50 basis points up to a maximum of 50%.

Separate mechanisms also would be established to ensure continued recovery of costs associated with activities mandated or approved by state or federal agencies or otherwise out of PSE&G's control. These costs include demand side management programs, environmental remediation, costs associated with non-utility electric generators, nuclear decommissioning funding and nuclear fuel assessment costs. These mechanisms would assure that PSE&G recovers only actual costs related to these activities.

The Plan would allow for electric and non-fuel gas prices to be changed to reflect exogenous events beyond the control of PSE&G and would be subject to modification for industry restructuring.

The Plan calls for an increase of $50 million in annual depreciation expenses for PSE&G's Hope Creek nuclear generating station—$25 million effective January 1, 1997, and an additional $25 million effective January 1, 1998. In addition, the Plan proposes a transfer of depreciation reserves totaling $253 million from transmission and distribution to fossil steam electric generating accounts. The Plan would permit depreciation to be changed annually following BPU review and approval.

In addition to the pricing features, the Plan guarantees enhanced quality of customer services through PSE&G's recently established service guarantee program for electric and gas customers and specific incentive and penalty mechanisms based on various service indicators.

The Plan would establish a program of rewards and penalties in key overall service indicators such as duration of customer power outages compared to a historic five-year average.

In addition to these service quality incentives, the Plan would establish rewards and penalties based on the movement of PSE&G's average electric residential rate measured against the national average of residential

849900331

electric rates. Rewards or penalties of up to $5 million would be implemented if comparisons indicate that PSE&G's residential rates decreased or increased by more than one-half of one percent relative to the national average.

A major component of the Plan is a proposed economic and market development and retention assurance program. This would allow flexible pricing and promote special economic development activities designed to enhance the economic vitality of the State of New Jersey. One aspect of the program would give PSE&G the ability to quickly establish new optional electric or gas rates or individual customer contracts to serve new markets and retain or attract individual customers.

Also under the Plan, PSE&G would fund two economic development initiatives. The first is a private sector leadership investment of $5 million in the New Jersey Fund for Community Economic Development. The second new initiative is the establishment of the PSE&G Economic Development Fund in which PSE&G would commit to investing up to $50 million for financing significant economic development projects within PSE&G's service territory over the seven years of the Plan.

In addition, the Plan calls for establishment of a State Emissions Trading Bank (Bank) for economic development and environmental improvement. PSE&G would donate 1,000 tons of nitrogen oxide emissions credits to the Bank for use in economic development. This is intended as a key step to linking economic development with sound environmental policy and building on New Jersey's leadership role in seeking a regional solution to air pollution problems.

Under the Plan, price levels associated with the recovery of Gross Receipts and Franchise Tax (GRFT) or successor taxes will be directly adjusted in such a manner as to insure their full and timely recovery from ratepayers.

PSE&G cannot predict what action, if any, may be taken by the BPU with respect to the Plan.

Levelized Gas Adjustment Charge

On October 2, 1995, PSE&G petitioned the BPU for modifications to its LGAC, requesting that:

(a) The LGAC be renamed to the Levelized Gas Incentive Clause (LGIC);

(b) A benchmark be established for certain gas delivered from the Gulf Coast, and any difference between PSE&G's actual gas purchase costs and the benchmark price, either positive or negative, be shared 50/50 between customers and PSE&G;

(c) The current annual LGAC rate be converted to a monthly rate for firm commercial and industrial customers; and

(d) A fixed annual margin would be credited to LGAC for certain interruptible rate schedules, while actual margins from such sales will be retained by PSE&G. Any differences, positive or negative, will be absorbed by PSE&G.

On December 20, 1995, the BPU approved an interim Stipulation to include the implementation of monthly pricing on the commodity portion of the LGAC rate for firm commercial and industrial customers effective January 1, 1996. The incentive proposal relating to interruptible sales (request (d)) above was withdrawn. The remaining aspects of PSE&G's October 2, 1995 petition remain the subject of continued investigation and litigation.

Electric Levelized Energy Adjustment Clause

By Order dated May 5, 1995, the BPU approved PSE&G's LEAC. Such Order also required that a hearing be convened regarding the April 1994 Salem 1 shutdown, to determine whether PSE&G should be allowed to

849900332

recover replacement power costs of approximately $8 million which have been deferred. On October 18, 1995, this matter was ordered to be transmitted to the Office of Administrative Law (OAL) for hearing. PSE&G cannot predict the outcome of this proceeding.

Remediation Adjustment Charge

On July 21, 1995, PSE&G petitioned the BPU to recover Remediation Program costs incurred during the period August 1, 1994 through July 31, 1995. In accordance with a BPU Order dated November 4, 1994, the petition proposes to recover, effective October 1, 1995, $2.5 million from gas customers and $1.6 million from electric customers.

Consolidated Tax Benefits

In a case affecting another utility in which neither Enterprise nor PSE&G were parties, the BPU considered the extent to which tax savings generated by nonutility affiliates included in the consolidated tax return of that utility's holding company should be considered in setting that utility's rates. In September, 1992, the BPU approved an order in such case treating certain consolidated tax savings generated after June 30, 1990 by that utility's nonutility affiliates as a reduction of its rate base. In December, 1992, the BPU issued an order approving a stipulation in PSE&G's 1992 base rate proceeding which resolved the case without separate quantification of the consolidated tax issue. The stipulation did not provide final resolution of the consolidated tax issue for any subsequent base rate filing. While Enterprise continues to account for its two wholly-owned subsidiaries on a stand-alone basis, resulting in a realization of the tax benefits by the entity generating the benefit, an ultimate unfavorable resolution of the consolidated tax issue could reduce PSE&G's and Enterprise's future revenue and net income. In addition, an unfavorable resolution may adversely impact Enterprise's nonutility investment strategy. Enterprise believes that PSE&G's taxes should be treated on a stand-alone basis for rate-making purposes, based on the separate nature of the utility and nonutility businesses. However, neither Enterprise nor PSE&G is able to predict what action, if any, the BPU may take concerning consolidation of tax benefits in future rate proceedings. (See Note 10—Federal Income Taxes).

Other Rate Matters

On July 21, 1995, the BPU initiated a generic proceeding to expeditiously adopt specific standards to guide utility "off-tariff" negotiated rate agreement programs, which proceeding would consider minimum prices, confidentiality, maximum contract duration, filing requirements and such other standards as necessary for compliance with the law. A Written Summary Decision and Order was issued on October 27, 1995, which ordered each New Jersey electric utility, including PSE&G, to file initial minimum tariffs, consistent with the terms of such Order, and further, indicated that such Order will be supplemented by a Final Decision and Order to fully discuss and explain the rationale for the BPU's overall decision. On November 13, 1995 PSE&G filed its compliance filing. PSE&G cannot predict what impact, if any, the generic tariff may have on its electric revenues and earnings.

In September 1994, the BPU initiated a generic proceeding regarding recovery of capacity costs associated with electric utility power purchases from cogeneration and small power producers. The initial phase of the proceeding, which has been transmitted to the Office of Administrative Law, seeks to determine whether there was any such overrecovery and, if so, the amount overrecovered.

The New Jersey Division of Ratepayer Advocate has intervened in the proceeding and alleges, among other things, that PSE&G has overrecovered such costs ranging from $250 to $300 million during the period from August 1991 to December 1994. PSE&G denies such overrecovery because its capacity cost recovery mechanisms were approved by the BPU as to each of its cogeneration contracts and as to its base rates. Additionally, PSE&G contends that a review of any individual cost item is inappropriate and that the BPU has

849900333

previously found that, during the period under review, PSE&G did not overearn compared to its established return. Moreover, PSE&G contends that the Ratepayer Advocate's assertion is proscribed as retroactive ratemaking.

While PSE&G cannot predict the outcome of this proceeding, the final resolution of this issue may impact the financial position, results from operations or net cash flows of Enterprise and PSE&G on a prospective basis.

Note 3. PSE&G Nuclear Decommissioning and Amortization of Nuclear Fuel

The BPU decision in PSE&G's 1992 base rate case utilized studies based on the prompt removal/dismantlement method of decommissioning for all of PSE&G's nuclear generating stations. This method consists of removing all fuel, source material and all other radioactive materials with activity levels above accepted release limits from the nuclear sites. PSE&G has an ownership interest in five nuclear units: Salem 1 and Salem 2—42.59% each, Hope Creek—95% and Peach Bottom 2 and 3—42.49% each. In accordance with rate orders received from the BPU, PSE&G has established an external master nuclear decommissioning trust for all of its nuclear units. The Internal Revenue Service (IRS) has ruled that payments to the trust are tax deductible. PSE&G's total estimated cost of decommissioning its share of these 5 nuclear units is estimated at $681 million in year-end 1990 dollars (the year that the site specific estimate was prepared), excluding contingencies. The 1992 base rate decision provided that $15.6 million of such costs are to be collected through base rates and an additional annual amount of $7.0 million in 1993 and $14 million each year thereafter are to be recovered through PSE&G's LEAC. In accordance with the filed Alternative Rate Plan, PSE&G has requested to have separate mechanisms to ensure continued recovery of costs associated with activities mandated or approved by state or federal agencies, but no assurances can be given that the BPU will authorize such recovery from customers. (See Note 2—Rate Matters). At December 31, 1995 and 1994, the accumulated provision for depreciation and amortization included reserves for nuclear decommissioning for PSE&G's units of $292 million and $249 million, respectively. As of December 31, 1995 and 1994, PSE&G had contributed $220 million and $190 million, respectively, into independent external qualified and nonqualified nuclear decommissioning trust funds.

On January 3, 1996, PSE&G filed with the BPU its 1995 nuclear plant decommissioning cost update. The filing includes decommissioning cost updates for PSE&G's respective ownership share of Salem, Hope Creek and Peach Bottom. PSE&G's filing was based on the existing Nuclear Regulatory Commission (NRC) generic formula(s). PSE&G does not believe that the NRC generic estimates provide an accurate estimate of the cost of decommissioning because the NRC formula does not factor into its cost estimates the cost of removal of nonradiological structures and equipment and interim spent fuel storage installations. PSE&G is currently completing site specific studies in order to update its filing with the BPU during 1996.

The Staff of the Securities and Exchange Commission (SEC) has questioned certain of the current accounting practices of the electric utility industry, including PSE&G, regarding the recognition, measurement and classification of decommissioning costs for nuclear generating stations in the financial statements of electric utilities. In response to these questions, the Financial Accounting Standards Board (FASB) has agreed to review the accounting for removal costs, including decommissioning. If current electric utility industry accounting practices for such decommissioning are changed: (1) annual provisions for decommissioning could increase, (2) the estimated cost for decommissioning could be recorded as a liability rather than as accumulated depreciation and (3) trust fund income from the external decommissioning trusts could be reported as investment income rather than as a reduction to decommissioning expense.

Uranium Enrichment Decontamination and Decommissioning Fund

In accordance with EPAct, domestic utilities that own nuclear generating stations are required to pay a cumulative total of $150 million each year (adjusted for inflation) into a decontamination and decommissioning

849900334

fund, based on their past purchases of enrichment services from the United States Department of Energy (DOE) Uranium Enrichment Enterprise (now a federal government corporation known as the United States Enrichment Corporation (USEC)). These amounts are being collected over a period of 15 years or until $2.25 billion (adjusted for inflation) has been collected. Under this legislation, PSE&G's obligation for the nuclear generating stations in which it has an interest is $67 million (adjusted for inflation). Since 1993, PSE&G has paid $17 million, resulting in a balance due of $50 million. PSE&G has deferred the expenditures incurred to date as part of deferred underrecovered electric energy costs and expects to recover its costs in the next LEAC. In accordance with the filed Alternative Rate Plan, PSE&G has requested to have separate mechanisms to ensure continued recovery of costs associated with activities mandated or approved by state or federal agencies, but no assurances can be given that the BPU will authorize such recovery from customers. (See Note 2—Rate Matters).

Spent Nuclear Fuel Disposal Costs

In accordance with the Nuclear Waste Policy Act (NWPA), PSE&G has entered into contracts with the DOE for the disposal of spent nuclear fuel. Payments made to the DOE for disposal costs are based on nuclear generation and are included in Fuel for Electric Generation and Interchanged Power in the Statements of Income. These costs are recovered through the LEAC. In accordance with the filed Alternative Rate Plan, PSE&G has requested to have separate mechanisms to ensure continued recovery of costs associated with activities mandated or approved by state or federal agencies, but no assurances can be given that the BPU will authorize such recovery from customers. (See Note 2—Rate Matters).

849900335

Note 4. Schedule of Consolidated Capital Stock and Other Securities

	Outstanding Shares	Current Redemption Price Per Share	December 31, 1995	December 31, 1994
			(Thousands of Dollars)	
Enterprise Common Stock (no par)—(note A)— Authorized 500,000,000 shares; issued and outstanding at December 31, 1995, and December 31, 1994, 244,697,930 shares, and at December 31, 1993, 243,688,256 shares			$3,801,157	$3,801,157
Enterprise Preferred Securities (note B) PSE&G Cumulative Preferred Securities (note C) Without Mandatory Redemption (notes D and E) $100 par value series				
4.08%	250,000	103.00	$ 25,000	$ 25,000
4.18%	249,942	103.00	24,994	24,994
4.30%	250,000	102.75	25,000	25,000
5.05%	250,000	103.00	25,000	25,000
5.28%	250,000	103.00	25,000	25,000
6.80%	250,000	102.00	25,000	25,000
6.92%	600,000	—	60,000	60,000
7.40%	500,000	101.00	50,000	50,000
7.52%	500,000	101.00	50,000	50,000
7.70% (note E)	—	—	—	60,000
$25 par value series				
6.75%	600,000	—	$ 15,000	$ 15,000
Total Preferred Stock without Mandatory Redemption			$ 324,994	$ 384,994
With Mandatory Redemption (notes D and F) $100 par value series				
7.44%	750,000	—	$ 75,000	$ 75,000
5.97%	750,000	—	75,000	75,000
Total Preferred Stock with Mandatory Redemption (note G)			$ 150,000	$ 150,000
Monthly Income Preferred Securities (notes D, F, G and H)				
9.375%	6,000,000	—	$ 150,000	$ 150,000
8.00%	2,400,000	—	$ 60,000	—
Total Monthly Income Preferred Securities			$ 210,000	$ 150,000

(A) Total authorized and unissued shares include 7,302,488 shares of Enterprise Common Stock reserved for issuance through Enterprise's Dividend Reinvestment and Stock Purchase Plan and various employee benefit plans. In 1995, no shares of Enterprise Common Stock were issued or sold and in 1994, 1,009,674 shares were issued and sold for $28,495,122.

(B) Enterprise has authorized a class of 50,000,000 shares of Preferred Stock without par value, none of which is outstanding.

(C) As of December 31, 1995, there were 2,900,058 shares of $100 par value and 9,400,000 shares of $25 par value Cumulative Preferred Stock which were authorized and unissued, and which upon issuance may or may not provide for mandatory sinking fund redemption. If dividends upon any shares of Preferred Stock are in arrears in an amount equal to the annual dividend thereon, voting rights for the election of a majority of PSE&G's Board of Directors become operative and continue until all accumulated and unpaid dividends thereon have been paid, whereupon all such voting rights cease, subject to being again revived from time to time.

849900336

(D) At December 31, 1995, the annual dividend requirement and embedded dividend for Preferred Stock without mandatory redemption were $20,046,765 and 6.14%, respectively, and for Preferred Stock with mandatory redemption were $10,057,500 and 6.75%, respectively.

At December 31, 1994, the annual dividend requirement and embedded dividend for Preferred Stock without mandatory redemption were $24,666,763 and 6.39%, respectively and for Preferred Stock with mandatory redemption were $10,057,500 and 6.75%, respectively.

At December 31, 1995, the annualized monthly income requirement of the Monthly Income Preferred Securities and their embedded cost were $18,862,500 and 6.04%, respectively.

At December 31, 1994, the annualized monthly income requirement of the Monthly Income Preferred Securities and their embedded cost were $14,062,500 and 6.31%, respectively.

(E) On October 16, 1995, PSE&G redeemed all of the 600,000 shares of its outstanding 7.70% Cumulative Preferred Stock ($100 par), at a redemption price of $100.79.

(F) For information concerning fair value of financial instruments, see Note 8—Financial Instruments and Risk Management.

(G) On September 12, 1995, Partnership issued 2,400,000 shares of its 8% Monthly Income Preferred Securities, Series B, with a stated liquidation preference of $25 each.

(H) Public Service Electric and Gas Capital, L.P. (Partnership) was formed for the purpose of issuing Monthly Income Preferred Securities. The proceeds of Monthly Income Preferred Securities sales are lent to PSE&G and evidenced by PSE&G's Deferrable Interest Subordinated Debentures. If and for as long as payments on PSE&G's Deferred Interest Subordinated Debentures have been deferred, or PSE&G has defaulted on the indenture related thereto or its guarantee thereof, PSE&G may not pay any dividends on its Capital Stock.

Note 5. Deferred Items

Property Abandonments

The BPU has authorized PSE&G to recover after-tax property abandonment costs from its customers. The following table reflects the application of Statement of Financial Accounting Standards No. 90, "Regulated Enterprises—Accounting for Abandonments and Disallowances of Plant Costs," as amended (SFAS 90), on property abandonments, and related tax effects, for which no return is earned. The net-of-tax discount rate used was between 4.443% and 7.801%. (See Note 2—Rate Matters). The following table reflects property abandonments:

	Property Abandonments			
	December 31, 1995		December 31, 1994	
	Discounted Cost	Taxes	Discounted Cost	Taxes
	(Thousands of Dollars)			
Atlantic Project	$58,221	$24,440	$70,130	$29,453
LNG Project	2,992	957	7,287	2,635
Uranium Projects	8,907	3,871	10,852	4,677
	$70,120	$29,268	$88,269	$36,765

849900337

Under (Over) Recovered Electric Energy and Gas Costs—net

Recoveries of electric energy and gas costs are determined by the BPU under the LEAC and LGAC. PSE&G's deferred fuel balances as of December 31, 1995 and December 31, 1994, reflect underrecovered costs as follows:

	December 31,	
	1995	1994
	(Millions)	
Underrecovered Electric Energy Costs	$162.4	$172.0
Underrecovered Gas Fuel Costs	8.2	.6
Total	$170.6	$172.6

Unrecovered Plant and Regulatory Study Costs

Amounts shown in the consolidated balance sheets consist of costs associated with developing, consolidating and documenting the specific design basis of PSE&G's jointly owned nuclear generating stations, as well as PSE&G's share of costs associated with the cancellation of the Hydrogen Water Chemistry System Project (HWCS Project) at Peach Bottom. PSE&G has received both BPU and FERC approval to defer and amortize, over the remaining life of the Salem and Hope Creek nuclear units, costs associated with configuration baseline documentation and the canceled HWCS Project. PSE&G has received FERC approval to defer and amortize over the remaining life of the applicable Peach Bottom units, costs associated with the configuration baseline documentation and the canceled HWCS Project. In accordance with the filed Alternative Rate Plan, PSE&G has requested to have separate mechanisms to ensure continued recovery of costs associated with activities mandated or approved by state or federal agencies or otherwise out of PSE&G's control. (See Note 2 —Rate Matters).

Unamortized Debt Expense

Gains and losses and the costs of issuing and redeeming long-term debt for PSE&G are deferred and amortized over the life of the applicable debt.

Oil and Gas Property Write-Down

On December 31, 1992, the BPU approved the recovery of PSE&G's deferral of an EDC write-down through PSE&G's LGAC over a ten-year period beginning January 1, 1993. At December 31, 1995 and 1994, the remaining balance to be amortized was $36.1 million and $41.2, respectively.

849900338

Note 6. Schedule of Consolidated Debt

Interest Rates	Due	December 31, 1995	December 31, 1994
		(Thousands of Dollars)	
Long-Term			
PSE&G			
First and Refunding Mortgage Bonds (note A)			
4¾%–6%	1995	$ —	$ 310,000
6⅞%–7⅛%	1997	300,000	300,000
6%	1998	100,000	100,000
8¾%	1999	100,000	100,000
6%–7⅝%	2000	400,000	400,000
6⅛%–9⅛%	2001-2005	1,125,000	1,125,000
6.30%–6.90%	2006-2010	177,990	234,310
6.80%–7⅜%	2011-2015	198,500	198,500
Variable	2011-2015	42,620	—
6.45%–8.10%	2016-2020	29,600	29,600
Variable	2016-2020	13,700	—
5.20%–9¼%	2021-2025	1,263,500	1,267,500
5.70%–6.55%	2026-2030	244,835	244,835
5.45%–6.40%	2031-2035	399,565	399,565
5%–8%	2037	15,001	15,001
Medium-Term Notes			
7.10%–7.13%	1997	100,000	—
7.15%–7.18%	2023	40,500	40,500
8.10%–8.16%	2009	60,000	60,000
Total First and Refunding Mortgage Bonds		$4,610,811	$4,824,811
Debenture Bonds Unsecured			
6%	1998	$ 18,195	$ 18,195
Total Debenture Bonds		18,195	18,195
Principal Amount Outstanding (note F)		4,629,006	4,843,006
Amounts Due Within One Year (note B)		—	(310,200)
Net Unamortized Discount		(42,738)	(46,019)
Total Long-Term Debt of PSE&G (note G)		4,586,268	4,486,787
EDHI			
Capital (note C) Senior notes			
9.875%—10.05%	1998	122,500	165,000
Medium-Term Notes			
5.65%–9.55%	1995	—	112,000
9.00%	1996	20,000	20,000
5.79%–5.92%	1997	27,000	27,000
9.00%	1998	75,000	75,000
8.95%–9.93%	1999	155,000	155,000
6.54%	2000	78,000	78,000
Principal Amount Outstanding (note F)		477,500	632,000
Amounts Due Within One Year (note B)		(62,482)	(154,405)
Net Unamortized Discount		(901)	(1,278)
Total Long-Term Debt of Capital		414,117	476,317

849900339

Interest Rates	Due	December 31, 1995	December 31, 1994
		(Thousands of Dollars)	
Funding (note D)			
9.54%	1995	—	35,000
9.55%	1996	28,000	28,000
6.85%–9.59%	1997	55,000	55,000
9.95%	1998	83,000	83,000
7.58%	1999	45,000	45,000
Principal Amount Outstanding (note F)		211,000	246,000
Amounts Due Within One Year (note B)		(28,000)	(35,000)
Total Long-Term Debt of Funding		183,000	211,000
EGDC Mortgage Notes			
10.625%—12.75%	2012 (note F)	6,554	6,686
Amounts Due Within One Year (note B)		(148)	(133)
Total Long-Term Debt of EGDC		6,406	6,553
Total Long-Term Debt of EDHI		603,523	693,870
Consolidated Long-Term Debt (note E)		$5,189,791	$5,180,657

Notes:

(A) PSE&G's Mortgage, securing the Bonds, constitutes a direct first mortgage lien on substantially all PSE&G's property and franchises.

(B) The aggregate principal amounts of mandatory requirements for sinking funds and maturities for each of the five years following December 31, 1995 are as follows:

Year	Sinking Funds	Maturities				
	Capital	PSE&G	Capital	EGDC	Funding	Total
	(Thousands of Dollars)					
1996	$ 42,500	$ —	$ 20,000	$148	$ 28,000	$ 90,648
1997	42,500	400,000	27,000	166	55,000	524,666
1998	37,500	118,195	75,000	184	83,000	313,879
1999	—	100,000	155,000	205	45,000	300,205
2000	—	400,000	78,000	228	—	478,228
	$122,500	$1,018,195	$355,000	$931	$211,000	$1,707,626

In January 1996 principal amounts of $3.5 million of the 8¾% EE First and Refunding Mortgage Bonds Series and $16.942 million of the 8¾% Series HH First and Refunding Mortgage Bonds were reacquired.

On February 1, 1996 a sinking fund in the principal amount of $1.5 million of the 8¾% Series HH First and Refunding Mortgage Bonds was met. In addition, the remaining principal amounts of $192.5 million of the 8¾% Series EE and $130.058 million of the 8¾% Series HH were defeased.

(C) Capital has provided up to $750 million debt financing for EDHI's businesses on the basis of a net worth maintenance agreement with Enterprise. Since January 31, 1995, Capital has agreed to limit its borrowings to no more than $650 million.

(D) Funding provides debt financing for EDHI's businesses other than EGDC on the basis of unconditional guarantees from EDHI.

(E) At December 31, 1995 and 1994, the annual interest requirement on long-term debt was $399.8 million and $422.7 million, of which $315.6 million and $335.6 million was the requirement for Bonds. The embedded interest cost on long-term debt on such date was 7.71% and 7.79%, respectively.

849900340

(F) For information concerning fair value of financial instruments, see Note 8—Financial Instruments and Risk Management.

(G) At December 31, 1995 and 1994, PSE&G's annual interest requirement on long-term debt was $330.5 million and $343.3 million, of which $315.6 million and $335.6 million, respectively, was the requirement for Bonds. The embedded interest cost on long-term debt was 7.54% and 7.59%, respectively.

PSE&G has authorization from the BPU to issue approximately $4.375 billion aggregate amount of additional bonds/MTNs/Preferred Stock/Monthly Income Preferred Securities through 1997 for refunding purposes.

SHORT-TERM (Commercial Paper and Loans)

Commercial paper represents unsecured bearer promissory notes sold through dealers at a discount with a term of nine months or less.

Bank loans represent PSE&G's unsecured promissory notes issued under informal credit arrangements with various banks and have a term of eleven months or less.

PSE&G

	1995	1994	1993
	(Millions of Dollars)		
Principal amount outstanding at end of year, primarily commercial paper	$567	$402	$533
Weighted average interest rate for Short-Term Debt at year-end	5.93%	6.07%	3.34%

PSE&G has authorization from the BPU to issue and have outstanding not more than $1 billion of its short-term obligations at any one time, consisting of commercial paper and other unsecured borrowings from banks and other lenders. This authorization expires January 1, 1997.

PSE&G has a $500 million one year revolving credit agreement expiring in August 1996 and a $500 million five year revolving credit agreement expiring in August 2000 with a group of commercial banks each of which provides for borrowing up to one year. As of December 31, 1995, there was no short-term debt outstanding under this agreement.

PSE&G has a $50 million uncommitted Line of Credit facility extended by a bank to primarily support short-term borrowings all of which was outstanding under this facility on December 31, 1995 and is included in the table above.

PSE&G had various Lines of Credit facility extended by a bank to primarily support the issuance of Letters of Credit. As of December 31, 1995, Letters of Credit were issued in the amount of $20.6 million.

Fuelco has a $150 million commercial paper program to finance a 42.49% share of Peach Bottom nuclear fuel, supported by a $150 million revolving credit facility with a group of banks, which expires in June 1996. PSE&G has guaranteed repayment of Fuelco's respective obligations. As of December 31, 1995, 1994 and 1993, Fuelco had commercial paper of $87.7 million, $93.7 million and $108.7 million, respectively, outstanding under such program, which amounts are included in the table above.

PSCRC has a $30 million revolving credit facility supported by a PSE&G subscription agreement in an aggregate amount of $30 million which terminates on March 7, 1996. PSCRC is presently in the process of negotiating a one year extension for this facility. As of December 31, 1995, PSCRC had $30 million outstanding under this facility, which amount is included in the table above.

PSE&G has entered into standby financing arrangements with a bank totaling $61 million. These facilities support tax-exempt multi-mode financings done through the New Jersey Economic Development Authority and

849900341

the York County (Pennsylvania) Industrial Development Authority. As of December 31, 1995, no amounts were outstanding under such arrangements.

EDHI

	1995	1994	1993
	(Millions of Dollars)		
Principal amount outstanding at end of year	$182	$ 90	$ 45
Weighted average interest rate for Short-Term Debt at year-end	6.26%	5.97%	3.47%

At December 31, 1995, Funding had a $225 million commercial paper program supported by a direct pay commercial bank letter of credit and revolving credit facility and a $225 million revolving credit facility, each of which expires in March 1998. At December 31, 1995, there was $100 million outstanding under this agreement.

ENTERPRISE

At December 31, 1995, 1994 and 1993, Enterprise had a $25 million line of credit with a bank. At December 31, 1995, 1994 and 1993, Enterprise had no borrowings under this line.

Note 7. Long-Term Investments

Long-Term Investments are primarily those of EDHI. A summary of Long-Term Investments is as follows:

	1995	1994
	(Millions of Dollars)	
Lease Agreements (see Note 11—Leasing Activities):		
Leveraged Leases	$ 845	$ 789
Direct-Financing Leases	35	76
Other Leases	6	6
Total	886	871
Partnerships:		
General Partnerships	177	168
Limited Partnerships	522	437
Total	699	605
Corporate Joint Ventures	49	26
Securities	76	75
Valuation Allowances	(21)	(17)
Other Investments	133	66
Total Long-Term Investments	$1,822	$1,626

PSRC's leveraged leases are reported net of principal and interest on nonrecourse loans, unearned income and deferred tax credits. Income and deferred tax credits are recognized at a level rate of return from each lease during the periods in which the net investment is positive.

Partnership investments are those of PSRC, EGDC and CEA and are undertaken with other investors. PSRC is a limited partner in various partnerships and is committed to make investments from time to time upon the request of the respective general partners. As of December 31, 1995, $58 million remained as PSRC's unfunded commitment subject to call.

PSRC has invested in securities and limited partnerships investing in securities, which are recorded at fair value. Realized investment gains and losses on the sale of investment securities are determined utilizing the specific cost identification method. (See Note 8—Financial Instruments and Risk Management.)

849900342

As of December 31, 1995 and 1994, EDHI's long-term investments aggregated $1.7 billion and $1.6 billion, respectively, and its property, plant and equipment (net of accumulated depreciation and amortization and valuation allowances) aggregated $.7 billion. As of December 31, 1995 and December 31, 1994, EDHI comprised 15% of Enterprise's assets.

Note 8. Financial Instruments and Risk Management

Enterprise's operations give rise to exposure to market risks from changes in crude oil and natural gas prices, interest rates, foreign exchange rates and security prices of investments. Enterprise's policy is to use derivatives for the purpose of managing market risk consistent with its business plans and prudent practices. Enterprise does not hold or issue financial instruments for trading purposes.

The notional amounts of derivatives summarized below do not represent amounts exchanged by the parties and, thus, are not a measure of the exposure of Enterprise through its use of derivatives. The amounts exchanged, under the terms of the derivatives, are calculated on the basis of the notional amounts. Enterprise limits its exposure to credit-related losses in the event of nonperformance by counterparties by limiting its counterparties to those with high credit ratings.

Natural Gas and Crude Oil Hedging

EDC sold natural gas futures contracts outstanding at December 31, 1995 and 1994 which hedged 21,250,000 mmbtu and 10,650,000 mmbtu, respectively. Such amounts represented approximately 26% and 13% of EDC's anticipated domestic natural gas production in 1996 and 1995, respectively, at average sales prices of $1.93 per mmbtu and $1.95 per mmbtu, respectively.

At December 31, 1995, EDC sold crude oil futures contracts outstanding which hedged 1.5 million barrels of oil representing approximately 38% of EDC's anticipated domestic oil production in 1996 at an average price of $17.74 per barrel.

The deferred unrealized gains (losses) at December 31, 1995 and 1994 related to EDC's futures contracts were ($5.1) million and $2.6 million, respectively.

Through December 31, 1995 and 1994, USEP entered into swaps for future contracts to buy 4,970,000 mmbtu and 2,850,000 mmbtu of natural gas related to fixed-price sales commitments. Such swaps hedged approximately 54% and 73% of sales commitments at December 31, 1995 and 1994 at average prices of $1.78 and $1.94 per mmbtu, respectively. USEP had deferred unrealized gains of $3.1 million at December 31, 1995 and unrealized losses of $.7 million at December 31, 1994.

Interest Rate Swap

Capital entered into an interest rate swap in December, 1990 to allow EDHI to borrow at floating rates and effectively swap them into fixed rates. The interest differential to be received or paid under the interest rate swap agreement is accrued over the life of the agreement as an adjustment to the interest expense of the related borrowing. The swap expired on December 11, 1995.

	1995	1994
	(Thousands of Dollars)	
Pay-fixed swap		
Notional amount	$100,000	$100,000
Pay rate	8.0%	8.0%
Average receive rate	6.4%	4.1%
Year-end receive rate	— %	6.8%

849900343

Foreign Exchange

During 1994, PSRC entered into a forward purchase contract for foreign currency to hedge an EDC firm purchase commitment denominated in pound sterling. The EDC commitment related to the acquisition of Industrial Scotland Energy Limited (ISE) for approximately 21 million pounds. The realized gain of approximately $800 thousand on the forward purchase contract for foreign currency was used to reduce the net acquisition cost allocated to ISE's assets upon completion of the acquisition in June 1994.

Currently, substantially all of Enterprise's foreign revenues and expenses are denominated in U.S. dollars.

Security Swap

During 1994, PSRC entered into two agreements to swap portions of its ownership interest in certain equity securities, held in a partnership, to the S&P 500 return. The purpose of the swaps was to minimize PSRC's exposure to the potential price volatility of such equity securities. The agreements had respective notional amounts of $17.6 million and $12.9 million.

The aggregate notional amounts swapped and the year end unrealized gain during 1994 for these two agreements were $30.5 million and $3.8 million, respectively.

In March 1995, the equity securities, in which PSRC had an ownership interest, were exchanged for equity securities of another entity. Consequently, PSRC terminated the security swap and realized a pre-tax gain of $3.5 million which was offset by the reversal of the $3.8 million unrealized gain at year end 1994.

Fair Value of Financial Instruments

The estimated fair value was determined using the market quotations or values of securities with similar terms, credit ratings, remaining maturities and redemptions at the end of 1995 and 1994, respectively.

	1995		1994	
	Carrying Amount	Fair Value	Carrying Amount	Fair Value
	(Thousands of Dollars)			
Long-Term Debt:				
EDHI	$ 603,523	$ 730,000	$ 884,686	$ 930,000
PSE&G	4,629,006	4,828,008	4,843,006	4,500,000
Preferred Securities Subject to Mandatory Redemption:				
PSE&G Cumulative Preferred Securities	150,000	156,000	150,000	145,900
Monthly Income Preferred Securities	210,000	225,300	150,000	158,300

Note 9. Cash and Cash Equivalents

The December 31, 1995 and 1994 balances consist primarily of working funds and highly liquid marketable securities (commercial paper) with a maturity of three months or less.

849900344

Note 10. Federal Income Taxes

A reconciliation of reported Net Income with pretax income and of Federal income tax expense with the amount computed by multiplying pretax income by the statutory Federal income tax rate of 35% is as follows:

	1995	1994	1993
	(Thousands of Dollars)		
Net Income	$ 662,323	$ 679,033	$600,933
Preferred securities dividend requirements	34,236	40,467	38,114
SFAS 109 Cumulative Effect	—	—	(5,414)
Subtotal	696,559	719,500	633,633
Federal income taxes:			
Operating income:			
Current provision	183,268	162,521	151,208
Provision for deferred income taxes—net(A)	192,648	173,327	186,256
Investment tax credits—net	(21,919)	(23,297)	(23,784)
Total included in operating income	353,997	312,551	313,680
Miscellaneous other income:			
Current provision	(9,897)	(8,186)	(14,340)
Provision for deferred income taxes(A)	9,816	10,422	9,815
SFAS 90 deferred income taxes(A)	2,161	2,530	2,948
Total Federal income tax provisions	356,077	317,317	312,103
Pretax income	$1,052,636	$1,036,817	$945,736

Reconciliation between total Federal income tax provisions and tax computed at the statutory tax rate on pretax income:

	1995	1994	1993
	(Thousands of Dollars)		
Tax computed at the statutory rate	$368,423	$362,887	$331,008
Increase (decrease) attributable to flow through of certain tax adjustments:			
Depreciation	16,257	(4,597)	3,347
Amortization of investment tax credits	(21,919)	(23,297)	(23,784)
Other	(6,684)	(17,676)	1,532
Subtotal	(12,346)	(45,570)	(18,905)
Total Federal income tax provisions	$356,077	$317,317	$312,103
Effective Federal income tax rate	33.8%	30.6%	33.0%

(A) The provision for deferred income taxes represents the tax effects of the following items:

	1995	1994	1993
	(Thousands of Dollars)		
Deferred Credits:			
Additional tax depreciation and amortization	$174,190	$109,106	$112,814
Leasing Activities	64,567	60,129	34,958
Property Abandonments	(7,411)	(6,606)	(6,632)
Oil and Gas Property Write-Down	(2,451)	(2,451)	(2,451)
Deferred fuel costs—net	(3,601)	39,361	63,330
Other	(20,669)	(13,260)	(3,000)
Total	$204,625	$186,279	$199,019

849900345

Between the years 1987 and 1994, Enterprise's Federal alternative minimum tax (AMT) liability exceeded its regular Federal income tax liability. This excess can be carried forward indefinitely to offset regular income tax liability in future years. Enterprise commenced using these AMT credits in 1995 and expects to continue using them in future years as regular tax liability exceeds AMT. As of December 31, 1995, 1994 and 1993, Enterprise had AMT credits of $203 million, $256 million and $247 million, respectively.

Since 1986, Enterprise has filed a consolidated Federal income tax return on behalf of itself and its subsidiaries. Prior to 1986, PSE&G filed consolidated tax returns. In March, 1992, the Internal Revenue Service (IRS) issued a Revenue Agent's Report (RAR) following completion of examination of PSE&G's consolidated tax return for 1985 and Enterprise's consolidated tax returns for 1986 and 1987, proposing various adjustments for such years which would increase Enterprise's consolidated Federal income tax liability by approximately $121 million, exclusive of interest and penalties, of which approximately $118 million is attributable to PSE&G. Interest after taxes on these proposed adjustments is currently estimated to be approximately $119 million as of December 31, 1995 and will continue to accrue at the Federal rate for large corporate underpayments, currently 11% annually.

The most significant of these proposed adjustments relates to the IRS contention that PSE&G's Hope Creek nuclear unit is a partnership with a short 1986 taxable year. In addition, the IRS contends that the tax in-service date of that unit is four months later than the date claimed by PSE&G. In June 1992, Enterprise and PSE&G filed a protest with the IRS disagreeing with certain of the proposed adjustments (including those related to Hope Creek) contained in the RAR for taxable years 1985 through 1987 and continue to contest these issues. Any tax adjustments resulting from the RAR would reduce Enterprise's and PSE&G's respective deferred credits for accumulated deferred income taxes. While PSE&G believes that assessments attributable to it are generally recoverable from its customers in rates, no assurances can be given as to what regulatory treatment may be afforded by the BPU.

On January 1, 1993, Enterprise adopted SFAS 109 without restating prior years' financial statements which resulted in Enterprise recording a $5.4 million cumulative effect increase in its net income. Under SFAS 109, deferred taxes are provided at the enacted statutory tax rate for all temporary differences between the financial statement carrying amounts and the tax bases of existing assets and liabilities irrespective of the treatment for rate-making purposes. Since management believes that it is probable that the effects of SFAS 109 on PSE&G, principally the accumulated tax benefits that previously have been treated as a flow-through item to customers, will be recovered from utility customers in the future, an offsetting regulatory asset was established. As of December 31, 1995, PSE&G had recorded a deferred tax liability and an offsetting regulatory asset of $769 million representing the future revenue expected to be recovered through rates based upon established regulatory practices which permit recovery of current taxes payable. This amount was determined using the 1995 Federal income tax rate of 35%.

849900346

SFAS 109

The following is an analysis of accumulated deferred income taxes:

ACCUMULATED DEFERRED INCOME TAXES	1995	1994
	(Thousands of Dollars)	
Assets:		
Current (net)	$ 27,571	$ 25,311
Non-Current:		
Unrecovered Investment Tax Credits	129,713	136,402
Nuclear Decommissioning	25,241	25,082
Hope Creek Cost Disallowance	—	10,127
Construction Period Interest and Taxes	17,199	15,913
Vacation Pay	6,681	6,822
AMT Credit	202,655	255,828
Real Estate Impairment	5,213	20,932
Other	4,107	6,863
Total Non-Current	$ 390,809	$ 477,969
Total Assets	$ 418,380	$ 503,280
Liabilities:		
Non-Current:		
Plant Related Items	$2,370,830	$2,268,688
Leasing Activities	616,914	580,415
Property Abandonments	21,469	26,971
Oil and Gas Property Write-Down	13,061	14,925
Deferred Electric Energy & Gas Costs	56,283	59,884
Unamortized Debt Expense	36,945	37,599
Taxes Recoverable Through Future Rates (net)	262,625	270,684
Other	107,302	124,193
Total Non-Current	$3,485,429	$3,383,359
Total Liabilities	$3,485,429	$3,383,359
Summary—Accumulated Deferred Income Taxes		
Net Current Assets	$ 27,571	$ 25,311
Net Deferred Liability	$3,094,620	$2,905,390
Total	$3,067,049	$2,880,079

Note 11. Leasing Activities

As Lessee

The Consolidated Balance Sheets include assets and related obligations applicable to capital leases under which PSE&G is a lessee. The total amortization of the leased assets and interest on the lease obligations equals the net minimum lease payments included in rent expense for capital leases.

Capital leases of PSE&G relate primarily to its corporate headquarters and other capital equipment. Certain of the leases contain renewal and purchase options and also contain escalation clauses.

Enterprise and its other subsidiaries are not lessees in any capitalized leases.

849900347

Utility plant includes the following amounts for capital leases at December 31:

	1995	1994
	(Thousands of Dollars)	
Common Plant	$58,610	$58,610
Less: Accumulated Amortization	5,499	4,840
Net Assets under Capital Leases	$53,111	$53,770

Future minimum lease payments for noncancelable capital and operating leases at December 31, 1995 were:

	Capital Leases	Operating Leases
	(Thousands of Dollars)	
1996	13,174	14,616
1997	13,175	12,580
1998	13,176	8,638
1999	13,177	6,517
2000	12,834	4,449
Later Years	189,229	12,998
Minimum Lease Payments	254,765	$59,798
Less: Amount representing estimated executory costs, together with any profit thereon, included in minimum lease payments	126,029	
Net minimum lease payments	128,736	
Less: Amount representing interest	75,625	
Present value of net minimum lease payments(A)	$53,111	

(A) Reflected in the Consolidated Balance Sheets for 1995 and 1994 were Capital Lease Obligations of $53.111 million and $53.770 million which includes Capital Lease Obligations due within one year of $739 thousand and $659 thousand, respectively.

The following schedule shows the composition of rent expense included in Operating Expenses:

	For the Years Ended December 31,		
	1995	1994	1993
	(Thousands of Dollars)		
Interest on Capital Lease Obligations	$ 6,084	$ 6,156	$ 6,074
Amortization of Utility Plant under Capital Leases	659	588	513
Net minimum lease payments relating to Capital Leases	6,743	6,744	6,587
Other Lease payments	27,219	28,447	22,132
Total Rent Expense	$33,962	$35,191	$28,719

849900348

As Lessor

PSRC's net investments in leveraged and direct financing leases are composed of the following elements:

	December 31, 1995			December 31, 1994		
	(Millions of Dollars)					
	Leveraged Leases	Direct Financing Leases	Total	Leveraged Leases	Direct Financing Leases	Total
Lease rents receivable	$1,031	$39	$1,070	$ 990	$92	$1,082
Estimated residual value	635	8	643	622	13	635
	1,666	47	1,713	1,612	105	1,717
Unearned and deferred income	(821)	(12)	(833)	(823)	(29)	(852)
Total investments	845	35	880	789	76	865
Deferred taxes	(405)	(11)	(416)	(333)	(20)	(353)
Net investments	$ 440	$24	$ 464	$ 456	$56	$ 512

PSRC's other capital leases are with various regional, state and city authorities for transportation equipment and aggregated $6 million as of December 31, 1995 and 1994.

During 1995, PSRC converted two Airbus A-300 aircraft under direct-finance leases to operating leases. As of December 31, 1995, such aircraft had a net asset value of $11 million. On January 31, 1996, the aircraft were sold for an amount approximating their net asset value.

Note 12. Commitments and Contingent Liabilities

Nuclear Performance Standard

The BPU has established its NPS for nuclear generating stations owned by New Jersey electric utilities, including the five nuclear units in which PSE&G has an ownership interest: Salem Units 1 and 2—42.59%; Hope Creek—95%; and Peach Bottom Units 2 and 3—42.49%. PSE&G operates Salem and Hope Creek, while Peach Bottom is operated by PECO Energy, Inc. (PECO).

The penalty/reward under the NPS is a percentage of replacement power costs. (See table below.)

Capacity Factor Range	Reward	Penalty
Equal to or greater than 75%	30%	—
Equal to or greater than 65% and less than 75%	None	None
Equal to or greater than 55% and less than 65%	—	30%
Equal to or greater than 45% and less than 55%	—	40%
Equal to or greater than 40% and less than 45%	—	50%
Below 40%	BPU Intervenes	

Under the NPS, the capacity factor is calculated annually using maximum dependable capability of the five nuclear units in which PSE&G owns an interest. This method takes into account actual operating conditions of the units.

While the NPS does not specifically have a gross negligence provision, the BPU has indicated that it would consider allegations of gross negligence brought upon a sufficient factual basis. A finding of gross negligence could result in penalties other than those prescribed under the NPS. During 1995, the five nuclear units in which PSE&G has an ownership interest aggregated a 62% combined capacity factor which resulted in a penalty for

849900349

1995 of approximately $3.5 million. On January 16, 1996, PSE&G filed its Alternative Rate Plan with the BPU which proposes the elimination of the NPS. See Note 2.

Based upon current projections and assumptions regarding PSE&G's five nuclear units during 1996, including the return of Hope Creek to service in early March, the return of Salem 2 in the third quarter and the continued outage of Salem 1 for the remainder of the year, the 1996 aggregate capacity factor would be approximately 57%, which would result in a penalty ranging from $11 to $12 million. Both of the Salem units are currently out of service and their return dates are subject to completion of testing, analysis, repair activity and NRC concurrence that they are prepared to restart. Restart of Salem 1, which had originally been scheduled for the second quarter of 1996, will be delayed for a substantial period as a result of the ongoing steam generator inspection and analysis. Salem 2, which is also undergoing steam generator inspection and analysis is still scheduled to return to service in the third quarter of 1996. The inability to successfully return these units to continuous, safe operation could have a material effect on the financial position, results of operation and net cash flows of Enterprise and PSE&G.

Certain of the owners of Salem have indicated that they may seek to hold PSE&G responsible for their share of costs of the current outage. PSE&G cannot predict what actions, if any, may be taken.

Nuclear Insurance Coverages and Assessments

PSE&G's insurance coverages and maximum retrospective assessments for its nuclear operations are as follows:

Type and Source of Coverages	Total Site Coverages	PSE&G Maximum Assessments for a Single Incident
	(Millions of Dollars)	
Public Liability:		
American Nuclear Insurers	$ 200.0	$ —
Indemnity(A)	8,720.3	210.2
	$8,920.3(B)	$210.2
Nuclear Worker Liability:		
American Nuclear Insurers(C)	$ 200.0	$ 8.1
Property Damage:		
Nuclear Mutual Limited	$ 500.0	$ 9.2
Nuclear Electric Insurance Ltd. (NEIL II)	1,400.0	8.3(D)
Nuclear Electric Insurance Ltd. (NEIL III)	850.0	9.2
	$2,750.0	$ 26.7
Replacement Power:		
Nuclear Electric Insurance Ltd (NEIL I)	$ 3.5(E)	$ 11.4

(A) Retrospective premium program under the Price-Anderson liability provisions of the Atomic Energy Act of 1954, as amended (Price-Anderson). Subject to retrospective assessment with respect to loss from an incident at any licensed nuclear reactor in the United States. Assessment adjusted for inflation effective August 20, 1993.

(B) Limit of liability for each nuclear incident under Price-Anderson.

(C) Industry aggregate limit representing the potential liability from workers claiming exposure to the hazard of nuclear radiation. This policy includes automatic reinstatements up to an aggregate of $200 million, thereby

849900350

providing total coverage of $400 million. This policy does not increase PSE&G's obligation under Price-Anderson.

(D) In the event of a second industry loss triggering NEIL II—coverage, the maximum retrospective premium assessment can increase to $18.5 million.

(E) Represents limit of coverage available to co-owners of Salem and Hope Creek, for each plant. Each co-owner purchases its own policy. PSE&G is currently covered for its percent ownership interest of this limit for each plant.

Price-Anderson sets the "limit of liability" for claims that could arise from an incident involving any licensed nuclear facility in the nation. The "limit of liability" is based on the number of licensed nuclear reactors and is adjusted at least every five years based on the Consumer Price Index. The current "limit of liability" is $8.9 billion. All utilities owning a nuclear reactor, including PSE&G, have provided for this exposure through a combination of private insurance and mandatory participation in a financial protection pool as established by Price-Anderson. Under Price-Anderson, each party with an ownership interest in a nuclear reactor can be assessed its share of $79.3 million per reactor per incident, payable at $10 million per reactor per incident per year. If the damages exceed the "limit of liability", the President is to submit to Congress a plan for providing additional compensation to the injured parties. Congress could impose further revenue raising measures on the nuclear industry to pay claims. PSE&G's maximum aggregate assessment per incident is $210.2 million (based on PSE&G's ownership interests in Hope Creek, Peach Bottom and Salem) and its maximum aggregate annual assessment per incident is $26.5 million.

Further, a recent decision by the U.S. Court of Appeals for the Third Circuit, not involving PSE&G, held that the Price Anderson Act did not preclude awards based on state law claims for punitive damage.

PSE&G is a member of two industry mutual insurance companies; Nuclear Mutual Limited (NML), and Nuclear Electric Insurance Limited (NEIL). NML provides the primary property insurance at Salem and Hope Creek. NEIL provides excess property insurance through its NEIL II and NEIL III policies and replacement power coverage through its NEIL I policy. Both companies may make retrospective premium assessments in case of adverse loss experience. PSE&G's maximum potential liabilities under these assessments are included in the table and notes above. Certain of the policies also provide that the insurer may suspend coverage with respect to all nuclear units on a site without notice if the NRC suspends or revokes the operating license for any unit on a site, issues a shutdown order with respect to such unit or issues a confirmatory order keeping such unit down. All coverages at Salem and Hope Creek remain fully in effect.

Construction and Fuel Supplies

PSE&G has substantial commitments as part of its ongoing construction program which include capital requirements for nuclear fuel. PSE&G's construction program is continuously reviewed and periodically revised as a result of changes in economic conditions, revised load forecasts, changes in the scheduled retirement dates of existing facilities, changes in business strategies, site changes, cost escalations under construction contracts, requirements of regulatory authorities and laws, the timing of and amount of electric and gas rate changes and the ability of PSE&G to raise necessary capital. Pursuant to an electric integrated resource plan (IRP), PSE&G periodically reevaluates its forecasts of future customers, load and peak growth, sources of electric generating capacity and demand side management (DSM) to meet such projected growth, including the need to construct new electric generating capacity. The IRP takes into account assumptions concerning future demands of customers, effectiveness of conservation and load management activities, the long-term condition of PSE&G's plants, capacity available from electric utilities and other suppliers and the amounts of co-generation and other non-utility capacity projected to be available.

Based on PSE&G's construction program, construction expenditures are expected to aggregate approximately $2.8 billion, which includes $428 million for nuclear fuel and $84 million of Allowance for Funds

849900351

used During Construction (AFDC) during the years 1996 through 2000. The estimate of construction requirements is based on expected project completion dates and includes anticipated escalation due to inflation of approximately 3%, annually. Therefore, construction delays or higher inflation levels could cause significant increases in these amounts. PSE&G expects to generate internally the funds necessary to satisfy its construction expenditures over the next five years, assuming adequate and timely recovery of costs, as to which no assurances can be given. In addition, PSE&G does not presently anticipate any difficulties in obtaining sufficient sources of fuel for electric generation or adequate gas supplies during the years 1996 through 2000.

Hazardous Waste

Certain Federal and State laws authorize the United States Environmental Protection Agency (EPA) and the New Jersey Department of Environmental Protection (NJDEP), among other agencies, to issue orders and bring enforcement actions to compel responsible parties to take investigative and remedial actions at any site that is determined to present an imminent and substantial danger to the public or the environment because of an actual or threatened release of one or more hazardous substances. Because of the nature of PSE&G's business, including the production of electricity, the distribution of gas and, formerly, the manufacture of gas, various by-products and substances are or were produced or handled which contain constituents classified as hazardous. PSE&G generally provides for the disposal or processing of such substances through licensed independent contractors. However, these statutory provisions impose joint and several responsibility without regard to fault on all responsible parties, including the generators of the hazardous substances, for certain investigative and remediation costs at sites where these substances were disposed of or processed. PSE&G has been notified with respect to a number of such sites and the remediation of these potentially hazardous sites is receiving greater attention from the government agencies involved. Generally, actions directed at funding such site investigations and remediation include all suspected or known responsible parties. PSE&G does not expect its expenditures for any such site to have a material effect on its financial position, results of operations or net cash flows.

PSE&G Manufactured Gas Plant Remediation Program

In 1988, NJDEP notified PSE&G that it had identified the need for PSE&G, pursuant to a formal arrangement, to systematically investigate and, if necessary, resolve environmental concerns extant at PSE&G's former manufactured gas plant sites. To date, NJDEP and PSE&G have identified 38 former gas plant sites. PSE&G is currently working with NJDEP under a program to assess, investigate and, if necessary, remediate environmental concerns at these sites (Remediation Program). The Remediation Program is periodically reviewed and revised by PSE&G based on regulatory requirements, experience with the Remediation Program and available technologies. The cost of the Remediation Program cannot be reasonably estimated, but experience to date indicates that costs of at least $20 million per year could be incurred over a period of more than 30 years and that the overall cost could be material to PSE&G's financial position, results of operations or net cash flows.

Costs incurred through December 31, 1995 for the Remediation Program amounted to $64.6 million, net of certain insurance proceeds. In addition, at December 31, 1995, PSE&G's estimated liability for remediation costs through 1998 aggregated $96.3 million.

In accordance with a Stipulation approved by the BPU in 1992, PSE&G is recovering through its LEAC over a six-year period $32 million of its actual remediation costs to reflect costs incurred through September 30, 1992. As of December 31, 1995, PSE&G has recovered $27.8 million of the $32 million of such costs. PSE&G is expected to recover the balance of $4.2 million in its currently filed LGAC period ending in 1996.

Note 13. Postretirement Benefits Other Than Pensions

On January 1, 1993, Enterprise and PSE&G adopted SFAS 106 which requires that the expected cost of employees' postretirement health care and insurance benefits be charged to expense during the years in which

849900352

employees render service. PSE&G elected to amortize, over 20 years, its unfunded obligation of $609.3 million at January 1, 1993. The following table discloses the significant components of the net periodic postretirement benefit obligation:

Net Periodic Postretirement Benefit Obligation	December 31, 1995	1994	1993
		(Millions)	
Service cost	$ 8.5	$ 11.1	$ 11.7
Interest on accumulated postretirement obligation	48.2	45.4	44.4
Amortization of transition obligation	30.5	30.5	30.5
Amortization of Net (Gain)/Loss (a)	(3.8)	—	—
Deferral of current expense	(50.7)	(57.8)	(58.6)
Annual net expense	$ 32.7	$ 29.2	$ 28.0

(a) Reflects change in Plan Assumptions.

The discount rate used in determining the PSE&G net periodic postretirement benefit cost was 8.50% and 7.25% for 1995 and 1994, respectively.

A one-percentage-point increase in the assumed health care cost trend rate for each year would increase the aggregate of the service and interest cost components of net periodic postretirement health care cost by approximately $2.6 million, or 5.6%, and increase the accumulated postretirement benefit obligation as of December 31, 1995 by $34.8 million, or 5.9%.

The assumed health care cost trend rates used in measuring the accumulated postretirement benefit obligation in 1995 were: medical costs for pre-age sixty-five retirees—13.0%, medical costs for post-age sixty-five retirees—9.0% and dental costs—7.0%; such rates are assumed to gradually decline to 5.0%, 5.0% and 5.0%, respectively, in 2011. The medical costs above include a provision for prescription drugs.

In its 1992 base rate case, PSE&G requested full recovery of the costs associated with postretirement benefits other than pensions (OPEB) on an accrual basis, in accordance with SFAS 106. The BPU's December 31, 1992 base rate order provided that (1) PSE&G's pay-as-you-go basis OPEB costs will continue to be included in cost of service and will be recoverable in base rates on a pay-as-you-go basis; (2) prudently incurred OPEB costs, that are accounted for on an accrual basis in accordance with SFAS 106, will be recoverable in future rates; (3) PSE&G should account for the differences between its OPEB costs on an accrual basis and the pay-as-you-go basis being recovered in rates as a regulatory asset; and (4) the issue of cash versus accrual accounting will be revisited and in the event that FASB or the SEC requires the use of accrual accounting for OPEB costs for rate-making purposes, the regulatory asset will be recoverable, through rates, over an appropriate amortization period.

Accordingly, PSE&G is accounting for the differences between its SFAS 106 accrual cost and the cash cost currently recovered through rates as a regulatory asset. OPEB costs charged to expenses during 1995 were $32.6 million and accrued OPEB costs deferred were $50.7 million. The amount of the unfunded liability, at December 31, 1995, as shown below, is $717.9 million and funding options are currently being explored. The primary effect of adopting SFAS 106 on Enterprise's and PSE&G's financial reporting is on the presentation of their financial positions with minimal effect on their results of operations.

During January 1993 and subsequent to the receipt of the Order, the FASB's Emerging Issues Task Force (EITF) concluded that deferral of such costs is acceptable, provided regulators allow SFAS 106 costs in rates within approximately five years of the adoption of SFAS 106 for financial reporting purposes, with any cost deferrals recovered in approximately twenty years. In accordance with the Alternative Rate Plan filed, PSE&G

849900353

expects full SFAS 106 recovery in accordance with the EITF's view of such standard and believes that it is probable that any deferred costs will be recovered from utility customers within such twenty-year time period. As of December 31, 1995, PSE&G has deferred $167.2 million of such costs. However, if recovery of SFAS 106 costs is not approved by the BPU, the impact on the financial position and results of operations would be material.

In accordance with SFAS 106 disclosure requirements, a reconciliation of the funded status of the plan is as follows:

	December 31,	
	1995	1994
	(Millions)	
Accumulated postretirement benefit obligation:		
Retirees	$(444.6)	$(379.2)
Fully eligible active plan participants	(52.9)	(45.7)
Other active plan participants	(220.4)	(161.0)
Total	(717.9)	(585.9)
Plan assets at fair value	—	—
Accumulated postretirement benefit obligation in excess of plan assets	(717.9)	(585.9)
Unrecognized net (gain)/loss from past experience different from that assumed and from changes in assumptions	32.8	(78.8)
Unrecognized prior service cost	—	—
Unrecognized transition obligation	517.9	548.3
Accrued postretirement obligation	$(167.2)	$(116.4)

The discount rate used in determining the accumulated postretirement benefit obligation as of December 31, 1995 was 7.25% and 8.50% for 1995 and 1994, respectively.

Note 14. Pension Plan

The discount rates, expected long-term rates of return on assets and average compensation growth rates used in determining the Pension Plan's funded status and net pension cost as of December 31, 1995 and 1994 were as follows:

	1995	1994
Funded Status:		
Discount Rate used to Determine Benefit Obligations	7¼%	8½%
Average Compensation Growth to Determine Benefit Obligations	4.5%	4.5%
Net Pension Cost:		
Discount Rate	8.5%	7¼%
Expected Long-Term Return on Assets	8.5%	8%
Average Compensation Growth	4.5%	5.5%

849900354

The following table shows the Pension Plan's funded status:

	December 31,	
	1995	1994
	(Thousands of Dollars)	
Actuarial present value of benefit obligations:		
Accumulated benefit obligations, including vested benefits of $1,403,313 in 1995 and $1,151,677 in 1994	$(1,509,841)	$(1,235,930)
Effect of projected future compensation	(321,545)	(261,846)
Projected benefit obligations	(1,831,386)	(1,497,776)
Plan assets at fair value, primarily listed equity and debt securities	1,533,446	1,270,116
Projected benefit obligations in excess of plan assets	(297,940)	(227,660)
Unrecognized net gain (loss) from past experience and effects of changes in assumptions	120,859	32,815
Prior service cost not yet recognized in net pension cost	110,213	119,783
Unrecognized net obligations being recognized over 16.7 years	61,287	69,387
Accrued pension expense	$ (5,581)	$ (5,675)

The net pension cost for the years ending December 31, 1995, 1994 and 1993, include the following components:

	1995	1994	1993
	(Thousands of Dollars)		
Service cost—benefits earned during year	$ 37,033	$ 42,904	$ 42,948
Interest cost on projected benefit obligations	124,147	108,394	103,118
Return on assets	(312,190)	5,022	(166,916)
Net amortization and deferral	222,916	(90,752)	90,958
Total	$ 71,906	$ 65,568	$ 70,108

See Note 1—Organization and Summary of Significant Accounting Policies.

849900355

Note 15. Financial Information by Business Segments

Information related to the segments of Enterprise's business is detailed below:

	Electric	Gas	EDC	Nonutility Activities(A)	Total
		(Thousands of Dollars)			
For the Year Ended December 31, 1995					
Operating Revenues	$ 4,020,842	$1,686,403	$248,002	$ 208,906	$ 6,164,153
Eliminations (Intersegment Revenues)	—	—	—	—	—
Total Operating Revenues	4,020,842	1,686,403	248,002	208,906	6,164,153
Depreciation and Amortization	503,022	88,092	77,265	5,852	674,231
Operating Income Before Income Taxes	1,140,279	178,718	58,654	142,172	1,519,823
Capital Expenditures	545,997	140,153	132,098	8,364	826,612
December 31, 1995					
Net Utility Plant	9,651,695	1,535,736	—	—	11,187,431
Oil and Gas Property, Plant & Equipment	—	—	608,015	—	608,015
Other Corporate Assets	2,778,691	589,455	147,822	1,858,654	5,374,622
Total Assets	$12,430,386	$2,125,191	$755,837	$1,858,654	$17,170,068
For the Year Ended December 31, 1994					
Operating Revenues	$ 3,739,713	$1,778,528	$229,880	$ 187,067	$ 5,935,188
Eliminations (Intersegment Revenues)	—	—	(11,179)	(1,566)	(12,745)
Total Operating Revenues	3,739,713	1,778,528	218,701	185,501	5,922,443
Depreciation and Amortization	471,910	79,462	78,567	4,089	634,028
Operating Income Before Income Taxes	1,083,155	226,196	39,210	133,590	1,482,151
Capital Expenditures	734,100	153,183	160,296	8,445	1,056,024
December 31, 1994					
Net Utility Plant	9,642,177	1,456,068	—	—	11,098,245
Oil and Gas Property, Plant & Equipment	—	—	577,913	—	577,913
Other Corporate Assets	2,589,348	576,806	150,973	1,724,155	5,041,282
Total Assets	$12,231,525	$2,032,874	$728,886	$1,724,155	$16,717,440
For the Year Ended December 31, 1993					
Operating Revenues	$ 3,696,114	$1,594,341	$278,470	$ 161,650	$ 5,730,575
Eliminations (Intersegment Revenues)	—	—	(20,158)	(1,827)	(21,985)
Total Operating Revenues	3,696,114	1,594,341	258,312	159,823	5,708,590
Depreciation and Amortization	441,164	69,375	86,136	4,922	601,597
Operating Income Before Income Taxes	1,117,739	173,916	92,162	43,310	1,427,127
Capital Expenditures	738,362	152,012	91,988	2,026	984,388
December 31, 1993					
Net Utility Plant	9,451,581	1,352,799	—	—	10,804,380
Oil and Gas Property, Plant & Equipment	—	—	506,047	—	506,047
Other Corporate Assets	2,313,394	866,524	173,390	1,665,921	5,019,229
Total Assets	$11,764,975	$2,219,323	$679,437	$1,665,921	$16,329,656

(A) The Nonutility Activities include amounts applicable to Enterprise, the parent corporation.

849900356

Information related to Property, Plant and Equipment of PSE&G is detailed below:

	December 31,		
	1995	1994	1993
	(Thousands of Dollars)		
Utility Plant—Original Cost			
Electric Plant in Service			
Steam Production	$ 1,791,010	$ 1,810,674	$ 1,763,253
Nuclear Production	5,992,341	5,931,049	5,873,274
Transmission	1,127,031	1,078,928	1,034,150
Distribution	3,044,830	2,877,862	2,724,202
Other	1,139,891	647,406	526,015
Total Electric Plant in Service	13,095,103	12,345,919	11,920,894
Gas Plant in Service			
Transmission	65,109	62,213	63,395
Distribution	2,250,705	2,131,816	1,993,044
Other	126,758	124,204	121,402
Total Gas Plant in Service	2,442,572	2,318,233	2,177,841
Common Plant in Service			
Capital Leases	58,610	58,610	56,812
General	458,494	486,521	463,473
Total Common Plant in Service	517,104	545,131	520,285
Total	$16,054,779	$15,209,283	$14,619,020

Note 16. Property Impairment of Enterprise Group Development Corporation

As a result of a management review of each property's current value and the potential for increasing such value through operating and other improvements, EGDC recorded an impairment in 1993 related to certain of its properties, including properties upon which EDHI's management revised its intent from a long-term investment strategy to a hold for sale status, reflecting such properties on its books at their net realizable value. This impairment reduced the estimated value of EGDC's properties by $77.6 million and 1993 net income by $50.5 million, after tax, or 21 cents per share of Enterprise Common Stock.

849900357

Note 17. Jointly Owned Facilities—Utility Plant

PSE&G has ownership interests in and is responsible for providing its share of the necessary financing for the following jointly owned facilities. All amounts reflect the share of PSE&G's jointly owned projects and the corresponding direct expenses are included in Consolidated Statements of Income as operating expenses. (See Note 1—Organization and Summary of Significant Accounting Policies.)

Plant—December 31, 1995	Ownership Interest	Plant in Service	Accumulated Depreciation	Plant Under Construction
		(Thousands of Dollars)		
Coal Generating				
Conemaugh	22.50%	$ 198,724	$ 38,339	$2,401
Keystone	22.84	119,690	32,800	1,629
Nuclear Generating				
Peach Bottom	42.49	755,504	312,856	21,139
Salem	42.59	1,055,114	396,795	57,041
Hope Creek	95.00	4,122,715	1,063,403	13,592
Nuclear Support Facilities	Various	179,065	33,754	2,990
Pumped Storage Generating				
Yards Creek	50.00	27,246	9,293	2,350
Transmission Facilities	Various	121,100	36,266	89
Merrill Creek Reservoir	13.91	37,231	12,111	—
Linden Gas Plant	90.00	15,855	19,388	—

Note 18. Selected Quarterly Data (Unaudited)

The information shown below, in the opinion of Enterprise, includes all adjustments, consisting only of normal recurring accruals, necessary to a fair presentation of such amounts. Due to the seasonal nature of the utility business, quarterly amounts vary significantly during the year.

	March 31,		June 30,		September 30,		December 31,	
Calendar Quarter Ended	1995	1994	1995	1994	1995	1994	1995	1994
			(Thousands Where Applicable)					
Operating Revenues	$1,676,269	$1,795,457	$1,328,784	$1,279,588	$1,492,130	$1,376,199	$1,666,970	$1,471,199
Operating Income	$ 334,336	$ 348,948	$ 233,239	$ 252,725	$ 311,528	$ 311,920	$ 278,607	$ 250,500
Net Income	$ 212,592	$ 230,127	$ 110,667	$ 129,885	$ 186,782	$ 187,178	$ 152,282	$ 131,843
Earnings Per Share of Common Stock	$ 0.87	$ 0.94	$ 0.45	$ 0.53	$ 0.76	$ 0.76	$ 0.62	$ 0.54
Average Shares of Common Stock Outstanding	244,698	243,777	244,698	244,698	244,698	244,698	244,698	244,698

849900358

PUBLIC SERVICE ELECTRIC AND GAS COMPANY

NOTES TO CONSOLIDATED FINANCIAL STATEMENTS

PSE&G

Except as modified below, the Notes to Consolidated Financial Statements of Enterprise are incorporated herein by reference insofar as they relate to PSE&G and its subsidiaries:

Note 1. —Organization and Summary of Significant Accounting Policies
Note 2. —Rate Matters
Note 3. —PSE&G Nuclear Decommissioning and Amortization of Nuclear Fuel
Note 4. —Schedule of Consolidated Capital Stock and Other Securities
Note 5. —Deferred Items
Note 6. —Schedule of Consolidated Debt
Note 7. —Long-Term Investments
Note 8. —Financial Instruments and Risk Management
Note 11. —Leasing Activities—As Lessee
Note 12. —Commitments and Contingent Liabilities
Note 13. —Postretirement Benefits Other Than Pensions
Note 14. —Pension Plan
Note 15. —Financial Information by Business Segments
Note 17. —Jointly Owned Facilities—Utility Plant

Note 1. Organization and Summary of Significant Accounting Policies

Consolidation Policy

The consolidated financial statements include the accounts of PSE&G and its subsidiaries. All significant intercompany accounts and transactions have been eliminated in consolidation. Certain reclassifications of prior years' data have been made to conform with the current presentation.

Note 9. Cash and Cash Equivalents

The December 31, 1995 and 1994 balances consist primarily of working funds.

Note 10. Federal Income Taxes

A reconciliation of reported Net Income with pretax income and of Federal income tax expense with the amount computed by multiplying pretax income by the statutory Federal income tax rate of 35% is as follows:

	1995	1994	1993
Net Income	$616,964	$659,406	$614,868
Federal income taxes:			
Operating income:			
Current provision	275,460	230,709	177,314
Provision for deferred income taxes—net(A)	65,084	83,028	149,884
Investment tax credits—net	(19,111)	(19,208)	(18,408)
Total included in operating income	321,433	294,529	308,790
Miscellaneous other income:			
Current provision	(9,897)	(8,186)	(15,419)
Provision for deferred income taxes(A)	9,816	10,422	9,815
SFAS 90 deferred income taxes(A)	2,161	2,530	2,948
Total Federal income tax provisions	323,513	299,295	306,134
Pretax income	$940,477	$958,701	$921,002

849900359

Reconciliation between total Federal income tax provisions and tax computed at the statutory tax rate on pretax income:

	1995	1994	1993
	(Thousands of Dollars)		
Tax expense at the statutory rate	$329,167	$335,546	$322,351
Increase (decrease) attributable to flow-through of certain tax adjustments:			
Depreciation	16,257	(4,597)	3,347
Amortization of investment tax credits	(19,111)	(19,208)	(18,408)
Other	(2,800)	(12,446)	(1,156)
Subtotal	(5,654)	(36,251)	(16,217)
Total Federal income tax provisions	$323,513	$299,295	$306,134
Effective Federal income tax rate	34.4%	31.2%	33.2%

(A) The provision for deferred income taxes represents the tax effects of the following items:

	1995	1994	1993
	(Thousands of Dollars)		
Deferred Credits:			
Additional tax depreciation and amortization	$111,193	$ 85,335	$ 92,693
Property Abandonments	(7,411)	(6,606)	(6,632)
Oil and Gas Property Write-Down	(2,451)	(2,451)	(2,451)
Deferred fuel costs-net	(3,601)	39,361	63,330
Other	(20,669)	(19,659)	15,707
Total	$ 77,061	$ 95,980	$162,647

849900360

SFAS 109

The following is an analysis of accumulated deferred income taxes:

Accumulated Deferred Income Taxes	1995	1994
	(Thousands of Dollars)	
Assets:		
Current (net)	$ 27,571	$ 25,311
Non-Current:		
Unrecovered Investment Tax Credits	129,713	136,402
Nuclear Decommissioning	25,241	25,082
Hope Creek Cost Disallowance	—	10,127
Construction Period Interest and Taxes	17,199	15,913
Vacation Pay	6,681	6,822
Other	5,057	6,863
Total Non-Current	$ 183,891	$ 201,209
Total Assets	$ 211,462	$ 226,520
Liabilities:		
Non-Current:		
Plant Related Items	$2,237,386	$2,157,206
Property Abandonments	21,469	26,971
Oil and Gas Property Write-Down	13,061	14,925
Deferred Electric Energy & Gas Costs	56,283	59,884
Unamortized Debt Expense	36,945	37,599
Taxes Recoverable Through Future Rates (Net)	262,625	270,684
Other	91,725	112,479
Total Non-Current	$2,719,494	$2,679,748
Total Liabilities	$2,719,494	$2,679,748
Summary—Accumulated Deferred Income Taxes		
Net Current Assets	$ 27,571	$ 25,311
Net Deferred Liability	$2,535,603	$2,478,539
Total	$2,500,032	$2,453,228

The balance of Federal income tax payable by PSE&G to Enterprise was $5.3 million and $15.6 million, as of December 31, 1995 and December 31, 1994, respectively.

849900361

Note 18. Selected Quarterly Data (Unaudited)

The information shown below, in the opinion of PSE&G, includes all adjustments, consisting only of normal recurring accruals, necessary to a fair presentation of such amounts. Due to the seasonal nature of the utility business, quarterly amounts vary significantly during the year.

Calendar Quarter ended	March 31,		June 30,		September 30,		December 31,	
	1995	1994	1995	1994	1995	1994	1995	1994
				(Thousands of Dollars)				
Operating Revenues	$1,579,516	$1,690,999	$1,235,435	$1,182,880	$1,381,004	$1,284,175	$1,511,290	$1,360,187
Operating Income	$ 298,432	$ 305,013	$ 204,606	$ 218,225	$ 280,525	$ 282,782	$ 211,939	$ 206,650
Net Income	$ 206,896	$ 221,439	$ 111,300	$ 128,113	$ 184,878	$ 190,378	$ 113,890	$ 119,476
Earnings Available to Public Service Enterprise Group Incorporated	$ 198,214	$ 211,159	$ 102,620	$ 117,969	$ 176,196	$ 180,234	$ 105,698	$ 109,577

Note 19. Accounts Payable to Associated Companies—Net

The balance at December 31, 1995 and 1994 consisted of the following:

	1995	1994
	(Thousands of Dollars)	
Public Service Enterprise Group Incorporated (A)	$ 9,055	$17,678
Energy Development Corporation	(306)	(336)
Other	(738)	(665)
Total	$ 8,011	$16,677

(A) Principally Federal income taxes related to PSE&G's taxable income.

849900362

PART III

Item 9. Changes in and Disagreements with Accountants on Accounting and Financial Disclosure

Enterprise and PSE&G, none.

Item 10. Directors and Executive Officers of the Registrants

Directors of the Registrants

Enterprise

The information required by Item 10 of Form 10-K with respect to present directors who are nominees for election as directors at Enterprise's Annual Meeting of Stockholders to be held on April 16, 1996, and directors whose terms will continue beyond the meeting, is set forth under the heading "Election of Directors" in Enterprise's definitive Proxy Statement for such Annual Meeting of Stockholders, which definitive Proxy Statement is expected to be filed with the Securities and Exchange Commission on or about March 1, 1996 and which information set forth under said heading is incorporated herein by this reference thereto.

PSE&G

There is shown as to each present director information as to the period of service as a director of PSE&G, age as of April 16, 1996, present committee memberships, business experience during the last five years and other present directorships. For discussion of certain litigation involving the directors of PSE&G, except Forrest J. Remick, see Part I—Business, Item 3—Legal Proceedings.

LAWRENCE R. CODEY has been a director since 1988. Age 51. Member of Executive Committee. Has been President and Chief Operating Officer of PSE&G since September 1991. Was Senior Vice President—Electric of PSE&G from January 1989 to September 1991. Director of Enterprise. Director of Sealed Air Corporation, The Trust Company of New Jersey, United Water Resources Inc. and Blue Cross & Blue Shield of New Jersey.

E. JAMES FERLAND has been a director since 1986. Age 54. Chairman of Executive Committee. Chairman of the Board, President and Chief Executive Officer of Enterprise since July 1986, Chairman of the Board and Chief Executive Officer of PSE&G since September 1991 and Chairman of the Board and Chief Executive Officer of EDHI since June 1989. President of PSE&G from July 1986 to September 1991. Director of Enterprise and of EDHI and its principal subsidiaries. Director of Foster Wheeler Corporation and The Hartford Steam Boiler Inspection and Insurance Company.

RAYMOND V. GILMARTIN has been a director since 1993. Age 55. Director of Enterprise. Has been Chairman of the Board, President and Chief Executive Officer of Merck & Co., Inc., Whitehouse Station, New Jersey (discovers, develops, produces and markets human and animal health products) since November 1994. Was President and Chief Executive Officer from June 1994 to November 1994. Was Chairman of the Board, President and Chief Executive Officer of Becton Dickinson and Company from November 1992 to June 1994 and President and Chief Executive Officer from February 1989 to November 1992. Director of Merck & Co., Inc. and Providian Corporation.

IRWIN LERNER has been a director since 1993. Age 65. Was previously a director from 1981 to February 1988. Director of Enterprise. Was Chairman, Board of Directors and Executive Committee from January 1993 to September 1993 and President and Chief Executive Officer from 1980 to December 1992 of Hoffmann-La Roche Inc., Nutley, New Jersey (prescription pharmaceuticals, vitamins and fine chemicals, and diagnostic products and services). Director of Humana Inc., Sequana Therapeutics, Inc. and Medarex, Inc.

849900363

JAMES C. PITNEY has been a director since 1993. Age 69. Was previously a director from 1979 to February 1988. Member of Executive Committee. Director of Enterprise. Has been a partner in the law firm of Pitney, Hardin, Kipp & Szuch, Morristown, New Jersey, since 1958. Director of Tri-Continental Corporation, sixteen funds of the Seligman family of funds and Seligman Quality, Inc.

FORREST J. REMICK has been a director since May 1995. Age 65. Director of Enterprise. Has been an engineering consultant since July 1994. Was Commissioner, United States Nuclear Regulatory Commission, from December 1989 to June 1994. Was Associate Vice President—Research and Professor of Nuclear Engineering at Pennsylvania State University, from 1985 to 1989.

Executive Officers of the Registrants

The following table sets forth certain information concerning the executive officers of Enterprise and PSE&G, respectively.

Name	Age December 31, 1995	Office	Effective Date First Elected to Present Position
E. James Ferland ..	53	Chairman of the Board, President and Chief Executive Officer (Enterprise)	July 1986 to present
		Chairman of the Board and Chief Executive Officer (PSE&G)	July 1986 to present
		President (PSE&G)	June 1986 to September 1991
		Chairman of the Board and Chief Executive Officer (EDHI)	June 1989 to present
Lawrence R. Codey.	51	President and Chief Operating Officer (PSE&G)	September 1991 to present
		Senior Vice President—Electric (PSE&G)	January 1989 to September 1991
Robert C. Murray ..	50	Vice President and Chief Financial Officer (Enterprise)	January 1992 to present
		Senior Vice President and Chief Financial Officer (PSE&G)	January 1992 to present
		Managing Director of Morgan Stanley & Co. Incorporated	January 1987 to July 1991
Patricia A. Rado ...	53	Vice President and Controller (Enterprise)	April 1993 to present
		Vice President and Controller (PSE&G)	April 1993 to present
		Controller of Yankee Energy Systems Inc.	July 1989 to April 1993
Paul H. Way	58	President, Chief Operating Officer and Director (EDHI)	February 1993 to present
		Senior Vice President (EDHI)	June 1992 to February 1993
		Senior Vice President—Corporate Performance (PSE&G)	April 1988 to June 1992
R. Edwin Selover ..	50	Vice President and General Counsel (Enterprise)	April 1988 to present
		Senior Vice President and General Counsel (PSE&G)	January 1988 to present

849900364

Name	Age December 31, 1995	Office	Effective Date First Elected to Present Position
Robert J. Dougherty, Jr.	44	President—Enterprise Ventures and Services Corporation (PSE&G)	February 1995 to present
		Senior Vice President—Electric (PSE&G)	September 1991 to February 1995
		Senior Vice President—Customer Operations (PSE&G)	September 1989 to September 1991
Leon R. Eliason.....	56	Chief Nuclear Officer and President—Nuclear Business Unit (PSE&G)	October 1994 to present
		President, Power Supply Business Unit, Northern States Power	January 1993 to September 1994
		Vice President, Nuclear Generation, Northern States Power	July 1990 to January 1993
Alfred C. Koeppe	49	Senior Vice President— External Affairs (PSE&G)	October 1995 to present
		President and Chief Executive Officer of Bell Atlantic—New Jersey	February 1993 to October 1995
		Vice President—Public Affairs of Bell Atlantic—New Jersey	February 1991 to February 1993

849900365

Item 11. Executive Compensation

Enterprise

The information required by Item 11 of Form 10-K is set forth under the heading "Executive Compensation" in Enterprise's definitive Proxy Statement for the Annual Meeting of Stockholders to be held April 16, 1996, which definitive Proxy Statement is expected to be filed with the Securities and Exchange Commission on or about March 1, 1996 and such information set forth under such heading is incorporated herein by this reference thereto.

PSE&G

Information regarding the compensation of the Chief Executive Officer and the four most highly compensated executive officers of PSE&G as of December 31, 1995 is set forth below. Amounts shown were paid or awarded for all services rendered to Enterprise and its subsidiaries and affiliates including PSE&G.

SUMMARY COMPENSATION TABLE

		Annual Compensation		Long-Term Compensation		
				Awards	Payouts	
Name and Principal Position	Year	Salary $	Bonus/Annual Incentive Award($)(1)	Securities Underlying Options (#)(2)	LTIP Payouts ($)(3)	All Other Compensation ($)(4)
E. James Ferland	1995	682,377	(5)	5,800	246,288	8,681
Chairman of the Board,	1994	652,492	251,383	5,400	127,140	5,628
President and CEO of Enterprise	1993	622,606	265,316	5,800	28,072	7,678
Lawrence R. Codey	1995	418,392	(5)	2,800	118,746	5,756
President and Chief	1994	398,468	129,276	2,500	48,900	5,351
Operating Officer of PSE&G	1993	378,545	109,585	2,800	9,570	6,981
Leon R. Eliason	1995	323,755	165,000(5)(6)	5,500	26,388	3,242
President—Nuclear	1994	74,713	0	600	0	0
Business Unit of PSE&G and Chief Nuclear Officer(7)	1993	0	0	0	0	0
Robert J. Dougherty, Jr.	1995	322,759	(5)	2,500	70,368	4,269
Vice President of	1994	273,946	72,027	1,800	26,895	4,227
Enterprise and President of Enterprise Ventures and Services Corporation	1993	259,004	65,703	2,000	5,104	6,341
Robert C. Murray	1995	318,775	25,000(5)(8)	2,000	70,368	5,169
Vice President and	1994	303,832	152,621(8)	1,800	26,895	4,944
Chief Financial Officer of Enterprise	1993	288,889	154,032(8)	2,000	3,190	7,264

(1) Amount awarded in given year was earned under Management Incentive Compensation Plan (MICP) and determined in following year with respect to the given year based on individual performance and financial and operating performance of Enterprise and PSE&G, including comparison to other companies. Award is accounted for as market-priced phantom stock with dividend reinvestment at 95% of market price, with payment made over three years beginning in second year following grant.

(2) Granted under Long-Term Incentive Plan (LTIP) in tandem with equal number of performance units and dividend equivalents which may provide cash payments, dependent upon future financial performance of Enterprise in comparison to other companies and dividend payments by Enterprise, to assist officers in exercising options granted. The grant is made at the beginning of a three-year performance period and cash payment of the value of such performance units and dividend equivalents is made following such period in proportion to the options, if any, exercised at such time.

849900366

(3) Amount paid in proportion to options exercised, if any, based on value of previously granted performance units and dividend equivalents, each as measured during three-year period ending the year prior to the year in which payment is made.

(4) Includes employer contribution to Thrift and Tax-Deferred Savings Plan and value of 5% discount on phantom stock dividend reinvestment under MICP:

	Ferland		Codey		Eliason		Dougherty		Murray	
	Thrift ($)	MICP ($)	Thrift ($)	MICP ($)	Thrift ($)	MICP ($)	Thrift ($)	MICP ($)	Thrift ($)	MICP ($)
1995	3,752	2,383	4,502	1,254	1,795	0	3,754	515	4,502	667
1994	3,751	1,877	4,197	1,154	0	0	3,752	475	4,504	440
1993	5,900	1,778	5,896	1,085	0	0	5,907	434	7,078	186

In addition, for Mr. Ferland and Mr. Eliason, 1995 amounts include $2,546 and $1,447, respectively, representing interest on compensation deferred under PSE&G's Deferred Compensation Plan in excess of 120% of the applicable federal long-term rate as prescribed under Section 1274(d) of the Internal Revenue Code. Under PSE&G's Deferred Compensation Plan, interest is paid at prime rate plus 1/2%, adjusted quarterly.

(5) The 1995 MICP award amount has not yet been determined. The target award is 40% of salary for Mr. Ferland, 30% for Messrs. Codey, Eliason and Dougherty and 25% for Mr. Murray. The target award is adjusted to reflect Enterprise's return on capital, PSE&G's comparative electric and gas costs and individual performance.

(6) Amount paid pursuant to Mr. Eliason's employment agreement.

(7) Mr. Eliason commenced employment September 26, 1994.

(8) 1995 amount paid pursuant to Mr. Murray's employment agreement. 1994 and 1993 amounts include $50,000 and $75,000, respectively, paid pursuant to Mr. Murray's employment agreement.

849900367

OPTION GRANTS IN LAST FISCAL YEAR (1995)

Name	Individual Grants: Number of Securities Underlying Options Granted(1)	% of Total Options Granted to Employees in Fiscal Year	Exercise or Base Price ($/Sh)	Expiration Date	Potential Realizable Value at Assumed Annual Rates of Stock Price Appreciation for Option Term(2): 0%($)	5%($)	10%($)
E. James Ferland	5,800	16.6	26.625	1/04/05	0	97,117	246,114
Lawrence R. Codey	2,800	8.0	26.625	1/04/05	0	46,884	118,874
Leon R. Eliason	2,500		26.625	1/04/05	0	41,861	106,083
	1,800	(15.7)	31.375	1/04/05	0	35,517	90,007
	1,200		30.500	1/04/05	0	23,018	58,331
Robert J. Dougherty, Jr.	2,000	(7.1)	26.625	1/04/05	0	33,489	84,867
	500		28.125	3/02/05	0	8,844	22,412
Robert C. Murray	2,000	5.7	26.625	1/04/05	0	33,489	84,867

(1) Granted under LTIP in tandem with equal number of performance units and dividend equivalents which may provide cash payments, dependent on future financial performance of Enterprise in comparison to other companies and dividend payments by Enterprise, to assist individuals in exercising options, with exercisability commencing January 1, 1998, except with respect to Mr. Eliason, for whom exercisability commences January 1, 1996, 1997 and 1998, respectively, for each of his three grants. Cash payment is made, based on the value, if any, of performance units awarded and dividend equivalents accrued, if any, as measured during the three-year period ending the year prior to the year in which payment, if any, is made, only if the specified performance level is achieved, dividend equivalents have accrued and options are exercised.

(2) All options reported have a ten-year term, as noted. Amounts shown represent hypothetical future values at such term based upon hypothetical price appreciation of Enterprise Common Stock and may not necessarily be realized. Actual values which may be realized, if any, upon any exercise of such options, will be based on the market price of Enterprise Common Stock at the time of any such exercise and thus are dependent upon future performance of Enterprise Common Stock.

AGGREGATED OPTION EXERCISES IN LAST FISCAL YEAR (1995) AND FISCAL YEAR-END OPTION VALUES (12/31/95)

Name	Shares Acquired on Exercise (#)(1)	Value Realized ($)(2)	Number of Unexercised Options At Fy-End(#)(1): Exercisable (#)	Unexercisable (#)	Value of Unexercised In-The-Money Options At Fy-End($)(3): Exercisable ($)	Unexercisable ($)
E. James Ferland	5,600	0	0	17,000	0	23,925
Lawrence R. Codey	2,700	0	700	8,100	4,463	11,550
Leon R. Eliason	600	72	0	5,500	0	10,150
Robert J Dougherty	1,600	0	0	6,300	0	9,500
Robert C. Murray	1,600	192	0	5,800	0	8,250

(1) Does not reflect any options granted and/or exercised after year-end (12/31/95). The net effect of any such grants and exercises is reflected in the table appearing under Security Ownership of Directors and Management.

(2) Represents difference between exercise price and market price of Enterprise Common Stock on date of exercise.

(3) Represents difference between market price of Enterprise Common Stock and the respective exercise prices of the options at fiscal year-end (12/31/95). Such amounts may not necessarily be realized. Actual values which may be realized, if any, upon any exercise of such options will be based on the market price of Enterprise Common Stock at the time of any such exercise and thus are dependent upon future performance of Enterprise Common Stock.

849900368

Employment Contracts and Arrangements

Employment agreements were entered into with Messrs. Ferland, Eliason and Murray at the time of their employment. For Mr. Ferland, the remaining applicable provisions of the agreement provide for additional credited service for pension purposes in the amount of 22 years. The principal remaining applicable terms of the agreement with Mr. Eliason provide for payment of severance in the amount of one year's salary, if discharged without cause during his first five years of employment which began in September 1994, for lump sum cash payments of $100,000 in 1996, $65,000 in 1997 and $35,000 in 1998 to align Mr. Eliason with MICP payments for other executive officers, and additional years of credited service for pension purposes for allied work experience of 19 years after completion of three years of service, and up to 29 years after completion of ten years of service. The principal remaining applicable terms of the agreement with Mr. Murray provide for payment of severance in the amount of one year's salary, if discharged without cause during his first five years of employment, which began in January 1992, and additional years of credited service for pension purposes for allied work experience of five years after completion of five years of service, and up to fifteen years after completion of ten years of service.

Compensation Committee Interlocks and Insider Participation

PSE&G does not have a compensation committee. Decisions regarding compensation of PSE&G's executive officers are made by the Organization and Compensation Committee of Enterprise. Hence, during 1995 the PSE&G Board of Directors did not have, and no officer, employee or former officer of PSE&G participated in any deliberations of such Board, concerning executive officer compensation.

Compensation of Directors and Certain Business Relationships

A director who is not an officer of Enterprise or its subsidiaries and affiliates, including PSE&G, is paid an annual retainer of $22,000 and a fee of $1,200 for attendance at any Board or committee meeting, inspection trip, conference or other similar activity relating to Enterprise, PSE&G or EDHI. Each of the directors of PSE&G is also a director of Enterprise. No additional retainer is paid for service as a director of PSE&G. Fifty percent of the annual retainer is paid in Enterprise Common Stock.

Enterprise also maintains a Stock Plan for Outside Directors pursuant to which directors who are not employees of Enterprise or its subsidiaries receive 300 shares of restricted stock for each year of service as a director. Such shares held by each non-employee director are included in the table above under the heading Security Ownership of Directors and Management. Prior to 1996, Enterprise had maintained a retirement plan for non-employee directors which provided an annual benefit for life equal to the annual Board retainer in effect at the time the director's service terminated if the director retired from the Board after 10 years of service. Participation of all current directors under that plan was terminated December 31, 1995. As of January 1, 1996, current non-employee directors with ten years or more of service received an award of shares of restricted stock equal to the present value of the retirement benefit under this prior retirement plan, while those with less than ten years of service received an award of 300 shares per year of service. The number of shares awarded were as follows: Mr. Gilmartin: 900; Mr. Lerner: 3,768; Mr. Pitney: 5,467; and Dr. Remick: 300. No current director remains eligible to receive a benefit under the prior retirement plan.

The restrictions on the stock granted under the Stock Plan for Outside Directors provide that the shares are subject to forfeiture if the director leaves service at any time prior to the Annual Meeting of Stockholders following his or her 70th birthday. This restriction would be deemed to have been satisfied if the director's service were terminated if Enterprise were to merge with another corporation and not be the surviving corporation or if the director were to die in office. Enterprise also has the ability to waive this restriction for good cause shown. Restricted stock may not be sold or otherwise transferred prior to the lapse of the restrictions. Dividends on shares held subject to restrictions are paid directly to the director, and the director has the right to vote the shares.

849900369

Compensation Pursuant to Pension Plans

PENSION PLAN TABLE

Average Final Compensation	Length of Service			
	30 Years	35 Years	40 Years	45 Years
$ 300,000	$180,000	$195,000	$210,000	$225,000
400,000	240,000	260,000	280,000	300,000
500,000	300,000	325,000	350,000	375,000
600,000	360,000	390,000	420,000	450,000
700,000	420,000	455,000	490,000	525,000
800,000	480,000	520,000	560,000	600,000
900,000	540,000	585,000	630,000	675,000
1,000,000	600,000	650,000	700,000	750,000

The above table illustrates annual retirement benefits expressed in terms of single life annuities based on the average final compensation and service shown and retirement at age 65. A person's annual retirement benefit is based upon a percentage that is equal to years of credited service plus 30, but not more than 75%, times average final compensation at the earlier of retirement, attainment of age 65 or death. These amounts are reduced by Social Security benefits and certain retirement benefits from other employers. Pensions in the form of joint and survivor annuities are also available.

Average final compensation, for purposes of retirement benefits of executive officers, is generally equivalent to the average of the aggregate of the salary and bonus amounts reported in the Summary Compensation Table above under 'Annual Compensation' for the five years preceding retirement, not to exceed 120% of the average annual salary for such five year period. Messrs. Ferland, Codey, Eliason, Dougherty and Murray will have accrued approximately 48, 41, 44, 48 and 39 years of credited service, respectively, as of age 65.

Item 12. Security Ownership of Certain Beneficial Owners and Management

Enterprise

The information required by Item 12 of Form 10-K with respect to directors and executive officers is set forth under the heading 'Security Ownership of Directors and Management' in Enterprise's definitive Proxy Statement for the Annual Meeting of Stockholders to be held April 16, 1996 which definitive Proxy Statement is expected to be filed with the Securities and Exchange Commission on or about March 1, 1996 and such information set forth under such heading is incorporated herein by this reference thereto.

PSE&G

All of PSE&G's 132,450,344 outstanding shares of Common Stock are owned beneficially and of record by PSE&G's parent, Enterprise, 80 Park Plaza, P.O. Box 1171, Newark, New Jersey.

849900370

The following table sets forth beneficial ownership of Enterprise Common Stock, including options, by the directors and executive officers named below as of January 31, 1995. None of these amounts exceed 1% of the Enterprise Common Stock outstanding at such date. No director or executive officer owns any PSE&G Preferred Stock of any class.

Name	Amount and Nature of Beneficial Ownership
Lawrence R. Codey	21,611(1)
Robert J. Dougherty, Jr	13,588(2)
Leon R. Eliason	8,600(3)
E. James Ferland	63,479(4)
Raymond V. Gilmartin	2,347
Irwin Lerner	8,071
Robert C. Murray	13,752(5)
James C. Pitney	8,864
Forrest J. Remick	676
All directors and executive officers (12) as a group	157,582(6)

(1) Includes options to purchase 11,800 additional shares, 3,500 of which are currently exercisable.

(2) Includes the equivalent of 686 shares held under Thrift and Tax-Deferred Savings Plan. Include options to purchase 8,900 additional shares, 2,000 of which are currently exercisable.

(3) Includes options to purchase 8,000 additional shares, 1,200 of which are currently exercisable.

(4) Includes the equivalent of 9,432 shares held under Thrift and Tax-Deferred Savings Plan. Includes options to purchase 23,500 additional shares, 5,800 of which are currently exercisable.

(5) Includes the equivalent of 752 shares held under Thrift and Tax-Deferred Savings Plan. Includes options to purchase 7,800 additional shares, 2,000 of which are currently exercisable.

(6) Includes the equivalent of 10,870 shares held under Thrift and Tax-Deferred Savings Plan. Includes options to purchase 71,700 additional shares, of which 18,700 are currently exercisable.

Item 13. Certain Relationships and Related Transactions

Enterprise

The information required by Item 13 of Form 10-K is set forth under the heading "Executive Compensation" in Enterprise's definitive Proxy Statement for the Annual Meeting of Stockholders to be held April 16, 1996, which definitive Proxy Statement is expected to be filed with the Securities and Exchange Commission on or about March 1, 1996. Such information set forth under such heading is incorporated herein by this reference thereto.

PSE&G

None.

849900371

PART IV

Item 14. Exhibits, Financial Statement Schedules and Reports on Form 8-K

(a) Financial Statements:

(1) Enterprise Consolidated Statements of Income for the years ended December 31, 1995, 1994, and 1993, on page 59.

Enterprise Consolidated Balance Sheets for the years ended December 31, 1995 and 1994, on pages 60 and 61.

Enterprise Consolidated Statements of Cash Flows for the years ended December 31, 1995, 1994, and 1993 on page 62.

Enterprise Statements of Retained Earnings for the years ended December 31, 1995, 1994, and 1993 on page 63.

Enterprise Notes to Consolidated Financial Statements on pages 70 through 101.

(2) PSE&G Consolidated Statements of Income for the years ended December 31, 1995, 1994, and 1993, on page 65.

PSE&G Consolidated Balance Sheets for the years ended December 31, 1995 and 1994, on pages 66 and 67.

PSE&G Consolidated Statements of Cash Flows for the years ended December 31, 1995, 1994, and 1993 on page 68.

PSE&G Statements of Retained Earnings for the years ended December 31, 1995, 1994, and 1993 on page 69.

PSE&G Notes to Consolidated Financial Statements on pages 102 through 105.

(b) The following documents are filed as a part of this report:

(1) Enterprise Financial Statement Schedules:

Schedule II—Valuation and Qualifying Accounts for each of the three years in the period ended December 31, 1995 (page 117).

(2) PSE&G Financial Statement Schedules:

Schedule II—Valuation and Qualifying Accounts for each of the three years in the period ended December 31, 1995 (page 118).

Schedules other than those listed above are omitted for the reason that they are not required or are not applicable, or the required information is shown in the consolidated financial statements or notes thereto.

(c) The following exhibits are filed herewith:

(1) Enterprise:

10a(18) —Directors Stock Plan
10a(19) —Mid Career Hire Supplemental Retirement Income Plan
10a(20) —Retirement Income Reinstatement Plan
12 —Computation of Ratios of Earnings to Fixed Charges.
21 —Subsidiaries of Registrant.
23 —Independent Auditors' Consent.
27 —Financial Data Schedule

(See Exhibit Index on pages 121 through 128).

849900372

(2) PSE&G:

10a(18) —Directors Stock Plan
10a(19) —Mid Career Hire Supplemental Retirement Income Plan
10a(20) —Retirement Income Reinstatement Plan
12(a) —Computation of Ratios of Earnings to Fixed Charges.
12(b) —Computation of Ratios of Earnings to Fixed Charges Plus Preferred Stock Dividend Requirements.
23 —Independent Auditors' Consent.
27 —Financial Data Schedule

(See Exhibit Index on page 121 and pages 129 through 135).

(d) The following reports on Form 8-K were filed by the registrant(s) named below during the last quarter of 1995 and the 1996 period covered by this report under Item 5:

Registrant	Date of Report	Item Reported
Enterprise and PSE&G	January 19, 1996	Item 5. Other Events (Alternative Rate Plan and change in credit agency rating)
Enterprise and PSE&G	December 12, 1995	Item 5. (Nuclear Operations—Salem and Energy Development Corporation Divestiture)
Enterprise and PSE&G	October 17, 1995	Item 5. Other Events (Nuclear Operations—Salem)

849900373

SCHEDULE II

PUBLIC SERVICE ENTERPRISE GROUP INCORPORATED

SCHEDULE II—VALUATION AND QUALIFYING ACCCOUNTS

Years Ended December 31, 1995—December 31, 1993

Column A	Column B	Column C		Column D	Column E
		Additions			
Description	Balance at beginning of period	Charged to cost and expenses	Charged to other accounts-described	Deductions-describe	Balance at end of period
		(Thousands of Dollars)			
1995					
Allowance for Doubtful Accounts	$40,915	$32,555	$ —	$35,829(A)	$37,641
Discount on Property Abandonments ...	$11,423	$ —	$ —	$ 3,957(B)	$ 7,466
Inventory Valuation Reserve	$18,200	$ 1,900	$ —	$ —	$20,100
Valuation Allowances	$40,368	$ 4,241	$ —	$15,079(C)	$29,530
1994					
Allowance for Doubtful Accounts	$27,932	$50,140	$ —	$37,157(A)	$40,915
Discount on Property Abandonments ...	$16,263	$ —	$ —	$ 4,840(B)	$11,423
Inventory Valuation Reserve	$ 8,525	$ 9,675	$ —	$ —	$18,200
Valuation Allowances	$34,703	$ 6,827	$4,500	$ 5,662	$40,368
1993					
Allowance for Doubtful Accounts	$24,059	$31,625	$ —	$27,752(A)	$27,932
Discount on Property Abandonments ...	$21,951	$ —	$ —	$ 5,688(B)	$16,263
Inventory Valuation Reserve	$ —	$ 8,525	$ —	$ —	$ 8,525
Valuation Allowances	$21,509	$17,887	$ —	$ 4,693	$34,703

NOTES:

(A) Accounts Receivable/Investments written off.

(B) Amortization of discount to income.

(C) Assets Sold

849900374

SCHEDULE II

PUBLIC SERVICE ELECTRIC AND GAS COMPANY

SCHEDULE II—VALUATION AND QUALIFYING ACCCOUNTS

Years Ended December 31, 1995—December 31, 1993

Column A	Column B	Column C		Column D	Column E
		Additions			
Description	Balance at beginning of period	Charged to cost and expenses	Charged to other accounts—described	Deductions—describe	Balance at end of period
		(Thousands of Dollars)			
1995					
Allowance for Doubtful Accounts ...	$40,915	$ 32,555	$—	$35,829(A)	$37,641
Discount on Property Abandonments.	$11,423	$ —	$—	$ 3,957(B)	$ 7,466
Inventory Valuation Reserve.....	$18,200	$ 1,900	$—	$ —	$20,100
1994					
Allowance for Doubtful Accounts ...	$27,932	$ 50,140	$—	$37,157(A)	$40,915
Discount on Property Abandonments.	$16,263	$ —	$—	$ 4,840(B)	$11,423
Inventory Valuation Reserve.....	$ 8,525	$ 9,675	$—	$ —	$18,200
1993					
Allowance for Doubtful Accounts ...	$24,059	$ 31,625	$—	$27,752(A)	$27,932
Discount on Property Abandonments.	$21,951	$ —	$—	$ 5,688(B)	$16,263
Inventory Valuation Reserve.....	$ —	$ 8,525	$—	$ —	$ 8,525

NOTES:

(A) Accounts Receivable/Investments written off.

(B) Amortization of discount to income.

849900375

SIGNATURES

Pursuant to the requirements of Section 13 or 15(d) of the Securities Exchange Act of 1934, the registrant has duly caused this report to be signed on its behalf by the undersigned, thereunto duly authorized.

PUBLIC SERVICE ENTERPRISE GROUP INCORPORATED

By E. JAMES FERLAND

E. James Ferland
Chairman of the Board, President and Chief Executive Officer

Date: February 22, 1996

Pursuant to the requirements of the Securities Exchange Act of 1934, this report has been signed below by the following persons on behalf of the registrant and in the capacities and on the dates indicated.

Signature	Title	Date
E. JAMES FERLAND **E. James Ferland**	Chairman of the Board, President and Chief Executive Officer and Director (Principal Executive Officer)	February 22, 1996
ROBERT C. MURRAY **Robert C. Murray**	Vice President and Chief Financial Officer (Principal Financial Officer)	February 22, 1996
PATRICIA A. RADO **Patricia A. Rado**	Vice President and Controller (Principal Accounting Officer)	February 22, 1996
LAWRENCE R. CODEY **Lawrence R. Codey**	Director	February 22, 1996
ERNEST H. DREW **Ernest H. Drew**	Director	February 22, 1996
T. J. DERMOT DUNPHY **T. J. Dermot Dunphy**	Director	February 22, 1996
RAYMOND V. GILMARTIN **Raymond V. Gilmartin**	Director	February 22, 1996
IRWIN LERNER **Irwin Lerner**	Director	February 22, 1996
MARILYN M. PFALTZ **Marilyn M. Pfaltz**	Director	February 22, 1996
JAMES C. PITNEY **James C. Pitney**	Director	February 22, 1996
FORREST J. REMICK **Forrest J. Remick**	Director	February 22, 1996
RICHARD J. SWIFT **Richard J. Swift**	Director	February 22, 1996
JOSH S. WESTON **Josh S. Weston**	Director	February 22, 1996

849900376

SIGNATURES

Pursuant to the requirements of Section 13 or 15(d) of the Securities Exchange Act of 1934, the registrant has duly caused this report to be signed on its behalf by the undersigned, thereunto duly authorized.

PUBLIC SERVICE ELECTRIC AND GAS COMPANY

By E. JAMES FERLAND

E. James Ferland
Chairman of the Board and
Chief Executive Officer

Date: February 22, 1996

Pursuant to the requirements of the Securities Exchange Act of 1934, this report has been signed below by the following persons on behalf of the registrant and in the capacities and on the dates indicated.

Signature	Title	Date
E. JAMES FERLAND **E. James Ferland**	Chairman of the Board and Chief Executive Officer and Director (Principal Executive Officer)	February 22, 1996
ROBERT C. MURRAY **Robert C. Murray**	Senior Vice President and Chief Financial Officer (Principal Financial Officer)	February 22, 1996
PATRICIA A. RADO **Patricia A. Rado**	Vice President and Controller (Principal Accounting Officer)	February 22, 1996
LAWRENCE R. CODEY **Lawrence R. Codey**	Director	February 22, 1996
RAYMOND V. GILMARTIN **Raymond V. Gilmartin**	Director	February 22, 1996
IRWIN LERNER **Irwin Lerner**	Director	February 22, 1996
JAMES C. PITNEY **James C. Pitney**	Director	February 22, 1996
FORREST J. REMICK **Forrest J. Remick**	Director	February 22, 1996

849900377

EXHIBIT INDEX

Certain Exhibits previously filed with the Commission and the appropriate securities exchanges are indicated as set forth below. Such Exhibits are not being refiled, but are included because inclusion is desirable for convenient reference.

(a) Filed by PSE&G with Form 8-A under the Securities Exchange Act of 1934, on the respective dates indicated, File No. 1-973.

(b) Filed by PSE&G with Form 8-K under the Securities Exchange Act of 1934, on the respective dates indicated, File No. 1-973.

(c) Filed by PSE&G with Form 10-K under the Securities Exchange Act of 1934, on the respective dates indicated, File No. 1-973.

(d) Filed by PSE&G with Form 10-Q under the Securities Exchange Act of 1934, on the respective dates indicated, File No. 1-973.

(e) Filed by Enterprise with Form 10-K under the Securities Exchange Act of 1934, on the respective dates indicated, File No. 1-9120.

(f) Filed with registration statement of PSE&G under the Securities Exchange Act of 1934, File No. 1-973, effective July 1, 1935, relating to the registration of various issues of securities.

(g) Filed with registration statement of PSE&G under the Securities Act of 1933, No. 2-4995, effective May 20, 1942, relating to the issuance of $15,000,000 First and Refunding Mortgage Bonds, 3% Series due 1972.

(h) Filed with registration statement of PSE&G under the Securities Act of 1933, No. 2-7568, effective July 1, 1948, relating to the proposed issuance of 200,000 shares of Cumulative Preferred Stock.

(i) Filed with registration statement of PSE&G under the Securities Act of 1933, No. 2-8381, effective April 18, 1950, relating to the issuance of $26,000,000 First and Refunding Mortgage Bonds, 2¾% Series due 1980.

(j) Filed with registration statement of PSE&G under the Securities Act of 1933, No. 2-12906, effective December 4, 1956, relating to the issuance of 1,000,000 shares of Common Stock.

(k) Filed with registration statement of PSE&G under the Securities Act of 1933, No. 2-59675, effective September 1, 1977, relating to the issuance of $60,000,000 First and Refunding Mortgage Bonds, 8⅛% Series I due 2007.

(l) Filed with registration statement of PSE&G under the Securities Act of 1933, No. 2-60925, effective March 30, 1978, relating to the issuance of 750,000 shares of Common Stock through an Employee Stock Purchase Plan.

(m) Filed with registration statement of PSE&G under the Securities Act of 1933, No. 2-65521, effective October 10, 1979, relating to the issuance of 3,000,000 shares of Common Stock.

(n) Filed with registration statement of PSE&G under the Securities Act of 1933, No. 2-74018, filed on June 16, 1982, relating to the Thrift Plan of PSE&G.

(o) Filed with registration statement of Public Service Enterprise Group Incorporated under the Securities Act of 1933, No. 33-2935 filed January 28, 1986, relating to PSE&G's plan to form a holding company as part of a corporate restructuring.

(p) Filed with registration statement of PSE&G under the Securities Act of 1933, No. 33-13209 filed April 9, 1987, relating to the registration of $575,000,000 First and Refunding Mortgage Bonds pursuant to Rule 415.

849900378

ENTERPRISE

Exhibit Number					
This Filing	Previous Filing				
	Commission		Exchanges		
3a	*(o)*	*3a*	*(o)*	3a	Certificate of Incorporation Public Service Enterprise Group Incorporated
3b	*(e)*	*3b*	*(e)*	3b 4/11/88	Copy of By-Laws of Public Service Enterprise Group Incorporated, as in effect May 1,1987
3c	*(e)*	*3c*	*(e)*	3c 4/11/88	Certificate of Amendment of Certificate of Incorporation of Public Service Enterprise Group Incorporated, effective April 23, 1987
4a(1)	*(f)*	*B-1*	*(c)*	4b(1) 2/18/81	Indenture between PSE&G and Fidelity Union Trust Company, (now First Fidelity Bank, National Association), as Trustee, dated August 1, 1924, securing First and Refunding Mortgage Bonds Indentures between PSE&G and First Fidelity Bank, National Association, as Trustee, supplemental to Exhibit 4a(1), dated as follows:
4a(2)	*(i)*	*7(1a)*	*(c)*	4b(2) 2/18/81	April 1, 1927
4a(3)	*(k)*	*2b(3)*	*(c)*	4b(3) 2/18/81	June 1, 1937
4a(4)	*(k)*	*2b(4)*	*(c)*	4b(4) 2/18/81	July 1, 1937
4a(5)	*(k)*	*2b(5)*	*(c)*	4b(5) 2/18/81	December 19, 1939
4a(6)	*(g)*	*B-10*	*(c)*	4b(6) 2/18/81	March 1, 1942
4a(7)	*(k)*	*2b(7)*	*(c)*	4b(7) 2/18/81	June 1, 1949
4a(8)	*(k)*	*2b(8)*	*(c)*	4b(8) 2/18/81	May 1, 1950
4a(9)	*(k)*	*2b(9)*	*(c)*	4b(9) 2/18/81	October 1, 1953
4a(10)	*(k)*	*2b(10)*	*(c)*	4b(10) 2/18/81	May 1, 1954
4a(11)	*(j)*	*4b(16)*	*(c)*	4b(11) 2/18/81	November 1, 1956
4a(12)	*(k)*	*2b(12)*	*(c)*	4b(12) 2/18/81	September 1, 1957
4a(13)	*(k)*	*2b(13)*	*(c)*	4b(13) 2/18/81	August 1, 1958
4a(14)	*(k)*	*2b(14)*	*(c)*	4b(14) 2/18/81	June 1, 1959

849900379

Exhibit Number					
This Filing	Previous Filing				
	Commission		Exchanges		
4a(15)	*(k)*	2b(15)	*(c)*	4b(15) 2/18/81	September 1, 1960
4a(16)	*(k)*	2b(16)	*(c)*	4b(16) 2/18/81	August 1, 1962
4a(17)	*(k)*	2b(17)	*(c)*	4b(17) 2/18/81	June 1, 1963
4a(18)	*(k)*	2b(18)	*(c)*	4b(18) 2/18/81	September 1, 1964
4a(19)	*(k)*	2b(19)	*(c)*	4b(19) 2/18/81	September 1, 1965
4a(20)	*(k)*	2b(20)	*(c)*	4b(20) 2/18/81	June 1, 1967
4a(21)	*(k)*	2b(21)	*(c)*	4b(21) 2/18/81	June 1, 1968
4a(22)	*(k)*	2b(22)	*(c)*	4b(22) 2/18/81	April 1, 1969
4a(23)	*(k)*	2b(23)	*(c)*	4b(23) 2/18/81	March 1, 1970
4a(24)	*(k)*	2b(24)	*(c)*	4b(24) 2/18/81	May 15, 1971
4a(25)	*(k)*	2b(25)	*(c)*	4b(25) 2/18/81	November 15, 1971
4a(26)	*(k)*	2b(26)	*(c)*	4b(26) 2/18/81	April 1, 1972
4a(27)	*(a)*	2 3/29/74	*(c)*	4b(27) 2/18/81	March 1, 1974
4a(28)	*(a)*	2 10/11/74	*(c)*	4b(28) 2/18/81	October 1, 1974
4a(29)	*(a)*	2 4/6/76	*(c)*	4b(29) 2/18/81	April 1, 1976
4a(30)	*(a)*	2 9/16/76	*(c)*	4b(30) 2/18/81	September 1, 1976
4a(31)	*(k)*	2b(31)	*(c)*	4b(31) 2/18/81	October 1, 1976
4a(32)	*(a)*	2 6/29/77	*(c)*	4b(32) 2/18/81	June 1, 1977
4a(33)	*(l)*	2b(33)	*(c)*	4b(33) 2/18/81	September 1, 1977
4a(34)	*(a)*	2 11/21/78	*(c)*	4b(34) 2/18/81	November 1, 1978
4a(35)	*(a)*	2 7/25/79	*(c)*	4b(35) 2/18/81	July 1, 1979

849900380

Exhibit Number					
This Filing	Previous Filing				
	Commission		Exchanges		
4a(36)	*(m)*	2d(36)	*(c)*	4b(36) 2/18/81	September 1, 1979 (No. 1)
4a(37)	*(m)*	2d(37)	*(c)*	4b(37) 2/18/81	September 1, 1979 (No. 2)
4a(38)	*(a)*	2 12/3/79	*(c)*	4b(38) 2/18/81	November 1, 1979
4a(39)	*(a)*	2 6/10/80	*(c)*	4b(39) 2/18/81	June 1, 1980
4a(40)	*(a)*	2 8/19/81	*(a)*	2 8/19/81	August 1, 1981
4a(41)	*(b)*	4e 4/29/82	*(b)*	4e 5/5/82	April 1, 1982
4a(42)	*(a)*	2 9/17/82	*(a)*	2 9/20/82	September 1, 1982
4a(43)	*(a)*	2 12/21/82	*(a)*	2 12/21/82	December 1, 1982
4a(44)	*(d)*	4(ii) 7/26/83	*(d)*	4(ii) 7/27/83	June 1, 1983
4a(45)	*(a)*	4 8/19/83	*(a)*	4 8/19/83	August 1, 1983
4a(46)	*(d)*	4(ii) 8/14/84	*(d)*	4(ii) 8/17/84	July 1, 1984
4a(47)	*(d)*	4(ii) 11/2/84	*(d)*	4(ii) 11/9/84	September 1, 1984
4a(48)	*(b)*	4(ii) 1/4/85	*(b)*	4(ii) 1/9/85	November 1, 1984 (No. 1)
4a(49)	*(b)*	4(ii) 1/4/85	*(b)*	4(ii) 1/9/85	November 1, 1984 (No. 2)
4a(50)	*(a)*	2 8/2/85	*(a)*	2 8/2/85	July 1, 1985
4a(51)	*(c)*	4a(51) 2/11/86	*(c)*	4a(51) 2/11/86	January 1, 1986
4a(52)	*(a)*	2 3/28/86	*(a)*	2 3/28/86	March 1, 1986
4a(53)	*(a)*	2(a) 5/1/86	*(a)*	2(a) 5/1/86	April 1, 1986 (No. 1)
4a(54)	*(a)*	2(b) 5/1/86	*(a)*	2(b) 5/1/86	April 1, 1986 (No. 2)
4a(55)	*(p)*	4a(55) 4/9/87	*(p)*	4a(55) 4/9/87	March 1, 1987
4a(56)	*(a)*	4 8/17/87	*(a)*	4 8/17/87	July 1, 1987 (No. 1)

849900381

Exhibit Number					
This Filing	Previous Filing				
	Commission		Exchanges		
4a(57)	*(d)*	4 11/13/87	*(d)*	4 11/20/87	July 1, 1987 (No. 2)
4a(58)	*(a)*	4 5/17/88	*(a)*	4 5/18/88	May 1, 1988
4a(59)	*(a)*	4 9/27/88	*(a)*	4 9/28/88	September 1, 1988
4a(60)	*(a)*	4 7/25/89	*(a)*	4 7/26/89	July 1, 1989
4a(61)	*(a)*	4 7/25/90	*(a)*	4 7/26/90	July 1, 1990 (No. 1)
4a(62)	*(a)*	4 7/25/90	*(a)*	4 7/26/90	July 1, 1990 (No. 2)
4a(63)	*(a)*	4 7/1/91	*(a)*	4 7/2/91	June 1, 1991 (No. 1)
4a(64)	*(a)*	4 7/1/91	*(a)*	4 7/2/91	June 1, 1991 (No. 2)
4a(65)	*(a)*	4 12/2/91	*(a)*	4 12/3/91	November 1, 1991 (No. 1)
4a(66)	*(a)*	4 12/2/91	*(a)*	4 12/3/91	November 1, 1991 (No. 2)
4a(67)	*(a)*	4 12/2/91	*(a)*	4 12/3/91	November 1, 1991 (No. 3)
4a(68)	*(a)*	4 2/27/92	*(a)*	4 2/28/92	February 1, 1992 (No. 1)
4a(69)	*(a)*	4 2/27/92	*(a)*	4 2/28/92	February 1, 1992 (No. 2)
4a(70)	*(a)*	4 6/17/92	*(a)*	4 6/11/92	June 1, 1992 (No. 1)
4a(71)	*(a)*	4 6/17/92	*(a)*	4 6/11/92	June 1, 1992 (No. 2)
4a(72)	*(a)*	4 6/17/92	*(a)*	4 6/11/92	June 1, 1992 (No. 3)
4a(73)	*(a)*	4 2/2/93	*(a)*	4 2/2/93	January 1, 1993 (No.1)
4a(74)	*(a)*	4 2/2/93	*(a)*	4 2/2/93	January 1, 1993 (No. 2)
4a(75)	*(a)*	4 3/17/93	*(a)*	4 3/18/93	March 1, 1993
4a(76)	*(b)*	4 5/27/93	*(a)*	4 5/28/93	May 1, 1993
4a(77)	*(a)*	4 5/25/93	*(a)*	4 5/25/93	May 1, 1993 (No. 2)

849900382

Exhibit Number					
This Filing	Previous Filing				
	Commission		Exchanges		
4a(78)	*(a)*	4 5/25/93	*(a)*	4 5/25/93	May 1, 1993 (No. 3)
4a(79)	*(b)*	4 12/1/93	*(b)*	4 12/1/93	July 1, 1993
4a(80)	*(a)*	4 8/3/93	*(a)*	4 8/3/93	August 1, 1993
4a(81)	*(b)*	4 12/1/93	*(b)*	4 12/1/93	September 1, 1993
4a(82)	*(b)*	4 12/1/93	*(b)*	4 12/1/93	September 1, 1993 (No. 2)
4a(83)	*(b)*	4 12/1/93	*(b)*	4 12/1/93	November 1, 1993
4a(84)	*(a)*	4 2/3/94	*(a)*	4 2/14/94	February 1, 1994
4a(85)	*(a)*	4 3/15/94	*(a)*	4 3/16/94	March 1, 1994 (No. 1)
4a(86)	*(a)*	4 3/15/94	*(a)*	4 3/16/94	March 1, 1994 (No. 2)
4a(87)	*(d)*	4 11/8/94	*(d)*	4 12/2/94	May 1, 1994
4a(88)	*(d)*	4 11/8/94	*(d)*	4 12/2/94	June 1, 1994
4a(89)	*(d)*	4 11/8/94	*(d)*	4 12/2/94	August 1, 1994
4a(90)	*(d)*	4 11/8/94	*(d)*	4 12/2/94	October 1, 1994 (No. 1)
4a(91)	*(d)*	4 11/8/94	*(d)*	4 12/2/94	October 1, 1994 (No. 2)
4a(92)	*(a)*	4 1/26/96	*(a)*	4 1/26/96	January 1, 1996 (No. 1)
4a(93)	*(a)*	4 1/26/96	*(a)*	4 1/26/96	January 1, 1996 (No. 2)
4b	*(h)*	7(12)	*(c)*	4c(1) 2/18/81	Indenture between PSE&G and Federal Trust Company, as Trustee (Midlantic National Bank, Successor Trustee) dated July 1, 1948, providing for 6% Debenture Bonds due 1998
4c	*(l)*	2c(8)	*(c)*	4c(8) 2/18/81	Indenture between PSE&G and The Chase Manhattan Bank (National Association), as Trustee, dated August 15, 1971, providing for 7¾% Debenture Bonds due 1996

849900383

Exhibit Number					
This Filing	Previous Filing				
	Commission		Exchanges		
4d	*(b)*	4 12/1/93	*(b)*	4 12/1/93	Indenture of Trust between PSE&G and The Chase Manhattan Bank (National Association), as Trustee, providing for Secured Medium-Term Notes dated July 1, 1993
4e(1)	*(c)*	2/23/95	*(c)*	2/23/95	Indenture between PSE&G and First Fidelity Bank, National Association, as Trustee, dated November 1, 1994, providing for Deferrable Interest Subordinated Debentures in Series
4e(2)	*(a)*	9/11/95	*(a)*	9/11/95	Supplemental Indenture between PSE&G and First Fidelity Bank, National Association, as Trustee, dated September 11, 1995 providing for Deferrable Interest Subordinated Debentures, Series B
9					Inapplicable
10a(1)	*(c)*	10c(1) 3/17/82	*(c)*	10c(1) 3/19/82	Directors' Deferred Compensation Plan
10a(2)	*(c)*	10c(2) 3/17/82	*(c)*	10c(2) 3/19/82	Officers' Deferred Compensation Plan
10a(3)	*(c)*	10c(3) 3/17/82	*(c)*	10c(3) 3/19/82	Supplemental Death Benefits Plan for officers
10a(4)	*(c)*	10c(4) 3/17/82	*(c)*	10c(4) 3/19/82	Description of additional retirement benefits for certain officers
10a(5)(i)	*(c)*	10b(5) 3/31/83	*(c)*	10b(5) 4/8/83	Limited Supplemental Death Benefits and Retirement Plan
10a(5)(ii)	*(c)*	10a(5)(ii) 2/25/94	*(c)*	10a(5)(ii) 3/1/94	Limited Supplemental Benefits Plan for Certain Employees
10a(6)(i)	*(c)*	10a(6) 3/10/87	*(c)*	10a(6) 4/16/87	Description of additional retirement benefits for certain officers
10a(6)(ii)	*(c)*	10a(6)(1) 3/30/90	*(c)*	10a(6)(1) 3/30/90	Description of additional retirement benefits for certain officers
10a(6)(iii)	*(c)*	10a(6)(2) 3/30/92	*(c)*	10a(6)(2) 4/27/92	Description of additional retirement benefits for a certain officer
10a(7)	*(o)*	10g	*(o)*	10g	Management Incentive Compensation Plan
10a(8)	*(c)*	10a(8) 3/30/89	*(c)*	10a(8) 4/18/89	Long-Term Incentive Plan
10a(9)	*(c)*	10a(9) 3/30/89	*(c)*	10a(9) 4/18/89	Public Service Enterprise Group Incorporated Pension Plan for Outside Directors
10a(10)	*(c)*	10a(11) 2/10/93	*(c)*	10a(11) 2/11/93	Letter Agreement with E. James Ferland dated April 16, 1986

849900384

Exhibit Number					
This Filing	Previous Filing				
	Commission		Exchanges		
10a(11)	*(c)*	10a(12) 2/10/93	*(c)*	10a(12) 2/11/93	Letter Agreement with Paul H. Way dated March 28, 1988
10a(12)	*(c)*	10a(13) 2/10/93	*(c)*	10a(13) 2/11/93	Letter Agreement with Thomas M. Crimmins, Jr. dated April 5, 1989
10a(13)	*(c)*	10a(15) 2/10/93	*(c)*	10a(15) 2/11/93	Letter Agreement with Robert C. Murray dated December 17, 1991
10a(14)	*(c)*	10a(14) 2/26/94	*(c)*	10a(14) 3/9/94	Letter Agreement with Patricia A. Rado dated March 24, 1993
10a(15)	*(c)*	10a(15) 2/23/95	*(c)*	10a(15) 2/23/95	Letter Agreement, as amended, with Leon R. Eliason dated September 14, 1994
10a(16)	*(d)*	10a(15) 8/14/95	*(d)*	10a(15) 8/14/95	Letter Agreement with Louis F. Storz dated July 7, 1995
10a(17)	*(d)*	10a(16) 8/14/95	*(d)*	10a(16) 8/14/95	Letter Agreement with Elbert C. Simpson dated May 31, 1995
10a(18)	*(d)*	10a(17) 11/14/95	*(d)*	10a(17) 11/14/95	Letter Agreement with Alfred C. Koeppe dated August 23, 1995
10a(19)					Directors' Stock Plan
10a(20)					Mid Career Hire Supplemental Retirement Plan
10a(21)					Retirement Income Reinstatement Plan
11					Inapplicable
12					Computation of Ratios of Earnings to Fixed Charges
13					Inapplicable
16					Inapplicable
18					Inapplicable
21					Subsidiaries of the Registrant
22					Inapplicable
23					Independent Auditors' Consent
24					Inapplicable
27					Financial Data Schedule
28					Inapplicable
99					Inapplicable

849900385

PSE&G

Exhibit Number					
This Filing	Previous Filing				
	Commission		Exchanges		
3a(1)	*(b)*	3a 8/28/86	*(b)*	3a 8/29/86	Restated Certificate of Incorporation of PSE&G, effective May 1, 1986
3a(2)	*(c)*	3a(2)	*(c)*	3a(2) 4/10/87	Certificate of Amendment of Certificate of Restated Certificate of Incorporation of PSE&G filed February 18, 1987 with the State of New Jersey adopting limitations of liability provisions in accordance with an amendment to New Jersey Business Corporation Act
3a(3)	*(a)*	3(a)3 2/3/94	*(a)*	3(a)3 2/14/94	Certificate of Amendment of Restated Certificate of Incorporation of PSE&G filed June 17, 1992 with the State of New Jersey, establishing the 7.44% Cumulative Preferred Stock ($100 Par) as a series of the Preferred Stock
3a(4)	*(a)*	3(a)4 2/3/94	*(a)*	3(a)4 2/14/94	Certificate of Amendment of Restated Certificate of Incorporation of PSE&G filed March 11, 1993 with the State of New Jersey, establishing the 5.97% Cumulative Preferred Stock ($100 Par) as a series of Preferred Stock
3a(5)	*(a)*	3(a)5 2/3/94	*(a)*	3(a)5 2/14/94	Certificate of Amendment of Restated Certificate of Incorporation of PSE&G filed January 27, 1994 with the State of New Jersey, establishing the 6.92% Cumulative Preferred Stock ($100 Par) and the 6.75% Cumulative Preferred Stock — $25 Par as series of Preferred Stock
3b					Copy of By-Laws of PSE&G, as in effect September 1, 1994
4a(1)	*(f)*	B-1	*(c)*	4b(1) 2/18/81	Indenture between PSE&G and Fidelity Union Trust Company, (now First Fidelity Bank, National Association), as Trustee, dated August 1, 1924, securing First and Refunding Mortgage Bond Indentures between PSE&G and First Fidelity Bank, National Association, as Trustee, supplemental to Exhibit 4a(1), dated as follows:
4a(2)	*(i)*	7(1a)	*(c)*	4b(2) 2/18/81	April 1, 1927
4a(3)	*(k)*	2b(3)	*(c)*	4b(3) 2/18/81	June 1, 1937
4a(4)	*(k)*	2b(4)	*(c)*	4b(4) 2/18/81	July 1, 1937
4a(5)	*(k)*	2b(5)	*(c)*	4b(5) 2/18/81	December 19, 1939

849900386

Exhibit Number					
This Filing	Previous Filing				
	Commission		Exchanges		
4a(6)	*(g)*	B-10	*(c)*	4b(6) 2/18/81	March 1, 1942
4a(7)	*(k)*	2b(7)	*(c)*	4b(7) 2/18/81	June 1, 1949
4a(8)	*(k)*	2b(8)	*(c)*	4b(8) 2/18/81	May 1, 1950
4a(9)	*(k)*	2b(9)	*(c)*	4b(9) 2/18/81	October 1, 1953
4a(10)	*(k)*	2b(10)	*(c)*	4b(10) 2/18/81	May 1, 1954
4a(11)	*(j)*	4b(16)	*(c)*	4b(11) 2/18/81	November 1, 1956
4a(12)	*(k)*	2b(12)	*(c)*	4b(12) 2/18/81	September 1, 1957
4a(13)	*(k)*	2b(13)	*(c)*	4b(13) 2/18/81	August 1, 1958
4a(14)	*(k)*	2b(14)	*(c)*	4b(14) 2/18/81	June 1, 1959
4a(15)	*(k)*	2b(15)	*(c)*	4b(15) 2/18/81	September 1, 1960
4a(16)	*(k)*	2b(16)	*(c)*	4b(16) 2/18/81	August 1, 1962
4a(17)	*(k)*	2b(17)	*(c)*	4b(17) 2/18/81	June 1, 1963
4a(18)	*(k)*	2b(18)	*(c)*	4b(18) 2/18/81	September 1, 1964
4a(19)	*(k)*	2b(19)	*(c)*	4b(19) 2/18/81	September 1, 1965
4a(20)	*(k)*	2b(20)	*(c)*	4b(20) 2/18/81	June 1, 1967
4a(21)	*(k)*	2b(21)	*(c)*	4b(21) 2/18/81	June 1, 1968
4a(22)	*(k)*	2b(22)	*(c)*	4b(22) 2/18/81	April 1, 1969
4a(23)	*(k)*	2b(23)	*(c)*	4b(23) 2/18/81	March 1, 1970
4a(24)	*(k)*	2b(24)	*(c)*	4b(24) 2/18/81	May 15, 1971
4a(25)	*(k)*	2b(25)	*(c)*	4b(25) 2/18/81	November 15, 1971
4a(26)	*(k)*	2b(26)	*(c)*	4b(26) 2/18/81	April 1, 1972

849900387

Exhibit Number					
This Filing	Previous Filing				
	Commission		Exchanges		
4a(27)	*(a)*	2 3/29/74	*(c)*	4b(27) 2/18/81	March 1, 1974
4a(28)	*(a)*	2 10/11/74	*(c)*	4b(28) 2/18/81	October 1, 1974
4a(29)	*(a)*	2 4/6/76	*(c)*	4b(29) 2/18/81	April 1, 1976
4a(30)	*(a)*	2 9/16/76	*(c)*	4b(30) 2/18/81	September 1, 1976
4a(31)	*(k)*	2b(31)	*(c)*	4b(31) 2/18/81	October 1, 1976
4a(32)	*(a)*	2 6/29/77	*(c)*	4b(32) 2/18/81	June 1, 1977
4a(33)	*(l)*	2b(33)	*(c)*	4b(33) 2/18/81	September 1, 1977
4a(34)	*(a)*	2 11/21/78	*(c)*	4b(34) 2/18/81	November 1, 1978
4a(35)	*(a)*	2 7/25/79	*(c)*	4b(35) 2/18/81	July 1, 1979
4a(36)	*(m)*	2d(36)	*(c)*	4b(36) 2/18/81	September 1, 1979 (No. 1)
4a(37)	*(m)*	2d(37)	*(c)*	4b(37) 2/18/81	September 1, 1979 (No. 2)
4a(38)	*(a)*	2 12/3/79	*(c)*	4b(38) 2/18/81	November 1, 1979
4a(39)	*(a)*	2 6/10/80	*(c)*	4b(39) 2/18/81	June 1, 1980
4a(40)	*(a)*	2 8/19/81	*(a)*	2 8/19/81	August 1, 1981
4a(41)	*(b)*	4e 4/29/82	*(b)*	4e 5/5/82	April 1, 1982
4a(42)	*(a)*	2 9/17/82	*(a)*	2 9/20/82	September 1, 1982
4a(43)	*(a)*	2 12/21/82	*(a)*	2 12/21/82	December 1, 1982
4a(44)	*(d)*	4(ii) 7/26/83	*(d)*	4(ii) 7/27/83	June 1, 1983
4a(45)	*(a)*	4 8/19/83	*(a)*	4 8/19/83	August 1, 1983
4a(46)	*(d)*	4(ii) 8/14/84	*(d)*	4(ii) 8/17/84	July 1, 1984
4a(47)	*(d)*	4(ii) 11/2/84	*(d)*	4(ii) 11/9/84	September 1, 1984

849900388

Exhibit Number					
This Filing	Previous Filing				
	Commission		Exchanges		
4a(48)	*(b)*	4(ii) 1/4/85	*(b)*	4(ii) 1/9/85	November 1, 1984 (No. 1)
4a(49)	*(b)*	4(ii) 1/4/85	*(b)*	4(ii) 1/9/85	November 1, 1984 (No. 2)
4a(50)	*(a)*	2 8/2/85	*(a)*	2 8/2/85	July 1, 1985
4a(51)	*(c)*	4a(51) 2/11/86	*(c)*	4a(51) 2/11/86	January 1, 1986
4a(52)	*(a)*	2 3/28/86	*(a)*	2 3/28/86	March 1, 1986
4a(53)	*(a)*	2(a) 5/1/86	*(a)*	2(a) 5/1/86	April 1, 1986 (No. 1)
4a(54)	*(a)*	2(b) 5/1/86	*(a)*	2(b) 5/1/86	April 1, 1986 (No. 2)
4a(55)	*(p)*	4a(55) 4/9/87	*(p)*	4a(55) 4/9/87	March 1, 1987
4a(56)	*(a)*	4 8/17/87	*(a)*	4 8/17/87	July 1, 1987 (No. 1)
4a(57)	*(d)*	4 11/13/87	*(d)*	4 11/20/87	July 1, 1987 (No. 2)
4a(58)	*(a)*	4 5/17/88	*(a)*	4 5/18/88	May 1, 1988
4a(59)	*(a)*	4 9/27/88	*(a)*	4 9/28/88	September 1, 1988
4a(60)	*(a)*	4 7/25/89	*(a)*	4 7/26/89	July 1, 1989
4a(61)	*(a)*	4 7/25/90	*(a)*	4 7/26/90	July 1, 1990 (No. 1)
4a(62)	*(a)*	4 7/25/90	*(a)*	4 7/26/90	July 1, 1990 (No. 2)
4a(63)	*(a)*	4 7/1/91	*(a)*	4 7/2/91	June 1, 1991 (No. 1)
4a(64)	*(a)*	4 7/1/91	*(a)*	4 7/2/91	June 1, 1991 (No. 2)
4a(65)	*(a)*	4 12/2/91	*(a)*	4 12/3/91	November 1, 1991 (No. 1)
4a(66)	*(a)*	4 12/2/91	*(a)*	4 12/3/91	November 1, 1991 (No. 2)
4a(67)	*(a)*	4 12/2/91	*(a)*	4 12/3/91	November 1, 1991 (No. 3)
4a(68)	*(a)*	4 2/27/92	*(a)*	4 2/28/92	February 1, 1992 (No. 1)

849900389

Exhibit Number					
This Filing	Previous Filing				
	Commission		Exchanges		
4a(69)	*(a)*	4 2/27/92	*(a)*	4 2/28/92	February 1, 1992 (No. 2)
4a(70)	*(a)*	4 6/17/92	*(a)*	4 6/11/92	June 1, 1992 (No. 1)
4a(71)	*(a)*	4 6/17/92	*(a)*	4 6/11/92	June 1, 1992 (No. 2)
4a(72)	*(a)*	4 6/17/92	*(a)*	4 6/11/92	June 1, 1992 (No. 3)
4a(73)	*(a)*	4 2/2/93	*(a)*	4 2/2/93	January 1, 1993 (No. 1)
4a(74)	*(a)*	4 2/2/93	*(a)*	4 2/2/93	January 1, 1993 (No. 2)
4a(75)	*(a)*	4 3/17/93	*(a)*	4 3/18/93	March 1, 1993
4a(76)	*(b)*	4 5/27/93	*(a)*	4 5/28/93	May 1, 1993
4a(77)	*(a)*	4 5/25/93	*(a)*	4 5/25/93	May 1, 1993 (No. 2)
4a(78)	*(a)*	4 5/25/93	*(a)*	4 5/25/93	May 1, 1993 (No. 3)
4a(79)	*(b)*	4 12/1/93	*(b)*	4 12/1/93	July 1, 1993
4a(80)	*(a)*	4 8/3/93	*(a)*	4 8/3/93	August 1, 1993
4a(81)	*(b)*	4 12/1/93	*(b)*	4 12/1/93	September 1, 1993
4a(82)	*(a)*	4 12/1/93	*(a)*	4 12/1/93	September 1, 1993 (No. 2)
4a(83)	*(b)*	4 12/1/93	*(b)*	4 12/1/93	November 1, 1993
4a(84)	*(a)*	4 2/3/94	*(a)*	4 2/14/94	February 1, 1994
4a(85)	*(a)*	4 3/15/94	*(a)*	4 3/16/94	March 1, 1994 (No. 1)
4a(86)	*(a)*	4 3/15/94	*(a)*	4 3/16/94	March 1, 1994 (No. 2)
4a(87)	*(d)*	4 11/8/94	*(d)*	4 12/2/94	May 1, 1994
4a(88)	*(d)*	4 11/8/94	*(d)*	4 12/2/94	June 1, 1994
4a(89)	*(d)*	4 11/8/94	*(d)*	4 12/2/94	August 1, 1994

849900390

Exhibit Number					
This Filing	Previous Filing				
	Commission		Exchanges		
4a(90)	*(d)*	4 11/8/94	*(d)*	4 12/2/94	October 1, 1994 (No. 1)
4a(91)	*(d)*	4 11/8/94	*(d)*	4 12/2/94	October 1, 1994 (No. 2)
4a(92)	*(a)*	4 1/26/96	*(a)*	4 1/26/96	January 1, 1996 (No.1)
4a(93)	*(a)*	4 1/26/96	*(a)*	4 1/26/96	January 1, 1996 (No.2)
4b(1)	*(h)*	7(12)	*(c)*	4c(1) 2/18/81	Indenture between PSE&G and Federal Trust Company, as Trustee, (Midlantic National Bank, Successor Trustee) dated July 1, 1948, providing for 6% Debenture Bonds due 1998
4b(2)	*(l)*	2c(8)	*(c)*	4c(8) 2/18/81	Indenture between PSE&G and the Chase Manhattan Bank (National Association), as Trustee, dated August 15, 1971, providing for 7¾% Debenture Bonds due 1996
4b(3)	*(b)*	4 12/1/93	*(b)*	4 12/1/93	Indenture of Trust between PSE&G and The Chase Manhattan Bank (National Association), as Trustee, providing for Secured Medium-Term Notes dated July 1, 1993
4b(4)	*(b)*	2/23/95	*(c)*	2/23/95	Indenture between PSE&G and First Fidelity Bank, National Association, as Trustee, dated November 1, 1994, providing for Deferrable Interest Subordinated Debentures in Series
4b(5)	*(a)*	4b(5)	*(a)*	4b(5)	Supplemental Indenture between PSE&G and First Fidelity Bank, National Association, as Trustee, dated September 11, 1995 providing for Deferrable Interest Subordinated Debentures in Series B
9					Inapplicable
10a(1)	*(c)*	10c(1) 3/17/82	*(c)*	10c(1) 3/19/82	Directors' Deferred Compensation Plan
10a(2)	*(c)*	10c(2) 3/17/82	*(c)*	10c(2) 3/19/82	Officers' Deferred Compensation Plan
		2/25/94		3/1/94	Supplemental Benefits Plan for Certain Employees
10a(3)	*(c)*	10c(3) 3/17/82	*(c)*	10c(3) 3/19/82	Supplemental Death Benefits Plan for officers
10a(4)	*(c)*	10c(4) 3/17/82	*(c)*	10c(4) 3/19/82	Description of additional retirement for certain officers
10a(5)(i)	*(c)*	10b(5) 3/31/83	*(c)*	10b(5) 4/8/83	Limited Supplemental Death Benefits and Retirement Plan
10a(5)(ii)	*(c)*	10a(5)(ii)	*(c)*	10a(5)(ii)	Limited Supplemental Benefits Plan for Certain Employees

849900391

Exhibit Number					
This Filing	Previous Filing				
	Commission		Exchanges		
10a(6)(i)	*(c)*	10a(6) 3/10/87	*(c)*	10a(6) 4/16/87	Description of additional retirement benefits for certain officers
10a(6)(ii)	*(c)*	10a(6)(1) 3/30/90	*(c)*	10a(6)(1) 3/30/90	Description of additional retirement benefit for certain officers.
10a(6)(iii)	*(c)*	10a(6)(2) 3/30/92	*(c)*	10a(6)(2) 4/27/92	Description of additional retirement benefit for a certain officer.
10a(7)	*(o)*	10g	*(o)*	10g	Management Incentive Compensation Plan
10a(8)	*(c)*	10a(8) 3/30/89	*(c)*	10a(8) 4/18/89	Long-Term Incentive Plan
10a(9)	*(c)*	10a(9) 3/30/89	*(c)*	10a(9) 4/18/89	Public Service Enterprise Group Incorporated Pension Plan for Outside Directors
10a(10)	*(c)*	10a(9) 2/10/93	*(c)*	10a(9) 2/11/93	Letter Agreement with E. James Ferland dated April 16, 1986
10a(11)	*(c)*	10a(10) 2/10/93	*(c)*	10a(10) 2/11/93	Letter Agreement with Thomas M. Crimmins, Jr. dated April 5, 1989
10a(12)	*(c)*	10a(12) 2/10/93	*(c)*	10a(12) 2/11/93	Letter Agreement with Robert C. Murray dated December 17, 1991
10a(13)	*(c)*	10a(13) 2/26/94	*(c)*	10a(13) 3/9/94	Letter Agreement with Patricia A. Rado dated March 24, 1993.
10a(14)	*(c)*	10a(14) 2/23/95	*(c)*	10a(14) 2/23/95	Letter Agreement, as amended, with Leon R. Eliason dated September 14, 1994
10a(15)	*(d)*	10a(15) 8/14/95	*(d)*	10a(15) 8/14/95	Letter Agreement with Louis F. Storz dated July 7, 1995
10a(16)	*(d)*	10a(16) 8/14/95	*(d)*	10a(16) 8/14/95	Letter Agreement with Elbert C. Simpson dated May 31, 1995
10a(17)	*(d)*	10a(17) 11/14/95	*(d)*	10a(17) 11/14/95	Letter Agreement with Alfred C. Koeppe dated August 23, 1995
10a(18)					Director Stock Plan
10a(19)					Mid Career Hire Supplemental Retirement Plan
10a(20)					Retirement Income Reinstatement Plan
11					Inapplicable
12(a)					Computation of Ratios of Earnings to Fixed Charges
12(b)					Computation of Ratios of Earnings to Fixed Charges Plus Preferred Stock Dividend Requirements
13					Inapplicable
16					Inapplicable
19					Inapplicable
21					Inapplicable
23					Independent Auditors' Consent
27					Financial Data Schedule

849900392

APPENDIX B

APPENDIX B

PRODUCTION REPORTS

Table B-1 - Gas Produced And Fuels Used For Gas Production

Table B-2 - Production Totals

Table B-3 - Chemicals Used In Gas Production

Table B-4 - Solid Fuels Used For Gas Production

Tables B-5(a) & B-5(b) - Liquid Fuel And Natural Gas Used For Gas Production

Tables B-6(a), B-6(b) & B-6(c) - Solid Fuel Used For Steam Generation

Table B-7 - Liquid Fuels Used In Steam Generation

Table B-1

Public Service Electric and Gas Company

Harrison Gas Plant

Gas Produced and Fuels Used for Gas Production

Year	Total Gas Produced (MCF)	Solid Fuels Used for Gas Production (Tons)	Liquid Fuels Used For Gas Production (BBL)	Natural Gas Used for Gas Production (MCF)
1926	427,223	7,965	32,987	--
1927	7,926,276	106,882	551,041	--
1928	8,787,381	119,458	617,643	--
1929	9,806,261	130,174	686,475	--
1930	10,244,412	97,644	942,202	--
1931	10,427,719	81,629	997,487	--
1932	10,758,297	65,030	1,088,383	--
1933	9,847,671	62,653	989,185	--
1934	10,329,076	66,542	1,047,866	--
1935	9,990,419	70,884	955,409	--
1936	10,411,703	83,701	1,113,532	--
1937	10,492,765	82,556	1,116,023	--
1938	10,671,071	82,835	1,131,980	--
1939	11,294,299	88,506	1,225,458	--
1940	12,498,333	99,164	1,312,058	--
1941	12,922,891	103,899	1,395,512	--
1942	13,791,207	111,797	1,480,661	--
1943	13,948,727	124,526	1,314,045	--
1944	15,001,751	126,455	1,421,180	--
1945	14,142,930	123,251	1,347,949	--

MCF-Thousands of Cubic Feet

-- : Indicates no Records of Produced or Used

Harrison Gas Plant

Gas Produced and Fuels Used for Gas Production

Year	Total Gas Produced (MCF)	Solid Fuels Used for Gas Production (Tons)	Liquid Fuels Used For Gas Production (BBL)	Natural Gas Used for Gas Production (MCF)
1946	13,088,139	115,160	1,331,412	--
1947	13,397,172	108,399	1,423,108	--
1948	13,890,557	121,310	1,418,495	--
1949	15,460,852	128,106	1,588,059	--
1950	16,529,087	132,621	1,642,545	--
1951	21,648,247	68,320	477,748	7,043,182
1952	23,771,430	61,371	354,092	6,965,887
1953	26,169,922	56,543	144,410	9,847,864
1954	30,754,926	61,704	189,270	13,034,215
1955	31,876,721	16,711	70,905	16,405,036
1956	31,424,372	9,003	18,379	17,289,920
1957	29,558,483	9,700	38,966	17,038,590
1958	31,900,134	18,547	41,941	18,016,218
1959	29,613,220	11,123	18,370	17,097,909
1960	30,345,793	9,755	13,059	17,785,132
1961	31,451,770	8,254	24,801	18,719,162
1962	29,665,998	2,366	30,819	17,624,813
1963	25,918,137	639	39,913	18,916,289
1964	18,582,250	160	5,838	8,502,115
1965	5,361,932	--	9,316	2,957,681
1966	--	--	--	--
1967	--	--	--	--
1968	459,089	--	154,824	--

MCF-Thousands of Cubic Feet

-- : Indicates no Records of Produced or Used

Harrison Gas Plant

Gas Produced and Fuels Used for Gas Production

Year	Total Gas Produced (MCF)	Solid Fuels Used for Gas Production (Tons)	Liquid Fuels Used For Gas Production (BBL)	Natural Gas Used for Gas Production (MCF)
1969	96,342	--	35,221	--
1970	467,119	--	131,637	--
1971	410,484	--	136,405	--
1972	288,584	--	102,845	--
1973	876,761	--	232,476	--
1974	937,170	--	229,093	--
1975	465,930	--	104,173	--
1976	851,184	--	239,932	--
1977	1,661,696	--	515,713	--
1978	236,950	--	87,140	--
1979	281,395	--	98,571	--
1980	269,927	--	52,907	--
1981	547,566	--	192,752	--
1982	534,068	--	182,704	--
1983	236,336	--	79,295	--
1984	189,420	--	67,771	--
1985	310,339	--	110,705	--
1986	141,849	--	52,588	--
1987	88,093	--	28,028	--
1988	124,986	--	46,907	--
1989	293,553	--	36,323	--
1990	757	--	941	--
1991	32,668	--	11,688	--

MCF-Thousands of Cubic Feet

-- : Indicates no Records of Produced or Used

Harrison Gas Plant

Gas Produced and Fuels Used for Gas Production

Year	Total Gas Produced (MCF)	Solid Fuels Used for Gas Production (Tons)	Liquid Fuels Used For Gas Production (BBL)	Natural Gas Used for Gas Production (MCF)
1992	2,562	--	917	--
1993	--	--	--	--
1994	--	--	--	--
1995	--	--	--	--
TOTALS:	**693,934,383**	**2,775,342**	**32,580,074**	**207,244,013**

MCF-Thousands of Cubic Feet

-- : Indicates no Records of Produced or Used

Table B-2

Public Service Electric and Gas Company

Harrison Gas Plant

Production Totals

Year	Total Gas Produced (MCF)	Coke Oven Gas Recieved (MCF)	Water Gas Produced (MCF)	LP Gas Produced (MCF)	Cold Enrichment (MCF)	Air Jet Gas Produced (MCF)	Th Ref NG Produced (MCF)	Cat Ref NG Produced (MCF)	Cat Ref Kerosene Produced (MCF)	CAT Oil Gas (MCF)	SNG Produced (MCF)	Oil Gas Produced (MCF)	Tar Produced (Gals)	Tar Received (Gals)	Drip Oil Prod (Gals)	Drip Oil Received (Gals)	Sulphur Produced (Tons)	Sulphur Paste Produced (Tons)
1926	427,223	–	427,223	–	–	–	–	–	–	–	–	–	–	–	–	–	–	–
1927	7,926,276	–	7,926,276	–	–	–	–	–	–	–	–	–	5,766,826	–	548,364	–	–	–
1928	8,787,381	–	8,787,381	–	–	–	–	–	–	–	–	–	5,883,776	–	774,730	–	–	–
1929	9,806,261	–	9,806,261	–	–	–	–	–	–	–	–	–	6,851,689	–	919,516	–	–	–
1930	10,244,412	–	10,244,412	–	–	–	–	–	–	–	–	–	8,913,472	218,476	665,731	–	–	–
1931	10,427,719	–	10,427,719	–	–	–	–	–	–	–	–	–	8,921,322	2,553,444	604,271	–	–	–
1932	10,758,297	–	10,758,297	–	–	–	–	–	–	–	–	–	9,307,230	1,659,813	645,401	–	155	–
1933	9,847,671	–	9,847,671	–	–	–	–	–	–	–	–	–	9,812,178	1,540,630	617,994	3850	–	324
1934	10,329,076	–	10,329,076	–	–	–	–	–	–	–	–	–	8,231,508	2,158,958	849,080	3500	–	269
1935	9,990,419	–	9,990,419	–	–	–	–	–	–	–	–	–	7,744,617	1,804,931	481,098	350	–	380
1936	10,411,703	–	10,411,703	–	–	–	–	–	–	–	–	–	14,605,284	1,740,323	210,850	3150	–	244
1937	10,492,765	–	10,492,765	–	–	–	–	–	–	–	–	–	15,169,811	1,443,899	123,452	1750	–	441
1938	10,671,071	–	10,671,071	–	–	–	–	–	–	–	–	–	15,486,982	2,801,930	36,087	3000	–	831
1939	11,294,299	–	11,294,299	–	–	–	–	–	–	–	–	–	17,363,034	1,469,506	178,555	–	–	877
1940	12,498,333	–	12,498,333	–	–	–	–	–	–	–	–	–	17,053,247	3,157,735	649,835	–	–	572
1941	12,922,891	–	12,922,891	–	–	–	–	–	–	–	–	–	18,678,434	4,292,665	66,066	–	–	–
1942	13,791,207	–	13,791,207	–	–	–	–	–	–	–	–	–	19,485,542	6,774,281	240,641	–	–	–
1943	13,948,727	–	13,948,727	–	–	–	–	–	–	–	–	–	15,284,982	3,393,596	492,094	1050	–	–

– : No Records Of Produced or Used

84990399

Harrison Gas Plant

Production Totals

Year	Total Gas Produced (MCF)	Coke Oven Gas Recieved (MCF)	Water Gas Produced (MCF)	LP Gas Produced (MCF)	Cold Enrichment (MCF)	Air Jet Gas Produced (MCF)	Th Ref NG Produced (MCF)	Cat Ref NG Produced (MCF)	Cat Ref Kerosene Produced (MCF)	CAT Oil Gas (MCF)	SNG Produced (MCF)	Oil Gas Produced (MCF)	Tar Produced (Gals)	Tar Received (Gals)	Drip Oil Prod (Gals)	Drip Oil Received (Gals)	Sulphur Produced (Tons)	Sulphur Paste Produced (Tons)
1944	15,001,751	–	15,001,751	–	–	–	–	–	–	–	–	–	15,160,424	5,007,424	61,062	–	–	–
1945	14,142,930	–	14,142,930	–	–	–	–	–	–	–	–	–	14,046,915	4,663,832	98,752	–	–	–
1946	13,088,139	–	13,088,139	–	–	–	–	–	–	–	–	–	14,669,320	4,381,406	210,840	–	–	1,324
1947	13,397,172	–	13,397,172	–	–	–	–	–	–	–	–	–	15,490,334	4,356,734	736,169	–	–	969
1948	13,890,557	–	13,890,557	–	–	–	–	–	–	–	–	–	16,117,918	7,598,184	615,700	–	–	408
1949	15,460,852	–	15,460,852	–	–	–	–	–	–	–	–	–	18,181,542	4,052,520	658,695	–	477	–
1950	16,529,087	–	16,528,997	90	–	–	–	–	–	–	–	–	16,835,407	3,283,994	514,070	–	892	–
1951	21,648,247	2,248,408	4,732,932	–	1,330,089	6,460,128	6,876,690	–	–	–	–	–	5,024,379	5,231,508	512,973	101171	141	27
1952	23,771,430	2,297,137	3,519,434	–	1,567,432	9,051,440	7,335,988	–	–	–	–	–	4,306,500	867,067	224,408	–	231	–
1953	26,169,922	2,272,810	1,072,150	–	1,948,046	9,814,989	11,061,928	–	–	–	–	–	1,878,275	140,327	87,429	13371	26	–
1954	30,754,926	2,254,305	1,500,814	–	2,277,443	14,487,226	9,369,895	865,243	–	–	–	–	2,081,965	395,404	205,614	–	21	–
1955	31,876,721	1,069,996	569,614	–	3,069,649	19,734,218	1,685,905	5,629,545	117,794	–	–	–	468,241	24,307	69,832	6722	4	–
1956	31,424,372	1,363,900	99,464	17,561	3,147,694	19,095,435	1,188,010	6,510,598	1,710	–	–	–	526,117	35,848	41,651	10756	18	–
1957	29,558,483	984,700	276,870	25,213	4,024,186	16,630,132	785,963	6,762,081	69,338	–	–	–	46,201	172,525	12,784	–	22	–
1958	31,900,134	567,820	279,002	10,392	4,325,344	18,001,945	1,787,110	6,877,764	50,757	–	–	–	442,261	218	13,417	–	–	–
1959	29,613,220	406,650	107,200	5,328	4,226,616	16,748,089	1,026,087	7,073,015	20,235	–	–	–	111,020	–	16,274	–	–	–
1960	30,345,793	319,405	58,766	1,329	4,471,897	17,347,946	1,362,234	6,776,717	7,499	–	–	–	309,829	78,662	2,278	–	–	–
1961	31,451,770	29,720	51,496	5,161	4,731,105	18,011,853	1,012,001	7,506,297	104,137	–	–	–	161,217	100,674	3,054	–	–	–
1962	29,665,998	–	3,701	–	4,533,043	17,315,439	331,546	7,392,284	9,414	632	–	79,939	7,594	436,796	153	–	–	–
1963	25,918,137	543,248	–	–	3,706,717	15,347,006	46,218	6,136,039	18,587	30,000	–	90,322	321,126	1,038,937	8,141	–	–	–

– : No Records Of Produced or Used

849900400

Harrison Gas Plant

Production Totals

Year	Total Gas Produced (MCF)	Coke Oven Gas Recieved (MCF)	Water Gas Produced (MCF)	LP Gas Produced (MCF)	Cold Enrichment (MCF)	Air Jet Gas Produced (MCF)	Th Ref NG Produced (MCF)	Cat Ref NG Produced (MCF)	Cat Ref Kerosene Produced (MCF)	CAT Oil Gas (MCF)	SNG Produced (MCF)	Oil Gas Produced (MCF)	Tar Produced (Gals)	Tar Received (Gals)	Drip Oil Prod (Gals)	Drip Oil Received (Gals)	Sulphur Produced (Tons)	Sulphur Paste Produced (Tons)
1964	18,582,250	1,459,145	–	534	2,381,915	11,064,413	14,747	3,647,930	2,317	5,049	–	6,200	106,066	22,386	269	17792	–	–
1965	5,361,932	338,921	–	–	683,195	3,259,645	–	1,046,902	2,847	18,453	–	11,969	81,853	128,105	4,286	–	–	–
1966	–	–	–	–	–	–	–	–	–	–	–	–	78,925	74	6,723	–	–	–
1967	–	–	–	–	–	–	–	–	–	–	–	–	23,558	–	2	12827	–	–
1968	459,089	–	–	80,433	–	–	–	–	–	–	–	378,656	884,971	417,172	13,498	–	–	–
1969	96,342	–	–	29,706	–	–	–	–	–	–	–	66,636	214,380	63,901	4,429	–	–	–
1970	467,119	–	–	147,632	–	–	–	–	–	–	–	319,487	895,648	664,751	557	–	–	–
1971	410,484	–	–	46,130	–	–	–	–	–	–	–	364,354	1,094,283	2,421,354	33,616	–	–	–
1972	288,584	–	–	134,728	–	–	–	–	–	–	–	153,856	509,441	580,034	–	–	–	–
1973	876,761	–	–	83,888	–	–	–	–	–	–	663,098	129,775	387,592	–	–	–	–	–
1974	937,170	–	–	108,463	–	–	–	–	–	–	790,567	38,140	112,994	–	–	–	–	–
1975	465,930	–	–	76,758	–	–	–	–	–	–	385,073	4,099	73,098	–	–	–	–	–
1976	851,184	–	–	52,574	–	–	–	–	–	–	539,186	259,424	482,318	13,189	6,662	–	–	–
1977	1,661,696	–	–	110,186	–	–	–	–	–	–	517,767	1,033,743	3,196,970	2,070,457	–	–	–	–
1978	236,950	–	–	49,227	–	–	–	–	–	–	–	187,723	647,498	509,204	–	–	–	–
1979	281,395	–	–	49,485	–	–	–	–	–	–	14,852	217,058	452,527	312,471	–	–	–	–
1980	269,927	–	–	74,682	–	–	–	–	–	–	104,161	91,084	400,101	55,299	–	–	–	–
1981	547,566	–	–	188,503	–	–	–	–	–	–	–	359,063	935,025	1,000	–	–	–	–
1982	534,068	–	–	262,427	–	–	–	–	–	–	–	271,641	678,854	514,536	–	–	–	–
1983	236,336	–	–	189,593	–	–	–	–	–	–	–	46,743	24,375	–	–	–	–	–

– : No Records Of Produced or Used

849900401

Harrison Gas Plant

Production Totals

Year	Total Gas Produced (MCF)	Coke Oven Gas Recieved (MCF)	Water Gas Produced (MCF)	LP Gas Produced (MCF)	Cold Enrichment (MCF)	Air Jet Gas Produced (MCF)	Th Ref NG Produced (MCF)	Cat Ref NG Produced (MCF)	Cat Ref Kerosene Produced (MCF)	CAT Oil Gas (MCF)	SNG Produced (MCF)	Oil Gas Produced (MCF)	Tar Produced (Gals)	Tar Received (Gals)	Drip Oil Prod (Gals)	Drip Oil Received (Gals)	Sulphur Produced (Tons)	Sulphur Paste Produced (Tons)
1984	189,420	–	–	164,926	–	–	–	–	–	–	–	24,494	89,112	289,144	–	–	–	–
1985	310,339	–	–	216,250	–	–	–	–	–	–	–	94,089	183,011	217,019	–	–	–	–
1986	141,849	–	–	116,440	–	–	–	–	–	–	–	25,409	39,198	43,120	–	–	–	–
1987	88,093	–	–	83,242	–	–	–	–	–	–	–	4,851	40,054	33,800	–	–	–	–
1988	124,986	–	–	124,986	–	–	–	–	–	–	–	–	–	–	–	–	–	–
1989	293,553	–	–	293,553	–	–	–	–	–	–	–	–	–	–	–	–	–	–
1990	757	–	–	757	–	–	–	–	–	–	–	–	–	–	–	–	–	–
1991	32,668	–	–	32,668	–	–	–	–	–	–	–	–	–	–	–	–	–	–
1992	2,562	–	–	2,562	–	–	–	–	–	–	–	–	–	–	–	–	–	–
1993	–	–	–	–	–	–	–	–	–	–	–	–	–	–	–	–	–	–
1994	–	–	–	–	–	–	–	–	–	–	–	–	–	–	–	–	–	–
1995	–	–	–	–	–	–	–	–	–	–	–	–	–	–	–	–	–	–
Totals:	693,934,383	16,156,166	298,357,572	2,785,487	46,424,370	212,369,903	43,884,322	66,224,415	404,635	54,134	3,014,704	4,258,755	342,378,371	85,233,570	12,267,103	179289	1,987	6,664

– : No Records Of Produced or Used

849900402

849900403

Table B-3

Public Service Electric and Gas Company

Harrison Gas Plant

Chemicals Used in Gas Production

Year	Total Gas Produced (MCF)	Ore (Lbs)	Lime (Lbs)	Shavings (Bus)	Soda Ash (Lbs)	Red Mud (Lbs)	Nickel Sulphate (Lbs)	New Oxide (Bus)	Discarded Used Oxide (Bus)	Mixed Carbonate (Lbs)	Finished Salts (Lbs)	Ferrox (Lbs)	Ferrous Sulphate (Lbs)	Manganous Sulphate (Lbs)	Manganous Chloride (Lbs)	Thylox (Lbs)	Arsenic Trioxide (Lbs)	30% Liquid Caustic (Lbs)	50% Liquid Caustic (Gal)	Lavino Ore (Lbs)	Fogging Oil (Gals)	Hexylene Glycol (Gals)	Calodoran (Gals)	CCR Catalyst (Lbs)	SNG Catalyst (Lbs)
1926	427,223	533,960	22,264	351,605	58,000	–	15,007	36,000	–	–	–	–	–	–	–	–	–	–	–	–	–	–	–	–	–
1927	7,926,276	–	59,300	300	1,229,600	–	315,267	20,820	9,070	–	–	–	–	–	–	–	–	–	–	–	–	–	–	–	–
1928	8,787,381	150,369	194,350	20,340	1,083,750	–	158,959	–	4,700	–	–	–	–	–	–	–	–	–	–	–	–	–	–	–	–
1929	9,806,261	454,366	163,550	30,985	1,163,400	–	140,659	13,600	27,400	–	–	50,460	–	–	–	–	–	–	–	–	–	–	–	–	–
1930	10,244,412	1,608,210	167,550	86,279	3,509,150	471,416	112,019	25,975	12,125	–	–	68,800	–	–	–	–	–	–	–	–	–	–	–	–	–
1931	10,427,719	210,340	179,350	11,785	1,572,100	955,384	47,239	17,063	17,263	–	–	–	–	–	–	–	–	–	–	–	–	–	–	–	–
1932	10,758,297	–	–	–	–	–	–	–	–	–	–	–	–	–	–	–	–	–	–	–	–	–	–	–	–
1933	9,847,671	124,985	109,450	14,965	2,181,700	208,239	127,777	18,000	12,250	57,680	–	–	–	–	–	–	–	–	–	–	–	–	–	–	–
1934	10,329,076	1,271,515	–	77,840	1,010,500	416,478	153,976	30,000	34,600	1,275,099	–	–	–	–	–	–	–	–	–	–	–	–	–	–	–
1935	9,990,419	637,216	5,900	52,155	1,426,000	208,239	135,106	30,689	14,689	57,891	–	–	–	–	–	–	–	–	–	–	–	–	–	–	–
1936	10,411,703	686,204	–	58,655	1,338,000	–	153,306	36,000	30,000	–	776,870	–	–	–	–	–	–	–	–	–	–	–	–	–	–
1937	10,492,765	476,560	19,490	146,648	1,585,618	–	53,842	29,656	39,000	–	78,240	–	131,108	332	1,045	–	–	–	–	–	–	–	–	–	–
1938	10,671,071	623,000	–	48,627	1,247,200	–	15,023	30,000	26,656	–	–	–	143,260	22,896	–	–	–	–	–	4,000	–	–	–	–	–
1939	11,294,299	564,840	–	41,850	1,383,000	–	16,614	24,000	30,000	–	–	–	135,390	23,650	–	–	–	–	–	–	–	–	–	–	–

– : Indicates no Records of Produced or Used

Harrison Gas Plant

849900404

Chemicals Used in Gas Production

Year	Total Gas Produced (MCF)	Ore (Lbs)	Lime (Lbs)	Shavings (Bus)	Soda Ash (Lbs)	Red Mud (Lbs)	Nickel Sulphate (Lbs)	New Oxide (Bus)	Discarded Used Oxide (Bus)	Mixed Carbonate (Lbs)	Finished Salts (Lbs)	Ferrox (Lbs)	Ferrous Sulphate (Lbs)	Manganous Sulphate (Lbs)	Manganous Chloride (Lbs)	Thylox (Lbs)	Arsenic Trioxide (Lbs)	30% Liquid Caustic (Lbs)	50% Liquid Caustic (Gal)	Lavino Ore (Lbs)	Fogging Oil (Gals)	Hexylene Glycol (Gals)	Calodoran (Gals)	CCR Catalyst (Lbs)	SNG Catalyst (Lbs)
1940	12,498,333	144,080	–	129,655	1,417,600	–	22,398	30,000	30,000	–	–	–	182,700	22,140	–	–	–	–	–	205,100	–	–	–	–	–
1941	12,922,891	58,440	5,770	59,310	1,662,000	–	23,170	24,000	18,000	–	–	–	196,900	21,090	–	–	–	–	–	272,500	–	–	–	–	–
1942	13,791,207	–	–	45,310	1,908,200	–	25,834	24,000	24,000	–	–	–	139,725	25,890	–	–	–	–	–	377,550	–	–	–	–	–
1943	13,948,727	–	–	99,245	1,583,396	–	26,368	24,000	24,000	–	–	–	118,125	20,812	–	1,850	–	–	–	877,100	–	–	–	–	–
1944	15,001,751	–	–	59,075	1,567,804	–	7,821	24,000	24,000	–	–	–	172,150	8,470	–	–	167,163	–	–	280,450	–	–	–	–	–
1945	14,142,930	210,400	–	47,320	1,229,800	–	21	24,000	24,000	–	–	–	69,925	675	–	–	235,721	–	–	–	–	–	–	–	–
1946	13,088,139	710,500	–	166,080	1,330,800	–	–	36,000	36,000	–	–	–	76,060	–	–	–	288,079	–	–	–	–	–	–	–	–
1947	13,397,172	–	–	4,720	1,533,600	–	–	68,400	33,000	–	–	–	91,900	–	–	–	249,077	–	–	–	–	–	–	–	–
1948	13,890,557	1,114,180	4,230	92,260	1,524,800	–	–	58,500	18,000	–	–	–	97,000	725	–	–	209,145	–	–	–	–	–	–	–	–
1949	15,460,852	947,040	–	123,280	1,567,900	–	–	44,400	14,400	–	–	–	88,625	–	–	–	188,982	–	–	–	–	–	–	–	–
1950	16,529,087	–	–	13,515	1,888,750	–	–	18,000	18,000	–	–	–	98,900	–	–	–	234,193	46,200	134,660	–	–	–	–	–	–
1951	21,648,247	–	–	3,850	731,913	–	–	25,000	19,000	–	–	–	47,750	–	–	–	69,451	–	70,395	–	–	–	–	–	–
1952	23,771,430	18,000	–	2,585	568,300	–	–	15,200	15,200	–	–	–	39,375	–	–	–	41,230	–	30,526	–	–	–	–	–	–
1953	26,169,922	–	–	6,155	336,640	–	–	46,000	46,000	–	–	–	30,475	–	–	–	26,451	–	13,376	–	–	–	–	–	–
1954	30,754,926	–	–	–	486,940	–	2,023	–	–	–	–	–	35,375	–	–	–	37,331	–	2,000	–	–	–	–	–	–
1955	31,876,721	–	–	5,200	152,200	–	–	22,800	22,800	–	–	–	8,300	–	–	–	29,029	–	7,207	–	–	–	–	–	–
1956	31,424,372	–	–	2,640	43,500	–	–	10,800	10,800	–	–	–	7,125	–	–	–	5,750	–	65,165	–	–	–	–	–	–

– : Indicates no Records of Produced or Used

Harrison Gas Plant

Chemicals Used in Gas Production

849900405

Year	Total Gas Produced (MCF)	Ore (Lbs)	Lime (Lbs)	Shavings (Bus)	Soda Ash (Lbs)	Red Mud (Lbs)	Nickel Sulphate (Lbs)	New Oxide (Bus)	Discarded Used Oxide (Bus)	Mixed Carbonate (Lbs)	Finished Salts (Lbs)	Ferrox (Lbs)	Ferrous Sulphate (Lbs)	Manganous Sulphate (Lbs)	Manganous Chloride (Lbs)	Thylox (Lbs)	Arsenic Trioxide (Lbs)	30% Liquid Caustic (Lbs)	50% Liquid Caustic (Gal)	Lavino Ore (Lbs)	Fogging Oil (Gals)	Hexylene Glycol (Gals)	Calodoran (Gals)	CCR Catalyst (Lbs)	SNG Catalyst (Lbs)
1957	29,558,483	–	–	2,200	68,700	–	–	10,800	12,000	–	–	–	9,725	–	–	–	11,992	–	13,158	–	–	–	–	–	9,700
1958	31,900,134	–	–	2,640	123,300	–	–	16,640	18,000	–	–	–	5,525	475	–	–	17,596	–	–	–	3,520	–	995	–	–
1959	29,613,220	–	–	2,640	67,100	–	–	13,440	18,000	–	–	–	2,500	1,525	–	–	7,032	–	–	–	3,292	–	296	–	–
1960	30,345,793	–	–	1,760	47,700	–	2,727	11,520	12,000	–	–	–	2,500	–	–	–	9,036	–	–	–	1,257	–	–	–	–
1961	31,451,770	–	–	–	60,200	–	–	5,120	6,000	–	–	–	2,115	–	–	–	2,216	–	–	–	521	–	1,425	31,300	–
1962	29,665,998	–	–	–	36,000	–	–	5,120	–	–	–	–	800	–	–	–	2,012	–	–	–	953	–	24,012	–	–
1963	25,918,137	–	–	–	4,400	–	–	–	–	–	–	–	–	–	–	–	–	–	–	–	783	–	11	23,502	–
1964	18,582,250	–	–	–	27,400	–	–	5,040	6,000	–	–	–	–	–	–	–	–	–	–	–	450	–	14	–	–
1965	5,361,932	–	–	–	7,300	–	–	5,760	6,000	–	–	–	300	–	–	–	–	–	–	–	338	–	–	–	–
1966	–	–	–	–	700	–	–	–	–	–	–	–	100	–	–	–	–	–	–	–	1,184	–	–	–	–
1967	–	–	–	–	1,500	–	–	–	–	–	–	–	–	–	–	–	–	–	–	–	546	409	–	–	–
1968	459,089	–	–	–	600	–	–	–	–	–	–	–	–	–	–	–	–	–	–	–	194	760	–	–	–
1969	96,342	–	–	–	–	–	–	–	–	–	–	–	–	–	–	–	–	–	–	–	750	1,153	–	–	–
1970	467,119	–	–	–	200	–	–	–	–	–	–	–	–	–	–	–	–	–	–	–	546	1,643	–	–	–
1971	410,484	–	–	400	–	–	–	–	–	–	–	–	–	–	–	–	–	–	–	–	523	1,697	–	–	–
1972	288,584	–	–	–	100	–	–	–	–	–	–	–	–	–	–	–	–	–	–	–	727	1,405	–	–	–
1973	876,761	–	–	–	–	–	–	–	–	–	–	–	–	–	–	–	–	–	–	–	1,008	1,287	–	–	–

– : Indicates no Records of Produced or Used

Harrison Gas Plant

Chemicals Used in Gas Production

849900406

Year	Total Gas Produced (MCF)	Ore (Lbs)	Lime (Lbs)	Shavings (Bus)	Soda Ash (Lbs)	Red Mud (Lbs)	Nickel Sulphate (Lbs)	New Oxide (Bus)	Discarded Used Oxide (Bus)	Mixed Carbonate (Lbs)	Finished Salts (Lbs)	Ferrox (Lbs)	Ferrous Sulphate (Lbs)	Manganous Sulphate (Lbs)	Manganous Chloride (Lbs)	Thylox (Lbs)	Arsenic Trioxide (Lbs)	30% Liquid Caustic (Lbs)	50% Liquid Caustic (Gal)	Lavino Ore (Lbs)	Fogging Oil (Gals)	Hexylene Glycol (Gals)	Calodoran (Gals)	CCR Catalyst (Lbs)	SNG Catalyst (Lbs)
1974	937,170	–	–	–	–	–	–	–	–	–	–	–	–	–	–	–	–	–	–	–	1,667	1,147	–	–	–
1975	465,930	–	–	–	–	–	–	–	–	–	–	–	–	–	–	–	–	–	–	–	998	1,506	–	–	–
1976	851,184	–	–	–	–	–	–	–	–	–	–	–	–	–	–	–	–	–	–	–	959	1,592	–	–	19,000
1977	1,661,696	–	–	–	–	–	–	–	–	–	–	–	–	–	–	–	–	–	–	–	864	1,445	–	–	15,500
1978	236,950	–	–	–	–	–	–	–	–	–	–	–	–	–	–	–	–	–	–	–	924	1,712	–	–	–
1979	281,395	–	–	–	–	–	–	–	–	–	–	–	–	–	–	–	–	–	–	–	1,164	1,365	–	–	–
1980	269,927	–	–	–	–	–	–	–	–	–	–	–	–	–	–	–	–	–	–	–	537	1,968	–	–	–
1981	547,566	–	–	–	–	–	–	–	–	–	–	–	–	–	–	–	–	–	–	–	–	–	–	–	–
1982	534,068	–	–	–	–	–	–	–	–	–	–	–	–	–	–	–	–	–	–	–	–	–	–	–	–
1983	236,336	–	–	–	–	–	–	–	–	–	–	–	–	–	–	–	–	–	–	–	–	–	–	–	–
1984	189,420	–	–	–	–	–	–	–	–	–	–	–	–	–	–	–	–	–	–	–	–	–	–	–	–
1985	310,339	–	–	–	–	–	–	–	–	–	–	–	–	–	–	–	–	–	–	–	–	–	–	–	–
1986	141,849	–	–	–	–	–	–	–	–	–	–	–	–	–	–	–	–	–	–	–	–	–	–	–	–
1987	88,093	–	–	–	–	–	–	–	–	–	–	–	–	–	–	–	–	–	–	–	–	–	–	–	–
1988	124,986	–	–	–	–	–	–	–	–	–	–	–	–	–	–	–	–	–	–	–	–	–	–	–	–
1989	293,553	–	–	–	–	–	–	–	–	–	–	–	–	–	–	–	–	–	–	–	–	–	–	–	–
1990	757	–	–	–	–	–	–	–	–	–	–	–	–	–	–	–	–	–	–	–	–	–	–	–	–

– : Indicates no Records of Produced or Used

Harrison Gas Plant

Chemicals Used in Gas Production

849900407

Year	Total Gas Produced (MCF)	Ore (Lbs)	Lime (Lbs)	Shavings (Bus)	Soda Ash (Lbs)	Red Mud (Lbs)	Nickel Sulphate (Lbs)	New Oxide (Bus)	Discarded Used Oxide (Bus)	Mixed Carbonate (Lbs)	Finished Salts (Lbs)	Ferrox (Lbs)	Ferrous Sulphate (Lbs)	Manganous Sulphate (Lbs)	Manganous Chloride (Lbs)	Thylox (Lbs)	Arsenic Trioxide (Lbs)	30% Liquid Caustic (Lbs)	50% Liquid Caustic (Gal)	Lavino Ore (Lbs)	Fogging Oil (Gals)	Hexylene Glycol (Gals)	Calodoran (Gals)	CCR Catalyst (Lbs)	SNG Catalyst (Lbs)
1991	32,668	--	--	--	--	--	--	--	--	--	--	--	--	--	--	--	--	--	--	--	--	--	--	--	--
1992	2,562	--	--	--	--	--	--	--	--	--	--	--	--	--	--	--	--	--	--	--	--	--	--	--	--
1993	--	--	--	--	--	--	--	--	--	--	--	--	--	--	--	--	--	--	--	--	--	--	--	--	--
1994	--	--	--	--	--	--	--	--	--	--	--	--	--	--	--	--	--	--	--	--	--	--	--	--	--
1995	--	--	--	--	--	--	--	--	--	--	--	--	--	--	--	--	--	--	--	--	--	--	--	--	--
Totals:	693,934,383	10,544,205	931,204	1,811,874	38,767,361	2,259,756	1,555,156	880,343	712,953	1,390,670	855,110	119,260	1,933,733	148,680	1,045	1,850	1,831,486	46,200	336,487	2,016,700	23,705	19,089	26,753	54,802	44,20

-- : Indicates no Records of Produced or Used

Table B-4

Public Service Electric and Gas Company

Harrison Gas Plant

849900408

Solid Fuels Used for Gas Production

Year	Total Gas Produced (MCF)	Solid Fuel Total (Tons)	Rainey Coke (Tons)	Seaboard Coke (Tons)	Koppers Coke (Tons)	Broken Coal (Tons)	Imperial Coke (Tons)	Jamison Coke (Tons)	Connellsville Coke (Tons)	COKE (Tons)	Anthracite(Tons)	Camden Coke (Tons)	Con Edison Coke (Tons)	Brooklyn Boro Coke (Tons)	Lewis Coke (Tons)	Debevoise Coke (Tons)	NAWG Bit Coal (Tons)	Producers Coke (Tons)	Hillman Coke (Tons)	Transocean Coke (Tons)	W Moreland Bit Coal (Tons)	Wieman Ward Coke (Tons)	Hudson Valley Coke (Tons)
1926	427,223	7,965	2,279	89	–	–	–	–	–	–	–	–	–	–	–	312	1,576	2,765	–	–	944	–	–
1927	7,926,276	106,882	13,310	4,840	–	–	–	–	–	–	–	12,865	–	–	–	1,520	539	22,131	39,643	–	135	852	11,047
1928	8,787,381	119,458	359	47,436	–	–	–	–	–	–	–	34,203	–	–	–	–	–	1,295	34,096	–	–	1,573	495
1929	9,806,261	130,174	120	109,438	–	–	–	–	–	–	–	20,594	–	–	22	–	–	–	–	–	–	–	–
1930	10,244,412	97,644	3,866	93,474	–	–	–	–	–	–	–	304	–	–	–	–	–	–	–	–	–	–	–
1931	10,427,719	81,629	2,730	78,899	–	–	–	–	–	–	–	–	–	–	–	–	–	–	–	–	–	–	–
1932	10,758,297	65,030	–	65,030	–	–	–	–	–	–	–	–	–	–	–	–	–	–	–	–	–	–	–
1933	9,847,671	62,653	–	46,231	–	–	–	–	1,498	–	–	14,924	–	–	–	–	–	–	–	–	–	–	–
1934	10,329,076	66,542	–	–	62,792	–	1,857	1,893	–	–	–	–	–	–	–	–	–	–	–	–	–	–	–
1935	9,990,419	70,884	899	–	15,996	–	–	–	–	–	–	53,989	–	–	–	–	–	–	–	–	–	–	–
1936	10,411,703	83,701	35	–	21,875	–	–	–	–	–	–	61,235	–	–	–	–	–	–	–	555	–	–	–
1937	10,492,765	82,556	–	–	–	–	–	–	–	–	–	82,556	–	–	–	–	–	–	–	–	–	–	–
1938	10,671,071	82,835	–	–	–	–	–	–	–	–	–	82,835	–	–	–	–	–	–	–	–	–	–	–

– : Indicates no Record of Produced or Used

Harrison Gas Plant

Solid Fuels Used for Gas Production

849900409

Year	Total Gas Produced (MCF)	Solid Fuel Total (Tons)	Rainey Coke (Tons)	Seaboard Coke (Tons)	Koppers Coke (Tons)	Broken Coal (Tons)	Imperial Coke (Tons)	Jamison Coke (Tons)	Connellsville Coke (Tons)	COKE (Tons)	Anthracite(Tons)	Camden Coke (Tons)	Con Edison Coke (Tons)	Brooklyn Boro Coke (Tons)	Lewis Coke (Tons)	Debevoise Coke (Tons)	NAWG Bit Coal (Tons)	Producers Coke (Tons)	Hillman Coke (Tons)	Transocean Coke (Tons)	W Moreland Bit Coal (Tons)	Wieman Ward Coke (Tons)	Hudson Valley Coke (Tons)
1939	11,294,299	88,506	–	–	–	–	–	–	–	–	–	88,506	–	–	–	–	–	–	–	–	–	–	–
1940	12,498,333	99,164	–	–	–	–	–	–	–	–	–	99,164	–	–	–	–	–	–	–	–	–	–	–
1941	12,922,891	103,899	–	–	–	–	–	–	–	–	–	103,899	–	–	–	–	–	–	–	–	–	–	–
1942	13,791,207	111,797	6,702	–	–	–	–	–	–	–	–	105,095	–	–	–	–	–	–	–	–	–	–	–
1943	13,948,727	124,526	–	–	27,964	–	–	–	–	305	–	96,257	–	–	–	–	–	–	–	–	–	–	–
1944	15,001,751	126,455	–	–	39,481	–	–	–	–	–	–	86,973	–	–	–	–	–	–	–	–	–	–	–
1945	14,142,930	123,251	–	–	77,881	–	–	–	–	–	–	45,370	–	–	–	–	–	–	–	–	–	–	–
1946	13,088,139	115,160	–	–	48,997	–	–	–	–	–	–	66,163	–	–	–	–	–	–	–	–	–	–	–
1947	13,397,172	108,399	–	–	31,144	–	–	–	–	–	–	77,255	–	–	–	–	–	–	–	–	–	–	–
1948	13,890,557	121,310	–	–	51,727	–	–	–	–	–	16,940	52,643	–	–	–	–	–	–	–	–	–	–	–
1949	15,460,852	128,106	–	–	69,240	1,009	–	–	–	294	845	56,718	–	–	–	–	–	–	–	–	–	–	–
1950	16,529,087	132,621	–	–	10,998	–	–	–	–	–	–	121,622	–	–	–	–	–	–	–	–	–	–	–
1951	21,648,247	68,320	–	–	8,086	–	–	–	–	–	–	50,423	9,810	–	–	–	–	–	–	–	–	–	–
1952	23,771,430	61,371	–	–	–	–	–	–	–	–	–	61,171	–	200	–	–	–	–	–	–	–	–	–
1953	26,169,922	56,543	–	–	–	–	–	–	–	–	–	56,543	–	–	–	–	–	–	–	–	–	–	–

– : Indicates no Record of Produced or Used

Harrison Gas Plant

Solid Fuels Used for Gas Production

849900410

Year	Total Gas Produced (MCF)	Solid Fuel Total (Tons)	Rainey Coke (Tons)	Seaboard Coke (Tons)	Koppers Coke (Tons)	Broken Coal (Tons)	Imperial Coke (Tons)	Jamison Coke (Tons)	Connellsville Coke (Tons)	COKE (Tons)	Anthracite(Tons)	Camden Coke (Tons)	Con Edison Coke (Tons)	Brooklyn Boro Coke (Tons)	Lewis Coke (Tons)	Debevoise Coke (Tons)	NAWG Bit Coal (Tons)	Producers Coke (Tons)	Hillman Coke (Tons)	Transocean Coke (Tons)	W Moreland Bit Coal (Tons)	Wieman Ward Coke (Tons)	Hudson Valley Coke (Tons)
1954	30,754,926	61,704	–	–	–	–	–	–	–	–	–	57,729	–	–	–	–	–	–	–	3,975	–	–	–
1955	31,876,721	16,711	–	–	–	–	–	–	–	–	–	16,711	–	–	–	–	–	–	–	–	–	–	–
1956	31,424,372	9,003	–	–	–	–	–	–	–	–	–	9,003	–	–	–	–	–	–	–	–	–	–	–
1957	29,558,483	9,700	–	–	–	–	–	–	–	–	–	9,700	–	–	–	–	–	–	–	–	–	–	–
1958	31,900,134	18,547	–	–	–	–	–	–	–	–	–	18,547	–	–	–	–	–	–	–	–	–	–	–
1959	29,613,220	11,123	–	–	–	–	–	–	–	–	–	11,123	–	–	–	–	–	–	–	–	–	–	–
1960	30,345,793	9,755	–	–	–	–	–	–	–	–	–	9,755	–	–	–	–	–	–	–	–	–	–	–
1961	31,451,770	8,254	–	–	–	–	–	–	–	–	–	8,254	–	–	–	–	–	–	–	–	–	–	–
1962	29,665,998	2,366	–	–	–	–	–	–	–	–	–	2,366	–	–	–	–	–	–	–	–	–	–	–
1963	25,918,137	639	–	–	–	–	–	–	–	–	–	639	–	–	–	–	–	–	–	–	–	–	–
1964	18,582,250	160	–	–	–	–	–	–	–	–	–	160	–	–	–	–	–	–	–	–	–	–	–
1965	5,361,932	–	–	–	–	–	–	–	–	–	–	–	–	–	–	–	–	–	–	–	–	–	–
1966	–	–	–	–	–	–	–	–	–	–	–	–	–	–	–	–	–	–	–	–	–	–	–
1967	–	–	–	–	–	–	–	–	–	–	–	–	–	–	–	–	–	–	–	–	–	–	–
1968	459,089	–	–	–	–	–	–	–	–	–	–	–	–	–	–	–	–	–	–	–	–	–	–

– : Indicates no Record of Produced or Used

Harrison Gas Plant

Solid Fuels Used for Gas Production

849900411

Year	Total Gas Produced (MCF)	Solid Fuel Total (Tons)	Rainey Coke (Tons)	Seaboard Coke (Tons)	Koppers Coke (Tons)	Broken Coal (Tons)	Imperial Coke (Tons)	Jamison Coke (Tons)	Connellsville Coke (Tons)	COKE (Tons)	Anthracite(Tons)	Camden Coke (Tons)	Con Edison Coke (Tons)	Brooklyn Boro Coke (Tons)	Lewis Coke (Tons)	Debevoise Coke (Tons)	NAWG Bit Coal (Tons)	Producers Coke (Tons)	Hillman Coke (Tons)	Transocean Coke (Tons)	W Moreland Bit Coal (Tons)	Wieman Ward Coke (Tons)	Hudson Valley Coke (Tons)
1969	96,342	–	–	–	–	–	–	–	–	–	–	–	–	–	–	–	–	–	–	–	–	–	–
1970	467,119	–	–	–	–	–	–	–	–	–	–	–	–	–	–	–	–	–	–	–	–	–	–
1971	410,484	–	–	–	–	–	–	–	–	–	–	–	–	–	–	–	–	–	–	–	–	–	–
1972	288,584	–	–	–	–	–	–	–	–	–	–	–	–	–	–	–	–	–	–	–	–	–	–
1973	876,761	–	–	–	–	–	–	–	–	–	–	–	–	–	–	–	–	–	–	–	–	–	–
1974	937,170	–	–	–	–	–	–	–	–	–	–	–	–	–	–	–	–	–	–	–	–	–	–
1975	465,930	–	–	–	–	–	–	–	–	–	–	–	–	–	–	–	–	–	–	–	–	–	–
1976	851,184	–	–	–	–	–	–	–	–	–	–	–	–	–	–	–	–	–	–	–	–	–	–
1977	1,661,696	–	–	–	–	–	–	–	–	–	–	–	–	–	–	–	–	–	–	–	–	–	–
1978	236,950	–	–	–	–	–	–	–	–	–	–	–	–	–	–	–	–	–	–	–	–	–	–
1979	281,395	–	–	–	–	–	–	–	–	–	–	–	–	–	–	–	–	–	–	–	–	–	–
1980	269,927	–	–	–	–	–	–	–	–	–	–	–	–	–	–	–	–	–	–	–	–	–	–
1981	547,566	–	–	–	–	–	–	–	–	–	–	–	–	–	–	–	–	–	–	–	–	–	–
1982	534,068	–	–	–	–	–	–	–	–	–	–	–	–	–	–	–	–	–	–	–	–	–	–
1983	236,336	–	–	–	–	–	–	–	–	–	–	–	–	–	–	–	–	–	–	–	–	–	–

– : Indicates no Record of Produced or Used

Harrison Gas Plant

Solid Fuels Used for Gas Production

849900412

Year	Total Gas Produced (MCF)	Solid Fuel Total (Tons)	Rainey Coke (Tons)	Seaboard Coke (Tons)	Koppers Coke (Tons)	Broken Coal (Tons)	Imperial Coke (Tons)	Jamison Coke (Tons)	Connellsville Coke (Tons)	COKE (Tons)	Anthracite(Tons)	Camden Coke (Tons)	Con Edison Coke (Tons)	Brooklyn Boro Coke (Tons)	Lewis Coke (Tons)	Debevoise Coke (Tons)	NAWG Bit Coal (Tons)	Producers Coke (Tons)	Hillman Coke (Tons)	Transocean Coke (Tons)	W Moreland Bit Coal (Tons)	Wiemau Ward Coke (Tons)	Valley Coke (Tons)
1984	189,420	–	–	–	–	–	–	–	–	–	–	–	–	–	–	–	–	–	–	–	–	–	–
1985	310,339	–	–	–	–	–	–	–	–	–	–	–	–	–	–	–	–	–	–	–	–	–	–
1986	141,849	–	–	–	–	–	–	–	–	–	–	–	–	–	–	–	–	–	–	–	–	–	–
1987	88,093	–	–	–	–	–	–	–	–	–	–	–	–	–	–	–	–	–	–	–	–	–	–
1988	124,986	–	–	–	–	–	–	–	–	–	–	–	–	–	–	–	–	–	–	–	–	–	–
1989	293,553	–	–	–	–	–	–	–	–	–	–	–	–	–	–	–	–	–	–	–	–	–	–
1990	757	–	–	–	–	–	–	–	–	–	–	–	–	–	–	–	–	–	–	–	–	–	–
1991	32,668	–	–	–	–	–	–	–	–	–	–	–	–	–	–	–	–	–	–	–	–	–	–
1992	2,562	–	–	–	–	–	–	–	–	–	–	–	–	–	–	–	–	–	–	–	–	–	–
1993	–	–	–	–	–	–	–	–	–	–	–	–	–	–	–	–	–	–	–	–	–	–	–
1994	–	–	–	–	–	–	–	–	–	–	–	–	–	–	–	–	–	–	–	–	–	–	–
1995	–	–	–	–	–	–	–	–	–	–	–	–	–	–	–	–	–	–	–	–	–	–	–
Totals:	693,537,918	2,770,589	30,301	445,438	466,193	1,009	1,857	1,893	1,498	599	17,785	1,674,506	9,810	200	22	1,832	2,115	26,191	73,739	555	1,079	2,426	11,541

– : Indicates no Record of Produced or Used

Table B-5(a)

Public Service Electric and Gas Company

Harrison Gas Plant

Liquid Fuel and Natural Gas Used for Gas Production I

Year	Total Gas Produced (MCF)	Liquid Fuel Total (BBL)	Miranda Oil (BBL)	Gas Oil (BBL)	Atlantic City Gas Oil (BBL)	West End Gas Oil (BBL)	No 1 Option 1933 GasOil (BBL)	No 2 Option 1933 GasOil (BBL)	No 3 Gas Oil (BBL)	Doremus No 2 Oil (BBL)	1934 Gas Oil (BBL)	1935 Gas Oil (BBL)	1936 Gas Oil (BBL)	1937 Gas Oil (BBL)	1938 Gas Oil (BBL)	1939 Gas Oil (BBL)	1940 Gas Oil (BBL)	Harrison Mineral Oil (BBL)	American Mineral Oil (BBL)	1941Gas Oil (BBL)	1942 Gas Oil (BBL)	No 6 Fuel Oil (BBL)
1926	427,223	32,987	--	32,987	--	--	--	--	--	--	--	--	--	--	--	--	--	--	--	--	--	--
1927	7,926,276	551,041	--	551,041	--	--	--	--	--	--	--	--	--	--	--	--	--	--	--	--	--	--
1928	8,787,381	617,643	--	617,643	--	--	--	--	--	--	--	--	--	--	--	--	--	--	--	--	--	--
1929	9,806,261	686,475	--	686,475	--	--	--	--	--	--	--	--	--	--	--	--	--	--	--	--	--	--
1930	10,244,412	942,202	--	117,348	--	--	--	--	--	--	--	--	--	--	--	--	--	--	--	--	--	--
1931	10,427,719	997,487	--	1,501	--	--	--	--	--	--	--	--	--	--	--	--	--	--	--	--	--	--
1932	10,758,297	1,088,383	--	3,324	--	--	--	--	--	--	--	--	--	--	--	--	--	--	--	--	--	--
1933	9,847,671	989,185	--	4,197	--	--	212,998	703,827	--	--	--	--	--	--	--	--	--	--	--	--	--	--
1934	10,329,076	1,047,866	--	4,579	--	--	--	39,998	--	--	1,003,290	--	--	--	--	--	--	--	--	--	--	--
1935	9,990,419	955,409	--	2,287	--	--	--	--	--	--	76,918	817,969	--	--	--	--	--	--	--	--	--	--
1936	10,411,703	1,113,532	--	3,022	1,928	2,039	--	--	--	--	--	49,416	1,057,127	--	--	--	--	--	--	--	--	--
1937	10,492,765	1,116,023	--	3,438	--	--	--	--	--	--	--	2,405	188,342	921,511	--	--	--	--	--	--	--	--
1938	10,671,071	1,131,980	--	2,683	--	--	--	--	--	--	--	2,157	--	138,604	988,536	--	--	--	--	--	--	--

-- : Indicates no Record of Produced or Used

849900413

Harrison Gas Plant

Liquid Fuel and Natural Gas Used for Gas Production I

Year	Total Gas Produced (MCF)	Liquid Fuel Total (BBL)	Miranda Oil (BBL)	Gas Oil (BBL)	Atlantic City Gas Oil (BBL)	West End Gas Oil (BBL)	No 1 Option 1933 GasOil (BBL)	No 2 Option 1933 GasOil (BBL)	No 3 Gas Oil (BBL)	Doremus No 2 Oil (BBL)	1934 Gas Oil (BBL)	1935 Gas Oil (BBL)	1936 Gas Oil (BBL)	1937 Gas Oil (BBL)	1938 Gas Oil (BBL)	1939 Gas Oil (BBL)	1940 Gas Oil (BBL)	Harrison Mineral Oil (BBL)	American Mineral Oil (BBL)	1941Gas Oil (BBL)	1942 Gas Oil (BBL)	No 6 Fuel Oil (BBL)
1939	11,294,299	1,225,458	--	4,215	--	--	--	--	--	--	--	2,519	--	--	146,853	1,071,871	--	--	--	--	--	--
1940	12,498,333	1,312,058	--	5,534	--	--	--	--	--	--	--	5,706	--	--	--	111,737	1,176,979	--	46	--	--	--
1941	12,922,891	1,395,512	--	1,446	--	1,063	--	--	--	--	--	--	--	--	--	--	166,845	--	1,380	1,224,778	--	--
1942	13,791,207	1,480,661	--	365	969,081	137	--	--	20,390	--	--	496	--	--	--	--	--	--	175	262,580	227,151	88
1943	13,948,727	1,314,045	--	--	1,294,725	--	--	--	19,297	--	--	--	--	--	--	--	--	--	23	--	--	--
1944	15,001,751	1,421,180	--	,415,01	--	--	--	--	6,162	--	--	--	--	--	--	--	--	--	--	--	--	--
1945	14,142,930	1,347,949	--	,337,25	--	--	--	--	10,693	--	--	--	--	--	--	--	--	--	--	--	--	--
1946	13,088,139	1,331,412	--	,274,36	--	--	--	--	37,260	--	--	--	--	--	--	--	--	--	--	--	--	--
1947	13,397,172	1,423,108	--	,125,24	--	--	--	--	12,585	--	--	--	--	--	--	--	--	9,920	--	--	--	--
1948	13,890,557	1,418,495	--	--	--	--	--	--	21,630	--	--	--	--	--	--	--	--	--	--	--	--	--
1949	15,460,852	1,588,059	--	--	--	--	--	--	40,712	--	--	--	--	--	--	--	--	--	--	--	--	--
1950	16,529,087	1,642,545	--	--	--	--	--	--	160,763	1,020	--	--	--	--	--	--	--	--	--	--	--	--
1951	21,648,247	477,748	--	--	--	--	--	--	39,411	--	--	--	--	--	--	--	--	--	--	--	--	--
1952	23,771,430	354,092	1,491	--	--	--	--	--	1,934	--	--	--	--	--	--	--	--	--	--	--	--	--
1953	26,169,922	144,410	27,953	--	--	--	--	--	--	--	--	--	--	--	--	--	--	--	--	--	--	--
1954	30,754,926	189,270	5,739	--	--	--	--	--	--	--	--	--	--	--	--	--	--	--	--	--	--	--

-- : Indicates no Record of Produced or Used

849900414

Harrison Gas Plant
Liquid Fuel and Natural Gas Used for Gas Production I

Year	Total Gas Produced (MCF)	Liquid Fuel Total (BBL)	Miranda Oil (BBL)	Gas Oil (BBL)	Atlantic City Gas Oil (BBL)	West End Gas Oil (BBL)	No 1 Option 1933 GasOil (BBL)	No 2 Option 1933 GasOil (BBL)	No 3 Gas Oil (BBL)	Doremus No 2 Oil (BBL)	1934 Gas Oil (BBL)	1935 Gas Oil (BBL)	1936 Gas Oil (BBL)	1937 Gas Oil (BBL)	1938 Gas Oil (BBL)	1939 Gas Oil (BBL)	1940 Gas Oil (BBL)	Harrison Mineral Oil (BBL)	American Mineral Oil (BBL)	1941Gas Oil (BBL)	1942 Gas Oil (BBL)	No 6 Fuel Oil (BBL)
1955	31,876,721	70,905	--	--	--	--	--	--	--	--	--	--	--	--	--	--	--	--	--	--	--	--
1956	31,424,372	18,379	--	--	--	--	--	--	--	--	--	--	--	--	--	--	--	--	--	--	--	--
1957	29,558,483	38,966	--	--	--	--	--	--	--	--	--	--	--	--	--	--	--	--	--	--	--	--
1958	31,900,134	41,941	--	--	--	--	--	--	--	--	--	--	--	--	--	--	--	--	--	--	--	--
1959	29,613,220	18,370	--	--	--	--	--	--	--	--	--	--	--	--	--	--	--	--	--	--	--	--
1960	30,345,793	13,059	--	--	--	--	--	--	--	--	--	--	--	--	--	--	--	--	--	--	--	--
1961	31,451,770	24,801	--	--	--	--	--	--	--	--	--	--	--	--	--	--	--	--	--	--	--	--
1962	29,665,998	30,819	--	--	--	--	--	--	--	--	--	--	--	--	--	--	--	--	--	--	--	--
1963	25,918,137	39,913	--	--	--	--	--	--	--	--	--	--	--	--	--	--	--	--	--	--	--	--
1964	18,582,250	5,838	--	--	--	--	--	--	--	--	--	--	--	--	--	--	--	--	--	--	--	--
1965	5,361,932	9,316	--	--	--	--	--	--	--	--	--	--	--	--	--	--	--	--	--	--	--	--
1966	--	--	--	--	--	--	--	--	--	--	--	--	--	--	--	--	--	--	--	--	--	--
1967	--	--	--	--	--	--	--	--	--	--	--	--	--	--	--	--	--	--	--	--	--	--
1968	459,089	154,824	--	--	--	--	--	--	--	--	--	--	--	--	--	--	--	--	--	--	--	--
1969	96,342	35,221	--	--	--	--	--	--	--	--	--	--	--	--	--	--	--	--	--	--	--	--
1970	467,119	131,637	--	--	--	--	--	--	--	--	--	--	--	--	--	--	--	--	--	--	--	--

-- : Indicates no Record of Produced or Used

849900415

Harrison Gas Plant

Liquid Fuel and Natural Gas Used for Gas Production I

Year	Total Gas Produced (MCF)	Liquid Fuel Total (BBL)	Miranda Oil (BBL)	Gas Oil (BBL)	Atlantic City Gas Oil (BBL)	West End Gas Oil (BBL)	No 1 Option 1933 GasOil (BBL)	No 2 Option 1933 GasOil (BBL)	No 3 Gas Oil (BBL)	Doremus No 2 Oil (BBL)	1934 Gas Oil (BBL)	1935 Gas Oil (BBL)	1936 Gas Oil (BBL)	1937 Gas Oil (BBL)	1938 Gas Oil (BBL)	1939 Gas Oil (BBL)	1940 Gas Oil (BBL)	Harrison Mineral Oil (BBL)	American Mineral Oil (BBL)	1941Gas Oil (BBL)	1942 Gas Oil (BBL)	No 6 Fuel Oil (BBL)
1971	410,484	136,405	--	--	--	--	--	--	--	--	--	--	--	--	--	--	--	--	--	--	--	--
1972	288,584	102,845	--	--	--	--	--	--	--	--	--	--	--	--	--	--	--	--	--	--	--	--
1973	876,761	232,476	--	--	--	--	--	--	--	--	--	--	--	--	--	--	--	--	--	--	--	--
1974	937,170	229,093	--	--	--	--	--	--	--	--	--	--	--	--	--	--	--	--	--	--	--	--
1975	465,930	104,173	--	--	--	--	--	--	--	--	--	--	--	--	--	--	--	--	--	--	--	--
1976	851,184	239,932	--	--	--	--	--	--	--	--	--	--	--	--	--	--	--	--	--	--	--	--
1977	1,661,696	515,713	--	--	--	--	--	--	--	--	--	--	--	--	--	--	--	--	--	--	--	--
1978	236,950	87,140	--	--	--	--	--	--	--	--	--	--	--	--	--	--	--	--	--	--	--	--
1979	281,395	98,571	--	--	--	--	--	--	--	--	--	--	--	--	--	--	--	--	--	--	--	--
1980	269,927	52,907	--	--	--	--	--	--	--	--	--	--	--	--	--	--	--	--	--	--	--	--
1981	547,566	192,752	--	--	--	--	--	--	--	--	--	--	--	--	--	--	--	--	--	--	--	--
1982	534,068	182,704	--	--	--	--	--	--	--	--	--	--	--	--	--	--	--	--	--	--	--	--
1983	236,336	79,295	--	--	--	--	--	--	--	--	--	--	--	--	--	--	--	--	--	--	--	--
1984	189,420	67,771	--	--	--	--	--	--	--	--	--	--	--	--	--	--	--	--	--	--	--	--
1985	310,339	110,705	--	--	--	--	--	--	--	--	--	--	--	--	--	--	--	--	--	--	--	--
1986	141,849	52,588	--	--	--	--	--	--	--	--	--	--	--	--	--	--	--	--	--	--	--	--

-- : Indicates no Record of Produced or Used

849900416

Harrison Gas Plant
Liquid Fuel and Natural Gas Used for Gas Production I

Year	Total Gas Produced (MCF)	Liquid Fuel Total (BBL)	Miranda Oil (BBL)	Gas Oil (BBL)	Atlantic City Gas Oil (BBL)	West End Gas Oil (BBL)	No 1 Option 1933 GasOil (BBL)	No 2 Option 1933 GasOil (BBL)	No 3 Gas Oil (BBL)	Doremus No 2 Oil (BBL)	1934 Gas Oil (BBL)	1935 Gas Oil (BBL)	1936 Gas Oil (BBL)	1937 Gas Oil (BBL)	1938 Gas Oil (BBL)	1939 Gas Oil (BBL)	1940 Gas Oil (BBL)	Harrison Mineral Oil (BBL)	American Mineral Oil (BBL)	1941Gas Oil (BBL)	1942 Gas Oil (BBL)	No 6 Fuel Oil (BBL)
1987	88,093	28,028	–	–	–	–	–	–	–	–	–	–	–	–	–	–	–	–	–	–	–	–
1988	124,986	46,907	–	–	–	–	–	–	–	–	–	–	–	–	–	–	–	–	–	–	–	–
1989	293,553	36,323	–	–	–	–	–	–	–	–	–	–	–	–	–	–	–	–	–	–	–	–
1990	757	941	–	–	–	–	–	–	–	–	–	–	–	–	–	–	–	–	–	–	–	–
1991	32,668	11,688	–	–	–	–	–	–	–	–	–	–	–	–	–	–	–	–	–	–	–	–
1992	2,562	917	–	–	–	–	–	–	–	–	–	–	–	–	–	–	–	–	–	–	–	–
1993	–	–	–	–	–	–	–	–	–	–	–	–	–	–	–	–	–	–	–	–	–	–
1994	–	–	–	–	–	–	–	–	–	–	–	–	–	–	–	–	–	–	–	–	–	–
1995	–	–	–	–	–	–	–	–	–	–	–	–	–	–	–	–	–	–	–	–	–	–
Totals:	693,934,383	32,580,074	35,184	7,193,973	2,265,734	3,240	212,998	743,825	370,837	1,020	1,080,208	880,667	1,245,468	1,060,115	1,135,389	1,183,608	1,343,824	9,920	1,623	1,487,358	227,151	88

– : Indicates no Record of Produced or Used

849900417

Table B-5(b)

Public Service Electric and Gas Company

Harrison Gas Plant

Liquid Fuel and Natural Gas Used for Gas Production II

Year	TotalGas Produced (MCF)	NG Used (MCF)	Liquid Fuel Total (BBL)	Frontier Illinois (BBL)	Mexican Petroleum (BBL)	Texas Coastal Oil (BBL)	Standard Gas Oil (BBL)	Tar (BBL)	1932 Gas Oil (BBL)	Tar Pitch (BBL)	Bunker C Oil (BBL)	Republic Oil (BBL)	Sum Of Heavy Oil (BBL)	No 6 Heavy Oil (BBL)	Spent Oil (BBL)	Kerosene (BBL)	Propane (BBL)	Naphtha (BBL)	No 2 Light Oil (BBL)
1926	427,223	–	32,987	–	–	–	–	–	–	–	–	–	–	–	–	–	–	–	–
1927	7,926,276	–	551,041	–	–	–	–	–	–	–	–	–	–	–	–	–	–	–	–
1928	8,787,381	–	617,643	–	–	–	–	–	–	–	–	–	–	–	–	–	–	–	–
1929	9,806,261	–	686,475	–	–	–	–	–	–	–	–	–	–	–	–	–	–	–	–
1930	10,244,412	–	942,202	–	–	27,495	–	26,891	–	–	770,467	–	–	–	–	–	–	–	–
1931	10,427,719	–	997,487	–	–	805,775	–	28,639	–	1,022	85,862	74,688	–	–	–	–	–	–	–
1932	10,758,297	–	1,088,383	–	–	56,107	–	–	1,028,952	–	–	–	–	–	–	–	–	–	–
1933	9,847,671	–	989,185	–	–	–	–	–	68,164	–	–	–	–	–	–	–	–	–	–
1934	10,329,076	–	1,047,866	–	–	–	–	–	–	–	–	–	–	–	–	–	–	–	–
1935	9,990,419	–	955,409	–	58,236	–	–	–	–	–	–	–	–	–	–	–	–	–	–
1936	10,411,703	–	1,113,532	–	–	–	–	–	–	–	–	–	–	–	–	–	–	–	–
1937	10,492,765	–	1,116,023	–	–	328	–	–	–	–	–	–	–	–	–	–	–	–	–
1938	10,671,071	–	1,131,980	–	–	–	–	–	–	–	–	–	–	–	–	–	–	–	–
1939	11,294,299	–	1,225,458	–	–	–	–	–	–	–	–	–	–	–	–	–	–	–	–
1940	12,498,333	–	1,312,058	12,056	–	–	–	–	–	–	–	–	–	–	–	–	–	–	–
1941	12,922,891	–	1,395,512	–	–	–	–	–	–	–	–	–	–	–	–	–	–	–	–
1942	13,791,207	–	1,480,661	198	–	–	–	–	–	–	–	–	–	–	–	–	–	–	–
1943	13,948,727	–	1,314,045	–	–	–	–	–	–	–	–	–	–	–	–	–	–	–	–

849900418

Harrison Gas Plant
Liquid Fuel and Natural Gas Used for Gas Production II

Year	TotalGas Produced (MCF)	NG Used (MCF)	Liquid Fuel Total (BBL)	Frontier Illinois (BBL)	Mexican Petroleum (BBL)	Texas Coastal Oil (BBL)	Standard Gas Oil (BBL)	Tar (BBL)	1932 Gas Oil (BBL)	Tar Pitch (BBL)	Bunker C Oil (BBL)	Republic Oil (BBL)	Sum Of Heavy Oil (BBL)	No 6 Heavy Oil (BBL)	Spent Oil (BBL)	Kerosene (BBL)	Propane (BBL)	Naphtha (BBL)	No 2 Light Oil (BBL)
1944	15,001,751	–	1,421,180	–	–	–	–	–	–	–	–	–	–	–	–	–	–	–	–
1945	14,142,930	–	1,347,949	–	–	–	–	–	–	–	–	–	–	–	–	–	–	–	–
1946	13,088,139	–	1,331,412	–	–	–	19,785	–	–	–	–	–	–	–	–	–	–	–	–
1947	13,397,172	–	1,423,108	–	–	–	–	–	–	–	–	–	275,354	–	–	–	–	–	–
1948	13,890,557	–	1,418,495	–	–	–	–	–	–	–	–	–	1,396,866	–	–	–	–	–	–
1949	15,460,852	–	1,588,059	–	–	–	–	–	–	–	–	–	1,547,347	–	–	–	–	–	–
1950	16,529,087	–	1,642,545	–	–	–	–	–	–	–	–	–	1,480,762	–	–	–	–	–	–
1951	21,648,247	167,695	477,748	–	–	–	–	–	–	–	–	–	438,337	–	–	–	–	–	–
1952	23,771,430	165,854	354,092	–	–	–	–	–	–	–	–	–	350,666	–	–	–	–	–	–
1953	26,169,922	234,473	144,410	–	–	–	–	–	–	–	–	–	99,495	459	–	–	–	–	16,502
1954	30,754,926	310,338	189,270	–	–	–	–	–	–	–	–	–	67,472	–	–	–	–	–	116,060
1955	31,876,721	390,596	70,905	–	–	–	–	–	–	–	–	–	57,310	–	–	8,303	–	–	5,292
1956	31,424,372	411,665	18,379	–	–	–	–	–	–	–	–	–	13,451	–	–	93	3,778	–	1,057
1957	29,558,483	405,681	38,966	–	–	–	–	–	–	–	–	–	31,447	–	–	4,423	3,096	–	–
1958	31,900,134	428,958	41,941	–	–	–	–	–	–	–	–	–	33,480	–	–	2,871	2,042	–	3,548
1959	29,613,220	407,093	18,370	–	–	–	–	–	–	–	–	–	13,373	–	–	1,245	1,574	–	2,178
1960	30,345,793	423,456	13,059	–	–	–	–	–	–	–	–	–	11,333	–	–	431	1,068	–	227
1961	31,451,770	445,694	24,801	–	–	–	–	–	–	–	–	–	6,808	–	–	9,870	1,575	–	6,548
1962	29,665,998	419,638	30,819	–	–	–	–	–	–	–	–	–	–	–	1,042	27,397	–	–	2,379
1963	25,918,137	450,388	39,913	–	–	–	–	–	–	–	–	–	–	–	7,184	32,729	–	–	–
1964	18,582,250	202,431	5,838	–	–	–	–	–	–	–	–	–	–	–	225	4,888	725	–	–

849900419

Harrison Gas Plant
Liquid Fuel and Natural Gas Used for Gas Production II

Year	TotalGas Produced (MCF)	NG Used (MCF)	Liquid Fuel Total (BBL)	Frontier Illinois (BBL)	Mexican Petroleum (BBL)	Texas Coastal Oil (BBL)	Standard Gas Oil (BBL)	Tar (BBL)	1932 Gas Oil (BBL)	Tar Pitch (BBL)	Bunker C Oil (BBL)	Republic Oil (BBL)	Sum Of Heavy Oil (BBL)	No 6 Heavy Oil (BBL)	Spent Oil (BBL)	Kerosene (BBL)	Propane (BBL)	Naphtha (BBL)	No 2 Light Oil (BBL)
1965	5,361,932	70,421	9,316	–	–	–	–	–	–	–	–	–	–	–	906	8,410	–	–	–
1966	–	–	–	–	–	–	–	–	–	–	–	–	–	–	–	–	–	–	–
1967	–	–	–	–	–	–	–	–	–	–	–	–	–	–	–	–	–	–	–
1968	459,089	–	154,824	–	–	–	–	–	–	–	–	–	–	–	19,114	116,753	18,957	–	–
1969	96,342	–	35,221	–	–	–	–	–	–	–	–	–	–	–	3,977	20,849	10,395	–	–
1970	467,119	–	131,637	–	–	–	–	–	–	–	–	–	–	–	12,483	95,767	23,387	–	–
1971	410,484	–	136,405	–	–	–	–	–	–	–	–	–	–	–	18,898	109,402	8,106	–	–
1972	288,584	–	102,845	–	–	–	–	–	–	–	–	–	–	–	7,702	51,691	43,452	–	–
1973	876,761	–	232,476	–	–	–	–	–	–	–	–	–	–	–	7,795	42,287	7,409	174,985	–
1974	937,170	–	229,093	–	–	–	–	–	–	–	–	–	–	–	3,763	12,133	18,933	194,265	–
1975	465,930	–	104,173	–	–	–	–	–	–	–	–	–	–	–	1,905	2,264	22,902	77,102	–
1976	851,184	–	239,932	–	–	–	–	–	–	–	–	–	–	–	13,970	84,249	21,234	120,480	–
1977	1,661,696	–	515,713	–	–	–	–	–	–	–	–	–	–	–	55,353	307,990	38,891	113,479	–
1978	236,950	–	87,140	–	–	–	–	–	–	–	–	–	–	–	11,121	65,067	10,451	500	–
1979	281,395	–	98,571	–	–	–	–	–	–	–	–	–	–	–	3,607	70,004	19,942	5,017	–
1980	269,927	–	52,907	–	–	–	–	–	–	–	–	–	–	–	6,790	6,507	15,826	23,785	–
1981	547,566	–	192,752	–	–	–	–	–	–	–	–	–	–	–	19,552	113,339	59,861	–	–
1982	534,068	–	182,704	–	–	–	–	–	–	–	–	–	–	–	15,577	87,599	79,528	–	–
1983	236,336	–	79,295	–	–	–	–	–	–	–	–	–	–	–	1,921	17,160	60,214	–	–
1984	189,420	–	67,771	–	–	–	–	–	–	–	–	–	–	–	2,916	7,960	56,895	–	–
1985	310,339	–	110,705	–	–	–	–	–	–	–	–	–	–	–	4,537	26,620	79,548	–	–

849900420

Harrison Gas Plant
Liquid Fuel and Natural Gas Used for Gas Production II

Year	TotalGas Produced (MCF)	NG Used (MCF)	Liquid Fuel Total (BBL)	Frontier Illinois (BBL)	Mexican Petroleum (BBL)	Texas Coastal Oil (BBL)	Standard Gas Oil (BBL)	Tar (BBL)	1932 Gas Oil (BBL)	Tar Pitch (BBL)	Bunker C Oil (BBL)	Republic Oil (BBL)	Sum Of Heavy Oil (BBL)	No 6 Heavy Oil (BBL)	Spent Oil (BBL)	Kerosene (BBL)	Propane (BBL)	Naphtha (BBL)	No 2 Light Oil (BBL)
1986	141,849	–	52,588	–	–	–	–	–	–	–	–	–	–	–	1,666	10,000	40,922	–	–
1987	88,093	–	28,028	–	–	–	–	–	–	–	–	–	–	–	835	–	27,193	–	–
1988	124,986	–	46,907	–	–	–	–	–	–	–	–	–	–	–	–	–	46,907	–	–
1989	293,553	–	36,323	–	–	–	–	–	–	–	–	–	–	–	–	–	36,323	–	–
1990	757	–	941	–	–	–	–	–	–	–	–	–	–	–	–	–	941	–	–
1991	32,668	–	11,688	–	–	–	–	–	–	–	–	–	–	–	–	–	11,688	–	–
1992	2,562	–	917	–	–	–	–	–	–	–	–	–	–	–	–	–	917	–	–
1993	–	–	–	–	–	–	–	–	–	–	–	–	–	–	–	–	–	–	–
1994	–	–	–	–	–	–	–	–	–	–	–	–	–	–	–	–	–	–	–
1995	–	–	–	–	–	–	–	–	–	–	–	–	–	–	–	–	–	–	–
	693,934,383		32,580,074		58,236		19,785		1,097,115	1,022		74,688		459		1,348,299		709,613	
		4,934,381		12,254		889,706		55,530			856,330		5,823,501		222,837		774,679		153,792

849900421

Table B-6(a)
Public Service Electric and Gas Company

Harrison Gas Plant

Solid Fuel Used for Steam Generation I

849900422

Year	Total Gas Produced (MCF)	Solid Fuel Total (Tons)	Broken Coal (Tons)	Woolson Rice (Tons)	Sidford Greene No 4 Buck (Tons)	DL- W Rice (Tons)	Knicker-bocker Bit Coal (Tons)	NAWG Bit Coal (Tons)	W Moreland Bit Coal (Tons)	Briquete Pitch (Tons)	Pitch (Tons)	Bitumi-nous (Tons)	Koppers Bitumi-nous (Tons)	Flat Top Bitumi-nous (Tons)	Adelphia Rice (Tons)	Hayden Rice (Tons)	RICE (Tons)	RIVER (Tons)	PubFuel Breeze (Tons)	Anthracite (Tons)	Camden Breeze (Tons)	Bar Tuck Bit (Tons)	Cortright Bit (Tons)	Pittsburgh Soft Coal (Tons)	Barrett Fuel Pitch (Tons)
1926	427,223	9,983	–	–	–	25	63	932	151	–	–	–	–	–	–	–	–	–	–	–	–	–	–	–	–
1927	7,926,276	42,851	–	–	–	–	–	90	15	–	–	577	–	–	–	–	–	–	–	–	–	–	–	–	–
1928	8,787,381	40,618	–	–	–	–	–	–	2	–	–	332	–	–	–	–	–	–	–	–	–	–	–	–	–
1929	9,806,261	41,439	–	–	–	–	–	–	–	–	–	382	–	–	–	–	–	–	–	–	–	–	–	–	–
1930	10,244,412	48,614	–	–	–	–	–	–	–	–	–	324	–	–	–	–	–	–	–	–	–	–	–	–	–
1931	10,427,719	49,194	–	–	–	–	–	–	–	7	138	400	–	–	–	–	–	–	–	–	–	–	–	–	–
1932	10,758,297	48,871	–	–	–	–	–	–	–	–	–	391	–	–	–	–	–	–	–	–	–	–	–	–	–
1933	9,847,671	45,440	–	–	8	–	–	–	–	–	–	46	300	–	–	–	–	–	247	–	–	–	–	–	–
1934	10,329,076	45,870	–	–	–	–	–	–	–	–	–	–	425	–	–	–	–	–	–	–	–	–	–	–	–
1935	9,990,419	42,016	–	–	–	–	–	–	–	–	–	–	26	–	–	–	–	–	–	–	–	–	–	–	–
1936	10,411,703	42,356	–	–	–	–	–	–	–	–	–	–	143	–	–	–	–	–	–	–	–	199	111	–	–
1937	10,492,765	41,607	–	–	–	–	–	–	–	–	–	–	4	–	–	–	–	–	–	–	–	–	–	–	–
1938	10,671,071	36,195	–	–	–	–	–	–	–	–	–	–	356	903	–	–	–	–	–	–	–	–	–	204	–
1939	11,294,299	21,328	–	–	–	–	–	–	–	–	–	–	–	160	–	–	–	–	–	–	–	–	–	–	3,252
1940	12,498,333	32,706	–	–	–	–	–	–	–	–	–	–	–	–	–	–	–	–	–	–	–	–	–	–	–
1941	12,922,891	38,983	–	–	–	–	–	–	–	–	–	–	–	–	331	183	–	–	–	–	–	–	–	–	–
1942	13,791,207	49,146	–	556	–	–	–	–	–	–	–	–	–	–	424	726	530	14,000	–	–	–	–	–	–	–

Harrison Gas Plant

Solid Fuel Used for Steam Generation I

Year	Total Gas Produced (MCF)	Solid Fuel Total (Tons)	Broken Coal (Tons)	Woolson Rice (Tons)	Sidford Greene No 4 Buck (Tons)	DL- W Rice (Tons)	Knicker-bocker Bit Coal (Tons)	NAWG Bit Coal (Tons)	W Moreland Bit Coal (Tons)	Briquete Pitch (Tons)	Pitch (Tons)	Bitumi-nous (Tons)	Koppers Bitumi-nous (Tons)	Flat Top Bitumi-nous (Tons)	Adelphia Rice (Tons)	Hayden Rice (Tons)	RICE (Tons)	RIVER (Tons)	PubFuel Breeze (Tons)	Anthracite (Tons)	Camden Breeze (Tons)	Bar Tuck Bit (Tons)	Cortright Bit (Tons)	Pittsburgh Soft Coal (Tons)	Barrett Fuel Pitch (Tons)
1943	13,948,727	43,954	–	–	–	–	–	–	–	–	–	–	–	–	–	–	–	1,935	–	–	685	–	–	–	–
1944	15,001,751	40,397	–	–	–	–	–	–	–	–	–	–	–	–	–	–	–	–	–	–	2,580	–	–	–	–
1945	14,142,930	37,939	–	–	–	–	–	–	–	–	–	–	–	–	–	–	–	–	–	–	68	–	–	–	–
1946	13,088,139	38,275	–	–	–	–	–	–	–	–	–	–	–	–	–	–	–	–	–	–	26	–	–	–	–
1947	13,397,172	41,696	–	–	–	–	–	–	–	–	–	–	–	–	–	–	–	–	–	–	–	–	–	–	–
1948	13,890,557	41,175	–	–	–	–	–	–	–	–	–	–	–	–	–	–	–	–	–	1,402	–	–	–	–	–
1949	15,460,852	36,602	85	–	–	–	–	–	–	–	–	–	–	–	–	–	–	–	–	84	–	–	–	–	–
1950	16,529,087	43,113	–	–	–	–	–	–	–	–	–	–	–	–	–	–	–	–	–	–	–	–	–	–	–
1951	21,648,247	39,476	–	–	–	–	–	–	–	–	–	–	–	–	–	–	–	–	–	–	–	–	–	–	–
1952	23,771,430	28,868	–	–	–	–	–	–	–	–	–	–	–	–	–	–	–	–	–	–	–	–	–	–	–
1953	26,169,922	24,739	–	–	–	–	–	–	–	–	–	–	–	–	–	–	–	–	–	–	–	–	–	–	–
1954	30,754,926	29,165	–	–	–	–	–	–	–	–	–	943	–	–	–	–	–	–	–	–	–	–	–	–	–
1955	31,876,721	21,365	–	–	–	–	–	–	–	–	–	428	–	–	–	–	–	–	–	–	–	–	–	–	–
1956	31,424,372	24,305	–	–	–	–	–	–	–	–	–	–	–	–	–	–	–	–	–	–	–	–	–	–	–
1957	29,558,483	18,273	–	–	–	–	–	–	–	–	–	–	–	–	–	–	–	–	–	–	–	–	–	–	–
1958	31,900,134	19,691	–	–	–	–	–	–	–	–	–	–	–	–	–	–	–	–	–	–	–	–	–	–	–
1959	29,613,220	18,171	–	–	–	–	–	–	–	–	–	–	–	–	–	–	–	–	–	–	–	–	–	–	–
1960	30,345,793	18,443	–	–	–	–	–	–	–	–	–	–	–	–	–	–	–	–	–	–	–	–	–	–	–
1961	31,451,770	19,662	–	–	–	–	–	–	–	–	–	–	–	–	–	–	–	–	–	–	–	–	–	–	–

849900423

Harrison Gas Plant

Solid Fuel Used for Steam Generation I

Year	Total Gas Produced (MCF)	Solid Fuel Total (Tons)	Broken Coal (Tons)	Woolson Rice (Tons)	Sidford Greene No 4 Buck (Tons)	DL- W Rice (Tons)	Knicker-bocker Bit Coal (Tons)	NAWG Bit Coal (Tons)	W Moreland Bit Coal (Tons)	Briquete Pitch (Tons)	Pitch (Tons)	Bitumi-nous (Tons)	Koppers Bitumi-nous (Tons)	Flat Top Bitumi-nous (Tons)	Adelphia Rice (Tons)	Hayden Rice (Tons)	RICE (Tons)	RIVER (Tons)	PubFuel Breeze (Tons)	Anthracite (Tons)	Camden Breeze (Tons)	Bar Tuck Bit (Tons)	Cortright Bit (Tons)	Pittsburgh Soft Coal (Tons)	Barrett Fuel Pitch (Tons)
1962	29,665,998	18,254	--	--	--	--	--	--	--	--	--	--	--	--	--	--	--	--	--	--	--	--	--	--	--
1963	25,918,137	11,589	--	--	--	--	--	--	--	--	--	--	--	--	--	--	--	--	--	--	--	--	--	--	--
1964	18,582,250	--	--	--	--	--	--	--	--	--	--	--	--	--	--	--	--	--	--	--	--	--	--	--	--
1965	5,361,932	--	--	--	--	--	--	--	--	--	--	--	--	--	--	--	--	--	--	--	--	--	--	--	--
1966	--	--	--	--	--	--	--	--	--	--	--	--	--	--	--	--	--	--	--	--	--	--	--	--	--
1967	--	--	--	--	--	--	--	--	--	--	--	--	--	--	--	--	--	--	--	--	--	--	--	--	--
1968	459,089	--	--	--	--	--	--	--	--	--	--	--	--	--	--	--	--	--	--	--	--	--	--	--	--
1969	96,342	--	--	--	--	--	--	--	--	--	--	--	--	--	--	--	--	--	--	--	--	--	--	--	--
1970	467,119	--	--	--	--	--	--	--	--	--	--	--	--	--	--	--	--	--	--	--	--	--	--	--	--
1971	410,484	--	--	--	--	--	--	--	--	--	--	--	--	--	--	--	--	--	--	--	--	--	--	--	--
1972	288,584	--	--	--	--	--	--	--	--	--	--	--	--	--	--	--	--	--	--	--	--	--	--	--	--
1973	876,761	--	--	--	--	--	--	--	--	--	--	--	--	--	--	--	--	--	--	--	--	--	--	--	--
1974	937,170	--	--	--	--	--	--	--	--	--	--	--	--	--	--	--	--	--	--	--	--	--	--	--	--
1975	465,930	--	--	--	--	--	--	--	--	--	--	--	--	--	--	--	--	--	--	--	--	--	--	--	--
1976	851,184	--	--	--	--	--	--	--	--	--	--	--	--	--	--	--	--	--	--	--	--	--	--	--	--
1977	1,661,696	--	--	--	--	--	--	--	--	--	--	--	--	--	--	--	--	--	--	--	--	--	--	--	--
1978	236,950	--	--	--	--	--	--	--	--	--	--	--	--	--	--	--	--	--	--	--	--	--	--	--	--
1979	281,395	--	--	--	--	--	--	--	--	--	--	--	--	--	--	--	--	--	--	--	--	--	--	--	--
1980	269,927	--	--	--	--	--	--	--	--	--	--	--	--	--	--	--	--	--	--	--	--	--	--	--	--

849900424

849900425

Harrison Gas Plant

Solid Fuel Used for Steam Generation I

Year	Total Gas Produced (MCF)	Solid Fuel Total (Tons)	Broken Coal (Tons)	Woolson Rice (Tons)	Sidford Greene No 4 Buck (Tons)	DL- W Rice (Tons)	Knicker-bocker Bit Coal (Tons)	NAWG Bit Coal (Tons)	W Moreland Bit Coal (Tons)	Briquete Pitch (Tons)	Pitch (Tons)	Bitumi-nous (Tons)	Koppers Bitumi-nous (Tons)	Flat Top Bitumi-nous (Tons)	Adelphia Rice (Tons)	Hayden Rice (Tons)	RICE (Tons)	RIVER (Tons)	PubFuel Breeze (Tons)	Anthracite (Tons)	Camden Breeze (Tons)	Bar Tuck Bit (Tons)	Cortright Bit (Tons)	Pittsburgh Soft Coal (Tons)	Barrett Fuel Pitch (Tons)
1981	547,566	--	--	--	--	--	--	--	--	--	--	--	--	--	--	--	--	--	--	--	--	--	--	--	--
1982	534,068	--	--	--	--	--	--	--	--	--	--	--	--	--	--	--	--	--	--	--	--	--	--	--	--
1983	236,336	--	--	--	--	--	--	--	--	--	--	--	--	--	--	--	--	--	--	--	--	--	--	--	--
1984	189,420	--	--	--	--	--	--	--	--	--	--	--	--	--	--	--	--	--	--	--	--	--	--	--	--
1985	310,339	--	--	--	--	--	--	--	--	--	--	--	--	--	--	--	--	--	--	--	--	--	--	--	--
1986	141,849	--	--	--	--	--	--	--	--	--	--	--	--	--	--	--	--	--	--	--	--	--	--	--	--
1987	88,093	--	--	--	--	--	--	--	--	--	--	--	--	--	--	--	--	--	--	--	--	--	--	--	--
1988	124,986	--	--	--	--	--	--	--	--	--	--	--	--	--	--	--	--	--	--	--	--	--	--	--	--
1989	293,553	--	--	--	--	--	--	--	--	--	--	--	--	--	--	--	--	--	--	--	--	--	--	--	--
1990	757	--	--	--	--	--	--	--	--	--	--	--	--	--	--	--	--	--	--	--	--	--	--	--	--
1991	32,668	--	--	--	--	--	--	--	--	--	--	--	--	--	--	--	--	--	--	--	--	--	--	--	--
1992	2,562	--	--	--	--	--	--	--	--	--	--	--	--	--	--	--	--	--	--	--	--	--	--	--	--
1993	--	--	--	--	--	--	--	--	--	--	--	--	--	--	--	--	--	--	--	--	--	--	--	--	--
1994	--	--	--	--	--	--	--	--	--	--	--	--	--	--	--	--	--	--	--	--	--	--	--	--	--
1995	--	--	--	--	--	--	--	--	--	--	--	--	--	--	--	--	--	--	--	--	--	--	--	--	--
Total:		1,292,369		556		25		1,023		7		3,822		1,063		908		15,935		1,486		199		204	
	693,934,383		85		8		63		168		138		1,254		754		530		247		3,359		111		3,252

Table B-6(b)

Public Service Electric and Gas Company

Harrison Gas Plant

849900426

Solid Fuel (Barley) Used for Steam Generation II

Year	Total Gas Produced (MCF)	Solid Fuel Total (Tons)	Jonathan Barley (Tons)	Woolson Barley (Tons)	Madeira Hill Barley (Tons)	DL-W Barley (Tons)	Peterson Barley (Tons)	Penn Barley (Tons)	West Dod Barley (Tons)	Foreston Barley (Tons)	Sidford-Greene Barley (Tons)	Adelphia Barley (Tons)	Continental Barley (Tons)	Hanna Barley (Tons)	Beahm Barley (Tons)	Common Barley (Tons)	BARLEY (Tons)	Win Knick Barley (Tons)
1926	427,223	9,983	–	–	–	7,760	–	–	–	–	–	–	–	–	–	–	–	–
1927	7,926,276	42,851	–	–	23,786	9,570	–	–	–	–	–	–	–	–	–	–	–	–
1928	8,787,381	40,618	–	–	10,646	23,339	–	–	–	–	–	–	–	–	–	–	–	–
1929	9,806,261	41,439	–	–	–	34,543	–	–	–	–	–	–	–	–	–	–	–	–
1930	10,244,412	48,614	–	–	–	11,596	31,757	–	–	–	–	–	–	–	–	–	–	–
1931	10,427,719	49,194	–	–	–	–	17,174	–	–	–	27,645	–	–	–	–	–	–	–
1932	10,758,297	48,871	–	–	–	–	1,554	–	–	–	43,871	–	–	–	–	–	–	–
1933	9,847,671	45,440	–	–	500	479	3,843	–	–	–	36,218	–	–	48	–	–	–	–
1934	10,329,076	45,870	–	–	–	–	–	–	–	–	42,136	–	–	–	–	–	–	–
1935	9,990,419	42,016	12,341	–	–	–	–	–	–	–	25,991	–	–	–	–	–	–	311
1936	10,411,703	42,356	23,860	–	–	–	–	–	–	–	14,336	–	–	–	–	–	–	119
1937	10,492,765	41,607	27,071	–	–	–	–	–	–	–	5,782	682	–	4,419	–	–	–	–
1938	10,671,071	36,195	24,296	–	–	–	–	–	5,084	–	–	–	–	1,617	–	–	–	–
1939	11,294,299	21,328	11,813	–	–	–	–	–	706	–	2,322	–	–	–	–	–	–	–
1940	12,498,333	32,706	27,569	89	–	–	–	–	–	–	1,710	–	–	–	–	–	–	212
1941	12,922,891	38,983	26,735	279	–	–	–	289	–	3,272	4,176	225	–	–	–	41	–	222
1942	13,791,207	49,146	1,231	1,375	–	–	–	–	–	1,127	2,795	716	347	–	123	–	20,649	–
1943	13,948,727	43,954	–	–	–	–	–	–	–	–	–	–	–	–	–	–	35,075	–
1944	15,001,751	40,397	–	–	–	–	–	–	–	–	–	–	–	–	–	–	32,245	–

– : Indicates no Record of Produced or Used

Harrison Gas Plant
Solid Fuel (Barley) Used for Steam Generation II

Year	Total Gas Produced (MCF)	Solid Fuel Total (Tons)	Jonathan Barley (Tons)	Woolson Barley (Tons)	Madeira Hill Barley (Tons)	DL-W Barley (Tons)	Peterson Barley (Tons)	Penn Barley (Tons)	West Dod Barley (Tons)	Foreston Barley (Tons)	Sidford-Greene Barley (Tons)	Adelphia Barley (Tons)	Continental Barley (Tons)	Hanna Barley (Tons)	Beahm Barley (Tons)	Common Barley (Tons)	BARLEY (Tons)	Win Knick Barley (Tons)
1945	14,142,930	37,939	–	–	–	–	–	–	–	–	–	–	–	–	–	–	31,816	–
1946	13,088,139	38,275	–	–	–	–	–	–	–	–	–	–	–	–	–	–	30,650	–
1947	13,397,172	41,696	–	–	–	–	–	–	–	–	–	–	–	–	–	–	34,970	–
1948	13,890,557	41,175	–	–	–	–	–	–	–	–	–	–	–	–	–	–	32,356	–
1949	15,460,852	36,602	–	–	–	–	–	–	–	–	–	–	–	–	–	–	27,792	–
1950	16,529,087	43,113	–	–	–	–	–	–	–	–	–	–	–	–	–	–	34,183	–
1951	21,648,247	39,476	–	–	–	–	–	–	–	–	–	–	–	–	–	–	35,333	–
1952	23,771,430	28,868	–	–	–	–	–	–	–	–	–	–	–	–	–	–	24,663	–
1953	26,169,922	24,739	–	–	–	–	–	–	–	–	–	–	–	–	–	–	21,112	–
1954	30,754,926	29,165	–	–	–	–	–	–	–	–	–	–	–	–	–	–	24,374	–
1955	31,876,721	21,365	–	–	–	–	–	–	–	–	–	–	–	–	–	–	19,873	–
1956	31,424,372	24,305	–	–	–	–	–	–	–	–	–	–	–	–	–	–	23,740	–
1957	29,558,483	18,273	–	–	–	–	–	–	–	–	–	–	–	–	–	–	17,549	–
1958	31,900,134	19,691	–	–	–	–	–	–	–	–	–	–	–	–	–	–	18,524	–
1959	29,613,220	18,171	–	–	–	–	–	–	–	–	–	–	–	–	–	–	17,394	–
1960	30,345,793	18,443	–	–	–	–	–	–	–	–	–	–	–	–	–	–	17,810	–
1961	31,451,770	19,662	–	–	–	–	–	–	–	–	–	–	–	–	–	–	19,041	–
1962	29,665,998	18,254	–	–	–	–	–	–	–	–	–	–	–	–	–	–	18,107	–
1963	25,918,137	11,589	–	–	–	–	–	–	–	–	–	–	–	–	–	–	11,569	–
1964	18,582,250	–	–	–	–	–	–	–	–	–	–	–	–	–	–	–	–	–
1965	5,361,932	–	–	–	–	–	–	–	–	–	–	–	–	–	–	–	–	–

– : Indicates no Record of Produced or Used

849900427

Harrison Gas Plant
Solid Fuel (Barley) Used for Steam Generation II

Year	Total Gas Produced (MCF)	Solid Fuel Total (Tons)	Jonathan Barley (Tons)	Woolson Barley (Tons)	Madeira Hill Barley (Tons)	DL -W Barley (Tons)	Peterson Barley (Tons)	Penn Barley (Tons)	West Dod Barley (Tons)	Foreston Barley (Tons)	Sidford -Greene Barley (Tons)	Adelphia Barley (Tons)	Continental Barley (Tons)	Hanna Barley (Tons)	Beahm Barley (Tons)	Common Barley (Tons)	BARLEY (Tons)	Win Knick Barley (Tons)
1966	–	–	–	–	–	–	–	–	–	–	–	–	–	–	–	–	–	–
1967	–	–	–	–	–	–	–	–	–	–	–	–	–	–	–	–	–	–
1968	459,089	–	–	–	–	–	–	–	–	–	–	–	–	–	–	–	–	–
1969	96,342	–	–	–	–	–	–	–	–	–	–	–	–	–	–	–	–	–
1970	467,119	–	–	–	–	–	–	–	–	–	–	–	–	–	–	–	–	–
1971	410,484	–	–	–	–	–	–	–	–	–	–	–	–	–	–	–	–	–
1972	288,584	–	–	–	–	–	–	–	–	–	–	–	–	–	–	–	–	–
1973	876,761	–	–	–	–	–	–	–	–	–	–	–	–	–	–	–	–	–
1974	937,170	–	–	–	–	–	–	–	–	–	–	–	–	–	–	–	–	–
1975	465,930	–	–	–	–	–	–	–	–	–	–	–	–	–	–	–	–	–
1976	851,184	–	–	–	–	–	–	–	–	–	–	–	–	–	–	–	–	–
1977	1,661,696	–	–	–	–	–	–	–	–	–	–	–	–	–	–	–	–	–
1978	236,950	–	–	–	–	–	–	–	–	–	–	–	–	–	–	–	–	–
1979	281,395	–	–	–	–	–	–	–	–	–	–	–	–	–	–	–	–	–
1980	269,927	–	–	–	–	–	–	–	–	–	–	–	–	–	–	–	–	–
1981	547,566	–	–	–	–	–	–	–	–	–	–	–	–	–	–	–	–	–
1982	534,068	–	–	–	–	–	–	–	–	–	–	–	–	–	–	–	–	–
1983	236,336	–	–	–	–	–	–	–	–	–	–	–	–	–	–	–	–	–
1984	189,420	–	–	–	–	–	–	–	–	–	–	–	–	–	–	–	–	–
1985	310,339	–	–	–	–	–	–	–	–	–	–	–	–	–	–	–	–	–
1986	141,849	–	–	–	–	–	–	–	–	–	–	–	–	–	–	–	–	–

– : Indicates no Record of Produced or Used

849900428

Harrison Gas Plant
Solid Fuel (Barley) Used for Steam Generation II

Year	Total Gas Produced (MCF)	Solid Fuel Total (Tons)	Jonathan Barley (Tons)	Woolson Barley (Tons)	Madeira Hill Barley (Tons)	DL-W Barley (Tons)	Peterson Barley (Tons)	Penn Barley (Tons)	West Dod Barley (Tons)	Foreston Barley (Tons)	Sidford-Greene Barley (Tons)	Adelphia Barley (Tons)	Continental Barley (Tons)	Hanna Barley (Tons)	Beahm Barley (Tons)	Common Barley (Tons)	BARLEY (Tons)	Win Knick Barley (Tons)
1987	88,093	--	--	--	--	--	--	--	--	--	--	--	--	--	--	--	--	--
1988	124,986	--	--	--	--	--	--	--	--	--	--	--	--	--	--	--	--	--
1989	293,553	--	--	--	--	--	--	--	--	--	--	--	--	--	--	--	--	--
1990	757	--	--	--	--	--	--	--	--	--	--	--	--	--	--	--	--	--
1991	32,668	--	--	--	--	--	--	--	--	--	--	--	--	--	--	--	--	--
1992	2,562	--	--	--	--	--	--	--	--	--	--	--	--	--	--	--	--	--
1993	--	--	--	--	--	--	--	--	--	--	--	--	--	--	--	--	--	--
1994	--	--	--	--	--	--	--	--	--	--	--	--	--	--	--	--	--	--
1995	--	--	--	--	--	--	--	--	--	--	--	--	--	--	--	--	--	--
Totals:	693,934,383	1,292,369	154,915	1,743	34,932	87,287	54,328	289	5,790	4,399	206,980	1,623	347	6,084	123	41	548,822	864

-- : Indicates no Record of Produced or Used

849900429

Table B-6(c)

Public Service Electric and Gas Company

Harrison Gas Plant

Solid Fuel (Coke) Used for Steam Generation III

Year	Total Gas Produced (MCF)	Solid Fuel Total (Tons)	Seaboard Coke (Tons)	Koppers Coke (Tons)	Rainey Coke (Tons)	Imperial Coke (Tons)	Jamison Coke (Tons)	Connellsville Coke (Tons)	Transocean Coke (Tons)	Barley Coke (Tons)	Buck Coke (Tons)	Debevois Coke (Tons)	Hillman Coke (Tons)	Wieman Ward Coke (Tons)	Hudson Valley Coke (Tons)	Producers Coke (Tons)	Hanover Coke Breeze (Tons)	COKE (Tons)	Camden Coke (Tons)	Con Edison Coke (Tons)	Brooklyn Boro Coke (Tons)
1926	427,223	9,983	--	--	262	--	--	--	--	332	--	47	--	--	--	411	--	--	--	--	--
1927	7,926,276	42,851	160	--	1,950	--	--	--	--	115	--	169	3,090	27	518	1,647	--	--	1,137	--	--
1928	8,787,381	40,618	1,604	--	22	--	--	--	--	1,108	58	--	1,623	61	22	51	--	--	1,751	--	--
1929	9,806,261	41,439	5,059	--	--	--	--	--	--	52	82	--	--	--	--	--	--	--	1,321	--	--
1930	10,244,412	48,614	4,548	--	344	--	--	--	--	--	--	--	--	--	--	--	--	--	45	--	--
1931	10,427,719	49,194	3,438	--	391	--	--	--	--	--	--	--	--	--	--	--	--	--	--	--	--
1932	10,758,297	48,871	3,055	--	--	--	--	--	--	--	--	--	--	--	--	--	--	--	--	--	--
1933	9,847,671	45,440	2,096	--	--	--	--	33	--	--	--	--	--	--	--	--	324	--	1,298	--	--
1934	10,329,076	45,870	--	3,161	--	63	85	--	--	--	--	--	--	--	--	--	--	--	--	--	--
1935	9,990,419	42,016	--	827	51	--	--	--	--	--	--	--	--	--	--	--	--	--	2,469	--	--
1936	10,411,703	42,356	--	906	2	--	--	--	8	--	--	--	--	--	--	--	--	--	2,673	--	--
1937	10,492,765	41,607	--	--	--	--	--	--	--	--	--	--	--	--	--	--	--	--	3,650	--	--
1938	10,671,071	36,195	--	--	--	--	--	--	--	--	--	--	--	--	--	--	--	--	3,735	--	--
1939	11,294,299	21,328	--	--	--	--	--	--	--	--	--	--	--	--	--	--	--	--	3,075	--	--
1940	12,498,333	32,706	--	--	--	--	--	--	--	--	--	--	--	--	--	--	--	--	3,127	--	--
1941	12,922,891	38,983	--	--	--	--	--	--	--	--	--	--	--	--	--	--	--	--	3,231	--	--
1942	13,791,207	49,146	--	--	448	--	--	--	--	--	--	--	--	--	--	--	--	--	4,100	--	--
1943	13,948,727	43,954	--	1,184	--	--	--	--	--	--	--	--	--	--	--	--	--	13	5,062	--	--

-- : Indicates no Record of Produced or Used

849900430

Harrison Gas Plant

Solid Fuel (Coke) Used for Steam Generation III

Year	Total Gas Produced (MCF)	Solid Fuel Total (Tons)	Seaboard Coke (Tons)	Koppers Coke (Tons)	Rainey Coke (Tons)	Imperial Coke (Tons)	Jamison Coke (Tons)	Connellsville Coke (Tons)	Transocean Coke (Tons)	Barley Coke (Tons)	Buck Coke (Tons)	Debevois Coke (Tons)	Hillman Coke (Tons)	Wieman Ward Coke (Tons)	Hudson Valley Coke (Tons)	Producers Coke (Tons)	Hanover Coke Breeze (Tons)	COKE (Tons)	Camden Coke (Tons)	Con Edison Coke (Tons)	Brooklyn Boro Coke (Tons)
1944	15,001,751	40,397	–	1,917	–	–	–	–	–	–	–	–	–	–	–	–	–	–	3,656	–	–
1945	14,142,930	37,939	–	4,250	–	–	–	–	–	–	–	–	–	–	–	–	–	–	1,805	–	–
1946	13,088,139	38,275	–	2,777	–	–	–	–	–	–	–	–	–	–	–	–	–	–	4,822	–	–
1947	13,397,172	41,696	–	1,982	–	–	–	–	–	–	–	–	–	–	–	–	–	–	4,744	–	–
1948	13,890,557	41,175	–	3,613	–	–	–	–	–	–	–	–	–	–	–	–	–	–	3,803	–	–
1949	15,460,852	36,602	–	4,612	–	–	–	–	–	–	–	–	–	–	–	–	–	17	4,013	–	–
1950	16,529,087	43,113	–	830	–	–	–	–	–	–	–	–	–	–	–	–	–	–	8,100	–	–
1951	21,648,247	39,476	–	478	–	–	–	–	–	–	–	–	–	–	–	–	–	–	3,017	648	–
1952	23,771,430	28,868	–	–	–	–	–	–	–	–	–	–	–	–	–	–	–	–	4,192	–	13
1953	26,169,922	24,739	–	–	–	–	–	–	–	–	–	–	–	–	–	–	–	–	3,627	–	–
1954	30,754,926	29,165	–	–	–	–	–	–	–	–	–	–	–	–	–	–	–	–	3,849	–	–
1955	31,876,721	21,365	–	–	–	–	–	–	–	–	–	–	–	–	–	–	–	–	1,065	–	–
1956	31,424,372	24,305	–	–	–	–	–	–	–	–	–	–	–	–	–	–	–	–	565	–	–
1957	29,558,483	18,273	–	–	–	–	–	–	–	–	–	–	–	–	–	–	–	–	724	–	–
1958	31,900,134	19,691	–	–	–	–	–	–	–	–	–	–	–	–	–	–	–	–	1,168	–	–
1959	29,613,220	18,171	–	–	–	–	–	–	–	–	–	–	–	–	–	–	–	–	778	–	–
1960	30,345,793	18,443	–	–	–	–	–	–	–	–	–	–	–	–	–	–	–	–	633	–	–
1961	31,451,770	19,662	–	–	–	–	–	–	–	–	–	–	–	–	–	–	–	–	621	–	–
1962	29,665,998	18,254	–	–	–	–	–	–	–	–	–	–	–	–	–	–	–	–	147	–	–
1963	25,918,137	11,589	–	–	–	–	–	–	–	–	–	–	–	–	–	–	–	–	20	–	–
1964	18,582,250	–	–	–	–	–	–	–	–	–	–	–	–	–	–	–	–	–	–	–	–

– : Indicates no Record of Produced or Used

849900431

Harrison Gas Plant

Solid Fuel (Coke) Used for Steam Generation III

Year	Total Gas Produced (MCF)	Solid Fuel Total (Tons)	Seaboard Coke (Tons)	Koppers Coke (Tons)	Rainey Coke (Tons)	Imperial Coke (Tons)	Jamison Coke (Tons)	Connellsville Coke (Tons)	Transocean Coke (Tons)	Barley Coke (Tons)	Buck Coke (Tons)	Debevois Coke (Tons)	Hillman Coke (Tons)	Wieman Ward Coke (Tons)	Hudson Valley Coke (Tons)	Producers Coke (Tons)	Hanover Coke Breeze (Tons)	COKE (Tons)	Camden Coke (Tons)	Con Edison Coke (Tons)	Brooklyn Boro Coke (Tons)
1965	5,361,932	–	–	–	–	–	–	–	–	–	–	–	–	–	–	–	–	–	–	–	–
1966	–	–	–	–	–	–	–	–	–	–	–	–	–	–	–	–	–	–	–	–	–
1967	–	–	–	–	–	–	–	–	–	–	–	–	–	–	–	–	–	–	–	–	–
1968	459,089	–	–	–	–	–	–	–	–	–	–	–	–	–	–	–	–	–	–	–	–
1969	96,142	–	–	–	–	–	–	–	–	–	–	–	–	–	–	–	–	–	–	–	–
1970	467,119	–	–	–	–	–	–	–	–	–	–	–	–	–	–	–	–	–	–	–	–
1971	410,484	–	–	–	–	–	–	–	–	–	–	–	–	–	–	–	–	–	–	–	–
1972	288,584	–	–	–	–	–	–	–	–	–	–	–	–	–	–	–	–	–	–	–	–
1973	876,761	–	–	–	–	–	–	–	–	–	–	–	–	–	–	–	–	–	–	–	–
1974	937,170	–	–	–	–	–	–	–	–	–	–	–	–	–	–	–	–	–	–	–	–
1975	465,930	–	–	–	–	–	–	–	–	–	–	–	–	–	–	–	–	–	–	–	–
1976	851,184	–	–	–	–	–	–	–	–	–	–	–	–	–	–	–	–	–	–	–	–
1977	1,661,696	–	–	–	–	–	–	–	–	–	–	–	–	–	–	–	–	–	–	–	–
1978	236,950	–	–	–	–	–	–	–	–	–	–	–	–	–	–	–	–	–	–	–	–
1979	281,395	–	–	–	–	–	–	–	–	–	–	–	–	–	–	–	–	–	–	–	–
1980	269,927	–	–	–	–	–	–	–	–	–	–	–	–	–	–	–	–	–	–	–	–
1981	547,566	–	–	–	–	–	–	–	–	–	–	–	–	–	–	–	–	–	–	–	–
1982	534,068	–	–	–	–	–	–	–	–	–	–	–	–	–	–	–	–	–	–	–	–
1983	236,336	–	–	–	–	–	–	–	–	–	–	–	–	–	–	–	–	–	–	–	–
1984	189,420	–	–	–	–	–	–	–	–	–	–	–	–	–	–	–	–	–	–	–	–
1985	310,339	–	–	–	–	–	–	–	–	–	–	–	–	–	–	–	–	–	–	–	–

– : Indicates no Record of Produced or Used

849900432

Harrison Gas Plant

Solid Fuel (Coke) Used for Steam Generation III

Year	Total Gas Produced (MCF)	Solid Fuel Total (Tons)	Seaboard Coke (Tons)	Koppers Coke (Tons)	Rainey Coke (Tons)	Imperial Coke (Tons)	Jamison Coke (Tons)	Connellsville Coke (Tons)	Transocean Coke (Tons)	Barley Coke (Tons)	Buck Coke (Tons)	Debevois Coke (Tons)	Hillman Coke (Tons)	Wieman Ward Coke (Tons)	Hudson Valley Coke (Tons)	Producers Coke (Tons)	Hanover Coke Breeze (Tons)	COKE (Tons)	Camden Coke (Tons)	Con Edison Coke (Tons)	Brooklyn Boro Coke (Tons)
1986	141,849	--	--	--	--	--	--	--	--	--	--	--	--	--	--	--	--	--	--	--	--
1987	88,093	--	--	--	--	--	--	--	--	--	--	--	--	--	--	--	--	--	--	--	--
1988	124,986	--	--	--	--	--	--	--	--	--	--	--	--	--	--	--	--	--	--	--	--
1989	293,553	--	--	--	--	--	--	--	--	--	--	--	--	--	--	--	--	--	--	--	--
1990	757	--	--	--	--	--	--	--	--	--	--	--	--	--	--	--	--	--	--	--	--
1991	32,668	--	--	--	--	--	--	--	--	--	--	--	--	--	--	--	--	--	--	--	--
1992	2,562	--	--	--	--	--	--	--	--	--	--	--	--	--	--	--	--	--	--	--	--
1993	--	--	--	--	--	--	--	--	--	--	--	--	--	--	--	--	--	--	--	--	--
1994	--	--	--	--	--	--	--	--	--	--	--	--	--	--	--	--	--	--	--	--	--
1995	--	--	--	--	--	--	--	--	--	--	--	--	--	--	--	--	--	--	--	--	--
Totals:		1,292,369		26,538		63		33		1,608		216		88		2,109		29		648	
	693,934,383		19,960		3,470		85		8		141		4,714		540		324		88,017		13

-- : Indicates no Record of Produced or Used

849900433

Table B-7

Public Service Electric and Gas Company

Harrison Gas Plant

Liquid Fuels Used in Steam Generation

Year	Total Gas Produced (MCF)	Total Liquid Fuels (BBL)	Tar (BBL)	Atlantic Gas Oil (BBL)	Heavy Oil (BBL)	No 2 Light Oil (BBL)	No 6 Heavy Oil (BBL)	Kerosene (BBL)	Gas Oil (BBL)	1938 Gas Oil (BBL)	1939 Gas Oil (BBL)	1940 Gas Oil (BBL)	1941 Gas Oil (BBL)	1942 Gas Oil (BBL)
1926	427,223	--	--	--	--	--	--	--	--	--	--	--	--	--
1927	7,926,276	--	--	--	--	--	--	--	--	--	--	--	--	--
1928	8,787,381	--	--	--	--	--	--	--	--	--	--	--	--	--
1929	9,806,261	--	--	--	--	--	--	--	--	--	--	--	--	--
1930	10,244,412	--	--	--	--	--	--	--	--	--	--	--	--	--
1931	10,427,719	--	--	--	--	--	--	--	--	--	--	--	--	--
1932	10,758,297	--	--	--	--	--	--	--	--	--	--	--	--	--
1933	9,847,671	--	--	--	--	--	--	--	--	--	--	--	--	--
1934	10,329,076	--	--	--	--	--	--	--	--	--	--	--	--	--
1935	9,990,419	--	--	--	--	--	--	--	--	--	--	--	--	--
1936	10,411,703	--	--	--	--	--	--	--	--	--	--	--	--	--
1937	10,492,765	--	--	--	--	--	--	--	--	--	--	--	--	--
1938	10,671,071	25,377	--	--	--	--	--	--	--	25,377	--	--	--	--
1939	11,294,299	68,833	22,932	--	--	--	--	--	--	9,984	35,917	--	--	--
1940	12,498,333	59,380	50,697	--	--	--	--	--	--	--	--	8,683	--	--
1941	12,922,891	50,648	41,450	--	--	--	--	--	--	--	--	316	8,881	--
1942	13,791,207	41,837	34,230	--	--	--	--	--	--	--	--	--	5,790	1,817

849900434

Harrison Gas Plant
Liquid Fuels Used in Steam Generation

Year	Total Gas Produced (MCF)	Total Liquid Fuels (BBL)	Tar (BBL)	Atlantic Gas Oil (BBL)	Heavy Oil (BBL)	No 2 Light Oil (BBL)	No 6 Heavy Oil (BBL)	Kerosene (BBL)	Gas Oil (BBL)	1938 Gas Oil (BBL)	1939 Gas Oil (BBL)	1940 Gas Oil (BBL)	1941 Gas Oil (BBL)	1942 Gas Oil (BBL)
1943	13,948,727	41,362	40,277	1,085	--	--	--	--	--	--	--	--	--	--
1944	15,001,751	55,712	55,712	--	--	--	--	--	--	--	--	--	--	--
1945	14,142,930	59,902	44,905	--	--	--	--	--	14,998	--	--	--	--	--
1946	13,088,139	42,043	3,143	--	--	--	--	--	38,901	--	--	--	--	--
1947	13,397,172	47,209	9,922	--	6,666	--	--	--	30,621	--	--	--	--	--
1948	13,890,557	60,810	30,766	--	30,044	--	--	--	--	--	--	--	--	--
1949	15,460,852	73,885	63,307	--	10,577	--	--	--	--	--	--	--	--	--
1950	16,529,087	72,836	54,882	--	--	--	--	--	17,954	--	--	--	--	--
1951	21,648,247	84,746	--	--	--	--	30,280	--	54,465	--	--	--	--	--
1952	23,771,430	108,239	5,064	--	10,893	--	92,282	--	--	--	--	--	--	--
1953	26,169,922	147,412	--	--	636	--	146,775	--	--	--	--	--	--	--
1954	30,754,926	151,837	31,657	--	1,223	--	118,957	--	--	--	--	--	--	--
1955	31,876,721	122,272	--	--	2,378	--	119,894	--	--	--	--	--	--	--
1956	31,424,372	108,754	5,062	--	8,052	--	95,640	--	--	--	--	--	--	--
1957	29,558,483	109,895	--	--	1,558	303	108,034	--	--	--	--	--	--	--
1958	31,900,134	106,059	--	--	1,262	141	104,655	--	--	--	--	--	--	--
1959	29,613,220	114,395	--	--	--	--	114,395	--	--	--	--	--	--	--
1960	30,345,793	111,341	--	--	--	--	111,341	--	--	--	--	--	--	--
1961	31,451,770	125,070	--	--	5,722	538	118,809	--	--	--	--	--	--	--

849900435

Harrison Gas Plant
Liquid Fuels Used in Steam Generation

Year	Total Gas Produced (MCF)	Total Liquid Fuels (BBL)	Tar (BBL)	Atlantic Gas Oil (BBL)	Heavy Oil (BBL)	No 2 Light Oil (BBL)	No 6 Heavy Oil (BBL)	Kerosene (BBL)	Gas Oil (BBL)	1938 Gas Oil (BBL)	1939 Gas Oil (BBL)	1940 Gas Oil (BBL)	1941 Gas Oil (BBL)	1942 Gas Oil (BBL)
1962	29,665,998	114,014	--	--	--	449	113,565	--	--	--	--	--	--	--
1963	25,918,137	131,841	--	--	--	227	131,614	--	--	--	--	--	--	--
1964	18,582,250	144,126	736	--	--	2,898	140,493	--	--	--	--	--	--	--
1965	5,361,932	102,116	--	--	--	1,451	100,665	--	--	--	--	--	--	--
1966	--	89,624	--	--	--	387	89,236	--	--	--	--	--	--	--
1967	--	82,575	--	--	--	80	82,495	--	--	--	--	--	--	--
1968	459,089	99,016	--	--	--	5,678	93,337	--	--	--	--	--	--	--
1969	96,342	165,318	--	--	--	3,963	161,355	--	--	--	--	--	--	--
1970	467,119	94,370	--	--	--	6,561	87,809	--	--	--	--	--	--	--
1971	410,484	89,906	--	--	--	3,642	86,263	--	--	--	--	--	--	--
1972	288,584	99,621	--	--	--	1,285	98,336	--	--	--	--	--	--	--
1973	876,761	234,506	--	--	--	--	234,506	--	--	--	--	--	--	--
1974	937,170	124,952	--	--	--	--	124,952	--	--	--	--	--	--	--
1975	465,930	103,219	--	--	--	--	103,219	--	--	--	--	--	--	--
1976	851,184	119,518	952	--	--	--	118,566	--	--	--	--	--	--	--
1977	1,661,696	149,599	80,086	--	--	--	69,514	--	--	--	--	--	--	--
1978	236,950	107,711	41,404	--	--	--	66,308	--	--	--	--	--	--	--
1979	281,395	113,194	23,517	--	--	--	89,677	--	--	--	--	--	--	--
1980	269,927	110,414	4,058	--	--	--	106,356	--	--	--	--	--	--	--

849900436

Harrison Gas Plant
Liquid Fuels Used in Steam Generation

Year	Total Gas Produced (MCF)	Total Liquid Fuels (BBL)	Tar (BBL)	Atlantic Gas Oil (BBL)	Heavy Oil (BBL)	No 2 Light Oil (BBL)	No 6 Heavy Oil (BBL)	Kerosene (BBL)	Gas Oil (BBL)	1938 Gas Oil (BBL)	1939 Gas Oil (BBL)	1940 Gas Oil (BBL)	1941 Gas Oil (BBL)	1942 Gas Oil (BBL)
1981	547,566	100,676	38,915	–	–	–	61,760	–	–	–	–	–	–	–
1982	534,068	90,915	34,874	–	–	–	56,041	–	–	–	–	–	–	–
1983	236,336	78,501	5,135	–	–	–	73,366	–	–	–	–	–	–	–
1984	189,420	74,559	9,180	–	–	–	65,380	–	–	–	–	–	–	–
1985	310,339	85,239	9,578	–	–	–	75,661	–	–	–	–	–	–	–
1986	141,849	78,612	1,333	–	–	–	77,279	–	–	–	–	–	–	–
1987	88,093	82,387	6,502	–	–	–	68,672	7,213	–	–	–	–	–	–
1988	124,986	75,247	–	–	–	–	68,289	6,958	–	–	–	–	–	–
1989	293,553	61,558	–	–	–	–	55,224	6,334	–	–	–	–	–	–
1990	757	51,167	–	–	–	–	42,317	8,850	–	–	–	–	–	–
1991	32,668	43,154	–	–	–	–	25,085	18,069	–	–	–	–	–	–
1992	2,562	29,690	2,318	–	–	–	18,190	9,182	–	–	–	–	–	–
1993	–	–	–	–	–	–	–	–	–	–	–	–	–	–
1994	–	–	–	–	–	–	–	–	–	–	–	–	–	–
1995	–	–	–	–	–	–	–	–	–	–	–	–	–	–
Totals:	693,934,383	5,117,198	752,593	1,085	79,014	27,603	3,946,592	56,607	156,939	35,361	35,917	9,000	14,671	1,817

849900437

APPENDIX C

849900438

APPENDIX C

RESIDUAL STOCK ACCOUNTS

1926 - 1975

849900439

RESIDUALS. 1926

LINE NO.	ITEM. (a)	COKE. (TONS). (b)	COAL GAS TAR (GALS.). (c)	WATER GAS TAR (GALS.). (d)	AMMONIACAL LIQUOR (GALS.). (e)	DRIP OIL (GALS.) (f)	CARBON (LBS.) (g)	OTHER RESIDUALS. COAL GAS. (h)	OTHER RESIDUALS. WATER GAS. (i)
1	On hand at beginning of year,			634,839		11,660			
2	Made during year,			8,444,713		683,770			
3	Used during year,			19,640		–			
4	Sold during year,			8,379,165		695,430			
5	On hand at close of year,			680,747		–			
6	Rec'ts from sales,			$354,099.73		$54,678.71			
7	Aver. selling price,			4.73¢		7.86¢			

MONTHLY RECORD OF STATION OUTPUT.

LINE NO.	MONTH. (a)	CUBIC FEET OF GAS MADE DURING YEAR. COAL GAS. (b)	WATER GAS. (c)	MIXED GAS. (d)	REMARKS. (e)
8	January,			7767 054 094	
9	February,			7136 954 485	
10	March,			7735 778 085	
11	April,			7055 133 100	
12	May,			7097 187 066	
13	June,			1961 804 181	
14	July,			1705 850 801	
15	August,			1734 009 686	
16	September,			7014 545 075	
17	October,			7179 773 770	
18	November,			7007 894 450	
19	December,			7765 109 853	
20	TOTALS,			74600 494 546	

Maximum Output in 24 Hours, 90,184 M Date, Jan. 29, 1926.

Minimum Output in 24 Hours, 44,659 M Date, July 27, 1926.

TRANSMISSION LINE.

LINE NO.	TERMINI OF LINE. POINT OF BEGINNING. (a)	POINT OF ENDING. (b)	DIAMETER OF PIPE (Inches). (c)	MATERIAL. (d)	HIGHEST WORKING PRESSURE. (Lbs. Per Sq. In.). (e)	TOTAL LENGTH OF PIPE (Feet) AT BEGINNING OF YEAR. (f)	CHANGES DURING YEAR. ADDITIONS. (g)	CHANGES DURING YEAR. WITHDRAWALS. (h)	TOTAL LENGTH OF PIPE (Feet) AT CLOSE OF YEAR. (i)
21	See page 45								
22									
23									
24									
25									
26									
27									
28									
29									
30		TOTALS,							

1926

849900440

RESIDUALS. 1927

LINE NO.	ITEM. (a)	COKE (TONS). (b)	COAL GAS TAR (GALS.). (c)	WATER GAS TAR (GALS.). (d)	AMMONIACAL LIQUOR (GALS.). (e)	DRIP OIL (GALS.). (f)	CARBON (LBS.). (g)	OTHER RESIDUALS. COAL GAS. (h)	OTHER RESIDUALS. WATER GAS. (i)
1	On hand at beginning of year,			680,247		—			
2	Made during year,			9,220,883		958,525			
3	Used during year,			—		50			
4	Sold during year,			9,422,239		853,326			
5	On hand at close of year,			478,891		105,149			
6	Rec'ts from sales,			$400,544.51		$65,484.69			
7	Aver. selling price,			4.254		7.654			

MONTHLY RECORD OF STATION OUTPUT.

LINE NO.	MONTH. (a)	CUBIC FEET OF GAS MADE DURING YEAR. COAL GAS. (b)	WATER GAS. (c)	MIXED GAS. (d)	REMARKS. (e)
8	January,			2,240,767,844	
9	February,			1,920,842,902	
10	March,			2,112,077,396	
11	April,			2,070,143,710	
12	May,			2,153,015,194	
13	June,			2,011,802,301	
14	July,			1,813,197,401	
15	August,			1,925,752,522	
16	September,			2,081,326,606	
17	October,			2,195,151,715	
18	November,			2,059,760,379	
19	December,			2,238,390,154	
20	Total,			24,822,228,124	

Maximum Output in 24 Hours, 84,300 M. Date, Jan. 11, 1927.
Minimum Output in 24 Hours, 49,997 M Date, July 17, 1927

TRANSMISSION LINE.

LINE NO.	TERMINI OF LINE. POINT OF BEGINNING. (a)	POINT OF ENDING. (b)	DIAMETER OF PIPE (Inches). (c)	MATERIAL. (d)	HIGHEST WORKING PRESSURE. (Lbs. Per Sq. In.). (e)	TOTAL LENGTH OF PIPE (Feet) AT BEGINNING OF YEAR. (f)	CHANGES DURING YEAR. ADDITIONS. (g)	CHANGES DURING YEAR. WITHDRAWALS. (h)	TOTAL LENGTH OF PIPE (Feet) AT CLOSE OF YEAR. (i)
21	See Page 45								
22									
23									
24									
25									
26									
27									
28									
29									
30		Total,							

1927

849900441

RESIDUALS. 1928

LINE NO.	ITEM. (a)	COKE. (TONS). (b)	COAL GAS TAR (GALS.). (c)	WATER GAS TAR (GALS.). (d)	AMMONIACAL LIQUOR (GALS.). (e)	DRIP OIL (GALS.) (f)	CARBON (LBS.) (g)	OTHER RESIDUALS. COAL GAS. (h)	OTHER RESIDUALS. WATER GAS. (i)
1	On hand at beginning of year,			478,891		105,149			
2	Made during year,			8,974,667		1,100,008			
3	Used during year,					1,150			
4	Sold during year,			8,959,633		1,104,078			
5	On hand at close of year,			393,925		99,929			
6	Rec'ts from sales,			$ 444,977.81		$ 81,751.03			
7	Aver. selling price,			4.97¢		7.45¢			

MONTHLY RECORD OF STATION OUTPUT.

LINE NO.	MONTH. (a)	CUBIC FEET OF GAS MADE DURING YEAR. COAL GAS. (b)	WATER GAS. (c)	MIXED GAS. (d)	REMARKS. (e)
8	January,			1,008,491,716	
9	February,			1,181,798,980	
10	March,			1,384,490,054	
11	April,			1,175,506,974	
12	May,			1,179,466,091	
13	June,			1,135,999,077	
14	July,			1,066,709,993	
15	August,			1,046,857,067	
16	September,			1,100,054,985	
17	October,			1,310,759,318	
18	November,			1,175,445,677	
19	December,			1,286,694,918	
20	TOTALS,			15,976,533,350	

Maximum Output in 24 Hours, 25,798 M. Date Sept. 15, 1928.

Minimum Output in 24 Hours, 46,477 M. Date Aug. 5, 1928.

TRANSMISSION LINE.

LINE NO.	TERMINI OF LINE. POINT OF BEGINNING. (a)	POINT OF ENDING. (b)	DIAMETER OF PIPE (Inches). (c)	MATERIAL. (d)	HIGHEST WORKING PRESSURE. (Lbs. Per Sq. In.). (e)	TOTAL LENGTH OF PIPE (Feet) AT BEGINNING OF YEAR. (f)	CHANGES DURING YEAR. ADDITIONS. (g)	CHANGES DURING YEAR. WITHDRAWALS. (h)	TOTAL LENGTH OF PIPE (Feet) AT CLOSE OF YEAR. (i)
21	See Page 45.								
22									
23									
24									
25									
26									
27									
28									
29									
30		TOTALS,							

1928

849900442

RESIDUALS. 1929

LINE NO.	ITEM. (a)	COKE. (TONS). (b)	COAL GAS TAR (GALS.). (c)	WATER GAS TAR (GALS.). (d)	AMMONIACAL LIQUOR (GALS.). (e)	DRIP OIL (GALS.). (f)	CARBON (LBS.). (g)	OTHER RESIDUALS. COAL GAS. (h)	OTHER RESIDUALS. WATER GAS. (i)
1	On hand at beginning of year,			393,945		99,979			
2	Made during year,			9,461,961		1,535,906			
3	Used during year,			55,389		-			
4	Sold during year,			8,943,555		1,585,619			
5	On hand at close of year,			886,945		50,566			
6	Rec'ts from sales,			$471,9499		$100 833.35			
7	Aver. selling price,			5.58¢		7.86¢			

MONTHLY RECORD OF STATION OUTPUT.

LINE NO.	MONTH. (a)	CUBIC FEET OF GAS MADE DURING YEAR. COAL GAS. (b)	WATER GAS. (c)	MIXED GAS. (d)	REMARKS. (e)
8	January,			54399 4977	
9	February,			5178 05 710	
10	March,			5306 5837	
11	April,			5580163 517	
12	May,			5364 511074	
13	June,			5104876 735	
14	July,			19677846 58	
15	August,			5049795 600	
16	September,			5550851 348	
17	October,			5390351433	
18	November,			5587198 815	
19	December,			5477898858	
20	Total,			57067364761	

Maximum Output in 24 Hours, 95,095 M. Date, Jan. 14, 1929.
Minimum Output in 24 Hours, 55,036 M. Date, Sept. 5, 1929.

TRANSMISSION LINE.

LINE NO.	TERMINI OF LINE. POINT OF BEGINNING. (a)	POINT OF ENDING. (b)	DIAMETER OF PIPE (Inches). (c)	MATERIAL. (d)	HIGHEST WORKING PRESSURE. (Lbs. Per Sq. In.). (e)	TOTAL LENGTH OF PIPE (Feet) AT BEGINNING OF YEAR. (f)	CHANGES DURING YEAR. ADDITIONS. (g)	CHANGES DURING YEAR. WITHDRAWALS. (h)	TOTAL LENGTH OF PIPE (Feet) AT CLOSE OF YEAR. (i)
21									
22	See Page 45								
23									
24									
25									
26									
27									
28									
29									
30		TOTAL,							

849900443

1929

RESIDUALS. 1930

LINE NO.	ITEM. (a)	COKE. (TONS). (b)	COAL GAS TAR (GALS.). (c)	WATER GAS TAR (GALS.). (d)	AMMONIACAL LIQUOR (GALS.). (e)	DRIP OIL (GALS.) (f)	CARBON (LBS.) (g)	OTHER RESIDUALS. COAL GAS. (h)	OTHER RESIDUALS. WATER GAS. (i)
1	On hand at beginning of year,			186,945		50,266			
2	Made during year,			* 182,694 12,096,681		* 182,694 1,000,219			
3	Used during year,			1,532,138					
4	Sold during year,			9,380,872		764,791			
5	On hand at close of year,			2,253,360		103,000			
6	Rec'ts from sales,			$453,026.16		$ 73,783.04			
7	Aver. selling price,			4.83¢		9.65¢			

* 182,694 gallons of drip oil transferred to Water Gas Day

MONTHLY RECORD OF STATION OUTPUT.

LINE NO.	MONTH. (a)	CUBIC FEET OF GAS ~~MADE~~ DELIVERED TO MAINS DURING YEAR. COAL GAS. (b)	WATER GAS. (c)	MIXED GAS. (d)	REMARKS. (e)
8	January,			2501724637	
9	February,			2233943606	
10	March,			2401944874	
11	April,			2304035408	
12	May,			2351859886	
13	June,			2089834156	
14	July,			1934386909	
15	August,			1992187836	
16	September,			2223765728	
17	October,			2399145597	
18	November,			2256756137	
19	December,			2475031757	
20	TOTALS,			27164616531	

Maximum Output in 24 Hours, 98,149 M Date, Feb. 16, 1930

Minimum Output in 24 Hours, 50,621 M Date, July 20, 1930

TRANSMISSION LINE.

LINE NO.	TERMINI OF LINE. POINT OF BEGINNING. (a)	POINT OF ENDING. (b)	DIAMETER OF PIPE (Inches). (c)	MATERIAL. (d)	HIGHEST WORKING PRESSURE. (Lbs. Per Sq. In.). (e)	TOTAL LENGTH OF PIPE (Feet) AT BEGINNING OF YEAR. (f)	CHANGES DURING YEAR. ADDITIONS. (g)	CHANGES DURING YEAR. WITHDRAWALS. (h)	TOTAL LENGTH OF PIPE (Feet) AT CLOSE OF YEAR. (i)
21									
22	See Page 45								
23									
24									
25									
26									
27									
28									
29									
30		TOTALS,							

849900444

1930

RESIDUALS. 1931

LINE NO.	ITEM. (a)	COKE. (TONS). (b)	COAL GAS TAR (GALS.). (c)	WATER GAS TAR (GALS.). (d)	AMMONIACAL LIQUOR (GALS.). (e)	DRIP OIL (GALS.) (f)	CARBON (LBS.) (g)	OTHER RESIDUALS. COAL GAS. (h)	OTHER RESIDUALS. WATER GAS. (i)
1	On hand at beginning of year,			2,253,360		103,000			
2	Made during year,			A 1,488,168 B 522,797 12,711,108		B 522,797 1,116,202			
3	Used during year,			1,692,761		-			
4	Sold during year,			10,067,834		572,826			
5	On hand at close of year,			5,214,838		123,579			
6	Rec'ts from sales,			$ 506,261.78		$ 45,698.88			
7	Aver. selling price,			5.03¢		7.98¢			

A. PURCHASED B. TRANSFERRED FROM DRIP OIL TO WATER GAS TAR

MONTHLY RECORD OF STATION OUTPUT.

LINE NO.	MONTH. (a)	CUBIC FEET OF GAS ~~MADE~~ DELIVERED TO MAINS DURING YEAR. COAL GAS. (b)	WATER GAS. (c)	MIXED GAS. (d)	REMARKS. (e)
8	January,			2486351148	
9	February,			2227985601	
10	March,			2412601615	
11	April,			2311130497	
12	May,			2359122772	
13	June,			2145065573	
14	July,			1884041217	
15	August,			1931056127	
16	September,			2123436649	
17	October,			2345092490	
18	November,			2208130572	
19	December,			2383322775	
20	TOTALS,			26817337036	

Maximum Output in 24 Hours, 92,174 M. Date, Jan. 15. 1931

Minimum Output in 24 Hours, 51,877 M. Date, Aug. 9. 1931

TRANSMISSION LINE.

LINE NO.	TERMINI OF LINE. POINT OF BEGINNING. (a)	POINT OF ENDING. (b)	DIAMETER OF PIPE (Inches). (c)	MATERIAL. (d)	HIGHEST WORKING PRESSURE. (Lbs. Per Sq. In.). (e)	TOTAL LENGTH OF PIPE (Feet) AT BEGINNING OF YEAR. (f)	CHANGES DURING YEAR. ADDITIONS. (g)	CHANGES DURING YEAR. WITHDRAWALS. (h)	TOTAL LENGTH OF PIPE (Feet) AT CLOSE OF YEAR. (i)
21									
22	See Page 45								
23									
24									
25									
26									
27									
28									
29									
30		TOTALS,							

1931

849900445

LINE NO.	ITEM. (a)	COKE. (TONS). (b)	COAL GAS TAR (GALS.). (c)	WATER GAS TAR (GALS.). (d)	AMMONIACAL LIQUOR (GALS.). (e)	DRIP OIL (GALS.) (f)	SULPHUR ~~CARBON~~ (LBS.) (g)	OTHER RESIDUALS. COAL GAS. (h)	OTHER RESIDUALS. WATER GAS. (i)
1	On hand at beginning of year,			ADJ. + 20000. 5214838.		123579.	–		
2	Made during year,			A 1812799. B 19165. 13177983.		B 19165. 983418.	683242.		
3	Used during year,			–		–	–		
4	Sold during year,			17098813.		979354.	677242.		
5	On hand at close of year,			2845980.		108478.	6000.		
6	Rec'ts from sales,			$779,787.77.		$68,128.57.	$10,158.70.		
7	Aver. selling price,			4.56¢		6.96¢	1.50¢		

A – PURCHASED
B – TRANSFERRED FROM DRIP OIL TO WATER GAS TAR

MONTHLY RECORD OF STATION OUTPUT.

LINE NO.	MONTH. (a)	CUBIC FEET OF GAS ~~MADE~~ DELIVERED TO MAINS DURING YEAR. COAL GAS. (b)	WATER GAS. (c)	MIXED GAS. (d)	REMARKS. (e)
8	January,			2314381887.	
9	February,			2261998547.	
10	March,			2464251025.	
11	April,			2246813780.	
12	May,			2299238654.	
13	June,			2084006735.	
14	July,			1838202125.	
15	August,			1856325118.	
16	September,			2101810479.	
17	October,			2193153188.	
18	November,			2151753384.	
19	December,			2270338598.	
20	TOTALS,			26083274520.	

Maximum Output in 24 Hours, 93,599 M. Date, MAR. 15 1932.

Minimum Output in 24 Hours, 47,454 M. Date, SEPT. 5, 1932.

TRANSMISSION LINE.

LINE NO.	TERMINI OF LINE. POINT OF BEGINNING. (a)	POINT OF ENDING. (b)	DIAMETER OF PIPE (Inches). (c)	MATERIAL. (d)	HIGHEST WORKING PRESSURE. (Lbs. Per Sq. In.). (e)	TOTAL LENGTH OF PIPE (Feet) AT BEGINNING OF YEAR. (f)	CHANGES DURING YEAR. ADDITIONS. (g)	CHANGES DURING YEAR. WITHDRAWALS. (h)	TOTAL LENGTH OF PIPE (Feet) AT CLOSE OF YEAR. (i)
21									
22	See Page 45								
23									
24									
25									
26									
27									
28									
29									
30		TOTALS,							

RESIDUALS. 1933

LINE NO.	ITEM. (a)	COKE. (TONS). (b)	COAL GAS TAR (GALS.). (c)	WATER GAS TAR (GALS.). (d)	SULPHATE OF AMMONIA ~~AMMONIACAL LIQUOR (GALS.)~~. (LBS.) (e)	DRIP OIL (GALS.) (f)	SULPHUR ~~CARBON~~ (LBS.) (g)	OTHER RESIDUALS. COAL GAS. BREEZE (h)	OTHER RESIDUALS. WATER GAS. (i)
1	On hand at beginning of year,	47 808	400 324	2 845 980	240 100	108 478	6 000	40	
2	Made during year,	A 136 528	2 394 479	A 1 497 551 11 413 629	4 610 050	936 114	386 093	A 610 14 170	
3	Used during year,	27 586	-	21 400	-	-	-	14 760	
4	Sold during year,	127 597	2 307 632	12 328 681	4 438 150	964 915	392 093	-	
5	On hand at close of year,	29 161	487 171	3 407 079	412 000	79 677	-	60	
6	Rec'ts from sales,	$856,196.52	$108,430.40	$624,607.77	$44,264.99	$69,416.80	$7,809.93	-	
7	Aver. selling price,	$6.71	4.70¢	5.07¢	1.00¢	7.19¢	1.99¢	-	

A - PURCHASED

MONTHLY RECORD OF STATION OUTPUT.

LINE NO.	MONTH. (a)	CUBIC FEET OF GAS ~~MADE~~ DELIVERED TO MAINE DURING YEAR. COAL GAS. (b)	WATER GAS. (c)	MIXED GAS. (d)	REMARKS. (e)
8	January,			2 203 588 970	
9	February,			2 103 016 167	
10	March,			2 241 081 842	
11	April,			2 086 495 554	
12	May,			2 142 661 256	
13	June,			1 923 040 928	
14	July,			1 795 385 025	
15	August,			1 788 544 280	
16	September,			1 966 167 015	
17	October,			2 124 361 953	
18	November,			2 136 211 119	
19	December,			2 345 838 565	
20	TOTALS,			24 856 392 674	

Maximum Output in 24 Hours, 100001 M. Date, DEC. 29, 1933.

Minimum Output in 24 Hours, 46354 M. Date, AUG. 2, 1933.

TRANSMISSION LINE.

LINE NO.	TERMINI OF LINE. POINT OF BEGINNING. (a)	POINT OF ENDING. (b)	DIAMETER OF PIPE (Inches). (c)	MATERIAL. (d)	HIGHEST WORKING PRESSURE. (Lbs. Per Sq. In.). (e)	TOTAL LENGTH OF PIPE (Feet) AT BEGINNING OF YEAR. (f)	CHANGES DURING YEAR. ADDITIONS. (g)	CHANGES DURING YEAR. WITHDRAWALS. (h)	TOTAL LENGTH OF PIPE (Feet) AT CLOSE OF YEAR. (i)
21									
22	See Page 45								
23									
24									
25									
26									
27									
28									
29									
30		TOTALS,							

1933

849900447

RESIDUALS. 1934

LINE NO.	ITEM. (a)	COKE (TONS). (b)	COAL GAS TAR (GALS.). (c)	WATER GAS TAR (GALS.). (d)	SULPHATE OF AMMONIA ~~AMMONIACAL LIQUOR (GALS.)~~ (LBS.) (e)	DRIP OIL (GALS.). (f)	SULPHUR ~~CARBON~~ (LBS.). (g)	OTHER RESIDUALS. COAL GAS. BREEZE (TONS) (h)	OTHER RESIDUALS. WATER GAS. (i)
1	On hand at beginning of year,	29 161	487 171	3 407 079	412 000	79 677	—	60	
2	Made during year,	A 3 400 / 139 176	2 414 413	A 2 237 906 / B 28 720 / 11 542 344	4543 265	1265 487	269 255	13 930	
3	Used during year,	27 510	—	36 280	—	—	—	13 950	
4	Sold during year,	102 094	2 680 764	14 575 220	3897 455	1302 464	269 255	—	
5	On hand at close of year,	42 133	220 820	2 604 479	1057 810	42 700	—	40	
6	Rec'ts from sales,	$ 743 92608	$ 120041 69	$ 721 247.11	$ 45264.33	$ 96798 19	17473.13	—	
7	Aver. selling price,	$ 7.29	4.48¢	4.95¢	1.16¢	7.43¢	6.49¢		

A - PURCHASED
B - TRANSFERRED FROM GAS OIL

MONTHLY RECORD OF STATION OUTPUT.

LINE NO.	MONTH. (a)	CUBIC FEET OF GAS ~~MADE~~ DELIVERED TO MAINS DURING YEAR. COAL GAS. (b)	WATER GAS. (c)	MIXED GAS. (d)	REMARKS. (e)
8	January,			2 333 481 436	
9	February,			2 472 127 895	
10	March,			2 401 027 849	
11	April,			2 180 026 807	
12	May,			2 219 113 915	
13	June,			1 917 665 696	
14	July,			1 702 348 953	
15	August,			1 862 427 974	
16	September,			2 045 121 607	
17	October,			2 163 201 588	
18	November,			1 999 073 734	
19	December,			2 275 643 996	
20	Total,			25 551 760 320	

Maximum Output in 24 Hours, 115 309 M. Date, Oct. 9 1934

Minimum Output in 24 Hours, 45 702 M. Date, July 4 1934

TRANSMISSION LINE.

LINE NO.	TERMINI OF LINE. POINT OF BEGINNING. (a)	POINT OF ENDING. (b)	DIAMETER OF PIPE (Inches). (c)	MATERIAL. (d)	HIGHEST WORKING PRESSURE. (Lbs. Per Sq. In.). (e)	TOTAL LENGTH OF PIPE (Feet) AT BEGINNING OF YEAR. (f)	CHANGES DURING YEAR. ADDITIONS. (g)	CHANGES DURING YEAR. WITHDRAWALS. (h)	TOTAL LENGTH OF PIPE (Feet) AT CLOSE OF YEAR. (i)
21									
22	See Page 45								
23									
24									
25									
26									
27									
28									
29									
30		TOTAL,							

849900448

RESIDUALS. 1935

LINE NO.	ITEM. (a)	COKE. (TONS). (b)	COAL GAS TAR (GALS.). (c)	WATER GAS TAR (GALS.). (d)	SULPHATE OF AMMONIA ~~AMMONIACAL LIQUOR (GALS.)~~. (LBS.) (e)	DRIP OIL (GALS.) (f)	SULPHUR ~~CARBON~~ (LBS.) (g)	OTHER RESIDUALS. COAL GAS. BREEZE (TONS) (h)	OTHER RESIDUALS. WATER GAS. (i)
1	On hand at beginning of year,	42 133	220 820	2 604 479	1 057 810	42 700	-	40	
2	Made during year,	* 566 160 256	2 115 351	* 2 315 008 10 887 316	4 271 971	727 719	563 342	19 210	
3	Used during year,	28 285	-	-	-	-	-	19 210	
4	Sold during year,	166 606	1 951 112	13 847 849	4 954 625	707 558	563 342	2	
5	On hand at close of year,	8 064	385 059	1 958 954	375 156	62 861	-	38	
6	Rec'ts from sales,	$1145 740.39	$92 993.81	$650 263.90	$56 610.17	$54 221.10	$36 590.31	$18.50	
7	Aver. selling price,	$6.88	4.77¢	4.70¢	1.14¢	7.66¢	6.50¢	$9.25	

* PURCHASED

MONTHLY RECORD OF STATION OUTPUT.

LINE NO.	MONTH. (a)	CUBIC FEET OF GAS ~~MADE~~ DELIVERED TO MAINS DURING YEAR. COAL GAS. (b)	WATER GAS. (c)	MIXED GAS. (d)	REMARKS. (e)
8	January,			2 395 097 048	
9	February,			2 124 586 874	
10	March,			2 166 037 631	
11	April,			2 096 261 779	
12	May,			2 148 083 357	
13	June,			1 942 991 388	
14	July,			1 694 823 397	
15	August,			1 790 428 059	
16	September,			2 098 363 413	
17	October,			2 165 504 266	
18	November,			2 078 632 954	
19	December,			2 412 221 829	
20	TOTALS,			25 113 031 995	

Maximum Output in 24 Hours, 93 020 M · Date, Jan. 24, 1935

Minimum Output in 24 Hours, 48 867 M · Date, July 20 1935

TRANSMISSION LINE.

LINE NO.	TERMINI OF LINE. POINT OF BEGINNING. (a)	POINT OF ENDING. (b)	DIAMETER OF PIPE (Inches). (c)	MATERIAL. (d)	HIGHEST WORKING PRESSURE. (Lbs. Per Sq. In.). (e)	TOTAL LENGTH OF PIPE (Feet) AT BEGINNING OF YEAR. (f)	CHANGES DURING YEAR. ADDITIONS. (g)	CHANGES DURING YEAR. WITHDRAWALS. (h)	TOTAL LENGTH OF PIPE (Feet) AT CLOSE OF YEAR. (i)
21									
22	See page 45.								
23									
24									
25									
26									
27									
28									
29									
30		TOTALS,							

1935

849900449

RESIDUALS. 1936

LINE NO.	ITEM. (a)	COKE. (TONS). (b)	COAL GAS TAR (GALS.). (c)	WATER GAS TAR (GALS.). (d)	SULPHATE OF AMMONIA ~~AMMONIACAL LIQUOR (GALS.)~~ (LBS) (e)	DRIP OIL (GALS.) (f)	SULPHUR ~~CARBON~~ (LBS.) (g)	OTHER RESIDUALS. COAL GAS. BREEZE (TONS) (h)	OTHER RESIDUALS. WATER GAS. (i)
1	On hand at beginning of year,	8 064	385 059	1 958 954	375 156	62 861	–	38	
2	Made during year,	* 14 250 006	3 792 477	# 23 000 #1 693 941 17 442 011	7 135 477	# 23 000 279 107	763 791	25 115	
3	Used during year,	33 822	–	–	–	–	–	25 040	
4	Sold during year,	184 593	3 995 386	16 913 299	6 568 205	254 774	763 791	3	
5	On hand at close of year,	39 669	182 150	4 204 607	942 428	64 194	–	110	
6	Rec'ts from sales,	$ 1284 702.84	$ 198 999.19	$ 772 584.78	$ 76 153.41	$ 19 566.28	$ 48 771.45	$ 29.25	
7	Aver. selling price,	$ 6.96	4.98 ¢	4.57 ¢	1.16 ¢	7.68 ¢	6.39 ¢	$ 9.75	

* Purchased
\# Transferred from Drip oil to Sulphate of Ammonia

MONTHLY RECORD OF STATION OUTPUT.

LINE NO.	MONTH. (a)	CUBIC FEET OF GAS ~~MADE~~ DELIVERED TO MAINS DURING YEAR. COAL GAS. (b)	WATER GAS. (c)	MIXED GAS. (d)	GAS PURCHASED. (e)	REMARKS. (f)
8	January,			2 488 729 757	806 886 759	
9	February,			2 429 647 047	755 892 416	
10	March,			2 219 705 711	752 672 055	
11	April,			2 160 604 764	683 076 895	
12	May,			2 153 576 330	708 029 318	
13	June,			1 958 125 965	652 933 300	
14	July,			1 750 404 434	645 630 193	
15	August,			1 786 447 183	645 608 288	
16	September,			2 015 238 157	707 127 721	
17	October,			2 179 795 845	805 717 094	
18	November,			2 227 670 413	780 140 636	
19	December,			2 357 791 630	805 925 727	
20	TOTALS,			25 727 737 236	8 749 640 402	

Maximum Output in 24 Hours, 107,571 M Date, Jan 23, 1936

Minimum Output in 24 Hours, 43,631 M Date, July 11, 1936

TRANSMISSION LINE.

LINE NO.	TERMINI OF LINE. POINT OF BEGINNING. (a)	POINT OF ENDING. (b)	DIAMETER OF PIPE (Inches). (c)	MATERIAL. (d)	HIGHEST WORKING PRESSURE. (Lbs. Per Sq. In.). (e)	TOTAL LENGTH OF PIPE (Feet) AT BEGINNING OF YEAR. (f)	CHANGES DURING YEAR. ADDITIONS. (g)	CHANGES DURING YEAR. WITHDRAWALS. (h)	TOTAL LENGTH OF PIPE (Feet) AT CLOSE OF YEAR. (i)
21									
22	There are no mains used exclusively for the transmission								
23	of gas from point to point.								
24									
25									
26									
27									
28									
29									
30		TOTALS,							

RESIDUALS. 1931

LINE NO.	ITEM. (a)	COKE. (TONS). (b)	COAL GAS TAR (GALS.). (c)	WATER GAS TAR (GALS.). (d)	SULPHATE OF AMMONIA ~~AMMONIA ACAL LIQUOR (GALS.)~~. (LBS.) (e)	DRIP OIL (GALS.) (f)	SULPHUR ~~CARBON~~ (LBS.) (g)	OTHER RESIDUALS. COAL GAS. BREEZE (Tons) (h)	OTHER RESIDUALS. WATER GAS. (i)
1	On hand at beginning of year,	39669	182150	4204607	942428	64194	-	110	
2	Made during year,	a 21 249047	3572497	b 137,748 37,440 c 17700246	6722306	b 37440 197936	1042820	22623	
3	Used during year,	34047	-	-	-	-	-	22570	
4	Sold during year,	190613	3247487	18881662	6834475	179742	1042820	-	
5	On hand at close of year,	64077	507160	4409100	830259	44948	-	163	
6	Rec'ts from sales,	$1,330,907.42	$162,374.35	$847,573.78	$86,075.53	$15,777.88	$61,446.32	-	
7	Aver. selling price,	$6.98	5.00¢	4.49¢	1.26¢	8.78¢	5.89¢	-	

a - Purchased
b - Transferred from drip oil to water gas tar
c - Transferred from gas oil to water gas tar

MONTHLY RECORD OF STATION OUTPUT.

LINE NO.	MONTH. (a)	CUBIC FEET OF GAS ~~MADE~~ DELIVERED TO MAINS DURING YEAR. COAL GAS. (b)	WATER GAS. (c)	MIXED GAS. (d)	GAS PURCHASED. (e)	REMARKS. (f)
8	January,			2287947350	794948425	
9	February,			2180410344	728496332	
10	March,			2418092313	753215948	
11	April,			2160330133	680296345	
12	May,			2154293778	708229716	
13	June,			1957032385	652266555	
14	July,			1748516208	641221484	
15	August,			1768155098	639630631	
16	September,			2063044744	707149103	
17	October,			2196690433	805193419	
18	November,			2217325867	778028548	
19	December,			2496097313	803503152	
20	TOTALS,			25647935966	8692179658	

Maximum Output in 24 Hours, 94,208 M Date, Dec. 13, 1937

Minimum Output in 24 Hours, 43,670 M Date, July 10, 1937

TRANSMISSION LINE.

LINE NO.	TERMINI OF LINE. POINT OF BEGINNING. (a)	POINT OF ENDING. (b)	DIAMETER OF PIPE (Inches). (c)	MATERIAL. (d)	HIGHEST WORKING PRESSURE. (Lbs. Per Sq. In.). (e)	TOTAL LENGTH OF PIPE (Feet) AT BEGINNING OF YEAR. (f)	CHANGES DURING YEAR. ADDITIONS. (g)	WITHDRAWALS. (h)	TOTAL LENGTH OF PIPE (Feet) AT CLOSE OF YEAR. (i)
21									
22									
23	THERE ARE NO MAINS USED EXCLUSIVELY FOR THE TRANSMISSION								
24	OF GAS FROM POINT TO POINT.								
25									
26									
27									
28									
29									
30	7/24/38	TOTALS,							

620.--RESIDUAL STOCK ACCOUNTS

1. Report below the information specified.
2. Quantities entered in this table should be comparable to the dollar amounts entered on the same line.
3. The dollar amounts entered opposite Residuals Produced (Cr.Production Expense) should agree with the total credited to production expense (account 730). The quantities entered on these lines should agree with the totals of the amounts shown in Schedule 680.
4. Residuals used in production should include amounts charged directly to production expense accounts and amounts charged to fuel stock accounts.

Line No.	Item (a)	Quantities (b)	Dollar Amounts (c)	¢
1	**COKE AND COKE BREEZE**	Net Tons	$	
2	On hand first of year	64,240	381,555	99
3	Produced (Cr. production expense)	252,580	1,606,212	98
4	Stock expense		1,149	50
5	Adjustments--Debits			
6	Adjustments--Credits			
7	Net coke and breeze produced	252,580	1,607,362	48
8	Coke purchased			
9	Coke breeze purchased (All Breeze purchased is for Boiler Fuel)			
10	Total to account for (and is accounted for in Schedule 235)	316,820	1,988,918	47
11	Coke sold	97,824	697,723	92
12	Coke (Interchanged within company. Includes)	105,898	688,811	44
13	Coke used in gas production (Generator Coke accounted for in Schedule 235)	40,796	235,947	08
14	Coke breeze used in gas production	8,036	28,126	41
15	Other coke used by company			
16	Other coke breeze used by company	14,261	49,913	09
17	Total disposed of	266,815	1,700,521	94
18	On hand end of year	50,005	288,396	53
19				
20	**COALTAR**	Gallons		
21	On hand first of year	507,160	25,358	00
22	Produced (Cr. production expense)	3,194,989	194,225	28
23	Stock expense			
24	Adjustments--Debits			
25	Adjustments--Credits			
26				
27	Total to account for	3,702,149	219,583	28
28	Tar sold	3,278,149	194,143	28
29	Tar used in gas production			
30				
31	Total disposed of	3,278,149	194,143	28
32	On hand end of year	424,000	25,440	00
33				
34	**WATER GAS TAR RESIDUAL**	Gallons		
35	On hand first of year	4,409,100	132,273	00
36	Produced (Cr.production expense)	18,355,764	828,036	25
37	Tar Purchased	2,079,816	114,820	89
38	Adjustments--Debits			
39	Adjustments--Credits			
40				
41	Total to account for	24,844,680	1,075,130	14
42	Sold	21,251,266	964,266	32
43	Other Tar Used by Company	20,074	3,663	62
44	On hand at end of year	3,573,340	107,200	20
45				
46	**DRIP OIL RESIDUAL**	Gallons		
47	On hand first of year	44,948	3,146	36
48	Produced (Cr.production expense)	93,388	9,136	47
49	Received from Holders - Cr. 751 Operation of Holder Facilities	2,450	122	50
50	Adjustments--Debits			
51	Adjustments--Credits			
52				
53	Total to account for	140,786	12,405	33
54	Sold	107,354	9,727	77
55	Other Drip Oil Used by Company	1,400	115	00
56	On hand end of year	32,032	2,562	56
57				
58				

CHIEF ACCOUNTANT'S DEPARTMENT COMPTROLLER

849900452

630. RESIDUAL STOCK ACCOUNTS (Continued)

1. Report below the information specified.
2. Quantities entered in this table should be comparable to the dollar amounts entered on the same line.
3. The dollar amounts entered opposite Residuals Produced (Cr. Production Expense) should agree with the total credited to production expense (account 730). The quantities entered on these lines should agree with the totals of the amounts shown in Schedule 680.
4. Residuals used in production should include amounts charged directly to production expense accounts and amounts charged to fuel stock accounts.

Line No.	Item (a)	Quantities (b)	Dollar Amounts (c)	¢
1	**COKE AND COKE BREEZE**		$	¢
2	On hand first of year			
3	Produced (Cr. production expense)			
4	Stock expense			
5	Adjustments--Debits			
6	Adjustments--Credits			
7	Net coke and breeze produced			
8	Coke purchased			
9	Coke breeze purchased			
10	Total to account for			
11	Coke sold			
12	Coke breeze sold			
13	Coke used in gas production			
14	Coke breeze used in gas production			
15	Other coke used by company			
16	Other coke breeze used by company			
17	Total disposed of			
18	On hand end of year			
19				
20	**NAPHTHALENE**	Pounds		
21	On hand first of year	-	-	
22	Produced (Cr. production expense)	196,205	3,105	16
23	Stock expense			
24	Adjustments--Debits			
25	Adjustments--Credits			
26				
27	Total to account for	196,205	3,105	16
28	sold	187,205	2,970	16
29	used in gas production			
30				
31	Total disposed of	187,205	2,970	16
32	On hand end of year	9,000	135	00
33				
34	**SULPHATE OF AMMONIA RESIDUAL**	Pounds		
35	On hand first of year	830,259	8,302	59
36	Produced (Cr. production expense)	5,985,603	81,468	29
37	Stock expense			
38	Adjustments--Debits			
39	Adjustments--Credits			
40				
41	Total to account for	6,815,862	89,770	88
42	Sold	6,765,500	89,267	26
43	Used in gas production			
44	On hand at end of year	50,362	503	62
45				
46	**CRUDE SULPHUR RESIDUAL**	Pounds		
47	On hand first of year	-	-	
48	Produced (Cr. production expense)	1,419,880	84,574	51
49	Stock expense			
50	Adjustments--Debits			
51	Adjustments--Credits			
52				
53	Total to account for	1,419,880	84,574	51
54	Sold	1,419,880	84,574	51
55	Used in gas production			
56	On hand end of year	-	-	
57				
58				

CHIEF ACCOUNTANT'S DEPARTMENT
COMPTROLLER
MAR 29 1939
CHECKED

849900453

849900454

620. RESIDUAL STOCK ACCOUNTS

1. Report below the information specified.
2. Quantities entered in this table should be comparable to the dollar amounts entered on the same line.
3. The dollar amounts entered opposite Residuals Produced (Cr. Production Expense) should agree with the total credited to Production Expense (Account 730). The quantities entered on these lines should agree with the totals of the amounts shown in Schedule 680.
4. Residuals used in production should include amounts charged directly to production expense accounts and amounts charged to fuel stock accounts.

Line No.	Item (a)	Quantities (b)	Dollar Amounts (c)			
1	COKE AND COKE BREEZE	Net Tons				
2	On Hand First of Year	50,005		288	396	53
3	Produced (Cr. Production Expense)	260,881	1	699	479	37
4	Stock Expense					
5	Adjustments -- Debits					
6	Adjustments -- Credits					
7	Net Coke and Breeze Produced	260,881	1	699	479	37
8	Coke Purchased					
9	Coke Breeze Purchased (All breeze purchased is for Boiler Fuel and is accounted for in Schedule 235)					
10	Total to Account For	310,886	1	987	875	90
11	Coke Sold	99,177		729	404	86
12	Coke Breeze Sold	2			10	88
13	Coke Used in Gas Production	45,307		262	592	81
14	Coke Breeze Used in Gas Production	7,576		26	517	43
15	Coke (Interchanged within company. Includes (Generator Coke accounted for in Schedule 235)	109,821		716	008	73
16	Other Coke Breeze Used by Company	15,263		53	419	07
17	Total Disposed Of	277,146	1	787	953	78
18	On Hand End of Year	33,740		199	922	12
19						
20	COAL TAR	Gallons				
21	On Hand First of Year	424,000		25	440	00
22	Produced (Cr. Production Expense)	3,324,050		183	683	93
23	Stock Expense					
24	Adjustments -- Debits					
25	Adjustments -- Credits					
26	(Dr. account G-730 to reduce stock value Jan. 1, 1939)			2	120	00
27	Total to Account For	3,748,050		207	003	93
28	Tar Sold	3,150,946		174	163	21
29	Tar Used in Gas Production					
30	Total Disposed Of	3,150,946		174	163	21
31	On Hand End of Year	597,104		32	840	72
32						
33	.....DRIP OIL RESIDUAL	Gallons				
34	On Hand First of Year	32,032		2	562	56
35	Produced (Cr. Production Expense)	259,364		21	894	48
36	Stock Expense					
37	Adjustments -- Debits					
38	Adjustments -- Credits (Dr. account 730 to reduce stock value Jan. 1, 1939)				160	16
39	Total to Account For	291,396		24	296	88
40	Sold	270,186		22	704	02
41	Other Drip Oil Used by Company	210			17	85
42	Total Disposed Of	270,396		22	721	87
43	On Hand at End of Year	21,000		1	575	01
44						
45	.....NAPHTHALENE RESIDUAL	Pounds				
46	On Hand First of Year	9,000			135	00
47	Produced (Cr. Production Expense)	220,770		2	759	63
48	Stock Expense					
49	Adjustments -- Debits					
50	Adjustments -- Credits (Dr. account G-730 to reduce stock value Jan. 1, 1939)				22	50
51	Total to Account For	229,770		2	872	13
52	Sold	225,770		2	822	13
53	Used in Gas Production					
54	Total Disposed Of	225,770		2	822	13
55	On Hand End of Year	4,000			50	00

1939

620. RESIDUAL STOCK ACCOUNTS

1. Report below the information specified.
2. Quantities entered in this table should be comparable to the dollar amounts entered on the same line.
3. The dollar amounts entered opposite Residuals Produced (Cr. Production Expense) should agree with the total credited to Production Expense (Account 730). The quantities entered on these lines should agree with the totals of the amounts shown in Schedule 680.
4. Residuals used in production should include amounts charged directly to production expense accounts and amounts charged to fuel stock accounts.

Line No.	Item (a)	Quantities (b)	Dollar Amounts (c)			
1	WATER GAS TAR RESIDUAL	Gallons				
2	On Hand First of Year	3,573,340		107	200	20
3	Produced (Cr. Production Expense)	20,552,865		800	799	56
4	Tar Purchased	1,284,909		64	276	71
5	Adjustments -- Debits					
6	Adjustments -- Credits					
7						
8						
9						
10		25,411,114		972	276	47
11	Coke Sold					
12	Tar Sold	17,959,946		765	363	52
13	Used in Gas Production	963,146		24	078	66
14	Transferred to Electric Department (See Sch. 235)	1,636,236		32	724	72
15	Other Tar Used by Company	67,786		6	589	57
16						
17	Total Disposed Of	20,627,114		828	756	47
18	On Hand End of Year	4,784,000		143	520	00
19						
20	TAR					
21	On Hand First of Year					
22	Produced (Cr. Production Expense)					
23	Stock Expense					
24	Adjustments -- Debits					
25	Adjustments -- Credits					
26						
27	Total to Account For					
28	Tar Sold					
29	Tar Used in Gas Production					
30	Total Disposed Of					
31	On Hand End of Year					
32						
33	.....SULPHATE OF AMMONIA..RESIDUAL	Pounds				
34	On Hand First of Year	50,362			503	62
35	Produced (Cr. Production Expense)	6,556,838		86	664	83
36	Stock Expense					
37	Adjustments -- Debits					
38	Adjustments -- Credits					
39	Total to Account For	6,607,200		87	168	45
40	Sold	6,589,200		86	988	45
41	Used in Gas Production					
42	Total Disposed Of	6,589,200		86	988	45
43	On Hand at End of Year	18,000			180	00
44						
45	.....CRUDE SULPHUR..RESIDUAL	Pounds				
46	On Hand First of Year					
47	Produced (Cr. Production Expense)	1,163,148		67	319	16
48	Stock Expense					
49	Adjustments -- Debits					
50	Adjustments -- Credits					
51	Total to Account For	1,163,148		67	319	16
52	Sold	1,163,148		67	319	16
53	Used in Gas Production					
54	Total Disposed Of	1,163,148		67	319	16
55	On Hand End of Year	-			-	

1939

849900455

849900456

620. RESIDUAL STOCK ACCOUNTS

1. Report below the information specified.
2. Quantities entered in this table should be comparable to the dollar amounts entered on the same line.
3. The dollar amounts entered opposite Residuals Produced (Cr. Production Expense) should agree with the total credited to Production Expense (Account 730). The quantities entered on these lines should agree with the totals of the amounts shown in Schedule 680.
4. Residuals used in production should include amounts charged directly to production expense accounts and amounts charged to fuel stock accounts.

Line No.	Item (a)	Quantities (b)	Dollar Amounts (c)		
1	COKE AND COKE BREEZE	Net Tons			
2	On Hand First of Year	33,740		199	922
3	Produced (Cr. Production Expense)	274,418	1	785	715
4	Stock Expense				
5	Adjustments -- Debits				
6	Adjustments -- Credits				
7	Net Coke and Breeze Produced	274,418	1	785	715
8	Coke Purchased (All coke purchased is accounted for in Schedule 235)				
9	Coke Breeze Purchased (All breeze purchased is accounted for in Schedule 235)				
10	Total to Account For	308,158	1	985	637
11	Coke Sold	92,654		691	057
12	Coke Breeze Sold	2			10
13	Coke Used in Gas Production	46,976		272	830
14	Coke Breeze Used in Gas Production	6,139		21	484
15	Coke (Interchanged within company. Includes (Generator Coke accounted for in Schedule 235)	128,169		834	727
16	Other Coke Breeze Used by Company	15,583		54	542
17	Total Disposed Of	289,523	1	874	653
18	On Hand End of Year	18,635		110	984
19					
20	COAL TAR	Gallons			
21	On Hand First of Year	597,104		32	840
22	Produced (Cr. Production Expense)	3,462,813		173	140
23	Stock Expense				
24	Adjustments -- Debits				
25	Adjustments -- Credits				
26	(Dr. account G730 to reduce stock value Jan. 1, 1940)			1	261
27	Total to Account For	4,059,917		204	719
28	Tar Sold	3,529,131		178	180
29	Tar Used in Gas Production				
30	Total Disposed Of	3,529,131		178	180
31	On Hand End of Year	530,786		26	539
32					
33	DRIP OIL RESIDUAL	Gallons			
34	On Hand First of Year	21,000		1	575
35	Produced (Cr. Production Expense)	844,502		69	175
36	Stock Expense				
37	Adjustments -- Debits				
38	Adjustments -- Credits				
39	Total to Account For	865,502		70	750
40	Sold	696,728		58	092
41	Used in Gas Production				
42	Total Disposed Of	696,728		58	092
43	On Hand at End of Year	168,774		12	658
44					
45	NAPHTHALENE RESIDUAL	Pounds			
46	On Hand First of Year	4,000			50
47	Produced (Cr. Production Expense)	90,200		1	353
48	Stock Expense				
49	Adjustments -- Debits (Cr. account G730 to increase stock value Jan. 1, 1940)				10
50	Adjustments -- Credits				
51	Total to Account For	94,200		1	413
52	Sold	94,200		1	413
53	Used in Gas Production				
54	Total Disposed Of	94,200		1	413
55	On Hand End of Year				

1940

620. RESIDUAL STOCK ACCOUNTS

1. Report below the information specified.
2. Quantities entered in this table should be comparable to the dollar amounts entered on the same line.
3. The dollar amounts entered opposite Residuals Produced (Cr. Production Expense) should agree with the total credited to Production Expense (Account 730). The quantities entered on these lines should agree with the totals of the amounts shown in Schedule 680.
4. Residuals used in production should include amounts charged directly to production expense accounts and amounts charged to fuel stock accounts.

Line No.	Item (a)	Quantities (b)	Dollar Amounts (c)		
1	WATER GAS TAR RESIDUAL	Gallons			
2	On Hand First of Year	4,784,000	143	520	00
3	Produced (Cr. Production Expense)	21,910,064	712	080	64
4	Tar Purchased	2,024,492	102	822	35
5	Adjustments -- Debits				
6	Adjustments -- Credits				
7					
8					
9					
10	Total to Account For	28,718,556	958	422	99
11					
12	Tar Sold	14,344,261	579	911	34
13	Used in Gas Production	2,129,276	56	502	06
14	Transferred to Electric Department (See Schedule 235)	9,448,446	233	337	98
15	Other Tar Used by Company	64,969	6	723	49
16					
17	Total Disposed Of	25,986,952	876	474	87
18	On Hand End of Year	2,731,604	81	948	12
19					
20	TAR				
21	On Hand First of Year				
22	Produced (Cr. Production Expense)				
23	Stock Expense				
24	Adjustments -- Debits				
25	Adjustments -- Credits				
26					
27	Total to Account For				
28	Tar Sold				
29	Tar Used in Gas Production				
30	Total Disposed Of				
31	On Hand End of Year				
32					
33	...SULPHATE OF AMMONIA.....RESIDUAL	Pounds			
34	On Hand First of Year	18,000		180	00
35	Produced (Cr. Production Expense)	6,414,154	87	390	62
36	Stock Expense				
37	Adjustments -- Debits (Cr. account G730 to increase stock value Jan. 1, 1940)			54	00
38	Adjustments -- Credits				
39	Total to Account For	6,432,154	87	624	62
40	Sold	6,022,200	82	295	22
41	Used in Gas Production				
42	Total Disposed Of	6,022,200	82	295	22
43	On Hand at End of Year	409,954	5	329	40
44					
45	.....CRUDE SULPHUR.....RESIDUAL	Pounds			
46	On Hand First of Year				
47	Produced (Cr. Production Expense)	730,916	38	292	98
48	Stock Expense				
49	Adjustments -- Debits				
50	Adjustments -- Credits				
51	Total to Account For	730,916	38	292	98
52	Sold	730,916	38	292	98
53	Used in Gas Production				
54	Total Disposed Of	730,916	38	292	98
55	On Hand End of Year				

1940 849900457

849900458

620. RESIDUAL STOCK ACCOUNTS

1. Report below the information specified.
2. Quantities entered in this table should be comparable to the dollar amounts entered on the same line.
3. The dollar amounts entered opposite Residuals Produced (Cr. Production Expense) should agree with the total credited to Production Expense (Account 730). The quantities entered on these lines should agree with the totals of the amounts shown in Schedule 679.
4. Residuals used in production should include amounts charged directly to production expense accounts and amounts charged to fuel stock accounts.

LINE NO.	ITEM (a)	QUANTITIES (b)	DOLLAR AMOUNTS (c)			
1	COKE AND COKE BREEZE	Net Tons				
2	On Hand First of Year	18,635		110	984	14
3	Produced (Cr. Production Expense)	273,560	1	706	603	37
4	Stock Expense					
5	Adjustments—Debits					
6	Adjustments—Credits					
7	Net Coke and Breeze Produced	273,560	1	706	603	37
8	Coke Purchased) All coke and breeze purchased is					
9	Coke Breeze Purchased) accounted for in Schedule 235					
10	Total to Account For	292,195	1	817	587	51
11	Coke Sold	77,704		600	118	92
12	Coke Breeze Sold	8			38	75
13	Coke Used in Gas Production	47,232		267	689	33
14	Coke Breeze Used in Gas Production	7,397		25	888	30
15	*Other Coke Used by Company	139,229		843	927	42
16	Other Coke Breeze Used by Company	16,065		56	228	70
17	Total Disposed Of	287,635	1	793	891	42
18	On Hand End of Year	4,560		23	696	09
19	*Interchanged within company. Includes Generator Coke accounted for in Schedule 235.					
20	COAL TAR	Gallons				
21	On Hand First of Year	530,786		26	539	30
22	Produced (Cr. Production Expense)	3,373,199		164	455	98
23	Stock Expense					
24	Adjustments—Debits					
25	Adjustments—Credits To adjust stock value Jan. 1, 1941					
26	(Dr. - Account G 730)				315	44
27	Total to Account For	3,903,985		190	679	84
28	Tar Sold	3,571,966		174	493	91
29	Tar Used in Gas Production					
30	Total Disposed Of	3,571,966		174	493	91
31	On Hand End of Year	332,019		16	185	93
32						
33	.....DRIP OIL.....RESIDUAL	Gallons				
34	On Hand First of Year	168,774		12	658	05
35	Produced (Cr. Production Expense)	287,951		23	274	91
36	Stock Expense					
37	Adjustments—Debits					
38	Adjustments—Credits					
39	Total to Account For	456,725		35	932	96
40	Sold	303,957		24	475	36
41	~~Used in Gas Production~~ Transferred to Water Gas Tar	118,768		8	907	60
42	Total Disposed Of	422,725		33	382	96
43	On Hand End of Year	34,000		2	550	00
44						
45	SULPHATE OF AMMONIARESIDUAL	Pounds				
46	On Hand First of Year	409,954		5	329	40
47	Produced (Cr. Production Expense)	6,183,340		87	712	15
48	Stock Expense					
49	Adjustments—Debits					
50	Adjustments—Credits					
51	Total to Account For	6,593,294		93	041	55
52	Sold	6,226,150		88	268	68
53	Used in Gas Production					
54	Total Disposed Of	6,226,150		88	268	68
55	On Hand End of Year	367,144		4	772	87

620. RESIDUAL STOCK ACCOUNTS

849900459

1. Report below the information specified.
2. Quantities entered in this table should be comparable to the dollar amounts entered on the same line.
3. The dollar amounts entered opposite Residuals Produced (Cr. Production Expense) should agree with the total credited to Production Expense (Account 730). The quantities entered on these lines should agree with the totals of the amounts shown in Schedule 679.
4. Residuals used in production should include amounts charged directly to production expense accounts and amounts charged to fuel stock accounts.

LINE NO.	ITEM (a)	QUANTITIES (b)	DOLLAR AMOUNTS (c)			
1	WATER GAS TAR RESIDUAL	Gallons				
2	On Hand First of Year	2,731,604		81	948	12
3	Produced (Cr. Production Expense)	24,795,061		883	479	59
4	Tar Purchased	2,093,495		108	505	68
5	Transferred from Drip Oil	118,768		8	907	60
6	Adjustments—Debits					
7	Adjustments—Credits					
8						
9						
10	Total to Account For	29,738,928	1	082	840	99
11	Tar Sold	22,106,747		864	964	34
12	Tar Used in Gas Production	1,740,916		52	227	48
13	Transferred to Electric Dept. (See Schedule 235)	3,244,794		81	119	85
14	Other Tar Used by Company	33,128		6	129	03
15						
16						
17	Total Disposed Of	27,125,585	1	004	440	70
18	On Hand End of Year	2,613,343		78	400	29
19						
20	TAR					
21	On Hand First of Year					
22	Produced (Cr. Production Expense)					
23	Stock Expense					
24	Adjustments—Debits					
25	Adjustments—Credits					
26						
27	Total to Account For					
28	Tar Sold					
29	Tar Used in Gas Production					
30	Total Disposed Of					
31	On Hand End of Year					
32						
33	.....CRUDE SULPHUR..RESIDUAL	Pounds				
34	On Hand First of Year					
35	Produced (Cr. Production Expense)	394,038		19	148	65
36	Stock Expense					
37	Adjustments—Debits					
38	Adjustments—Credits					
39	Total to Account For	394,038		19	148	65
40	Sold	394,038		19	148	65
41	Used in Gas Production					
42	Total Disposed Of	394,038		19	148	65
43	On Hand End of Year					
44						
45	.....RESIDUAL					
46	On Hand First of Year					
47	Produced (Cr. Production Expense)					
48	Stock Expense					
49	Adjustments—Debits					
50	Adjustments—Credits					
51	Total to Account For					
52	Sold					
53	Used in Gas Production					
54	Total Disposed Of					
55	On Hand End of Year					

849900460

620. RESIDUAL STOCK ACCOUNTS

1. Report below the information specified.
2. Quantities entered in this table should be comparable to the dollar amounts entered on the same line.
3. The dollar amounts entered opposite Residuals Produced (Cr. Production Expense) should agree with the total credited to Production Expense (Account 730). The quantities entered on these lines should agree with the totals of the amounts shown in Schedule 679.
4. Residuals used in production should include amounts charged directly to production expense accounts and amounts charged to fuel stock accounts.

LINE NO.	ITEM (a)	QUANTITIES (b)	DOLLAR AMOUNTS (c)		
1	COKE AND COKE BREEZE	Net Tons			
2	On Hand First of Year	4,560		23	696 09
3	Produced (Cr. Production Expense)	271,208	1	773	674 34
4	Stock Expense				
5	Adjustments—Debits				
6	Adjustments—Credits				
7	Net Coke and Breeze Produced				
8	Coke Purchased) All coke and breeze purchased is				
9	Coke Breeze Purchased) accounted for in Schedule 235				
10	Total to Account For	275,768	1	797	370 43
11	Coke Sold	47,541		407	854 01
12	Coke Breeze Sold				
13	Coke Used in Gas Production	53,044		318	454 98
14	Coke Breeze Used in Gas Production	7,483		26	189 65
15	*Other Coke Used by Company	146,594		959	666 62
16	*Other Coke Breeze Used by Company	15,865		55	537 95
17	Total Disposed Of	270 527	1	767	703 21
18	On Hand End of Year	5 241		29	667 22
19	*Interchanged within company. Includes Generator Coke accounted for in Schedule 235.				
20	COAL TAR	Gallons			
21	On Hand First of Year	332,019		16	185 93
22	Produced (Cr. Production Expense)	3,240,965		178	253 11
23	Stock Expense				
24	Adjustments—Debits				
25	Adjustments—Credits To adjust stock value Jan. 1, 1942			1	516 43
26	(Cr. Account G 730)				
27	Total to Account For	3,572,984		195	955 47
28	Tar Sold	3,368,884		184	729 97
29	Tar Used in Gas Production				
30	Total Disposed Of	3,368,884		184	729 97
31	On Hand End of Year	204,100		11	225 50
32					
33	.....DRIP..OIL.....RESIDUAL	Gallons			
34	On Hand First of Year	34,000		2	550 00
35	Produced (Cr. Production Expense)	520,276		42	559 67
36	Stock Expense				
37	Adjustments—Debits				
38	Adjustments—Credits				
39	Total to Account For	554,276		45	109 67
40	Sold	537,851		43	877 79
41	Used in Gas Production				
42	Total Disposed Of	537,851		43	877 79
43	On Hand End of Year	16,425		1	231 88
44					
45	SULPHATE.OF.AMMONIA.RESIDUAL	Pounds			
46	On Hand First of Year	367,144		4	772 87
47	Produced (Cr. Production Expense)	5,696,944		80	753 75
48	Stock Expense				
49	Adjustments—Debits				
50	Adjustments—Credits				
51	Total to Account For	6,064,088		85	526 62
52	Sold	5,841,900		82	638 16
53	Used in Gas Production				
54	Total Disposed Of	5,841,900		82	638 18
55	On Hand End of Year	222,188		2	888 4

620. RESIDUAL STOCK ACCOUNTS
(Continued)

849900461

LINE NO.	ITEM (a)	QUANTITIES (b)	DOLLAR AMOUNTS (c)		
1	WATER GAS TAR RESIDUAL	Gallons			
2	On Hand First of Year	2 613 343		78	400 2
3	Produced (Cr. Production Expense)	28 457 836	1	464	714 6
4	Tar Purchased	1 936 388		108	387 9
5					
6					
7					
8					
9					
10	Total to Account For	33 007 567	1	651	502 8
11	Tar Sold	28 200 900	1	504	640 8
12	Tar Used in Gas Production	1 437 661		43	129 8
13	Transferred to Electric Dept. (See Schedule 235)	544 698		14	265 9
14	Other Tar Used by Company	53 415		6	339 5
15					
16					
17	Total Disposed Of	30 236 674	1	568	376 0
18	On Hand End of Year	2 770 893		83	126 7
19					
20	TAR				
21	On Hand First of Year				
22	Produced (Cr. Production Expense)				
23	Stock Expense				
24	Adjustments—Debits				
25	Adjustments—Credits				
26					
27	Total to Account For				
28	Tar Sold				
29	Tar Used in Gas Production				
30	Total Disposed Of				
31	On Hand End of Year				
32					
33	....CRUDE SULPHUR....RESIDUAL	Pounds			
34	On Hand First of Year	None			
35	Produced (Cr. Production Expense)	635 985		29	727 6
36	Stock Expense				
37	Adjustments—Debits				
38	Adjustments—Credits				
39	Total to Account For	635 985		29	727 6
40	Sold	635 985		29	727 6
41	Used in Gas Production				
42	Total Disposed Of	635 985		29	727 6
43	On Hand End of Year	None			
44					
45	.....RESIDUAL				
46	On Hand First of Year				
47	Produced (Cr. Production Expense)				
48	Stock Expense				
49	Adjustments—Debits				
50	Adjustments—Credits				
51	Total to Account For				
52	Sold				
53	Used in Gas Production				
54	Total Disposed Of				
55	On Hand End of Year				

620. RESIDUAL STOCK ACCOUNTS

1. Report below the information specified.
2. Quantities entered in this table should be comparable to the dollar amounts entered on the same line.
3. The dollar amounts entered opposite Residuals Produced (Cr. Production Expense) should agree with the total credited to Production Expense (Account 730). The quantities entered on these lines should agree with the totals of the amounts shown in Schedule 679.
4. Residuals used in production should include amounts charged directly to production expense accounts and amounts charged to fuel stock accounts.

LINE NO.	ITEM (a)	QUANTITIES (b)	DOLLAR AMOUNTS (c)			
1	**COKE AND COKE BREEZE**	Net Tons				
2	On Hand First of Year	5 241		29	667	22
3	Produced (Cr. Production Expense)	267 578	1	819	387	81
4	Stock Expense					
5	Adjustments—Debits					
6	Adjustments—Credits					
7	Net Coke and Breeze Produced					
8	Coke Purchased) All coke and breeze purchased is					
9	Coke Breeze Purchased) accounted for in Schedule 235					
10	Total to Account For	272 819	1	849	055	03
11	Coke Sold	52 530		494	555	24
12	Coke Breeze Sold	10			51	00
13	Coke Used in Gas Production	48 143		302	049	68
14	Coke Breeze Used in Gas Production	7 969		27	889	74
15	*Other Coke Used by Company	160 059	1	000	465	37
16	*Other Coke Breeze Used by Company	766		2	294	96
17	Total Disposed Of	269 477	1	827	305	99
18	On Hand End of Year	3 342		21	749	04
19	*Interchanged within company. Includes Generator Coke accounted for in Schedule 235.					
20	COAL TAR	Gallons				
21	On Hand First of Year	204 100		11	225	50
22	Produced (Cr. Production Expense)	3 369 207		185	306	41
23	Stock Expense					
24	Adjustments—Debits					
25	Adjustments—Credits					
26						
27	Total to Account For	3 573 307		196	531	91
28	Tar Sold	3 251 907		178	854	91
29	Tar Used in Gas Production					
30	Total Disposed Of	3 251 907		178	854	91
31	On Hand End of Year	321 400		17	677	00
32						
33	.....DRIP..OIL.....RESIDUAL	Gallons				
34	On Hand First of Year	16 425		1	231	88
35	Produced (Cr. Production Expense)	997 245		81	060	48
36	Received from holders Cr. G751 - Operation of					
37	Storage Facilities	1 050			89	25
38	Adjustments—Credits					
39	Total to Account For	1 014 720		82	381	61
40	Sold	993 720		80	806	61
41	Used in Gas Production					
42	Total Disposed Of	993 720		80	806	61
43	On Hand End of Year	21 000		1	575	00
44						
45	SULPHATE OF AMMONIA RESIDUAL	Pounds				
46	On Hand First of Year	222 188		2	888	44
47	Produced (Cr. Production Expense)	5 699 912		75	356	65
48	Stock Expense					
49	Adjustments—Debits					
50	Adjustments—Credits					
51	Total to Account For	5 922 100		78	245	09
52	Sold	5 291 500		74	410	09
53	Used in Gas Production					
54	Total Disposed Of	5 291 500		74	410	09
55	On Hand End of Year	630 600		3	835	00

849900463

620. RESIDUAL STOCK ACCOUNTS
(Continued)

LINE NO.	ITEM (a)	QUANTITIES (b)	DOLLAR AMOUNTS (c)
1	WATER GAS TAR RESIDUAL		
2	On Hand First of Year	2 770 893	83 126 79
3	Produced (Cr. Production Expense)	25 187 039	1 369 921 27
4	Tar Purchased	1 644 561	104 349 39
5			
6			
7			
8			
9			
10	Total to Account For	29 602 493	1 557 397 45
11	Tar Sold	23 631 009	1 374 686 66
12	Tar Used in Gas Production	2 934 334	88 030 02
13	Other Tar used by company	23 621	4 274 90
14			
15			
16			
17	Total Disposed Of	26 588 964	1 466 991 58
18	On Hand End of Year	3 013 529	90 405 87
19			
20	TAR		
21	On Hand First of Year		
22	Produced (Cr. Production Expense)		
23	Stock Expense		
24	Adjustments—Debits		
25	Adjustments—Credits		
26			
27	Total to Account For		
28	Tar Sold		
29	Tar Used in Gas Production		
30	Total Disposed Of		
31	On Hand End of Year		
32			
33	....CRUDE SULPHUR.....RESIDUAL		
34	On Hand First of Year	None	
35	Produced (Cr. Production Expense)	545 343	22 800 13
36	Stock Expense		
37	Adjustments—Debits		
38	Adjustments—Credits		
39	Total to Account For	545 343	22 800 13
40	Sold	545 343	22 800 13
41	Used in Gas Production		
42	Total Disposed Of	545 343	22 800 13
43	On Hand End of Year	None	
44			
45	.....RESIDUAL		
46	On Hand First of Year		
47	Produced (Cr. Production Expense)		
48	Stock Expense		
49	Adjustments—Debits		
50	Adjustments—Credits		
51	Total to Account For		
52	Sold		
53	Used in Gas Production		
54	Total Disposed Of		
55	On Hand End of Year		

620. RESIDUAL STOCK ACCOUNTS

849900464

1. Report below the information specified.
2. Quantities entered in this table should be comparable to the dollar amounts entered on the same line.
3. The dollar amounts entered opposite Residuals Produced (Cr. Production Expense) should agree with the total credited to Production Expense (Account 730). The quantities entered on these lines should agree with the totals of the amounts shown in Schedule 679.
4. Residuals used in production should include amounts charged directly to production expense accounts and amounts charged to fuel stock accounts.

LINE NO	ITEM (a)	QUANTITIES (b)	DOLLAR AMOUNTS (c)
1	COKE AND COKE BREEZE	Net Tons	
2	On Hand First of Year	3 342	21 749 04
3	Produced (Cr. Production Expense)	253 385	1 899 109 58
4	Stock Expense		
5	Adjustments—Debits		
6	Adjustments—Credits		
7	Net Coke and Breeze Produced		
8	Coke Purchased) All coke and breeze purchased is		
9	Coke Breeze Purchased) accounted for in Schedule 235		
10	Total to Account For	256 727	1 920 858 62
11	Coke Sold	60 247	602 857 94
12	Coke Breeze Sold		
13	Coke Used in Gas Production	42 027	295 915 79
14	Coke Breeze Used in Gas Production	7 538	26 383 88
15	Other Coke Used by Company (a)	126 764	909 816 79
16	Other Coke Breeze Used by Company (b)	15 576	53 185 62
17	Total Disposed Of	252 152	1 888 160 02
18	On Hand End of Year	4 575	32 698 60
19			
20			
21	NOTES:		
22	(a) Interchanged within company; includes Generator		
23	Coke accounted for in Schedule 235.		
24			
25	(b) Includes coke breeze interchanged within company.		
26			
27			
28			
29			
30			
31			
32			
33	.....DRIP OIL.....RESIDUAL	Gallons	
34	On Hand First of Year	21 000	1 575 00
35	Produced (Cr. Production Expense)	471 417	37 484 12
36			
37			
38	Adjustments—Credits		
39	Total to Account For	492 417	39 059 12
40	Sold	469 057	37 307 11
41	Used in Gas Production		
42	Total Disposed Of	469 057	37 307 11
43	On Hand End of Year	23 360	1 752 01
44			
45	SULPHATE OF AMMONIA RESIDUAL	Pounds	
46	On Hand First of Year	630 600	3 835 00
47	Produced (Cr. Production Expense)	5 237 131	78 770 81
48	Stock Expense		
49	Adjustments—Debits		
50	Adjustments—Credits		
51	Total to Account For	5 867 731	82 605 81
52	Sold	5 098 400	72 604 51
53	Used in Gas Production		
54	Total Disposed Of	5 098 400	72 604 51
55	On Hand End of Year	769 331	10 001 30

1944

620. RESIDUAL STOCK ACCOUNTS (Continued)

849900465

LINE NO.	ITEM (a)	QUANTITIES (b)	DOLLAR AMOUNTS (c)
1	WATER GAS TAR RESIDUAL	GALLONS	
2	On Hand First of Year	3 013 529	90 405 8
3	Produced (Cr. Production Expense)	24 015 193	1 269 554 2
4	Tar Purchased	2 568 082	158 346 7
5			
6			
7			
8			
9			
10	Total to Account For	29 596 804	1 518 306 8
11	Tar Sold	19 419 728	1 141 295 8
12	Tar Used in Gas Production	4 847 336	185 102 1
13	Other Tar used by company	60 621	4 807 6
14			
15			
16			
17	Total Disposed Of	24 327 685	1 331 205 6
18	On Hand End of Year	5 269 119	187 101 2
19			
20	COAL TAR	GALLONS	
21	On Hand First of Year	321 400	17 677 0
22	Produced (Cr. Production Expense)	3 090 515	169 978 3
23	Stock Expense		
24	Adjustments—Debits		
25	Adjustments—Credits		
26			
27	Total to Account For	3 411 915	187 655 3
28	Tar Sold	2 843 475	156 391 1
29	Tar ~~Used in Gas Production~~ transferred to Water Gas Tar, incl. in line 4	119 148	6 553 1
30	Total Disposed Of	2 962 623	162 944 2
31	On Hand End of Year	449 292	24 711 0
32			
33	...CRUDE SULPHUR.....RESIDUAL	POUNDS	
34	On Hand First of Year	None	
35	Produced (Cr. Production Expense)	1 165 675	55 855 5
36	Stock Expense		
37	Adjustments—Debits		
38	Adjustments—Credits		
39	Total to Account For	1 165 675	55 855 5
40	Sold	1 165 675	55 855 5
41	Used in Gas Production		
42	Total Disposed Of	1 165 675	55 855 5
43	On Hand End of Year	None	
44			
45	.....RESIDUAL		
46	On Hand First of Year		
47	Produced (Cr. Production Expense)		
48	Stock Expense		
49	Adjustments—Debits		
50	Adjustments—Credits		
51	Total to Account For		
52	Sold		
53	Used in Gas Production		
54	Total Disposed Of		
55	On Hand End of Year		

1944

620. RESIDUAL STOCK ACCOUNTS

1. Report below the information specified.
2. Quantities entered in this table should be comparable to the dollar amounts entered on the same line.
3. The dollar amounts entered opposite Residuals Produced (Cr. Production Expense) should agree with the total credited to Production Expense (Account 730). The quantities entered on these lines should agree with the totals of the amounts shown in Schedule 679.
4. Residuals used in production should include amounts charged directly to production expense accounts and amounts charged to fuel stock accounts.

LINE NO	ITEM (a)	QUANTITIES (b)	DOLLAR AMOUNTS (c)
1	**COKE AND COKE BREEZE**	NET TONS	
2	On Hand First of Year	4 575	32 698 60
3	Produced (Cr. Production Expense)	219 922	1 709 012 11
4	Stock Expense		
5	Adjustments—Debits		
6	Adjustments—Credits		
7	Net Coke and Breeze Produced		
8	Coke Purchased) All coke and breeze purchased is		
9	Coke Breeze Purchased) accounted for in Schedule 235		
10	Total to Account For	224 497	1 741 710 71
11	Coke Sold	49 133	497 017 80
12	Coke Breeze Sold		
13	Coke Used in Gas Production	41 567 ✓	303 541 82
14	Coke Breeze Used in Gas Production	8 555 ✓	29 941 29
15	Other Coke Used by Company (a)	106 231	813 474 92
16	Other Coke Breeze Used by Company (b)	11 227	39 304 96
17	Total Disposed Of	216 713	1 683 280 79
18	On Hand End of Year	7 784	58 429 92
19			
20			
21	NOTES:		
22	(a) Interchanged within company; includes Generator		
23	Coke accounted for in Schedule 235.		
24			
25	(b) Includes coke breeze interchanged within company.		
26			
27			
28			
29			
30			
31			
32			
33	.....DRIP OIL.....RESIDUAL	GALLONS	
34	On Hand First of Year	23 360	1 752 01
35	Produced (Cr. Production Expense)	442 840	35 274 36
36			
37			
38	Adjustments—Credits		
39	Total to Account For	466 200	37 026 37
40	Sold	350 323	27 716 48
41	~~XXXXXXXXXXXXXXXX~~ Transferred to tar,incl.in line 4 page 609a	93 977	7 555 53
42	Total Disposed Of	444 300	35 272 01
43	On Hand End of Year	21 900	1 754 36
44			
45	SULPHATE OF AMMONIA RESIDUAL	POUNDS	
46	On Hand First of Year	769 331	10 001 30
47	Produced (Cr. Production Expense)	4 283 719	61 944 90
48	Stock Expense		
49	Adjustments—Debits		
50	Adjustments—Credits		
51	Total to Account For	5 053 050	71 946 20
52	Sold	5 033 050	71 686 20
53	Used in Gas Production		
54	Total Disposed Of	5 033 050	71 686 20
55	On Hand End of Year	20 000	260 00

620. RESIDUAL STOCK ACCOUNTS (Continued)

LINE NO.	ITEM (a)	QUANTITIES (b)	DOLLAR AMOUNTS (c)
1	**WATER GAS TAR RESIDUAL**	GALLONS	
2	On Hand First of Year	5 269 119	187 101 25
3	Produced (Cr. Production Expense)	22 607 717	1 290 915 72
4	Tar Purchased	2 600 765	162 997 51
5			
6			
7			
8			
9			
10	Total to Account For	30 477 601	1 641 014 48
11	Tar Sold	22 822 982	1 319 480 57
12	Tar Used in Gas Production	3 861 256	166 231 35
13	Other Tar used by company	118 367	8 478 00
14	Tar transferred to Electric Dept.		
15	(See Schedule 235)	980 826	42 618 85
16			
17	Total Disposed Of	27 783 431	1 536 808 77
18	On Hand End of Year	2 694 170	104 205 71
19			
20	**COAL TAR**	GALLONS	
21	On Hand First of Year	449 292	24 711 06
22	Produced (Cr. Production Expense)	2 292 766	126 102 21
23	Stock Expense		
24	Adjustments—Debits		
25	Adjustments—Credits		
26			
27	Total to Account For	2 742 058	150 813 27
28	Tar Sold	2 337 847	128 581 66
29	Tar ~~[illegible]~~ transferred to Water Gas Tar, incl. in line 4	161 211	8 866 61
30	Total Disposed Of	2 499 058	137 448 27
31	On Hand End of Year	243 000	13 365 00
32			
33	**CRUDE SULPHUR.....RESIDUAL**	POUNDS	
34	On Hand First of Year	None	
35	Produced (Cr. Production Expense)	1 258 950	61 810 85
36	Stock Expense		
37	Adjustments—Debits		
38	Adjustments—Credits		
39	Total to Account For	1 258 950	61 810 85
40	Sold	1 258 950	61 810 85
41	Used in Gas Production		
42	Total Disposed Of	1 258 950	61 810 85
43	On Hand End of Year	None	
44			
45	.....RESIDUAL		
46	On Hand First of Year		
47	Produced (Cr. Production Expense)		
48	Stock Expense		
49	Adjustments—Debits		
50	Adjustments—Credits		
51	Total to Account For		
52	Sold		
53	Used in Gas Production		
54	Total Disposed Of		
55	On Hand End of Year		

10111

620. RESIDUAL STOCK ACCOUNTS

1. Report below the information specified.
2. Quantities entered in this table should be comparable to the dollar amounts entered on the same line.
3. The dollar amounts entered opposite Residuals Produced (Cr. Production Expense) should agree with the total credited to Production Expense (Account 730). The quantities entered on these lines should agree with the totals of the amounts shown in Schedule 679.
4. Residuals used in production should include amounts charged directly to production expense accounts and amounts charged to fuel stock accounts.

LINE NO.	ITEM (a)	QUANTITIES (b)	DOLLAR AMOUNTS (c)			
1	COKE AND COKE BREEZE	NET TONS				
2	On Hand First of Year	7 784		58	429	92
3	Produced (Cr. Production Expense)	258 820	2	287	951	67
4	Stock Expense					
5	Adjustments—Debits					
6	Adjustments—Credits					
7	Net Coke and Breeze Produced	258 820	2	287	951	67
8	Coke Purchased } All coke and breeze purchased is					
9	Coke Breeze Purchased } accounted for in Schedule 235					
10	Total to Account For	266 604	2	346	381	59
11	Coke Sold	60 483		644	612	77
12	Coke Breeze Sold					
13	Coke Used in Gas Production	44 647		351	145	01
14	Coke Breeze Used in Gas Production	7 534		28	304	79
15	Other Coke Used by Company (a)	130 117	1	162	538	87
16	Other Coke Breeze Used by Company	10 251		39	307	71
17	Total Disposed Of	253 032	2	225	909	15
18	On Hand End of Year	13 572		120	472	44
19						
20						
21	NOTE:					
22	(a) Interchanged within company; includes Generator					
23	Coke accounted for in Schedule 235.					
24						
25						
26						
27						
28						
29						
30						
31						
32						
33	DRIP OIL RESIDUAL	GALLONS				
34	On Hand First of Year	21 900		1	754	36
35	Produced (Cr. Production Expense)	482 486		39	716	18
36	Stock Expense					
37	Adjustments—Debits					
38	Adjustments—Credits					
39	Total to Account For	504 386		41	470	54
40	Sold	391 866		32	180	01
41	~~[illegible]~~ Transferred to tar.	94 276		7	922	23
42	Total Disposed Of	486 142		40	102	24
43	On Hand End of Year	18 244		1	368	30
44						
45	SULPHATE OF AMMONIA RESIDUAL	POUNDS				
46	On Hand First of Year	20 000			260	00
47	Produced (Cr. Production Expense)	4 810 470		70	525	80
48	Stock Expense					
49	Adjustments—Debits					
50	Adjustments—Credits					
51	Total to Account For	4 830 470		70	785	80
52	Sold	4 810 470		70	525	80
53	Used in Gas Production					
54	Total Disposed Of	4 810 470		70	525	80
55	On Hand End of Year	20 000			260	00

620. RESIDUAL STOCK ACCOUNTS
(Continued)

LINE NO.	ITEM (a)	QUANTITIES (b)	DOLLAR AMOUNTS (c)
1	WATER GAS TAR RESIDUAL	GALLONS	
2	On Hand First of Year	2 694 170	104 205 71
3	Produced (Cr. Production Expense)	25 784 224	1 554 309 46
4	Tar Purchased	3 004 943	186 550 40
5	Transferred from Drip Oil	94 276	7 922 23
6			
7			
8			
9			
10	Total to Account For	31 577 613	1 852 987 80
11	Tar Sold	28 624 820	1 717 306 32
12	Tar Used in Gas Production	352 229	15 835 31
13	Other Tar used by company	91 639	6 790 22
14			
15			
16			
17	Total Disposed Of	29 068 688	1 739 931 85
18	On Hand End of Year	2 508 925	113 055 95
19			
20	COAL TAR	GALLONS	
21	On Hand First of Year	243 000	13 365 00
22	Produced (Cr. Production Expense)	3 067 485	168 711 75
23	Stock Expense		
24	Adjustments—Debits		
25	Adjustments—Credits		
26			
27	Total to Account For	3 310 485	182 076 75
28	Tar Sold	3 030 485	166 676 75
29	Tar		
30	Total Disposed Of	3 030 485	166 676 75
31	On Hand End of Year	280 000	15 400 00
32			
33	CRUDE SULPHUR RESIDUAL	POUNDS	
34	On Hand First of Year	None	
35	Produced (Cr. Production Expense)	6 167 710	73 787 67
36	Stock Expense		
37	Adjustments—Debits		
38	Adjustments—Credits		
39	Total to Account For	6 167 710	73 787 67
40	Sold	3 861 550	69 175 35
41	Used in Gas Production		
42	Total Disposed Of	3 861 550	69 175 35
43	On Hand End of Year	2 306 160	4 612 32
44			
45	RESIDUAL		
46	On Hand First of Year		
47	Produced (Cr. Production Expense)		
48	Stock Expense		
49	Adjustments—Debits		
50	Adjustments—Credits		
51	Total to Account For		
52	Sold		
53	Used in Gas Production		
54	Total Disposed Of		
55	On Hand End of Year		

620. RESIDUAL STOCK ACCOUNTS

1. Report below the information specified.
2. Quantities entered in this table should be comparable to the dollar amounts entered on the same line.
3. The dollar amounts entered opposite Residuals Produced (Cr. Production Expense) should agree with the total credited to Production Expense (Account 730). The quantities entered on these lines should agree with the totals of the amounts shown in Schedule 679.
4. Residuals used in production should include amounts charged directly to production expense accounts and amounts charged to fuel stock accounts.

LINE NO.	ITEM (a)	QUANTITIES (b)	DOLLAR AMOUNTS (c)			
1	COKE AND COKE BREEZE	NET TONS				
2	On Hand First of Year	13 572		120	472	44
3	Produced (Cr. Production Expense)	312 141	3	355	228	63
4	Stock Expense					
5	Adjustments—Debits					
6	Adjustments—Credits					
7	Net Coke and Breeze Produced	312 141	3	355	228	63
8	Coke Purchased) All coke and breeze purchased is					
9	Coke Breeze Purchased) accounted for in Schedule 235					
10	Total to Account For	325 713	3	475	701	07
11	Coke Sold	91 397	1	170	953	02
12	Coke Breeze Sold					
13	Coke Used in Gas Production	55 719		552	985	51
14	Coke Breeze Used in Gas Production	7 126		29	973	56
15	Other Coke Used by Company (a)	153 396	1	611	291	96
16	Other Coke Breeze Used by Company	13 103		55	071	44
17	Total Disposed Of	320 741	3	420	275	49
18	On Hand End of Year	4 972		55	425	58
19						
20						
21	NOTE:					
22	(a) Interchanged within company; includes Generator					
23	Coke accounted for in Schedule 235.					
24						
25						
26						
27						
28						
29						
30						
31						
32						
33	DRIP OIL RESIDUAL	GALLONS				
34	On Hand First of Year	18 244		1	368	30
35	Produced (Cr. Production Expense)	1 271 060		122	408	90
36	~~Stock Expense~~ Total to Account For	1 289 304		123	777	20
37	Adjustments—Debits					
38	Adjustments—Credits					
39	~~Total to Account For~~ Interchanged within company	500			52	50
40	~~Sold~~ Sold	1 210 668		116	843	90
41	~~Used in Gas Production~~ Transferred to Water Gas Tar	58 136		5	380	79
42	Total Disposed Of	1 269 304		122	277	19
43	On Hand End of Year	20 000		1	500	01
44						
45	SULPHATE OF AMMONIA RESIDUAL	POUNDS				
46	On Hand First of Year	20 000			260	00
47	Produced (Cr. Production Expense)	6 646 250		116	886	50
48	Stock Expense					
49	Adjustments—Debits					
50	Adjustments—Credits					
51	Total to Account For	6 666 250		117	146	50
52	Sold	6 466 250		114	546	50
53	Used in Gas Production					
54	Total Disposed Of	6 466 250		114	546	50
55	On Hand End of Year	200 000		2	600	00

1947

849900470

620. RESIDUAL STOCK ACCOUNTS (Continued)

849900471

LINE NO.	ITEM (a)	QUANTITIES (b)	DOLLAR AMOUNTS (c)
1	WATER GAS TAR RESIDUAL	GALLONS	
2	On Hand First of Year	2 508 925	113 055 95
3	Produced (Cr. Production Expense)	28 348 845	2 080 118 06
4	Tar Purchased	3 331 461	235 696 99
5	Transferred from Drip Oil	58 136	5 380 79
6	Transferred from Coal Tar	156 290	11 721 75
7			
8			
9			
10	Total to Account For	34 403 657	2 445 973 54
11	Tar Sold	30 156 922	2 191 374 86
12	Tar Used in Gas Production	556 438	29 712 00
13	Other Tar used by company	107 715	9 808 12
14			
15			
16			
17	Total Disposed Of	30 821 075	2 230 894 98
18	On Hand End of Year	3 582 582	215 078 56
19			
20	COAL TAR	GALLONS	
21	On Hand First of Year	280 000	15 400 00
22	Produced (Cr. Production Expense)	4 122 370	308 246 89
23	Stock Expense		
24	Adjustments—Debits		
25	Adjustments—Credits		
26			
27	Total to Account For	4 402 370	323 646 89
28	Tar Sold	3 919 531	293 964 94
29	Tar transferred to Water Gas Tar	156 290	11 721 75
30	Total Disposed Of	4 075 821	305 686 69
31	On Hand End of Year	326 549	17 960 20
32			
33	SULPHUR RESIDUAL	POUNDS	
34	On Hand First of Year	2 306 160	4 612 32
35	Produced (Cr. Production Expense)	3 686 805	79 230 06
36	Stock Expense		
37	~~Adjustments—Debits~~ Sulphur purchased	12 000	36 00
38	Adjustments—Credits		
39	Total to Account For	6 004 965	83 878 38
40	Sold	4 137 900	80 144 25
41	Used in Gas Production		
42	Total Disposed Of	4 137 900	80 144 25
43	On Hand End of Year	1 867 065	3 734 13
44			
45	RESIDUAL		
46	On Hand First of Year		
47	Produced (Cr. Production Expense)		
48	Stock Expense		
49	Adjustments—Debits		
50	Adjustments—Credits		
51	Total to Account For		
52	Sold		
53	Used in Gas Production		
54	Total Disposed Of		
55	On Hand End of Year		

620. RESIDUAL STOCK ACCOUNTS

1. Report below the information specified.
2. Quantities entered in this table should be comparable to the dollar amounts entered on the same line.
3. The dollar amounts entered opposite Residuals Produced (Cr. Production Expense) should agree with the total credited to Production Expense (Account 730). The quantities entered on these lines should agree with the totals of the amounts shown in Schedule 679.
4. Residuals used in production should include amounts charged directly to production expense accounts and amounts charged to fuel stock accounts.

LINE NO.	ITEM (a)	QUANTITIES (b)	DOLLAR AMOUNTS (c)			
1	COKE AND COKE BREEZE	NET TONS				
2	On Hand First of Year	4 972		55	425	58
3	Produced (Cr. Production Expense)	296 625	3	986	194	15
4	Stock Expense					
5	Adjustments—Debits					
6	Adjustments—Credits					
7	Net Coke and Breeze Produced	296 625	3	986	194	15
8	Coke Purchased) All coke and breeze purchased is					
9	Coke Breeze Purchased) accounted for in Schedule 235					
10	Total to Account For	301 597	4	041	619	73
11	Coke Sold	92 727	1	487	987	39
12	Coke Breeze Sold					
13	Coke Used in Gas Production Charged to acct.712-Prod.Gas Fuel	46 482		609	754	17
14	Coke Breeze Used in Gas Production Charged to acct.708-Boiler Fuel	7 578		35	608	43
15	Other Coke Used by Company (a)	119 823	1	523	249	81
16	Other Coke Breeze Used by Company	11 677		55	011	57
17	Total Disposed Of	278 287	3	711	611	37
18	On Hand End of Year	23 310		330	008	36
19						
20						
21	NOTE:					
22	(a) Interchanged within company; includes Generator					
23	Coke accounted for in Schedule 235.					
24						
25						
26						
27						
28						
29						
30						
31						
32						
33	.....DRIP OIL.....RESIDUAL	GALLONS				
34	On Hand First of Year	20 000		1	500	01
35	Produced (Cr. Production Expense)	1 157 026		130	162	40
36	~~Stock Expense~~ Total to Account For	1 177 026		131	662	41
37	Adjustments—Debits					
38	Adjustments—Credits					
39	~~Total to Account For~~ Interchanged within company	1 050			126	00
40	~~Sold~~ Sold	1 148 226		129	316	41
41	~~Used in Gas Production~~ Transferred to Water Gas Tar	4 750			380	00
42	Total Disposed Of	1 154 026		129	822	41
43	On Hand End of Year	23 000		1	840	00
44						
45	SULPHATE OF AMMONIA..RESIDUAL	POUNDS				
46	On Hand First of Year	200 000		2	600	00
47	Produced (Cr. Production Expense)	6 844 163		150	206	10
48	Stock Expense					
49	Adjustments—Debits					
50	Adjustments—Credits					
51	Total to Account For	7 044 163		152	806	10
52	Sold	6 715 300		147	873	15
53	Used in Gas Production					
54	Total Disposed Of	6 715 300		147	873	15
55	On Hand End of Year	328 863		4	932	95

1948

849900472

620. RESIDUAL STOCK ACCOUNTS (Continued)

LINE NO.	ITEM (a)	QUANTITIES (b)	DOLLAR AMOUNTS (c)
1	**WATER GAS TAR RESIDUAL**	GALLONS	
2	On Hand First of Year	3 582 582	215 078 56
3	Produced (Cr. Production Expense)	29 495 526	2 562 814 41
4	Tar Purchased	2 495 562	193 260 40
5	Transferred from Drip Oil	4 750	380 00
6	Transferred from Coal Tar	27 311	3 277 32
7			
8			
9			
10	Total to Account For	35 605 731	2 974 810 69
11	Tar Sold	28 404 991	2 482 505 72
12	Tar Used in Gas Production — Used under boilers:		
13	Charged to account 708 — Boiler Fuel	905 615	63 058 93
14	Charged to other accounts	1 190 767	82 729 36
15	Other Tar used by company	164 188	16 109 75
16			
17	Total Disposed Of	30 665 561	2 644 403 76
18	On Hand End of Year	4 940 170	330 406 93
19			
20	**COAL TAR**	GALLONS	
21	On Hand First of Year	326 549	17 960 20
22	Produced (Cr. Production Expense)	3 851 651	480 922 98
23	Stock Expense		
24	Adjustments—Debits		
25	Adjustments—Credits		
26			
27	Total to Account For	4 178 200	498 883 18
28	Tar Sold	4 025 848	483 101 76
29	Tar transferred to Water Gas Tar	27 311	3 277 32
30	Total Disposed Of	4 053 159	486 379 08
31	On Hand End of Year	125 041	12 504 10
32			
33	**SULPHUR RESIDUAL**	POUNDS	
34	On Hand First of Year	1 867 065	3 734 13
35	Produced (Cr. Production Expense)	2 431 765	64 867 85
36	Stock Expense		
37	Adjustments—Debits		
38	Adjustments—Credits		
39	Total to Account For	4 298 830	68 601 98
40	Sold	3 427 700	66 847 69
41	Used in Gas Production — Residuals Operation Expenses	12 030	36 09
42	Total Disposed Of	3 439 730	66 883 78
43	On Hand End of Year	859 100	1 718 20
44			
45	**RESIDUAL**		
46	On Hand First of Year		
47	Produced (Cr. Production Expense)		
48	Stock Expense		
49	Adjustments—Debits		
50	Adjustments—Credits		
51	Total to Account For		
52	Sold		
53	Used in Gas Production		
54	Total Disposed Of		
55	On Hand End of Year		

670 RESIDUAL STOCK ACCOUNTS

1. Report below the information specified.
2. Quantities entered in this table should be comparable to the dollar amounts entered on the same line.
3. The dollar amounts entered opposite Residuals Produced (Cr. Production Expense) should agree with the total credited to Production Expense (Account 730). The quantities entered on these lines should agree with the totals of the amounts shown in Schedule 679.
4. Residuals used in production should include amounts charged directly to production expense accounts and amounts charged to fuel stock accounts.

LINE NO.	ITEM (a)	QUANTITIES (b)	DOLLAR AMOUNTS (c)			
1	COKE AND COKE BREEZE	NET TONS				
2	On Hand First of Year	23 310		330	008	36
3	Produced (Cr. Production Expense)	288 110	4	038	482	45
4	Stock Expense					
5	Adjustments—Debits					
6	Adjustments—Credits					
7	Net Coke and Breeze Produced	288 110	4	038	482	45
8	Coke Purchased } All coke and breeze purchased is					
9	Coke Breeze Purchased } accounted for in Schedule 235					
10	Total to Account For	311 420	4	368	490	81
11	Coke Sold	109 173	1	800	425	04
12	Coke Breeze Sold	5			41	25
13	Coke Used in Gas Production Charged to acct.712-Prod.Gas Fuel	54 093		722	446	49
14	Coke Breeze Used in Gas Production Charged to acct.708-Boiler Fuel	8 184		42	965	21
15	Other Coke Used by Company (a)	115 788	1	597	317	54
16	Other Coke Breeze Used by Company	12 361		64	896	04
17	Total Disposed Of	299 604	4	228	091	57
18	On Hand End of Year	11 816		140	399	24
19						
20						
21	Note:					
22	(a) Interchanged within company; includes Generator					
23	Coke accounted for in Schedule 235.					
24						
25						
26						
27						
28						
29						
30						
31						
32						
33	.....DRIP OIL.....RESIDUAL	GALLONS				
34	On Hand First of Year	23 000		1	840	00
35	Produced (Cr. Production Expense)	978 983		119	784	74
36	~~Stock Expense~~ Total to Account For	1 001 983		121	624	74
37	Adjustments—Debits					
38	Adjustments—Credits					
39	~~Total to Account For~~ Interchanged within company	100			11	50
40	~~Sold~~ Sold	886 376		110	232	88
41	~~Used in Gas Production~~ Transferred to Water Gas Tar	55 507		5	780	36
42	Total Disposed Of	941 983		116	024	74
43	On Hand End of Year	60 000		5	600	00
44						
45	SULPHATE OF AMMONIA.RESIDUAL	POUNDS				
46	On Hand First of Year	328 863		4	932	95
47	Produced (Cr. Production Expense)	6 482 812		159	569	38
48	Stock Expense					
49	Adjustments—Debits					
50	Adjustments—Credits					
51	Total to Account For	6 811 675		164	502	33
52	Sold	6 312 200		154	512	83
53	Used in Gas Production					
54	Total Disposed Of	6 312 200		154	512	83
55	On Hand End of Year	499 475		9	989	50

1949

670. RESIDUAL STOCK ACCOUNTS
(Continued)

LINE NO.	ITEM (a)	QUANTITIES (b)	DOLLAR AMOUNTS (c)			
1	WATER GAS TAR RESIDUAL	GALLONS				
2	On Hand First of Year	4 940 170		330	406	93
3	Produced (Cr. Production Expense)	28 439 774	2	064	328	20
4	Tar Purchased	3 024 818		233	378	89
5	Transferred from Drip Oil	55 507		5	780	36
6	Transferred from Coal Tar	338 644		25	664	11
7						
8						
9						
10	Total to Account For	36 798 913	2	659	558	49
11	Tar Sold	21 126 142	1	796	280	12
12	Tar Used in Gas Production – Used under boilers:					
13	Charged to account 708 – Boiler Fuel	2 227 213		137	938	49
14	Charged to other accounts	3 705 328		233	587	05
15	Other Tar used by company	110 091		10	245	88
16						
17	Total Disposed Of	27 168 774	2	178	051	54
18	On Hand End of Year	9 630 139		481	506	95
19						
20	COAL TAR	GALLONS				
21	On Hand First of Year	125 041		12	504	10
22	Produced (Cr. Production Expense)	3 733 227		320	870	16
23	Stock Expense					
24	Adjustments—Debits					
25	Adjustments—Credits					
26						
27	Total to Account For	3 858 268		333	374	26
28	Tar Sold	3 412 224		302	340	15
29	Tar transferred to Water Gas Tar	338 644		25	664	11
30	Total Disposed Of	3 750 868		328	004	26
31	On Hand End of Year	107 400		5	370	00
32						
33	.....SULPHUR.....RESIDUAL	POUNDS				
34	On Hand First of Year	859 100		1	718	20
35	Produced (Cr. Production Expense)	3 129 315		60	368	31
36	Stock Expense					
37	Adjustments—Debits					
38	Adjustments—Credits					
39	Total to Account For	3 988 415		62	086	51
40	Sold	3 086 450		60	282	58
41	Used in Gas Production					
42	Total Disposed Of	3 086 450		60	282	58
43	On Hand End of Year	901 965		1	803	93
44						
45	.....RESIDUAL					
46	On Hand First of Year					
47	Produced (Cr. Production Expense)					
48	Stock Expense					
49	Adjustments—Debits					
50	Adjustments—Credits					
51	Total to Account For					
52	Sold					
53	Used in Gas Production					
54	Total Disposed Of					
55	On Hand End of Year					

1949

670 RESIDUAL STOCK ACCOUNTS

1. Report below the information specified.
2. Quantities entered in this table should be comparable to the dollar amounts entered on the same line.
3. The dollar amounts entered opposite Residuals Produced (Cr. Production Expense) should agree with the total credited to Production Expense (Account 730). The quantities entered on these lines should agree with the totals of the amounts shown in Schedule 679.
4. Residuals used in production should include amounts charged directly to production expense accounts and amounts charged to fuel stock accounts.

LINE NO.	ITEM (a)	QUANTITIES (b)	DOLLAR AMOUNTS (c)			
1	COKE AND COKE BREEZE	NET TONS				
2	On Hand First of Year	11 816		140	399	24
3	Produced (Cr. Production Expense)	397 534	5	540	960	87
4	Stock Expense					
5	Adjustments—Debits					
6	Adjustments—Credits					
7	Net Coke and Breeze Produced	397 534	5	540	960	87
8	Coke Purchased } All coke and breeze purchased is					
9	Coke Breeze Purchased } accounted for in Schedule 235					
10	Total to Account For	409 350	5	681	360	11
11	Coke Sold	145 880	2	276	308	69
12	Coke Breeze Sold	8			125	24
13	Coke Used in Gas Production — Charged to acct.712-Prod.Gas Fuel	55 894		738	322	87
14	Coke Breeze Used in Gas Production — Charged to acct.708-Boiler Fuel	9 927		52	119	40
15	Other Coke Used by Company (a)	182 774	2	516	563	99
16	Other Coke Breeze Used by Company	12 098		63	511	85
17	Total Disposed Of	406 581	5	646	952	04
18	On Hand End of Year	2 769		34	408	07
19						
20						
21	Note:					
22	(a) Interchanged within company; includes Generator					
23	Coke accounted for in Schedule 235.					
24						
25						
26						
27						
28						
29						
30						
31						
32						
33	.....DRIP OIL.....RESIDUAL	GALLONS				
34	On Hand First of Year	60 000		5	600	00
35	Produced (Cr. Production Expense)	643 913		71	004	44
36	~~Stock Expense~~ Total to Account For	703 913		76	604	44
37	Adjustments—Debits					
38	Adjustments—Credits					
39	~~Total to Account For~~ Interchanged within company	1 850			182	25
40	~~Sold~~ Sold	520 083		60	953	85
41	~~Used in Gas Production~~ Transferred to Water Gas Tar	131 887		11	210	43
42	Total Disposed Of	653 820		72	346	53
43	On Hand End of Year	50 093		4	257	91
44						
45	SULPHATE OF AMMONIA..RESIDUAL	POUNDS				
46	On Hand First of Year	499 475		9	989	50
47	Produced (Cr. Production Expense)	9 026 175		165	201	51
48	Stock Expense					
49	Adjustments—Debits					
50	Adjustments—Credits					
51	Total to Account For	9 525 650		175	191	01
52	Sold	9 121 550		169	735	66
53	Used in Gas Production					
54	Total Disposed Of	9 121 550		169	735	66
55	On Hand End of Year	404 100		5	455	35

670. RESIDUAL STOCK ACCOUNTS
(Continued)

LINE NO.	ITEM (a)	QUANTITIES (b)	DOLLAR AMOUNTS (c)			
1	WATER GAS TAR RESIDUAL	GALLONS				
2	On Hand First of Year	9 630 139		481	506	95
3	Produced (Cr. Production Expense)	29 165 753	1	415	421	10
4	Tar Purchased	2 902 317		239	589	44
5	Transferred from Drip Oil	131 887		11	210	43
6	Transferred from Coal Tar	31 817		2	545	36
7						
8						
9						
10	Total to Account For	41 861 913	2	150	273	28
11	Tar Sold	24 621 938	1	409	787	16
12	Tar Used in Gas Production - Used under boilers:					
13	Charged to account 708 - Boiler Fuel	2 155 429		99	943	89
14	Charged to other accounts	4 144 239		191	853	28
15	Other Tar used by company	119 918		10	723	73
16						
17	Total Disposed Of	31 041 524	1	712	308	06
18	On Hand End of Year	10 820 389		437	965	22
19						
20	COAL TAR	GALLONS				
21	On Hand First of Year	107 400		5	370	00
22	Produced (Cr. Production Expense)	5 648 129		451	640	92
23	Stock Expense					
24	Adjustments—Debits					
25	Adjustments—Credits					
26						
27	Total to Account For	5 755 529		457	010	92
28	Tar Sold	5 609 332		448	746	56
29	Tar transferred to Water Gas Tar	31 817		2	545	36
30	Total Disposed Of	5 641 149		451	291	92
31	On Hand End of Year	114 380		5	719	00
32						
33	.....SULPHUR.....RESIDUAL	POUNDS				
34	On Hand First of Year	901 965		1	803	93
35	Produced (Cr. Production Expense)	3 284 875		60	482	17
36	Stock Expense					
37	Adjustments—Debits					
38	Adjustments—Credits					
39	Total to Account For	4 186 840		62	286	10
40	Sold	3 112 700		60	137	82
41	Used in Gas Production					
42	Total Disposed Of	3 112 700		60	137	82
43	On Hand End of Year	1 074 140		2	148	28
44						
45	.....RESIDUAL					
46	On Hand First of Year					
47	Produced (Cr. Production Expense)					
48	Stock Expense					
49	Adjustments—Debits					
50	Adjustments—Credits					
51	Total to Account For					
52	Sold					
53	Used in Gas Production					
54	Total Disposed Of					
55	On Hand End of Year					

670 RESIDUAL STOCK ACCOUNTS

1. Report below the information specified.
2. Quantities entered in this table should be comparable to the dollar amounts entered on the same line.
3. The dollar amounts entered opposite Residuals Produced (Cr. Production Expense) should agree with the total credited to Production Expense (Account 730). The quantities entered on these lines should agree with the totals of the amounts shown in Schedule 679.
4. Residuals used in production should include amounts charged directly to production expense accounts and amounts charged to fuel stock accounts.

LINE NO.	ITEM (a)	QUANTITIES (b)	DOLLAR AMOUNTS (c)			
1	COKE AND COKE BREEZE	NET TONS				
2	On Hand First of Year	2 769		34	408	07
3	Produced (Cr. Production Expense)	434 973	6	558	002	75
4	Stock Expense					
5	Adjustments—Debits					
6	Adjustments—Credits					
7	Net Coke and Breeze Produced	434 973	6	558	002	75
8	Coke Purchased } All coke and breeze purchased is					
9	Coke Breeze Purchased } accounted for in Schedule 235					
10	Total to Account For	437 742	6	592	410	82
11	Coke Sold	242 334	4	087	539	04
12	Coke Breeze Sold					
13	Coke Used in Gas Production Charged to acct. 712-Prod.Gas Fuel	18 740		269	481	49
14	Coke Breeze Used in Gas Production Charged to acct. 708-Boiler Fuel	8 873		46	580	92
15	Other Coke Used by Company (a)	125 025	1	721	034	67
16	Other Coke Breeze Used by Company	13 257		69	601	58
17	Total Disposed Of	408 229	6	194	237	70
18	On Hand End of Year	29 513		398	173	12
19						
20						
21	Note:					
22	(a) Interchanged within company; includes Generator					
23	Coke accounted for in Schedule 235.					
24						
25						
26						
27						
28						
29						
30						
31						
32						
33	DRIP OIL RESIDUAL	GALLONS				
34	On Hand First of Year	50 093		4	257	91
35	Produced (Cr. Production Expense)	711 259		108	593	86
36	~~Stock Expense~~ Tar Purchased	9 872			820	94
37	~~Adjustments—Debits~~ Transferred from Mixed Gas Tar	113 771		5	034	85
38	~~Adjustments—Credits~~ Total to Account For	884 995		118	707	56
39	~~Total to Account For~~ Interchanged within company	465			63	93
40	~~Sold~~ Sold	709 740		102	912	53
41	~~Used in Gas Production~~ Transferred to Mixed Gas Tar	65 334		5	880	06
42	Total Disposed Of	775 539		108	856	52
43	On Hand End of Year	109 456		9	851	04
44						
45	SULPHATE OF AMMONIA RESIDUAL	POUNDS				
46	On Hand First of Year	404 100		5	455	35
47	Produced (Cr. Production Expense)	9 754 295		188	487	67
48	Stock Expense					
49	Adjustments—Debits					
50	Adjustments—Credits					
51	Total to Account For	10 158 395		193	943	02
52	Sold	9 717 900		187	996	34
53	Used in Gas Production					
54	Total Disposed Of	9 717 900		187	996	34
55	On Hand End of Year	440 495		5	946	68

849900478

670. RESIDUAL STOCK ACCOUNTS
(Continued)

LINE NO.	ITEM (a)	QUANTITIES (b)	DOLLAR AMOUNTS (c)
1	MIXED GAS TAR RESIDUAL	GALLONS	
2	On Hand First of Year	10 820 389	437 965 22
3	Produced (Cr. Production Expense)	8 605 212	1 034 430 66
4	Tar Purchased	243 369	19 350 20
5	Transferred from Drip Oil	65 334	5 880 06
6	Transferred from Coal Tar	558 489	55 848 90
7			
8			
9			
10	Total to Account For	20 292 793	1 553 475 04
11	Tar Sold	16 870 010	1 382 153 38
12	Tar Used in Gas Production: Charged to account 708-Boiler Fuel	196 611	8 757 43
13	Charged to Other Accounts	257 389	11 472 31
14	Other Tar Used by Company	54 189	4 144 81
15	Transferred to Coal Tar	127 205	12 720 50
16	Transferred to Drip Oil	113 771	5 034 85
17	Total Disposed Of	17 619 175	1 424 283 28
18	On Hand End of Year	2 673 618	129 191 76
19			
20	COAL TAR	GALLONS	
21	On Hand First of Year	114 380	5 719 00
22	Produced (Cr. Production Expense)	6 300 594	629 166 40
23	~~Stock Expense~~ Transferred from Mixed Gas Tar	127 205	12 720 50
24	Adjustments—Debits		
25	Adjustments—Credits		
26			
27	Total to Account For	6 542 179	647 605 90
28	Tar Sold	5 763 290	576 329 00
29	Tar transferred to Mixed Gas Tar	558 489	55 848 90
30	Total Disposed Of	6 321 779	632 177 90
31	On Hand End of Year	220 400	15 428 00
32			
33	.....SULPHUR.....RESIDUAL	POUNDS	
34	On Hand First of Year	1 074 140	2 148 28
35	Produced (Cr. Production Expense)	3 487 170	70 425 11
36	Stock Expense		
37	Adjustments—Debits	16 350	363 79
38	Adjustments—Credits		
39	Total to Account For	4 577 660	72 937 18
40	Sold	3 277 250	70 005 27
41	Used in Gas Production		
42	Total Disposed Of	3 277 250	70 005 27
43	On Hand End of Year	1 300 410	2 931 91
44			
45	.....RESIDUAL		
46	On Hand First of Year		
47	Produced (Cr. Production Expense)		
48	Stock Expense		
49	Adjustments—Debits		
50	Adjustments—Credits		
51	Total to Account For		
52	Sold		
53	Used in Gas Production		
54	Total Disposed Of		
55	On Hand End of Year		

670 RESIDUAL STOCK ACCOUNTS

1. Report below the information specified.
2. Quantities entered in this table should be comparable to the dollar amounts entered on the same line.
3. The dollar amounts entered opposite Residuals Produced (Cr. Production Expense) should agree with the total credited to Production Expense (Account 730). The quantities entered on these lines should agree with the totals of the amounts shown in Schedule 679.
4. Residuals used in production should include amounts charged directly to production expense accounts and amounts charged to fuel stock accounts.

LINE NO.	ITEM (a)	QUANTITIES (b)	DOLLAR AMOUNTS (c)			
		NET TONS				
1	COKE AND COKE BREEZE					
2	On Hand First of Year	Coke 26,905 Br 2,608 29 513		398	173	12
3	Produced (Cr. Production Expense)	420 860	6	150	386	43
4	Stock Expense					
5	Adjustments—Debits					
6	Adjustments—Credits					
7	Net Coke and Breeze Produced	Coke 391,779 Br 29,079 420 860	6	150	386	43
8	Coke Purchased } All coke and breeze purchased is					
9	Coke Breeze Purchased } accounted for in Schedule 235					
10	Total to Account For	450 373	6	548	559	55
11	Coke Sold	293 611	4	732	932	66
12	Coke Breeze Sold	1			10	00
13	Coke Used in Gas Production					
14	Coke Breeze Used in Gas Production Charged to acct. 708-Boiler Fuel	12 098		65	250	56
15	Other Coke Used by Company (a)	95 524	1	358	764	30
16	Other Coke Breeze Used by Company	15 844		85	173	19
17	Total Disposed Of	417 078	6	242	130	71
18	On Hand End of Year	Coke 29,541 Br 3,754 33 295		306	428	84
19						
20						
21	Note:					
22	(a) Interchanged within company; includes Generator					
23	Coke accounted for in Schedule 235.					
24						
25						
26						
27						
28						
29						
30						
31						
32						
33	.....DRIP OIL.....RESIDUAL	GALLONS				
34	On Hand First of Year	109 456		9	851	04
35	Produced (Cr. Production Expense)	173 287		27	232	66
36	~~Stock Expense~~					
37	~~Adjustments—Debits~~ Transferred from Mixed Gas Tar	19 410			941	07
38	~~Adjustments—Credits~~ Total to Account For	302 153		38	024	77
39	~~Total to Account For~~ Interchanged within company	9 670			870	30
40	~~Sold~~ Sold	174 153		25	242	68
41	~~Used in Gas Production~~ Transferred to Mixed Gas Tar	60 653		5	458	77
42	Total Disposed Of	244 476		31	571	75
43	On Hand End of Year	57 677		6	453	02
44						
45	SULPHATE OF AMMONIA RESIDUAL	POUNDS				
46	On Hand First of Year	440 495		5	946	68
47	Produced (Cr. Production Expense)	9 034 105		189	196	73
48	Stock Expense					
49	Adjustments—Debits					
50	Adjustments—Credits					
51	Total to Account For	9 474 600		195	143	41
52	Sold	8 973 700		188	381	26
53	Used in Gas Production					
54	Total Disposed Of	8 973 700		188	381	26
55	On Hand End of Year	500 900		6	762	15

670. RESIDUAL STOCK ACCOUNTS
(Continued)

LINE NO.	ITEM (a)	QUANTITIES (b)	DOLLAR AMOUNTS (c)
1	MIXED GAS TAR RESIDUAL	GALLONS	
2	On Hand First of Year	2 673 618	129 191 76
3	Produced (Cr. Production Expense)	6 249 861	562 714 89
4	Tar Purchased	103 417	8 010 68
5	Transferred from Drip Oil	60 653	5 458 77
6	Transferred from Coal Tar	1 226 285	99 935 48
7			
8			
9			
10	Total to Account For	10 313 834	805 311 58
11	Tar Sold	7 620 031	670 370 15
12	Tar Used in Gas Production Charged to Account 708-Boiler Fuel	128 171	6 330 21
13	Charged to Other Accounts	219 531	10 823 46
14	Other Tar Used by Company	34 249	2 988 28
15	Transferred to Drip Oil	19 410	941 07
16			
17	Total Disposed Of	8 021 392	691 453 17
18	On Hand End of Year	2 292 442	113 858 41
19			
20	COAL TAR	GALLONS	
21	On Hand First of Year	220 400	15 428 00
22	Produced (Cr. Production Expense)	6 263 335	596 901 15
23	Stock Expense		
24	Adjustments—Debits		
25	Adjustments—Credits		
26			
27	Total to Account For	6 483 735	612 329 15
28	Tar Sold	4 763 452	477 813 81
29	Tar transferred to Mixed Gas Tar	1 226 285	99 935 48
30	Total Disposed Of	5 989 737	577 749 29
31	On Hand End of Year	493 998	34 579 86
32			
33	.....SULPHUR.....RESIDUAL	POUNDS	
34	On Hand First of Year	1 300 410	2 931 91
35	Produced (Cr. Production Expense)	2 552 200	49 994 95
36	Stock Expense		
37	Adjustments—Debits		
38	Adjustments—Credits	16 350	363 79
39	Total to Account For	3 836 260	52 563 07
40	Sold	2 237 550	49 365 65
41	Used in Gas Production		
42	Total Disposed Of	2 237 550	49 365 65
43	On Hand End of Year	1 598 710	3 197 42
44			
45	.....RESIDUAL		
46	On Hand First of Year		
47	Produced (Cr. Production Expense)		
48	Stock Expense		
49	Adjustments—Debits		
50	Adjustments—Credits		
51	Total to Account For		
52	Sold		
53	Used in Gas Production		
54	Total Disposed Of		
55	On Hand End of Year		

670 RESIDUAL STOCK ACCOUNTS

1. Report below the information specified.
2. Quantities entered in this table should be comparable to the dollar amounts entered on the same line.
3. The dollar amounts entered opposite Residuals Produced (Cr. Production Expense) should agree with the total credited to Production Expense (Account 730). The quantities entered on these lines should agree with the totals of the amounts shown in Schedule 679.
4. Residuals used in production should include amounts charged directly to production expense accounts and amounts charged to fuel stock accounts.

LINE NO.	ITEM (a)	QUANTITIES (b)	DOLLAR AMOUNTS (c)		
1	COKE AND COKE BREEZE	NET TONS			
2	On Hand First of Year	33 295		306	428 8
3	Produced (Cr. Production Expense)	369 642	5	308	994 6
4	Stock Expense			27	489 0
5	Adjustments—Debits				
6	Adjustments—Credits				
7	Net Coke and Breeze Produced	369 642	5	336	483 6
8	Coke Purchased) All coke and breeze purchased is				
9	Coke Breeze Purchased) accounted for in Schedule 235				
10	Total to Account For	402 937	5	642	912 4
11	Coke Sold	188 978	2	936	691 0
12	Coke Breeze Sold				
13	Coke Used in Gas Production	1 884		16	487 2
14	Coke Breeze Used in Gas Production Charged to acct. 708-Boiler Fuel	8 591		53	694 6
15	Other Coke Used by Company (a)	141 743	2	020	135 0
16	Other Coke Breeze Used by Company	14 955		93	471 3
17	Total Disposed Of	356 151	5	120	479 2
18	On Hand End of Year	46 786		522	433 2
19					
20					
21	Note:				
22	(a) Interchanged within company; includes Generator				
23	Coke accounted for in Schedule 235.				
24					
25					
26					
27					
28					
29					
30					
31					
32					
33	.....DRIP OIL.....RESIDUAL	GALLONS			
34	On Hand First of Year	57 677		6	453 0
35	Produced (Cr. Production Expense)	143 617		20	460 2
36	~~Stock Expense~~				
37	~~Adjustments—Debits~~ Transferred from Mixed Gas Tar	68 413		3	374 5
38	~~Adjustments—Credits~~ Total to Account For	269 707		30	287 8
39	~~Total to Account For~~ Interchanged within company	2 564			230 7
40	~~Sold~~ Sold	110 453		15	954 9
41	~~Used in Gas Production~~ Transferred to Mixed Gas Tar	4 556			410 0
42	Total Disposed Of	117 573		16	595 7
43	On Hand End of Year	152 134		13	692 0
44					
45	SULPHATE OF AMMONIA RESIDUAL	POUNDS			
46	On Hand First of Year	500 900		6	762 1
47	Produced (Cr. Production Expense)	8 385 836		193	136
48	Stock Expense				
49	Adjustments—Debits				
50	Adjustments—Credits				
51	Total to Account For	8 886 736		199	898
52	Sold	8 717 400		197	358
53	Used in Gas Production				
54	Total Disposed Of	8 717 400		197	358
55	On Hand End of Year	169 336		2	540 0

670. RESIDUAL STOCK ACCOUNTS (Continued)

849900483

LINE NO.	ITEM (a)	QUANTITIES (b)	DOLLAR AMOUNTS (c)
1	MIXED GAS TAR RESIDUAL	GALLONS	
2	On Hand First of Year	2 292 442	113 858 41
3	Produced (Cr. Production Expense)	2 972 519	232 628 13
4	Tar Purchased	72 445	5 684 82
5	Transferred from Drip Oil	4 556	410 04
6	Transferred from Coal Tar	705 104	70 510 40
7			
8			
9			
10	Total to Account For	6 047 066	423 091 80
11	Tar Sold	3 528 233	315 074 76
12	Tar Used in Gas Production Charged to Account 708-Boiler Fuel	68 991	3 449 55
13	Charged to Other Production Accounts	14 342	1 142 08
14	Other Tar Used by Company including Fire Loss	49 816	2 738 15
15	Transferred to Drip Oil	68 413	3 374 56
16	Transferred to Coal Tar	77 459	7 745 90
17	Total Disposed Of	3 807 254	333 525 00
18	On Hand End of Year	2 239 812	89 566 80
19			
20	COAL TAR	GALLONS	
21	On Hand First of Year	493 998	34 579 86
22	Produced (Cr. Production Expense)	5 266 212	598 286 30
23	Stock Expense		
24	Adjustments—Debits		
25	Adjustments—Credits		
26	Tar transferred from Mixed Gas Tar	77 459	7 745 90
27	Total to Account For	5 837 669	640 612 06
28	Tar Sold	5 073 965	565 413 66
29	Tar transferred to Mixed Gas Tar	705 104	70 510 40
30	Total Disposed Of	5 779 069	635 924 06
31	On Hand End of Year	58 600	4 688 00
32			
33	.....SULPHUR.....RESIDUAL	POUNDS	
34	On Hand First of Year	1 598 710	3 197 42
35	Produced (Cr. Production Expense)	1 380 710	37 083 22
36	Stock Expense		
37	Adjustments—Debits		
38	Adjustments—Credits		
39	Total to Account For	2 979 420	40 280 64
40	Sold	1 671 650	37 665 10
41	Used in Gas Production		
42	Total Disposed Of	1 671 650	37 665 10
43	On Hand End of Year	1 307 770	2 615 54
44			
45	.....RESIDUAL		
46	On Hand First of Year		
47	Produced (Cr. Production Expense)		
48	Stock Expense		
49	Adjustments—Debits		
50	Adjustments—Credits		
51	Total to Account For		
52	Sold		
53	Used in Gas Production		
54	Total Disposed Of		
55	On Hand End of Year		

670 RESIDUAL STOCK ACCOUNTS

1. Report below the information specified.
2. Quantities entered in this table should be comparable to the dollar amounts entered on the same line.
3. The dollar amounts entered opposite Residuals Produced (Cr. Production Expense) should agree with the total credited to Production Expense (Account 730). The quantities entered on these lines should agree with the totals of the amounts shown in Schedule 679.
4. Residuals used in production should include amounts charged directly to production expense accounts and amounts charged to fuel stock accounts.

LINE NO.	ITEM (a)	QUANTITIES (b)	DOLLAR AMOUNTS (c)			
1	COKE AND COKE BREEZE	NET TONS				
2	On Hand First of Year	46 786		522	433	20
3	Produced (Cr. Production Expense)	293 477	3	908	784	92
4	Stock Expense					
5	Adjustments—Debits					
6	Adjustments—Credits					
7	Net Coke and Breeze Produced	293 477	3	908	784	92
8	Coke Purchased } All coke and breeze purchased is					
9	Coke Breeze Purchased } accounted for in Schedule 235					
10	Total to Account For	340 263	4	431	218	12
11	Coke Sold	134 191	1	799	740	02
12	Coke Breeze Sold					
13	Coke Used in Gas Production	4 725		45	396	55
14	Coke Breeze Used in Gas Production Charged to acct. 708-Boiler Fuel	6 767		42	296	38
15	Other Coke Used by Company (a)	123 003	1	737	167	81
16	Other Coke Breeze Used by Company	10 714		66	960	49
17	Total Disposed Of	279 400	3	691	561	25
18	On Hand End of Year	60 863		739	656	87
19						
20						
21	Note:					
22	(a) Interchanged within company; includes Generator					
23	Coke accounted for in Schedule 235.					
24						
25						
26						
27						
28						
29						
30						
31						
32						
33	DRIP OIL RESIDUAL	GALLONS				
34	On Hand First of Year	152 134		13	692	06
35	Produced (Cr. Production Expense)	206 407		23	392	43
36	~~Stock Expense~~ Transferred from Mixed Gas Tar	50 802		4	572	18
37	~~Adjustments—Debits~~ Total to Account For	409 343		41	656	67
38	~~Adjustments—Credits~~ Interchanged within company	1 412			129	58
39	~~Total to Account For~~ Sold	288 046		32	693	28
40	~~Sold~~ Charged to acct. 131.151-Oil Stock	60 330		3	473	86
41	Used in Gas Production Charged to acct. 751.2-Oper. of Storage Facilities	23 792		2	141	28
42	~~Total Disposed Of~~ Transferred to Mixed Gas Tar	400			36	00
43	~~On Hand End of Year~~ Total Disposed Of	373 980		38	474	00
44	On Hand End of Year	35 363		3	182	67
45	SULPHATE OF AMMONIA RESIDUAL	POUNDS				
46	On Hand First of Year	169 336		2	540	04
47	Produced (Cr. Production Expense)	6 527 544		135	058	21
48	Stock Expense					
49	Adjustments—Debits					
50	Adjustments—Credits					
51	Total to Account For	6 696 880		137	598	25
52	Sold	6 290 300		132	008	40
53	Used in Gas Production					
54	Total Disposed Of	6 290 300		132	008	40
55	On Hand End of Year	406 580		5	589	85

670. RESIDUAL STOCK ACCOUNTS
(Continued)

849900485

LINE NO.	ITEM (a)	QUANTITIES (b)	DOLLAR AMOUNTS (c)		
1	MIXED GAS TAR RESIDUAL	GALLONS			
2	On Hand First of Year	2 239 812	89	566	80
3	Produced (Cr. Production Expense)	3 189 677	211	276	12
4	Tar Purchased	280 565	16	198	72
5	Transferred from Drip Oil	400		36	00
6	Transferred from Coal Tar	936 891	76	009	64
7					
8					
9					
10	Total to Account For	6 647 345	393	087	28
11	Tar Sold	2 894 604	253	867	38
12	Tar Used in Gas Production Charged to Account 708-Boiler Fuel	591 498	22	384	69
13	Charged to Other Production Accounts	90 621	3	504	56
14	Other Tar Used by Company	909 234	38	794	41
15	Transferred to Drip Oil	50 802	4	572	18
16	Charged to acct. 131.152-Oil Stock-Other Charges	1 280		46	14
17	Total Disposed Of	4 538 039	323	169	36
18	On Hand End of Year	2 109 306	69	917	92
19					
20	COAL TAR	GALLONS			
21	On Hand First of Year	58 600	4	688	00
22	Produced (Cr. Production Expense)	3 404 985	382	955	20
23	Stock Expense				
24	Adjustments—Debits				
25	Adjustments—Credits				
26					
27	Total to Account For	3 463 585	387	643	20
28	Tar Sold	2 238 694	288	593	56
29	Tar transferred to Mixed Gas Tar	936 891	76	009	64
30	Total Disposed Of	3 175 585	364	603	20
31	On Hand End of Year	288 000	23	040	00
32					
33	.....SULPHUR.....RESIDUAL	POUNDS			
34	On Hand First of Year	1 307 770	2	615	54
35	Produced (Cr. Production Expense)	317 220	25	147	65
36	Stock Expense				
37	Adjustments—Debits				
38	Adjustments—Credits				
39	Total to Account For	1 624 990	27	763	19
40	Sold	1 165 500	26	844	21
41	Used in Gas Production				
42	Total Disposed Of	1 165 500	26	844	21
43	On Hand End of Year	459 490		918	98
44					
45	.....RESIDUAL				
46	On Hand First of Year				
47	Produced (Cr. Production Expense)				
48	Stock Expense				
49	Adjustments—Debits				
50	Adjustments—Credits				
51	Total to Account For				
52	Sold				
53	Used in Gas Production				
54	Total Disposed Of				
55	On Hand End of Year				

670 RESIDUAL STOCK ACCOUNTS

849900486

1. Report below the information specified.
2. Quantities entered in this table should be comparable to the dollar amounts entered on the same line.
3. The dollar amounts entered opposite Residuals Produced (Cr. Production Expense) should agree with the total credited to Production Expense (Account 730). The quantities entered on these lines should agree with the totals of the amounts shown in Schedule 679.
4. Residuals used in production should include amounts charged directly to production expense accounts and amounts charged to fuel stock accounts.

LINE NO.	ITEM (a)	QUANTITIES (b)	DOLLAR AMOUNTS (c)			
1	COKE AND COKE BREEZE	NET TONS				
2	On Hand First of Year	60 863		739	656	87
3	Produced (Cr. Production Expense)	344 752	4	856	974	26
4	Stock Expense					
5	Adjustments—Debits					
6	Adjustments—Credits					
7	Net Coke and Breeze Produced	344 752	4	856	974	26
8	Coke Purchased) All coke and breeze purchased is					
9	Coke Breeze Purchased) accounted for in Schedule 235					
10	Total to Account For	405 615	5	596	631	13
11	Coke Sold	299 709	4	351	984	92
12	Coke Breeze Sold					
13	Coke Used in Gas Production Charged to Acct. 708-Boiler Fuel	184		1	556	72
14	Coke Breeze Used in Gas Production Charged to Acct. 708-Boiler Fuel	11 568		73	217	28
15	Other Coke Used by Company (a)	63 550		948	660	82
16	Other Coke Breeze Used by Company	18 011		113	995	10
17	Total Disposed Of	393 022	5	489	414	84
18	On Hand End of Year	12 593		107	216	29
19						
20						
21	Note:					
22	(a) Interchanged within company; includes Generator					
23	Coke accounted for in Schedule 235.					
24						
25						
26						
27						
28						
29						
30						
31						
32						
33	.....DRIP OIL.....RESIDUAL	GALLONS				
34	On Hand First of Year	35 363		3	182	67
35	Produced (Cr. Production Expense)	72 569		6	647	61
36	~~Stock Expense~~ Transferred from Mixed Gas Tar	6 722			604	98
37	~~Adjustments—Debits~~ Total to Account For	114 654		10	435	26
38	~~Adjustments—Credits~~ Interchanged within company	1 908			171	72
39	~~Total to Account For~~ Transferred to Mixed Gas Tar	8 676			780	84
40	Sold	3 880			465	60
41	Used in Gas Production Charged to Acct.724 – Maint. of Structures & Improvements	8 000			720	00
42	Total Disposed Of	22 464		2	138	16
43	On Hand End of Year	92 190		8	297	10
44						
45	SULPHATE OF AMMONIA RESIDUAL	POUNDS				
46	On Hand First of Year	406 580		5	589	85
47	Produced (Cr. Production Expense)	7 472 820		145	693	85
48	Stock Expense					
49	Adjustments—Debits					
50	Adjustments—Credits					
51	Total to Account For	7 879 400		151	283	70
52	Sold	7 076 500		141	046	72
53	Used in Gas Production					
54	Total Disposed Of	7 076 500		141	046	72
55	On Hand End of Year	802 900		10	236	98

670. RESIDUAL STOCK ACCOUNTS (Continued)

849900487

LINE NO.	ITEM (a)	QUANTITIES (b)	DOLLAR AMOUNTS (c)			
1	MIXED GAS TAR RESIDUAL	GALLONS				
2	On Hand First of Year	2 109 306		69	917	92
3	Produced (Cr. Production Expense)	746 144		89	691	80
4	Tar Purchased	4 650			287	91
5	Transferred from Drip Oil	8 676			780	84
6	Transferred from Holders	10 981			329	43
7						
8						
9						
10	Total to Account For	2 879 757		161	007	90
11	Tar Sold	1 513 956		112	425	16
12	Tar Used in Gas Production Charged to Account 708-Boiler Fuel	244 112		10	226	79
13	Charged to Other Production Accounts	13 803			525	57
14	Other Tar Used by Company	298 797		12	304	39
15	Transferred to Drip Oil	6 722			604	98
16	Transferred to Coal Tar	17 000		1	360	00
17	Total Disposed Of	2 094 390		137	446	89
18	On Hand End of Year	785 367		23	561	01
19						
20	COAL TAR	GALLONS				
21	On Hand First of Year	288 000		23	040	00
22	Produced (Cr. Production Expense)	3 816 690		504	422	26
23	Stock Expense					
24	Adjustments—Debits					
25	Adjustments—Credits					
26	Transferred from Mixed Gas Tar	17 000		1	360	00
27	Total to Account For	4 121 690		528	822	26
28	Tar Sold	3 644 695		481	122	76
29	Tar					
30	Total Disposed Of	3 644 695		481	122	76
31	On Hand End of Year	476 995		47	699	50
32						
33	.....SULPHUR.....RESIDUAL	POUNDS				
34	On Hand First of Year	459 490			918	98
35	Produced (Cr. Production Expense)	814 556		14	214	81
36	Stock Expense					
37	Adjustments—Debits					
38	Adjustments—Credits					
39	Total to Account For	1 274 046		15	133	79
40	Sold	597 356		13	780	41
41	Used in Gas Production					
42	Total Disposed Of	597 356		13	780	41
43	On Hand End of Year	676 690		1	353	38
44						
45	.....RESIDUAL					
46	On Hand First of Year					
47	Produced (Cr. Production Expense)					
48	Stock Expense					
49	Adjustments—Debits					
50	Adjustments—Credits					
51	Total to Account For					
52	Sold					
53	Used in Gas Production					
54	Total Disposed Of					
55	On Hand End of Year					

670 RESIDUAL STOCK ACCOUNTS

1. Report below the information specified.
2. Quantities entered in this table should be comparable to the dollar amounts entered on the same line.
3. The dollar amounts entered opposite Residuals Produced (Cr. Production Expense) should agree with the total credited to Production Expense (Account 730). The quantities entered on these lines should agree with the totals of the amounts shown in Schedule 679.
4. Residuals used in production should include amounts charged directly to production expense accounts and amounts charged to fuel stock accounts.

LINE NO.	ITEM (a)	QUANTITIES (b)	DOLLAR AMOUNTS (c)
1	**COKE AND COKE BREEZE**	NET TONS	
2	On Hand First of Year	12 593	107 216 29
3	Produced (Cr. Production Expense)	460 140	7 302 022 04
4	Stock Expense		
5	Adjustments—Debits		
6	Adjustments—Credits		
7	Net Coke and Breeze Produced	460 140	7 302 022 04
8	Coke Purchased) All coke and breeze purchased is		
9	Coke Breeze Purchased) accounted for in Schedule 235		
10	Total to Account For	472 733	7 409 238 33
11	Coke Sold	358 924	5 886 034 98
12	Coke Breeze Sold	4	42 26
13	Coke Used in Gas Production		
14	Coke Breeze Used in Gas Production Charged to Acct. 708-Boiler Fuel	9 736	77 890 08
15	Other Coke Used by Company (a)	56 583	928 731 62
16	Other Coke Breeze Used by Company	15 558	124 466 32
17	Total Disposed Of	440 805	7 017 165 26
18	On Hand End of Year	31 928	392 073 07
19			
20			
21	Note:		
22	(a) Interchanged within Company; includes Generator		
23	Coke accounted for in Schedule 235.		
24			
25			
26			
27			
28			
29			
30			
31			
32			
33	**DRIP OIL RESIDUAL**	GALLONS	
34	On Hand First of Year	92 190	8 297 10
35	Produced (Cr. Production Expense)	75 599	8 519 37
36	Transferred from Mixed Gas Tar	11 156	334 68
37	Total to Account For	178 945	17 151 15
38	Interchanged within company	1 055	94 95
39	Transferred to Mixed Gas Tar	29 631	2 666 79
40	Sold	104 310	10 434 06
41	Used in Gas Production		
42	Total Disposed Of	134 996	13 195 74
43	On Hand End of Year	43 949	3 955 41
44			
45	**SULPHATE OF AMMONIA RESIDUAL**	POUNDS	
46	On Hand First of Year	802 900	10 236 98
47	Produced (Cr. Production Expense)	8 807 600	141 311 1
48	Stock Expense		
49	Adjustments—Debits		
50	Adjustments—Credits		
51	Total to Account For	9 610 500	151 548 1
52	Sold	9 256 200	148 802 2
53	Used in Gas Production		
54	Total Disposed Of	9 256 200	148 802 2
55	On Hand End of Year	354 300	2 745 8

670. RESIDUAL STOCK ACCOUNTS
(Continued)

LINE NO.	ITEM (a)	QUANTITIES (b)	DOLLAR AMOUNTS (c)		
1	MIXED GAS TAR RESIDUAL	GALLONS			
2	On Hand First of Year	785 367	23	561	01
3	Produced (Cr. Production Expense)	885 894	53	035	54
4	Tar Purchased	2 742		169	77
5	Transferred from Drip Oil	29 631	2	666	79
6	Transferred from Holders	33 023		990	69
7					
8					
9					
10	Total to Account For	1 736 657	80	423	80
11	Tar Sold	653 685	47	888	43
12	Tar Used in Gas Production Charged to Account 708-Boiler Fuel	193 920	5	817	60
13	Charged to Other Production Accounts	33 442	1	003	26
14	Other Tar Used by Company	341 650	10	295	71
15	Transferred to Drip Oil	11 156		334	68
16	Transferred to Heavy Oil	31 500		945	00
17	Total Disposed Of	1 265 353	66	284	68
18	On Hand End of Year	471 304	14	139	12
19					
20	COAL TAR	GALLONS			
21	On Hand First of Year	476 995	47	699	50
22	Produced (Cr. Production Expense)	4 324 000	589	202	79
23	Stock Expense				
24	Adjustments—Debits				
25	Adjustments—Credits				
26					
27	Total to Account For	4 800 995	636	902	29
28	Tar Sold	4 496 474	606	450	19
29	Tar				
30	Total Disposed Of	4 496 474	606	450	19
31	On Hand End of Year	304 521	30	452	10
32					
33	SULPHUR RESIDUAL	POUNDS			
34	On Hand First of Year	676 690	1	353	38
35	Produced (Cr. Production Expense)	642 433	12	997	08
36	Stock Expense				
37	Adjustments—Debits				
38	Adjustments—Credits				
39	Total to Account For	1 319 123	14	350	46
40	Sold	517 533	12	747	28
41	Used in Gas Production				
42	Total Disposed Of	517 533	12	747	28
43	On Hand End of Year	801 590	1	603	18
44					
45	RESIDUAL				
46	On Hand First of Year				
47	Produced (Cr. Production Expense)				
48	Stock Expense				
49	Adjustments—Debits				
50	Adjustments—Credits				
51	Total to Account For				
52	Sold				
53	Used in Gas Production				
54	Total Disposed Of				
55	On Hand End of Year				

670. RESIDUAL STOCK ACCOUNTS

1. Report below the information specified.
2. Quantities entered in this table should be comparable to the dollar amounts entered on the same line.
3. The dollar amounts entered opposite Residuals Produced (Cr. Production Expense) should agree with the total credited to Production Expense (Account 730). The quantities entered on these lines should agree with the totals of the amounts shown in Schedule 679.
4. Residuals used in production should include amounts charged directly to production expense accounts and amounts charged to fuel stock accounts.

LINE NO.	ITEM (a)	QUANTITIES (b)	DOLLAR AMOUNTS (c)			
1	COKE AND COKE BREEZE	NET TONS				
2	On Hand First of Year	31 928		392	073	07
3	Produced (Cr. Production Expense)	342 422	5	590	836	12
4	Stock Expense					
5	Adjustments—Debits					
6	Adjustments—Credits					
7	Net Coke and Breeze Produced	342 422	5	590	836	12
8	Coke Purchased) All coke and breeze purchased is					
9	Coke Breeze Purchased) accounted for in Schedule 235					
10	Total to Account For	374 350	5	982	909	19
11	Coke Sold	166 113	2	857	593	81
12	Coke Breeze Sold	1 006		11	072	78
13	Coke Used in Gas Production					
14	Coke Breeze Used in Gas Production Charged to Acct.708-Boiler Fuel	11 988		95	899	84
15	Other Coke Used by Company (a)	62 860	1	084	096	64
16	Other Coke Breeze Used by Company	13 854		110	828	16
17	Total Disposed Of	255 821	4	159	491	23
18	On Hand End of Year	118 529	1	823	417	96
19						
20						
21	Note:					
22	(a) Interchanged within Company; includes Generator					
23	Coke accounted for in Schedule 235.					
24						
25						
26						
27						
28						
29						
30						
31						
32						
33	DRIP OIL RESIDUAL	GALLONS				
34	On Hand First of Year	43 949		3	955	41
35	Produced (Cr. Production Expense)	16 701		1	503	09
36						
37	Total to Account For	60 650		5	458	50
38	Interchanged within Company	2 293			206	37
39	Transferred to Mixed Gas Tar	8 340			750	60
40	Sold					
41	Used in Gas Production Charged to Acct.722-Misc. Works Expense	11 306		1	017	54
42	Total Disposed Of	21 939		1	974	51
43	On Hand End of Year	38 711		3	483	99
44						
45	SULPHATE OF AMMONIA RESIDUAL	POUNDS				
46	On Hand First of Year	354 300		2	745	83
47	Produced (Cr. Production Expense)	7 736 557		113	538	84
48	Stock Expense					
49	Adjustments—Debits					
50	Adjustments—Credits					
51	Total to Account For	8 090 857		116	284	67
52	Sold	7 272 000		109	938	53
53	Used in Gas Production					
54	Total Disposed Of	7 272 000		109	938	53
55	On Hand End of Year	818 857		6	346	14

670. RESIDUAL STOCK ACCOUNTS
(Continued)

LINE NO.	ITEM (a)	QUANTITIES (b)	DOLLAR AMOUNTS (c)
1	MIXED GAS TAR RESIDUAL	GALLONS	
2	On Hand First of Year	471 304	14 139 12
3	Produced (Cr. Production Expense)	749 083	49 010 11
4	Tar Purchased	370	22 90
5	Transferred from Drip Oil	8 340	750 60
6			
7			
8			
9			
10	Total to Account For	1 229 097	63 922 73
11	Tar Sold	346 970	34 694 96
12	Tar Used in Gas Production Charged to Account 708-Boiler Fuel	214 426	6 432 78
13	Charged to Other Production Accounts	38 127	1 143 81
14	Other Tar Used by Company	186 221	8 350 59
15			
16			
17	Total Disposed Of	785 744	50 622 14
18	On Hand End of Year	443 353	13 300 59
19			
20	COAL TAR	GALLONS	
21	On Hand First of Year	304 521	30 452 10
22	Produced (Cr. Production Expense)	3 665 900	507 976 11
23	Stock Expense		
24	Adjustments—Debits		
25	Adjustments—Credits		
26			
27	Total to Account For	3 970 421	538 428 21
28	Tar Sold	3 571 584	498 544 51
29	Tar		
30	Total Disposed Of	3 571 584	498 544 51
31	On Hand End of Year	398 837	39 883 70
32			
33	SULPHUR RESIDUAL	POUNDS	
34	On Hand First of Year	801 590	1 603 18
35	Produced (Cr. Production Expense)	1 013 014	11 253 25
36	Stock Expense		
37	Adjustments—Debits		
38	Adjustments—Credits		
39	Total to Account For	1 814 604	12 856 43
40	Sold	419 014	10 065 25
41	Used in Gas Production		
42	Total Disposed Of	419 014	10 065 25
43	On Hand End of Year	1 395 590	2 791 18
44			
45	RESIDUAL		
46	On Hand First of Year		
47	Produced (Cr. Production Expense)		
48	Stock Expense		
49	Adjustments—Debits		
50	Adjustments—Credits		
51	Total to Account For		
52	Sold		
53	Used in Gas Production		
54	Total Disposed Of		
55	On Hand End of Year		

670. RESIDUAL STOCK ACCOUNTS

1. Report below the information specified.
2. Quantities entered in this table should be comparable to the dollar amounts entered on the same line.
3. The dollar amounts entered opposite Residuals Produced (Cr. Production Expense) should agree with the total credited to Production Expense (Account 730). The quantities entered on these lines should agree with the totals of the amounts shown in Schedule 679.
4. Residuals used in production should include amounts charged directly to production expense accounts and amounts charged to fuel stock accounts.

LINE NO.	ITEM (a)	QUANTITIES (b)	DOLLAR AMOUNTS (c)
1	**COKE AND COKE BREEZE**	NET TONS	
2	On Hand First of Year	118 529	1 823 417 96
3	Produced (Cr. Production Expense)	239 113	3 429 933 29
4	Stock Expense		
5	Adjustments—Debits		
6	Adjustments—Credits		
7	Net Coke and Breeze Produced	239 113	3 429 933 29
8	Coke Purchased)All coke and breeze purchased is		
9	Coke Breeze Purchased) accounted for in Schedule 235		
10	Total to Account For	357 642	5 253 351 25
11	Coke Sold	79 509	1 439 364 26
12	Coke Breeze Sold	506	6 074 40
13	Coke Used in Gas Production		
14	Coke Breeze Used in Gas Production Charged to Acct.708-Boiler Fuel	9 292	74 340 40
15	Other Coke Used by Company (a)	62 017	1 069 797 93
16	Other Coke Breeze Used by Company	8 520	68 159 60
17	Total Disposed Of	159 844	2 657 736 59
18	On Hand End of Year	197 798	2 595 614 66
19			
20			
21	Note:		
22	(a) Interchanged within Company; includes Generator		
23	Coke accounted for in Schedule 235.		
24			
25			
26			
27			
28			
29			
30			
31			
32			
33	....DRIP OIL.....RESIDUAL	GALLONS	
34	On Hand First of Year	38 711	3 483 99
35	Produced (Cr. Production Expense)	15 732	1 415 88
36	[redacted]		
37	[redacted] Total to Account For	54 443	4 899 87
38	[redacted]		
39	[redacted] Transferred to Mixed Gas Tar	2 315	208 35
40	Sold	165	14 85
41	Used in Gas Production Charged to Account.722-Misc. Works Expense	15 111	1 359 99
42	Total Disposed Of	17 591	1 583 19
43	On Hand End of Year	36 852	3 316 68
44			
45	SULPHATE OF AMMONIA.RESIDUAL	POUNDS	
46	On Hand First of Year	818 857	6 346 14
47	Produced (Cr. Production Expense)	4 827 643	74 504 64
48	Stock Expense		
49	Adjustments—Debits		
50	Adjustments—Credits		
51	Total to Account For	5 646 500	80 850 78
52	Sold	4 927 100	75 455 28
53	Used in Gas Production		
54	Total Disposed Of	4 927 100	75 455 28
55	On Hand End of Year	719 400	5 395 50

670. RESIDUAL STOCK ACCOUNTS
(Continued)

LINE NO.	ITEM (a)	QUANTITIES (b)	DOLLAR AMOUNTS (c)		
1	MIXED GAS TAR RESIDUAL	GALLONS			
2	On Hand First of Year	443 353	13	300	59
3	Produced (Cr. Production Expense)	940 253	54	621	91
4	Tar Purchased	218		13	50
5	Transferred from Drip Oil	2 315		208	35
6					
7					
8					
9					
10	Total to Account For	1 386 139	68	144	35
11	Tar Sold	567 709	42	177	53
12	Tar Used in Gas Production Charged to Account 708-Boiler Fuel	91 118	2	733	54
13	Charged to Other Production Accounts	9 794		293	82
14	Other Tar Used by Company	67 212	2	622	00
15					
16					
17	Total Disposed Of	735 833	47	826	89
18	On Hand End of Year	650 306	20	317	46
19					
20	COAL TAR	GALLONS			
21	On Hand First of Year	398 837	39	883	70
22	Produced (Cr. Production Expense)	2 768 600	342	082	15
23	Stock Expense				
24	Adjustments—Debits				
25	Adjustments—Credits				
26					
27	Total to Account For	3 167 437	381	965	85
28	Tar Sold	2 670 258	332	247	95
29	Tar				
30	Total Disposed Of	2 670 258	332	247	95
31	On Hand End of Year	497 179	49	717	90
32					
33	....SULPHUR.....RESIDUAL	POUNDS			
34	On Hand First of Year	1 395 590	2	791	18
35	Produced (Cr. Production Expense) Price adjustment		6	697	66
36	Stock Expense				
37	Adjustments—Debits				
38	Adjustments—Credits				
39	Total to Account For	1 395 590	9	488	84
40	Sold	313 600	7	324	86
41	Used in Gas Production				
42	Total Disposed Of	313 600	7	324	86
43	On Hand End of Year	1 081 990	2	163	98
44					
45	.....RESIDUAL				
46	On Hand First of Year				
47	Produced (Cr. Production Expense)				
48	Stock Expense				
49	Adjustments—Debits				
50	Adjustments—Credits				
51	Total to Account For				
52	Sold				
53	Used in Gas Production				
54	Total Disposed Of				
55	On Hand End of Year				

670 RESIDUAL STOCK ACCOUNTS

1. Report below the information specified.
2. Quantities entered in this table should be comparable to the dollar amounts entered on the same line.
3. The dollar amounts entered opposite Residuals Produced (Cr. Production Expense) should agree with the total credited to Production Expense (Account 730). The quantities entered on these lines should agree with the totals of the amounts shown in Schedule 679.
4. Residuals used in production should include amounts charged directly to production expense accounts and amounts charged to fuel stock accounts.

LINE NO.	ITEM (a)	QUANTITIES (b)	DOLLAR AMOUNTS (c)
1	**COKE AND COKE BREEZE**	NET TONS	
2	On Hand First of Year	197 798	2 595 614 66
3	Produced (Cr. Production Expense)	95 021	1 620 212 44
4	Stock Expense		
5	Adjustments—Debits		
6	Adjustments—Credits		
7	Net Coke and Breeze Produced	95 021	1 620 212 44
8	Coke Purchased) All coke and breeze purchased is		
9	Coke Breeze Purchased) accounted for in Schedule 235		
10	Total to Account For	292 819	4 215 827 10
11	Coke Sold	84 428	1 429 847 56
12	Coke Breeze Sold	2 267	27 168 95
13	Coke Used in Gas Production		
14	Coke Breeze Used in Gas Production Charged to Acct.708-Boiler Fuel	4 252	34 013 52
15	Other Coke Used by Company (a)	42 588	734 645 83
16	Other Coke Breeze Used by Company	3 268	26 148 48
17	Total Disposed Of	136 803	2 251 824 34
18	On Hand End of Year	156 016	1 964 002 76
19			
20			
21	Note:		
22	(a) Interchanged within Company; includes Generator		
23	Coke accounted for in Schedule 235.		
24			
25			
26			
27			
28			
29			
30			
31			
32			
33	.....DRIP..OIL.....RESIDUAL	GALLONS	
34	On Hand First of Year	36 852	3 316 68
35	Produced (Cr. Production Expense)	16 274	1 464 66
36	Stock Expense		
37	Adjustments—Debits		
38	Adjustments—Credits		
39	Total to Account For	53 126	4 781 34
40	Sold		
41	Used in Gas Production Charged to Account 722-Misc.Works Expense	3 182	286 38
42	Total Disposed Of	3 182	286 38
43	On Hand End of Year	49 944	4 494 96
44			
45	SULPHATE.OF.AMMONIA..RESIDUAL	POUNDS	
46	On Hand First of Year	719 400	5 395 50
47	Produced (Cr. Production Expense)	2 112 600	37 596 23
48	Stock Expense		
49	Adjustments—Debits		
50	Adjustments—Credits		
51	Total to Account For	2 832 000	42 991 73
52	Sold	2 832 000	42 991 73
53	Used in Gas Production		
54	Total Disposed Of	2 832 000	42 991 73
55	On Hand End of Year	-	-

670. RESIDUAL STOCK ACCOUNTS
(Continued)

LINE NO.	ITEM (a)	QUANTITIES (b)	DOLLAR AMOUNTS (c)		
1	MIXED GAS TAR RESIDUAL	GALLONS			
2	On Hand First of Year	650 306	20	317	46
3	Produced (Cr. Production Expense)	314 130	15	537	36
4					
5					
6					
7					
8					
9					
10	Total to Account For	964 436	35	854	82
11	Tar Sold	262 516	13	832	60
12	Tar Used in Gas Production Charged to Account 708-Boiler Fuel	55 181	1	655	43
13	Charged to Other Production Accounts	5 626		168	78
14	Other Tar Used by Company	36 903	2	071	71
15					
16					
17	Total Disposed Of	360 226	17	728	52
18	On Hand End of Year	604 210	18	126	30
19					
20	COAL TAR	GALLONS			
21	On Hand First of Year	497 179	49	717	90
22	Produced (Cr. Production Expense)	1 094 886	160	677	06
23	Stock Expense				
24	Adjustments—Debits				
25	Adjustments—Credits				
26					
27	Total to Account For	1 592 065	210	394	96
28	Tar Sold	1 592 065	210	394	96
29	Tar				
30	Total Disposed Of	1 592 065	210	394	96
31	On Hand End of Year	-		-	
32					
33	.....SULPHUR.....RESIDUAL	POUNDS			
34	On Hand First of Year	1 081 990	2	163	98
35	Produced (Cr. Production Expense)				
36	Stock Expense				
37	Adjustments—Debits				
38	Adjustments—Credits				
39	Total to Account For	1 081 990	2	163	98
40	~~Tar~~ Discarded	1 081 990	2	163	98
41	Used in Gas Production				
42	Total Disposed Of	1 081 990	2	163	98
43	On Hand End of Year	-		-	
44					
45	.....RESIDUAL				
46	On Hand First of Year				
47	Produced (Cr. Production Expense)				
48	Stock Expense				
49	Adjustments—Debits				
50	Adjustments—Credits				
51	Total to Account For				
52	Sold				
53	Used in Gas Production				
54	Total Disposed Of				
55	On Hand End of Year				

670 RESIDUAL STOCK ACCOUNTS

1. Report below the information specified.
2. Quantities entered in this table should be comparable to the dollar amounts entered on the same line.
3. The dollar amounts entered opposite Residuals Produced (Cr. Production Expense) should agree with the total credited to Production Expense (Account 730). The quantities entered on these lines should agree with the totals of the amounts shown in Schedule 679.
4. Residuals used in production should include amounts charged directly to production expense accounts and amounts charged to fuel stock accounts.

LINE NO.	ITEM (a)	QUANTITIES (b)	DOLLAR AMOUNTS (c)			
1	COKE AND COKE BREEZE	NET TONS				
2	On Hand First of Year	156 016	1	964	002	76
3	Produced (Cr. Production Expense)	3 180		261	250	21
4	Stock Expense					
5	Adjustments—Debits					
6	Adjustments—Credits					
7	Net Coke and Breeze Produced	3 180		261	250	21
8	Coke Purchased)All coke and breeze purchased is					
9	Coke Breeze Purchased) accounted for in Schedule 235					
10	Total to Account For	159 196	2	225	252	97
11	Coke Sold	139 831	1	980	832	27
12	Coke Breeze Sold	9 679		100	503	70
13	Coke Used in Gas Production					
14	Coke Breeze Used in Gas Production					
15	Other Coke Used by Company (a)	7 088		122	268	15
16	Other Coke Breeze Used by Company	2 598		21	648	85
17	Total Disposed Of	159 196	2	225	252	97
18	On Hand End of Year	-			-	
19						
20						
21	Note:					
22	(a) Interchanged within Company; includes Generator					
23	Coke accounted for in Schedule 235.					
24						
25						
26						
27						
28						
29						
30						
31						
32						
33	..DRIP OIL.....RESIDUAL	GALLONS				
34	On Hand First of Year	49 944		4	494	96
35	Produced (Cr. Production Expense)	2 278			22	78
36	Stock Expense					
37	Adjustments—Debits					
38	Adjustments—Credits					
39	Total to Account For	52 222		4	517	74
40	Sold					
41	Used in Gas Production	5 603			504	27
42	Total Disposed Of	5 603			504	27
43	On Hand End of Year	46 619		4	013	47
44						
45	.....RESIDUAL					
46	On Hand First of Year					
47	Produced (Cr. Production Expense)					
48	Stock Expense					
49	Adjustments—Debits					
50	Adjustments—Credits					
51	Total to Account For					
52	Sold					
53	Used in Gas Production					
54	Total Disposed Of					
55	On Hand End of Year					

670. RESIDUAL STOCK ACCOUNTS (Continued)

849900497

LINE NO.	ITEM (a)	QUANTITIES (b)	DOLLAR AMOUNTS (c)			
1	MIXED GAS TAR RESIDUAL	GALLONS				
2	On Hand First of Year	604 210		18	126	30
3	Produced (Cr. Production Expense)	361 314		6	892	43
4	Tar Purchased	681			42	17
5	Transferred from Holders	77 981			779	81
6						
7						
8						
9						
10	Total to Account For	1 044 186		25	840	71
11	Tar Sold	311 199		10	574	39
12	Tar Used in Gas Production Charged to Account 708-Boiler Fuel	29 120			873	60
13	Charged to Other Production Accounts	13 043			391	29
14	Other Tar Used by Company	6 270			188	10
15	Transferred to Solvent "E" Tar	326 098		9	782	94
16						
17	Total Disposed Of	685 730		21	810	32
18	On Hand End of Year	358 456		4	030	39
19						
20	TAR					
21	On Hand First of Year					
22	Produced (Cr. Production Expense)					
23	Stock Expense					
24	Adjustments—Debits					
25	Adjustments—Credits					
26						
27	Total to Account For					
28	Tar Sold					
29	Tar					
30	Total Disposed Of					
31	On Hand End of Year					
32						
33	.....RESIDUAL					
34	On Hand First of Year					
35	Produced (Cr. Production Expense)					
36	Stock Expense					
37	Adjustments—Debits					
38	Adjustments—Credits					
39	Total to Account For					
40	Sold					
41	Used in Gas Production					
42	Total Disposed Of					
43	On Hand End of Year					
44						
45	.....RESIDUAL					
46	On Hand First of Year					
47	Produced (Cr. Production Expense)					
48	Stock Expense					
49	Adjustments—Debits					
50	Adjustments—Credits					
51	Total to Account For					
52	Sold					
53	Used in Gas Production					
54	Total Disposed Of					
55	On Hand End of Year					

Annual report of PUBLIC SERVICE ELECTRIC AND GAS COMPANY Year ended December 31, 19 61

RESIDUAL STOCK ACCOUNTS

1. Report below the information specified.
2. Quantities entered in this table should be comparable to the dollar amounts entered on the same line.
3. The dollar amounts entered opposite Residuals Produced (Cr. Production Expense) should agree with the total credited to Production Expense (Account 731).
4. Residuals used in production should include amounts charged directly to production expense accounts and amounts charged to fuel stock accounts.

LINE NO.	ITEM (a)	QUANTITIES (b)	DOLLAR AMOUNTS (c)
1	COKE AND COKE BREEZE	NET TONS	
2	On Hand First of Year	-	-
3	Produced (Cr. Production Expense)	13 738	138 410 01
4	Stock Expense		
5	Adjustments—Debits		
6	Adjustments—Credits		
7	Net Coke and Breeze Produced	13 738	138 410 01
8	Coke Purchased)All coke and breeze purchased is		
9	Coke Breeze Purchased) accounted for on page 209 b		
10	Total to Account For	13 738	138 410 01
11	Coke Sold	11 353	110 581 49
12	Coke Breeze Sold		
13	Coke Used in Gas Production		
14	Coke Breeze Used in Gas Production		
15	Other Coke Used by Company (a)	1 320	19 308 87
16	Other Coke Breeze Used by Company (b)	1 065	8 519 65
17	Total Disposed Of	13 738	138 410 01
18	On Hand End of Year	-	-
20	Notes:		
21	(a) Interchanged within Company; includes Generator		
22	Coke accounted for on page 209 b.		
23	(b) Interchanged within Company; includes Boiler		
24	Coke accounted for on page 209 b.		
26	LIGHT WATER GAS TAR RESIDUAL	GALLONS	
27	On Hand First of Year	570 556	24 918 97
28	Produced (Cr. Production Expense)		
29	Stock Expense		
30	Adjustments—Debts		
31	~~Adjustments—Credits~~ Total to Account For	570 556	24 918 97
32	~~Total to Account For~~ Transferred to Tar	2 486	153 92
33	Sold	400	24 77
34	Used in Gas Production Charged to Other Production Accounts	1 878	116 28
35	Total Disposed Of	4 764	294 97
36	On Hand End of Year	565 792	24 624 00
38	TAR EMULSION RESIDUAL	GALLONS	
39	On Hand First of Year	111 645	-
40	Produced (Cr. Production Expense)	590 006	100 05
41	~~Stock Expense~~		
42	~~Adjustments—Debits~~ Total to Account For	701 651	100 05
43	~~Adjustments—Credits~~ Interchanged within Company	6 000	30 00
44	~~Total to Account For~~ Transferred to Tar	510 872	-
45	Sold		
46	Used in Gas Production Charged to Account 702 - Boiler Fuel	2 335	70 05
47	Total Disposed Of	519 207	100 05
48	On Hand End of Year	182 444	-

849900499

Annual report of PUBLIC SERVICE ELECTRIC AND GAS COMPANY Year ended December 31, 19 61

RESIDUAL STOCK ACCOUNTS (Continued)

LINE NO.	ITEM (a)	QUANTITIES (b)	DOLLAR AMOUNTS (c)
1	TAR . RESIDUAL	GALLONS	
2	On Hand First of Year	246 811	4 030 39
3	Produced (Cr. Production Expense)	143 249	69 211 75
4	Transferred from Tar Emulsion	510 872	-
5	Transferred from Light Water Gas Tar	2 486	153 92
6	Transferred from Drip Oil	104	9 36
7			
8	Total to Account For	903 522	73 405 42
9	Tar Sold	734 671	72 718 41
10	Tar Used in Gas Production Charged to Account 702 - Boiler Fuel	9 765	292 95
11	Charged to Other Production Accounts	18 388	210 38
12			
13			
14			
15	Total Disposed Of	762 824	73 221 74
16	On Hand End of Year	140 698	183 68
18	DRIP OIL . RESIDUAL	GALLONS	
19	On Hand First of Year	46 619	4 013 47
20	Produced (Cr. Production Expense)	7 164	26 40
21	Total to Account For	53 783	4 039 87
22	Interchanged within Company	985	88 65
23	Transferred to Tar	104	9 36
24	Charged to Other Production Accounts	5 818	523 62
25	Other Drip Oil Used by Company	250	22 50
26	Sold	220	26 40
27			
28	Total Disposed Of	7 377	670 53
29	On Hand End of Year	46 406	3 369 34
	RESIDUAL		
31	On Hand First of Year		
32	Produced (Cr. Production Expense)		
33	Stock Expense		
34	Adjustments–Debits		
35	Adjustments–Credits		
36	Total to Account For		
37	Sold		
38	Used in Gas Production		
39	Total Disposed Of		
40	On Hand End of Year		
42	RESIDUAL		
43	On Hand First of Year		
44	Produced (Cr. Production Expense)		
45	Stock Expense		
46	Adjustments–Debits		
47	Adjustments–Credits		
48	Total to Account For		
49	Sold		
50	Used in Gas Production		
51	Total Disposed Of		
52	On Hand End of Year		

RESIDUAL STOCK ACCOUNTS

1. Report below the information specified.
2. Quantities entered in this table should be comparable to the dollar amounts entered on the same line.
3. The dollar amounts entered opposite Residuals Produced (Cr. Production Expense) should agree with the total credited to Production Expense (Account 731).
4. Residuals used in production should include amounts charged directly to production expense accounts and amounts charged to fuel stock accounts.

LINE NO.	ITEM (a)	QUANTITIES (b)	DOLLAR AMOUNTS (c)
1	COKE AND COKE BREEZE		
2	On Hand First of Year		
3	Produced (Cr. Production Expense)	NONE	
4	Stock Expense		
5	Adjustments—Debits		
6	Adjustments—Credits		
7	Net Coke and Breeze Produced		
8	Coke Purchased		
9	Coke Breeze Purchased		
10	Total to Account For		
11	Coke Sold		
12	Coke Breeze Sold		
13	Coke Used in Gas Production		
14	Coke Breeze Used in Gas Production		
15	Other Coke Used by Company		
16	Other Coke Breeze Used by Company		
17	Total Disposed Of		
18	On Hand End of Year		
20			
21	All coke purchased is accounted for on page 209 b		
22			
23			
24			
26	LIGHT WATER GAS TAR RESIDUAL	GALLONS	
27	On Hand First of Year	565 792	24 624 00
28	Produced (Cr. Production Expense)		
29	Stock Expense		
30	Adjustments—Debts		
31	Total to Account For	565 792	24 624 00
32	Transferred to Tar	1 377	85 25
33	Sold		
34	Used in Gas Production Charged to Other Production Accounts	1 932	119 63
35	Total Disposed Of	3 309	204 88
36	On Hand End of Year	562 483	24 419 12
38	TAR EMULSION RESIDUAL	GALLONS	
39	On Hand First of Year	182 444	-
40	Produced (Cr. Production Expense)	321 926	-
41	Stock Expense		
42	Adjustments—Debits		
43	Adjustments—Credits		
44	Total to Account For	504 370	-
45	Transferred to Tar	281 175	-
46	Used in Gas Production		
47	Total Disposed Of	281 175	-
48	On Hand End of Year	223 195	-

849900500

RESIDUAL STOCK ACCOUNTS (Continued)

LINE NO.	ITEM (a)	QUANTITIES (b)	DOLLAR AMOUNTS (c)
1	TAR. RESIDUAL	GALLONS	
2	On Hand First of Year	140 698	183 68
3	Produced (Cr. Production Expense)	424 620	26 440 94
4	Transferred from Tar Emulsion	281 175	-
5	Transferred from Light Water Gas Tar	1 377	85 25
6	Adjustments—Credits		
7			
8	Total to Account For	847 870	26 709 87
9	Tar Sold	256 951	26 675 68
10	Tar Used in Gas Production Charged to Other Production Accounts	3 419	34 19
11			
12			
13			
14			
15	Total Disposed Of	260 370	26 709 87
16	On Hand End of Year	587 500	-
18	TAR		
19	On Hand First of Year		
20	Produced (Cr. Production Expense)		
21	Stock Expense		
22	Adjustments—Debits		
23	Adjustments—Credits		
24			
25	Total to Account For		
26	Tar Sold		
27	Tar		
28	Total Disposed Of		
29	On Hand End of Year		
	DRIP OIL. RESIDUAL	GALLONS	
31	On Hand First of Year	46 406	3 369 34
32	Produced (Cr. Production Expense)	412	-
33	Stock Expense		
34	Adjustments—Debits		
35	Adjustments—Credits		
36	Total to Account For	46 818	3 369 34
37	Interchanged within Company	510	45 90
38	Used in Gas Production Charged to Other Production Accounts	2 542	228 78
39	Total Disposed Of	3 052	274 68
40	On Hand End of Year	43 766	3 094 66
42	RESIDUAL		
43	On Hand First of Year		
44	Produced (Cr. Production Expense)		
45	Stock Expense		
46	Adjustments—Debits		
47	Adjustments—Credits		
48	Total to Account For		
49	Sold		
50	Used in Gas Production		
51	Total Disposed Of		
52	On Hand End of Year		

849900501

RESIDUAL STOCK ACCOUNTS

1. Report below the information specified.
2. Quantities entered in this table should be comparable to the dollar amounts entered on the same line.
3. The dollar amounts entered opposite Residuals Produced (Cr. Production Expense) should agree with the total credited to Production Expense (Account 731).
4. Residuals used in production should include amounts charged directly to production expense accounts and amounts charged to fuel stock accounts.

LINE NO.	ITEM (a)	QUANTITIES (b)	DOLLAR AMOUNTS (c)
1	COKE AND COKE BREEZE		
2	On Hand First of Year		
3	Produced (Cr. Production Expense)		
4	Stock Expense	N O	N E
5	Adjustments–Debits		
6	Adjustments–Credits		
7	Net Coke and Breeze Produced		
8	Coke Purchased		
9	Coke Breeze Purchased		
10	Total to Account For		
11	Coke Sold		
12	Coke Breeze Sold		
13	Coke Used in Gas Production		
14	Coke Breeze Used in Gas Production		
15	Other Coke Used by Company		
16	Other Coke Breeze Used by Company		
17	Total Disposed Of		
18	On Hand End of Year		
20			
21	All coke purchased is accounted for on page 209 b		
22			
23			
24			
26	LIGHT WATER GAS TAR RESIDUAL	GALLONS	
27	On Hand First of Year	562 483	24 419 12
28	Produced (Cr. Production Expense)		
29	Stock Expense		
30	Adjustments–Debits		
31	Total to Account For	562 483	24 419 12
32	Transferred to Tar	3 416	211 50
33	Sold		
34	Used in Gas Production Charged to Other Production Accounts	1 359	84 15
35	Total Disposed Of	4 775	295 65
36	On Hand End of Year	557 708	24 123 47
38	TAR EMULSION RESIDUAL	GALLONS	
39	On Hand First of Year	223 195	-
40	Produced (Cr. Production Expense)	594 067	-
41	Stock Expense		
42	Adjustments–Debits		
43	Adjustments–Credits		
44	Total to Account For	817 262	-
45	Transferred to Tar	791 736	-
46	Transferred to Drip Oil	12 989	-
47	Total Disposed Of	804 725	-
48	On Hand End of Year	12 537	-

849900502

RESIDUAL STOCK ACCOUNTS (Continued)

LINE NO.	ITEM (a)	QUANTITIES (b)	DOLLAR AMOUNTS (c)
1	TAR . RESIDUAL	GALLONS	
2	On Hand First of Year	587 500	-
3	Produced (Cr. Production Expense)	752 055	84 059 88*
4	~~Stock Expense~~ Transferred from Tar Emulsion	791 736	-
5	~~Adjustments-Debits~~ Transferred from Light Water Gas Tar	3 416	211 50
6	~~Adjustments-Credits~~ Transferred from Drip Oil	883	79 47
7			
8	Total to Account For	2 135 590	84 350 85*
9	Tar Sold	500 745	11 390 30*
10	Tar Used in Gas Production Charged to Other Production Accounts	1 116	55 80
11			
12			
13			
14			
15	Total Disposed Of	501 861	11 446 10
16	On Hand End of Year	1 633 729	72 904 75
	*Excludes $33,313.48 credited directly to Account G731 - Residuals Produced - Credit.		
18	TAR		
19	On Hand First of Year		
20	Produced (Cr. Production Expense)		
21	Stock Expense		
22	Adjustments-Debits		
23	Adjustments-Credits		
24			
25	Total to Account For		
26	Tar Sold		
27	Tar		
28	Total Disposed Of		
29	On Hand End of Year		
	DRIP OIL . RESIDUAL	GALLONS	
31	On Hand First of Year	43 766	3 094 66
32	Produced (Cr. Production Expense)	13 702	685 10
33	~~Stock Expense~~ Transferred from Tar Emulsion	12 989	-
34	Adjustments-Debits		
35	~~Adjustments-Credits~~ Total to Account For	70 457	3 779 76
36	~~Tar Sold~~ Transferred to Tar	883	79 47
37	~~Sold~~ Interchanged within Company	1 206	108 54
38	Used in Gas Production Charged to Other Production Accounts	3 746	337 14
39	Total Disposed Of	5 835	525 15
40	On Hand End of Year	64 622	3 254 61
42	RESIDUAL		
43	On Hand First of Year		
44	Produced (Cr. Production Expense)		
45	Stock Expense		
46	Adjustments-Debits		
47	Adjustments-Credits		
48	Total to Account For		
49	Sold		
50	Used in Gas Production		
51	Total Disposed Of		
52	On Hand End of Year		

849900503

RESIDUAL STOCK ACCOUNTS

1. Report below the information specified.
2. Quantities entered in this table should be comparable to the dollar amounts entered on the same line.
3. The dollar amounts entered opposite Residuals Produced (Cr. Production Expense) should agree with the total credited to Production Expense (Account 731).
4. Residuals used in production should include amounts charged directly to production expense accounts and amounts charged to fuel stock accounts.

LINE NO.	ITEM (a)	QUANTITIES (b)	DOLLAR AMOUNTS (c)
1	COKE AND COKE BREEZE		
2	On Hand First of Year		
3	Produced (Cr. Production Expense)		
4	Stock Expense	NO	NE
5	Adjustments—Debits		
6	Adjustments—Credits		
7	Net Coke and Breeze Produced		
8	Coke Purchased		
9	Coke Breeze Purchased		
10	Total to Account For		
11	Coke Sold		
12	Coke Breeze Sold		
13	Coke Used in Gas Production		
14	Coke Breeze Used in Gas Production		
15	Other Coke Used by Company		
16	Other Coke Breeze Used by Company		
17	Total Disposed Of		
18	On Hand End of Year		
20			
21	All coke purchased is accounted for on page 209 b		
22			
23			
24			
26	LIGHT WATER GAS TAR RESIDUAL	GALLONS	
27	On Hand First of Year	557 708	24 123 47
28	Produced (Cr. Production Expense)	32 233	-
29	Stock Expense		
30	Adjustments—Debits		
31	~~Adjustments—Credits~~ Total to Account For	589 941	24 123 47
32	~~Total to Account For~~ Transferred to Tar	4 434	274 54
33	Sold		
34	Used in Gas Production Charged to Other Production Accounts	605	37 46
35	Total Disposed Of	5 039	312 00
36	On Hand End of Year	584 902	23 811 47
38	TAR EMULSION RESIDUAL	GALLONS	
39	On Hand First of Year	12 537	-
40	Produced (Cr. Production Expense)	1 890	350 50
41	Stock Expense		
42	Adjustments—Debits		
43	Adjustments—Credits		
44	Total to Account For	14 427	350 50
45	~~Sold~~ Transferred to Tar	12 537	350 50
46	Used in Gas Production		
47	Total Disposed Of	12 537	350 50
48	On Hand End of Year	1 890	-

849900504

RESIDUAL STOCK ACCOUNTS (Continued)

LINE NO.	ITEM (a)	QUANTITIES (b)	DOLLAR AMOUNTS (c)
1	TAR RESIDUAL	GALLONS	
2	On Hand First of Year	1 633 729	72 904 75
3	Produced (Cr. Production Expense)	478 346	108 216 12
4	Transferred from Tar Emulsion	12 537	350 50
5	Transferred from Light Water Gas Tar	4 434	274 54
6	Transferred from Drip Oil	1 222	109 98
7			
8	Total to Account For	2 130 268	181 855 89
9	Tar Sold	1 704 284	163 913 54
10	Tar Used in Gas Production Charged to Other Production Accounts	85 520	919 15
11			
12			
13			
14			
15	Total Disposed Of	1 789 804	164 832 69
16	On Hand End of Year	340 464	17 023 20
18	TAR		
19	On Hand First of Year		
20	Produced (Cr. Production Expense)		
21	Stock Expense		
22	Adjustments—Debits		
23	Adjustments—Credits		
24			
25	Total to Account For		
26	Tar Sold		
27	Tar		
28	Total Disposed Of		
29	On Hand End of Year		
	DRIP OIL RESIDUAL	GALLONS	
31	On Hand First of Year	64 622	3 254 61
32	Produced (Cr. Production Expense)	269	120 50
33	Stock Expense		
34	Adjustments—Debits		
35	Total to Account For	64 891	3 375 11
36	Transferred to Tar	1 222	109 98
37	Interchanged within Company	565	50 85
38	Used in Gas Production Charged to Other Production Accounts	2 360	177 08
39	Total Disposed Of	4 147	337 91
40	On Hand End of Year	60 744	3 037 20
42	RESIDUAL		
43	On Hand First of Year		
44	Produced (Cr. Production Expense)		
45	Stock Expense		
46	Adjustments—Debits		
47	Adjustments—Credits		
48	Total to Account For		
49	Sold		
50	Used in Gas Production		
51	Total Disposed Of		
52	On Hand End of Year		

849900505

RESIDUAL STOCK ACCOUNTS

1. Report below the information specified.
2. Quantities entered in this table should be comparable to the dollar amounts entered on the same line.
3. The dollar amounts entered opposite Residuals Produced (Cr. Production Expense) should agree with the total credited to Production Expense (Account 731).
4. Residuals used in production should include amounts charged directly to production expense accounts and amounts charged to fuel stock accounts.

LINE NO.	ITEM (a)	QUANTITIES (b)	DOLLAR AMOUNTS (c)
1	COKE AND COKE BREEZE		
2	On Hand First of Year		
3	Produced (Cr. Production Expense)		
4	Stock Expense	NONE	
5	Adjustments–Debits		
6	Adjustments–Credits		
7	Net Coke and Breeze Produced		
8	Coke Purchased		
9	Coke Breeze Purchased		
10	Total to Account For		
11	Coke Sold		
12	Coke Breeze Sold		
13	Coke Used in Gas Production		
14	Coke Breeze Used in Gas Production		
15	Other Coke Used by Company		
16	Other Coke Breeze Used by Company		
17	Total Disposed Of		
18	On Hand End of Year		
20			
21	All coke purchased is accounted for on page 209b		
22			
23			
24			
26	LIGHT WATER GAS TAR RESIDUAL	GALLONS	
27	On Hand First of Year	584 902	23 811 47
28	Produced (Cr. Production Expense)		
29	Stock Expense		
30	Adjustments–Debits		
31	Adjustments–Credits		
32	Total to Account For	584 902	23 811 47
33	Sold		
34	Used in Gas Production Charged to Other Production Accounts	22 396	1 213 97
35	Total Disposed Of	22 396	1 213 97
36	On Hand End of Year	562 506	22 597 50
38	TAR EMULSION RESIDUAL	GALLONS	
39	On Hand First of Year	1 890	-
40	Produced (Cr. Production Expense)	25 629	1 305 70
41	Stock Expense		
42	Adjustments–Debits		
43	Adjustments–Credits		
44	Total to Account For	27 519	1 305 70
45	Transferred to Tar	26 114	1 305 70
46	Used in Gas Production		
47	Total Disposed Of	26 114	1 305 70
48	On Hand End of Year	1 405	-

849900506

RESIDUAL STOCK ACCOUNTS (Continued)

LINE NO.	ITEM (a)	QUANTITIES (b)	DOLLAR AMOUNTS (c)
1	TAR. RESIDUAL	GALLONS	
2	On Hand First of Year	340 464	17 023 20
3	Produced (Cr. Production Expense)	357 887	56 834 78
4	Transferred from Tar Emulsion	26 114	1 305 70
5	Adjustments–Debits		
6	Adjustments–Credits		
7			
8	Total to Account For	724 465	75 163 68
9	Tar Sold	659 005	71 890 68
10	Tar Used in Gas Production Charged to Other Production Accounts	1 188	59 40
11			
12			
13			
14			
15	Total Disposed Of	660 193	71 950 08
16	On Hand End of Year	64 272	3 213 60
18	TAR		
19	On Hand First of Year		
20	Produced (Cr. Production Expense)		
21	Stock Expense		
22	Adjustments–Debits		
23	Adjustments–Credits		
24			
25	Total to Account For		
26	Tar Sold		
27	Tar		
28	Total Disposed Of		
29	On Hand End of Year		
	DRIP OIL. RESIDUAL	GALLONS	
31	On Hand First of Year	60 744	3 037 20
32	Produced (Cr. Production Expense)	5 534	3 349 84
33	Stock Expense		
34	Adjustments–Debits		
35	Adjustments–Credits		
36	Total to Account For	66 278	6 387 04
37	Sold	51 219	5 634 09
38	Used in Gas Production Charged to Other Production Accounts	1 335	66 75
39	Total Disposed Of	52 554	5 700 84
40	On Hand End of Year	13 724	686 20
42	RESIDUAL		
43	On Hand First of Year		
44	Produced (Cr. Production Expense)		
45	Stock Expense		
46	Adjustments–Debits		
47	Adjustments–Credits		
48	Total to Account For		
49	Sold		
50	Used in Gas Production		
51	Total Disposed Of		
52	On Hand End of Year		

849900507

RESIDUAL STOCK ACCOUNTS

1. Report below the information specified.
2. Quantities entered in this table should be comparable to the dollar amounts entered on the same line.
3. The dollar amounts entered opposite Residuals Produced (Cr. Production Expense) should agree with the total credited to Production Expense (Account 731).
4. Residuals used in production should include amounts charged directly to production expense accounts and amounts charged to fuel stock accounts.

LINE NO.	ITEM (a)	QUANTITIES (b)	DOLLAR AMOUNTS (c)
1	COKE AND COKE BREEZE		
2	On Hand First of Year		
3	Produced (Cr. Production Expense)	NONE	
4	Stock Expense		
5	Adjustments–Debits		
6	Adjustments–Credits		
7	Net Coke and Breeze Produced		
8	Coke Purchased		
9	Coke Breeze Purchased		
10	Total to Account For		
11	Coke Sold		
12	Coke Breeze Sold		
13	Coke Used in Gas Production		
14	Coke Breeze Used in Gas Production		
15	Other Coke Used by Company		
16	Other Coke Breeze Used by Company		
17	Total Disposed Of		
18	On Hand End of Year		
20			
21			
22			
23			
24			
26	LIGHT WATER GAS TAR RESIDUAL	GALLONS	
27	On Hand First of Year	562 506	22 597 50
28	Produced (Cr. Production Expense)		
29	Stock Expense		
30	Adjustments–Debits		
31	Total to Account For	562 506	22 597 50
32	Transferred to Tar	74	4 01
33	Interchanged within Company	110	5 96
34	Used in Gas Production Charged to Other Production Accounts	58 078	3 148 14
35	Total Disposed Of	58 262	3 158 11
36	On Hand End of Year	504 244	19 439 39
38	TAR EMULSION RESIDUAL	GALLONS	
39	On Hand First of Year	1 405	-
40	Produced (Cr. Production Expense)	103 109	3 144 65
41	Stock Expense		
42	Adjustments–Debits		
43	Adjustments–Credits		
44	Total to Account For	104 514	3 144 65
45	Transferred to Tar	62 893	3 144 65
46	Used in Gas Production		
47	Total Disposed Of	62 893	3 144 65
48	On Hand End of Year	41 621	-

849900508

RESIDUAL STOCK ACCOUNTS (Continued)

LINE NO.	ITEM (a)	QUANTITIES (b)	DOLLAR AMOUNTS (c)
1	TAR RESIDUAL	GALLONS	
2	On Hand First of Year	64 272	3 213 60
3	Produced (Cr. Production Expense)	571 136	41 548 14
4	~~Stock Expense~~ Transferred from Tar Emulsion	62 893	3 144 65
5	~~Adjustments-Debits~~ Transferred from Light Water Gas Tar	74	4 01
6	Adjustments—Credits		
7			
8	Total to Account For	698 375	47 910 40
9	Tar Sold	260 793	25 894 83
10	Tar Used in Gas Production Charged to Other Production Accounts	5 645	282 25
11			
12			
13			
14			
15	Total Disposed Of	266 438	26 177 08
16	On Hand End of Year	431 937	21 733 32
18	TAR		
19	On Hand First of Year		
20	Produced (Cr. Production Expense)		
21	Stock Expense		
22	Adjustments—Debits		
23	Adjustments—Credits		
24			
25	Total to Account For		
26	Tar Sold		
27	Tar		
28	Total Disposed Of		
29	On Hand End of Year		
	DRIP OIL RESIDUAL	GALLONS	
31	On Hand First of Year	13 724	686 20
32	Produced (Cr. Production Expense)	19 523	976 15
33	Stock Expense		
34	Adjustments—Debits		
35	Adjustments—Credits		
36	Total to Account For	33 247	1 662 35
37	~~Sold~~ Interchanged within Company	210	10 50
38	Used in Gas Production Charged to Other Production Accounts	484	24 20
39	Total Disposed Of	694	34 70
40	On Hand End of Year	32 553	1 627 65
42	RESIDUAL		
43	On Hand First of Year		
44	Produced (Cr. Production Expense)		
45	Stock Expense		
46	Adjustments—Debits		
47	Adjustments—Credits		
48	Total to Account For		
49	Sold		
50	Used in Gas Production		
51	Total Disposed Of		
52	On Hand End of Year		

849900509

RESIDUAL STOCK ACCOUNTS

1. Report below the information specified.
2. Quantities entered in this table should be comparable to the dollar amounts entered on the same line.
3. The dollar amounts entered opposite Residuals Produced (Cr. Production Expense) should agree with the total credited to Production Expense (Account 731).
4. Residuals used in production should include amounts charged directly to production expense accounts and amounts charged to fuel stock accounts.

LINE NO.	ITEM (a)	QUANTITIES (b)	DOLLAR AMOUNTS (c)
1	COKE AND COKE BREEZE		
2	On Hand First of Year		
3	Produced (Cr. Production Expense)		
4	Stock Expense	NONE	
5	Adjustments–Debits		
6	Adjustments–Credits		
7	Net Coke and Breeze Produced		
8	Coke Purchased		
9	Coke Breeze Purchased		
10	Total to Account For		
11	Coke Sold		
12	Coke Breeze Sold		
13	Coke Used in Gas Production		
14	Coke Breeze Used in Gas Production		
15	Other Coke Used by Company		
16	Other Coke Breeze Used by Company		
17	Total Disposed Of		
18	On Hand End of Year		
20			
21			
22			
23			
24			
26	LIGHT WATER GAS TAR RESIDUAL	GALLONS	
27	On Hand First of Year	504 244	19 439
28	Produced (Cr. Production Expense)		
29	Stock Expense		
30	Adjustments–Debits		
31	Total to Account For	504 244	19 439
32	Transferred to Tar	3 994	216
33	Interchanged within Company	550	30
34	Used in Gas Production Charged to Other Production Accounts	52 854	2 865
35	Total Disposed Of	57 398	3 111
36	On Hand End of Year	446 846	16 328
38	TAR EMULSION RESIDUAL	GALLONS	
39	On Hand First of Year	41 621	-
40	Produced (Cr. Production Expense)	99 873	6 086
41	Stock Expense		
42	Adjustments–Debits		
43	Adjustments–Credits		
44	Total to Account For	141 494	6 086
45	Transferred to Tar	121 714	6 086
46	Used in Gas Production		
47	Total Disposed Of	121 714	6 086
48	On Hand End of Year	19 780	-

849900510

RESIDUAL STOCK ACCOUNTS (Continued)

LINE NO.	ITEM (a)	QUANTITIES (b)	DOLLAR AMOUNTS (c)
1	TAR RESIDUAL	GALLONS	
2	On Hand First of Year	431 937	21 733
3	Produced (Cr. Production Expense)	293 445	35 911
4	~~Stock Expense~~ Transferred from Tar Emulsion	121 714	6 086
5	~~Adjustments-Debits~~ Transferred from Light Water Gas Tar	3 994	216
6	Adjustments-Credits		
7			
8	Total to Account For	851 090	63 946
9	Tar Sold	452 521	44 018
10	Tar Used in Gas Production Charged to Other Production Accounts	3 587	179
11			
12			
13			
14			
15	Total Disposed Of	456 108	44 197
16	On Hand End of Year	394 982	19 749
18	TAR		
19	On Hand First of Year		
20	Produced (Cr. Production Expense)		
21	Stock Expense		
22	Adjustments-Debits		
23	Adjustments-Credits		
24			
25	Total to Account For		
26	Tar Sold		
27	Tar		
28	Total Disposed Of		
29	On Hand End of Year		
	DRIP OIL RESIDUAL	GALLONS	
31	On Hand First of Year	32 553	1 628
32	Produced (Cr. Production Expense)	17 403	870
33	Stock Expense		
34	Adjustments-Debits		
35	Adjustments-Credits		
36	Total to Account For	49 956	2 498
37	Sold		
38	Used in Gas Production Charged to Other Production Accounts	257	13
39	Total Disposed Of	257	13
40	On Hand End of Year	49 699	2 485
42	RESIDUAL		
43	On Hand First of Year		
44	Produced (Cr. Production Expense)		
45	Stock Expense		
46	Adjustments-Debits		
47	Adjustments-Credits		
48	Total to Account For		
49	Sold		
50	Used in Gas Production		
51	Total Disposed Of		
52	On Hand End of Year		

849900511

RESIDUAL STOCK ACCOUNTS

1. Report below the information specified.
2. Quantities entered in this table should be comparable to the dollar amounts entered on the same line.
3. The dollar amounts entered opposite Residuals Produced (Cr. Production Expense) should agree with the total credited to Production Expense (Account 731).
4. Residuals used in production should include amounts charged directly to production expense accounts and amounts charged to fuel stock accounts.

LINE NO.	ITEM (a)	QUANTITIES (b)	DOLLAR AMOUNTS (c)
1	COKE AND COKE BREEZE		
2	On Hand First of Year		
3	Produced (Cr. Production Expense)		
4	Stock Expense	NONE	
5	Adjustments–Debits		
6	Adjustments–Credits		
7	Net Coke and Breeze Produced		
8	Coke Purchased		
9	Coke Breeze Purchased		
10	Total to Account For		
11	Coke Sold		
12	Coke Breeze Sold		
13	Coke Used in Gas Production		
14	Coke Breeze Used in Gas Production		
15	Other Coke Used by Company		
16	Other Coke Breeze Used by Company		
17	Total Disposed Of		
18	On Hand End of Year		
20			
21			
22			
23			
24			
26	LIGHT WATER GAS TAR RESIDUAL	GALLONS	
27	On Hand First of Year	446 846	16 328
28	Produced (Cr. Production Expense)		
29	Stock Expense		
30	Adjustments–Debits		
31	Adjustments–Credits		
32	Total to Account For	446 846	16 328
33	Sold		
34	Used in Gas Production Charged to Other Production Accounts	213	11
35	Total Disposed Of	213	11
36	On Hand End of Year	446 633	16 317
38	TAR EMULSION RESIDUAL	GALLONS	
39	On Hand First of Year	19 780	-
40	Produced (Cr. Production Expense)	810 009	37 039
41	~~xxxxxxxxx~~ Transferred from Tar	77 378	3 869
42	Adjustments–Debits		
43	Adjustments–Credits		
44	Total to Account For	887 387	40 908
45	~~xxx~~ Transferred to Tar	818 167	40 908
46	Used in Gas Production		
47	Total Disposed Of	818 167	40 908
48	On Hand End of Year	89 000	-

849900512

Annual report of PUBLIC SERVICE ELECTRIC AND GAS COMPANY Year ended December 31, 1968

RESIDUAL STOCK ACCOUNTS (Continued)

LINE NO.	ITEM (a)	QUANTITIES (b)	DOLLAR AMOUNTS (c)
1	TAR RESIDUAL	GALLONS	
2	On Hand First of Year	394 982	19 749
3	Produced (Cr. Production Expense)	2 441 453	234 950
4	~~Stock Expense~~ Transferred from Tar Emulsion	818 167	40 908
5	Adjustments–Debits		
6	Adjustments–Credits		
7			
8	Total to Account For	3 259 620	275 858
9	Tar Sold	2 221 700	223 962
10	Tar Used in Gas Production Charged to Other Production Accounts	2 254	112
11	Transferred to Tar Emulsion	77 378	3 869
12			
13			
14			
15	Total Disposed Of	2 301 332	227 943
16	On Hand End of Year	1 353 270	67 664
18	TAR		
19	On Hand First of Year		
20	Produced (Cr. Production Expense)		
21	Stock Expense		
22	Adjustments–Debits		
23	Adjustments–Credits		
24			
25	Total to Account For		
26	Tar Sold		
27	Tar		
28	Total Disposed Of		
29	On Hand End of Year		
	DRIP OIL RESIDUAL	GALLONS	
31	On Hand First of Year	49 699	2 485
32	Produced (Cr. Production Expense)	19 225	961
33	Stock Expense		
34	Adjustments–Debits		
35	Adjustments–Credits		
36	Total to Account For	19 225	961
37	~~Sold~~ Interchanged within Company	125	6
38	Used in Gas Production Charged to Other Production Accounts	371	19
39	Total Disposed Of	496	25
40	On Hand End of Year	68 428	3 421
42	RESIDUAL		
43	On Hand First of Year		
44	Produced (Cr. Production Expense)		
45	Stock Expense		
46	Adjustments–Debits		
47	Adjustments–Credits		
48	Total to Account For		
49	Sold		
50	Used in Gas Production		
51	Total Disposed Of		
52	On Hand End of Year		

RESIDUAL STOCK ACCOUNTS

1. Report below the information specified.
2. Quantities entered in this table should be comparable to the dollar amounts entered on the same line.
3. The dollar amounts entered opposite Residuals Produced (Cr. Production Expense) should agree with the total credited to Production Expense (Account 731).
4. Residuals used in production should include amounts charged directly to production expense accounts and amounts charged to fuel stock accounts.

LINE NO.	ITEM (a)	QUANTITIES (b)	DOLLAR AMOUNTS (c)
1	COKE AND COKE BREEZE		
2	On Hand First of Year		
3	Produced (Cr. Production Expense)	N O	N E
4	Stock Expense		
5	Adjustments–Debits		
6	Adjustments–Credits		
7	Net Coke and Breeze Produced		
8	Coke Purchased		
9	Coke Breeze Purchased		
10	Total to Account For		
11	Coke Sold		
12	Coke Breeze Sold		
13	Coke Used in Gas Production		
14	Coke Breeze Used in Gas Production		
15	Other Coke Used by Company		
16	Other Coke Breeze Used by Company		
17	Total Disposed Of		
18	On Hand End of Year		
20			
21			
22			
23			
24			
26	LIGHT WATER GAS TAR RESIDUAL	GALLONS	
27	On Hand First of Year	446 633	16 317
28	Produced (Cr. Production Expense)		
29	Stock Expense		
30	Adjustments–Debits		
31	Adjustments–Credits		
32	Total to Account For	446 633	16 317
33	Sold		
34	Used in Gas Production Charged to Other Production Accounts	1 815	99
35	Total Disposed Of	1 815	99
36	On Hand End of Year	444 818	16 218
38	TAR EMULSION RESIDUAL	GALLONS	
39	On Hand First of Year	89 000	-
40	Produced (Cr. Production Expense)	203 697	12 423
41	~~Stock Expense~~ Transferred from Tar	17 443	872
42	Adjustments–Debits		
43	Adjustments–Credits		
44	Total to Account For	221 140	13 295
45	~~Sold~~ Transferred to Tar	265 896	13 295
46	Used in Gas Production		
47	Total Disposed Of	265 896	13 295
48	On Hand End of Year	44 244	-

849900514

Annual report of PUBLIC SERVICE ELECTRIC AND GAS COMPANY Year ended December 31, 1969

RESIDUAL STOCK ACCOUNTS (Continued)

LINE NO.	ITEM (a)	QUANTITIES (b)	DOLLAR AMOUNTS (c)
1	TAR RESIDUAL	GALLONS	
2	On Hand First of Year	1 353 270	67 664
3	Produced (Cr. Production Expense)	493 360	118 058
4	~~Stock Expense~~ Transferred from Tar Emulsion	265 896	13 295
5	Adjustments—Debits		
6	Adjustments—Credits		
7	Transferred from Drip Oil	5 391	269
8	Total to Account For	764 647	131 622
9	Tar Sold	1 844 715	185 626
10	Tar Used in Gas Production Charged to Other Production Accounts	4 782	239
11	Transferred to Tar Emulsion	17 443	872
12			
13			
14			
15	Total Disposed Of	1 866 940	186 737
16	On Hand End of Year	250 977	12 549
18	TAR		
19	On Hand First of Year		
20	Produced (Cr. Production Expense)		
21	Stock Expense		
22	Adjustments—Debits		
23	Adjustments—Credits		
24			
25	Total to Account For		
26	Tar Sold		
27	Tar		
28	Total Disposed Of		
29	On Hand End of Year		
	DRIP OIL RESIDUAL	GALLONS	
31	On Hand First of Year	68 428	3 421
32	Produced (Cr. Production Expense)	10 229	512
33	Stock Expense		
34	Adjustments—Debits		
35	~~Adjustments~~ Total to Account For	10 229	512
36	~~Tar~~ Transferred to Tar	5 391	269
37	~~Sold~~ Interchanged within Company	100	5
38	Used in Gas Production Charged to Other Production Accounts	2 275	114
39	Total Disposed Of	7 766	388
40	On Hand End of Year	70 891	3 545
42	RESIDUAL		
43	On Hand First of Year		
44	Produced (Cr. Production Expense)		
45	Stock Expense		
46	Adjustments—Debits		
47	Adjustments—Credits		
48	Total to Account For		
49	Sold		
50	Used in Gas Production		
51	Total Disposed Of		
52	On Hand End of Year		

RESIDUAL STOCK ACCOUNTS

1. Report below the information specified.
2. Quantities entered in this table should be comparable to the dollar amounts entered on the same line.
3. The dollar amounts entered opposite Residuals Produced (Cr. Production Expense) should agree with the total credited to Production Expense (Account 731). (See note (a))
4. Residuals used in production should include amounts charged directly to production expense accounts and amounts charged to fuel stock accounts.

LINE NO.	ITEM (a)	QUANTITIES (b)	DOLLAR AMOUNTS (c)
1	COKE AND COKE BREEZE		
2	On Hand First of Year		
3	Produced (Cr. Production Expense)	NONE	
4	Stock Expense		
5	Adjustments—Debits		
6	Adjustments—Credits		
7	Net Coke and Breeze Produced		
8	Coke Purchased		
9	Coke Breeze Purchased		
10	Total to Account For		
11	Coke Sold		
12	Coke Breeze Sold		
13	Coke Used in Gas Production		
14	Coke Breeze Used in Gas Production		
15	Other Coke Used by Company		
16	Other Coke Breeze Used by Company		
17	Total Disposed Of		
18	On Hand End of Year		

20 Note:
21 (a) The total of Residuals Produced excludes $28,792 of peak shaving gas credited
22 to the Electric Department. This amount is included in Production Expense
23 (Account 731).
24

26	LIGHT WATER GAS TAR RESIDUAL	GALLONS	
27	On Hand First of Year	444 818	16 218
28	Produced (Cr. Production Expense)		
29	Stock Expense		
30	Adjustments—Debits		
31	Adjustments—Credits		
32	Total to Account For	444 818	16 218
33	Transferred to Tar / Sold	85	5
34	Used in Gas Production / Charged to Other Production Accounts	300 15 602	16 845
35	Total Disposed Of	15 987	866
36	On Hand End of Year	428 831	15 352

38	TAR EMULSION RESIDUAL	GALLONS	
39	On Hand First of Year	44 244	-
40	Produced (Cr. Production Expense)	534 994	23 530
41	~~Stock Expense~~ Transferred from Tar	9 140	457
42	Adjustments—Debits		
43	Adjustments—Credits		
44	Total to Account For	544 134	23 987
45	~~Sold~~ Transferred to Tar	479 756	23 987
46	Used in Gas Production		
47	Total Disposed Of	479 756	23 987
48	On Hand End of Year	108 622	-

849900516

RESIDUAL STOCK ACCOUNTS (Continued)

LINE NO.	ITEM (a)	QUANTITIES (b)	DOLLAR AMOUNTS (c)
1	TAR RESIDUAL	GALLONS	
2	On Hand First of Year	250 977	12 549
3	Produced (Cr. Production Expense)	2 394 442	258 615
4	Transferred from Tar Emulsion	479 756	23 987
5	Adjustments–Debits		
6	Transferred from Light Water Gas Tar	85	5
7	Transferred from Drip Oil	65 506	3 275
8	Total to Account For	2 939 789	285 882
9	Tar Sold	2 527 386	265 262
10	Tar Used in Gas Production Charged to Other Production Accounts	1 509	75
11	Transferred to Tar Emulsion	9 140	457
12			
13			
14			
15	Total Disposed Of	2 538 035	265 794
16	On Hand End of Year	652 731	32 637
18	TAR		
19	On Hand First of Year		
20	Produced (Cr. Production Expense)		
21	Stock Expense		
22	Adjustments–Debits		
23	Adjustments–Credits		
24			
25	Total to Account For		
26	Tar Sold		
27	Tar		
28	Total Disposed Of		
29	On Hand End of Year		
	DRIP OIL RESIDUAL	GALLONS	
31	On Hand First of Year	70 891	3 545
32	Produced (Cr. Production Expense)	12 057	603
33	Stock Expense		
34	Adjustments–Debits		
35	Total to Account For	12 057	603
36	Transferred to Tar	65 506	3 275
37	Sold	150	8
38	Used in Gas Production Charged to Other Production Accounts	1 062	53
39	Total Disposed Of	66 718	3 336
40	On Hand End of Year	16 230	812
42	RESIDUAL		
43	On Hand First of Year		
44	Produced (Cr. Production Expense)		
45	Stock Expense		
46	Adjustments–Debits		
47	Adjustments–Credits		
48	Total to Account For		
49	Sold		
50	Used in Gas Production		
51	Total Disposed Of		
52	On Hand End of Year		

849900517

RESIDUAL STOCK ACCOUNTS

1. Report below the information specified.
2. Quantities entered in this table should be comparable to the dollar amounts entered on the same line.
3. The dollar amounts entered opposite Residuals Produced (Cr. Production Expense) should agree with the total credited to Production Expense (Account 731).
4. Residuals used in production should include amounts charged directly to production expense accounts and amounts charged to fuel stock accounts.

LINE NO.	ITEM (a)	QUANTITIES (b)	DOLLAR AMOUNTS (c)
1	COKE AND COKE BREEZE		
2	On Hand First of Year		
3	Produced (Cr. Production Expense)		
4	Stock Expense	NONE	
5	Adjustments–Debits		
6	Adjustments–Credits		
7	Net Coke and Breeze Produced		
8	Coke Purchased		
9	Coke Breeze Purchased		
10	Total to Account For		
11	Coke Sold		
12	Coke Breeze Sold		
13	Coke Used in Gas Production		
14	Coke Breeze Used in Gas Production		
15	Other Coke Used by Company		
16	Other Coke Breeze Used by Company		
17	Total Disposed Of		
18	On Hand End of Year		
20			
21			
22			
23			
24			
26	LIGHT WATER GAS TAR RESIDUAL	GALLONS	
27	On Hand First of Year	428 831	15 352
28	Produced (Cr. Production Expense)		
29	Stock Expense		
30	Adjustments–Debits		
31	Adjustments–Credits		
32	Total to Account For	428 831	15 352
33	Sold		
34	Used in Gas Production Charged to Other Production Accounts	6 885	374
35	Total Disposed Of	6 885	374
36	On Hand End of Year	421 946	14 978
38	TAR EMULSION RESIDUAL	GALLONS	
39	On Hand First of Year	108 622	-
40	Produced (Cr. Production Expense)	304 959	17 644
41	Stock Expense		
42	Adjustments–Debits		
43	Adjustments–Credits		
44	Total to Account For	304 959	17 644
45	~~xxx~~ Transferred to Tar	352 884	17 644
46	Used in Gas Production		
47	Total Disposed Of	352 884	17 644
48	On Hand End of Year	60 697	-

849900518

RESIDUAL STOCK ACCOUNTS (Continued)

LINE NO.	ITEM (a)	QUANTITIES (b)	DOLLAR AMOUNTS (c)
1	TAR RESIDUAL	GALLONS	
2	On Hand First of Year	652 731	32 637
3	Produced (Cr. Production Expense)	3 277 842	345 008
4	~~Stock Expense~~ Transferred from Tar Emulsion	352 884	17 644
5	Adjustments–Debits		
6	Adjustments–Credits		
7	Transferred from Drip Oil	2 000	100
8	Total to Account For	3 632 726	362 752
9	Tar Sold	2 967 528	329 493
10	Tar Used in Gas Production		
11			
12			
13			
14			
15	Total Disposed Of	2 967 528	329 493
16	On Hand End of Year	1 317 929	65 896
18	TAR		
19	On Hand First of Year		
20	Produced (Cr. Production Expense)		
21	Stock Expense		
22	Adjustments–Debits		
23	Adjustments–Credits		
24			
25	Total to Account For		
26	Tar Sold		
27	Tar		
28	Total Disposed Of		
29	On Hand End of Year		
	DRIP OIL RESIDUAL	GALLONS	
31	On Hand First of Year	16 230	812
32	Produced (Cr. Production Expense)	41 216	2 061
33	Stock Expense		
34	Adjustments–Debits		
35	~~Adjustments–Credits~~ Total to Account For	41 216	2 061
36	~~Total to Account For~~ Transferred to Tar	2 000	100
37	Sold	175	9
38	Used in Gas Production Charged to Other Production Accounts	885	45
39	Total Disposed Of	3 060	154
40	On Hand End of Year	54 386	2 719
42	RESIDUAL		
43	On Hand First of Year		
44	Produced (Cr. Production Expense)		
45	Stock Expense		
46	Adjustments–Debits		
47	Adjustments–Credits		
48	Total to Account For		
49	Sold		
50	Used in Gas Production		
51	Total Disposed Of		
52	On Hand End of Year		

849900519

RESIDUAL STOCK ACCOUNTS

1. Report below the information specified.
2. Quantities entered in this table should be comparable to the dollar amounts entered on the same line.
3. The dollar amounts entered opposite Residuals Produced (Cr. Production Expense) should agree with the total credited to Production Expense (Account 731).
4. Residuals used in production should include amounts charged directly to production expense accounts and amounts charged to fuel stock accounts.

LINE NO.	ITEM (a)	QUANTITIES (b)	DOLLAR AMOUNTS (c)
1	COKE AND COKE BREEZE		
2	On Hand First of Year		
3	Produced (Cr. Production Expense)	NONE	
4	Stock Expense		
5	Adjustments—Debits		
6	Adjustments—Credits		
7	Net Coke and Breeze Produced		
8	Coke Purchased		
9	Coke Breeze Purchased		
10	Total to Account For		
11	Coke Sold		
12	Coke Breeze Sold		
13	Coke Used in Gas Production		
14	Coke Breeze Used in Gas Production		
15	Other Coke Used by Company		
16	Other Coke Breeze Used by Company		
17	Total Disposed Of		
18	On Hand End of Year		
20			
21			
22			
23			
24			
26	LIGHT WATER GAS TAR RESIDUAL	GALLONS	
27	On Hand First of Year	421 946	14 978
28	Produced (Cr. Production Expense)		
29	Stock Expense		
30	Adjustments—Debits		
31	Adjustments—Credits		
32	Total to Account For	421 946	14 978
33	Sold		
34	Used in Gas Production Charged to Other Production Accounts	17 187	931
35	Total Disposed Of	17 187	931
36	On Hand End of Year	404 759	14 047
38	TAR EMULSION RESIDUAL	GALLONS	
39	On Hand First of Year	60 697	-
40	Produced (Cr. Production Expense)	515 723	19 639
41	Stock Expense		
42	Adjustments—Debits		
43	Adjustments—Credits		
44	Total to Account For	576 420	19 639
45	Transferred to Tar	392 770	19 639
46	Used in Gas Production		
47	Total Disposed Of	392 770	19 639
48	On Hand End of Year	183 650	-

849900520

RESIDUAL STOCK ACCOUNTS (Continued)

LINE NO.	ITEM (a)	QUANTITIES (b)	DOLLAR AMOUNTS (c)
1	TAR RESIDUAL	GALLONS	
2	On Hand First of Year	1 317 929	65 896
3	Produced (Cr. Production Expense)	1 224 772	179 143
4	Transferred from Tar Emulsion	392 770	19 639
5	Adjustments–Debits		
6	Adjustments–Credits		
7			
8	Total to Account For	2 935 471	264 678
9	Tar Sold	1 933 737	214 591
10	Tar Used in Gas Production	108 716	5 436
11			
12			
13			
14			
15	Total Disposed Of	2 042 453	220 027
16	On Hand End of Year	893 018	44 651
18	TAR		
19	On Hand First of Year		
20	Produced (Cr. Production Expense)		
21	Stock Expense		
22	Adjustments–Debits		
23	Adjustments–Credits		
24			
25	Total to Account For		
26	Tar Sold		
27	Tar		
28	Total Disposed Of		
29	On Hand End of Year		
	DRIP OIL RESIDUAL	GALLONS	
31	On Hand First of Year	54 386	2 719
32	Produced (Cr. Production Expense)	1 900	95
33	Stock Expense		
34	Adjustments–Debits		
35	Total to Account For	56 286	2 814
36			
37	Sold		
38	Used in Gas Production Charged to Other Production Accounts	427	21
39	Total Disposed Of	427	21
40	On Hand End of Year	55 859	2 793
42	RESIDUAL		
43	On Hand First of Year		
44	Produced (Cr. Production Expense)		
45	Stock Expense		
46	Adjustments–Debits		
47	Adjustments–Credits		
48	Total to Account For		
49	Sold		
50	Used in Gas Production		
51	Total Disposed Of		
52	On Hand End of Year		

849900521

RESIDUAL STOCK ACCOUNTS

1. Report below the information specified.
2. Quantities entered in this table should be comparable to the dollar amounts entered on the same line.
3. The dollar amounts entered opposite Residuals Produced (Cr. Production Expense) should agree with the total credited to Production Expense (Account 731).
4. Residuals used in production should include amounts charged directly to production expense accounts and amounts charged to fuel stock accounts.

LINE NO.	ITEM (a)	QUANTITIES (b)	DOLLAR AMOUNTS (c)
1	COKE AND COKE BREEZE		
2	On Hand First of Year		
3	Produced (Cr. Production Expense)	NONE	
4	Stock Expense		
5	Adjustments–Debits		
6	Adjustments–Credits		
7	Net Coke and Breeze Produced		
8	Coke Purchased		
9	Coke Breeze Purchased		
10	Total to Account For		
11	Coke Sold		
12	Coke Breeze Sold		
13	Coke Used in Gas Production		
14	Coke Breeze Used in Gas Production		
15	Other Coke Used by Company		
16	Other Coke Breeze Used by Company		
17	Total Disposed Of		
18	On Hand End of Year		
20			
21			
22			
23			
24			
26	LIGHT WATER GAS TAR . RESIDUAL	GALLONS	
27	On Hand First of Year	404 759	14 047
28	Produced (Cr. Production Expense)		
29	Stock Expense		
30	Adjustments–Debits	-	191
31	Adjustments–Credits		
32	Total to Account For	404 759	14 238
33	Sold		
34	Used in Gas Production Charged to Other Production Accounts	17 815	966
35	Total Disposed Of	17 815	966
36	On Hand End of Year	386 944	13 272
38	TAR EMULSION . RESIDUAL	GALLONS	
39	On Hand First of Year	183 650	-
40	Produced (Cr. Production Expense)	241 263	20 116
41	Stock Expense		
42	Adjustments–Debits		
43	Adjustments–Credits		
44	Total to Account For	424 913	20 116
45	~~Sold~~ Transferred to Tar	402 324	20 116
46	Used in Gas Production		
47	Total Disposed Of	402 324	20 116
48	On Hand End of Year	22 589	-

849900522

RESIDUAL STOCK ACCOUNTS (Continued)

LINE NO.	ITEM (a)	QUANTITIES (b)	DOLLAR AMOUNTS (c)
1	TAR . . RESIDUAL	GALLONS	
2	On Hand First of Year	893 018	44 651
3	Produced (Cr. Production Expense)	974 088	161 262
4	Transferred from Tar Emulsion	402 324	20 116
5	Adjustments–Debits		
6	Adjustments–Credits		
7			
8	Total to Account For	2 269 430	226 029
9	Tar Sold	1 692 140	197 164
10	Tar Used in Gas Production	425 277	21 264
11	Used in Gas Production Charged to Other Production Accounts	514	26
12			
13			
14			
15	Total Disposed Of	2 117 931	218 454
16	On Hand End of Year	151 499	7 575
18	TAR		
19	On Hand First of Year		
20	Produced (Cr. Production Expense)		
21	Stock Expense		
22	Adjustments–Debits		
23	Adjustments–Credits		
24			
25	Total to Account For		
26	Tar Sold		
27	Tar		
28	Total Disposed Of		
29	On Hand End of Year		
	DRIP OIL . . . . . RESIDUAL	GALLONS	
31	On Hand First of Year	55 859	2 793
32	Produced (Cr. Production Expense)		
33	Stock Expense		
34	Adjustments–Debits		
35	Total to Account For	55 859	2 793
36			
37	Sold		
38	Used in Gas Production Charged to Other Production Accounts	289	14
39	Total Disposed Of	289	14
40	On Hand End of Year	55 570	2 779
42	. . . . . RESIDUAL		
43	On Hand First of Year		
44	Produced (Cr. Production Expense)		
45	Stock Expense		
46	Adjustments–Debits		
47	Adjustments–Credits		
48	Total to Account For		
49	Sold		
50	Used in Gas Production		
51	Total Disposed Of		
52	On Hand End of Year		

849900523

RESIDUAL STOCK ACCOUNTS

1. Report below the information specified.
2. Quantities entered in this table should be comparable to the dollar amounts entered on the same line.
3. The dollar amounts entered opposite Residuals Produced (Cr. Production Expense) should agree with the total credited to Production Expense (Account 731).
4. Residuals used in production should include amounts charged directly to production expense accounts and amounts charged to fuel stock accounts.

LINE NO.	ITEM (a)	QUANTITIES (b)	DOLLAR AMOUNTS (c)
1	COKE AND COKE BREEZE		
2	On Hand First of Year		
3	Produced (Cr. Production Expense)		
4	Stock Expense	NONE	
5	Adjustments—Debits		
6	Adjustments—Credits		
7	Net Coke and Breeze Produced		
8	Coke Purchased		
9	Coke Breeze Purchased		
10	Total to Account For		
11	Coke Sold		
12	Coke Breeze Sold		
13	Coke Used in Gas Production		
14	Coke Breeze Used in Gas Production		
15	Other Coke Used by Company		
16	Other Coke Breeze Used by Company		
17	Total Disposed Of		
18	On Hand End of Year		
20			
21			
22			
23			
24			
26	LIGHT.WATER.GAS.TAR. RESIDUAL	GALLONS	
27	On Hand First of Year	386 944	$ 13 272
28	Produced (Cr. Production Expense)		
29	Stock Expense		
30	Adjustments—Debits		
31	Adjustments—Credits	-	191
32	Total to Account For	386 944	13 081
33	Sold		
34	Used in Gas Production Charged to Other Production Accounts	68 842	3 538
35	Total Disposed Of	68 842	3 538
36	On Hand End of Year	318 102	$ 9 543
38	.....TAR.EMULSION.. RESIDUAL	GALLONS	
39	On Hand First of Year	22 589	$ -
40	Produced (Cr. Production Expense)	228 422	7 533
41	Stock Expense		
42	Adjustments—Debits		
43	Adjustments—Credits		
44	Total to Account For	251 011	7 533
45	~~Used~~ Transferred to Tar	150 666	7 533
46	Used in Gas Production		
47	Total Disposed Of	150 666	7 533
48	On Hand End of Year	100 345	$ -

849900524

RESIDUAL STOCK ACCOUNTS (Continued)

LINE NO.	ITEM (a)	QUANTITIES (b)	DOLLAR AMOUNTS (c)
1	TAR. RESIDUAL	GALLONS	
2	On Hand First of Year	151 499	$ 7 575
3	Produced (Cr. Production Expense)	295 744	14 787
4	~~Stock Expense~~ Transferred from Tar Emulsion	150 666	7 533
5	Adjustments—Debits		
6	Adjustments—Credits		
7			
8	Total to Account For	597 909	29 895
9	Tar Sold		
10	Tar Used in Gas Production	319 284	15 964
11	Used in Gas Production Charged to Other Production		
12	Accounts	3 527	176
13			
14			
15	Total Disposed Of	322 811	16 140
16	On Hand End of Year	275 098	$ 13 755
18	TAR		
19	On Hand First of Year		
20	Produced (Cr. Production Expense)		
21	Stock Expense		
22	Adjustments—Debits		
23	Adjustments—Credits		
24			
25	Total to Account For		
26	Tar Sold		
27	Tar		
28	Total Disposed Of		
29	On Hand End of Year		
	DRIP OIL RESIDUAL	GALLONS	
31	On Hand First of Year	55 570	$ 2 779
32	Produced (Cr. Production Expense)		
33	Stock Expense		
34	Adjustments—Debits		
35	~~Adjustments—Credits~~ Total to Account For	55 570	2 779
36	~~Total to Account For~~		
37	Sold		
38	Used in Gas Production Charged to Other Production Accounts	1 324	66
39	Total Disposed Of	1 324	66
40	On Hand End of Year	54 246	$ 2 713
42	RESIDUAL		
43	On Hand First of Year		
44	Produced (Cr. Production Expense)		
45	Stock Expense		
46	Adjustments—Debits		
47	Adjustments—Credits		
48	Total to Account For		
49	Sold		
50	Used in Gas Production		
51	Total Disposed Of		
52	On Hand End of Year		

849900525

RESIDUAL STOCK ACCOUNTS

1. Report below the information specified.
2. Quantities entered in this table should be comparable to the dollar amounts entered on the same line.
3. The dollar amounts entered opposite Residuals Produced (Cr. Production Expense) should agree with the total credited to Production Expense (Account 731).
4. Residuals used in production should include amounts charged directly to production expense accounts and amounts charged to fuel stock accounts.

LINE NO.	ITEM (a)	QUANTITIES (b)	DOLLAR AMOUNTS (c)
1	COKE AND COKE BREEZE		
2	On Hand First of Year		
3	Produced (Cr. Production Expense)		
4	Stock Expense	NONE	
5	Adjustments—Debits		
6	Adjustments—Credits		
7	Net Coke and Breeze Produced		
8	Coke Purchased		
9	Coke Breeze Purchased		
10	Total to Account For		
11	Coke Sold		
12	Coke Breeze Sold		
13	Coke Used in Gas Production		
14	Coke Breeze Used in Gas Production		
15	Other Coke Used by Company		
16	Other Coke Breeze Used by Company		
17	Total Disposed Of		
18	On Hand End of Year		
20			
21			
22			
23			
24			
26	LIGHT WATER GAS TAR RESIDUAL	GALLONS	
27	On Hand First of Year	318 102	$ 9 543
28	Produced (Cr. Production Expense)		
29	Stock Expense		
30	Adjustments—Debits		
31	Adjustments—Credits		
32	Total to Account For	318 102	9 543
33	Sold		
34	Used in Gas Production Charged to Other Production Accounts	95 735	2 872
35	Total Disposed Of	95 735	2 872
36	On Hand End of Year	222 367	$ 6 671
38	TAR EMULSION RESIDUAL	GALLONS	
39	On Hand First of Year	100 345	–
40	Produced (Cr. Production Expense)	31 444	4 269
41	Stock Expense		
42	Adjustments—Debits		
43	Adjustments—Credits		
44	Total to Account For	131 789	4 269
45	~~Sold~~ Transferred to Tar	85 375	4 269
46	Used in Gas Production		
47	Total Disposed Of	85 375	4 269
48	On Hand End of Year	46 414	$ –

849900526

RESIDUAL STOCK ACCOUNTS (Continued)

LINE NO.	ITEM (a)	QUANTITIES (b)	DOLLAR AMOUNTS (c)
1	TAR ..... RESIDUAL	GALLONS	
2	On Hand First of Year	275 098	$ 13 755
3	Produced (Cr. Production Expense)	284 215	31 405
4	~~Stock Expense~~ Transferred from Tar Emulsion	85 375	4 269
5	Adjustments—Debits		
6	Adjustments—Credits		
7			
8	Total to Account For	644 688	49 429
9	Tar Sold	46 724	19 531
10	Tar Used in Gas Production	74 269	3 713
11	Used in Gas Production Charged to Other Production		
12	Accounts	5 572	279
13			
14			
15	Total Disposed Of	126 565	23 523
16	On Hand End of Year	518 123	$ 25 906
18	TAR		
19	On Hand First of Year		
20	Produced (Cr. Production Expense)		
21	Stock Expense		
22	Adjustments—Debits		
23	Adjustments—Credits		
24			
25	Total to Account For		
26	Tar Sold		
27	Tar		
28	Total Disposed Of		
29	On Hand End of Year		
	DRIP OIL ..... RESIDUAL	GALLONS	
31	On Hand First of Year	54 246	$ 2 713
32	Produced (Cr. Production Expense)		
33	Stock Expense		
34	Adjustments—Debits		
35	~~Adjustments—Credits~~ Total to Account For	54 246	2 713
36	~~Total to Account For~~		
37	Sold		
38	Used in Gas Production Charged to Other Production Accounts	4 356	218
39	Total Disposed Of	4 356	218
40	On Hand End of Year	49 890	2 495
42	..... RESIDUAL		
43	On Hand First of Year		
44	Produced (Cr. Production Expense)		
45	Stock Expense		
46	Adjustments—Debits		
47	Adjustments—Credits		
48	Total to Account For		
49	Sold		
50	Used in Gas Production		
51	Total Disposed Of		
52	On Hand End of Year		

849900527

APPENDIX D

APPENDIX D

HAZARDOUS AIR POLLUTION

HARRISON GAS PLANT

APPENDIX D

HAZARDOUS AIR POLLUTANTS
HARRISON GAS PLANT

The steam produced at the Harrison Gas Plant was generated by conventional boilers fired by either coal or oil.

Plant specific data for Hazardous Air Pollutants (HAPs) are not available. To provide an estimate of the potential HAPs generated at the Plant, the following coal- and oil-fired boiler emission factors analyses are provided from the EPRI PISCES Database (ref 1).

Fuel Fired Boilers

Tables **I-1** through **I-4** list emission factors for hazardous air pollutants for coal-, and oil- fired steam-electric power plants that were prepared for the Electric Power Research Institute "EPRI" by Radian Corporation.

The emission factors for coal-fired units are divided into three groups:

1. particulate-phase emissions (**Table I-1**),
2. vapor-phase inorganics such as Hydrochloric Acid (HCl), and Hydrofluoric Acid (HF) mercury, and, in some cases, selenium (**Table I-2**),
3. organic substances (**Table I-3**)

Uncontrolled oil-fired boiler emission factors are presented in **Table I-4** for particulate-phase emissions, vapor-phase inorganics, and organic substances. A limited data set was developed for oil-fired boilers with normally operating electrostatic precipitators (ESPs). Based on this data, EPRI recommends 60% of the values in **Table I-4** for the metals Arsenic (As), Beryllium (Be), Cadmium (Cd), Chromium (Cr), Cobalt (Co), Lead (Pb), Manganese (Mn), and Nickel (Ni) for oil-fired boilers with ESPs. For organic substances and volatile elements Mercury (Hg), Selenium (Se), Hydrochloric Acid (HCl), and Hydrofluoric Acid (HF), the values in **Table I-4** are appropriate for oil-fired boilers with or without an ESP.

The HAPs emission factors were derived from recent test data produced by EPRI and the U.S. Department of Energy "DOE" that focused on HAPs. The emissions estimating methodology was presented in reference 1, by Radian with the following caveats:

- Actual measurements of HAPs emissions can vary from estimated levels by several orders of magnitude. This variability is primarily external to sampling and analytical variability (i.e., it is caused by site-specific differences in plant design and operation and in daily process variability). Emission estimates developed from such data distributions may differ significantly from measured values.

849900530

- As more data become available and are used in the regressions and averages, the predicted factors may change.

- Much of the data fit log-normal distributions. The resulting correlations and geometric mean values provide an appropriate median emission factor for a single unit.

- Site-specific factors at any given plant may be so different from the sample population used to produce these equations that the predictive value may be compromised. For example, co-firing waste tires with oil was not examined at any test site. The oil emission factors would not be good estimators for emissions from such a plant.

It should also be noted that the field data used to develop emission factors for coal-fired boilers were obtained from wall-fired, tangential- fired, and cyclone boilers/furnaces equipped with particulate and/or flue gas desulfurization (FGD) systems. The low pressure boilers at the Plant utilized a different boiler type than the FCEM test units and were not equipped with air pollution control systems.

References

1. Field Chemical Emissions Monitoring Project: Guidelines for Estimating Trace Substance Emissions from Fossil Fuel Steam Electric Plants, EPRI - DCN 95-213-152-64, August 1995

849900531

Table I-1 **

EPRI - Coal Fired Boiler Emission Factors and Correlation Results for Particulate-Phase Emissions (lb/trillion Btu)

Analyte	Predicted Emissions	r^2	N	Root MSE	t - Value	$\bar{x}_{log}$	SS_{logx}
Antimony	$(0.92)\ x^{0.63}$	0.65	8	0.37	2.45	-0.30	3.8
Arsenic	$(3.1)\ x^{0.85}$	0.72	34	0.44	2.04	-0.006	27
Beryllium	$(1.2)\ x^{1.1}$	0.83	17	0.29	2.13	-0.26	4.8
Cadmium	$(3.3)\ x^{0.5}$	0.78	9	0.24	2.37	-0.55	7.8
Chromium	$(3.7)\ x^{0.58}$	0.57	38	0.40	2.03	0.31	23
Cobalt	$(1.7)\ x^{0.69}$	0.57	20	0.42	2.10	0.016	8.3
Lead	$(3.4)\ x^{0.80}$	0.62	33	0.48	2.04	0.061	18
Manganese	$(3.8)\ x^{0.60}$	0.57	37	0.39	2.03	0.70	18
Nickel	$(4.4)\ x^{0.48}$	0.51	25	0.49	2.07	0.28	25

** Ref; Field Chemical Emissions Monitoring Project: Guidelines for Estimating Trace Substance Emissions from Fossil Fuel Steam Electric Plants, EPRI - DCN 95-213-152-64, August 1995

x = Coal ppm/ash fraction * Particulate Emission (lb/million Btu)
r^2 = Correlation coefficient for the regulation
N = Number of data points included in the regression
Root MSE = Square root of the mean squared error (MSE) of the regression
t = Two-tail t value ($t_{0.025}$) for N-2 degrees of freedom
$\bar{x}_{log}$ = Mean of the log of the x terms
SS_{logx} = Sum of Squared Deviations of the log of the x terms

EXAMPLE CALCULATION

Coal arsenic concentration = 20 ppm
Ash Fraction = 10%
Particulate emission = 0.06 lb/million Btu

Mean emission $E = 3.1(x)^{0.85}$
$E = 3.1\ (20 \times 0.06/0.1)^{0.85}$
$E = 25.6$ lb/trillion Btu

The 95% Upper Confidence Interval = E * 10^{ t * RMSE * Square Root { 1/N+((log x - $\bar{x}_{log}$)^2)/SS_{logx} }}

849900532

Table I-2 **

EPRI - Recommended Emission Factor as Percent of Coal Input Bituminous Coals

Emission	Control Device	Number of Sites	Average Reduction	95% Confidence Interval	Recommended Emission Factor as Percent of Coal Input
Mercury	ESP	17	26%	±14%	70%
Mercury	None	---	---	---	100%
Selenium	None	15	45%	± 13%	55%
Hydrochloric Acid	None	15	-1%	± 13%	100%
Hydrofluoric Acid	None	12	11%	± 19%	90%

** Ref; Field Chemical Emissions Monitoring Project: Guidelines for Estimating Trace Substance Emissions from Fossil Fuel Steam ElectricPlants, EPRI - DCN 95-213-152-64, August 1995

Table I-3 **

EPRI - Coal-Fired Boiler
Organic Substance Emission Factors (lb/trillion Btu)

Chemical Substance	Sites Tested	Sites Detected	Sample Size	DQ*	Log-Normal		
					Mean	LCI	UCI
1-Chloronaphthalene	9	0	0	E		<0.18	<7.8
1-Naphthylamine	8	1	1	D	0.011		
1,1-Dichloroethane	12	1	12	D	0.89	0.40	2.0
1,1-Dichloroethane	12	0	0	E		<0.4	<12
1,1,2-Trichloroethane	12	0	0	E		<0.4	<12
1,1,2,2-Tetrachloroethane	12	0	0	E		<0.4	<10
1,2-Dibromomethane	2	1	2	D	2.6	0.0	1.3e+0.6
1,2-Dichlorobenzene	11	0	0	E		<0.2	<3.5
1,2-Dichloroethane	9	0	0	E		<0.4	<5.2
1,2-Dichloropropane	12	0	0	E		<0.4	<6
1,2-Diphenylhydrazine	8	0	0	E		<2.4	<33
1,2,4-Trichlorobenzene	9	1	9	D	1.5	0.3	8.6
1,2,4,5-Tetrachlorobenzene	8	0	0	E		<0.15	<5
1,3-Dichlorobenzene	11	1	11	D	1.0	0.24	4.4
1,4-Dichlorobenzene	11	1	11	D	1.1	0.25	4.8
2-Butanone	11	2	11	D	3.1	1.8	5.4
2-Chloronaphthalene	8	2	2	C	0.0005	0.0	0.017
2-Chlorophenol	6	0	0	E		<0.2	<5
2-Hexanone	10	3	10	C	3.2	1.8	5.7
2-Methylnaphthalene	19	8	11	A	0.036	0.017	0.077
2-Methylphenol	8	0	0	E		<1.8	<7.8
2-Naphthylamine	7	0	0	E		<0.54	<5
2-Nitroaniline	7	0	0	E		<0.15	<24
2-Nitrophenol	7	0	0	E		<2.4	<7.8
2-Picoline	9	0	0	E		<0.3	<7.8
2,3,4,6-Tetrachlorophenol	9	0	0	E		<0.14	<16
2,3,7,8-TCDD equivalents	10	10	10	A	0.000002	4.40e-07	0.000012
2,4-Dichlorophenol	9	0	0	E		<0.14	<7.8
2,4-Dimethylphenol	9	0	0	E		<0.35	<7.8
2,4-Dinitrophenol	9	0	0	E		<1.8	<39
2,4-Dinitrotoluene	13	4	10	C	0.20	0.038	0.94

Table I -3 (Continued)

EPRI - Coal-Fired Boiler
Organic Substance Emission Factors (lb/trillion Btu)

Chemical Substance	Sites Tested	Sites Detected	Sample Size	DQ*	Log-Normal		
					Mean	LCI	UCI
2,4,5-Trichlorophenol	9	0	0	E		<0.12	7.8
2,4,6-Trichlorophenol	9	0	0	E		<0.12	<7.8
2,5-Dimethylbenzaldehyde	2	2	2	C	14	9.1	23
2,6-Dichlorophenol	9	0	0	E		<0.19	<7.8
2,6-Dinitrotoluene	13	2	8	D	0.11	0.0095	1.3
3-Chloropropylene	2	2	2	C	9.1	5.5	15
3-Methylcholanthrene	10	0	0	E		<0.005	<7.8
3-Nitroeniline	9	0	0	E		<0.14	<39
3,3-Dichlorobenzidine	9	0	0	E		<0.13	<16
3,4-Methylphenol	2	2	2	C	0.71	0.21	2.4
4-Aminobiphenyl	10	0	0	E		<0.27	<7.8
4-Bromophenyl phenyl ether	9	0	0	E		<0.14	<7.8
4-Chloro-3-methylphenol	9	0	0	E		<0.19	<7.8
4-Chlorophenyl phenyl ether	9	0	0	E		<0.14	<7.8
4-Ethyl toluene	2	2	2	C	2.8	0.0001	1.3e+05
4-Methyl-2-pentanone	7	2	6	D	2.3	1.1	4.7
4-Methylphenol	9	2	6	D	1.3	1.1	1.5
4-Nitroaniline	9	0	0	E		<3.5	<39
4-Nitrophenol	9	0	0	E		<0.23	<39
4,6-Dinitro-o-cresol	9	0	0	E		<0.2	<39
5-Methylchrysene	3	1	3	D	0.0006	0.0001	0.0054
7H-Dibenzo(c,g)carbazole	3	0	0	E		<0.001	<0.016
7,12-Dimethylbenzo(a)anthracene	10	0	0	E		<0.005	<19
Acenaphthene	24	11	15	A	0.024	0.011	0.050
Acenaphthylene	24	12	13	A	0.0078	0.0044	0.014
Acetaldehyde	19	11	19	A	3.2	1.1	8.9
Acetone	11	3	11	C	1.1	0.37	3.2
Acetophenone	15	8	14	A	1.2	0.74	1.9
Acrolein	12	5	12	B	1.9	0.51	7.2
Aniline	9	0	0	E		<0.24	<7.8
Anthracene	24	11	15	A	0.013	0.0054	0.030

849900535

Table I -3 (Continued)

EPRI - Coal-Fired Boiler
Organic Substance Emission Factors (lb/trillion Btu)

Chemical Substance	Sites Tested	Sites Detected	Sample Size	DQ*	Log-Normal		
					Mean	LCI	UCI
Benzaldehyde	7	2	7	D	4.2	0.83	21
Benzene	25	23	25	A	3.9	1.9	8.0
Benzidine	10	0	0	E		<2.4	<7.8
Benzoic acid	11	5	11	B	22	9.5	53
Benzo(a)anthracene	27	11	15	A	0.0075	0.0032	0.017
Benzo(a)pyrene	27	7	13	B	0.0019	0.0008	0.0045
Benzo(a)pyrene equivalents	11	11	11	A	0.0048	0.0019	0.012
Benzo(b,j&k)fluoranthene	26	10	14	A	0.0096	0.0040	0.023
Benzo(e)pyrene	7	4	7	C	0.0036	0.0013	0.010
Benzo(g,h,i)perylene	26	6	12	B	0.0015	0.0007	0.0031
Benzyl alcohol	9	2	9	D	2.0	1.4	2.9
Benzylchloride	6	4	6	C	0.28	0.0042	19
Biphenyl	9	6	9	B	0.16	0.022	1.2
bis(2-Chloroethoxy)methane	8	0	0	E		<0.17	<7.8
bis(2-Chloroethyl)ether	9	0	0	E		<0.18	<7.8
bis(2-Chloroisopropyl)ether	10	0	0	E		<0.22	<7.8
bis(2-Ethylhexyl)phthalate	11	7	11	A	3.6	2.0	6.2
Bromodichloromethane	10	0	0	E		<0.49	<6
Bromoform	10	0	0	E		<0.42	<10
Bromomethane	13	4	13	C	0.89	0.38	2.1
Butylbenzylphthalate	9	2	2	C	0.30	0.24	0.38
Carbon disulfide	14	7	13	B	1.1	0.40	2.9
Carbon tetrachloride	14	0	0	E		<0.42	<6
Chlorobenzene	15	1	1	D	0.16		
Chloroethane	13	1	11	D	0.53	0.26	1.1
Chloroform	12	1	11	D	0.55	0.26	1.2
Chloromethane	10	3	10	C	1.1	0.23	5.1
Chrysene	26	9	12	A	0.0055	0.0028	0.011
cis-1,2-Dichloroethene	6	0	0	E		<0.42	<3.1
cis-1,3-Dichloropropene	14	1	14	D	0.72	0.37	1.4
Crotonaldehyde	4	0	0	E		<0.1	<7.1

849900536

Table I -3 (Continued)

EPRI - Coal-Fired Boiler
Organic Substance Emission Factors (lb/trillion Btu)

Chemical Substance	Sites Tested	Sites Detected	Sample Size	DQ*	Log-Normal		
					Mean	LCI	UCI
Dibenzofuran	14	4	14	C	0.58	0.21	1.6
Dibenzo(a,e) pyrene	3	0	0	E		<0.0003	<0.003
Dibenzo(a,h)acridine	3	0	0	E		<0.001	<0.002
Dibenzo(a,h)anthracene	26	3	12	C	0.0009	0.0003	0.0024
Dibenzo(a,i)acridine	3	1	1	D	0.0010		
Dibenzo(a,i)pyrene	3	0	0	E		<0.001	<0.004
Dibenzo(a,j)acridine	9	0	0	E		<0.2	<7.8
Dibromochloromethane	12	0	0	E		<0.42	<6
Dibutylphthalate	9	1	2	D	0.11	0.0005	28
Dichlorobromomethane	2	0	0	E		<0.42	<0.45
Dichloromethane	2	0	0	E		<1.6	<2
Diethylphthalate	10	2	2	C	0.20	0.020	2.0
Dimethylphenethylamine	9	0	0	E		<2.4	<40
Dimethylphthalate	9	1	2	D	0.090	0.0	1.0e+03
Di-n-butylphthalate	3	0	0	E		<1.9	<3
Di-n-octylphthalate	9	0	0	E		<0.21	<7.8
Diphenylamine	9	0	0	E		<0.13	<7.8
Ethyl methanesulfonate	9	0	0	E		<0.17	<7.8
Ethylbenzene	16	4	16	C	0.80	0.35	1.8
Fluoranthene	24	13	22	A	0.15	0.059	0.39
Fluorene	24	11	23	B	0.14	0.049	0.40
Formaldehyde	26	10	26	B	2.6	1.4	4.8
Hexachlorobenzene	14	0	0	E		<0.001	<7.8
Hexachlorobutadiene	15	0	0	E		<0.001	<7.8
Hexachlorocyclopentadiene	13	0	0	E		<0.001	<7.8
Hexachloroethane	13	0	0	E		<0.001	<7.8
Hexaldehyde	2	1	2	D	5.7	0.0036	9.2e+03
Indeno(1,2,3-c,d)pyrene	25	7	12	B	0.0017	0.0008	0.0039
Iodomethane	2	2	2	C	2.0	0.0	2.3e+09
Isophorone	10	1	10	D	1.2	0.32	4.3
Methyl chloroform	8	3	7	C	0.61	0.24	1.5

849900537

Table I -3 (Continued)

EPRI - Coal-Fired Boiler
Organic Substance Emission Factors (lb/trillion Btu)

Chemical Substance	Sites Tested	Sites Detected	Sample Size	DQ*	Log-Normal		
					Mean	LCI	UCI
Methyl methacrylate	2	1	1	D	1.1		
Methyl methanesulfonate	9	0	0	E		<1.2	<17
Methylene chloride	7	4	7	C	3.6	0.63	21
m/p-Tolualdehyde	2	2	2	C	3.2	0.0012	8.4e+03
m/p-Xylene	13	8	13	A	0.82	0.28	2.4
Naphthalene	23	12	20	A	0.62	0.36	1.1
n-Butyraldehyde	2	1	2	D	8.3	0.0001	5.9e+05
n-Hexane	2	2	2	C	0.49	0.0	1.7e+06
Nitrobenzene	9	0	0	E		<0.19	<7.8
N-Nitrosodibutylamine	6	0	0	E		<2.4	<7.8
N-Nitrosodimethylamine	10	0	0	E		<0.34	<7.8
N-Nitroso-di-n-butylamine	3	0	0	E		<0.32	<5
N-Nitrosodiphenylamine	9	0	0	E		<0.14	<7.8
N-Nitrosodipropylamine	9	0	0	E		<0.21	<7.8
N-Nitrosopiperidine	9	0	0	E		<0.24	<7.8
o-Tolualdehyde	2	1	2	D	2.9	0.0	6.0e+06
o-Xylene	12	3	12	C	0.44	0.25	0.78
p-Chloroaniline	9	0	0	E		<0.18	<7.8
p-Dimethylaminoazobenzene	9	0	0	E		<0.17	<7.8
Pentachlorobenzene	9	0	0	E		<0.12	<7.8
Pentachloronitrobenzene	9	0	0	E		<0.54	<7.8
Pentachlorophenol	13	0	0	E		<0.001	<39
Perylene	2	1	2	D	0.0035	0.0	7.2e+15
Phenacetin	9	0	0	E		<0.014	<7.8
Phenanthrene	24	13	24	A	0.42	0.19	0.91
Phenol	13	7	13	B	3.3	1.5	7.1
Pronamide	9	0	0	E		<0.17	<7.8
Propanal	2	1	3	D	2.3	0.0	1.1e+06
Propionaldehyde	6	4	6	C	1.8	0.11	30
Pyrene	24	10	21	B	0.066	0.022	0.19
Pyridine	9	0	0	E		<0.28	<7.8

849900538

Table I -3 (Continued)

EPRI - Coal-Fired Boiler
Organic Substance Emission Factors (lb/trillion Btu)

Chemical Substance	Sites Tested	Sites Detected	Sample Size	DQ*	Log-Normal		
					Mean	LCI	UCI
Quinoline	3	0	0	E		<0.009	<5.6
Styrene	16	4	12	C	0.70	0.34	1.4
Tetrachloroethylene	15	3	10	C	0.42	0.24	0.75
Toluene	23	16	23	A	1.7	0.90	3.1
trans-1,2-Dichloroethene	12	0	0	E		<0.42	<6
trans-1,3-Dichloropropene	14	0	0	E		<0.42	<6.9
Trichloroethylene	14	0	0	E		<0.42	<6
Trichlorofluoromethane	12	5	12	B	0.87	0.33	2.3
Trichloromethane	2	1	2	D	3.3	0.0	4.7e+05
Valeraldehyde	2	2	2	C	7.6	0.049	1.2e+03
Vinyl acetate	13	1	3	D	0.31	0.14	0.69
Vinyl chloride	12	1	12	D	0.73	0.30	1.8

** Ref; Field Chemical Emissions Monitoring Project: Guidelines for Estimating Trace Substance Emissions from Fossil Fuel Steam ElectricPlants, EPRI - DCN 95-213-152-64, August 1995

*Data quality:

A = Five or more detected values, no more than 50% nondetects in statistics.
B = Four or more detected values, no more than 67% nondetects in statistics.
C = Two or more detected values, no more than 75% nondetects in statistics.
D = One or more detected values, no limit on nondetects in statistics.
E = Substance has not been detected.

LCI = Lower Confidence Interval
UCI = Upper Confidence Interval

849900539

Table I-4 **

EPRI - Uncontrolled Oil-Fired Boiler Emission Factors (lb/trillion Btu)

Chemical Substance	Sites Tested	Sites Detected	Sample Size	DQ*	Log-Normal Mean	Log-Normal LCI	Log-Normal UCI
Arsenic	13	12	13	A	5.1	2.5	11
Beryllium	13	5	13	B	0.15	0.05	0.46
Cadmium	13	12	13	A	1.2	0.42	3.1
Chloride (as HCl)	12	12	12	A	2370	1870	3000
Chromium	13	12	13	A	5.2	3.1	8.7
Cobalt	7	7	7	A	32	14	76
Fluoride as (HF)	10	10	10	A	110	48	270
Lead	13	11	13	A	8.0	3.7	17
Manganese	13	13	13	A	14	8.3	23
Mercury	17	9	12	A	0.48	0.23	1.0
Nickel	14	14	14	A	710	470	1080
Selenium	17	11	17	A	2.1	0.81	5.6
1-Chloronaphthalene	2	0	0	E		<5.9	<6.5
1-Naphthylamine	2	0	0	E		<5.9	<6.5
1,1-Dichlorethane	2	0	0	E		<0.49	<1.9
1,1-Cichloroethene	2	0	0	E		<0.49	<1.9
1,1,1-Trichloroethane	2	2	2	C	1.1	0.0074	160
1,1,2-Trichloroethane	2	0	0	E		<0.48	<0.49
1,1,2,2-Tetrachloroethane	2	0	0	E		<0.48	<0.49
1,2-Dibromomethane	2	0	0	E		<1.7	<2.9
1,2-Dichlorethane	2	0	0	E		<1.2	<2.1
1,2-Dichlorobenzene	2	0	0	E		<0.49	<6.5
1,2-Dichloroethane	2	0	0	E		<0.49	<1.9
1,2-Dichloropropane	2	0	0	E		<0.49	<5.9
1,2-Diphenylhydrazine	2	0	0	E		<5.9	<6.5
1,2,4-Trichlorobenzene	2	0	0	E		<5.9	<6.5
1,2,4,5-Tetrachlorobenzene	2	0	0	E		<5.9	<6.5
1,3-Butadiene	2	0	0	E		<0.14	
1,3-Dichlorobenzene	2	0	0	E		<0.49	<6.5
1,4-Dichlorobenzene	2	0	0	E		<0.49	<6.5
2-Butanone	2	0	0	E		<4.9	<19
2-Chloronaphthalene	2	0	0	E		<5.9	<6.5
2-Chlorophenol	2	0	0	E		<5.9	<6.5
2-Hexanone	4	0	0	E		<4.8	<19

Table I-4 (Continued)

EPRI - Uncontrolled Oil-Fired Boiler Emission Factors (lb/trillion Btu)

Chemical Substance	Sites Tested	Sites Detected	Sample Size	DQ*	Log-Normal		
					Mean	LCI	UCI
2-Methylnaphthalene	11	9	9	A	0.029	0.018	0.047
2-Methylphenol	2	0	0	E		<5.9	<6.5
2-Naphthylamine	2	0	0	E		<5.9	<6.5
2-Nitroaniline	2	0	0	E		<30	<32
2-Nitrophenol	2	0	0	E		<5.9	<6.5
2-Picoline	2	0	0	E		<5.9	<6.5
2,3,4,6-Tetrachlorophenol	2	0	0	E		<12	<13
2,3,7,8-TCDD equivalents	4	3	3	C	0.000008	0.000001	0.00012
2,4-Dichlorophenol	2	0	0	E		<5.9	<6.5
2,4-Dimethylphenol	2	0	0	E		<5.9	<6.5
2,4-Dinitrophenol	2	0	0	E		<30	<32
2,4-Dinitrotoluene	2	0	0	E		<5.9	<6.5
2,4,5-Trichlorophenol	2	0	0	E		<5.9	<6.5
2,4,6-Trichlorophenol	2	0	0	E		<5.9	<6.5
2,6-Dichlorophenol	2	0	0	E		<5.9	<6.5
2,6-Dinitrotoluene	2	0	0	E		<5.9	<6.5
3-Methylcholanthrene	11	0	0	E		0.006	<330
3-Nitroaniline	2	0	0	E		<30	<32
3,3-Dichlorobenzidine	2	0	0	E		<12	<13
4-Aminobiphenyl	2	0	0	E		<5.9	<6.5
4-Bromophenyl phenyl ether	2	0	0	E		<5.9	<6.5
4-Chloro-3-methylphenol	2	0	0	E		<5.9	<6.5
4-Chiorophenyl phenyl ether	2	0	0	E		<5.9	<6.5
4-Methylphenol	2	0	0	E		<5.9	<6.5
4-Nitroaniline	2	0	0	E		<30	<32
4-Nitrophenol	2	0	0	E		<30	<32
4,6-Dinitro-o-cresol	2	0	0	E		<30	<32
6-Nitrobenzo(a)pyrene	2	0	0	E		<0.01	
7,12-Dimethylbenzo(a)anthraecene	11	0	0	E		<0.002	<16
Acenaphthene	18	4	16	C	0.012	0.0052	0.029
Acenaphthylene	18	1	1	D	0.0020		
Acetaldehyde	2	1	2	D	6.6	0.16	270
Acetone	2	0	0	E		<4.9	<19
Acetophenone	2	0	0	E		<5.9	<6.5

849900541

Table I-4 (Continued)

EPRI - Uncontrolled Oil-Fired Boiler Emission Factors (lb/trillion Btu)

Chemical Substance	Sites Tested	Sites Detected	Sample Size	DQ*	Log-Normal		
					Mean	LCI	UCI
Acrolein	2	0	0	E		<10	<12
Aniline	2	0	0	E		<5.9	<6.5
Anthracene	18	2	14	D	0.0044	0.0030	0.0066
Benzaldehyde	2	0	0	E		<16	<20
Benzene	18	11	16	A	1.10	0.80	1.5
Benzoic acid	2	2	2	C	73	2.1	2500
Benzo(a)anthracene	18	3	15	C	0.0094	0.0047	0.019
Benzo(a)pyrene	18	0	0	E		<0.004	<6.5
Benzo(a)pyrene equivalents	18	4	4	B	0.012	0.0005	0.026
Benzo(bj&k)fluoranthene	17	2	14	D	0.0056	0.0037	0.0086
Benzo(g,h,i)perylene	18	2	15	D	0.0068	0.0044	<0.010
Benzyl alcohol	2	0	0	E		<5.9	<6.5
bis(2-Chloroethoxy)methane	2	0	0	E		<5.9	<6.5
bis(2-Chloroethyl)ether	2	0	0	E		<5.9	<6.5
bis(2-Chloroisopropyl)ether	2	0	0	E		<5.9	<6.5
bis(2)-Ethylhexyl)phthalate	2	0	0	E		<5.9	<6.5
Bromodechloromethane	2	0	0	E		<0.49	<1.9
Bromoform	2	0	0	E		<0.48	<0.49
Bromomethane	2	0	0	E		<0.49	<1.9
Butylbenzylphthalate	2	0	0	E		<5.9	<6.5
Carbon disulfide	2	0	0	E		<0.49	<1.9
Carbon tetrachloride	4	0	0	E		<0.48	<1.9
Chlorobenzene	4	0	0	E		<0.34	<0.69
Chloroethane	2	0	0	E		<0.48	<1.9
Chloroform	4	0	0	E		<0.48	<1.9
Chloromethane	2	0	0	E		<0.48	<1.9
Chrysene	18	3	16	C	0.0098	0.0051	0.019
cis-1,2-Dischloroethene	2	0	0	E		<0.49	<1.9
Dibenzofuran	2	0	0	E		<5.9	<6.5
Dibenzo(a,h)anthracene	18	1	12	D	0.0046	0.0031	0.0069
Dibenzo(a,j)acridine	2	0	0	E		<5.9	<6.5
Dibromochloromethane	2	0	0	E		<0.48	<0.49
Dibutylphthalate	2	0	0	E		<5.9	<6.5
Dichloromethane	2	2	2	C	33	9.7	110

849900542

Table I-4 (Continued)

EPRI - Uncontrolled Oil-Fired Boiler Emission Factors (lb/trillion Btu)

Chemical Substance	Sites Tested	Sites Detected	Sample Size	DQ*	Log-Normal		
					Mean	LCI	UCI
Diethylphthalate	2	0	0	E		<5.9	<6.5
Dimethylphenethylamine	2	0	0	E		<5.9	<6.5
Dimethylphthalate	2	0	0	E		<5.9	<6.5
Di-n-octylphthalate	2	0	0	E		<5.9	<6.5
Diphenylamine	2	0	0	E		<5.9	<6.5
Ethyl methanesulfonate	2	0	0	E		<5.9	<6.5
Ethylbenzene	4	2	4	D	0.29	0.19	0.45
Fluoranthene	18	7	16	B	0.014	0.0064	0.030
Fluorene	18	10	16	A	0.012	0.0068	0.022
Formaldehyde	18	12	18	A	18	7.4	43
Indeno (1,2,3,-c,d) pyrene	18	2	15	D	0.0069	0.0046	0.010
Isophorone	2	0	0	E		<5.9	<6.5
Methyl bromide	2	0	0	E		<1.2	<1.7
Methyl chloroform	2	2	2	C	11	0.051	2500
Methyl methanesulfonate	2	0	0	E		<5.9	<6.5
m/p-Xylene	2	2	2	C	1.2	0.73	2.1
Naphthalene	18	14	18	A	0.83	0.30	2.3
Nitrobenzene	2	0	0	E		<5.9	<6.5
N-Nitrosodibutylamine	4	0	0	E		<5.9	<6.5
N-Nitrosodiethylamine	2	0	0	E		<0.04	<0.05
N-Nitrosodimethylamine	4	0	0	E		<0.03	<6.5
N-Nitrosodiphenylamine	2	0	0	E		<5.9	<6.5
N-Nitrosodipropylamine	4	0	0	E		<0.4	<6.5
N-Nitrosomorpholine	2	0	0	E		<0.4	<0.5
N-Nitrosopiperidine	4	0	0	E		<0.04	<6.5
N-Nitrosopyrrolidine	2	0	0	E		<0.04	<0.05
o-Xylene	4	2	4	D	0.35	0.15	0.84
p-Chloroaniline	2	0	0	E		<5.9	<6.5
p-Dimethylaminoazobenzene	2	0	0	E		<5.9	<6.5
Pentachlorobenzene	2	0	0	E		<5.9	<6.5
Pentachloronitrobenzene	2	0	0	E		<5.9	<6.5
Pentachlorophenol	2	0	0	E		<30	<32
Phenacetin	2	0	0	E		<5.9	<6.5
Phenanthrene	18	15	16	A	0.040	0.018	0.092

849900543

Table I-4 (Continued)

EPRI - Uncontrolled Oil-Fired Boiler Emission Factors (lb/trillion Btu)

Chemical Substance	Sites Tested	Sites Detected	Sample Size	DQ*	Log-Normal		
					Mean	LCI	UCI
Phenol	2	2	2	C	10	1.3	83
Pronamide	2	0	0	E		<5.9	<6.5
Pyrene	19	5	15	B	0.012	0.0064	0.024
Pyridine	2	0	0	E		<5.9	<6.5
Styrene	2	0	0	E		<0.48	<0.49
Tetrachloroethylene	4	0	0	E		<0.41	<1
Toluene	11	11	11	A	12	6.0	25
trans-1,2-Dichloroethene	2	0	0	E		<0.49	<1.9
trans-1,2-Dichloropropene	2	0	0	E		<0.49	<1.9
Trichloroethylene	4	0	0	E		<0.49	<1.9
Trichlorofluoromethane	4	3	4	C	1.7	0.23	13
Vinyl acetate	2	0	0	E		<4.9	<19
Vinyl chloride	4	0	0	E		<0.49	<1.9

** Ref; Field Chemical Emissions Monitoring Project: Guidelines for Estimating Trace Substance Emissions from Fossil Fuel Steam ElectricPlants, EPRI - DCN 95-213-152-64, August 1995

*Data quality:

A = Five or more detected values, no more than 50% nondetects in statistics.
B = Four or more detected values, no more than 67% nondetects in statistics.
C = Two or more detected values, no more than 75% in statistics.
D = One or more detected values, no limit on nondetects in statistics.
E = Substance has not been detected.

849900544