PSE&G Public Service Electric and Gas Company

80 Park Plaza, T5C, Newark, NJ 07101

MAILING ADDRESS / P.O. Box 570, Newark, NJ 07101
Telephone No. 201/430-6405
Telecopy No. 201/802-1267

Hugh J. Mahoney General Environmental Counsel

April 22, 1997

Amelia M. Wagner, Esq.
U. S. Environmental Protection Agency
Region II
Office of Regional Counsel, 17th Floor
290 Broadway
New York, New York 10007-1866

Re: Diamond Alkali Superfund Site, Passaic River Study Area

Dear Ms. Wagner:

By letter dated April 30, 1996, the United States Environmental Protection Agency served Public Service Electric and Gas Company ("PSE&G" or "Company") with a Request for Information under 42 U.S.C. Section 9601, et seq. for the Company's former Harrison Gas Plant site. PSE&G provided a response to the Request for Information on August 13, 1996.

The Request for Information provides, in pertinent part, that PSE&G is under a continuing obligation to supplement the Company's response should additional information become available. Consistent with the Company's obligation, please find enclosed a copy of the Focused Remedial Investigation Report for the Harrison site that PSE&G recently filed with the New Jersey Department of Environmental Protection. I have not enclosed but will make available at your request Appendices C and I to this report which contain the soil analytical results package and groundwater analytical results package, respectively. If you require same, kindly advise and I will immediately forward same.

If you have any questions concerning this report or other matters of mutual interest and concern, please do not hesitate to contact me.

Very truly yours,

Hugh J. Mahoney

HJM/rd
Enclosure
rd\c:mydocs\wagner.doc

RECEIVED
APR 25 1997

FOCUSED REMEDIAL INVESTIGATION REPORT

FORMER HARRISON GAS PLANT
HARRISON, NEW JERSEY

Submitted by :

PSEG Public Service Electric and Gas Company

80 Park Plaza, T24C
P.O. Box 570
Newark, New Jersey 07102

Golder Project No. 953-6306 849880002 February 1997

EXHIBIT A

CERTIFICATION
PURSUANT TO N.J.A.C. 7:26C-1.2(c)

Regarding the Focused Remedial Investigation Report dated February 28th 1997, for the Former Harrison Gas Plant located in Harrison, New Jersey:

"I certify under penalty of law that I have personally examined and am familiar with the information submitted herein and all attached documents, and that based on my inquiry of those individuals immediately responsible for obtaining the information, I believe that the submitted information is true, accurate and complete. I am aware that there are significant civil penalties for knowingly submitting false, inaccurate or incomplete information and that I am committing a crime of the fourth degree if I make a written false statement which I do not believe to be true. I am also aware that if I knowingly direct or authorize the violation of any statute, I am personally liable for the penalties."

GOLDER ASSOCIATES INC.

Peter P. Swinick
Typed/Printed Name

Vice President
Title

Signature

2/28/97
Date

Sworn to and subscribed before me on this 28th day of February, 1997.

Debra Lee Cesario
Notary Public - New Jersey

STAMP AND SEAL/COMMISSION EXPIRATION DATE:

DEBRA LEE CESARIO
NOTARY PUBLIC OF NEW JERSEY
My Commission Expires March 18, 1997

849880003

EXHIBIT B

CERTIFICATION

Pursuant to N.J.A.C. 7:26C-1.2(b)

Based on the Certification of Peter P. Swinick of Golder Associates dated February 28, 1997 (attached hereto as Exhibit "A") and information obtained in connection with my status as Project Manager for PSE&G's focused remedial activities at the Former Harrison Gas Plant site located in Harrison, New Jersey:

"I certify, under penalty of law, that the information provided in the Focused Remedial Investigation Report dated February 28, 1997, is true, accurate and complete. I am aware that there are significant civil penalties for knowingly submitting false, inaccurate, or incomplete information, and that I am committing a crime of the fourth degree if I make a written false statement that I do not believe to be true. I am also aware that, if I knowingly direct or authorize the violation of any statute, I am personally liable for the penalties."

PUBLIC SERVICE ELECTRIC AND GAS COMPANY

Warren Straubmuller — Project Manager - Environmental, Health & Safety

Typed/Printed Name — Title

Warren Straubmuller — 3/3/97

Signature — Date

Sworn to and subscribed before me on this 3 day of March 1997.

Marilyn G. Romano

Signature of Notary Public

(Stamp and Seal/Commission Expiration Date)

MARILYN G. ROMANO

NOTARY PUBLIC OF NEW JERSEY

Commission Expires 10/11/2001

849880004

EXHIBIT C

CERTIFICATION

Pursuant to N.J.A.C. 7:26C-1.2(c)

Regarding the Focused Remedial Investigation Report dated February 28, 1997 for the Former Harrison Gas Plant site located in Harrison, New Jersey:

"I certify, under penalty of law, that I have personally examined and am familiar with the information submitted herein and all attached documents, and that based on my inquiry of those individuals immediately responsible for obtaining the information, I believe that the submitted information is true, accurate and complete. I am aware that there are significant civil penalties for knowingly submitting false, inaccurate, or incomplete information, and that I am committing a crime of the fourth degree if I make a written false statement that I do not believe to be true. I am also aware that, if I knowingly direct or authorize the violation of any statute, I am personally liable for the penalties."

PUBLIC SERVICE ELECTRIC AND GAS COMPANY

Stanley LaBruna	Vice President - Environmental, Health & Safety
Typed/Printed Name	Title
S. LaBruna	3/4/97
Signature	Date

Sworn to and subscribed before me on this 4 day of March 1997.

Marilyn G. Romano

Signature of Notary Public
(Stamp and Seal/Commission Expiration Date)

MARILYN G. ROMANO
NOTARY PUBLIC OF NEW JERSEY
Commission Expires 10/11/2001

TABLE OF CONTENTS

Cover Letter

Table of Contents i

SECTION PAGE

1.0 INTRODUCTION 1
1.1 Project Background 1
1.2 Project Objectives 1
1.3 Report Organization 2

2.0 BACKGROUND 4
2.1 Site Description 4
2.2 Site Operational History 4
2.3 Current Site Use 5
2.4 Regional Geology 5
2.5 Regional Hydrogeology 8

3.0 DESCRIPTION OF FRI ACTIVITIES 10
3.1 Utility Markouts/GPR Survey 11
3.2 In-Situ Vane Shear Tests 11
3.3 Test Pits 12
3.4 Cone Penetrometer Tests 13
3.5 Soil Borings 13
3.6 Piezometers 15
3.7 Groundwater Level Measurements 16
3.8 Groundwater Monitoring Wells 17
3.9 Groundwater Sampling 18
3.10 Slug Tests 19
3.11 Pumping Tests 20
3.12 Site Survey 20
3.13 Decontamination and Residuals Management 20
3.14 Waste Characterization Sampling 22
3.15 Laboratory Analytical Program 22
3.16 Groundwater Modeling 23

4.0 SUMMARY OF FRI FINDINGS 24
4.1 In-Situ Vane Shear Tests 24
4.2 Test Pits 24
4.3 Cone Penetrometer Tests 25
4.4 Soil Borings and Soil Sampling 26
4.5 Water Level Measurements 28
4.6 Groundwater Sampling 32

TABLE OF CONTENTS (cont'd)

SECTION PAGE

4.7 Slug Tests 32
4.8 Pumping Tests 33
4.9 Laboratory Analytical Program 36
4.10 Groundwater Modeling 36

5.0 CONCLUSIONS 40
5.1 Site Geology 40
5.1.1 Fill Material Unit 40
5.1.2 Intertidal Channel Deposits Unit 40
5.1.3 Meadow Mat Unit 41
5.1.4 Glacial Deposits Unit 41
5.2 Site Hydrogeology 42
5.2.1 Groundwater and Hydraulic Gradients 42
5.2.2 Hydraulic Conductivities and Flow Velocities 43
5.2.3 Groundwater Flux Rates 44
5.2.4 Tidal Influences 44
5.3 Contaminant Distribution 44
5.4 Site Conceptual Model 45
5.5 Project Objectives 46

6.0 RECOMMENDATIONS 48

7.0 REFERENCES 50

In Order Following Page 51

LIST OF TABLES

Table 1 Vane Shear Testing Results
Table 2 Soil Sample Depth Intervals
Table 3 Sample Information
Table 4 Summary of Soil Detections
Table 5 Static Groundwater Level Data
Table 6 Stratigraphic Data
Table 7 Summary of Groundwater Detections
Table 8 Aquifer Testing Results
Table 9 Calculation of Vertical Flow Velocities

TABLE OF CONTENTS (cont'd)

LIST OF FIGURES

Figure 1	Site Location Plan
Figure 2	Base Map
Figure 3	Exceedances of the NJDEP Soil Cleanup Criteria
Figure 4	Potentiometric Surface Map - Fill Material - High Tide
Figure 5	Potentiometric Surface Map - Fill Material - Low Tide
Figure 6	Potentiometric Surface Map - Glacial Deposits - High Tide
Figure 7	Potentiometric Surface Map - Glacial Deposits - Low Tide
Figure 8	Structure Map - Top of Meadow Mat Unit
Figure 9	Long-Term Water Level Measurements - Glacial Deposits
Figure 10	Long-Term Water Level Measurements - Fill Material
Figure 11	Exceedances of the NJDEP Ground Water Quality Standards
Figure 12	Cross Section A-A'
Figure 13	Cross-Section B-B'
Figure 14	Conceptual Hydrogeological Conditions

LIST OF APPENDICES

Appendix A	Pertinent Correspondence
Appendix B	Boring Logs, Well Construction Logs, Sample Collection Forms, CPT Logs, Test Pit Logs
Appendix C	Soil Analytical Results Package
Appendix D	Geotechnical Laboratory Testing Results
Appendix E	NJDEP Forms (Form As, Form Bs, Contour Map Reporting Forms)
Appendix F	Continuous Water Level Measurement Data
Appendix G	Aquifer Testing Procedures
Appendix H	Waste Characterization Analytical Results Package
Appendix I	Groundwater Analytical Results Package

1.0 INTRODUCTION

1.1 Project Background

On May 23, 1994, Public Service Electric & Gas Company (PSE&G) reported a potential release of an oily substance allegedly from the former Harrison Gas Plant site (Site) located in Harrison, New Jersey into the adjacent Passaic River to the New Jersey Department of Environmental Protection (NJDEP) and the United States Coast Guard (USCG). PSE&G subsequently implemented interim mitigative measures (IMM) to contain and collect any potential release from the Site. By letter dated May 30, 1994, the USCG directed PSE&G, among other things, to investigate and, if warranted, implement remedial measures to prevent the potential release of oily materials from the Site to the river. PSE&G entered into a Memorandum of Agreement (MOA) dated July 7, 1994, with the NJDEP to resolve environmental concerns related to the Site including potential releases from the Site to the Passaic River.

PSE&G subsequently retained Golder Associates Inc. (Golder) to conduct a Focused Remedial Investigation (FRI) at the Site to identify an interim remedial action (IRA) to minimize hydraulic communication between the Site and the Passaic River.

This FRI Report (Report) presents the findings, the data and information collected to mitigate the potential of any oil substances from the Site in the context of the FRI. This Report has been prepared in accordance with the NJDEP-approved *Remedial Investigation Work Plan for the Development of an Interim Remedial Action, Harrison Gas Plant Site, Harrison, New Jersey* (FRI Work Plan) (Golder, 1996) and Field Changes 1, 2, and 3 approved by the NJDEP (Appendix A). The FRI Work Plan was prepared pursuant to and in accordance with the NJDEP's *Technical Requirements for Site Remediation* (N.J.A.C. 7:26E-1, et seq.) and the NJDEP's *Field Sampling Procedures Manual* (NJDEP, 1992).

1.2 Project Objectives

The objectives of the FRI were to identify potential IRAs at the Site which would minimize hydraulic communication between the Site and the adjacent Passaic River (the IRA Program). The specific objectives of the FRI, as described in the approved FRI Work Plan, were to:

- Determine the general stratigraphy and physical and hydrogeological characteristics of the subsurface soils at the Site above a regional confining layer which reportedly occurs at depths ranging between 30 feet to 60 feet below ground surface (bgs);
- Obtain data needed to determine the engineering and hydrogeological properties of the subsurface soils above the regional confining layer and to assess groundwater movement and potential presence of manufactured gas plant (MGP) residuals within the soil strata;
- Investigate engineering properties of the subsurface that could significantly influence the interim remedial action; and,
- Collect hydrogeological data needed to understand the nature of groundwater flow near the Passaic River, including the extent of tidal influence.

The FRI was not designed to fully investigate and delineate environmental conditions at the Site. A Remedial Investigation Work Plan is presently being developed for submission to the NJDEP to address this issue.

As further described in the following sections, the data collected during the FRI satisfies the specific objectives set forth above, but failed to identify the source for any alleged oily discharge to the river. Further delineation of the Site will be required and is recommended in the form of a remedial investigation (RI) pursuant to the NJDEP Technical Requirements for Site Remediation (N.J.A.C. 7:26E). RI data will be used not only to develop site-wide remedial actions (RAs), as appropriate, but also to determine the Site source, if any, of any oily discharge to the Passaic River emanating from the Site. Absorbent booms, as appropriate, will continue to be deployed in the river along the Site until the RI has been completed and RAs, if any, have been agreed upon and implemented.

1.3 Report Organization

This Report presents conclusions based on evaluations and interpretations of data collected during the field program, including an assessment of hydrogeologic and engineering data to provide a comprehensive understanding of Site conditions, an evaluation of potential controls, and a description of the conceptual remedial design. This Report addresses the following:

- Summary of FRI explorations and sampling;
- Site characterization;

- Results of field observations and laboratory analyses;
- Data assessment;
- Engineering assessment; and,
- Recommendation for additional environmental studies at the Site.

This Report is organized as follows:

- Section 2.0 presents background information including a general description of the Site, a summary of the Site history, current use, and regional geologic/hydrogeologicsetting;
- Section 3.0 describes the FRI activities conducted at the Site;
- Section 4.0 summarizes the findings of specific FRI activities;
- Section 5.0 discusses the conclusions reached regarding Site geology, hydrogeology, contaminant distribution, site conceptual model, and the engineering assessment of the IRA based on the FRI Program;
- Section 6.0 presents recommendations; and,
- Section 7.0 presents the literature references used in the Report.

2.0 BACKGROUND

2.1 Site Description

The former Harrison Gas Plant is located at 2000 Frank E. Rodgers Boulevard (formerly South Fourth Street) in the Town of Harrison, Hudson County, New Jersey (Figure 1). The Site presently consists of a single parcel of land approximately 30 acres in area which is generally triangular in shape. The Site is bounded on the east by Frank E. Rodgers Boulevard, on the south/southwest by the Passaic River and on the west/northwest by the Conrail/Amtrak railroad right-of-way (Figure 2). The southwestern boundary consists of approximately 1600 feet of shoreline; the eastern two-thirds of which has been reinforced through the construction of wood and concrete bulkhead structures. The Site, which has been in use since the early 1900's, was developed over an area which formerly included meadow mat and tidal channels.

2.2 Site Operational History

The Site was generally acquired by separate transactions over a period from 1884 through 1924 by the Newark Consolidated Gas Company (Newark Gas), who originally owned the Site. Newark Gas leased its plant properties and franchises to the United Gas Improvement Company in 1898 which assigned the lease that same year to the Essex and Hudson Gas Company. Public Service Corporation of New Jersey acquired in 1903 by lease of the plant, property and franchises of the Essex and Hudson Gas Company, which included the Site. The Essex and Hudson Gas Company and Newark Gas Company merged with and into PSE&G in 1939.

Commencing in 1902 through approximately 1926, the Site was a satellite facility utilized solely for the storage of raw materials and manufactured gas. Available information suggests that this was the first industrial operation conducted at the Site. Between 1924 and 1926, a gas manufacturing facility was constructed on the Site which commenced operation in October 1926. The Site was converted to peak shaving status in 1965. Gas manufacturing operations generally ceased in 1987. Gas manufacturing equipment was removed from the Site beginning in 1988 and completed in 1996.

2.3 Current Site Use

The Site presently contains a major PSE&G natural gas metering and regulating (M&R) facility. The Site is also used as a headquarters for a portion of PSE&G's Gas Distribution Department. Plant and equipment associated with the active M&R station to receive, and distribute natural gas supplies to PSE&G's customers remain in place at the Site. Two active underground 30-inch diameter gas distribution mains serving the Newark area are located at the Site. A 60-inch diameter storm sewer traverses the eastern boundary of the Site parallel to Frank E. Rodgers Boulevard and discharges into the Passaic River at the southeastern corner of the property. The Site is also serviced by a sanitary sewer that connects an on-site pre-treatment facility to the municipal sewer and Publicly Owned Treatment Works (POTW).

2.4 Regional Geology

The Site is located north of a wide meander of the Passaic River as it flows from the hills of the western margin of the Piedmont Lowland Physiographic Province and enters the broad Hackensack valley. The nearby Hackensack River flows in a broad, tidally influenced lowland bounded by prominent northwest-southwest trending bedrock ridges formed by the resistant sandy-siltstone and sandstone facies of the Passaic Formation in the west (beneath Kearny, Harrison, Newark and East Orange), and the Palisades sill in the east overlooking the Hudson River (beneath Jersey City and Elizabeth). The lower reaches of the Hackensack River and Passaic River and their tributaries drain this lowland which in turn is underlain by the less resistant sandy-siltstone and mudstone facies of the Passaic Formation of the Newark basin (Parker, 1993).

The stratigraphic sequence in the Piedmont Lowland Physiographic Province can be subdivided from the youngest to the oldest geologic units (based on Stanford, et al., 1994) as follows:

Unconsolidated Deposits

- Intertidal and Recent Fluvial Deposits: consisting of fluvial and estuarine sands, silts, clays and gravels overlain by the intertidal silts, clays, salt marsh and meadow-mat deposits;
- Glacial Deposits: consisting of stratified glaciolacustrine silts, silty clays and clays, often varved (include the older Glacial Lake Bayonne and younger, Glacial Lake

Hackensack deposits), and outwash sands, silts and gravels; the stratified deposits generally overlie unstratified deposits which include glacial till (Rahway Till) and pro-glacial fan-delta deposits; and,

- Pre-glacial Deposits: consisting of sands, gravels and silts infilling buried bedrock valleys carved by the pre-glacial, ancestral Passaic and Hackensack rivers;

Consolidated Deposits:

- Bedrock: consisting of bedded sandstones, siltstones, and conglomerates, interbedded with basalt lava flows and sills of the Newark Basin.

Bedrock in this portion of Hudson County is concealed beneath unconsolidated deposits related to the Wisconsinan stage of continental glaciation which reached its maximum extent approximately 20,000 years ago during the Pleistocene Epoch (Stanford, 1993, Averill et al., 1980). The terminal Wisconsinan moraine, which was located south of the Site in Monmouth County, has influenced the development of the geologic conditions underlying the Site area. The dominant red and brown colors of these unconsolidated sediments reflects their derivation from local bedrock which consists of the Watchung and Orange Mountain lavas, the Palisades sill, and the red-colored sedimentary strata of the Newark Basin (Barksdale et. al., 1943).

Pre-glacial stream drainage was generally to the north and northeast. The stream valleys of the ancestral, pre-glacial Passaic, Hackensack and tributary streams (the Kennilworth-Newark buried bedrock valley) were modified by glacial erosion and deposition, and locally blocked as the glaciers advanced southward, forming large pro-glacial lakes which included Glacial Lake Hackensack in the Site area. The Kennilworth buried valley, which directly underlies the Site was scoured down to a depth of 250 feet below mean sea level (MSL). The bedrock surface rises up from the axis of this buried valley (Parillo, 1959; Stanford and others, 1995, Stanford, 1993) to an elevation of 10 feet above MSL approximately 1000 feet east of the Site. The bedrock surface is believed to rise to an elevation of about -60 feet MSL in the western portion of the Site, and in the eastern part, adjacent to the Palisades ridge, it underlies the Overpeck buried valley (the ancestral Hackensack drainage course) which is scoured down to a depth of -200 feet MSL.

Two different lake levels have been recognized within the confines of the Hackensack valley; Glacial Lake Bayonne and Glacial Lake Hackensack. Glacial Lake Bayonne formed first. The

glaciolacustrine sediments of this phase consist of yellow, reddish-brown, and gray, varved siltstones and silty clays. Glacial Lake Hackensack formed about 15,000 years ago impounded behind the terminal moraine in Monmouth County. The sediments of Lake Hackensack consist of reddish-brown, reddish-yellow, and gray, varved silts, silty-clays and clays. These are the unconsolidated sediments intercepted during the FRI at the Site (see Section 5.1). Along the margins of these lakes, such as in the vicinity of the Site, coarser grained silts, sands, gravels and occasional boulders were shed into the varved sediments from the surrounding ridges and dropped by floating icebergs. Thus, along these lake margins, the fine-grained silts and clays (varved deposits of glaciolacustrine origin) deposits are interlayered with coarser-grained sands, and gravels of fan and delta deposits. Glacial Lake Hackensack drained into the Atlantic Ocean about 10,000 years ago when the terminal moraine was breached, leaving behind a vast featureless lowland (Stanford et. al, 1995; Stanford., 1993). The lake deposits of glacial Lake Hackensack have been pit-mined locally in the site area.

Approximately 4000 years ago, rising sea level converted the lowlands into a vast salt marsh and tidal-flat, drained by the Passaic, Hackensack and Rahway rivers. In the area of the Site, the lowland may be considered to be the southernmost part of the present day Hackensack Meadowlands (Stanford et al. 1995, Averill et al., 1980; USEPA, 1995) drained by the Passaic River, Hackensack River and their tributaries. These rivers drain south into the Newark Bay. They are all tidally influenced and thus have incised their channels into the underlying geologic units to as much as -20 feet MSL.

The youngest deposits that cover most of the surficial area of the Hackensack Meadowlands and surroundings consist of a mix of natural and reclaimed, man-made land. Much of the present topography of the lower reaches of the Passaic River and Hackensack Valley has been modified by extensive industrialization, landfilling and reclamation, and is crossed by major roadways such as the New Jersey Turnpike (USEPA, 1995). The extent of this development is seen in the varying thickness and composition of the man-made fill overlying the area which can be as much as 40 feet thick.

2.5 Regional Hydrogeology

Groundwater in the Site area is typically obtained from either the unconsolidated deposits or the underlying bedrock. The unconsolidated deposits consist of both Recent and Holocene age fluvial deposits, and the underlying glacial deposits. Bedrock aquifers are generally confined to varying degrees by the overlying mantle of unconsolidated deposits.

Unconsolidated Deposits

The fluvial deposits and glacial deposits form unconfined, semi-confined, and locally confined aquifers. The glacial deposits are typically classified as stratified or unstratified deposits, and locally form productive aquifers. The glacial deposits typically consist of boulders, gravel, sand, silt, and clay largely derived from the local bedrock. Glacial tills mantle the bedrock surface and, where present, are highly consolidated and therefore may act as confining beds to the underlying bedrock. In deeper portions of the glacially scoured bedrock, such as in buried bedrock valleys, the glacial aquifers occur in the outwash or pre-glacial valley fill fluvial deposits The stratified glacial deposits consist of silts and moderately- to well-sorted sands and gravels, having been transported by glacial meltwater streams. Locally in the Newark area and in the Passaic River basin, the glacial outwash and pre-glacial deposits are referred to as the "water-bearing gravels" or "brownstone gravels" (Parillo, 1959).

Overlying these gravels are the stratified glaciolacustrine sediments consisting of laminated (varved) clays, silts, very fine-grained sands and occasional gravels. These sediments may act as regional confining layer. Sand and gravel deposited as deltas and fans in the glacial lakes stratigraphically above the glaciolacustrine deposits may locally form large, surficial, unconfined glacial aquifers. Within these glacial aquifers, overbank flood plain and intertidal silts and clays may locally act as confining layers.

The surficial aquifers produce substantial quantities of water, although by the early portion of the 20th century most of the production was curtailed due to degradation in water quality (Nichols, 1968; Herpers and Barksdale, 1951; Serfes, 1994; USEPA, 1995). At the present time, only aquifers in confined portions of the glacial aquifers and those in the bedrock serve as principal sources of water due to salt water incursion into the surficial unconfined aquifers. Post-glacial fluvial deposits consisting of silts, sands and gravels deposited by the modern day rivers are

locally used as sources of groundwater, however intensive industrialization (including the installation of piles, utilities, or other structures through the overlying confining layers and discharges of hazardous materials) and salt water incursion tends to limit the use of such aquifers.

The groundwater present beneath the glaciolacustrine deposits is generally under confined conditions, with hydraulic heads as much as 10 ft. to 40 ft. above present ground surface in historical times. However, extensive modern day groundwater pumping from these confined aquifers has significantly changed the hydraulic heads and flow directions in many areas.

Bedrock

The extent and thickness of discrete water-producing beds within the bedrock aquifer is generally controlled by secondary porosity formed by joints, bedding planes and various other fractures. The hydraulic properties of the bedrock aquifers have been described in detail by Herpers and Barksdale (1951). Extensive development of groundwater resources in the bedrock aquifers have modified the directions and gradients for groundwater flow, and have also resulted in significant incursions of saline waters from the Newark Bay and local rivers. The potentiometric head level for the bedrock aquifer typically is between -10 ft. and -50 ft. MSL, depending upon the elevation of the bedrock-to-unconsolidated overburden interface.

3.0 DESCRIPTION OF FRI ACTIVITIES

The work activities associated with the FRI Work Plan and approved Field Change Notifications 1, 2, and 3 consisted of the following:

- markout of underground utilities:
- conduct a ground penetrating radar (GPR) survey;
- performance of in-situ vane shear tests;
- excavation, examination, logging of information from test pits;
- cone penetrometer testing;
- drilling of soil borings;
- installation of piezometers;
- measurement of groundwater and surface water levels;
- installation of groundwater monitoring wells;
- collection of groundwater and soil samples;
- completion of slug tests;
- completion of pumping tests;
- land survey of field activity locations;
- laboratory analysis of groundwater and soil samples;
- characterization of drill cuttings and decontamination water for disposal options; and,
- groundwater modeling.

All work activities were conducted in accordance with the FRI Work Plan, including the Quality Assurance Project Plan (QAPP, Appendix A of the FRI Work Plan) and the Health and Safety Plan (HASP, Appendix B of the FRI Work Plan)and NJDEP-approved supplemental activities (see Appendix A of this Report). The objectives of the activities and procedures used to complete them are described below. Results of the activities are discussed in Section 4.0.

3.1 Utility Markout/GPR Survey

Underground utility locations were marked out prior to intrusive work to avoid damage to the extensive network of subsurface water, steam, electric, telephone, sewer and gas transmission and distribution facilities. A GPR and magnetometer survey was conducted between May 10 and 13, 1996 to assist in locating subsurface structures/facilities. GPR data were depth calibrated by running over a pipe of known depth. A 20 ft. x 20 ft. (minimum) grid was then laid out at each proposed intrusive testing site. A 120 MHz GPR antenna was then towed across each testing site in at least two sets of parallel lines. GPR penetration was generally limited to 2 to 5 feet due to field conditions. If an object was detected, the proposed test location was moved to one of the parallel lines and more GPR lines were run until all proposed test locations (i.e., soil boring, test pits, piezometer, CPTs) for the Site were located in a 'clear' area.

Radiodetection and magnetometer methods were then used at each proposed test location to determine the nature of objects detected by the GPR and/or to locate some targets not detectable by the GPR. The magnetometer identified large surface metal objects such as a chain link fence and several buried ferrous objects. Any locations where the objects could not be identified as surface metal were relocated. Revised test locations were then staked for subsequent use.

3.2 In-Situ Vane Shear Testing

In-situ vane shear testing was conducted between May 13 and 15, 1996 to determine the strength characteristics of the sediments outboard (river side) of the existing bulkhead for consideration in the possible design of an IRA near the bulkhead. In addition to the vane shear testing, field measurements of undrained shear strength using a pocket penetrometer were made on samples of cohesive materials (e.g., organic silt, peat, and clays) when encountered in the borings. The locations of the completed vane shear tests are shown on Figure 2.

The tests were performed at various depth intervals in three (3) boreholes (GV-1, GV-2, and GV-3) located along the existing bulkhead using a 2.5 inch diameter Sprague and Henwood, Inc. vane. Vane shear tests were performed by Uni-Tech Drilling Inc. (Uni-Tech), of Malaga, NJ using a B-53 Mobil drill rig backed up to the bulkhead and drilling outboard of the bulkhead. To facilitate drilling over the water, an 8 ft. x 8 ft. steel platform was attached to the drill rig as a

working platform. The vane shear tests were advanced within 4-inch-diameter flush casing until the underlying silty sand riverbed soils were encountered.

The depths of each vane shear test are summarized on Table 1 and shown in the boring logs for boreholes GV-1, GV-2, and GV-3 (see Appendix B). In addition, several Shelby tubes and split-spoon samples were collected at these borings to collect undisturbed sediment samples of the river sediments. The depths of the Shelby tubes and split-spoon samples are also shown on the boring logs.

3.3 Test Pits

A test pit survey was conducted on May 26, 1996 to determine shallow subsurface soil conditions at specific areas of the Site where former intertidal channels were believed to have been filled and to determine the structural integrity of the existing bulkhead structures. The former intertidal channels could affect both the rate and direction of groundwater flow in localized areas of the Site, and therefore their locations could be important for the design of an IRA. The location and integrity of the buried portion of the bulkhead could also be important consideration in the design of the IRA. The locations of the completed test pits are shown on Figure 2.

A total of five (5) test pits were excavated by Uni-Tech using a Caterpillar 416B Turbo backhoe. Prior to excavating each test pit and prior to leaving the Site the backhoe was steam cleaned at the Site decontamination pad. Excavations approximately 2 ft. wide x 8 ft. long were made down to the water table or to refusal, whichever was shallower. Excavated soils were temporarily staged on plastic liner adjacent to each pit. Immediately upon removal from the excavation, each backhoe bucket of soil removed was screened with a photo-ionization detector (PID) for the presence of volatile organic compounds (VOCs). The soils were then classified and visually examined for any evidence of contamination. All observations were noted on the test pit logs (Appendix B). Samples were collected where PID readings or visual observations indicated the potential presence of contamination. Where field observations did not indicate the potential presence of contamination, a soil sample was collected from the six-inch interval above the water table.

Each test pit was photographed prior to backfilling. Backfilling was accomplished by replacing the materials excavated from the pit in the order that they were removed, with the deepest materials being backfilled first.

3.4 Cone Penetrometer Tests

Cone penetrometer tests (CPTs) were conducted to provide information regarding subsurface stratigraphy or other significant geologic features that may affect groundwater movement at the Site. A total of 16 CPTs (CPT-1 through CPT-16) were proposed in the FRI Work Plan, however this number was subsequently reduced to nine locations along the Site bulkhead (CPT-1 through CPT-9) following discussions and approval from NJDEP (see Appendix A). The locations of the CPT boreholes are shown on Figure 2.

The CPTs were performed between July 12 and 16, 1996 by ConeTec, Inc. (ConeTec) of Warren, NJ. CPT probes were equipped with tip pressure, sleeve resistance, resistivity, and pore pressure sensors to gather physical and chemical data in the subsurface. Where necessary, 4¼ inch diameter hollow stem augers (HSAs) were advanced through the surficial fill material to facilitate CPT penetration. CPT boreholes were advanced until subsurface conditions prevented further penetration. Dense sands/silty sands at the Site limited the maximum penetration of the CPT explorations to 50 ft. bgs and thus were not able to be advanced to the top of the "confining unit" (present at a depth of approximately 70 feet bgs). Upon completion of the tests, each borehole was grouted to the ground surface with a cement/bentonite mixture. Data collected from the CPTs were recorded on the CPT logs which are presented in Appendix B.

3.5 Soil Borings

A total of four (4) soil borings (B-1 through B-4) were drilled to collect geological, geotechnical and chemical information. The locations of the completed soil borings are shown on Figure 2. The soil borings were conducted between May 21 and June 4, 1996 by Uni-Tech. Soil borings B-1 through B-3 were drilled along the river near the bulkhead. Soil boring B-4 was drilled at the northern corner of the Site. The soil borings were completed as deep piezometers screened in the underlying native soil. Descriptions of the piezometer installations are provided in the following section.

The soil borings were drilled with a CME-85 drill rig using 4¼-inch inside diameter (ID)/6¼-inch outside diameter (OD) HSAs to depths between 48 feet and 88 feet bgs, depending upon where the regional confining layer was interpreted to have been intercepted. Prior to drilling each boring, the

drill rig, augers, and drilling and sampling tools were steam-cleaned at the Site decontamination pad.

Subsurface soil samples were collected continuously using a 2-inch OD split-spoon sampler driven in accordance with ASTM D-1586. Prior to the collection of each sample, split-spoons and sampling equipment were field-decontaminated according to the procedures outlined in the 1992 NJDEP Field Sampling Procedures Manual. Soil samples from each of the four soil borings were submitted for both chemical laboratory analyses and geotechnical laboratory testing, as described below. Three (3) inch OD Shelby tube samples of organic silt/peat and/or silty clay strata were also collected and submitted to the geotechnical laboratory for permeability and consolidation testing. Soil boring logs were prepared for each boring and are included in Appendix B.

Chemical Laboratory Testing

A total of 10 soil samples were collected and submitted for chemical laboratory analyses from the four (4) soil borings. Soil samples were collected from the six (6) inch interval immediately above the water table and from the six (6) inch interval above the regional confining layer at 65 ft. bgs near the bottom of each soil boring. A third soil sample was collected and submitted for laboratory analyses if visual or instrumental evidence of contamination was encountered in split-spoon samples collected from the soil boring. Additionally, quality assurance/ quality control (QA/QC) samples consisting of field blanks, blind field duplicates and matrix spike/matrix spike duplicate (MS/MSD) were also collected.

All samples submitted for laboratory analyses were analyzed for the following;

- VOCs;
- Semi-Volatile Organic Compounds (SVOCs);
- Target Analyte List (TAL) metals; and
- Total Petroleum Hydrocarbons (TPH).

Complete chemical laboratory testing results for soils are included in Appendix C.

Geotechnical Laboratory Testing

Laboratory tests were conducted on subsurface soils to allow initial quantification of the index and engineering properties of soils underlying the Site:

- Grain Size Distribution Analyses (ASTM D-422/D-2216) were conducted on split-spoon samples and Shelby tube samples of major soil units encountered to confirm visual descriptions and provide quantitative insight on permeability and other soil properties. A total of three (3) grain size distribution analyses were completed;

- Triaxial Permeability Tests (ASTM D-5084-90) were run on specimens from Shelby tube samples of cohesive soils encountered. A total of two (2) triaxial permeability tests were conducted, one (1) on the near surface soft silty clay unit (meadow mat) and one (1) on the clayey portion of the marsh deposit directly underlying the meadow mat; and

- Consolidation Tests (ASTM D-4767) were run on specimens from Shelby tube samples of cohesive soils. A total of two (2) consolidation tests were conducted on samples from the meadow mat.

Geotechnical laboratory testing results are included in Appendix D.

3.6 Piezometers

A total of 24 piezometers were installed during the FRI to collect data on groundwater flow directions and groundwater communication with the adjacent Passaic River. Twenty (20) piezometers were completed as shallow/deep pairs. The locations of the completed piezometers are shown on Figure 2. The piezometers were installed by Uni-Tech using 4¼-inch ID/6¼-inch OD HSA drilling methods. The proposed scope of work for the installation of the piezometers was modified to include the collection of split-spoon samples during drilling to help determine appropriate screen intervals (see Appendix A).

The deep piezometers, designated by the suffix "A", were constructed to provide data from groundwater in the native soils underlying the fill ("glacial deposits", see Section 5.1.4). The shallow piezometers, designated by the suffix "B", were screened in the fill material (, see Section 5.1.1) to provide data on shallow groundwater. At each piezometer pair location, continuous split-spoon sampling was performed only in the deeper piezometer borehole down to the top of the silty clay unit underlying the fill material ("meadow mat", see Section 5.1.3). Once the meadow mat was encountered, split-spoon sampling continued on five foot intervals down to the completion depth. Single deep piezometers were sampled on five foot centers for the entire depth.

All piezometers were constructed in accordance with NJDEP *Field Sampling Procedures Manual* (NJDEP, 1992) using two (2) inch ID schedule 40 polyvinyl chloride (PVC) pipe and a 0.01 inch machine slot screen. All deep piezometers were constructed with 5-foot screens. The bottom of fill unit was encountered at depths ranging from 3.5 to 13.5 ft. bgs. Consequently, the screen length in many of the shallow piezometers screened in this unit was shortened to allow for the placement of a surface seal above the screened interval. As a result, the shallow piezometers were constructed with screen lengths ranging from 2 to 5 feet.

A washed silica sandpack was installed in the annulus between the borehole wall and screen. The sandpack was extended a minimum of one (1) foot above the top of the screen. 00 Lot silica filter sand was installed above the sandpack and the remaining borehole annulus was backfilled with bentonite-cement grout installed via a tremie pipe. The piezometers were secured against tampering by a locking protective casing or a locking flushmount box. Subsequent to installation, all piezometers were developed to help ensure a good hydraulic connection within the screened interval to help obtain accurate water level information. Drill cutting and development water management procedures used during piezometer installation are outlined in Section 3.13.

Boring logs, installation logs, NJDEP Form A (Groundwater Monitoring Well Certification) and Form B (Location Certification) for the piezometers are included in Appendix E.

3.7 Groundwater Level Measurements

Synoptic ("instantaneous") and continuous ("long-term") groundwater level measurements were collected from all piezometers to assess variations in groundwater levels and to evaluate tidal influences at the Site.

Synoptic groundwater level measurements were collected from all piezometers using a Solinst electronic water level meter on June 24 and July 18, 1996. The water level meter was field-decontaminated prior to each use by rinsing the probe with distilled water. Measurements to the depth of water were made in each piezometer to the nearest 0.01 foot relative to a survey mark at the top of the inner casing. This measurement was converted to a water level elevation based upon the surveyed elevation of the inner casing. Measurements of the river elevation were also made to

the nearest 0.01 foot during the groundwater level measurement rounds. This was accomplished by measuring the depth to the river level using a steel tape at 2 staff gauges installed during the FRI, SG-1 located at the SE corner of the Site and SG-2 located at the SW corner of the Site (see Figure 2). The SG-1 and SG-2 locations were subsequently surveyed and depth to water measurements were converted to elevations.

During the second round of the synoptic groundwater level measurements, a field-decontaminated oil-water interface probe was used to determine the presence of free product, both light non-aqueous phase liquids (LNAPLs) and dense non-aqueous phase liquids (DNAPLs). Results are discussed in Section 4.5.

In addition to the synoptic measurements, continuous water level measurements were collected from a total of nine (9) piezometers for a duration of 7 days between July 19 and July 27, 1996 using In-Situ TROLL® pressure transducers and data loggers. The pressure transducers and data loggers were field decontaminated and installed below the water table in five (5) shallow piezometers (PZ 1B, PZ 5B, PZ 6B, PZ 10B, and PZ 13B) and four (4) deep piezometers (PZ 1A, PZ 5A, PZ 7A, PZ 13A). Additionally, one (1) pressure transducer and data logger was placed next to the staff gauge in the Passaic River to monitor river level fluctuations (SG-1). The depth to water was manually confirmed at each location with an electronic water level meter before installing and removing the equipment. Water level information was collected at 30 minute intervals for the duration of the seven day period. Results from the continuous water level measurements are presented in Appendix F.

3.8 Groundwater Monitoring Wells

Five (5) groundwater monitoring wells (MW-1 through MW-5) were proposed to help determine groundwater quality and groundwater flow direction at the Site. It was determined that several of the newly installed piezometers were suitably located to be used as monitoring points for groundwater sampling and groundwater level measurements in lieu of the proposed monitoring wells. Piezometers PZ-1B, PZ-4B, PZ-5B, PZ-10B, and PZ-13B were used for the collection of five (5) groundwater samples from groundwater in the fill material, and piezometers PZ-1A and PZ-7A were used for the collection of two (2) groundwater samples from the glacial deposits.

3.9 Groundwater Sampling

Groundwater samples were collected on July 25, 1996 to determine groundwater quality at the Site. Samples were collected from five (5) piezometers screened in the fill material and two (2) piezometers screened in the glacial deposits as described above. The groundwater sampling program at the Site consisted of determining the casing volume, purging, and sampling the wells. These procedures are described below.

Casing volume was determined by measuring the water level in each well (piezometer) and utilizing well construction data to calculate the volume of standing water in the well. The depth to the bottom of the wells was determined to confirm the construction details.

To obtain a representative water sample from the screened unit, each well was purged prior to sampling with a disposable Teflon bottom-filling bailer. The field parameters of pH, specific conductance, and temperature were measured and recorded prior to purging the well and after each well volume purged. Sampling was not performed until at least three well volumes were purged, and the last two measurements of (2) field parameters were within ±10%. All purge water was disposed of in accordance with the procedures described in Section 3.13.

The following information was recorded for each monitoring well sampled:

Before Purging:

- Date, time, and weather conditions;
- Well identification number;
- PID readings taken from the well immediately after the cap is removed;
- pH, temperature, and specific conductivity (after each well volume);
- Total well depth and depth to water from the top of inner casing; and,
- Water volume in well.

After Purging:

- Start and end time for purging;
- Purge method;
- Total volume purged,
- pH, temperature, and specific conductivity,
- Sampling time,
- Sampling method; and,
- Sample collection sequence

This information is summarized for each well on the Sample Collection Forms in Appendix B.

Sampling was performed with a dedicated, disposable Teflon bailer with a single check valve (bottom) dedicated to each well. Each bailer was equipped with a dedicated, decontaminated Teflon-coated stainless steel leader attached to the top. The leader was at least three (3) feet in length, and was attached on the other end by new, dedicated nylon rope, which was discarded after use at a well. To obtain a sample, the bailer was slowly lowered into the well using the leader and rope until it was submerged, and slowly brought back to the surface after filling. The contents of the bailer was slowly poured into the sampling glassware provided by the analytical laboratory. The first bailer recovered after well evacuation was used for sample collection. Sample collection was completed in the following order:

- Field measurements (temperature, pH, and specific conductance);
- VOCs;
- SVOCs;
- TAL metals; and,
- TPH.

One set of QA/QC samples, which included one field duplicate, one trip blank, one rinsate blank, and one MS/MSD pair was collected with the primary samples.

Following collection, the sample containers were securely closed, residue wiped from the sides of the containers, and immediately placed in a cooler on ice. Samples were kept chilled in a cooler, and shipped via courier under chain-of-custody (COC) to the analytical laboratory for analysis.

3.10 Slug Tests

Slug tests were conducted in a total of 10 piezometers to estimate the horizontal hydraulic conductivity of the screened unit. Three (3) tests were conducted within the fill material (PZ-1B, PZ-4B, and PZ-13B) and seven (7) within the glacial deposits (PZ-1A, PZ-4A, PZ-6A, PZ-7A, PZ-8A, PZ-12A, and PZ-13A). The slug testing procedures and data analysis methods used for the project are described in detail in Appendix G.

3.11 Pumping Tests

Pump-in (i.e., injection, as opposed to extraction) and recovery tests were conducted in two (2) of the newly installed piezometers to provide data needed to design hydraulic control systems and/or other potential remedies (e.g., trenches, cut-off walls, etc.), and for estimates of horizontal hydraulic conductivity for use in groundwater modeling of remedial alternatives.

Injection and recovery tests were conducted in piezometers PZ-1B and PZ-4B screened within the fill material. These piezometers were chosen based on their location near the river which was regarded as a likely location for potential pumping as part of the IRA. Details regarding the injection/recoverytesting procedures and data analysis methods are described in Appendix G.

3.12 Site Survey

A pre-existing detailed, scaled site map was used as a base map for the FRI. The locations of specific FRI field activities (e.g., vane shear tests, test pits, soil borings, CPTs, piezometers, etc.) were surveyed to an accuracy of ±1 foot horizontal relative to available Site monumentation by James M. Stewart, Inc.(JMS) of Philadelphia, PA. These locations were subsequently transferred to and identified on the Site base topographic survey map as shown on Figure 2. Additionally, the outer casing, inner casing, and ground surface elevations of each piezometer were surveyed to the nearest ±0.01 foot. This information is summarized on the NJDEP Form B (Location Certification) attached in Appendix E.

3.13 Decontamination and Residuals Management

Decontamination of field and sampling equipment and subsequent management and disposal of residuals generated during the field work (e.g., equipment decontamination water, development water, drill cuttings, personal protective equipment, etc.) were handled as follows:

Equipment Decontamination

All appropriate drilling and sampling equipment was decontaminated at the on-site decontamination pad utilizing an on-site public water supply source. Drilling equipment, well screens and similar materials were decontaminated by steam cleaning. Split-spoon samplers and other sampling equipment were field-decontaminated in accordance with the NJDEP *Field Sampling Procedures Manual* (NJDEP, 1992) as follows:

1. Non-phosphate detergent plus tap water wash;
2. Tap water rinse;
3. Distilled/deionized water rinse;
4. 10 percent nitric acid solution rinse*;
5. Distilled/deionized water rinse*;
6. Acetone (pesticide-grade) rinse**;
7. Air dry completely**; and,
8. Distilled/deionized water rinse**.

NOTES:

* Steps 4 and 5 were conducted only if samples were to be analyzed for metals.

** Steps 6, 7, and 8 were conducted only for samples to be analyzed for organics.

If no gross contamination was observed, split-spoon samplers and other field sampling equipment were field-decontaminated utilizing the following alternate procedure:

1. Laboratory grade glassware detergent and tap water scrub to remove visual contamination;
2. Generous tap water rinse; and,
3. Distilled and deionized (ASTM Type II) water rinse.

Decontamination fluids were pumped into US Department of Transportation (DOT) approved 55-gallon metal drums, labeled with regard to general waste type, and staged at the on-site drum storage area for subsequent waste characterization and disposal.

Drill Cutting, Development Water, and Decontamination Fluids Disposal

Development water and purge water that did not contain visible free product were discharged to the ground at the Site per the NJDEP-approved FRI Work Plan. Development water, purge water, decontamination water that did contain visible free product, drill cuttings, personal protective equipment (PPE) and drill area plastic (placed on ground surface at each drill location to eliminate the contact of potentially contaminated drill cuttings or other fluids with surface soils) were collected in DOT-approved 55-gallon metal drums and transported to the designated on-site drum storage area. The storage area was lined with plastic sheeting to limit the potential for discharges. All containers removed from an area of investigation (e.g., test pit or boring location) to the storage location were labeled prior to leaving the investigation area. Approximately 48 drums of investigation residuals (12 water, 24 soil, 12 PPE/plastic) were temporarily staged at the drum storage area and later classified for disposal as outlined in Section 3.14.

3.14 Waste Characterization Sampling

Potential hazardous wastes generated and stored in the drum storage area during the FRI field work, were sampled for waste characterization purposes. Water samples were collected from two (2) of the water drums (±17% of the drums containing water) and composited to form one (1) composite sample for analysis. Soil samples were collected from three (3) of the soil drums (±13% of the drums containing the soil) and composited to form one (1) composite sample for analysis. The composite samples were analyzed for waste characterization purposes for the following parameters:

- Toxicity Characteristic Leaching Procedure (TCLP), including VOCs, SVOCs, pesticides, herbicides and metals;
- Resource Conservation and Recovery Act (RCRA) Characteristics, including reactive sulfide, reactive cyanide, ignitability and corrosivity;
- Polychlorinated biphenyls (PCBs);
- TPH;
- Paint filter test;
- Percent moisture/solids;
- Benzene, toluene, ethylbenzene, and xylene (BTEX); and,
- Total metals, including 8 RCRA metals and nickel, zinc and chromium.

The results of the analysis are summarized in Appendix H. Based on these results the residuals were determined to be non-hazardous. The soils (approximately 9.28 tons) were consolidated and transported off-site on October 2, 1996 to the Linden, NJ landfill where it was used as daily cover. The water (approximately 550 gallons) was consolidated and transported to the Clean Harbors water treatment facility located in Baltimore, MD.

3.15 Laboratory Analytical Program

A limited number of soil and groundwater samples were collected during the FRI for laboratory analysis to help determine the nature and extent of potential soil and groundwater contaminants (i.e., constituents that exceed appropriate remedial standards or criteria) at the Site. Samples were collected from four (4) test pits, four (4) soil borings, and seven (7) groundwater

monitoring well locations. In addition to the primary samples, two (2) soil samples and one (1) groundwater sample were collected for field duplicate analysis. Eight (8) field blanks (seven (7) in support of the soil sampling and one (1) in support of groundwater sampling), and four (4) trip blanks (three (3) in support of soil sampling and one (1) in support of groundwater sampling) were submitted for analysis.

The samples collected were analyzed for the Target Analyte List (TAL) in accordance with the U.S. Environmental Protection Agency (USEPA) *Contract Laboratory Program Statement of Work for Inorganics Analysis, Multi-Media, Multi-Concentration* (CLP SOW ILM03.0) (USEPA, 1990a), the Target Compound List (TCL) in accordance with the *Contract Laboratory Program Statement of Work for Organics Analysis, Multi-Media, Multi-Concentration* (CLP SOW OLM03.2) (USEPA, 1990b) for VOCs and SVOCs, and TPH by USEPA Method 418.1. In addition, the groundwater samples were analyzed for Total Dissolved Solids (TDS) by USEPA Method 160.1. All analyses were performed by Blue Marsh Laboratory (BML) of Douglassville, Pennsylvania.

Data validation of the groundwater and soil samples collected during the FRI was performed in accordance with the NJDEP Division of Hazardous Site Mitigation, Bureau of Environmental Measurements and Quality Assurance, *Standard Operating Procedures* (SOPs) Document Numbers 5.A.2 Revision No. 2 dated February 5, 1992, 5.A.13 dated October 1, 1991, and 5.A.15 dated February 22, 1992. Non-CLP data were validated using the QA/QC criteria outlined in the QAPP (Appendix A of the FRI Work Plan). Reduced data deliverables were submitted by the laboratory in accordance with N.J.A.C. 7-26E *Appendix A, Reduced Laboratory Data Deliverables USEPA/CLP Methods*, and are included in Appendices C and I of this Report which includes a summary of both the data validation qualifiers and the associated NJDEP footnotes used for data reporting following data validation. These data packages were reviewed for completeness and were validated in accordance with the above listed documents.

3.16 Groundwater Modeling

Limited groundwater modeling was conducted as part of the FRI. The results of the modeling, as well as a recommendation for additional studies, are described in Section 4.10.

4.0 SUMMARY OF FINDINGS

4.1 In-Situ Vane Shear Testing

In-situ vane shear tests were performed at locations GV-1 through GV-3. The results of the tests showed that:

- The bottom of the sediments in the Passaic River near the Site bulkhead ranged from 18 feet to 30 feet bgs;
- Shear strength values of the tested sediments ranged from 0 pounds per square foot (psf) to 415 psf;
- Consistency of the river sediments was classified as "very soft" based on the shear strength values (Das, 1990).

The results of the vane shear tests are included on boring logs in Appendix B and are summarized on Table 1.

4.2 Test Pits

Test pits TP-1, TP-2, TP-3, and TP-5 were excavated from the ground surface down to the top of the water table and were left open until low tide. At that time, each test pit was re-evaluated to determine whether the water table had subsided further. If so, the test pit was excavated further until the water table was once again encountered. The total depth of these test pits ranged between 3.5 feet and 8 feet bgs. The materials encountered in test pit TP-1 consisted entirely of coarse gravel fill. Materials in tests pits TP-3 and TP-5 consisted entirely of fill material (see description in Section 5.1.1). In TP-2, fill material was encountered down to a depth of 4 feet bgs, at which depth a (suspected) intertidal channel deposit was encountered. Test pit TP-4 was advanced to a depth of 8 feet bgs at which point horizontal wooden timber members of the existing bulkhead were encountered. The test pit was terminated at that depth.

A soil sample was collected for laboratory analyses from each test pit, with the exception of test pit TP-1 which consisted entirely of coarse fill. In test pits TP-3, TP-4 and TP-5, soil samples were collected from intervals where the presence of potential contamination was observed, in accordance with the NJDEP approved FRI Work Plan. In test pit TP-2, the soil sample was collected from the 6 inch interval directly above the water table as evidence of contamination was not observed. The

test pit sampling depth intervals are summarized in Table 2. Sample identifications and matrices for all sample points are summarized in Table 3. The samples were submitted to the laboratory for analysis of VOCs, SVOCs, TAL metals, and TPHs. The analytical results are summarized in Table 4, and discussed in Section 4.4. The complete analytical data package is included in Appendix C.

The results of the test pit survey indicated the following:

- An intertidal channel deposit was observed at test pit TP-2;
- Portions of the Site have been backfilled with coarse fill material;
- The depth to the bulkhead shown on available as-built diagrams is correct; and,
- Buried portions of the bulkhead represent a significant subsurface obstruction to potential construction.

Soil descriptions, PID readings, and other observations made during the test pitting activities are included in the test pit logs included in Appendix B.

4.3 Cone Penetrometer Tests

Cone penetrometer tests CPT-1 through CPT-9 conducted along the Site bulkhead provided detailed lithologic information on the shallow subsurface near the Site bulkhead. The results of the CPTs indicated that:

- A meadow mat underlies the fill at the Site (see Section 4.4);
- The top of the meadow mat was encountered at depths ranging between 7 feet and 13 feet bgs;
- The base of the meadow mat ranged between 14 feet and 17 feet bgs; and,
- The thickness of the meadow mat ranged between 3.5 feet and 9 feet;

Copies of the CPT logs are included in Appendix B.

4.4 Soil Borings

A total of four deep borings were drilled during the FRI. Borings B-1, B-3, and B-4 were advanced down to the silty clay layer described in the FRI Work Plan as the "confining unit" which was encountered at depths ranging from 64 ft. bgs in B-1 to 69.5 ft. bgs in B-3 and B-4. Boring B-2 was terminated at a depth of 48 ft. bgs in a silty clay which at that time was believed to be part of the "confining unit". These units are summarized in further detail in Section 5.1. Stratigraphic information from these soil borings may be summarized as follows:

- Fill Material Unit;
- Intertidal Channel Deposits Unit;
- Meadow Mat Unit; and
- Glacial Deposits Unit (including the "confining unit").

These units are described in further detail in Section 5.1.

Geotechnical and Chemical Data for Soils

Soil samples were collected from the four borings (B-1 through B-4) to provide geotechnical and chemical data. Three (3) samples of cohesive soils (i.e., silts or clays) were collected at selected depth intervals (20 feet to 22 feet in B-2; 6 feet to 8 feet B-3; and 6 feet to 8 feet B-4), and analyzed for grain-size distribution. Samples from B-2 and B-3 were submitted for triaxial permeability testing. Samples from B-3 and B-4 were submitted for consolidation testing. Vertical permeabilities ranged from 2.0×10^{-7} cm/sec to 3.9×10^{-7} cm/sec, with an average of 2.95×10^{-7} cm/sec. Results of the grain-size distribution analyses showed the following:

- B-2 was classified as a medium to fine SAND with some silt (SM), having a plastic limit (PL) of 38 and plasticity index (PI) of 1;
- B-3 was classified as a SILT with little sand (MH), with a PL of 44 and PI of 59; and
- B-4 was classified as a SILT with little sand (MH), with a PL of 69 and PI of 43.

In general, field observations of the grain-size of the samples compared well with the results of the grain-size distribution analyses. Results of the geotechnical laboratory tests are presented in Appendix D.

Ten (10) samples were collected from the soil borings for chemical analyses, five (5) from the Fill Material Unit and (5) from the Glacial Deposits Unit. Three (3) samples each were collected from borings B-1 and B-2. Two (2) samples were collected from borings B-3 and B-4 as no indications of contamination were observed in these borings. Table 2 summarizes the sample depth intervals for each boring. The soil samples were submitted to the laboratory for analysis of VOCs, SVOCs, TAL metals, and TPH.

The analytical results of the soil samples were compared to the NJDEP Soil Cleanup Criteria (SCC) (N.J.A.C. 7:26D, revised February 3, 1994), including the Residential Direct Contact, Non-Residential Contact, and Impact to Groundwater criteria.

A complete laboratory analytical report for the soil samples is included in Appendix C. Detected soil constituents are summarized in Table 4, which also include a listing of the above NJDEP quantitative criteria. Exceedances of the most stringent of the SCC criteria are highlighted in the table, and their locations and results are shown in Figure 3.

A review of the analytical results for Fill Material Unit soil samples shows that there are exceedances of the SCC for SVOCs (from the polycylical aromatic hydrocarbon [PAH] fraction) in two (2) samples, TP-3 and B-1A, and exceedances of the SCC for metals (primarily arsenic, cadmium and/or lead) in eight (8) samples, TP-2, TP-3, TP-4, TP-5, B-1A, B-2A, B-3A and B-4A.

A review of the Glacial Deposits Unit soil samples showed only three (3) constituents were reported to exceed the SCC criteria for the five (5) samples: cadmium, at a concentration of 1.3 micrograms per kilogram (mg/kg) or parts per million (ppm) from a depth interval of 22 ft. to 24 ft. bgs in sample B-2C; and beryllium and chromium at a concentration of 7.1 ppm (each) from a depth interval of 66 ft. to 68 ft. bgs in sample B-4B.

The results of the soil boring and soil sampling program can be summarized as follows:

- Stratigraphy at the Site consists of the following in descending order: Fill Material Unit; Intertidal Channel Deposits Unit (in limited areas); Meadow Mat Unit (acting as a local confining layer); and the Glacial Deposits Unit;

- Vertical permeability of the Meadow Mat Unit ranged from 2.0 x 10^{-7} cm/sec to 3.9 x 10^{-7} cm/sec with an average of 2.95 x 10^{-7} cm/sec;

- Grain size distribution analyses of the Meadow Mat Unit materials indicated classification as a silt to silty sand;

- Analytical results for Fill Material Unit soil samples shows that there were exceedances of the SCC for SVOCs (from the PAH fraction) in two (2) samples, and exceedances of the SCC for metals (primarily arsenic, cadmium and/or lead) in eight (8) samples; and,

- Only three (3) constituents (cadmium - 1.3 ppm in sample B-2C, beryllium - 7.1 ppm in sample B-4B and chromium - 7.1 ppm in sample B-4B) in the Glacial Deposits Unit were found to exceed the most stringent of the SCC.

4.5 Water Level Measurements

Two (2) rounds of synoptic water level measurements were conducted in all 24 piezometers and the 2 staff gauges during the FRI to determine groundwater flow direction(s) and to determine the effect, if any, of tidal influences on the groundwater flow at the Site. Potentiometric surface maps were then prepared for the Fill Material Unit and the Glacial Deposits Unit during both high and low tide conditions. The water level measurement data is summarized in Table 5 and the potentiometric maps of the Fill Material Unit are included as Figures 4 and 5, and the potentiometric maps for Glacial Deposits Unit are shown on Figures 6 and 7.

The synoptic water level data showed that two distinct groundwater systems existed in the shallow subsurface underlying the Site. These groundwater systems include the shallow system developed within the Fill Material Units and the Intertidal Channel Deposits Unit, and a deeper flow system in the Glacial Deposits Unit. These two systems are hydraulically separated by the Meadow Mat Unit which serves as a local confining layer (Figure 8).

The groundwater is under unconfined conditions in the Fill Material Unit and groundwater levels are above the Passaic River water level. Groundwater in the Fill Material Unit generally flows radially away from approximately the central portion of the Site (Figures 4 and 5) south towards the Passaic River, west towards the Conrail/Amtrak right-of-way, and east in the general direction of Frank E. Rodgers Boulevard. However, during the high tide of the Passaic River, the direction of groundwater flow is locally reversed along the bulkhead so that groundwater flows from the river towards the center of the Site. This is shown in Figure 4, where a gentle trough in the groundwater

elevations is observed parallel with the bulkhead during high tide. Water levels measured at the staff gauges SG-2 (3.49 feet MSL) and SG-1 (3.61 feet MSL) are higher than those measured at piezometers PZ-1B (2.85 feet MSL) and PZ-5B (3.14 feet MSL) which are within 100 feet from the bulkhead line. Farther inboard of the trough, groundwater elevations measured at inboard piezometers (PZ-2B, PZ-3B, and PZ-13B) are higher than the high tide water levels measured at the staff gauges.

Groundwater levels measured in the piezometers screened within the Glacial Deposits Unit are consistently below the water level of Passaic River during both low tide and high tide conditions (see Figures 6 and 7). The direction of groundwater flow in the Glacial Deposit Unit is the same throughout the tidal cycles, which is northerly, away from the river. Heavy groundwater pumping at off-site locations northeast of the Site apparently has caused a reversal of groundwater flow away from the river in the Glacial Deposits Unit. Groundwater elevations measured in piezometers indicate the groundwater flow in this unit is northerly and northeasterly, away from the Passaic River.

Groundwater flow is away from the Passaic River within the Glacial Deposits Unit and is much lower than river level in the northern portion of the Site (also see Figures 6 and 7). As further discussed below, the Glacial Deposits Unit are unsaturated beneath the Meadow Mat Unit in some portions of the Site. Therefore the Meadow Mat Unit serves as a confining layer only in localized areas.

The influence of tidal fluctuations at the Site has also been investigated. Passaic River water levels were recorded at staff gauge locations SG-1 and SG-2. During a rising (or flood) tide, the surface water elevation at staff gauge SG-1 (downstream location) is higher than the water level at staff gauge SG-2 (upstream location). Conversely during a falling (or ebb) tide, the SG-1 water level is lower than the SG-2 water level. This data show that the river flow is reversed during the flood or rising tidal cycle, which potentially needs to be considered during the design of a possible IRA.

Continuous water level measurements were taken at one staff gauge (SG-1) and several piezometers (PZ-1A, PZ-1B, PZ-5A, PZ-5B, PZ-6B, PZ-7A, PZ-10B, PZ-13A, and PZ-13B) for a duration of 7 days to assess the influence of tides on groundwater flow at the Site. This data is

summarized in Appendix F. Groundwater elevations measured at the above locations were plotted against time in order to determine the cyclicity of the tides, as shown on Figures 9 and 10.

The continuous water level data showed that the tidal fluctuations of the river influenced groundwater levels in both the Fill Material Units and the Glacial Deposits Unit, only in a zone proximal to the river. In the Fill Material Unit, tidal influence was shown in piezometer PZ-1B located approximately 60 ft. from the river, but not in piezometers PZ-13B, PZ-6B and PZ-10B situated approximately 510 ft., 650 ft., and 650 ft., respectively, from the river. It should be noted that piezometer PZ-5B, although located along the bulkhead and screened in the Fill Material Unit similar to PZ-1B, did not show any tidal influence. This apparent lack of response in this piezometer is interpreted to be due to stratigraphic variation in the immediate vicinity of the piezometer. In this area, the thickness of the Fill Material Unit was only 5 ft., the base of the Fill Material Unit was approximately 4 ft. higher than that at PZ-1B, and the underlying Meadow Mat Unit was approximately 4 ft. thicker (see Table 6).

In the Glacial Deposits Unit, tidal influence was shown in piezometers PZ-1A and PZ-5A located approximately 60 feet and 95 feet from the river, respectively, but not in piezometers PZ-13A or PZ-7A located approximately 520 ft. and 1190 ft., respectively, from the river.

The observed groundwater systems at the Site were classified as confined or unconfined based upon the continuous water level data, as evidenced by the following. The plot of water level elevations over time for piezometer PZ-1B screened in the Fill Material Unit shows a time-lag in the response of groundwater levels with changing tidal conditions (Figure 10). The rise in groundwater level is some time after the level of the river rises. In surficial unconfined aquifers that are tidally influenced, changes in water level are due to the physical movement of groundwater (i.e., saturation or draining of the pore space). Thus, as the tide rises and is measured at the staff gauge, piezometers inboard of the river respond with a time lag because the rising groundwater slowly pervades and saturates the Fill. As the tide ebbs, groundwater levels may be reversed but with a time-lag as water drains from the pore spaces within the Fill. Accordingly, this data indicates that groundwater within the Fill Material Unit is unconfined.

In contrast, the plots for water level elevations over time for piezometers PZ-1A and PZ-5A screened in the Glacial Deposits Unit beneath the Meadow Mat Unit show that tidal response is

almost concurrent with the rising or falling tides (Figure 9). The lack of time-lag in tidal response and concurrent water level change show that the Glacial Deposits Unit, where fully saturated, are confined beneath the Meadow Mat Unit (or local confining layer).

The results of the use of the oil-water interface probe during the synoptic water level measurements did not indicate the presence of any measurable thickness (i.e., >0.01 ft) of either LNAPLs or DNAPLs in the piezometers, with the exception of piezometer PZ-7A in which approximately 0.04 ft. of a suspected DNAPL was observed. Multi-colored sheens were noted in several piezometers, including PZ-7A, PZ-6A, and PZ-2B, and PZ-13B.

Data from the piezometers may be summarized as follows:

- Two distinct groundwater systems exist in the shallow subsurface underlying the Site, one within the Fill Material Unit and another within the Glacial Deposits Unit, separated by a local confining layer (the Meadow Mat Unit);
- Both groundwater systems are in direct hydraulic connection with the Passaic River;
- Groundwater levels in the Fill Material Unit are generally above the level of the Passaic River and the groundwater flows radially away from near the center of the Site;
- Groundwater within the Fill Material Unit is under unconfined conditions;
- Groundwater levels in the Glacial Deposits Unit are generally below the level of the Passaic River and the groundwater flows northeastward across most of the Site, away from the river;
- Groundwater within the Glacial Deposits Unit is under confined conditions where saturated in the southwestern part of the Site, and under unconfined conditions where not fully saturated in the northeastern part of the Site;
- Tidal fluctuations of the river influence groundwater levels in both the Fill Material Unit and the Glacial Deposits Unit, but only in proximity to the river;
- River surface water flows downstream towards Newark Bay during ebb tide, but reverses and flows upstream during flood tide; and,
- Measurable thickness (i.e., >0.01 ft) of either LNAPLs or DNAPLs were not observed in any of the piezometers, with the exception of piezometer PZ-7A in which approximately 0.04 ft. of DNAPL was observed. Multi-colored sheens were noted in several piezometers, including PZ-7A, PZ-6A, and PZ-2B, and PZ-13B.

4.6 Groundwater Sampling

A limited number of groundwater samples were collected during the FRI to determine groundwater quality at the Site. Samples were collected from five (5) piezometers screened in the Fill Material Unit (piezometers PZ-1B, PZ-4B, PZ-5B, PZ-10B, PZ-13B) and two (2) piezometers screened in the Glacial Deposits Unit (piezometers PZ-1A, PZ-7A).

Analytical summaries for the groundwater samples collected are shown in Table 7. The NJDEP Ground Water Quality Standards (GWQS) (N.J.A.C. 7:9-6) are shown for comparison purposes. Groundwater results from all five (5) samples collected in the Fill Material Unit exceed the GWQS for several metals (e.g., aluminum, antimony, iron, lead, manganese, sodium, etc.), two (2) samples (PZ-10B and PZ-13B) exceed the standard for benzene(a VOC), and three (3) samples exceed the standard for TDS (PZ-1B, PZ-4B and PZ-5B).

The two (2) Glacial Deposits Unit groundwater samples had exceedances of TDS, aluminum, manganese and sodium. The upgradient piezometer PZ-1A (near the river) also had an exceedance of benzene. The downgradient piezometer PZ-7A (in the northern portion of the Site near Frank E. Rodgers Boulevard) also had exceedances of arsenic, cadmium, and iron. Figure 11 shows the exceedances of the GWQS for groundwater samples collected during the FRI.

Results of the groundwater sampling conducted during the FRI can be summarized as follows:

- Groundwater results from all five (5) samples collected in the Fill Material Unit exceed the GWQS for several metals (e.g., aluminum, antimony, iron, lead, manganese, sodium, etc.), two (2) samples (PZ-10B and PZ-13B) exceed the standard for benzene, and three (3) samples (PZ-1B, PZ-4B and PZ-5B) exceed the standard for TDS; and,
- Two (2) Glacial Deposits Unit groundwater samples had exceedances of TDS, aluminum, manganese and sodium. The upgradient piezometer PZ-1A (near the river) also had an exceedance of benzene, and the downgradient piezometer PZ-7A (in the northern portion of the Site near Frank E. Rodgers Boulevard) also had exceedances of arsenic, cadmium, and iron.

4.7 Slug Tests

A total of 10 slug tests were performed during the FRI, three (3) in piezometers screened in the Fill Material Unit (PZ-1B, PZ-4B, and PZ-13B) and seven (7) screened in Glacial Deposits Unit(PZ-

1A, PZ-4A, PZ-6A, PZ-7A, PZ-8A, PZ-12A, and PZ-13A). Estimates of horizontal hydraulic conductivity were obtained using both the Hvorslev (1935) and Bouwer and Rice (1967) methods. The results of the slug tests are as follows:

- hydraulic conductivities in the Fill Material Unit ranged from 9.78×10^{-4} cm/sec to 2.58×10^{-2} cm/sec ; and
- hydraulic conductivities in the Glacial Deposits Unit ranged from 3.36×10^{-5} cm/sec to 9.44×10^{-3} cm/sec.

The results of the slug tests are summarized in Table 8 and data interpretation graphs are included in Appendix G.

4.8 Pumping Tests

Pumping (injection) tests were performed in two (2) piezometers screened in the Fill Material Unit near the bulkhead, PZ-1B and PZ-4B. Injection data for each of the injection wells was analyzed using the Earlougher method (1977) and recovery data was analyzed using the Theis method (1935). The results of the pumping tests are as follows:

- hydraulic conductivities in the Fill Material Unit ranged from 1.74×10^{-1} cm/sec to 7.23×10^{-4} cm/sec.

The results of the pumping tests are summarized in Table 8 and data interpretation graphs are included in Appendix G.

Average groundwater flow velocity and average groundwater flux rate, important design considerations for the IRA, can be estimated using the pumping test and slug test data as shown below.

Groundwater Flow Velocity

An estimate of the ground water flow velocity in the Fill Material Unit at the Site was obtained using the calculated hydraulic conductivities, hydraulic gradients, and an assumed porosity. The equation for average groundwater velocity is given as (Freeze and Cherry, 1979):

$$v = \frac{Ki}{n_e}$$

where:

v = average flow velocity [cm/s];
K = hydraulic conductivity [cm/s];
i = mean horizontal hydraulic gradient [cm/cm]; and,
n_e = effective porosity [ml/ml].

The following data was used to calculate the average flow velocity of the groundwater in the Fill Material Unit at the Site:

- A geometric mean horizontal hydraulic conductivity (K) of 4.61×10^{-3} cm/s;
- A horizontal hydraulic gradient of (i) of 0.01241 (determined from PZ-13B to the river using the mean river level); and,
- An estimated effective porosity (n_e) of 0.25 (typical of sandy materials [Freeze and Cherry, 1979] which has been assumed for the Fill Material Unit).

The corresponding calculated average flow velocity of the groundwater in the Fill Material Unit is 1.65×10^{-4} cm/s (171 ft/yr or 0.47 ft/day).

The horizontal hydraulic conductivity of the Meadow Mat Unit was determined by analyzing Shelby tube samples taken from borings B-2 and B-3. The samples were analyzed by the geotechnical laboratory using the falling head permeameter method..

An estimate of the groundwater flow velocity through the Meadow Mat Unit can be obtained by using the methods outlined above and the following data:

- A geometric mean horizontal hydraulic conductivity (K) of 2.79×10^{-7} cm/s (determined from laboratory analysis of Shelby tube samples from the Meadow Mat Unit in borings B-1 and B-2, which were 3.9×10^{-7} cm/s and 2.0×10^{-7} cm/s, respectively, yielding a geometric mean of 2.79×10^{-7} cm/s
- Hydraulic gradients in well pairs calculated from water levels measured during the FRI.
- An estimated effective porosity (n_e) of 0.10 (typical of clay materials [Freeze and Cherry, 1979] which has been assumed for the Meadow Mat Unit).

The corresponding calculated flow velocities range from 0.000107 ft/day to 0.00326 ft/day. Using these flow velocity values along with the stratigraphic data , the time required for groundwater to flow through the Meadow Mat Unit can be calculated. The time required varies from 4.2 years at PZ-10A/B to 65.9 years at PZ-5A/B. A summary of the travel times for the Meadow Mat Unit is contained in Table 9.

Groundwater Flux Rates

The quantity of water moving through the Fill Material Unit that discharges into the Passaic River can be calculated using data developed from the pumping and slug tests conducted during the FRI . This quantity of water, or volumetric flux (q), represents a unit width of a water bearing unit and is calculated as (Heath, 1987):

$$Q = Kbw\frac{dh}{dl}$$

where:

Q = volumetric flux [ft^3/day] of fill water discharging to the river;
K = hydraulic conductivity [ft/day] of man-made fill;
bw = saturated cross-sectional area of the water bearing unit [ft^2]; and,
dh/dl = hydraulic gradient [ft/ft].

The following data was used to calculate the average flux rate of water from the Fill Material Unit into the river:

- A geometric mean horizontal hydraulic conductivity (K) of 4.61 x 10^{-3} cm/s or 13.07 ft/day (determined from analysis of aquifer tests performed in the fill;
- The mean hydraulic gradient (dh/dl) of 0.01241 (determined from PZ-13B to the river using the mean river level); and,
- The cross-sectional area of the fill (bw) near the river of 13,600 ft^2 (determined from the average fill thickness near the river multiplied by the property length along the river).

The corresponding calculated average flux of water from the fill into the river is 2205 ft^3/day or 11.5 gpm.

The groundwater flow velocities and flux rate calculated above can be used for design considerations for the IRA.

4.9 Laboratory Analytical Program

Reduced data deliverables were generated by the laboratory for the groundwater and soil samples collected during the FRI. These data packages were reviewed for completeness and were validated in accordance with the documents listed in Section 3.15. The results of this data validation for the groundwater and soil samples are summarized below.

- the analytical results for VOCs, SVOCs, TAL metals, TPH and TDS were deemed generally acceptable; and,
- several samples for various analyses were "flagged" during the validation process, some of which were rejected and some qualified as "estimated". The qualified data were all deemed useable.

4.10 Groundwater Modeling

A numerical groundwater flow model was developed to simulate different containment (e.g., sheet pile walls, slurry walls, etc.) and collection (e.g., pumping, drains, etc.) combinations and options to evaluate the potential effectiveness of different remedial alternatives. A groundwater flow model was developed for the Site using the computer code MODFLOW, developed by the U.S. Geological Survey (McDonald and Harbaugh, 1988). MODFLOW is a three-dimensional numerical, finite-difference groundwater flow model which can be used to simulate groundwater flow in one, two, or three directions. Flow from external stresses such as wells, areal recharge and surface water bodies can also be simulated.

A finite difference grid domain was chosen to encompass the potential groundwater control system and the nearby physical boundaries to groundwater flow. A rectangular finite-difference grid consisting of 3 layers with 60 rows and 250 columns per layer was superimposed over the study area. The grid was oriented so that the rows are parallel to the longest straight section of the bulkhead. Vertically, the model consisted of three layers which were hydraulically connected. The hydraulic interconnection between layers was simulated using the leaking layer option for layer 1 and layer 2. The bottom of layer 3 acted as a no flow boundary. All layers were modeled as confined/unconfined to account for the potential drop of water levels below the top of each modeling layer.

The boundary conditions were selected in accordance with the water level data from the FRI, regional information, and extrapolation of the Site potentiometric surface to the boundaries of the modeling grid. The top border of layer 1 and layer 3 was set under constant head boundary with the values set to match the measured groundwater potentiometric surfaces in the historic fill material and the glacial deposits.

Following set-up and calibration, the model was run to evaluate the following categories of IRA alternatives:

- Passive Recovery System: Cut-off wall;
- Active Recovery Systems: Extraction wells/well points or recovery trench;
- Combined Recovery System: Cut-off wall and recovery trench.

Within these categories, several specific options were evaluated:

- Alternative 1: Cut-off wall;
- Alternative 2: Wells/well points;
- Alternative 3: Recovery trench;
- Alternative 4: Recovery trench with cut-off wall;
- Alternative 5: Recovery trench with injection wells.

In evaluating the active systems (which assumed that the extraction well(s) control the groundwater flow), the following criteria were used to assess the effectiveness and applicability of a pumping scenario:

- The extraction wells should develop a sufficiently large capture zone that would control the groundwater flow into the river.
- The capture zone developed by the extraction well(s) should extend towards the river to reverse groundwater flow from the aquifer to the river.
- The total pumping rate of the extraction well(s) should be minimized to accommodate available storage and treatment capabilities.

The following section provides a summary of the assessment of the potentially applicable measures, based largely on the results of the computer simulations.

Alternative 1: Cut-Off Wall

Based on the modeling results, a cut-off wall is not recommended as a means to prevent oil seepage into the river because of the following disadvantages:

- Groundwater and associated NAPL may laterally migrate around the sheet pile wall.
- The hydraulic head build-up in the Fill Material Unit would be greater than the ground surface elevation in the area of the river bank. This would result in groundwater seepage up through the ground surface, taking any potential contaminants with it.
- The section of the aquifer between the sheet pile wall and Passaic River that may contain LNAPL would continue to seep into the river. The system would be effective only if the sheet pile wall could be constructed in the immediate vicinity of the river bank/bulkhead and active pumping was initiated upgradient of the wall to prevent mounding of the groundwater.

Alternative 2: Well/Wellpoint System

Based on the modeling results, a well/well point system is not recommended as a means to prevent oil seepage into the river because of the high cost and degree of complexity which would be required. At low tide, a 20 well capture zone would not be continuous and as a result, some oil potentially could seep into the river at low tide. To achieve a continuous capture zone, 47 well/well points pumping at a total of 2.5 gpm would be required. The costs associated with constructing and maintaining a system of this magnitude were not deemed justified.

Alternative 3: Recovery Trench

A recovery trench system is not recommended as a means to prevent oil seepage into the river because of its ineffectiveness in capturing all of the groundwater flowing to the river. A seven (7) sump/recovery trench system would work for high tide, but at low tide, the capture zone is not continuous which could result in oil seeping into the river. To achieve a continuous capture zone, 15 sumps pumping at a total of 2.6 gpm would be required. The costs associated with constructing the trench and maintaining the sumps were not deemed justified.

Alternative 4: Recovery Trench with a Cut-off Wall

This alternative consisted of a recovery trench and a series of sumps to collect the groundwater, with a cut-off wall next to the river bank. This alternative had several advantages over the recovery trench, including:

- The capture zone generated by the extraction system would be sufficiently large to control groundwater flow into the river; and
- The addition of the cut-off wall greatly reduces the amount of river water being extracted (reduction of 2 gpm at high tide) as compared to Alternative 2B, thereby reducing treatment costs.

Alternative 5: Recovery Trench with Injection Wells

This alternative is conceptually the same as Alternative 4, but the extracted groundwater would be injected into the Glacial Deposits Unit via two (2) injection wells after on-Site treatment.

Although the results of the FRI groundwater modeling indicated that Alternative 4 (Recovery Trench with a Cut-off Wall) and Alternative 5 (Recovery Trench with Injection Wells) theoretically could be used as an IRA, there are a number of design issues that remain to be considered prior to the design and implementation of an interim remedial system for the alleged oily discharge from the Site into the Passaic River. These issues include:

- Identifying the source for the oily discharge;
- Insufficient data on groundwater are available (a hydraulic containment system will alter the rate and direction of contaminant movement);
- Insufficient data on aquifer properties are available; and
- Analytical studies of groundwater flow patterns (particularly where it meets the Passaic River) have not been sufficiently developed for the design of an appropriate hydraulic containment system.

Given that these issues cannot be resolved with the available limited data, additional studies are recommended for the Site as further discussed in Section 6.0.

5.0 CONCLUSIONS

5.1 Site Geology

Regional geologic information indicates that the geology of the Site can be divided into two general units, an unconsolidated overburden and an underlying consolidated bedrock. The FRI subsurface investigation extended down into only a portion of the overburden unit, and therefore the Site geology has not been fully defined at the present time (see Section 6.0, Recommendations). The present interpretation of the Site overburden geology, which is described below, is based the results of the FRI as well as a review of available literature. Figures 12 and 13 (Stratigraphic Cross-Sections) illustrate the relationship of the geologic units along the Passaic River and perpendicular to the Passaic River, respectively.

5.1.1 Fill Material Unit

The youngest unit within the boundary of the Site consists of miscellaneous man-made fill material. The fill material at the Site consisted mostly of brownish-gray to gray, locally black or dark gray mixtures of silt, sand and gravel, and miscellaneous debris. The fill ranged in thickness from 3.5 feet at piezometers PZ-7A and PZ-12A to 11 feet at piezometer PZ-3A. It may be thicker in local sections along the Passaic River as shown in the regional studies of Parillo (1959). The fill material at the Site generally was loose (standard penetration test [SPT] blows $N < 10$) to locally compact ($N = \pm 15$), although very loose to weight of hammer zones ($N = 0$) were also encountered. Locally the heterogeneous nature of fill material did not allow CPT penetration.

5.1.2 Intertidal Channel Deposits Unit

The intertidal channel deposits were found only in limited areas of the Site, within narrow bands that likely represent former tidal channels of the Passaic River prior to the emplacement of the fill material. The intertidal channel deposits consisted of a well graded loose to very loose, brown to brownish-gray fine to coarse sand intermixed with clay and silt. The lower portion of this unit was found to contain seams of cemented shell fragments as noted at piezometer PZ-12A and thin sandy gravel seams as observed at borehole PZ-4A. This unit was found to range up to 8.5 feet in thickness at the locations of CPT-6 and PZ-4A. Where present, the intertidal channel deposits graded into the underlying Meadow Mat Unit.

5.1.3 Meadow Mat Unit

A meadow mat consisting of organic silt and clay intermixed with sand and some peat was the youngest, natural geologic material at the Site forming a uniformly recognizable, laterally continuous layer. The Meadow Mat Unit consisted of a laterally mappable organic layer which was saturated, loose, soft (generally weight of hammer, N = 0), dark gray to gray, olive-gray to black or brown in color, fibrous, and included silty clay or clay material and stringers of fine sand.

The Meadow Mat Unit ranged in thickness from about 3.5 feet at CPT-6 and PZ-4A to 12 feet at PZ-5A. The base of the Meadow Mat Unit consisted of a well defined contact, below which an organic, gray fine-sand and silt layer was found that was correlatable with similar deposits across the Hackensack and adjacent lowlands. The gray silt unit was relatively well consolidated, and included a thin, "organic soil" layer of very low penetration resistance beneath a sand, silty-sand seam in the lower portion of the Meadow Mat Unit (see CPT logs for CPT-5, CPT-6, CPT-7, and CPT-9). Similarly, organic material and seams of peat were also intercepted in this unit beneath the Meadow Mat Unit in piezometers PZ-5A and PZ-4A.

The Meadow Mat Unit and the overlying Intertidal Channel Deposits Unit are correlated with the Estuarine and Salt Marsh Unit of Stanford et. al., (1995), but are herein recorded as separate hydrostratigraphic units because of their differing hydraulic behavior. The Intertidal Channel Deposits Unit is considered together with the Fill Material Unit as part of the surficial hydrostratigraphic unit, separated from deeper water-bearing units (Glacial Deposits Unit) by the Meadow Mat Unit, herein considered to represent a Site-wide local confining unit.

5.1.4 Glacial Deposits Unit

Glacial deposits underlying the Site were found to be comprised of up to three geologically distinct units as follows:

- Marsh deposits;
- Glacial outwash deposits; and,
- Glaciolacustrine deposits.

The marsh deposits consist of an organic gray fine sand and silt layer. This unit was tentatively correlated with the Estuarine and Salt Marsh units of Stanford et. al., (1995);

The glacial outwash deposits consisted of stratified fine to coarse sands, interbedded with silt, sandy silt and local seams (or lenses) of silty clay and clay, and gravel. These deposits are uniformly brown, pale yellow to dark brown in color , and noticeably harder than the overlying Meadow Mat Unit. This unit is considered to be a confined water-bearing unit beneath the Meadow Mat Unit which serves as a local confining layer. This sequence is similar to the stratigraphy reported in Parillo(1959).

Underlying the glacial outwash, a laterally persistent unit consisting of silty clays and clays was observed in the three deep boreholes (B-1, B-3 and B-4). This unit is tentatively identified as glaciolacustrine deposits of Glacial Lake Hackensack. These deposits consisted of brown to dark brown, silty clay, clay or clayey silt, with trace fine sand and occasionally gravel. The unit was stiff to hard with blow counts generally greater than N = 15. This unit was referred to as the "regional confining unit" in the FRI Work Plan. Based on a review of available published literature, these glaciolacustrine deposits are believed to act as a regional confining layer, hydraulically separating deeper geologic units from the shallower units investigated during the FRI (Fill Material Unit, Meadow Mat Unit and Glacial Deposits Unit).

Although these three geologically distinct units have been identified in the overburden below the Meadow Mat Unit, they are collectively referred to as "Glacial Deposits Unit" in this Report as they are believed to act as a single hydraulic unit..

5.2 Site Hydrogeology

5.2.1 Groundwater Levels and Hydraulic Gradients

As discussed in Section 4.5, groundwater levels in the Fill Material Unit were generally above the level of the Passaic River and the groundwater flowed radially away from the approximate center of the Site. Horizontal hydraulic gradients near the river were highest at low tide and the levels showed flow from the Fill Material Unit into the river. However at high tide, a slight trough developed in the groundwater table surface near the bulkhead indicating flow reversal from the river into the Fill Material Unit. In contrast, groundwater levels in the Glacial Deposits Unit were

generally below the level of the Passaic River and the groundwater flowed northeastward across most of the Site (away from the river). Groundwater levels and horizontal hydraulic gradients varied in both the Fill Material Unit and Glacial Deposits Unit as a result of tidal fluctuations.

The vertical hydraulic gradient between the two groundwater systems was calculated by dividing the difference in head by the distance between the mid-point of the screen intervals. Vertical gradients were calculated for all eight (8) piezometer pairs located within the confined section of the Glacial Deposits Unit (2 of the 10 piezometer pairs were located in an area where the glacial deposits are not fully confined). These calculations are summarized in Table 9. The calculated vertical gradients were all negative, indicating that the vertical component of groundwater flow is downward. The values were fairly low, ranging from 6.30×10^{-2} ft./ft to 4.11×10^{-1} ft./ft.

5.2.2 Hydraulic Conductivities and Flow Velocities

As described in Sections 4.7 and 4.8, hydraulic conductivities of the Fill Material Unit were calculated by analyzing short-term injection test data and slug test data for wells PZ-1B and PZ-4B and slug test data for well MW-13B. The injection test data were analyzed using the methods of Earlougher (1977) and Theis (1935). Calculated hydraulic conductivities were 8.84×10^{-2} cm/s, 1.24×10^{-3} cm/s and 8.96×10^{-4} cm/s for PZ-1B, PZ-4B and PZ-13B, respectively, with a geometric mean of 4.61×10^{-3} cm/s.

Hydraulic conductivities of the Glacial Deposits Unit were calculated by analyzing slug test data for wells PZ-1A, PZ-4A, PZ-5A, PZ-6A, PZ-7A, PZ-8A and PZ-12A. The slug tests of the wells in the Glacial Deposits Unit were analyzed using the methods of Hvorslev (1951) and Bouwer and Rice (1976). The calculated average hydraulic conductivities using these methods range from 3.73×10^{-5} cm/s at PZ-8A to 8.05×10^{-3} cm/s at PZ-6A, with an overall geometric mean of 4.33×10^{-4} cm/s. A summary of the horizontal hydraulic conductivity testing results and analysis methods is included in Table 8.

Estimates of groundwater flow velocity in the Fill Material Unit and through the Meadow Mat Unit were made in Section 4.8. The calculated average flow velocity in the Fill Material Unit was 1.65×10^{-4} cm/s or 0.47 ft/day. The calculated flow velocities for the Meadow Mat Unit ranged from 0.000107 ft/day to 0.00326 ft/day. Using these flow velocity values along with the stratigraphic

data, the time required for groundwater to flow through the Meadow Mat Unit was calculated to vary from 4.2 years at PZ-10A/B to 65.9 years at PZ-5A/B. These travel time calculations are summarized in Table 9.

5.2.3 Groundwater Flux Rates

The quantity of water, or volumetric flux, moving through the Fill Material Unit that discharges into the Passaic River was calculated in Section 4.8 to be about 2205 ft^3/day or 11.5 gpm.

5.2.4 Tidal Influences

Tidal fluctuations of up to six (6) feet were observed in the Passaic River during the long term water level measurements. As previously described, water in the river flows downstream towards Newark Bay during ebb tide, but reverses direction and flows upstream during flood tide. The lateral extent of tidal influence in the two shallow overburden groundwater systems at the Site can be estimated using data developed during the FRI. For the purposes of this estimate, tidal influence is defined as a change in the water level of ± 0.05 feet or more (i.e., an amplitude of ±0.10 feet or more). From Table 5, piezometer PZ-3B screened in the Fill Material Unit showed a change in head of approximately 0.1 ft during a tidal cycle. Since this well is about 250 feet from the river, the area of the Fill Material Unit influenced by tidal variations in the river is estimated to be approximately 250 feet or less from the river bank. The continuous water level measurements show that water levels in the Fill Material Unit near the river vary as much as approximately 3.5 ft. depending on the tide stage (Figure 10).

Likewise for the Glacial Deposits Unit, piezometer PZ-13A, screened in the glacial deposits, showed a change in head of approximately 0.1 ft. during a tidal cycle (Table 5). This indicates that tidal influence extends approximately 500 feet or less from the river within the confined Glacial Deposits Unit. The maximum observed water level fluctuation in the Glacial Deposits Unit was approximately 3 ft (Figure 9).

5.3 Contaminant Distribution

All soil and groundwater sample data collected during the FRI were subject to data validation in accordance with the NJDEP protocols described in Section 3.15. The laboratory analytical deliverables are attached in Appendices C and I. The results of the data validation are provided in

Section 4.9, and the validated detections for the various environmental media are summarized in Tables 4 and 7. The validated detections for these samples were compared to the appropriate remediation criteria/standards, if any, to assess potential areas of concern for future Site investigations. For this review, the following comparisons were made;

- Soil sample results were compared to the NJDEP Soil Cleanup Criteria (N.J.A.C. 7:26D, revised February 3, 1994), including the Residential Direct Contact, Non-Residential Direct Contact, and Impact to Ground water criteria; and,
- Groundwater samples were compared to the NJDEP Groundwater Quality Standards (N.J.A.C. 7:9-6).

5.4 Site Conceptual Model

A conceptual site model (CSM) is a database that is used as a basis to make informed management/ engineering/scientific decisions. A CSM for the Site, which primarily addresses site geology and hydrogeology, is illustrated on Figure 14, and described below. This CSM is based on the FRI field data and the available applicable literature discussed in previous sections.

The Site is comprised of a parcel of land roughly triangular in shape and approximately 30 acres in size. The south/southwestern boundary consists of about 1600 feet of shoreline along the Passaic River; the eastern two-thirds of which has been reinforced through the construction of a wood and concrete bulkhead.

Surface water in the Passaic River adjacent to the Site river flows downstream towards Newark Bay during ebb tide, but reverses direction and flows upstream during flood tide. Sediments in the river near the Site bulkhead range in thickness from 18 feet to 30 feet bgs, and have a very soft consistency and little shear strength

The Site is underlain by overburden and bedrock. Literature shows that the unconsolidated overburden varies in thickness across the Site from 60 ft. to 200 ft., depending on location. The overburden consists of the following units:

- Fill Material Unit;
- Intertidal Channel Deposits Unit (only in select areas);

- Meadow Mat Unit (the local confining layer); and,
- Glacial Deposits Unit (including the regional confining layer).

The Fill Material Unit ranges in thickness from 3.5 ft. to 11.0 ft. and has hydraulic conductivities ranging between 4.78 x 10^{-4} cm/sec to 6.79 x 10^{-2} cm/sec. The Meadow Mat Unit ranges in thickness from 3.5 ft. to 12. 0 ft. and has permeabilities ranging from 2.0 x 10^{-7} cm/sec to 3.9 x 10^{-7} cm/sec. Hydraulic conductivities in the Glacial Deposits Unit range from 3.36 x 10^{-5} cm/sec to 9.44 x 10^{-3} cm/sec

There are two distinct groundwater systems in the shallow overburden (i.e., that portion investigated by the FRI) at the Site, an unconfined system in the Fill Material Unit and a (largely) confined system in the Glacial Deposits Unit. The Meadow Mat Unit acts as local confining layer between the two systems. Groundwater within the Fill Material Unit generally is above the level of the river and flows radially away from the approximate center of the Site. Groundwater within the Glacial Deposits Unit typically is below the level of the river and flows primarily northeastward across the Site (away from the river) likely due to heavy off-site pumping in these deposits. Vertical hydraulic gradients between the two systems are slightly negative, indicating downward flow. Both groundwater systems are in hydraulic communication with the Passaic River, and are influenced by tides in proximity to the river. Tidal influence extends approximately 250 ft. from the river in the unconfined Fill Material Unit and approximately 500 ft. in the confined Glacial Deposits Unit. Total calculated groundwater flux from the Fill Material Unit to the river is 11.5 gpm.

Based upon literature, a laterally continuous glaciolacustrine clay unit is found within the Glacial Deposits Unit. This unit serves as the regional confining layer and was the deepest unit investigated during the FRI.

5.5 Project Objectives

The objective of the FRI was to identify potential IRAs at the Site which would minimize hydraulic communication between the Site and the adjacent Passaic River. Specific objectives of the FRI were to:

- Determine the general stratigraphy and physical and hydrogeological characteristics of the subsurface soils at the Site above the regional confining layer;
- Obtain data needed to determine the engineering and hydrogeological properties of the subsurface soils above the regional confining layer and to assess groundwater movement and potential presence of MGP residuals within the soil strata;
- Investigate engineering properties of the subsurface that could significantly influence the IRA; and,
- Collect hydrogeological data needed to understand the nature of groundwater flow near the Passaic River.

The specific objectives of the project have been met by successful completion of the work scoped in the FRI Work Plan. Potential IRAs were identified and evaluated (see Section 4.10). A specific IRA cannot be recommended at this time because the source of the oily discharge to the Passaic River was not located during the FRI. Absent a defined source, no conclusions can be made regarding actual pathways between the Site and the river for the migration of oily fluids. Therefore, the efficacy of a particular IRA to break pathways and thereby abate the oily discharge cannot be ascertained. Consequently, potential IRAs for the Site cannot be fully evaluated until additional studies are completed to resolve these remaining technical issues.

6.0 RECOMMENDATIONS

The objective of the FRI was to identify potential IRAs at the Site which would minimize hydraulic communication between the Site and the adjacent Passaic River.

The specific objectives of the FRI were to:

- Determine the general stratigraphy and physical and hydrogeological characteristics of the subsurface soils at the Site above the regional confining layer;
- Obtain data needed to determine the engineering and hydrogeological properties of the subsurface soils above the regional confining layer and to assess groundwater movement and potential presence of MGP residuals within the soil strata;
- Investigate engineering properties of the subsurface that could significantly influence the IRA; and,
- Collect hydrogeological data needed to understand the nature of groundwater flow near the Passaic River.

These specific objectives have been fully met by the FRI. However, there are a number of design issues that remain to be considered prior to the design and implementation of an interim remedial system for the alleged oily discharge from the Site into the Passaic River. These issues include:

- Identifying the source for the oily discharge;
- Insufficient data on groundwater are available (a hydraulic containment system will alter the rate and direction of contaminant movement);
- Insufficient data on aquifer properties are available; and
- Analytical studies of groundwater flow patterns (particularly where it meets the Passaic River) have not been sufficiently developed for the design of an appropriate hydraulic containment system.

Potential IRAs cannot be evaluated until additional studies are completed to resolve these issues. Such studies should include:

- An evaluation of preferential pathways for potential discharges for MGP residuals from the Site to the river;
- A comprehensive understanding of the Site stratigraphy above Glacial Deposits Unit, particularly along the river; and,
- A more comprehensive characterization of ground water and contaminant flux between the Site and the river.

Therefore, to design an appropriate remedial measure, further investigation at the Site is required via a site-wide remedial investigation (RI) pursuant to the Technical Requirements for Site Remediation (N.J.A.C. 7:26E). It is envisioned that data from the RI will be used to develop site-wide remedial actions (RAs), if deemed appropriate, including an action to mitigate the discharge of the oily substance from the Site. Until the RI has been completed and RAs, if any, have been agreed upon and implemented, the absorbent booms, which have proven to be an effective measure to protect both human health and the environment from the discharge, will continue to be deployed in the river along the Site.

g:\projects\953-6306\ri.rpt\final\text_f.doc

7.0 REFERENCES

Avervill, S.P., Pardi, R.R., Newman, W.S., and Dineen, R.J., 1980. Late Wisconsin-Holocene History of the Lower Hudson Region: New Evidence from the Hackensack and Hudson River Valleys in W. Manspeizer Ceditor. 1988. Field Studies of New Jersey Geology 2nd Guide to Field Trips, 52nd Annual Meeting of the New York State Geological Association. Rutgers University, pp. 159-187.

Barksdale, M., Johnson, M., Schafer, E., and Baker, R, 1943. Groundwater Supplies of Middlesex County, New Jersey, New Jersey Geological Survey Special Report 8, 154 pp.

Bouwer, H., and Rice, R.C., 1976. A Slug Test for Determining Hydraulic Conductivity of Unconfined Aquifers with Completely or Partially Penetrating Wells, Water Resources Research, vol. 12, No. 3.

Das, B. M., 1990. Principles of Geotechnical Engineering, PWS-Kent Publishing Company, Boston.

Earlougher, R.C., 1977. Advances in Well Test Analysis. American Institute of Mining, Metallurgical, and Petroleum Engineers, Inc., New York.

Freeze, R.A. and Cherry, J.A., 1979. Groundwater, Prentice Hall, Inc., Englewood Cliffs, NJ.

Golder Associates Inc., 1996. Remedial Investigation Work Plan for the Development of an Interim Remedial Action, Harrison Gas Plant Site, Harrison, New Jersey, January 1996.

Heath, R.C., 1987. Basic Ground-Water Hydrology, United States Geological Survey Water Supply Paper 2220.

Herpers, H., and Barksdale, H.C., 1951. Preliminary report on the Geology and Groundwater Supply of the Newark, New Jersey, Area. New Jersey Geological Survey Special Report 10.

Hvorslev, M.J., 1951. Time Lag and Soil Permeability in Groundwater Observations, Bulletin 36, U.S. Army Corps of Engineers, Waterways Experiment Station, Vicksburg, Mississippi.

New Jersey Department of Environmental Protection, 1992a. Field Sampling Procedures Manual, May 1992.

New Jersey Department of Environmental Protection, 1992b., Quality Assurance Data Validation of Analytical Deliverables, Standard Operating Procedures (SOPs) Document Numbers 5.A.2 Revision No. 2, 5.A.13, and 5.A.15.

Nichols, W.D., 1968. Groundwater Resources of Essex County, N.J. Division of Water Policy, N.J. Dept. Conservation and Economic Development Special Report No. 28, 56 p.

Parillo, D.G., 1959. Bedrock Topography of the Hackensack Meadowlands, New Jersey Geological Survey Report Series #1, 25 p.

Serfes, M.E., 1994. Natural Groundwater Quality in Bedrock of the Newark Basin, NJ, New Jersey Geol. Survey, Geol. Surv. Report GSR-35 28p.

Stanford, S.D., Witte, R.W., and Harper, D.P., 1995. Glacial Sediments of New Jersey and Glacial Thickness of New Jersey. New Jersey Geol. Survey Open File Map, OFM-16 (1:150,000 Scale)

Stanford , S.D., 1993. Surficial Geology of the Weewaken and Central Park Quadrangles, Bergen, Hudson, and Passaic Counties, New Jersey. New Jersey Geological Survey Open File Map OFM 13, two sheets, scale 1:24,000.

Theis, C.V., 1935. The Relationship Between the Lowering of the Piezometric Surface and the Rate and Duration of Discharge of a Well Using Groundwater Storage, Transactions of the American Geophysical Union, Vol. 16, pp. 519-524.

United States Environmental Protection Agency, 1990a. Contract Laboratory Program Statement of Work for Inorganics Analysis, Multi-Media, Multi-Concentration 3/90 (CLP SOW ILM03.0)

United States Environmental Protection Agency, 1990b. Contract Laboratory Program Statement of Work for Organics Analysis, Multi-Media, Multi-Concentration 3/90 (CLP SOW OLM03.2)

United States Environmental Protection Agency, 1995. Draft Environmental Impact Statement on the Special Area Management Plan for the Hackensack Meadowlands District, NJ,

Tables

Table 1
Vane Shear Testing Results
Former Harrison Gas Plant
Focused Remedial Investigation

Vane Shear Location	Depth (feet bgs)	Shear Strength (Max) (psf)	Consistency(*)
GV-1	10-10.5	38	very soft
	11.5-12	38	very soft
	13.25-13.75	38	very soft
	14.25-14.75	38	very soft
	15.5-16	113	very soft
	17-17.5	38	very soft
	20.5-21	76	very soft
	22-22.5	113	very soft
Bottom of River Sediments @ 27.5 feet bgs			
GV-2	10.5-11	76	very soft
	12-12.5	132	very soft
	13.5-14	76	very soft
	18.5-19	151	very soft
	21-21.5	113	very soft
	23-23.5	94	very soft
	24.5-25	113	very soft
	26-26.5	113	very soft
Bottom of River Sediments @ 30 feet bgs			
GV-3	11.25-11.75	0	very soft
	14-14.5	75	very soft
Bottom of River Sediments @ 18.0 feet bgs			
	18.5-19	415	very soft

Notes (*) Classsified per "General Relationship of Consistency and Unconfined Compression of Clays," Table 8.3, Principals of Geotechnical Engineering, Braja Das, 1990.

849880061

Table 2
Soil Sample Depth Intervals
Former Harrison Gas Plant
Focused Remedial Investigation

Location	Depth (feet-bgs)	Stratigraphic Unit
Soil Borings		
B-1A	4-6	Fill Material
B-1B	62-64	Glacial Deposits
B-1C	8-10	Fill Material
B-2A	4-6	Fill Material
B-2B	30-32	Glacial Deposits
B-2C	22-24	Glacial Deposits
B-3A	4-5	Fill Material
B-3B	66-68	Glacial Deposits
B-4A	2-4	Fill Material
B-4B	66-68	Glacial Deposits
Test Pits		
TP-2	4-4.5	Fill Material
TP-3	4.5-5	Fill Material
TP-4	6.5-7	Fill Material
TP-5	2-2.5	Fill Material

849880062

Table 3
Sample Information
Focused Remedial Investigation
Former Harrison Gas Plant

FIELD ID No.	LAB ID No.	MATRIX	COMMENTS
PZ-5B	9607-6964	Groundwater	
PZ-4B	9607-6966	Groundwater	
PZ-13B	9607-6967	Groundwater	
PZ-7A	9607-6969	Groundwater	
PZ-1A	9607-6971	Groundwater	
PZ-1B	9607-6972	Groundwater	
PZ-10B	9607-6974	Groundwater	
HYDRIN	9607-6966	Groundwater	Potable water source
PZ-99A	9607-6970	Groundwater	Field duplicate
RB-01	9607-6973	Groundwater	Field blank
TB-01	9607-6968	Groundwater	Trip blank
TP-02	9605-4468	Test Pit	
TP-03	9605-4469	Test Pit	
TP-04	9605-4470	Test Pit	
TP-05	9605-4471	Test Pit	
TP-10	9605-4474	Test Pit	Field duplicate
B-1A	9605-4636	Soil Boring	
B-2A	9605-4638	Soil Boring	
B-1B	9605-4637	Soil Boring	
B-1C	9605-4642	Soil Boring	
B-2B	9605-4644	Soil Boring	
B-2C	9605-4645	Soil Boring	
B-3A	9605-4776	Soil Boring	
B-3B	9605-4777	Soil Boring	
B-4A	9605-4883	Soil Boring	
B-4B	9605-4884	Soil Boring	
B-10	9605-4778	Soil Boring	Field duplicate
RB-01	9605-4472	Test Pit	Field blank
TB-01	9605-4473	Test Pit	Trip blank
RB-02	9505-4639	Soil Boring	Field blank
RB-03	9505-4640	Soil Boring	Field blank
RB-04	9505-4641	Soil Boring	Field blank
RB-06	9505-4779	Soil Boring	Field blank
RB-07	9505-4885	Soil Boring	Field blank
TB-02	9505-4643	Soil Boring	Trip blank
TB-04	9505-4886	Soil Boring	Trip blank

Table 4
Summary of Soil Detections
Semi-Volatile Organic Compounds
Former Harrison Gas Plant
Focused Remedial Investigation

Criteria					Sample Point:		B-1B	Sample Point:		B-2B	Sample Point:		B-2C
					Lab ID Number:		9605-4637	Lab ID Number:		9605-4644	Lab ID Number:		9605-4645
					Date Sampled:		5/22/96	Date Sampled:		5/24/96	Date Sampled:		5/24/96
					Date Analyzed:		5/31/96	Date Analyzed:		6/1/96	Date Analyzed:		6/1/96
(1)	(2)	(3)	CRQL	Parameter	SQL	Result	Qual	SQL	Result	Qual	SQL	Result	Qual
4200000	100000	230000	330	Naphthalene	320	-		320	-		630	-	
- -	- -	- -	330	2-Methylnaphthalene	320	-		320	-		630	-	
- -	- -	- -	330	Acenaphthylene	320	-		320	-		630	-	
10000000	100000	3400000	330	Acenaphthene	320	-		320	-		630	-	
- -	- -	- -	330	Phenanthrene	320	-		320	-		630	-	
10000000	100000	1E+07	330	Anthracene	320	-		320	-		630	-	
10000000	100000	2300000	330	Fluoranthene	320	-		320	-		630	-	
10000000	100000	1700000	330	Pyrene	320	-		320	-		630	-	
4000	500000	900	330	Benzo(a)anthracene	320	-		320	-		630	-	
40000	500000	9000	330	Chrysene	320	-		320	-		630	-	
4000	50000	900	330	Benzo(b)fluoranthene	320	-		320	-		630	-	
4000	500000	900	330	Benzo(k)fluoranthene	320	-		320	-		630	-	
660	100000	660	330	Benzo(a)pyrene	320	-		320	-		630	580	J,93
4000	500000	900	330	Indeno(1,2,3-cd)pyrene	320	-		320	-		630	-	
- -	- -	- -	330	Benzo(g,h,i)perylene	320	-		320	-		630	-	
10000000	100000	2300000	330	Fluorene	320	-		320	-		630	-	

Notes:

All units are ug/kg

"-" Indicates analyte not detected in sample.

"- -" Indicates no criteria available.

The Qual column indicates the qualifier applied to the result following data validation, see back page for definition

CRQL - Contract Required Quantitation Limit.

SQL - Sample Quantitation Limit; SQL adjusted for percent moisture and dilution as applicable.

The criteria columns are based on the NJDEP Soil Cleanup Criteria for (N.J.A.C. 7:26D, revised 2/3/94):

(1) Non-Residential Direct Contact.

(2) Impact to Groundwater

(3) Residential Direct Contact.

= Indicates criteria exceeded.

849880064

Table 4
Summary of Soil Detections
Semi-Volatile Organic Compounds
Former Harrison Gas Plant
Focused Remedial Investigation

Criteria					Sample Point:		B-3B	Sample Point:		B-4B	Sample Point:		B-10
					Lab ID Number:		9605-4777	Lab ID Number:		9605-4884	Lab ID Number:		9605-4778
					Date Sampled:		5/29/96	Date Sampled:		6/4/96	Date Sampled:		5/29/96
					Date Analyzed:		6/13/96	Date Analyzed:		6/6/96	Date Analyzed:		6/13/96
(1)	(2)	(3)	CRQL	Parameter	SQL	Result	Qual	SQL	Result	Qual	SQL	Result	Qual
4200000	100000	230000	330	Naphthalene	310	-		320	-		310	-	
- -	- -	- -	330	2-Methylnaphthalene	310	-		320	-		310	-	
- -	- -	- -	330	Acenaphthylene	310	-		320	-		310	-	
10000000	100000	3400000	330	Acenaphthene	310	-		320	-		310	-	
- -	- -	- -	330	Phenanthrene	310	-		320	-		310	-	
10000000	100000	1E+07	330	Anthracene	310	-		320	-		310	-	
10000000	100000	2300000	330	Fluoranthene	310	-		320	-		310	-	
10000000	100000	1700000	330	Pyrene	310	-		320	-		310	-	
4000	500000	900	330	Benzo(a)anthracene	310	-		320	-		310	-	
40000	500000	9000	330	Chrysene	310	-		320	-		310	-	
4000	50000	900	330	Benzo(b)fluoranthene	310	-		320	-		310	-	
4000	500000	900	330	Benzo(k)fluoranthene	310	-		320	-		310	-	
660	100000	660	330	Benzo(a)pyrene	310	-		320	-		310	-	
4000	500000	900	330	Indeno(1,2,3-cd)pyrene	310	-		320	-		310	-	
- -	- -	- -	330	Benzo(g,h,i)perylene	310	-		320	-		310	-	
10000000	100000	2300000	330	Fluorene	310	-		320	-		310	-	

Notes:

All units are ug/kg

"-" Indicates analyte not detected in sample.

"- -" Indicates no criteria available.

The Qual column indicates the qualifier applied to the result following data validation, see back page for definition

CRQL - Contract Required Quantitation Limit.

SQL - Sample Quantitation Limit; SQL adjusted for percent moisture and dilution as applicable.

The criteria columns are based on the NJDEP Soil Cleanup Criteria for (N.J.A.C. 7:26D, revised 2/3/94):

(1) Non-Residential Direct Contact.

(2) Impact to Groundwater

(3) Residential Direct Contact.

= Indicates criteria exceeded.

Sample ID B-10 is field dup. of B-3B.

849880065

Table 4
Summary of Soil Detections
Semi-Volatile Organic Compounds
Former Harrison Gas Plant
Focused Remedial Investigation

Criteria					Sample Point:		TP-02	Sample Point:		TP-03	Sample Point:		TP-04
					Lab ID Number:		9605-4468	Lab ID Number:		9605-4469	Lab ID Number:		9605-4470
					Date Sampled:		5/20/96	Date Sampled:		5/20/96	Date Sampled:		5/20/96
					Date Analyzed:		5/24/96	Date Analyzed:		5/24/96	Date Analyzed:		5/24/96
(1)	(2)	(3)	CRQL	Parameter	SQL	Result	Qual	SQL	Result	Qual	SQL	Result	Qual
4200000	100000	230000	330	Naphthalene	350	-		290	380		300	130	J,93
- -	- -	- -	330	2-Methylnaphthalene	350	-		290	190	JN,92,93	300	230	J,93
- -	- -	- -	330	Acenaphthylene	350	-		290	1300		300	360	
10000000	100000	3400000	330	Acenaphthene	350	-		290	1400		300	-	
- -	- -	- -	330	Phenanthrene	350	-		290	870		300	130	J,93
10000000	100000	1E+07	330	Anthracene	350	-		290	1000		300	210	J,93
10000000	100000	2300000	330	Fluoranthene	350	210	J,93	290	5500		300	200	J,93
10000000	100000	1700000	330	Pyrene	350	350		290	9800		300	300	J,93
4000	500000	900	330	Benzo(a)anthracene	350	180	JN,92,93	290	2400		300	160	J,93
40000	500000	9000	330	Chrysene	350	230	J,93	290	2100		300	230	J,93
4000	50000	900	330	Benzo(b)fluoranthene	350	250	J,93	290	1800		300	220	J,93
4000	500000	900	330	Benzo(k)fluoranthene	-	-		290	1500		300	200	J,93
660	100000	660	330	Benzo(a)pyrene	350	170	J,93	290	3500		300	160	J,93
4000	500000	900	330	Indeno(1,2,3-cd)pyrene	-	-		290	1400		300	280	J,93
- -	- -	- -	330	Benzo(g,h,i)perylene	350	170	J,93	290	2200		300	520	
10000000	100000	2300000	330	Fluorene	350	-		290	-		300	-	

All units are ug/kg

"-" Indicates analyte not detected in sample.

"- -" Indicates no criteria available.

The Qual column indicates the qualifier applied to the result following data validation, see back page for definition

CRQL - Contract Required Quantitation Limit.

SQL - Sample Quantitation Limit; SQL adjusted for percent moisture and dilution as applicable.

The criteria columns are based on the NJDEP Soil Cleanup Criteria for (N.J.A.C. 7:26D, revised 2/3/94):

(1) Non-Residential Direct Contact.

(2) Impact to Groundwater

(3) Residential Direct Contact.

= Indicates criteria exceeded.

84988006

Table 4
Summary of Soil Detections
Semi-Volatile Organic Compounds
Former Harrison Gas Plant
Focused Remedial Investigation

Criteria					Sample Point: TP-05			Sample Point: TP-10			Sample Point: B-1A		
					Lab ID Number: 9605-4471			Lab ID Number: 9605-4474			Lab ID Number: 9605-4636		
					Date Sampled: 5/20/96			Date Sampled: 5/20/96			Date Sampled: 5/21/96		
					Date Analyzed: 5/24/96			Date Analyzed: 5/24/96			Date Analyzed: 5/31/96		
(1)	(2)	(3)	CRQL	Parameter	SQL	Result	Qual	SQL	Result	Qual	SQL	Result	Qual
4200000	100000	230000	330	Naphthalene	300	-		280	190	J,93	290		
- -	- -	- -	330	2-Methylnaphthalene	300	-		280	240	JN,92,93	290		
- -	- -	- -	330	Acenaphthylene	300	150	J,93	280	600		290	1100	
10000000	100000	3400000	330	Acenaphthene	300	-		280	460		290		
- -	- -	- -	330	Phenanthrene	300	-		280	260	J,93	290	5200	
10000000	100000	1E+07	330	Anthracene	300	-		280	390		290	900	
10000000	100000	2300000	330	Fluoranthene	300	280	J,93	280	1600		290	4000	
10000000	100000	1700000	330	Pyrene	300	360		280	3500		290	5400	
4000	500000	900	330	Benzo(a)anthracene	300	230	J,93	280	730		290	2400	
40000	500000	9000	330	Chrysene	300	260	J,93	280	780		290	2900	
4000	50000	900	330	Benzo(b)fluoranthene	300	250	J,93	280	540		290	1800	
4000	500000	900	330	Benzo(k)fluoranthene	300	240	J,93	280	630		290	920	
660	100000	660	330	Benzo(a)pyrene	300	290	J,93	280	1200		290	1600	
4000	500000	900	330	Indeno(1,2,3-cd)pyrene	300	200	J,93	280	600		290	1000	
- -	- -	- -	330	Benzo(g,h,i)perylene	300	290	J,93	280	920		290	1200	
10000000	100000	2300000	330	Fluorene	300	-		280	-		290	230	J,93

All units are ug/kg

"-" Indicates analyte not detected in sample.

"- -" Indicates no criteria available.

The Qual column indicates the qualifier applied to the result following data validation, see back page for definition

CRQL - Contract Required Quantitation Limit.

SQL - Sample Quantitation Limit; SQL adjusted for percent moisture and dilution as applicable.

The criteria columns are based on the NJDEP Soil Cleanup Criteria for (N.J.A.C. 7:26D, revised 2/3/94):

(1) Non-Residential Direct Contact.

(2) Impact to Groundwater

(3) Residential Direct Contact.

= Indicates criteria exceeded.

Sample ID TP-10 is field dup. of TP-3.

849880067

Table 4
Summary of Soil Detections
Semi-Volatile Organic Compounds
Former Harrison Gas Plant
Focused Remedial Investigation

Criteria					Sample Point:		B-2A	Sample Point:		B-1C	Sample Point:		B-3A
					Lab ID Number:		9605-4638	Lab ID Number:		9605-4642	Lab ID Number:		9605-4776
					Date Sampled:		5/23/96	Date Sampled:		5/21/96	Date Sampled:		5/29/96
					Date Analyzed:		5/31/96	Date Analyzed:		6/1/96	Date Analyzed:		6/6/96
(1)	(2)	(3)	CRQL	Parameter	SQL	Result	Qual	SQL	Result	Qual	SQL	Result	Qual
4200000	100000	230000	330	Naphthalene	290	-		300	-		300	-	
- -	- -	- -	330	2-Methylnaphthalene	290	-		300	-		300	-	
- -	- -	- -	330	Acenaphthylene	290	-		300	-		300	-	
10000000	100000	3400000	330	Acenaphthene	290	-		300	-		300	-	
- -	- -	- -	330	Phenanthrene	290	-		300	-		300	740	
10000000	100000	1E+07	330	Anthracene	290	-		300	-		300	140	J,93
10000000	100000	2300000	330	Fluoranthene	290	-		300	160	J,93	300	450	
10000000	100000	1700000	330	Pyrene	290	-		300	320		300	720	
4000	500000	900	330	Benzo(a)anthracene	290	-		300	180	J,93	300	280	J,93
40000	500000	9000	330	Chrysene	290	-		300	220	J,93	300	330	
4000	50000	900	330	Benzo(b)fluoranthene	290	-		300	180	JN,92	300	150	J,93
4000	500000	900	330	Benzo(k)fluoranthene	290	-		300	130	JN,92	300	170	J,93
660	100000	660	330	Benzo(a)pyrene	290	-		300	230	J,93	300	230	J,93
4000	500000	900	330	Indeno(1,2,3-cd)pyrene	290	-		300	140	J,93	300	-	
- -	- -	- -	330	Benzo(g,h,i)perylene	290	-		300	190	J,93	300	170	J,93
10000000	100000	2300000	330	Fluorene	290	-		300	-		300	-	

All units are ug/kg

"-" Indicates analyte not detected in sample.

"- -" Indicates no criteria available.

The Qual column indicates the qualifier applied to the result following data validation, see back page for definition

CRQL - Contract Required Quantitation Limit.

SQL - Sample Quantitation Limit; SQL adjusted for percent moisture and dilution as applicable.

The criteria columns are based on the NJDEP Soil Cleanup Criteria for (N.J.A.C. 7:26D, revised 2/3/94):

(1) Non-Residential Direct Contact.

(2) Impact to Groundwater

(3) Residential Direct Contact.

= Indicates criteria exceeded.

849880068

Table 4
Summary of Soil Detections
Semi-Volatile Organic Compounds
Former Harrison Gas Plant
Focused Remedial Investigation

Criteria					Sample Point:			Sample Point:			Sample Point:		
					Lab ID Number:		9605-4883	Lab ID Number:			Lab ID Number:		
					Date Sampled:		6/4/96	Date Sampled:			Date Sampled:		
					Date Analyzed:		6/6/96	Date Analyzed:			Date Analyzed:		
(1)	(2)	(3)	CRQL	Parameter	SQL	Result	Qual	SQL	Result	Qual	SQL	Result	Qual
4200000	100000	230000	330	Naphthalene	340	-							
- -	- -	- -	330	2-Methylnaphthalene	340	-							
- -	- -	- -	330	Acenaphthylene	340	150	J,93						
10000000	100000	3400000	330	Acenaphthene	340	-							
- -	- -	- -	330	Phenanthrene	340	300	J,93						
10000000	100000	1E+07	330	Anthracene	340	-							
10000000	100000	2300000	330	Fluoranthene	340	360							
10000000	100000	1700000	330	Pyrene	340	470							
4000	500000	900	330	Benzo(a)anthracene	340	220	J,93						
40000	500000	9000	330	Chrysene	340	260	J,93						
4000	50000	900	330	Benzo(b)fluoranthene	340	240	JN,92,93						
4000	500000	900	330	Benzo(k)fluoranthene	340	-							
660	100000	660	330	Benzo(a)pyrene	340	220	J,93						
4000	500000	900	330	Indeno(1,2,3-cd)pyrene	340	140	J,93						
- -	- -	- -	330	Benzo(g,h,i)perylene	340	190	J,93						
10000000	100000	2300000	330	Fluorene	340	-							

All units are ug/kg

"-" Indicates analyte not detected in sample.

"- -" Indicates no criteria available.

The Qual column indicates the qualifier applied to the result following data validation, see back page for definitions.

CRQL - Contract Required Quantitation Limit.

SQL - Sample Quantitation Limit; SQL adjusted for percent moisture and dilution as applicable.

The criteria columns are based on the NJDEP Soil Cleanup Criteria for (N.J.A.C. 7:26D, revised 2/3/94):

(1) Non-Residential Direct Contact.

(2) Impact to Groundwater

(3) Residential Direct Contact.

= Indicates criteria exceeded.

849880069

Table 4
Summary of Soil Detections
Metals
Former Harrison Gas Plant
Focused Remedial Investigation

Criteria													
						Sample Point:	B-1B	Sample Point:	B-2B	Sample Point:	B-2C	Sample Point:	B-3B
						Lab ID:	9605-4637	Lab ID:	9605-4644	Lab ID:	9605-4645	Lab ID:	9605-4777
						Date Sampled:	5/22/96	Date Sampled:	5/24/96	Date Sampled:	5/24/96	Date Sampled:	5/29/96
						Date Analyzed:	NA	Date Analyzed:	NA	Date Analyzed:	NA	Date Analyzed:	NA
(1)	(2)	(3)	IDL	CRQL	Parameter	Result	Qual	Result	Qual	Result	Qual	Result	Qual
--	--	--	0.5	10	Aluminum	5861		5907		17371		5977	
340	--	14	1	3	Antimony	-	UJ,19	-	UJ,19	-	UJ,19	3	
20	--	20	0.5	0.5	Arsenic	1.5	R,27	1.8	R,27	10.3	R,27	1	R,27
47000	--	700	0.1	10	Barium	70.1	R,94	23.4	R,94	131.1	R,94	102.75	R,94
1	--	1	0.1	0.25	Beryllium	0.3		0.3		0.9		0.3	
100	--	1	0.1	0.25	Cadmium	0.7		0.6		1.3		0.9	
--	--	--	5	250	Calcium	12113		1122		6040		13535	
--	--	--	0.1	0.5	Chromium	7.9	R,94	7	R,94	32.1	R,94	8	R,94
--	--	--	0.1	2.5	Cobalt	4.4		4.7		10.3		4.6	
600	--	600	0.25	1.25	Copper	5.89		7.77		20.7		10.5	
--	--	--	2	5	Iron	12610		12829		19896		11008	
600	--	100	0.1	0.15	Lead	4.68		4.79		10.59		4.77	
--	--	--	2	250	Magnesium	4081		3525		7360		4160	
--	--	--	0.2	0.75	Manganese	220.28	J,16	83.53	J,16	349.6	J,16	256.23	J,16
270	--	14	0.02	0.02	Mercury	1.35	J,16	0.46	J,16	2.06	J,16	0.36	J,16
2400	--	250	0.25	2	Nickel	8.67		8.63		16.69		9.6	
--	--	--	5	250	Potassium	1277		1037		753		1265	
3100	--	63	0.25	0.25	Selenium	-		-		-		7.51	J,18
4100	--	110	0.1	0.5	Silver	0.6	UJ,1	0.3	UJ,1	1	UJ,1	-	
--	--	--	5	250	Sodium	1876		1356		6173		1117	
7100	--	370	1	2.5	Vanadium	12		11		70		11	
1500	--	1500	0.3	1	Zinc	27.14	U,1	23.55	U,1	77.8	U,1	40.09	U,1

Notes:

All units are mg/kg; NA = Not Applicable.

"-" Indicates analyte not detected in sample; "- -" Indicates no criteria available.

The Qual column indicates the qualifier applied to the result following data validation, see back page for definitions.

CRDL - Contract Required Detection Limit.

The criteria columns are based on the NJDEP Soil Cleanup Criteria for (N.J.A.C. 7:26D, revised 2/3/94):

(1) Non-Residential Direct Contact. IDL - Instrument Detection Limit.

(2) Impact to Groundwater

(3) Residential Direct Contact.

= Indicates criteria exceeded.

849880070

Table 4
Summary of Soil Detections
Metals
Former Harrison Gas Plant
Focused Remedial Investigation

Criteria						Sample Point: B-4B		Sample Point: B-10		Sample Point: TP-02		Sample Point: TP-03	
						Lab ID: 9605-4884		Lab ID: 9605-4778		Lab ID: 9605-4468		Lab ID: 9605-4469	
						Date Sampled: 6/4/96		Date Sampled: 5/29/96		Date Sampled: 5/20/96		Date Sampled: 5/20/96	
						Date Analyzed: NA		Date Analyzed: NA		Date Analyzed: NA		Date Analyzed: NA	
(1)	(2)	(3)	IDL	CRQL	Parameter	Result	Qual	Result	Qual	Result	Qual	Result	Qual
--	--	--	0.5	10	Aluminum	5543		5976		5618		5378	
340	--	14	1	3	Antimony	2		4		6	J,19	-	
20	--	20	0.5	0.5	Arsenic	1.7	R,27	0.7	R,27	14.8	J,19	4	J,19
47000	--	700	0.1	10	Barium	91.43	R,94	94.9	R,94	204.33		62.49	
1	--	1	0.1	0.25	Beryllium	7.1		0.3		0.3		0.3	
100	--	1	0.1	0.25	Cadmium	0.7		0.88		1		0.8	
--	--	--	5	250	Calcium	15980		11957		1145		1249	
--	--	--	0.1	0.5	Chromium	7.1	R,94	8.6	R,94	15.8		10.5	
--	--	--	0.1	2.5	Cobalt	4.4		4.8		5.8		6.8	
600	--	600	0.25	1.25	Copper	5.68		10.93		43.35	J,25	49.32	J,25
--	--	--	2	5	Iron	92.65		11594		19637	J,25	11915	J,25
600	--	100	0.1	0.15	Lead	4.39		4.76		388.96		455.97	
--	--	--	2	250	Magnesium	4254		4336		1289		2185	
--	--	--	0.2	0.75	Manganese	240.64	J,16	252.47	J,16	111.88		150.59	
270	--	14	0.02	0.02	Mercury	-		1.31	J,16	1.19		0.64	
2400	--	250	0.25	2	Nickel	8.83		9.46		36.59		15.28	
--	--	--	5	250	Potassium	1164		1413		420		1072	
3100	--	63	0.25	0.25	Selenium	7.42	J,18	11.39	J,18	14.81	J,19,89	12.61	J,19,89
4100	--	110	0.1	0.5	Silver	0.3	UJ,1	-		0.8		0.6	
--	--	--	5	250	Sodium	1013		1161		523		588	
7100	--	370	1	2.5	Vanadium	10		13		36		13	
1500	--	1500	0.3	1	Zinc	28.76	U,1	41.1	U,1	189.45		79.07	

Notes:

All units are mg/kg; NA = Not Applicable.

"-" Indicates analyte not detected in sample; "- -" Indicates no criteria available.

Sample ID B-10 is field dup. of B-3B.

The Qual column indicates the qualifier applied to the result following data validation, see back page for definitions.

CRDL - Contract Required Detection Limit.

The criteria columns are based on the NJDEP Soil Cleanup Criteria for (N.J.A.C. 7:26D, revised 2/3/94):

(1) Non-Residential Direct Contact.

(2) Impact to Groundwater

(3) Residential Direct Contact.

= Indicates criteria exceeded.

849880071

Table 4
Summary of Soil Detections
Metals
Former Harrison Gas Plant
Focused Remedial Investigation

Criteria (1)	Criteria (2)	Criteria (3)	IDL	CRQL	Parameter	Sample Point: TP-04 Lab ID: 9605-447 Date Sampled: 5/20/96 Date Analyzed: NA Result	Qual	Sample Point: TP-05 Lab ID: 9605-4471 Date Sampled: 5/20/96 Date Analyzed: NA Result	Qual	Sample Point: TP-10 Lab ID: 9605-4474 Date Sampled: 5/20/96 Date Analyzed: NA Result	Qual	Sample Point: B-1A Lab ID: 9605-4636 Date Sampled: 5/21/96 Date Analyzed: NA Result	Qual
- -	- -	- -	0.5	10	Aluminum	3199		6477		4645		3844	
340	- -	14	1	3	Antimony	-		-		-		-	UJ,19
20	- -	20	0.5	0.5	Arsenic	50.2	J,19	40.9	J,19	4.8	J,19	13.5	R,27
47000	- -	700	0.1	10	Barium	47.31		34.5		71.76		43.6	R,94
1	- -	1	0.1	0.25	Beryllium	0.4		0.3		0.4		0.5	
100	- -	1	0.1	0.25	Cadmium	1.2		1.2		1.1		1.6	
- -	- -	- -	5	250	Calcium	1351		307		1258		1618	
- -	- -	- -	0.1	0.5	Chromium	13.5		13.1		13.6		35.8	R,94
- -	- -	- -	0.1	2.5	Cobalt	5.2		4.7		7.7		11.3	
600	- -	600	0.25	1.25	Copper	56.03	J,25	29.37	J,25	61.22	J,25	75.93	
- -	- -	- -	2	5	Iron	15119	J,25	22061	J,25	12752	J,25	26012	
600	- -	100	0.1	0.15	Lead	124.53		85.54		102.66		107.69	
- -	- -	- -	2	250	Magnesium	690		691		2191		1316	
- -	- -	- -	0.2	0.75	Manganese	91.14		105.088		205.87		101.1	J,16
270	- -	14	0.02	0.02	Mercury	1.08		2.62		0.28		0.92	J,16
2400	- -	250	0.25	2	Nickel	19.77		18.37		23.52		198.67	
- -	- -	- -	5	250	Potassium	309		541		1034		320	
3100	- -	63	0.25	0.25	Selenium	16.93	J,19,89	19.68	J,19,89	12.86	J,19,89	-	
4100	- -	110	0.1	0.5	Silver	1		1.1		0.7		-	
- -	- -	- -	5	250	Sodium	605		662		444		806	
7100	- -	370	1	2.5	Vanadium	30		18		16		30	
1500	- -	1500	0.3	1	Zinc	55.02		210.01		100		82.43	JB,2

Notes:

All units are mg/kg; NA = Not Applicable.

"-" Indicates analyte not detected in sample; "- -" Indicates no criteria available.

Sample ID TP-10 is field duplicate of TP-3.

The Qual column indicates the qualifier applied to the result following data validation, see back page for definitions.

CRDL - Contract Required Detection Limit.

The criteria columns are based on the NJDEP Soil Cleanup Criteria for (N.J.A.C. 7:26D, revised 2/3/94):

(1) Non-Residential Direct Contact.

(2) Impact to Groundwater

(3) Residential Direct Contact.

= Indicates criteria exceeded.

849880072

Table 4
Summary of Soil Detections
Metals
Former Harrison Gas Plant
Focused Remedial Investigation

Criteria													
						Sample Point:	B-1C	Sample Point:	B-2A	Sample Point:	B-3A	Sample Point:	B-4A
						Lab ID:	9605-4642	Lab ID:	9605-4638	Lab ID:	9605-4776	Lab ID:	9605-4883
						Date Sampled:	5/21/96	Date Sampled:	5/23/96	Date Sampled:	5/29/96	Date Sampled:	6/4/96
						Date Analyzed:	NA	Date Analyzed:	NA	Date Analyzed:	NA	Date Analyzed:	NA
(1)	(2)	(3)	IDL	CRQL	Parameter	Result	Qual	Result	Qual	Result	Qual	Result	Qual
- -	- -	- -	0.5	10	Aluminum	10960		9924		8136		3666	
340	- -	14	1	3	Antimony	-	UJ,19	-	UJ,19	8		7	
20	- -	20	0.5	0.5	Arsenic	1.8	R,27	5.6	R,27	18	R,27	23.5	JB,2,18
47000	- -	700	0.1	10	Barium	22.3	R,94	15.9	R,94	54.18	R,94	5083	R,94
1	- -	1	0.1	0.25	Beryllium	0.4		0.5		0.4		0.2	
100	- -	1	0.1	0.25	Cadmium	0.8		1		1.2		3.3	
- -	- -	- -	5	250	Calcium	425		535		4844		1107	
- -	- -	- -	0.1	0.5	Chromium	17.1	R,94	24.7	R,94	14	R,94	40.6	R,94
- -	- -	- -	0.1	2.5	Cobalt	5.1		9.4		8.1		6.3	
600	- -	600	0.25	1.25	Copper	9.36		47.71		40.76		45.43	
- -	- -	- -	2	5	Iron	14487		22687		16514		46863	
600	- -	100	0.1	0.15	Lead	59.45		54.62		284.98		134.87	
- -	- -	- -	2	250	Magnesium	2600		5209		3875		2687	
- -	- -	- -	0.2	0.75	Manganese	68.97	J,16	315.78	J,16	230.27	J,16	146.4	J,16
270	- -	14	0.02	0.02	Mercury	0.54	J,16	0.56	J,16	1.4	J,16	0.51	J,16
2400	- -	250	0.25	2	Nickel	16.27		28.16		15.33		21.98	
- -	- -	- -	5	250	Potassium	517		1740		10.96		431	
3100	- -	63	0.25	0.25	Selenium	-		-		7.06	J,18	20.42	J,18
4100	- -	110	0.1	0.5	Silver	-		-		-		-	
- -	- -	- -	5	250	Sodium	816		610		1087		980	
7100	- -	370	1	2.5	Vanadium	27		38		14		68	
1500	- -	1500	0.3	1	Zinc	33.19	U,1	96.92	JB,2	95.74	JB,2	58.85	U,1

Notes:

All units are mg/kg; NA = Not Applicable.

"-" Indicates analyte not detected in sample; "- -" Indicates no criteria available.

The Qual column indicates the qualifier applied to the result following data validation, see back page for definitions.

CRDL - Contract Required Detection Limit.

The criteria columns are based on the NJDEP Soil Cleanup Criteria for (N.J.A.C. 7:26D, revised 2/3/94):

(1) Non-Residential Direct Contact.

(2) Impact to Groundwater

(3) Residential Direct Contact.

= Indicates criteria exceeded.

84988073

Table 4
Summary of Soil Detections
Volatile Organic Compounds
Former Harrison Gas Plant
Focused Remedial Investigation

					Sample Point:		B-1B	Sample Point:		B-2B	Sample Point:		B-2C	Sample Point:		B-3B
					Lab ID Number:		9605-4637	Lab ID Number:		9605-4644	Lab ID Number:		9605-4645	Lab ID Number:		9605-4777
					Date Sampled:		5/22/96	Date Sampled:		5/24/96	Date Sampled:		5/24/96	Date Sampled:		5/29/96
Criteria					Date Analyzed:		5/29/96	Date Analyzed:		5/29/96	Date Analyzed:		5/29/96	Date Analyzed:		6/6/96
(1)	(2)	(3)	CRQL	Parameter	SQL	Result	Qual	SQL	Result	Qual	SQL	Result	Qual	SQL	Result	Qual
54000	1000	23000	10	Trichloroethene	60	-		60	-		125	-		50	-	
6000	1000	4000	10	Tetrachloroethene	60	-		60	-		125	-		50	-	
13000	1000	3000	10	Benzene	60	-		60	-		125	-		50	-	
1E+06	5E+05	1E+06	10	Toluene	60	-		60	-		125	-		50	-	
1E+06	10000	4E+05	10	m&p-Xylenes	60	-		60	-		125	-		50	-	
1E+06	1E+05	1E+06	10	Acetone	60	-		60	-		125	350	U,96	50	-	

Notes:

All units are ug/kg

"-" Indicates analyte not detected in sample.

"- -" Indicates no criteria available.

The Qual column indicates the qualifier applied to the result following data validation, see back page for definitions.

CRQL - Contract Required Quantitation Limit.

SQL - Sample Quantitation Limit; SQL adjusted for percent moisture and dilution as applicable.

The criteria columns are based on the NJDEP Soil Cleanup Criteria for (N.J.A.C. 7:26D, revised 2/3/94):

(1) Non-Residential Direct Contact.

(2) Impact to Groundwater

(3) Residential Direct Contact.

= Indicates criteria exceeded.

849880074

Table 4
Summary of Soil Detections
Volatile Organic Compounds
Former Harrison Gas Plant
Focused Remedial Investigation

					Sample Point:		B-4B	Sample Point:		B-10	Sample Point:		TP-02	Sample Point:		TP-03
					Lab ID Number:		9605-4884	Lab ID Number:		9605-4778	Lab ID Number:		9605-4468	Lab ID Number:		9605-4469
					Date Sampled:		6/4/96	Date Sampled:		5/29/96	Date Sampled:		5/20/96	Date Sampled:		5/20/96
Criteria					Date Analyzed:		6/6/96	Date Analyzed:		6/6/96	Date Analyzed:		5/28/96	Date Analyzed:		5/28/96
(1)	(2)	(3)	CRQL	Parameter	SQL	Result	Qual	SQL	Result	Qual	SQL	Result	Qual	SQL	Result	Qual
54000	1000	23000	10	Trichloroethene	60	-		50	-		55	-		45	-	
6000	1000	4000	10	Tetrachloroethene	60	-		50	-		55	-		45	-	
13000	1000	3000	10	Benzene	60	-		50	-		55	-		45	-	
1E+06	5E+05	1E+06	10	Toluene	60	-		50	-		55	-		45	-	
1E+06	10000	4E+05	10	m&p-Xylenes	60	-		50	-		55	-		45	-	
1E+06	1E+05	1E+06	10	Acetone	60	-		50	-		55	-		45	-	

Notes:

All units are ug/kg

"-" Indicates analyte not detected in sample.

"- -" Indicates no criteria available.

The Qual column indicates the qualifier applied to the result following data validation, see back page for definitions.

CRQL - Contract Required Quantitation Limit.

SQL - Sample Quantitation Limit; SQL adjusted for percent moisture and dilution as applicable.

The criteria columns are based on the NJDEP Soil Cleanup Criteria for (N.J.A.C. 7:26D, revised 2/3/94):

(1) Non-Residential Direct Contact.

(2) Impact to Groundwater

(3) Residential Direct Contact.

= Indicates criteria exceeded.

Sample ID B-10 is field dup. of B-3B.

849880075

Table 4
Summary of Soil Detections
Volatile Organic Compounds
Former Harrison Gas Plant
Focused Remedial Investigation

					Sample Point:		TP-04	Sample Point:		TP-05	Sample Point:		TP-10	Sample Point:		B-1A
					Lab ID Number:		9605-4470	Lab ID Number:		9605-4471	Lab ID Number:		9605-4474	Lab ID Number:		9605-4636
					Date Sampled:		5/20/96	Date Sampled:		5/20/96	Date Sampled:		5/20/96	Date Sampled:		5/21/96
Criteria					Date Analyzed:		5/24/96	Date Analyzed:		5/29/96	Date Analyzed:		5/28/96	Date Analyzed:		5/29/96
(1)	(2)	(3)	CRQL	Parameter	SQL	Result	Qual	SQL	Result	Qual	SQL	Result	Qual	SQL	Result	Qual
54000	1000	23000	10	Trichloroethene	55	7	JN,92,93	55	-		45	-		45	-	R,95
6000	1000	4000	10	Tetrachloroethene	55	17	J,93	55	-		45	-		45	-	R,95
13000	1000	3000	10	Benzene	55	-		55	-		45	-		45	16	R,95
1E+06	5E+05	1E+06	10	Toluene	55	-		55	-		45	-		45	21	R,95
1E+06	10000	4E+05	10	m&p-Xylenes	55	-	UJ,49	55	-		45	-		45	8	R,95
1E+06	1E+05	1E+06	10	Acetone	55	-		55	130	U,3	45	-		45	-	R,95

Notes:

All units are ug/kg

"-" Indicates analyte not detected in sample.

"- -" Indicates no criteria available.

The Qual column indicates the qualifier applied to the result following data validation, see back page for definitions.

CRQL - Contract Required Quantitation Limit.

SQL - Sample Quantitation Limit; SQL adjusted for percent moisture and dilution as applicable.

The criteria columns are based on the NJDEP Soil Cleanup Criteria for (N.J.A.C. 7:26D, revised 2/3/94):

(1) Non-Residential Direct Contact.

(2) Impact to Groundwater

(3) Residential Direct Contact.

= Indicates criteria exceeded.

Sample ID TP-10 is field duplicate of TP-3.

849880076

Table 4
Summary of Soil Detections
Volatile Organic Compounds
Former Harrison Gas Plant
Focused Remedial Investigation

					Sample Point:		B-2A	Sample Point:		B-1C	Sample Point:		B-3A	Sample Point:		B-4A
					Lab ID Number:		9605-4638	Lab ID Number:		9605-4642	Lab ID Number:		9605-4776	Lab ID Number:		9605-4883
					Date Sampled:		5/23/96	Date Sampled:		5/21/96	Date Sampled:		5/29/96	Date Sampled:		6/4/96
Criteria					Date Analyzed:		5/29/96	Date Analyzed:		5/29/96	Date Analyzed:		6/6/96	Date Analyzed:		6/6/96
(1)	(2)	(3)	CRQL	Parameter	SQL	Result	Qual	SQL	Result	Qual	SQL	Result	Qual	SQL	Result	Qual
54000	1000	23000	10	Trichloroethene	30	-	R,95	60	-		45	-		60	-	
6000	1000	4000	10	Tetrachloroethene	30	-	R,95	60	-		45	-		60	-	
13000	1000	3000	10	Benzene	30	-	R,95	60	-		45	-		60	-	
1E+06	5E+05	1E+06	10	Toluene	30	-	R,95	60	-		45	-		60	-	
1E+06	10000	4E+05	10	m&p-Xylenes	30	-	R,95	60	-		45	-		60	-	
1E+06	1E+05	1E+06	10	Acetone	30	-	R,95	60	-		45	-		60	96	

Notes:

All units are ug/kg

"-" Indicates analyte not detected in sample.

"- -" Indicates no criteria available.

The Qual column indicates the qualifier applied to the result following data validation, see back page for definitions.

CRQL - Contract Required Quantitation Limit.

SQL - Sample Quantitation Limit; SQL adjusted for percent moisture and dilution as applicable.

The criteria columns are based on the NJDEP Soil Cleanup Criteria for (N.J.A.C. 7:26D, revised 2/3/94):

(1) Non-Residential Direct Contact.

(2) Impact to Groundwater

(3) Residential Direct Contact.

= Indicates criteria exceeded.

849880077

Table 4
Summary of Soil Detections
Total Petroleum Hydrocarbons
Former Harrison Gas Plant
Focused Remedial Investigation

			Sample Point:		B-1B	Sample Point:		B-2B	Sample Point:		B-2C	Sample Point:		B-3B
			Lab ID Number:		9606-4637	Lab ID Number:		9606-4644	Lab ID Number:		9606-4645	Lab ID Number:		9606-4777
			Date Sampled:		5/22/96	Date Sampled:		5/24/96	Date Sampled:		5/24/96	Date Sampled:		5/29/96
Criteria			Date Analyzed:		5/29/96	Date Analyzed:		5/29/96	Date Analyzed:		5/29/96	Date Analyzed:		6/3/96
	RL	Parameter	SQL	Result	Qual	SQL	Result	Qual	SQL	Result	Qual	SQL	Result	Qual
--	5	TPH	6.5	-		6.3	-		12.5	53	J,19	6.3	-	

Notes:

All units are mg/kg

"-" Indicates analyte not detected in sample.

"- -" Indicates no criteria available.

The Qual column indicates the qualifier applied to the result following data validation, see back page for definitions.

RL - Reporting Limit.

SQL - Sample Quantitation Limit; SQL adjusted for percent moisture and dilution as applicable.

849880078

Table 4
Summary of Soil Detections
Total Petroleum Hydrocarbons
Former Harrison Gas Plant
Focused Remedial Investigation

Criteria			Sample Point: B-4B			Sample Point: B-1A			Sample Point: B-2A			Sample Point: B-1C		
			Lab ID Number: 9606-4884			Lab ID Number: 9606-4636			Lab ID Number: 9606-4638			Lab ID Number: 9606-4642		
			Date Sampled: 6/4/96			Date Sampled: 5/21/96			Date Sampled: 5/23/96			Date Sampled: 5/21/96		
			Date Analyzed: 6/6/96			Date Analyzed: 5/29/96			Date Analyzed: 5/29/96			Date Analyzed: 5/29/96		
	RL	Parameter	SQL	Result	Qual	SQL	Result	Qual	SQL	Result	Qual	SQL	Result	Qual
--	5	TPH	6.4	30	J,19	5.8	1556	J,19	5.9	21	J,19	6	32	J,19

Notes:

All units are mg/kg

"-" Indicates analyte not detected in sample.

"- -" Indicates no criteria available.

The Qual column indicates the qualifier applied to the result following data validation, see back page for definitions.

RL - Reporting Limit.

SQL - Sample Quantitation Limit; SQL adjusted for percent moisture and dilution as applicable.

849880079

Table 4
Summary of Soil Detections
Total Petroleum Hydrocarbons
Former Harrison Gas Plant
Focused Remedial Investigation

			Sample Point:		B-3A	Sample Point:		B-4A	Sample Point:		TP-02	Sample Point:		TP-03
			Lab ID Number:		9606-4776	Lab ID Number:		9606-4883	Lab ID Number:		TP-02	Lab ID Number:		TP-03
			Date Sampled:		5/29/96	Date Sampled:		6/4/96	Date Sampled:		5/20/96	Date Sampled:		5/20/96
Criteria			Date Analyzed:		6/3/96	Date Analyzed:		6/6/96	Date Analyzed:		5/24/96	Date Analyzed:		5/24/96
	RL	Parameter	SQL	Result	Qual	SQL	Result	Qual	SQL	Result	Qual	SQL	Result	Qual
--	5	TPH	6	28	J,19	6.8	790	J,19	7	42		5.8	717	

Notes:

All units are mg/kg

"-" Indicates analyte not detected in sample.

"- -" Indicates no criteria available.

The Qual column indicates the qualifier applied to the result following data validation, see back page for definitions.

RL - Reporting Limit.

SQL - Sample Quantitation Limit; SQL adjusted for percent moisture and dilution as applicable.

849880080

Table 4
Summary of Soil Detections
Total Petroleum Hydrocarbons
Former Harrison Gas Plant
Focused Remedial Investigation

			Sample Point:		TP-04	Sample Point:		TP-05	Sample Point:		TP-10	Sample Point:			Sample Point:		
			Lab ID Number:		TP-04	Lab ID Number:		TP-05	Lab ID Number:		TP-10	Lab ID Number:			Lab ID Number:		
			Date Sampled:		5/20/96	Date Sampled:		5/20/96	Date Sampled:		5/20/96	Date Sampled:			Date Sampled:		
Criteria			Date Analyzed:		5/24/96	Date Analyzed:		5/24/96	Date Analyzed:		5/24/96	Date Analyzed:			Date Analyzed:		
	RL	Parameter	SQL	Result	Qual	SQL	Result	Qual	SQL	Result	Qual	SQL	Result	Qual	SQL	Result	Qual
--	5	TPH	6	933		6	186		5.6	835							

Notes:

All units are mg/kg

"-" Indicates analyte not detected in sample.

"- -" Indicates no criteria available.

The Qual column indicates the qualifier applied to the result following data validation, see back page for definitions.

RL - Reporting Limit.

SQL - Sample Quantitation Limit; SQL adjusted for percent moisture and dilution as applicable.

Sample ID TP-10 is field duplicate of TP-3

849880081

Table 5
Static Groundwater Level Data
Former Harrison Gas Plant
Focused Remedial Investigation

Location	Inner Casing Elevation [1] (ft msl)	6/24/96 (Round 1) Time	Depth to Water (ft btic)	Groundwater Elevation (ft msl)	6/24/96 (Round 2) Time	Depth to Water (ft btic)	Groundwater Elevation (ft msl)	6/24/96 (Round 3) Time	Depth to Water (ft btic)	Groundwater Elevation (ft msl)
Fill Material										
PZ-1B	7.38	1116	6.45	0.93	1327	5.34	2.04	1508	4.13	3.25
PZ-2B	8.05	1114	4.22	3.83	1323	4.22	3.83	1506	4.21	3.84
PZ-3B	8.39	1112	3.24	5.15	1320	3.25	5.14	1503	3.17	5.22
PZ-4B	7.61	1108	6.28	1.33	1317	5.93	1.68	1458	5.35	2.26
PZ-5B	8.92	1104	5.93	2.99	1314	5.94	2.98	1454	5.93	2.99
PZ-6B	9.02	1138	4.19	4.83	1351	4.19	4.83	1536	4.15	4.87
PZ-8B	10.40	1129	5.21	5.19	1340	5.21	5.19	1524	5.20	5.20
PZ-9B	9.50	1126	5.50	4.00	1337	5.51	3.99	1522	5.51	3.99
PZ-10B	9.18	1124	4.23	4.95	1334	4.23	4.95	1519	4.21	4.97
PZ-13B	8.85	1135	2.25	6.60	1347	2.27	6.58	1532	2.23	6.62
Glacial Deposits										
PZ-1A	7.24	1115	7.45	-0.21	1326	6.71	0.53	1510	6.41	0.83
PZ-2A	8.00	1113	8.47	-0.47	1324	7.89	0.11	1505	7.58	0.42
PZ-3A	8.31	1111	9.29	-0.98	1321	9.09	-0.78	1503	8.86	-0.55
PZ-4A	7.56	1107	7.74	-0.18	1317	7.13	0.43	1459	6.74	0.82
PZ-5A	8.83	1103	9.10	-0.27	1313	8.01	0.82	1453	7.51	1.32
PZ-6A	8.90	1137	12.53	-3.63	1350	12.52	-3.62	1535	12.42	-3.52
PZ-7A	7.38	1130	11.03	-3.65	1342	11.02	-3.64	1527	10.95	-3.57
PZ-8A	10.50	1128	13.96	-3.46	1339	13.96	-3.46	1525	13.88	-3.38
PZ-9A	9.44	1126	12.75	-3.31	1336	12.75	-3.31	1523	12.67	-3.23
PZ-10A	9.01	1123	11.64	-2.63	1333	11.61	-2.60	1518	11.49	-2.48
PZ-11A	8.49	1122	10.71	-2.22	1332	10.62	-2.13	1516	10.49	-2.00
PZ-12A	8.48	1118	9.84	-1.36	1328	9.49	-1.01	1513	9.31	-0.83
PZ-13A	8.84	1134	11.62	-2.78	1346	11.61	-2.77	1531	11.51	-2.67
PZ-14A	9.32	1132	12.84	-3.52	1344	12.84	-3.52	1529	12.76	-3.44
Passaic River										
SG-1	6.60	1102	6.00	0.60	1359	2.97	3.63	1456	2.65	3.95
SG-2	4.35	1120	3.35	1.00	1329	0.9	3.45	1514	0.27	4.08

Notes [1] = measuring point elevation for river staff gauges SG-1 and SG-2 are surveyed points on bulkhead
ft msl = feet above (or below) mean sea level
ft btic = feet below top of inner casing

849880082

Table 5
Static Groundwater Level Data
Former Harrison Gas Plant
Focused Remedial Investigation

Location	Inner Casing Elevation [1] (ft msl)	7/18/96 (Round 1)			7/18/96 (Round 2)			7/18/96 (Round 3)			7/18/96 (Round 4)			7/18/96 (Round 5)			7/18/96 (Round 6)			7/18/96 (Round 7)			7/18/96 (Round 8)		
		Time	Depth to Water (ft btic)	Groundwater Elevation (ft msl)	Time	Depth to Water (ft btic)	Groundwater Elevation (ft msl)	Time	Depth to Water (ft btic)	Groundwater Elevation (ft msl)	Time	Depth to Water (ft btic)	Groundwater Elevation (ft msl)	Time	Depth to Water (ft btic)	Groundwater Elevation (ft msl)	Time	Depth to Water (ft btic)	Groundwater Elevation (ft msl)	Time	Depth to Water (ft btic)	Groundwater Elevation (ft msl)	Time	Depth to Water (ft btic)	Groundwater Elevation (ft msl)
Fill Material																									
PZ-1B	7.38	900	5.94	1.44	1052	4.53	2.85	1312	4.46	2.92	1449	5.16	2.22	1605	5.66	1.72	1736	6.16	1.22	1834	6.46	0.92	2000	6.26	1.12
PZ-2B	8.05	941	4.02	4.03	1049	4.03	4.02	1302	4.02	4.03	1447	4.02	4.03	1558	4.01	4.04	1734	4.01	4.04	1832	4.01	4.04	1955	4.01	4.04
PZ-3B	8.39	939	2.92	5.47	1040	2.91	5.48	1301	2.87	5.52	1444	2.86	5.53	1556	2.85	5.54	1731	2.84	5.55	1831	2.84	5.55	1951	2.85	5.54
PZ-4B	7.61	846	6.22	1.39	1036	5.59	2.02	1257	5.12	2.49	1441	5.48	2.13	1553	5.8	1.81	1727	6.15	1.46	1828	6.33	1.28	1945	6.4	1.21
PZ-5B	8.92	833	5.78	3.14	1021	5.78	3.14	1232	5.77	3.15	1436	5.76	3.16	1550	5.76	3.16	1722	5.76	3.16	1823	5.77	3.15	1936	5.78	3.14
PZ-6B	9.02	819	3.92	5.10	1009	3.92	5.10	1215	3.89	5.13	1433	3.88	5.14	1643	3.86	5.16	1719	3.85	5.17	1821	3.86	5.16	1930	3.86	5.16
PZ-8B	10.40	922	4.49	5.91	1115	4.5	5.90	1350	4.51	5.89	1501	4.5	5.90	1635	4.51	5.89	1748	4.51	5.89	1846	4.53	5.87	2025	4.52	5.88
PZ-9B	9.50	919	5.54	3.96	1110	5.57	3.93	1352	5.6	3.90	1458	5.6	3.90	1633	5.61	3.89	1746	5.63	3.87	1844	5.63	3.87	2021	5.65	3.85
PZ-10B	9.18	915	3.8	5.38	1105	3.79	5.39	1322	3.79	5.39	1456	3.79	5.39	1626	3.79	5.39	1743	3.78	5.40	1842	3.78	5.40	2013	3.79	5.39
PZ-13B	8.85	943	1.27	7.58	1140	1.26	7.59	1336	1.25	7.60	1507	1.25	7.60	1640	1.24	7.61	1754	1.24	7.61	1852	1.25	7.60	2033	1.26	7.59
Glacial Deposits																									
PZ-1A	7.24	901	6.9	0.34	1051	6.65	0.59	1309	6.85	0.39	1448	7.4	-0.16	1604	7.64	-0.40	1735	7.74	-0.50	1832	7.68	-0.44	1959	7.15	0.09
PZ-2A	8.00	942	7.86	0.14	1050	7.75	0.25	1302	7.79	0.21	1446	8.23	-0.23	1557	8.46	-0.46	1733	8.59	-0.59	1831	8.59	-0.59	1955	8.23	-0.23
PZ-3A	8.31	853	9.12	-0.81	1041	8.92	-0.61	1300	8.79	-0.48	1444	8.89	-0.58	1555	8.98	-0.67	1731	9.09	-0.78	1831	9.13	-0.82	1951	9.08	-0.77
PZ-4A	7.56	845	7.43	0.13	1036	6.97	0.59	1257	6.95	0.61	1440	7.41	0.15	1552	7.73	-0.17	1726	7.93	-0.37	1828	7.95	-0.39	1945	7.59	-0.03
PZ-5A	8.83	833	8.59	0.24	1022	7.79	1.04	1236	7.84	0.99	1437	8.77	0.06	1549	9.3	-0.47	1721	9.54	-0.71	1823	9.52	-0.69	1936	8.94	-0.11
PZ-6A	8.90	820	12.18	-3.28	1010	12.14	-3.24	1225	12.1	-3.20	1434	12.07	-3.17	1642	12.04	-3.14	1718	12.04	-3.14	1820	12.05	-3.15	1930	12.06	-3.16
PZ-7A	7.38	926	10.65	-3.27	1119	10.63	-3.25	1341	10.59	-3.21	1502	10.58	-3.20	1637	10.56	-3.18	1750	10.56	-3.18	1848	10.57	-3.19	2027	10.57	-3.19
PZ-8A	10.50	923	13.62	-3.12	1115	13.59	-3.09	1349	13.55	-3.05	1500	13.54	-3.04	1634	13.53	-3.03	1748	13.51	-3.01	1844	13.52	-3.02	2025	13.52	-3.02
PZ-9A	9.44	919	12.39	-2.95	1110	12.36	-2.92	1353	12.33	-2.89	1458	12.31	-2.87	1632	12.29	-2.85	1746	12.28	-2.84	1842	12.29	-2.85	2020	12.29	-2.85
PZ-10A	9.01	914	11.28	-2.27	1106	11.23	-2.22	1322	11.19	-2.18	1455	11.18	-2.17	1625	11.19	-2.18	1743	11.17	-2.16	1840	11.19	-2.18	2013	11.17	-2.16
PZ-11A	8.49	910	10.36	-1.87	1104	10.29	-1.80	1320	10.28	-1.79	1454	10.3	-1.81	1622	10.33	-1.84	1742	10.33	-1.84	1838	10.34	-1.85	2010	10.28	-1.79
PZ-12A	8.48	906	9.38	-0.90	1101	9.29	-0.81	1317	9.39	-0.91	1451	9.59	-1.11	1619	9.68	-1.20	1738	9.71	-1.23	1835	9.68	-1.20	2006	9.44	-0.96
PZ-13A	8.84	935	11.16	-2.32	1140	11.12	-2.28	1337	11.09	-2.25	1506	11.06	-2.22	1640	11.03	-2.19	1753	11.02	-2.18	1852	11.03	-2.19	2033	11.03	-2.19
PZ-14A	9.32	931	12.48	-3.16	1130	12.45	-3.13	1340	12.42	-3.10	1504	12.4	-3.08	1638	12.38	-3.06	1752	12.38	-3.06	1849	12.39	-3.07	2030	12.39	-3.07
Passaic River																									
SG-1	6.60	838	4.4	2.20	1029	2.99	3.61	1243	3.75	2.85	1438	6.19	0.41	1548	7.25	-0.65	1723	7.55	-0.95	1826	7.22	-0.62	1940	5.49	1.11
SG-2	4.35	905	1.48	2.87	1102	0.86	3.49	1318	2.08	2.27	1452	4.13	0.22	1620	5.19	-0.84	1739	5.31	-0.96	1837	4.75	-0.40	2008	2.5	1.85

Notes [1] = measuring point elevation for river staff gauges SG-1 and SG-2 are surveyed points on bulkhead
ft msl = feet above (or below) mean sea level
ft btic = feet below top of inner casing

849880083

Table 6
Stratigraphic Data
Former Harrison Gas Plant
Focused Remedial Investigation

Boring Number	Piezometer/ CPT Number	Ground Surface Elevation (ft msl)	Fill Material					Intertidal Channel Deposits					Meadow Mat					Regional Confining Layer	
			Top (ft bgs)	Bottom (ft bgs)	Top (ft msl)	Bottom (ft msl)	Thickness (ft)	Top (ft bgs)	Bottom (ft bgs)	Top (ft msl)	Bottom (ft msl)	Thickness (ft)	Top (ft bgs)	Bottom (ft bgs)	Top (ft msl)	Bottom (ft msl)	Thickness (ft)	Top (ft bgs)	Top (ft msl)
B-1	PZ-1A	7.56	0.0	10.0	7.6	-2.4	10.0						10.0	18.0	-2.4	-10.4	8.0	64.0	56.4
	PZ-2A	8.25	0.0	10.0	8.3	-1.8	10.0						10.0	18.5	-1.8	-10.3	8.5		
	PZ-3A	8.68	0.0	11.0	8.7	-2.3	11.0						11.0	15.0	-2.3	-6.3	4.0		
B-2	PZ-4A	7.98	0.0	5.0	8.0	3.0	5.0	5.0	13.5	3.0	-5.5	8.5	13.5	17.0	-5.5	-9.0	3.5		
B-3	PZ-5A	6.85	0.0	5.0	6.9	1.9	5.0						5.0	17.0	1.9	-10.2	12.0	69.5	62.7
	PZ-6A	9.26	0.0	7.0	9.3	2.3	7.0						7.0	12.5	2.3	-3.2	5.5		
	PZ-7A	7.72	0.0	3.5	7.7	4.2	3.5						3.5	11.0	4.2	-3.3	7.5		
B-4	PZ-8A	8.19	0.0	5.0	8.2	3.2	5.0						5.0	15.5	3.2	-7.3	10.5	69.5	61.3
	PZ-9A	9.74	0.0	5.0	9.7	4.7	5.0						5.0	9.0	4.7	0.7	4.0		
	PZ-10A	9.30	0.0	7.0	9.3	2.3	7.0						7.0	12.0	2.3	-2.7	5.0		
	PZ-11A	8.82	0.0	8.5	8.8	0.3	8.5						8.5	16.5	0.3	-7.7	8.0		
	PZ-12A	8.78	0.0	8.5	8.8	0.3	8.5	3.5	8.5	5.3	0.3	5.0	8.5	18.5	0.3	-9.7	10.0		
	PZ-13A	9.19	0.0	9.0	9.3	0.3	9.0						9.0	14.5	0.2	-5.3	5.5		
	PZ-14A	9.74	0.0	8.5	9.7	1.2	8.5						8.5	13.5	1.2	-3.8	5.0		
	CPT-1	8.41																	
	CPT-2	8.04						4.0	7.0	4.0	1.0	3.0	7.0	15.0	1.0	-7.0	8.0		
	CPT-3	7.17																	
	CPT-4	7.92											9.0	17.0	-1.1	-9.1	8.0		
	CPT-5	8.22						5.0	9.5	3.2	-1.3	4.5	9.5	16.7	-1.3	-8.5	7.2		
	CPT-6	7.97						5.0	13.5	3.0	-5.5	8.5	13.5	17.0	-5.5	-9.0	3.5		
	CPT-7	6.83											7.0	15.0	-0.2	-8.2	8.0		
	CPT-8	6.82											7.5	13.3	-0.7	-6.5	5.8		
	CPT-9	6.42												14.0		-7.6			

Notes

ft bgs = feet below ground surface
ft msl = feet above (or below) mean sea level

849880084

Table 7
Summary of Groundwater Detections
Semi-Volatile Organic Compounds
Former Harrison Gas Plant
Focused Remedial Investigation

			Sample Point:		PZ-7A	Sample Point:		PZ-1A	Sample Point:		HYDRIN	Sample Point:		PZ-99A
			Lab ID Number:		A6969	Lab ID Number:		A6971	Lab ID Number:		A6966	Lab ID Number:		A6970
			Date Sampled:		7/25/96	Date Sampled:		7/25/96	Date Sampled:		7/25/96	Date Sampled:		7/25/96
Criteria			Date Analyzed:		8/1/96	Date Analyzed:		8/1/96	Date Analyzed:		8/1/96	Date Analyzed:		8/1/96
(1)	CRQL	Parameter	SQL	Result	Qual	SQL	Result	Qual	SQL	Result	Qual	SQL	Result	Qual
30	5	bis(2-Ethylhexyl)phthalate	20	12	U,3	20	5	U,3	20	-		20	5	U,3
400	5	Acenaphthene	20	-		20	73		20	-		20	-	
300	5	Fluorene	20	-		20	-		20	-		20	-	
- -	5	Naphthalene	20	-		20	5	J,93	20	-		20	-	
- -	5	Acenaphthylene	20	-		20	6	J,93	20	-		20	-	
- -	5	Phenanthrene	20	-		20	6	J,93	20	-		20	-	
- -	5	Carbazole	20	-		20	6	J,93	20	-		20	-	
900	5	Di-n-butylphthalate	20	-		20	-		20	-		20	-	

Notes:

All units are ug/l

"-" Indicates analyte not detected in sample.

"- -" Indicates no criteria available.

The Qual column indicates the qualifier applied to the result following data validation, see back sheet for definitions.

CRQL - Contract Required Quantitation Limit.

SQL - Sample Quantitation Limit; SQL adjusted for percent moisture and dilution as applicable.

(1) The criteria column is based on the NJDEP Ground Water Quality Standards (N.J.A.C. 7:9-6) for Class IIA Aquifers

Indicates criteria exceeded.

Sample ID PZ-99A is field duplicate of PZ-7A.

849880085

Table 7
Summary of Groundwater Detections
Semi-Volatile Organic Compounds
Former Harrison Gas Plant
Focused Remedial Investigation

			Sample Point:		PZ-1B	Sample Point:		PZ-4B	Sample Point:		PZ-13B	Sample Point:		PZ-5B
			Lab ID Number:		A6972	Lab ID Number:		A6965	Lab ID Number:		A6967	Lab ID Number:		A6964
			Date Sampled:		7/25/96	Date Sampled:		7/25/96	Date Sampled:		7/25/96	Date Sampled:		7/25/96
Criteria			Date Analyzed:		8/1/96	Date Analyzed:		8/1/96	Date Analyzed:		8/1/96	Date Analyzed:		8/1/96
(1)	CRQL	Parameter	SQL	Result	Qual	SQL	Result	Qual	SQL	Result	Qual	SQL	Result	Qual
30	5	bis(2-Ethylhexyl)phthalate	20	14	U,3	20	13	U,3	20	6	U,3	20	11	U,3
400	5	Acenaphthene	20	-		20	2	JN,92,93	20	5	JN,92,93	20	3	JN,92,93
300	5	Fluorene	20	-		20	-		20	3	JN,92,93	20	-	
- -	5	Naphthalene	20	-		20	-		20	-		20	-	
- -	5	Acenaphthylene	20	-		20	-		20	-		20	-	
- -	5	Phenanthrene	20	-		20	-		20	-		20	-	
- -	5	Carbazole	20	-		20	-		20	-		20	-	
900	5	Di-n-butylphthalate	20	-		20	-		20	-		20	-	

Notes:

All units are ug/l

"-" Indicates analyte not detected in sample.

"- -" Indicates no criteria available.

The Qual column indicates the qualifier applied to the result following data validation, see back sheet for definitions.

CRQL - Contract Required Quantitation Limit.

SQL - Sample Quantitation Limit; SQL adjusted for percent moisture and dilution as applicable.

(1) The criteria column is based on the NJDEP Ground Water Quality Standards (N.J.A.C. 7:9-6) for Class IIA Aquifers

Indicates criteria exceeded.

849880086

Table 7
Summary of Groundwater Detections
Semi-Volatile Organic Compounds
Former Harrison Gas Plant
Focused Remedial Investigation

			Sample Point:		PZ-10B	Sample Point:			Sample Point:			Sample Point:		
			Lab ID Number:		A6974	Lab ID Number:			Lab ID Number:			Lab ID Number:		
			Date Sampled:		7/25/96	Date Sampled:			Date Sampled:			Date Sampled:		
Criteria			Date Analyzed:		8/1/96	Date Analyzed:			Date Analyzed:			Date Analyzed:		
(1)	CRQL	Parameter	SQL	Result	Qual	SQL	Result	Qual	SQL	Result	Qual	SQL	Result	Qual
30	5	bis(2-Ethylhexyl)phthalate	20	17	U,3									
400	5	Acenaphthene	20	2	JN,92,93									
300	5	Fluorene	20	-										
- -	5	Naphthalene	20	-										
- -	5	Acenaphthylene	20	-										
- -	5	Phenanthrene	20	-										
- -	5	Carbazole	20	-										
900	5	Di-n-butylphthalate	20	3	J,93									

Notes:

All units are ug/l

"-" Indicates analyte not detected in sample.

"- -" Indicates no criteria available.

The Qual column indicates the qualifier applied to the result following data validation, see back sheet for definitions.

CRQL - Contract Required Quantitation Limit.

SQL - Sample Quantitation Limit; SQL adjusted for percent moisture and dilution as applicable.

(1) The criteria column is based on the NJDEP Ground Water Quality Standards (N.J.A.C. 7:9-6) for Class IIA Aquifers

Indicates criteria exceeded.

849880087

Table 7
Summary of Groundwater Detections
Metals
Former Harrison Gas Plant
Focused Remedial Investigation

Criteria				Sample Point:	PZ-1A	Sample Point:	HYDRIN	Sample Point:	PZ-7A	Sample Point:	PZ-99A
				Lab ID:	9607-6971	Lab ID:	9607-6966	Lab ID:	9607-6969	Lab ID:	9607-9670
				Date Sampled:	7/25/96	Date Sampled:	7/25/96	Date Sampled:	7/25/96	Date Sampled:	7/25/96
				Date Analyzed:	NA	Date Analyzed:	NA	Date Analyzed:	NA	Date Analyzed:	NA
(1)	IDL	CRQL	Parameter	Result	Qual	Result	Qual	Result	Qual	Result	Qual
200	10	200	Aluminum	285	U,3	85	U,3	4215	JB,2	5880	JB,2
20	20	60	Antimony	-		-		-		-	
8	10	10	Arsenic	-		-		32	R,27	-	
2000	2	200	Barium	167	JB,2,19	23	U,3	390	JB,2,19	374	JB,2,19
0.02	2	5	Beryllium	-		-		-		-	
4	2	5	Cadmium	-		-		6	J,89	4	J,89
- -	100	5000	Calcium	171000	JB,2	26400	JB,2	111200	JB,2	102700	JB,2
100	2	10	Chromium	-		-		8	J,9	11	J,9
- -	2	50	Cobalt	-		-		3	J,9	6	J,9
1000	5	25	Copper	-		8.8	U,3	29	JB,2	39.9	JB,2
300	40	100	Iron	270	JB,2	100	JB,2	7690	JB,2	11700	JB,2
10	2	3	Lead	3	R,31	4	R,31	6	U,3	13	R,31
- -	40	5000	Magnesium	132100	JB,2	4580	JB,2	120700	JB,2	106690	JB,2
50	4	15	Manganese	268		5	J,9	731	J,9	750	
2	0.2	0.2	Mercury	-		-		-		-	
100	5	40	Nickel	-		-		9	J,9	7.2	J,9
- -	100	5000	Potassium	147200	JB,2	940	JB,2	36500	JB,2	40500	JB,2
50	5	5	Selenium	39.1	R,27	-		19	R,27	25.6	R,27
- -	2	10	Silver	-		-		4	J,9	-	
50000	100	5000	Sodium	2645000	JB,2	17750	JB,2	888000	JB,2	826000	JB,2
- -	20	50	Vanadium	-		-		51		18	J,9
5000	6	20	Zinc	235	R,90	231	R,90	392	R,90	362	R,90

Notes:

All units are ug/l; NA = Not Applicable.

"-" Indicates analyte not detected in sample.

"- -" Indicates no criteria available.

The Qual column indicates the qualifier applied to the result following data validation, see back page for definitions.

CRDL - Contract Required Detection Limit.

IDL - Instrument Detection Limit.

(1) The criteria column is based on the NJDEP Ground Water Quality Standards (N.J.A.C. 7:9-6) for Class IIA Aquifers

Indicates criteria exceeded.

Sample PZ-99A is a field duplicate of PZ-7A.

849880088

Table 7
Summary of Groundwater Detections
Metals
Former Harrison Gas Plant
Focused Remedial Investigation

Criteria				Sample Point:	PZ-1B	Sample Point:	PZ-4B	Sample Point:	PZ-13B	Sample Point:	PZ-5B
				Lab ID:	9607-6972	Lab ID:	9607-6965	Lab ID:	9607-6967	Lab ID:	9607-6964
				Date Sampled:	7/25/96	Date Sampled:	7/25/96	Date Sampled:	7/25/96	Date Sampled:	7/25/96
				Date Analyzed:	NA	Date Analyzed:	NA	Date Analyzed:	NA	Date Analyzed:	NA
(1)	IDL	CRQL	Parameter	Result	Qual	Result	Qual	Result	Qual	Result	Qual
200	10	200	Aluminum	14850	JB,2	3580	JB,2	22000	JB,2	18800	JB,2
20	20	60	Antimony	20		-		20	J,9	20	J,9
8	10	10	Arsenic	79	R,27	7	R,27	6	R,27	16	R,27
2000	2	200	Barium	463	JB,2,19	98	JB,2,19	236	JB,2,19	817	JB,2,19
0.02	2	5	Beryllium	-		-		-		-	
4	2	5	Cadmium	4	J,89	-		3	J,89	4	J,89
- -	100	5000	Calcium	85500	JB,2	105000	JB,2	69200	JB,2	158900	JB,2
100	2	10	Chromium	150		19		65		22	
- -	2	50	Cobalt	36	J,9	3	J,9	20	J,9	18	J,9
1000	5	25	Copper	266.5	JB,2	469	JB,2	112.5	JB,2	110.5	JB,2
300	40	100	Iron	79800	JB,2	4560	JB,2	82700	JB,2	58800	JB,2
10	2	3	Lead	306	R,31	67	R,31	290	R,31	280	R,31
- -	40	5000	Magnesium	66870	JB,2	45410	JB,2	14980	JB,2	130300	JB,2
50	4	15	Manganese	865		569		1242		5156	
2	0.2	0.2	Mercury	2.8		-		-		-	
100	5	40	Nickel	788		4.1	J,9	62.3		25.3	J,9
- -	100	5000	Potassium	20590	JB,2	24220	JB,2	5560	JB,2	23810	JB,2
50	5	5	Selenium	27.7	R,27	216	JB,2,89	27.6	R,27	34.7	R,27
- -	2	10	Silver	-		3	J,9	-		-	
50000	100	5000	Sodium	447000	JB,2	581000	JB,2	60400	JB,2	1564000	JB,2
- -	20	50	Vanadium	173		289		82		34	J,9
5000	6	20	Zinc	505	R,90	273	R,90	333	R,90	523	R,90

Notes:

All units are ug/l; NA = Not Applicable.

"-" Indicates analyte not detected in sample.

"- -" Indicates no criteria available.

The Qual column indicates the qualifier applied to the result following data validation, see back page for definitions.

CRDL - Contract Required Detection Limit.

IDL - Instrument Detection Limit.

(1) The criteria column is based on the NJDEP Ground Water Quality Standards (N.J.A.C. 7:9-6) for Class IIA Aquifers

Indicates criteria exceeded.

Sample PZ-99A is a field duplicate of PZ-7A.

849880089

Table 7
Summary of Groundwater Detections
Metals
Former Harrison Gas Plant
Focused Remedial Investigation

Criteria				Sample Point:	PZ-10B	Sample Point:		Sample Point:		Sample Point:	
				Lab ID:	9607-6974	Lab ID:		Lab ID:		Lab ID:	
				Date Sampled:	7/25/96	Date Sampled:		Date Sampled:		Date Sampled:	
				Date Analyzed:	NA	Date Analyzed:		Date Analyzed:		Date Analyzed:	
(1)	IDL	CRQL	Parameter	Result	Qual	Result	Qual	Result	Qual	Result	Qual
200	10	200	Aluminum	45800	JB,2						
20	20	60	Antimony	30	J,9						
8	10	10	Arsenic	23	R,27						
2000	2	200	Barium	1398	JB,2,19						
0.02	2	5	Beryllium	7							
4	2	5	Cadmium	35	J,89						
- -	100	5000	Calcium	80800	JB,2						
100	2	10	Chromium	318							
- -	2	50	Cobalt	102							
1000	5	25	Copper	1402.1	JB,2						
300	40	100	Iron	128000	JB,2						
10	2	3	Lead	2032	JB,2						
- -	40	5000	Magnesium	16690	JB,2						
50	4	15	Manganese	1691							
2	0.2	0.2	Mercury	0.3							
100	5	40	Nickel	9876.9							
- -	100	5000	Potassium	8330	JB,2						
50	5	5	Selenium	37.1	R,27						
- -	2	10	Silver	-							
50000	100	5000	Sodium	11530	JB,2						
- -	20	50	Vanadium	131							
5000	6	20	Zinc	4023	R,90						

Notes:

All units are ug/l; NA = Not Applicable.

"-" Indicates analyte not detected in sample.

"- -" Indicates no criteria available.

The Qual column indicates the qualifier applied to the result following data validation, see back page for definitions.

CRDL - Contract Required Detection Limit.

IDL - Instrument Detection Limit.

(1) The criteria column is based on the NJDEP Ground Water Quality Standards (N.J.A.C. 7:9-6) for Class IIA Aquifers

Indicates criteria exceeded.

849880090

Table 7
Summary of Groundwater Detections
Volatile Organic Compounds
Former Harrison Gas Plant
Focused Remedial Investigation

			Sample Point:		PZ-1A	Sample Point:		PZ-7A	Sample Point:		HYDRIN	Sample Point:		PZ-99A
			Lab ID Number:		A6971	Lab ID Number:		A6969	Lab ID Number:		A6966	Lab ID Number:		A6970
			Date Sampled:		7/25/96	Date Sampled:		7/25/96	Date Sampled:		7/25/96	Date Sampled:		7/25/96
Criteria			Date Analyzed:		8/1/96	Date Analyzed:		8/1/96	Date Analyzed:		8/1/96	Date Analyzed:		8/1/96
(1)	CRQL	Parameter	SQL	Result	Qual	SQL	Result	Qual	SQL	Result	Qual	SQL	Result	Qual
6	1	Chloroform	1	-		1	-		1	97		1	-	
700	10	Acetone	1	13		10	-		10	-		10	-	
1	1	Benzene	1	170		1	-		1	-		1	-	
400	5	4-Methyl-2-pentanone	1	-		5	-		5	-		5	-	
1000	1	Toluene	1	2		1	-		1	-		1	-	
700	1	Ethylbenzene	1	130		1	-		1	-		1	-	
- -	1	m&p-Xylenes	1	5		1	-		1	-		1	-	
- -	1	o-Xylene	1	11		1	-		1	-		1	-	
1	1	Bromodichloromethane	1	-		1	-		1	14		1	-	
10	1	Dibromochloromethane	1	-		1	-		1	1		1	-	

Notes:

All units are ug/l.

"-" Indicates analyte not detected in sample.

"- -" Indicates no criteria available.

The Qual column indicates the qualifier applied to the result following data validation; see back page for definitions.

CRQL - Contract Required Quantitation Limit.

SQL - Sample Quantitation Limit; SQL adjusted for percent moisture and dilution as applicable.

(1) The criteria column is based on the NJDEP Ground Water Quality Standards (N.J.A.C. 7:9-6) for Class IIA Aquifers

Indicates criteria exceeded.

Sample ID PZ-99A is field duplicate of PZ-7A.

849880091

Table 7
Summary of Groundwater Detections
Volatile Organic Compounds
Former Harrison Gas Plant
Focused Remedial Investigation

			Sample Point:		PZ-1B	Sample Point:		PZ-4B	Sample Point:		PZ-13B	Sample Point:		PZ-5B
			Lab ID Number:		A6972	Lab ID Number:		A6965	Lab ID Number:		A6967	Lab ID Number:		A6964
			Date Sampled:		7/25/96	Date Sampled:		7/25/96	Date Sampled:		7/25/96	Date Sampled:		7/25/96
Criteria			Date Analyzed:		8/1/96	Date Analyzed:		8/1/96	Date Analyzed:		8/1/96	Date Analyzed:		8/1/96
(1)	CRQL	Parameter	SQL	Result	Qual	SQL	Result	Qual	SQL	Result	Qual	SQL	Result	Qual
6	1	Chloroform	1	-		1	2		1	-		1	-	
700	10	Acetone	10	-		10	-		10	75		10	-	
1	1	Benzene	1	-		1	-		1	31		1	-	
400	5	4-Methyl-2-pentanone	5	-		5	-		5	55		5	-	
1000	1	Toluene	1	-		1	-		1	1		1	-	
700	1	Ethylbenzene	1	-		1	-		1	-		1	-	
- -	1	m&p-Xylenes	1	-		1	-		1	-		1	-	
- -	1	o-Xylene	1	-		1	-		1	-		1	-	
1	1	Bromodichloromethane	1	-		1	-		1	-		1	-	
10	1	Dibromochloromethane	1	-		1	-		1	-		1	-	

Notes:

All units are ug/l.

"-" Indicates analyte not detected in sample.

"- -" Indicates no criteria available.

The Qual column indicates the qualifier applied to the result following data validation; see back page for definitions.

CRQL - Contract Required Quantitation Limit.

SQL - Sample Quantitation Limit; SQL adjusted for percent moisture and dilution as applicable.

(1) The criteria column is based on the NJDEP Ground Water Quality Standards (N.J.A.C. 7:9-6) for Class IIA Aquifers

Indicates criteria exceeded.

849880092

Table 7
Summary of Groundwater Detections
Volatile Organic Compounds
Former Harrison Gas Plant
Focused Remedial Investigation

			Sample Point:		PZ-10B	Sample Point:			Sample Point:			Sample Point:		
			Lab ID Number:		A6974	Lab ID Number:			Lab ID Number:			Lab ID Number:		
			Date Sampled:		7/25/96	Date Sampled:			Date Sampled:			Date Sampled:		
Criteria			Date Analyzed:		8/1/96	Date Analyzed:			Date Analyzed:			Date Analyzed:		
(1)	CRQL	Parameter	SQL	Result	Qual	SQL	Result	Qual	SQL	Result	Qual	SQL	Result	Qual
6	1	Chloroform	1	2										
700	10	Acetone	10	-										
1	1	Benzene	1	6										
400	5	4-Methyl-2-pentanone	5	-										
1000	1	Toluene	1	-										
700	1	Ethylbenzene	1	-										
- -	1	m&p-Xylenes	1	-										
- -	1	o-Xylene	1	-										
1	1	Bromodichloromethane	1	-										
10	1	Dibromochloromethane	1	-										

Notes:

All units are ug/l.

"-" Indicates analyte not detected in sample.

"- -" Indicates no criteria available.

The Qual column indicates the qualifier applied to the result following data validation; see back page for definitions.

CRQL - Contract Required Quantitation Limit.

SQL - Sample Quantitation Limit; SQL adjusted for percent moisture and dilution as applicable.

(1) The criteria column is based on the NJDEP Ground Water Quality Standards (N.J.A.C. 7:9-6) for Class IIA Aquifers

Indicates criteria exceeded.

849880093

Table 7
Summary of Groundwater Detections
Total Petroleum Hydrocarbons
Former Harrison Gas Plant
Focused Remedial Investigation

			Sample Point:		PZ-1A	Sample Point:		PZ-99A	Sample Point:		HYDRIN	Sample Point:		PZ-7A
			Lab ID Number:		PZ-1A	Lab ID Number:		PZ-99A	Lab ID Number:		9607-6966	Lab ID Number:		9607-6969
			Date Sampled:		7/25/96	Date Sampled:		7/25/96	Date Sampled:		7/25/96	Date Sampled:		7/25/96
Criteria			Date Analyzed:		8/7/96	Date Analyzed:		8/7/96	Date Analyzed:		7/30/96	Date Analyzed:		7/30/96
(1)	RL	Parameter	SQL	Result	Qual	SQL	Result	Qual	SQL	Result	Qual	SQL	Result	Qual
None Noticeable	0.5	TPH	0.5	0.6	J,91	0.5	0.9	J,91	0.5	0.8	J,91	0.5	1.4	J,91

Notes:

All units are mg/l.

"-" Indicates analyte not detected in sample.

"- -" Indicates no criteria available.

The Qual column indicates the qualifier applied to the result following data validation, see back page for definitions.

RL - Reporting Limit.

SQL - Sample Quantitation Limit; SQL adjusted for percent moisture and dilution as applicable.

(1) The criteria column is based on the NJDEP Ground Water Quality Standards (N.J.A.C. 7:9-6) for Class IIA Aquifers

Indicates criteria exceeded.

Sample ID PZ-99A is field duplicate of PZ-7A.

849880094

Table 7
Summary of Groundwater Detections
Total Petroleum Hydrocarbons
Former Harrison Gas Plant
Focused Remedial Investigation

			Sample Point:		PZ-1B	Sample Point:		PZ-4B	Sample Point:		PZ-13B	Sample Point:		PZ-10B
			Lab ID Number:		PZ-1B	Lab ID Number:		9607-6965	Lab ID Number:		9607-6967	Lab ID Number:		PZ-10B
			Date Sampled:		7/25/96	Date Sampled:		7/25/96	Date Sampled:		7/25/96	Date Sampled:		7/25/96
Criteria			Date Analyzed:		8/7/96	Date Analyzed:		7/30/96	Date Analyzed:		7/30/96	Date Analyzed:		8/7/96
(1)	RL	Parameter	SQL	Result	Qual	SQL	Result	Qual	SQL	Result	Qual	SQL	Result	Qual
None Noticeable	0.5	TPH	0.5	0.7	J,91	0.5	0.7	J,91	0.5	14	J,91	0.5	9.2	J,91

Notes:

All units are mg/l.

"-" Indicates analyte not detected in sample.

"- -" Indicates no criteria available.

The Qual column indicates the qualifier applied to the result following data validation, see back page for definitions.

RL - Reporting Limit.

SQL - Sample Quantitation Limit; SQL adjusted for percent moisture and dilution as applicable.

(1) The criteria column is based on the NJDEP Ground Water Quality Standards (N.J.A.C. 7:9-6) for Class IIA Aquifers

Indicates criteria exceeded.

849880095

Table 7
Summary of Groundwater Detections
Total Petroleum Hydrocarbons
Former Harrison Gas Plant
Focused Remedial Investigation

			Sample Point:		PZ-5B	Sample Point:			Sample Point:			Sample Point:		
			Lab ID Number:		9607-6964	Lab ID Number:			Lab ID Number:			Lab ID Number:		
			Date Sampled:		7/25/96	Date Sampled:			Date Sampled:			Date Sampled:		
Criteria			Date Analyzed:		7/30/96	Date Analyzed:			Date Analyzed:			Date Analyzed:		
(1)	RL	Parameter	SQL	Result	Qual	SQL	Result	Qual	SQL	Result	Qual	SQL	Result	Qual
None Noticeable	0.5	TPH	0.5	1.1	J,91									

Notes:

All units are mg/l.

"-" Indicates analyte not detected in sample.

"- -" Indicates no criteria available.

The Qual column indicates the qualifier applied to the result following data validation, see back page for definitions.

RL - Reporting Limit.

SQL - Sample Quantitation Limit; SQL adjusted for percent moisture and dilution as applicable.

(1) The criteria column is based on the NJDEP Ground Water Quality Standards (N.J.A.C. 7:9-6) for Class IIA Aquifers

Indicates criteria exceeded.

84988096

Table 7
Summary of Groundwater Detections
Total Dissolved Solids
Former Harrison Gas Plant
Focused Remedial Investigation

			Sample Point:		PZ-1A	Sample Point:		PZ-99A	Sample Point:		HYDRIN	Sample Point:		PZ-7A
			Lab ID Number:		PZ-1A	Lab ID Number:		PZ-99A	Lab ID Number:		9607-6966	Lab ID Number:		9607-6969
			Date Sampled:		7/25/96	Date Sampled:		7/25/96	Date Sampled:		7/25/96	Date Sampled:		7/25/96
Criteria			Date Analyzed:		8/7/96	Date Analyzed:		8/7/96	Date Analyzed:		7/30/96	Date Analyzed:		7/30/96
(1)	RL	Parameter	SQL	Result	Qual	SQL	Result	Qual	SQL	Result	Qual	SQL	Result	Qual
500	0.5	TDS	0.5	7840		0.5	2820		0.5	424		0.5	2938	

Notes:

All units are mg/l.

"-" Indicates analyte not detected in sample.

"- -" Indicates no criteria available.

The Qual column indicates the qualifier applied to the result following data validation, see back page for definitions.

RL - Reporting Limit.

SQL - Sample Quantitation Limit; SQL adjusted for percent moisture and dilution as applicable.

(1) The criteria column is based on the NJDEP Ground Water Quality Standards (N.J.A.C. 7:9-6) for Class IIA Aquifers

Indicates criteria exceeded.

Sample ID PZ-99A is field duplicate of PZ-7A.

849880097

Table 7
Summary of Groundwater Detections
Total Dissolved Solids
Former Harrison Gas Plant
Focused Remedial Investigation

			Sample Point:		PZ-1B	Sample Point:		PZ-4B	Sample Point:		PZ-13B	Sample Point:		PZ-10B
			Lab ID Number:		PZ-1B	Lab ID Number:		9607-6965	Lab ID Number:		9607-6967	Lab ID Number:		PZ-10B
			Date Sampled:		7/25/96	Date Sampled:		7/25/96	Date Sampled:		7/25/96	Date Sampled:		7/25/96
Criteria			Date Analyzed:		8/7/96	Date Analyzed:		7/30/96	Date Analyzed:		7/30/96	Date Analyzed:		8/7/96
(1)	RL	Parameter	SQL	Result	Qual	SQL	Result	Qual	SQL	Result	Qual	SQL	Result	Qual
500	0.5	TDS	0.5	1580		0.5	1864		0.5	272		0.5	250	

Notes:

All units are mg/l.

"-" Indicates analyte not detected in sample.

"- -" Indicates no criteria available.

The Qual column indicates the qualifier applied to the result following data validation, see back page for definitions.

RL - Reporting Limit.

SQL - Sample Quantitation Limit; SQL adjusted for percent moisture and dilution as applicable.

(1) The criteria column is based on the NJDEP Ground Water Quality Standards (N.J.A.C. 7:9-6) for Class IIA Aquifers

Indicates criteria exceeded.

849880098

Table 7
Summary of Groundwater Detections
Total Dissolved Solids
Former Harrison Gas Plant
Focused Remedial Investigation

			Sample Point:			Sample Point:			Sample Point:			Sample Point:		
			Lab ID Number:		9607-6964	Lab ID Number:			Lab ID Number:			Lab ID Number:		
			Date Sampled:		7/25/96	Date Sampled:			Date Sampled:			Date Sampled:		
Criteria			Date Analyzed:		7/30/96	Date Analyzed:			Date Analyzed:			Date Analyzed:		
(1)	RL	Parameter	SQL	Result	Qual	SQL	Result	Qual	SQL	Result	Qual	SQL	Result	Qual
500	0.5	TDS	0.5	4361										

Notes:

All units are mg/l.

"-" Indicates analyte not detected in sample.

"- -" Indicates no criteria available.

The Qual column indicates the qualifier applied to the result following data validation, see back page for definitions.

RL - Reporting Limit.

SQL - Sample Quantitation Limit; SQL adjusted for percent moisture and dilution as applicable.

(1) The criteria column is based on the NJDEP Ground Water Quality Standards (N.J.A.C. 7:9-6) for Class IIA Aquifers

Indicates criteria exceeded.

849880099

Table 8
Aquifer Testing Results
Former Harrison Gas Plant
Focused Remedial Investigation

Piezometer	Unit Screened	Hvorslev Method Results (cm/sec)	Bouwer and Rice Method Results (cm/sec)	Earlougher Method Results (cm/sec)	Theis Recovery Method (cm/sec)	Average (cm/sec)	Average (ft/day)
PZ-1B	Fill Material	2.58E-02		1.54E-01	1.74E-01	8.84E-02	250.647
PZ-4B	Fill/Channel	4.72E-04		5.57E-03	7.23E-04	1.24E-03	3.511
PZ-13B	Fill Material	9.78E-04	8.20E-04			8.96E-04	2.538
					AVERAGE FOR FILL MATERIAL:	**4.61E-03**	**13.07**
PZ-1A	Glacial Deposits	1.08E-04	8.34E-05			9.49E-05	0.269
PZ-4A	Glacial Deposits	2.16E-04	1.67E-04			1.90E-04	0.538
PZ-5A	Glacial Deposits	4.73E-04	3.98E-04			4.34E-04	1.230
PZ-6A	Glacial Deposits	9.44E-03	6.87E-03			8.05E-03	22.828
PZ-7A	Glacial Deposits	2.38E-03	1.51E-03			1.90E-03	5.374
PZ-8A	Glacial Deposits	4.15E-05	3.36E-05			3.73E-05	0.106
PZ-12A	Glacial Deposits	6.84E-04	6.07E-04			6.44E-04	1.827
					AVERAGE FOR GLACIAL DEPOSITS:	**4.33E-04**	**1.23**

849880100

Table 9
Calculation of Vertical Flow Velocities
Former Harrison Gas Plant
Focused Remedial Investigation

WELL PAIR	WATER LEVEL ELEVATION (ft)		WATER LEVEL DIFFERENCE (h, in ft)	SCREEN ELEVATION DIFFERENCE (L, in ft)	GRADIENT (i = h/L)	AVERAGE GRADIENT (ft/ft)	MEADOW MAT THICKNESS (ft)	MEAN PORE VELOCITY (ft/day)	TRAVEL TIME (years)
PZ-1A/PZ-1B	PZ-1A	PZ-1B							
High Tide	0.590	2.850	-2.260	30.0	-0.07533				
Low Tide	-0.500	1.220	-1.720	30.0	-0.05733	-0.06633	8.00	0.00053	41.7
PZ-2A/PZ-2B	PZ-2A	PZ-2B							
High Tide	0.250	4.020	-3.770	31.0	-0.12161				
Low Tide	-0.590	4.040	-4.630	31.0	-0.14935	-0.13548	8.50	0.00107	21.7
PZ-3A/PZ-3B	PZ-3A	PZ-3B							
High Tide	-0.610	5.480	-6.090	29.0	-0.21000				
Low Tide	-0.780	5.550	-6.330	29.0	-0.21828	-0.21414	4.00	0.00170	6.5
PZ-4A/PZ-4B	PZ-4A	PZ-4B							
High Tide	0.590	2.020	-1.430	23.0	-0.06217				
Low Tide	-0.370	1.460	-1.830	23.0	-0.07957	-0.07087	8.50	0.00056	41.5
PZ-5A/PZ-5B	PZ-5A	PZ-5B							
High Tide	1.040	3.140	-2.100	47.4	-0.04430				
Low Tide	-0.710	3.160	-3.870	47.4	-0.08165	-0.06297	12.00	0.00050	65.9
PZ-6A/PZ-6B	PZ-6A	PZ-6B							
	-3.240	5.100	-8.340	21.5	-0.38791	-0.38791	5.50	0.00307	4.9
PZ-10A/PZ-10B	PZ-10A	PZ-10B							
	-2.220	5.390	-7.610	18.5	-0.41135	-0.41135	5.00	0.00326	4.2
PZ-13A/PZ-13B	PZ-13A	PZ-13B							
High Tide	-0.810	7.590	-8.400	36.0	-0.23333				
Low Tide	-1.230	7.610	-8.840	36.0	-0.24556	-0.23944	5.50	0.00190	7.9

NOTES: (1) Negative vertical gradient indicates downward flow.
(2) Porosity assumed to be 10%.
K = 2.79 E-7 cm/s from laboratory analysis.

849880101

Figures

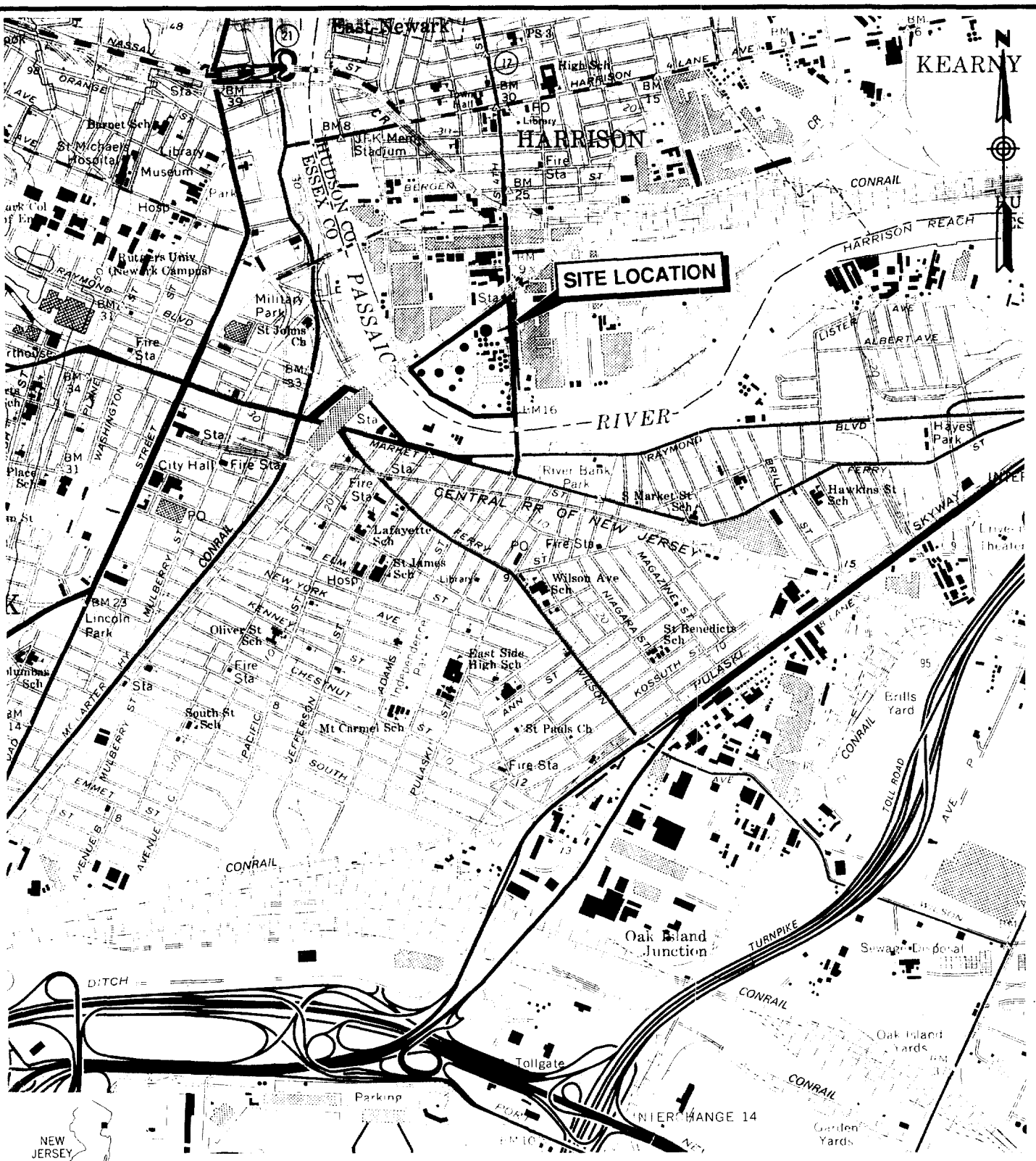

FEB 26 1997

2000 0 2000
scale feet

SOURCE: USGS TOPOGRAPHIC QUADRANGLE 7.5 – MINUTE SERIES, ELIZABETH, NY–NJ, 1967 (PHOTOREVISED)

JOB No.:	95–6306	SCALE:	AS SHOWN
DR BY:	JSG	DATE:	11/20/95
CHK BY:	mm	FILE No.:	NJ03–332
REV BY:	RV	DR SUBTITLE:	02

SITE LOCATION PLAN

Golder Associates

PSE&G / RI–IRA / NJ

FIGURE 1

849880103

THIS MAP CAN BE FOUND IN THE SITE FILE LOCATED AT: U.S. EPA SUPERFUND RECORDS CENTER, 290 BROADWAY, 18TH FLOOR, NY,NY 10007

REV	DATE	DESCRIPTION	DR BY	CHK BY	RVW BY

PSEG Public Service Electric and Gas Company

HARRISON GAS PLANT
TOWN OF HARRISON
HUDSON COUNTY, NEW JERSEY

SHEET TITLE:

BASE MAP

Golder Associates
Mt. Laurel, New Jersey

PROJECT No.	953-6306		FILE No.:	NJ03-567
CLIENT PROJ. No.			DRAFTING SUBTITLE:	02
DES BY	SN	09/28/96	SCALE:	AS SHOWN
DR BY	MRM	02/26/97	FIGURE 2	
CHK BY	mmm	2/27/97		
RVW BY	RV	2/27/97		

849880104

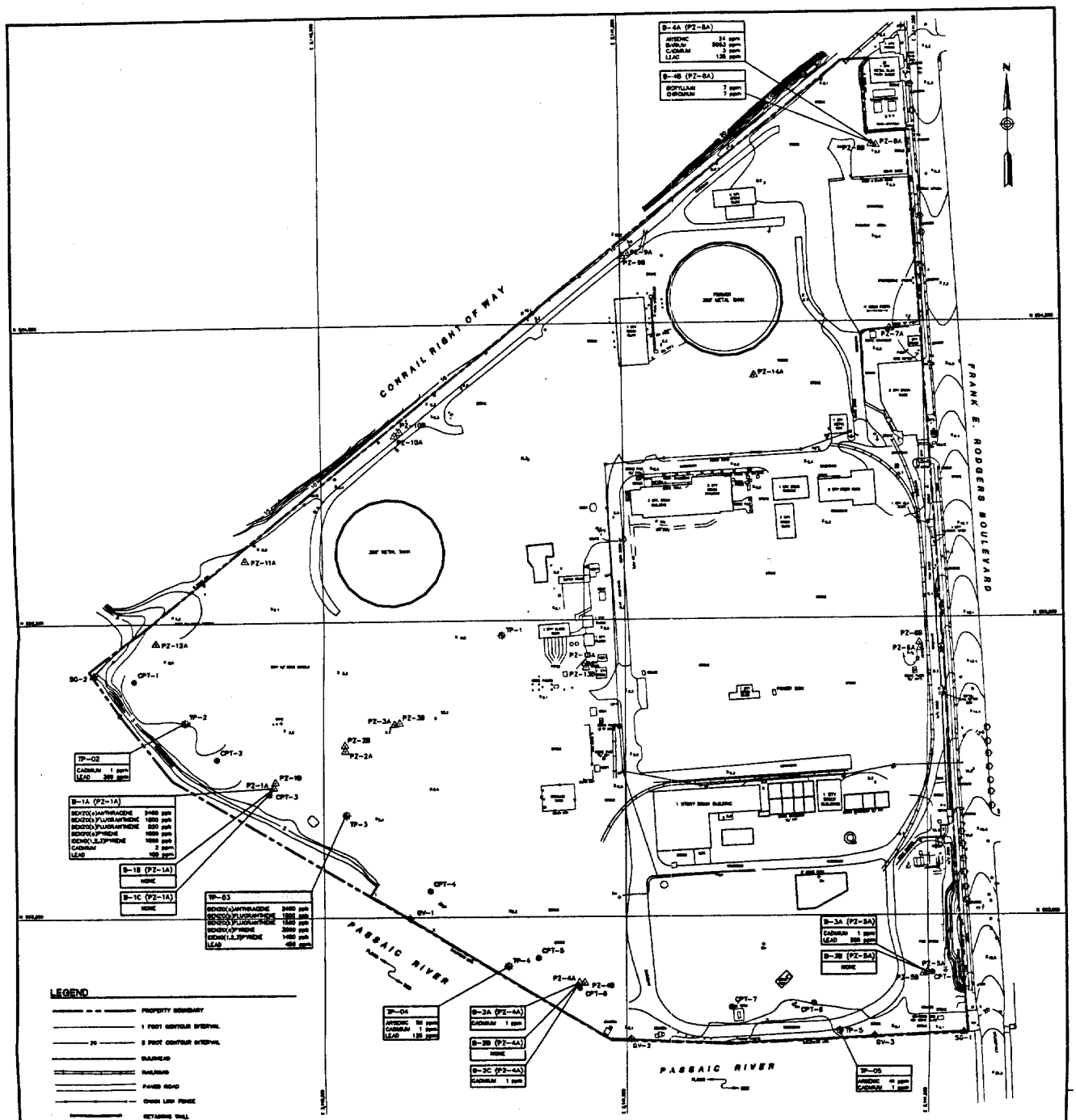

FEB 26 1997

REFERENCES

1) PROPERTY BOUNDARY AND VERTICAL AND HORIZONTAL SITE FEATURES SHOWN (EXCEPT AS NOTED IN REFERENCE 3 BELOW) TAKEN FROM DRAWING ENTITLED "SITE UPDATE HARRISON GAS, PSE&G PROJECT No. 88004, LOT 7A, BLOCK 143, TOWN OF HARRISON, HUDSON COUNTY, N.J." PREPARED BY BSA/SURVEAT, BELLE MEAD, NEW JERSEY 08052 DATED AUGUST 2, 1995.

2) LOCATIONS AND ELEVATIONS OF PIEZOMETERS, STAFF GAUGES, VANE SHEAR TESTS, AND TEST PITS FROM INFORMATION ENTITLED, "PSE&G PLANT, HARRISON, NEW JERSEY, SAMPLING LOCATIONS" BY JAMES M. STEWART, INC., PHILADELPHIA, PA. DATED JUNE 26, 1996.

3) EXCEEDANCES, WHICH HAVE BEEN ROUNDED TO THE NEAREST WHOLE NUMBER, ARE BASED ON COMPARISON OF RESULTS TO THE MOST STRINGENT OF THE NJDEP SOIL CLEANUP CRITERIA, N.J.A.C. 7:26D, REVISED FEBRUARY 3, 1995. SEE TEXT FOR DETAILS.

REV	DATE	DESCRIPTION	BY	CHK BY	APP BY

OPSEG Public Service Electric and Gas Company

HARRISON GAS PLANT
TOWN OF HARRISON
HUDSON COUNTY, NEW JERSEY

SHEET TITLE:
EXCEEDANCES OF THE
NJDEP SOIL CLEANUP CRITERIA

Golder Associates
Mt. Laurel, New Jersey

PROJECT No.	953-5306	FILE No.	NJC3-505
CLIENT PROJ. No.		DRAFTING SUPPLIER	02
DR BY	MAM	09/03/96	SCALE AS SHOWN
CHK BY		01/06/97	
APP BY	RV	2/26/97	FIGURE 3

849880105

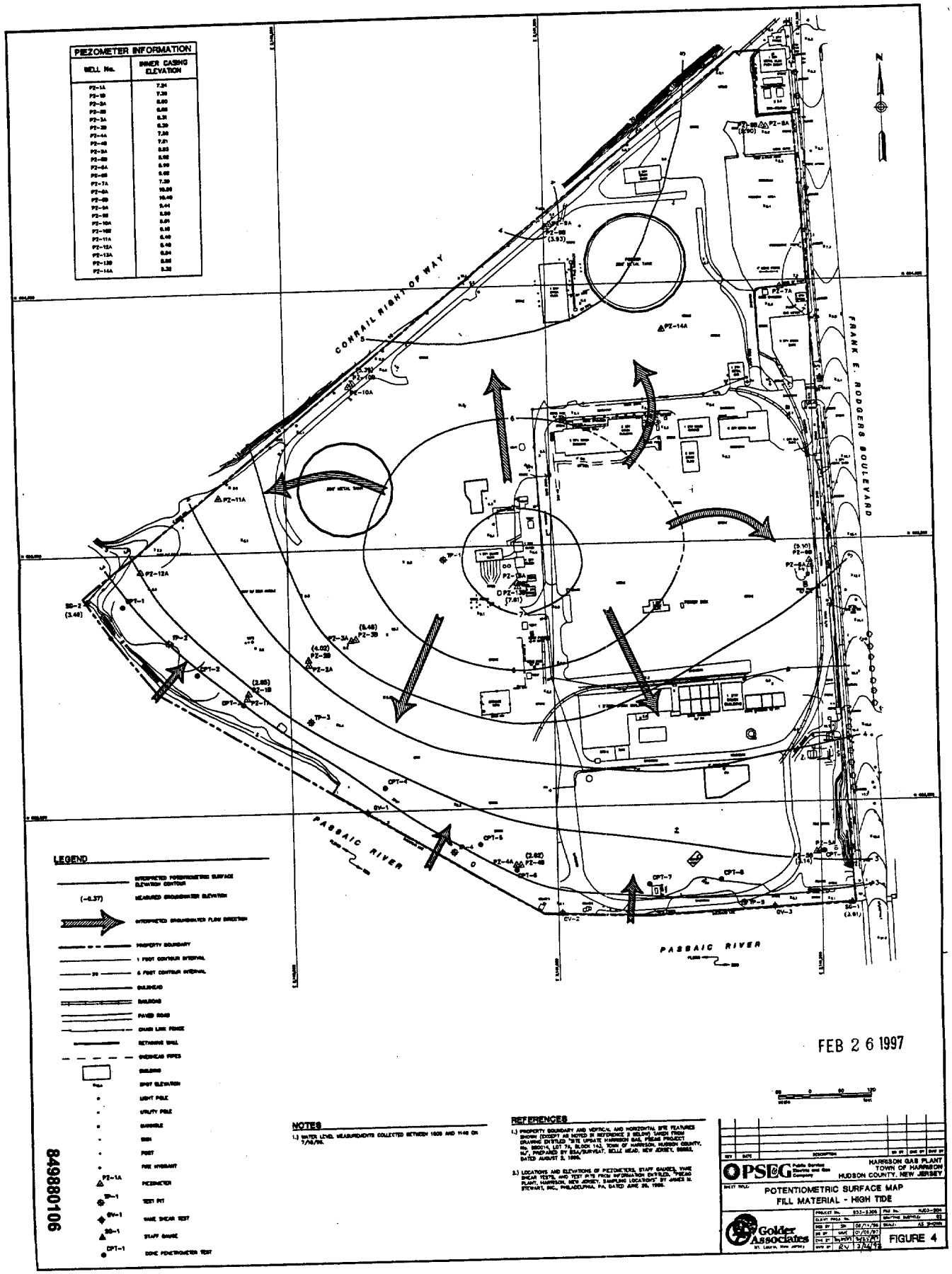
PIEZOMETER INFORMATION
WELL No.
INNER CASING ELEVATION
CONRAIL RIGHT OF WAY
FRANK E. RODGERS BOULEVARD
PASSAIC RIVER
PASSAIC RIVER
LEGEND
PROPERTY BOUNDARY
1 FOOT CONTOUR INTERVAL
5 FOOT CONTOUR INTERVAL
RAILROAD
PAVED ROAD
CHAIN LINK FENCE
RETAINING WALL
OVERHEAD PIPES
BUILDING
SPOT ELEVATION
LIGHT POLE
UTILITY POLE
MANHOLE
SIGN
POST
FIRE HYDRANT
PZ-1A PIEZOMETER
TP-1 TEST PIT
SV-1 VANE SHEAR TEST
SG-1 STAFF GAUGE
CPT-1 CONE PENETROMETER TEST
FEB 2 6 1997
NOTES
1.) WATER LEVEL MEASUREMENTS COLLECTED BETWEEN 1600 AND 1140 ON 7/16/96.
REFERENCES
1.) PROPERTY BOUNDARY AND VERTICAL AND HORIZONTAL SITE FEATURES SHOWN (EXCEPT AS NOTED IN REFERENCE 2 BELOW) TAKEN FROM DRAWING ENTITLED "SITE UPDATE HARRISON GAS PLANT PROJECT No. 880014, LOT 74, BLOCK 143, TOWN OF HARRISON, HUDSON COUNTY, N.J., PREPARED BY ESA/SURVEAT, BELLE MEAD, NEW JERSEY, 08502, DATED AUGUST 2, 1996.
2.) LOCATIONS AND ELEVATIONS OF PIEZOMETERS, STAFF GAUGES, VANE SHEAR TESTS, AND TEST PITS FROM INFORMATION ENTITLED, "HEAD PLANT, HARRISON, NEW JERSEY, SAMPLING LOCATIONS" BY JAMES M. STEWART, INC., PHILADELPHIA, PA, DATED JUNE 20, 1996.
PSEG Public Service Electric and Gas Company
HARRISON GAS PLANT
TOWN OF HARRISON
HUDSON COUNTY, NEW JERSEY
POTENTIOMETRIC SURFACE MAP
FILL MATERIAL - HIGH TIDE
Golder Associates
FIGURE 4
849880106

PIEZOMETER INFORMATION	
WELL No.	INNER CASING ELEVATION
PZ-1A	7.34
PZ-1B	7.38
PZ-2A	6.86
PZ-2B	6.86
PZ-3A	6.71
PZ-3B	6.36
PZ-4A	7.26
PZ-4B	7.21
PZ-5A	6.63
PZ-5B	6.62
PZ-6A	6.66
PZ-6B	6.66
PZ-7A	7.36
PZ-8A	10.28
PZ-8B	10.46
PZ-9A	6.44
PZ-9B	6.86
PZ-10A	6.86
PZ-10B	6.18
PZ-11A	6.49
PZ-11B	6.46
PZ-12A	6.84
PZ-12B	6.86
PZ-13A	6.84
PZ-13B	6.86
PZ-14A	6.86

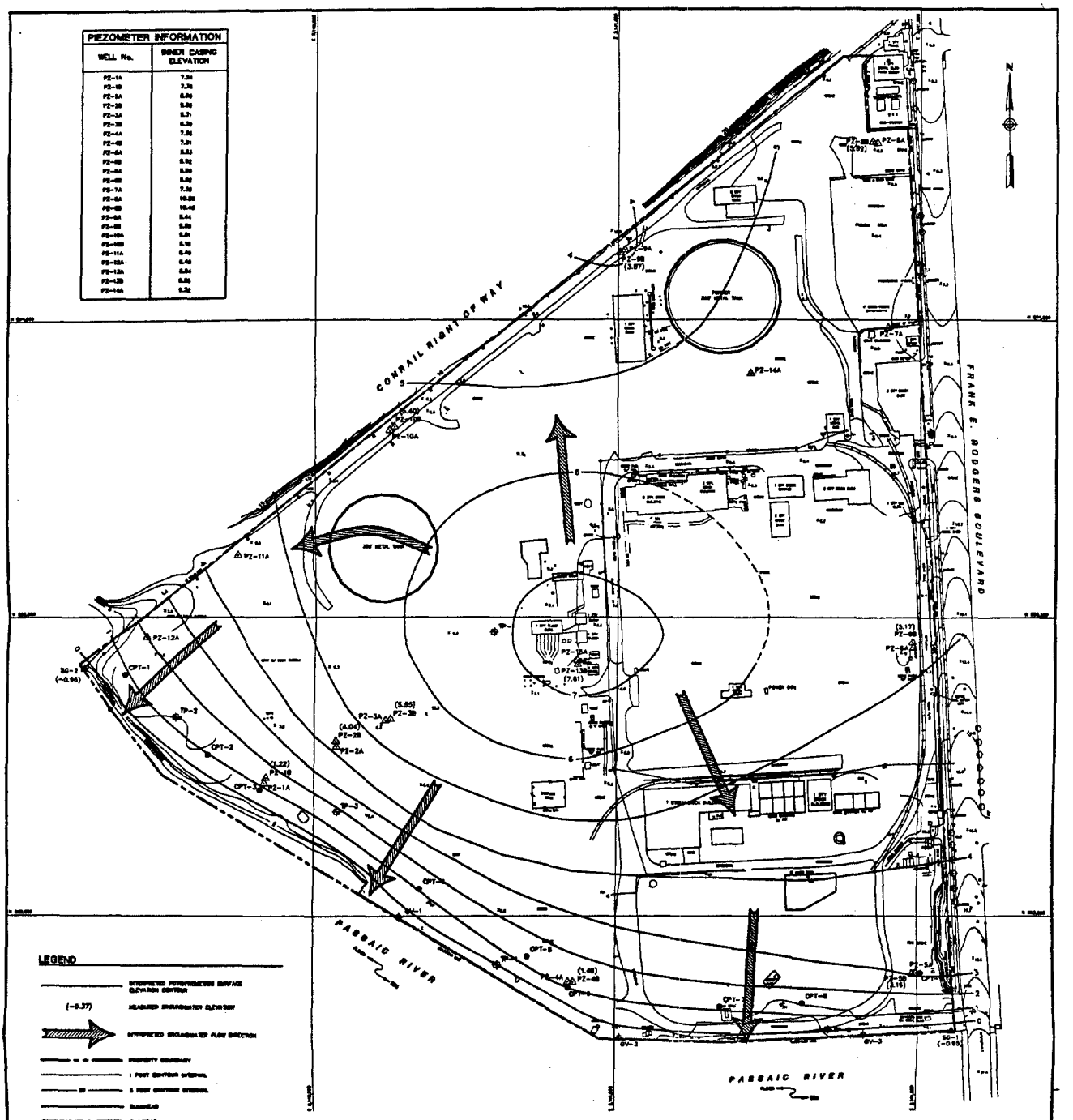

LEGEND

- INTERPOLATED POTENTIOMETRIC SURFACE ELEVATION CONTOUR
- (-0.37) MEASURED GROUNDWATER ELEVATION
- INTERPRETED GROUNDWATER FLOW DIRECTION
- PROPERTY BOUNDARY
- 1 FOOT CONTOUR INTERVAL
- 5 FOOT CONTOUR INTERVAL
- RAILROAD
- RAILROAD
- PAVED ROAD
- CHAIN LINK FENCE
- RETAINING WALL
- UNDERGROUND PIPES
- BUILDING
- SPOT ELEVATION
- LIGHT POLE
- UTILITY POLE
- MANHOLE
- SIGN
- POST
- FIRE HYDRANT
- PZ-1A PIEZOMETER
- TP-1 TEST PIT
- GV-1 VANE SHEAR TEST
- SG-1 STAFF GAUGE
- CPT-1 CONE PENETROMETER TEST

FEB 26 1997

NOTES

1.) WATER LEVEL MEASUREMENTS COLLECTED BETWEEN 1715 AND 1754 ON 7/10/96.

REFERENCES

1.) PROPERTY BOUNDARY AND VERTICAL AND HORIZONTAL SITE FEATURES SHOWN (EXCEPT AS NOTED IN REFERENCE 2 BELOW) TAKEN FROM DRAWING ENTITLED "SITE UPDATE HARRISON GAS, PREAM PROJECT No. 86001A, LOT 7A, BLOCK 143, TOWN OF HARRISON, HUDSON COUNTY, N.J.", PREPARED BY E2A/SUMMIT, BELLE MEAD, NEW JERSEY, 08502, DATED AUGUST 2, 1995.

2.) LOCATIONS AND ELEVATIONS OF PIEZOMETERS, STAFF GAUGES, VANE SHEAR TESTS, AND TEST PITS FROM INFORMATION ENTITLED "PREAM PLANT, HARRISON, NEW JERSEY, SAMPLING LOCATIONS" BY JAMES M. STEWART, INC., PHILADELPHIA, PA, DATED JUNE 26, 1996.

REV	DATE	DESCRIPTION	BY	CHK	APV	PRV

PSEG Public Service Electric and Gas Company

HARRISON GAS PLANT
TOWN OF HARRISON
HUDSON COUNTY, NEW JERSEY

SHEET TITLE: POTENTIOMETRIC SURFACE MAP
FILL MATERIAL - LOW TIDE

Golder Associates
Mt. Laurel, New Jersey

PROJECT No.	953-6306	FILE No.	HJG2-003
CLIENT WELL No.		SHEET SUFFIX	01
DR BY	SN	08/14/96	SCALE 1" = 200'
CK BY	LMC	01/06/97	
DW BY	SN/MT	1/6/97	
APV BY	KV	2/26/97	

FIGURE 5

849880107

PIEZOMETER INFORMATION	
WELL No.	INNER CASING ELEVATION
PZ-1A	7.34
PZ-1B	7.38
PZ-2A	8.00
PZ-2B	8.05
PZ-3A	8.31
PZ-3B	8.30
PZ-4A	7.39
PZ-4B	7.91
PZ-5A	8.83
PZ-5B	8.82
PZ-6A	8.93
PZ-6B	8.92
PZ-7A	7.39
PZ-8A	10.00
PZ-8B	10.43
PZ-9A	8.41
PZ-9B	8.80
PZ-10A	8.91
PZ-10B	8.90
PZ-11A	8.49
PZ-12A	8.48
PZ-13A	8.84
PZ-13B	8.85
PZ-14A	8.38

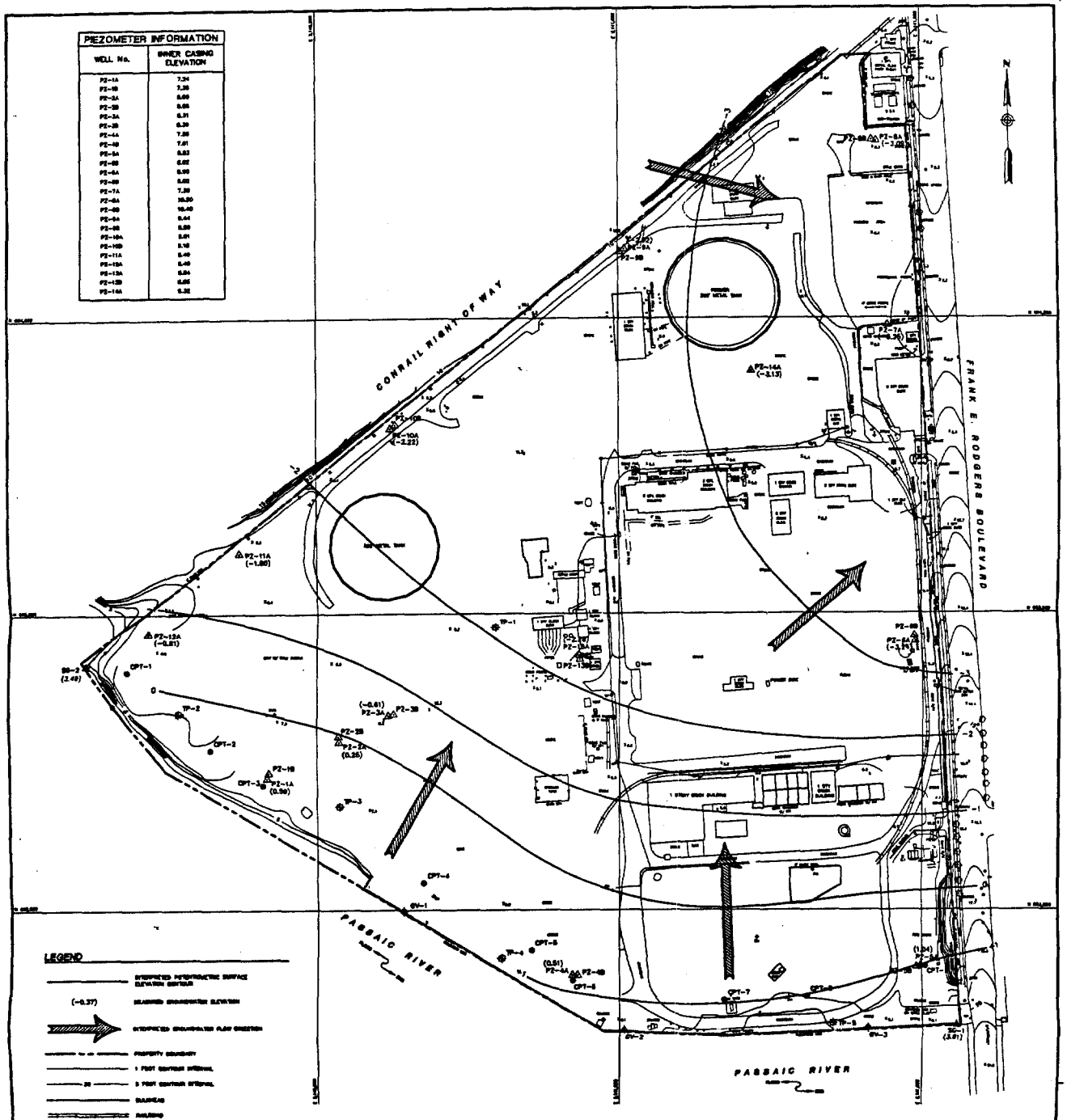

LEGEND

- INTERPRETED PIEZOMETRIC SURFACE ELEVATION CONTOUR
- (-0.37) MEASURED GROUNDWATER ELEVATION
- INTERPRETED GROUNDWATER FLOW DIRECTION
- PROPERTY BOUNDARY
- 1 FOOT CONTOUR INTERVAL
- 5 FOOT CONTOUR INTERVAL
- RAILROAD
- RAILWAY
- PAVED ROAD
- CHAIN LINK FENCE
- RETAINING WALL
- UNDERGROUND PIPES
- BUILDING
- 7.00 STAFF ELEVATION
- LIGHT POLE
- UTILITY POLE
- MANHOLE
- SIGN
- POST
- FIRE HYDRANT
- PZ-1A PIEZOMETER
- TP-1 TEST PIT
- GV-1 VANE SHEAR TEST
- SS-1 STAFF GAUGE
- CPT-1 CONE PENETROMETER TEST

FEB 2 6 1997

NOTES

1.) WATER LEVEL MEASUREMENTS COLLECTED BETWEEN 1000 AND 1140 ON 7/15/96

REFERENCES

1.) PROPERTY BOUNDARY AND VERTICAL AND HORIZONTAL SITE FEATURES SHOWN (EXCEPT AS NOTED IN REFERENCE 2 BELOW) TAKEN FROM DRAWING ENTITLED "SITE MAPS OF HARRISON GAS PLANT PROJECT No. 9800-4, LOT 7A, BLOCK 143, TOWN OF HARRISON, HUDSON COUNTY, NJ" PREPARED BY B&A/SURVEAT, BELLE MEAD, NEW JERSEY, 08502, DATED AUGUST 2, 1995.

2.) LOCATIONS AND ELEVATIONS OF PIEZOMETERS, STAFF GAUGES, VANE SHEAR TESTS, AND TEST PITS FROM INFORMATION ENTITLED "PEAT PLANT, HARRISON, NEW JERSEY, SAMPLING LOCATIONS" BY JAMES M STEWART, INC., PHILADELPHIA, PA, ON EXC JUNE 20, 1996.

REV	DATE	DESCRIPTION	DR BY	CHK BY	APP BY

PSEG Public Service Electric and Gas Company

HARRISON GAS PLANT
TOWN OF HARRISON
HUDSON COUNTY, NEW JERSEY

POTENTIOMETRIC SURFACE MAP
GLACIAL DEPOSITS- HIGH TIDE

Golder Associates
Wall, New Jersey

PROJECT No.	851-9308	FILE No.	8851-002
CLIENT PROJ. No.		DRAFTING SUPPL.	02
DR BY	DN	06/11/96	SCALE AS SHOWN
CK BY	MMC	6/20/97	
CHK BY	[illegible]	1/31/97	FIGURE 6
APP BY	RV	2/12/97	

849880108

PIEZOMETER INFORMATION	
WELL No.	INNER CASING ELEVATION
PZ-1A	7.34
PZ-1B	7.33
PZ-2A	8.60
PZ-2B	8.65
PZ-3A	8.31
PZ-3B	8.39
PZ-4A	7.86
PZ-4B	7.61
PZ-5A	8.83
PZ-5B	8.92
PZ-6A	8.90
PZ-6B	8.82
PZ-7A	7.38
PZ-8A	10.50
PZ-8B	10.40
PZ-9A	8.44
PZ-9B	8.69
PZ-10A	8.91
PZ-10B	8.16
PZ-11A	8.40
PZ-12A	8.40
PZ-13A	8.91
PZ-13B	8.68
PZ-14A	8.38

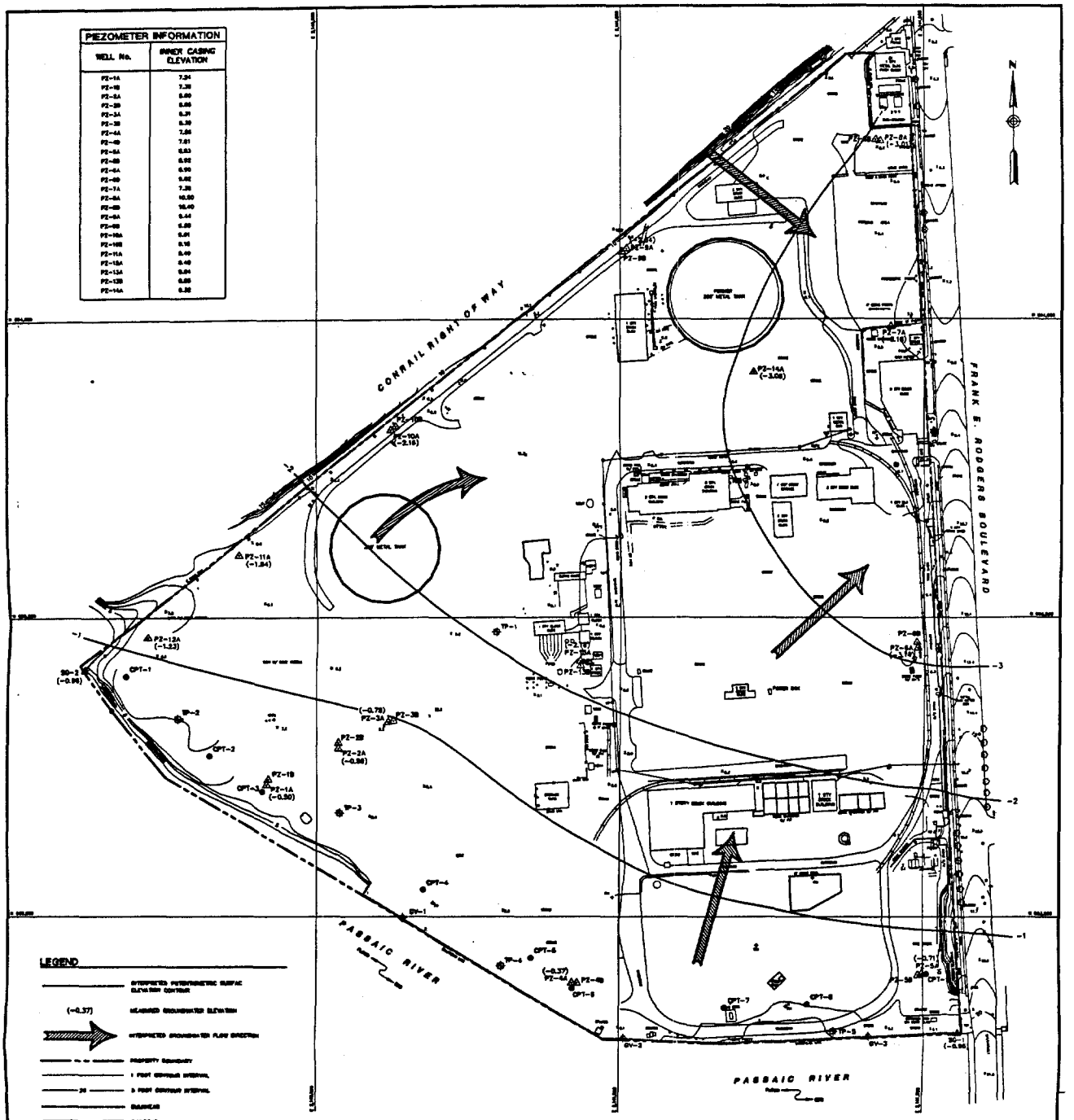

LEGEND

- INTERPRETED POTENTIOMETRIC SURFACE ELEVATION CONTOUR
- (-0.37) MEASURED GROUNDWATER ELEVATION
- INTERPRETED GROUNDWATER FLOW DIRECTION
- PROPERTY BOUNDARY
- 1 FOOT CONTOUR INTERVAL
- 5 FOOT CONTOUR INTERVAL
- RAILROAD
- BUILDING
- PICKET FENCE
- CHAIN LINK FENCE
- RETAINING WALL
- OVERHEAD POWER
- BUILDING
- SPOT ELEVATION
- LIGHT POLE
- UTILITY POLE
- MANHOLE
- SIGN
- POST
- FIRE HYDRANT
- PZ-1A PIEZOMETER
- TP-1 TEST PIT
- SV-1 VANE SHEAR TEST
- SG-1 STAFF GAUGE
- CPT-1 CONE PENETROMETER TEST

FEB 2 6 1997

NOTES

1.) WATER LEVEL MEASUREMENTS COLLECTED BETWEEN 1700 AND 1704 ON 7/16/96.

REFERENCES

1.) PROPERTY BOUNDARY AND VERTICAL AND HORIZONTAL SITE FEATURES SHOWN (EXCEPT AS NOTED IN REFERENCE 2 BELOW) TAKEN FROM DRAWING ENTITLED "NYE UPGRADE HARRISON GAS PREMS PROJECT No. 8600-1, LOT 7A, BLOCK 143, TOWN OF HARRISON, HUDSON COUNTY, NJ", PREPARED BY SEA/DURNBAUGH, BELLE MEAD, NEW JERSEY; 8/8/95, DATED AUGUST 2, 1995.

2.) LOCATIONS AND ELEVATIONS OF PIEZOMETERS, STAFF GAUGES, VANE SHEAR TESTS, AND TEST PITS FROM INFORMATION ENTITLED, "PREMS PLANT, HARRISON, NEW JERSEY, SAMPLING LOCATIONS" BY JAMES E. STEWART, INC., PHILADELPHIA, PA, DATED JUNE 26, 1996.

REV	DATE	DESCRIPTION	DR. BY	CHK. BY	APR. BY

PSEG Public Service Electric and Gas Company

HARRISON GAS PLANT
TOWN OF HARRISON
HUDSON COUNTY, NEW JERSEY

POTENTIOMETRIC SURFACE MAP
GLACIAL DEPOSITS- LOW TIDE

Golder Associates
Wl. Laurel, New Jersey

PROJECT No.	867-1304	FILE No.	1453-001
CLIENT PROJ. No.		DRAWING SUFFIX	03
DR. BY	DR 07/14/97	SCALE	AS SHOWN
CHK. BY	KJK 07/28/97		
APR. BY	07/29/97		
APR. BY	PV 07/29/97		

FIGURE 7

8498801109

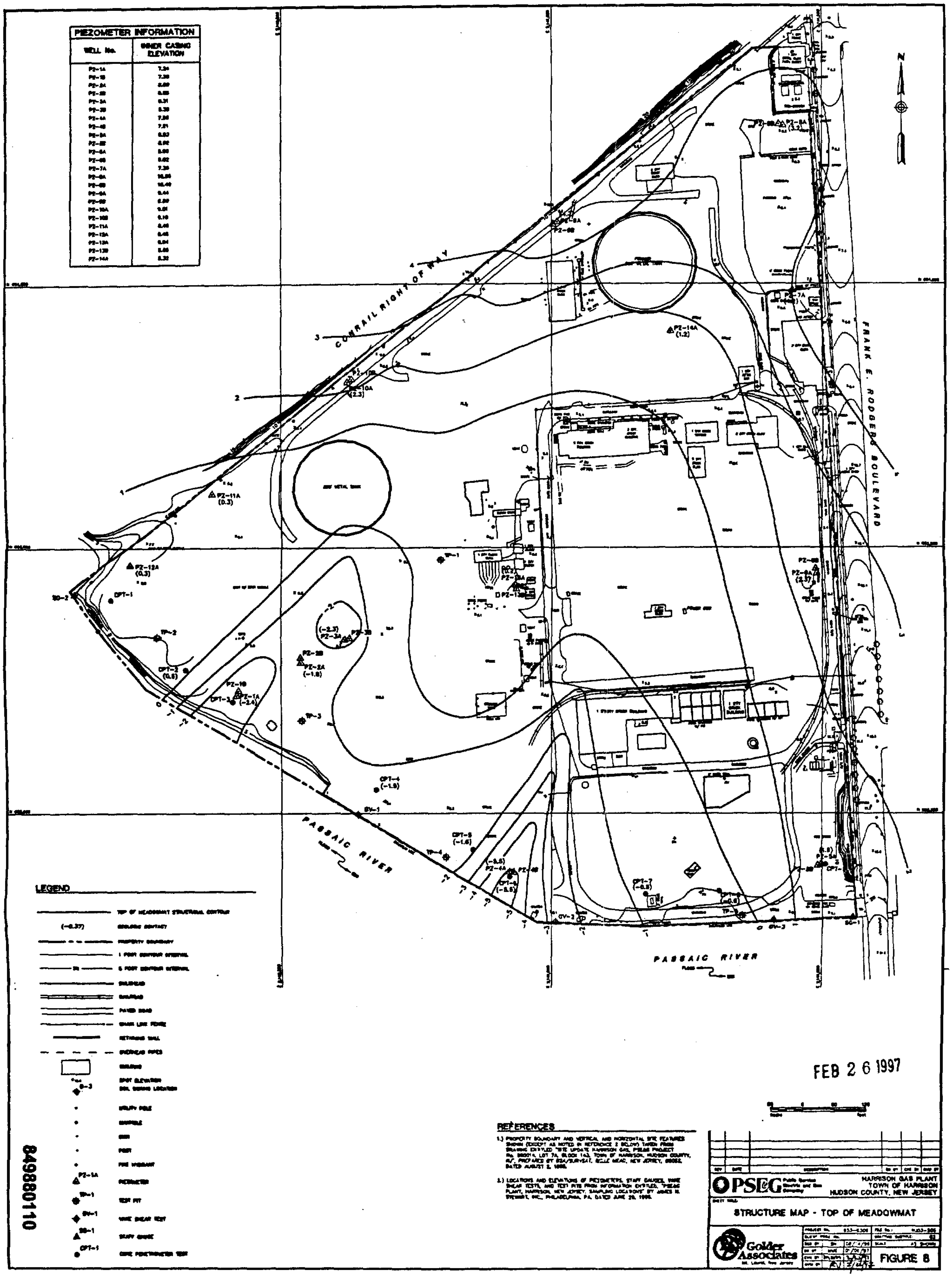

FEB 2 6 1997

84980110

849880111

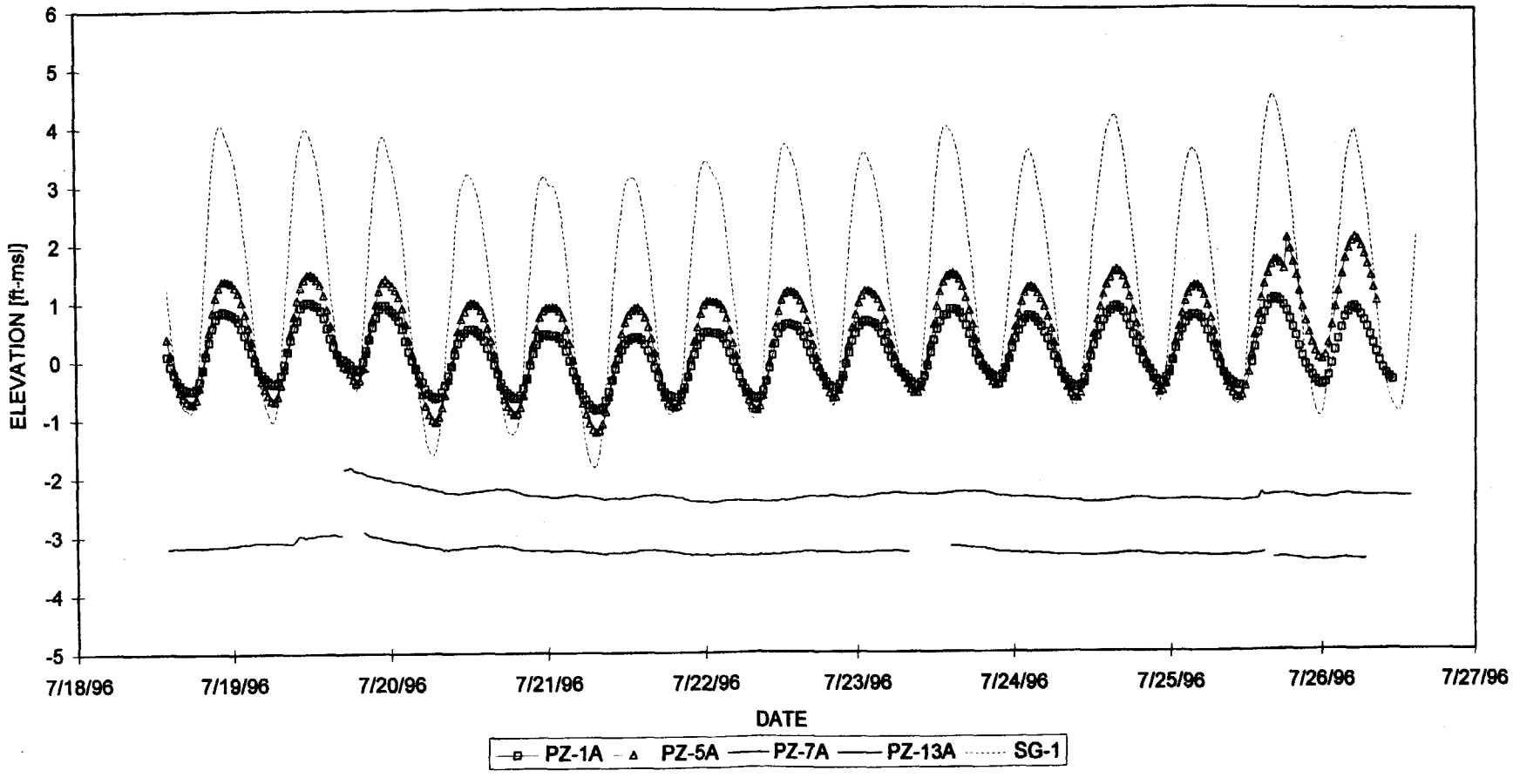

FEB 26 1997

JOB No.: 953-6306	SCALE: AS SHOWN	LONG TERM WATER LEVEL MEASUREMENTS GLACIAL DEPOSITS		
DR BY: WME	DATE: 09/27/96			
CHK BY:	FILE No.: NJ03-546			
REV BY:	DR SUBTITLE: 02			
Golder Associates		PSE&G/FRI/NJ	FIGURE 9	

849880112

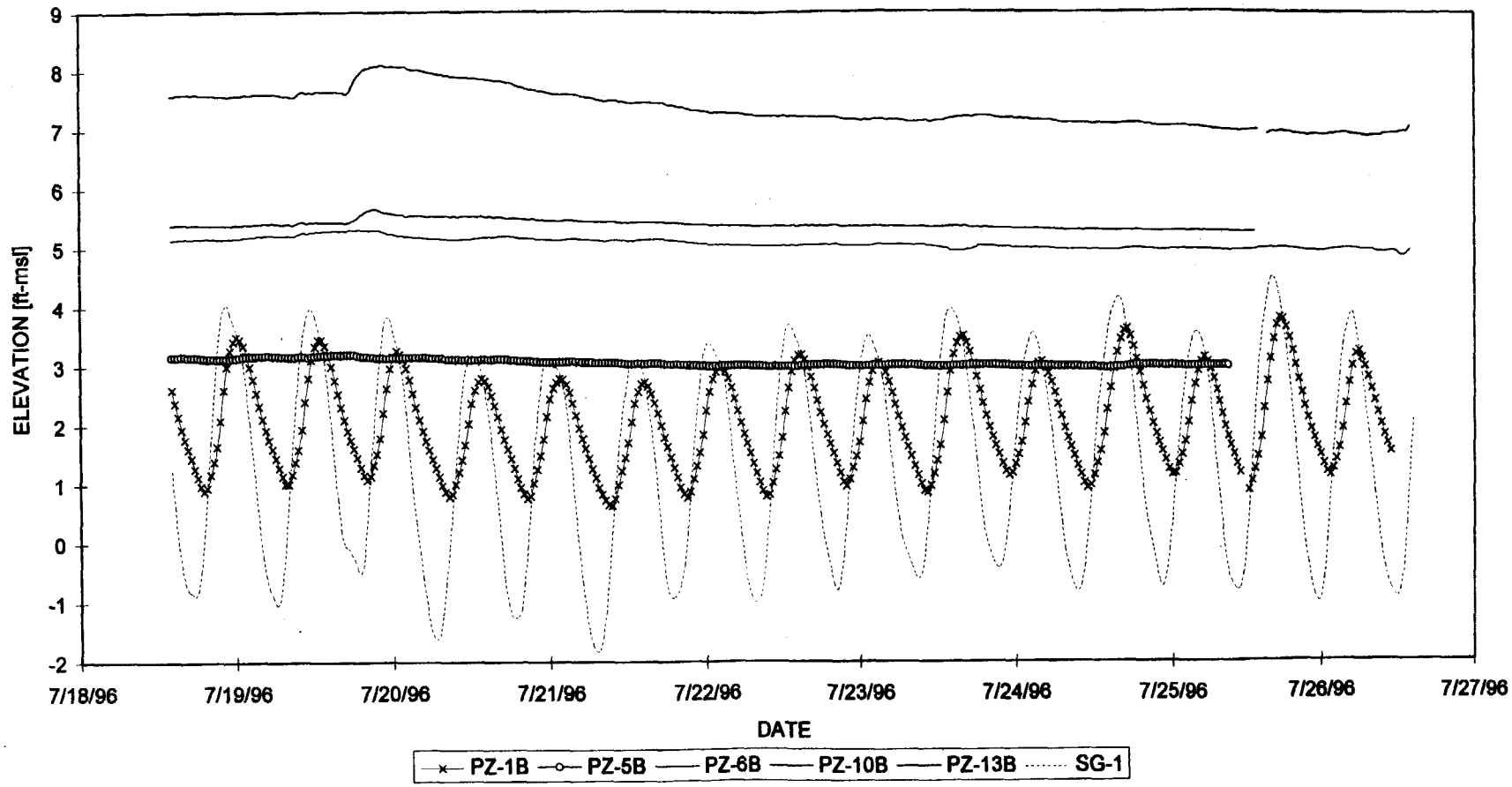

FEB 2 6 1997

JOB No.:	953-6306	SCALE:	AS SHOWN	LONG TERM WATER LEVEL MEASUREMENTS FILL MATERIAL
DR BY:	WME	DATE:	09/27/96	
CHK BY:	mmm	FILE No.:	NJ03-547	
REV BY:	ev	DR SUBTITLE:	02	
Golder Associates				PSE&G/FRI/NJ — FIGURE 10

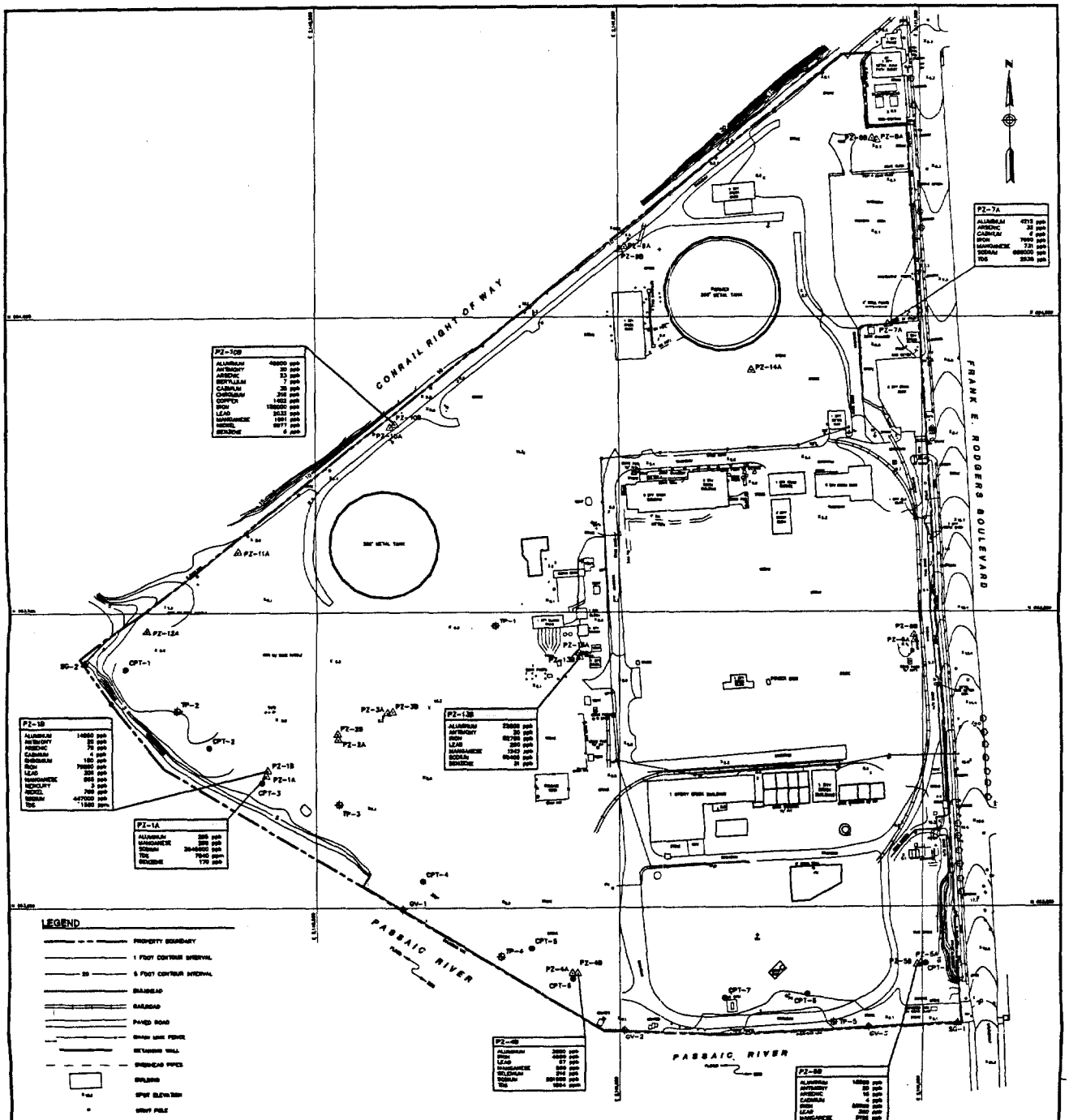

FEB 2 6 1997

NOTES

1.) ALL RESULTS ARE ROUNDED TO THE NEAREST WHOLE NUMBER.

REFERENCES

1.) PROPERTY BOUNDARY AND VERTICAL AND HORIZONTAL SITE FEATURES SHOWN (EXCEPT AS NOTED IN REFERENCE 2 BELOW) TAKEN FROM DRAWING ENTITLED "SITE UPDATE HARRISON GAS PSE&G PROJECT No. 880014, LOT 7A, BLOCK 143, TOWN OF HARRISON, HUDSON COUNTY, N.J." PREPARED BY [illegible], BELLE MEAD, NEW JERSEY, [illegible], DATED AUGUST 2, 1996.

2.) LOCATIONS AND ELEVATIONS OF PIEZOMETERS, STAFF GAUGES, VANE SHEAR TESTS, AND TEST PITS FROM INFORMATION ENTITLED, "PSE&G PLANT, HARRISON, NEW JERSEY, SAMPLING LOCATIONS" BY JAMES H. STEWART, INC., PHILADELPHIA, PA. DATED JUNE 28, 1996.

3.) EXCEEDANCES, WHICH HAVE BEEN ROUNDED TO THE NEAREST WHOLE NUMBER, ARE BASED ON COMPARISON TO THE GROUND WATER QUALITY STANDARDS FOR CLASS IIA AQUIFERS, N.J.A.C. 7:9-6. SEE TEXT FOR DETAILS.

REV	DATE	DESCRIPTION	DR BY	DSN BY	DWG BY

PSEG Public Service Electric and Gas Company

HARRISON GAS PLANT
TOWN OF HARRISON
HUDSON COUNTY, NEW JERSEY

EXCEEDANCES OF THE NJDEP
GROUND WATER QUALITY STANDARDS

Golder Associates

FIGURE 11

849880113

849880114

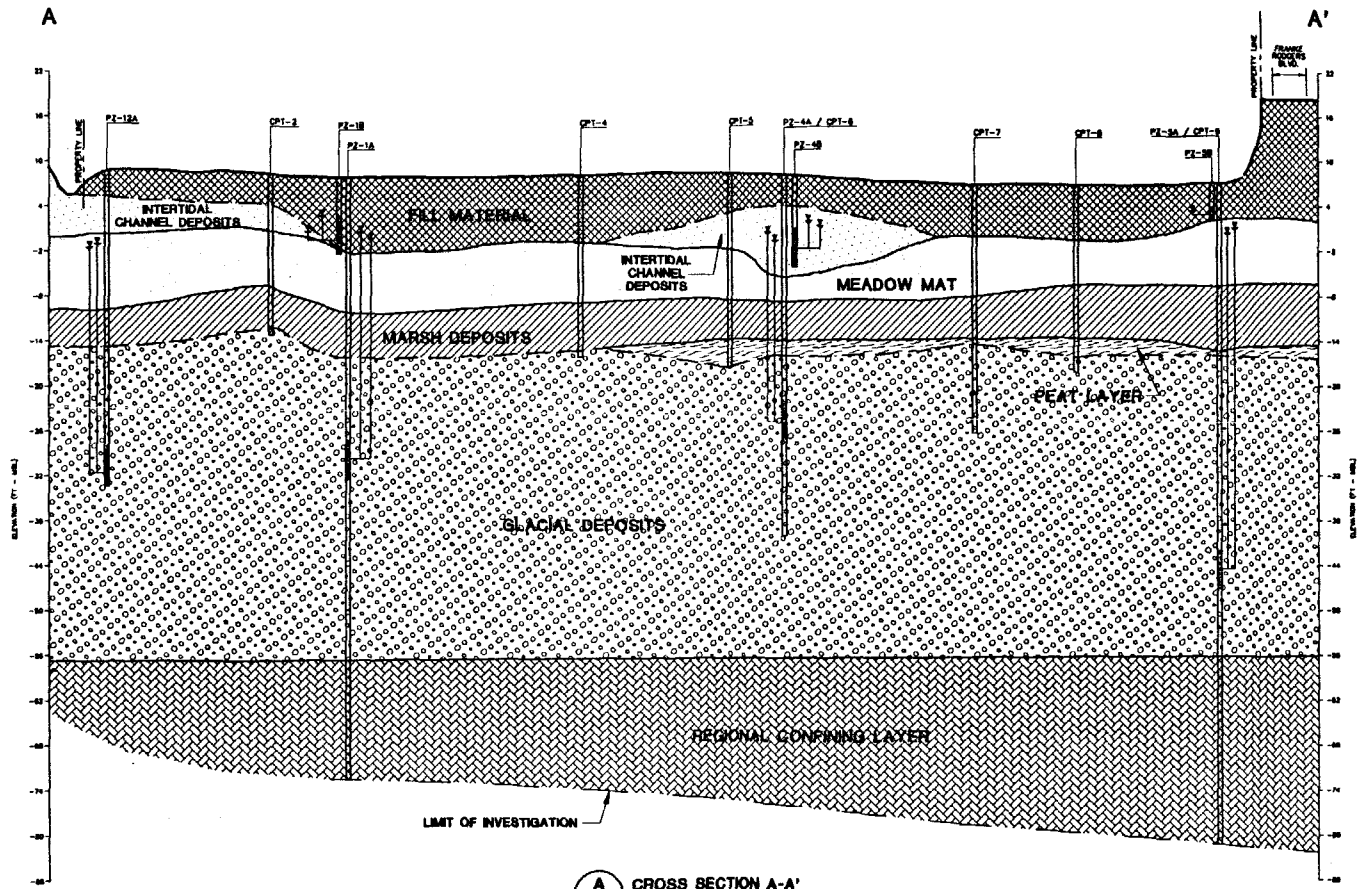

A 2 13 CROSS SECTION A-A'

LEGEND

- DETAIL OR CROSS SECTION DESIGNATION
- FIGURE No. WHERE DETAIL OR CROSS SECTION IS PRESENTED
- FIGURE No. WHERE LOCATION OF DETAIL OR CROSS SECTION IS FIRST SHOWN
- BH-33 — BOREHOLE LABEL
- 436 ft. 300 — PROJECTED DISTANCE
- TOP OF BOREHOLE
- SCREENED INTERVAL
- BOTTOM OF BOREHOLE
- LOW TIDE AND HIGH TIDE WATER LEVELS
- FILL MATERIAL — BROWNISH GRAY SILT, SAND AND GRAVEL WITH OCCASIONAL BRICKS, CONCRETE, WOOD, CLINKER AND SLAG/PITCH
- INTERTIDAL CHANNEL DEPOSITS — WELL GRADED LOOSE TO VERY LOOSE, BROWN TO BROWNISH-GRAY FINE TO COARSE SAND INTERMIXED WITH CLAY AND SILT
- MEADOW MAT — SOFT, BLUE-GRAY/GREEN SILT TO SILTY CLAY, SOME PINCH INTERMIXED WITH DECAYED VEGETATION/PLANT DEBRIS
- MARSH DEPOSITS — LIGHT GRAY TO PALE BROWN SILTY SAND TO SANDY SILT, SOMETIMES INTERMIXED WITH DECAYED VEGETATION / PLANT DEBRIS
- PEAT LAYER — BROWN TO YELLOWISH BROWN, PEAT LAYER WITH WOODY FRAGMENTS AND OCCASIONAL SILTY-SAND SEAMS INTERMIXED WITH CLAY
- GLACIAL DEPOSITS — MODERATE BROWN TO TAN, YELLOW TO YELLOW BROWN, STRATIFIED, INTERBEDDED, SANDS, SILTS, CLAYS AND GRAVELS
- REGIONAL CONFINING LAYER — BLACK-LAKUSTRINE DEPOSITS OF BROWN TO REDDISH-BROWN, CLAYEY-SILT TO SILTY CLAY, WITH STRINGERS AND LENSES OF FINE SAND

LEGEND

1.) WATER LEVELS SHOWN WERE MEASURED ON 07/16/96 DURING HIGH AND LOW TIDAL CONDITIONS (SEE TEXT FOR DETAILS).

FEB 26 1997

REV	DATE	DESCRIPTION	DR. BY	CHK BY	APP BY

OPSEG Public Service Electric and Gas Company

HARRISON GAS PLANT
TOWN OF HARRISON
HUDSON COUNTY, NEW JERSEY

SHEET TITLE: CROSS SECTION A-A'

Golder Associates

PROJECT No.	953-6316	FILE No.	6J07-343
FILE No.		SHEET No.	12
DR. BY	SAI	DATE	09/17/96
CHK BY			07/29/97
APP BY		SCALE	AS SHOWN

FIGURE 12

849880115

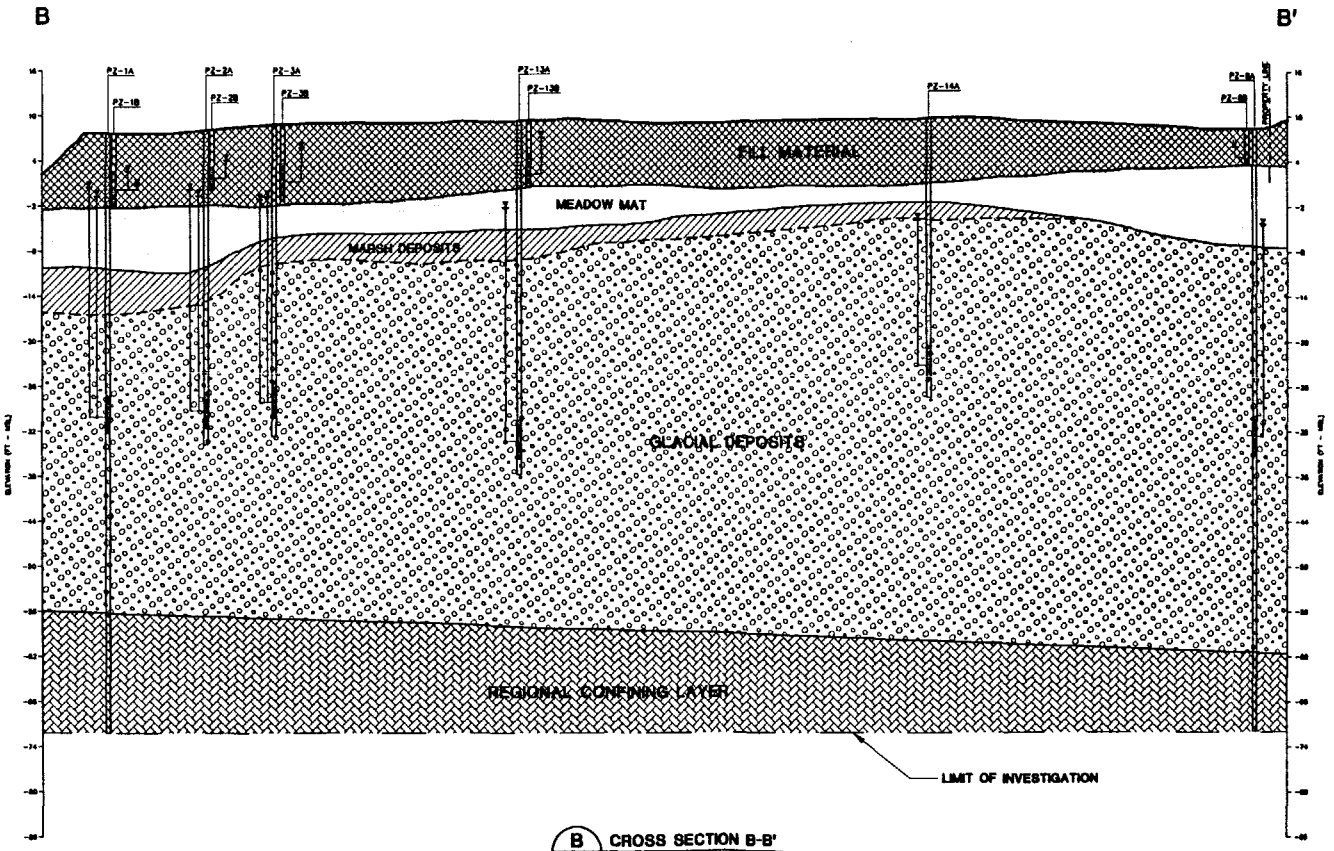

B 2 14 CROSS SECTION B-B'

LEGEND

DETAIL OR CROSS SECTION DESIGNATION
FIGURE No. WHERE DETAIL OR CROSS SECTION IS PRESENTED
FIGURE No. WHERE LOCATION OF DETAIL OR CROSS SECTION IS FIRST SHOWN

BH-33 — BOREHOLE LABEL
456 ft. MSL — PROJECTION DISTANCE

TOP OF BOREHOLE
SCREENED INTERVAL
BOTTOM OF BOREHOLE
LOW TIDE AND HIGH TIDE WATER LEVELS

FILL MATERIAL
BROWNISH GRAY SILT, SAND AND GRAVEL WITH OCCASIONAL BRICKS, CONCRETE, WOOD, RUBBER AND SALVAGE

INTERTIDAL CHANNEL DEPOSITS
WELL GRADED LOOSE TO VERY LOOSE, BROWN TO BROWNISH-GRAY FINE TO COARSE SAND INTERMIXED WITH CLAY AND SILT

MEADOW MAT
SOFT, OLIVE-GRAY/GREEN, SILT TO SILTY CLAY, SOMETIMES INTERMIXED WITH DECAYED VEGETATION/PLANT DEBRIS

MARSH DEPOSITS
LIGHT GRAY TO PALE BROWN SILTY SAND TO SANDY SILT, SOMETIMES INTERMIXED WITH DECAYED VEGETATION / PLANT DEBRIS

PEAT LAYER
BROWN TO YELLOWISH BROWN, PEAT LAYER WITH WOODY FRAGMENTS AND OCCASIONAL SILTY-SAND SEAMS INTERMIXED WITH CLAY

GLACIAL DEPOSITS
MODERATE BROWN TO TAN, YELLOW TO YELLOW BROWN, STRATIFIED, INTERBEDDED, SANDS, SILTS, CLAYS AND GRAVELS

REGIONAL CONFINING LAYER
BLACK-LACUSTRINE DEPOSITS OF BROWN, TO REDDISH-BROWN, CLAYEY SILT TO SILTY CLAY, WITH STRINGERS AND LENSES OF FINE SAND

LEGEND

1.) WATER LEVELS SHOWN WERE MEASURED ON 07/16/96 DURING HIGH AND LOW TIDE, RESPECTIVELY (SEE TEXT FOR DETAILS).

FEB 26 1997

REV	DATE	DESCRIPTION	DR BY	CHK BY	APP BY

PSEG Public Service Electric and Gas Company

HARRISON GAS PLANT
TOWN OF HARRISON
HUDSON COUNTY, NEW JERSEY

CROSS SECTION B-B'

Golder Associates

PROJECT No.	953-5308	PAT No.	1-93-544
DRAFT MAN. No.		DRAWING GROUP	01
DR BY	JH	08/21/96	SCALE: AS SHOWN
CK BY	MRW	02/26/97	
CHK BY			
APP BY			FIGURE 13

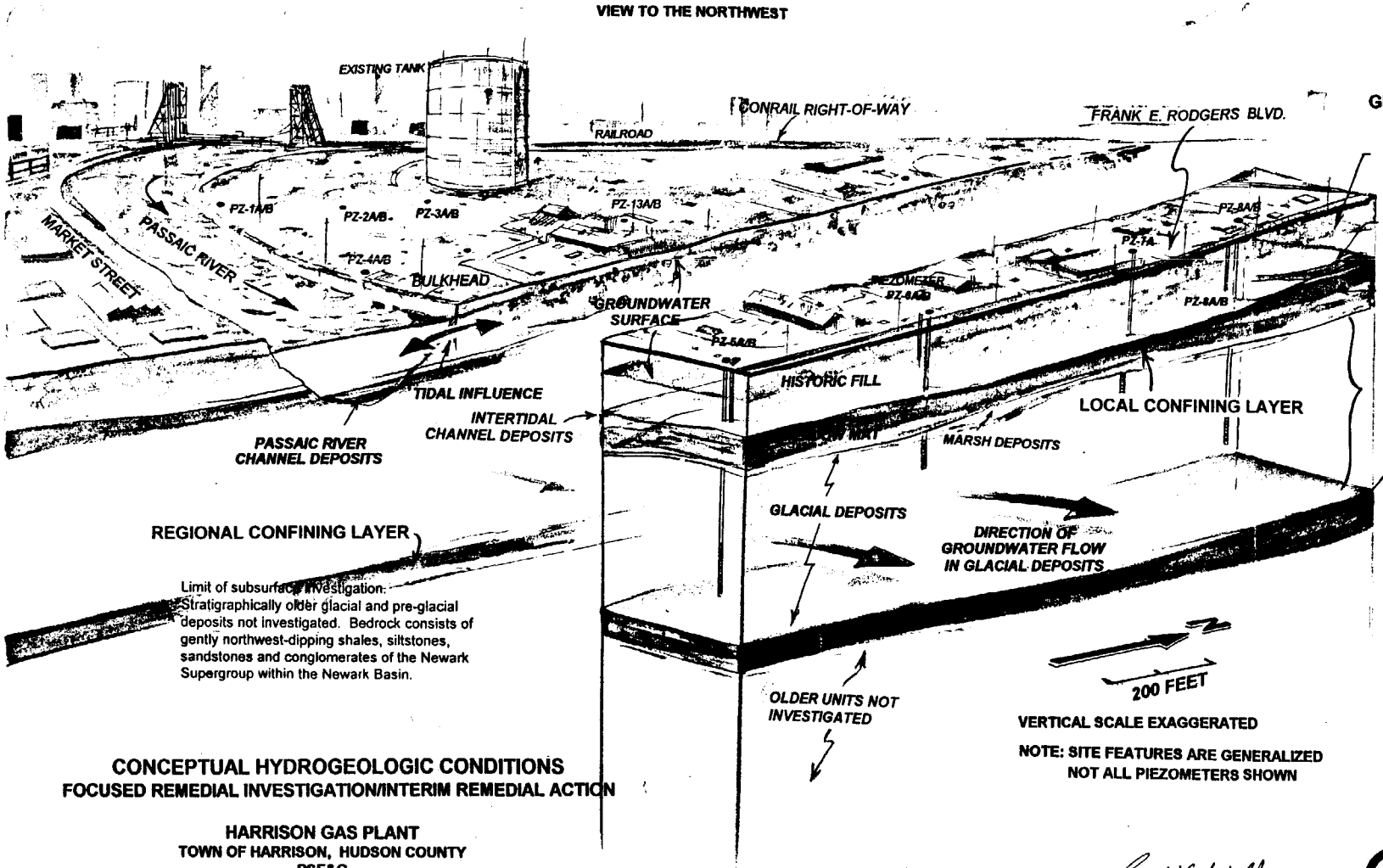

GENERALIZED STRATIGRAPHY

FILL MATERIAL
BROWNISH GRAY SILT, SAND AND GRAVEL WITH OCCASIONAL BRICKS, CONCRETE, WOOD, CLINKER AND TAR/PITCH

INTERTIDAL CHANNEL DEPOSITS
BROWN, FINE TO COARSE, SAND AND GRAVEL; LOCALLY PRESENT IN NARROW CHANNELS ACROSS SITE

MEADOW MAT
SOFT, OLIVE-GRAY/GREEN, ORGANIC SILT TO SILTY CLAY, SOMETIMES INTERMIXED WITH DECAYED VEGETATION/PLANT DEBRIS;

GLACIAL DEPOSITS
MODERATE BROWN TO TAN, YELLOW TO YELLOW BROWN, STRATIFIED, INTERBEDDED, SANDS, SILTS, CLAYS AND GRAVELS

"CONFINING LAYER"
GLACIO-LACUSTRINE DEPOSITS BROWN, TO REDDISH-BROWN, CLAYEY-SILT TO SILTY CLAY, WITH STRINGERS AND LENSES OF FINE SAND

CONCEPTUAL HYDROGEOLOGIC CONDITIONS
FOCUSED REMEDIAL INVESTIGATION/INTERIM REMEDIAL ACTION

HARRISON GAS PLANT
TOWN OF HARRISON, HUDSON COUNTY
PSE&G

Ramesh Venkatadhram

Golder Associates

FEB 26 1997

FIGURE 14

849880116

Appendix A

Appendix A

Pertinent Correspondence

FM101

Golder Associates Inc.

305 Fellowship Road, Suite 200
Mt. Laurel, NJ USA 08054
Tel: (609) 273-1110
Fax (609) 273-0778

Golder Associates

May 13, 1996

Project No.: 953-6306

New Jersey Dept. of Environmental Protection
Division of Privately Funded Site Remediation
401 E. State Street
CN 028
Trenton, NJ 08625

Attn: Matthew Turner

RE; REMEDIAL INVESTIGATION FOR DEVELOPMENT OF INTERIM REMEDIAL ACTION, FORMER HARRISON GAS WORKS SITE FIELD CHANGE NO. 1

Gentlemen:

Pursuant to the telephone conversation today between Mr. Matthew Turner of NJDEP and Mr. Michael Morris of Golder Associates, it was agreed to modify the procedures for the approved Work Plan for the above described project as follows:

- The Work Plan (specifically Section 13.2 of the Quality Assurance Project Plan) states that if the soil in the three vane shear tests (proposed total depth of 18 feet) in the Passaic River is cohesive, then Shelby tubes would be taken in the "even" foot interval for testing purposes (total maximum of eight Shelby tubes per boring). It was agreed to delete half (i.e., up to four) of the Shelby tubes in the river and collect them instead in the on-shore soil borings located near the bulkhead (e.g., borings B-1, B-2, and B-3).

This revision would allow for the collection of geotechnical data over a wider geographic area at the Site, including the area where a potential hydraulic barrier would actually be constructed.

Please call me if there are any questions regarding this Field Change.

Very truly yours,

GOLDER ASSOCIATES INC.

Michael M. Morris

Michael M. Morris, P.G.
Senior Project Manager

MMM/lrl
D:\PROJECTS\953-6306\0513LTR.DOC

cc: Warren Straubmuller, PSE&G

849880119

PSE&G

Public Service Electric and Gas Company 80 Park Plaza, Newark, NJ 07102-4194

Environmental Management

June 13, 1996

via TELECOPIER and OVERNIGHT MAIL

Mr. Matthew Turner, Case Manager
Bureau of State Case Management
New Jersey Department of Environmental Protection
401 East State Street, CN-028
Trenton, New Jersey 08625-0028

Re: Remedial Investigation For Development Of Interim Remedial Action Former Harrison Gas Works Site Field Change No. 2

Dear Mr. Turner:

Pursuant to your recent telephone conversations with Mr. Michael Morris of Golder Associates on behalf of the Public Service Electric and Gas Company (PSE&G), it was agreed to modify the procedures for the approved Work Plan for the above described project as follows:

- Split Spoon Sampling at Piezometer Locations - Due to the observed complexity of the stratigraphy at the Site, split spoon samples will be collected at 5 foot intervals in all deep piezometer boreholes to help determine an appropriate screen interval (i.e., a sandy horizon below the fill). Given that soil samples will be collected at those locations, the previously proposed cone penetrometer tests (CPTs) at those locations (i.e., CPTs 10 through 16) will be deleted from the scope of work. The proposed CPTs along the bulkhead (i.e., CPTs 1 through 9) will be retained as they will provide valuable geotechnical data in the design area that otherwise would not be collected; and

- Develop Piezometers - All piezometers will be developed to help ensure a good hydraulic connection within the screened interval to help obtain accurate water level information. The water level information collected from the piezometers will be used to determine the position of the five groundwater monitoring wells which are to be subsequently installed as part of the investigation.

PSE&G appreciates NJDEP's continued support in our efforts to facilitate an interim remedial action for the Site. Please contact me at (201) 430-7816 or Michael Morris of Golder Associates at (609) 273-1110 if there are any questions regarding this Field Change.

Very truly yours,

Warren Straubmuller/amc

Warren Straubmuller
Project Manager - Environmental

WS/amc

cc: M. Beck
H. Mahoney
W. Max
M. Valeri
M. Morris - Golder Assoc.

953-630
FM 110

PSEG

Public Service Electric and Gas Company 80 Park Plaza, Newark, NJ 07102-4194

Environmental, Health and Safety

RECEIVED
JUL 22 1996
GOLDER-NJ

July 18, 1996

VIA FEDEX

Mr. Matthew Turner, Case Manager
Bureau of State Case Management
New Jersey Department of Environmental Protection
401 East State Street, CN-028
Trenton, New Jersey 08625-0028

Re: Remedial Investigation For Development Of Interim Remedial Action
Former Harrison Gas Works Site
Field Change No. 3

Dear Mr. Turner:

Pursuant to recent telephone conversations between Mr. Gregory Giles (NJDEP), Mr. Michael Morris of Golder Associates, Warren Straubmuller (PSE&G) and Yourself on July 15 and July 17, 1996 regarding preliminary findings at the Site, it was agreed to modify the procedures described in the approved Work Plan as follows:

- ***Groundwater Monitoring Wells*** - The Work Plan calls for the installation of five groundwater monitoring wells (MW-1 through MW-5) following the installation of piezometers and the measurement of groundwater levels to help determine groundwater flow direction. As piezometers have already been installed in the areas that appear to be both upgradient and downgradient in the historic fill (the unit that seems to be in direct hydraulic connection with the adjacent Passaic River), and the piezometers were constructed the same as the proposed monitoring wells (see Figures A-5 and A-6 of the Work Plan), it was agreed that groundwater samples could be collected from the piezometers. Therefore, the installation of the five wells will not be necessary. The required five groundwater samples will be collected from the following:

  Historic Fill - PZ13B (upgradient)
  PZ1B, PZ4B, PZ5B, PZ10B (downgradient)

  It was also agreed that 2 additional groundwater samples will be collected as follows:

  Glacial Deposit - PZ1A (upgradient)
  PZ7A (downgradient)

- ***Aquifer Testing*** - The five proposed slug tests and two proposed pumping tests, originally scheduled in the monitoring wells, will instead be performed in the newly installed piezometers as follows:

  Slug tests - PZ1A, PZ4A, PZ5A, PZ5B, and PZ12A
  Pumping tests- PZ1B, PZ4B

  Five additional slug tests will be conducted in piezometers along Frank E. Rodgers Boulevard, specifically piezometers PZ6A, PZ6B, PZ8A, and PZ8B.

- ***Oil-Water Interface Probe*** - As sheens were noted in some piezometers during installation, it was agreed that an oil-water interface probe will be used to identify the thickness, if any, of free product during the next round of static water level measurements.

PSE&G appreciates NJDEP's continued support in our efforts to facilitate an interim remedial action for the Site. Please contact me at (201) 430-7816 or Michael Morris of Golder Associates at (609) 273-1110 if there are any questions regarding this Field Change.

Very truly yours,

Warren Straubmuller
Project Manager
Environmental Health & Safety

WS/ads

cc: M. Beck
H. Mahoney
W. Max
M. Morris - Golder Assoc.
M. Valori

fieldchg.doc

Appendix B

849880124

Appendix B

Boring Logs, Well Construction Logs, Sample Collection Forms, CPT Logs, and Test Pit Logs

PROJECT: PSE&G/HARRISON/NJ

RECORD OF BOREHOLE PZ-1A

SHEET: 1 OF 2

PROJECT LOCATION: HARRISON, NEW JERSEY

BORING START: 05-21-96

DATUM: NGVD 29

PROJECT NUMBER: 953-6306

BORING LOCATION:

DEPTH SCALE FEET	BORING METHOD	SOIL PROFILE: DESCRIPTION	USCS	GRAPHIC LOG	ELEV / DEPTH	SAMPLES: NUMBER	TYPE	BLOWS / 6 in	N	REC/ATT	REMARKS	PIEZOMETER OR STANDPIPE INSTALLATION
					7.56							
0	4 1/4" ID H.S.A.	0.0-10.0 ft. Brownish gray SAND, SILT, and GRAVEL fill with occasional brick, concrete and black tar-like material intermixed. (FILL)			0.00	S-1	DO	3,9,10,6	19	21"/24"		
						S-2	DO	7,5,5,6	10	10"/24"		
5						S-3	DO	7,6,5,3	11	10"/24"		
						S-4	DO	3,3,5,7	8	5"/24"		
					-2.44	S-5	DO	2,4,6,4	10	7"/24"		
10		10.0-18.0 ft. Soft, olive-gray SILT to SILTY CLAY with a 2 ft. interval of sand and gravel from 14'-16'.			10.00	S-6	DO	5,1,1,1	2	13"/24"		
						S-7	DO	WOH	N/A	0"/24"		
15						S-8	DO	WOH,WOH,1,1	1	2"/24"		
						S-9	DO	5,3,2,2	5	24"/24"		
					-10.44							
		18.0-19.0 ft. Loose, multi-colored, coarse SAND and fine GRAVEL.			18.00 -11.44	S-10	DO	1,1,2,3	3	17"/24"		
20		19.0-24.0 ft. Loose, pale yellowish-brown, fine SAND, trace to some silt.			19.00	S-11	DO	WOH,1,1,1	2	18"/24"		
						S-12	DO	1,2,1,1	3	24"/24"		
					-16.44							
25		24.0-34.0 ft. Moderate brown, fine to coarse SAND, trace to little silt and fine gravel, some clay from 24'-26'.			24.00	S-13	DO	2,5,6,8	11	24"/24"		
						S-14	DO	6,8,9,13	17	24"/24"		
						S-15	DO	5,6,7,7	13	18"/24"		
30						S-16	DO	4,3,4,10	7	16"/24"		
						S-17	DO	10,7,6,9	13	24"/24"		
					-26.44							
35		34.0-64.0 ft. Moderate brown, fine SAND, trace to little silt with a coarse sand interval from 46'-48'.			34.00	S-18	DO	4,4,5,5	9	24"/24"		
						S-19	DO	4,6,9,12	15	24"/24"		
						S-20	DO	6,6,10,12	16	24"/24"		
					-32.44							
40					40.00							

849880126

DRILL RIG: CME-85

DRILLING CONTRACTOR: UNI-TECH

DRILLER: J. EVANS

LOGGED: S. NEVSHEHIRLIAN

CHECKED: mmm

DATE: 01-06-97

Golder Associates

PROJECT: PSE&G/HARRISON/NJ

RECORD OF BOREHOLE PZ-1A

SHEET: 2 OF 2

PROJECT LOCATION: HARRISON, NEW JERSEY

BORING START: 05-21-96

DATUM: NGVD 29

PROJECT NUMBER: 953-6306

BORING LOCATION:

DEPTH SCALE FEET	BORING METHOD	SOIL PROFILE: DESCRIPTION	USCS	GRAPHIC LOG	ELEV / DEPTH	SAMPLES: NUMBER	TYPE	BLOWS / 6 in	N	REC/ATT	REMARKS	PIEZOMETER OR STANDPIPE INSTALLATION
					-32.44 / 40.00							
40	4 1/4" ID H.S.A.	34.0-64.0 ft. Moderate brown, fine SAND, trace to little silt with a coarser sand interval from 46'-48'.				S-21	DO	6,6,9,16	15	24"/24"		
45						S-22	DO	4,4,6,5	10	24"/24"		
						S-23	DO	9,10,10,12	20	24"/24"		
						S-24	DO	8,8,9,11	17	24"/24"		
50						S-25	DO	3,4,7,15	11	24"/24"		
						S-26	DO	7,9,12,19	21	24"/24"		
55						S-27	DO	5,9,13,14	22	24"/24"		
						S-28	DO	7,7,5,6	12	24"/24"		
						S-29	DO	4,10,15,15	25	24"/24"		
60						S-30	DO	4,8,15,16	23	24"/24"		
					-56.44 / 64.00	S-31	DO	7,17,22,26	39*	24"/24"		
65		64.0-74.0 ft. Alternating zones varying from moderate brown SILTY, fine SAND to SILTY CLAY.				S-32	DO	4,4,7,18	11	24"/24"		
						S-33	DO	13,22,25,27	47	24"/24"		
						S-34	DO	6,14,22,30	36	24"/24"	* - Blows may be inaccurate. (Difficulty getting spoon to sampling interval.)	
70						S-35	DO	5,15,25,26	40	24"/24"		
					-66.44 / 74.00	S-36	DO	7,17	N/A*	24"/24"		
75		74.0-80.0 ft. Stiff, moderate brown CLAYEY SILT to SILTY CLAY, trace fine sand.				S-37	DO	7,10,12,18	22	24"/24"		
						S-38	SH	N/A	N/A	24"/24"		
		BORING TERMINATED AT 80.0 FT. BELOW GROUND SURFACE.			-72.44 / 80.00	S-39	DO	12,14,17,27	31	24"/24"		
80												

849880127

DRILL RIG: CME-85

DRILLING CONTRACTOR: UNI-TECH

DRILLER: J. EVANS

LOGGED: S. NEVSHEHIRLIAN

CHECKED: mmm

DATE: 01-06-97

Golder Associates

PROJECT: PSE&G/HARRISON/NJ

PROJECT LOCATION: HARRISON, NEW JERSEY

PROJECT NUMBER: 953-6306

RECORD OF BOREHOLE PZ-2A

BORING START: 06-05-96

BORING LOCATION:

SHEET: 1 OF 2

DATUM: NGVD 29

DEPTH SCALE FEET	BORING METHOD	SOIL PROFILE: DESCRIPTION	USCS	GRAPHIC LOG	ELEV / DEPTH	SAMPLES: NUMBER	TYPE	BLOWS / 6 in	N	REC/ATT	REMARKS	PIEZOMETER OR STANDPIPE INSTALLATION
					8.25							
0	4 1/4" ID H.S.A.	0.0-10.0 ft. Light brown to olive gray, fine to medium SAND and CLAYEY SILT, some fine to coarse gravel with occasional pieces of moderate red brick near surface. (FILL?)			0.00	S-1	DO	7,15,16,9	31	20"/24"		
						S-2	DO	13,16,7,2	23	8"/24"		
5						S-3	DO	3,2,3,2	5	6"/24"		
						S-4	DO	2,1,0,2	1	6"/24"		
						S-5	DO	3,1,3,4	4	16"/24"		
10		10.0-18.5 ft. Soft, olive gray CLAY to SILTY CLAY.			-1.75 / 10.00	S-6	DO	2,1,1,2	2	5"/24"		
15						S-7	DO	2,1,1,1	2	24"/24"		
		18.5-23.0 ft. Brownish-gray SILTY, fine SAND.			-10.25 / 18.50							
20						S-8	DO	3,1,3,3	4	24"/24"		
		23.0-29.5 ft. Brownish-gray, fine to coarse SAND and GRAVEL with occasional intervals of moderate brown sandstone fragments.			-14.75 / 23.00							
25						S-9	DO	12,14,17,18	31	24"/24"		
30		29.5-42.0 ft. Moderate brown, fine SAND, trace to some silt.			-21.25 / 29.50	S-10	DO	4,3,5,6	8	18"/24"		
35						S-11	DO	4,5,5,5	10	1"/24"		
40					-31.75 / 40.00							

849880128

DRILL RIG: CME-85

DRILLING CONTRACTOR: UNI-TECH

DRILLER: J. EVANS

Golder Associates

LOGGED: S. NEVSHEHIRLIAN

CHECKED: mm

DATE: 01-06-97

PROJECT: PSE&G/HARRISON/NJ

RECORD OF BOREHOLE PZ-2A

SHEET: 2 OF 2

PROJECT LOCATION: HARRISON, NEW JERSEY

BORING START: 06-05-96

DATUM: NGVD 29

PROJECT NUMBER: 953-6306

BORING LOCATION:

DEPTH SCALE FEET	BORING METHOD	SOIL PROFILE: DESCRIPTION	USCS	GRAPHIC LOG	ELEV / DEPTH	SAMPLES: NUMBER	TYPE	BLOWS / 6 in	N	REC/ATT	REMARKS	PIEZOMETER OR STANDPIPE INSTALLATION
40					-31.75							
	HSA	29.5-40.0 ft. Moderate brown, fine SAND, trace to some silt.			40.00 -33.75	S-12	DO	2,2,5,6	7	20"/24"		
		BORING TERMINATED AT 42.0 FT. BELOW GROUND SURFACE.			42.00							
45												
50												
55												
60												
65												
70												
75												
80												

849880129

DRILL RIG: CME-85

DRILLING CONTRACTOR: UNI-TECH

DRILLER: J. EVANS

Golder Associates

LOGGED: S. NEVSHEHIRLIAN

CHECKED: mmm

DATE: 01-06-97

PROJECT: PSE&G/HARRISON/NJ

RECORD OF BOREHOLE PZ-3A

SHEET: 1 OF 2

PROJECT LOCATION: HARRISON, NEW JERSEY

BORING START: 06-06-96

DATUM: NGVD 29

PROJECT NUMBER: 953-6306

BORING LOCATION:

DEPTH SCALE FEET	BORING METHOD	SOIL PROFILE: DESCRIPTION	USCS	GRAPHIC LOG	ELEV / DEPTH	SAMPLES: NUMBER	TYPE	BLOWS / 6 in	N	REC/ATT	REMARKS	PIEZOMETER OR STANDPIPE INSTALLATION
0					6.68							
	4 1/4" ID H.S.A.	0.0-2.0 ft. Light brown, fine to medium SAND, SILT, and GRAVEL, trace brick. (FILL)			0.00 / 6.68	S-1	DO	5,7,6,6	13	24"/24"		
		2.0-11.0 ft. Grayish-brown, fine SAND, CLAYEY SILT, and black, tar-like material. (FILL)			2.00	S-2	DO	6,4,8,14	12	20"/24"		
5						S-3	DO	2,2,2,2	4	12"/24"		
						S-4	DO	2,1,0,1	1	16"/24"		
						S-5	DO	4,2,2,3	4	24"/24"		
10					-2.32	S-6	DO	3,WOH,1,2	1	24"/24"		
		11.0-15.0 ft. Olive gray SILTY CLAY to CLAY with some cemented shells and marine material from 11'-11.5'.			11.00							
15					-6.32							
		15.0-28.5 ft. Moderate brown, fine to coarse SAND and fine GRAVEL, little to some clayey silt with occasional intervals containing moderate brown siltstone and sandstone fragments.			15.00	S-7	DO	2,2,6,7	8	0"/24"		
20						S-8	DO	7,9,11,14	20	0"/24"		
25						S-9	DO	5,4,7,7	11	16"/24"		
					-19.82							
		28.5-31.5 ft. Soft, moderate brown CLAY.			28.50							
30					-22.82	S-10	DO	2,2,3,8	5	24"/24"		
		31.5-41.5 ft. Moderate brown, fine to medium SAND, trace fine gravel grading down to moderate brown, fine sandy silt, coarsens upward.			31.50							
35						S-11	DO	5,4,5,7	9	24"/24"		
					-31.32							
40					40.00							

849880130

DRILL RIG: CME-75

DRILLING CONTRACTOR: UNI-TECH

DRILLER: J. EVANS

LOGGED: S. NEVSHEHIRLIAN

CHECKED: mmm

DATE: 01-07-97

Golder Associates

PROJECT: PSE&G/HARRISON/NJ

RECORD OF BOREHOLE PZ-3A

SHEET: 2 OF 2

PROJECT LOCATION: HARRISON, NEW JERSEY

BORING START: 06-06-96

DATUM: NGVD 29

PROJECT NUMBER: 953-6306

BORING LOCATION:

DEPTH SCALE FEET	BORING METHOD	SOIL PROFILE: DESCRIPTION	USCS	GRAPHIC LOG	ELEV / DEPTH	SAMPLES: NUMBER	TYPE	BLOWS / 6 in	N	REC/ATT	REMARKS	PIEZOMETER OR STANDPIPE INSTALLATION
40					-31.32							
	HSA	31.5-41.5 ft. Moderate brown, fine to medium SAND, trace fine gravel grading down to moderate brown, fine sandy silt, coarsens upward.			40.00 / -32.82	S-12	DO	4,6,3,4	9	18"/24"		
		41.5-42.0 ft. Moderate brown CLAY, trace fine sand.			-33.32 / 42.00							
		BORING TERMINATED AT 42.0 FT. BELOW GROUND SURFACE.										
45												
50												
55												
60												
65												
70												
75												
80												

849880131

DRILL RIG: CME-75

DRILLING CONTRACTOR: UNI-TECH

DRILLER: J. EVANS

LOGGED: S. NEVSHEHIRLIAN

CHECKED: mmm

DATE: 01-07-97

Golder Associates

PROJECT: PSE&G/HARRISON/NJ

PROJECT LOCATION: HARRISON, NEW JERSEY

PROJECT NUMBER: 953-6306

RECORD OF BOREHOLE PZ-4A

BORING START: 05-23-96

BORING LOCATION:

DATUM: NGVD 29

DEPTH SCALE FEET	BORING METHOD	SOIL PROFILE: DESCRIPTION	USCS	GRAPHIC LOG	ELEV / DEPTH	SAMPLES: NUMBER	TYPE	BLOWS / 6 in	N	REC/ATT	REMARKS	PIEZOMETER OR STANDPIPE INSTALLATION
					7.98							
0	4 1/4" ID H.S.A.	0.0-8.0 ft. SAND, SILT, and GRAVEL FILL with occasional large chunks of concrete near ground surface and black, granular tar-like material intermixed.			0.00	S-1	DO	-,4,3,5	8	18"/18"		
						S-2	DO	6,3,2,2	5	10"/24"		
5						S-3	DO	3,2,2,3	4	8"/24"		
						S-4	DO	2,2,1,1	3	6"/24"		
		8.0-13.5 ft. Moderate brown, fine to coarse SAND and GRAVEL, little to some silt and clay.			-0.02 8.00	S-5	DO	5,5,4,2	9	7"/24"		
10						S-6	DO	3,4,5,6	9	17"/24"		
						S-7	DO	4,2,1,3	3	24"/24"		
		13.5-22.0 ft. Soft, olive gray SILT to SILTY CLAY with and organic odor and wood intermixed and occasional fine sandy intervals.			-5.52 13.50	S-8	SH	N/A	N/A	2"/15"		
15						S-9	DO	3,1,2,2	3	24"/24"		
						S-10	DO	1,1,2,2	3	6"/24"		
20						S-11	SH	N/A	N/A	18"/24"		
		22.0-26.0 ft. Dark yellowish-brown SILT to CLAYEY SILT, some fine sand with a 1' thick layer of peat with wood intermixed at 23'.			-14.02 22.00	S-12	DO	3,4,4,5	8	24"/24"		
25						S-13	SH	N/A	N/A	24"/24"		
		26.0-33.0 ft. Medium gray, fine to medium SAND, trace silt and fine gravel.			-18.02 26.00	S-14	DO	12,10,6,4	16	19"/24"		
						S-15	DO	5,4,5,3	9	24"/24"		
30						S-16	DO	5,2,2,3	4	20"/24"		
					-25.02	S-17	DO	4,2,3,4	5	24"/24"		
		33.0-48.0 ft. Moderate brown SILT to SILTY CLAY, trace to some fine sand with a 4" thick fine sand, little silt interval at 45'.			33.00							
35						S-18	DO	5,6,8,8	14	24"/24"		
						S-19	DO	8,11,22,15	33*	24"/24"	* - Blows may be inaccurate.	
						S-20	SH	N/A	N/A	19"/21"		
40					-32.02 40.00							

849880132

DRILL RIG: CME-85

DRILLING CONTRACTOR: UNI-TECH

DRILLER: J. EVANS

LOGGED: S. NEVSHEHIRLIAN

CHECKED: mm

DATE: 01-07-97

Golder Associates

PROJECT: PSE&G/HARRISON/NJ

RECORD OF BOREHOLE PZ-4A

SHEET: 2 OF 2

PROJECT LOCATION: HARRISON, NEW JERSEY

BORING START: 05-23-96

DATUM: NGVD 29

PROJECT NUMBER: 953-6306

BORING LOCATION:

DEPTH SCALE FEET	BORING METHOD	SOIL PROFILE: DESCRIPTION	USCS	GRAPHIC LOG	ELEV / DEPTH	SAMPLES: NUMBER	TYPE	BLOWS / 6 in	N	REC/ATT	REMARKS	PIEZOMETER OR STANDPIPE INSTALLATION
40					-32.02							
	4 1/4" ID H.S.A.	33.0-48.0 ft. Moderate brown SILT to SILTY CLAY, trace to some fine sand with a 4" thick fine sand, little silt interval at 45'.			40.00	S-21	DO	3,5,10,13	15	12"/24"		
						S-22	DO	10,10,11,15	21*	3"/24"	* - Blows may be inaccurate.	
45						S-23	DO	5,8,8,7	16	24"/24"		
						S-24	DO	6,10,10,13	20	24"/24"		
					-40.02							
		BORING TERMINATED AT 48.0 FT. BELOW GROUND SURFACE.			48.00							
50												
55												
60												
65												
70												
75												
80												

849880133

DRILL RIG: CME-85

DRILLING CONTRACTOR: UNI-TECH

DRILLER: J. EVANS

LOGGED: S. NEVSHEHIRLIAN

CHECKED: mmm

DATE: 01-07-97

Golder Associates

PROJECT: PSE&G/HARRISON/NJ

RECORD OF BOREHOLE PZ-5A

SHEET: 1 OF 3

PROJECT LOCATION: HARRISON, NEW JERSEY

BORING START: 05-29-96

DATUM: NGVD 29

PROJECT NUMBER: 953-6306

BORING LOCATION:

DEPTH SCALE FEET	BORING METHOD	SOIL PROFILE: DESCRIPTION	USCS	GRAPHIC LOG	ELEV / DEPTH	SAMPLES: NUMBER	TYPE	BLOWS / 6 in	N	REC/ATT	REMARKS	PIEZOMETER OR STANDPIPE INSTALLATION
0	4 1/4" ID H.S.A.	0.0-5.0 ft. Moderate reddish-brown SAND and CLAYEY SILT, some gravel with occasional pieces of black, tar-like material. (FILL)			6.85 / 0.00	S-1	DO	2,7,4	11	13"/18"		
						S-2	DO	4,3,3,3	6	15"/24"		
5		5.0-17.0 ft. Soft, olive gray, organic SILT to SILTY CLAY with pieces of wood intermixed, occasional 4"-10" intervals of fine to coarse sand with some gravel.			1.85 / 5.00	S-3	DO	WOH,WOH,1,1	1	20"/24"		
						S-4	SH	N/A	N/A	27.5"/30"		
						S-5	DO	WOH,WOH,WOH	0	3"/18"		
10						S-6	SH	N/A	N/A	27.5"/30"		
						S-7	DO	WOH,2,2,2	4	24"/24"		
15						S-8	DO	WOH,WOH,WOH,2	0	20"/24"		
		17.0-25.0 ft. Brownish-gray, fine to medium SAND, trace coarse gravel and silt grading downward to fine sand and clayey silt with an organic odor.			-10.15 / 17.00	S-9	DO	2,3,2,2	5	24"/24"		
						S-10	DO	WOH,1,2,2,	3	17"/24"		
20						S-11	DO	WOH,1,1,1	2	24"/24"		
						S-12	DO	WOH,1,1,2	2	24"/24"		
25		25.0-26.0 ft. Multi-colored, medium to coarse SAND, little to some gravel and clayey silt.			-18.15 / 25.00 / -19.15	S-13	DO	6,6,7,8	13	24"/24"		
		26.0-29.0 ft. Grayish-orange CLAY with occasional zones of fine to medium sandy clay, trace gravel.			26.00 / -22.15	S-14	DO	2,3,3,5	6	24"/24"		
		29.0-34.0 ft. Moderate brown, fine SAND and SILTY CLAY with occasional thin, fine to medium sand lenses.			29.00 / -27.15	S-15	DO	5,6,8,8	14*	6"/24"		
30						S-16	DO	2,3,2,3	5	12"/24"		
						S-17	DO	2,3,4,6	7	18"/24"		
35		34.0-36.0 ft. Moderate brown, fine to coarse SAND, little silt and fine gravel.			34.00 / -29.15	S-18	DO	4,5,5,7	10	24"/24"	* - Blows may be inaccurate.	
		36.0-40.0 ft. Moderate brown CLAYEY SILT and fine GRAVEL, little medium to coarse sand.			36.00	S-19	DO	5,8,9,8	17*	24"/24"		
						S-20	DO	5,5,5,7	10	24"/24"		
40					-33.15 / 40.00							

849880134

DRILL RIG: CME-85

DRILLING CONTRACTOR: UNI-TECH

DRILLER: J. EVANS

LOGGED: S. NEVSHEHIRLIAN

CHECKED: mmm

DATE: 01-07-97

Golder Associates

PROJECT: PSE&G/HARRISON/NJ

RECORD OF BOREHOLE PZ-5A

SHEET: 2 OF 3

PROJECT LOCATION: HARRISON, NEW JERSEY

BORING START: 05-29-96

DATUM: NGVD 29

PROJECT NUMBER: 953-6306

BORING LOCATION:

DEPTH SCALE FEET	BORING METHOD	SOIL PROFILE: DESCRIPTION	USCS	GRAPHIC LOG	ELEV / DEPTH	SAMPLES: NUMBER	TYPE	BLOWS / 6 in	N	REC/ATT	REMARKS	PIEZOMETER OR STANDPIPE INSTALLATION
40					-33.15							
	4 1/4" ID H.S.A.	40.0-45.0 ft. Firm, moderate brown CLAYEY SILT to SILTY CLAY, little fine sand, trace fine gravel.			40.00	S-21	DO	6,4,4,6	8	24"/24"		
						S-22	DO	3,2,4,4	6	24"/24"		
45					-38.15	S-23	SH	N/A	N/A	6"/21"		
		45.0-63.0 ft. Moderate brown, fine to medium SAND, trace to little silt, coarsens upward.			45.00	S-24	DO	4,3,7,11	10	24"/24"		
						S-25	DO	6,4,7,9	11	24"/24"		
50						S-26	DO	7,5,5,9	10	24"/24"		
						S-27	DO	7,7,10,10	17*	24"/24"		
55						S-28	DO	7,9,13,14	22	24"/24"		
						S-29	DO	5,12,17,20	29	24"/24"		
						S-30	DO	4,8,14,14	22	24"/24"		
60						S-31	DO	4,9,12,14	21	24"/24"		
					-56.15	S-32	DO	5,8,11,12	19	24"/24"		
		63.0-69.5 ft. Moderate brown SILT to SILTY fine SAND.			63.00							
65						S-33	DO	5,8,13,16	21	24"/24"		
						S-34	DO	7,8,12,14	20	24"/24"	* - Blows may be inaccurate.	
					-62.65	S-35	DO	1,4,7,11	11	24"/24"		
70		69.5-76.0 ft. Alternating zones varying from moderate brown SILTY SAND to CLAY.			69.50	S-36	DO	4,5,7,6	12	24"/24"		
						S-37	DO	6,6,8,12	14	24"/24"		
75					-69.15	S-38	DO	3,3,5,11	8	24"/24"		
		76.0-82.0 ft. Stiff, moderate brown CLAYEY SILT to SILTY CLAY.			76.00	S-39	DO	10,10,28,39	38	24"/24"		
						S-40	DO	17,22,25,38	47*	24"/24"		
80					-73.15 80.00							

849880135

DRILL RIG: CME-85

DRILLING CONTRACTOR: UNI-TECH

DRILLER: J. EVANS

Golder Associates

LOGGED: S. NEVSHEHIRLIAN

CHECKED: mmm

DATE: 01-07-97

PROJECT: PSE&G/HARRISON/NJ

RECORD OF BOREHOLE PZ-5A

SHEET: 3 OF 3

PROJECT LOCATION: HARRISON, NEW JERSEY

BORING START: 05-29-96

DATUM: NGVD 29

PROJECT NUMBER: 953-6306

BORING LOCATION:

DEPTH SCALE FEET	BORING METHOD	SOIL PROFILE: DESCRIPTION	USCS	GRAPHIC LOG	ELEV / DEPTH	SAMPLES: NUMBER	TYPE	BLOWS / 6 in	N	REC/ATT	REMARKS	PIEZOMETER OR STANDPIPE INSTALLATION
80					-73.15							
	4 1/4" ID H.S.A.	76.0-82.0 ft. Stiff, moderate brown CLAYEY SILT to SILTY CLAY.			80.00 -75.15	S-41	DO	9,15,23,23	38	24"/24"		
		82.0-88.0 ft. Moderate brown, fine SAND and SILT with occasional zones of silty clay.			82.00	S-42	DO	17,28,37,40	65*	24"/24"	* - Blows may be inaccurate.	
85						S-43	DO	11,12,16,29	28	24"/24"		
						S-44	DO	11,25,36,43	61*	24"/24"		
		BORING TERMINATED AT 88.0 FT. BELOW GROUND SURFACE.			-81.15 88.00							
90												
95												
100												
105												
110												
115												
120												

849880136

DRILL RIG: CME-85

DRILLING CONTRACTOR: UNI-TECH

DRILLER: J. EVANS

LOGGED: S. NEVSHEHIRLIAN

CHECKED: mmm

DATE: 01-07-97

Golder Associates

PROJECT: PSE&G/HARRISON/NJ

PROJECT LOCATION: HARRISON, NEW JERSEY

PROJECT NUMBER: 953-6306

RECORD OF BOREHOLE PZ-6A

BORING START: 06-12-96

BORING LOCATION:

SHEET: 1 OF 1

DATUM: NGVD 29

DEPTH SCALE FEET	BORING METHOD	SOIL PROFILE: DESCRIPTION	USCS	GRAPHIC LOG	ELEV / DEPTH	SAMPLES: NUMBER	TYPE	BLOWS / 6 in	N	REC/ATT	REMARKS	PIEZOMETER OR STANDPIPE INSTALLATION
					9.26							
0	4 1/4" ID H.S.A.	0.0-7.0 ft. Brownish-gray, fine SAND, SILT, and GRAVEL with brick and "clinkers." (FILL)			0.00	S-1	DO	4,4,7,12	11	24"/24"		
						S-2	DO	7,12,4,1	16	24"/24"		
5						S-3	DO	4,12,13,2	25	6"/24"		
					2.26							
		7.0-12.5 ft. Soft, olive gray to grayish-black, organic SILTY CLAY to CLAY with wood and vegetation intermixed.			7.00	S-4	DO	2,1,1,1	2	24"/24"		
10						S-5	DO	2,WOH,WOH,WOH	0	24"/24"		
					-3.24							
		12.5-26.0 ft. Compact, brownish-gray, fine to coarse SAND, little to some gravel, little silt with occasional intervals containing moderate brown sandstone fragments.			12.50							
15						S-6	DO	7,9,11,12	20	24"/24"		
20						S-7	DO	8,4,6,15	10	24"/24"		
25					-16.74							
		26.0-26.5 ft. Moderate red SHALE fragments.			26.00	S-8	DO	10,13,14,13	27	24"/24"		
		26.5-31.0 ft. Moderate brown, medium to fine SAND, little to some silt, little fine gravel.			26.50							
30					-21.74							
		31.0-32.0 ft. Moderate brown CLAYEY SILT.			31.00	S-9	DO	10,6,5,7	11	24"/24"		
					-22.74							
		BORING TERMINATED AT 32.0 FT. BELOW GROUND SURFACE.			32.00							
35												
40												

849880137

DRILL RIG: CME-85

DRILLING CONTRACTOR: UNI-TECH

DRILLER: J. EVANS

Golder Associates

LOGGED: S. NEVSHEHIRLIAN

CHECKED: mmm

DATE: 01-07-97

PROJECT: PSE&G/HARRISON/NJ

PROJECT LOCATION: HARRISON, NEW JERSEY

PROJECT NUMBER: 953-6306

RECORD OF BOREHOLE PZ-7A

BORING START: 06-17-96

BORING LOCATION:

SHEET: 1 OF 1

DATUM: NGVD 29

DEPTH SCALE FEET	BORING METHOD	SOIL PROFILE: DESCRIPTION	USCS	GRAPHIC LOG	ELEV / DEPTH	SAMPLES: NUMBER	TYPE	BLOWS / 6 in	N	REC/ATT	REMARKS	PIEZOMETER OR STANDPIPE INSTALLATION
					7.72							
0	4 1/4" ID H.S.A.	0.0-0.25 ft. Light gray, coarse GRAVEL. (FILL)			0.25	S-1	DO	5,3,2,2	5	3"/24"		
		0.25-3.5 ft. Brownish-gray, fine SAND, SILT, and GRAVEL, trace brick. (FILL)			4.22							
		3.5-11.0 ft. Soft, olive gray SILTY CLAY to CLAY with organic matter.			3.50							
5						S-2	DO	WOH	0	6"/24"		
10					-3.28	S-3	DO	WOH,WOH,3,4	3	24"/24"		
		11.0-16.0 ft. Pale yellowish-brown, fine SAND and CLAYEY SILT, little gravel with organic matter intermixed.			11.00							
15					-8.28	S-4	DO	9,3,3,3	6	24"/24"		
		16.0-18.5 ft. Loose, moderate brown, medium to coarse SAND, little fine gravel.			16.00							
					-10.78							
		18.5-33.0 ft. Moderate brown, fine to coarse GRAVEL, trace to some clayey silt with occasional intervals containing moderate brown sandstone fragments.			18.50							
20						S-5	DO	14,11,10,8	21	20"/24"		
25						S-6	DO	10,8,11,8	19	4"/24"		
30						S-7	DO	16,8,5,6	13	24"/24"		
					-25.28							
		33.0-37.0 ft. Moderate brown, fine to coarse SAND and GRAVEL, little clayey silt from 36'-37'.			33.00							
35						S-8	DO	6,4,5,5	9	24"/24"		
					-29.28							
		BORING TERMINATED AT 37.0 FT. BELOW GROUND SURFACE.			37.00							
40												

849880138

DRILL RIG: CME-85

DRILLING CONTRACTOR: UNI-TECH

DRILLER: J. EVANS

Golder Associates

LOGGED: S. NEVSHEHIRLIAN

CHECKED: mmm

DATE: 01-07-97

PROJECT: PSE&G/HARRISON/NJ

PROJECT LOCATION: HARRISON, NEW JERSEY

PROJECT NUMBER: 953-6306

RECORD OF BOREHOLE PZ-8A

BORING START: 05-31-96

BORING LOCATION:

SHEET: 1 OF 2

DATUM: NGVD 29

DEPTH SCALE FEET	BORING METHOD	SOIL PROFILE: DESCRIPTION	USCS	GRAPHIC LOG	ELEV / DEPTH	SAMPLES: NUMBER	TYPE	BLOWS / 6 in	N	REC/ATT	REMARKS	PIEZOMETER OR STANDPIPE INSTALLATION
0	4 1/4" ID H.S.A.	0.0-0.25 ft. Light gray, coarse GRAVEL. (FILL)			8.19 / 0.25							
		0.25-5.0 ft. Olive gray, fine SAND and SILTY CLAY with black, granular, tar-like material intermixed.				S-1	DO	5,4,5,5	9	24"/24"		
						S-2	DO	2,2,2,1	4	24"/24"		
5		5.0-15.5 ft. Soft, olive gray, organic CLAY to SILTY CLAY with vegetation and wood intermixed.			3.19 / 5.00	S-3	DO	1,2,1,1	3	16"/24"		
						S-4	SH	N/A	N/A	24"/24"		
						S-5	DO	WOH,WOH,1,1	1	24"/24"		
10						S-6	DO	WOH	0	24"/24"		
						S-7	DO	WOH,WOH,WOH,4	0	24"/24"		
15					-7.31 / 15.50	S-8	DO	6,14,6,4	20	12"/24"		
		15.5-30.0 ft. Moderate brown, fine to coarse SAND and GRAVEL, some silty clay, with occasional thin layers containing moderate brown to grayish-red siltstone and sandstone fragments.				S-9	DO	5,8,8,7	16	24"/24"		
						S-10	DO	6,18,20,19	38*	8"/24"	* - Blows may be inaccurate.	
20						S-11	DO	7,8,12,12	20	24"/24"		
						S-12	DO	13,10,12,15	22	24"/24"		
25						S-13	DO	5,5,16,15	21	19"/24"		
						S-14	DO	10,10,9,8	19	17"/24"		
					-21.81 / 30.00	S-15	DO	9,8,9,13	17	0"/24"		
30		30.0-32.0 ft. Moderate brown SILTY CLAY, trace gravel.			-23.81 / 32.00	S-16	DO	4,5,5,7	10	18"/24"		
		32.0-34.0 ft. Moderate brown, fine to medium SAND, trace to some silt.			-25.81 / 34.00	S-17	DO	2,4,10,11	14	24"/24"		
		34.0-35.0 ft. Moderate brown SILTY CLAY.			-26.81 / 35.00	S-18	DO	5,7,9,12	16	24"/24"		
35		35.0-48.0 ft. Moderate brown, fine to medium SAND, trace to some silt, trace fine gravel.				S-19	DO	5,8,11,12	19	24"/24"		
						S-20	DO	6,8,9,12	17	24"/24"		
40					-31.81 / 40.00							

DRILL RIG: CME-85

DRILLING CONTRACTOR: UNI-TECH

DRILLER: J. EVANS

849880139

Golder Associates

LOGGED: S. NEVSHEHIRLIAN

CHECKED: MMM

DATE: 01-07-97

PROJECT: PSE&G/HARRISON/NJ

RECORD OF BOREHOLE PZ-8A

SHEET: 2 OF 2

PROJECT LOCATION: HARRISON, NEW JERSEY

BORING START: 05-31-96

DATUM: NGVD 29

PROJECT NUMBER: 953-6306

BORING LOCATION:

DEPTH SCALE FEET	BORING METHOD	SOIL PROFILE: DESCRIPTION	USCS	GRAPHIC LOG	ELEV / DEPTH	SAMPLES: NUMBER	TYPE	BLOWS / 6 in	N	REC/ATT	REMARKS	PIEZOMETER OR STANDPIPE INSTALLATION
40	4 1/4" ID H.S.A.	35.0-48.0 ft. Moderate brown, fine to medium SAND, trace to some silt, trace fine gravel.			-31.81 / 40.00	S-21	DO	4,5,6,10	11	24"/24"		
						S-22	DO	6,8,12,14	20	24"/24"		
45						S-23	DO	4,3,7,10	10	24"/24"		
						S-24	DO	5,12,12,16	24	24"/24"		
		48.0-56.0 ft. Moderate brown, fine SAND with occasional intervals of clayey silt. Some moderate brown and medium gray sandstone fragments from 48'-52'.			-39.81 / 48.00	S-25	DO	8,10,12,11	22	0"/24"		
50						S-26	DO	3,5,15,26	20	3"/24"		
						S-27	DO	14,25,25,45	50	2"/24"		
55						S-28	DO	12,25,41,54	66*	24"/24"	* - Blows may be inaccurate.	
		56.0-69.5 ft. Moderate brown, fine SAND, trace to some silt with occasional intervals of silty, fine sand.			-47.81 / 56.00	S-29	DO	2,4,12,20	16	24"/24"		
						S-30	DO	7,14,23,22	37	24"/24"		
60						S-31	DO	5,10,20,24	30	24"/24"		
						S-32	DO	8,11,21,30	33	24"/24"		
65						S-33	DO	12,22,30,31	52	24"/24"		
						S-34	DO	14,25,36,40	61	24"/24"		
						S-35	DO	11,13,17,18	30	24"/24"		
70		69.5-76.0 ft. Moderate brown CLAY to SILTY CLAY, trace to some fine sand.			-61.31 / 69.50	S-36	DO	6,5,11,14	16	24"/24"		
						S-37	DO	9,17,24,40	41	24"/24"		
75						S-38	SH	N/A	N/A	16"/16"		
		76.0-80.0 ft. Varying intervals of fine SANDY SILT, SILTY fine SAND, and CLAYEY SILT and fine SAND.			-67.81 / 76.00	S-39	DO	19,22,24,29	46	24"/24"		
		BORING TERMINATED AT 80.0 FT. BELOW GROUND SURFACE.			-71.81 / 80.00	S-40	DO	9,14,20,20	34	24"/24"		
80												

DRILL RIG: CME-85

DRILLING CONTRACTOR: UNI-TECH

DRILLER: J. EVANS

849880140

Golder Associates

LOGGED: S. NEVSHEHIRLIAN

CHECKED: mmm

DATE: 01-07-97

PROJECT: PSE&G/HARRISON/NJ

PROJECT LOCATION: HARRISON, NEW JERSEY

PROJECT NUMBER: 953-6306

RECORD OF BOREHOLE PZ-9A

BORING START: 06-12-96

BORING LOCATION:

SHEET: 1 OF 1

DATUM: NGVD 29

DEPTH SCALE FEET	BORING METHOD	SOIL PROFILE: DESCRIPTION	USCS	GRAPHIC LOG	ELEV / DEPTH	SAMPLES: NUMBER	TYPE	BLOWS / 6 in	N	REC/ATT	REMARKS	PIEZOMETER OR STANDPIPE INSTALLATION
0	4 1/4" ID H.S.A.	0.0-0.25 ft. Light gray, coarse GRAVEL. (FILL)			9.74 / 0.25							
		0.25-5.0 ft. Brownish-gray, fine SAND, SILT, and fine GRAVEL with black, granular material and "clinkers" intermixed. (FILL)				S-1	DO	6,3,2,2	5	24"/24"		
						S-2	DO	3,8,5,4	14	24"/24"		
5		5.0-9.0 ft. Soft, olive gray SILTY CLAY with organic matter intermixed.			4.74 / 5.00	S-3	DO	1,1,1,1	2	2"/24"		
						S-4	DO	WOH	0	24"/24"		
		9.0-14.5 ft. Dark, yellowish-brown, fine to medium SAND, trace to some silt, trace fine gravel; trace organic matter from 9'-10'.			0.74 / 9.00	S-5	DO	WOH,WOH,2,2,	2	24"/24"		
10						S-6	DO	WOH,1,3,6	4	24"/24"		
		14.5-18.0 ft. Medium gray, coarse GRAVEL.			-4.76 / 14.50	S-7	DO	34,40,45,38	85	20"/24"		
15		18.0-23.5 ft. Moderate brown, fine to coarse SAND and fine GRAVEL, little to some silty clay.			-8.26 / 18.00	S-8	DO	22,22,18,20	40	20"/24"		
20		23.5-28.5 ft. Grayish-green, moderate brown, and light gray, coarse GRAVEL, little silty clay.			-13.76 / 23.50	S-9	DO	10,8,9,8	17	6"/24"		
25		28.5-32.0 ft. Moderate brown SILT, some fine sand.			-18.76 / 28.50	S-10	DO	6,9,12,14	21	24"/24"		
30		BORING TERMINATED AT 32.0 FT. BELOW GROUND SURFACE.			-22.26 / 32.00							
35												
40												

849880141

DRILL RIG: CME-85

DRILLING CONTRACTOR: UNI-TECH

DRILLER: J. EVANS

Golder Associates

LOGGED: S. NEVSHEHIRLIAN

CHECKED: mmm

DATE: 01-07-97

PROJECT: PSE&G/HARRISON/NJ

PROJECT LOCATION: HARRISON, NEW JERSEY

PROJECT NUMBER: 953-6306

RECORD OF BOREHOLE PZ-10A

BORING START: 06-11-96

BORING LOCATION:

SHEET: 1 OF 1

DATUM: NGVD 29

DEPTH SCALE FEET	BORING METHOD	SOIL PROFILE: DESCRIPTION	USCS	GRAPHIC LOG	ELEV / DEPTH	SAMPLES: NUMBER	TYPE	BLOWS / 6 in	N	REC/ATT	REMARKS	PIEZOMETER OR STANDPIPE INSTALLATION
					9.30							
0	4 1/4" ID H.S.A.	0.0-7.0 ft. Brownish-gray, fine to coarse SAND, GRAVEL, and SILTY CLAY with occasional intervals of black, granular, tar-like material. (FILL)			0.00	S-1	DO	4,4,1,1	5	20"/24"		
						S-2	DO	2,1,3,4	4	24"/24"		
5						S-3	DO	1,2,1,1	3	18"/24"		
					2.30	S-4	DO	2,2,1,WOH	3	12"/24"		
		7.0-12.0 ft. Soft, olive gray SILTY CLAY to CLAY with organic matter.			7.00	S-5	DO	2,WOH,WOH,1	0	24"/24"		
10					-2.70							
		12.0-14.0 ft. Brownish-gray, fine GRAVEL, some clayey silt.			12.00							
					-4.70	S-6	DO	1,4,7,6	11	20"/24"		
15		14.0-27.0 ft. Brownish-gray, fine to coarse SAND with occasional intervals of fine to coarse sand and gravel.			14.00							
20						S-7	DO	4,8,10,14	18	24"/24"		
25						S-8	DO	8,8,9,7	17	3"/24"		
					-17.70	S-9	DO	2,3,2,5	5	24"/24"		
		BORING TERMINATED AT 27.0 FT. BELOW GROUND SURFACE.			27.00							
30												
35												
40												

849880142

DRILL RIG: CME-85

DRILLING CONTRACTOR: UNI-TECH

DRILLER: J. EVANS

Golder Associates

LOGGED: S. NEVSHEHIRLIAN

CHECKED: mm m

DATE: 12-18-96

PROJECT: PSE&G/HARRISON/NJ

PROJECT LOCATION: HARRISON, NEW JERSEY

PROJECT NUMBER: 953-6306

RECORD OF BOREHOLE PZ-11A

BORING START: 06-10-96

BORING LOCATION:

DATUM: NGVD 29

DEPTH SCALE FEET	BORING METHOD	SOIL PROFILE: DESCRIPTION	USCS	GRAPHIC LOG	ELEV / DEPTH	SAMPLES: NUMBER	TYPE	BLOWS / 6 in	N	REC/ATT	REMARKS	PIEZOMETER OR STANDPIPE INSTALLATION
0	4 1/4" ID H.S.A.	0.0-1.5 ft. Light brown, fine to medium SAND, SILT, and GRAVEL with black, granular, tar-like material intermixed. (FILL)			8.82 / 0.00	S-1	DO	2,4,5,8	9	24"/24"		
		1.5-8.5 ft. Black, granular to globular, tar-like material. (FILL)			7.32 / 1.50							
5						S-2	DO	1,9,2,3	11	24"/24"		
		8.5-16.5 ft. Soft, olive gray SILTY CLAY, little to some fine to medium sand from 15.5'-16.5'.			0.32 / 8.50							
10						S-3	DO	WOH	0	4"/24"		
15					-7.68 / 16.50	S-4	DO	WOH,5,6,10	11	24"/24"		
		16.5-28.5 ft. Compact, brownish-gray, fine to coarse SAND, trace to little fine gravel with occasional intervals containing moderate brown and light olive gray sandstone fragments.										
20						S-5	DO	2,4,20,7	24	24"/24"		
25						S-6	DO	5,4,10,8	14	24"/24"		
		28.5-42.0 ft. Moderate brown, fine SANDY SILT to SILTY fine SAND.			-19.68 / 28.50							
30						S-7	DO	5,6,7,8	13	24"/24"		
35						S-8	DO	1,5,6,7	11	24"/24"		
40					-31.18 / 40.00							

849880143

DRILL RIG: CME-85

DRILLING CONTRACTOR: UNI-TECH

DRILLER: G. EDWARDS

Golder Associates

LOGGED: S. NEVSHEHIRLIAN

CHECKED: mmm

DATE: 12-18-96

PROJECT: PSE&G/HARRISON/NJ

RECORD OF BOREHOLE PZ-11A

SHEET: 2 OF 2

PROJECT LOCATION: HARRISON, NEW JERSEY

BORING START: 06-10-96

DATUM: NGVD 29

PROJECT NUMBER: 953-6306

BORING LOCATION:

DEPTH SCALE FEET	BORING METHOD	SOIL PROFILE: DESCRIPTION	USCS	GRAPHIC LOG	ELEV / DEPTH	SAMPLES: NUMBER	TYPE	BLOWS / 6 in	N	REC/ATT	REMARKS	PIEZOMETER OR STANDPIPE INSTALLATION
					-31.18							
40	4.25" HSA	28.5-42.0 ft. Moderate brown, fine SANDY SILT to SILTY fine SAND.			40.00 / -33.18	S-9	DO	5,7,8,10	15	24"/24"		
		BORING TERMINATED AT 42.0 FT. BELOW GROUND SURFACE.			42.00							
45												
50												
55												
60												
65												
70												
75												
80												

849880144

DRILL RIG: CME-85

DRILLING CONTRACTOR: UNI-TECH

DRILLER: G. EDWARDS

LOGGED: S. NEVSHEHIRLIAN

CHECKED: mmm

DATE: 12-18-96

Golder Associates

PROJECT: PSE&G/HARRISON/NJ

PROJECT LOCATION: HARRISON, NEW JERSEY

PROJECT NUMBER: 953-6306

RECORD OF BOREHOLE PZ-12A

BORING START: 06-07-96

BORING LOCATION:

DATUM: NGVD 29

DEPTH SCALE FEET	BORING METHOD	SOIL PROFILE: DESCRIPTION	USCS	GRAPHIC LOG	ELEV / DEPTH	SAMPLES: NUMBER	TYPE	BLOWS / 6 in	N	REC/ATT	REMARKS	PIEZOMETER OR STANDPIPE INSTALLATION
					8.78							
0	4 1/4" ID H.S.A.	0.0-3.5 ft. Moderate brown, fine SAND and SILT, little gravel, trace glass. (FILL)			0.00	S-1	DO	6,11,11,7	22	16"/24"		
					5.28							
		3.5-8.5 ft. Medium to light gray SILT, coarse SAND, and fine GRAVEL with occasional cemented shell fragments.			3.50							
5						S-2	DO	2,3,2,1	5	11"/24"		
					0.28							
		8.5-18.5 ft. Soft, olive gray CLAY to SILTY CLAY.			8.50							
10						S-3	DO	WOH	0	24"/24"		
15						S-4	DO	WOH	0	24"/24"		
					-9.72							
		18.5-23.5 ft. Light olive gray SILTY fine SAND.			18.50							
20						S-5	DO	WOH,WOH,2,2,	2	20"/24"		
					-14.72							
		23.5-28.5 ft. Moderate brown to light gray, fine to medium SAND, trace to some silt and clay with occasional zones containing moderate brown sandstone fragments.			23.50							
25						S-6	DO	9,8,5,5	13	18"/24"		
					-19.72							
		28.5-45.0 ft. Moderate brown, fine SANDY SILT grading down to fine sand, little silt, fining upward.			28.50							
30						S-7	DO	6,2,2,3	4	20"/24"		
35						S-8	DO	4,3,3,4	6	20"/24"		
					-31.22							
40					40.00							

849880145

DRILL RIG: CME-85

DRILLING CONTRACTOR: UNI-TECH

DRILLER: J. EVANS

Golder Associates

LOGGED: S. NEVSHEHIRLIAN

CHECKED: mmm

DATE: 12-18-96

PROJECT: PSE&G/HARRISON/NJ

RECORD OF BOREHOLE PZ-12A

SHEET: 2 OF 2

PROJECT LOCATION: HARRISON, NEW JERSEY

BORING START: 06-07-96

DATUM: NGVD 29

PROJECT NUMBER: 953-6306

BORING LOCATION:

DEPTH SCALE FEET	BORING METHOD	SOIL PROFILE: DESCRIPTION	USCS	GRAPHIC LOG	ELEV / DEPTH	SAMPLES: NUMBER	TYPE	BLOWS / 6 in	N	REC/ATT	REMARKS	PIEZOMETER OR STANDPIPE INSTALLATION
					-31.22							
40	4 1/4" ID H.S.A.	28.5-45.0 ft. Moderate brown, fine SANDY SILT grading down to fine sand, little silt, fining upward.			40.00	S-9	DO	4,3,6,7	9	20"/24"		
						S-10	DO	5,6,10,14	16	24"/24"		
45		BORING TERMINATED AT 45.0 FT. BELOW GROUND SURFACE.			-36.22 45.00							
50												
55												
60												
65												
70												
75												
80												

849880146

DRILL RIG: CME-85

DRILLING CONTRACTOR: UNI-TECH

DRILLER: J. EVANS

Golder Associates

LOGGED: S. NEVSHEHIRLIAN

CHECKED: mmm

DATE: 12-18-96

PROJECT: PSE&G/HARRISON/NJ

PROJECT LOCATION: HARRISON, NEW JERSEY

PROJECT NUMBER: 953-6306

RECORD OF BOREHOLE PZ-13A

BORING START: 06-13-96

BORING LOCATION:

SHEET: 1 OF 2

DATUM: NGVD 29

DEPTH SCALE FEET	BORING METHOD	SOIL PROFILE: DESCRIPTION	USCS	GRAPHIC LOG	ELEV / DEPTH	SAMPLES: NUMBER	TYPE	BLOWS / 6 in	N	REC/ATT	REMARKS	PIEZOMETER OR STANDPIPE INSTALLATION
					9.32							
0	4 1/4" ID H.S.A.	0.0-4.5 ft. Brownish-gray, fine SAND, SILT, and fine GRAVEL. (FILL)			0.00	S-1	DO	6,9,7,7	16	24"/24"		
						S-2	DO	4,7,7,6	14	20"/24"		
					4.82							
5		4.5-9.0 ft. Loose, medium light gray, fine to medium SAND, little to some silt. Chunk of wood at 7.5'. (FILL)			4.50	S-3	DO	WOH	0	24"/24"		
						S-4	DO	WOH,4,11,6	15	24"/24"		
					0.32	S-5	DO	7,3,5,WOH	8	18"/24"		
		9.0-14.5 ft. Soft, olive gray SILTY CLAY with organic matter.			9.00							
10						S-6	DO	WOH	0	10"/24"		
						S-7	DO	WOH	0	12"/24"		
					-5.18							
15		14.5-18.5 ft. Loose to compact, pale brown, fine SAND, little silt.			14.50	S-8	DO	2,4,6,6	10	20"/24"		
					-9.18							
		18.5-33.5 ft. Moderate brown to brownish-gray, fine to coarse SAND and GRAVEL, little to some silty clay with occasional pieces of moderate brown sandstone.			18.50							
20						S-9	DO	4,5,7,6	12	24"/24"		
25						S-10	DO	4,9,6,6	15	24"/24"		
30						S-11	DO	7,3,4,6	7	18"/24"		
					-24.18							
		33.5-47.0 ft. Moderate brown, fine SAND, trace to some silt with occasional thin sandy silt lenses from 45'-47'.			33.50							
35						S-12	DO	16,5,2,3	7	16"/24"		
					-30.68							
40					40.00							

849880147

DRILL RIG: CME-85

DRILLING CONTRACTOR: UNI-TECH

DRILLER: J. EVANS

Golder Associates

LOGGED: S. NEVSHEHIRLIAN

CHECKED: mmm

DATE: 01-07-97

PROJECT: PSE&G/HARRISON/NJ

RECORD OF BOREHOLE PZ-13A

SHEET: 2 OF 2

PROJECT LOCATION: HARRISON, NEW JERSEY

BORING START: 06-13-96

DATUM: NGVD 29

PROJECT NUMBER: 953-6306

BORING LOCATION:

DEPTH SCALE FEET	BORING METHOD	SOIL PROFILE: DESCRIPTION	USCS	GRAPHIC LOG	ELEV / DEPTH	SAMPLES: NUMBER	TYPE	BLOWS / 6 in	N	REC/ATT	REMARKS	PIEZOMETER OR STANDPIPE INSTALLATION
					-30.68							
40	4 1/4" ID H.S.A.	33.5-47.0 ft. Moderate brown, fine SAND, trace to some silt with occasional thin sandy silt lenses from 45'-47'.			40.00	S-13	DO	3,2,2,4	4	24"/24"		
45						S-14	DO	4,4,7,8	11	24"/24"		
					-37.68							
		BORING TERMINATED AT 47.0 FT. BELOW GROUND SURFACE.			47.00							
50												
55												
60												
65												
70												
75												
80												

849880148

DRILL RIG: CME-85

DRILLING CONTRACTOR: UNI-TECH

DRILLER: J. EVANS

Golder Associates

LOGGED: S. NEVSHEHIRLIAN

CHECKED: mmm

DATE: 01-07-97

PROJECT: PSE&G/HARRISON/NJ

PROJECT LOCATION: HARRISON, NEW JERSEY

PROJECT NUMBER: 953-6306

RECORD OF BOREHOLE PZ-14A

BORING START: 06-14-96

BORING LOCATION:

SHEET: 1 OF 1

DATUM: NGVD 29

DEPTH SCALE FEET	BORING METHOD	SOIL PROFILE: DESCRIPTION	USCS	GRAPHIC LOG	ELEV / DEPTH	SAMPLES: NUMBER	TYPE	BLOWS / 6 in	N	REC/ATT	REMARKS	PIEZOMETER OR STANDPIPE INSTALLATION
					9.74							
0	4 1/4" ID H.S.A.	0.0-3.5 ft. Brownish-gray, fine SAND, SILT, and GRAVEL with occasional "clinkers" and wood. (FILL)			0.00	S-1	DO	9,8,7,9	15	24"/24"		
					6.24							
		3.5-8.5 ft. Black, tar-like material, trace brick. (FILL)			3.50							
5						S-2	DO	8,3,3,4	6	20"/24"		
					1.24							
		8.5-11.0 ft. Soft, olive gray SILTY CLAY with organic matter.			8.50							
10					-1.26	S-3	DO	WOH,WOH,3,3	3	24"/24"		
		11.0-13.5 ft. Olive gray, fine SAND and SILT with organic matter.			11.00							
					-3.76							
		13.5-18.5 ft. Dense, brownish-gray, fine to medium SAND, some fine gravel, trace silt and clay with occasional pieces of sandstone.			13.50							
15						S-4	DO	10,19,19,15	38	24"/24"		
					-8.76							
		18.5-31.0 ft. Moderate brown, fine to coarse GRAVEL and CLAYEY SILT, little to some medium to coarse sand with occasional large pieces of sandstone.			18.50							
20						S-5	DO	9,6,3,2	9	18"/24"		
25						S-6	DO	7,12,14,16	26	12"/24"		
30					-21.26	S-7	DO	14,8,9,12	17	24"/24"		
		31.0-37.0 ft. Compact, moderate brown, fine to medium SAND, trace to some silt with occasional thin, sandy silt lenses from 35.5'-37'.			31.00							
35						S-8	DO	5,9,12,16	21	24"/24"		
					-27.26							
		BORING TERMINATED AT 37.0 FT. BELOW GROUND SURFACE.			37.00							
40												

849880149

DRILL RIG: CME-85

DRILLING CONTRACTOR: UNI-TECH

DRILLER: J. EVANS

LOGGED: S. NEVSHEHIRLIAN

CHECKED: mmm

DATE: 01-07-97

Golder Associates

THIS PAGE WAS INTENTIONALLY LEFT BLANK
FOR PAGINATION PURPOSES

MONITORING WELL INSTALLATION LOG

JOB NO. 953-6306 PROJECT PSE&G/HARRISON/NJ WELL NO. PZ-1A SHEET 1 of 2
GA INSP. S. NEVSHEHIRLIAN DRILLING METHOD 4 1/4" ID HOLLOW STEM AUGER GROUND ELEV. 7.56 WATER DEPTH 7.45 (TOC)
WEATHER SUNNY DRILLING COMPANY UNI-TECH COLLAR ELEV. 7.24 TIME/DATE 1115/06-24-96
TEMP. 81° F DRILL RIG CME 85 DRILLER J. EVANS STARTED 1000/05-22-96 (TIME / DATE) COMPLETED 1245/05-23-96 (TIME / DATE)
LOCATION / COORDINATES N 693219.40 E 2140417.77

MATERIALS INVENTORY

WELL CASING 2 in. dia. 35 l.f. WELL SCREEN 2 in. dia. 5 l.f. BENTONITE SEAL GROUT
CASING TYPE SCH 40 PVC SCREEN TYPE SCH 40 PVC INSTALLATION METHOD TREMIE
JOINT TYPE FLUSH THREADED SLOT SIZE 0.010" MACHINE SLOTTED FILTER PACK QTY. 350 LBS.
GROUT QUANTITY 100 GALLONS CENTRALIZERS NONE USED FILTER PACK TYPE #1 MORIE SAND
GROUT TYPE CEMENT/BENTONITE DRILLING MUD TYPE N/A INSTALLATION METHOD GRAVITY

ELEV./DEPTH	SOIL/ROCK DESCRIPTION
	GROUND SURFACE
0.00	See boring log PZ-1A for lithologic description.
5.00	
10.00	
15.00	
20.00	
25.00	
30.00	
35.00	
40.00	
45.00	
50.00	
55.00	

WELL SKETCH

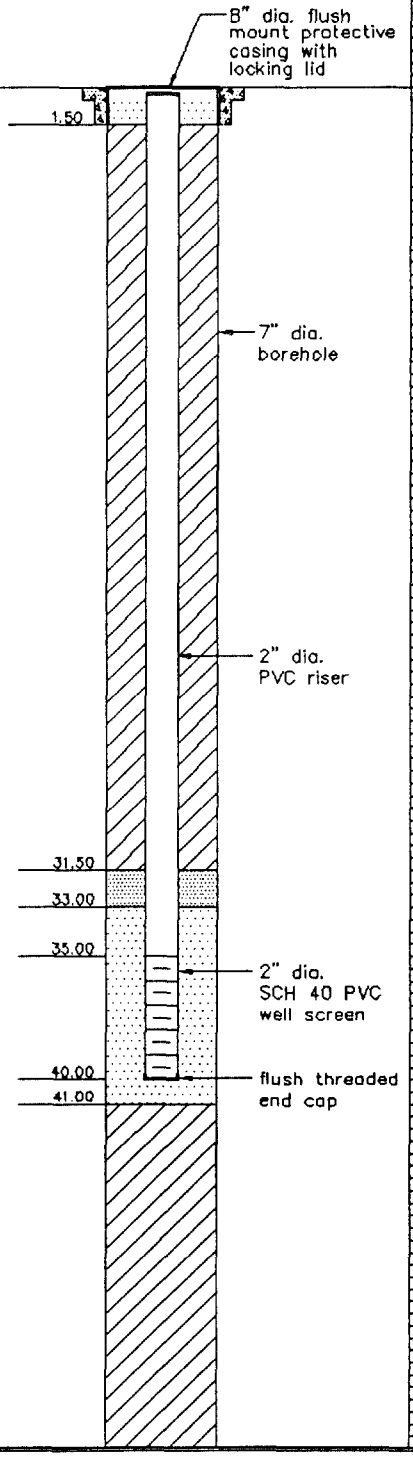

INSTALLATION NOTES

Drilled to 76.0 ft. below ground ground surface. Tremie 50 gallons cement/bentonite grout at bottom of hole on 05-22-96. Let stand overnight (18 hrs.). Grout set up at 41' bgs. Set 2" PVC casing and constructed piezometer on 05-23-96.

WELL DEVELOPMENT NOTES

Well developed on 05-28-96 and 06-19-96 with a 2" submersible pump by pumping and surging.

LEGEND

- CEMENT PAD
- CEMENT/BENTONITE GROUT
- #00 FILTER SAND
- #1 MORIE SAND

849880151

MONITORING WELL INSTALLATION LOG

JOB NO. 953-6306 PROJECT PSE&G/HARRISON/NJ WELL NO. PZ-1A SHEET 2 of 2
GA INSP. S. NEVSHEHIRLIAN DRILLING METHOD 4 1/4" ID HOLLOW STEM AUGER GROUND ELEV. 7.56 WATER DEPTH 7.45 (TOC)
WEATHER SUNNY DRILLING COMPANY UNI-TECH COLLAR ELEV. 7.24 TIME/DATE 1115/06-24-96
TEMP. 81° F DRILL RIG CME 85 DRILLER J. EVANS STARTED 1000/05-22-96 (TIME / DATE) COMPLETED 1245/05-23-96 (TIME / DATE)
LOCATION / COORDINATES N 693219.40 E 2140417.77

MATERIALS INVENTORY

WELL CASING 2 in. dia. 35 l.f. WELL SCREEN 2 in. dia. 5 l.f. BENTONITE SEAL GROUT
CASING TYPE SCH 40 PVC SCREEN TYPE SCH 40 PVC INSTALLATION METHOD TREMIE
JOINT TYPE FLUSH THREADED SLOT SIZE 0.010" MACHINE SLOTTED FILTER PACK QTY. 350 LBS.
GROUT QUANTITY 100 GALLONS CENTRALIZERS NONE USED FILTER PACK TYPE #1 MORIE SAND
GROUT TYPE CEMENT/BENTONITE DRILLING MUD TYPE N/A INSTALLATION METHOD GRAVITY

ELEV./DEPTH	SOIL/ROCK DESCRIPTION
55.00	See boring log PZ-1A for lithologic description.
60.00	
65.00	
70.00	
75.00	
80.00	
85.00	
90.00	
95.00	
100.00	
105.00	
110.00	
155.00	

WELL SKETCH

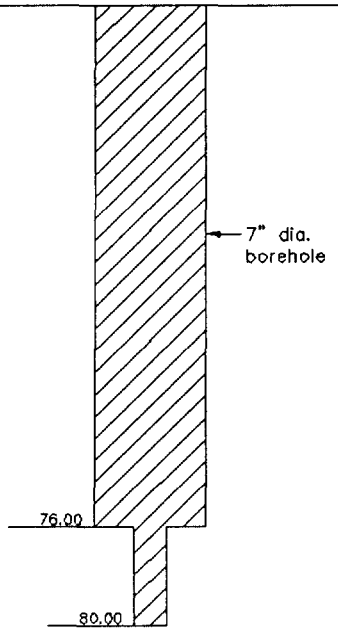

849880152

INSTALLATION NOTES

Drilled to 76.0 ft. below ground ground surface. Tremie 50 gallons cement/bentonite grout at bottom of hole on 05-22-96. Let stand overnight (18 hrs.). Grout set up at 41' bgs. Set 2" PVC casing and constructed piezometer on 05-23-96.

WELL DEVELOPMENT NOTES

Well developed on 05-28-96 and 06-19-96 with a 2" submersible pump by pumping and surging.

LEGEND

- CEMENT PAD
- CEMENT/BENTONITE GROUT
- #00 FILTER SAND
- #1 MORIE SAND

MONITORING WELL INSTALLATION LOG

JOB NO. 953-6306 PROJECT PSE&G/HARRISON/NJ WELL NO. PZ-1B SHEET 1 of 1
GA INSP. S. NEVSHEHIRLIAN DRILLING METHOD 4 1/4" ID HOLLOW STEM AUGER GROUND ELEV. 7.69 WATER DEPTH 6.45 (TOC)
WEATHER SUNNY DRILLING COMPANY UNI-TECH COLLAR ELEV. 7.38 TIME/DATE 1116/06-24-96
TEMP. 83° F DRILL RIG CME 85 DRILLER J. EVANS STARTED 1520/05-22-96 (TIME / DATE) COMPLETED 1545/05-22-96 (TIME / DATE)
LOCATION / COORDINATES N 693228.25 E 2140420.84

MATERIALS INVENTORY

WELL CASING 2 in. dia. 5 l.f. WELL SCREEN 2 in. dia. 5 l.f. BENTONITE SEAL SLURRY
CASING TYPE SCH 40 PVC SCREEN TYPE SCH 40 PVC INSTALLATION METHOD GRAVITY
JOINT TYPE FLUSH THREADED SLOT SIZE 0.010" MACHINE SLOTTED FILTER PACK QTY. 400 LBS.
GROUT QUANTITY N/A CENTRALIZERS NONE USED FILTER PACK TYPE #1 MORIE SAND
GROUT TYPE N/A DRILLING MUD TYPE N/A INSTALLATION METHOD GRAVITY

ELEV./DEPTH	SOIL/ROCK DESCRIPTION
	GROUND SURFACE
0.00	See boring log PZ-1A for lithologic description.
5.00	
10.00	
15.00	
20.00	
25.00	
30.00	
35.00	
40.00	
45.00	
50.00	
55.00	

WELL SKETCH

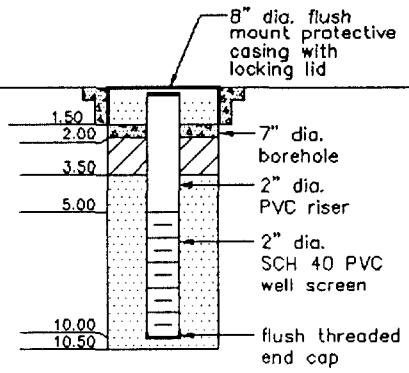

849880153

INSTALLATION NOTES

WELL DEVELOPMENT NOTES

Well developed on 05-28-96 and 06-19-96 with a 2" submersible pump by pumping and surging.

LEGEND

CEMENT PAD

BENTONITE SLURRY

#1 MORIE SAND

MONITORING WELL INSTALLATION LOG

JOB NO.	953-6306	PROJECT	PSE&G/HARRISON/NJ	WELL NO.	PZ-2A	SHEET	1 of 1
GA INSP.	S. NEVSHEHIRLIAN	DRILLING METHOD	4 1/4" ID HOLLOW STEM AUGER	GROUND ELEV.	8.25	WATER DEPTH	8.47 (TOC)
WEATHER	SUNNY	DRILLING COMPANY	UNI-TECH	COLLAR ELEV.	8.00	TIME/DATE	1113/06-24-96
TEMP.	70° F	DRILL RIG	CME 85	DRILLER	J. EVANS	STARTED (TIME / DATE)	0820/06-06-96
						COMPLETED (TIME / DATE)	1015/06-06-96
LOCATION / COORDINATES	N 693280.44 E 2140536.27						

MATERIALS INVENTORY

WELL CASING	2 in. dia. 35 l.f.	WELL SCREEN	2 in. dia. 5 l.f.	BENTONITE SEAL	GROUT
CASING TYPE	SCH 40 PVC	SCREEN TYPE	SCH 40 PVC	INSTALLATION METHOD	TREMIE
JOINT TYPE	FLUSH THREADED	SLOT SIZE	0.010" MACHINE SLOTTED	FILTER PACK QTY.	200 LBS.
GROUT QUANTITY	100 GALLONS	CENTRALIZERS	NONE USED	FILTER PACK TYPE	#1 MORIE SAND
GROUT TYPE	CEMENT/BENTONITE	DRILLING MUD TYPE	N/A	INSTALLATION METHOD	GRAVITY

ELEV./DEPTH	SOIL/ROCK DESCRIPTION
	GROUND SURFACE
0.00	See boring log PZ-2A for lithologic description.
5.00	
10.00	
15.00	
20.00	
25.00	
30.00	
35.00	
40.00	
45.00	
50.00	
55.00	

WELL SKETCH

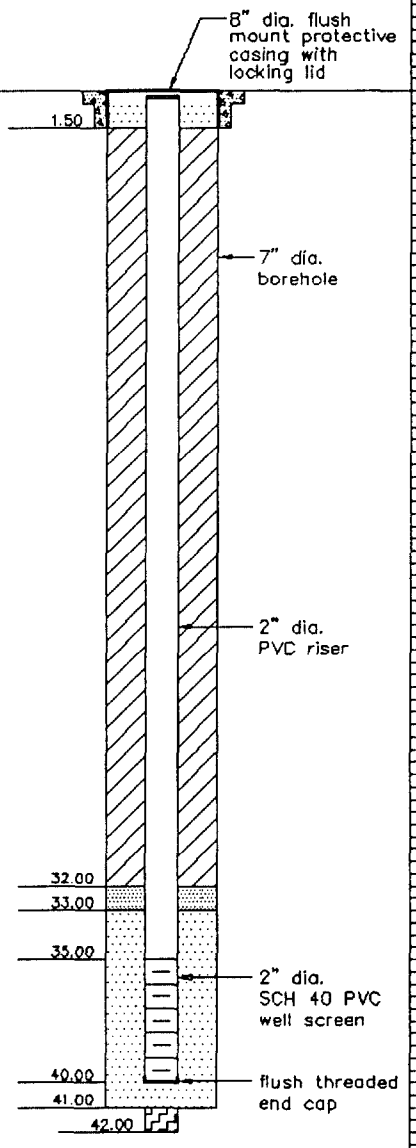

849880154

INSTALLATION NOTES

WELL DEVELOPMENT NOTES

Well developed on 06-19-96 with a 2" submersible pump by pumping and surging.

LEGEND

- CEMENT PAD
- CEMENT/BENTONITE GROUT
- #00 FILTER SAND
- #1 MORIE SAND
- DRILL CUTTINGS

MONITORING WELL INSTALLATION LOG

JOB NO. 953-6306 PROJECT PSE&G/HARRISON/NJ WELL NO. PZ-2B SHEET 1 of 1
GA INSP. S. NEVSHEHIRLIAN DRILLING METHOD 4 1/4" ID HOLLOW STEM AUGER GROUND ELEV. 8.36 WATER DEPTH 4.22 (TOC)
WEATHER MOSTLY SUNNY DRILLING COMPANY UNI-TECH COLLAR ELEV. 8.05 TIME/DATE 1114/06-24-96
TEMP. 75° F DRILL RIG CME 85 DRILLER J. EVANS STARTED 1040/06-06-96 (TIME / DATE) COMPLETED 1100/06-06-96 (TIME / DATE)
LOCATION / COORDINATES N 693289.53 E 2140535.67

MATERIALS INVENTORY

WELL CASING 2 in. dia. 5 l.f. WELL SCREEN 2 in. dia. 3 l.f. BENTONITE SEAL GROUT
CASING TYPE SCH 40 PVC SCREEN TYPE SCH 40 PVC INSTALLATION METHOD GRAVITY
JOINT TYPE FLUSH THREADED SLOT SIZE 0.010" MACHINE SLOTTED FILTER PACK QTY. 200 LBS.
GROUT QUANTITY 7 GALLONS CENTRALIZERS NONE USED FILTER PACK TYPE #1 MORIE SAND
GROUT TYPE CEMENT/BENTONITE DRILLING MUD TYPE N/A INSTALLATION METHOD GRAVITY

ELEV./DEPTH	SOIL/ROCK DESCRIPTION
	GROUND SURFACE
0.00	See boring log PZ-2A for lithologic description.
5.00	
10.00	
15.00	
20.00	
25.00	
30.00	
35.00	
40.00	
45.00	
50.00	
55.00	

WELL SKETCH

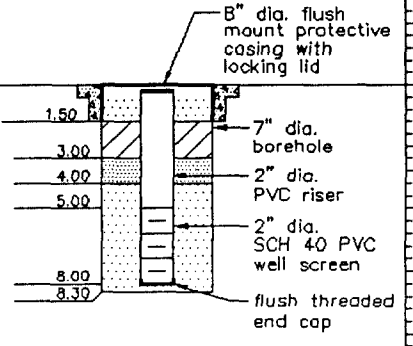

849880155

INSTALLATION NOTES

WELL DEVELOPMENT NOTES

Well developed on 06-19-96 with a 2" submersible pump by pumping and surging.

LEGEND

- CEMENT PAD
- CEMENT/BENTONITE GROUT
- #00 FILTER SAND
- #1 MORIE SAND

MONITORING WELL INSTALLATION LOG

JOB NO. 953-6306 PROJECT PSE&G/HARRISON/NJ WELL NO. PZ-3A SHEET 1 of 1
GA INSP. S. NEVSHEHIRLIAN DRILLING METHOD 4 1/4" ID HOLLOW STEM AUGER GROUND ELEV. 8.68 WATER DEPTH 9.29 (TOC)
WEATHER SUNNY DRILLING COMPANY UNI-TECH COLLAR ELEV. 8.31 TIME/DATE 1111/06-24-96
TEMP. 76° F DRILL RIG CME 85 DRILLER J. EVANS STARTED 1550/06-06-96 (TIME / DATE) COMPLETED 1800/06-06-96 (TIME / DATE)
LOCATION / COORDINATES N 693324.28 E 2140617.63

MATERIALS INVENTORY

WELL CASING 2 in. dia. 34 l.f. WELL SCREEN 2 in. dia. 5 l.f. BENTONITE SEAL GROUT
CASING TYPE SCH 40 PVC SCREEN TYPE SCH 40 PVC INSTALLATION METHOD TREMIE
JOINT TYPE FLUSH THREADED SLOT SIZE 0.010" MACHINE SLOTTED FILTER PACK QTY. 220 LBS.
GROUT QUANTITY 100 GALLONS CENTRALIZERS NONE USED FILTER PACK TYPE #1 MORIE SAND
GROUT TYPE CEMENT/BENTONITE DRILLING MUD TYPE N/A INSTALLATION METHOD GRAVITY

ELEV./DEPTH	SOIL/ROCK DESCRIPTION
	GROUND SURFACE
0.00	See boring log PZ-3A for lithologic description.
5.00	
10.00	
15.00	
20.00	
25.00	
30.00	
35.00	
40.00	
45.00	
50.00	
55.00	

WELL SKETCH

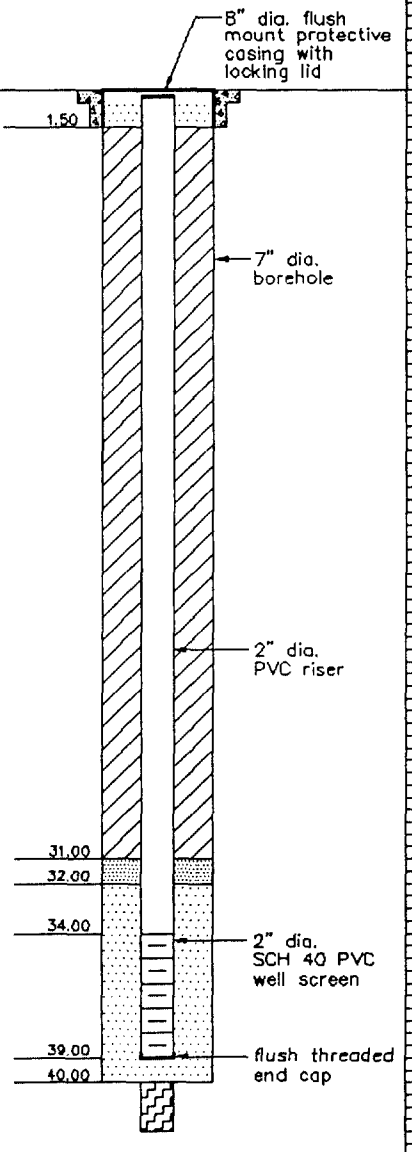

849880156

INSTALLATION NOTES

WELL DEVELOPMENT NOTES

Well developed on 06-20-96 with a 2" submersible pump by pumping and surging.

LEGEND

- CEMENT PAD
- CEMENT/BENTONITE GROUT
- #00 FILTER SAND
- #1 MORIE SAND
- DRILL CUTTINGS

MONITORING WELL INSTALLATION LOG

JOB NO. 953-6306 PROJECT PSE&G/HARRISON/NJ WELL NO. PZ-3B SHEET 1 of 1
GA INSP. S. NEVSHEHIRLIAN DRILLING METHOD 4 1/4" ID HOLLOW STEM AUGER GROUND ELEV. 8.67 WATER DEPTH 3.24 (TOC)
WEATHER SUNNY DRILLING COMPANY UNI-TECH COLLAR ELEV. 8.39 TIME/DATE 1112/06-24-96
TEMP. 70° F DRILL RIG CME 85 DRILLER J. EVANS STARTED 0750/06-07-96 (TIME / DATE) COMPLETED 0845/06-07-96 (TIME / DATE)
LOCATION / COORDINATES N 693326.27 E 2140626.14

MATERIALS INVENTORY

WELL CASING 2 in. dia. 5 l.f. WELL SCREEN 2 in. dia. 5 l.f. BENTONITE SEAL SLURRY
CASING TYPE SCH 40 PVC SCREEN TYPE SCH 40 PVC INSTALLATION METHOD GRAVITY
JOINT TYPE FLUSH THREADED SLOT SIZE 0.010" MACHINE SLOTTED FILTER PACK QTY. 140 LBS.
GROUT QUANTITY N/A CENTRALIZERS NONE USED FILTER PACK TYPE #1 MORIE SAND
GROUT TYPE N/A DRILLING MUD TYPE N/A INSTALLATION METHOD GRAVITY

ELEV./DEPTH	SOIL/ROCK DESCRIPTION
	GROUND SURFACE
0.00	See boring log PZ-3A for lithologic description.
5.00	
10.00	
15.00	
20.00	
25.00	
30.00	
35.00	
40.00	
45.00	
50.00	
55.00	

WELL SKETCH

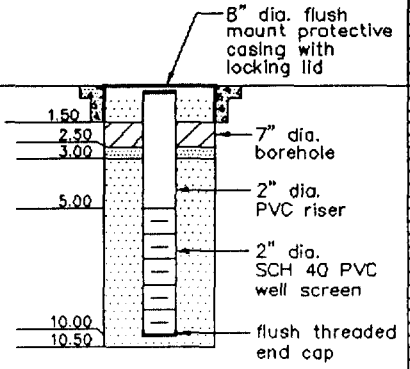

849880157

INSTALLATION NOTES

WELL DEVELOPMENT NOTES

Well developed on 06-20-96 with a 2" submersible pump by pumping and surging.

LEGEND

- CEMENT PAD
- CEMENT/BENTONITE GROUT
- #00 FILTER SAND
- #1 MORIE SAND

MONITORING WELL INSTALLATION LOG

JOB NO.	953-6306	PROJECT	PSE&G/HARRISON/NJ	WELL NO.	PZ-4A	SHEET	1 of 1
GA INSP.	S. NEVSHEHIRLIAN	DRILLING METHOD	4 1/4" ID HOLLOW STEM AUGER	GROUND ELEV.	7.98	WATER DEPTH	7.74 (TOC)
WEATHER	CLOUDY	DRILLING COMPANY	UNI-TECH	COLLAR ELEV.	7.56	TIME/DATE	1107/06-24-96
TEMP.	58° F	DRILL RIG	CME 85	DRILLER	J. EVANS	STARTED (TIME / DATE)	0930/05-28-96
LOCATION / COORDINATES	N 692890.79 E 2140921.85					COMPLETED (TIME / DATE)	1100/05-28-96

MATERIALS INVENTORY

WELL CASING	2 in. dia. 30 l.f.	WELL SCREEN	2 in. dia. 5 l.f.	BENTONITE SEAL	GROUT
CASING TYPE	SCH 40 PVC	SCREEN TYPE	SCH 40 PVC	INSTALLATION METHOD	TREMIE
JOINT TYPE	FLUSH THREADED	SLOT SIZE	0.010" MACHINE SLOTTED	FILTER PACK QTY.	200 LBS.
GROUT QUANTITY	60 GALLONS	CENTRALIZERS	NONE USED	FILTER PACK TYPE	#1 MORIE SAND
GROUT TYPE	CEMENT/BENTONITE	DRILLING MUD TYPE	N/A	INSTALLATION METHOD	GRAVITY

ELEV./DEPTH	SOIL/ROCK DESCRIPTION
	GROUND SURFACE
0.00	See boring log PZ-4A for lithologic description.
5.00	
10.00	
15.00	
20.00	
25.00	
30.00	
35.00	
40.00	
45.00	
50.00	
55.00	

WELL SKETCH

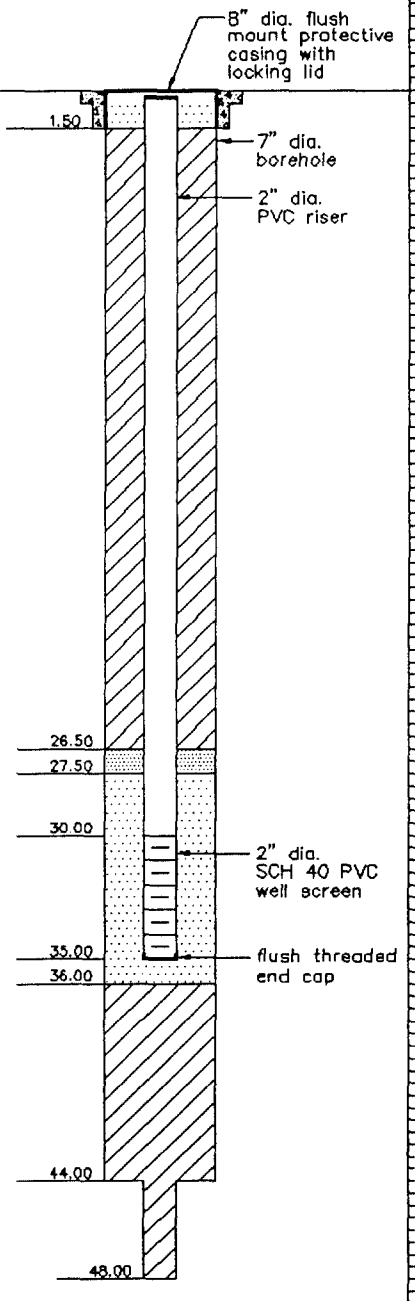

849880158

INSTALLATION NOTES

WELL DEVELOPMENT NOTES

Well developed on 06-20-96 with a 2" submersible pump by pumping and surging.

LEGEND

- CEMENT PAD
- CEMENT/BENTONITE GROUT
- #00 FILTER SAND
- #1 MORIE SAND

MONITORING WELL INSTALLATION LOG

JOB NO. 953-6306 PROJECT PSE&G/HARRISON/NJ WELL NO. PZ-4B SHEET 1 of 1
GA INSP. S. NEVSHEHIRLIAN DRILLING METHOD 4 1/4" ID HOLLOW STEM AUGER GROUND ELEV. 7.95 WATER DEPTH 6.28 (TOC)
WEATHER MOSTLY SUNNY DRILLING COMPANY UNI-TECH COLLAR ELEV. 7.61 TIME/DATE 1108/06-24-96
TEMP. 74° F DRILL RIG CME 85 DRILLER J. EVANS STARTED 1420/05-24-96 (TIME / DATE) COMPLETED 1440/05-24-96 (TIME / DATE)
LOCATION / COORDINATES N 692890.41 E 2140930.42

MATERIALS INVENTORY

WELL CASING 2 in. dia. 7 l.f. WELL SCREEN 2 in. dia. 5 l.f. BENTONITE SEAL GROUT
CASING TYPE SCH 40 PVC SCREEN TYPE SCH 40 PVC INSTALLATION METHOD GRAVITY
JOINT TYPE FLUSH THREADED SLOT SIZE 0.010" MACHINE SLOTTED FILTER PACK QTY. 200 LBS.
GROUT QUANTITY 12 GALLONS CENTRALIZERS NONE USED FILTER PACK TYPE #1 MORIE SAND
GROUT TYPE CEMENT/BENTONITE DRILLING MUD TYPE N/A INSTALLATION METHOD GRAVITY

ELEV./DEPTH	SOIL/ROCK DESCRIPTION
	GROUND SURFACE
0.00	See boring log PZ-4A for lithologic description.
5.00	
10.00	
15.00	
20.00	
25.00	
30.00	
35.00	
40.00	
45.00	
50.00	
55.00	

WELL SKETCH

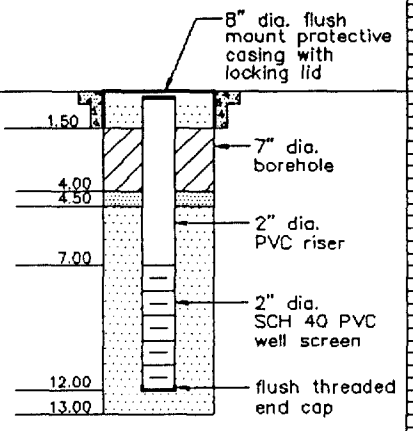

INSTALLATION NOTES

WELL DEVELOPMENT NOTES

Well developed on 06-20-96 with a 2" submersible pump by pumping and surging.

LEGEND

- CEMENT PAD
- CEMENT/BENTONITE GROUT
- #00 FILTER SAND
- #1 MORIE SAND

849880159

MONITORING WELL INSTALLATION LOG

JOB NO.	953-6306	PROJECT	PSE&G/HARRISON/NJ	WELL NO.	PZ-5A	SHEET	2 of 2
GA INSP.	S. NEVSHEHIRLIAN	DRILLING METHOD	4 1/4" ID HOLLOW STEM AUGER	GROUND ELEV.	6.85	WATER DEPTH	9.10 (TOC)
WEATHER	SUNNY	DRILLING COMPANY	UNI-TECH	COLLAR ELEV.	8.83	TIME/DATE	1103/06-24-96
TEMP.	60° F	DRILL RIG	CME 85	DRILLER	J. EVANS	STARTED (TIME / DATE)	0830/05-31-96
						COMPLETED (TIME / DATE)	1100/05-31-96

LOCATION / COORDINATES N 692905.48 E 2141498.01

MATERIALS INVENTORY

WELL CASING	2 in. dia. 51 l.f.	WELL SCREEN	2 in. dia. 5 l.f.	BENTONITE SEAL	GROUT
CASING TYPE	SCH 40 PVC	SCREEN TYPE	SCH 40 PVC	INSTALLATION METHOD	TREMIE
JOINT TYPE	FLUSH THREADED	SLOT SIZE	0.010" MACHINE SLOTTED	FILTER PACK QTY.	250 LBS.
GROUT QUANTITY	85 GALLONS	CENTRALIZERS	NONE USED	FILTER PACK TYPE	#1 MORIE SAND
GROUT TYPE	CEMENT/BENTONITE	DRILLING MUD TYPE	N/A	INSTALLATION METHOD	GRAVITY

ELEV./DEPTH	SOIL/ROCK DESCRIPTION
55.00	See boring log PZ-5A for lithologic description.
60.00	
65.00	
70.00	
75.00	
80.00	
85.00	
90.00	
95.00	
100.00	
105.00	
110.00	
115.00	

WELL SKETCH

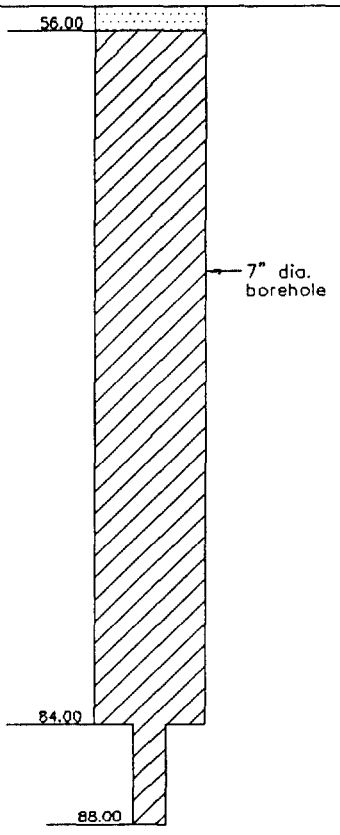

849880160

INSTALLATION NOTES

WELL DEVELOPMENT NOTES

Well developed on 06-20-96 with a 2" submersible pump by pumping and surging.

LEGEND

- CEMENT PAD
- CEMENT/BENTONITE GROUT
- #00 FILTER SAND
- #1 MORIE SAND

MONITORING WELL INSTALLATION LOG

JOB NO. 953-6306 PROJECT PSE&G/HARRISON/NJ WELL NO. PZ-5B SHEET 1 of 1
GA INSP. S. NEVSHEHIRLIAN DRILLING METHOD 4 1/4" ID HOLLOW STEM AUGER GROUND ELEV. 6.84 WATER DEPTH 5.93 (TOC)
WEATHER MOSTLY CLOUDY DRILLING COMPANY UNI-TECH COLLAR ELEV. 8.92 TIME/DATE 1104/06-24-96
TEMP. 63° F DRILL RIG CME 85 DRILLER J. EVANS STARTED 1100/05-30-96 (TIME / DATE) COMPLETED 1130/05-30-96 (TIME / DATE)
LOCATION / COORDINATES N 692903.34 E 2141491.63

MATERIALS INVENTORY

WELL CASING 2 in. dia. 5.7 l.f. WELL SCREEN 2 in. dia. 1.8 l.f. BENTONITE SEAL GROUT
CASING TYPE SCH 40 PVC SCREEN TYPE SCH 40 PVC INSTALLATION METHOD GRAVITY
JOINT TYPE FLUSH THREADED SLOT SIZE 0.010" MACHINE SLOTTED FILTER PACK QTY. 70 LBS.
GROUT QUANTITY 3 GALLONS CENTRALIZERS NONE USED FILTER PACK TYPE #1 MORIE SAND
GROUT TYPE CEMENT/BENTONITE DRILLING MUD TYPE N/A INSTALLATION METHOD GRAVITY

ELEV./DEPTH	SOIL/ROCK DESCRIPTION
	GROUND SURFACE
0.00	See boring log PZ-5A for lithologic description.
5.00	
10.00	
15.00	
20.00	
25.00	
30.00	
35.00	
40.00	
45.00	
50.00	
55.00	

WELL SKETCH

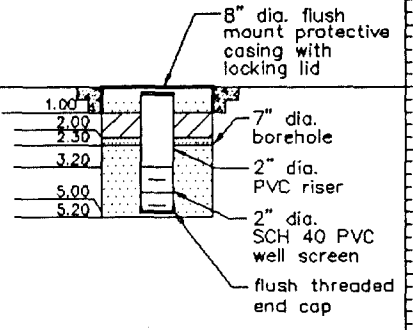

849880161

INSTALLATION NOTES

WELL DEVELOPMENT NOTES

Well developed on 06-20-96 with a 2" submersible pump by pumping and surging.

LEGEND

- CEMENT PAD
- CEMENT/BENTONITE GROUT
- #00 FILTER SAND
- #1 MORIE SAND

MONITORING WELL INSTALLATION LOG

JOB NO. 953-6306 PROJECT PSE&G/HARRISON/NJ WELL NO. PZ-6A SHEET 1 of 1
GA INSP. S. NEVSHEHIRLIAN DRILLING METHOD 4 1/4" ID HOLLOW STEM AUGER GROUND ELEV. 9.26 WATER DEPTH 12.53 (TOC)
WEATHER CLOUDY DRILLING COMPANY UNI-TECH COLLAR ELEV. 8.90 TIME/DATE 1137/06-24-96
TEMP. 84° F DRILL RIG CME 85 DRILLER J. EVANS STARTED 1645/06-12-96 (TIME / DATE) COMPLETED 1800/06-12-96 (TIME / DATE)
LOCATION / COORDINATES N 693447.58 E 2141489.43

MATERIALS INVENTORY

WELL CASING 2 in. dia. 25 l.f. WELL SCREEN 2 in. dia. 5 l.f. BENTONITE SEAL GROUT
CASING TYPE SCH 40 PVC SCREEN TYPE SCH 40 PVC INSTALLATION METHOD TREMIE
JOINT TYPE FLUSH THREADED SLOT SIZE 0.010" MACHINE SLOTTED FILTER PACK QTY. 300 LBS.
GROUT QUANTITY 60 GALLONS CENTRALIZERS NONE USED FILTER PACK TYPE #1 MORIE SAND
GROUT TYPE CEMENT/BENTONITE DRILLING MUD TYPE N/A INSTALLATION METHOD GRAVITY

ELEV./DEPTH	SOIL/ROCK DESCRIPTION
	GROUND SURFACE
0.00	See boring log PZ-6A for lithologic description.
5.00	
10.00	
15.00	
20.00	
25.00	
30.00	
35.00	
40.00	
45.00	
50.00	
55.00	

WELL SKETCH

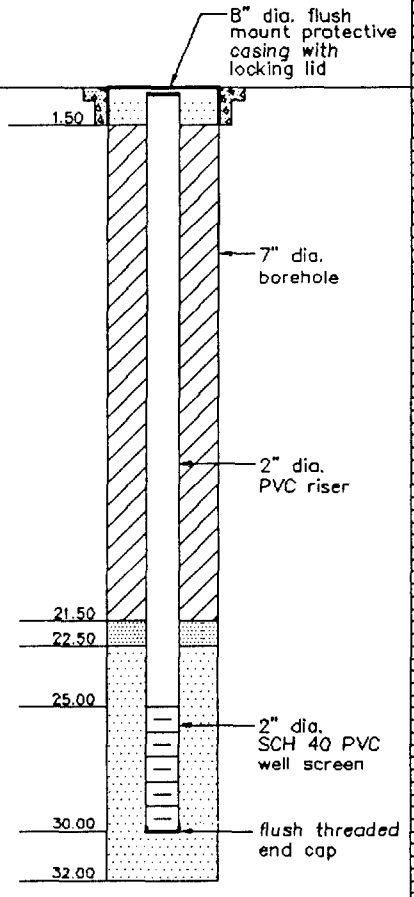

849880162

INSTALLATION NOTES

WELL DEVELOPMENT NOTES

Well developed on 06-20-96 with a 2" submersible pump by pumping and surging.

LEGEND

- CEMENT PAD
- CEMENT/BENTONITE GROUT
- #00 FILTER SAND
- #1 MORIE SAND

MONITORING WELL INSTALLATION LOG

JOB NO. 953-6306 PROJECT PSE&G/HARRISON/NJ WELL NO. PZ-6B SHEET 1 of 1
GA INSP. S. NEVSHEHIRLIAN DRILLING METHOD 4 1/4" ID HOLLOW STEM AUGER GROUND ELEV. 9.38 WATER DEPTH 4.19 (TOC)
WEATHER PARTLY CLOUDY DRILLING COMPANY UNI-TECH COLLAR ELEV. 9.02 TIME/DATE 1130/06-24-96
TEMP. 84° F DRILL RIG CME 85 DRILLER J. EVANS STARTED 0820/06-13-96 (TIME / DATE) COMPLETED 0910/06-13-96 (TIME / DATE)
LOCATION / COORDINATES N 693456.78 E 2141487.75

MATERIALS INVENTORY

WELL CASING 2 in. dia. 5 l.f. WELL SCREEN 2 in. dia. 2 l.f. BENTONITE SEAL GROUT
CASING TYPE SCH 40 PVC SCREEN TYPE SCH 40 PVC INSTALLATION METHOD GRAVITY
JOINT TYPE FLUSH THREADED SLOT SIZE 0.010" MACHINE SLOTTED FILTER PACK QTY. 70 LBS.
GROUT QUANTITY 6 GALLONS CENTRALIZERS NONE USED FILTER PACK TYPE #1 MORIE SAND
GROUT TYPE CEMENT/BENTONITE DRILLING MUD TYPE N/A INSTALLATION METHOD GRAVITY

ELEV./DEPTH	SOIL/ROCK DESCRIPTION
	GROUND SURFACE
0.00	See boring log PZ-6A for lithologic description.
5.00	
10.00	
15.00	
20.00	
25.00	
30.00	
35.00	
40.00	
45.00	
50.00	
55.00	

WELL SKETCH

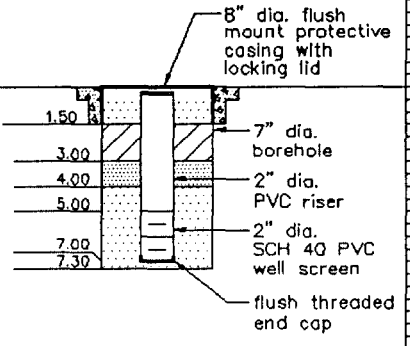

849880163

INSTALLATION NOTES

WELL DEVELOPMENT NOTES

Well developed on 06-19-96 with a 2" submersible pump by pumping and surging.

LEGEND

- CEMENT PAD
- CEMENT/BENTONITE GROUT
- #00 FILTER SAND
- #1 MORIE SAND

MONITORING WELL INSTALLATION LOG

JOB NO. 953-6306 PROJECT PSE&G/HARRISON/NJ WELL NO. PZ-7A SHEET 1 of 1
GA INSP. S. NEVSHEHIRLIAN DRILLING METHOD 4 1/4" ID HOLLOW STEM AUGER GROUND ELEV. 7.72 WATER DEPTH 11.03 (TOC)
WEATHER MOSTLY CLOUDY DRILLING COMPANY UNI-TECH COLLAR ELEV. 7.38 TIME/DATE 1130/06-24-96
TEMP. 86° F DRILL RIG CME 85 DRILLER J. EVANS STARTED 1540/06-17-96 (TIME / DATE) COMPLETED 1710/06-17-96 (TIME / DATE)
LOCATION / COORDINATES N 693986.99 E 2141444.93

MATERIALS INVENTORY

WELL CASING 2 in. dia. 30 l.f. WELL SCREEN 2 in. dia. 5 l.f. BENTONITE SEAL GROUT
CASING TYPE SCH 40 PVC SCREEN TYPE SCH 40 PVC INSTALLATION METHOD TREMIE
JOINT TYPE FLUSH THREADED SLOT SIZE 0.010" MACHINE SLOTTED FILTER PACK QTY. 250 LBS.
GROUT QUANTITY 100 GALLONS CENTRALIZERS NONE USED FILTER PACK TYPE #1 MORIE SAND
GROUT TYPE CEMENT/BENTONITE DRILLING MUD TYPE N/A INSTALLATION METHOD GRAVITY

ELEV./DEPTH	SOIL/ROCK DESCRIPTION
	GROUND SURFACE
0.00	See boring log PZ-7A for lithologic description.
5.00	
10.00	
15.00	
20.00	
25.00	
30.00	
35.00	
40.00	
45.00	
50.00	
55.00	

WELL SKETCH

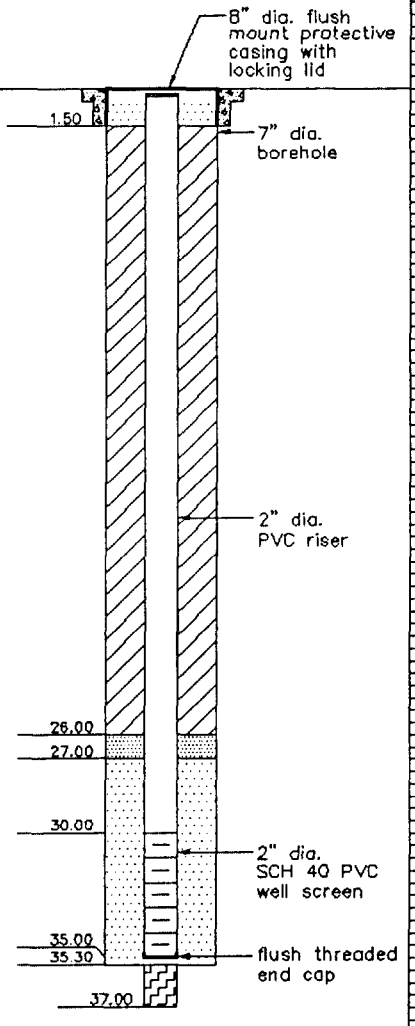

INSTALLATION NOTES

WELL DEVELOPMENT NOTES

Well developed on 06-19-96 with a 2" submersible pump by pumping and surging.

LEGEND

- CEMENT PAD
- CEMENT/BENTONITE GROUT
- #00 FILTER SAND
- #1 MORIE SAND
- DRILL CUTTINGS

849880164

MONITORING WELL INSTALLATION LOG

JOB NO. 953-6306 PROJECT PSE&G/HARRISON/NJ WELL NO. PZ-8A SHEET 1 of 2
GA INSP. S. NEVSHEHIRLIAN DRILLING METHOD 4 1/4" ID HOLLOW STEM AUGER GROUND ELEV. 8.19 WATER DEPTH 13.96 (TOC)
WEATHER SUNNY DRILLING COMPANY UNI-TECH COLLAR ELEV. 10.50 TIME/DATE 1128/06-24-96
TEMP. 76° F DRILL RIG CME 85 DRILLER J. EVANS STARTED 0830/06-05-96 (TIME / DATE) COMPLETED 1115/06-05-96 (TIME / DATE)
LOCATION / COORDINATES N 694296.67 E 2141427.70

MATERIALS INVENTORY

WELL CASING 2 in. dia. 40 l.f. WELL SCREEN 2 in. dia. 5 l.f. BENTONITE SEAL GROUT
CASING TYPE SCH 40 PVC SCREEN TYPE SCH 40 PVC INSTALLATION METHOD TREMIE
JOINT TYPE FLUSH THREADED SLOT SIZE 0.010" MACHINE SLOTTED FILTER PACK QTY. 250 LBS.
GROUT QUANTITY 105 GALLONS CENTRALIZERS NONE USED FILTER PACK TYPE #1 MORIE SAND
GROUT TYPE CEMENT/BENTONITE DRILLING MUD TYPE N/A INSTALLATION METHOD GRAVITY

ELEV./DEPTH	SOIL/ROCK DESCRIPTION
	GROUND SURFACE
0.00	See boring log PZ-8A for lithologic description.
5.00	
10.00	
15.00	
20.00	
25.00	
30.00	
35.00	
40.00	
45.00	
50.00	
55.00	

WELL SKETCH

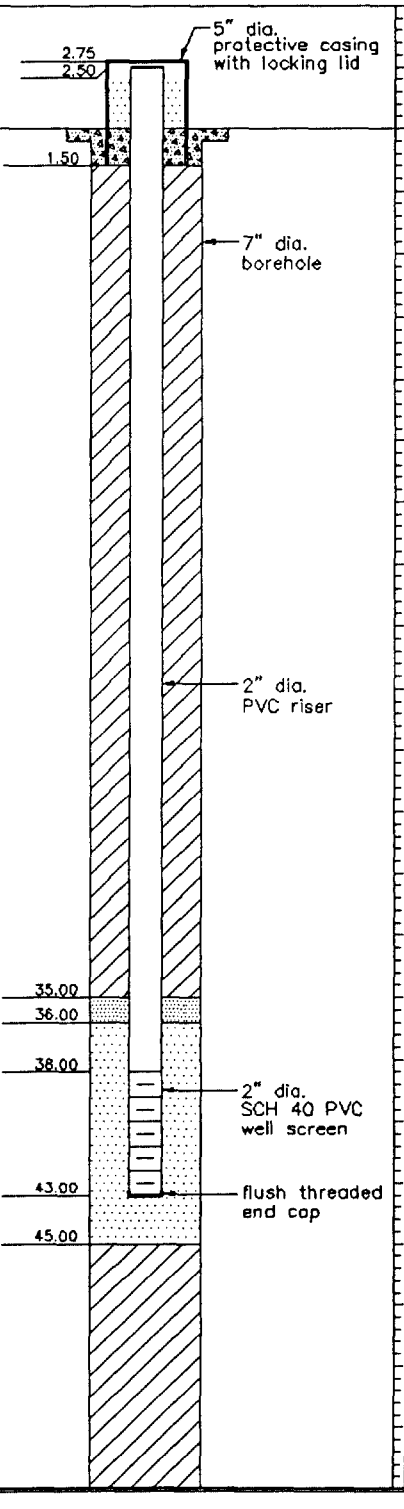

INSTALLATION NOTES

WELL DEVELOPMENT NOTES

Well developed on 06-19-96 with a 2" submersible pump by pumping and surging.

LEGEND

- CEMENT PAD
- CEMENT/BENTONITE GROUT
- #00 FILTER SAND
- #1 MORIE SAND

849880165

MONITORING WELL INSTALLATION LOG

JOB NO.	953-6306	PROJECT	PSE&G/HARRISON/NJ	WELL NO.	PZ-8B	SHEET	1 of 1
GA INSP.	S. NEVSHEHIRLIAN	DRILLING METHOD	4 1/4" ID HOLLOW STEM AUGER	GROUND ELEV.	8.18	WATER DEPTH	5.21 (TOC)
WEATHER	SUNNY	DRILLING COMPANY	UNI-TECH	COLLAR ELEV.	10.40	TIME/DATE	1129/06-24-96
TEMP.	76° F	DRILL RIG	CME 85	DRILLER	J. EVANS	STARTED (TIME / DATE)	1145/06-05-96
LOCATION / COORDINATES	N 694298.86 E 2141419.96					COMPLETED (TIME / DATE)	1215/06-05-96

MATERIALS INVENTORY

WELL CASING	2 in. dia. 3 l.f.	WELL SCREEN	2 in. dia. 2 l.f.	BENTONITE SEAL	GROUT
CASING TYPE	SCH 40 PVC	SCREEN TYPE	SCH 40 PVC	INSTALLATION METHOD	GRAVITY
JOINT TYPE	FLUSH THREADED	SLOT SIZE	0.010" MACHINE SLOTTED	FILTER PACK QTY.	70 LBS.
GROUT QUANTITY	4 GALLONS	CENTRALIZERS	NONE USED	FILTER PACK TYPE	#1 MORIE SAND
GROUT TYPE	CEMENT/BENTONITE	DRILLING MUD TYPE	N/A	INSTALLATION METHOD	GRAVITY

ELEV./DEPTH	SOIL/ROCK DESCRIPTION
	GROUND SURFACE
0.00	See boring log PZ-8A for *lithologic description.*
5.00	
10.00	
15.00	
20.00	
25.00	
30.00	
35.00	
40.00	
45.00	
50.00	
55.00	

WELL SKETCH

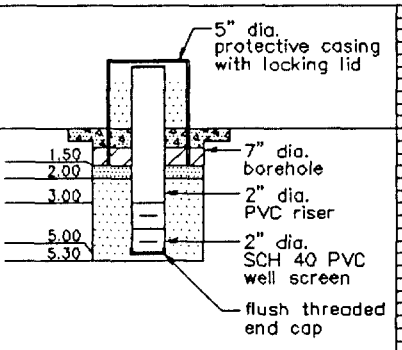

INSTALLATION NOTES

WELL DEVELOPMENT NOTES

Well developed on 06-19-96 with a 2" bailer.

LEGEND

- CEMENT PAD
- CEMENT/BENTONITE GROUT
- #00 FILTER SAND
- #1 MORIE SAND
- DRILL CUTTINGS

849880166

MONITORING WELL INSTALLATION LOG

JOB NO. 953-6306 PROJECT PSE&G/HARRISON/NJ WELL NO. PZ-9A SHEET 1 of 1
GA INSP. S. NEVSHEHIRLIAN DRILLING METHOD 4 1/4" ID HOLLOW STEM AUGER GROUND ELEV. 9.74 WATER DEPTH 12.75 (TOC)
WEATHER PARTLY CLOUDY DRILLING COMPANY UNI-TECH COLLAR ELEV. 9.44 TIME/DATE 1126/06-24-96
TEMP. 84° F DRILL RIG CME 85 DRILLER J. EVANS STARTED 1115/06-12-96 (TIME / DATE) COMPLETED 1230/06-12-96 (TIME / DATE)
LOCATION / COORDINATES N 694117.42 E 2141010.54

MATERIALS INVENTORY

WELL CASING 2 in. dia. 21 l.f. WELL SCREEN 2 in. dia. 5 l.f. BENTONITE SEAL GROUT
CASING TYPE SCH 40 PVC SCREEN TYPE SCH 40 PVC INSTALLATION METHOD TREMIE
JOINT TYPE FLUSH THREADED SLOT SIZE 0.010" MACHINE SLOTTED FILTER PACK QTY. 330 LBS.
GROUT QUANTITY 40 GALLONS CENTRALIZERS NONE USED FILTER PACK TYPE #1 MORIE SAND
GROUT TYPE CEMENT/BENTONITE DRILLING MUD TYPE N/A INSTALLATION METHOD GRAVITY

ELEV./DEPTH	SOIL/ROCK DESCRIPTION
	GROUND SURFACE
0.00	See boring log PZ-9A for lithologic description.
5.00	
10.00	
15.00	
20.00	
25.00	
30.00	
35.00	
40.00	
45.00	
50.00	
55.00	

WELL SKETCH

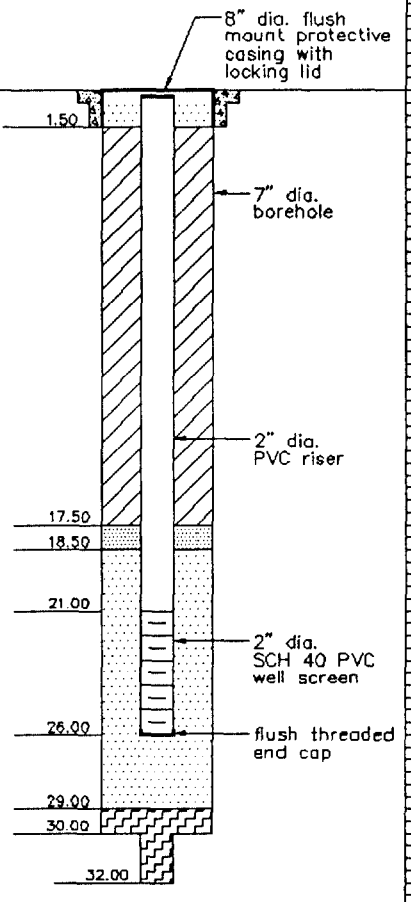

849880167

INSTALLATION NOTES

WELL DEVELOPMENT NOTES

Well developed on 06-19-96 with a 2" submersible pump by pumping and surging.

LEGEND

- CEMENT PAD
- CEMENT/BENTONITE GROUT
- #00 FILTER SAND
- #1 MORIE SAND
- DRILL CUTTINGS

MONITORING WELL INSTALLATION LOG

JOB NO.	953-6306	PROJECT	PSE&G/HARRISON/NJ	WELL NO.	PZ-9B	SHEET	1 of 1
GA INSP.	S. NEVSHEHIRLIAN	DRILLING METHOD	4 1/4" ID HOLLOW STEM AUGER	GROUND ELEV.	9.87	WATER DEPTH	5.50 (TOC)
WEATHER	LIGHT RAIN	DRILLING COMPANY	UNI-TECH	COLLAR ELEV.	9.50	TIME/DATE	1126/06-24-96
TEMP.	84° F	DRILL RIG	CME 85	DRILLER	J. EVANS	STARTED (TIME / DATE)	1420/06-12-96
LOCATION / COORDINATES	N 694112.69 E 2141002.64					COMPLETED (TIME / DATE)	1500/06-12-96

MATERIALS INVENTORY

WELL CASING	2 in. dia. 4 l.f.	WELL SCREEN	2 in. dia. 3 l.f.	BENTONITE SEAL	GROUT
CASING TYPE	SCH 40 PVC	SCREEN TYPE	SCH 40 PVC	INSTALLATION METHOD	GRAVITY
JOINT TYPE	FLUSH THREADED	SLOT SIZE	0.010" MACHINE SLOTTED	FILTER PACK QTY.	100 LBS.
GROUT QUANTITY	4 GALLONS	CENTRALIZERS	NONE USED	FILTER PACK TYPE	#1 MORIE SAND
GROUT TYPE	CEMENT/BENTONITE	DRILLING MUD TYPE	N/A	INSTALLATION METHOD	GRAVITY

ELEV./DEPTH	SOIL/ROCK DESCRIPTION
	GROUND SURFACE
0.00	See boring log PZ-9A for lithologic description.
5.00	
10.00	
15.00	
20.00	
25.00	
30.00	
35.00	
40.00	
45.00	
50.00	
55.00	

WELL SKETCH

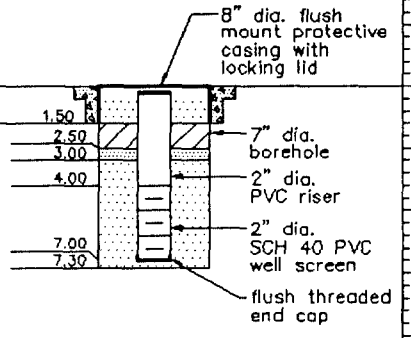

849880168

INSTALLATION NOTES

WELL DEVELOPMENT NOTES

Well developed on 06-20-96 with a 2" bailer.

LEGEND

- CEMENT PAD
- CEMENT/BENTONITE GROUT
- #00 FILTER SAND
- #1 MORIE SAND

MONITORING WELL INSTALLATION LOG

JOB NO.	953-6306	PROJECT	PSE&G/HARRISON/NJ	WELL NO.	PZ-10A	SHEET	1 of 1
GA INSP.	S. NEVSHEHIRLIAN	DRILLING METHOD	4 1/4" ID HOLLOW STEM AUGER	GROUND ELEV.	9.30	WATER DEPTH	11.64 (TOC)
WEATHER	MOSTLY CLOUDY	DRILLING COMPANY	UNI-TECH	COLLAR ELEV.	9.01	TIME/DATE	1123/06-24-96
TEMP.	85° F	DRILL RIG	CME 85	DRILLER	J. EVANS	STARTED (TIME / DATE)	1515/06-11-96
LOCATION / COORDINATES	N 693812.94 E 2140622.18					COMPLETED (TIME / DATE)	1630/06-11-96

MATERIALS INVENTORY

WELL CASING	2 in. dia. 22 l.f.	WELL SCREEN	2 in. dia. 5 l.f.	BENTONITE SEAL	GROUT
CASING TYPE	SCH 40 PVC	SCREEN TYPE	SCH 40 PVC	INSTALLATION METHOD	TREMIE
JOINT TYPE	FLUSH THREADED	SLOT SIZE	0.010" MACHINE SLOTTED	FILTER PACK QTY.	260 LBS.
GROUT QUANTITY	45 GALLONS	CENTRALIZERS	NONE USED	FILTER PACK TYPE	#1 MORIE SAND
GROUT TYPE	CEMENT/BENTONITE	DRILLING MUD TYPE	N/A	INSTALLATION METHOD	GRAVITY

ELEV./DEPTH	SOIL/ROCK DESCRIPTION
	GROUND SURFACE
0.00	See boring log PZ-10A for lithologic description.
5.00	
10.00	
15.00	
20.00	
25.00	
30.00	
35.00	
40.00	
45.00	
50.00	
55.00	

WELL SKETCH

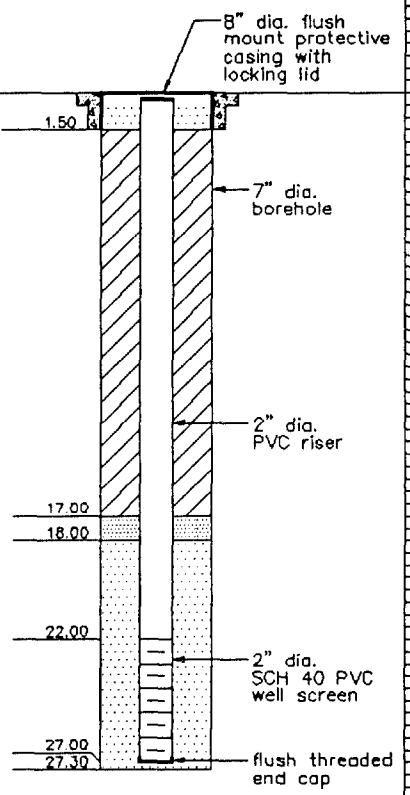

849880169

INSTALLATION NOTES

WELL DEVELOPMENT NOTES

Well developed on 06-18-96 with a 2" submersible pump by pumping and surging.

LEGEND

- CEMENT PAD
- CEMENT/BENTONITE GROUT
- #00 FILTER SAND
- #1 MORIE SAND

MONITORING WELL INSTALLATION LOG

JOB NO. 953-6306 PROJECT PSE&G/HARRISON/NJ WELL NO. PZ-10B SHEET 1 of 1
GA INSP. S. NEVSHEHIRLIAN DRILLING METHOD 4 1/4" ID HOLLOW STEM AUGER GROUND ELEV. 9.46 WATER DEPTH 4.23 (TOC)
WEATHER CLOUDY DRILLING COMPANY UNI-TECH COLLAR ELEV. 9.18 TIME/DATE 1124/06-24-96
TEMP. 84° F DRILL RIG CME 85 DRILLER J. EVANS STARTED 0830/06-12-96 (TIME / DATE) COMPLETED 0900/06-12-96 (TIME / DATE)
LOCATION / COORDINATES N 693818.93 E 2140630.45

MATERIALS INVENTORY

WELL CASING 2 in. dia. 5 l.f. WELL SCREEN 2 in. dia. 2 l.f. BENTONITE SEAL GROUT
CASING TYPE SCH 40 PVC SCREEN TYPE SCH 40 PVC INSTALLATION METHOD GRAVITY
JOINT TYPE FLUSH THREADED SLOT SIZE 0.010" MACHINE SLOTTED FILTER PACK QTY. 70 LBS.
GROUT QUANTITY 4 GALLONS CENTRALIZERS NONE USED FILTER PACK TYPE #1 MORIE SAND
GROUT TYPE CEMENT/BENTONITE DRILLING MUD TYPE N/A INSTALLATION METHOD GRAVITY

ELEV./DEPTH	SOIL/ROCK DESCRIPTION
	GROUND SURFACE
0.00	See boring log PZ-10B for lithologic description.
5.00	
10.00	
15.00	
20.00	
25.00	
30.00	
35.00	
40.00	
45.00	
50.00	
55.00	

WELL SKETCH

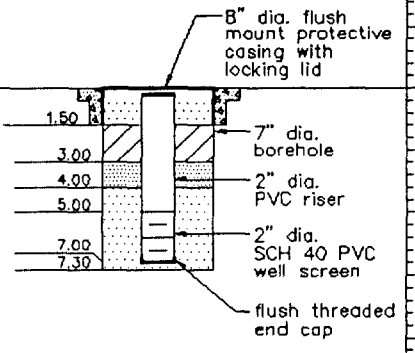

849880170

INSTALLATION NOTES

WELL DEVELOPMENT NOTES

Well developed on 06-18-96 with a 2" submersible pump by pumping and surging.

LEGEND

- CEMENT PAD
- CEMENT/BENTONITE GROUT
- #00 FILTER SAND
- #1 MORIE SAND

MONITORING WELL INSTALLATION LOG

JOB NO.	953-6306	PROJECT	PSE&G/HARRISON/NJ	WELL NO.	PZ-11A	SHEET	1 of 1
GA INSP.	S. NEVSHEHIRLIAN	DRILLING METHOD	4 1/4" ID HOLLOW STEM AUGER	GROUND ELEV.	8.82	WATER DEPTH	10.71 (TOC)
WEATHER	CLOUDY	DRILLING COMPANY	UNI-TECH	COLLAR ELEV.	8.49	TIME/DATE	1122/06-24-96
TEMP.	67° F	DRILL RIG	CME 85	DRILLER	J. EVANS	STARTED (TIME / DATE)	0830/06-11-96
LOCATION / COORDINATES	N 693605.52 E 2140372.42					COMPLETED (TIME / DATE)	1100/06-11-96

MATERIALS INVENTORY

WELL CASING	2 in. dia. 22 l.f.	WELL SCREEN	2 in. dia. 5 l.f.	BENTONITE SEAL	GROUT
CASING TYPE	SCH 40 PVC	SCREEN TYPE	SCH 40 PVC	INSTALLATION METHOD	TREMIE
JOINT TYPE	FLUSH THREADED	SLOT SIZE	0.010" MACHINE SLOTTED	FILTER PACK QTY.	300 LBS.
GROUT QUANTITY	28 GALLONS	CENTRALIZERS	NONE USED	FILTER PACK TYPE	#1 MORIE SAND
GROUT TYPE	CEMENT/BENTONITE	DRILLING MUD TYPE	N/A	INSTALLATION METHOD	GRAVITY

ELEV./DEPTH	SOIL/ROCK DESCRIPTION
	GROUND SURFACE
0.00	See boring log PZ-11A for lithologic description.
5.00	
10.00	
15.00	
20.00	
25.00	
30.00	
35.00	
40.00	
45.00	
50.00	
55.00	

WELL SKETCH

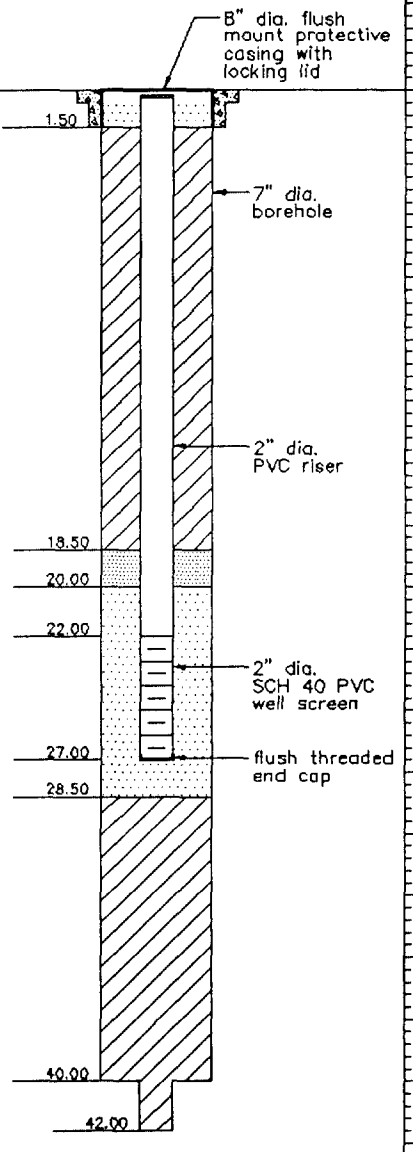

849880171

INSTALLATION NOTES

WELL DEVELOPMENT NOTES

Well developed on 06-18-96 with a 2" submersible pump by pumping and surging.

LEGEND

- CEMENT PAD
- CEMENT/BENTONITE GROUT
- #00 FILTER SAND
- #1 MORIE SAND

MONITORING WELL INSTALLATION LOG

JOB NO. 953-6306 PROJECT PSE&G/HARRISON/NJ WELL NO. PZ-12A SHEET 1 of 1
GA INSP. S. NEVSHEHIRLIAN DRILLING METHOD 4 1/4" ID HOLLOW STEM AUGER GROUND ELEV. 8.78 WATER DEPTH 9.84 (TOC)
WEATHER MOSTLY SUNNY DRILLING COMPANY UNI-TECH COLLAR ELEV. 8.48 TIME/DATE 1118/06-24-96
TEMP. 74° F DRILL RIG CME 85 DRILLER J. EVANS STARTED 1200/06-07-96 (TIME / DATE) COMPLETED 1340/06-07-96 (TIME / DATE)
LOCATION / COORDINATES N 693464.32 E 2140221.27

MATERIALS INVENTORY

WELL CASING 2 in. dia. 37 l.f. WELL SCREEN 2 in. dia. 5 l.f. BENTONITE SEAL GROUT
CASING TYPE SCH 40 PVC SCREEN TYPE SCH 40 PVC INSTALLATION METHOD TREMIE
JOINT TYPE FLUSH THREADED SLOT SIZE 0.010" MACHINE SLOTTED FILTER PACK QTY. 230 LBS.
GROUT QUANTITY 100 GALLONS CENTRALIZERS NONE USED FILTER PACK TYPE #1 MORIE SAND
GROUT TYPE CEMENT/BENTONITE DRILLING MUD TYPE N/A INSTALLATION METHOD GRAVITY

ELEV./DEPTH	SOIL/ROCK DESCRIPTION
	GROUND SURFACE
0.00	See boring log PZ-12A for lithologic description.
5.00	
10.00	
15.00	
20.00	
25.00	
30.00	
35.00	
40.00	
45.00	
50.00	
55.00	

WELL SKETCH

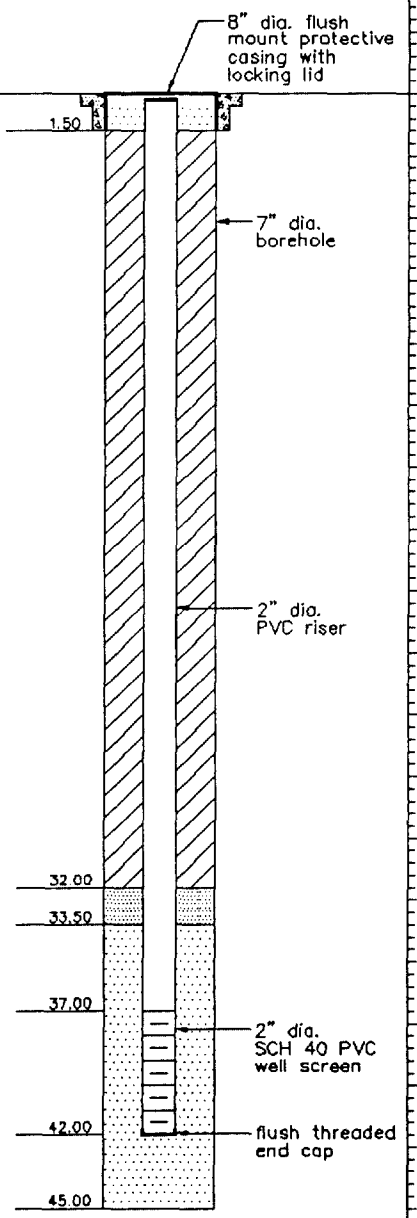

849880172

INSTALLATION NOTES

WELL DEVELOPMENT NOTES

Well developed on 06-18-96 with a 2" submersible pump by pumping and surging.

LEGEND

- CEMENT PAD
- CEMENT/BENTONITE GROUT
- #00 FILTER SAND
- #1 MORIE SAND

MONITORING WELL INSTALLATION LOG

JOB NO. 953-6306 PROJECT PSE&G/HARRISON/NJ WELL NO. PZ-13A SHEET 1 of 1
GA INSP. S. NEVSHEHIRLIAN DRILLING METHOD 4 1/4" ID HOLLOW STEM AUGER GROUND ELEV. 9.32 WATER DEPTH 11.62 (TOC)
WEATHER PT. CLOUDY DRILLING COMPANY UNI-TECH COLLAR ELEV. 8.84 TIME/DATE 1134/06-24-96
TEMP. 84° F DRILL RIG CME 85 DRILLER J. EVANS STARTED 1430/06-13-96 (TIME / DATE) COMPLETED 1640/06-13-96 (TIME / DATE)
LOCATION / COORDINATES N 693424.96 E 2140934.18

MATERIALS INVENTORY

WELL CASING 2 in. dia. 40 l.f. WELL SCREEN 2 in. dia. 5 l.f. BENTONITE SEAL GROUT
CASING TYPE SCH 40 PVC SCREEN TYPE SCH 40 PVC INSTALLATION METHOD TREMIE
JOINT TYPE FLUSH THREADED SLOT SIZE 0.010" MACHINE SLOTTED FILTER PACK QTY. 250 LBS.
GROUT QUANTITY 120 GALLONS CENTRALIZERS NONE USED FILTER PACK TYPE #1 MORIE SAND
GROUT TYPE CEMENT/BENTONITE DRILLING MUD TYPE N/A INSTALLATION METHOD GRAVITY

ELEV./DEPTH	SOIL/ROCK DESCRIPTION
	GROUND SURFACE
0.00	See boring log PZ-13A for lithologic description.
5.00	
10.00	
15.00	
20.00	
25.00	
30.00	
35.00	
40.00	
45.00	
50.00	
55.00	

WELL SKETCH

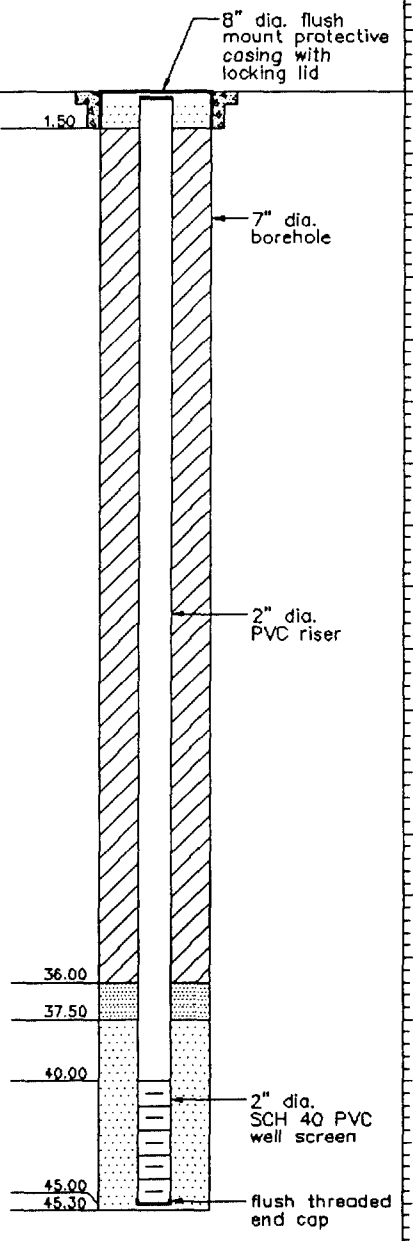

849880173

INSTALLATION NOTES

WELL DEVELOPMENT NOTES

Well developed on 06-19-96 with a 2" submersible pump by pumping and surging.

LEGEND

- CEMENT PAD
- CEMENT/BENTONITE GROUT
- #00 FILTER SAND
- #1 MORIE SAND

Golder Associates

MONITORING WELL INSTALLATION LOG

JOB NO. 953-6306 PROJECT PSE&G/HARRISON/NJ WELL NO. PZ-13B SHEET 1 of 1
GA INSP. S. NEVSHEHIRLIAN DRILLING METHOD 4 1/4" ID HOLLOW STEM AUGER GROUND ELEV. 9.19 WATER DEPTH 2.25 (TOC)
WEATHER SUNNY DRILLING COMPANY UNI-TECH COLLAR ELEV. 8.85 TIME/DATE 1135/06-24-96
TEMP. 86° F DRILL RIG CME 85 DRILLER J. EVANS STARTED 0850/06-14-96 (TIME / DATE) COMPLETED 0945/06-14-96 (TIME / DATE)
LOCATION / COORDINATES N 693418.02 E 2140934.73

MATERIALS INVENTORY

WELL CASING 2 in. dia. 4 l.f. WELL SCREEN 2 in. dia. 5 l.f. BENTONITE SEAL GROUT
CASING TYPE SCH 40 PVC SCREEN TYPE SCH 40 PVC INSTALLATION METHOD GRAVITY
JOINT TYPE FLUSH THREADED SLOT SIZE 0.010" MACHINE SLOTTED FILTER PACK QTY. 200 LBS.
GROUT QUANTITY 5 GALLONS CENTRALIZERS NONE USED FILTER PACK TYPE #1 MORIE SAND
GROUT TYPE CEMENT/BENTONITE DRILLING MUD TYPE N/A INSTALLATION METHOD GRAVITY

ELEV./DEPTH	SOIL/ROCK DESCRIPTION
	GROUND SURFACE
0.00	See boring log PZ-13A for lithologic description.
5.00	
10.00	
15.00	
20.00	
25.00	
30.00	
35.00	
40.00	
45.00	
50.00	
55.00	

WELL SKETCH

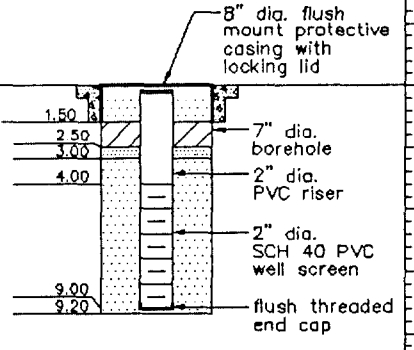

849880174

INSTALLATION NOTES

WELL DEVELOPMENT NOTES

Well developed on 06-19-96 with a 2" submersible pump by pumping and surging.

LEGEND

- CEMENT PAD
- CEMENT/BENTONITE GROUT
- #00 FILTER SAND
- #1 MORIE SAND

MONITORING WELL INSTALLATION LOG

JOB NO. 953-6306 PROJECT PSE&G/HARRISON/NJ WELL NO. PZ-14A SHEET 1 of 1
GA INSP. S. NEVSHEHIRLIAN DRILLING METHOD 4 1/4" ID HOLLOW STEM AUGER GROUND ELEV. 9.19 WATER DEPTH 2.25 (TOC)
WEATHER SUNNY DRILLING COMPANY UNI-TECH COLLAR ELEV. 8.85 TIME/DATE 1135/06-24-96
TEMP. 86° F DRILL RIG CME 85 DRILLER J. EVANS STARTED 0850/06-14-96 (TIME / DATE) COMPLETED 0945/06-14-96 (TIME / DATE)
LOCATION / COORDINATES N 693909.36 E 2141219.84

MATERIALS INVENTORY

WELL CASING 2 in. dia. 30 l.f. WELL SCREEN 2 in. dia. 5 l.f. BENTONITE SEAL GROUT
CASING TYPE SCH 40 PVC SCREEN TYPE SCH 40 PVC INSTALLATION METHOD TREMIE
JOINT TYPE FLUSH THREADED SLOT SIZE 0.010" MACHINE SLOTTED FILTER PACK QTY. 250 LBS.
GROUT QUANTITY 100 GALLONS CENTRALIZERS NONE USED FILTER PACK TYPE #1 MORIE SAND
GROUT TYPE CEMENT/BENTONITE DRILLING MUD TYPE N/A INSTALLATION METHOD GRAVITY

ELEV./DEPTH	SOIL/ROCK DESCRIPTION
	GROUND SURFACE
0.00	See boring log PZ-14A for lithologic description.
5.00	
10.00	
15.00	
20.00	
25.00	
30.00	
35.00	
40.00	
45.00	
50.00	
55.00	

WELL SKETCH

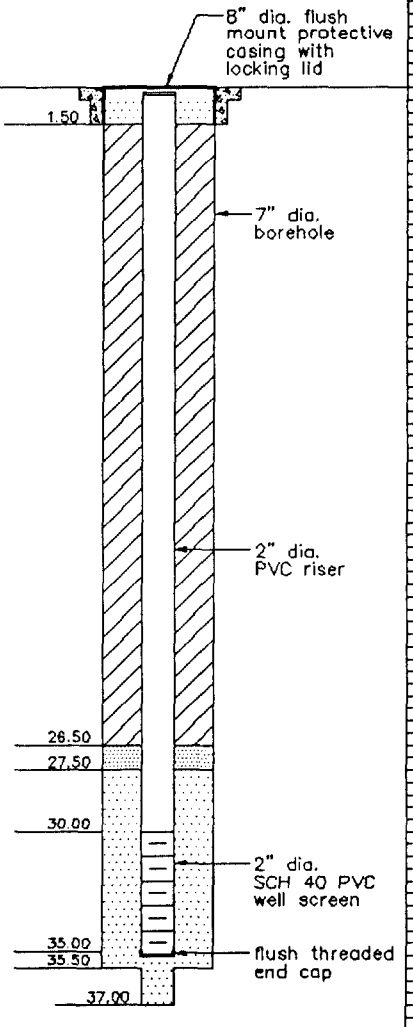

849880175

INSTALLATION NOTES

WELL DEVELOPMENT NOTES

Well developed on 06-19-96 with a 2" submersible pump by pumping and surging.

LEGEND

- CEMENT PAD
- CEMENT/BENTONITE GROUT
- #00 FILTER SAND
- #1 MORIE SAND

WATER SAMPLE FIELD INFORMATION FORM

Site:	PSE&G Harrison Gas Plant
Location:	Harrison, New Jersey
Project Number:	953-6306
Sampling Team:	S. Nevshehirlian / J. Hendel

Golder Associates

Sample Point ID: PZ-4B (well) / surface water / other (circle one)

Purging Device: Bailer

Depth to water before purging (ft-bmp): 6.06 Date: 7/25/96 Time: 1015

Well depth (ft-bmp): 11.89

Casing diameter (in): 2

Casing volume (gal): 0.75

Volume purged (gal): 3 Time Start: 1020 Time Finish: 1037

Depth to water after purging (ft-bmp): 11

Remarks:

Casing Volume Calculation

2"	4"	6"	8"
0.163 gal/ft	0.653 gal/ft	1.47 gal/ft	2.61 gal/ft

WELL INSPECTION (Circle Y or N)

Is well location correct on map?	(Y) or N	Is the well locked?	(Y) or N
Is well located in a dry area?	(Y) or N	Is the lock in good condition?	(Y) or N
Is well readily accessible?	(Y) or N	Is the well vented?	Y or (N)
Is well legibly labeled?	(Y) or N	Does casing have weep hole?	Y or N n/a
Is well protected with posts?	Y or (N)	Does well have dedicated bailer?	Y or (N)
Is casing free of kinks/bends?	(Y) or N	Does well have dedicated pump?	Y or (N)
Is protective casing secure?	Y or N n/a	Is equip. in good condition?	(Y) or N

Remarks: Flushmount

FIELD MEASUREMENTS

					Units	Calibration Notes
Temp.	1) 71.0	2) 70.5	3) 70.0	4) 69.6	°F	1.
pH	1) 7.09	2) 7.48	3) 7.69	4) 7.61	std. units	
Sp. Cond	1) 18.60	2) 2040	3) 2100	4) 2130	umhos/cm	
D.O.	1) meter	2) meter	3)	4)		
Volume	1) 0	2) 1 gal	3) 2 gal	4) 3 gal	gallons	

Sample Collection Notes: PID 1.3ppm at well head
initially turbid; however, cleared up at time of sampling

Weather conditions at time of sampling: m. cloudy, humid, lt. breeze 80°F

Sample characteristics: v. pale orange v. slightly turbid no noticeable odor

Sample date / time: 7/25/96 10:25 Method of sample collection:

Sample sequence: VOCs / SVOCs / TAL Metals / TPH / TDS

Signature: [signature] Company: Golder Associates Inc. Date: 7/25/96

849880176

WATER SAMPLE FIELD INFORMATION FORM

Site:	PSE&G Harrison Gas Plant
Location:	Harrison, New Jersey
Project Number:	953-6306
Sampling Team:	S. Nevshehirlian / J. Hendel

Golder Associates

Sample Point ID: PZ-5B (well) / surface water / other (circle one)

Purging Device: bailer

Depth to water before purging (ft-bmp): 5.91 Date: 7/25/96 Time: 0920

Well depth (ft-bmp): 7.45

Casing diameter (in): 2

Casing volume (gal): 0.25

Volume purged (gal): 1 Time Start: 0930 Time Finish: 0940

Depth to water after purging (ft-bmp): 6.10

Remarks:

Casing Volume Calculation

2"	4"	6"	8"
0.163 gal/ft	0.653 gal/ft	1.47 gal/ft	2.61 gal/ft

WELL INSPECTION (Circle Y or N)

Is well location correct on map?	(Y) or N	Is the well locked?	(Y) or N
Is well located in a dry area?	(Y) or N	Is the lock in good condition?	(Y) or N
Is well readily accessible?	(Y) or N	Is the well vented?	(Y) or N
Is well legibly labeled?	Y or (N)	Does casing have weep hole?	Y or (N)
Is well protected with posts?	Y or (N)	Does well have dedicated bailer?	Y or (N)
Is casing free of kinks/bends?	(Y) or N	Does well have dedicated pump?	Y or (N)
Is protective casing secure?	(Y) or N	Is equip. in good condition? NA	Y or N

Remarks:

FIELD MEASUREMENTS

	1)	2)	3)	4)	Units
Temp.	73.5	72.5	72.2	72.1	°F
pH	~~4.55~~ 6.03	6.23	6.38	6.42	std. units
Sp. Cond	3650	3500	3770	4090	umhos/cm
D.O.	meter	meter			
Volume	0	.25	.5	.75	gallons

Calibration Notes: Meter #7500 calibrated @ 0910

Sample Collection Notes: PID 0.5 ppm at well head.

Weather conditions at time of sampling: hazy, humid, 80°F

Sample characteristics: orange-brown in color, slightly to med turbid, v. slight odor

Sample date / time: 7/25/96 0945 Method of sample collection: Bailer

Sample sequence: VOCs / SVOCs / TAL Metals / TPH / TDS

Signature: Stephen Nevshehirlian Company: Golder Associates Inc. Date: 7/25/96

849880177

WATER SAMPLE FIELD INFORMATION FORM

Site:	PSE&G Harrison Gas Plant
Location:	Harrison, New Jersey
Project Number:	953-6306
Sampling Team:	S. Nevshehirlian / J. Hendel

Golder Associates

Sample Point ID: PZ-7A (well) / surface water / other (circle one)

Purging Device: Bailer

Depth to water before purging (ft-bmp): 10.67 Date: 7/25/90 Time: 1510

Well depth (ft-bmp): 34.63

Casing diameter (in): 2

Casing volume (gal): 3.9

Volume purged (gal): 16 Time Start: 1515 Time Finish: 1550

Depth to water after purging (ft-bmp): 13.9

Remarks:

Casing Volume Calculation

2"	4"	6"	8"
0.163 gal/ft	0.653 gal/ft	1.47 gal/ft	2.61 gal/ft

WELL INSPECTION (Circle Y or N)

Is well location correct on map?	Y or N	Is the well locked?	Y or N
Is well located in a dry area?	Y or N	Is the lock in good condition?	Y or N
Is well readily accessible?	Y or N	Is the well vented?	Y or N
Is well legibly labeled?	Y or N	Does casing have weep hole?	Y or N
Is well protected with posts?	Y or N	Does well have dedicated bailer?	Y or N
Is casing free of kinks/bends?	Y or N	Does well have dedicated pump?	Y or N
Is protective casing secure?	Y or N	Is equip. in good condition?	Y or N

Remarks:

FIELD MEASUREMENTS

	1)	2)	3)	4)	Units	Calibration Notes
Temp.	69.8	67.8	67.7	67.2	°F	
pH	8.87	7.61	6.82	7.19	std. units	
Sp. Cond	110.0	561	1976	2540	umhos/cm	
D.O.	meter	meter	meter			
Volume	0	4	8	12	gallons	

Sample Collection Notes: Collected Blind duplicate PZ-99A at this location PID 0.5ppm at well head.

4th Volume T=66.7 pH=7.40 Sp Cond=2800 Vol. 16

Weather conditions at time of sampling: p. cloudy, 82°F

Sample characteristics: Pale orange in color

Sample date / time: 7/25/90 1550 Method of sample collection:

Sample sequence: VOCs / SVOCs / TAL Metals / TPH / TDS

Signature: Stepan Nevshehirlian Company: Golder Associates Inc. Date: 7/25/90

849880178

WATER SAMPLE FIELD INFORMATION FORM

Site:	PSE&G Harrison Gas Plant
Location:	Harrison, New Jersey
Project Number:	953-6306
Sampling Team:	S. Nevshehirlian / J. Hendel

Golder Associates

Sample Point ID: **PZ-10B** well / surface water / other (circle one)

Purging Device: Bailer

Depth to water before purging (ft-bmp) 3.90 Date: 7/25/96 Time: 1335

Well depth (ft-bmp) 6.76

Casing diameter (in) 2

Casing volume (gal) 0.5

Volume purged (gal) 1.5 Time Start: 1350 Time Finish: 1405

Depth to water after purging (ft-bmp) 4

Remarks:

Casing Volume Calculation

2"	4"	6"	8"
0.163 gal/ft	0.653 gal/ft	1.47 gal/ft	2.61 gal/ft

WELL INSPECTION (Circle Y or N)

Is well location correct on map?	Y or N	Is the well locked?	Y or N
Is well located in a dry area?	Y or N	Is the lock in good condition?	Y or N
Is well readily accessible?	Y or N	Is the well vented?	Y or N
Is well legibly labeled?	Y or N	Does casing have weep hole?	Y or N
Is well protected with posts?	Y or N	Does well have dedicated bailer?	Y or N
Is casing free of kinks/bends?	Y or N	Does well have dedicated pump?	Y or N
Is protective casing secure?	Y or N	Is equip. in good condition?	Y or N

Remarks:

FIELD MEASUREMENTS

	1)	2)	3)	4)	Units	Calibration Notes
Temp.	73.6	71.0	71.0	70.2	°F	
pH	6.95	6.36	6.24	6.21	std. units	
Sp. Cond	~~[illegible]~~	265	274	278	umhos/cm	
D.O.	188.7	meter malfunct				
Volume	0	0.5	1	1.5	gallons	

Sample Collection Notes: Collected Rinsate Blank RB-010 at this location prior to sampling sample time: 1350

Weather conditions at time of sampling: P. sunny 81°F

Sample characteristics: murky brownish gray slight odor

Sample date / time: 7/25/96 1410 Method of sample collection:

Sample sequence: **VOCs / SVOCs / TAL Metals / TPH / TDS**

Signature: [signature] Company: **Golder Associates Inc.** Date: 7/25/96

849880179

WATER SAMPLE FIELD INFORMATION FORM

Site:	PSE&G Harrison Gas Plant
Location:	Harrison, New Jersey
Project Number:	953-6306
Sampling Team:	S. Nevshehirlian / J. Hendel

Golder Associates

Sample Point ID: PZ-13B — (well) / surface water / other (circle one)

Purging Device: Bailer

Depth to water before purging (ft-bmp): 1.86 — Date: 7/25/96 — Time: 1430

Well depth (ft-bmp): 9.20

Casing diameter (in): 2

Casing volume (gal): 1.2

Volume purged (gal): 3.6 — Time Start: 1435 — Time Finish: 1447

Depth to water after purging (ft-bmp): 2.3

Remarks:

Casing Volume Calculation

2"	4"	6"	8"
0.163 gal/ft	0.653 gal/ft	1.47 gal/ft	2.61 gal/ft

WELL INSPECTION (Circle Y or N)

Is well location correct on map?	Y or N	Is the well locked?	Y or N
Is well located in a dry area?	Y or N	Is the lock in good condition?	Y or N
Is well readily accessible?	Y or N	Is the well vented?	Y or N
Is well legibly labeled?	Y or N	Does casing have weep hole?	Y or N
Is well protected with posts?	Y or N	Does well have dedicated bailer?	Y or N
Is casing free of kinks/bends?	Y or N	Does well have dedicated pump?	Y or N
Is protective casing secure?	Y or N	Is equip. in good condition?	Y or N

Remarks:

FIELD MEASUREMENTS

	1)	2)	3)	4)	Units	Calibration Notes
Temp.	74.1	72.0	70.7	70.6	°F	
pH	6.11	6.25	6.35	6.15	std. units	
Sp. Cond	1090	932	753	688	umhos/cm	
D.O.	meter	meter	meter			
Volume	~~1.20~~ 3.0	1.2	2.4	3.6	gallons	

Sample Collection Notes: 3.7 ppm @ well head

Weather conditions at time of sampling: p. sunny, humid 82°F

Sample characteristics: murky brown-gray slight to med odor SH. sheen

Sample date / time: 7/25/96 1450 — Method of sample collection:

Sample sequence: VOCs / SVOCs / TAL Metals / TPH / TDS

Signature: [signature] — Company: Golder Associates Inc. — Date: 7/25/96

849880180

WATER SAMPLE FIELD INFORMATION FORM

Site:	PSE&G Harrison Gas Plant
Location:	Harrison, New Jersey
Project Number:	953-6306
Sampling Team:	S. Nevshehirlian / J. Hendel

Golder Associates

Sample Point ID: PZ-1A (well) / surface water / other (circle one)

Purging Device: Bailer

Depth to water before purging (ft-bmp): 7.73 Date: 7/25/96 Time: 1140

Well depth (ft-bmp): 39.95

Casing diameter (in): 2

Casing volume (gal): 5.25

Volume purged (gal): 5.25 Time Start: 1145 Time Finish: 1218

Depth to water after purging (ft-bmp): 20

Remarks:

Casing Volume Calculation

2"	4"	6"	8"
0.163 gal/ft	0.653 gal/ft	1.47 gal/ft	2.61 gal/ft

WELL INSPECTION (Circle Y or N)

Is well location correct on map?	(Y) or N	Is the well locked?	(Y) or N
Is well located in a dry area?	(Y) or N	Is the lock in good condition?	(Y) or N
Is well readily accessible?	(Y) or N	Is the well vented?	Y or (N)
Is well legibly labeled?	(Y) or N	Does casing have weep hole?	Y or N NA
Is well protected with posts?	Y or (N)	Does well have dedicated bailer?	Y or (N)
Is casing free of kinks/bends?	(Y) or N	Does well have dedicated pump?	Y or (N)
Is protective casing secure?	(Y) or N	Is equip. in good condition?	(Y) or N

Remarks: Flushmount

FIELD MEASUREMENTS

	1)	2)	3)	4)	Units	Calibration Notes
Temp.	70.8	66.8	66.1	66.8	°F	
pH	10.22	10.71	9.46	9.45	std. units	
Sp. Cond	6590	6210	6880	6960	umhos/cm	
D.O.	—	~~water~~	~~malfunct~~			
Volume	0	5.25	10.5	15.75	gallons	

Sample Collection Notes:

Weather conditions at time of sampling: Hazy, humid, 81°F

Sample characteristics: m. clear

Sample date / time: 7/25/96 12:20 Method of sample collection: Bailer

Sample sequence: **VOCs / SVOCs / TAL Metals / TPH / TDS**

Signature: Stepa Nevshehirlian Company: **Golder Associates Inc.** Date: 7/25/96

849880181

WATER SAMPLE FIELD INFORMATION FORM

Site:	PSE&G Harrison Gas Plant
Location:	Harrison, New Jersey
Project Number:	953-6306
Sampling Team:	S. Nevshehirlian / J. Hendel

Golder Associates

Sample Point ID: PZ-1B (well) / surface water / other (circle one)

Purging Device: Bailer

Depth to water before purging (ft-bmp): 6.22 Date: 7/25/96 Time: 1100

Well depth (ft-bmp): 9.72

Casing diameter (in): 2

Casing volume (gal): 0.57

Volume purged (gal): 1.8 Time Start: 1112 Time Finish: 1122

Depth to water after purging (ft-bmp): 6.5

Remarks:

Casing Volume Calculation

2"	4"	6"	8"
0.163 gal/ft	0.653 gal/ft	1.47 gal/ft	2.61 gal/ft

WELL INSPECTION (Circle Y or N)

Is well location correct on map?	Y or N	Is the well locked?	Y or N
Is well located in a dry area?	Y or N	Is the lock in good condition?	Y or N
Is well readily accessible?	Y or N	Is the well vented?	Y or N
Is well legibly labeled?	Y or N	Does casing have weep hole?	Y or N
Is well protected with posts?	Y or N	Does well have dedicated bailer?	Y or N
Is casing free of kinks/bends?	Y or N	Does well have dedicated pump?	Y or N
Is protective casing secure?	Y or N	Is equip. in good condition?	Y or N

Remarks:

FIELD MEASUREMENTS

	1)	2)	3)	4)	Units	Calibration Notes
Temp.	75.2	73.8	73.1	72.3	°F	
pH	6.59	6.57	6.55	6.51	std. units	
Sp. Cond	2090	2070	1950	1910	umhos/cm	
D.O.	meter	malfunction				
Volume	0	~~0.5~~ 0.6	~~1.0~~ 1.2	~~1.5~~ 1.8	gallons	

Sample Collection Notes: Collected Extra Volume for MS/MSD analysis

0 ppm at well head

Weather conditions at time of sampling: hazy, humid, 80°F

Sample characteristics: murky brown-gray in color no noticeable odor

Sample date / time: 7/25/96 11:30 Method of sample collection: Bailer

Sample sequence: **VOCs / SVOCs / TAL Metals / TPH / TDS**

Signature: Stephen Nevshehirlian Company: **Golder Associates Inc.** Date: 7/25/96

849880182

FIELD TEST PIT LOG

Job No. 953-6306 Project PSE&G/HARRISON/NJ Test Pit No. TP-1
Contractor UNI-TECH Operator R. BAER Equipment CAT 416B TURBO
GAI Insp. S. NEVSHEHIRLIAN Elevation 8.78 Started 0950/05-20-96
Weather HAZY SUNSHINE, LIGHT WIND, 83° F Completed 1010/05-20-96
Location N 693474.47 E 2140795.03

TEST PIT SKETCH

SCALE: 1 INCH= 2.5 feet

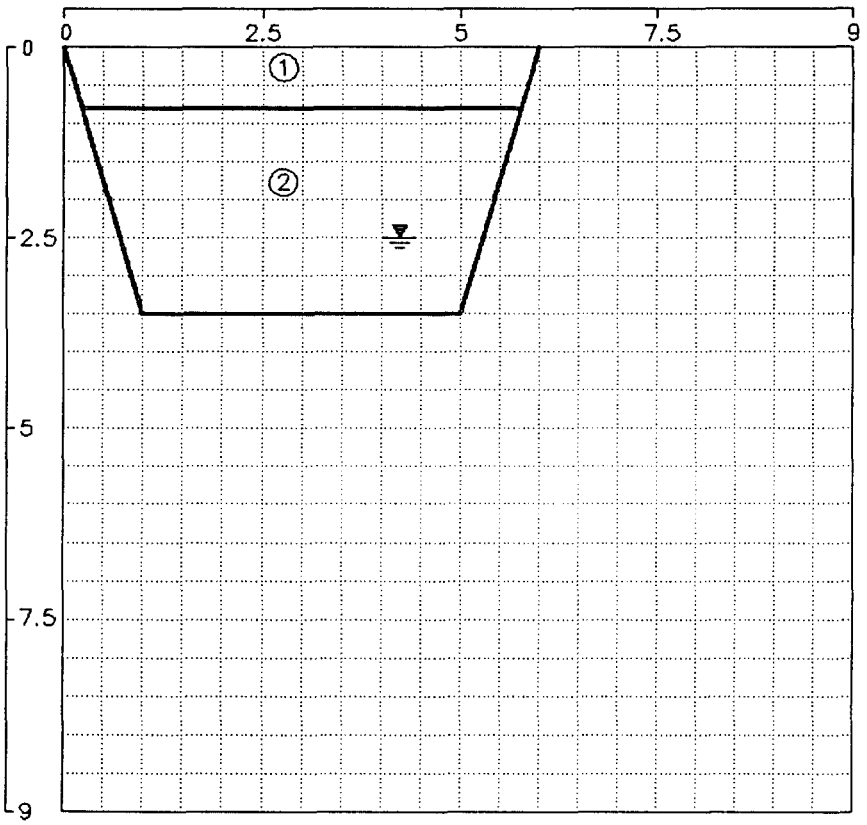

NOTES / STRATA DESCRIPTIONS

① 0.0-0.8 ft. Light gray, cemented, fine to coarse GRAVEL.

② 0.8-3.5 ft. Light gray, medium to coarse GRAVEL, trace to fine to coarse sand.

PID Readings

0"-6"	0 ppm
6"-12"	0 ppm
12"-18"	21 ppm
18"-24"	16 ppm
24"-30"	1 ppm

SAMPLES

NO.	DEPTH (bgs)	NOTES

EXCAVATION NOTES

WATER LEVELS

TIME	WATER DEPTH (bgs)
1005	2.5'

Golder Associates

849880183

FIELD TEST PIT LOG

Job No. 953-6306 Project PSE&G/HARRISON/NJ Test Pit No. TP-2
Contractor UNI-TECH Operator R. BAER Equipment CAT 416B TURBO
GAI Insp. S. NEVSHEHIRLIAN Elevation 8.52 Started 1400/05-20-96
Weather N/A Completed 1420/05-20-96
Location N 693328.91 E 2140272.41

TEST PIT SKETCH

SCALE: 1 INCH= 2.5 feet

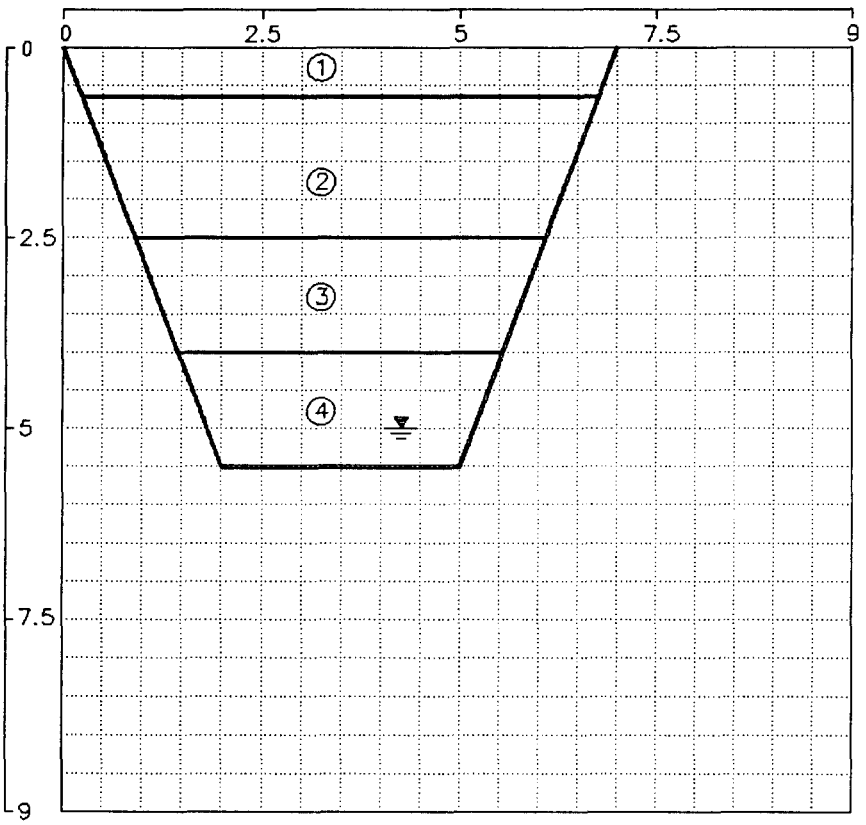

NOTES / STRATA DESCRIPTIONS

① 0.0-0.67 ft. Light brown, fine SAND, some silt, little gravel with miscellaneous (wood, brick, etc.) fill intermixed.

② 0.67-2.5 ft. Moderate, brown, fine SAND and SILT with some reddish-brown, clayey silt and miscellaneous fill intermixed.

③ 2.5-4.0 ft. Dark brown SILT, little fine sand with miscellaneous fill intermixed.

④ 4.0-5.5 ft. Orange-brown, fine to medium SAND, little silt and gravel.

SAMPLES

NO.	DEPTH (bgs)	NOTES
TP-2	54"-60"	VOC, SVOC, TPH,
		Metals *
		* Extra volume collected
		for MS/MSD analysis.

PID Readings

0"-6"	0 ppm
6"-12"	0 ppm
12"-18"	0 ppm
18"-24"	0 ppm
24"-30"	0 ppm
30"-36"	0 ppm
36"-42"	0 ppm
42"-48"	0 ppm
48"-54"	0 ppm
54"-60"	0 ppm
60"-66"	0 ppm

EXCAVATION NOTES

WATER LEVELS

TIME	WATER DEPTH (bgs)
1420	5'
1600	5'

Golder Associates

849880184

FIELD TEST PIT LOG

Job No. 953-6306 Project PSE&G/HARRISON/NJ Test Pit No. TP-3
Contractor UNI-TECH Operator R. BAER Equipment CAT 416B TURBO
GAI Insp. S. NEVSHEHIRLIAN Elevation 7.54 Started 1305/05-20-96
Weather HAZY SUNSHINE, LIGHT WIND, 83° F Completed 1340/05-20-96
Location N 693172.49 E 2140537.89

TEST PIT SKETCH

SCALE: 1 INCH= 2.5 feet

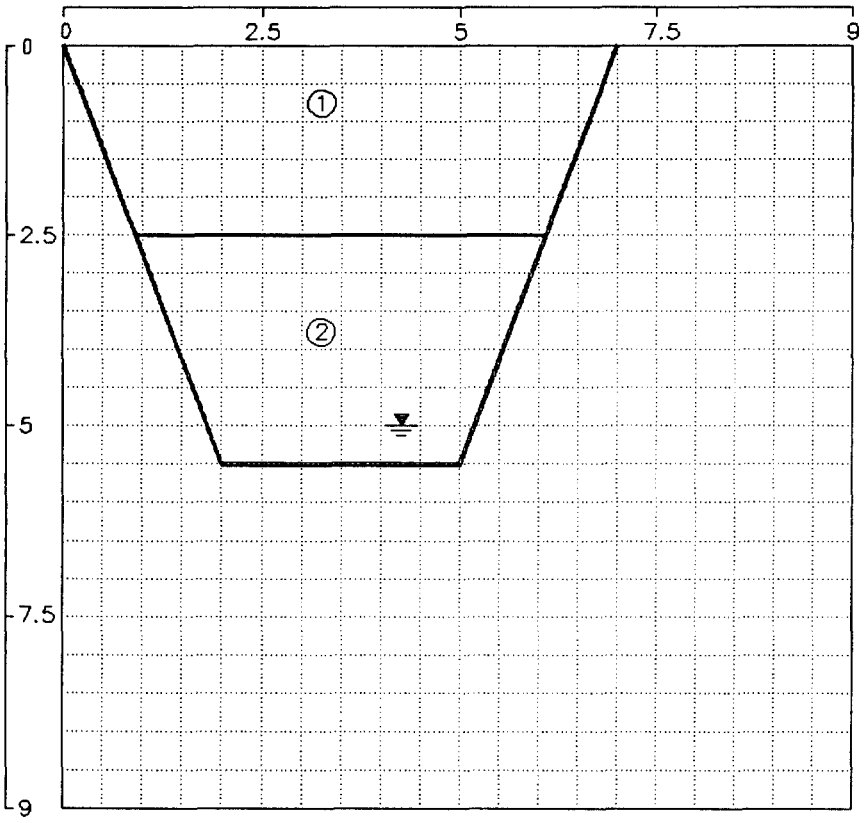

NOTES / STRATA DESCRIPTIONS

① 0.0-2.5 ft. Miscellaneous SAND, SILT, and GRAVEL fill, some bricks.

② 2.5-5.5 ft. Moderate brown, fine to coarse SAND and GRAVEL, some silt, occasional miscellaneous fill intermixed.
Hit water at 5.0 ft. Noticeable "tar-like" odor and oily sheen on water.

PID Readings	
0"-6"	0.1 ppm
6"-12"	0.2 ppm
12"-18"	0.0 ppm
18"-24"	0.2 ppm
24"-30"	0.3 ppm
30"-36"	0.2 ppm
36"-42"	0.3 ppm
42"-48"	0.4 ppm
48"-54"	0.4 ppm
54"-60"	45 ppm
60"-66"	No reading

SAMPLES

NO.	DEPTH (bgs)	NOTES
TP-3	54"-60"	VOC, SVOC, TPH, Metals
TP-10	54"-60"	Duplicate of TP-3

EXCAVATION NOTES

WATER LEVELS

TIME	WATER DEPTH (bgs)
1340	5'
1610	4.3'

Golder Associates

849880185

FIELD TEST PIT LOG

Job No. 953-6306 Project PSE&G/HARRISON/NJ Test Pit No. TP-4
Contractor UNI-TECH Operator R. BAER Equipment CAT 416B TURBO
GAI Insp. S. NEVSHEHIRLIAN Elevation 7.79 Started 1140/05-20-96
Weather HAZY SUNSHINE, LIGHT WIND, 83° F Completed 1200/05-20-96
Location N 692918.77 E 2140804.62

TEST PIT SKETCH

SCALE: 1 INCH= 2.5 feet

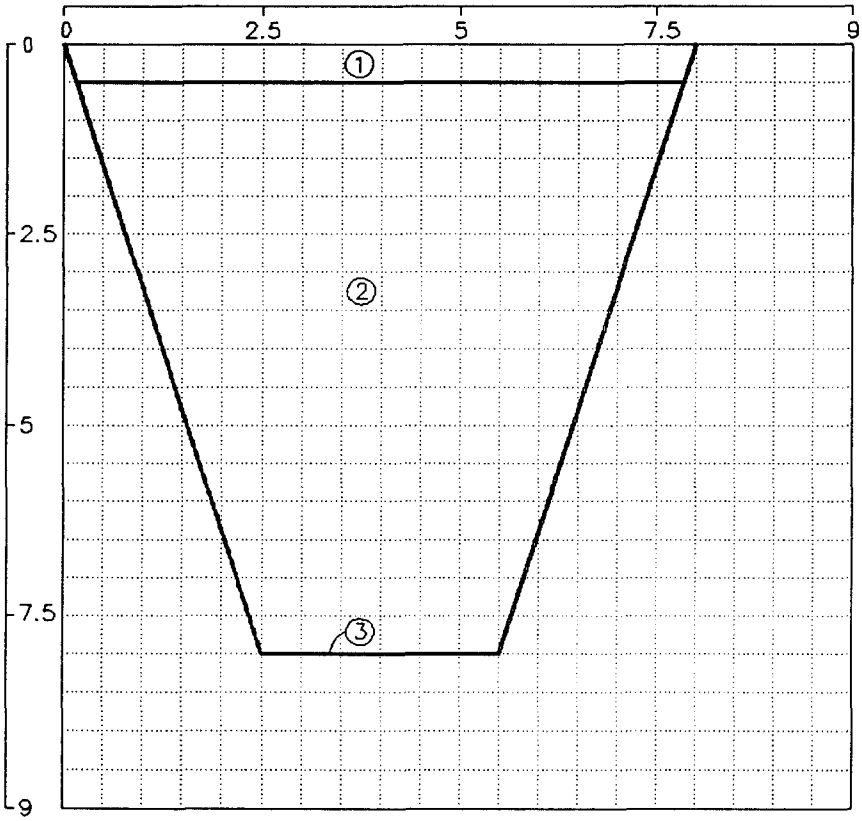

NOTES / STRATA DESCRIPTIONS

① 0.0-0.5 ft. Medium gray, cemented, fine to medium GRAVEL.

② 0.5-8.0 ft. Brownish-gray, fine to coarse SAND, SILT, and CLAY with occasional brick, wood, and gravel intermixed.

③ 8.0 ft. Horizontal "timber" members of existing bulkhead.

PID Readings

0"-6"	0.0 ppm
6"-12"	0.0 ppm
12"-18"	0.0 ppm
18"-24"	0.1 ppm
24"-30"	0.2 ppm
30"-36"	0.2 ppm
36"-42"	0.2 ppm
42"-48"	0.2 ppm
48"-54"	0.5 ppm
54"-60"	0.5 ppm
60"-66"	0.5 ppm
66"-72"	0.5 ppm
72"-78"	2.5 ppm
78"-84"	5.0 ppm
84"-90"	4.0 ppm
90"-96"	4.5 ppm

SAMPLES

NO.	DEPTH (bgs)	NOTES
TP-4	78"-84"	VOC, SVOC, TPH, Metals

EXCAVATION NOTES

WATER LEVELS

TIME	WATER DEPTH (bgs)
1150	5'
1630	>8'

Golder Associates

849880186

FIELD TEST PIT LOG

Job No. 953-6306 Project PSE&G/HARRISON/NJ Test Pit No. TP-5
Contractor UNI-TECH Operator R. BAER Equipment CAT 416B TURBO
GAI Insp. S. NEVSHEHIRLIAN Elevation 5.52 Started 1040/05-20-96
Weather HAZY SUNSHINE, LIGHT WIND, 83° F Completed 1100/05-20-96
Location N 692808.14 E 2141352.33

TEST PIT SKETCH

SCALE: 1 INCH= 2.5 feet

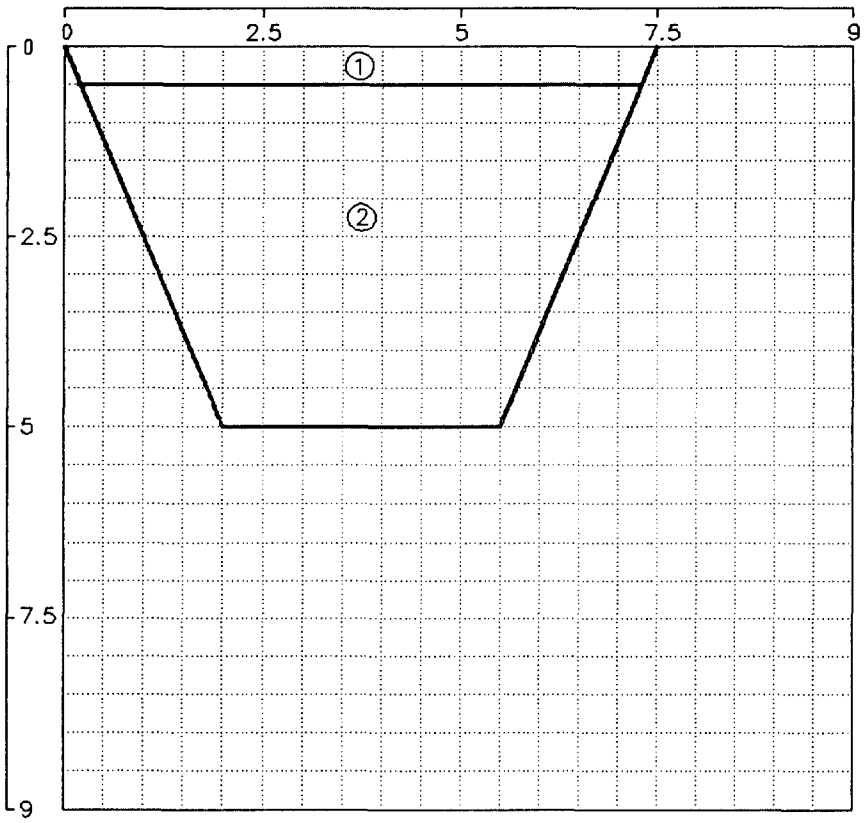

NOTES / STRATA DESCRIPTIONS

① 0.0-0.5 ft. Cemented GRAVEL/ BITUMINOUS PAVEMENT.

② 0.5-5.0 ft. Brownish-gray, fine to coarse SAND, SILT, and GRAVEL with occasional wood and brick intermixed. (Wooden bulkhead members at 4'.) (Iron staining at 3'.)

PID Readings

0"-6"	0.0 ppm
6"-12"	0.0 ppm
12"-18"	0.5 ppm
18"-24"	23 ppm
24"-30"	70 ppm
30"-36"	61 ppm
36"-42"	40 ppm
42"-48"	38 ppm
48"-54"	16 ppm
54"-60"	0.0 ppm

SAMPLES

NO.	DEPTH (bgs)	NOTES
TP-5	24"-30"	VOC, SVOC, TPH, Metals

EXCAVATION NOTES

WATER LEVELS

TIME	WATER DEPTH (bgs)
1100	4.5'
1645	4' Oily sheen on water

Golder Associates

849880187

CONETEC

GOLDER ASSOC.

Site: TC-01
Location: HARRISON

Cone: 20 TON A 24
Date: 07:12:96 08:53

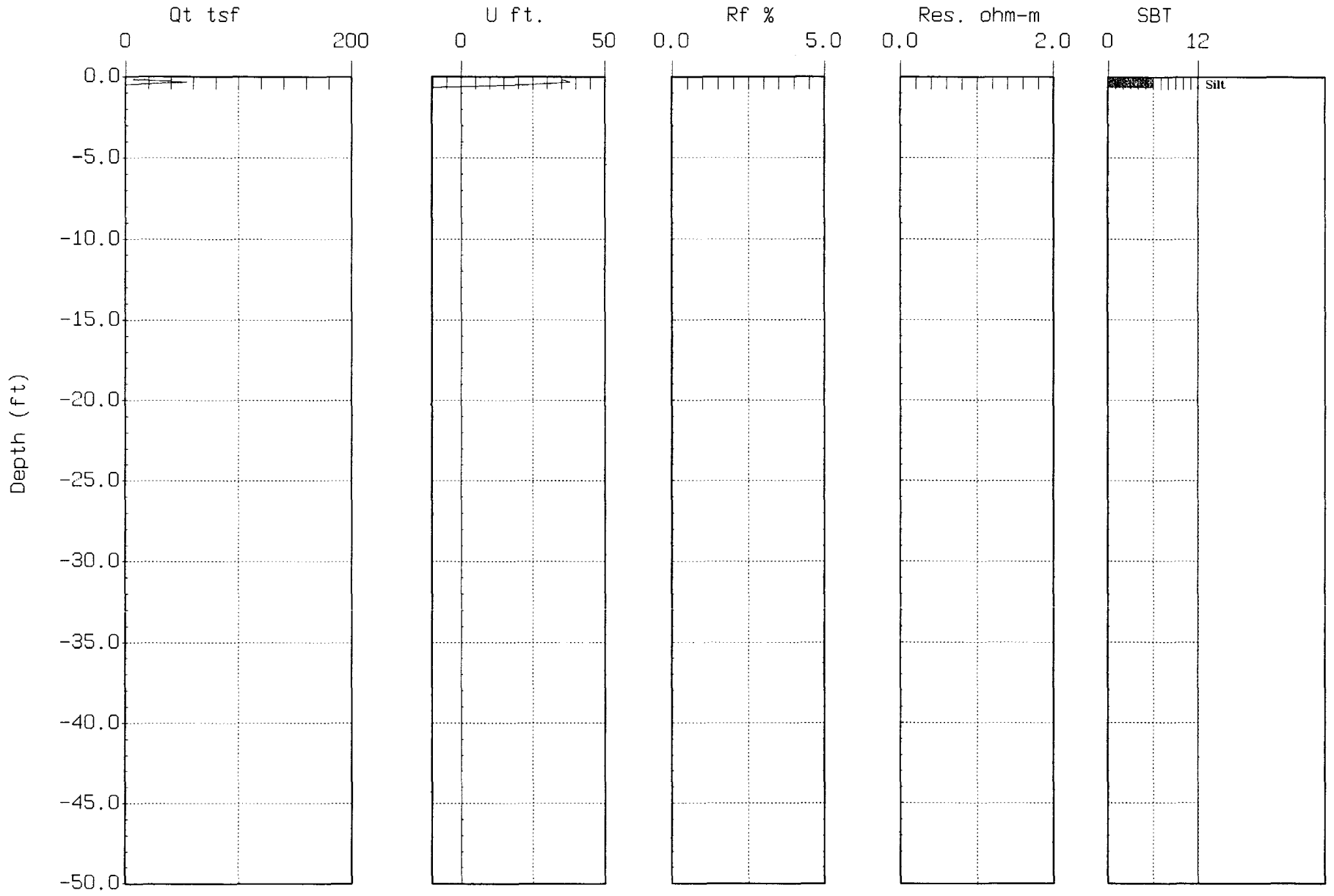

Max. Depth: 0.66 (ft)

Depth Inc.: 0.164 (ft)

SBT: Soil Behavior Type (Robertson and Campanella 1988)

849880188

CONETEC

GOLDER ASSOC.

Site: CT-02
Location: HARRISON

Cone: 20 TON AD24
Date: 07:12:96 09:58

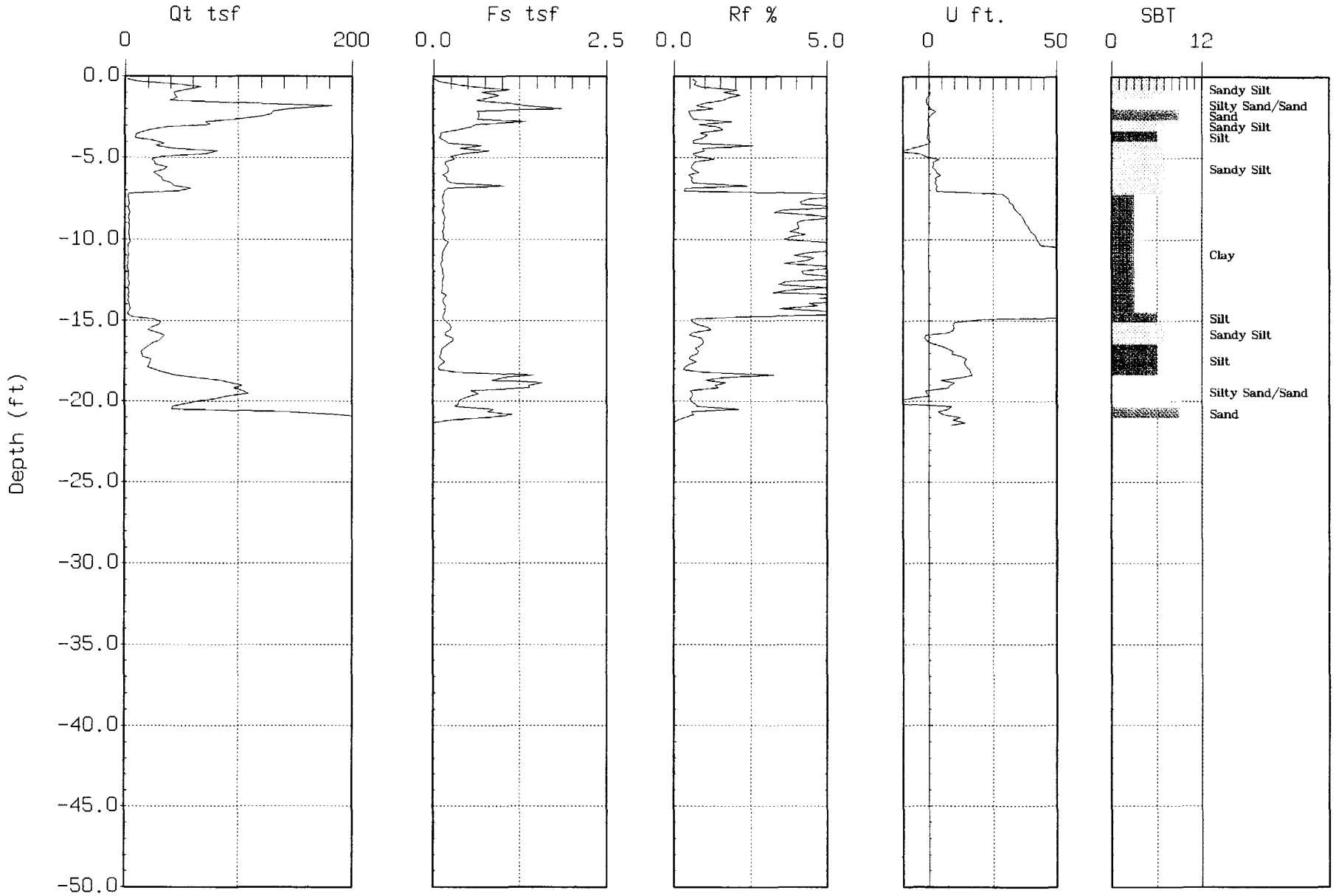

Max. Depth: 21.49 (ft)

Depth Inc.: 0.164 (ft)

SBT: Soil Behavior Type (Robertson and Campanella 1988)

8498801189

CONETEC

GOLDER ASSOC.

Site: TC-3
Location: HARRISON

Cone: 20 TON A 24
Date: 07:16:96 15:05

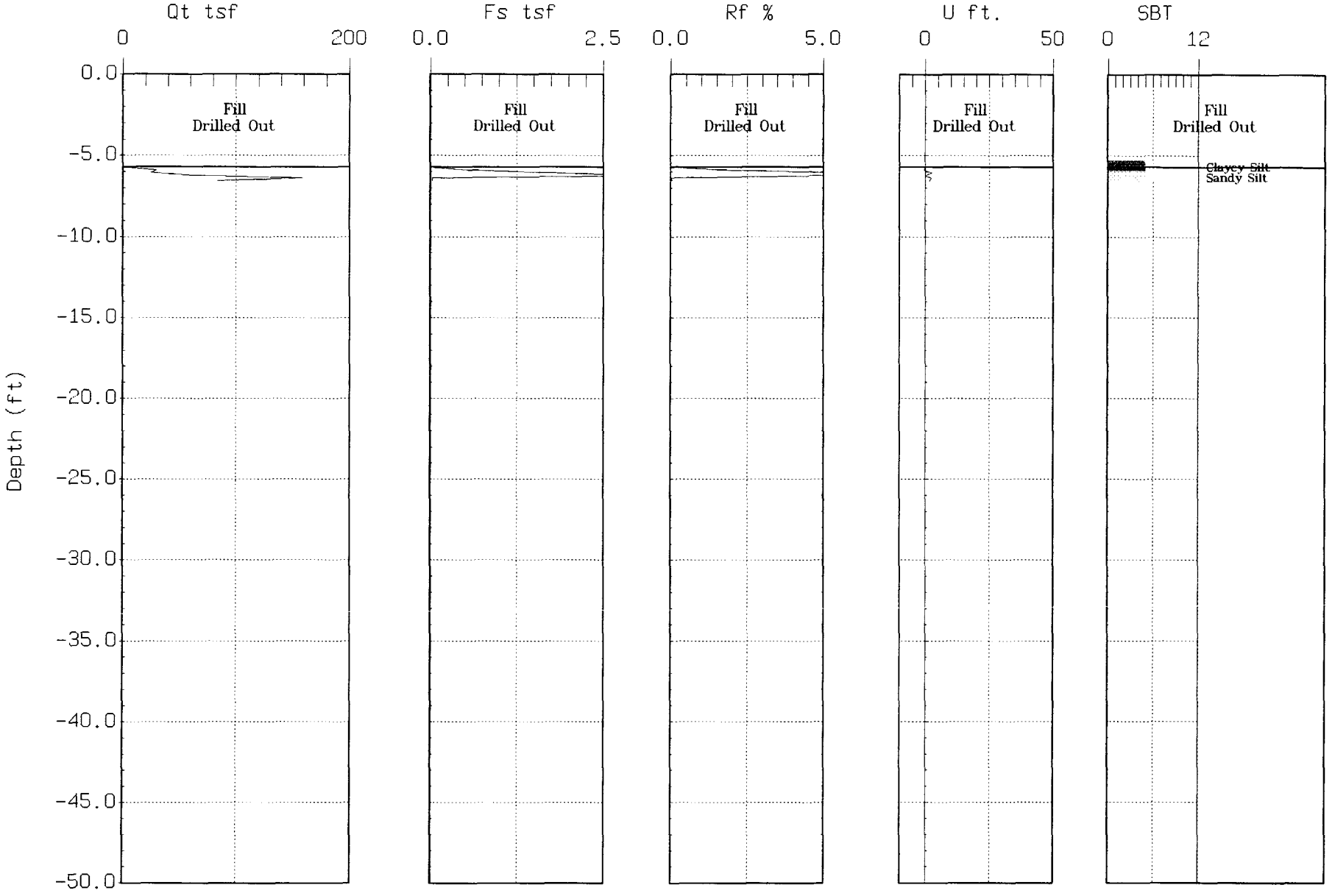

Max. Depth: 6.56 (ft)

Depth Inc.: 0.164 (ft)

SBT: Soil Behavior Type (Robertson and Campanella 1988)

8498801 90

CONETEC

GOLDER ASSOC.

Site: TC-04
Location: HARRISON

Cone: 20 TON A 24
Date: 07:16:96 14:09

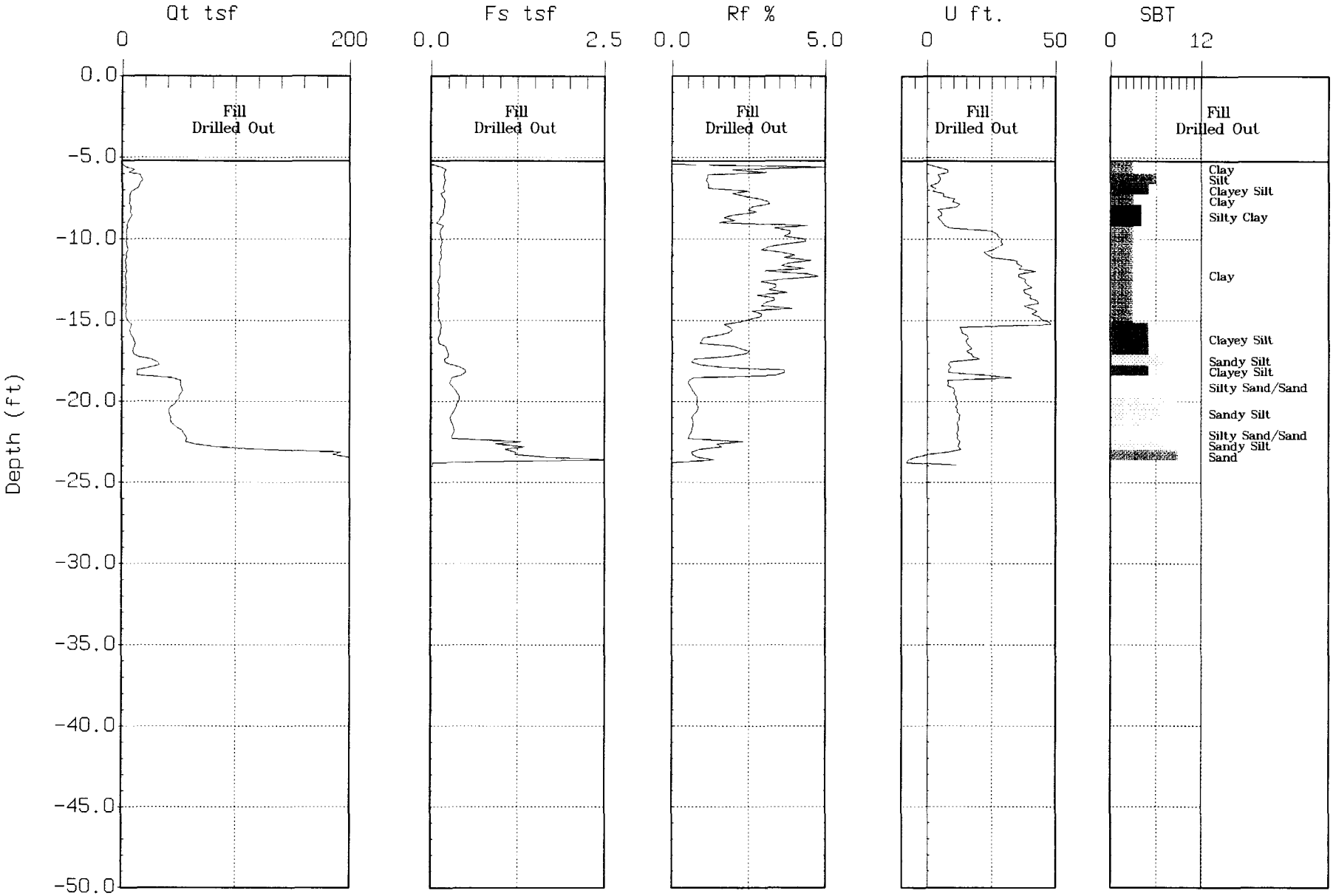

Max. Depth: 23.95 (ft)

Depth Inc.: 0.164 (ft)

SBT: Soil Behavior Type (Robertson and Campanella 1988)

8498801 91

CONETEC

GOLDER ASSOC.

Site: TC-05
Location: HARRISON

Cone: 20 TON A24
Date: 07:16:96 12:47

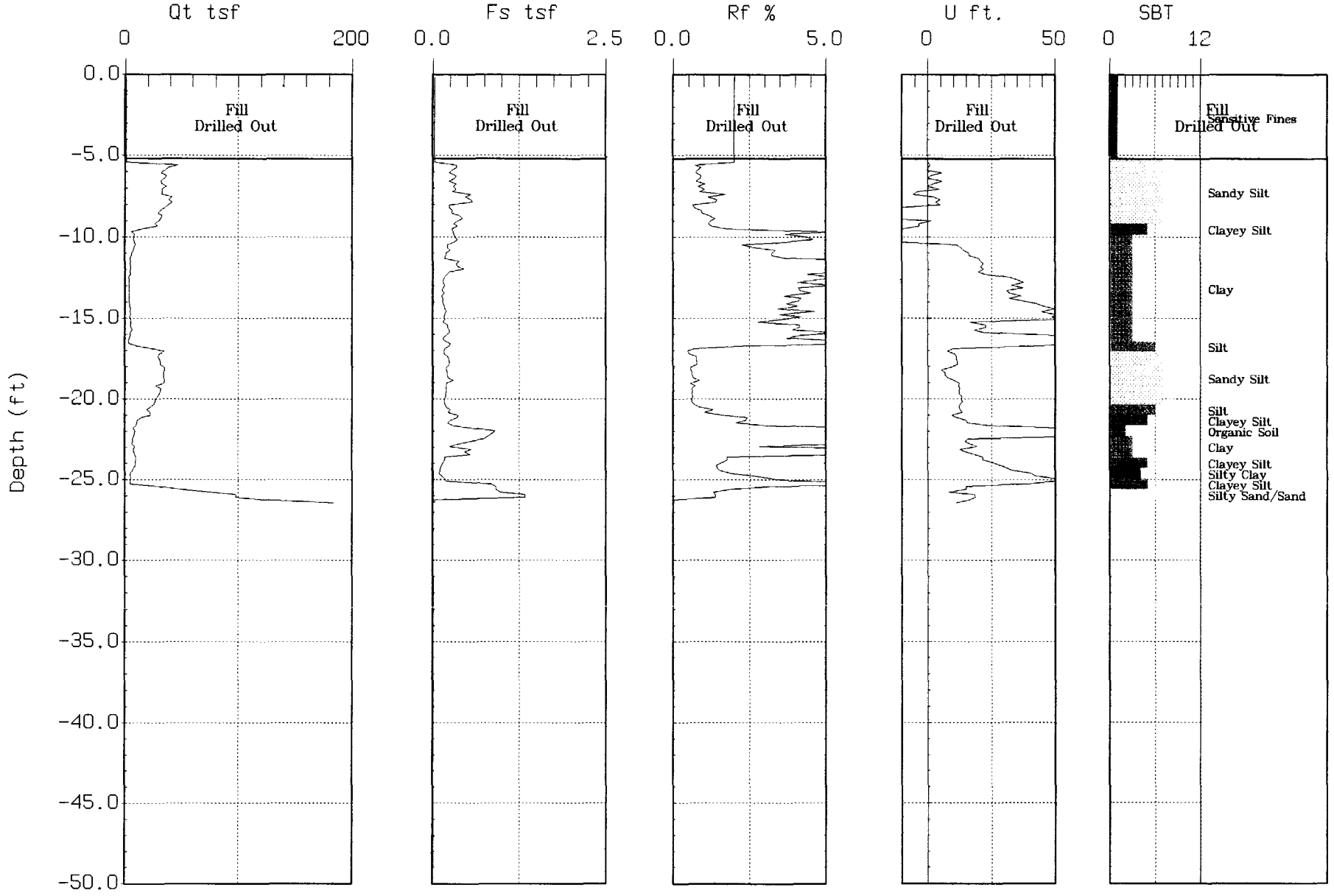

Max. Depth: 26.41 (ft)

Depth Inc.: 0.164 (ft)

SBT: Soil Behavior Type (Robertson and Campanella 1988)

849880192

CONETEC

GOLDER ASSOC.

Site: TC-06
Location: HARRISON

Cone: 20 TON A 24
Date: 07:16:96 10:25

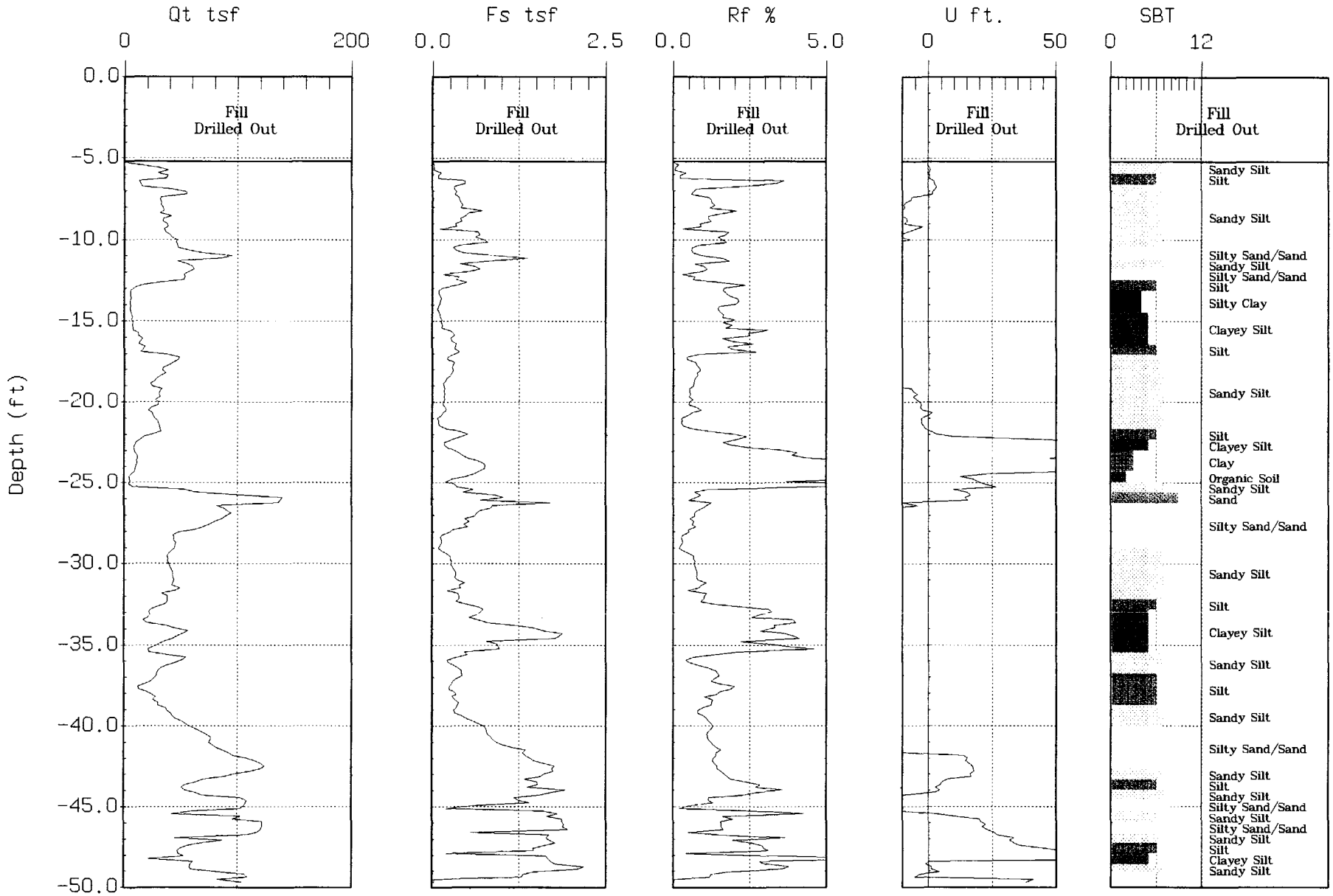

Max. Depth: 49.70 (ft)

Depth Inc.: 0.164 (ft)

SBT: Soil Behavior Type (Robertson and Campanella 1988)

849880193

CONETEC

GOLDER ASSOC.

Site: TC-07
Location: HARRISON

Cone: 20 TON A 24
Date: 07:16:96 07:47

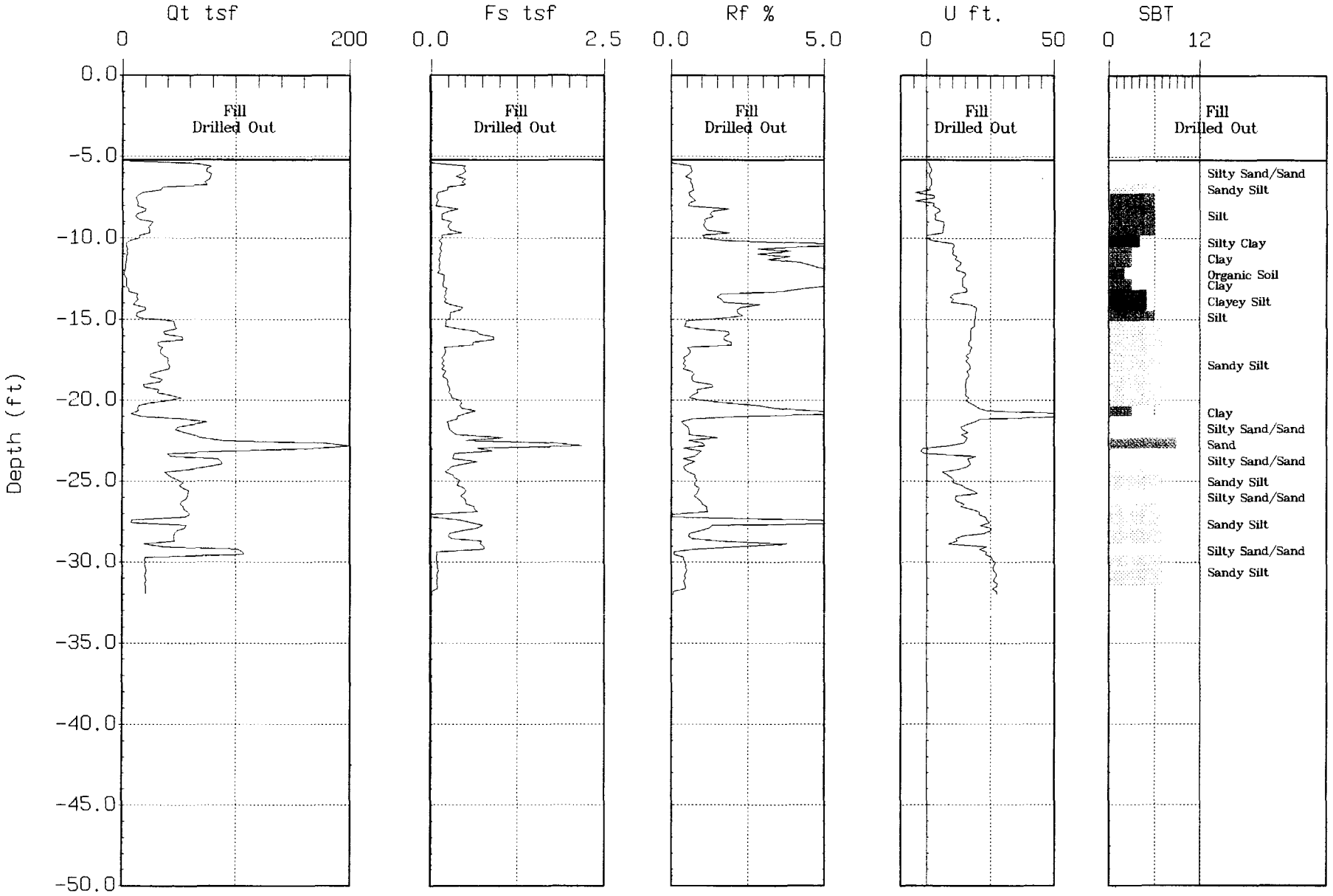

Max. Depth: 31.99 (ft)

Depth Inc.: 0.164 (ft)

SBT: Soil Behavior Type (Robertson and Campanella 1988)

8498801194

CONETEC

GOLDER ASSOC.

Site: TC-08
Location: HARRISON

Cone: 20 TON A 24
Date: 07:15:96 15:00

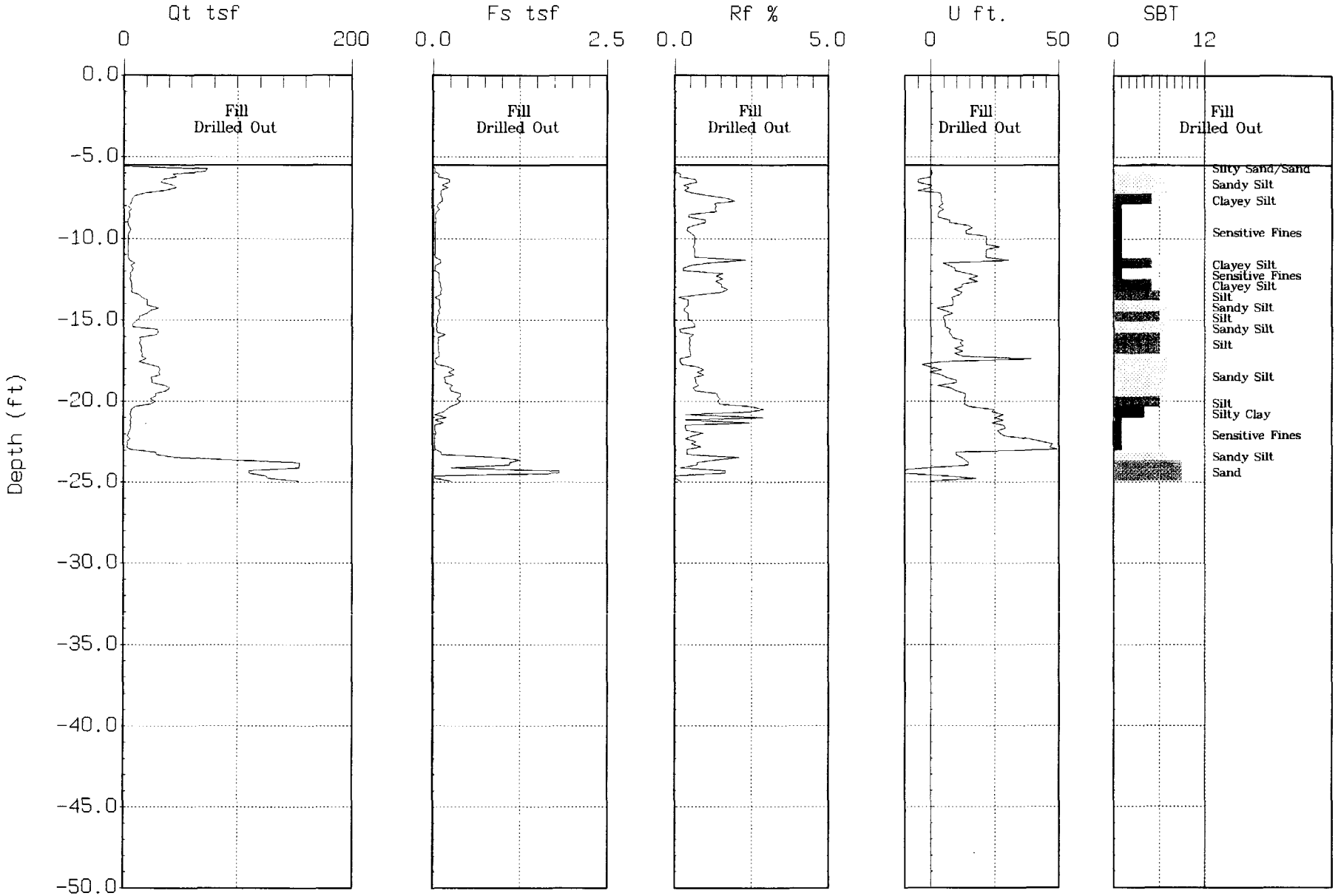

Max. Depth: 24.93 (ft)

Depth Inc.: 0.164 (ft)

SBT: Soil Behavior Type (Robertson and Campanella 1988)

8498801 95

CONETEC

GOLDER ASSOC.

Site: TC-09
Location: HARRISON

Cone: 20 TON A 24
Date: 07:15:96 13:17

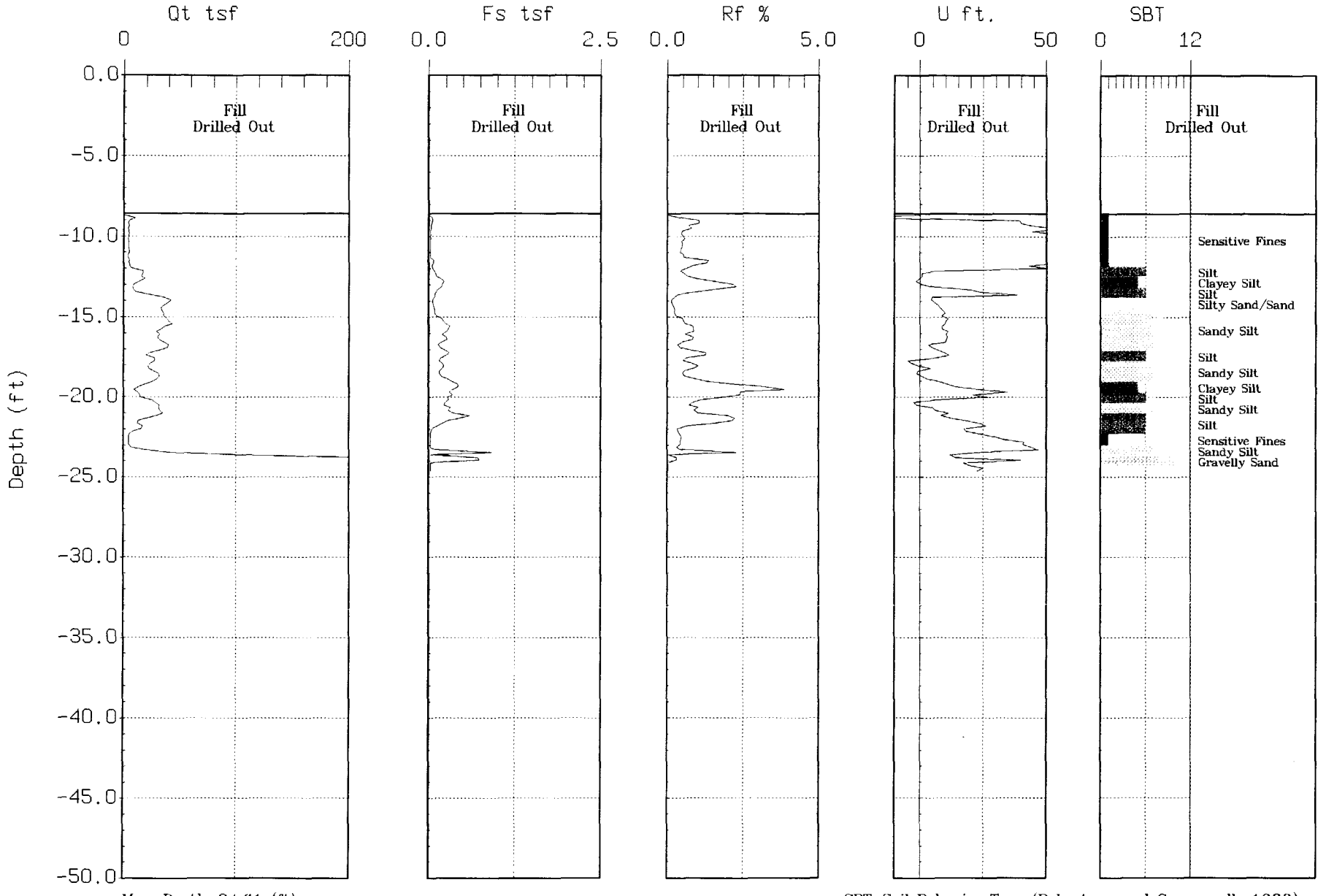

Max. Depth: 24.61 (ft)

Depth Inc.: 0.164 (ft)

SBT: Soil Behavior Type (Robertson and Campanella 1988)

849880196

Appendix C

Appendix C

Soil Analytical Results Package

Due to the volume of data, this appendix has been submitted as a separate package.

Appendix D

8498802 00

Appendix D

Geotechnical Laboratory Testing Results

PARTICLE-SIZE ANALYSIS OF SOILS

ASTM D 421, D 422, D 1140, D 2216, D 2217

PSE&G/RI-IRA/NJ **953-6306**		**SAMPLE #:**	**B2 20'-22'**

MOISTURE CONTENT (Delivered Moisture)

tare #	RW5
wt soil&tare,moist (g)	1109.53
wt soil&tare,dry (g)	872.58
wt tare (g)	156.61
wt moisture (g)	236.95
wt dry soil (g)	715.97
% moisture	**33.09%**

% PASSING #10 SIEVE

Total Wt (g)	715.97
Wt Split #10 (g)	480.30
% passing #10	67.08%

	SIEVE	wt ret (g)	% ret	% pass	SIEVE	
coarse gravel	3.000		0.00%	**100.00%**	3.000	coarse gravel
	1.500		0.00%	**100.00%**	1.500	
	1.000		0.00%	**100.00%**	1.000	
fine gravel	0.750	31.59	4.41%	**95.59%**	0.750	fine gravel
	0.375	160.95	22.48%	**77.52%**	0.375	
coarse sand	#4	195.47	27.30%	**72.70%**	#4	coarse sand
medium sand	#10	235.67	32.92%	**67.08%**	#10	medium sand

SAMPLE PREPARATION FOR HYDROMETER ANALYSIS

% Passing #10 Sieve	67.08	Initial Moist Weight	70.65
Specific Gravity (ASSUMED)	2.65	Calculated Dry Weight	70.57
ml Dispersing Agent Used (40 ml Na(PO4)n per 1000 ml H2O)	125		

MOISTURE CONTENT (Hygroscopic - #10)

tare #	Z1	tare #	GH7		
wt soil&tare,moist (g)	40.08	wt soil&tare,dry (g)	230.01	LL:	39
wt soil&tare,dry (g)	40.06	wt soil&tare,wash (g)	197.81	PL:	38
wt tare (g)	21.82	wt tare (g)	159.44	PI:	1
wt moisture (g)	0.02	wt fines lost (g)	32.20		
wt dry soil (g)	18.24	wt dry soil (g)	70.57		
% moisture	**0.11%**	% fines lost	**45.63%**		

PERCENT BETWEEN #10 AND #200 SIEVE CALCULATION

SIEVE	CUMUL WT RETAINED	CUMUL WT RET. CORR.	PERCENT PASSING		
#10	0.00	34.63	**67.08%**	#10	medium sand
#20	5.58	40.21	**61.78%**	#20	
#40	14.66	49.29	**53.15%**	#40	fine sand
#60	22.02	56.65	**46.15%**	#60	
#100	30.88	65.51	**37.73%**	#100	
#200	38.37	73.00	**30.61%**	#200	fines

DATE	TIME	TIME,CUM (min)	READING R	TEMP T	HYD RDG H	PARTICLE DIAMETER	% FINER
9/3/96	8:19	2.0	31.0	26.0	4.0	0.031	**25.67%**
	8:21	4.0	28.0	26.0	4.0	0.023	**22.81%**
	8:25	8.0	25.0	26.0	4.0	0.016	**19.96%**
	8:32	15.0	21.0	26.0	4.0	0.012	**16.16%**
	8:47	30.0	17.0	25.5	4.5	0.009	**11.88%**
	9:17	60.0	15.0	25.0	5.0	0.006	**9.51%**
	10:17	120.0	13.0	24.0	5.0	0.005	**7.60%**
	12:17	240.0	12.0	23.5	5.0	0.003	**6.65%**
	16:17	480.0	10.0	24.0	5.0	0.002	**4.75%**
9/4/96	8:17	1440.0	8.0	26.5	4.0	0.001	**3.80%**

%C GRVL:	**4.41%**
%F GRVL:	**22.89%**
%C SAND:	**5.61%**
%M SAND:	**13.94%**
%F SAND:	**22.54%**
%FINES:	**30.61%**
%TOTAL:	**100.00%**

Wet Color: **Very dark brown**
Description: **m-f SAND, some silt, some f gravel (SM)**

DATE	9/4/96
TECH	RDD
REVIEW	RMW

GOLDER ASSOCIATES INC.
MT. LAUREL, NEW JERSEY

849880202

PARTICLE-SIZE DISTRIBUTION ASTM D 421 AND D 422
US STANDARD SIEVE OPENING SIZES

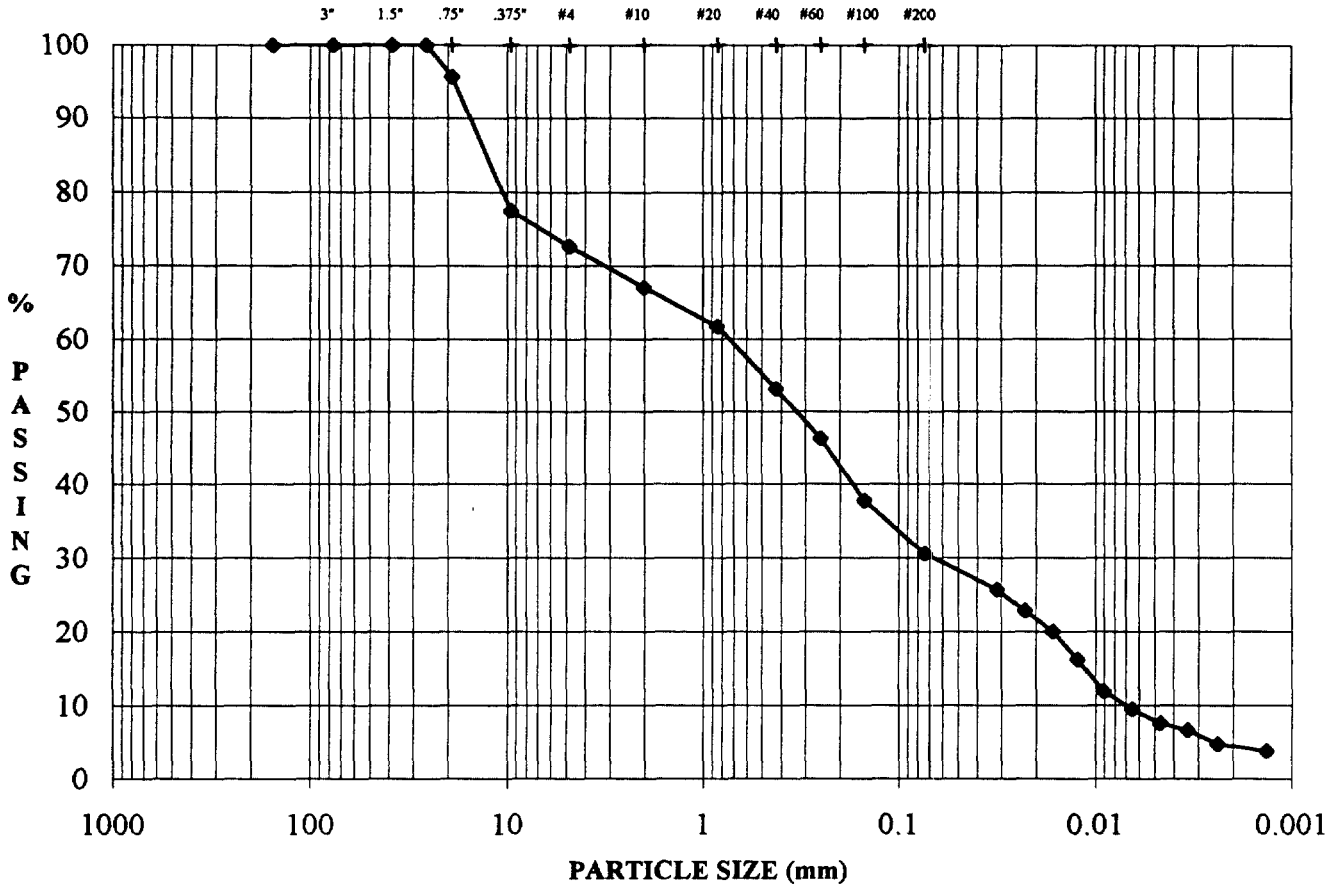

COBBLES	Coarse	Fine	Cor	Med	Fine	Silt or Clay Size
	GRAVEL		SAND			FINES

SAMPLE #:	B2 20'-22'	Mc:	33.09%
		LL:	39
		PL:	38
WET COLOR:	Very dark brown	PI :	1
DESCRIPTION:	m-f SAND, some silt, some f gravel (SM)	Gs:	-

PSE&G/RI-IRA/NJ
953-6306

DATE	9/4/96
TECH	RDD
REVIEW	RMW

GOLDER ASSOCIATES INC.
MT. LAUREL, NEW JERSEY

MEASUREMENT OF HYDRAULIC CONDUCTIVITY OF SATURATED POROUS MATERIALS USING A FLEXIBLE WALL PERMEAMETER (ASTM D 5084) METHOD C, FALLING HEAD WITH INCREASING TAILWATER LEVEL

PSE&G/RI-IRA/NJ 953-6306	SAMPLE #:	B-2 20'-22'	TYPE:	ST	TECH REVIEW: JMP / RMW

SAMPLE DATA, INITIAL				SAMPLE DATA, FINAL		COMMENTS
height, cm	7.863	B-value	1.00	height, cm	7.794	
diameter, cm	7.264	cell pressure, psi	37.3	diameter, cm	6.985	
area, cm^2	41.44	bottom pressure, psi	30.5	area, cm^2	38.32	
volume, cm^3	325.86	top pressure, psi	29.5	volume, cm^3	298.66	
weight, g	589.95	head, cm	70.3	weight, g	570.9	
% moisture	32.23	maximum gradient	14.96	% moisture	26.07	
dry density, pcf	85.44	minimum gradient	2.68	dry density, pcf	94.61	
volume solids, cm^3	171.60	total back pressure, psi	30.0	volume solids, cm^3	174.17	
volume voids, cm^3	154.26	maximum effective stress	7.8	volume voids, cm^3	124.50	
void ratio	0.90	minimum effective stress	6.8	void ratio	0.71	
% saturation	93.21	specific gravity	2.60	% saturation	94.84	

TIME FUNCTION					READINGS					
Date	Hour	Minute	dt,elapsed (min)	dt,elapsed (sec)	Inflow (cc)	Outflow (cc)	Head (cm)	(H1/H2) (inc.)	Gradient	Permeability (cm/sec)
8/28/96	15	1	0	0	2.0	45.7	116.62		14.96	
8/28/96	16	12	71	4260	3.0	44.5	114.29	1.02	14.66	4.5E-07
8/28/96	17	17	136	8160	3.8	43.6	112.49	1.02	14.43	3.9E-07
8/28/96	17	32	151	9060	4.0	43.4	112.06	1.00	14.38	4.0E-07
9/3/96	8	19	8238	494280	46.0	-0.6	20.90	5.36	2.68	3.3E-07
			INFLOW RATE,cc/sec		8.90E-05		PERMEABILITY REPORTED A			3.9E-07
			OUTFLOW RATE,cc/sec		9.37E-05					
			INFLOW / OUTFLOW RATIO		0.95					

GOLDER ASSOCIATES INC.
MT. LAUREL, NEW JERSEY

849880204

PARTICLE-SIZE ANALYSIS OF SOILS

ASTM D 421, D 422, D 1140, D 2216, D 2217

PSE&G/RI-IRA/NJ **953-6306**		**SAMPLE #:**	**B3** **6'-8'**

MOISTURE CONTENT (Delivered Moisture)

tare #	GH2
wt soil&tare,moist (g)	529.98
wt soil&tare,dry (g)	380.39
wt tare (g)	159.65
wt moisture (g)	149.59
wt dry soil (g)	220.74
% moisture	**67.77%**

% PASSING #10 SIEVE

Total Wt (g)	235.61
Wt Split #10 (g)	214.05
% passing #10	90.85%

	SIEVE	wt ret (g)	% ret	% pass	SIEVE	
coarse gravel	3.000		0.00%	**100.00%**	3.000	coarse gravel
	1.500		0.00%	**100.00%**	1.500	
	1.000		0.00%	**100.00%**	1.000	
fine gravel	0.750		0.00%	**100.00%**	0.750	fine gravel
	0.375		0.00%	**100.00%**	0.375	
coarse sand	#4	0.06	0.03%	**99.97%**	#4	coarse sand
medium sand	#10	0.39	0.17%	**99.83%**	#10	medium sand

SAMPLE PREPARATION FOR HYDROMETER ANALYSIS

% Passing #10 Sieve	99.83	Initial Moist Weight	52.47
Specific Gravity (ASSUMED)	2.65	Calculated Dry Weight	51.37
ml Dispersing Agent Used (40 ml Na(PO4)n per 1000 ml H2O)	125		

MOISTURE CONTENT (Hygroscopic - #10)

tare #	34C	tare #	RW16		
wt soil&tare,moist (g)	25.78	wt soil&tare,dry (g)	207.10	LL:	103
wt soil&tare,dry (g)	25.66	wt soil&tare,wash (g)	160.01	PL:	44
wt tare (g)	20.03	wt tare (g)	155.72	PI:	59
wt moisture (g)	0.12	wt fines lost (g)	47.09		
wt dry soil (g)	5.63	wt dry soil (g)	51.38		
% moisture	**2.13%**	% fines lost	**91.65%**		

PERCENT BETWEEN #10 AND #200 SIEVE CALCULATION

SIEVE	CUMUL WT RETAINED	CUMUL WT RET. CORR.	PERCENT PASSING		
#10	0.00	0.09	**99.83%**	#10	medium sand
#20	0.84	0.93	**98.20%**	#20	
#40	1.77	1.86	**96.39%**	#40	fine sand
#60	2.48	2.57	**95.02%**	#60	
#100	3.45	3.54	**93.13%**	#100	
#200	4.29	4.38	**91.50%**	#200	fines

DATE	TIME	TIME,CUM (min)	READING R	TEMP T	HYD RDG H	PARTICLE DIAMETER	% FINER
9/17/96	7:17	2.0	47.0	23.5	4.0	0.029	**83.56%**
	7:19	4.0	43.0	23.5	4.0	0.021	**75.79%**
	7:23	8.0	38.0	23.5	4.0	0.015	**66.07%**
	7:30	15.0	33.0	23.0	5.0	0.012	**54.41%**
	7:47	32.0	27.0	22.5	5.0	0.009	**42.75%**
	8:15	60.0	23.5	22.5	5.0	0.006	**35.95%**
	9:15	120.0	20.5	22.0	5.5	0.005	**29.15%**
	11:18	243.0	18.0	21.5	5.0	0.003	**25.26%**
	15:27	492.0	15.0	21.0	5.0	0.002	**19.43%**
9/18/96	7:15	1440.0	12.0	23.5	4.5	0.001	**14.57%**

%C GRVL:	**0.00%**
%F GRVL:	**0.03%**
%C SAND:	**0.14%**
%M SAND:	**3.44%**
%F SAND:	**4.90%**
%FINES:	**91.50%**
%TOTAL:	**100.00%**

Wet Color: **Very dark brown**
Description: **SILT, little sand, trace gravel (MH)**

DATE	9/18/96
TECH	RDD
REVIEW	RMW

GOLDER ASSOCIATES INC.
MT. LAUREL, NEW JERSEY

849880205

PARTICLE-SIZE DISTRIBUTION ASTM D 421 AND D 422
US STANDARD SIEVE OPENING SIZES

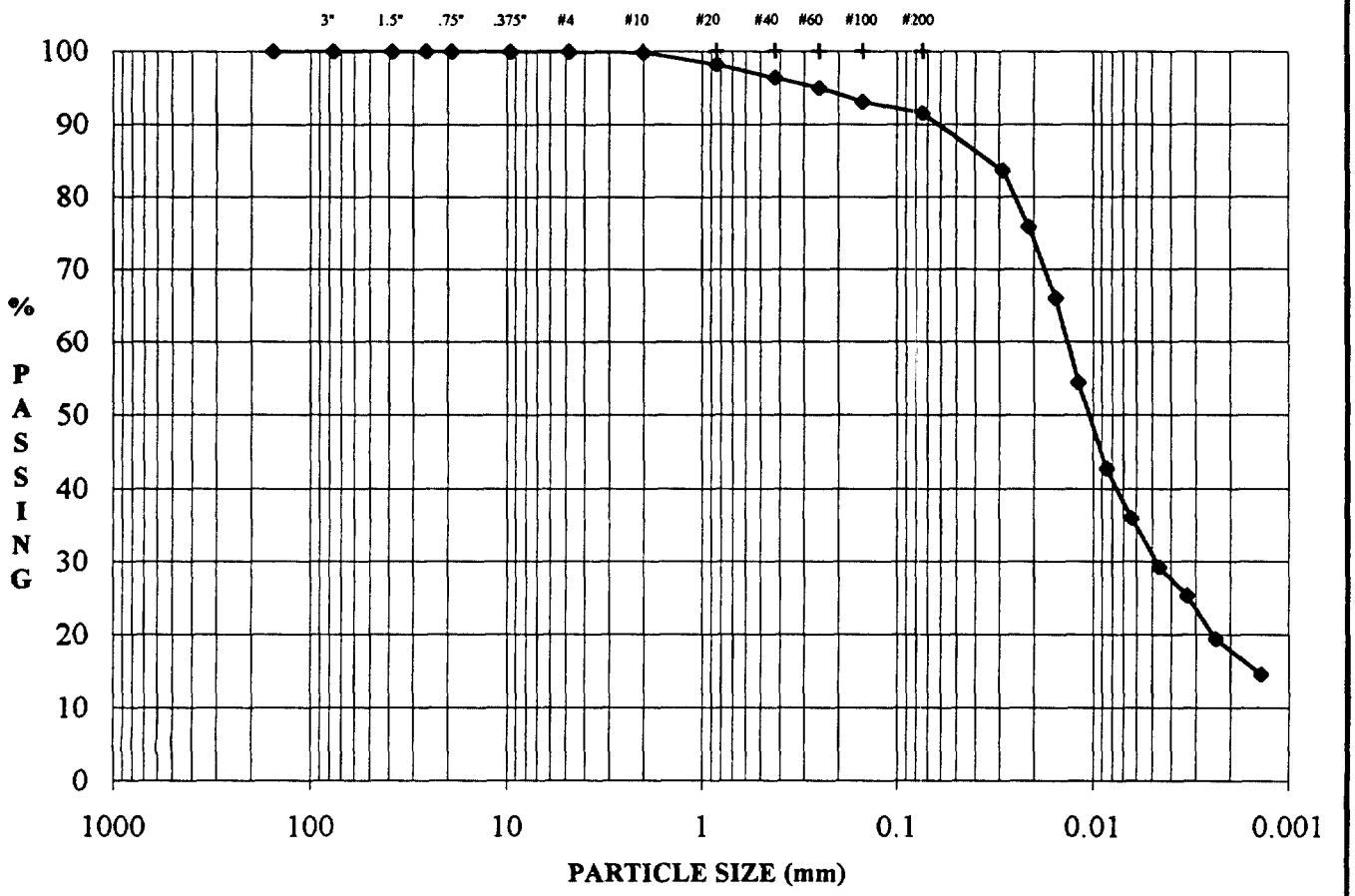

	Coarse	Fine	Cor	Med	Fine	Silt or Clay Size
COBBLES	GRAVEL		SAND			FINES

SAMPLE #:	B3 6'-8'
WET COLOR:	Very dark brown
DESCRIPTION:	SILT, little sand, trace gravel (MH)

Mc:	67.77%
LL:	103
PL:	44
PI :	59
Gs:	-

PSE&G/RI-IRA/NJ
953-6306

DATE	9/18/96
TECH	RDD
REVIEW	RMW

GOLDER ASSOCIATES INC.
MT. LAUREL, NEW JERSEY

MEASUREMENT OF HYDRAULIC CONDUCTIVITY OF SATURATED POROUS MATERIALS USING A FLEXIBLE WALL PERMEAMETER (ASTM D 5084) METHOD C, FALLING HEAD WITH INCREASING TAILWATER LEVEL

PSE&G/RI-IRA/NJ 953-6306	SAMPLE #:	B-3 6'-8'	TYPE:	ST	TECH REVIEW: JMP / RMW

SAMPLE DATA, INITIAL				SAMPLE DATA, FINAL		COMMENTS
height, cm	5.835	B-value	0.95	height, cm	5.826	
diameter, cm	7.195	cell pressure, psi	24.3	diameter, cm	7.14	
area, cm^2	40.66	bottom pressure, psi	20.5	area, cm^2	40.04	
volume, cm^3	237.24	top pressure, psi	19.5	volume, cm^3	233.27	
weight, g	370.33	head, cm	70.3	weight, g	365.58	
% moisture	67.77	maximum gradient	17.27	% moisture	65.62	
dry density, pcf	58.06	minimum gradient	15.21	dry density, pcf	59.05	
volume solids, cm^3	84.90	total back pressure, psi	20.0	volume solids, cm^3	84.90	
volume voids, cm^3	152.34	maximum effective stress	4.8	volume voids, cm^3	148.37	
void ratio	1.79	minimum effective stress	3.8	void ratio	1.75	
% saturation	98.19	specific gravity	2.60	% saturation	97.62	

TIME FUNCTION					READINGS					
Date	Hour	Minute	dt,elapsed (min)	dt,elapsed (sec)	Inflow (cc)	Outflow (cc)	Head (cm)	(H1/H2) (inc.)	Gradient	Permeability (cm/sec)
9/13/96	4	15	0	0	9.2	37.8	100.62		17.27	
9/13/96	5	56	101	6060	10.0	37.1	99.03	1.02	17.00	1.8E-07
9/13/96	8	18	243	14580	11.2	35.9	96.48	1.03	16.56	2.1E-07
9/13/96	15	30	675	40500	14.7	32.4	89.06	1.08	15.29	2.1E-07
9/13/96	16	0	705	42300	14.8	32.1	88.64	1.00	15.21	1.8E-07

INFLOW RATE,cc/sec	1.32E-04	PERMEABILITY REPORTED A: 2.0E-07
OUTFLOW RATE,cc/sec	1.35E-04	
INFLOW / OUTFLOW RATIO	0.98	

GOLDER ASSOCIATES INC.
MT. LAUREL, NEW JERSEY

849880207

CONSOLIDATED UNDRAINED W[illegible] PORE PRESSURE MEASUREMENT

AS[illegible] D 4767

PSE&G/RI-IRA/NJ 953-6306	SAMPLE #:	B3 6'-8'	DATE 9/16/96 TECH JMP/RMW REVIEW RMW

SAMPLE DATA

height (in)	6.052	confining pressure (psi)	5	**MOISTURE CONTENT**	
diameter (in)	2.851	machine speed (in/min)	0.01	tare #	GH1
area (in^2)	6.384	strain rate (%/min)	0.17	wt soil&tare,moist	1128.76
height/diameter ratio	2.12	final "B" value	0.98	wt soil&tare,dry	756.74
volume (in^3)	38.64	t50 (min)	30.0	wt tare	155.96
% moisture,initial	67.77%	volume,solids	14.22	wt moisture	372.02
weight (g)	980.95	volume,voids	24.42	wt dry soil	600.78
specific gravity	2.60	void ratio	1.717	% moisture,final	61.92%
moist density (pcf)	96.68	% saturation,initial	93.76%		
dry density (pcf)	57.63	% saturation,final	92.98%		

DESCRIPTION: Very dark brown SILT, little sand, trace gravel (MH)

TIME (min)	DEFLECTION (in)	AXIAL LOAD (lbs)	PORE PRESSURE,U (psi)	dU (psf) (cumulative)	STRAIN (ε)	(1-ε)	AREA CORR (in^2)	HEIGHT CORR (in)	DEVIATOR STRESS (psf)	SIGMA 1 (psf)	EFFECTIVE SIGMA 1 (psf)	EFFECTIVE SIGMA 3 (psf)	EFF PRN STR RATIO (S1'/S3')	P' (psf)	Q' (psf)
0.0	0.00	0.0	79.9	0.0	0.00%	1.00	6.384	6.052	0.00	720.00	720.00	720.00	1.00	720.00	0.00
0.5	0.00	8.0	80.6	100.8	0.00%	1.00	6.384	6.052	180.45	900.45	799.65	619.20	1.29	709.43	90.23
1.0	0.00	12.0	81.0	158.4	0.00%	1.00	6.384	6.052	270.68	990.68	832.28	561.60	1.48	696.94	135.34
1.5	0.00	14.0	81.5	230.4	0.00%	1.00	6.384	6.052	315.80	1035.80	805.40	489.60	1.65	647.50	157.90
2.0	0.00	17.0	81.9	288.0	0.00%	1.00	6.384	6.052	383.47	1103.47	815.47	432.00	1.89	623.73	191.73
2.5	0.02	19.0	81.9	288.0	0.33%	1.00	6.405	6.032	427.16	1147.16	859.16	432.00	1.99	645.58	213.58
3.0	0.02	21.0	82.0	302.4	0.33%	1.00	6.405	6.032	472.13	1192.13	889.73	417.60	2.13	653.66	236.06
3.5	0.02	22.0	82.1	316.8	0.33%	1.00	6.405	6.032	494.61	1214.61	897.81	403.20	2.23	650.51	247.31
4.0	0.02	24.0	82.2	331.2	0.33%	1.00	6.405	6.032	539.58	1259.58	928.38	388.80	2.39	658.59	269.79
4.5	0.02	25.0	82.2	331.2	0.33%	1.00	6.405	6.032	562.06	1282.06	950.86	388.80	2.45	669.83	281.03
5.0	0.04	26.0	82.3	345.6	0.66%	0.99	6.426	6.012	582.60	1302.60	957.00	374.40	2.56	665.70	291.30
5.5	0.04	27.0	82.6	388.8	0.66%	0.99	6.426	6.012	605.01	1325.01	936.21	331.20	2.83	633.70	302.50
6.0	0.04	29.0	83.0	446.4	0.66%	0.99	6.426	6.012	649.82	1369.82	923.42	273.60	3.38	598.51	324.91
6.5	0.06	30.0	83.0	446.4	0.99%	0.99	6.448	5.992	670.00	1390.00	943.60	273.60	3.45	608.60	335.00
7.0	0.06	31.0	83.1	460.8	0.99%	0.99	6.448	5.992	692.33	1412.33	951.53	259.20	3.67	605.36	346.16
7.5	0.06	33.0	83.1	460.8	0.99%	0.99	6.448	5.992	737.00	1457.00	996.20	259.20	3.84	627.70	368.50
8.0	0.06	33.0	83.0	446.4	0.99%	0.99	6.448	5.992	737.00	1457.00	1010.60	273.60	3.69	642.10	368.50
8.5	0.08	34.0	82.9	432.0	1.32%	0.99	6.469	5.972	756.79	1476.79	1044.79	288.00	3.63	666.40	378.40
9.0	0.08	36.0	82.9	432.0	1.32%	0.99	6.469	5.972	801.31	1521.31	1089.31	288.00	3.78	688.66	400.66
9.5	0.08	36.0	82.9	432.0	1.32%	0.99	6.469	5.972	801.31	1521.31	1089.31	288.00	3.78	688.66	400.66
10.0	0.10	38.0	82.9	432.0	1.65%	0.98	6.491	5.952	843.00	1563.00	1131.00	288.00	3.93	709.50	421.50
11.0	0.10	39.0	82.9	432.0	1.65%	0.98	6.491	5.952	865.18	1585.18	1153.18	288.00	4.00	720.59	432.59
12.0	0.12	41.0	82.9	432.0	1.98%	0.98	6.513	5.932	906.49	1626.49	1194.49	288.00	4.15	741.25	453.25
13.0	0.12	43.0	82.9	432.0	1.98%	0.98	6.513	5.932	950.71	1670.71	1238.71	288.00	4.30	763.36	475.36
14.0	0.14	45.0	82.9	432.0	2.31%	0.98	6.535	5.912	991.58	1711.58	1279.58	288.00	4.44	783.79	495.79
15.0	0.14	47.0	83.5	518.4	2.31%	0.98	6.535	5.912	1035.65	1755.65	1237.25	201.60	6.14	719.42	517.82
16.0	0.14	48.0	83.5	518.4	2.31%	0.98	6.535	5.912	1057.68	1777.68	1259.28	201.60	6.25	730.44	528.84
17.0	0.16	50.0	83.2	475.2	2.64%	0.97	6.557	5.892	1098.02	1818.02	1342.82	244.80	5.49	793.81	549.01
18.0	0.18	51.0	83.2	475.2	2.97%	0.97	6.580	5.872	1116.18	1836.18	1360.98	244.80	5.56	802.89	558.09
19.0	0.18	53.0	83.2	475.2	2.97%	0.97	6.580	5.872	1159.96	1879.96	1404.76	244.80	5.74	824.78	579.98
20.0	0.20	54.0	83.1	460.8	3.30%	0.97	6.602	5.852	1177.82	1897.82	1437.02	259.20	5.54	848.11	588.91

GOLDER ASSOCIATES INC.
MT. LAUREL, NEW JERSEY

849880208

TIME (min)	DEFLECTION (in)	AXIAL LOAD (lbs)	PORE PRESSURE,U (psi)	dU (psf) (cumulative)	STRAIN (ε)	(1-ε)	AREA CORR (in^2)	HEIGHT CORR (in)	DEVIATOR STRESS (psf)	SIGMA 1 (psf)	EFFECTIVE SIGMA 1 (psf)	EFFECTIVE SIGMA 3 (psf)	EFF PRN STR RATIO (S1'/S3')	P' (psf)	Q' (psf)
21.0	0.22	56.0	83.1	460.8	3.64%	0.96	6.625	5.832	1217.26	1937.26	1476.46	259.20	5.70	867.83	608.63
22.0	0.22	57.0	83.8	561.6	3.64%	0.96	6.625	5.832	1239.00	1959.00	1397.40	158.40	8.82	777.90	619.50
23.0	0.22	59.0	83.7	547.2	3.64%	0.96	6.625	5.832	1282.47	2002.47	1455.27	172.80	8.42	814.04	641.24
24.0	0.24	60.0	83.7	547.2	3.97%	0.96	6.647	5.812	1299.74	2019.74	1472.54	172.80	8.52	822.67	649.87
25.0	0.24	61.0	83.4	504.0	3.97%	0.96	6.647	5.812	1321.40	2041.40	1537.40	216.00	7.12	876.70	660.70
26.0	0.26	62.0	83.4	504.0	4.30%	0.96	6.670	5.792	1338.44	2058.44	1554.44	216.00	7.20	885.22	669.22
27.0	0.28	63.0	83.2	475.2	4.63%	0.95	6.694	5.772	1355.33	2075.33	1600.13	244.80	6.54	922.47	677.67
28.0	0.28	64.0	83.3	489.6	4.63%	0.95	6.694	5.772	1376.85	2096.85	1607.25	230.40	6.98	918.82	688.42
29.0	0.30	65.0	83.3	489.6	4.96%	0.95	6.717	5.752	1393.51	2113.51	1623.91	230.40	7.05	927.16	696.76
30.0	0.30	67.0	83.8	561.6	4.96%	0.95	6.717	5.752	1436.39	2156.39	1594.79	158.40	10.07	876.60	718.20
31.0	0.30	67.0	83.8	561.6	4.96%	0.95	6.717	5.752	1436.39	2156.39	1594.79	158.40	10.07	876.60	718.20
32.0	0.32	68.0	83.7	547.2	5.29%	0.95	6.740	5.732	1452.76	2172.76	1625.56	172.80	9.41	899.18	726.38
33.0	0.34	69.0	83.5	518.4	5.62%	0.94	6.764	5.712	1468.98	2188.98	1670.58	201.60	8.29	936.09	734.49
34.0	0.34	70.0	83.4	504.0	5.62%	0.94	6.764	5.712	1490.27	2210.27	1706.27	216.00	7.90	961.14	745.14
35.0	0.36	71.0	83.3	489.6	5.95%	0.94	6.788	5.692	1506.27	2226.27	1736.67	230.40	7.54	983.53	753.13
36.0	0.38	72.0	83.3	489.6	6.28%	0.94	6.812	5.672	1522.12	2242.12	1752.52	230.40	7.61	991.46	761.06
37.0	0.38	73.0	83.3	489.6	6.28%	0.94	6.812	5.672	1543.26	2263.26	1773.66	230.40	7.70	1002.03	771.63
38.0	0.38	74.0	83.2	475.2	6.28%	0.94	6.812	5.672	1564.40	2284.40	1809.20	244.80	7.39	1027.00	782.20
39.0	0.40	74.0	83.9	576.0	6.61%	0.93	6.836	5.652	1558.88	2278.88	1702.88	144.00	11.83	923.44	779.44
40.0	0.40	75.0	83.9	576.0	6.61%	0.93	6.836	5.652	1579.95	2299.95	1723.95	144.00	11.97	933.97	789.97
41.0	0.42	76.0	83.7	547.2	6.94%	0.93	6.860	5.632	1595.35	2315.35	1768.15	172.80	10.23	970.47	797.67
42.0	0.44	77.0	83.4	504.0	7.27%	0.93	6.884	5.612	1610.60	2330.60	1826.60	216.00	8.46	1021.30	805.30
43.0	0.44	77.0	83.3	489.6	7.27%	0.93	6.884	5.612	1610.60	2330.60	1841.00	230.40	7.99	1035.70	805.30
44.0	0.46	78.0	83.2	475.2	7.60%	0.92	6.909	5.592	1625.70	2345.70	1870.50	244.80	7.64	1057.65	812.85
45.0	0.46	78.0	83.2	475.2	7.60%	0.92	6.909	5.592	1625.70	2345.70	1870.50	244.80	7.64	1057.65	812.85
46.0	0.46	79.0	84.0	590.4	7.60%	0.92	6.909	5.592	1646.54	2366.54	1776.14	129.60	13.70	952.87	823.27
47.0	0.48	79.0	83.9	576.0	7.93%	0.92	6.934	5.572	1640.66	2360.66	1784.66	144.00	12.39	964.33	820.33
48.0	0.50	80.0	83.6	532.8	8.26%	0.92	6.959	5.552	1655.46	2375.46	1842.66	187.20	9.84	1014.93	827.73
49.0	0.50	80.0	83.5	518.4	8.26%	0.92	6.959	5.552	1655.46	2375.46	1857.06	201.60	9.21	1029.33	827.73
50.0	0.52	81.0	84.6	676.8	8.59%	0.91	6.984	5.532	1670.12	2390.12	1713.32	43.20	39.66	878.26	835.06
51.0	0.54	81.0	84.4	648.0	8.92%	0.91	7.009	5.512	1664.08	2384.08	1736.08	72.00	24.11	904.04	832.04
52.0	0.54	81.0	84.3	633.6	8.92%	0.91	7.009	5.512	1664.08	2384.08	1750.48	86.40	20.26	918.44	832.04
53.0	0.54	82.0	84.2	619.2	8.92%	0.91	7.009	5.512	1684.62	2404.62	1785.42	100.80	17.71	943.11	842.31
54.0	0.56	82.0	84.8	705.6	9.25%	0.91	7.035	5.492	1678.51	2398.51	1692.91	14.40	117.56	853.65	839.25
55.0	0.56	82.0	84.6	676.8	9.25%	0.91	7.035	5.492	1678.51	2398.51	1721.71	43.20	39.85	882.45	839.25
56.0	0.58	82.0	84.5	662.4	9.58%	0.90	7.061	5.472	1672.40	2392.40	1730.00	57.60	30.03	893.80	836.20
57.0	0.60	82.0	84.4	648.0	9.91%	0.90	7.086	5.452	1666.28	2386.28	1738.28	72.00	24.14	905.14	833.14
58.0	0.60	83.0	84.3	633.6	9.91%	0.90	7.086	5.452	1686.60	2406.60	1773.00	86.40	20.52	929.70	843.30
59.0	0.60	83.0	84.2	619.2	9.91%	0.90	7.086	5.452	1686.60	2406.60	1787.40	100.80	17.73	944.10	843.30
60.0	0.62	83.0	84.1	604.8	10.24%	0.90	7.113	5.432	1680.42	2400.42	1795.62	115.20	15.59	955.41	840.21
61.0	0.62	83.0	84.0	590.4	10.24%	0.90	7.113	5.432	1680.42	2400.42	1810.02	129.60	13.97	969.81	840.21
62.0	0.64	83.0	83.9	576.0	10.58%	0.89	7.139	5.412	1674.23	2394.23	1818.23	144.00	12.63	981.12	837.12
63.0	0.66	83.0	84.7	691.2	10.91%	0.89	7.165	5.392	1668.04	2388.04	1696.84	28.80	58.92	862.82	834.02
64.0	0.66	84.0	84.2	619.2	10.91%	0.89	7.165	5.392	1688.14	2408.14	1788.94	100.80	17.75	944.87	844.07
65.0	0.68	84.0	83.9	576.0	11.24%	0.89	7.192	5.372	1681.88	2401.88	1825.88	144.00	12.68	984.94	840.94
66.0	0.70	84.0	83.8	561.6	11.57%	0.88	7.219	5.352	1675.62	2395.62	1834.02	158.40	11.58	996.21	837.81
67.0	0.70	84.0	83.7	547.2	11.57%	0.88	7.219	5.352	1675.62	2395.62	1848.42	172.80	10.70	1010.61	837.81
68.0	0.70	84.0	83.5	518.4	11.57%	0.88	7.219	5.352	1675.62	2395.62	1877.22	201.60	9.31	1039.41	837.81
69.0	0.72	84.0	83.4	504.0	11.90%	0.88	7.246	5.332	1669.35	2389.35	1885.35	216.00	8.73	1050.68	834.68
70.0	0.72	84.0	84.1	604.8	11.90%	0.88	7.246	5.332	1669.35	2389.35	1784.55	115.20	15.49	949.88	834.68
71.0	0.74	84.0	83.9	576.0	12.23%	0.88	7.273	5.312	1663.09	2383.09	1807.09	144.00	12.55	975.55	831.55

GOLDER ASSOCIATES INC.
MT. LAUREL, NEW JERSEY

B-3 (6'-8')
PAGE 2 of 3
5 psi

8498880209

TIME (min)	DEFLECTION (in)	AXIAL LOAD (lbs)	PORE PRESSURE,U (psi)	dU (psf) (cumulative)	STRAIN (ε)	(1-ε)	AREA CORR (in^2)	HEIGHT CORR (in)	DEVIATOR STRESS (psf)	SIGMA 1 (psf)	EFFECTIVE SIGMA 1 (psf)	EFFECTIVE SIGMA 3 (psf)	EFF PRN STR RATIO (S1'/S3')	P' (psf)	Q' (psf)
72.0	0.76	84.0	83.8	561.6	12.56%	0.87	7.301	5.292	1656.83	2376.83	1815.23	158.40	11.46	986.82	828.42
73.0	0.76	83.0	83.6	532.8	12.56%	0.87	7.301	5.292	1637.11	2357.11	1824.31	187.20	9.75	1005.75	818.55
74.0	0.78	84.0	83.5	518.4	12.89%	0.87	7.328	5.272	1650.57	2370.57	1852.17	201.60	9.19	1026.88	825.28
75.0	0.78	84.0	83.5	518.4	12.89%	0.87	7.328	5.272	1650.57	2370.57	1852.17	201.60	9.19	1026.88	825.28
76.0	0.78	84.0	83.4	504.0	12.89%	0.87	7.328	5.272	1650.57	2370.57	1866.57	216.00	8.64	1041.28	825.28
77.0	0.80	84.0	83.3	489.6	13.22%	0.87	7.356	5.252	1644.31	2364.31	1874.71	230.40	8.14	1052.55	822.15
78.0	0.82	84.0	84.0	590.4	13.55%	0.86	7.384	5.232	1638.05	2358.05	1767.65	129.60	13.64	948.62	819.02
79.0	0.82	83.0	83.8	561.6	13.55%	0.86	7.384	5.232	1618.55	2338.55	1776.95	158.40	11.22	967.67	809.27
80.0	0.84	83.0	83.7	547.2	13.88%	0.86	7.413	5.212	1612.36	2332.36	1785.16	172.80	10.33	978.98	806.18
81.0	0.86	83.0	83.6	532.8	14.21%	0.86	7.441	5.192	1606.17	2326.17	1793.37	187.20	9.58	990.29	803.09
82.0	0.86	83.0	83.5	518.4	14.21%	0.86	7.441	5.192	1606.17	2326.17	1807.77	201.60	8.97	1004.69	803.09
83.0	0.86	84.0	83.5	518.4	14.21%	0.86	7.441	5.192	1625.52	2345.52	1827.12	201.60	9.06	1014.36	812.76
84.0	0.88	84.0	83.3	489.6	14.54%	0.85	7.470	5.172	1619.26	2339.26	1849.66	230.40	8.03	1040.03	809.63
85.0	0.88	84.0	83.3	489.6	14.54%	0.85	7.470	5.172	1619.26	2339.26	1849.66	230.40	8.03	1040.03	809.63
86.0	0.90	84.0	84.0	590.4	14.87%	0.85	7.499	5.152	1613.00	2333.00	1742.60	129.60	13.45	936.10	806.50
87.0	0.92	83.0	83.7	547.2	15.20%	0.85	7.528	5.132	1587.61	2307.61	1760.41	172.80	10.19	966.61	793.81
88.0	0.92	83.0	83.6	532.8	15.20%	0.85	7.528	5.132	1587.61	2307.61	1774.81	187.20	9.48	981.01	793.81

DEVIATORIC STRESS AT FAILURE: **1603.00**

EFFECTIVE PRINCIPAL STRESS RATIO AT FAILURE: **12.17**

GOLDER ASSOCIATES INC.
MT. LAUREL, NEW JERSEY

B-3 (6'-8')
PAGE 3 of 3
5 psi

8498880210

CONSOLIDATED UNDRAINED W[illegible]H PORE PRESSURE MEASUREMENT

A[illegible]D 4767

PSE&G/RI-IRA/NJ 953-6306	SAMPLE #:	B3 6'-8'	DATE 9/16/96 TECH JMP/RMW REVIEW RMW

SAMPLE DATA

height (in)	6.059	confining pressure (psi)	10	**MOISTURE CONTENT**	
diameter (in)	2.845	machine speed (in/min)	0.01	tare #	GH13
area (in^2)	6.357	strain rate (%/min)	0.17	wt soil&tare,moist	1116.00
height/diameter ratio	2.13	final "B" value	0.95	wt soil&tare,dry	741.88
volume (in^3)	38.52	t50 (min)	23.4	wt tare	158.61
% moisture,initial	67.77%	volume,solids	14.01	wt moisture	374.12
weight (g)	979.63	volume,voids	24.51	wt dry soil	583.27
specific gravity	2.60	void ratio	1.750	% moisture,final	64.14%
moist density (pcf)	96.85	% saturation,initial	95.31%		
dry density (pcf)	57.73	% saturation,final	93.15%		

DESCRIPTION: Very dark brown SILT, little sand, trace gravel (MH)

TIME (min)	DEFLECTION (in)	AXIAL LOAD (lbs)	PORE PRESSURE,U (psi)	dU (psf) (cumulative)	STRAIN (ε)	(1-ε)	AREA CORR (in^2)	HEIGHT CORR (in)	DEVIATOR STRESS (psf)	SIGMA 1 (psf)	EFFECTIVE SIGMA 1 (psf)	EFFECTIVE SIGMA 3 (psf)	EFF PRN STR RATIO (S1'/S3')	P' (psf)	Q' (psf)
0.0	0.00	0.0	89.5	0.0	0.00%	1.00	6.357	6.059	0.00	1440.00	1440.00	1440.00	1.00	1440.00	0.00
0.5	0.00	15.0	92.3	403.2	0.00%	1.00	6.357	6.059	339.78	1779.78	1376.58	1036.80	1.33	1206.69	169.89
1.0	0.00	21.0	92.5	432.0	0.00%	1.00	6.357	6.059	475.69	1915.69	1483.69	1008.00	1.47	1245.85	237.85
1.5	0.00	27.0	92.8	475.2	0.00%	1.00	6.357	6.059	611.61	2051.61	1576.41	964.80	1.63	1270.60	305.80
2.0	0.02	30.0	93.2	532.8	0.33%	1.00	6.378	6.039	677.32	2117.32	1584.52	907.20	1.75	1245.86	338.66
2.5	0.02	34.0	93.3	547.2	0.33%	1.00	6.378	6.039	767.63	2207.63	1660.43	892.80	1.86	1276.61	383.81
3.0	0.02	37.0	93.2	532.8	0.33%	1.00	6.378	6.039	835.36	2275.36	1742.56	907.20	1.92	1324.88	417.68
3.5	0.02	39.0	93.1	518.4	0.33%	1.00	6.378	6.039	880.51	2320.51	1802.11	921.60	1.96	1361.86	440.26
4.0	0.04	41.0	93.3	547.2	0.66%	0.99	6.399	6.019	922.60	2362.60	1815.40	892.80	2.03	1354.10	461.30
4.5	0.04	43.0	93.3	547.2	0.66%	0.99	6.399	6.019	967.61	2407.61	1860.41	892.80	2.08	1376.60	483.80
5.0	0.06	46.0	93.2	532.8	0.99%	0.99	6.421	5.999	1031.68	2471.68	1938.88	907.20	2.14	1423.04	515.84
5.5	0.06	47.0	93.3	547.2	0.99%	0.99	6.421	5.999	1054.10	2494.10	1946.90	892.80	2.18	1419.85	527.05
6.0	0.06	48.0	93.8	619.2	0.99%	0.99	6.421	5.999	1076.53	2516.53	1897.33	820.80	2.31	1359.07	538.27
6.5	0.06	51.0	95.3	835.2	0.99%	0.99	6.421	5.999	1143.82	2583.82	1748.62	604.80	2.89	1176.71	571.91
7.0	0.06	52.0	95.3	835.2	0.99%	0.99	6.421	5.999	1166.24	2606.24	1771.04	604.80	2.93	1187.92	583.12
7.5	0.08	53.0	95.2	820.8	1.32%	0.99	6.442	5.979	1184.71	2624.71	1803.91	619.20	2.91	1211.55	592.35
8.0	0.08	55.0	95.3	835.2	1.32%	0.99	6.442	5.979	1229.41	2669.41	1834.21	604.80	3.03	1219.51	614.71
8.5	0.08	56.0	95.3	835.2	1.32%	0.99	6.442	5.979	1251.77	2691.77	1856.57	604.80	3.07	1230.68	625.88
9.0	0.08	57.0	95.3	835.2	1.32%	0.99	6.442	5.979	1274.12	2714.12	1878.92	604.80	3.11	1241.86	637.06
9.5	0.08	58.0	95.1	806.4	1.32%	0.99	6.442	5.979	1296.47	2736.47	1930.07	633.60	3.05	1281.84	648.24
10.0	0.10	60.0	94.8	763.2	1.65%	0.98	6.464	5.959	1336.69	2776.69	2013.49	676.80	2.98	1345.15	668.35
11.0	0.12	62.0	94.6	734.4	1.98%	0.98	6.485	5.939	1376.61	2816.61	2082.21	705.60	2.95	1393.91	688.31
12.0	0.12	64.0	94.6	734.4	1.98%	0.98	6.485	5.939	1421.02	2861.02	2126.62	705.60	3.01	1416.11	710.51
13.0	0.12	66.0	94.4	705.6	1.98%	0.98	6.485	5.939	1465.43	2905.43	2199.83	734.40	3.00	1467.11	732.71
14.0	0.14	68.0	96.2	964.8	2.31%	0.98	6.507	5.919	1504.75	2944.75	1979.95	475.20	4.17	1227.58	752.38
15.0	0.14	69.0	96.1	950.4	2.31%	0.98	6.507	5.919	1526.88	2966.88	2016.48	489.60	4.12	1253.04	763.44
16.0	0.16	71.0	95.5	864.0	2.64%	0.97	6.529	5.899	1565.83	3005.83	2141.83	576.00	3.72	1358.91	782.91
17.0	0.18	72.0	95.5	864.0	2.97%	0.97	6.552	5.879	1582.50	3022.50	2158.50	576.00	3.75	1367.25	791.25
18.0	0.18	75.0	95.1	806.4	2.97%	0.97	6.552	5.879	1648.44	3088.44	2282.04	633.60	3.60	1457.82	824.22
19.0	0.20	75.0	95.6	878.4	3.30%	0.97	6.574	5.859	1642.83	3082.83	2204.43	561.60	3.93	1383.01	821.41
20.0	0.20	76.0	96.8	1051.2	3.30%	0.97	6.574	5.859	1664.73	3104.73	2053.53	388.80	5.28	1221.17	832.37

GOLDER ASSOCIATES INC.
MT. LAUREL, NEW JERSEY

849880211

TIME (min)	DEFLECTION (in)	AXIAL LOAD (lbs)	PORE PRESSURE,U (psi)	dU (psf) (cumulative)	STRAIN (ε)	(1-ε)	AREA CORR (in^2)	HEIGHT CORR (in)	DEVIATOR STRESS (psf)	SIGMA 1 (psf)	EFFECTIVE SIGMA 1 (psf)	EFFECTIVE SIGMA 3 (psf)	EFF PRN STR RATIO (S1'/S3')	P' (psf)	Q' (psf)
21.0	0.22	78.0	96.6	1022.4	3.63%	0.96	6.597	5.839	1702.71	3142.71	2120.31	417.60	5.08	1268.95	851.35
22.0	0.22	79.0	96.1	950.4	3.63%	0.96	6.597	5.839	1724.54	3164.54	2214.14	489.60	4.52	1351.87	862.27
23.0	0.24	80.0	96.0	936.0	3.96%	0.96	6.619	5.819	1740.39	3180.39	2244.39	504.00	4.45	1374.19	870.19
24.0	0.24	81.0	95.8	907.2	3.96%	0.96	6.619	5.819	1762.14	3202.14	2294.94	532.80	4.31	1413.87	881.07
25.0	0.26	82.0	95.6	878.4	4.29%	0.96	6.642	5.799	1777.76	3217.76	2339.36	561.60	4.17	1450.48	888.88
26.0	0.28	83.0	96.5	1008.0	4.62%	0.95	6.665	5.779	1793.24	3233.24	2225.24	432.00	5.15	1328.62	896.62
27.0	0.28	84.0	97.3	1123.2	4.62%	0.95	6.665	5.779	1814.84	3254.84	2131.64	316.80	6.73	1224.22	907.42
28.0	0.28	85.0	97.0	1080.0	4.62%	0.95	6.665	5.779	1836.45	3276.45	2196.45	360.00	6.10	1278.22	918.22
29.0	0.30	86.0	96.3	979.2	4.95%	0.95	6.688	5.759	1851.62	3291.62	2312.42	460.80	5.02	1386.61	925.81
30.0	0.30	86.0	96.3	979.2	4.95%	0.95	6.688	5.759	1851.62	3291.62	2312.42	460.80	5.02	1386.61	925.81
31.0	0.32	87.0	96.2	964.8	5.28%	0.95	6.711	5.739	1866.65	3306.65	2341.85	475.20	4.93	1408.52	933.32
32.0	0.34	88.0	95.8	907.2	5.61%	0.94	6.735	5.719	1881.52	3321.52	2414.32	532.80	4.53	1473.56	940.76
33.0	0.34	89.0	97.6	1166.4	5.61%	0.94	6.735	5.719	1902.91	3342.91	2176.51	273.60	7.96	1225.05	951.45
34.0	0.36	89.0	97.3	1123.2	5.94%	0.94	6.759	5.699	1896.25	3336.25	2213.05	316.80	6.99	1264.93	948.13
35.0	0.36	90.0	96.6	1022.4	5.94%	0.94	6.759	5.699	1917.56	3357.56	2335.16	417.60	5.59	1376.38	958.78
36.0	0.38	91.0	96.5	1008.0	6.27%	0.94	6.782	5.679	1932.06	3372.06	2364.06	432.00	5.47	1398.03	966.03
37.0	0.38	91.0	96.4	993.6	6.27%	0.94	6.782	5.679	1932.06	3372.06	2378.46	446.40	5.33	1412.43	966.03
38.0	0.40	92.0	96.1	950.4	6.60%	0.93	6.806	5.659	1946.41	3386.41	2436.01	489.60	4.98	1462.81	973.21
39.0	0.40	92.0	96.9	1065.6	6.60%	0.93	6.806	5.659	1946.41	3386.41	2320.81	374.40	6.20	1347.61	973.21
40.0	0.42	93.0	97.6	1166.4	6.93%	0.93	6.831	5.639	1960.61	3400.61	2234.21	273.60	8.17	1253.91	980.31
41.0	0.44	94.0	97.4	1137.6	7.26%	0.93	6.855	5.619	1974.67	3414.67	2277.07	302.40	7.53	1289.73	987.33
42.0	0.44	94.0	96.7	1036.8	7.26%	0.93	6.855	5.619	1974.67	3414.67	2377.87	403.20	5.90	1390.53	987.33
43.0	0.46	94.0	96.6	1022.4	7.59%	0.92	6.879	5.599	1967.64	3407.64	2385.24	417.60	5.71	1401.42	983.82
44.0	0.46	94.0	96.5	1008.0	7.59%	0.92	6.879	5.599	1967.64	3407.64	2399.64	432.00	5.55	1415.82	983.82
45.0	0.46	95.0	96.2	964.8	7.59%	0.92	6.879	5.599	1988.57	3428.57	2463.77	475.20	5.18	1469.49	994.29
46.0	0.48	95.0	98.0	1224.0	7.92%	0.92	6.904	5.579	1981.47	3421.47	2197.47	216.00	10.17	1206.73	990.73
47.0	0.50	96.0	97.7	1180.8	8.25%	0.92	6.929	5.559	1995.15	3435.15	2254.35	259.20	8.70	1256.77	997.57
48.0	0.50	96.0	97.5	1152.0	8.25%	0.92	6.929	5.559	1995.15	3435.15	2283.15	288.00	7.93	1285.57	997.57
49.0	0.52	96.0	96.8	1051.2	8.58%	0.91	6.954	5.539	1987.97	3427.97	2376.77	388.80	6.11	1382.78	993.98
50.0	0.54	96.0	96.8	1051.2	8.91%	0.91	6.979	5.519	1980.79	3420.79	2369.59	388.80	6.09	1379.20	990.40
51.0	0.54	97.0	96.7	1036.8	8.91%	0.91	6.979	5.519	2001.42	3441.42	2404.62	403.20	5.96	1403.91	1000.71
52.0	0.54	97.0	96.4	993.6	8.91%	0.91	6.979	5.519	2001.42	3441.42	2447.82	446.40	5.48	1447.11	1000.71
53.0	0.56	97.0	98.2	1252.8	9.24%	0.91	7.004	5.499	1994.17	3434.17	2181.37	187.20	11.65	1184.29	997.09
54.0	0.56	98.0	97.9	1209.6	9.24%	0.91	7.004	5.499	2014.73	3454.73	2245.13	230.40	9.74	1237.77	1007.37
55.0	0.58	98.0	97.7	1180.8	9.57%	0.90	7.030	5.479	2007.40	3447.40	2266.60	259.20	8.74	1262.90	1003.70
56.0	0.60	98.0	97.2	1108.8	9.90%	0.90	7.056	5.459	2000.07	3440.07	2331.27	331.20	7.04	1331.24	1000.04
57.0	0.60	98.0	96.9	1065.6	9.90%	0.90	7.056	5.459	2000.07	3440.07	2374.47	374.40	6.34	1374.44	1000.04
58.0	0.60	98.0	96.8	1051.2	9.90%	0.90	7.056	5.459	2000.07	3440.07	2388.87	388.80	6.14	1388.84	1000.04
59.0	0.62	99.0	98.4	1281.6	10.23%	0.90	7.082	5.439	2013.08	3453.08	2171.48	158.40	13.71	1164.94	1006.54
60.0	0.62	99.0	98.0	1224.0	10.23%	0.90	7.082	5.439	2013.08	3453.08	2229.08	216.00	10.32	1222.54	1006.54
61.0	0.64	99.0	97.8	1195.2	10.56%	0.89	7.108	5.419	2005.68	3445.68	2250.48	244.80	9.19	1247.64	1002.84
62.0	0.66	99.0	97.6	1166.4	10.89%	0.89	7.134	5.399	1998.28	3438.28	2271.88	273.60	8.30	1272.74	999.14
63.0	0.66	99.0	97.1	1094.4	10.89%	0.89	7.134	5.399	1998.28	3438.28	2343.88	345.60	6.78	1344.74	999.14
64.0	0.68	99.0	97.0	1080.0	11.22%	0.89	7.161	5.379	1990.87	3430.87	2350.87	360.00	6.53	1355.44	995.44
65.0	0.70	99.0	97.8	1195.2	11.55%	0.88	7.187	5.359	1983.47	3423.47	2228.27	244.80	9.10	1236.54	991.74
66.0	0.70	99.0	97.7	1180.8	11.55%	0.88	7.187	5.359	1983.47	3423.47	2242.67	259.20	8.65	1250.94	991.74
67.0	0.70	99.0	97.4	1137.6	11.55%	0.88	7.187	5.359	1983.47	3423.47	2285.87	302.40	7.56	1294.14	991.74
68.0	0.72	100.0	98.7	1324.8	11.88%	0.88	7.214	5.339	1996.03	3436.03	2111.23	115.20	18.33	1113.21	998.01
69.0	0.72	100.0	98.6	1310.4	11.88%	0.88	7.214	5.339	1996.03	3436.03	2125.63	129.60	16.40	1127.61	998.01
70.0	0.74	100.0	98.1	1238.4	12.21%	0.88	7.241	5.319	1988.55	3428.55	2190.15	201.60	10.86	1195.88	994.28
71.0	0.76	100.0	97.5	1152.0	12.54%	0.87	7.269	5.299	1981.08	3421.08	2269.08	288.00	7.88	1278.54	990.54

GOLDER ASSOCIATES INC.
MT. LAUREL, NEW JERSEY

B3 (6'-8')
PAGE 2 of 3
10 psi

849880212

TIME (min)	DEFLECTION (in)	AXIAL LOAD (lbs)	PORE PRESSURE,U (psi)	dU (psf) (cumulative)	STRAIN (ε)	(1-ε)	AREA CORR (in^2)	HEIGHT CORR (in)	DEVIATOR STRESS (psf)	SIGMA 1 (psf)	EFFECTIVE SIGMA 1 (psf)	EFFECTIVE SIGMA 3 (psf)	EFF PRN STR RATIO (S1'/S3')	P' (psf)	Q' (psf)
72.0	0.76	100.0	97.4	1137.6	12.54%	0.87	7.269	5.299	1981.08	3421.08	2283.48	302.40	7.55	1292.94	990.54
73.0	0.78	100.0	97.6	1166.4	12.87%	0.87	7.296	5.279	1973.60	3413.60	2247.20	273.60	8.21	1260.40	986.80
74.0	0.78	100.0	97.5	1152.0	12.87%	0.87	7.296	5.279	1973.60	3413.60	2261.60	288.00	7.85	1274.80	986.80
75.0	0.78	100.0	96.9	1065.6	12.87%	0.87	7.296	5.279	1973.60	3413.60	2348.00	374.40	6.27	1361.20	986.80
76.0	0.80	100.0	98.4	1281.6	13.20%	0.87	7.324	5.259	1966.12	3406.12	2124.52	158.40	13.41	1141.46	983.06
77.0	0.82	100.0	97.7	1180.8	13.53%	0.86	7.352	5.239	1958.64	3398.64	2217.84	259.20	8.56	1238.52	979.32
78.0	0.82	100.0	97.5	1152.0	13.53%	0.86	7.352	5.239	1958.64	3398.64	2246.64	288.00	7.80	1267.32	979.32
79.0	0.84	100.0	97.3	1123.2	13.86%	0.86	7.380	5.219	1951.17	3391.17	2267.97	316.80	7.16	1292.38	975.58
80.0	0.86	100.0	97.2	1108.8	14.19%	0.86	7.409	5.199	1943.69	3383.69	2274.89	331.20	6.87	1303.04	971.84
81.0	0.86	100.0	96.8	1051.2	14.19%	0.86	7.409	5.199	1943.69	3383.69	2332.49	388.80	6.00	1360.64	971.84
82.0	0.86	100.0	98.7	1324.8	14.19%	0.86	7.409	5.199	1943.69	3383.69	2058.89	115.20	17.87	1087.04	971.84
83.0	0.88	100.0	98.4	1281.6	14.52%	0.85	7.437	5.179	1936.21	3376.21	2094.61	158.40	13.22	1126.51	968.11
84.0	0.88	100.0	97.6	1166.4	14.52%	0.85	7.437	5.179	1936.21	3376.21	2209.81	273.60	8.08	1241.71	968.11
85.0	0.90	100.0	97.3	1123.2	14.85%	0.85	7.466	5.159	1928.74	3368.74	2245.54	316.80	7.09	1281.17	964.37
86.0	0.92	100.0	97.2	1108.8	15.18%	0.85	7.495	5.139	1921.26	3361.26	2252.46	331.20	6.80	1291.83	960.63
87.0	0.92	100.0	97.4	1137.6	15.18%	0.85	7.495	5.139	1921.26	3361.26	2223.66	302.40	7.35	1263.03	960.63
88.0	0.94	100.0	98.0	1224.0	15.51%	0.84	7.524	5.119	1913.78	3353.78	2129.78	216.00	9.86	1172.89	956.89

DEVIATORIC STRESS AT FAILURE: 1925.49

EFFECTIVE PRINCIPAL STRESS RATIO AT FAILURE: 6.96

GOLDER ASSOCIATES INC.
MT. LAUREL, NEW JERSEY

B3 (6'-8')
PAGE 3 of 3
10 psi

849880213

CONSOLIDATED UNDRAINED W[illegible] PORE PRESSURE MEASUREMENT

AS[illegible] D 4767

PSE&G/RI-IRA/NJ 953-6306	SAMPLE #:	B3 6'-8'	DATE 9/16/96 TECH JMP/RMW REVIEW RMW

SAMPLE DATA

height (in)	6.093	confining pressure (psi)	20	**MOISTURE CONTENT**	
diameter (in)	2.812	machine speed (in/min)	0.01	tare #	GH10
area (in^2)	6.210	strain rate (%/min)	0.16	wt soil&tare,moist	1077.89
height/diameter ratio	2.17	final "B" value	0.96	wt soil&tare,dry	744.32
volume (in^3)	37.84	t50 (min)	75.0	wt tare	152.47
% moisture,initial	67.77%	volume,solids	14.79	wt moisture	333.57
weight (g)	985.39	volume,voids	23.05	wt dry soil	591.85
specific gravity	2.60	void ratio	1.558	% moisture,final	56.36%
moist density (pcf)	99.16	% saturation,initial	94.04%		
dry density (pcf)	59.11	% saturation,final	88.32%		

DESCRIPTION: Very dark brown SILT, little sand, trace gravel (MH)

TIME (min)	DEFLECTION (in)	AXIAL LOAD (lbs)	PORE PRESSURE,U (psi)	dU (psf) (cumulative)	STRAIN (ε)	(1-ε)	AREA CORR (in^2)	HEIGHT CORR (in)	DEVIATOR STRESS (psf)	SIGMA 1 (psf)	EFFECTIVE SIGMA 1 (psf)	EFFECTIVE SIGMA 3 (psf)	EFF PRN STR RATIO (S1'/S3')	P' (psf)	Q' (psf)
0.0	0.00	0.0	41.0	0.0	0.00%	1.00	6.210	6.093	0.00	2880.00	2880.00	2880.00	1.00	2880.00	0.00
0.5	0.00	24.0	41.0	0.0	0.00%	1.00	6.210	6.093	556.48	3436.48	3436.48	2880.00	1.19	3158.24	278.24
1.0	0.00	36.0	41.0	0.0	0.00%	1.00	6.210	6.093	834.73	3714.73	3714.73	2880.00	1.29	3297.36	417.36
1.5	0.00	46.0	41.0	0.0	0.00%	1.00	6.210	6.093	1066.60	3946.60	3946.60	2880.00	1.37	3413.30	533.30
2.0	0.00	53.0	41.0	0.0	0.00%	1.00	6.210	6.093	1228.90	4108.90	4108.90	2880.00	1.43	3494.45	614.45
2.5	0.02	58.0	41.0	0.0	0.33%	1.00	6.231	6.073	1340.42	4220.42	4220.42	2880.00	1.47	3550.21	670.21
3.0	0.02	63.0	40.9	-14.4	0.33%	1.00	6.231	6.073	1455.98	4335.98	4350.38	2894.40	1.50	3622.39	727.99
3.5	0.02	67.0	40.9	-14.4	0.33%	1.00	6.231	6.073	1548.42	4428.42	4442.82	2894.40	1.53	3668.61	774.21
4.0	0.02	70.0	40.8	-28.8	0.33%	1.00	6.231	6.073	1617.75	4497.75	4526.55	2908.80	1.56	3717.68	808.88
4.5	0.02	72.0	40.8	-28.8	0.33%	1.00	6.231	6.073	1663.97	4543.97	4572.77	2908.80	1.57	3740.79	831.99
5.0	0.04	75.0	40.8	-28.8	0.66%	0.99	6.251	6.053	1727.60	4607.60	4636.40	2908.80	1.59	3772.60	863.80
5.5	0.04	77.0	40.7	-43.2	0.66%	0.99	6.251	6.053	1773.67	4653.67	4696.87	2923.20	1.61	3810.03	886.83
6.0	0.06	80.0	40.7	-43.2	0.98%	0.99	6.272	6.033	1836.68	4716.68	4759.88	2923.20	1.63	3841.54	918.34
6.5	0.06	82.0	40.7	-43.2	0.98%	0.99	6.272	6.033	1882.60	4762.60	4805.80	2923.20	1.64	3864.50	941.30
7.0	0.06	85.0	40.7	-43.2	0.98%	0.99	6.272	6.033	1951.48	4831.48	4874.68	2923.20	1.67	3898.94	975.74
7.5	0.06	87.0	40.6	-57.6	0.98%	0.99	6.272	6.033	1997.39	4877.39	4934.99	2937.60	1.68	3936.30	998.70
8.0	0.06	88.0	40.6	-57.6	0.98%	0.99	6.272	6.033	2020.35	4900.35	4957.95	2937.60	1.69	3947.78	1010.18
8.5	0.08	90.0	40.6	-57.6	1.31%	0.99	6.293	6.013	2059.42	4939.42	4997.02	2937.60	1.70	3967.31	1029.71
9.0	0.08	92.0	40.6	-57.6	1.31%	0.99	6.293	6.013	2105.18	4985.18	5042.78	2937.60	1.72	3990.19	1052.59
9.5	0.08	93.0	40.7	-43.2	1.31%	0.99	6.293	6.013	2128.07	5008.07	5051.27	2923.20	1.73	3987.23	1064.03
10.0	0.08	95.0	40.7	-43.2	1.31%	0.99	6.293	6.013	2173.83	5053.83	5097.03	2923.20	1.74	4010.12	1086.92
11.0	0.10	97.0	40.7	-43.2	1.64%	0.98	6.314	5.993	2212.21	5092.21	5135.41	2923.20	1.76	4029.31	1106.11
12.0	0.12	100.0	40.9	-14.4	1.97%	0.98	6.335	5.973	2273.02	5153.02	5167.42	2894.40	1.79	4030.91	1136.51
13.0	0.12	102.0	40.8	-28.8	1.97%	0.98	6.335	5.973	2318.48	5198.48	5227.28	2908.80	1.80	4068.04	1159.24
14.0	0.14	104.0	40.8	-28.8	2.30%	0.98	6.356	5.953	2356.03	5236.03	5264.83	2908.80	1.81	4086.81	1178.01
15.0	0.14	106.0	40.9	-14.4	2.30%	0.98	6.356	5.953	2401.33	5281.33	5295.73	2894.40	1.83	4095.07	1200.67
16.0	0.14	108.0	40.9	-14.4	2.30%	0.98	6.356	5.953	2446.64	5326.64	5341.04	2894.40	1.85	4117.72	1223.32
17.0	0.16	110.0	40.9	-14.4	2.63%	0.97	6.378	5.933	2483.58	5363.58	5377.98	2894.40	1.86	4136.19	1241.79
18.0	0.18	112.0	40.8	-28.8	2.95%	0.97	6.399	5.913	2520.21	5400.21	5429.01	2908.80	1.87	4168.90	1260.10
19.0	0.18	114.0	40.7	-43.2	2.95%	0.97	6.399	5.913	2565.21	5445.21	5488.41	2923.20	1.88	4205.81	1282.61
20.0	0.20	115.0	40.6	-57.6	3.28%	0.97	6.421	5.893	2578.96	5458.96	5516.56	2937.60	1.88	4227.08	1289.48

GOLDER ASSOCIATES INC.
MT. LAUREL, NEW JERSEY

849880214

TIME (min)	DEFLECTION (in)	AXIAL LOAD (lbs)	PORE PRESSURE,U (psi)	dU (psf) (cumulative)	STRAIN (ε)	(1-ε)	AREA CORR (in^2)	HEIGHT CORR (in)	DEVIATOR STRESS (psf)	SIGMA 1 (psf)	EFFECTIVE SIGMA 1 (psf)	EFFECTIVE SIGMA 3 (psf)	EFF PRN STR RATIO (S1'/S3')	P' (psf)	Q' (psf)
21.0	0.22	117.0	40.6	-57.6	3.61%	0.96	6.443	5.873	2614.91	5494.91	5552.51	2937.60	1.89	4245.05	1307.45
22.0	0.22	118.0	40.5	-72.0	3.61%	0.96	6.443	5.873	2637.26	5517.26	5589.26	2952.00	1.89	4270.63	1318.63
23.0	0.22	120.0	40.4	-86.4	3.61%	0.96	6.443	5.873	2681.96	5561.96	5648.36	2966.40	1.90	4307.38	1340.98
24.0	0.24	121.0	40.4	-86.4	3.94%	0.96	6.465	5.853	2695.10	5575.10	5661.50	2966.40	1.91	4313.95	1347.55
25.0	0.24	122.0	40.4	-86.4	3.94%	0.96	6.465	5.853	2717.37	5597.37	5683.77	2966.40	1.92	4325.09	1358.69
26.0	0.26	123.0	40.5	-72.0	4.27%	0.96	6.487	5.833	2730.28	5610.28	5682.28	2952.00	1.92	4317.14	1365.14
27.0	0.26	124.0	40.6	-57.6	4.27%	0.96	6.487	5.833	2752.48	5632.48	5690.08	2937.60	1.94	4313.84	1376.24
28.0	0.28	125.0	40.6	-57.6	4.60%	0.95	6.510	5.813	2765.17	5645.17	5702.77	2937.60	1.94	4320.18	1382.58
29.0	0.28	126.0	40.6	-57.6	4.60%	0.95	6.510	5.813	2787.29	5667.29	5724.89	2937.60	1.95	4331.24	1393.64
30.0	0.30	127.0	40.7	-43.2	4.92%	0.95	6.532	5.793	2799.74	5679.74	5722.94	2923.20	1.96	4323.07	1399.87
31.0	0.30	129.0	40.8	-28.8	4.92%	0.95	6.532	5.793	2843.83	5723.83	5752.63	2908.80	1.98	4330.72	1421.92
32.0	0.32	130.0	40.7	-43.2	5.25%	0.95	6.555	5.773	2855.98	5735.98	5779.18	2923.20	1.98	4351.19	1427.99
33.0	0.34	131.0	40.6	-57.6	5.58%	0.94	6.577	5.753	2867.98	5747.98	5805.58	2937.60	1.98	4371.59	1433.99
34.0	0.34	132.0	40.4	-86.4	5.58%	0.94	6.577	5.753	2889.88	5769.88	5856.28	2966.40	1.97	4411.34	1444.94
35.0	0.36	133.0	40.3	-100.8	5.91%	0.94	6.600	5.733	2901.65	5781.65	5882.45	2980.80	1.97	4431.62	1450.82
36.0	0.38	133.0	40.3	-100.8	6.24%	0.94	6.623	5.713	2891.52	5771.52	5872.32	2980.80	1.97	4426.56	1445.76
37.0	0.38	134.0	40.1	-129.6	6.24%	0.94	6.623	5.713	2913.26	5793.26	5922.86	3009.60	1.97	4466.23	1456.63
38.0	0.38	135.0	40.1	-129.6	6.24%	0.94	6.623	5.713	2935.00	5815.00	5944.60	3009.60	1.98	4477.10	1467.50
39.0	0.40	136.0	40.1	-129.6	6.56%	0.93	6.647	5.693	2946.39	5826.39	5955.99	3009.60	1.98	4482.80	1473.20
40.0	0.40	137.0	40.1	-129.6	6.56%	0.93	6.647	5.693	2968.06	5848.06	5977.66	3009.60	1.99	4493.63	1484.03
41.0	0.42	138.0	40.2	-115.2	6.89%	0.93	6.670	5.673	2979.22	5859.22	5974.42	2995.20	1.99	4484.81	1489.61
42.0	0.44	138.0	40.2	-115.2	7.22%	0.93	6.694	5.653	2968.72	5848.72	5963.92	2995.20	1.99	4479.56	1484.36
43.0	0.44	139.0	40.3	-100.8	7.22%	0.93	6.694	5.653	2990.23	5870.23	5971.03	2980.80	2.00	4475.91	1495.11
44.0	0.44	140.0	40.3	-100.8	7.22%	0.93	6.694	5.653	3011.74	5891.74	5992.54	2980.80	2.01	4486.67	1505.87
45.0	0.46	141.0	40.3	-100.8	7.55%	0.92	6.718	5.633	3022.52	5902.52	6003.32	2980.80	2.01	4492.06	1511.26
46.0	0.46	141.0	40.3	-100.8	7.55%	0.92	6.718	5.633	3022.52	5902.52	6003.32	2980.80	2.01	4492.06	1511.26
47.0	0.48	142.0	40.3	-100.8	7.88%	0.92	6.742	5.613	3033.15	5913.15	6013.95	2980.80	2.02	4497.38	1516.58
48.0	0.50	142.0	40.3	-100.8	8.21%	0.92	6.766	5.593	3022.34	5902.34	6003.14	2980.80	2.01	4491.97	1511.17
49.0	0.50	143.0	40.3	-100.8	8.21%	0.92	6.766	5.593	3043.63	5923.63	6024.43	2980.80	2.02	4502.61	1521.81
50.0	0.52	144.0	40.1	-129.6	8.53%	0.91	6.790	5.573	3053.95	5933.95	6063.55	3009.60	2.01	4536.58	1526.98
51.0	0.52	144.0	40.1	-129.6	8.53%	0.91	6.790	5.573	3053.95	5933.95	6063.55	3009.60	2.01	4536.58	1526.98
52.0	0.54	145.0	40.1	-129.6	8.86%	0.91	6.814	5.553	3064.12	5944.12	6073.72	3009.60	2.02	4541.66	1532.06
53.0	0.54	146.0	40.1	-129.6	8.86%	0.91	6.814	5.553	3085.26	5965.26	6094.86	3009.60	2.03	4552.23	1542.63
54.0	0.54	147.0	40.2	-115.2	8.86%	0.91	6.814	5.553	3106.39	5986.39	6101.59	2995.20	2.04	4548.39	1553.19
55.0	0.56	147.0	40.1	-129.6	9.19%	0.91	6.839	5.533	3095.20	5975.20	6104.80	3009.60	2.03	4557.20	1547.60
56.0	0.58	147.0	40.1	-129.6	9.52%	0.90	6.864	5.513	3084.01	5964.01	6093.61	3009.60	2.02	4551.61	1542.01
57.0	0.58	148.0	40.0	-144.0	9.52%	0.90	6.864	5.513	3104.99	5984.99	6128.99	3024.00	2.03	4576.50	1552.50
58.0	0.60	149.0	40.0	-144.0	9.85%	0.90	6.889	5.493	3114.63	5994.63	6138.63	3024.00	2.03	4581.32	1557.32
59.0	0.60	149.0	40.1	-129.6	9.85%	0.90	6.889	5.493	3114.63	5994.63	6124.23	3009.60	2.03	4566.92	1557.32
60.0	0.60	150.0	40.0	-144.0	9.85%	0.90	6.889	5.493	3135.53	6015.53	6159.53	3024.00	2.04	4591.77	1567.77
61.0	0.62	151.0	40.0	-144.0	10.18%	0.90	6.914	5.473	3144.95	6024.95	6168.95	3024.00	2.04	4596.47	1572.47
62.0	0.62	152.0	39.9	-158.4	10.18%	0.90	6.914	5.473	3165.77	6045.77	6204.17	3038.40	2.04	4621.29	1582.89
63.0	0.64	152.0	39.9	-158.4	10.50%	0.89	6.939	5.453	3154.20	6034.20	6192.60	3038.40	2.04	4615.50	1577.10
64.0	0.66	153.0	39.9	-158.4	10.83%	0.89	6.965	5.433	3163.31	6043.31	6201.71	3038.40	2.04	4620.06	1581.66
65.0	0.66	153.0	39.9	-158.4	10.83%	0.89	6.965	5.433	3163.31	6043.31	6201.71	3038.40	2.04	4620.06	1581.66
66.0	0.66	154.0	39.8	-172.8	10.83%	0.89	6.965	5.433	3183.99	6063.99	6236.79	3052.80	2.04	4644.79	1591.99
67.0	0.68	155.0	39.8	-172.8	11.16%	0.89	6.991	5.413	3192.86	6072.86	6245.66	3052.80	2.05	4649.23	1596.43
68.0	0.68	156.0	39.8	-172.8	11.16%	0.89	6.991	5.413	3213.46	6093.46	6266.26	3052.80	2.05	4659.53	1606.73
69.0	0.70	157.0	39.8	-172.8	11.49%	0.89	7.017	5.393	3222.11	6102.11	6274.91	3052.80	2.06	4663.86	1611.06
70.0	0.72	157.0	39.9	-158.4	11.82%	0.88	7.043	5.373	3210.16	6090.16	6248.56	3038.40	2.06	4643.48	1605.08
71.0	0.72	158.0	39.8	-172.8	11.82%	0.88	7.043	5.373	3230.61	6110.61	6283.41	3052.80	2.06	4668.11	1615.31

GOLDER ASSOCIATES INC.
MT. LAUREL, NEW JERSEY

B3 (6'-8')
PAGE 2 of 3
20 psi

8498880215

TIME (min)	DEFLECTION (in)	AXIAL LOAD (lbs)	PORE PRESSURE,U (psi)	dU (psf) (cumulative)	STRAIN (ε)	(1-ε)	AREA CORR (in^2)	HEIGHT CORR (in)	DEVIATOR STRESS (psf)	SIGMA 1 (psf)	EFFECTIVE SIGMA 1 (psf)	EFFECTIVE SIGMA 3 (psf)	EFF PRN STR RATIO (S1'/S3')	P' (psf)	Q' (psf)
72.0	0.72	159.0	39.8	-172.8	11.82%	0.88	7.043	5.373	3251.06	6131.06	6303.86	3052.80	2.06	4678.33	1625.53
73.0	0.74	160.0	39.7	-187.2	12.15%	0.88	7.069	5.353	3259.33	6139.33	6326.53	3067.20	2.06	4696.86	1629.66
74.0	0.76	160.0	39.8	-172.8	12.47%	0.88	7.095	5.333	3247.15	6127.15	6299.95	3052.80	2.06	4676.38	1623.58
75.0	0.76	160.0	39.8	-172.8	12.47%	0.88	7.095	5.333	3247.15	6127.15	6299.95	3052.80	2.06	4676.38	1623.58
76.0	0.78	161.0	39.8	-172.8	12.80%	0.87	7.122	5.313	3255.19	6135.19	6307.99	3052.80	2.07	4680.40	1627.60
77.0	0.78	161.0	39.8	-172.8	12.80%	0.87	7.122	5.313	3255.19	6135.19	6307.99	3052.80	2.07	4680.40	1627.60
78.0	0.80	161.0	39.8	-172.8	13.13%	0.87	7.149	5.293	3242.94	6122.94	6295.74	3052.80	2.06	4674.27	1621.47
79.0	0.82	161.0	39.7	-187.2	13.46%	0.87	7.176	5.273	3230.68	6110.68	6297.88	3067.20	2.05	4682.54	1615.34
80.0	0.82	161.0	39.7	-187.2	13.46%	0.87	7.176	5.273	3230.68	6110.68	6297.88	3067.20	2.05	4682.54	1615.34
81.0	0.84	162.0	39.8	-172.8	13.79%	0.86	7.204	5.253	3238.42	6118.42	6291.22	3052.80	2.06	4672.01	1619.21
82.0	0.84	162.0	39.8	-172.8	13.79%	0.86	7.204	5.253	3238.42	6118.42	6291.22	3052.80	2.06	4672.01	1619.21
83.0	0.86	162.0	39.7	-187.2	14.11%	0.86	7.231	5.233	3226.09	6106.09	6293.29	3067.20	2.05	4680.25	1613.05
84.0	0.86	162.0	39.8	-172.8	14.11%	0.86	7.231	5.233	3226.09	6106.09	6278.89	3052.80	2.06	4665.85	1613.05
85.0	0.86	162.0	39.8	-172.8	14.11%	0.86	7.231	5.233	3226.09	6106.09	6278.89	3052.80	2.06	4665.85	1613.05
86.0	0.88	163.0	39.8	-172.8	14.44%	0.86	7.259	5.213	3233.60	6113.60	6286.40	3052.80	2.06	4669.60	1616.80
87.0	0.90	163.0	39.8	-172.8	14.77%	0.85	7.287	5.193	3221.19	6101.19	6273.99	3052.80	2.06	4663.40	1610.60
88.0	0.90	163.0	39.8	-172.8	14.77%	0.85	7.287	5.193	3221.19	6101.19	6273.99	3052.80	2.06	4663.40	1610.60
89.0	0.92	163.0	39.7	-187.2	15.10%	0.85	7.315	5.173	3208.79	6088.79	6275.99	3067.20	2.05	4671.59	1604.39
90.0	0.92	163.0	39.7	-187.2	15.10%	0.85	7.315	5.173	3208.79	6088.79	6275.99	3067.20	2.05	4671.59	1604.39

DEVIATORIC STRESS AT FAILURE: **3212.55**

EFFECTIVE PRINCIPAL STRESS RATIO AT FAILURE: **2.04**

GOLDER ASSOCIATES INC.
MT. LAUREL, NEW JERSEY

B3 (6'-8')
PAGE 3 of 3
20 psi

8498880216

CONSOLIDATED UNDRAINED WITH PORE PRESSURE MEASUREMENT
ASTM D 4767

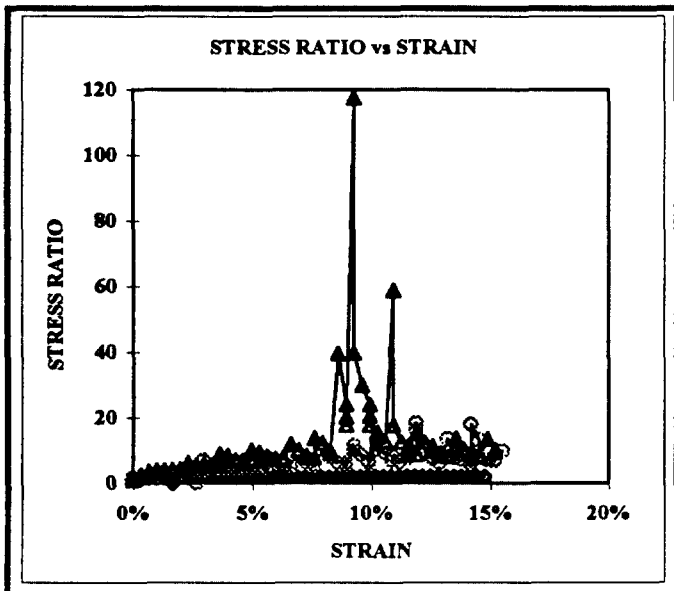

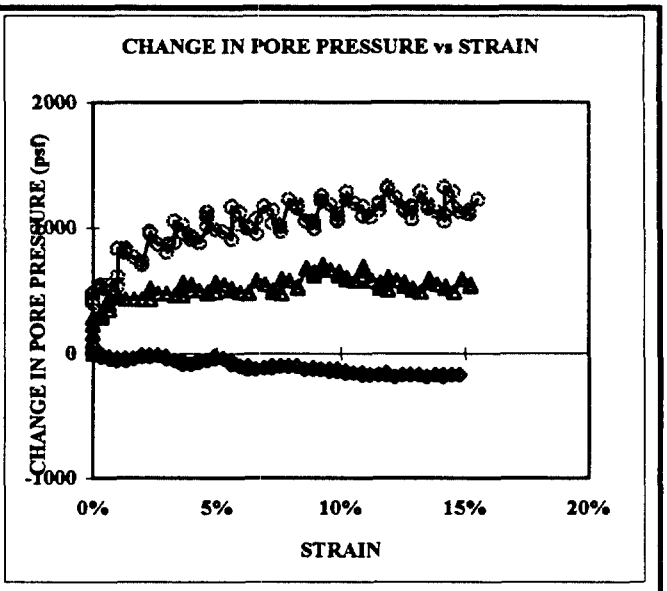

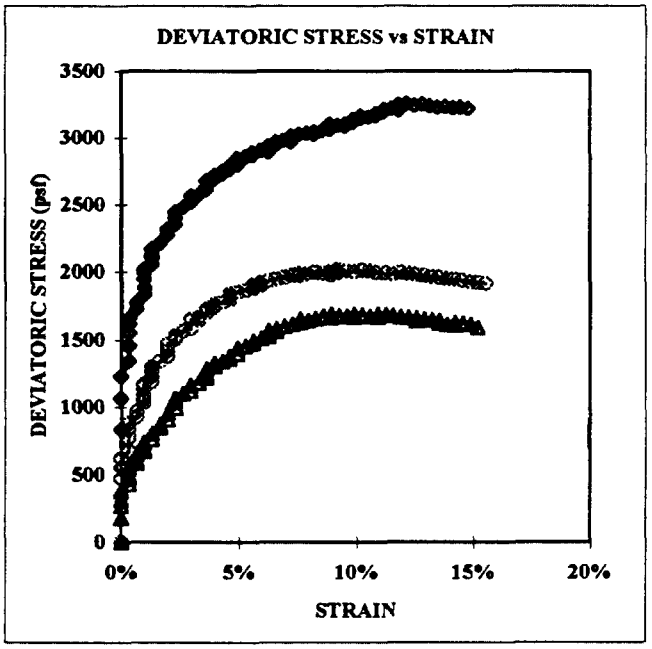

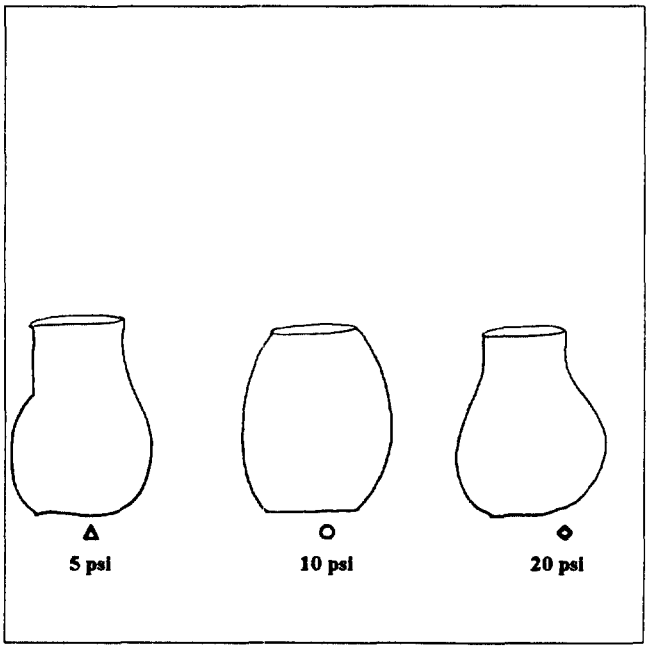

SAMPLE #:	B3 6'-8'	CONFINING PRES(psi)	5	10	20
		MOIST DENSITY(pcf)	96.68	96.85	99.16
DESCRIPTION:	Very dark brown SILT, little sand, trace gravel (MH)	% MOISTURE	61.92%	64.14%	56.36%
		STRAIN RATE(%/min)	0.17	0.17	0.16

FAILURE BASED UPON 15% STRAIN

DATE	9/16/96
TECH	JMP/RMW
REVIEW	RMW

PSE&G/RI-IRA/NJ
953-6306

GOLDER ASSOCIATES INC.
MT. LAUREL, NEW JERSEY

849880217

CONSOLIDATED UNDRAINED WITH PORE PRESSURE MEASUREMENT
ASTM D 4767

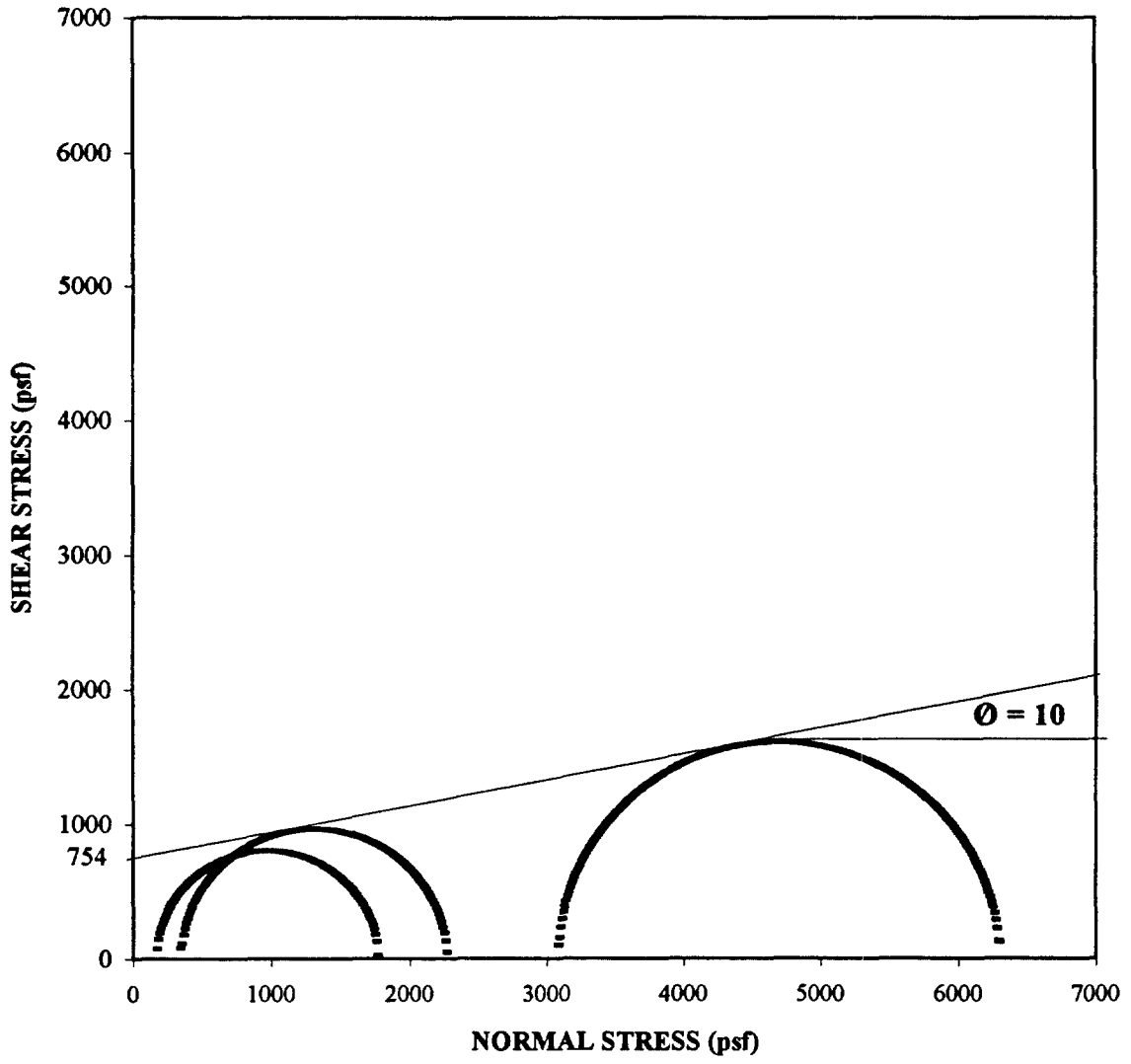

SAMPLE #:	B3 6'-8'	CONFINING PRES(psi)	5	10	20
		MOIST DENSITY(pcf)	96.68	96.85	99.16
DESCRIPTION:	Very dark brown SILT, little sand, trace gravel (MH)	% MOISTURE	61.92%	64.14%	56.36%
		STRAIN RATE(%/min)	0.17	0.17	0.16
		FAILURE BASED UPON 15% STRAIN			
				DATE	9/16/96
PSE&G/RI-IRA/NJ				TECH	JMP/RMW
953-6306				REVIEW	RMW

GOLDER ASSOCIATES INC.
MT. LAUREL, NEW JERSEY

849880218

PARTICLE-SIZE ANALYSIS OF SOILS

ASTM D 421, D 422, D 1140, D 2216, D 2217

PSE&G/RI-IRA/NJ		**SAMPLE #:**	**B4 6'-8'**
953-6306			

MOISTURE CONTENT (Delivered Moisture)

tare #	GH2
wt soil&tare,moist (g)	1020.90
wt soil&tare,dry (g)	608.40
wt tare (g)	151.66
wt moisture (g)	412.50
wt dry soil (g)	456.74
% moisture	**90.31%**

% PASSING #10 SIEVE

Total Wt (g)	472.54
Wt Split #10 (g)	472.54
% passing #10	100.00%

	SIEVE	wt ret (g)	% ret	% pass	SIEVE	
coarse gravel	3.000		0.00%	**100.00%**	3.000	coarse gravel
	1.500		0.00%	**100.00%**	1.500	
	1.000		0.00%	**100.00%**	1.000	
fine gravel	0.750		0.00%	**100.00%**	0.750	fine gravel
	0.375		0.00%	**100.00%**	0.375	
coarse sand	#4		0.00%	**100.00%**	#4	coarse sand
medium sand	#10		0.00%	**100.00%**	#10	medium sand

SAMPLE PREPARATION FOR HYDROMETER ANALYSIS

% Passing #10 Sieve	100.00	Initial Moist Weight	67.9
Specific Gravity (ASSUMED)	2.65	Calculated Dry Weight	66.73
ml Dispersing Agent Used (40 ml Na(PO4)n per 1000 ml H2O)	125		

MOISTURE CONTENT (Hygroscopic - #10)

tare #	CH20	tare #	RW17		
wt soil&tare,moist (g)	37.50	wt soil&tare,dry (g)	217.01	LL:	112
wt soil&tare,dry (g)	37.22	wt soil&tare,wash (g)	155.15	PL:	69
wt tare (g)	21.29	wt tare (g)	150.28	PI:	43
wt moisture (g)	0.28	wt fines lost (g)	61.86		
wt dry soil (g)	15.93	wt dry soil (g)	66.73		
% moisture	**1.76%**	% fines lost	**92.70%**		

PERCENT BETWEEN #10 AND #200 SIEVE CALCULATION

SIEVE	CUMUL WT RETAINED	CUMUL WT RET. CORR.	PERCENT PASSING		
#10	0.00	0.00	**100.00%**	#10	medium sand
#20	2.01	2.01	**96.99%**	#20	
#40	3.26	3.26	**95.11%**	#40	fine sand
#60	3.87	3.87	**94.20%**	#60	
#100	4.36	4.36	**93.47%**	#100	
#200	4.80	4.80	**92.81%**	#200	fines

DATE	TIME	TIME,CUM (min)	READING R	TEMP T	HYD RDG H	PARTICLE DIAMETER	% FINER
9/23/96	8:52	2.0	55.0	25.0	4.0	0.026	**76.43%**
	8:54	4.0	51.0	25.0	4.0	0.019	**70.44%**
	8:58	8.0	46.0	25.0	4.0	0.014	**62.94%**
	9:05	15.0	31.0	25.0	4.0	0.012	**40.46%**
	9:20	30.0	28.0	25.0	4.0	0.008	**35.97%**
	9:50	60.0	25.0	25.0	4.0	0.006	**31.47%**
	10:50	120.0	20.5	24.0	5.0	0.004	**23.23%**
	12:50	240.0	17.5	23.0	5.0	0.003	**18.73%**
	16:50	480.0	15.0	24.0	4.5	0.002	**15.74%**
9/24/96	8:50	1440.0	12.5	22.0	4.5	0.001	**11.99%**

%C GRVL:	**0.00%**
%F GRVL:	**0.00%**
%C SAND:	**0.00%**
%M SAND:	**4.89%**
%F SAND:	**2.31%**
%FINES:	**92.81%**
%TOTAL:	**100.00%**

Wet Color: **Very dark brown**
Description: **SILT, little sand (MH)**

DATE	9/24/96
TECH	RDD
REVIEW	RMW

GOLDER ASSOCIATES INC.
MT. LAUREL, NEW JERSEY

849880219

PARTICLE-SIZE DISTRIBUTION ASTM D 421 AND D 422
US STANDARD SIEVE OPENING SIZES

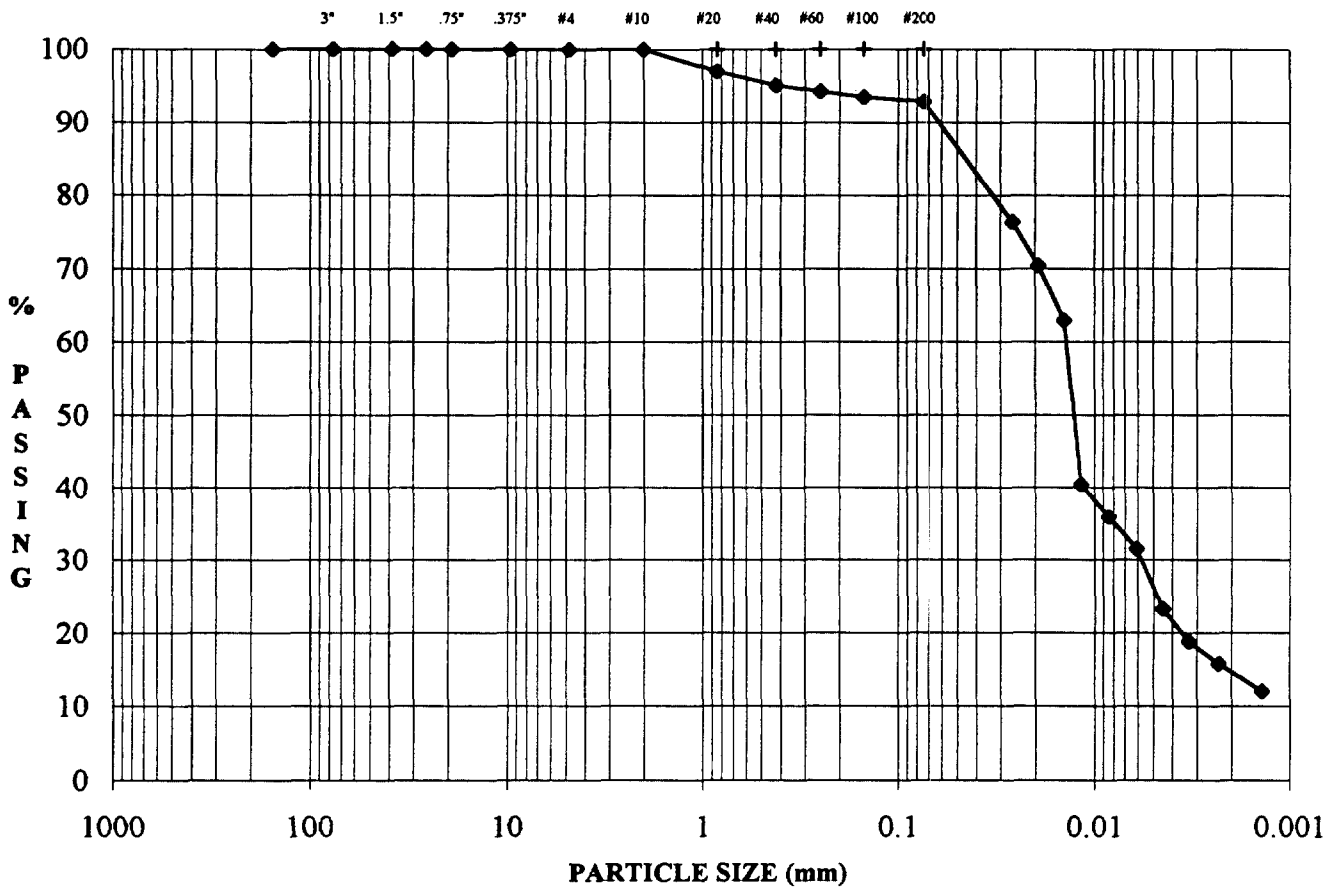

	Coarse	Fine	Cor	Med	Fine	Silt or Clay Size
COBBLES	GRAVEL		SAND			FINES

SAMPLE #:	B4 6'-8'
WET COLOR:	Very dark brown
DESCRIPTION:	SILT, little sand (MH)

Mc:	90.31%
LL:	112
PL:	69
PI :	43
Gs:	-

PSE&G/RI-IRA/NJ
953-6306

DATE	9/24/96
TECH	RDD
REVIEW	RMW

GOLDER ASSOCIATES INC.
MT. LAUREL, NEW JERSEY

CONSOLIDATED UNDRAINED WI[illegible] PORE PRESSURE MEASUREMENT

AS[illegible] 4767

PSE&G/RI-IRA/NJ 953-6306	SAMPLE #:	B4 6'-8'	DATE 9/16/96 TECH JMP/RMW REVIEW RMW

SAMPLE DATA

height (in)	6.031	confining pressure (psi)	10	**MOISTURE CONTENT**	
diameter (in)	2.837	machine speed (in/min)	0.02	tare #	GH12
area (in^2)	6.321	strain rate (%/min)	0.33	wt soil&tare,moist	970.38
height/diameter ratio	2.13	final "B" value	1.00	wt soil&tare,dry	608.40
volume (in^3)	38.12	t50 (min)	5.7	wt tare	151.66
% moisture,initial	90.31%	volume,solids	11.38	wt moisture	361.98
weight (g)	869.24	volume,voids	26.74	wt dry soil	456.74
specific gravity	2.60	void ratio	2.350	% moisture,final	79.25%
moist density (pcf)	86.82	% saturation,initial	87.70%		
dry density (pcf)	45.62	% saturation,final	82.60%		

DESCRIPTION: Very dark brown SILT, little sand (MH)

TIME (min)	DEFLECTION (in)	AXIAL LOAD (lbs)	PORE PRESSURE,U (psi)	dU (psf) (cumulative)	STRAIN (ε)	(1-ε)	AREA CORR (in^2)	HEIGHT CORR (in)	DEVIATOR STRESS (psf)	SIGMA 1 (psf)	EFFECTIVE SIGMA 1 (psf)	EFFECTIVE SIGMA 3 (psf)	EFF PRN STR RATIO (S1'/S3')	P' (psf)	Q' (psf)
0.0	0.00	0.0	31.6	0.0	0.00%	1.00	6.321	6.031	0.00	1440.00	1440.00	1440.00	1.00	1440.00	0.00
0.5	0.00	14.0	33.1	216.0	0.00%	1.00	6.321	6.031	318.92	1758.92	1542.92	1224.00	1.26	1383.46	159.46
1.0	0.00	20.0	33.9	331.2	0.00%	1.00	6.321	6.031	455.60	1895.60	1564.40	1108.80	1.41	1336.60	227.80
1.5	0.02	25.0	34.4	403.2	0.33%	1.00	6.342	6.011	567.61	2007.61	1604.41	1036.80	1.55	1320.61	283.81
2.0	0.02	29.0	35.0	489.6	0.33%	1.00	6.342	6.011	658.43	2098.43	1608.83	950.40	1.69	1279.61	329.21
2.5	0.04	32.0	35.3	532.8	0.66%	0.99	6.364	5.991	724.13	2164.13	1631.33	907.20	1.80	1269.26	362.06
3.0	0.04	34.0	35.7	590.4	0.66%	0.99	6.364	5.991	769.38	2209.38	1618.98	849.60	1.91	1234.29	384.69
3.5	0.06	37.0	36.0	633.6	0.99%	0.99	6.385	5.971	834.48	2274.48	1640.88	806.40	2.03	1223.64	417.24
4.0	0.06	39.0	36.2	662.4	0.99%	0.99	6.385	5.971	879.58	2319.58	1657.18	777.60	2.13	1217.39	439.79
4.5	0.08	41.0	36.5	705.6	1.33%	0.99	6.406	5.951	921.59	2361.59	1655.99	734.40	2.25	1195.20	460.80
5.0	0.08	42.0	36.7	734.4	1.33%	0.99	6.406	5.951	944.07	2384.07	1649.67	705.60	2.34	1177.63	472.03
5.5	0.10	44.0	36.9	763.2	1.66%	0.98	6.428	5.931	985.70	2425.70	1662.50	676.80	2.46	1169.65	492.85
6.0	0.10	46.0	37.1	792.0	1.66%	0.98	6.428	5.931	1030.51	2470.51	1678.51	648.00	2.59	1163.25	515.25
6.5	0.12	47.0	37.2	806.4	1.99%	0.98	6.450	5.911	1049.36	2489.36	1682.96	633.60	2.66	1158.28	524.68
7.0	0.12	49.0	37.4	835.2	1.99%	0.98	6.450	5.911	1094.01	2534.01	1698.81	604.80	2.81	1151.81	547.01
7.5	0.14	50.0	37.5	849.6	2.32%	0.98	6.472	5.891	1112.56	2552.56	1702.96	590.40	2.88	1146.68	556.28
8.0	0.14	51.0	37.6	864.0	2.32%	0.98	6.472	5.891	1134.81	2574.81	1710.81	576.00	2.97	1143.41	567.41
8.5	0.16	52.0	37.6	864.0	2.65%	0.97	6.494	5.871	1153.13	2593.13	1729.13	576.00	3.00	1152.57	576.57
9.0	0.16	53.0	37.6	864.0	2.65%	0.97	6.494	5.871	1175.31	2615.31	1751.31	576.00	3.04	1163.66	587.66
9.5	0.18	55.0	37.6	864.0	2.98%	0.97	6.516	5.851	1215.51	2655.51	1791.51	576.00	3.11	1183.75	607.75
10.0	0.18	56.0	37.6	864.0	2.98%	0.97	6.516	5.851	1237.61	2677.61	1813.61	576.00	3.15	1194.80	618.80
11.0	0.22	58.0	37.8	892.8	3.65%	0.96	6.561	5.811	1273.04	2713.04	1820.24	547.20	3.33	1183.72	636.52
12.0	0.22	60.0	38.0	921.6	3.65%	0.96	6.561	5.811	1316.94	2756.94	1835.34	518.40	3.54	1176.87	658.47
13.0	0.24	62.0	38.9	1051.2	3.98%	0.96	6.583	5.791	1356.16	2796.16	1744.96	388.80	4.49	1066.88	678.08
14.0	0.26	63.0	39.0	1065.6	4.31%	0.96	6.606	5.771	1373.27	2813.27	1747.67	374.40	4.67	1061.04	686.64
15.0	0.28	65.0	39.1	1080.0	4.64%	0.95	6.629	5.751	1411.96	2851.96	1771.96	360.00	4.92	1065.98	705.98
16.0	0.30	66.0	39.2	1094.4	4.97%	0.95	6.652	5.731	1428.69	2868.69	1774.29	345.60	5.13	1059.95	714.35
17.0	0.34	68.0	39.3	1108.8	5.64%	0.94	6.699	5.691	1461.71	2901.71	1792.91	331.20	5.41	1062.06	730.86
18.0	0.34	69.0	39.4	1123.2	5.64%	0.94	6.699	5.691	1483.21	2923.21	1800.01	316.80	5.68	1058.40	741.60
19.0	0.36	70.0	39.4	1123.2	5.97%	0.94	6.723	5.671	1499.42	2939.42	1816.22	316.80	5.73	1066.51	749.71
20.0	0.40	71.0	39.5	1137.6	6.63%	0.93	6.770	5.631	1510.11	2950.11	1812.51	302.40	5.99	1057.45	755.05

GOLDER ASSOCIATES INC.
MT. LAUREL, NEW JERSEY

849880221

TIME (min)	DEFLECTION (in)	AXIAL LOAD (lbs)	PORE PRESSURE,U (psi)	dU (psf) (cumulative)	STRAIN (ε)	(1-ε)	AREA CORR (in^2)	HEIGHT CORR (in)	DEVIATOR STRESS (psf)	SIGMA 1 (psf)	EFFECTIVE SIGMA 1 (psf)	EFFECTIVE SIGMA 3 (psf)	EFF PRN STR RATIO (S1'/S3')	P' (psf)	Q' (psf)
21.0	0.40	72.0	39.0	1065.6	6.63%	0.93	6.770	5.631	1531.38	2971.38	1905.78	374.40	5.09	1140.09	765.69
22.0	0.44	73.0	39.1	1080.0	7.30%	0.93	6.819	5.591	1541.62	2981.62	1901.62	360.00	5.28	1130.81	770.81
23.0	0.46	74.0	39.1	1080.0	7.63%	0.92	6.843	5.571	1557.15	2997.15	1917.15	360.00	5.33	1138.57	778.57
24.0	0.46	75.0	39.2	1094.4	7.63%	0.92	6.843	5.571	1578.19	3018.19	1923.79	345.60	5.57	1134.69	789.09
25.0	0.50	76.0	39.9	1195.2	8.29%	0.92	6.893	5.531	1587.75	3027.75	1832.55	244.80	7.49	1038.67	793.87
26.0	0.52	76.0	39.9	1195.2	8.62%	0.91	6.918	5.511	1582.01	3022.01	1826.81	244.80	7.46	1035.80	791.00
27.0	0.54	77.0	39.9	1195.2	8.95%	0.91	6.943	5.491	1597.01	3037.01	1841.81	244.80	7.52	1043.30	798.50
28.0	0.56	78.0	39.9	1195.2	9.29%	0.91	6.968	5.471	1611.85	3051.85	1856.65	244.80	7.58	1050.73	805.93
29.0	0.58	78.0	39.9	1195.2	9.62%	0.90	6.994	5.451	1605.96	3045.96	1850.76	244.80	7.56	1047.78	802.98
30.0	0.60	79.0	39.9	1195.2	9.95%	0.90	7.020	5.431	1620.58	3060.58	1865.38	244.80	7.62	1055.09	810.29
31.0	0.62	79.0	39.9	1195.2	10.28%	0.90	7.046	5.411	1614.62	3054.62	1859.42	244.80	7.60	1052.11	807.31
32.0	0.62	80.0	39.9	1195.2	10.28%	0.90	7.046	5.411	1635.05	3075.05	1879.85	244.80	7.68	1062.33	817.53
33.0	0.66	80.0	39.9	1195.2	10.94%	0.89	7.098	5.371	1622.97	3062.97	1867.77	244.80	7.63	1056.28	811.48
34.0	0.68	80.0	39.7	1166.4	11.28%	0.89	7.125	5.351	1616.92	3056.92	1890.52	273.60	6.91	1082.06	808.46
35.0	0.70	81.0	39.5	1137.6	11.61%	0.88	7.151	5.331	1631.02	3071.02	1933.42	302.40	6.39	1117.91	815.51
36.0	0.72	81.0	39.5	1137.6	11.94%	0.88	7.178	5.311	1624.90	3064.90	1927.30	302.40	6.37	1114.85	812.45
37.0	0.74	81.0	39.5	1137.6	12.27%	0.88	7.205	5.291	1618.78	3058.78	1921.18	302.40	6.35	1111.79	809.39
38.0	0.76	82.0	39.5	1137.6	12.60%	0.87	7.233	5.271	1632.57	3072.57	1934.97	302.40	6.40	1118.68	816.28
39.0	0.78	82.0	39.4	1123.2	12.93%	0.87	7.260	5.251	1626.37	3066.37	1943.17	316.80	6.13	1129.99	813.19
40.0	0.80	82.0	39.4	1123.2	13.26%	0.87	7.288	5.231	1620.18	3060.18	1936.98	316.80	6.11	1126.89	810.09
41.0	0.82	82.0	40.1	1224.0	13.60%	0.86	7.316	5.211	1613.99	3053.99	1829.99	216.00	8.47	1022.99	806.99
42.0	0.84	82.0	40.2	1238.4	13.93%	0.86	7.344	5.191	1607.79	3047.79	1809.39	201.60	8.98	1005.50	803.90
43.0	0.86	82.0	40.1	1224.0	14.26%	0.86	7.373	5.171	1601.60	3041.60	1817.60	216.00	8.41	1016.80	800.80
44.0	0.88	82.0	40.1	1224.0	14.59%	0.85	7.401	5.151	1595.40	3035.40	1811.40	216.00	8.39	1013.70	797.70
45.0	0.90	82.0	40.1	1224.0	14.92%	0.85	7.430	5.131	1589.21	3029.21	1805.21	216.00	8.36	1010.60	794.60
46.0	0.92	82.0	40.0	1209.6	15.25%	0.85	7.459	5.111	1583.01	3023.01	1813.41	230.40	7.87	1021.91	791.51
47.0	0.94	82.0	40.0	1209.6	15.59%	0.84	7.488	5.091	1576.82	3016.82	1807.22	230.40	7.84	1018.81	788.41

DEVIATORIC STRESS AT FAILURE: 1587.71

EFFECTIVE PRINCIPAL STRESS RATIO AT FAILURE: 8.24

GOLDER ASSOCIATES INC.
MT. LAUREL, NEW JERSEY

B4 (6'-8')
PAGE 2 of 2
10 psi

849880222

CONSOLIDATED UNDRAINED WI[illegible] PORE PRESSURE MEASUREMENT

AST[illegible] 4767

PSE&G/RI-IRA/NJ 953-6306	SAMPLE #: B4 6'-8'	DATE	9/16/96
		TECH	JMP/RMW
		REVIEW	RMW

SAMPLE DATA

height (in)	5.978	confining pressure (psi)	20
diameter (in)	2.801	machine speed (in/min)	0.01
area (in^2)	6.162	strain rate (%/min)	0.17
height/diameter ratio	2.13	final "B" value	0.96
volume (in^3)	36.84	t50 (min)	12.9
% moisture,initial	90.31%	volume,solids	13.00
weight (g)	898.29	volume,voids	23.83
specific gravity	2.60	void ratio	1.833
moist density (pcf)	92.86	% saturation,initial	88.16%
dry density (pcf)	48.79	% saturation,final	81.36%

MOISTURE CONTENT

tare #	RW10
wt soil&tare,moist	981.02
wt soil&tare,dry	663.24
wt tare	151.94
wt moisture	317.78
wt dry soil	511.30
% moisture,final	62.15%

DESCRIPTION: Very dark brown SILT, little sand (MH)

TIME (min)	DEFLECTION (in)	AXIAL LOAD (lbs)	PORE PRESSURE,U (psi)	dU (psf) (cumulative)	STRAIN (ε)	(1-ε)	AREA CORR (in^2)	HEIGHT CORR (in)	DEVIATOR STRESS (psf)	SIGMA 1 (psf)	EFFECTIVE SIGMA 1 (psf)	EFFECTIVE SIGMA 3 (psf)	EFF PRN STR RATIO (S1'/S3')	P' (psf)	Q' (psf)
0.0	0.00	0.0	20.0	0.0	0.00%	1.00	6.162	5.978	0.00	2880.00	2880.00	2880.00	1.00	2880.00	0.00
0.5	0.00	16.0	22.3	331.2	0.00%	1.00	6.162	5.978	373.91	3253.91	2922.71	2548.80	1.15	2735.75	186.95
1.0	0.00	26.0	23.3	475.2	0.00%	1.00	6.162	5.978	607.60	3487.60	3012.40	2404.80	1.25	2708.60	303.80
1.5	0.02	34.0	24.4	633.6	0.33%	1.00	6.183	5.958	791.90	3671.90	3038.30	2246.40	1.35	2642.35	395.95
2.0	0.02	38.0	24.9	705.6	0.33%	1.00	6.183	5.958	885.06	3765.06	3059.46	2174.40	1.41	2616.93	442.53
2.5	0.02	42.0	25.7	820.8	0.33%	1.00	6.183	5.958	978.23	3858.23	3037.43	2059.20	1.48	2548.31	489.11
3.0	0.02	45.0	26.2	892.8	0.33%	1.00	6.183	5.958	1048.10	3928.10	3035.30	1987.20	1.53	2511.25	524.05
3.5	0.04	48.0	26.7	964.8	0.67%	0.99	6.203	5.938	1114.22	3994.22	3029.42	1915.20	1.58	2472.31	557.11
4.0	0.04	50.0	27.1	1022.4	0.67%	0.99	6.203	5.938	1160.65	4040.65	3018.25	1857.60	1.62	2437.92	580.32
4.5	0.04	52.0	27.6	1094.4	0.67%	0.99	6.203	5.938	1207.07	4087.07	2992.67	1785.60	1.68	2389.14	603.54
5.0	0.06	54.0	27.9	1137.6	1.00%	0.99	6.224	5.918	1249.28	4129.28	2991.68	1742.40	1.72	2367.04	624.64
5.5	0.06	56.0	28.3	1195.2	1.00%	0.99	6.224	5.918	1295.55	4175.55	2980.35	1684.80	1.77	2332.57	647.77
6.0	0.06	57.0	28.6	1238.4	1.00%	0.99	6.224	5.918	1318.68	4198.68	2960.28	1641.60	1.80	2300.94	659.34
6.5	0.06	59.0	29.4	1353.6	1.00%	0.99	6.224	5.918	1364.95	4244.95	2891.35	1526.40	1.89	2208.88	682.48
7.0	0.08	61.0	29.8	1411.2	1.34%	0.99	6.246	5.898	1406.45	4286.45	2875.25	1468.80	1.96	2172.03	703.23
7.5	0.08	62.0	29.9	1425.6	1.34%	0.99	6.246	5.898	1429.51	4309.51	2883.91	1454.40	1.98	2169.15	714.75
8.0	0.08	63.0	29.9	1425.6	1.34%	0.99	6.246	5.898	1452.57	4332.57	2906.97	1454.40	2.00	2180.68	726.28
8.5	0.08	64.0	30.1	1454.4	1.34%	0.99	6.246	5.898	1475.62	4355.62	2901.22	1425.60	2.04	2163.41	737.81
9.0	0.08	65.0	30.5	1512.0	1.34%	0.99	6.246	5.898	1498.68	4378.68	2866.68	1368.00	2.10	2117.34	749.34
9.5	0.10	66.0	30.7	1540.8	1.67%	0.98	6.267	5.878	1516.58	4396.58	2855.78	1339.20	2.13	2097.49	758.29
10.0	0.10	67.0	30.9	1569.6	1.67%	0.98	6.267	5.878	1539.55	4419.55	2849.95	1310.40	2.17	2080.18	769.78
11.0	0.12	69.0	31.2	1612.8	2.01%	0.98	6.288	5.858	1580.12	4460.12	2847.32	1267.20	2.25	2057.26	790.06
12.0	0.12	71.0	31.6	1670.4	2.01%	0.98	6.288	5.858	1625.92	4505.92	2835.52	1209.60	2.34	2022.56	812.96
13.0	0.14	72.0	31.9	1713.6	2.34%	0.98	6.310	5.838	1643.19	4523.19	2809.59	1166.40	2.41	1987.99	821.59
14.0	0.14	74.0	32.2	1756.8	2.34%	0.98	6.310	5.838	1688.83	4568.83	2812.03	1123.20	2.50	1967.62	844.42
15.0	0.16	75.0	32.4	1785.6	2.68%	0.97	6.331	5.818	1705.79	4585.79	2800.19	1094.40	2.56	1947.29	852.89
16.0	0.16	76.0	32.7	1828.8	2.68%	0.97	6.331	5.818	1728.53	4608.53	2779.73	1051.20	2.64	1915.47	864.27
17.0	0.18	77.0	32.9	1857.6	3.01%	0.97	6.353	5.798	1745.26	4625.26	2767.66	1022.40	2.71	1895.03	872.63
18.0	0.18	79.0	33.7	1972.8	3.01%	0.97	6.353	5.798	1790.59	4670.59	2697.79	907.20	2.97	1802.49	895.29
19.0	0.20	80.0	33.9	2001.6	3.35%	0.97	6.375	5.778	1807.00	4687.00	2685.40	878.40	3.06	1781.90	903.50
20.0	0.22	81.0	33.8	1987.2	3.68%	0.96	6.397	5.758	1823.25	4703.25	2716.05	892.80	3.04	1804.43	911.63

GOLDER ASSOCIATES INC.
MT. LAUREL, NEW JERSEY

849880223

TIME (min)	DEFLECTION (in)	AXIAL LOAD (lbs)	PORE PRESSURE,U (psi)	dU (psf) (cumulative)	STRAIN (ε)	(1-ε)	AREA CORR (in^2)	HEIGHT CORR (in)	DEVIATOR STRESS (psf)	SIGMA 1 (psf)	EFFECTIVE SIGMA 1 (psf)	EFFECTIVE SIGMA 3 (psf)	EFF PRN STR RATIO (S1'/S3')	P' (psf)	Q' (psf)
21.0	0.22	81.0	33.9	2001.6	3.68%	0.96	6.397	5.758	1823.25	4703.25	2701.65	878.40	3.08	1790.03	911.63
22.0	0.24	82.0	34.0	2016.0	4.01%	0.96	6.420	5.738	1839.35	4719.35	2703.35	864.00	3.13	1783.68	919.68
23.0	0.24	83.0	34.2	2044.8	4.01%	0.96	6.420	5.738	1861.78	4741.78	2696.98	835.20	3.23	1766.09	930.89
24.0	0.24	85.0	34.4	2073.6	4.01%	0.96	6.420	5.738	1906.65	4786.65	2713.05	806.40	3.36	1759.72	953.32
25.0	0.26	85.0	34.5	2088.0	4.35%	0.96	6.442	5.718	1900.00	4780.00	2692.00	792.00	3.40	1742.00	950.00
26.0	0.28	86.0	34.6	2102.4	4.68%	0.95	6.465	5.698	1915.63	4795.63	2693.23	777.60	3.46	1735.41	957.81
27.0	0.28	87.0	34.8	2131.2	4.68%	0.95	6.465	5.698	1937.90	4817.90	2686.70	748.80	3.59	1717.75	968.95
28.0	0.30	88.0	34.9	2145.6	5.02%	0.95	6.487	5.678	1953.30	4833.30	2687.70	734.40	3.66	1711.05	976.65
29.0	0.30	89.0	35.0	2160.0	5.02%	0.95	6.487	5.678	1975.49	4855.49	2695.49	720.00	3.74	1707.75	987.75
30.0	0.30	90.0	35.1	2174.4	5.02%	0.95	6.487	5.678	1997.69	4877.69	2703.29	705.60	3.83	1704.45	998.85
31.0	0.32	90.0	35.8	2275.2	5.35%	0.95	6.510	5.658	1990.65	4870.65	2595.45	604.80	4.29	1600.13	995.33
32.0	0.34	91.0	35.8	2275.2	5.69%	0.94	6.534	5.638	2005.66	4885.66	2610.46	604.80	4.32	1607.63	1002.83
33.0	0.34	92.0	35.6	2246.4	5.69%	0.94	6.534	5.638	2027.70	4907.70	2661.30	633.60	4.20	1647.45	1013.85
34.0	0.36	92.0	35.6	2246.4	6.02%	0.94	6.557	5.618	2020.51	4900.51	2654.11	633.60	4.19	1643.85	1010.25
35.0	0.38	94.0	35.7	2260.8	6.36%	0.94	6.580	5.598	2057.08	4937.08	2676.28	619.20	4.32	1647.74	1028.54
36.0	0.38	94.0	35.8	2275.2	6.36%	0.94	6.580	5.598	2057.08	4937.08	2661.88	604.80	4.40	1633.34	1028.54
37.0	0.40	95.0	35.8	2275.2	6.69%	0.93	6.604	5.578	2071.54	4951.54	2676.34	604.80	4.43	1640.57	1035.77
38.0	0.40	95.0	35.9	2289.6	6.69%	0.93	6.604	5.578	2071.54	4951.54	2661.94	590.40	4.51	1626.17	1035.77
39.0	0.40	96.0	36.0	2304.0	6.69%	0.93	6.604	5.578	2093.34	4973.34	2669.34	576.00	4.63	1622.67	1046.67
40.0	0.42	96.0	36.0	2304.0	7.03%	0.93	6.628	5.558	2085.84	4965.84	2661.84	576.00	4.62	1618.92	1042.92
41.0	0.44	97.0	36.7	2404.8	7.36%	0.93	6.651	5.538	2099.98	4979.98	2575.18	475.20	5.42	1525.19	1049.99
42.0	0.44	98.0	36.6	2390.4	7.36%	0.93	6.651	5.538	2121.63	5001.63	2611.23	489.60	5.33	1550.41	1060.81
43.0	0.46	98.0	36.3	2347.2	7.69%	0.92	6.676	5.518	2113.97	4993.97	2646.77	532.80	4.97	1589.78	1056.98
44.0	0.46	99.0	36.4	2361.6	7.69%	0.92	6.676	5.518	2135.54	5015.54	2653.94	518.40	5.12	1586.17	1067.77
45.0	0.46	100.0	36.4	2361.6	7.69%	0.92	6.676	5.518	2157.11	5037.11	2675.51	518.40	5.16	1596.95	1078.55
46.0	0.48	100.0	36.4	2361.6	8.03%	0.92	6.700	5.498	2149.29	5029.29	2667.69	518.40	5.15	1593.05	1074.65
47.0	0.50	101.0	36.5	2376.0	8.36%	0.92	6.724	5.478	2162.89	5042.89	2666.89	504.00	5.29	1585.44	1081.44
48.0	0.50	101.0	36.5	2376.0	8.36%	0.92	6.724	5.478	2162.89	5042.89	2666.89	504.00	5.29	1585.44	1081.44
49.0	0.52	101.0	36.6	2390.4	8.70%	0.91	6.749	5.458	2154.99	5034.99	2644.59	489.60	5.40	1567.10	1077.50
50.0	0.54	102.0	36.6	2390.4	9.03%	0.91	6.774	5.438	2168.35	5048.35	2657.95	489.60	5.43	1573.78	1084.18
51.0	0.54	102.0	36.7	2404.8	9.03%	0.91	6.774	5.438	2168.35	5048.35	2643.55	475.20	5.56	1559.38	1084.18
52.0	0.54	103.0	36.7	2404.8	9.03%	0.91	6.774	5.438	2189.61	5069.61	2664.81	475.20	5.61	1570.01	1094.81
53.0	0.56	103.0	36.8	2419.2	9.37%	0.91	6.799	5.418	2181.56	5061.56	2642.36	460.80	5.73	1551.58	1090.78
54.0	0.56	104.0	37.3	2491.2	9.37%	0.91	6.799	5.418	2202.74	5082.74	2591.54	388.80	6.67	1490.17	1101.37
55.0	0.58	104.0	37.2	2476.8	9.70%	0.90	6.824	5.398	2194.61	5074.61	2597.81	403.20	6.44	1500.50	1097.30
56.0	0.60	104.0	36.9	2433.6	10.04%	0.90	6.849	5.378	2186.48	5066.48	2632.88	446.40	5.90	1539.64	1093.24
57.0	0.60	105.0	36.9	2433.6	10.04%	0.90	6.849	5.378	2207.50	5087.50	2653.90	446.40	5.95	1550.15	1103.75
58.0	0.62	105.0	36.9	2433.6	10.37%	0.90	6.875	5.358	2199.29	5079.29	2645.69	446.40	5.93	1546.04	1099.64
59.0	0.62	105.0	36.9	2433.6	10.37%	0.90	6.875	5.358	2199.29	5079.29	2645.69	446.40	5.93	1546.04	1099.64
60.0	0.62	105.0	36.9	2433.6	10.37%	0.90	6.875	5.358	2199.29	5079.29	2645.69	446.40	5.93	1546.04	1099.64
61.0	0.64	106.0	36.9	2433.6	10.71%	0.89	6.901	5.338	2211.95	5091.95	2658.35	446.40	5.96	1552.37	1105.97
62.0	0.66	106.0	37.0	2448.0	11.04%	0.89	6.927	5.318	2203.66	5083.66	2635.66	432.00	6.10	1533.83	1101.83
63.0	0.66	106.0	37.0	2448.0	11.04%	0.89	6.927	5.318	2203.66	5083.66	2635.66	432.00	6.10	1533.83	1101.83
64.0	0.68	106.0	37.6	2534.4	11.38%	0.89	6.953	5.298	2195.37	5075.37	2540.97	345.60	7.35	1443.29	1097.69
65.0	0.70	106.0	37.4	2505.6	11.71%	0.88	6.979	5.278	2187.09	5067.09	2561.49	374.40	6.84	1467.94	1093.54
66.0	0.70	106.0	37.1	2462.4	11.71%	0.88	6.979	5.278	2187.09	5067.09	2604.69	417.60	6.24	1511.14	1093.54
67.0	0.72	106.0	37.1	2462.4	12.04%	0.88	7.006	5.258	2178.80	5058.80	2596.40	417.60	6.22	1507.00	1089.40
68.0	0.72	106.0	37.1	2462.4	12.04%	0.88	7.006	5.258	2178.80	5058.80	2596.40	417.60	6.22	1507.00	1089.40
69.0	0.72	106.0	37.1	2462.4	12.04%	0.88	7.006	5.258	2178.80	5058.80	2596.40	417.60	6.22	1507.00	1089.40
70.0	0.74	106.0	37.1	2462.4	12.38%	0.88	7.032	5.238	2170.51	5050.51	2588.11	417.60	6.20	1502.86	1085.26
71.0	0.76	106.0	37.1	2462.4	12.71%	0.87	7.059	5.218	2162.22	5042.22	2579.82	417.60	6.18	1498.71	1081.11

GOLDER ASSOCIATES INC.
MT. LAUREL, NEW JERSEY

B4 (6'-8')
PAGE 2 of 3
20 psi

849880224

TIME (min)	DEFLECTION (in)	AXIAL LOAD (lbs)	PORE PRESSURE,U (psi)	dU (psf) (cumulative)	STRAIN (ε)	(1-ε)	AREA CORR (in^2)	HEIGHT CORR (in)	DEVIATOR STRESS (psf)	SIGMA 1 (psf)	EFFECTIVE SIGMA 1 (psf)	EFFECTIVE SIGMA 3 (psf)	EFF PRN STR RATIO (S1'/S3')	P' (psf)	Q' (psf)
72.0	0.76	106.0	37.1	2462.4	12.71%	0.87	7.059	5.218	2162.22	5042.22	2579.82	417.60	6.18	1498.71	1081.11
73.0	0.78	106.0	37.1	2462.4	13.05%	0.87	7.087	5.198	2153.94	5033.94	2571.54	417.60	6.16	1494.57	1076.97
74.0	0.78	106.0	37.1	2462.4	13.05%	0.87	7.087	5.198	2153.94	5033.94	2571.54	417.60	6.16	1494.57	1076.97
75.0	0.78	106.0	37.1	2462.4	13.05%	0.87	7.087	5.198	2153.94	5033.94	2571.54	417.60	6.16	1494.57	1076.97
76.0	0.80	106.0	37.5	2520.0	13.38%	0.87	7.114	5.178	2145.65	5025.65	2505.65	360.00	6.96	1432.82	1072.82
77.0	0.82	106.0	37.6	2534.4	13.72%	0.86	7.142	5.158	2137.36	5017.36	2482.96	345.60	7.18	1414.28	1068.68
78.0	0.82	106.0	37.2	2476.8	13.72%	0.86	7.142	5.158	2137.36	5017.36	2540.56	403.20	6.30	1471.88	1068.68
79.0	0.84	106.0	37.1	2462.4	14.05%	0.86	7.169	5.138	2129.07	5009.07	2546.67	417.60	6.10	1482.14	1064.54
80.0	0.86	106.0	37.1	2462.4	14.39%	0.86	7.197	5.118	2120.78	5000.78	2538.38	417.60	6.08	1477.99	1060.39
81.0	0.86	106.0	37.1	2462.4	14.39%	0.86	7.197	5.118	2120.78	5000.78	2538.38	417.60	6.08	1477.99	1060.39
82.0	0.86	106.0	37.1	2462.4	14.39%	0.86	7.197	5.118	2120.78	5000.78	2538.38	417.60	6.08	1477.99	1060.39
83.0	0.88	106.0	37.1	2462.4	14.72%	0.85	7.226	5.098	2112.50	4992.50	2530.10	417.60	6.06	1473.85	1056.25
84.0	0.88	106.0	37.0	2448.0	14.72%	0.85	7.226	5.098	2112.50	4992.50	2544.50	432.00	5.89	1488.25	1056.25
85.0	0.90	106.0	37.0	2448.0	15.06%	0.85	7.254	5.078	2104.21	4984.21	2536.21	432.00	5.87	1484.10	1052.10
86.0	0.92	106.0	37.0	2448.0	15.39%	0.85	7.283	5.058	2095.92	4975.92	2527.92	432.00	5.85	1479.96	1047.96
87.0	0.92	106.0	37.6	2534.4	15.39%	0.85	7.283	5.058	2095.92	4975.92	2441.52	345.60	7.06	1393.56	1047.96
88.0	0.94	106.0	37.2	2476.8	15.72%	0.84	7.312	5.038	2087.63	4967.63	2490.83	403.20	6.18	1447.02	1043.82
89.0	0.94	106.0	37.1	2462.4	15.72%	0.84	7.312	5.038	2087.63	4967.63	2505.23	417.60	6.00	1461.42	1043.82
90.0	0.96	106.0	37.1	2462.4	16.06%	0.84	7.341	5.018	2079.35	4959.35	2496.95	417.60	5.98	1457.27	1039.67

DEVIATORIC STRESS AT FAILURE: **2105.67**

EFFECTIVE PRINCIPAL STRESS RATIO AT FAILURE: **5.85**

GOLDER ASSOCIATES INC.
MT. LAUREL, NEW JERSEY

B4 (6'-8')
PAGE 3 of 3
20 psi

849880225

CONSOLIDATED UNDRAINED WITH PORE PRESSURE MEASUREMENT
ASTM D 4767

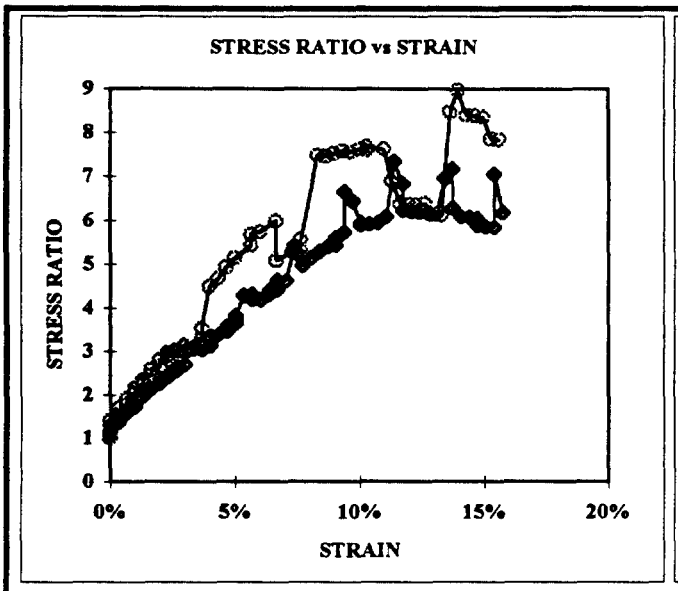

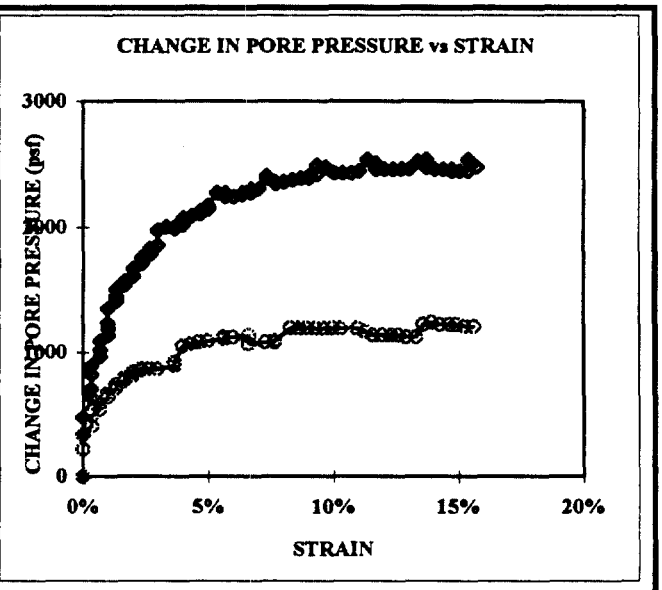

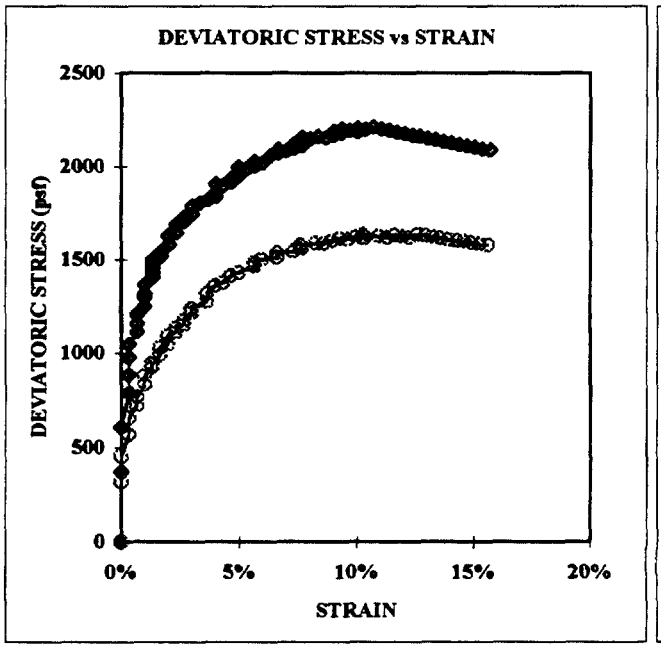

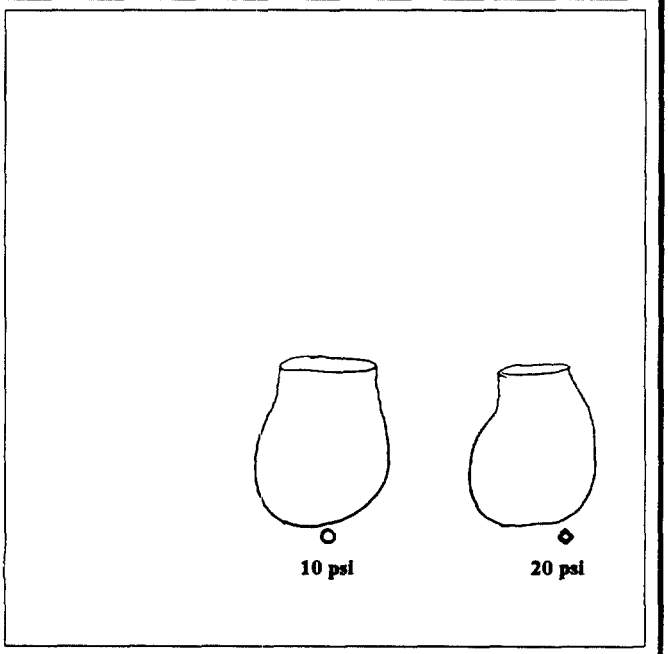

SAMPLE #:	B4 6'-8'	CONFINING PRES(psi)	10	20
		MOIST DENSITY(pcf)	86.82	92.86
DESCRIPTION:	Very dark brown	% MOISTURE	79.25%	62.15%
	SILT,	STRAIN RATE(%/min)	0.33	0.17
	little sand (MH)	FAILURE BASED UPON 15% STRAIN		

DATE	9/16/96
TECH	JMP/RMW
REVIEW	RMW

PSE&G/RI-IRA/NJ
953-6306

GOLDER ASSOCIATES INC.
MT. LAUREL, NEW JERSEY

849880226

CONSOLIDATED UNDRAINED WITH PORE PRESSURE MEASUREMENT
ASTM D 4767

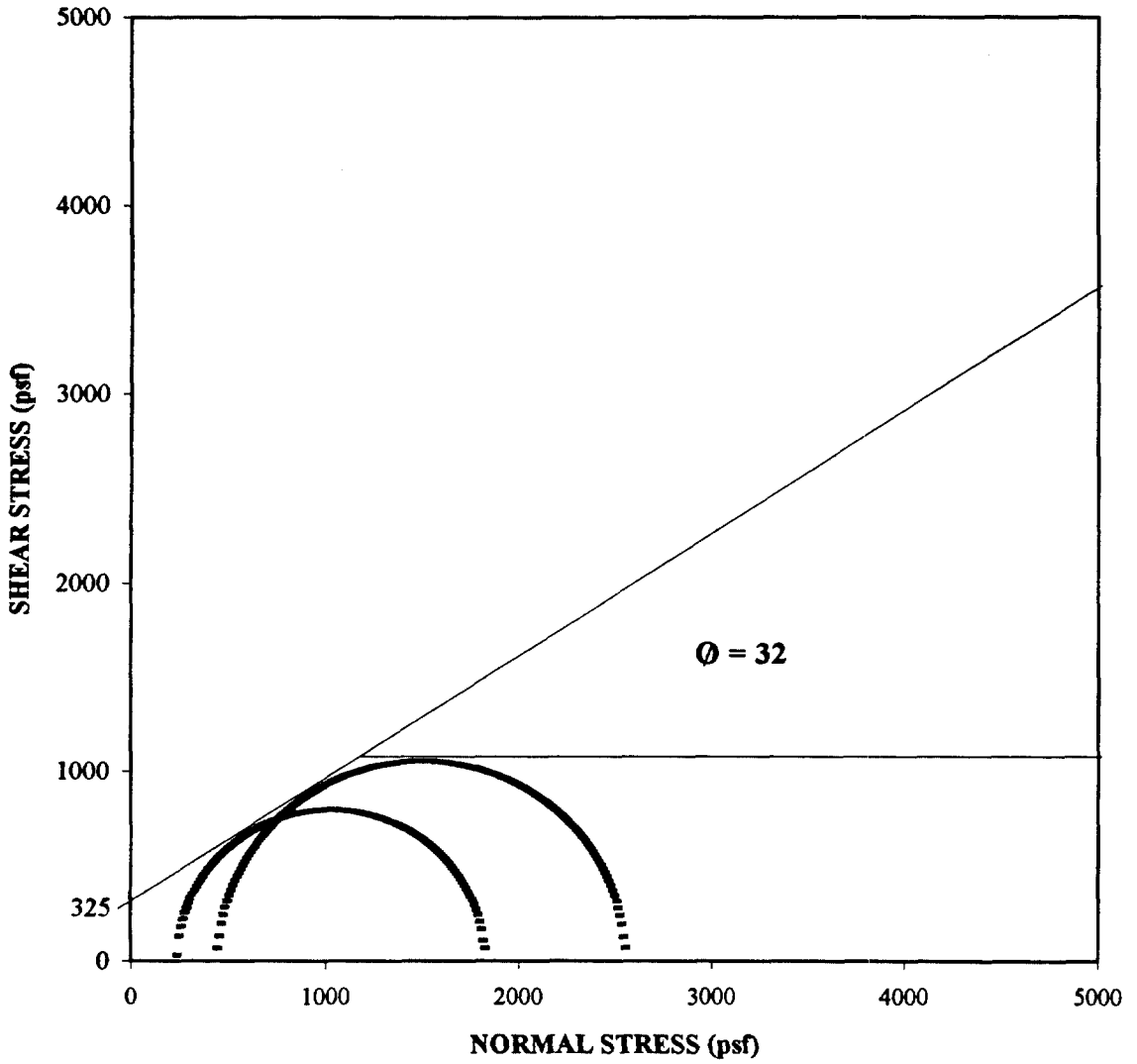

SAMPLE #:	B4 6'-8'	CONFINING PRES(psi)	10	20
		MOIST DENSITY(pcf)	86.82	92.86
DESCRIPTION:	Very dark brown SILT, little sand (MH)	% MOISTURE	79.25%	62.15%
		STRAIN RATE(%/min)	0.33	0.17
		FAILURE BASED UPON 15% STRAIN		
		DATE	9/16/96	
PSE&G/RI-IRA/NJ		TECH	JMP/RMW	
953-6306		REVIEW	RMW	

GOLDER ASSOCIATES INC.
MT. LAUREL, NEW JERSEY

849880227

Appendix E

Appendix E

NJDEP Forms (Form As, Form Bs, Contour Map Reporting Forms)

THIS FORM MUST BE COMPLETED BY THE PERMITTEE AND/OR SURVEYOR

MONITORING WELL CERTIFICATION-FORM B-LOCATION CERTIFICATION

Name of Permittee: Public Services Electric & Gas Company
Name of Facility: PSE&G Harrison Gas Plant
Location: Harrison, New Jersey
UST Registration Number: Case Number:
ISRA Case Number:

LAND SURVEYOR'S CERTIFICATION

Well Permit Number: This number must be permanently affixed to the well casing. 2 6 - 4 2 9 3 9 -

Horizontal Datum NAD 27 (x) NAD 83 ( )

Longitude (to thousandth of a second): West 74°09'29.240"

Latitude (to thousandth of a second): North 40°44'09.110"

Elevation of Top of Inner Casing (cap off) (one-hundredth of a foot): 8.85

Vertical Datum NGVD 29 (x) NAVD 88 ( )

Source of elevation datum (benchmark, nail,) etc) and year (if an alternate datum has been approved by the Department, identify here, assume datum of 100' and give elevation.) Source: NJGS 1108 Elev: 16.374'

Owners Well Number (As shown on application or plans): PZ-13B

Elevations are to be determined by double run, three wire leveling methods using balanced sights, commencing from a well marked and described point. This beginning point shall either be derived from Federal or State benchmarks if not more than 1000 feet from the site or from an alternate datum approved by the department. Tolerances should meet third order standards, which are 0.05 ft x (mile) 1/2. For sections less than 0.1 mile, let miles = 0.1.

AUTHENTICATION

I certify under penalty of law that I have personally examined and am familiar with the information submitted in this document and all attachments and that, based on my inquiry of these individuals immediately responsible for obtaining the information, I believe the submitted information is true, accurate and complete. I am aware that there are significant penalties for submitting false information including the possibility of fine and imprisonment.

PROFESSIONAL LAND SURVEYOR' SIGNATURE

JAMES M. STEWART 26108

PROFESSIONAL LAND SURVEYOR'S NAME AND LICENSE NUMBER
(Please print or type)

SEAL

849880230

THIS FORM MUST BE COMPLETED BY THE PERMITTEE AND/OR SURVEYOR

MONITORING WELL CERTIFICATION-FORM B-LOCATION CERTIFICATION

Name of Permittee: Public Services Electric & Gas Company
Name of Facility: PSE&G Harrison Gas Plant
Location: Harrison, New Jersey
UST Registration Number: Case Number:
ISRA Case Number:

LAND SURVEYOR'S CERTIFICATION

Well Permit Number: This number must be permanently affixed to the well casing. 2 6 - 4 2 9 4 0 -

Horizontal Datum NAD 27 (x) NAD 83 ( )

Longitude (to thousandth of a second): West 74°09'25.499"

Latitude (to thousandth of a second): North 40°44'13.948"

Elevation of Top of Inner Casing (cap off) (one-hundredth of a foot): 9.32

Vertical Datum NGVD 29 (x) NAVD 88 ( )

Source of elevation datum (benchmark, nail,) etc) and year (if an alternate datum has been approved by the Department, identify here, assume datum of 100' and give elevation.) Source: NJGS 1108 Elev: 16.374'

Owners Well Number (As shown on application or plans): PZ-14A

Elevations are to be determined by double run, three wire leveling methods using balanced sights, commencing from a well marked and described point. This beginning point shall either be derived from Federal or State benchmarks if not more than 1000 feet from the site or from an alternate datum approved by the department. Tolerances should meet third order standards, which are 0.05 ft x (mile) 1/2. For sections less than 0.1 mile, let miles = 0.1.

AUTHENTICATION

I certify under penalty of law that I have personally examined and am familiar with the information submitted in this document and all attachments and that, based on my inquiry of these individuals immediately responsible for obtaining the information, I believe the submitted information is true, accurate and complete. I am aware that there are significant penalties for submitting false information including the possibility of fine and imprisonment.

PROFESSIONAL LAND SURVEYOR' SIGNATURE

JAMES M. STEWART 26108

PROFESSIONAL LAND SURVEYOR'S NAME AND LICENSE NUMBER
(Please print or type)

SEAL

849880231

THIS FORM MUST BE COMPLETED BY THE PERMITTEE AND/OR SURVEYOR

MONITORING WELL CERTIFICATION-FORM B-LOCATION CERTIFICATION

Name of Permittee: Public Services Electric & Gas Company
Name of Facility: PSE&G Harrison Gas Plant
Location: Harrison, New Jersey
UST Registration Number: Case Number:
ISRA Case Number:

LAND SURVEYOR'S CERTIFICATION

Well Permit Number: This number must be permanently affixed to the well casing. 2 6 - 4 2 9 2 2 -

Horizontal Datum NAD 27 (x) NAD 83 ( )

Longitude (to thousandth of a second): West 74°09'35.970"

Latitude (to thousandth of a second): North 40°44'07.177"

Elevation of Top of Inner Casing (cap off) (one-hundredth of a foot): 7.24

Vertical Datum NGVD 29 (x) NAVD 88 ( )

Source of elevation datum (benchmark, nail,) etc) and year (if an alternate datum has been approved by the Department, identify here, assume datum of 100' and give elevation.) Source: NJGS 1108 Elev: 16.374'

Owners Well Number (As shown on application or plans): PZ-1A

Elevations are to be determined by double run, three wire leveling methods using balanced sights, commencing from a well marked and described point. This beginning point shall either be derived from Federal or State benchmarks if not more than 1000 feet from the site or from an alternate datum approved by the department. Tolerances should meet third order standards, which are 0.05 ft x (mile) 1/2. For sections less than 0.1 mile, let miles = 0.1.

AUTHENTICATION

I certify under penalty of law that I have personally examined and am familiar with the information submitted in this document and all attachments and that, based on my inquiry of these individuals immediately responsible for obtaining the information, I believe the submitted information is true, accurate and complete. I am aware that there are significant penalties for submitting false information including the possibility of fine and imprisonment.

PROFESSIONAL LAND SURVEYOR' SIGNATURE

JAMES M. STEWART 26108 SEAL

PROFESSIONAL LAND SURVEYOR'S NAME AND LICENSE NUMBER
(Please print or type)

849880232

THIS FORM MUST BE COMPLETED BY THE PERMITTEE AND/OR SURVEYOR

MONITORING WELL CERTIFICATION-FORM B-LOCATION CERTIFICATION

Name of Permittee: Public Services Electric & Gas Company
Name of Facility: PSE&G Harrison Gas Plant
Location: Harrison, New Jersey
UST Registration Number: Case Number:
ISRA Case Number:

LAND SURVEYOR'S CERTIFICATION

Well Permit Number: This number must be permanently affixed to the well casing. 2 6 - 4 2 9 2 3 - __

Horizontal Datum NAD 27 (x) NAD 83 ( )

Longitude (to thousandth of a second): West 74°09'35.929"

Latitude (to thousandth of a second): North 40°44'07.264"

Elevation of Top of Inner Casing (cap off) (one-hundredth of a foot): 7.38

Vertical Datum NGVD 29 (x) NAVD 88 ( )

Source of elevation datum (benchmark, nail,) etc) and year (if an alternate datum has been approved by the Department, identify here, assume datum of 100' and give elevation.) Source: NJGS 1108 Elev: 16.374'

Owners Well Number (As shown on application or plans): PZ-1B

Elevations are to be determined by double run, three wire leveling methods using balanced sights, commencing from a well marked and described point. This beginning point shall either be derived from Federal or State benchmarks if not more than 1000 feet from the site or from an alternate datum approved by the department. Tolerances should meet third order standards, which are 0.05 ft x (mile) 1/2. For sections less than 0.1 mile, let miles = 0.1.

AUTHENTICATION

I certify under penalty of law that I have personally examined and am familiar with the information submitted in this document and all attachments and that, based on my inquiry of these individuals immediately responsible for obtaining the information, I believe the submitted information is true, accurate and complete. I am aware that there are significant penalties for submitting false information including the possibility of fine and imprisonment.

PROFESSIONAL LAND SURVEYOR' SIGNATURE

JAMES M. STEWART 26108 SEAL

PROFESSIONAL LAND SURVEYOR'S NAME AND LICENSE NUMBER
(Please print or type)

849880233

THIS FORM MUST BE COMPLETED BY THE PERMITTEE AND/OR SURVEYOR

MONITORING WELL CERTIFICATION-FORM B-LOCATION CERTIFICATION

Name of Permittee: Public Services Electric & Gas Company
Name of Facility: PSE&G Harrison Gas Plant
Location: Harrison, New Jersey
UST Registration Number: Case Number:
ISRA Case Number:

LAND SURVEYOR'S CERTIFICATION

Well Permit Number: This number must be permanently affixed to the well casing. 2 6 - 4 2 9 2 4 -

Horizontal Datum NAD 27 (x) NAD 83 ( )

Longitude (to thousandth of a second): West 74°09'34.426"

Latitude (to thousandth of a second): North 40°44'07.773"

Elevation of Top of Inner Casing (cap off) (one-hundredth of a foot): 8.00

Vertical Datum NGVD 29 (x) NAVD 88 ( )

Source of elevation datum (benchmark, nail,) etc) and year (if an alternate datum has been approved by the Department, identify here, assume datum of 100' and give elevation.) Source: NJGS 1108 Elev: 16.374'

Owners Well Number (As shown on application or plans): PZ-2A

Elevations are to be determined by double run, three wire leveling methods using balanced sights, commencing from a well marked and described point. This beginning point shall either be derived from Federal or State benchmarks if not more than 1000 feet from the site or from an alternate datum approved by the department. Tolerances should meet third order standards, which are 0.05 ft x (mile) 1/2. For sections less than 0.1 mile, let miles = 0.1.

AUTHENTICATION

I certify under penalty of law that I have personally examined and am familiar with the information submitted in this document and all attachments and that, based on my inquiry of these individuals immediately responsible for obtaining the information, I believe the submitted information is true, accurate and complete. I am aware that there are significant penalties for submitting false information including the possibility of fine and imprisonment.

PROFESSIONAL LAND SURVEYOR' SIGNATURE

JAMES M. STEWART 26108 SEAL

PROFESSIONAL LAND SURVEYOR'S NAME AND LICENSE NUMBER (Please print or type)

849880234

THIS FORM MUST BE COMPLETED BY THE PERMITTEE AND/OR SURVEYOR

MONITORING WELL CERTIFICATION-FORM B-LOCATION CERTIFICATION

Name of Permittee: Public Services Electric & Gas Company
Name of Facility: PSE&G Harrison Gas Plant
Location: Harrison, New Jersey
UST Registration Number: Case Number:
ISRA Case Number:

LAND SURVEYOR'S CERTIFICATION

Well Permit Number: This number must be permanently affixed to the well casing. 2 6 - 4 2 9 2 5 -

Horizontal Datum NAD 27 (x) NAD 83 ( )

Longitude (to thousandth of a second): West 74°09'34.433"

Latitude (to thousandth of a second): North 40°44'07.863"

Elevation of Top of Inner Casing (cap off) (one-hundredth of a foot): 8.05

Vertical Datum NGVD 29 (x) NAVD 88 ( )

Source of elevation datum (benchmark, nail,) etc) and year (if an alternate datum has been approved by the Department, identify here, assume datum of 100' and give elevation.) Source: NJGS 1108

Elev: 16.374'

Owners Well Number (As shown on application or plans): PZ-2B

Elevations are to be determined by double run, three wire leveling methods using balanced sights, commencing from a well marked and described point. This beginning point shall either be derived from Federal or State benchmarks if not more than 1000 feet from the site or from an alternate datum approved by the department. Tolerances should meet third order standards, which are 0.05 ft x (mile) 1/2. For sections less than 0.1 mile, let miles = 0.1.

AUTHENTICATION

I certify under penalty of law that I have personally examined and am familiar with the information submitted in this document and all attachments and that, based on my inquiry of these individuals immediately responsible for obtaining the information, I believe the submitted information is true, accurate and complete. I am aware that there are significant penalties for submitting false information including the possibility of fine and imprisonment.

PROFESSIONAL LAND SURVEYOR' SIGNATURE

JAMES M. STEWART 26108

PROFESSIONAL LAND SURVEYOR'S NAME AND LICENSE NUMBER (Please print or type)

SEAL

849880235

THIS FORM MUST BE COMPLETED BY THE PERMITTEE AND/OR SURVEYOR

MONITORING WELL CERTIFICATION-FORM B-LOCATION CERTIFICATION

Name of Permittee: Public Services Electric & Gas Company
Name of Facility: PSE&G Harrison Gas Plant
Location: Harrison, New Jersey
UST Registration Number: Case Number:
ISRA Case Number:

LAND SURVEYOR'S CERTIFICATION

Well Permit Number: This number must be permanently affixed to the well casing. 2 6 - 4 2 9 2 6 -

Horizontal Datum NAD 27 (x) NAD 83 ( )

Longitude (to thousandth of a second): West 74°09'33.366"

Latitude (to thousandth of a second): North 40°44'08.202"

Elevation of Top of Inner Casing (cap off) (one-hundredth of a foot): 8.31

Vertical Datum NGVD 29 (x) NAVD 88 ( )

Source of elevation datum (benchmark, nail,) etc) and year (if an alternate datum has been approved by the Department, identify here, assume datum of 100' and give elevation.) Source: NJGS 1108 Elev: 16.374'

Owners Well Number (As shown on application or plans): PZ-3A

Elevations are to be determined by double run, three wire leveling methods using balanced sights, commencing from a well marked and described point. This beginning point shall either be derived from Federal or State benchmarks if not more than 1000 feet from the site or from an alternate datum approved by the department. Tolerances should meet third order standards, which are 0.05 ft x (mile) 1/2. For sections less than 0.1 mile, let miles = 0.1.

AUTHENTICATION

I certify under penalty of law that I have personally examined and am familiar with the information submitted in this document and all attachments and that, based on my inquiry of these individuals immediately responsible for obtaining the information, I believe the submitted information is true, accurate and complete. I am aware that there are significant penalties for submitting false information including the possibility of fine and imprisonment.

PROFESSIONAL LAND SURVEYOR' SIGNATURE

JAMES M. STEWART 26108

PROFESSIONAL LAND SURVEYOR'S NAME AND LICENSE NUMBER
(Please print or type)

SEAL

849880236

THIS FORM MUST BE COMPLETED BY THE PERMITTEE AND/OR SURVEYOR

MONITORING WELL CERTIFICATION-FORM B-LOCATION CERTIFICATION

Name of Permittee: Public Services Electric & Gas Company
Name of Facility: PSE&G Harrison Gas Plant
Location: Harrison, New Jersey
UST Registration Number: Case Number:
ISRA Case Number:

LAND SURVEYOR'S CERTIFICATION

Well Permit Number: This number must be permanently affixed to the well casing. 2 6 - 4 2 9 2 7 -

Horizontal Datum NAD 27 (x) NAD 83 ( )

Longitude (to thousandth of a second): West 74°09'33.255"

Latitude (to thousandth of a second): North 40°44'08.221"

Elevation of Top of Inner Casing (cap off) (one-hundredth of a foot): 8.39

Vertical Datum NGVD 29 (x) NAVD 88 ( )

Source of elevation datum (benchmark, nail,) etc) and year (if an alternate datum has been approved by the Department, identify here, assume datum of 100' and give elevation.) Source: NJGS 1108 Elev: 16.374'

Owners Well Number (As shown on application or plans): PZ-3B

Elevations are to be determined by double run, three wire leveling methods using balanced sights, commencing from a well marked and described point. This beginning point shall either be derived from Federal or State benchmarks if not more than 1000 feet from the site or from an alternate datum approved by the department. Tolerances should meet third order standards, which are 0.05 ft x (mile) 1/2. For sections less than 0.1 mile, let miles = 0.1.

AUTHENTICATION

I certify under penalty of law that I have personally examined and am familiar with the information submitted in this document and all attachments and that, based on my inquiry of these individuals immediately responsible for obtaining the information, I believe the submitted information is true, accurate and complete. I am aware that there are significant penalties for submitting false information including the possibility of fine and imprisonment.

PROFESSIONAL LAND SURVEYOR' SIGNATURE

JAMES M. STEWART 26108
PROFESSIONAL LAND SURVEYOR'S NAME AND LICENSE NUMBER
(Please print or type)

SEAL

849880237

THIS FORM MUST BE COMPLETED BY THE PERMITTEE AND/OR SURVEYOR

MONITORING WELL CERTIFICATION-FORM B-LOCATION CERTIFICATION

Name of Permittee: Public Services Electric & Gas Company
Name of Facility: PSE&G Harrison Gas Plant
Location: Harrison, New Jersey
UST Registration Number: Case Number:
ISRA Case Number:

LAND SURVEYOR'S CERTIFICATION

Well Permit Number: This number must be permanently affixed to the well casing. 2 6 - 4 2 9 2 8 -

Horizontal Datum NAD 27 (x) NAD 83 ( )

Longitude (to thousandth of a second): West 74°09'29.447"

Latitude (to thousandth of a second): North 40°44'03.901"

Elevation of Top of Inner Casing (cap off) (one-hundredth of a foot): 7.56

Vertical Datum NGVD 29 (x) NAVD 88 ( )

Source of elevation datum (benchmark, nail,) etc) and year (if an alternate datum has been approved by the Department, identify here, assume datum of 100' and give elevation.) Source: NJGS 1108 Elev: 16.374'

Owners Well Number (As shown on application or plans): PZ-4A

Elevations are to be determined by double run, three wire leveling methods using balanced sights, commencing from a well marked and described point. This beginning point shall either be derived from Federal or State benchmarks if not more than 1000 feet from the site or from an alternate datum approved by the department. Tolerances should meet third order standards, which are 0.05 ft x (mile) 1/2. For sections less than 0.1 mile, let miles = 0.1.

AUTHENTICATION

I certify under penalty of law that I have personally examined and am familiar with the information submitted in this document and all attachments and that, based on my inquiry of these individuals immediately responsible for obtaining the information, I believe the submitted information is true, accurate and complete. I am aware that there are significant penalties for submitting false information including the possibility of fine and imprisonment.

PROFESSIONAL LAND SURVEYOR' SIGNATURE

JAMES M. STEWART 26108 SEAL

PROFESSIONAL LAND SURVEYOR'S NAME AND LICENSE NUMBER
(Please print or type)

849880238

THIS FORM MUST BE COMPLETED BY THE PERMITTEE AND/OR SURVEYOR

MONITORING WELL CERTIFICATION-FORM B-LOCATION CERTIFICATION

Name of Permittee: Public Services Electric & Gas Company
Name of Facility: PSE&G Harrison Gas Plant
Location: Harrison, New Jersey
UST Registration Number: Case Number:
ISRA Case Number:

LAND SURVEYOR'S CERTIFICATION

Well Permit Number: This number must be permanently affixed to the well casing. 2 6 - 4 2 9 2 9 -

Horizontal Datum NAD 27 (x) NAD 83 ( )

Longitude (to thousandth of a second): West 74°09'29.336"

Latitude (to thousandth of a second): North 40°44'03.897"

Elevation of Top of Inner Casing (cap off) (one-hundredth of a foot): 7.61

Vertical Datum NGVD 29 (x) NAVD 88 ( )

Source of elevation datum (benchmark, nail,) etc) and year (if an alternate datum has been approved by the Department, identify here, assume datum of 100' and give elevation.) Source: NJGS 1108 Elev: 16.374'

Owners Well Number (As shown on application or plans): PZ-4B

Elevations are to be determined by double run, three wire leveling methods using balanced sights, commencing from a well marked and described point. This beginning point shall either be derived from Federal or State benchmarks if not more than 1000 feet from the site or from an alternate datum approved by the department. Tolerances should meet third order standards, which are 0.05 ft x (mile) 1/2. For sections less than 0.1 mile, let miles = 0.1.

AUTHENTICATION

I certify under penalty of law that I have personally examined and am familiar with the information submitted in this document and all attachments and that, based on my inquiry of these individuals immediately responsible for obtaining the information, I believe the submitted information is true, accurate and complete. I am aware that there are significant penalties for submitting false information including the possibility of fine and imprisonment.

PROFESSIONAL LAND SURVEYOR' SIGNATURE

JAMES M. STEWART 26108 SEAL

PROFESSIONAL LAND SURVEYOR'S NAME AND LICENSE NUMBER
(Please print or type)

849880239

THIS FORM MUST BE COMPLETED BY THE PERMITTEE AND/OR SURVEYOR

MONITORING WELL CERTIFICATION-FORM B-LOCATION CERTIFICATION

Name of Permittee: Public Services Electric & Gas Company
Name of Facility: PSE&G Harrison Gas Plant
Location: Harrison, New Jersey
UST Registration Number: Case Number:
ISRA Case Number:

LAND SURVEYOR'S CERTIFICATION

Well Permit Number: This number must be permanently affixed to the well casing. 2 6 - 4 2 9 3 0 -

Horizontal Datum NAD 27 (x) NAD 83 ( )

Longitude (to thousandth of a second): West 74°09'21.962"

Latitude (to thousandth of a second): North 40°44'04.013"

Elevation of Top of Inner Casing (cap off) (one-hundredth of a foot): 8.83

Vertical Datum NGVD 29 (x) NAVD 88 ( )

Source of elevation datum (benchmark, nail,) etc) and year (if an alternate datum has been approved by the Department, identify here, assume datum of 100' and give elevation.) Source: NJGS 1108 Elev: 16.374'

Owners Well Number (As shown on application or plans): PZ-5A

Elevations are to be determined by double run, three wire leveling methods using balanced sights, commencing from a well marked and described point. This beginning point shall either be derived from Federal or State benchmarks if not more than 1000 feet from the site or from an alternate datum approved by the department. Tolerances should meet third order standards, which are 0.05 ft x (mile) 1/2. For sections less than 0.1 mile, let miles = 0.1.

AUTHENTICATION

I certify under penalty of law that I have personally examined and am familiar with the information submitted in this document and all attachments and that, based on my inquiry of these individuals immediately responsible for obtaining the information, I believe the submitted information is true, accurate and complete. I am aware that there are significant penalties for submitting false information including the possibility of fine and imprisonment.

PROFESSIONAL LAND SURVEYOR' SIGNATURE

JAMES M. STEWART 26108 SEAL

PROFESSIONAL LAND SURVEYOR'S NAME AND LICENSE NUMBER
(Please print or type)

849880240

THIS FORM MUST BE COMPLETED BY THE PERMITTEE AND/OR SURVEYOR

MONITORING WELL CERTIFICATION-FORM B-LOCATION CERTIFICATION

Name of Permittee: Public Services Electric & Gas Company
Name of Facility: PSE&G Harrison Gas Plant
Location: Harrison, New Jersey
UST Registration Number: Case Number:
ISRA Case Number:

LAND SURVEYOR'S CERTIFICATION

Well Permit Number: This number must be permanently affixed to the well casing. 2 6 - 4 2 9 3 1 -

Horizontal Datum NAD 27 (x) NAD 83 ( )

Longitude (to thousandth of a second): West 74°09'22.045"

Latitude (to thousandth of a second): North 40°44'03.992"

Elevation of Top of Inner Casing (cap off) (one-hundredth of a foot): 8.92

Vertical Datum NGVD 29 (x) NAVD 88 ( )

Source of elevation datum (benchmark, nail,) etc) and year (if an alternate datum has been approved by the Department, identify here, assume datum of 100' and give elevation.) Source: NJGS 1108 Elev: 16.374'

Owners Well Number (As shown on application or plans): PZ-5B

Elevations are to be determined by double run, three wire leveling methods using balanced sights, commencing from a well marked and described point. This beginning point shall either be derived from Federal or State benchmarks if not more than 1000 feet from the site or from an alternate datum approved by the department. Tolerances should meet third order standards, which are 0.05 ft x (mile) 1/2. For sections less than 0.1 mile, let miles = 0.1.

AUTHENTICATION

I certify under penalty of law that I have personally examined and am familiar with the information submitted in this document and all attachments and that, based on my inquiry of these individuals immediately responsible for obtaining the information, I believe the submitted information is true, accurate and complete. I am aware that there are significant penalties for submitting false information including the possibility of fine and imprisonment.

PROFESSIONAL LAND SURVEYOR' SIGNATURE

JAMES M. STEWART 26108

PROFESSIONAL LAND SURVEYOR'S NAME AND LICENSE NUMBER
(Please print or type)

SEAL

849880241

THIS FORM MUST BE COMPLETED BY THE PERMITTEE AND/OR SURVEYOR

MONITORING WELL CERTIFICATION-FORM B-LOCATION CERTIFICATION

Name of Permittee: Public Services Electric & Gas Company
Name of Facility: PSE&G Harrison Gas Plant
Location: Harrison, New Jersey
UST Registration Number: Case Number:
ISRA Case Number:

LAND SURVEYOR'S CERTIFICATION

Well Permit Number: This number must be permanently affixed to the well casing. 2 6 - 4 2 9 1 2 -

Horizontal Datum NAD 27 (x) NAD 83 ( )

Longitude (to thousandth of a second): West 74°09'22.032"

Latitude (to thousandth of a second): North 40°44'09.370"

Elevation of Top of Inner Casing (cap off) (one-hundredth of a foot): 8.90

Vertical Datum NGVD 29 (x) NAVD 88 ( )

Source of elevation datum (benchmark, nail,) etc) and year (if an alternate datum has been approved by the Department, identify here, assume datum of 100' and give elevation.) Source: NJGS 1108 Elev: 16.374'

Owners Well Number (As shown on application or plans): PZ-6A

Elevations are to be determined by double run, three wire leveling methods using balanced sights, commencing from a well marked and described point. This beginning point shall either be derived from Federal or State benchmarks if not more than 1000 feet from the site or from an alternate datum approved by the department. Tolerances should meet third order standards, which are 0.05 ft x (mile) 1/2. For sections less than 0.1 mile, let miles = 0.1.

AUTHENTICATION

I certify under penalty of law that I have personally examined and am familiar with the information submitted in this document and all attachments and that, based on my inquiry of these individuals immediately responsible for obtaining the information, I believe the submitted information is true, accurate and complete. I am aware that there are significant penalties for submitting false information including the possibility of fine and imprisonment.

PROFESSIONAL LAND SURVEYOR' SIGNATURE

JAMES M. STEWART 26108

PROFESSIONAL LAND SURVEYOR'S NAME AND LICENSE NUMBER
(Please print or type)

SEAL

849880242

THIS FORM MUST BE COMPLETED BY THE PERMITTEE AND/OR SURVEYOR

MONITORING WELL CERTIFICATION-FORM B-LOCATION CERTIFICATION

Name of Permittee: Public Services Electric & Gas Company
Name of Facility: PSE&G Harrison Gas Plant
Location: Harrison, New Jersey
UST Registration Number: Case Number:
ISRA Case Number:

LAND SURVEYOR'S CERTIFICATION

Well Permit Number: This number must be permanently affixed to the well casing. 2 6 - 4 2 9 1 3 -

Horizontal Datum NAD 27 (x) NAD 83 ( )

Longitude (to thousandth of a second): West 74°09'22.054"

Latitude (to thousandth of a second): North 40°44'09.461"

Elevation of Top of Inner Casing (cap off) (one-hundredth of a foot): 9.02

Vertical Datum NGVD 29 (x) NAVD 88 ( )

Source of elevation datum (benchmark, nail,) etc) and year (if an alternate datum has been approved by the Department, identify here, assume datum of 100' and give elevation.) Source: NJGS 1108 Elev: 16.374'

Owners Well Number (As shown on application or plans): PZ-6B

Elevations are to be determined by double run, three wire leveling methods using balanced sights, commencing from a well marked and described point. This beginning point shall either be derived from Federal or State benchmarks if not more than 1000 feet from the site or from an alternate datum approved by the department. Tolerances should meet third order standards, which are 0.05 ft x (mile) 1/2. For sections less than 0.1 mile, let miles = 0.1.

AUTHENTICATION

I certify under penalty of law that I have personally examined and am familiar with the information submitted in this document and all attachments and that, based on my inquiry of these individuals immediately responsible for obtaining the information, I believe the submitted information is true, accurate and complete. I am aware that there are significant penalties for submitting false information including the possibility of fine and imprisonment.

PROFESSIONAL LAND SURVEYOR' SIGNATURE

JAMES M. STEWART 26108 SEAL

PROFESSIONAL LAND SURVEYOR'S NAME AND LICENSE NUMBER (Please print or type)

849880243

THIS FORM MUST BE COMPLETED BY THE PERMITTEE AND/OR SURVEYOR

MONITORING WELL CERTIFICATION-FORM B-LOCATION CERTIFICATION

Name of Permittee: Public Services Electric & Gas Company
Name of Facility: PSE&G Harrison Gas Plant
Location: Harrison, New Jersey
UST Registration Number: Case Number:
ISRA Case Number:

LAND SURVEYOR'S CERTIFICATION

Well Permit Number: This number must be permanently affixed to the well casing. 2 6 - 4 2 9 1 4 -

Horizontal Datum NAD 27 (x) NAD 83 ( )

Longitude (to thousandth of a second): West 74°09'22.570"

Latitude (to thousandth of a second): North 40°44'14.703"

Elevation of Top of Inner Casing (cap off) (one-hundredth of a foot): 7.38

Vertical Datum NGVD 29 (x) NAVD 88 ( )

Source of elevation datum (benchmark, nail,) etc) and year (if an alternate datum has been approved by the Department, identify here, assume datum of 100' and give elevation.) Source: NJGS 1108 Elev: 16.374'

Owners Well Number (As shown on application or plans): PZ-7A

Elevations are to be determined by double run, three wire leveling methods using balanced sights, commencing from a well marked and described point. This beginning point shall either be derived from Federal or State benchmarks if not more than 1000 feet from the site or from an alternate datum approved by the department. Tolerances should meet third order standards, which are 0.05 ft x (mile) 1/2. For sections less than 0.1 mile, let miles = 0.1.

AUTHENTICATION

I certify under penalty of law that I have personally examined and am familiar with the information submitted in this document and all attachments and that, based on my inquiry of these individuals immediately responsible for obtaining the information, I believe the submitted information is true, accurate and complete. I am aware that there are significant penalties for submitting false information including the possibility of fine and imprisonment.

PROFESSIONAL LAND SURVEYOR' SIGNATURE

JAMES M. STEWART 26108

PROFESSIONAL LAND SURVEYOR'S NAME AND LICENSE NUMBER (Please print or type)

SEAL

849880244

THIS FORM MUST BE COMPLETED BY THE PERMITTEE AND/OR SURVEYOR

MONITORING WELL CERTIFICATION-FORM B-LOCATION CERTIFICATION

Name of Permittee: Public Services Electric & Gas Company
Name of Facility: PSE&G Harrison Gas Plant
Location: Harrison, New Jersey
UST Registration Number: Case Number:
ISRA Case Number:

LAND SURVEYOR'S CERTIFICATION

Well Permit Number: This number must be permanently affixed to the well casing. 2 6 - 4 2 9 1 5 -

Horizontal Datum NAD 27 (x) NAD 83 ( )

Longitude (to thousandth of a second): West 74°09'22.770"

Latitude (to thousandth of a second): North 40°44'17.763"

Elevation of Top of Inner Casing (cap off) (one-hundredth of a foot): 10.50

Vertical Datum NGVD 29 (x) NAVD 88 ( )

Source of elevation datum (benchmark, nail,) etc) and year (if an alternate datum has been approved by the Department, identify here, assume datum of 100' and give elevation.) Source: NJGS 1108 Elev: 16.374'

Owners Well Number (As shown on application or plans): PZ-8A

Elevations are to be determined by double run, three wire leveling methods using balanced sights, commencing from a well marked and described point. This beginning point shall either be derived from Federal or State benchmarks if not more than 1000 feet from the site or from an alternate datum approved by the department. Tolerances should meet third order standards, which are 0.05 ft x (mile) 1/2. For sections less than 0.1 mile, let miles = 0.1.

AUTHENTICATION

I certify under penalty of law that I have personally examined and am familiar with the information submitted in this document and all attachments and that, based on my inquiry of these individuals immediately responsible for obtaining the information, I believe the submitted information is true, accurate and complete. I am aware that there are significant penalties for submitting false information including the possibility of fine and imprisonment.

PROFESSIONAL LAND SURVEYOR' SIGNATURE

JAMES M. STEWART 26108 SEAL

PROFESSIONAL LAND SURVEYOR'S NAME AND LICENSE NUMBER (Please print or type)

849880245

THIS FORM MUST BE COMPLETED BY THE PERMITTEE AND/OR SURVEYOR

MONITORING WELL CERTIFICATION-FORM B-LOCATION CERTIFICATION

Name of Permittee: Public Services Electric & Gas Company
Name of Facility: PSE&G Harrison Gas Plant
Location: Harrison, New Jersey
UST Registration Number: Case Number:
ISRA Case Number:

LAND SURVEYOR'S CERTIFICATION

Well Permit Number: This number must be permanently affixed to the well casing. 2 6 - 4 2 9 1 6 -

Horizontal Datum NAD 27 (x) NAD 83 ( )

Longitude (to thousandth of a second): West 74°09'22.871"

Latitude (to thousandth of a second): North 40°44'17.786"

Elevation of Top of Inner Casing (cap off) (one-hundredth of a foot): 10.40

Vertical Datum NGVD 29 (x) NAVD 88 ( )

Source of elevation datum (benchmark, nail,) etc) and year (if an alternate datum has been approved by the Department, identify here, assume datum of 100' and give elevation.) Source: NJGS 1108 Elev: 16.374'

Owners Well Number (As shown on application or plans): PZ-8B

Elevations are to be determined by double run, three wire leveling methods using balanced sights, commencing from a well marked and described point. This beginning point shall either be derived from Federal or State benchmarks if not more than 1000 feet from the site or from an alternate datum approved by the department. Tolerances should meet third order standards, which are 0.05 ft x (mile) 1/2. For sections less than 0.1 mile, let miles = 0.1.

AUTHENTICATION

I certify under penalty of law that I have personally examined and am familiar with the information submitted in this document and all attachments and that, based on my inquiry of these individuals immediately responsible for obtaining the information, I believe the submitted information is true, accurate and complete. I am aware that there are significant penalties for submitting false information including the possibility of fine and imprisonment.

PROFESSIONAL LAND SURVEYOR' SIGNATURE

JAMES M. STEWART 26108 SEAL

PROFESSIONAL LAND SURVEYOR'S NAME AND LICENSE NUMBER (Please print or type)

849880246

THIS FORM MUST BE COMPLETED BY THE PERMITTEE AND/OR SURVEYOR

MONITORING WELL CERTIFICATION-FORM B-LOCATION CERTIFICATION

Name of Permittee: Public Services Electric & Gas Company
Name of Facility: PSE&G Harrison Gas Plant
Location: Harrison, New Jersey
UST Registration Number: Case Number:
ISRA Case Number:

LAND SURVEYOR'S CERTIFICATION

Well Permit Number: This number must be permanently affixed to the well casing. 2 6 - 4 2 9 1 7 -

Horizontal Datum NAD 27 (x) NAD 83 ( )

Longitude (to thousandth of a second): West 74°09'28.203"

Latitude (to thousandth of a second): North 40°44'16.016"

Elevation of Top of Inner Casing (cap off) (one-hundredth of a foot): 9.44

Vertical Datum NGVD 29 (x) NAVD 88 ( )

Source of elevation datum (benchmark, nail,) etc) and year (if an alternate datum has been approved by the Department, identify here, assume datum of 100' and give elevation.) Source: NJGS 1108 Elev: 16.374'

Owners Well Number (As shown on application or plans): PZ-9A

Elevations are to be determined by double run, three wire leveling methods using balanced sights, commencing from a well marked and described point. This beginning point shall either be derived from Federal or State benchmarks if not more than 1000 feet from the site or from an alternate datum approved by the department. Tolerances should meet third order standards, which are 0.05 ft x (mile) 1/2. For sections less than 0.1 mile, let miles = 0.1.

AUTHENTICATION

I certify under penalty of law that I have personally examined and am familiar with the information submitted in this document and all attachments and that, based on my inquiry of these individuals immediately responsible for obtaining the information, I believe the submitted information is true, accurate and complete. I am aware that there are significant penalties for submitting false information including the possibility of fine and imprisonment.

PROFESSIONAL LAND SURVEYOR' SIGNATURE

JAMES M. STEWART 26108

PROFESSIONAL LAND SURVEYOR'S NAME AND LICENSE NUMBER
(Please print or type)

SEAL

849880247

THIS FORM MUST BE COMPLETED BY THE PERMITTEE AND/OR SURVEYOR

MONITORING WELL CERTIFICATION-FORM B-LOCATION CERTIFICATION

Name of Permittee: Public Services Electric & Gas Company
Name of Facility: PSE&G Harrison Gas Plant
Location: Harrison, New Jersey
UST Registration Number: Case Number:
ISRA Case Number:

LAND SURVEYOR'S CERTIFICATION

Well Permit Number: This number must be permanently affixed to the well casing. 2 6 - 4 2 9 1 8 -

Horizontal Datum NAD 27 (x) NAD 83 ( )

Longitude (to thousandth of a second): West 74°09'28.306"

Latitude (to thousandth of a second): North 40°44'15.970"

Elevation of Top of Inner Casing (cap off) (one-hundredth of a foot): 9.50

Vertical Datum NGVD 29 (x) NAVD 88 ( )

Source of elevation datum (benchmark, nail,) etc) and year (if an alternate datum has been approved by the Department, identify here, assume datum of 100' and give elevation.) Source: NJGS 1108 Elev: 16.374'

Owners Well Number (As shown on application or plans): PZ-9B

Elevations are to be determined by double run, three wire leveling methods using balanced sights, commencing from a well marked and described point. This beginning point shall either be derived from Federal or State benchmarks if not more than 1000 feet from the site or from an alternate datum approved by the department. Tolerances should meet third order standards, which are 0.05 ft x (mile) 1/2. For sections less than 0.1 mile, let miles = 0.1.

AUTHENTICATION

I certify under penalty of law that I have personally examined and am familiar with the information submitted in this document and all attachments and that, based on my inquiry of these individuals immediately responsible for obtaining the information, I believe the submitted information is true, accurate and complete. I am aware that there are significant penalties for submitting false information including the possibility of fine and imprisonment.

PROFESSIONAL LAND SURVEYOR' SIGNATURE

JAMES M. STEWART 26108

PROFESSIONAL LAND SURVEYOR'S NAME AND LICENSE NUMBER
(Please print or type)

SEAL

849880248

THIS FORM MUST BE COMPLETED BY THE PERMITTEE AND/OR SURVEYOR

MONITORING WELL CERTIFICATION-FORM B-LOCATION CERTIFICATION

Name of Permittee: Public Services Electric & Gas Company
Name of Facility: PSE&G Harrison Gas Plant
Location: Harrison, New Jersey
UST Registration Number: Case Number:
ISRA Case Number:

LAND SURVEYOR'S CERTIFICATION

Well Permit Number: This number must be permanently affixed to the well casing. 2 6 - 4 2 9 1 9 -

Horizontal Datum NAD 27 (x) NAD 83 ( )

Longitude (to thousandth of a second): West 74°09'33.270"

Latitude (to thousandth of a second): North 40°44'13.030"

Elevation of Top of Inner Casing (cap off) (one-hundredth of a foot): 9.01

Vertical Datum NGVD 29 (x) NAVD 88 ( )

Source of elevation datum (benchmark, nail,) etc) and year (if an alternate datum has been approved by the Department, identify here, assume datum of 100' and give elevation.) Source: NJGS 1108 Elev: 16.374'

Owners Well Number (As shown on application or plans): PZ-10A

Elevations are to be determined by double run, three wire leveling methods using balanced sights, commencing from a well marked and described point. This beginning point shall either be derived from Federal or State benchmarks if not more than 1000 feet from the site or from an alternate datum approved by the department. Tolerances should meet third order standards, which are 0.05 ft x (mile) 1/2. For sections less than 0.1 mile, let miles = 0.1.

AUTHENTICATION

I certify under penalty of law that I have personally examined and am familiar with the information submitted in this document and all attachments and that, based on my inquiry of these individuals immediately responsible for obtaining the information, I believe the submitted information is true, accurate and complete. I am aware that there are significant penalties for submitting false information including the possibility of fine and imprisonment.

PROFESSIONAL LAND SURVEYOR' SIGNATURE

JAMES M. STEWART 26108 SEAL

PROFESSIONAL LAND SURVEYOR'S NAME AND LICENSE NUMBER
(Please print or type)

849880249

THIS FORM MUST BE COMPLETED BY THE PERMITTEE AND/OR SURVEYOR

MONITORING WELL CERTIFICATION-FORM B-LOCATION CERTIFICATION

Name of Permittee: Public Services Electric & Gas Company
Name of Facility: PSE&G Harrison Gas Plant
Location: Harrison, New Jersey
UST Registration Number: Case Number:
ISRA Case Number:

LAND SURVEYOR'S CERTIFICATION

Well Permit Number: This number must be permanently affixed to the well casing. 2 6 - 4 2 9 2 0 -

Horizontal Datum NAD 27 (x) NAD 83 ( )

Longitude (to thousandth of a second): West 74°09'33.162"

Latitude (to thousandth of a second): North 40°44'13.089"

Elevation of Top of Inner Casing (cap off) (one-hundredth of a foot): 9.18

Vertical Datum NGVD 29 (x) NAVD 88 ( )

Source of elevation datum (benchmark, nail,) etc) and year (if an alternate datum has been approved by the Department, identify here, assume datum of 100' and give elevation.) Source: NJGS 1108 Elev: 16.374'

Owners Well Number (As shown on application or plans): PZ-10B

Elevations are to be determined by double run, three wire leveling methods using balanced sights, commencing from a well marked and described point. This beginning point shall either be derived from Federal or State benchmarks if not more than 1000 feet from the site or from an alternate datum approved by the department. Tolerances should meet third order standards, which are 0.05 ft x (mile) 1/2. For sections less than 0.1 mile, let miles = 0.1.

AUTHENTICATION

I certify under penalty of law that I have personally examined and am familiar with the information submitted in this document and all attachments and that, based on my inquiry of these individuals immediately responsible for obtaining the information, I believe the submitted information is true, accurate and complete. I am aware that there are significant penalties for submitting false information including the possibility of fine and imprisonment.

PROFESSIONAL LAND SURVEYOR' SIGNATURE

JAMES M. STEWART 26108 SEAL

PROFESSIONAL LAND SURVEYOR'S NAME AND LICENSE NUMBER
(Please print or type)

849880250

THIS FORM MUST BE COMPLETED BY THE PERMITTEE AND/OR SURVEYOR

MONITORING WELL CERTIFICATION-FORM B-LOCATION CERTIFICATION

Name of Permittee: Public Services Electric & Gas Company
Name of Facility: PSE&G Harrison Gas Plant
Location: Harrison, New Jersey
UST Registration Number: Case Number:
ISRA Case Number:

LAND SURVEYOR'S CERTIFICATION

Well Permit Number: This number must be permanently affixed to the well casing. 2 6 - 4 2 9 2 1 -

Horizontal Datum NAD 27 (x) NAD 83 ( )

Longitude (to thousandth of a second): West 74°09'36.530"

Latitude (to thousandth of a second): North 40°44'10.995"

Elevation of Top of Inner Casing (cap off) (one-hundredth of a foot): 8.49

Vertical Datum NGVD 29 (x) NAVD 88 ( )

Source of elevation datum (benchmark, nail,) etc) and year (if an alternate datum has been approved by the Department, identify here, assume datum of 100' and give elevation.) Source: NJGS 1108 Elev: 16.374'

Owners Well Number (As shown on application or plans): PZ-11A

Elevations are to be determined by double run, three wire leveling methods using balanced sights, commencing from a well marked and described point. This beginning point shall either be derived from Federal or State benchmarks if not more than 1000 feet from the site or from an alternate datum approved by the department. Tolerances should meet third order standards, which are 0.05 ft x (mile) 1/2. For sections less than 0.1 mile, let miles = 0.1.

AUTHENTICATION

I certify under penalty of law that I have personally examined and am familiar with the information submitted in this document and all attachments and that, based on my inquiry of these individuals immediately responsible for obtaining the information, I believe the submitted information is true, accurate and complete. I am aware that there are significant penalties for submitting false information including the possibility of fine and imprisonment.

PROFESSIONAL LAND SURVEYOR' SIGNATURE

JAMES M. STEWART 26108

PROFESSIONAL LAND SURVEYOR'S NAME AND LICENSE NUMBER
(Please print or type)

SEAL

849880251

THIS FORM MUST BE COMPLETED BY THE PERMITTEE AND/OR SURVEYOR

MONITORING WELL CERTIFICATION-FORM B-LOCATION CERTIFICATION

Name of Permittee: Public Services Electric & Gas Company
Name of Facility: PSE&G Harrison Gas Plant
Location: Harrison, New Jersey
UST Registration Number: Case Number:
ISRA Case Number:

LAND SURVEYOR'S CERTIFICATION

Well Permit Number: This number must be permanently affixed to the well casing. 2 6 - 4 2 9 3 7 -

Horizontal Datum NAD 27 (x) NAD 83 ( )

Longitude (to thousandth of a second): West 74°09'38.504"

Latitude (to thousandth of a second): North 40°44'09.608"

Elevation of Top of Inner Casing (cap off) (one-hundredth of a foot): 8.48

Vertical Datum NGVD 29 (x) NAVD 88 ( )

Source of elevation datum (benchmark, nail,) etc) and year (if an alternate datum has been approved by the Department, identify here, assume datum of 100' and give elevation.) Source: NJGS 1108 Elev: 16.374'

Owners Well Number (As shown on application or plans): PZ-12A

Elevations are to be determined by double run, three wire leveling methods using balanced sights, commencing from a well marked and described point. This beginning point shall either be derived from Federal or State benchmarks if not more than 1000 feet from the site or from an alternate datum approved by the department. Tolerances should meet third order standards, which are 0.05 ft x (mile) 1/2. For sections less than 0.1 mile, let miles = 0.1.

AUTHENTICATION

I certify under penalty of law that I have personally examined and am familiar with the information submitted in this document and all attachments and that, based on my inquiry of these individuals immediately responsible for obtaining the information, I believe the submitted information is true, accurate and complete. I am aware that there are significant penalties for submitting false information including the possibility of fine and imprisonment.

PROFESSIONAL LAND SURVEYOR' SIGNATURE

JAMES M. STEWART 26108
PROFESSIONAL LAND SURVEYOR'S NAME AND LICENSE NUMBER
(Please print or type)

SEAL

849880252

THIS FORM MUST BE COMPLETED BY THE PERMITTEE AND/OR SURVEYOR

MONITORING WELL CERTIFICATION-FORM B-LOCATION CERTIFICATION

Name of Permittee: Public Services Electric & Gas Company
Name of Facility: PSE&G Harrison Gas Plant
Location: Harrison, New Jersey
UST Registration Number: Case Number:
ISRA Case Number:

LAND SURVEYOR'S CERTIFICATION

Well Permit Number: This number must be permanently affixed to the well casing. 2 6 - 4 2 9 3 8 -

Horizontal Datum NAD 27 (x) NAD 83 ( )

Longitude (to thousandth of a second): West 74°09'29.247"

Latitude (to thousandth of a second): North 40°44'09.178"

Elevation of Top of Inner Casing (cap off) (one-hundredth of a foot): 8.84

Vertical Datum NGVD 29 (x) NAVD 88 ( )

Source of elevation datum (benchmark, nail,) etc) and year (if an alternate datum has been approved by the Department, identify here, assume datum of 100' and give elevation.) Source: NJGS 1108 Elev: 16.374'

Owners Well Number (As shown on application or plans): PZ-13A

Elevations are to be determined by double run, three wire leveling methods using balanced sights, commencing from a well marked and described point. This beginning point shall either be derived from Federal or State benchmarks if not more than 1000 feet from the site or from an alternate datum approved by the department. Tolerances should meet third order standards, which are 0.05 ft x (mile) 1/2. For sections less than 0.1 mile, let miles = 0.1.

AUTHENTICATION

I certify under penalty of law that I have personally examined and am familiar with the information submitted in this document and all attachments and that, based on my inquiry of these individuals immediately responsible for obtaining the information, I believe the submitted information is true, accurate and complete. I am aware that there are significant penalties for submitting false information including the possibility of fine and imprisonment.

PROFESSIONAL LAND SURVEYOR' SIGNATURE

JAMES M. STEWART 26108 SEAL

PROFESSIONAL LAND SURVEYOR'S NAME AND LICENSE NUMBER
(Please print or type)

849880253

MONITORING WELL CERTIFICATION - **FORM A** - AS BUILT CERTIFICATION
(one form must be completed for each well)

Name of Permitee: **Public Service Electric & Gas Company**
Name of Facility: **PSE&G Harrison Gas Plant**
Location: **Harrison, New Jersey**
NJPDES Permit No.: NJ00 or ECRA Case No.:

CERTIFICATION

Well Permit Number (As assigned by NJDEP's Bureau of Water Allocation):	26-42922
Owners Well Number (As shown on the application or plans):	PZ-1A
Well Completion Date:	5-23-96
Distance from Top of Casing (cap off) to ground surface (one-hundredth of a foot):	0
Total Depth of Well to the nearest 1/2 foot:	40'
Depth to Top of Screen From Top of Casing (one-hundredth of a foot):	35'
Screen Length (or length of open hole) in feet:	5'
Screen or Slot Size:	0.010"
Screen or Slot Material:	SCH 40 PVC
Casing Material: (PVC, Steel, or other-Specify):	SCH 40 PVC
Casing Diameter (inches):	2"
Static Water Level From Top of Casing at the Time of Installation (one-hundredth of a foot):	Unknown
Yield (gallons per minute):	
Development Technique (specify):	Pump & Surge
Length of Time Well is Developed/ Pumped or Bailed:	1 HR
Lithologic Log:	See Attached

Authentication
I certify under penalty of law that I have personally examined and am familiar with the information submitted in this document and all attachments and that, based on my inquiry of those individuals immediately responsible for obtaining the information, I believe the submitted information is true, accurate and complete. I am aware that there are significant penalties for submitting false information, including the possibility of fine and imprisonment.

James Evans
Name (Type or Print)

James Evans
Signature

JD 01632
Certification or License No.

Certification By Executive Officer or Duly Authorized Representative

Gerald F. Freck
Name (Type or Print)

Signature

President
Title

9-6-96
Date

849880254

MONITORING WELL CERTIFICATION - **FORM A** - AS BUILT CERTIFICATION
(one form must be completed for each well)

Name of Permitee: **Public Service Electric & Gas Company**
Name of Facility: **PSE&G Harrison Gas Plant**
Location: **Harrison, New Jersey**
NJPDES Permit No.: NJ00 or ECRA Case No.:

CERTIFICATION

Well Permit Number (As assigned by NJDEP's Bureau of Water Allocation):	26-42923
Owners Well Number (As shown on the application or plans):	PZ-1B
Well Completion Date:	5-22-96
Distance from Top of Casing (cap off) to ground surface (one-hundredth of a foot):	0
Total Depth of Well to the nearest 1/2 foot:	10'
Depth to Top of Screen From Top of Casing (one-hundredth of a foot):	5'
Screen Length (or length of open hole) in feet:	5'
Screen or Slot Size:	0.010"
Screen or Slot Material:	SCH 40 PVC
Casing Material: (PVC, Steel, or other-Specify):	SCH 40 PVC
Casing Diameter (inches):	2"
Static Water Level From Top of Casing at the Time of Installation (one-hundredth of a foot):	Unknown
Yield (gallons per minute):	
Development Technique (specify):	Pump & Surge
Length of Time Well is Developed/ Pumped or Bailed:	1 HR
Lithologic Log:	See Attached

Authentication
I certify under penalty of law that I have personally examined and am familiar with the information submitted in this document and all attachments and that, based on my inquiry of those individuals immediately responsible for obtaining the information, I believe the submitted information is true, accurate and complete. I am aware that there are significant penalties for submitting false information, including the possibility of fine and imprisonment.

James Evans
Name (Type or Print)

James Evans
Signature

JD 01632
Certification or License No.

Certification By Executive Officer or Duly Authorized Representative

Gerald F. Freck
Name (Type or Print)

Signature

President
Title

9-6-96
Date

849880255

MONITORING WELL CERTIFICATION - **FORM A** - AS BUILT CERTIFICATION
(one form must be completed for each well)

Name of Permitee: **Public Service Electric & Gas Company**
Name of Facility: **PSE&G Harrison Gas Plant**
Location: **Harrison, New Jersey**
NJPDES Permit No.: NJ00 or ECRA Case No.:

CERTIFICATION

Well Permit Number (As assigned by NJDEP's Bureau of Water Allocation):	26-42924
Owners Well Number (As shown on the application or plans):	PZ-2A
Well Completion Date:	6-6-96
Distance from Top of Casing (cap off) to ground surface (one-hundredth of a foot):	0
Total Depth of Well to the nearest 1/2 foot:	40'
Depth to Top of Screen From Top of Casing (one-hundredth of a foot):	35'
Screen Length (or length of open hole) in feet:	5'
Screen or Slot Size:	0.010 "
Screen or Slot Material:	SCH 40 PVC
Casing Material: (PVC, Steel, or other-Specify):	SCH 40 PVC
Casing Diameter (inches):	2"
Static Water Level From Top of Casing at the Time of Installation (one-hundredth of a foot):	Unknown
Yield (gallons per minute):	
Development Technique (specify):	Pump & Surge
Length of Time Well is Developed/ Pumped or Bailed:	1 HR
Lithologic Log:	See Attached

Authentication
I certify under penalty of law that I have personally examined and am familiar with the information submitted in this document and all attachments and that, based on my inquiry of those individuals immediately responsible for obtaining the information, I believe the submitted information is true, accurate and complete. I am aware that there are significant penalties for submitting false information, including the possibility of fine and imprisonment.

James Evans
Name (Type or Print)

James Evans
Signature

JD 01632
Certification or License No.

Certification By Executive Officer or Duly Authorized Representative

Gerald F. Freck
Name (Type or Print)

Signature

President
Title

9-6-96
Date

849880256

MONITORING WELL CERTIFICATION - **FORM A** - AS BUILT CERTIFICATION
(one form must be completed for each well)

Name of Permitee: **Public Service Electric & Gas Company**
Name of Facility: **PSE&G Harrison Gas Plant**
Location: **Harrison, New Jersey**
NJPDES Permit No.: NJ00 or ECRA Case No.:

CERTIFICATION

Well Permit Number (As assigned by NJDEP's Bureau of Water Allocation):	26-42925
Owners Well Number (As shown on the application or plans):	PZ-2B
Well Completion Date:	6-6-96
Distance from Top of Casing (cap off) to ground surface (one-hundredth of a foot):	0
Total Depth of Well to the nearest 1/2 foot:	8'
Depth to Top of Screen From Top of Casing (one-hundredth of a foot):	5'
Screen Length (or length of open hole) in feet:	3'
Screen or Slot Size:	0.010"
Screen or Slot Material:	SCH 40 PVC
Casing Material: (PVC, Steel, or other-Specify):	SCH 40 PVC
Casing Diameter (inches):	2"
Static Water Level From Top of Casing at the Time of Installation (one-hundredth of a foot):	Unknown
Yield (gallons per minute):	
Development Technique (specify):	Pump & Surge
Length of Time Well is Developed/ Pumped or Bailed:	1 HR
Lithologic Log:	See Attached

Authentication
I certify under penalty of law that I have personally examined and am familiar with the information submitted in this document and all attachments and that, based on my inquiry of those individuals immediately responsible for obtaining the information, I believe the submitted information is true, accurate and complete. I am aware that there are significant penalties for submitting false information, including the possibility of fine and imprisonment.

James Evans
Name (Type or Print)

James Evans
Signature

JD 01632
Certification or License No.

Certification By Executive Officer or Duly Authorized Representative

Gerald F. Freck
Name (Type or Print)

Signature

President
Title

9-6-96
Date

849880257

MONITORING WELL CERTIFICATION - **FORM A** - AS BUILT CERTIFICATION
(one form must be completed for each well)

Name of Permitee: **Public Service Electric & Gas Company**
Name of Facility: **PSE&G Harrison Gas Plant**
Location: **Harrison, New Jersey**
NJPDES Permit No.: NJ00 or ECRA Case No.:

CERTIFICATION

Well Permit Number (As assigned by NJDEP's Bureau of Water Allocation):	26-42926
Owners Well Number (As shown on the application or plans):	PZ-3A
Well Completion Date:	6-6-96
Distance from Top of Casing (cap off) to ground surface (one-hundredth of a foot):	0
Total Depth of Well to the nearest 1/2 foot:	39'
Depth to Top of Screen From Top of Casing (one-hundredth of a foot):	34'
Screen Length (or length of open hole) in feet:	5'
Screen or Slot Size:	0.010"
Screen or Slot Material:	SCH 40 PVC
Casing Material: (PVC, Steel, or other-Specify):	SCH 40 PVC
Casing Diameter (inches):	2"
Static Water Level From Top of Casing at the Time of Installation (one-hundredth of a foot):	Unknown
Yield (gallons per minute):	
Development Technique (specify):	Pump & Surge
Length of Time Well is Developed/ Pumped or Bailed:	1 HR
Lithologic Log:	See Attached

Authentication
I certify under penalty of law that I have personally examined and am familiar with the information submitted in this document and all attachments and that, based on my inquiry of those individuals immediately responsible for obtaining the information, I believe the submitted information is true, accurate and complete. I am aware that there are significant penalties for submitting false information, including the possibility of fine and imprisonment.

James Evans
Name (Type or Print)

James Evans
Signature

JD 01632
Certification or License No.

Certification By Executive Officer or Duly Authorized Representative

Gerald F. Freck
Name (Type or Print)

Signature

President
Title

9-6-96
Date

849880258

MONITORING WELL CERTIFICATION - **FORM A** - AS BUILT CERTIFICATION
(one form must be completed for each well)

Name of Permitee: **Public Service Electric & Gas Company**
Name of Facility: **PSE&G Harrison Gas Plant**
Location: **Harrison, New Jersey**
NJPDES Permit No.: NJ00 or ECRA Case No.:

CERTIFICATION

Well Permit Number (As assigned by NJDEP's Bureau of Water Allocation):	26-42927
Owners Well Number (As shown on the application or plans):	PZ-3B
Well Completion Date:	6-7-96
Distance from Top of Casing (cap off) to ground surface (one-hundredth of a foot):	0
Total Depth of Well to the nearest 1/2 foot:	10'
Depth to Top of Screen From Top of Casing (one-hundredth of a foot):	5'
Screen Length (or length of open hole) in feet:	5'
Screen or Slot Size:	0.010"
Screen or Slot Material:	SCH 40 PVC
Casing Material: (PVC, Steel, or other-Specify):	SCH 40 PVC
Casing Diameter (inches):	2"
Static Water Level From Top of Casing at the Time of Installation (one-hundredth of a foot):	Unknown
Yield (gallons per minute):	
Development Technique (specify):	Pump & Surge
Length of Time Well is Developed/ Pumped or Bailed:	1 HR
Lithologic Log:	See Attached

Authentication
I certify under penalty of law that I have personally examined and am familiar with the information submitted in this document and all attachments and that, based on my inquiry of those individuals immediately responsible for obtaining the information, I believe the submitted information is true, accurate and complete. I am aware that there are significant penalties for submitting false information, including the possibility of fine and imprisonment.

James Evans
Name (Type or Print)

James Evans
Signature

JD 01632
Certification or License No.

Certification By Executive Officer or Duly Authorized Representative

Gerald F. Freck
Name (Type or Print)

Signature

President
Title

9-6-96
Date

849880259

MONITORING WELL CERTIFICATION - **FORM A** - AS BUILT CERTIFICATION
(one form must be completed for each well)

Name of Permitee: **Public Service Electric & Gas Company**
Name of Facility: **PSE&G Harrison Gas Plant**
Location: **Harrison, New Jersey**
NJPDES Permit No.: NJ00 or ECRA Case No.:

CERTIFICATION

Well Permit Number (As assigned by NJDEP's Bureau of Water Allocation):	26-42928
Owners Well Number (As shown on the application or plans):	PZ-4A
Well Completion Date:	5-28-96
Distance from Top of Casing (cap off) to ground surface (one-hundredth of a foot):	0
Total Depth of Well to the nearest 1/2 foot:	35'
Depth to Top of Screen From Top of Casing (one-hundredth of a foot):	30'
Screen Length (or length of open hole) in feet:	5'
Screen or Slot Size:	0.010"
Screen or Slot Material:	SCH 40 PVC
Casing Material: (PVC, Steel, or other-Specify):	SCH 40 PVC
Casing Diameter (inches):	2"
Static Water Level From Top of Casing at the Time of Installation (one-hundredth of a foot):	Unknown
Yield (gallons per minute):	
Development Technique (specify):	Pump & Surge
Length of Time Well is Developed/ Pumped or Bailed:	1 HR
Lithologic Log:	See Attached

Authentication
I certify under penalty of law that I have personally examined and am familiar with the information submitted in this document and all attachments and that, based on my inquiry of those individuals immediately responsible for obtaining the information, I believe the submitted information is true, accurate and complete. I am aware that there are significant penalties for submitting false information, including the possibility of fine and imprisonment.

James Evans
Name (Type or Print)

James Evans
Signature

JD 01632
Certification or License No.

Certification By Executive Officer or Duly Authorized Representative

Gerald F. Freck
Name (Type or Print)

Signature

President
Title

9-6-96
Date

849880260

MONITORING WELL CERTIFICATION - **FORM A** - AS BUILT CERTIFICATION
(one form must be completed for each well)

Name of Permitee: **Public Service Electric & Gas Company**
Name of Facility: **PSE&G Harrison Gas Plant**
Location: **Harrison, New Jersey**
NJPDES Permit No.: NJ00 or ECRA Case No.:

CERTIFICATION

Well Permit Number (As assigned by NJDEP's Bureau of Water Allocation):	26-42929
Owners Well Number (As shown on the application or plans):	PZ-4B
Well Completion Date:	5-24-96
Distance from Top of Casing (cap off) to ground surface (one-hundredth of a foot):	0
Total Depth of Well to the nearest 1/2 foot:	12'
Depth to Top of Screen From Top of Casing (one-hundredth of a foot):	7'
Screen Length (or length of open hole) in feet:	5'
Screen or Slot Size:	0.010"
Screen or Slot Material:	SCH 40 PVC
Casing Material: (PVC, Steel, or other-Specify):	SCH 40 PVC
Casing Diameter (inches):	2"
Static Water Level From Top of Casing at the Time of Installation (one-hundredth of a foot):	Unknown
Yield (gallons per minute):	
Development Technique (specify):	Pump & Surge
Length of Time Well is Developed/ Pumped or Bailed:	1 HR
Lithologic Log:	See Attached

Authentication
I certify under penalty of law that I have personally examined and am familiar with the information submitted in this document and all attachments and that, based on my inquiry of those individuals immediately responsible for obtaining the information, I believe the submitted information is true, accurate and complete. I am aware that there are significant penalties for submitting false information, including the possibility of fine and imprisonment.

James Evans
Name (Type or Print)

James Evans
Signature

JD 01632
Certification or License No.

Certification By Executive Officer or Duly Authorized Representative

Gerald F. Frech
Name (Type or Print)

Signature

President
Title

9-6-96
Date

849880261

MONITORING WELL CERTIFICATION - **FORM A** - AS BUILT CERTIFICATION
(one form must be completed for each well)

Name of Permitee: **Public Service Electric & Gas Company**
Name of Facility: **PSE&G Harrison Gas Plant**
Location: **Harrison, New Jersey**
NJPDES Permit No.: NJ00 or ECRA Case No.:

CERTIFICATION

Well Permit Number (As assigned by NJDEP's Bureau of Water Allocation):	26-42930
Owners Well Number (As shown on the application or plans):	PZ-5A
Well Completion Date:	5-31-96
Distance from Top of Casing (cap off) to ground surface (one-hundredth of a foot):	2.5'
Total Depth of Well to the nearest 1/2 foot:	54'
Depth to Top of Screen From Top of Casing (one-hundredth of a foot):	51.5'
Screen Length (or length of open hole) in feet:	5'
Screen or Slot Size:	0.010"
Screen or Slot Material:	SCH 40 PVC
Casing Material: (PVC, Steel, or other-Specify):	SCH 40 PVC
Casing Diameter (inches):	2"
Static Water Level From Top of Casing at the Time of Installation (one-hundredth of a foot):	Unknown
Yield (gallons per minute):	
Development Technique (specify):	Pump & Surge
Length of Time Well is Developed/ Pumped or Bailed:	1 HR
Lithologic Log:	See Attached

Authentication
I certify under penalty of law that I have personally examined and am familiar with the information submitted in this document and all attachments and that, based on my inquiry of those individuals immediately responsible for obtaining the information, I believe the submitted information is true, accurate and complete. I am aware that there are significant penalties for submitting false information, including the possibility of fine and imprisonment.

James Evans
Name (Type or Print)

James Evans
Signature

JD 01632
Certification or License No.

Certification By Executive Officer or Duly Authorized Representative

Gerald F. Freck
Name (Type or Print)

Signature

President
Title

9-6-96
Date

849880262

MONITORING WELL CERTIFICATION - **FORM A** - AS BUILT CERTIFICATION
(one form must be completed for each well)

Name of Permitee: **Public Service Electric & Gas Company**
Name of Facility: **PSE&G Harrison Gas Plant**
Location: **Harrison, New Jersey**
NJPDES Permit No.: NJ00 or ECRA Case No.:

CERTIFICATION

Well Permit Number (As assigned by NJDEP's Bureau of Water Allocation):	26-42931
Owners Well Number (As shown on the application or plans):	PZ-5B
Well Completion Date:	5-30-96
Distance from Top of Casing (cap off) to ground surface (one-hundredth of a foot):	2.5'
Total Depth of Well to the nearest 1/2 foot:	5'
Depth to Top of Screen From Top of Casing (one-hundredth of a foot):	5.7'
Screen Length (or length of open hole) in feet:	1.8'
Screen or Slot Size:	0.010"
Screen or Slot Material:	SCH 40 PVC
Casing Material: (PVC, Steel, or other-Specify):	SCH 40 PVC
Casing Diameter (inches):	2"
Static Water Level From Top of Casing at the Time of Installation (one-hundredth of a foot):	Unknown
Yield (gallons per minute):	
Development Technique (specify):	Pump & Surge
Length of Time Well is Developed/ Pumped or Bailed:	1 HR
Lithologic Log:	See Attached

Authentication
I certify under penalty of law that I have personally examined and am familiar with the information submitted in this document and all attachments and that, based on my inquiry of those individuals immediately responsible for obtaining the information, I believe the submitted information is true, accurate and complete. I am aware that there are significant penalties for submitting false information, including the possibility of fine and imprisonment.

James Evans
Name (Type or Print)

James Evans
Signature

JD 01632
Certification or License No.

Certification By Executive Officer or Duly Authorized Representative

Gerald F. Freck
Name (Type or Print)

Signature

President
Title

9-6-96
Date

849880263

MONITORING WELL CERTIFICATION - **FORM A** - AS BUILT CERTIFICATION
(one form must be completed for each well)

Name of Permitee: **Public Service Electric & Gas Company**
Name of Facility: **PSE&G Harrison Gas Plant**
Location: **Harrison, New Jersey**
NJPDES Permit No.: NJ00 or ECRA Case No.:

CERTIFICATION

Well Permit Number (As assigned by NJDEP's Bureau of Water Allocation):	26-42912
Owners Well Number (As shown on the application or plans):	PZ-6A
Well Completion Date:	6-12-96
Distance from Top of Casing (cap off) to ground surface (one-hundredth of a foot):	0
Total Depth of Well to the nearest 1/2 foot:	30'
Depth to Top of Screen From Top of Casing (one-hundredth of a foot):	25'
Screen Length (or length of open hole) in feet:	5'
Screen or Slot Size:	0.010"
Screen or Slot Material:	SCH 40 PVC
Casing Material: (PVC, Steel, or other-Specify):	SCH 40 PVC
Casing Diameter (inches):	2"
Static Water Level From Top of Casing at the Time of Installation (one-hundredth of a foot):	Unknown
Yield (gallons per minute):	
Development Technique (specify):	Pump & Surge
Length of Time Well is Developed/ Pumped or Bailed:	1 HR
Lithologic Log:	See Attached

Authentication
I certify under penalty of law that I have personally examined and am familiar with the information submitted in this document and all attachments and that, based on my inquiry of those individuals immediately responsible for obtaining the information, I believe the submitted information is true, accurate and complete. I am aware that there are significant penalties for submitting false information, including the possibility of fine and imprisonment.

James Evans
Name (Type or Print)

James Evans
Signature

JD 01632
Certification or License No.

Certification By Executive Officer or Duly Authorized Representative

Gerald F. Freck
Name (Type or Print)

Signature

President
Title

9-6-96
Date

849880264

MONITORING WELL CERTIFICATION - **FORM A** - AS BUILT CERTIFICATION
(one form must be completed for each well)

Name of Permitee: **Public Service Electric & Gas Company**
Name of Facility: **PSE&G Harrison Gas Plant**
Location: **Harrison, New Jersey**
NJPDES Permit No.: NJ00 or ECRA Case No.:

CERTIFICATION

Well Permit Number (As assigned by NJDEP's Bureau of Water Allocation):	26-42913
Owners Well Number (As shown on the application or plans):	PZ-6B
Well Completion Date:	6-13-96
Distance from Top of Casing (cap off) to ground surface (one-hundredth of a foot):	0
Total Depth of Well to the nearest 1/2 foot:	7'
Depth to Top of Screen From Top of Casing (one-hundredth of a foot):	5'
Screen Length (or length of open hole) in feet:	2'
Screen or Slot Size:	0.010 "
Screen or Slot Material:	SCH 40 PVC
Casing Material: (PVC, Steel, or other-Specify):	SCH 40 PVC
Casing Diameter (inches):	2"
Static Water Level From Top of Casing at the Time of Installation (one-hundredth of a foot):	Unknown
Yield (gallons per minute):	
Development Technique (specify):	Pump & Surge
Length of Time Well is Developed/ Pumped or Bailed:	1 HR
Lithologic Log:	See Attached

Authentication
I certify under penalty of law that I have personally examined and am familiar with the information submitted in this document and all attachments and that, based on my inquiry of those individuals immediately responsible for obtaining the information, I believe the submitted information is true, accurate and complete. I am aware that there are significant penalties for submitting false information, including the possibility of fine and imprisonment.

James Evans
Name (Type or Print)

James Evans
Signature

JD 01632
Certification or License No.

Certification By Executive Officer or Duly Authorized Representative

Gerald F. Freck
Name (Type or Print)

Signature

President
Title

9-6-96
Date

849880265

MONITORING WELL CERTIFICATION - **FORM A** - AS BUILT CERTIFICATION
(one form must be completed for each well)

Name of Permitee: **Public Service Electric & Gas Company**
Name of Facility: **PSE&G Harrison Gas Plant**
Location: **Harrison, New Jersey**
NJPDES Permit No.: NJ00 or ECRA Case No.:

CERTIFICATION

Well Permit Number (As assigned by NJDEP's Bureau of Water Allocation):	26-42914
Owners Well Number (As shown on the application or plans):	PZ-7A
Well Completion Date:	6-17-96
Distance from Top of Casing (cap off) to ground surface (one-hundredth of a foot):	0
Total Depth of Well to the nearest 1/2 foot:	35'
Depth to Top of Screen From Top of Casing (one-hundredth of a foot):	30'
Screen Length (or length of open hole) in feet:	5'
Screen or Slot Size:	0.010"
Screen or Slot Material:	SCH 40 PVC
Casing Material: (PVC, Steel, or other-Specify):	SCH 40 PVC
Casing Diameter (inches):	2"
Static Water Level From Top of Casing at the Time of Installation (one-hundredth of a foot):	Unknown
Yield (gallons per minute):	
Development Technique (specify):	Pump & Surge
Length of Time Well is Developed/ Pumped or Bailed:	1 HR
Lithologic Log:	See Attached

Authentication
I certify under penalty of law that I have personally examined and am familiar with the information submitted in this document and all attachments and that, based on my inquiry of those individuals immediately responsible for obtaining the information, I believe the submitted information is true, accurate and complete. I am aware that there are significant penalties for submitting false information, including the possibility of fine and imprisonment.

James Evans
Name (Type or Print)

James Evans
Signature

JD 01632
Certification or License No.

Certification By Executive Officer or Duly Authorized Representative

Gerald F. Freck
Name (Type or Print)

Signature

President
Title

9-6-96
Date

849880266

MONITORING WELL CERTIFICATION - **FORM A** - AS BUILT CERTIFICATION
(one form must be completed for each well)

Name of Permitee: **Public Service Electric & Gas Company**
Name of Facility: **PSE&G Harrison Gas Plant**
Location: **Harrison, New Jersey**
NJPDES Permit No.: NJ00 or ECRA Case No.:

CERTIFICATION

Well Permit Number (As assigned by NJDEP's Bureau of Water Allocation):	26-42915
Owners Well Number (As shown on the application or plans):	PZ-8A
Well Completion Date:	6-5-96
Distance from Top of Casing (cap off) to ground surface (one-hundredth of a foot):	0
Total Depth of Well to the nearest 1/2 foot:	43'
Depth to Top of Screen From Top of Casing (one-hundredth of a foot):	38'
Screen Length (or length of open hole) in feet:	5'
Screen or Slot Size:	0.010"
Screen or Slot Material:	SCH 40 PVC
Casing Material: (PVC, Steel, or other-Specify):	SCH 40 PVC
Casing Diameter (inches):	2"
Static Water Level From Top of Casing at the Time of Installation (one-hundredth of a foot):	Unknown
Yield (gallons per minute):	
Development Technique (specify):	Pump & Surge
Length of Time Well is Developed/ Pumped or Bailed:	1 HR
Lithologic Log:	See Attached

Authentication
I certify under penalty of law that I have personally examined and am familiar with the information submitted in this document and all attachments and that, based on my inquiry of those individuals immediately responsible for obtaining the information, I believe the submitted information is true, accurate and complete. I am aware that there are significant penalties for submitting false information, including the possibility of fine and imprisonment.

James Evans
Name (Type or Print)

James Evans
Signature

JD 01632
Certification or License No.

Certification By Executive Officer or Duly Authorized Representative

Gerald F. Freck
Name (Type or Print)

Signature

President
Title

9-6-96
Date

849880267

MONITORING WELL CERTIFICATION - **FORM A** - AS BUILT CERTIFICATION
(one form must be completed for each well)

Name of Permitee: **Public Service Electric & Gas Company**
Name of Facility: **PSE&G Harrison Gas Plant**
Location: **Harrison, New Jersey**
NJPDES Permit No.: NJ00 or ECRA Case No.:

CERTIFICATION

Well Permit Number (As assigned by NJDEP's Bureau of Water Allocation):	26-42916
Owners Well Number (As shown on the application or plans):	PZ-8B
Well Completion Date:	6-5-96
Distance from Top of Casing (cap off) to ground surface (one-hundredth of a foot):	0
Total Depth of Well to the nearest 1/2 foot:	5'
Depth to Top of Screen From Top of Casing (one-hundredth of a foot):	3'
Screen Length (or length of open hole) in feet:	2'
Screen or Slot Size:	0.010"
Screen or Slot Material:	SCH 40 PVC
Casing Material: (PVC, Steel, or other-Specify):	SCH 40 PVC
Casing Diameter (inches):	2"
Static Water Level From Top of Casing at the Time of Installation (one-hundredth of a foot):	Unknown
Yield (gallons per minute):	
Development Technique (specify):	Pump & Surge
Length of Time Well is Developed/ Pumped or Bailed:	1 HR
Lithologic Log:	See Attached

Authentication
I certify under penalty of law that I have personally examined and am familiar with the information submitted in this document and all attachments and that, based on my inquiry of those individuals immediately responsible for obtaining the information, I believe the submitted information is true, accurate and complete. I am aware that there are significant penalties for submitting false information, including the possibility of fine and imprisonment.

James Evans
Name (Type or Print)

James Evans
Signature

JD 01632
Certification or License No.

Certification By Executive Officer or Duly Authorized Representative

Gerald F. Freck
Name (Type or Print)

Signature

President
Title

9-6-96
Date

849880268

MONITORING WELL CERTIFICATION - **FORM A** - AS BUILT CERTIFICATION
(one form must be completed for each well)

Name of Permitee: **Public Service Electric & Gas Company**
Name of Facility: **PSE&G Harrison Gas Plant**
Location: **Harrison, New Jersey**
NJPDES Permit No.: NJ00 or ECRA Case No.:

CERTIFICATION

Well Permit Number (As assigned by NJDEP's Bureau of Water Allocation):	26-42917
Owners Well Number (As shown on the application or plans):	PZ-9A
Well Completion Date:	6-12-96
Distance from Top of Casing (cap off) to ground surface (one-hundredth of a foot):	0
Total Depth of Well to the nearest 1/2 foot:	26'
Depth to Top of Screen From Top of Casing (one-hundredth of a foot):	21'
Screen Length (or length of open hole) in feet:	5'
Screen or Slot Size:	0.010"
Screen or Slot Material:	SCH 40 PVC
Casing Material: (PVC, Steel, or other-Specify):	SCH 40 PVC
Casing Diameter (inches):	2"
Static Water Level From Top of Casing at the Time of Installation (one-hundredth of a foot):	Unknown
Yield (gallons per minute):	
Development Technique (specify):	Pump & Surge
Length of Time Well is Developed/ Pumped or Bailed:	1 HR
Lithologic Log:	See Attached

Authentication
I certify under penalty of law that I have personally examined and am familiar with the information submitted in this document and all attachments and that, based on my inquiry of those individuals immediately responsible for obtaining the information, I believe the submitted information is true, accurate and complete. I am aware that there are significant penalties for submitting false information, including the possibility of fine and imprisonment.

James Evans
Name (Type or Print)

James Evans
Signature

JD 01632
Certification or License No.

Certification By Executive Officer or Duly Authorized Representative

Gerald F. Freck
Name (Type or Print)

Signature

President
Title

9-6-96
Date

849880269

MONITORING WELL CERTIFICATION - **FORM A** - AS BUILT CERTIFICATION
(one form must be completed for each well)

Name of Permitee: **Public Service Electric & Gas Company**
Name of Facility: **PSE&G Harrison Gas Plant**
Location: **Harrison, New Jersey**
NJPDES Permit No.: NJ00 or ECRA Case No.:

CERTIFICATION

Well Permit Number (As assigned by NJDEP's Bureau of Water Allocation):	26-42918
Owners Well Number (As shown on the application or plans):	PZ-9B
Well Completion Date:	6-12-96
Distance from Top of Casing (cap off) to ground surface (one-hundredth of a foot):	0
Total Depth of Well to the nearest 1/2 foot:	7'
Depth to Top of Screen From Top of Casing (one-hundredth of a foot):	4'
Screen Length (or length of open hole) in feet:	3'
Screen or Slot Size:	0.010"
Screen or Slot Material:	SCH 40 PVC
Casing Material: (PVC, Steel, or other-Specify):	SCH 40 PVC
Casing Diameter (inches):	2"
Static Water Level From Top of Casing at the Time of Installation (one-hundredth of a foot):	Unknown
Yield (gallons per minute):	
Development Technique (specify):	Pump & Surge
Length of Time Well is Developed/ Pumped or Bailed:	1 HR
Lithologic Log:	See Attached

Authentication
I certify under penalty of law that I have personally examined and am familiar with the information submitted in this document and all attachments and that, based on my inquiry of those individuals immediately responsible for obtaining the information, I believe the submitted information is true, accurate and complete. I am aware that there are significant penalties for submitting false information, including the possibility of fine and imprisonment.

James Evans
Name (Type or Print)

James Evans
Signature

JD 01632
Certification or License No.

Certification By Executive Officer or Duly Authorized Representative

Gerald F. Freck
Name (Type or Print)

Signature

President
Title

9-6-96
Date

849880270

MONITORING WELL CERTIFICATION - **FORM A** - AS BUILT CERTIFICATION
(one form must be completed for each well)

Name of Permitee: **Public Service Electric & Gas Company**
Name of Facility: **PSE&G Harrison Gas Plant**
Location: **Harrison, New Jersey**
NJPDES Permit No.: NJ00 or ECRA Case No.:

CERTIFICATION

Well Permit Number (As assigned by NJDEP's Bureau of Water Allocation):	26-42919
Owners Well Number (As shown on the application or plans):	PZ-10A
Well Completion Date:	6-11-96
Distance from Top of Casing (cap off) to ground surface (one-hundredth of a foot):	0
Total Depth of Well to the nearest 1/2 foot:	27'
Depth to Top of Screen From Top of Casing (one-hundredth of a foot):	22'
Screen Length (or length of open hole) in feet:	5'
Screen or Slot Size:	0.010"
Screen or Slot Material:	SCH 40 PVC
Casing Material: (PVC, Steel, or other-Specify):	SCH 40 PVC
Casing Diameter (inches):	2"
Static Water Level From Top of Casing at the Time of Installation (one-hundredth of a foot):	Unknown
Yield (gallons per minute):	
Development Technique (specify):	Pump & Surge
Length of Time Well is Developed/ Pumped or Bailed:	1 HR
Lithologic Log:	See Attached

Authentication
I certify under penalty of law that I have personally examined and am familiar with the information submitted in this document and all attachments and that, based on my inquiry of those individuals immediately responsible for obtaining the information, I believe the submitted information is true, accurate and complete. I am aware that there are significant penalties for submitting false information, including the possibility of fine and imprisonment.

James Evans
Name (Type or Print)

James Evans
Signature

JD 01632
Certification or License No.

Certification By Executive Officer or Duly Authorized Representative

Gerald F. Freck
Name (Type or Print)

Signature

President
Title

9-6-96
Date

849880271

MONITORING WELL CERTIFICATION - **FORM A** - AS BUILT CERTIFICATION
(one form must be completed for each well)

Name of Permitee: **Public Service Electric & Gas Company**
Name of Facility: **PSE&G Harrison Gas Plant**
Location: **Harrison, New Jersey**
NJPDES Permit No.: NJ00 or ECRA Case No.:

CERTIFICATION

Well Permit Number (As assigned by NJDEP's Bureau of Water Allocation):	26-42920
Owners Well Number (As shown on the application or plans):	PZ-10B
Well Completion Date:	6-12-96
Distance from Top of Casing (cap off) to ground surface (one-hundredth of a foot):	0
Total Depth of Well to the nearest 1/2 foot:	7'
Depth to Top of Screen From Top of Casing (one-hundredth of a foot):	5'
Screen Length (or length of open hole) in feet:	2'
Screen or Slot Size:	0.010"
Screen or Slot Material:	SCH 40 PVC
Casing Material: (PVC, Steel, or other-Specify):	SCH 40 PVC
Casing Diameter (inches):	2"
Static Water Level From Top of Casing at the Time of Installation (one-hundredth of a foot):	Unknown
Yield (gallons per minute):	
Development Technique (specify):	Pump & Surge
Length of Time Well is Developed/ Pumped or Bailed:	1 HR
Lithologic Log:	See Attached

Authentication
I certify under penalty of law that I have personally examined and am familiar with the information submitted in this document and all attachments and that, based on my inquiry of those individuals immediately responsible for obtaining the information, I believe the submitted information is true, accurate and complete. I am aware that there are significant penalties for submitting false information, including the possibility of fine and imprisonment.

James Evans
Name (Type or Print)

James Evans
Signature

JD 01632
Certification or License No.

Certification By Executive Officer or Duly Authorized Representative

Gerald F. Freck
Name (Type or Print)

Signature

President
Title

9-6-96
Date

849880272

MONITORING WELL CERTIFICATION - **FORM A** - AS BUILT CERTIFICATION
(one form must be completed for each well)

Name of Permitee: **Public Service Electric & Gas Company**
Name of Facility: **PSE&G Harrison Gas Plant**
Location: **Harrison, New Jersey**
NJPDES Permit No.: NJ00 or ECRA Case No.:

CERTIFICATION

Well Permit Number (As assigned by NJDEP's Bureau of Water Allocation):	26-42921
Owners Well Number (As shown on the application or plans):	PZ-11A
Well Completion Date:	6-11-96
Distance from Top of Casing (cap off) to ground surface (one-hundredth of a foot):	0
Total Depth of Well to the nearest 1/2 foot:	27'
Depth to Top of Screen From Top of Casing (one-hundredth of a foot):	22'
Screen Length (or length of open hole) in feet:	5'
Screen or Slot Size:	0.010"
Screen or Slot Material:	SCH 40 PVC
Casing Material: (PVC, Steel, or other-Specify):	SCH 40 PVC
Casing Diameter (inches):	2"
Static Water Level From Top of Casing at the Time of Installation (one-hundredth of a foot):	Unknown
Yield (gallons per minute):	
Development Technique (specify):	Pump & Surge
Length of Time Well is Developed/ Pumped or Bailed:	1 HR
Lithologic Log:	See Attached

Authentication
I certify under penalty of law that I have personally examined and am familiar with the information submitted in this document and all attachments and that, based on my inquiry of those individuals immediately responsible for obtaining the information, I believe the submitted information is true, accurate and complete. I am aware that there are significant penalties for submitting false information, including the possibility of fine and imprisonment.

James Evans
Name (Type or Print)

James Evans
Signature

JD 01632
Certification or License No.

Certification By Executive Officer or Duly Authorized Representative

Gerald F. Freck
Name (Type or Print)

Signature

President
Title

9-6-96
Date

849880273

MONITORING WELL CERTIFICATION - **FORM A** - AS BUILT CERTIFICATION
(one form must be completed for each well)

Name of Permitee: **Public Service Electric & Gas Company**
Name of Facility: **PSE&G Harrison Gas Plant**
Location: **Harrison, New Jersey**
NJPDES Permit No.: NJ00 or ECRA Case No.:

CERTIFICATION

Well Permit Number (As assigned by NJDEP's Bureau of Water Allocation):	26-42937
Owners Well Number (As shown on the application or plans):	PZ-12A
Well Completion Date:	6-7-96
Distance from Top of Casing (cap off) to ground surface (one-hundredth of a foot):	0
Total Depth of Well to the nearest 1/2 foot:	42'
Depth to Top of Screen From Top of Casing (one-hundredth of a foot):	37'
Screen Length (or length of open hole) in feet:	5'
Screen or Slot Size:	0.010"
Screen or Slot Material:	SCH 40 PVC
Casing Material: (PVC, Steel, or other-Specify):	SCH 40 PVC
Casing Diameter (inches):	2"
Static Water Level From Top of Casing at the Time of Installation (one-hundredth of a foot):	Unknown
Yield (gallons per minute):	
Development Technique (specify):	Pump & Surge
Length of Time Well is Developed/ Pumped or Bailed:	1 HR
Lithologic Log:	See Attached

Authentication
I certify under penalty of law that I have personally examined and am familiar with the information submitted in this document and all attachments and that, based on my inquiry of those individuals immediately responsible for obtaining the information, I believe the submitted information is true, accurate and complete. I am aware that there are significant penalties for submitting false information, including the possibility of fine and imprisonment.

James Evans
Name (Type or Print)

James Evans
Signature

JD 01632
Certification or License No.

Certification By Executive Officer or Duly Authorized Representative

Gerald F. Freck
Name (Type or Print)

Signature

President
Title

9-6-96
Date

849880274

MONITORING WELL CERTIFICATION - **FORM A** - AS BUILT CERTIFICATION
(one form must be completed for each well)

Name of Permitee: **Public Service Electric & Gas Company**
Name of Facility: **PSE&G Harrison Gas Plant**
Location: **Harrison, New Jersey**
NJPDES Permit No.: NJ00 or ECRA Case No.:

CERTIFICATION

Well Permit Number (As assigned by NJDEP's Bureau of Water Allocation):	26-42938
Owners Well Number (As shown on the application or plans):	PZ-13A
Well Completion Date:	6-13-96
Distance from Top of Casing (cap off) to ground surface (one-hundredth of a foot):	0
Total Depth of Well to the nearest 1/2 foot:	45'
Depth to Top of Screen From Top of Casing (one-hundredth of a foot):	40'
Screen Length (or length of open hole) in feet:	5'
Screen or Slot Size:	0.010"
Screen or Slot Material:	SCH 40 PVC
Casing Material: (PVC, Steel, or other-Specify):	SCH 40 PVC
Casing Diameter (inches):	2"
Static Water Level From Top of Casing at the Time of Installation (one-hundredth of a foot):	Unknown
Yield (gallons per minute):	
Development Technique (specify):	Pump & Surge
Length of Time Well is Developed/ Pumped or Bailed:	1 HR
Lithologic Log:	See Attached

Authentication
I certify under penalty of law that I have personally examined and am familiar with the information submitted in this document and all attachments and that, based on my inquiry of those individuals immediately responsible for obtaining the information, I believe the submitted information is true, accurate and complete. I am aware that there are significant penalties for submitting false information, including the possibility of fine and imprisonment.

James Evans
Name (Type or Print)

James Evans
Signature

JD 01632
Certification or License No.

Certification By Executive Officer or Duly Authorized Representative

Gerald F. Freck
Name (Type or Print)

Signature

President
Title

9-6-96
Date

849880275

MONITORING WELL CERTIFICATION - **FORM A** - AS BUILT CERTIFICATION
(one form must be completed for each well)

Name of Permitee: **Public Service Electric & Gas Company**
Name of Facility: **PSE&G Harrison Gas Plant**
Location: **Harrison, New Jersey**
NJPDES Permit No.: NJ00 or ECRA Case No.:

CERTIFICATION

Well Permit Number (As assigned by NJDEP's Bureau of Water Allocation):	26-42939
Owners Well Number (As shown on the application or plans):	PZ-13B
Well Completion Date:	6-14-96
Distance from Top of Casing (cap off) to ground surface (one-hundredth of a foot):	0
Total Depth of Well to the nearest 1/2 foot:	9'
Depth to Top of Screen From Top of Casing (one-hundredth of a foot):	4'
Screen Length (or length of open hole) in feet:	5'
Screen or Slot Size:	0.010"
Screen or Slot Material:	SCH 40 PVC
Casing Material: (PVC, Steel, or other-Specify):	SCH 40 PVC
Casing Diameter (inches):	2"
Static Water Level From Top of Casing at the Time of Installation (one-hundredth of a foot):	Unknown
Yield (gallons per minute):	
Development Technique (specify):	Pump & Surge
Length of Time Well is Developed/ Pumped or Bailed:	1 HR
Lithologic Log:	See Attached

Authentication
I certify under penalty of law that I have personally examined and am familiar with the information submitted in this document and all attachments and that, based on my inquiry of those individuals immediately responsible for obtaining the information, I believe the submitted information is true, accurate and complete. I am aware that there are significant penalties for submitting false information, including the possibility of fine and imprisonment.

James Evans
Name (Type or Print)

James Evans
Signature

JD 01632
Certification or License No.

Certification By Executive Officer or Duly Authorized Representative

Gerald F. Freck
Name (Type or Print)

Signature

President
Title

9-6-96
Date

849880276

MONITORING WELL CERTIFICATION - **FORM A** - AS BUILT CERTIFICATION
(one form must be completed for each well)

Name of Permitee: **Public Service Electric & Gas Company**
Name of Facility: **PSE&G Harrison Gas Plant**
Location: **Harrison, New Jersey**
NJPDES Permit No.: NJ00 or ECRA Case No.:

CERTIFICATION

Well Permit Number (As assigned by NJDEP's Bureau of Water Allocation):	26-42940
Owners Well Number (As shown on the application or plans):	PZ-14A
Well Completion Date:	6-14-96
Distance from Top of Casing (cap off) to ground surface (one-hundredth of a foot):	0
Total Depth of Well to the nearest 1/2 foot:	35'
Depth to Top of Screen From Top of Casing (one-hundredth of a foot):	30'
Screen Length (or length of open hole) in feet:	5'
Screen or Slot Size:	0.010"
Screen or Slot Material:	SCH 40 PVC
Casing Material: (PVC, Steel, or other-Specify):	SCH 40 PVC
Casing Diameter (inches):	2"
Static Water Level From Top of Casing at the Time of Installation (one-hundredth of a foot):	Unknown
Yield (gallons per minute):	
Development Technique (specify):	Pump & Surge
Length of Time Well is Developed/ Pumped or Bailed:	1 HR
Lithologic Log:	See Attached

Authentication
I certify under penalty of law that I have personally examined and am familiar with the information submitted in this document and all attachments and that, based on my inquiry of those individuals immediately responsible for obtaining the information, I believe the submitted information is true, accurate and complete. I am aware that there are significant penalties for submitting false information, including the possibility of fine and imprisonment.

James Evans
Name (Type or Print)

James Evans
Signature

JD 01632
Certification or License No.

Certification By Executive Officer or Duly Authorized Representative

Gerald F. Freck
Name (Type or Print)

Signature

President
Title

9-6-96
Date

849880277

NJDEP CONTOUR MAP REPORTING FORM

Contour Map Title: Potentiometric Surface Map, Fill Material Unit, High Tide
Contour Map Number: Figure 4

1. Did any surveyed well casing elevations change from the previous sampling event? Yes ☐ No ☐
   If yes, attach new "Well Certification - Form B" and identify the reason for the elevation change (damage to casing, installation of recovery system in monitoring well, etc.)

   Not Applicable (this is the first event)

2. Are there any monitor wells in unconfined aquifers in which the water table elevation is higher than the top of the well screen? Yes ☑ No ☐
   If yes, identify these wells.

   PZ-1B **PZ-8B**
   PZ-2B **PZ-10B**
   PZ-3B **PZ-13B**
   PZ-4B

3. Are there any monitor wells present at the site but omitted from the contour map? Yes ☐ No ☑
   Unless the omission of the well(s) has been previously approved by the Department, justify the omissions.

4. Are there any monitor wells containing separate phase product during this measuring event? Yes ☐ No ☑
   Were any of the monitor wells with separate phase product included in the ground water contour map? Yes ☐ No ☑
   If yes, show the formula used to correct the water table elevation.

5. Has the ground water flow direction changed more than 45° from the previous ground water contour map? Yes ☐ No ☐
If yes, discuss the reasons for the change.

Not Applicable (this is the first event)

6. Has ground water mounding and/or depressions been identified in the ground water contour map? Yes ☑ No ☐
Unless the ground water mounds and/or depressions are caused by the ground water remediation system, discuss the reasons for this occurrence.

There appears to be a groundwater mound in the central portion of the Site which may be attributed to increased recharge in this area. Further investigation is necessary to confirm the presence of this mound.

7. Are all the wells used in the contour map screened in the same water-bearing zone? Yes ☑ No ☐
If no, justify inclusion of those wells.

8. Were the ground water contours
   - ☐ computer generated,
   - ☐ computer aided, or
   - ☑ hand-drawn?

If computer aided or generated, identify the interpolation method(s) used.

NJDEP CONTOUR MAP REPORTING FORM

Contour Map Title: Potentiometric Surface Map, Fill Material Unit, Low Tide
Contour Map Number: Figure 5

1. Did any surveyed well casing elevations change from the previous sampling event? Yes ☐ No ☐
   If yes, attach new "Well Certification - Form B" and identify the reason for the elevation change (damage to casing, installation of recovery system in monitoring well, etc.)

   Not Applicable (this is the first event)

2. Are there any monitor wells in unconfined aquifers in which the water table elevation is higher than the top of the well screen? Yes ☑ No ☐
   If yes, identify these wells.

   PZ-2B **PZ-10B**
   PZ-3B **PZ-13B**
   PZ-4B
   PZ-8B

3. Are there any monitor wells present at the site but omitted from the contour map? Yes ☐ No ☑
   Unless the omission of the well(s) has been previously approved by the Department, justify the omissions.

4. Are there any monitor wells containing separate phase product during this measuring event? Yes ☐ No ☑
   Were any of the monitor wells with separate phase product included in the ground water contour map? Yes ☐ No ☑
   If yes, show the formula used to correct the water table elevation.

5. Has the ground water flow direction changed more than 45° from the previous ground water contour map? Yes ☐ No ☐
If yes, discuss the reasons for the change.

Not Applicable (this is the first event)

6. Has ground water mounding and/or depressions been identified in the ground water contour map? Yes ☑ No ☐
Unless the ground water mounds and/or depressions are caused by the ground water remediation system, discuss the reasons for this occurrence.

There appears to be a groundwater mound in the central portion of the Site which may be attributed to increased recharge in this area. Further investigation is necessary to confirm the presence of this mound.

7. Are all the wells used in the contour map screened in the same water-bearing zone? Yes ☑ No ☐
If no, justify inclusion of those wells.

8. Were the ground water contours
   - ☐ computer generated,
   - ☐ computer aided, or
   - ☑ hand-drawn?

If computer aided or generated, identify the interpolation method(s) used.

NJDEP CONTOUR MAP REPORTING FORM

Contour Map Title: Potentiometric Surface Map, Glacial Deposits, High Tide
Contour Map Number: Figure 6

1. Did any surveyed well casing elevations change from the previous sampling event? Yes ☐ No ☐
   If yes, attach new "Well Certification - Form B" and identify the reason for the elevation change (damage to casing, installation of recovery system in monitoring well, etc.)

   Not Applicable (initial sampling event)

2. Are there any monitor wells in unconfined aquifers in which the water table elevation is higher than the top of the well screen? Yes ☐ No ☑
   If yes, identify these wells.

3. Are there any monitor wells present at the site but omitted from the contour map? Yes ☐ No ☑
   Unless the omission of the well(s) has been previously approved by the Department, justify the omissions.

4. Are there any monitor wells containing separate phase product during this measuring event? Yes ☑ No ☐
   Were any of the monitor wells with separate phase product included in the ground water contour map? Yes ☑ No ☐
   If yes, show the formula used to correct the water table elevation.

   0.04 feet of product was observed at the bottom of Piezometer PZ-7A. No correction was used to calculate the water level elevation.

5. Has the ground water flow direction changed more than 45° from the previous ground water contour map? Yes ☐ No ☐
If yes, discuss the reasons for the change.

Not Applicable (initial sampling event)

6. Has ground water mounding and/or depressions been identified in the ground water contour map? Yes ☐ No ☑
Unless the ground water mounds and/or depressions are caused by the ground water remediation system, discuss the reasons for this occurrence.

7. Are all the wells used in the contour map screened in the same water-bearing zone? Yes ☑ No ☐
If no, justify inclusion of those wells.

8. Were the ground water contours
   - ☐ computer generated,
   - ☐ computer aided, or
   - ☑ hand-drawn?

If computer aided or generated, identify the interpolation method(s) used.

NJDEP CONTOUR MAP REPORTING FORM

Contour Map Title: Potentiometric Surface Map, Glacial Deposits, Low Tide
Contour Map Number: Figure 7

1. Did any surveyed well casing elevations change from the previous sampling event? Yes ☐ No ☐
   If yes, attach new "Well Certification - Form B" and identify the reason for the elevation change (damage to casing, installation of recovery system in monitoring well, etc.)

   Not Applicable (initial sampling event)

2. Are there any monitor wells in unconfined aquifers in which the water table elevation is higher than the top of the well screen? Yes ☐ No ☑
   If yes, identify these wells.

3. Are there any monitor wells present at the site but omitted from the contour map? Yes ☐ No ☑
   Unless the omission of the well(s) has been previously approved by the Department, justify the omissions.

4. Are there any monitor wells containing separate phase product during this measuring event? Yes ☑ No ☐
   Were any of the monitor wells with separate phase product included in the ground water contour map? Yes ☑ No ☐
   If yes, show the formula used to correct the water table elevation.

   0.04 feet of product was observed at the bottom of Piezometer PZ-7A. No correction was used to calculate the water level elevation.

5. Has the ground water flow direction changed more than 45° from the previous ground water contour map? Yes ☐ No ☐
If yes, discuss the reasons for the change.

Not Applicable (initial sampling event)

6. Has ground water mounding and/or depressions been identified in the ground water contour map? Yes ☐ No ☑
Unless the ground water mounds and/or depressions are caused by the ground water remediation system, discuss the reasons for this occurrence.

7. Are all the wells used in the contour map screened in the same water-bearing zone? Yes ☑ No ☐
If no, justify inclusion of those wells.

8. Were the ground water contours
   - ☐ computer generated,
   - ☐ computer aided, or
   - ☑ hand-drawn?

   If computer aided or generated, identify the interpolation method(s) used.

Appendix F

849880286

Appendix F
Long Term Water Level Measurements
PSE&G Harrison Site

DATE	TIME	PZ-1A ELEV [FT-MSL]	PZ-1B ELEV [FT-MSL]	PZ-5A ELEV [FT-MSL]	PZ-5B ELEV [FT-MSL]	PZ-6B ELEV [FT-MSL]	PZ-7A ELEV [FT-MSL]	PZ-10B ELEV [FT-MSL]	PZ-13A ELEV [FT-MSL]	PZ-13B ELEV [FT-MSL]	SG-1 ELEV [FT-MSL]
7/26/96	3:30:00	0.685	1.933	1.692	NA	4.989	-3.442	NA	-2.344	6.952	3.36
7/26/96	4:00:00	0.78	2.349	1.869	NA	4.991	-3.437	NA	-2.337	6.952	3.655
7/26/96	4:30:00	0.844	2.706	1.998	NA	4.989	-3.437	NA	-2.337	6.939	3.837
7/26/96	5:00:00	0.877	2.99	2.07	NA	4.984	-3.446	NA	-2.344	6.929	3.9
7/26/96	5:30:00	0.821	3.191	2.028	NA	4.984	-3.446	NA	-2.344	6.925	3.623
7/26/96	6:00:00	0.736	3.244	1.92	NA	4.98	-3.451	NA	-2.348	6.915	3.265
7/26/96	6:30:00	0.635	3.126	1.775	NA	4.973	-3.456	NA	-2.357	6.906	2.836
7/26/96	7:00:00	0.522	2.983	1.604	NA	4.971	-3.451	NA	-2.362	6.902	2.393
7/26/96	7:30:00	0.39	2.805	1.408	NA	4.966	NA	NA	-2.367	6.897	1.888
7/26/96	8:00:00	0.247	2.602	1.203	NA	4.966	NA	NA	-2.362	6.902	1.376
7/26/96	8:30:00	0.097	2.411	0.979	NA	4.948	NA	NA	-2.362	6.906	0.843
7/26/96	9:00:00	-0.057	2.206	NA	NA	4.936	NA	NA	-2.367	6.911	0.338
7/26/96	9:30:00	-0.175	2.007	NA	NA	4.934	NA	NA	-2.362	6.92	-0.091
7/26/96	10:00:00	-0.272	1.83	NA	NA	4.927	NA	NA	-2.357	6.939	-0.419
7/26/96	10:30:00	-0.334	1.68	NA	NA	4.941	NA	NA	-2.362	6.943	-0.619
7/26/96	11:00:00	-0.385	1.539	NA	NA	4.948	NA	NA	-2.371	6.943	-0.774
7/26/96	11:30:00	NA	NA	NA	NA	4.948	NA	NA	-2.371	6.95	-0.878
7/26/96	12:00:00	NA	NA	NA	NA	4.913	NA	NA	-2.38	6.95	-0.926
7/26/96	12:30:00	NA	NA	NA	NA	4.86	NA	NA	-2.38	6.959	-0.804
7/26/96	13:00:00	NA	NA	NA	NA	4.869	NA	NA	-2.371	6.973	-0.4
7/26/96	13:30:00	NA	NA	NA	NA	4.915	NA	NA	-2.371	6.987	0.34
7/26/96	14:00:00	NA	NA	NA	NA	4.964	NA	NA	-2.371	7.072	1.281
7/26/96	14:30:00	NA	NA	NA	NA	NA	NA	NA	NA	NA	2.128

NA = Data Not Available

849880287

Appendix F

Continuous Water Level Measurement Data

Appendix F
Long Term Water Level Measurements
PSE&G Harrison Site

DATE	TIME	PZ-1A ELEV [FT-MSL]	PZ-1B ELEV [FT-MSL]	PZ-5A ELEV [FT-MSL]	PZ-5B ELEV [FT-MSL]	PZ-6B ELEV [FT-MSL]	PZ-7A ELEV [FT-MSL]	PZ-10B ELEV [FT-MSL]	PZ-13A ELEV [FT-MSL]	PZ-13B ELEV [FT-MSL]	SG-1 ELEV [FT-MSL]
7/18/96	14:00:00	0.083	2.609	0.391	3.154	5.137	-3.206	5.391	NA	7.584	1.242
7/18/96	14:30:00	-0.085	2.379	0.118	3.158	5.144	-3.202	5.388	NA	7.584	0.624
7/18/96	15:00:00	-0.221	2.153	-0.133	3.158	5.148	-3.193	5.395	NA	7.598	0.043
7/18/96	15:30:00	-0.327	1.936	-0.343	3.163	5.151	-3.188	5.395	NA	7.598	-0.356
7/18/96	16:00:00	-0.403	1.763	-0.507	3.163	5.155	-3.183	5.4	NA	7.603	-0.658
7/18/96	16:30:00	-0.45	1.606	-0.599	3.158	5.157	-3.183	5.398	NA	7.603	-0.79
7/18/96	17:00:00	-0.477	1.447	-0.668	3.158	5.162	-3.179	5.4	NA	7.612	-0.82
7/18/96	17:30:00	-0.5	1.276	-0.712	3.158	5.167	-3.179	5.405	NA	7.612	-0.878
7/18/96	18:00:00	-0.503	1.128	-0.717	3.154	5.169	-3.179	5.405	NA	7.617	-0.792
7/18/96	18:30:00	-0.463	0.981	-0.636	3.144	5.164	-3.183	5.395	NA	7.598	-0.451
7/18/96	19:00:00	-0.339	0.891	-0.435	3.144	5.162	-3.188	5.395	NA	7.594	0.142
7/18/96	19:30:00	-0.14	0.951	-0.147	3.135	5.169	-3.188	5.395	NA	7.598	0.905
7/18/96	20:00:00	0.097	1.172	0.172	3.135	5.164	-3.188	5.391	NA	7.589	1.711
7/18/96	20:30:00	0.335	1.391	0.506	3.131	5.162	-3.179	5.391	NA	7.589	2.502
7/18/96	21:00:00	0.57	1.65	0.843	3.126	5.16	-3.179	5.391	NA	7.58	3.251
7/18/96	21:30:00	0.727	2.086	1.094	3.126	5.157	-3.174	5.391	NA	7.58	3.733
7/18/96	22:00:00	0.817	2.6	1.267	3.126	5.16	-3.17	5.391	NA	7.58	3.985
7/18/96	22:30:00	0.849	2.992	1.364	3.126	5.16	-3.17	5.386	NA	7.571	4.045
7/18/96	23:00:00	0.835	3.267	1.376	3.126	5.157	-3.17	5.386	NA	7.566	3.9
7/18/96	23:30:00	0.808	3.428	1.359	3.14	5.164	-3.156	5.391	NA	7.575	3.745
7/19/96	0:00:00	0.798	3.497	1.336	3.144	5.176	-3.14	5.4	NA	7.589	3.59
7/19/96	0:30:00	0.755	3.458	1.272	3.149	5.176	-3.14	5.395	NA	7.589	3.355
7/19/96	1:00:00	0.69	3.35	1.175	3.158	5.185	-3.135	5.395	NA	7.589	3.035
7/19/96	1:30:00	0.575	3.195	1.016	3.167	5.19	-3.121	5.409	NA	7.603	2.571
7/19/96	2:00:00	0.448	2.997	0.815	3.167	5.19	-3.126	5.405	NA	7.594	2.04
7/19/96	2:30:00	0.298	2.78	0.587	3.172	5.192	-3.126	5.4	NA	7.598	1.48
7/19/96	3:00:00	0.152	2.554	0.349	3.177	5.201	-3.112	5.414	NA	7.607	0.899
7/19/96	3:30:00	0.003	2.328	0.095	3.181	5.213	-3.103	5.414	NA	7.617	0.31
7/19/96	4:00:00	-0.138	2.109	-0.151	3.177	5.211	-3.107	5.414	NA	7.607	-0.22
7/19/96	4:30:00	-0.226	1.913	-0.334	3.181	5.215	-3.107	5.418	NA	7.612	-0.527
7/19/96	5:00:00	-0.29	1.751	-0.472	3.181	5.213	-3.112	5.414	NA	7.603	-0.758
7/19/96	5:30:00	-0.348	1.606	-0.58	3.177	5.215	-3.112	5.418	NA	7.603	-0.903
7/19/96	6:00:00	-0.39	1.447	-0.668	3.181	5.224	-3.103	5.418	NA	7.612	-1.041

8498880289

Appendix F
Long Term Water Level Measurements
PSE&G Harrison Site

DATE	TIME	PZ-1A ELEV [FT-MSL]	PZ-1B ELEV [FT-MSL]	PZ-5A ELEV [FT-MSL]	PZ-5B ELEV [FT-MSL]	PZ-6B ELEV [FT-MSL]	PZ-7A ELEV [FT-MSL]	PZ-10B ELEV [FT-MSL]	PZ-13A ELEV [FT-MSL]	PZ-13B ELEV [FT-MSL]	SG-1 ELEV [FT-MSL]
7/19/96	6:30:00	-0.403	1.285	-0.689	3.177	5.224	-3.103	5.418	NA	7.607	-0.97
7/19/96	7:00:00	-0.357	1.142	-0.599	3.167	5.217	-3.112	5.409	NA	7.589	-0.612
7/19/96	7:30:00	-0.244	1.011	-0.407	3.167	5.215	-3.112	5.409	NA	7.584	-0.008
7/19/96	8:00:00	-0.057	1.004	-0.124	3.163	5.22	-3.107	5.414	NA	7.584	0.774
7/19/96	8:30:00	0.162	1.177	0.176	3.163	5.215	-3.112	5.409	NA	7.571	1.519
7/19/96	9:00:00	0.372	1.382	0.474	3.154	5.211	-3.116	5.405	NA	7.561	2.206
7/19/96	9:30:00	0.575	1.594	0.774	3.167	5.236	-3.07	5.432	NA	7.598	2.868
7/19/96	10:00:00	0.708	1.933	1.048	3.177	5.261	-2.99	5.448	NA	7.642	3.413
7/19/96	10:30:00	0.914	2.404	1.263	3.172	5.268	-2.994	5.446	NA	7.656	3.75
7/19/96	11:00:00	0.985	2.801	1.403	3.154	5.25	-3.02	5.428	NA	7.628	3.936
7/19/96	11:30:00	1.008	3.108	1.482	3.167	5.268	-3.003	5.439	NA	7.642	3.971
7/19/96	12:00:00	0.999	3.329	1.496	3.172	5.271	-3.003	5.435	NA	7.628	3.84
7/19/96	12:30:00	0.962	3.442	1.454	3.181	5.284	-2.985	5.448	NA	7.647	3.639
7/19/96	13:00:00	0.937	3.449	1.403	3.186	5.284	-2.98	5.448	NA	7.651	3.417
7/19/96	13:30:00	0.868	3.352	1.313	3.191	5.291	-2.976	5.448	NA	7.651	3.085
7/19/96	14:00:00	0.745	3.209	1.136	3.191	5.294	-2.976	5.448	NA	7.656	2.564
7/19/96	14:30:00	0.568	3.001	0.889	3.193	5.294	-2.971	5.448	NA	7.651	1.925
7/19/96	15:00:00	0.395	2.766	0.619	3.197	5.301	-2.962	5.448	NA	7.656	1.281
7/19/96	15:30:00	0.252	2.533	0.381	3.197	5.301	-2.962	5.439	NA	7.656	0.751
7/19/96	16:00:00	0.12	2.307	0.148	3.193	5.298	-2.971	5.439	NA	7.642	0.218
7/19/96	16:30:00	0.039	2.093	-0.011	3.197	5.301	-2.976	5.435	NA	7.642	-0.029
7/19/96	17:00:00	0.026	1.901	-0.078	3.197	5.294	NA	5.425	-1.852	7.612	-0.068
7/19/96	17:30:00	-0.007	1.749	-0.11	3.197	5.31	NA	5.448	-1.845	7.67	-0.174
7/19/96	18:00:00	-0.053	1.604	-0.202	3.193	5.305	NA	5.471	-1.818	7.799	-0.271
7/19/96	18:30:00	-0.122	1.454	-0.306	3.181	5.305	NA	5.504	-1.871	7.889	-0.421
7/19/96	19:00:00	-0.17	1.292	-0.375	3.177	5.312	NA	5.559	-1.884	7.96	-0.483
7/19/96	19:30:00	-0.147	1.161	-0.329	3.172	5.312	NA	5.601	-1.898	8.016	-0.213
7/19/96	20:00:00	-0.011	1.08	-0.115	3.167	5.31	-2.923	5.631	-1.919	8.046	0.463
7/19/96	20:30:00	0.185	1.142	0.148	3.158	5.305	-2.964	5.654	-1.947	8.06	1.215
7/19/96	21:00:00	0.367	1.331	0.418	3.154	5.307	-2.99	5.665	-1.961	8.078	1.888
7/19/96	21:30:00	0.579	1.518	0.716	3.144	5.301	-3.008	5.661	-1.979	8.087	2.592
7/19/96	22:00:00	0.745	1.784	0.965	3.144	5.301	-3.013	5.644	-1.991	8.092	3.125
7/19/96	22:30:00	0.891	2.21	1.193	3.144	5.287	-3.026	5.621	-1.991	8.106	3.641

8498880290

Appendix F
Long Term Water Level Measurements
PSE&G Harrison Site

DATE	TIME	PZ-1A ELEV [FT-MSL]	PZ-1B ELEV [FT-MSL]	PZ-5A ELEV [FT-MSL]	PZ-5B ELEV [FT-MSL]	PZ-6B ELEV [FT-MSL]	PZ-7A ELEV [FT-MSL]	PZ-10B ELEV [FT-MSL]	PZ-13A ELEV [FT-MSL]	PZ-13B ELEV [FT-MSL]	SG-1 ELEV [FT-MSL]
7/19/96	23:00:00	0.948	2.63	1.336	3.14	5.266	-3.047	5.61	-2.009	8.092	3.828
7/19/96	23:30:00	0.953	2.965	1.399	3.14	5.243	-3.061	5.594	-2.037	8.078	3.814
7/20/96	0:00:00	0.881	3.172	1.341	3.144	5.238	-3.066	5.589	-2.041	8.092	3.547
7/20/96	0:30:00	0.835	3.255	1.29	3.144	5.227	-3.075	5.578	-2.055	8.078	3.36
7/20/96	1:00:00	0.771	3.209	1.212	3.144	5.217	-3.084	5.573	-2.062	8.069	3.108
7/20/96	1:30:00	0.69	3.114	1.099	3.149	5.215	-3.093	5.571	-2.067	8.073	2.739
7/20/96	2:00:00	0.549	2.969	0.907	3.158	5.211	-3.098	5.548	-2.081	8.073	2.232
7/20/96	2:30:00	0.339	2.775	0.628	3.154	5.201	-3.11	5.552	-2.09	8.055	1.531
7/20/96	3:00:00	0.157	2.545	0.349	3.154	5.194	-3.128	5.555	-2.108	8.03	0.905
7/20/96	3:30:00	0.007	2.309	0.109	3.154	5.192	-3.128	5.559	-2.122	8.025	0.363
7/20/96	4:00:00	-0.129	2.095	-0.133	3.156	5.187	-3.137	5.555	-2.127	8.025	-0.135
7/20/96	4:30:00	-0.253	1.901	-0.352	3.154	5.183	-3.151	5.552	-2.138	8.016	-0.571
7/20/96	5:00:00	-0.371	1.735	-0.567	3.154	5.176	-3.165	5.548	-2.161	7.997	-0.965
7/20/96	5:30:00	-0.482	1.583	-0.767	3.144	5.169	-3.176	5.538	-2.175	7.983	-1.348
7/20/96	6:00:00	-0.563	1.426	-0.917	3.14	5.164	-3.186	5.543	-2.194	7.97	-1.54
7/20/96	6:30:00	-0.613	1.274	-1.01	3.14	5.162	-3.19	5.538	-2.198	7.96	-1.611
7/20/96	7:00:00	-0.65	1.126	-1.046	3.131	5.16	-3.204	5.538	-2.214	7.947	-1.56
7/20/96	7:30:00	-0.623	0.983	-0.963	3.131	5.155	-3.213	5.541	-2.228	7.94	-1.203
7/20/96	8:00:00	-0.544	0.877	-0.8	3.121	5.148	-3.232	5.536	-2.242	7.921	-0.693
7/20/96	8:30:00	-0.426	0.789	-0.585	3.121	5.148	-3.227	5.541	-2.256	7.917	-0.054
7/20/96	9:00:00	-0.267	0.829	-0.329	3.117	5.146	-3.232	5.531	-2.265	7.907	0.622
7/20/96	9:30:00	-0.099	0.999	-0.071	3.112	5.148	-3.218	5.541	-2.265	7.907	1.238
7/20/96	10:00:00	0.102	1.205	0.213	3.117	5.148	-3.223	5.527	-2.27	7.898	1.902
7/20/96	10:30:00	0.293	1.414	0.497	3.107	5.146	-3.218	5.536	-2.281	7.889	2.543
7/20/96	11:00:00	0.409	1.668	0.707	3.107	5.148	-3.213	5.538	-2.277	7.889	2.903
7/20/96	11:30:00	0.471	2.021	0.838	3.112	5.155	-3.204	5.538	-2.26	7.889	3.067
7/20/96	12:00:00	0.522	2.362	0.94	3.103	5.155	-3.199	5.534	-2.26	7.875	3.191
7/20/96	12:30:00	0.535	2.589	0.983	3.107	5.167	-3.19	5.538	-2.251	7.88	3.143
7/20/96	13:00:00	0.517	2.736	0.979	3.107	5.162	-3.195	5.525	-2.247	7.87	3.055
7/20/96	13:30:00	0.475	2.792	0.94	3.112	5.174	-3.172	5.543	-2.242	7.861	2.85
7/20/96	14:00:00	0.42	2.743	0.861	3.112	5.176	-3.172	5.529	-2.233	7.857	2.578
7/20/96	14:30:00	0.33	2.649	0.73	3.107	5.176	-3.179	5.52	-2.228	7.847	2.188
7/20/96	15:00:00	0.208	2.496	0.559	3.112	5.183	-3.17	5.529	-2.224	7.838	1.747

849880291

Appendix F
Long Term Water Level Measurements
PSE&G Harrison Site

DATE	TIME	PZ-1A ELEV [FT-MSL]	PZ-1B ELEV [FT-MSL]	PZ-5A ELEV [FT-MSL]	PZ-5B ELEV [FT-MSL]	PZ-6B ELEV [FT-MSL]	PZ-7A ELEV [FT-MSL]	PZ-10B ELEV [FT-MSL]	PZ-13A ELEV [FT-MSL]	PZ-13B ELEV [FT-MSL]	SG-1 ELEV [FT-MSL]
7/20/96	15:30:00	0.065	2.328	0.34	3.112	5.185	-3.174	5.52	-2.214	7.836	1.182
7/20/96	16:00:00	-0.08	2.141	0.1	3.117	5.192	-3.165	5.529	-2.21	7.831	0.624
7/20/96	16:30:00	-0.235	1.929	-0.151	3.117	5.197	-3.16	5.525	-2.194	7.831	0.034
7/20/96	17:00:00	-0.39	1.754	-0.431	3.112	5.194	-3.17	5.515	-2.203	7.813	-0.605
7/20/96	17:30:00	-0.503	1.592	-0.654	3.112	5.197	-3.174	5.504	-2.205	7.804	-1.014
7/20/96	18:00:00	-0.558	1.428	-0.786	3.103	5.192	-3.183	5.508	-2.201	7.804	-1.214
7/20/96	18:30:00	-0.604	1.265	-0.864	3.103	5.187	-3.193	5.508	-2.214	7.771	-1.26
7/20/96	19:00:00	-0.65	1.096	-0.926	3.094	5.178	-3.206	5.499	-2.237	7.748	-1.242
7/20/96	19:30:00	-0.655	0.942	-0.913	3.089	5.171	-3.22	5.495	-2.256	7.727	-1.106
7/20/96	20:00:00	-0.599	0.835	-0.804	3.089	5.164	-3.232	5.49	-2.27	7.714	-0.686
7/20/96	20:30:00	-0.484	0.75	-0.599	3.084	5.157	-3.246	5.481	-2.295	7.695	-0.059
7/20/96	21:00:00	-0.311	0.799	-0.32	3.08	5.153	-3.246	5.476	-2.304	7.681	0.696
7/20/96	21:30:00	-0.085	1.018	-0.006	3.075	5.151	-3.255	5.481	-2.314	7.672	1.471
7/20/96	22:00:00	0.106	1.248	0.273	3.075	5.146	-3.255	5.476	-2.318	7.663	2.112
7/20/96	22:30:00	0.266	1.479	0.534	3.066	5.144	-3.255	5.471	-2.323	7.656	2.633
7/20/96	23:00:00	0.381	1.758	0.73	3.071	5.144	-3.255	5.471	-2.327	7.647	2.986
7/20/96	23:30:00	0.429	2.139	0.843	3.066	5.139	-3.259	5.467	-2.332	7.642	3.115
7/21/96	0:00:00	0.434	2.443	0.889	3.066	5.139	-3.259	5.467	-2.337	7.624	3.115
7/21/96	0:30:00	0.411	2.623	0.884	3.061	5.132	-3.264	5.462	-2.348	7.61	2.988
7/21/96	1:00:00	0.42	2.72	0.903	3.066	5.132	-3.269	5.46	-2.348	7.601	2.977
7/21/96	1:30:00	0.42	2.785	0.898	3.066	5.132	-3.269	5.46	-2.344	7.601	2.898
7/21/96	2:00:00	0.376	2.773	0.843	3.066	5.134	-3.264	5.455	-2.341	7.596	2.663
7/21/96	2:30:00	0.293	2.683	0.73	3.071	5.141	-3.255	5.469	-2.332	7.601	2.31
7/21/96	3:00:00	0.152	2.549	0.534	3.071	5.141	-3.255	5.469	-2.323	7.596	1.761
7/21/96	3:30:00	-0.016	2.367	0.287	3.075	5.144	-3.255	5.465	-2.318	7.591	1.12
7/21/96	4:00:00	-0.194	2.162	0.003	3.071	5.144	-3.259	5.46	-2.318	7.582	0.449
7/21/96	4:30:00	-0.339	1.95	-0.262	3.075	5.148	-3.259	5.46	-2.309	7.577	-0.142
7/21/96	5:00:00	-0.473	1.767	-0.511	3.066	5.141	-3.269	5.455	-2.323	7.566	-0.668
7/21/96	5:30:00	-0.595	1.604	-0.74	3.066	5.139	-3.278	5.446	-2.327	7.552	-1.127
7/21/96	6:00:00	-0.689	1.435	-0.931	3.066	5.137	-3.283	5.446	-2.327	7.543	-1.482
7/21/96	6:30:00	-0.768	1.253	-1.086	3.061	5.134	-3.292	5.446	-2.337	7.538	-1.717
7/21/96	7:00:00	-0.83	1.103	-1.192	3.052	5.128	-3.299	5.441	-2.348	7.52	-1.826
7/21/96	7:30:00	-0.862	0.937	-1.238	3.052	5.125	-3.303	5.441	-2.357	7.506	-1.803

849880292

Appendix F
Long Term Water Level Measurements
PSE&G Harrison Site

DATE	TIME	PZ-1A ELEV [FT-MSL]	PZ-1B ELEV [FT-MSL]	PZ-5A ELEV [FT-MSL]	PZ-5B ELEV [FT-MSL]	PZ-6B ELEV [FT-MSL]	PZ-7A ELEV [FT-MSL]	PZ-10B ELEV [FT-MSL]	PZ-13A ELEV [FT-MSL]	PZ-13B ELEV [FT-MSL]	SG-1 ELEV [FT-MSL]
7/21/96	8:00:00	-0.862	0.824	-1.21	3.052	5.121	-3.313	5.441	-2.371	7.497	-1.583
7/21/96	8:30:00	-0.823	0.722	-1.095	3.048	5.114	-3.317	5.432	-2.385	7.481	-1.171
7/21/96	9:00:00	-0.703	0.653	-0.885	3.048	5.116	-3.313	5.437	-2.385	7.481	-0.525
7/21/96	9:30:00	-0.549	0.63	-0.622	3.048	5.125	-3.299	5.437	-2.371	7.488	0.172
7/21/96	10:00:00	-0.353	0.748	-0.324	3.048	5.128	-3.299	5.437	-2.371	7.485	0.908
7/21/96	10:30:00	-0.161	0.985	-0.048	3.043	5.125	-3.299	5.428	-2.367	7.485	1.531
7/21/96	11:00:00	0.007	1.223	0.208	3.043	5.123	-3.303	5.423	-2.376	7.467	2.098
7/21/96	11:30:00	0.162	1.449	0.446	3.038	5.125	-3.294	5.428	-2.367	7.471	2.52
7/21/96	12:00:00	0.27	1.698	0.637	3.034	5.118	-3.299	5.423	-2.371	7.458	2.889
7/21/96	12:30:00	0.33	2.044	0.764	3.034	5.121	-3.289	5.428	-2.371	7.448	3.06
7/21/96	13:00:00	0.362	2.356	0.838	3.034	5.118	-3.285	5.428	-2.367	7.448	3.104
7/21/96	13:30:00	0.381	2.559	0.88	3.038	5.13	-3.276	5.428	-2.353	7.458	3.104
7/21/96	14:00:00	0.385	2.688	0.889	3.038	5.132	-3.262	5.432	-2.341	7.462	2.998
7/21/96	14:30:00	0.339	2.722	0.834	3.034	5.137	-3.262	5.428	-2.337	7.462	2.76
7/21/96	15:00:00	0.261	2.651	0.725	3.034	5.139	-3.255	5.432	-2.327	7.462	2.384
7/21/96	15:30:00	0.152	2.524	0.564	3.038	5.141	-3.253	5.428	-2.323	7.458	1.93
7/21/96	16:00:00	0.016	2.367	0.363	3.038	5.139	-3.253	5.432	-2.318	7.448	1.404
7/21/96	16:30:00	-0.147	2.189	0.114	3.038	5.144	-3.248	5.423	-2.309	7.448	0.788
7/21/96	17:00:00	-0.311	1.982	-0.165	3.034	5.139	-3.253	5.428	-2.309	7.444	0.137
7/21/96	17:30:00	-0.459	1.788	-0.435	3.034	5.139	-3.262	5.423	-2.314	7.439	-0.449
7/21/96	18:00:00	-0.558	1.627	-0.636	3.029	5.132	-3.266	5.418	-2.323	7.425	-0.815
7/21/96	18:30:00	-0.609	1.451	-0.744	3.029	5.13	-3.276	5.423	-2.327	7.411	-0.924
7/21/96	19:00:00	-0.632	1.271	-0.786	3.024	5.123	-3.28	5.418	-2.337	7.407	-0.912
7/21/96	19:30:00	-0.646	1.115	-0.809	3.024	5.118	-3.289	5.414	-2.348	7.398	-0.843
7/21/96	20:00:00	-0.641	0.946	-0.786	3.02	5.109	-3.299	5.414	-2.362	7.381	-0.693
7/21/96	20:30:00	-0.595	0.829	-0.693	3.02	5.107	-3.308	5.409	-2.367	7.377	-0.356
7/21/96	21:00:00	-0.48	0.771	-0.507	3.011	5.095	-3.322	5.4	-2.39	7.354	0.165
7/21/96	21:30:00	-0.302	0.868	-0.253	3.011	5.091	-3.331	5.402	-2.403	7.345	0.915
7/21/96	22:00:00	-0.113	1.089	0.026	3.006	5.081	-3.34	5.398	-2.42	7.326	1.593
7/21/96	22:30:00	0.083	1.308	0.31	3.006	5.079	-3.336	5.398	-2.42	7.331	2.23
7/21/96	23:00:00	0.242	1.532	0.554	3.001	5.072	-3.343	5.393	-2.429	7.321	2.737
7/21/96	23:30:00	0.376	1.83	0.778	3.001	5.072	-3.343	5.393	-2.433	7.312	3.154
7/22/96	0:00:00	0.448	2.24	0.926	3.001	5.07	-3.343	5.388	-2.438	7.312	3.36

849880293

Appendix F
Long Term Water Level Measurements
PSE&G Harrison Site

DATE	TIME	PZ-1A ELEV [FT-MSL]	PZ-1B ELEV [FT-MSL]	PZ-5A ELEV [FT-MSL]	PZ-5B ELEV [FT-MSL]	PZ-6B ELEV [FT-MSL]	PZ-7A ELEV [FT-MSL]	PZ-10B ELEV [FT-MSL]	PZ-13A ELEV [FT-MSL]	PZ-13B ELEV [FT-MSL]	SG-1 ELEV [FT-MSL]
7/22/96	0:30:00	0.471	2.563	0.988	3.001	5.063	-3.343	5.388	-2.438	7.305	3.39
7/22/96	1:00:00	0.457	2.778	0.993	3.001	5.058	-3.347	5.384	-2.443	7.296	3.295
7/22/96	1:30:00	0.448	2.902	0.988	3.006	5.065	-3.338	5.393	-2.433	7.305	3.191
7/22/96	2:00:00	0.448	2.967	0.988	3.001	5.061	-3.338	5.384	-2.433	7.301	3.122
7/22/96	2:30:00	0.429	2.985	0.956	3.011	5.063	-3.333	5.393	-2.424	7.305	2.97
7/22/96	3:00:00	0.372	2.911	0.875	3.011	5.061	-3.333	5.388	-2.415	7.301	2.677
7/22/96	3:30:00	0.261	2.798	0.716	3.011	5.065	-3.329	5.388	-2.408	7.296	2.232
7/22/96	4:00:00	0.12	2.642	0.515	3.011	5.061	-3.333	5.384	-2.408	7.296	1.69
7/22/96	4:30:00	-0.025	2.45	0.291	3.015	5.061	-3.333	5.388	-2.408	7.296	1.152
7/22/96	5:00:00	-0.152	2.247	0.077	3.02	5.061	-3.333	5.388	-2.403	7.291	0.661
7/22/96	5:30:00	-0.286	2.04	-0.151	3.015	5.058	-3.333	5.384	-2.403	7.287	0.154
7/22/96	6:00:00	-0.408	1.85	-0.375	3.015	5.054	-3.343	5.384	-2.408	7.278	-0.31
7/22/96	6:30:00	-0.503	1.689	-0.562	3.011	5.047	-3.347	5.379	-2.415	7.264	-0.665
7/22/96	7:00:00	-0.572	1.53	-0.689	3.011	5.047	-3.352	5.375	-2.415	7.264	-0.873
7/22/96	7:30:00	-0.623	1.354	-0.786	3.011	5.047	-3.347	5.379	-2.415	7.264	-0.977
7/22/96	8:00:00	-0.65	1.193	-0.841	3.011	5.044	-3.352	5.375	-2.415	7.255	-0.995
7/22/96	8:30:00	-0.669	1.034	-0.855	3.011	5.044	-3.347	5.375	-2.424	7.25	-0.924
7/22/96	9:00:00	-0.632	0.893	-0.79	3.006	5.042	-3.343	5.375	-2.429	7.245	-0.635
7/22/96	9:30:00	-0.53	0.794	-0.604	3.001	5.044	-3.338	5.375	-2.42	7.245	-0.063
7/22/96	10:00:00	-0.362	0.826	-0.347	2.997	5.04	-3.338	5.375	-2.424	7.245	0.624
7/22/96	10:30:00	-0.134	1.025	-0.043	2.992	5.038	-3.343	5.37	-2.429	7.236	1.406
7/22/96	11:00:00	0.083	1.251	0.278	3.001	5.049	-3.324	5.384	-2.413	7.25	2.126
7/22/96	11:30:00	0.27	1.481	0.568	2.997	5.04	-3.333	5.375	-2.42	7.231	2.737
7/22/96	12:00:00	0.443	1.786	0.829	2.992	5.042	-3.329	5.375	-2.413	7.236	3.224
7/22/96	12:30:00	0.558	2.231	1.025	2.997	5.049	-3.315	5.379	-2.399	7.245	3.581
7/22/96	13:00:00	0.602	2.621	1.136	2.992	5.035	-3.324	5.365	-2.413	7.222	3.697
7/22/96	13:30:00	0.607	2.905	1.17	2.992	5.038	-3.315	5.37	-2.408	7.227	3.646
7/22/96	14:00:00	0.591	3.084	1.166	2.997	5.042	-3.306	5.375	-2.394	7.227	3.512
7/22/96	14:30:00	0.577	3.179	1.145	2.997	5.04	-3.306	5.365	-2.39	7.222	3.36
7/22/96	15:00:00	0.554	3.186	1.103	3.006	5.044	-3.299	5.375	-2.38	7.222	3.187
7/22/96	15:30:00	0.475	3.103	1.002	3.006	5.044	-3.296	5.375	-2.376	7.222	2.857
7/22/96	16:00:00	0.385	2.978	0.861	3.011	5.054	-3.285	5.375	-2.357	7.227	2.435
7/22/96	16:30:00	0.245	2.81	0.661	3.011	5.049	-3.294	5.37	-2.357	7.218	1.909

8498880294

Appendix F
Long Term Water Level Measurements
PSE&G Harrison Site

DATE	TIME	PZ-1A ELEV [FT-MSL]	PZ-1B ELEV [FT-MSL]	PZ-5A ELEV [FT-MSL]	PZ-5B ELEV [FT-MSL]	PZ-6B ELEV [FT-MSL]	PZ-7A ELEV [FT-MSL]	PZ-10B ELEV [FT-MSL]	PZ-13A ELEV [FT-MSL]	PZ-13B ELEV [FT-MSL]	SG-1 ELEV [FT-MSL]
7/22/96	17:00:00	0.106	2.619	0.446	3.015	5.054	-3.285	5.375	-2.348	7.218	1.383
7/22/96	17:30:00	-0.021	2.411	0.241	3.015	5.047	-3.289	5.365	-2.348	7.211	0.915
7/22/96	18:00:00	-0.138	2.206	0.035	3.015	5.054	-3.289	5.37	-2.344	7.213	0.47
7/22/96	18:30:00	-0.23	2.003	-0.142	3.015	5.051	-3.289	5.365	-2.344	7.211	0.11
7/22/96	19:00:00	-0.311	1.827	-0.301	3.02	5.054	-3.289	5.365	-2.341	7.211	-0.202
7/22/96	19:30:00	-0.394	1.673	-0.449	3.015	5.049	-3.292	5.365	-2.344	7.201	-0.462
7/22/96	20:00:00	-0.463	1.514	-0.576	3.015	5.054	-3.289	5.37	-2.337	7.201	-0.688
7/22/96	20:30:00	-0.503	1.348	-0.664	3.015	5.054	-3.289	5.37	-2.332	7.206	-0.797
7/22/96	21:00:00	-0.503	1.184	-0.659	3.011	5.049	-3.292	5.365	-2.341	7.192	-0.631
7/22/96	21:30:00	-0.436	1.032	-0.534	3.006	5.042	-3.301	5.361	-2.348	7.183	-0.179
7/22/96	22:00:00	-0.293	0.965	-0.315	3.001	5.035	-3.31	5.356	-2.357	7.174	0.44
7/22/96	22:30:00	-0.09	1.078	-0.029	2.997	5.031	-3.315	5.361	-2.367	7.169	1.217
7/22/96	23:00:00	0.097	1.276	0.241	2.997	5.028	-3.315	5.356	-2.371	7.165	1.84
7/22/96	23:30:00	0.298	1.465	0.534	2.997	5.033	-3.31	5.361	-2.362	7.169	2.486
7/23/96	0:00:00	0.429	1.705	0.75	2.992	5.028	-3.315	5.356	-2.371	7.16	2.924
7/23/96	0:30:00	0.554	2.06	0.951	2.988	5.026	-3.315	5.352	-2.371	7.155	3.293
7/23/96	1:00:00	0.612	2.425	1.071	2.992	5.028	-3.31	5.356	-2.362	7.16	3.468
7/23/96	1:30:00	0.644	2.706	1.15	2.992	5.028	-3.31	5.352	-2.357	7.155	3.514
7/23/96	2:00:00	0.63	2.905	1.154	2.997	5.031	-3.306	5.356	-2.348	7.155	3.394
7/23/96	2:30:00	0.612	3.015	1.131	3.001	5.042	-3.292	5.365	-2.332	7.174	3.242
7/23/96	3:00:00	0.586	3.054	1.094	3.001	5.044	-3.287	5.361	-2.323	7.169	3.09
7/23/96	3:30:00	0.531	2.99	1.016	3.006	5.047	-3.285	5.365	-2.314	7.174	2.804
7/23/96	4:00:00	0.429	2.884	0.875	3.006	5.047	-3.285	5.365	-2.304	7.169	2.389
7/23/96	4:30:00	0.284	2.727	0.67	3.011	5.044	-3.287	5.356	-2.309	7.16	1.847
7/23/96	5:00:00	0.143	2.542	0.451	3.011	5.049	-3.285	5.365	-2.3	7.165	1.314
7/23/96	5:30:00	0.016	2.339	0.241	3.011	5.047	-3.287	5.361	-2.295	7.16	0.841
7/23/96	6:00:00	-0.099	2.139	0.045	3.015	5.049	-3.28	5.361	-2.29	7.165	0.426
7/23/96	6:30:00	-0.18	1.945	-0.119	3.015	5.049	-3.285	5.361	-2.29	7.155	0.098
7/23/96	7:00:00	-0.244	1.779	-0.244	3.011	5.042	-3.292	5.356	-2.3	7.146	-0.077
7/23/96	7:30:00	-0.286	1.624	-0.334	3.006	5.038	-3.296	5.352	-2.304	7.137	-0.234
7/23/96	8:00:00	-0.343	1.47	-0.431	3.006	5.035	-3.296	5.347	-2.314	7.128	-0.389
7/23/96	8:30:00	-0.408	1.297	-0.525	3.006	5.035	NA	5.352	-2.314	7.128	-0.543
7/23/96	9:00:00	-0.454	1.145	-0.59	3.001	5.035	NA	5.347	-2.314	7.128	-0.608

849880295

Appendix F
Long Term Water Level Measurements
PSE&G Harrison Site

DATE	TIME	PZ-1A ELEV [FT-MSL]	PZ-1B ELEV [FT-MSL]	PZ-5A ELEV [FT-MSL]	PZ-5B ELEV [FT-MSL]	PZ-6B ELEV [FT-MSL]	PZ-7A ELEV [FT-MSL]	PZ-10B ELEV [FT-MSL]	PZ-13A ELEV [FT-MSL]	PZ-13B ELEV [FT-MSL]	SG-1 ELEV [FT-MSL]
7/23/96	9:30:00	-0.475	0.999	-0.59	3.001	5.031	NA	5.352	-2.314	7.137	-0.529
7/23/96	10:00:00	-0.417	0.879	-0.497	2.997	5.035	NA	5.352	-2.314	7.137	-0.16
7/23/96	10:30:00	-0.307	0.856	-0.297	2.997	5.028	NA	5.352	-2.309	7.142	0.386
7/23/96	11:00:00	-0.129	0.969	-0.052	2.992	5.026	NA	5.347	-2.314	7.132	1.058
7/23/96	11:30:00	0.097	1.177	0.259	2.988	5.024	NA	5.347	-2.318	7.137	1.842
7/23/96	12:00:00	0.307	1.394	0.582	2.988	5.014	NA	5.352	-2.314	7.146	2.525
7/23/96	12:30:00	0.503	1.654	0.893	2.983	5.003	NA	5.347	-2.314	7.151	3.143
7/23/96	13:00:00	0.63	2.07	1.136	2.988	4.989	NA	5.352	-2.309	7.155	3.646
7/23/96	13:30:00	0.727	2.538	1.299	2.983	4.989	NA	5.352	-2.309	7.169	3.9
7/23/96	14:00:00	0.741	2.905	1.399	2.988	4.955	NA	5.356	-2.295	7.183	3.971
7/23/96	14:30:00	0.844	3.186	1.436	2.992	4.948	-3.206	5.361	-2.29	7.192	3.916
7/23/96	15:00:00	0.84	3.373	1.454	2.992	4.945	-3.206	5.356	-2.286	7.199	3.833
7/23/96	15:30:00	0.826	3.479	1.422	2.992	4.943	-3.206	5.356	-2.281	7.208	3.62
7/23/96	16:00:00	0.775	3.5	1.35	3.001	4.945	-3.211	5.352	-2.281	7.213	3.355
7/23/96	16:30:00	0.681	3.389	1.226	3.001	4.95	-3.213	5.356	-2.281	7.218	2.956
7/23/96	17:00:00	0.554	3.237	1.039	3.006	4.971	-3.223	5.347	-2.281	7.218	2.469
7/23/96	17:30:00	0.404	3.034	0.82	3.011	4.987	-3.232	5.347	-2.286	7.218	1.946
7/23/96	18:00:00	0.242	2.812	0.573	3.015	5.001	-3.227	5.347	-2.281	7.227	1.42
7/23/96	18:30:00	0.083	2.589	0.324	3.015	5.038	-3.227	5.347	-2.277	7.236	0.834
7/23/96	19:00:00	-0.053	2.362	0.086	3.015	5.035	-3.236	5.342	-2.281	7.236	0.338
7/23/96	19:30:00	-0.134	2.155	-0.078	3.02	5.035	-3.236	5.347	-2.277	7.236	0.066
7/23/96	20:00:00	-0.189	1.959	-0.202	3.015	5.028	-3.255	5.338	-2.29	7.227	-0.13
7/23/96	20:30:00	-0.253	1.797	-0.311	3.015	5.026	-3.259	5.338	-2.295	7.222	-0.296
7/23/96	21:00:00	-0.297	1.65	-0.394	3.011	5.019	-3.271	5.333	-2.314	7.208	-0.4
7/23/96	21:30:00	-0.33	1.502	-0.449	3.006	5.012	-3.289	5.328	-2.332	7.199	-0.412
7/23/96	22:00:00	-0.325	1.343	-0.431	3.001	5.008	-3.299	5.328	-2.344	7.19	-0.248
7/23/96	22:30:00	-0.277	1.209	-0.343	3.001	5.008	-3.299	5.324	-2.348	7.19	0.064
7/23/96	23:00:00	-0.166	1.14	-0.17	3.001	5.008	-3.303	5.328	-2.353	7.19	0.589
7/23/96	23:30:00	-0.011	1.184	0.045	2.997	5.003	-3.308	5.324	-2.357	7.19	1.162
7/24/96	0:00:00	0.171	1.336	0.301	2.992	5.003	-3.313	5.324	-2.362	7.185	1.789
7/24/96	0:30:00	0.33	1.5	0.545	2.992	5.001	-3.313	5.328	-2.362	7.185	2.329
7/24/96	1:00:00	0.475	1.71	0.769	2.992	5.003	-3.317	5.324	-2.362	7.19	2.802
7/24/96	1:30:00	0.602	2.033	0.97	2.988	5.001	-3.322	5.324	-2.367	7.181	3.198

8498880296

Appendix F
Long Term Water Level Measurements
PSE&G Harrison Site

DATE	TIME	PZ-1A ELEV [FT-MSL]	PZ-1B ELEV [FT-MSL]	PZ-5A ELEV [FT-MSL]	PZ-5B ELEV [FT-MSL]	PZ-6B ELEV [FT-MSL]	PZ-7A ELEV [FT-MSL]	PZ-10B ELEV [FT-MSL]	PZ-13A ELEV [FT-MSL]	PZ-13B ELEV [FT-MSL]	SG-1 ELEV [FT-MSL]
7/24/96	2:00:00	0.676	2.386	1.113	2.988	5.003	-3.317	5.324	-2.362	7.185	3.417
7/24/96	2:30:00	0.727	2.676	1.216	2.988	4.998	-3.322	5.319	-2.367	7.176	3.567
7/24/96	3:00:00	0.727	2.905	1.235	2.992	5.001	-3.322	5.324	-2.367	7.176	3.489
7/24/96	3:30:00	0.685	3.045	1.207	2.992	4.998	-3.319	5.324	-2.371	7.172	3.311
7/24/96	4:00:00	0.616	3.071	1.122	2.992	4.996	-3.324	5.319	-2.371	7.167	3.018
7/24/96	4:30:00	0.549	2.978	1.02	2.992	4.994	-3.329	5.315	-2.376	7.16	2.735
7/24/96	5:00:00	0.452	2.865	0.889	2.997	4.994	-3.329	5.315	-2.376	7.16	2.361
7/24/96	5:30:00	0.339	2.718	0.716	2.997	4.991	-3.333	5.31	-2.38	7.16	1.92
7/24/96	6:00:00	0.194	2.547	0.515	2.997	4.987	-3.343	5.31	-2.39	7.142	1.422
7/24/96	6:30:00	0.035	2.353	0.278	2.997	4.982	-3.347	5.31	-2.399	7.142	0.871
7/24/96	7:00:00	-0.117	2.153	0.031	2.992	4.978	-3.352	5.31	-2.408	7.128	0.34
7/24/96	7:30:00	-0.24	1.947	-0.188	2.992	4.975	-3.356	5.301	-2.415	7.118	-0.107
7/24/96	8:00:00	-0.325	1.779	-0.357	2.997	4.973	-3.356	5.305	-2.424	7.118	-0.382
7/24/96	8:30:00	-0.385	1.629	-0.479	2.992	4.973	-3.352	5.305	-2.42	7.123	-0.582
7/24/96	9:00:00	-0.45	1.477	-0.594	2.988	4.971	-3.356	5.301	-2.429	7.118	-0.755
7/24/96	9:30:00	-0.493	1.311	-0.664	2.992	4.973	-3.352	5.305	-2.424	7.118	-0.818
7/24/96	10:00:00	-0.498	1.163	-0.673	2.983	4.971	-3.356	5.301	-2.433	7.118	-0.711
7/24/96	10:30:00	-0.459	1.02	-0.59	2.978	4.971	-3.361	5.296	-2.433	7.118	-0.389
7/24/96	11:00:00	-0.348	0.928	-0.403	2.978	4.968	-3.366	5.301	-2.443	7.109	0.179
7/24/96	11:30:00	-0.175	0.976	-0.156	2.974	4.966	-3.368	5.301	-2.447	7.105	0.862
7/24/96	12:00:00	0.035	1.151	0.139	2.974	4.966	-3.363	5.301	-2.452	7.1	1.604
7/24/96	12:30:00	0.226	1.352	0.423	2.974	4.966	-3.363	5.296	-2.447	7.105	2.239
7/24/96	13:00:00	0.381	1.562	0.665	2.969	4.971	-3.359	5.301	-2.443	7.105	2.721
7/24/96	13:30:00	0.522	1.857	0.884	2.969	4.971	-3.354	5.296	-2.443	7.105	3.166
7/24/96	14:00:00	0.653	2.261	1.09	2.964	4.973	-3.354	5.296	-2.443	7.105	3.565
7/24/96	14:30:00	0.764	2.63	1.267	2.969	4.971	-3.352	5.296	-2.443	7.105	3.876
7/24/96	15:00:00	0.817	2.953	1.385	2.969	4.968	-3.354	5.296	-2.438	7.1	4.04
7/24/96	15:30:00	0.881	3.225	1.486	2.974	4.968	-3.349	5.292	-2.433	7.1	4.158
7/24/96	16:00:00	0.895	3.449	1.523	2.974	4.971	-3.345	5.292	-2.429	7.105	4.133
7/24/96	16:30:00	0.854	3.594	1.491	2.978	4.98	-3.333	5.296	-2.415	7.109	3.913
7/24/96	17:00:00	0.789	3.624	1.403	2.988	4.982	-3.329	5.296	-2.408	7.109	3.59
7/24/96	17:30:00	0.676	3.497	1.249	2.992	4.987	-3.324	5.296	-2.399	7.114	3.122
7/24/96	18:00:00	0.545	3.322	1.053	3.001	4.989	-3.319	5.292	-2.394	7.114	2.585

8498880297

Appendix F
Long Term Water Level Measurements
PSE&G Harrison Site

DATE	TIME	PZ-1A ELEV [FT-MSL]	PZ-1B ELEV [FT-MSL]	PZ-5A ELEV [FT-MSL]	PZ-5B ELEV [FT-MSL]	PZ-6B ELEV [FT-MSL]	PZ-7A ELEV [FT-MSL]	PZ-10B ELEV [FT-MSL]	PZ-13A ELEV [FT-MSL]	PZ-13B ELEV [FT-MSL]	SG-1 ELEV [FT-MSL]
7/24/96	18:30:00	0.395	3.11	0.824	3.006	4.994	-3.319	5.301	-2.385	7.118	2.027
7/24/96	19:00:00	0.247	2.881	0.591	3.011	4.991	-3.315	5.296	-2.38	7.114	1.466
7/24/96	19:30:00	0.111	2.655	0.368	3.011	4.991	-3.317	5.292	-2.38	7.105	0.961
7/24/96	20:00:00	-0.034	2.429	0.13	3.011	4.987	-3.326	5.292	-2.385	7.095	0.467
7/24/96	20:30:00	-0.115	2.219	-0.043	3.015	4.987	-3.326	5.292	-2.385	7.095	0.158
7/24/96	21:00:00	-0.194	2.023	-0.184	3.011	4.978	-3.336	5.282	-2.394	7.082	-0.105
7/24/96	21:30:00	-0.281	1.85	-0.338	3.011	4.971	-3.345	5.282	-2.408	7.072	-0.398
7/24/96	22:00:00	-0.367	1.7	-0.488	3.006	4.966	-3.354	5.278	-2.413	7.063	-0.647
7/24/96	22:30:00	-0.417	1.557	-0.576	3.006	4.964	-3.359	5.278	-2.42	7.058	-0.73
7/24/96	23:00:00	-0.408	1.405	-0.557	3.001	4.966	-3.359	5.282	-2.42	7.058	-0.536
7/24/96	23:30:00	-0.334	1.251	-0.44	3.001	4.964	-3.359	5.282	-2.42	7.056	-0.116
7/25/96	0:00:00	-0.217	1.156	-0.248	3.006	4.971	-3.359	5.282	-2.415	7.058	0.437
7/25/96	0:30:00	-0.039	1.177	-0.001	3.001	4.971	-3.359	5.282	-2.415	7.058	1.099
7/25/96	1:00:00	0.162	1.329	0.278	2.997	4.968	-3.359	5.282	-2.415	7.058	1.78
7/25/96	1:30:00	0.339	1.497	0.536	2.997	4.971	-3.363	5.282	-2.413	7.058	2.373
7/25/96	2:00:00	0.48	1.714	0.764	2.997	4.973	-3.363	5.282	-2.408	7.058	2.827
7/25/96	2:30:00	0.602	2.04	0.965	2.992	4.973	-3.359	5.282	-2.408	7.056	3.21
7/25/96	3:00:00	0.685	2.39	1.108	2.992	4.973	-3.363	5.282	-2.408	7.047	3.445
7/25/96	3:30:00	0.727	2.676	1.203	2.992	4.975	-3.359	5.282	-2.403	7.047	3.565
7/25/96	4:00:00	0.741	2.907	1.244	2.992	4.973	-3.354	5.282	-2.403	7.047	3.549
7/25/96	4:30:00	0.722	3.064	1.239	2.992	4.968	-3.363	5.278	-2.403	7.033	3.427
7/25/96	5:00:00	0.671	3.138	1.189	2.992	4.968	-3.363	5.278	-2.408	7.028	3.194
7/25/96	5:30:00	0.582	3.061	1.066	2.997	4.964	-3.368	5.278	-2.413	7.019	2.822
7/25/96	6:00:00	0.457	2.941	0.898	2.997	4.959	-3.372	5.273	-2.415	7.01	2.366
7/25/96	6:30:00	0.302	2.773	0.679	2.997	4.955	-3.377	5.273	-2.42	7.001	1.803
7/25/96	7:00:00	0.157	2.579	0.451	2.997	4.955	-3.377	5.268	-2.424	6.996	1.277
7/25/96	7:30:00	0.012	2.376	0.227	2.997	4.95	-3.377	5.268	-2.429	6.992	0.776
7/25/96	8:00:00	-0.129	2.171	-0.011	2.997	4.948	-3.375	5.268	-2.433	6.987	0.248
7/25/96	8:30:00	-0.263	1.966	-0.244	3.001	4.948	-3.375	5.268	-2.438	6.982	-0.232
7/25/96	9:00:00	-0.343	1.797	-0.417	2.997	4.945	-3.375	5.268	-2.443	6.982	-0.529
7/25/96	9:30:00	-0.399	1.645	-0.52	NA	4.945	-3.375	5.268	-2.443	6.978	-0.645
7/25/96	10:00:00	-0.44	1.497	-0.599	NA	4.95	-3.37	5.268	-2.438	6.982	-0.751
7/25/96	10:30:00	-0.475	1.336	-0.664	NA	4.95	-3.37	5.268	-2.438	6.982	-0.795

8498880298

Appendix F
Long Term Water Level Measurements
PSE&G Harrison Site

DATE	TIME	PZ-1A ELEV [FT-MSL]	PZ-1B ELEV [FT-MSL]	PZ-5A ELEV [FT-MSL]	PZ-5B ELEV [FT-MSL]	PZ-6B ELEV [FT-MSL]	PZ-7A ELEV [FT-MSL]	PZ-10B ELEV [FT-MSL]	PZ-13A ELEV [FT-MSL]	PZ-13B ELEV [FT-MSL]	SG-1 ELEV [FT-MSL]
7/25/96	11:00:00	-0.489	1.184	-0.68	NA	4.95	-3.375	5.268	-2.438	6.973	-0.76
7/25/96	11:30:00	NA	NA	-0.64	NA	4.95	-3.375	5.264	-2.443	6.978	-0.529
7/25/96	12:00:00	NA	NA	-0.484	NA	4.957	-3.37	5.268	-2.433	6.982	-0.059
7/25/96	12:30:00	NA	0.886	-0.248	NA	4.957	-3.366	5.273	-2.429	6.987	0.624
7/25/96	13:00:00	-0.083	1.043	0.063	NA	4.966	-3.356	5.273	-2.42	6.992	1.415
7/25/96	13:30:00	0.182	1.244	0.395	NA	4.968	-3.354	5.273	-2.413	6.992	2.172
7/25/96	14:00:00	0.425	1.461	0.734	NA	4.975	-3.349	NA	-2.403	6.996	2.926
7/25/96	14:30:00	0.616	1.777	1.025	NA	4.982	-3.34	NA	-2.3	NA	3.512
7/25/96	15:00:00	0.766	2.27	1.258	NA	4.987	-3.326	NA	-2.353	NA	3.913
7/25/96	15:30:00	0.886	2.725	1.445	NA	4.987	NA	NA	-2.353	6.918	4.239
7/25/96	16:00:00	0.981	3.112	1.595	NA	4.996	NA	NA	-2.348	6.95	4.472
7/25/96	16:30:00	1.022	3.442	1.673	NA	4.998	-3.416	NA	-2.341	6.962	4.492
7/25/96	17:00:00	1.008	3.687	1.673	NA	4.996	-3.421	NA	-2.341	6.959	4.342
7/25/96	17:30:00	0.967	3.811	1.622	NA	5.001	-3.407	NA	-2.332	6.973	4.086
7/25/96	18:00:00	0.895	3.786	1.519	NA	5.003	-3.412	NA	-2.332	6.973	3.731
7/25/96	18:30:00	0.789	3.652	2.047	NA	5.001	-3.412	NA	-2.327	6.969	3.302
7/25/96	19:00:00	0.658	3.47	1.855	NA	4.991	-3.421	NA	-2.337	6.959	2.788
7/25/96	19:30:00	0.512	3.244	1.632	NA	4.984	-3.426	NA	-2.348	6.941	2.236
7/25/96	20:00:00	0.367	3.006	1.403	NA	4.98	-3.43	NA	-2.353	6.939	1.701
7/25/96	20:30:00	0.194	2.766	1.14	NA	4.973	-3.437	NA	-2.362	6.934	1.097
7/25/96	21:00:00	0.03	2.531	0.875	NA	4.966	-3.446	NA	-2.371	6.925	0.509
7/25/96	21:30:00	-0.113	2.309	0.628	NA	4.957	-3.456	NA	-2.385	6.915	0.013
7/25/96	22:00:00	-0.217	2.109	0.432	NA	4.952	-3.465	NA	-2.394	6.906	-0.333
7/25/96	22:30:00	-0.302	1.922	0.264	NA	4.955	-3.46	NA	-2.39	6.92	-0.631
7/25/96	23:00:00	-0.38	1.77	0.114	NA	4.955	-3.46	NA	-2.39	6.92	-0.873
7/25/96	23:30:00	-0.44	1.631	0.008	NA	4.955	-3.46	NA	-2.39	6.925	-0.993
7/26/96	0:00:00	-0.463	1.493	-0.025	NA	4.952	-3.469	NA	-2.399	6.915	-0.935
7/26/96	0:30:00	-0.426	1.338	0.049	NA	4.952	-3.474	NA	-2.394	6.92	-0.592
7/26/96	1:00:00	-0.311	1.198	0.245	NA	4.957	-3.474	NA	-2.399	6.92	0.027
7/26/96	1:30:00	-0.104	1.145	0.554	NA	4.966	-3.465	NA	-2.385	6.934	0.866
7/26/96	2:00:00	0.125	1.258	0.866	NA	4.971	-3.46	NA	-2.371	6.939	1.602
7/26/96	2:30:00	0.312	1.412	1.14	NA	4.98	-3.451	NA	-2.362	6.943	2.23
7/26/96	3:00:00	0.508	1.604	1.431	NA	4.984	-3.446	NA	-2.348	6.95	2.852

8498880299

Appendix G

849880300

Appendix G

Aquifer Testing Procedures

BOUWER AND RICE SLUG TEST ANALYSIS
RISING HEAD TEST PZ-13B

$$K = \frac{r_c^2 \ln\left(\frac{R_e}{r_w}\right)}{2L_e} \frac{1}{t} \ln \frac{y_0}{y_t}$$

where:

r_c = casing radius (feet);
R_e = effective radius (feet);
L_e = length of screened interval (feet);
r_w = radial distance to undisturbed aquifer (feet)
y_0 = initial drawdown (feet)
y_t = drawdown (feet) at time t (minutes)

INPUT PARAMETERS		RESULTS		
r_c =	0.08			
r_w =	0.29			
L_e =	5.5	K=	8.20E-04	cm/sec
$\ln(R_e/r_w)$=	2.16	K=	2.32E+00	ft/day
y_0 =	1.86			
y_t =	0.03			
t =	3.4			

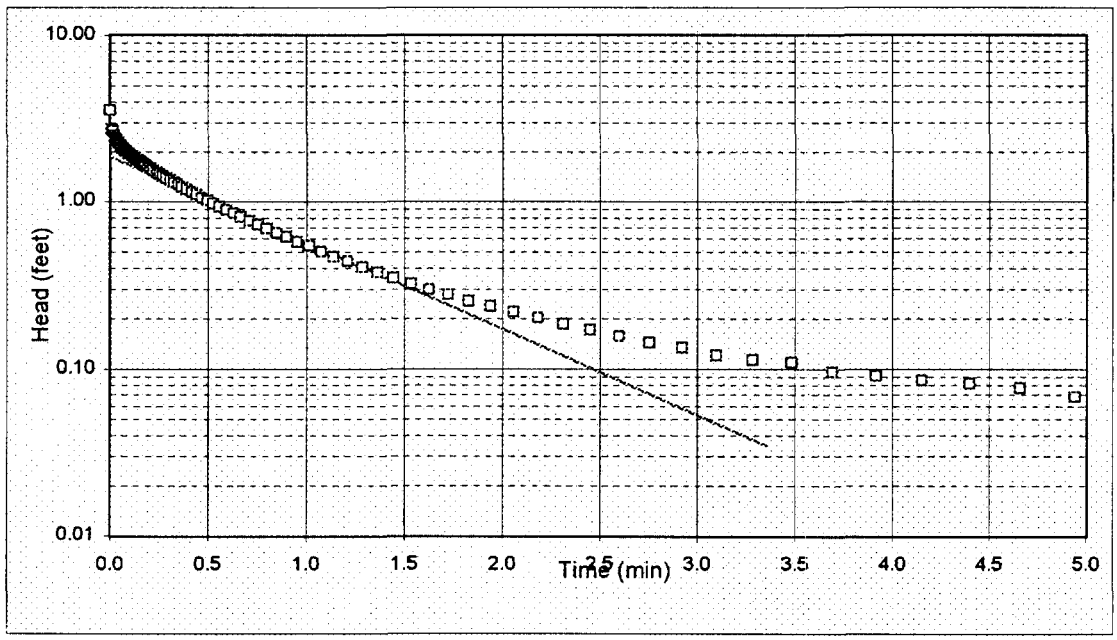

Project Name: PSE&G/HARRISON/NJ
Project No.: 953-6306
Test Date: 07/26/96

Analysis By: SN
Checked By:
Analysis Date: 1/2/97

TABLE OF CONTENTS

SECTION PAGE

G1.0 INJECTION AND RECOVERY TESTING PROCEDURES AND ANALYSIS 1
G1.1 Injection and Recovery Testing Equipment and Procedures 1
G1.2 Injection and Recovery Tests Analyses 2

G2.0 SLUG TESTING PROCEDURES AND ANALYSIS 6
G2.1 Slug Testing Equipment and Procedures 6
G2.2 Slug Testing Analysis 8

In Order Following Page 8

LIST OF TABLES

Table G1 Earlougher Injection Test Analysis, PZ-1B
Table G2 Earlougher Injection Test Analysis, PZ-4B
Table G3 Theis Analysis of Recovery Data, PZ-1B
Table G4 Theis Analysis of Recovery Data, PZ-4B
Table G5 Hvorslev Slug Test Analysis, Rising Head Test, PZ-1A
Table G6 Hvorslev Slug Test Analysis, Rising Head Test, PZ-1B
Table G7 Hvorslev Slug Test Analysis, Rising Head Test, PZ-4A
Table G8 Hvorslev Slug Test Analysis, Rising Head Test, PZ-4B
Table G9 Hvorslev Slug Test Analysis, Rising Head Test, PZ-5A
Table G10 Hvorslev Slug Test Analysis, Rising Head Test, PZ-6A
Table G11 Hvorslev Slug Test Analysis, Rising Head Test, PZ-7A
Table G12 Hvorslev Slug Test Analysis, Rising Head Test, PZ-8A
Table G13 Hvorslev Slug Test Analysis, Rising Head Test, PZ-12A
Table G14 Hvorslev Slug Test Analysis, Rising Head Test, PZ-13B
Table G15 Bouwer and Rice Slug Test Analysis, Rising Head Test, PZ-1A
Table G16 Bouwer and Rice Slug Test Analysis, Rising Head Test, PZ-4A
Table G17 Bouwer and Rice Slug Test Analysis, Rising Head Test, PZ-5A
Table G18 Bouwer and Rice Slug Test Analysis, Rising Head Test, PZ-6A
Table G19 Bouwer and Rice Slug Test Analysis, Rising Head Test, PZ-7A
Table G20 Bouwer and Rice Slug Test Analysis, Rising Head Test, PZ-8A
Table G21 Bouwer and Rice Slug Test Analysis, Rising Head Test, PZ-12A
Table G22 Bouwer and Rice Slug Test Analysis, Rising Head Test, PZ-13B

APPENDIX G

Aquifer Testing Procedures

This appendix describes the injection/recovery testing procedures and analysis and the slug testing procedures and analysis conducted at the PSE&G former Harrison Gas Plant during the Focused Remedial Investigation to determine the horizontal hydraulic conductivity of the underlying hydrogeologic units.

G1.0 Injection and Recovery Testing Procedures and Analysis

Single well injection and recovery tests were performed in piezometers PZ-1B and PZ-4B. Equipment and testing/analytical procedures used for the injection tests are described below.

G1.1 Injection and Recovery Testing Equipment and Procedures

Injection testing was performed by injecting potable water from an on-Site fire hydrant into a piezometer (injection well), and monitoring the water level response in the injection well. Prior to the tests, a sample of the water from the fire hydrant was collected and analyzed for VOCs, SVOCs, TAL Inorganics and TPH. Results from this sample can be found in Appendix H. For each test, the potable water was conveyed to the injection well via a 5/8" flexible rubber hose. A flow meter and gate valve were connected to the hose to measure flow rate and provide flow control, respectively. The flow rate into the piezometer was regulated via a 2" gate valve mounted in-line preceding the flow meter.

Each injection test consisted of a step test followed by a constant rate test. The step test was conducted using differing flow rates (steps) over a short time period (e.g., 5 to 10 minutes) to find an appropriate constant rate. Such a rate produced a measurable response in the test well (i.e., water level increase) without creating excessive water level rise in the test well. Once the constant rate had been determined, the injection test was conducted using the measured constant rate.

During the injection test, the water level in the injection well was measured and recorded using an In-Situ TROLL transducer/datalogger. The datalogger was programmed to record the water level

in the "logarithmic" mode in which the time interval between measurements gradually increased from 0.2 seconds at the beginning of the test to a maximum of 5 minutes after 80 minutes of recording. This allowed for the recording of rapid changes in water levels in the beginning of the test without collecting excessive/ redundant data late in the test when the water level had stabilized.

The general procedure for the constant rate injection testing and recovery testing was as follows:

- The initial static water level was measured using an electronic water level indicator;
- The datalogger/transducerwas placed below the water table in the piezometer;
- The initial static water level was input into the datalogger/transduceras a reference elevation;
- Water was injected into the piezometer until sufficient data was collected to perform data analysis (i.e., following the borehole storage and skin effects when a straight line is developed on a plot of head buildup versus log of time), typically for approximately 100 minutes
- Water was shut-off and the water level in the piezometer was allowed to recover (lower) to the initial static water level; and
- Water level data was downloaded and imported into a MS Excel spreadsheet for analysis.

G1.2 Injection and Recovery Tests Analyses

Results of the injection tests were analyzed using two different methods. The injection portion was analyzed using the Earlougher (1977) method, and the recovery portion was analyzed using the Theis (1935) recovery method. A brief description of these analytical methods follows.

Earlougher Analysis Method

The Earlougher analysis method historically has been used in the petroleum industry for single well testing of injection wells. This methodology has recently has been applied to the water well/environmentalremediation industries for aquifer testing and analysis.

The borehole storage and skin effects for the piezometers at the Site were identified by non-linear early time data on a semi-logarithmic graph of hydraulic head buildup (h) as a function of time (t). Subsequent data typically follows a straight line trend on the semi-logarithmic plots. Information from the graph was used to complete the analysis in the following manner:

Step 1

Plot h versus t with t on the logarithmic x-axis as described above.

Step 2

Draw a line through the straight line portion of the graph. This will be the later time portion of the graph since the non-linear early time data is due to borehole storage or skin effects.

Step 3

Select two points on the line and record their (t_1, h_1) and (t_2, h_2) coordinates. The difference in head for one log cycle of time (m) can be calculated using the following equation:

$$m = \frac{h_2 - h_1}{\log(t_2) - \log(t_1)}$$

Note: The units of m must be converted to psi for the analysis.

Step 4

The intrinsic permeability of the aquifer surrounding the piezometer can be calculated using the following equation:

$$k = \frac{-162.6qB\mu}{mh}$$

where:

k = intrinsic permeability in millidarcies [mD]

q = injection rate in standard barrels per day [STB/day]

B = formation volume factor [recoverable barrels/standard barrels, RB/STB, =1.0]

m = absolute viscosity in centipoises [cp]

m = difference in pressure in psi for one log cycle of time

h = formation thickness in feet [ft]

Step 5

The intrinsic permeability is used to determine the hydraulic conductivity using the following equation:

$$K = \frac{k\rho g}{\mu}$$

where:

K = hydraulic conductivity in centimeters per second [cm/s]

r = density of water in grams per milliliter [g/ml]

g = gravitational constant [= 980 cm/s^2]

Tables G1 and G2 present the Earlougher injection test analyses for piezometers PZ-1B and PZ-4B, respectively.

Theis Recovery Method

The recovery portion of the injection tests were analyzed using the Theis (1935) recovery method. This method is widely used for the analysis of recovery tests. It can be applied to injection testing in a manner identical to that of the more common withdrawal (pump) testing, with the exception that residual head buildup is analyzed as opposed to residual head drawdown. Residual head buildup data can be more reliable than the injection portion data since a constant flow injection rate is often difficult to achieve in the field.

The Theis recovery method analysis requires the plotting of the residual head buildup (s') on a vertical linear scale versus the ratio of time since injection started (t) to the time since injection ended (t') on the horizontal log scale (t/t'). Information from this plot is used to complete the analysis in the following manner:

Step 1

Plot s' versus t/t' with t/t' on the logarithmic x-axis as described above;

Step 2

Draw a line through the straight line portion of the graph. This will be the later time portion of the graph (the lower values of t/t');

Step 3

Select two points on the line and record their (t/t'_1, s'_1) and (t/t'_2, s_2) coordinates. The difference in residual head buildup for one log cycle of time ($\Delta s'$) can be calculated using the following equation:

$$\Delta s' = \frac{s'_2 - s'_1}{\log\left[\left(\frac{t}{t'}\right)_2\right] - \log\left[\left(\frac{t}{t'}\right)_1\right]}$$

Step 4

The intrinsic permeability of the aquifer surrounding the piezometer can be calculated using the following equation:

$$K = \frac{2.3Q}{4\pi D \Delta s'}$$

where:

K = hydraulic conductivity [cm/sec];

Q = injection rate in cubic feet per day [ft^3/day];

D = formation thickness [ft]; and

$\Delta s'$ = difference in residual head buildup for one log cycle of t/t'.

Tables G3 through G4 present the Theis recovery analyses for piezometers PZ-1B and PZ-4B, respectively.

G2.0 Slug Testing Procedures and Analysis

The horizontal hydraulic conductivity of the formation/interval screened in 10 piezometers was estimated by slug tests. Three (3) slug tests were performed in shallow piezometers PZ-1B, PZ-4B, and PZ-13B, and seven (7) were performed in deep piezometers PZ-1A, PZ-4A, PZ-6A, PZ-7A, PZ-8A, PZ-12A, and PZ-13A. Equipment and testing/analytical procedures used for the slug tests are described below.

G2.1 Slug Testing Equipment and Procedures

The slug tests were completed using an adjustable length PVC bailer to remove water from the piezometer and a In-Situ TROLL transducer/datalogger to monitor water level recoveries. The length of the bailer ranged from 5 feet to 10 feet depending upon the height of the water column in the piezometer and the anticipated hydraulic conductivity of the interval screened in the piezometer. Both the bailer and the transducer/datalogger were cleaned by scrubbing with an Alconox/water solution followed by a distilled water rinse prior to each use.

The general procedure for slug testing was as follows:

- The initial static water level was measured using an electronic water level indicator;
- The datalogger/transducer was placed below the water table in the piezometer (at a depth sufficient to allow the unimpeded removal of the slug);
- The initial static water level was input into the datalogger/transducer as a reference elevation;
- The slug was introduced into the piezometer and the water level allowed to equilibrate to the initial static level;
- The slug was quickly removed to produce an "instantaneous" drop in head. As the water rose in the piezometer ("rising head"), the level was recorded on a logarithmic time scale as previously described in Section G1.0; and
- The water level data was downloaded and imported into a MS Excel spreadsheet for analysis.

G2.2 Slug Testing Analysis

The data collected during the slug testing program was analyzed using several well-accepted analysis methods: the modified Hvorslev (1951) method and the Bouwer and Rice method (1976). These two analysis methods are described briefly below.

Hvorslev Method

Hvorslev developed a method for the determination of horizontal hydraulic conductivity using measured values of head difference (h) versus time (t).

The Hvorslev equation is written as:

$$K = \frac{r_c^2}{2L_e} ln \frac{L_e}{R_e} \left[\frac{ln\left(\frac{h_1}{h_2}\right)}{(t_2 - t_1)} \right]$$

where:
r_c = casing radius [(L)]
L_e = length of the open interval [(L)]
R_e = equivalent radius [(L)]
t = time [(t)]
h_t = head at time t [(L)]

The methodology of data analysis requires the plotting of head ratio (percentage of head yet to recover) on the vertical scale of semi-log paper versus time on the linear horizontal scale, and is presented in a stepwise manner for both rising and falling head tests as follows:

- Plot h_t/h_o (logarithmic) versus t in a semilogarithmic paper;
- Because h_t and t are the only variables in the equations, the plot must show a straight line. In other words, the straight line portion is the valid part of the readings, and the curved part of the plot may be due to wellbore storage, skin or boundary effects;
- Select two points on the straight line portion of the curve and record their (t_1, h_1) and (t_2, h_2) coordinates; and,
- Record the other piezometer parameters and calculate K based on the above formula.

Tables G5 through G14 present the Hvorslev analysis for piezometers PZ-1A, PZ-1B, PZ-4A, PZ-5A, PZ-6A, PZ-7A, PZ-8A, PZ-12A, and PZ-13B, respectively.

Bouwer and Rice Method
The Bouwer and Rice equation is written as:

$$K = \frac{r_c^2 ln\left(\frac{R_e}{r_w}\right)}{2L_e} \frac{1}{t} ln\frac{y_0}{y_t}$$

where:
r_c = casing radius [(L)]
L_e = length of the open interval [(L)]
R_e = effective radius [(L)]
r_w = distance to undisturbed aquifer (equivalent radius in Hvorslev) [(L)]
t = time [(t)]
y_t = drawdown at time t [(L)]

The Bouwer and Rice analysis is completed in a similar manner to the Hvorslev analysis with the exception that the drawdown (or head) is plotted against time, rather than the head ratio. The expression $ln\frac{R_e}{r_w}$ is calculated from a set of empirically derived equations which relate R_e to the geometry and boundary conditions of the aquifer system.

Tables G15 through G22 present the Bouwer and Rice analysis for piezometers PZ-1A, PZ-4A, PZ-5A, PZ-6A, PZ-7A, PZ-8A, PZ-12A, and PZ-13B, respectively.

g:\projects\953-6306\ri.rpt\draft3\appd.doc

EARLOUGHER INJECTION TEST ANALYSIS
PZ-1B

$$k = \frac{-162.6qB\mu}{mh} \qquad K = \frac{k\rho g}{\mu}$$

where:
- k = permeability (mD)
- q = injection rate (STB/day)
- B = formation volume factor (RB/STB) = 1.0
- μ = viscosity (cp)
- m = difference in pressure for one log cycle of time (psig)
- h = formation thickness (feet)
- K = hydraulic conductivity (cm/s)
- ρ = density of water (g/ml)
- g = gravitational constant (cm/s^2) = 980

INPUT PARAMETERS		RESULTS		
q =	411	k =	159079	mD
h =	10.0	k =	1.57E-06	cm^2
μ =	1.00	K =	1.54E-01	cm/sec
ρ =	1.00	K =	436	ft/day
m =	0.0421	T =	4361	ft^2/day

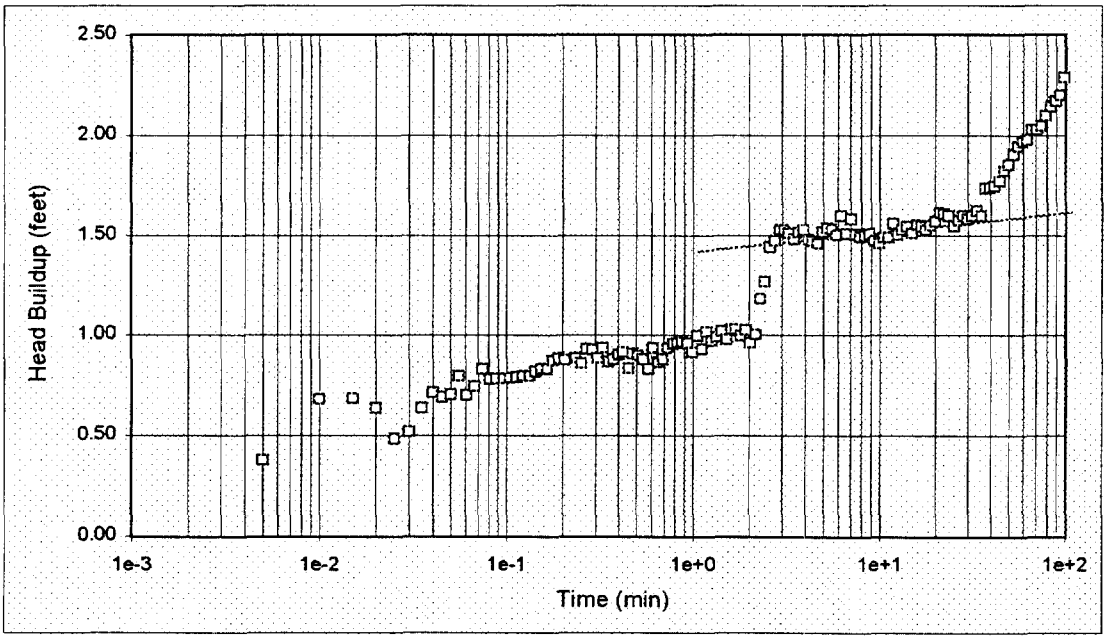

Project Name: PSE&G/HARRISON/NJ
Project No.: 953-6306
Test Date: 08/07/96

Analysis By: SN
Checked By:
Analysis Date: 1/2/97

EARLOUGHER INJECTION TEST ANALYSIS
PZ-4B

$$k = \frac{-162.6qB\mu}{mh} \qquad K = \frac{k\rho g}{\mu}$$

where:
- k = permeability (mD)
- q = injection rate (STB/day)
- B = formation volume factor (RB/STB) = 1.0
- μ = viscosity (cp)
- m = difference in pressure for one log cycle of time (psig)
- h = formation thickness (feet)
- K = hydraulic conductivity (cm/s)
- ρ = density of water (g/ml)
- g = gravitational constant (cm/s^2) = 980

INPUT PARAMETERS		RESULTS		
q =	36	k =	5763	mD
h =	13.5	k =	5.69E-08	cm^2
μ =	1.00	K =	5.57E-03	cm/sec
ρ =	1.00	K =	16	ft/day
m =	0.0752	T =	213	ft^2/day

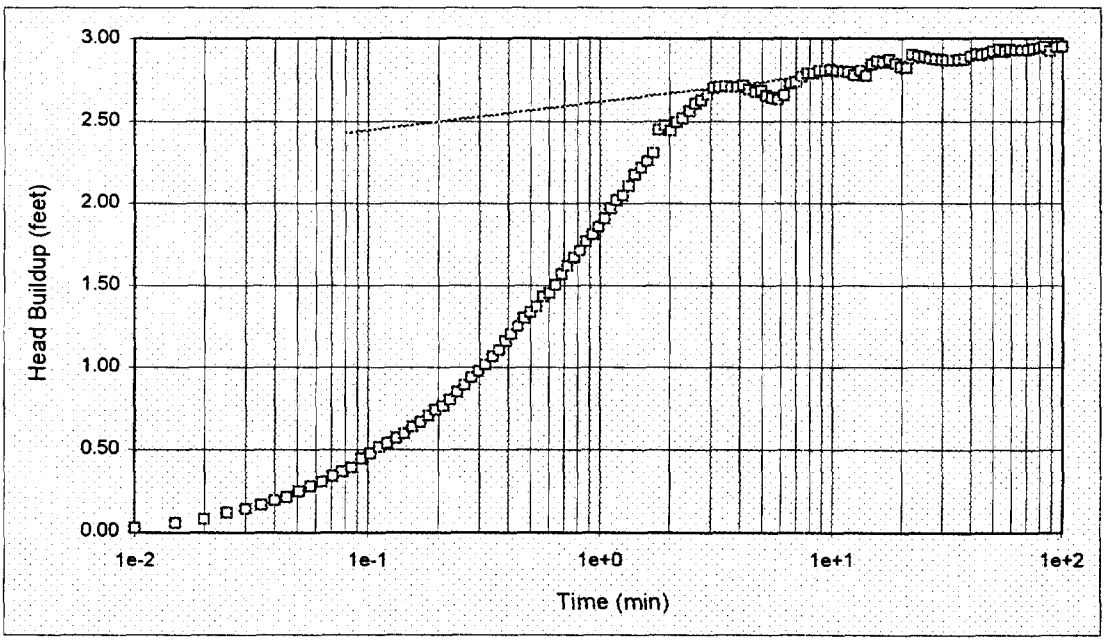

Project Name: PSE&G/HARRISON/NJ
Project No.: 953-6306
Test Date: 08/07/96

Analysis By: SN
Checked By:
Analysis Date: 10/1/96

THEIS ANALYSIS OF RECOVERY DATA
PZ-1B

$$s' = \frac{2.3Q}{4\pi KD} log\left(\frac{t}{t'}\right) \qquad \Delta s' = \frac{2.3Q}{4\pi KD}$$

where:

s' = residual drawdown (feet)
Q = rate of recharge = rate of discharge (ft^3/day)
K = hydraulic conductivity (feet/day)
D = aquifer thickness (feet)
t = time since start of pumping (days)
t' = time since cessation of pumping (days)
$\Delta s'$ = residual drawdown difference for one log cycle of t/t' (feet)

INPUT PARAMETERS		RESULTS	
D =	10.0	T =	4928 ft^2/day
Q =	2310	K =	492.8 ft/day
Δs' =	0.086	K =	1.74E-01 cm/sec

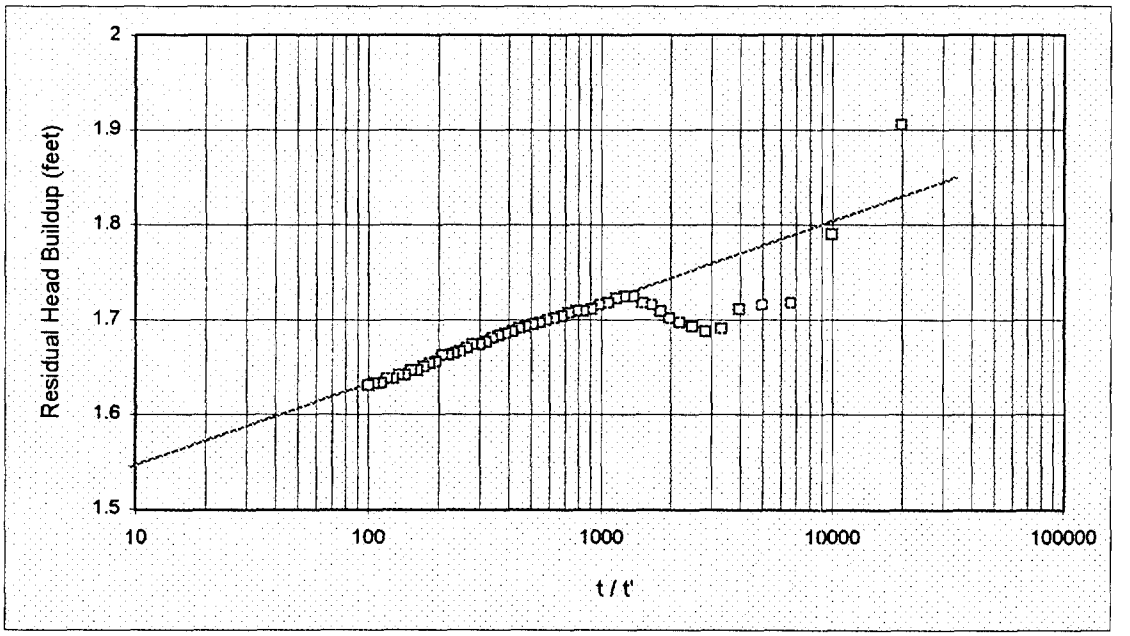

Project Name: PSE&G/HARRISON/NJ
Project No.: 953-6306
Test Date: 08/07/96

Analysis By: SN
Checked By:
Analysis Date: 1/2/97

THEIS ANALYSIS OF RECOVERY DATA
PZ-4B

$$s' = \frac{2.3Q}{4\pi KD} log\left(\frac{t}{t'}\right) \qquad \Delta s' = \frac{2.3Q}{4\pi KD}$$

where:

s' = residual drawdown (feet)
Q = rate of recharge = rate of discharge (ft^3/day)
K = hydraulic conductivity (feet/day)
D = aquifer thickness (feet)
t = time since start of pumping (days)
t' = time since cessation of pumping (days)
$\Delta s'$ = residual drawdown difference for one log cycle of t/t' (feet)

INPUT PARAMETERS		RESULTS	
D =	13.5	T =	28 ft^2/day
Q =	202	K =	2.1 ft/day
Δs' =	1.336	K =	7.23E-04 cm/sec

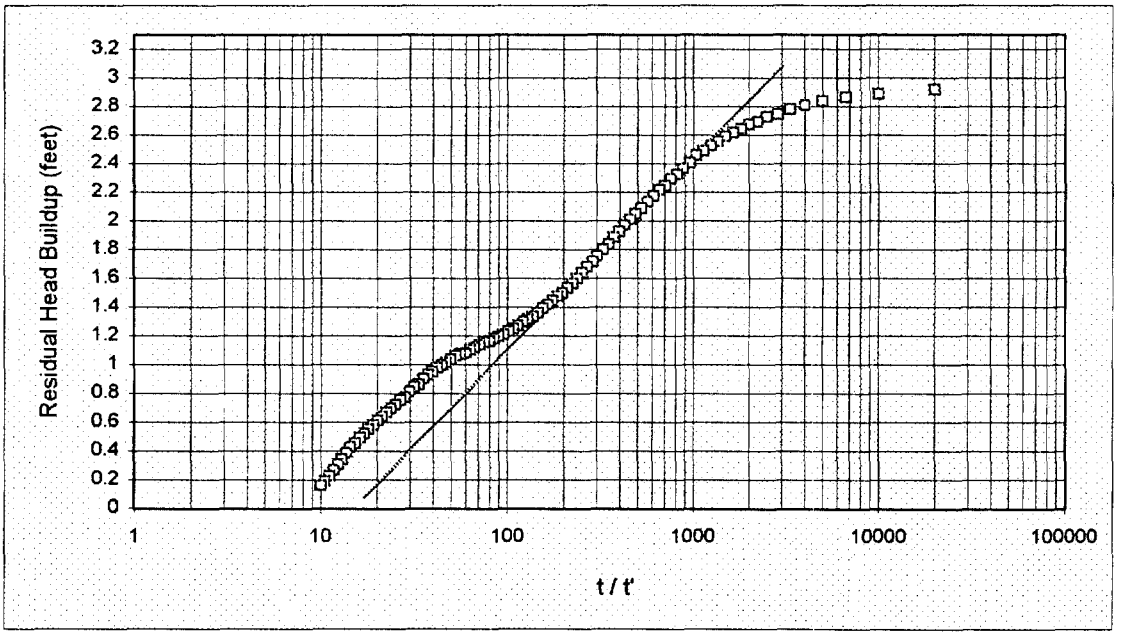

Project Name: PSE&G/HARRISON/NJ
Project No.: 953-6306
Test Date: 08/07/96

Analysis By: SN
Checked By:
Analysis Date: 10/1/96

HVORSLEV SLUG TEST ANALYSIS
RISING HEAD TEST PZ-1A

$$K = \frac{r_c^{\,2}}{2L_e} \ln \frac{L_e}{R_e} \left[\frac{\ln\left(\frac{h_1}{h_2}\right)}{(t2 - t1)} \right] 30.48$$

where:
r_c = casing radius (feet)
R_e = equivalent radius (feet)
L_e = length of screened interval (feet)
t = time (minutes)
h_t = head at time t (feet)

INPUT PARAMETERS		RESULTS		
r_c =	0.08			
R_e =	0.29			
L_e =	9.5	K=	1.08E-04	cm/sec
t_1 =	0	K=	3.07E-01	ft/day
t_2 =	26.16			
h_1/h_0 =	0.58			
h_2/h_0 =	0.01			

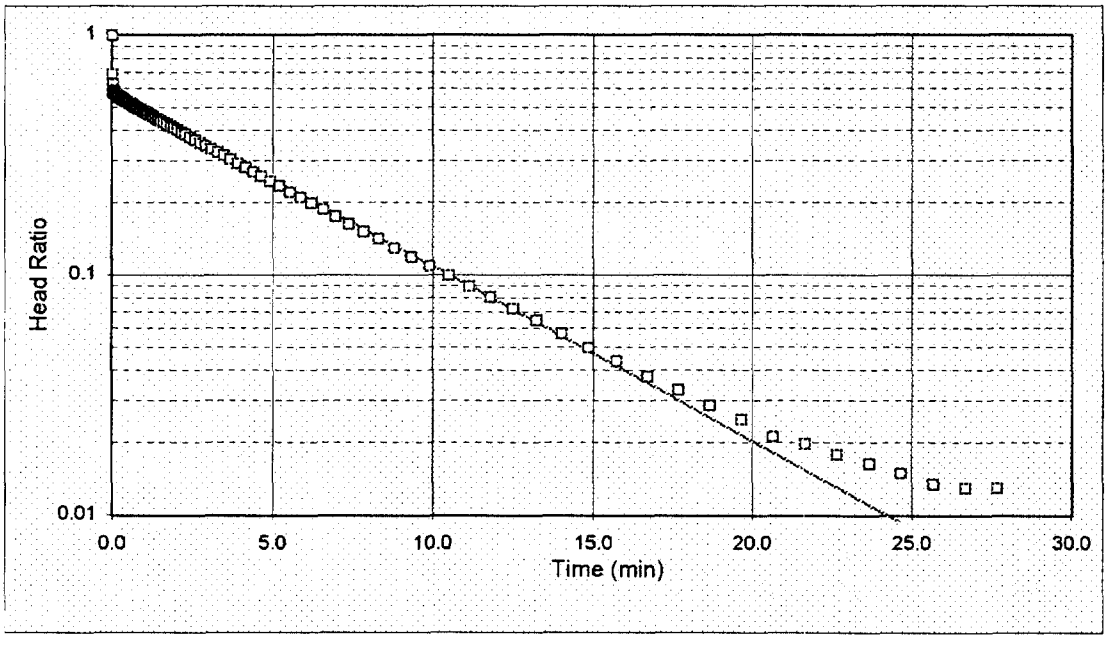

Project Name: PSE&G/HARRISON/NJ
Project No.: 953-6306
Test Date: 07/26/96

Analysis By: SN
Checked By:
Analysis Date: 1/2/97

HVORSLEV SLUG TEST ANALYSIS
RISING HEAD TEST PZ-1B

$$K = \frac{r_c^{\,2}}{2L_e} \ln \frac{L_e}{R_e} \left[\frac{\ln\left(\frac{h_1}{h_2}\right)}{(t2 - t1)} \right] 30.48$$

where:
r_c = casing radius (feet)
R_e = equivalent radius (feet)
L_e = length of screened interval (feet)
t = time (minutes)
h_t = head at time t (feet)

INPUT PARAMETERS		RESULTS		
r_c =	0.08			
R_e =	0.29			
L_e =	4.66	K=	2.58E-02	cm/sec
t_1 =	0	K=	7.32E+01	ft/day
t_2 =	0.16			
h_1/h_0 =	1.15			
h_2/h_0 =	0.02			

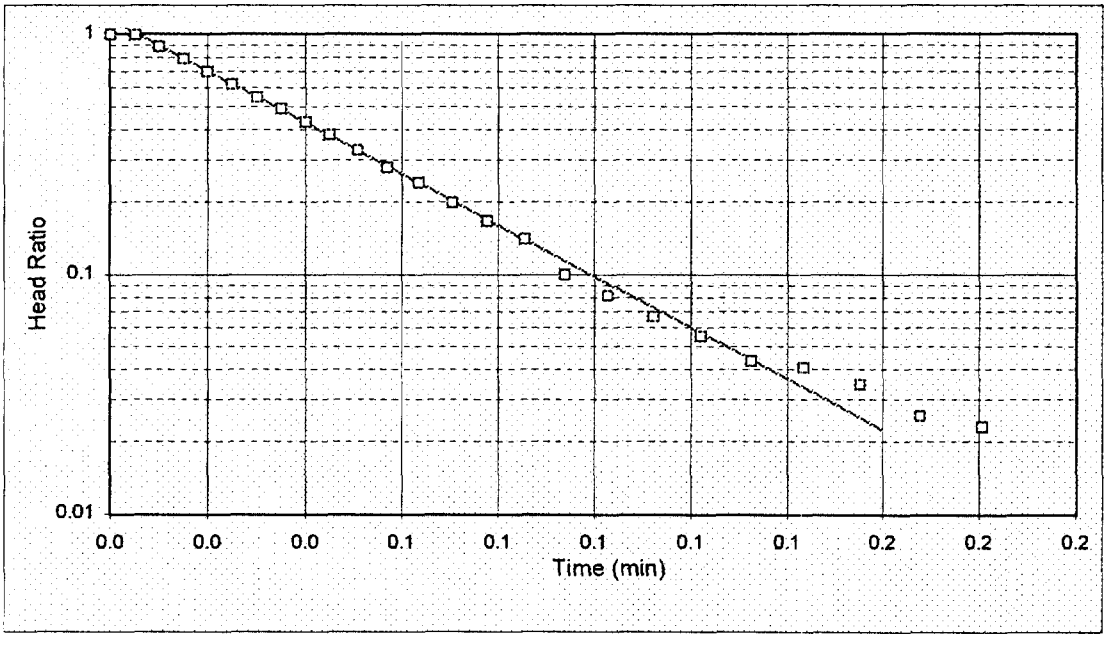

Project Name: PSE&G/HARRISON/NJ
Project No.: 953-6306
Test Date: 07/26/96

Analysis By: SN
Checked By:
Analysis Date: 1/2/97

HVORSLEV SLUG TEST ANALYSIS
RISING HEAD TEST PZ-4A

$$K = \frac{r_c^2}{2L_e} \ln \frac{L_e}{R_e} \left[\frac{\ln\left(\frac{h_1}{h_2}\right)}{(t2 - t1)} \right] 30.48$$

where:
r_c = casing radius (feet)
R_e = equivalent radius (feet)
L_e = length of screened interval (feet)
t = time (minutes)
h_t = head at time t (feet)

INPUT PARAMETERS		RESULTS		
r_c =	0.08			
R_e =	0.29			
L_e =	9.5	K=	2.16E-04	cm/sec
t_1 =	0	K=	6.13E-01	ft/day
t_2 =	17.08			
h_1/h_0 =	0.74			
h_2/h_0 =	0.00			

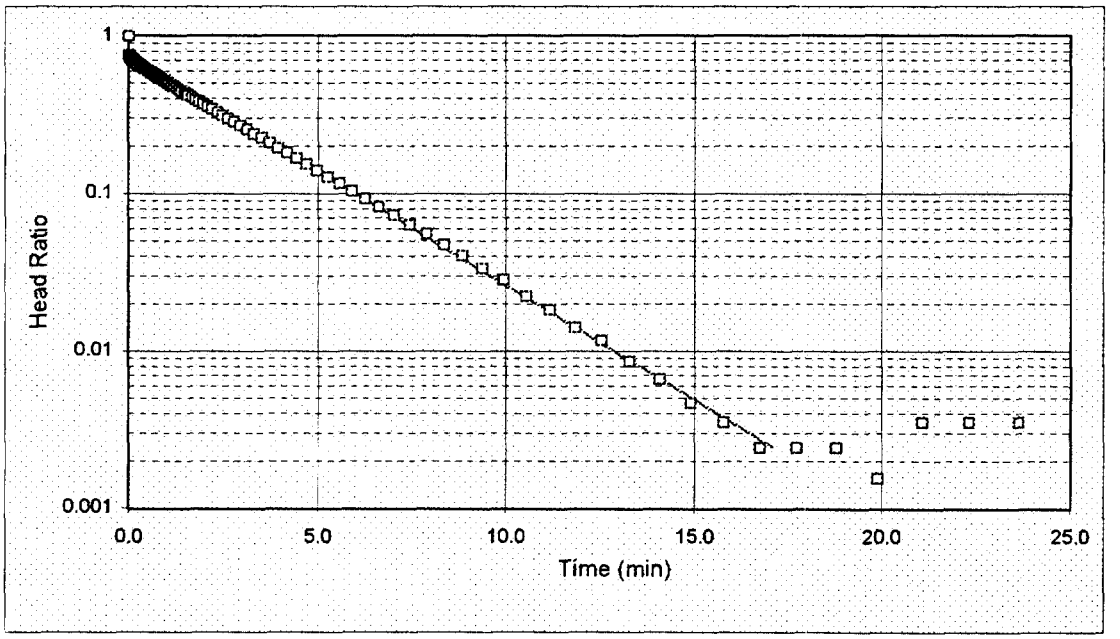

Project Name: PSE&G/HARRISON/NJ
Project No.: 953-6306
Test Date: 07/26/96

Analysis By: SN
Checked By:
Analysis Date: 1/2/97

HVORSLEV SLUG TEST ANALYSIS
RISING HEAD TEST PZ-4B

$$K = \frac{r_c^2}{2L_e} \ln \frac{L_e}{R_e} \left[\frac{\ln\left(\frac{h_1}{h_2}\right)}{(t2 - t1)} \right] 30.48$$

where:
- r_c = casing radius (feet)
- R_e = equivalent radius (feet)
- L_e = length of screened interval (feet)
- t = time (minutes)
- h_t = head at time t (feet)

INPUT PARAMETERS		RESULTS		
r_c =	0.08			
R_e =	0.29			
L_e =	7.23	K=	4.72E-04	cm/sec
t_1 =	0	K=	1.34E+00	ft/day
t_2 =	7.27			
h_1/h_0 =	0.80			
h_2/h_0 =	0.01			

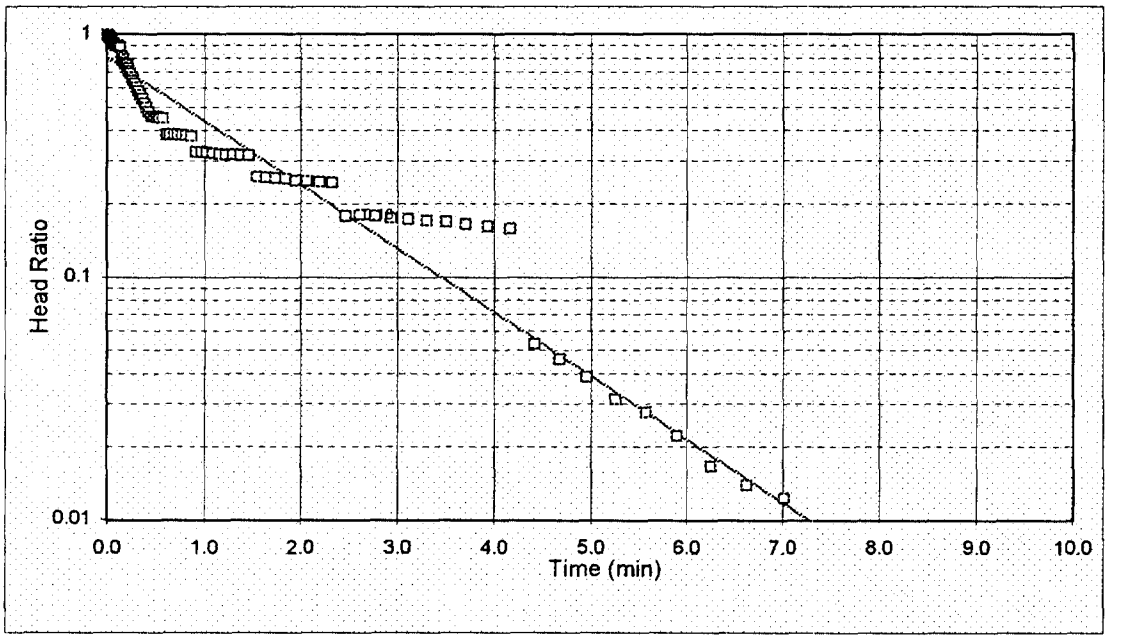

Project Name: PSE&G/HARRISON/NJ
Project No.: 953-6306
Test Date: 07/26/96

Analysis By: SN
Checked By:
Analysis Date: 1/2/97

HVORSLEV SLUG TEST ANALYSIS
RISING HEAD TEST PZ-5A

$$K = \frac{r_c^{\,2}}{2L_e} \ln \frac{L_e}{R_e} \left[\frac{\ln\left(\frac{h_1}{h_2}\right)}{(t2 - t1)} \right] 30.48$$

where:
r_c = casing radius (feet)
R_e = equivalent radius (feet)
L_e = length of screened interval (feet)
t = time (minutes)
h_t = head at time t (feet)

INPUT PARAMETERS		RESULTS		
r_c =	0.08			
R_e =	0.29			
L_e =	10	K=	4.73E-04	cm/sec
t_1 =	0	K=	1.34E+00	ft/day
t_2 =	9.75			
h_1/h_0 =	0.80			
h_2/h_0 =	0.00			

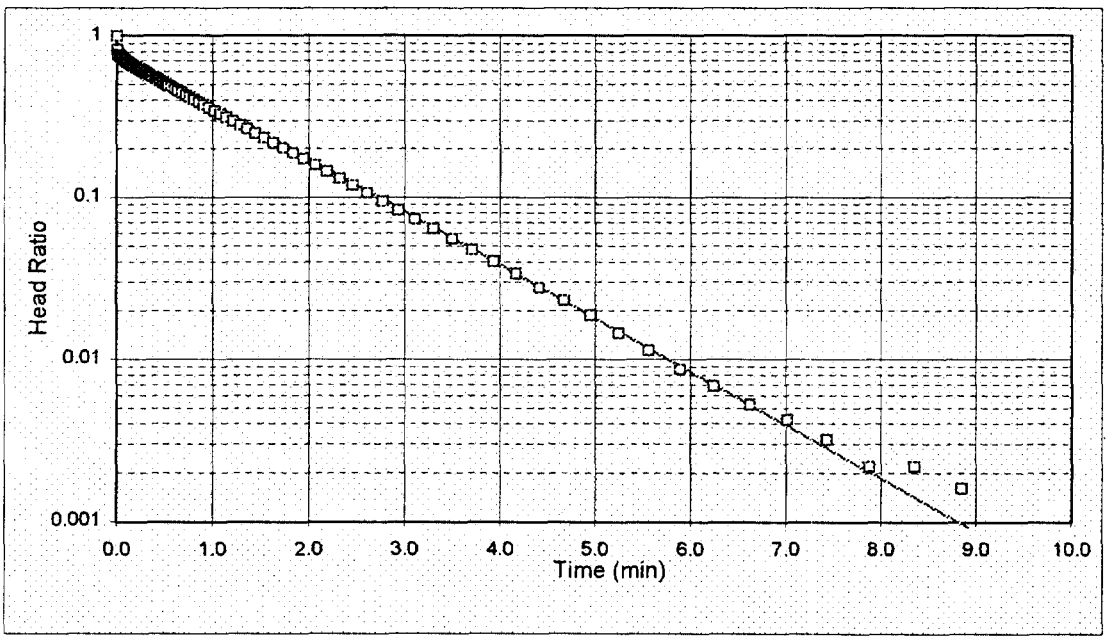

Project Name: PSE&G/HARRISON/NJ
Project No.: 953-6306
Test Date: 07/26/96

Analysis By: SN
Checked By:
Analysis Date: 1/2/97

HVORSLEV SLUG TEST ANALYSIS
RISING HEAD TEST PZ-6A

$$K = \frac{r_c^2}{2L_e} \ln \frac{L_e}{R_e} \left[\frac{\ln\left(\frac{h_1}{h_2}\right)}{(t2 - t1)} \right] 30.48$$

where:
- r_c = casing radius (feet)
- R_e = equivalent radius (feet)
- L_e = length of screened interval (feet)
- t = time (minutes)
- h_t = head at time t (feet)

INPUT PARAMETERS		RESULTS		
r_c =	0.08			
R_e =	0.29			
L_e =	9.5	K=	9.44E-03	cm/sec
t_1 =	0	K=	2.67E+01	ft/day
t_2 =	0.409			
h_1/h_0 =	1.10			
h_2/h_0 =	0.00			

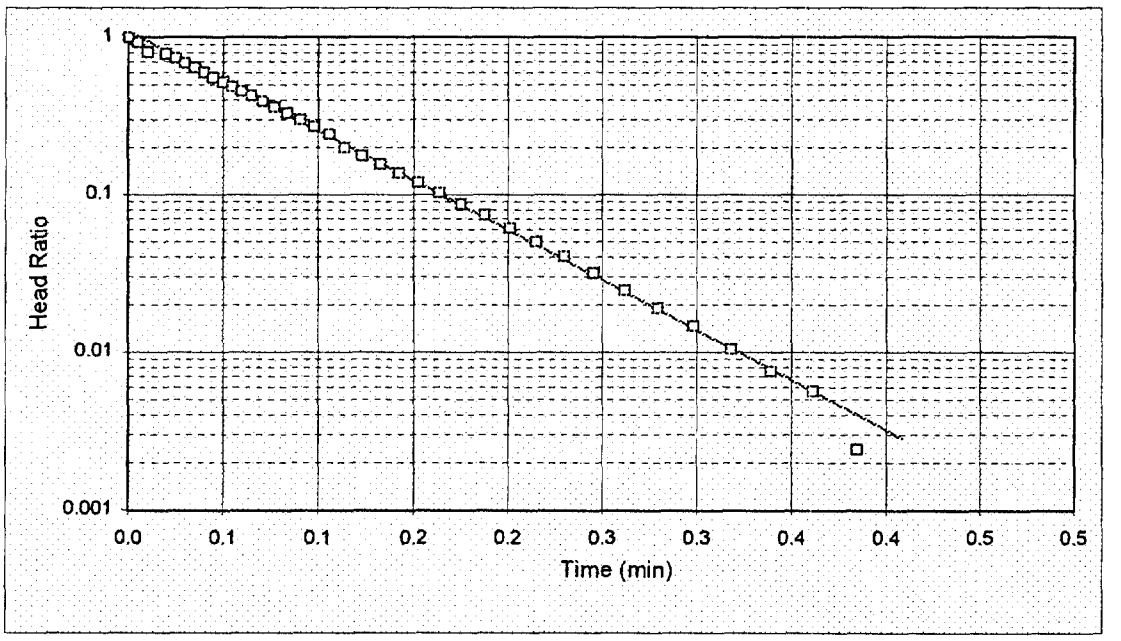

Project Name: PSE&G/HARRISON/NJ
Project No.: 953-6306
Test Date: 07/26/96

Analysis By: SN
Checked By:
Analysis Date: 1/2/97

HVORSLEV SLUG TEST ANALYSIS
RISING HEAD TEST PZ-7A

$$K = \frac{r_c^2}{2L_e} \ln \frac{L_e}{R_e} \left[\frac{\ln\left(\frac{h_1}{h_2}\right)}{(t2 - t1)} \right] 30.48$$

where:
- r_c = casing radius (feet)
- R_e = equivalent radius (feet)
- L_e = length of screened interval (feet)
- t = time (minutes)
- h_t = head at time t (feet)

INPUT PARAMETERS		RESULTS		
r_c =	0.08			
R_e =	0.29			
L_e =	10	K=	2.38E-03	cm/sec
t_1 =	0.469	K=	6.75E+00	ft/day
t_2 =	2			
h_1/h_0 =	0.25			
h_2/h_0 =	0.00			

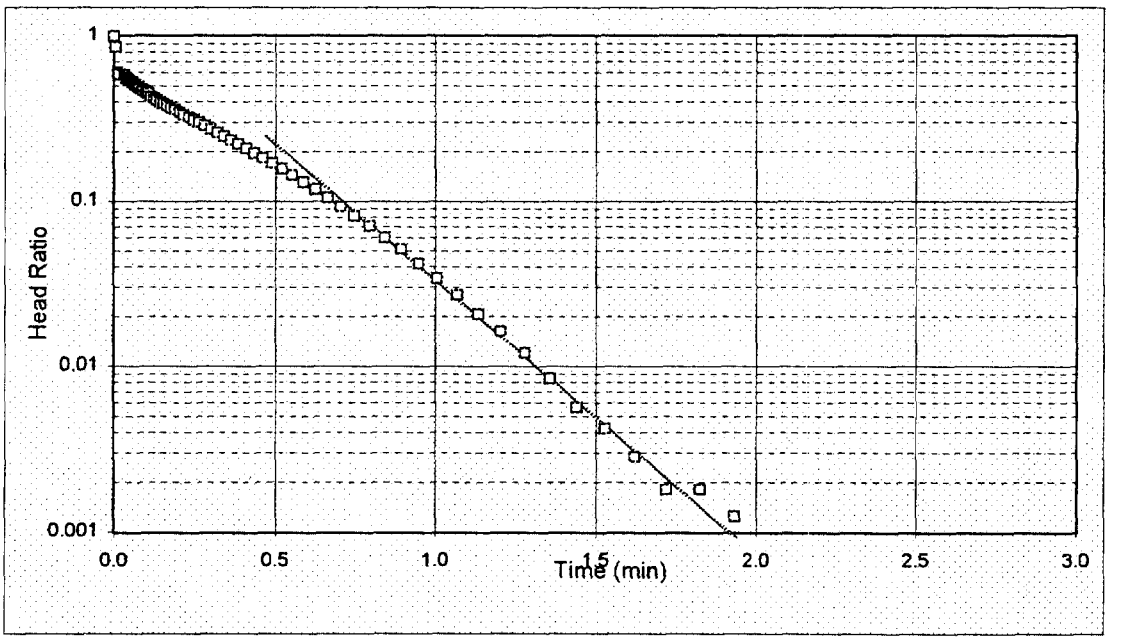

Project Name: PSE&G/HARRISON/NJ
Project No.: 953-6306
Test Date: 07/26/96

Analysis By: SN
Checked By:
Analysis Date: 1/2/97

HVORSLEV SLUG TEST ANALYSIS
RISING HEAD TEST PZ-8A

$$K = \frac{r_c^2}{2L_e} \ln \frac{L_e}{R_e} \left[\frac{\ln\left(\frac{h_1}{h_2}\right)}{(t2 - t1)} \right] 30.48$$

where:
r_c = casing radius (feet)
R_e = equivalent radius (feet)
L_e = length of screened interval (feet)
t = time (minutes)
h_t = head at time t (feet)

INPUT PARAMETERS	
r_c =	0.08
R_e =	0.29
L_e =	10
t_1 =	0
t_2 =	63.4
h_1/h_0 =	0.70
h_2/h_0 =	0.01

RESULTS

K=	4.15E-05	cm/sec
K=	1.18E-01	ft/day

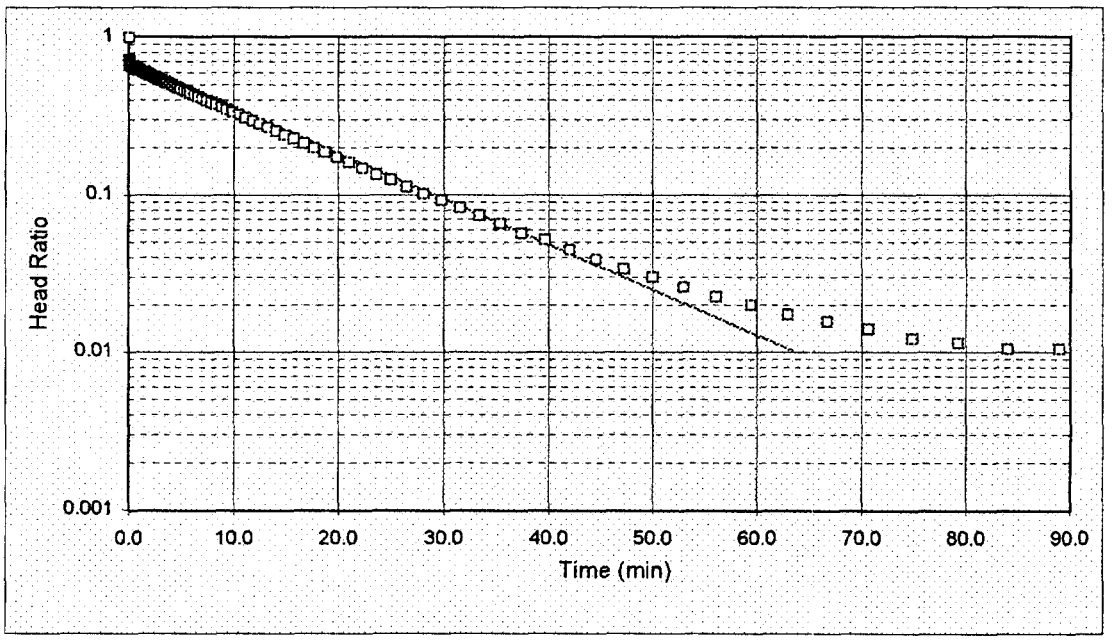

Project Name: PSE&G/HARRISON/NJ
Project No.: 953-6306
Test Date: 07/26/96

Analysis By: SN
Checked By:
Analysis Date: 1/2/97

HVORSLEV SLUG TEST ANALYSIS
RISING HEAD TEST PZ-12A

$$K = \frac{r_c^2}{2L_e} \ln \frac{L_e}{R_e} \left[\frac{\ln\left(\frac{h_1}{h_2}\right)}{(t2 - t1)} \right] 30.48$$

where:
r_c = casing radius (feet)
R_e = equivalent radius (feet)
L_e = length of screened interval (feet)
t = time (minutes)
h_t = head at time t (feet)

INPUT PARAMETERS		RESULTS		
r_c =	0.08			
R_e =	0.29			
L_e =	9.5	K=	6.84E-04	cm/sec
t_1 =	0	K=	1.94E+00	ft/day
t_2 =	6.16			
h_1/h_0 =	0.72			
h_2/h_0 =	0.00			

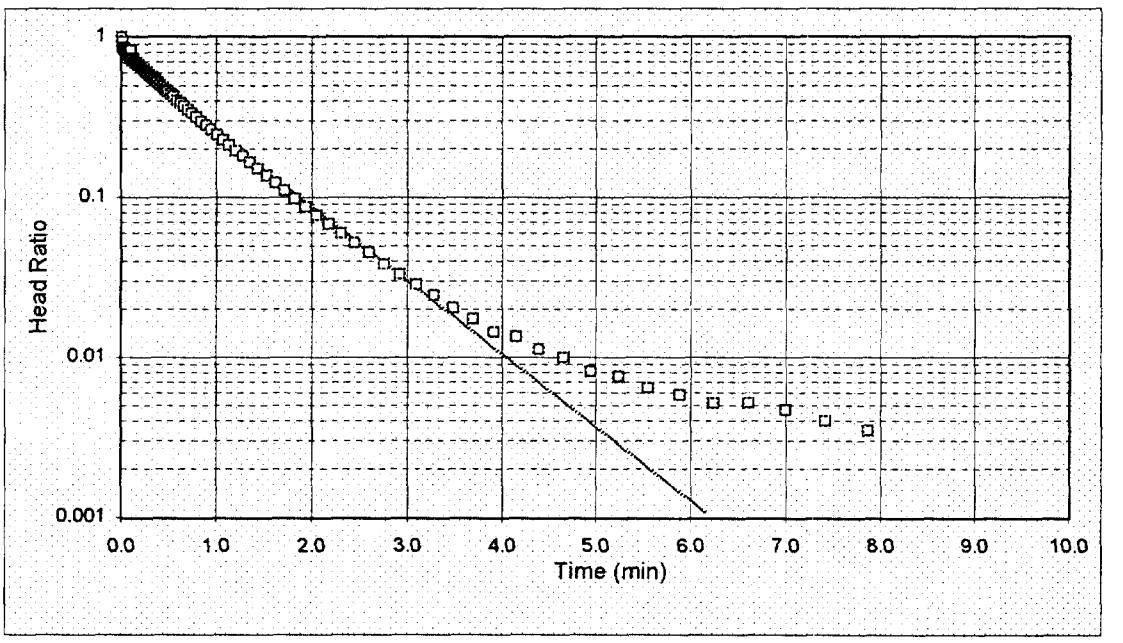

Project Name: PSE&G/HARRISON/NJ
Project No.: 953-6306
Test Date: 07/26/96

Analysis By: SN
Checked By:
Analysis Date: 1/2/97

HVORSLEV SLUG TEST ANALYSIS
RISING HEAD TEST PZ-13B

$$K = \frac{r_c^2}{2L_e} \ln \frac{L_e}{R_e} \left[\frac{\ln\left(\frac{h_1}{h_2}\right)}{(t2 - t1)} \right] 30.48$$

where:
r_c = casing radius (feet)
R_e = equivalent radius (feet)
L_e = length of screened interval (feet)
t = time (minutes)
h_t = head at time t (feet)

INPUT PARAMETERS		RESULTS		
r_c =	0.08			
R_e =	0.29			
L_e =	5.5	K=	9.78E-04	cm/sec
t_1 =	0	K=	2.77E+00	ft/day
t_2 =	3.23			
h_1/h_0 =	0.45			
h_2/h_0 =	0.02			

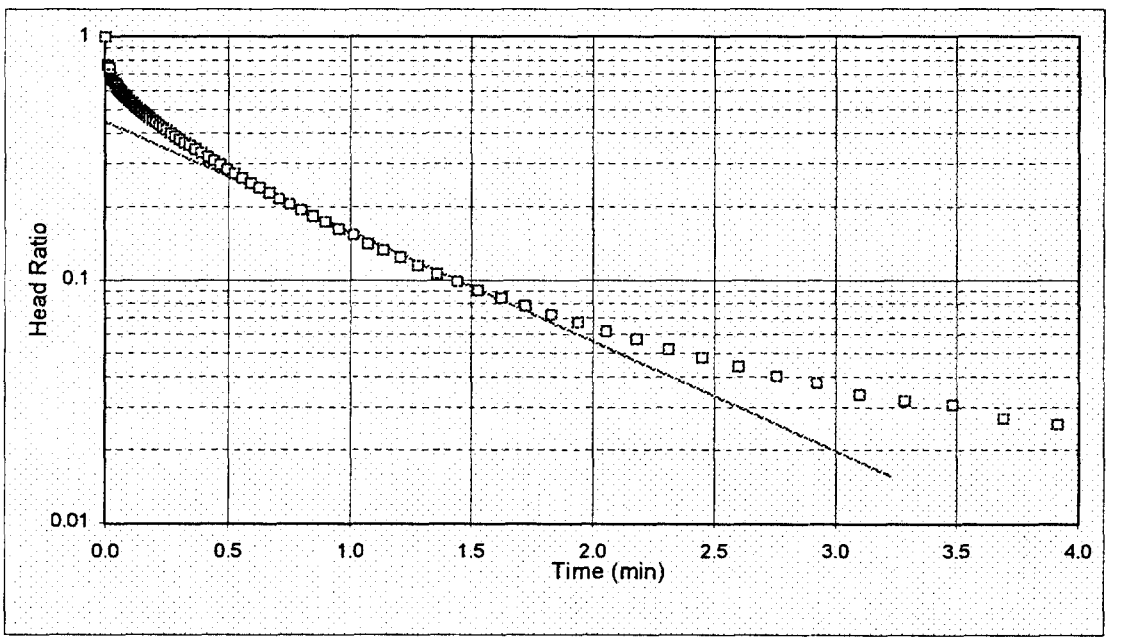

Project Name: PSE&G/HARRISON/NJ
Project No.: 953-6306
Test Date: 07/26/96

Analysis By: SN
Checked By:
Analysis Date: 1/2/97

BOUWER AND RICE SLUG TEST ANALYSIS
RISING HEAD TEST PZ-1A

$$K = \frac{r_c^2 \ln\left(\frac{R_e}{r_w}\right)}{2L_e} \frac{1}{t} \ln \frac{y_0}{y_t}$$

where:

r_c = casing radius (feet);
R_e = effective radius (feet);
L_e = length of screened interval (feet);
r_w = radial distance to undisturbed aquifer (feet)
y_0 = initial drawdown (feet)
y_t = drawdown (feet) at time t (minutes)

INPUT PARAMETERS		RESULTS		
r_c =	0.08			
r_w =	0.29			
L_e =	9.5	K=	8.34E-05	cm/sec
$\ln(R_e/r_w)$=	2.81	K=	2.36E-01	ft/day
y_0 =	3.39			
y_t =	0.08			
t =	23.5			

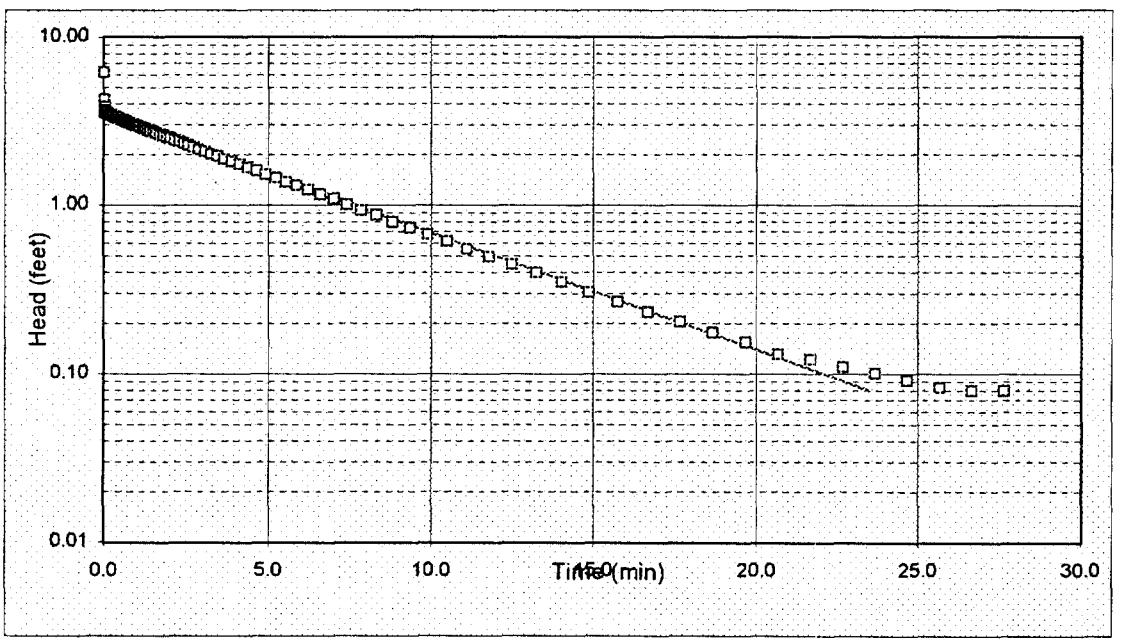

Project Name: PSE&G/HARRISON/NJ
Project No.: 953-6306
Test Date: 07/26/96

Analysis By: SN
Checked By:
Analysis Date: 1/2/97

BOUWER AND RICE SLUG TEST ANALYSIS
RISING HEAD TEST PZ-4A

$$K = \frac{r_c^2 \ln\left(\frac{R_e}{r_w}\right)}{2L_e} \frac{1}{t} \ln \frac{y_0}{y_t}$$

where:

r_c = casing radius (feet);
R_e = effective radius (feet);
L_e = length of screened interval (feet);
r_w = radial distance to undisturbed aquifer (feet)
y_0 = initial drawdown (feet)
y_t = drawdown (feet) at time t (minutes)

INPUT PARAMETERS		RESULTS		
r_c =	0.08			
r_w =	0.29			
L_e =	9.5	K=	1.67E-04	cm/sec
$\ln(R_e/r_w)$=	2.73	K=	4.74E-01	ft/day
y_0 =	3.15			
y_t =	0.01			
t =	17.9			

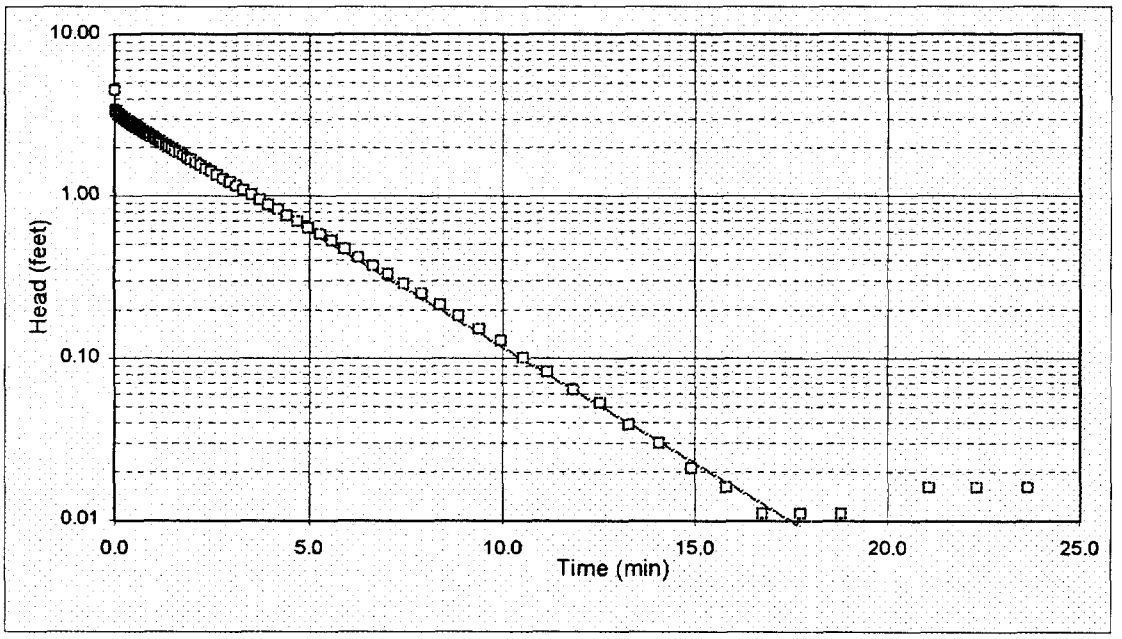

Project Name: PSE&G/HARRISON/NJ
Project No.: 953-6306
Test Date: 07/26/96

Analysis By: SN
Checked By:
Analysis Date: 1/2/97

BOUWER AND RICE SLUG TEST ANALYSIS
RISING HEAD TEST PZ-5A

$$K = \frac{r_c^2 \ln\left(\frac{R_e}{r_w}\right)}{2L_e} \frac{1}{t} \ln \frac{y_0}{y_t}$$

where:

r_c = casing radius (feet);
R_e = effective radius (feet);
L_e = length of screened interval (feet);
r_w = radial distance to undisturbed aquifer (feet)
y_0 = initial drawdown (feet)
y_t = drawdown (feet) at time t (minutes)

INPUT PARAMETERS		RESULTS		
r_c =	0.08			
r_w =	0.29			
L_e =	10	K=	3.98E-04	cm/sec
$\ln(R_e/r_w)$=	3.02	K=	1.13E+00	ft/day
y_0 =	6.76			
y_t =	0.01			
t =	9.2			

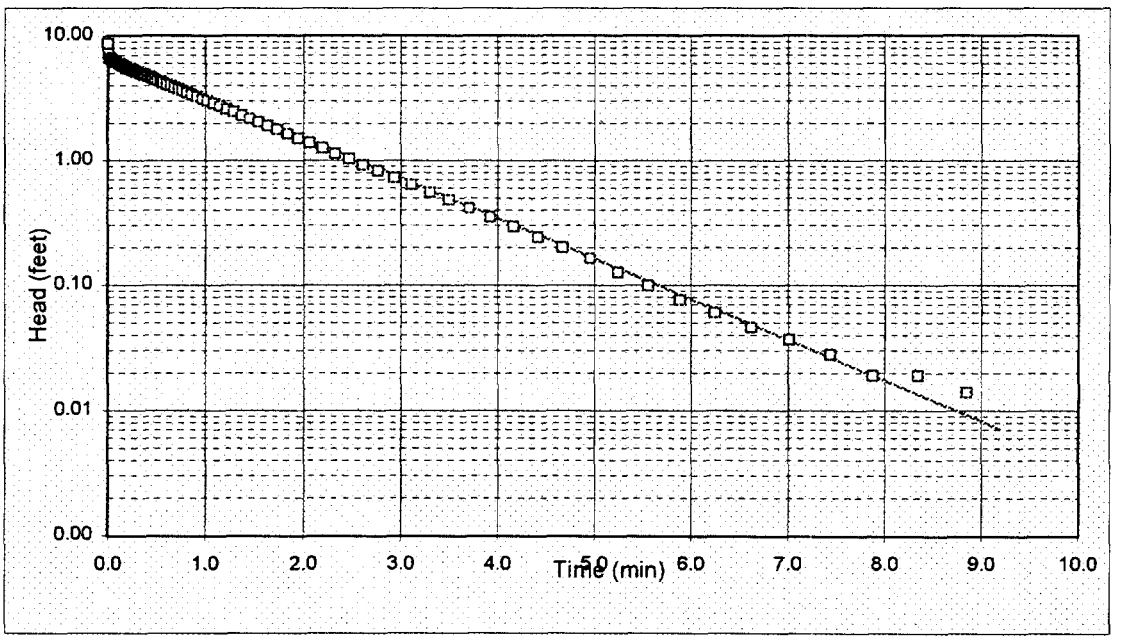

Project Name: PSE&G/HARRISON/NJ
Project No.: 953-6306
Test Date: 07/26/96

Analysis By: SN
Checked By:
Analysis Date: 1/2/97

BOUWER AND RICE SLUG TEST ANALYSIS
RISING HEAD TEST PZ-6A

$$K = \frac{r_c^2 \ln\left(\frac{R_e}{r_w}\right)}{2L_e} \frac{1}{t} \ln \frac{y_0}{y_t}$$

where:

r_c = casing radius (feet);
R_e = effective radius (feet);
L_e = length of screened interval (feet);
r_w = radial distance to undisturbed aquifer (feet)
y_0 = initial drawdown (feet)
y_t = drawdown (feet) at time t (minutes)

INPUT PARAMETERS		RESULTS		
r_c =	0.08			
r_w =	0.29			
L_e =	9.5	K=	6.87E-03	cm/sec
$\ln(R_e/r_w)$=	2.55	K=	1.95E+01	ft/day
y_0 =	6.76			
y_t =	0.04			
t =	0.4			

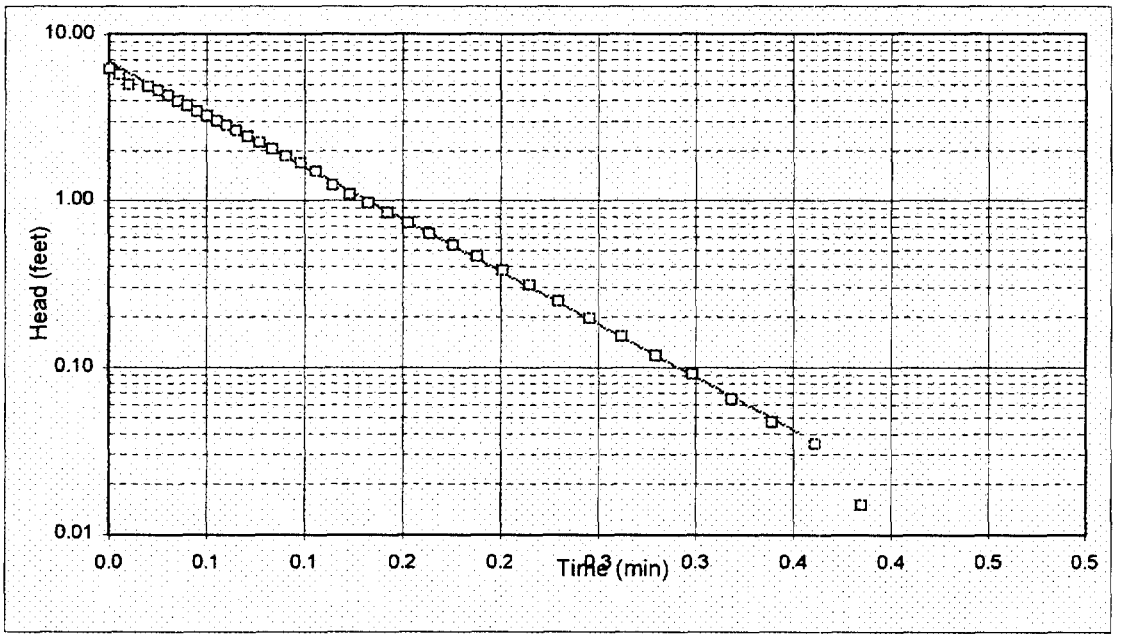

Project Name: PSE&G/HARRISON/NJ
Project No.: 953-6306
Test Date: 07/26/96

Analysis By: SN
Checked By:
Analysis Date: 1/2/97

BOUWER AND RICE SLUG TEST ANALYSIS
RISING HEAD TEST PZ-7A

$$K = \frac{r_c^2 \ln\left(\frac{R_e}{r_w}\right)}{2L_e} \frac{1}{t} \ln \frac{y_0}{y_t}$$

where:

r_c = casing radius (feet);
R_e = effective radius (feet);
L_e = length of screened interval (feet);
r_w = radial distance to undisturbed aquifer (feet)
y_0 = initial drawdown (feet)
y_t = drawdown (feet) at time t (minutes)

INPUT PARAMETERS		RESULTS		
r_c =	0.08			
r_w =	0.29			
L_e =	10	K=	1.51E-03	cm/sec
$\ln(R_e/r_w)$=	2.71	K=	4.29E+00	ft/day
y_0 =	3.38			
y_t =	0.01			
t =	2.0			

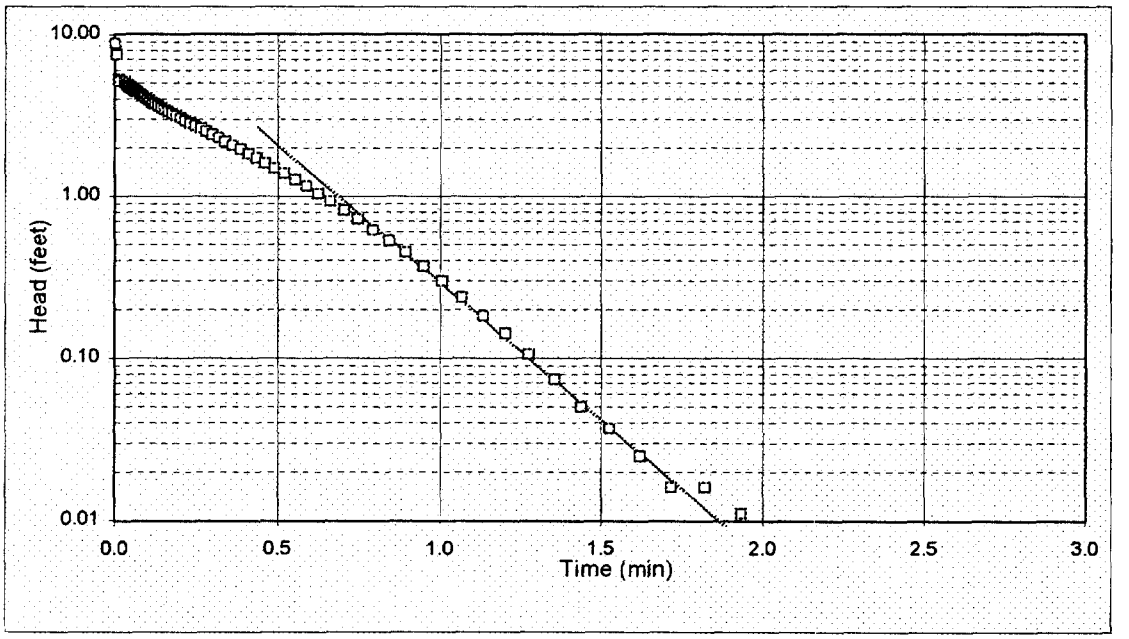

Project Name: PSE&G/HARRISON/NJ
Project No.: 953-6306
Test Date: 07/26/96

Analysis By: SN
Checked By:
Analysis Date: 1/2/97

BOUWER AND RICE SLUG TEST ANALYSIS
RISING HEAD TEST PZ-8A

$$K = \frac{r_c^2 \ln\left(\frac{R_e}{r_w}\right)}{2L_e} \frac{1}{t} \ln \frac{y_0}{y_t}$$

where:

r_c = casing radius (feet);
R_e = effective radius (feet);
L_e = length of screened interval (feet);
r_w = radial distance to undisturbed aquifer (feet)
y_0 = initial drawdown (feet)
y_t = drawdown (feet) at time t (minutes)

INPUT PARAMETERS		RESULTS		
r_c =	0.08			
r_w =	0.29			
L_e =	10	K=	3.36E-05	cm/sec
$\ln(R_e/r_w)$=	2.81	K=	9.51E-02	ft/day
y_0 =	4.15			
y_t =	0.04			
t =	69.2			

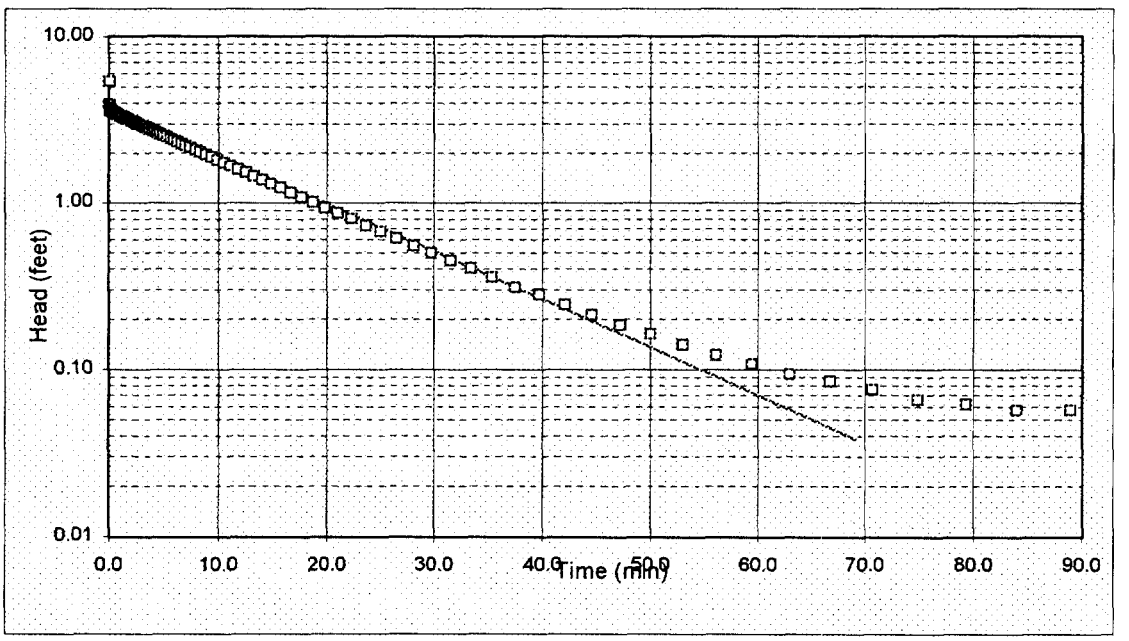

Project Name: PSE&G/HARRISON/NJ
Project No.: 953-6306
Test Date: 07/26/96

Analysis By: SN
Checked By:
Analysis Date: 1/2/97

BOUWER AND RICE SLUG TEST ANALYSIS
RISING HEAD TEST PZ-12A

$$K = \frac{r_c^2 \ln\left(\frac{R_e}{r_w}\right)}{2L_e} \frac{1}{t} \ln \frac{y_0}{y_t}$$

where:

r_c = casing radius (feet);
R_e = effective radius (feet);
L_e = length of screened interval (feet);
r_w = radial distance to undisturbed aquifer (feet)
y_0 = initial drawdown (feet)
y_t = drawdown (feet) at time t (minutes)

INPUT PARAMETERS		RESULTS		
r_c =	0.08			
r_w =	0.29			
L_e =	9.5	K=	6.07E-04	cm/sec
$\ln(R_e/r_w)$=	2.81	K=	1.72E+00	ft/day
y_0 =	6.50			
y_t =	0.02			
t =	4.8			

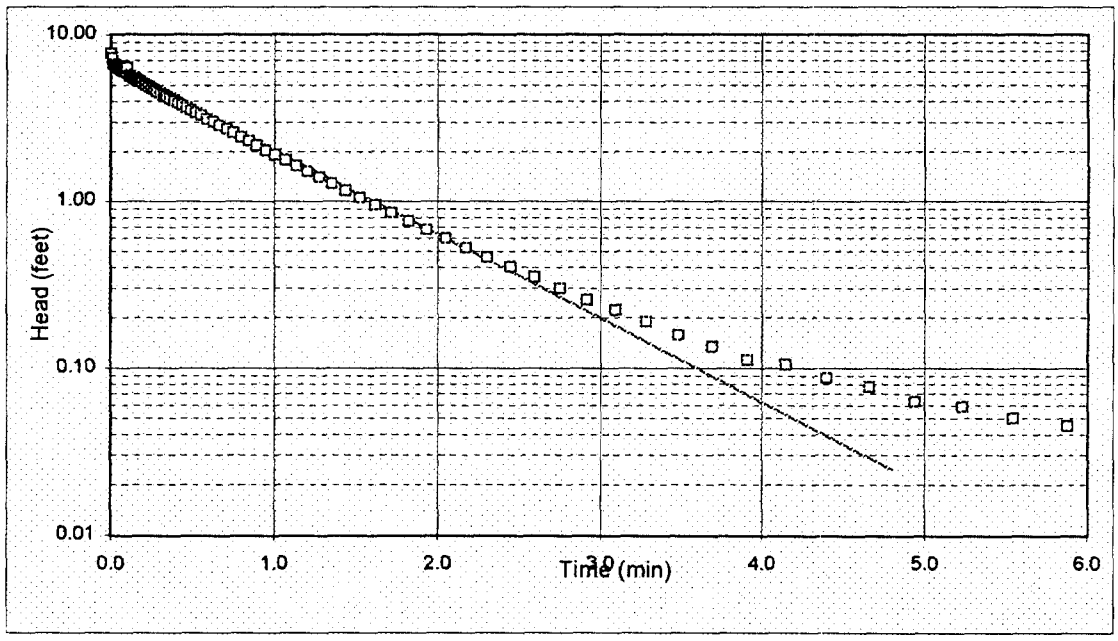

Project Name: PSE&G/HARRISON/NJ
Project No.: 953-6306
Test Date: 07/26/96

Analysis By: SN
Checked By:
Analysis Date: 1/2/97

Appendix H

849880333

Appendix H

Waste Characterization Analytical Results Package

Due to the volume of data, this appendix has been submitted as a separate package.

Appendix I

849880336

Appendix I

Groundwater Analytical Results Package

Due to the volume of data, this appendix has been submitted as a separate package.