ARCO Alaska, Inc.
Post Office Box 360
Anchorage, Alaska 99510
Telephone 907 277 5637

~~BETTY - CDS~~
SOURCE FILE
NSPS
CP F1

August 31, 1983

Mr. Mike Johnston
Chief, Air Operations Section
Region X
1200 Sixth Avenue
Seattle, Washington 98101

Mr. Doug Lowery
Regional Supervisor
Alaska Department of
Environmental Conservation
Pouch 1601
Fairbanks, Alaska 99707

SUBJECT: 1983 Compliance Test Plan - Kuparuk River Unit
PSD-X82-01
8336-AA002

Dear Sirs:

I have attached the 1983 test plan for NO_x compliance tests (Condition 6a, PSD X82-01) in the Kuparuk River Unit. These stack tests are scheduled to coincide with the Prudhoe Bay tests September 19-26, 1983.

The tests will be performed on a 14,000 HP turbine and a 10 million (MM) Btu/hr drill site heater by Chemecology Corp. Condition 6a of the PSD permit (referenced above) provides that a single heater may be tested and the test results submitted as representative of other similar drill site heaters. The attached test plan, submitted for your approval, proposes to use this approach by testing the one 10MM Btu/hr process heater.

Please contact me (907) 263-4307 if you have any questions regarding this test plan.

Sincerely,

Alan Schuyler

Alan J. Schuyler
Senior Engineer
Regulatory Compliance

AJS:tlh-0030

Attachment

USEPA REG
0000008

cc: D. Estes, ADEC-Juneau - w/attachment
L. Johnson, Chemecology - w/o attachment
S. Torok, EPA-Juneau - w/attachment

ARCO Alaska, Inc.
Post Office Box 360
Anchorage, Alaska 99510
Telephone 907 277 5637

~~Betty - PLEASE ENTER IN CDS & GET TO PAUL BOYS FOR HIS REVIEW~~

Wayne Your File: RCN DONE

August 31, 1983

Mr. Mike Johnston
Chief, Air Operations Section
Region X
1200 Sixth Avenue
Seattle, Washington 98101

Mr. Doug Lowery
Regional Supervisor
Alaska Department of
Environmental Conservation
Pouch 1601
Fairbanks, Alaska 99707

SUBJECT: Compliance Test Results - Kuparuk River Unit
PSD-X82-01
AQC-470B

Dear Sirs:

Please find a copy of the NO_x compliance tests performed on units P2101A and P2101B, turbine-driven water injection pumps, May 17-19, 1983 at the Kuparuk Central Production Facility #1. The Ruston TB-5000 turbines were tested by KVB, Inc. of Irvine, California and witnessed by Ron McAllister of the Department of Environmental Conservation.

If you have any questions, please contact me at (907) 263-4307.

Sincerely,

Alan Schuyler

Alan J. Schuyler
Senior Engineer
Regulatory Compliance

AJS:tlh-0031

Attachment

cc: D. Estes, ADEC-Juneau - w/attachment
R. McAllister, ADEC-Fairbanks - w/attachment
S. Torok, EPA-Juneau - w/attachment

EMISSIONS TEST REPORT

GASEOUS EMISSIONS CHARACTERIZATION OF A RUSTON TB5000 GAS TURBINE

PREPARED FOR:

RUSTON GAS TURBINES, INC.

HOUSTON, TEXAS

PREPARED BY:

D.A. PRODAN, P.E.

M.S. FISHER

KVB, INC.

WESTERN ENGINEERING DIVISION

AUGUST 1983

KVB71 66500-2052

A Research-Cottrell Company

CONTENTS

Section		Page
1.0	INTRODUCTION	1
2.0	UNIT DESCRIPTION AND OPERATION	2
3.0	EMISSIONS MEASUREMENT TECHNIQUES	4
	3.1 Calculation Techniques	4
	3.2 Quality Assurance Documentation	6
4.0	TEST RESULTS AND DISCUSSION	8
APPENDICES:		
A.	SAMPLING SYSTEM VERIFICATION - NO_2 CONSERVATION	13
B.	COLLECTION AND ANALYSIS METHODOLOGY OF PARTICULATE MATTER	22
C.	FUEL ANALYSIS AND CALCULATIONS	28
D.	CORRECTION FACTOR ANALYSIS - GAS TURBINE WORK	33
E.	INSTRUMENTATION QUALITY ASSURANCE CHECKS	40
F.	EPA PROTOCOL 1 CALIBRATION GAS CERTIFICATIONS FIELD CALIBRATION GAS ANALYSIS DATA SHEETS	64
G.	INSTRUMENT DATA SHEETS AND STRIP CHARTS	73
H.	CONTROL ROOM DATA SHEETS	107
I.	PARTICULATE DATA SHEETS	119
J.	GAS TURBINE NEW SOURCE PERFORMANCE STANDARDS	142

SECTION 1.0

INTRODUCTION

Ruston Gas Turbines, Inc., retained KVB, Inc., to perform emissions testing on two Ruston TB-5000 gas turbines located at an ARCO Alaska, Inc., production facility (CPF-1) in Kuparuk, Alaska. The purpose of these tests was to characterize the turbine's full load gaseous emissions when firing natural gas fuel and to comply with Condition 6A of the Kuparuk River unit's federal air quality permit PSD-X82-01 which requires U.S. Environmental Protection Agency (EPA) Method 20 NOx stack testing. Each turbine is used as a prime mover to operate a Bingham water injection pump with a nominal pumping capacity of 80,000 barrels of water per day. The turbine/pump unit is designed to operate the TB-5000 turbine at near 80% of turbine horsepower capacity, thus maximum production rates were tested in this test program--80% capacity (78,000 bbl/day) on P2202B and 83% (83,000 bbl/day) capacity on P2202A. Because of the advanced combustion design of the Ruston gas turbines, the low emissions that were measured were obtained without water or steam injection or other types of NOx reduction techniques. The stack exhaust constituents that were measured included NO, NO_2, O_2, CO, CO_2, particulates, and H_2O.

The turbines tested were Ruston TB-5000 combustion turbines nominally rated at 4900 bhp. A single load condition (base operating load) was proposed for testing during the program. Gaseous test data was collected from the exhaust stack through two ports at right angles to each other using a traverse of eight sampling points per port. Particulates were sampled isokinetically, also through the exhaust stack ports. Velocity and O_2 traverses were conducted through both ports for determination of any stratification.

This report details the results of testing conducted on May 17, 18, and 19, 1983. Section 2 provides a description of the turbines and their normal operating characteristics. Section 3 contains a discussion of the measurement techniques used in obtaining the emission measurements and a documentation of quality assurance. The test results are presented in Section 4.

SECTION 2.0

UNIT DESCRIPTION AND OPERATION

The Ruston type TB-5000 gas turbines tested at the ARCO Alaska facility in Kuparuk, Alaska are rated at 4900 bhp (ISO rating). The two turbines of concern, identified as P2202B and P2202A, were tested May 18 and 19, 1983, respectively. These turbines are linked with water injection pumps used to reinject the water produced with oil from the Kuparuk River oil field. The design of pump/turbine unit does not allow the turbine to run at 100% of turbine horsepower capacity. Under normal (maximum) operating conditions, the units are run at about 80% of turbine capacity. Figure 1A shows a skid mounted Ruston TB-5000 gas turbine. A cross-sectional view of the gas turbine is shown in Figure 1B. The gas turbine basically consists of an ambient air duct, air compressor, four combustion chambers, power turbine, exhaust duct, and the rotor shaft.

The full load, uninstalled operation of the gas turbine is discussed below. The air compressor receives ISO ambient air and discharges it at 102 psia. The compressed air then flows to the combustion chambers where the burners, firing gas, combust the fuel. The combustion products exit the chamber at a pressure and temperature of 95.9 psia and 1633°F (1163°K), respectively. The combustion gases drive the gas generator and power turbines after which they exit through the exhaust duct at a pressure and temperature of 14.7 psig and 944°F (780°K), respectively. The power turbine drives the rotor shaft at a nominal speed of 7950 revolutions per minute, delivering 4900 bhp.

Figure 1A. **Ruston TB5000 Type Gas Turbine (skid mounted)**

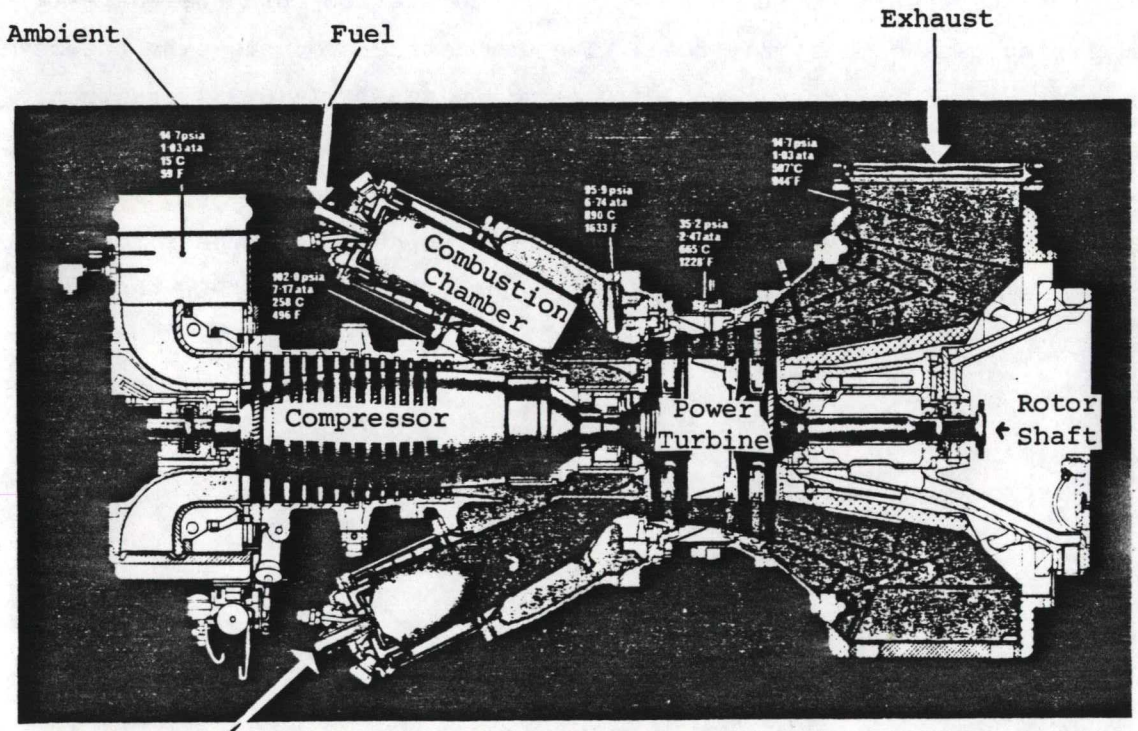

Figure 1B. **Ruston TB5000 Type Gas Turbine Cross Sectional View** KVB71 66500-2052

SECTION 3.0

EMISSIONS MEASUREMENT TECHNIQUES

Compliance testing for emissions of oxides of nitrogen was conducted by KVB, Inc., using a modified version of EPA Method 20. The modification was in the gas conditioner. This modification consisted of a water knockout at the stack followed by inert plastic sampling lines. Documentation of the accuracy of this method is included in Appendix A.

NOx, O_2, CO, and CO_2 were continuously monitored during each test. Unit P2202B testing consisted of three 15-minute runs for a total of 45 minutes of sampling. The gaseous emission concentrations were recorded every five minutes. Unit P2202A testing consisted of three separate 8-point traverse tests. A detailed drawing of the stack showing the port locations is presented in Figure 2. Sampling time at each point was seven minutes for a total test time of 168 minutes on Unit P2202A. Sampling points in each stack were determined using EPA Method 1.

Particulate emissions were measured using a wet impingement method on Unit P2202B and EPA Method 5 on Unit P2202A. The wet impingement method has been accepted by the South Coast Air Quality Management District (SCAQMD) for emissions testing in the South Coast Air Basin. This technique differs from EPA Method 5 in two ways. First, the probe is not heated; and second, the filter normally placed prior to the first impinger is located between the second and third impingers. In all other aspects, the methods are identical both in testing procedure and in sample analysis. For a more complete description of both methods, refer to Appendix B. Particulate sampling on the units consisted of two 3-hour tests each. The isokinetic proportional sampling was performed at a single point previously determined to be representative of the gas flow.

3.1 CALCULATION TECHNIQUES

During the test, a fuel gas sample was extracted from the gas manifold and analyzed (see Appendix C for gas analysis). A KVB computer program was used to determine the stack gas flow rates based on theoretical calculations. Appendix C contains these computer results.

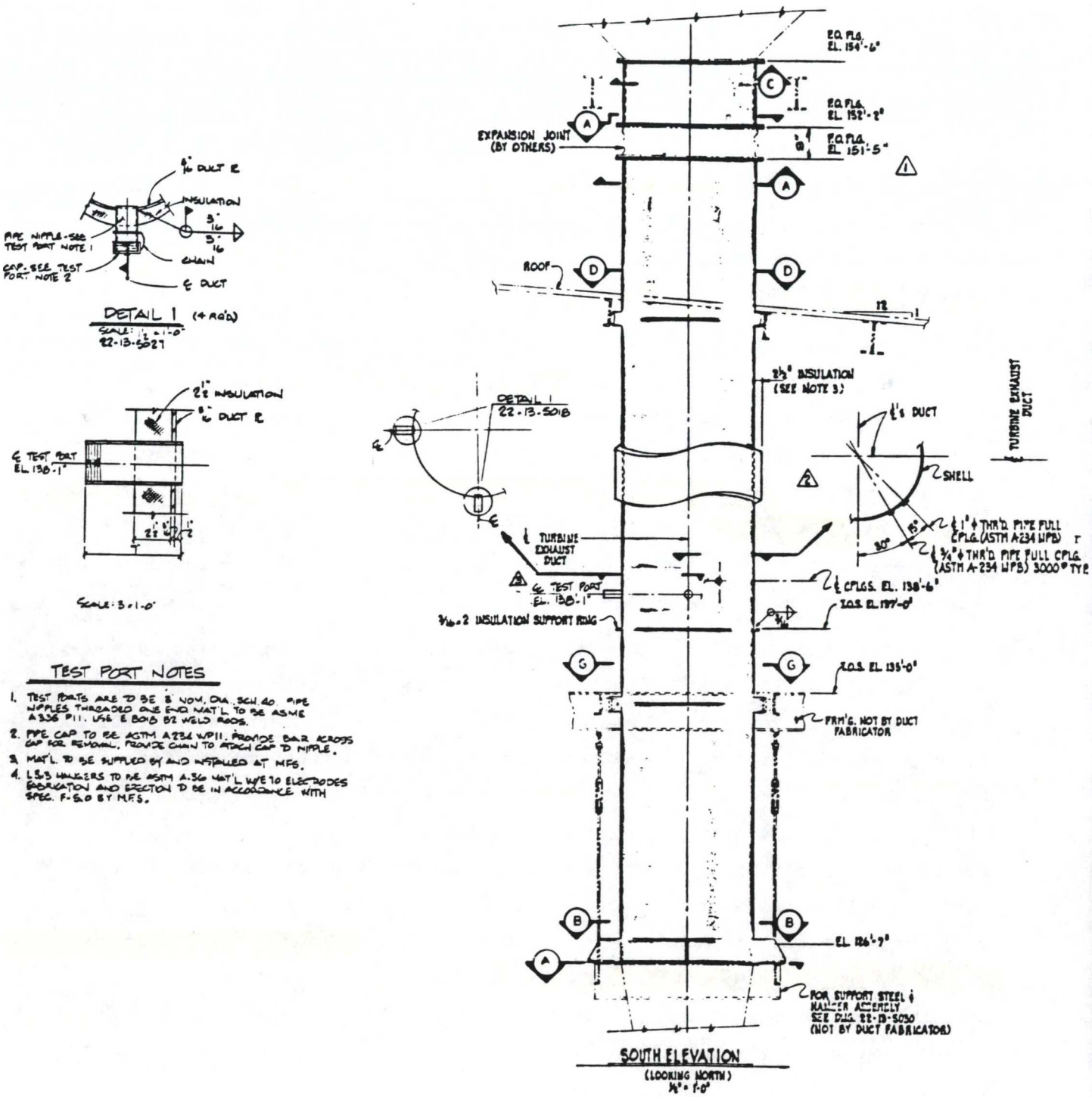

Figure 2. Stack detail showing port location.

The reported NOx emissions (lb/hr) are based on the moles of flue gas/cubic foot of gas fuel. The reported NOx emission rates were calculated using the following equation derived from basic combustion stoichiometry:

$$NOx\ (lb/hr) = \frac{NOx \times CO_2^{15} \times \dot{m} \times HHV \times 60 \times (20.95 - 3\%\ O_2)}{CO_2 \times (20.95 - 15\%\ O_2) \times K \times 10^6} \qquad (3\text{-}1)$$

where:

NOx = measured NOx, ppm, dry

CO_2^{15} = CO_2, % dry at 15% O_2

$\dot{m}$ = fuel flow, lb/min

HHV = fuel higher heating value, Btu/lb

CO_2 = measured CO_2, % dry

K = constant (calculated from computer results)*

The CO_2^{15} value was calculated using the stoichiometric CO_2 value determined from the fuel gas analysis computer program results (Appendix C). The stoichiometric CO_2 value was then corrected to 15% O_2. The fuel flows were calculated using the fuel flow calculation sheet supplied by ARCO Alaska. The fuel gas density supplied in the fuel analysis was taken into account when computing the flow rate.

It should be noted that these values were corrected to the CO_2 equivalent of 15% O_2. This was done based on a previous KVB study (Appendix D) which shows that for the levels of O_2 and CO_2 measured when testing a gas turbine, correcting to CO_2 is more accurate than correcting to O_2 (i.e,. when the stack O_2 is greater than 10%).

A sample calculation using Equation (3-1) is presented below:

Example: Test No. 3/1

Given: K = 835.0*

NOx = 39.3 ppm

CO_2^{15} = 3.52%

$\dot{m}$ = 25.92 lb/min

HHV = 22,400 Btu/lb

CO_2 = 2.33%

---

*See Appendix C for calculation of K values.

$$NOx\ (lb/hr) = \frac{(39.3)(3.52)(25.92)(22,400)(60)(17.95)}{(2.33)(5.95)(835.0)(10^6)}$$

$$NOx\ (lb/hr) = 7.5\ lb/hr$$

3.2 QUALITY ASSURANCE DOCUMENTATION

Appendix E contains all of the instrumentation quality assurance tests performed before and during the emissions tests. These included tests on the TECO Model 10AR NOx instrument contained in KVB's portable instrument package. These tests documented the linearity of the instrument using EPA Protocol 1 analyzed NOx calibration gases, linearity between the ranges on that instrument, converter efficiency checks, and interference data sheets provided by the manufacturer of the instrument.

Also included in this quality assurance procedure is an interference test on the Teledyne Model 325 oxygen analyzer using instrument zero gas and comparing the interference response when introducing 10% CO_2 into the analyzer. These tests indicated that there was no interference at this high level of CO_2 gas.

Appendix F contains the certifications of the EPA Protocol 1 analyzed NOx, CO, and CO_2 calibration gases and cross-certifications of the field NOx calibration gases using the EPA Protocol 1 gases, and includes the analysis data sheets to demonstrate that these gases were within specifications. The NOx EPA Protocol 1 gas was actually used in the field to calibrate the instrument for all the tests as the emission concentrations were within the zero to 100 ppm scale.

Appendix A contains documentation of KVB's internal quality assurance checks, demonstrating that the proposed technique for sample conditioning of stack gas minimized any possible loss of NO_2 occurring in the sampled gas. This documentation was performed in the laboratory at a much lower flow rate than normally encountered in the emissions portable package, and while some minor losses were encountered, it is anticipated that due to the much higher flow rate actually utilized during the test program, the gases would lose a negligible (i.e., less than 1 ppm) amount of NO_2.

Appendix G, in addition to the emissions data sheets, includes an O_2 traverse on Unit P2202B. This traverse was completed in order to demonstrate that the sample location contained a homogeneous composition of flue gas products.

SECTION 4.0

TEST RESULTS AND DISCUSSION

Emissions measurements were taken while operating the Ruston turbines at 80% (P2202B) and 83.8% (P2202A) of full rated load. This is the maximum production rate for which the turbine/injection pump unit is designed. Appendix H contains a summary table of all operating data, a pump design curve, and individual copies of the gas turbine operating data sheets for the emission tests conducted on May 18 and 19, 1983. These include all available pertinent turbine and pump operating parameters including fuel flow indication ($\sqrt{\Delta P}$), pump flow rate, pump suction and discharge pressure, turbine temperature and speed, and weather information. Appendix G contains all of the instrument data sheets for the test series and Appendix I contains particulate emission data sheets. The operating and emission data for the English units are summarized in Table 1, and the metric units are contained in Table 2.

Prior to obtaining NOx, O_2, CO, CO_2, particulate, and H_2O measurements on each unit, a velocity and O_2 traverse was completed. The results from these traverses are depicted in Appendix I and indicated that no stratification was present. Emission concentrations were uniform across the exhaust duct.

NOx emission concentrations, dry at 15% O_2, averaged 60.6 ppm for Unit P2202B, and 66.7 ppm for Unit P2202A. EPA Method 20 also contains an equation with which to calculate the NOx concentration at ISO standard dry conditions, and is presented as follows:

$$NOx = (NOx_{obs}) \left(\frac{P_{ref}}{P_{obs}}\right)^{0.5} e[19(H^{obs} - 0.00633)] \left(\frac{288°K}{T_{amb}}\right)^{1.53} \qquad (4\text{-}1)$$

As stated in EPA Method 20, the equation was incorrect in that the last term was presented as the inverse of the correct form. This revision is discussed in Appendix J. The equation accounts for specific humidity, and corrects to ISO standard conditions. Using Equation (4-1), average NOx emissions for the two units (15% O_2, ISO) are: 61.7 ppm for Unit P2202B and 67.0 ppm for Unit

TABLE 1. DATA SUMMARY - RUSTON GAS TURBINES TB-5000 GAS TURBINE TESTING AT ARCO'S KUPARUK FACILITY

ENGLISH UNITS

Test No.	Date 1983	Unit	Load %	Turbine Data: Fuel Rate lb/hr	Turbine Data: Outlet Temp °F	Turbine Data: Turbine/Pump RPM	Barometric Press. in. Hg.	Gaseous Emissions: NOx ppm Uncorr.	Gaseous Emissions: O_2 % dry	Gaseous Emissions: CO_2 % dry	Gaseous Emissions: CO ppm Uncorr.	Gaseous Emissions: NOx ppm at 15% O_2	Gaseous Emissions: NOx ppm† M-20	Gaseous Emissions: NOx lb/hr	Gaseous Emissions: CO ppm at 15% O_2	Gaseous Emissions: CO lb/hr	Particulate Emissions: gr/DSCF	Particulate Emissions: mg/DSCF	Particulate Emissions: lb/hr
1	5/18	P2202B	80.1	1565	814	5725	30.04	33.3	17.74	2.19	22	61.7	63.4	6.8	40.8	2.73	0.002	0.151	0.775
2-2 to 2-5*	5/18	P2202B	79.9	1565	820	5750	30.05	31.7	17.75	2.25	10	58.9	59.7	6.3	18.6	1.21	--	--	--
2-6 to 2-9*	5/18	P2202B	79.9	1565	820	5750	30.05	32.3	17.72	2.25	33.0	59.5	60.4	6.4	60.8	3.98	--	--	--
2-10 to 2-13*	5/18	P2202B	79.9	1565	820	5750	30.05	33.2	17.78	2.31	19.0	62.3	63.2	6.4	35.7	2.33	0.001	0.081	0.433
												14.9	67.2						
3-1*	5/19	P2202A	82.8	1555	856	5950	29.86	39.3	17.33	2.33	36.6	64.6	64.8	7.5	60.2	4.24	0.004	0.234	1.267
4-2*	5/19	P2202A	84.8	1555	860	6000	29.74	38.8	17.95	2.25	25.1	77.0	77.5	7.6	49.8	3.01	--	--	--
4-3*	5/19	P2202A	83.7	1555	853	6000	29.8	38.5	17.03	2.38	37.3	58.4	58.9	7.2	56.6	4.23	0.001	0.076	0.424

*EPA Method 20 test runs.

KVB71 66500-2052

$$^{\dagger}NOx_{ppm}\ (M\text{-}20) = (NOx_{obs}) \left(\frac{P_{ref}}{P_{obs}}\right)^{0.5} e[19(H^{obs} - 0.00633)] \left(\frac{288°K}{T_{amb}}\right)^{1.53}$$

Kaparuk Permit Limitations $NO_x = 150\ ppm\left(\frac{14.9}{Y}\right)$

$CO = 109\ lb/10^6\ cf$

TABLE 2. DATA SUMMARY - RUSTON GAS TURBINES TB-5000 GAS TURBINE TESTING AT ARCO'S KUPARUK FACILITY

METRIC UNITS

Test No.	Date 1983	Unit	Load %	Turbine Data: Fuel Rate Kg/hr	Turbine Data: Outlet Temp °K	Turbine Data: Turbine/ Pump RPM	Barometric Press. mm Hg.	Gaseous Emissions: NOx ppm Uncorr.	Gaseous Emissions: O_2 % dry	Gaseous Emissions: CO_2 % dry	Gaseous Emissions: CO ppm Uncorr.	Gaseous Emissions: NOx ppm at 15% O_2	Gaseous Emissions: NOx ppm† M-20	Gaseous Emissions: NOx Kg/hr x 10^3	Gaseous Emissions: CO ppm at 15% O_2	Gaseous Emissions: CO Kg/hr	Particulate Emissions: gr/DSCF	Particulate Emissions: mg/DSCF	Particulate Emissions: Kg/hr x 10^3
1	5/18	P2202B	80.1	3.45	708	5725	763	33.3	17.74	2.19	22	61.7	63.4	14.98	40.8	6.01	0.002	0.151	1.71
2-2 to 2-5*	5/18	P2202B	79.9	3.45	711	5750	763	31.7	17.75	2.25	10	58.9	59.7	13.88	18.6	2.67	--	--	--
2-6 to 2-9*	5/18	P2202B	79.9	3.45	711	5750	763	32.3	17.72	2.25	33.0	59.5	60.4	14.10	60.8	8.77	--	--	--
2-10 to 2-13*	5/18	P2202B	79.9	3.45	711	5750	763	33.2	17.78	2.31	19.0	62.3	63.2	14.10	35.7	5.13	0.001	0.081	0.95
3-1*	5/19	P2202A	82.8	3.43	731	5950	758	39.3	17.33	2.33	36.6	64.6	64.8	16.52	60.2	9.34	0.004	0.234	2.79
4-2*	5/19	P2202A	84.8	3.43	733	6000	755	38.8	17.95	2.25	25.1	77.0	77.5	16.74	49.8	6.63	--	--	--
4-3*	5/19	P2202A	83.7	3.43	729	6000	757	38.5	17.03	2.38	37.3	58.4	58.9	15.86	56.6	9.32	0.001	0.076	0.94

*EPA Method 20 test runs.

KVB71 66500-2052

$$^{\dagger}NOx_{ppm}\ (M\text{-}20) = (NOx_{obs}) \left(\frac{P_{ref}}{P_{obs}}\right)^{0.5} e[19(H^{obs} - 0.00633)] \left(\frac{288°K}{T_{amb}}\right)^{1.53}$$

P2202A. As expected, the two methods of obtaining NOx concentrations result in nearly identical values. The NOx mass emission rates calculated using Equation (3-1) are: 6.5 lb/hr and 7.4 lb/hr for Units P2202B and P2202A, respectively.

The CO emissions during the tests averaged 39 ppm (2.6 lb/hr) for Unit P2202B; and 56.5 ppm or 3.8 lb/hr for Unit P2202A. These values are typical values expected from this type and size of gas turbine utilizing natural gas fuel.

Particulate emissions were measured twice on each unit. The test data, calculations, and summary sheets are presented in Appendix I. The measured emissions on Unit P2202B averaged 0.116 mg/DSCF or 0.604 lb/hr and 0.155 mg/DSCF (0.846 lb/hr) on Unit P2202A. These low levels of particulate emissions were anticipated since natural gas was burned.

APPENDIX A

SAMPLING SYSTEM VERIFICATION

NO_2 CONSERVATION

TECHNICAL MEMORANDUM

TO:	PC71 Engineers and Technicians	DATE:	May 5, 1982
FROM:	R. D. Griffin	NO.:	TM71-R-1055
SUBJECT:	EPA METHOD 20; NO_2 SAMPLING VERIFICATION		
COPIES:	S. Hersh, S. Hunter, P. Thompson		

As a part of our on-going quality assurance program, a series of tests was run to verify that using a gas conditioner at the stack would not compromise our ability to measure NOx, specifically NO_2.

The sampling system outlined in my previous memo (TM71-R-1033) was set up in the lab. This is the sampling system used on all of our NOx compliance tests using instrumentation. A bottle of NO span gas and our Teco 100 NO_2 generator was used to provide the NO and NO_2 needed for the tests. A one-liter freeze-out originally containing 100 ml of water was installed in series between the NO_2 generator and the Teco NOx analyzer. This assembly is shown in Figure 1. Dry ice or rock salt and water ice is used to jacket the water freeze-out trap.

The only difference between this system and that used in our vans is that our vans pull sample gas at about 2 scfm whereas this system could only run at 3 scfh. This flow rate difference would mean that, during actual testing, the sample gas would be exposed to the ice for about 1/40 of the exposure time encountered in these tests.

These tests were run with the knockout/freeze-out trap (KO) in parallel with a KO bypass line. Total NOx and NO were determined by operating the Teco 10AR in either the NOx or NO mode; NO_2 was determined by difference. A NOx concentration consisting of 75 ppm NO and approximately 112 ppm NO_2 was generated for these tests.

KVB71 66500-2052

A summary of the 19 tests is given in Table 1. Table 2 itemizes the individual test data. A copy of the strip chart is given in Figure 2.

The results of these tests indicate that NO is completely conserved (as expected). NO_2 as measured by total NOx and NO_2 (by difference) is conserved in excess of 90% by this system. The 6 to 9 ppm NO_2 apparently lost (out of 112 ppm) across the water freeze-out trap is not considered significant since the rated accuracy is ± 2% of full scale (or ± 5 ppm on this range). Also, it is anticipated that at the much higher flow rates used in our vans, these apparent losses would be even lower.

Roger D. Griffin

RDG:gc

Attachments: As Noted

KVB71 66500-2052

TABLE 1. NOx/NO_2 TEST RESULTS SUMMARY
USING WATER FREEZE OUT CONDITIONER

	Average of Tests, ppm			
	Through KO	KO Bypassed	Δ	Test Numbers
NOx	180	186	6	8,10,14,16, 7,11,17
NO	75	75	0	18,19
NO_2	103	112	9	8/9,9/10,14/15, 11/12,17/18

Instrument: TECO 10AR

Range: 0 - 250 ppm

Rated Accuracy: ± 2% F.S.

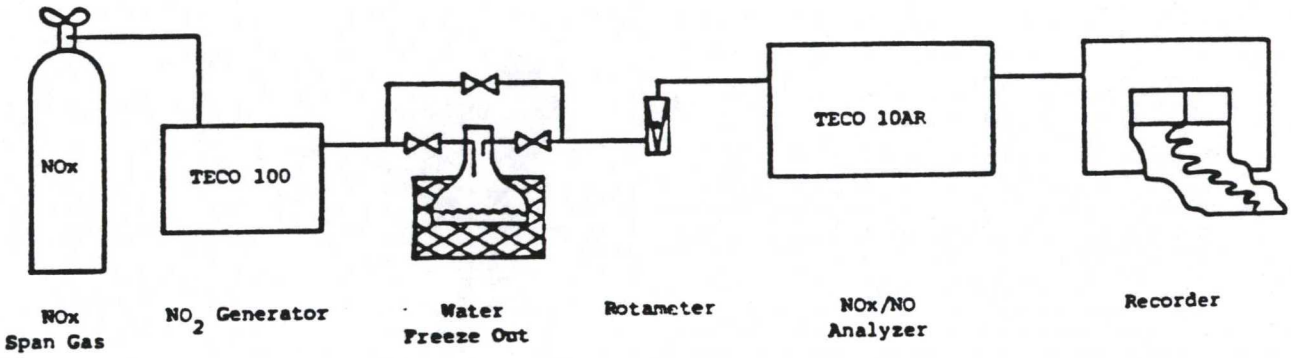

Figure 1. Instrumentation layout. NO_2 conservation using water freeze out.

TABLE 2. TEST DATA SUMMARY, NO_2 CONSERVATION ACROSS WATER FREEZE OUT TRAP
DECEMBER 10, 1981

	Teco 10AR NO/NOx Analyzer on 250 Scale (EN-575) - 3 SCFH																			
Test	1	2	3	4	5	6	6A	7	8	9	10	11	12	13	14	15	16	17	18	19
NO_2 Generator	Off	Off	Off	On	On	On	On	On	On	On	On	On	On	On	On	On	On	On	On	On
Through Flask	No	No	No	No	No	Yes	Yes	No	Yes	Yes	Yes	No	No	Yes	Yes	Yes	Yes	No	No	Yes
NOx, ppm	203	--	--	--	185	160*	175	185	178	--	178	185	--	--	183	--	180	187	--	--
NO, ppm	--	196	185	95	--	--	--	--	--	78	--	--	73	--	--	75	--	--	75	75
NO_2, ppm†	--	--	--	--	--	--	--	--	--	100	100	--	112	--	--	108	--	--	112	--
ΔNOx	--	--	--	--	--	--	--	10	7	--	--	7	--	--	--	--	--	7	--	--
ΔNO	--	--	--	--	--	--	--	--	--	--	--	--	--	--	--	--	--	--	--	0
Comments	Checking calibration		Diluted with air for NO_2 generation	NO_2 generator on		Water added	Ice forming		Solid ice					Stopper popped off		Jacketed with ice and rock salt				

*Average, unstable reading; water in flask added and swirled around.

†NO_2 from difference between consecutive readings.

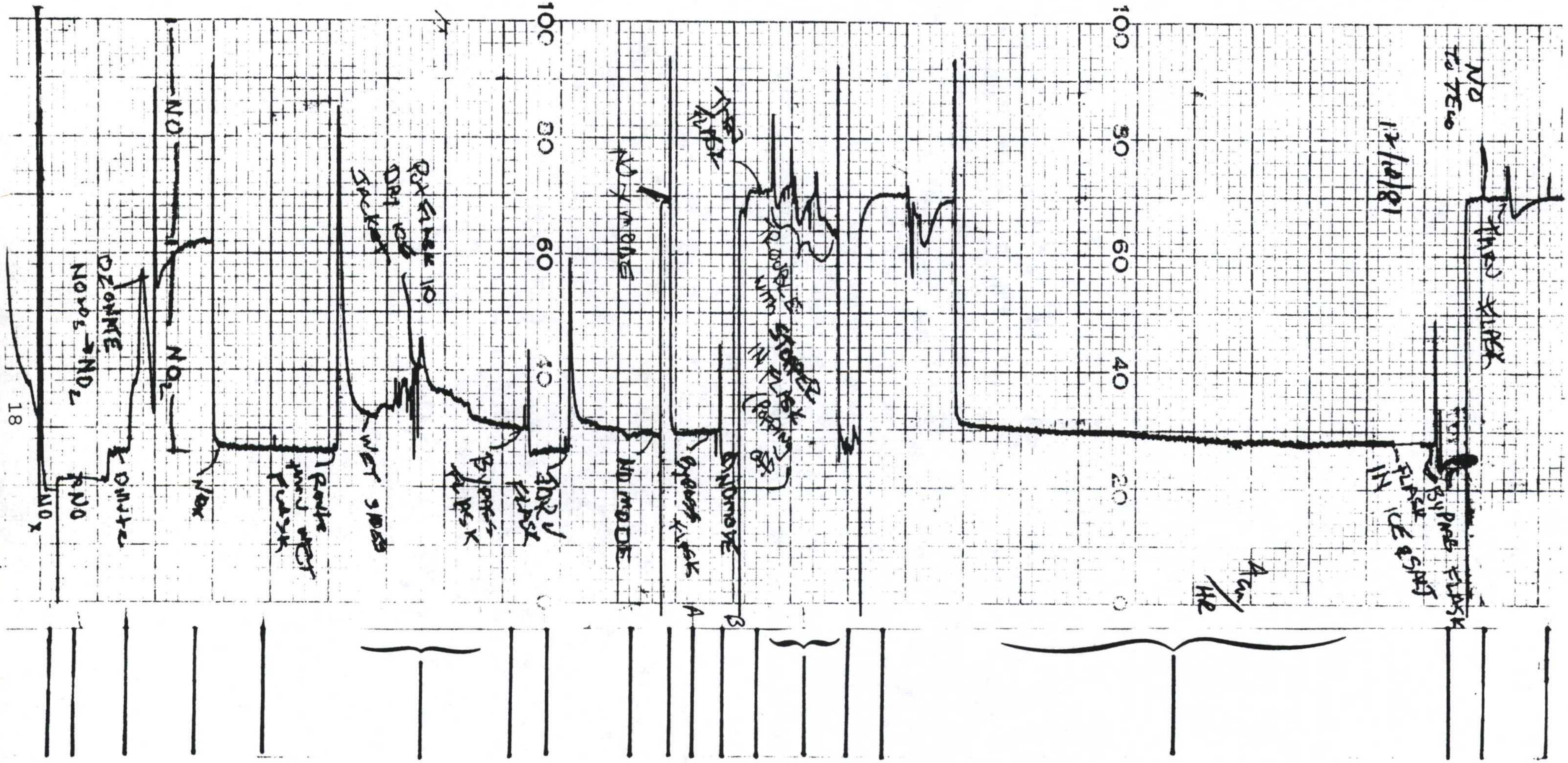

1 2 3 4 5 6 6A 7 8 9 10 11 12 13 14 15 16 17 18 19

Test No. →

Figure 2. NO_2/NOx using water freeze out - strip chart.

KVB

A Research-Cottrell Company

TECHNICAL MEMORANDUM

TO: PC71 Engineers and Technicians

DATE: December 11, 1981

FROM: R. D. Griffin

NO.: TM71-R-1033

SUBJECT: EPA METHOD 20 NOx TESTING - COMBUSTION TURBINES AND INTERNAL COMBUSTION ENGINES

COPIES: S. Hersh, S. Hunter, L. Muzio, P. Thompson

I spoke with Dr. Peter Westlin of EPA's Emissions Measurement Division at Research Triangle Park, (919) 541-2237 on December 10, 1981 regarding alternates to some problem areas with respect to performing a "pure" EPA Method 20 (Federal Register version, September 10, 1979). He said that the method will come up for extensive revision in 1982, but that alternative techniques were currently being reviewed. I outlined some of our alternative steps as listed below. He indicated that these would be acceptable alternatives to sampling in strict accordance with the requirements of EPA Method 20. The emphasis was on minimizing any possible loss of NO_2 in sampling and measurement.

1. Gas Conditioner at Stack

Our technique is to immediately follow the sampling probe with small-volume (0.5 to 1.0 liter) water knockouts: typically, Greenberg-Smith impingers with sawed-off tips. These knockouts are immersed in a bath of rock salt and ice (the ice container has a drain). This approach would freeze out any water on the sides and bottom of the knockouts and dry the gases to less than 0.5% moisture. (Rock salt and ice have a eutectic temperature of -20°C.) This approach, in addition to the high sample gas flow (typically 0.5 to 1.5 cfm), would minimize any possible NO_2 absorption. Dr. Westlin indicated that this approach would be acceptable.

2. Converter Efficiency

Rather than using bottled gases of NO_2 in nitrogen, which we have found to be rather unstable, KVB is currently using a TECO Model 100 NOx generator to generate NO_2 from a bottle of NO span gas. Through a series of steps, the converter efficiency is measured directly by generating NO_2 from

the span gas, and then measuring that NO_2 readout as it goes into the TECO instrument (sampling in the NOx mode). Dr. Westlin indicated that this was acceptable, and that they would be recommending a similar alternative procedure sometime during 1982.

3. Precision Flow Divider

In order to lower the cost of using EPA Protocol 1 gases, and to establish the linearity of instruments, we would propose to use a precision flow divider; that is, an instrument that dilutes a certified bottle of span gas down to a lower level using dry nitrogen. This instrument would be cross-checked with EPA Protocol 1 gases at 30%, 60%, and 90% of full scale. The high span gas concentration would then be diluted using the flow divider and the results compared for each dilution point with the dilution ratio calculated from the chart data. From this verification, the accuracy of the precision flow divider would be documented, and the instrument could be used in the field both for providing multiple gas concentrations for different instrument ranges and establishing instrument linearity. Dr. Westlin indicated that this would also be acceptable if the documentation were available for compliance testing at the site.

4. Field Calibration Gases

Rather than use expensive EPA Protocol 1 gases in the field with possible loss of such gases overnight (i.e., a regulator valve left open), we would propose the use of span gases (±2% accuracy) which have been cross-certified against EPA Protocol 1 gases and then use those gases in the field. The linear curve would be set up using several EPA Protocol 1 gases (i.e., 30%, 60%, 90% F.S.), and the individual field gases would then be measured on that instrument. The concentration read on that chart vs. EPA Protocol 1 gases would then be used for the true and actual level of NOx concentration in the field sampling bottle. Again, Dr. Westlin indicated that this would be acceptable if documentation were available during the field testing.

Copies of a typical cross-certification check and the original EPA Protocol 1 gas certificate are attached to this memo, as well as a figure showing an acceptable sample handling schematic.

Roger D. Griffin

RDG:gc

Attachments: As Noted

APPENDIX B

COLLECTION AND ANALYSIS METHODOLOGY
OF PARTICULATE MATTER

SOUTH COAST AQMD

COLLECTION AND ANALYSIS OF PARTICULATE MATTER

4.1 SCOPE

Particulate matter concentrations in source emissions are determined gravimetrically after isokinetic sampling and removal of uncombined water.

4.2 METHOD SUMMARY

The methods listed below are considered to give equivalent results. However, in some cases one method may be more practical than another. Selection of the appropriate method will be determined by the source test team supervisor after evaluating the process involved, stack conditions, and the physical requirements of the test.

1. EPA Method 5, with both halves (probe and filter, impingers) included for processing.
2. "Modified EPA 5" - filter and impingers; equipment not rigorously following EPA description, but fractions collected under similar conditions. (See paragraph 4.3.2 for description details).
3. Wet Impingement Method (as defined in the L. A. County Source Test Manual) - wet impingement followed by ambient temperature filtration.

4.3 SAMPLING EQUIPMENT

4.3.1 EPA Method 5 - equipment with impingers are described in the Federal Register, Vol. 36, No. 247, pages 24888 - 24890. (December 23, 1971)
Note: The filter temperature can be critical; see paragraph 4.3.2(B) following.

4.3.2 "Modified EPA Method 5" - equipment may be arranged as shown in Figures 4.1 and 4.2. The following comments apply to the operation of the equipment:

A. Probe and Nozzle - may be maintained at a temperature no greater than 250°F (or the stack gas temperature) provided no condensed water is present.

B. Filter - the location and temperature of the filter can be critical, depending upon the composition of the stack gas and the definition of particulate matter to be collected and included. When tests are conducted for Federal NSPS requirements, the location and temperature of the filter shall be consistent with the Federal regulations. Several possibilities exist:

(1) If SO_3 (which completely converts to sulfuric acid on cooling) is ab-

sent in the gases, and SO_2 is absent or below 25 ppm, any convenient location (in or out of stack) may be used for the filter. The filter temperature must be maintained above the water dewpoint of the sampled gases, but no higher than the stack gas temperature.

(2) If SO_3 and/or SO_2 are present and it is desired not to include SO_3 (as sulfuric acid) in the reported particulate matter, the filter must be maintained at a temperature high enough to prevent collection of particulate sulfuric acid on the filter. In most cases, temperatures of 300-350°F are sufficient for concentrations of SO_3 not expected to exceed 50-100 ppm.

(3) When sulfuric acid is to be included in the reported particulate matter, the filter temperature should be maintained at a level not above 200°F; higher temperatures will result in loss of H_2SO_4 (This would require a secondary filter in cases where it is desired to use an in-stack filter for sampling stack gases over 225°F).

C. Impingers - three impingers are connected in series with glass, teflon or chemically resistant tubing. The impingers are of the standard Greenburg-Smith design. For high dust loadings, the first impinger may be modified by replacing the impinger tip with a straight section which extends to ½" from the bottom of the flask. The first and second impingers are each filled with 100 ml of distilled or deionized water. The third impinger is dry with a suitable thermometer mounted on the stem to read impinger gas temperature. Crushed or chipped ice is placed around the impingers to maintain a temperature of less than 70°F in the third impinger during the test. A fourth impinger filled with silica gel (optional) may be used to measure residual moisture and to maintain dry conditions at the meter and orifice. Note: When using silica gel, the vacuum must not exceed 10 in. Hg to prevent moisture loss from gel and possible damage to the gas meter when located upstream of the pump).

D. Metering System and Pump - an air-tight pump, dry gas meter,* calibrated orifice, and associated valves, gauges and interconnecting tubing are used as shown in Figure 4.2.

E. Pitot Tube and Thermocouple - a Type-S or equivalent pitot

*"Dry gas meter" means a calibrated dry gas meter with ±2% accuracy when compared to a wet test meter or a primary standard.

KVB71 66500-2052

tube and calibrated thermocouple potentiometer system may be attached to the sampling probe for continuous monitoring of stack gas velocity and temperature at each sampling point, when multi-point sampling is being conducted. The pitot tube-probe-thermocouple system must be calibrated for pitot tube coefficient prior to use.

4.3.3 **Wet Impingement** - equipment is arranged as shown in Figure 4.3. The probe and impingers are the same as described above in Method 2. The pump and meter portion of the system can be arranged either as shown in Figure 4.2 or 4.3. (The Figure 4.3 setup must be used if the pump is not of the leakless type). When using this setup, calibrate the dry gas meter at a series of vacuums and meter rates.

The pitot tube - thermocouple combination can resemble Method 2; however, for single-point sampling (frequently the case) a conveniently-fixed location (reference point) is used for monitoring the stack gas velocity and temperature. The relationship of the reference point gas velocity to average gas velocity is established during the velocity traverse described under 4.4.1.

4.4 SAMPLING PROCEDURES (METHODS 1, 2 and 3)

4.4.1 VELOCITY TRAVERSE AND SAMPLING POINTS

Measure stack diameter and determine minimum number of traverse points as described in EPA Method 1.* Mark pitot tube and measure stack gas velocity and temperature as described in EPA Method 2.* After the traverse is completed, the source test supervisor will determine whether multiple-point sampling is necessary or whether sampling at an average point(s) will suffice. Appendix I outlines average point(s) sampling criteria.

Select suitable nozzle size for isokinetic sampling, as shown in Table 4.1. Table 4.2 is used in order to apply pressure corrections when the meter is ahead of the pump, as in Fig. 4.3.

4.4.2 SAMPLING

(a) Leak check: each sampling train shall be checked for leaks before and after use. This can be done either by EPA procedures, or by sealing the end of the sampling probe (before insertion into the stack) and drawing a vacuum of 8" Hg on the train. On closing the pump outlet (or pump inlet of Fig. 4.3), no loss in vacuum should be noticeable within 15 seconds.

(b) Multiple-point sampling: prior to sampling, remove protective caps, and connect components of sampling train. Position the nozzle at the first traverse point with the tip pointing directly into the gas stream. Start the pump and adjust the flow to isokinetic conditions. Sample at each traverse point; sampling time must be the same for all points. Maintain isokinetic sampling throughout the entire test period. Record all required data on a sample

*Refer to Federal Register, Vol. 36, No. 247, Pages 24882-24885 (December 23, 1971).

KVB71 66500-2052

FIGURE 4.1

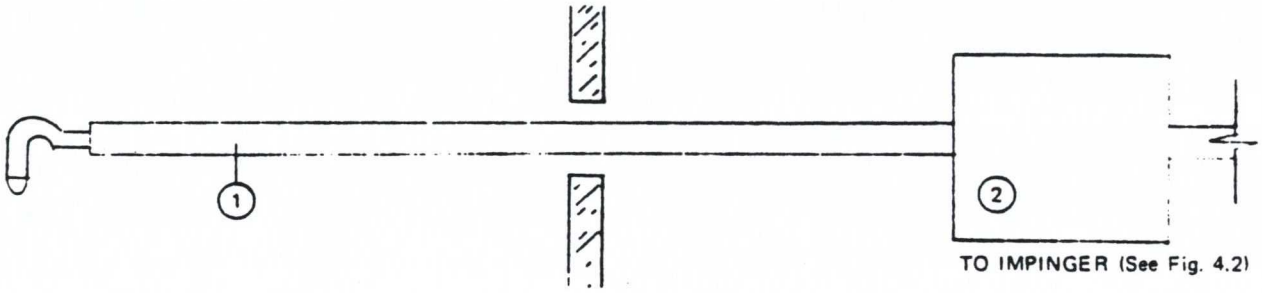

NOTES: (1) Probe and nozzle material of construction may be:

(a) Glass - Maximum 1000°F

(b) Stainless Steel - maximum 1400°F (some alloys higher)

(c) Quartz - for higher temperatrues

(d) Water-cooled stainless steel

(2) Filter media may be:

glass, quartz, or similar fiber in suitable holder maintained at a temperature not exceeding 200°F. Filter material should be chemically neutral.

(3) Filter may be located in stack; however, see Section 4.3.2 B. in procedure for limitations.

FIGURE 4.2

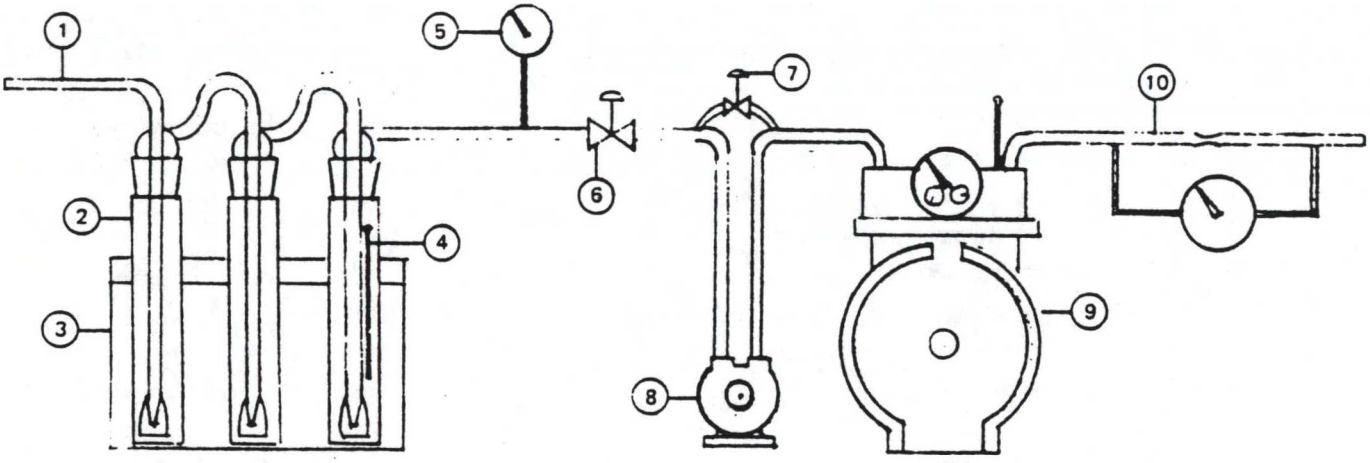

1. Sampling Probe from Filter; See Fig. 4.1
2. Impinger*
3. Ice Bath Container
4. Thermometer
5. Vacuum Gage
6. Main Valve
7. Control Valve
8. Vacuum Pump (Air Tight)
9. Dry Gas Meter
10. Orifice and Diff. Press. Gage (Magnehelic)

*Impinger Solution - Deionized or distilled water.

KVB71 66500-2052

FIGURE 4.3

Test No. _____ Page _____

Date _____

WET IMPINGEMENT SAMPLING TRAIN FOR PARTICULATES

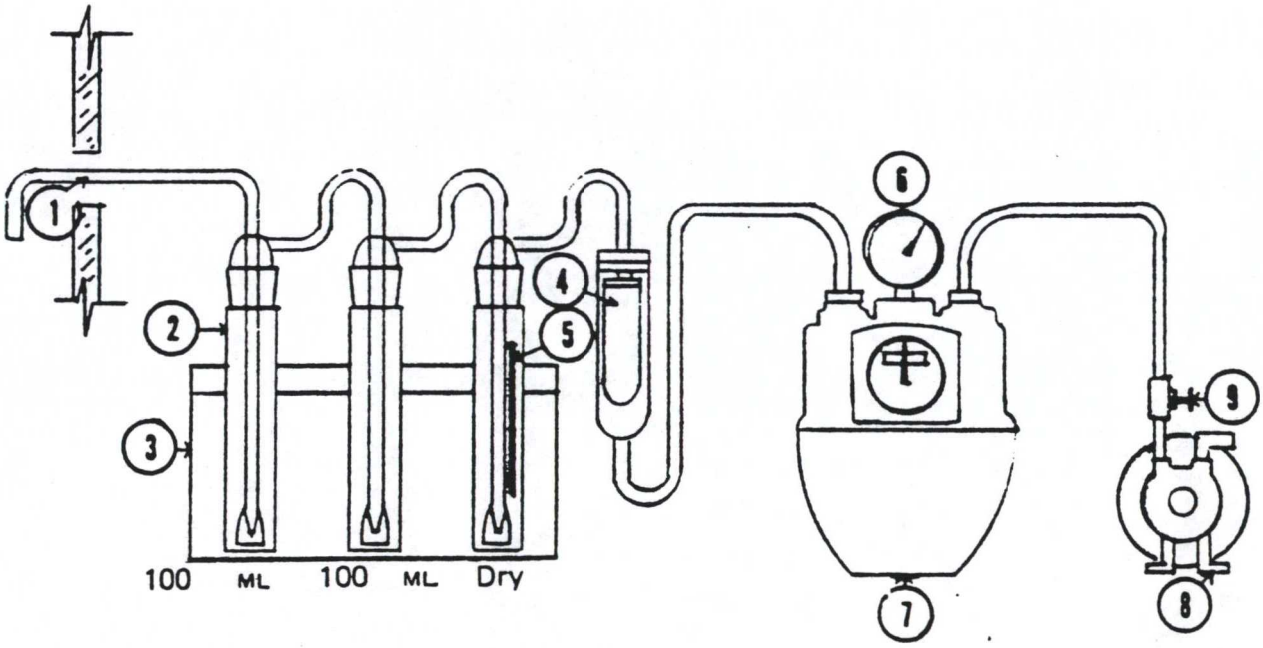

1. Sampling Probe (See Figure 4.1)
2. Impinger (Dust Concentration Sampler)
3. Ice Bath Container
4. Dry Filter Whatman, Millipore, or equivalent
5. Thermometer
6. Vacuum Gage (0-10 in. Hg)
7. Dry Gas Meter (temperature-compensated)*
8. Vacuum Pump
9. Valve to Control Gas Flow Rate

Impinger solution: Deionized or distilled water.

**If not temperature-compensated, a thermometer is necessary to read metered gas temperature.*

KVB71 66500-2052

APPENDIX C

FUEL ANALYSES AND CALCULATIONS

32

ARCO ALASKA, INC.
PRUDHOE BAY CENTRAL LABORATORY
ANALYSIS REPORT
****

01 JUN 1983

SAMPLE# E14207 ARCHIVE# G65J07:ZA

LOCATION, KUPARUK
COMPANY, ARCO
SAMPLE MONTH, DAY, YEAR, HOUR, SAMPLE POINT DESCRIPTION
5 19 1983 1200 RUSTON PUMP
SAMPLE DESCRIPTION
INLET GAS
TEMP, SAMPLE PSIG, LINE PSIG, METER#
** ** 150 **
REQUESTOR
AL SCHUYLER

PROPERTY	VALUE	
NITROGEN	.31	MOL %
#METHANE	84.2	MOL %
CARBON DIOXIDE	1	MOL %
&ETHANE	6.91	MOL %
PROPANE	5.01	MOL %
ISO-BUTANE	.63	MOL %
N-BUTANE	1.31	MOL %
ISO-PENTANE	.26	MOL %
N-PENTANE	.21	MOL %
C6+	.16	MOL %
HYDROGEN SULFIDE	**	
GROSS DRY (IDEAL GAS)	1188.1	BTU/CF
NET (IDEAL GAS)	1076.1	BTU/CF
GROSS SATURATED IDEAL	1167.5	BTU/CF
SP GRAVITY (CALC.)	.688	.....
SP GRAVITY (MEAS.)	**	

BTU VALUES ARE ON AN IDEAL BASIS AT 14.696 PSIA AND 60 DEG F

COMMENTS:

COMPLETED BY.....
REVIEWED BY:.....

D.SAMPERT/L.HATSON
K.KEYS/F.LOVE
S.KRUSE/D.KILAND
LAB/PROJECT/FILE

KCM | WPM | CVC | AJ | JUN 03 1983 | REGULATORY COMPLIANCE | Info | Copy | Re-use | See Me | Handle | Dis-Cont | Circ. | File | CC | S.

KVB71 66500-2052

HP-67 KEYED CALCULATION SHEET

GASEOUS FUEL ANALYSIS

Test No. _____ Date May 19 1983 Location [illegible]

Unit No. _____ Fuel Nat Gas Fuel Sample No. _____

Fuel Sample Point Fuelgas Point Inlet Fuel Analysis by _____

Gas		% Volume	
CH_4	Methane	[illegible]	[STO][0]
C_2H_6	Ethane	[illegible]	[STO][1]
C_3H_8	Propane	[illegible]	[STO][2]
C_4H_{10}	Butane	[illegible]	[STO][3]
C_5H_{12}	Pentane	[illegible]	[STO][4]
C_2H_4	Ethylene	[illegible]	[STO][5]
C_3H_6	Propylene	[illegible]	[STO][6]
C_4H_8	Butylene	[illegible]	[STO][7]
C_5H_{10}	Pentylene	[illegible]	[STO][8]
C_2H_2	Acetylene	[illegible]	[STO][9]
			[f][P≷S]
C_6H_6	Benzene	[illegible]	[STO][0]
O_2	Oxygen	[illegible]	[STO][1]
N_2	Nitrogen	[illegible]	[STO][2]
CO_2	Carb. Diox.	[illegible]	[STO][3]
CO	Carb. Monox.	[illegible]	[STO][4]
H_2	Hydrogen	[illegible]	[STO][5]
			[f][P≷S]

Load "Gaseous Fuel Analysis I"

[A] Σ % Volume = [illegible]

$\frac{\text{CF Air}}{\text{CF Fuel}}$ = [illegible]

[B] $\frac{\text{Btu (HHV)}}{\text{CF Fuel}}$ = [illegible]

[C] $\frac{\text{CF } CO_2}{\text{CF Fuel}}$ = [illegible]

Load "Gaseous Fuel Analysis II"

[D] $\frac{\text{CF } H_2O}{\text{CF Fuel}}$ = [illegible]

[E] $\frac{\text{CF Prod}}{\text{CF Fuel}}$ = [illegible]

[A] $\frac{\text{lb Prod}}{\text{CF Fuel}}$ = [illegible]

Load "Gaseous Fuel Analysis III"

[B] $\frac{\text{SCF Air}}{10^6 \text{ Btu}}$ = [illegible] at 70 °F, 29.92 in. Hg

[R/S] $\frac{\text{WSCF Prod}}{10^6 \text{ Btu}}$ = [illegible]

[R/S] % Moisture = [illegible]

[R/S] $\frac{\text{DSCF Prod}}{10^6 \text{ Btu}}$ = [illegible]

[R/S] % CO_2, dry = [illegible]

[R/S] K = [illegible]
[R/S] K' = [illegible] } NO_x

[R/S] K = [illegible]
[R/S] K' = [illegible] } CO

[R/S] K = [illegible]
[R/S] K' = [illegible] } HC

[R/S] K = [illegible]
[R/S] K' = [illegible] } SO_x

$lb/10^6$ Btu = (ppm at 3% O_2)/K

ng/J = (ppm at 3% O_2)/K'

Data Sheet 6015-6 (Rev. 3)
8/10/78

KVB71 66500-2052

GAS FLOW RATE CALCULATION
RUSTON TURBINES/ARCO ALASKA

5/19/83

Gas Rate Calculator, Use Key 1 to Activate, Key 2 for a Hard Copy

Meter I.D. (inches), required	2.067
Orifice Size (inches), required	1.125
Taps Location - U=Upstream D=Downstream, required	D
Temperature (°F), required	78
Differential Pressure ("H_2O), required	55.000
Static Pressure (psig), required	152
Gas Gravity	0.70000
Gas Viscosity (CP)	0.01600
Ratio of Specific Heat	1.300
Gas Rate at Base Conditions (MSCFD)	716.7
C' - Orifice Flow Constant	326.6
Basic Orifice Factor	271.7
Reynolds Number Factor	1.00096
Expansion Factor	1.00211
Pressure Base Factor	1.00546
Temperature Base Factor	1.00000
Flowing Temperature Factor	0.98313
Specific Gravity Factor	1.19523
Super Compressibility Factor	1.01435
Gauge Location Factor	1.00000

KVB71 66500-2052

GAS FLOW RATE CALCULATION
RUSTON TURBINES/ARCO ALASKA

5/20/83

Gas Rate Calculator, Use Key 1 to Activate, Key 2 for a Hard Copy

Meter I.D. (inches), required	2.067
Orifice Size (inches), required	1.125
Taps Location - U=Upstream D=Downstream, required	D
Temperature (°F), required	78
Differential Pressure ("H_2O), required	55.000
Static Pressure (psig), required	152
Gas Gravity	0.70000
Gas Viscosity (CP)	0.01600
Ratio of Specific Heat	1.300
Gas Rate at Base Conditions (MSCFD)	712.1
C' - Orifice Flow Constant	324.5
Basic Orifice Factor	271.7
Reynolds Number Factor	1.00096
Expansion Factor	0.99557
Pressure Base Factor	1.00546
Temperature Base Factor	1.00000
Flowing Temperature Factor	0.98313
Specific Gravity Factor	1.19523
Super Compressibility Factor	1.01435
Gauge Location Factor	1.00000

KVB71 66500-2052

APPENDIX D

CORRECTION FACTOR ANALYSIS
GAS TURBINE WORK

KVB71 66500-2052

CORRECTION FACTOR ANALYSIS
GAS TURBINE WORK

C.1. GENERAL CONSIDERATIONS

A common practice in evaluating gaseous pollutant data is to "correct" the raw data analyzed in the stack or exhaust to some standardized level of excess air or oxygen (O_2). Typically this standard excess air or oxygen level is specific to the type of equipment, and may even be written into emission regulations (i.e., for utility boilers in Southern California, NOx would be expressed: NOx, as NO_2, ppm at 3% oxygen). After 1982, new gas turbines will be NOx limited to either 75 or 150 ppm at 15% oxygen depending on location and unit size by the EPA.

This excess air correction technique is used to allow direct comparison of pollutant emissions from different engines, fuels, loads, etc. on a $lb/10^6$ Btu basis or a lb/1000 lb of fuel basis. This comparison is easily done if a standard excess oxygen level is used in conjunction with knowledge of the fuel analysis and the measured concentration of the pollutant in ppm. If the fuel flow is also known, then the mass emission rate (lb/hr) can also be easily calculated and compared on a common basis.

In order for these comparisons to be valid, accurate measurements of the "correcting" parameter are crucial. For any given fuel burned in the presence of air, basic chemistry allows the determination of a characteristic O_2 vs. CO_2 curve specific to that fuel. Thus, if one of the two measurements (O_2 or CO_2) is more accurate, then that parameter would be more appropriate for determining the excess air correction factor.

This appendix will put into perspective the errors associated with different methods of determining the correcting factor used to provide data calculated at a standard percent excess air or excess oxygen.

C.2 INSTRUMENTATION RANGES

Typically, gas turbines such as those used at Ellwood with liquid fuels will operate over a range of 1% excess oxygen (i.e., 17 to 18% O_2 in exhaust gases) from base load to half load. For these same conditions, the carbon dioxide (CO_2) levels will vary from 3% to 2%.

These operating ranges determine what scales are to be used in the O_2 and CO_2 instrumentation. For oxygen, the usual range is 0-25% O_2 with air (at 20.95% O_2) being used as the calibration standard. For carbon dioxide, the required range would be 0-5% with a certified CO_2 calibration gas at about 4.0% CO_2.

With this information, the relative accuracy of reading the correct O_2 or CO_2 can be evaluated. With a change of 1.0% oxygen in going from low load to base load, the instrument will change only 1.0% O_2/25% O_2, which corresponds to only four divisions on the 100-division chart.

The CO_2 also typically changes 1.0% in going from low load to base load. However, the instrument will show a change of 1.0% CO_2/5.0% CO_2, which corresponds to 20 divisions on the 100-division chart.

A comparison of these two results indicates that for gas turbines the CO_2 is 20/4 = 5 times more accurate than O_2 for any given load on the turbine. This accuracy is clearly seen in Figure C-1 where, over the course of the program, the CO_2 levels vs. load (MW) are consistent and highly repeatable. Using these load vs. CO_2 curves and the fuel-specific CO_2 vs. O_2 curves, any given data at a load can be much more accurately corrected using the CO_2 values corresponding to the standard percent excess air or percent excess oxygen.

C.3 UNCERTAINTY ANALYSIS

As mentioned previously, there are two methods of correcting data to a standard excess air percentage: either by the measured excess oxygen found in the exhaust gases at the sampling point, or by using the measured carbon dioxide (CO_2) in the exhaust gases. This section presents an analytical treatment of which technique is more appropriate for gas turbine exhaust gases, using an uncertainty analysis.

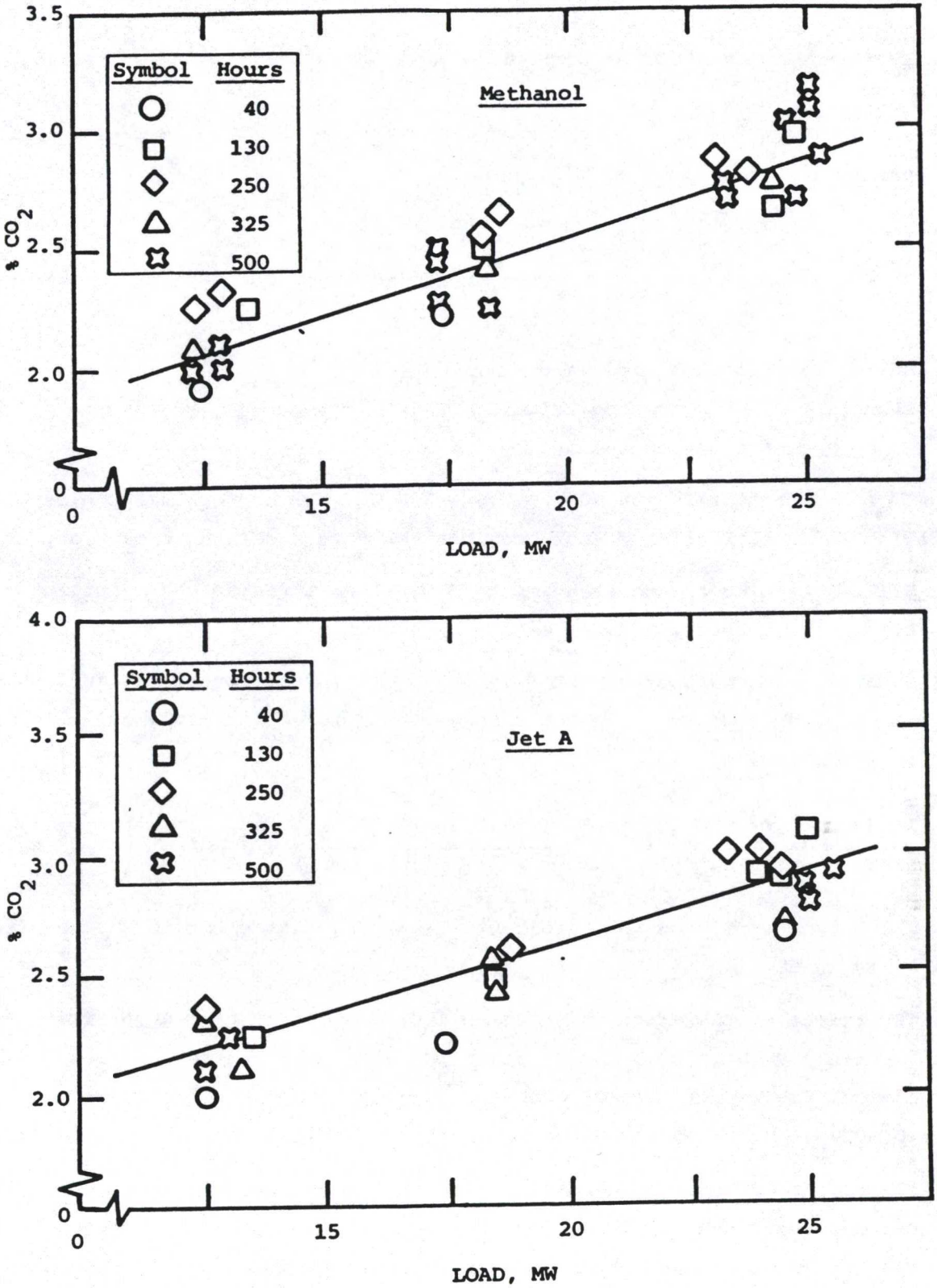

Figure C-1. CO_2 vs. load.

KVB71 66500-2052

There are two methods of correcting NOx (measured) to NOx (corrected) at 15% O_2:

Method 1 $$NO_c = NO_m \frac{21 - 15}{21 - O_2} \quad (1)$$

Method 2 $$NO_c = NO_m \frac{(\%\ CO_2 \text{ at } 15\%\ O_2)}{\%\ CO_{2_m}} \quad (1)$$

where

subscript m = measured value

subscript c = corrected value

21 = percent oxygen in air

If the uncertainties in NO_m, % O_2, and % CO_2 are known, the problem is to decide which correction factor provides the more accurate correction.

Differentiation and rearrangement of Equation 1 yields the resultant uncertainty in the correction using excess oxygen.

The resultant percent uncertainty in NO_c as a function of percent uncertainties in NO_m, % O_2 measured, and the value taken for O_2 in air (nominally 21%) is derived to be:

$$\left(\frac{\%\ W_{NO_c}}{NO_c}\right)^2 = \left(\frac{\%\ W_{NO_m}}{NO_m}\right)^2 + \left[\frac{21\ (15 - O_2)}{(21 - 15)(21 - O_2)}\right]^2 \left(\frac{\%\ W_{21}}{21}\right)^2 + \left(\frac{O_2}{21 - O_2}\right)^2 \left(\frac{\%\ W_{O_2}}{O_2}\right)^2$$

The effect of NO_m on NO_c is direct. That is, a 1% error in NO_m results in a 1% error in NO_c.

The effect of the exact value taken for 21, percent oxygen in air, is small. Values between 20.9 and 21 are used in various references. At KVB, 21 is used most frequently. The Handbook of Chemistry and Physics gives 20.946 ± 0.002. A value of 20.95 appears most appropriate for all corrections.

The effect of error in percent O_2 is a strong function of the level of O_2. Figure C-2 shows the amplification factor, $O_2/(21 - O_2)$ as a function of percent O_2. At an O_2 of 10.5% or below, the percent error in NO_c is less than the percent error in O_2. For O_2 over 10.5%, the error in NO_c is sharply

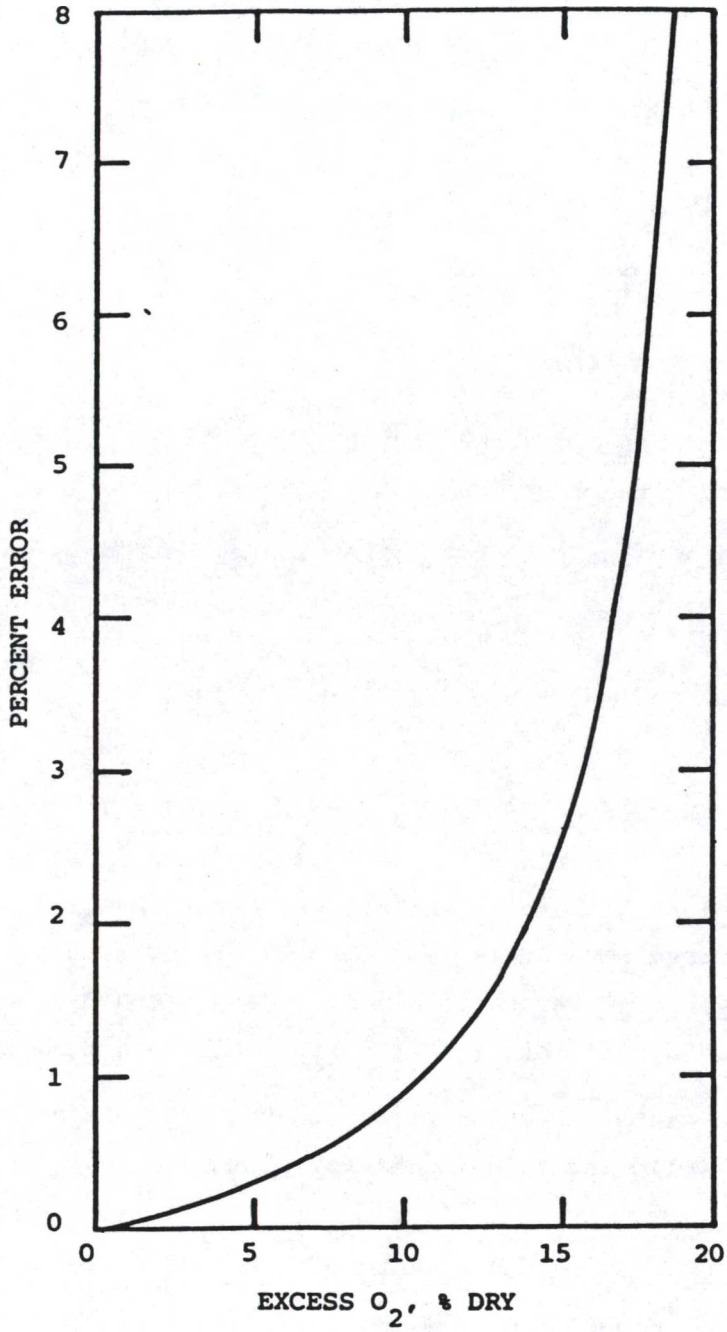

Figure C-2. Uncertainty in corrected NOx.

KVB71 66500-2052

increased as O_2 increases. At 17% O_2, typical of gas turbine exhaust, the percent error in NO_c is over four times the percent error in O_2. For example, a 5% error in percent O_2 (17 ± 0.85% O_2) will result in a 21.5% error in NO_c. If, in addition, there is a 1% error in NO_m, the error in NO_c is:

$$\left(\frac{\% W_{NO_c}}{NO_c}\right)^2 = (1)^2 + (4.3)^2 (5)^2 = 463$$

$$\frac{\% W_{NO_c}}{NO_c} = 21.5.$$

The O_2 error predominates and very accurate O_2 readings are necessary for reliable gas turbine data reduction.

The uncertainty analysis for correction by Method 2, using CO_2, results in:

$$\left(\frac{\% W_{NO_c}}{NO_c}\right)^2 = \left(\frac{\% W_{NO_m}}{NO_m}\right)^2 + \left(\frac{\% W_{CO_2}}{CO_2}\right)^2 + \left(\frac{\% W_{CO_2}}{CO_2}\right)^2 .$$

In contrast to O_2, the effect of CO_2 is direct; i.e., a 1% error in CO_2 results in a 1% error in NO_c. Comparison of the O_2 Method 1 and CO_2 Method 2 uncertainty analyses indicates that, <u>if</u> the percent error in O_2 and CO_2 are equal, Method 1 should be used when O_2 is less than 10.5% and <u>Method 2 should be used when O_2 is greater than 10.5%.</u> At a nominal 17% O_2 Method 2 should be used if the percent error in CO_2 is less than 4.3 times the percent error in O_2.

Application of the formulas presented requires estimates of the uncertainty in the following independent variables:

NO_m = measured NO, ppm, dry
O_{2_m} = measured O_2, %, dry
CO_{2_m} = measured CO_2, %, dry
% C = fuel carbon, % weight
% H = fuel hydrogen, % weight
% N = fuel nitrogen, % weight
% S = fuel sulfur, % weight
% O = fuel oxygen, % weight

APPENDIX E

INSTRUMENTATION QUALITY ASSURANCE CHECKS

11/5/82

TECO linearity Test on 0-100 scale FISHER

Blue Goose

Channel 1 = AAL - 4237 NO = 83.3 ; NO_x = 88.3

Channel 2 = AAL - 4676 Vehicle Emissions Zero Gas (N_2)

NO Readings Only

Precision Flow Divider

Flow Settings :

Point #	Channel 1	Channel 2	% NO	Theoretical Value	Obs. Value	Diff. 1 1	% of full scale
1	Ø	80.0	Ø	Ø	Ø	Ø	Ø
2	80.0	Ø	100%	83.3	83.3	Ø	Ø
3	20.0	60.0	25%	20.8	21.0	.2	.2%
4	40.0	40.0	50%	41.7	41.5	.2	.2%
5	60.0	20.0	75%	62.5	62.0	.5	.5%
6	60.0	30.0	67%	55.8	54.7	1.1	1.1%
7	30.0	60.0	33%	27.5	27.3	.2	.2%
8	Ø	80.0	Ø	Ø	.4	.4	.4%
9	90.0	Ø	100%	83.3	80.7	2.6	2.6%

1	Ø	90.0	Ø	Ø	Ø	Ø	Ø
2	90.0	Ø	100%	83.3	83.3	Ø	Ø
3	20.0	60.0	25%	20.8	20.3	.5	.5%
4	30.0	60.0	33%	27.5	27.3	.2	.2%
5	50.0	50.0	50%	41.7	41.0	.7	.7%
6	60.0	30.0	67%	55.8	55.0	.8	.8%
7	90.0	30.0	75%	62.5	61.9	.6	.6%
8	Ø	90.0	Ø	Ø	(< 0.0)	?	?
9	90.0	Ø	100%	83.3	82.7	.6	.7

KVB71 66500-2052

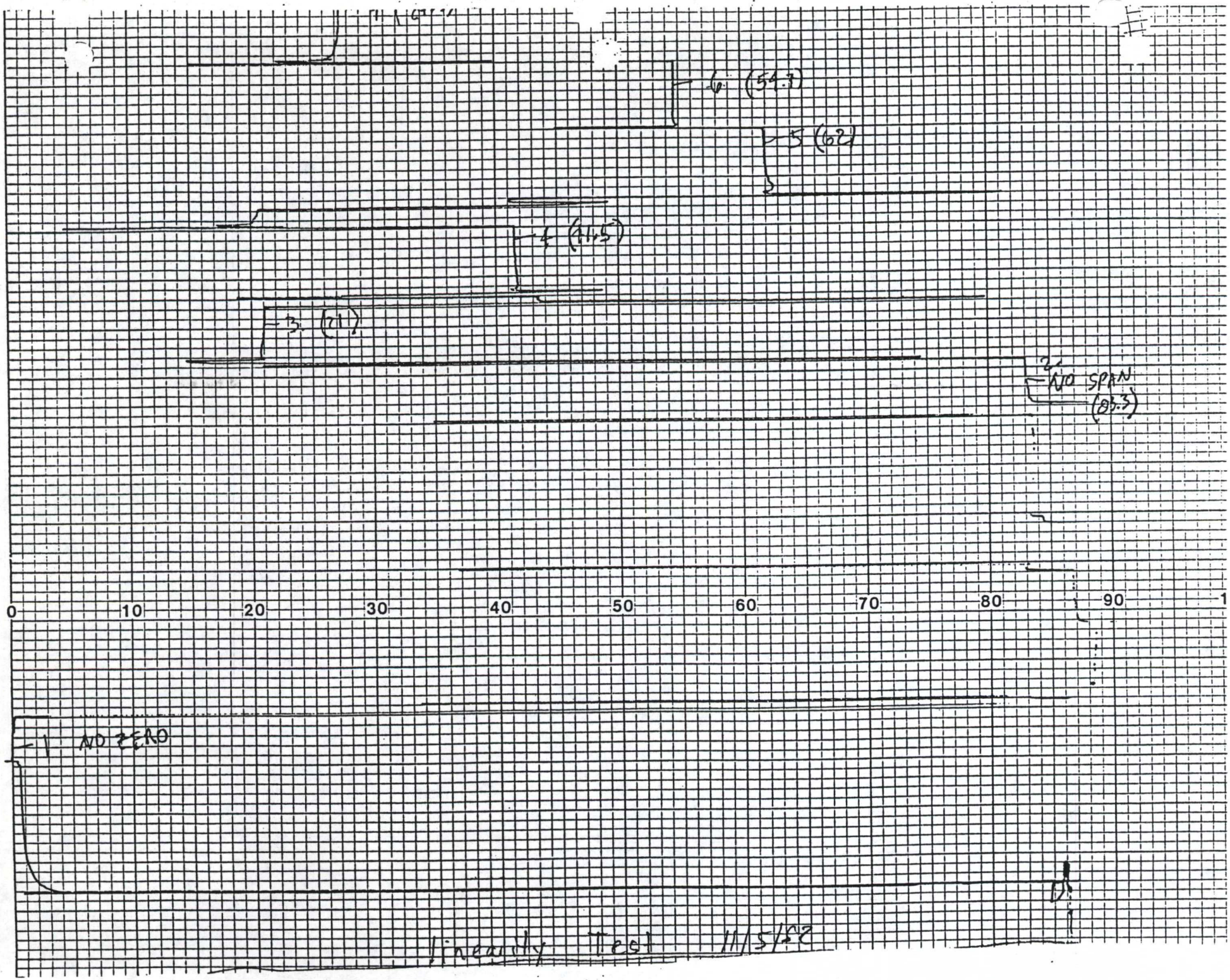
6 (54.7)
5 (62)
4 (41.5)
3 (21)
2 NO SPAN (03.3)
1 NO ZERO
0
10
20
30
40
50
60
70
80
90
1
Linearity Test 11/5/82

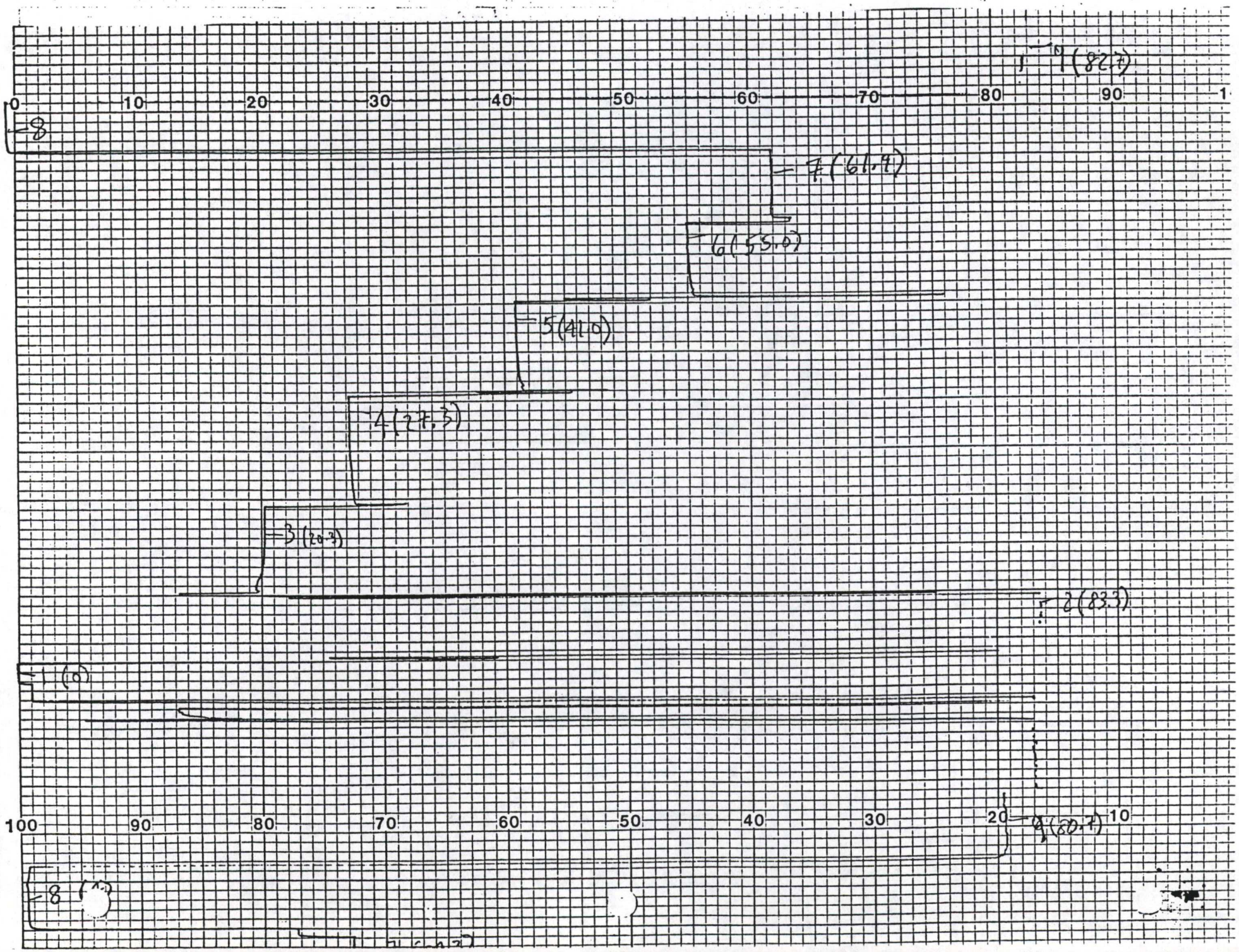

KVB71 66500-2052

ASTER FILE COPY

RECD
NOV 1 0 1981

INTERFERENCE RESPONSE TEST

DATE OF TEST January 18, 1980

ANALYZER TYPE 10AR (Range 0-2.5PPM) SERIAL NO. 10AR-0 14B-80

TEST GAS TYPE	CONCENTRATION PPM	ANALYZER OUTPUT RESPONSE	% OF SPAN
CO	500	< .1PPM	< .1%
SO_2	201	< .1PPM	< .1%
CO_2	10%	< .1PPM	< .1%
O_2	20.9%	< .1PPM	< .1%

Thermo Electron
ORATION

Sal Pardo
Field Service Manager
Western Region

Ref: EPA METHOD 20

nmental Instruments Division

ntiem Street
ego, California 92111
60-4145

I hope this will meet your

KVB71 66500-2052

FISHER

NO_x Converter Efficiency Test 11/5/82

Blue Goose

AAL-4237 $NO = 83.3$, $NO_x = 88.3$

AAL-4676 Vehicle Emissions Zero Gas (N_2)

AAL-4737 Blended Gas

TECO AR 10 Instrument (0-100 scale)

TECO 100 NO_x Generator

(7) SPAN

I (ii) No Span = 83.3 ppm

(iii) 10 % reduction = 74.5 ppm.

(iv) $NO + O_2 \rightarrow NO_2$ NO = 64.0 ppm; Variac @ 24.5

(v) NO_x = 78.3

(vi) NO_x = 78.4

$$\% \text{ Eff.} = \frac{78.3 - 64.0}{78.4 - 64.0}(100) = \frac{14.3}{14.4} \times 100 = \boxed{99.3}$$

(vii) NO = 85 ppm

II (i) SPAN / CALIBRATE

(ii) NO SPAN = 83.3 ppm

(iii) Dilute by ~10%, NO = 75.8 ppm

(iv) $NO + O_2 \rightarrow NO_2$, Variac @ 33, ~20% of (ii), NO = 15.7 ppm

(v) NO_x = 79.2

(vi) NO_x = 79.6

VII NO = 84.5

$$\frac{79.2 - 15.7}{79.6 - 15.7} \times 100 = \frac{63.5}{63.9} \times 100 = \boxed{99.4\%}$$

KVB71 66500-2052

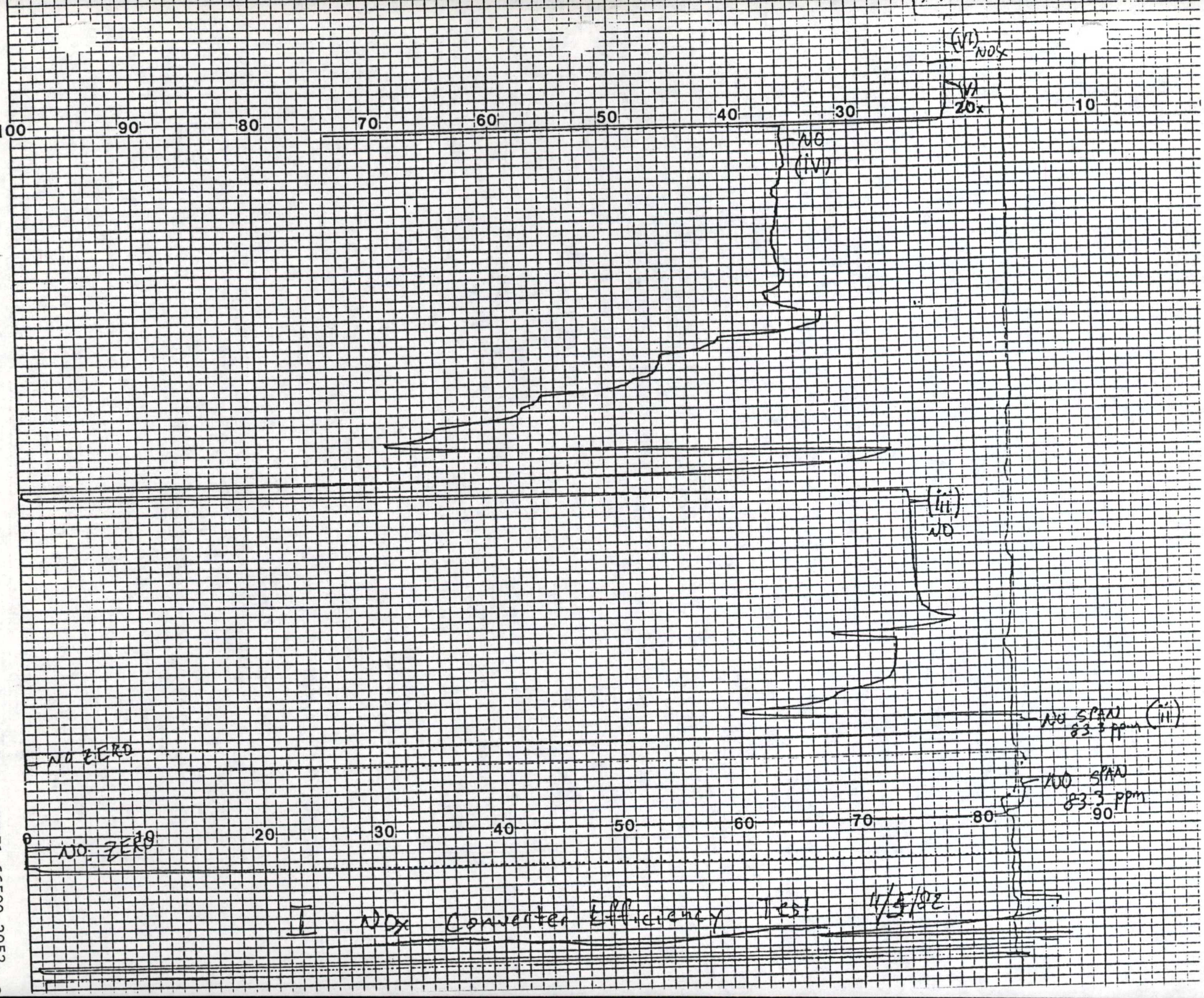

KVB71 66500-2052

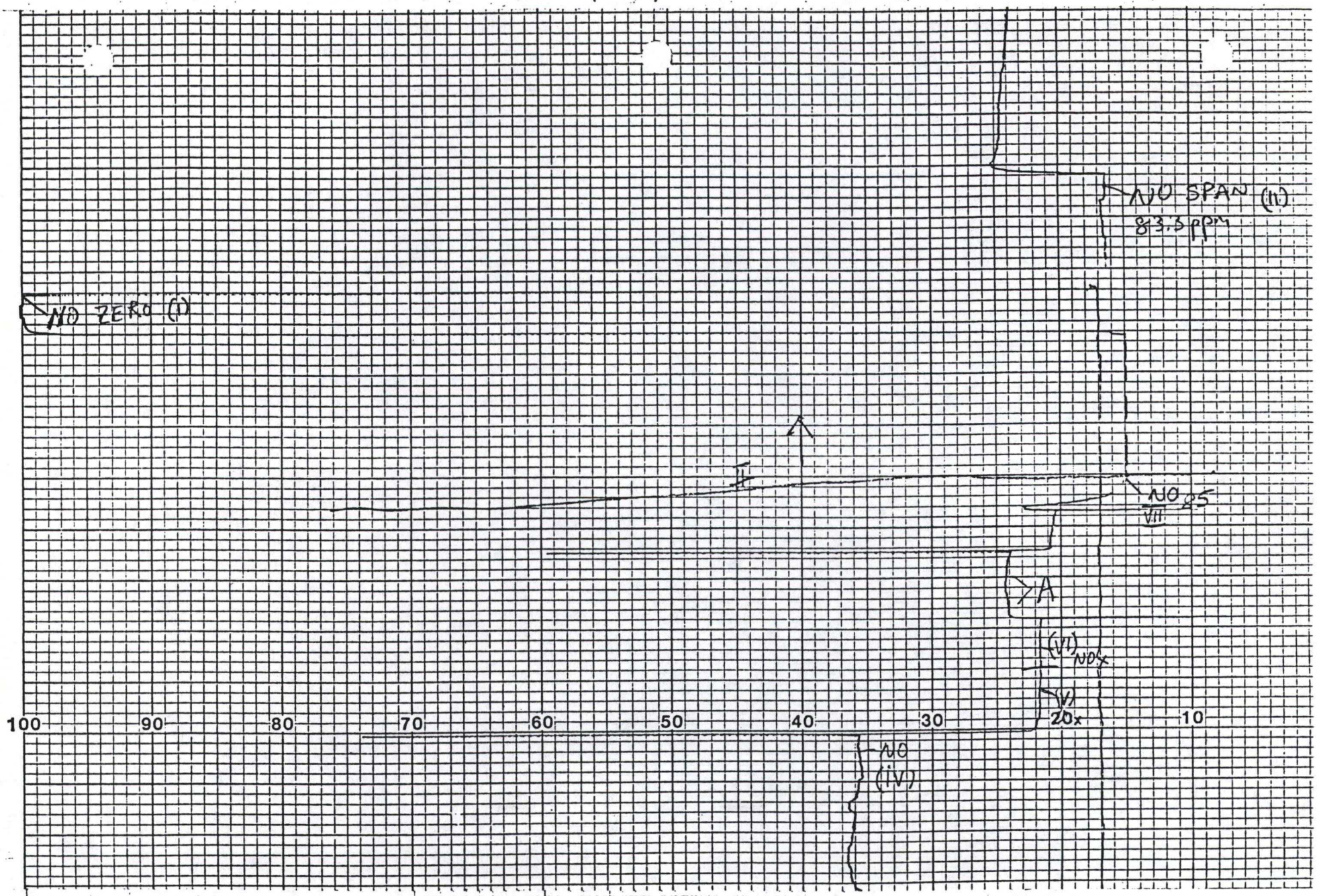

KVB71 66500-2052

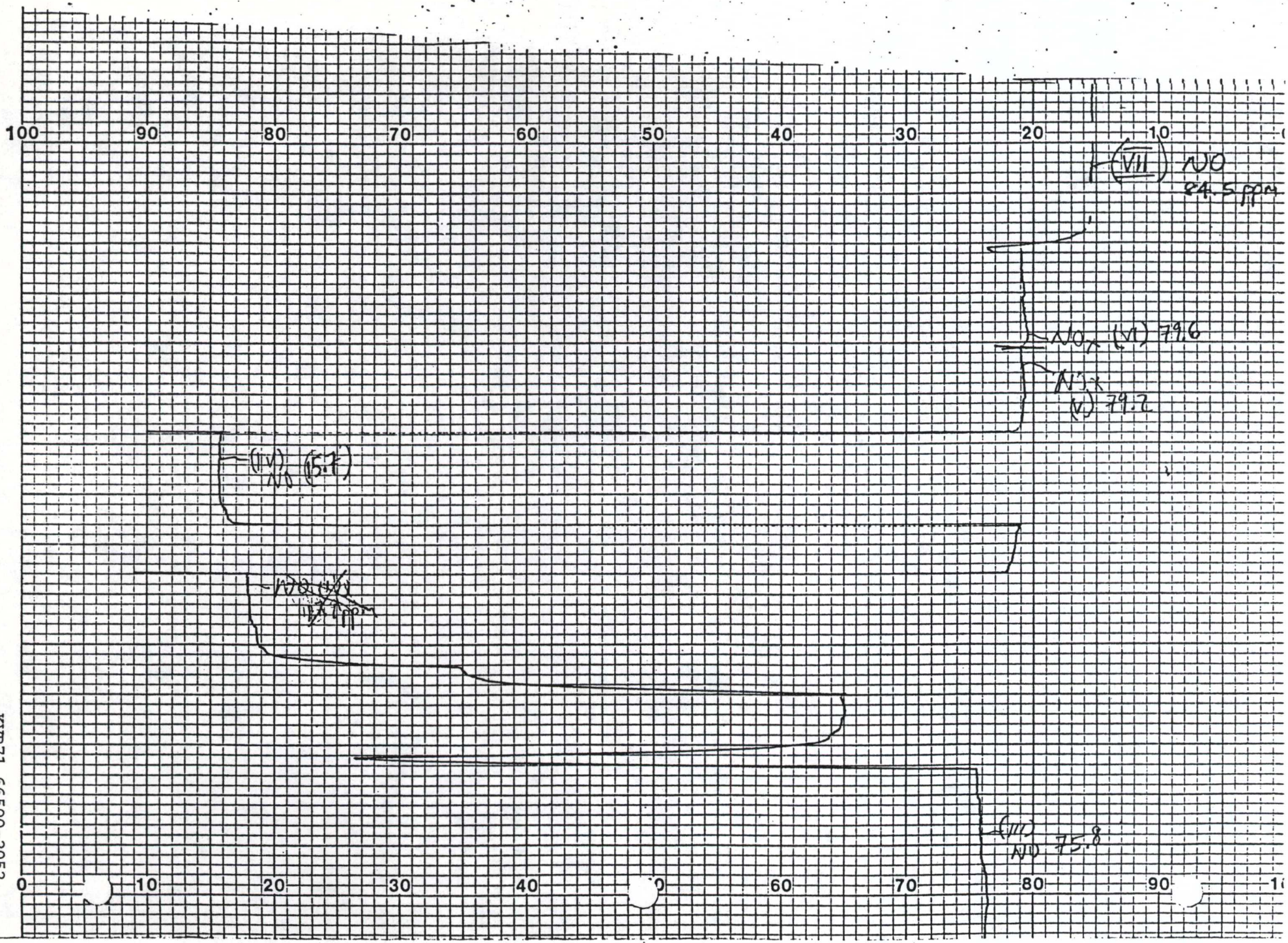

KVB71 66500-2052

10/12/82

Teledyne linearity

Bott.	Sample Point	Condition	Chart reading	RANGE
	1	Span against air	20.95 % O_2	High Range
AL 6758	2.	Ø N_2 Gas	.2 % O_2	High Range
	3.	" " "	.19 % O_2	Med. Range
	4.	" " "	.18 % O_2	Low Range
AL 4155	5	Span w/ 4.0 % O_2	4.3% O_2	LOW
	6	" " " "	4.3% O_2	MED
	7	" " " "	4.3% O_2	HI
AL 4133	8	100% Blended air	20.75% O_2	HI
	9	Span against AIR		

Point	Channel 1	Channel 2	Fraction	Theoretical Value	Reading	Deviation	%
10	10	20	1/3 (.33)	6.85 %	6.8%	- 0.05 (.2)	.7%
11	20	20	1/2 (.5)	10.38%	10.3%	- 0.08 (.3)	.8%
12	30	20	3/5 (.6)	12.45%	12.3%	- 0.15 (.6)	1.2%
13	40	20	2/3 (.67)	13.9%	13.8%	- 0.1 (.4)	0.7%
14	60	20	3/4 (.75)	15.56%	~~15.4~~% 15.5%	- 0.06 (.2)	0.4% ~~1.0%~~
15	80	20	4/5 (.8)	16.6%	16.5%	- 0.1 (.4)	0.6%
16	20	10	2/3 (.67)	13.9%	13.70%	-0.20 (.8)	1.4%
17	20	20	1/2 (.5)	10.38%	10.3%	- 0.08 (.3)	0.8%
18	20	30	2/5 (.4)	8.30%	8.2%	-0.1 (.4)	1.2%
19	20	40	1/3 (.33)	6.85%	6.9%	+0.05 (.2)	0.8%
20	20	60	1/4 (.25)	5.19%	5.25%	+0.06 (.2)	1.2%
21	20	80	1/5 (.2)	4.15%	4.25%	0.1 (.4)	2.4%
22	Ambient	Span.		20.95%	21.2 avg	1.0941 (.4)	1.02%
23	Ø N_2	Span		Ø %	0.075%		

↑ % of scale

KVB71 66500-2052

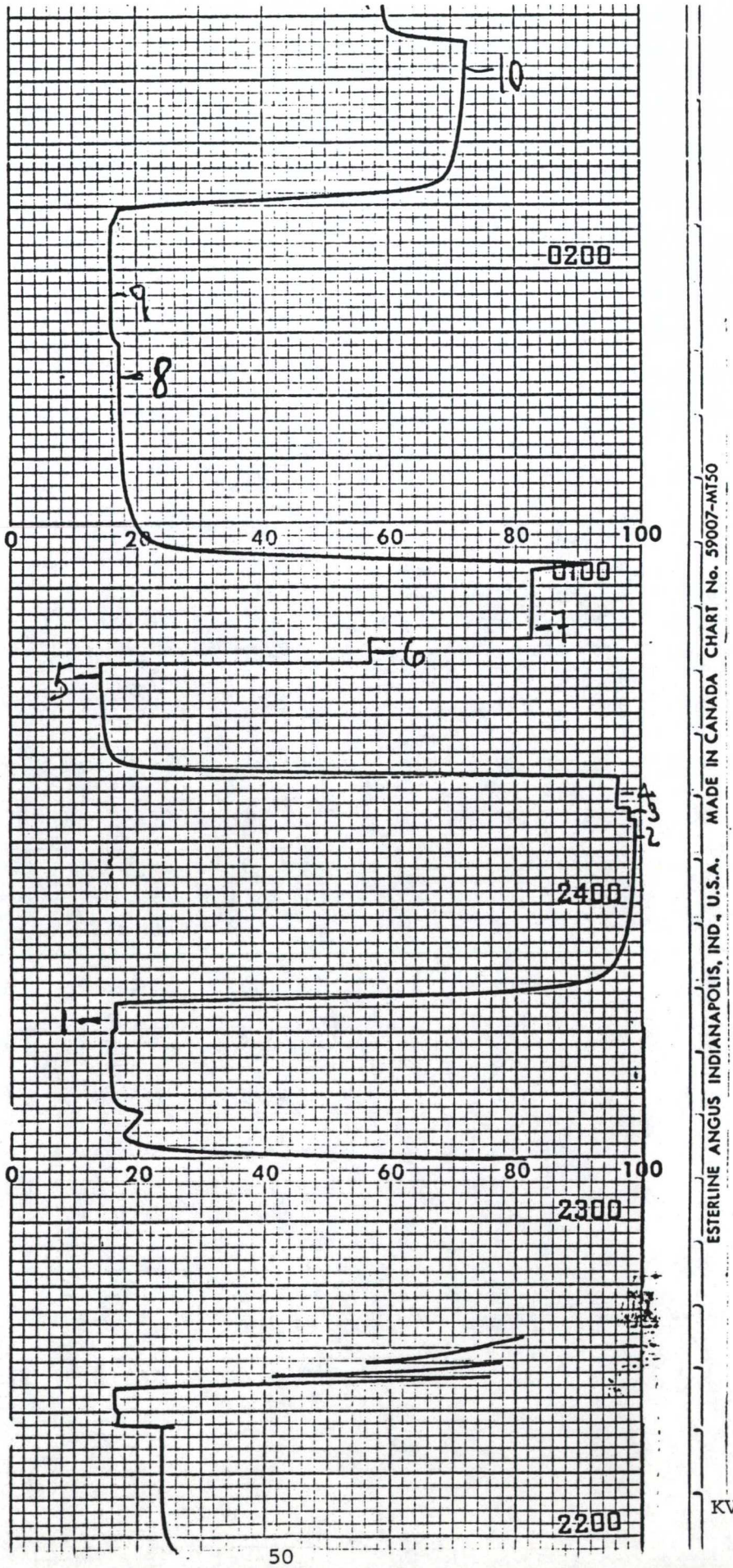

KVB71 66500-2052

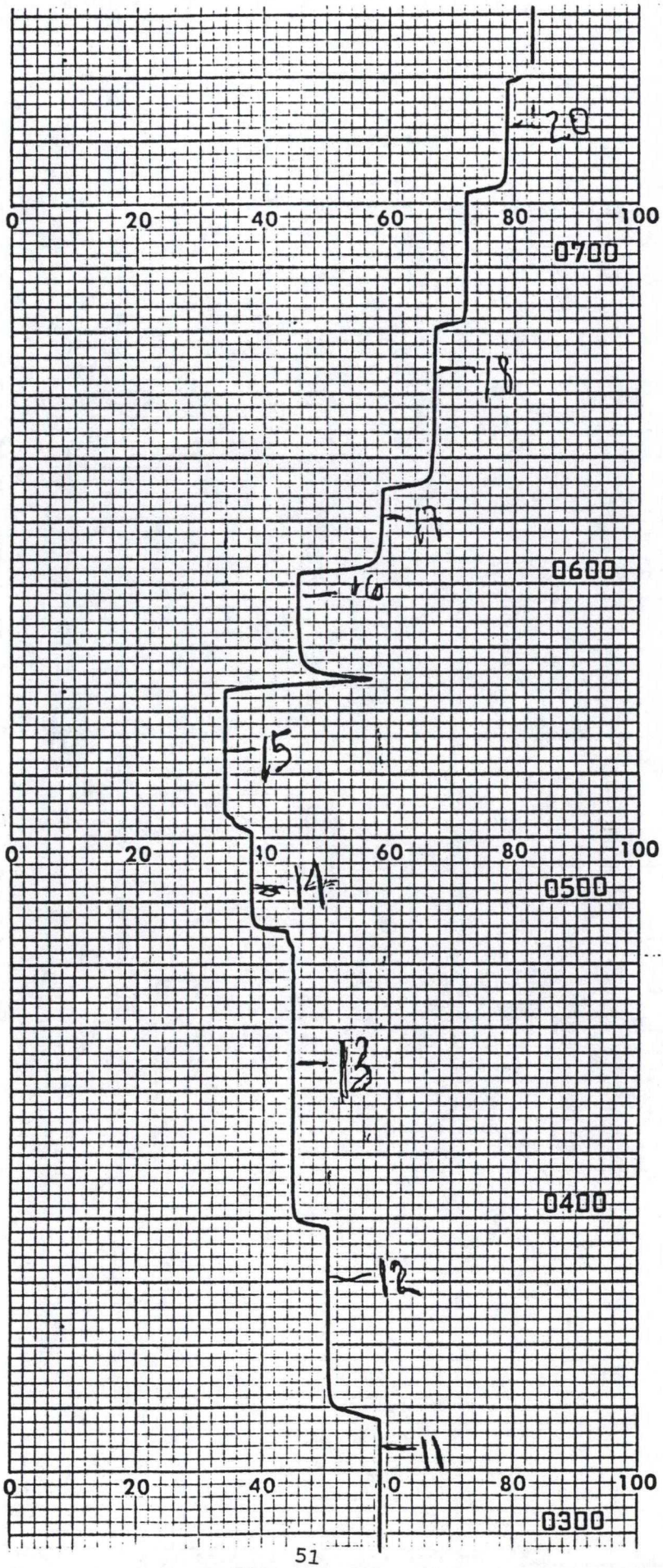

KVB71 66500-2052

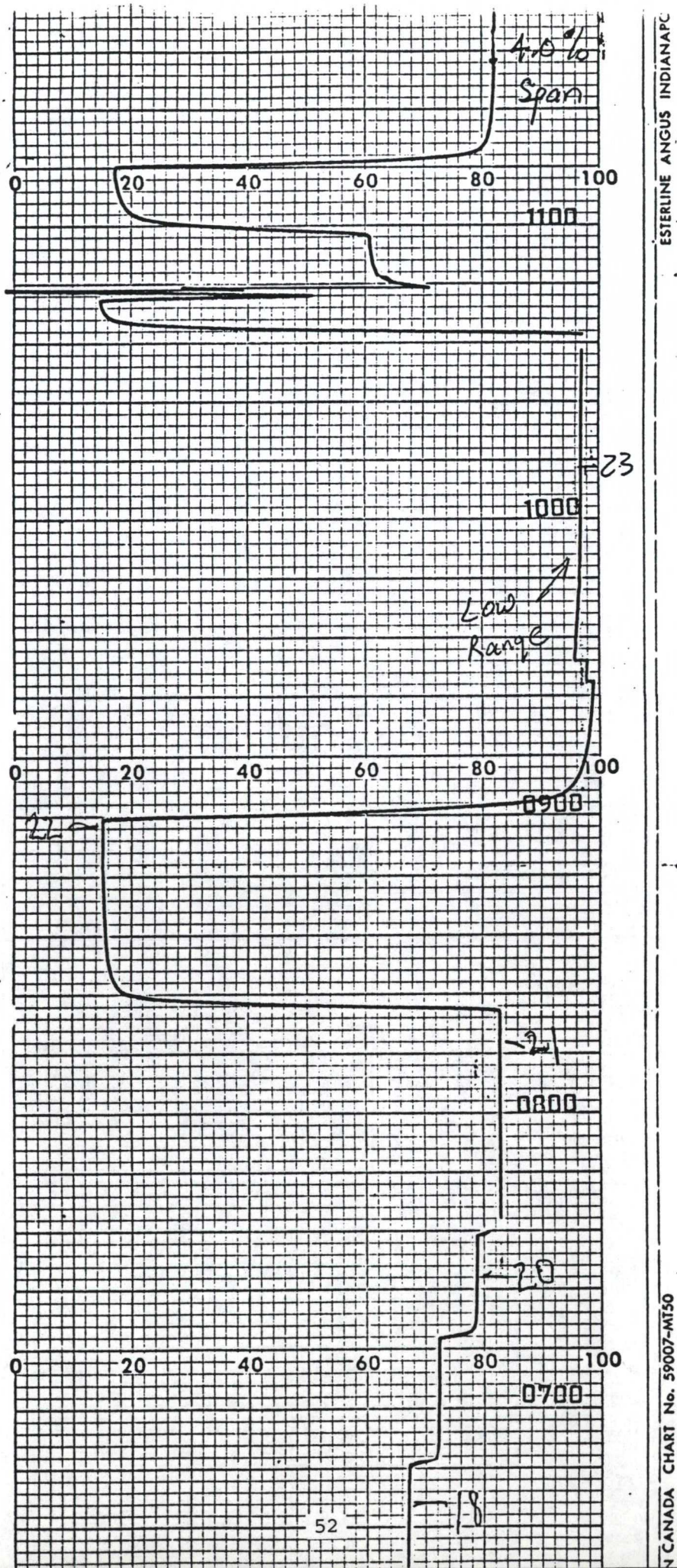

ESTERLINE ANGUS INDIANAPO

N CANADA CHART No. 59007-MT50

KVB71 66500-2052

INSTRUCTIONS

BROOKS INSTRUMENT DIVISION
EMERSON ELECTRIC CO.
HATFIELD, PENNSYLVANIA 19440

EMERSON®

MODEL 5841-A1A2MM
S.N. 8112-H-36340

INSTALLATION AND OPERATING INSTRUCTIONS
Dual Channel Mass Flow Controller
Model 5840, 5841

COL. #1 - "AIR"
COL. #2 - "N_2"

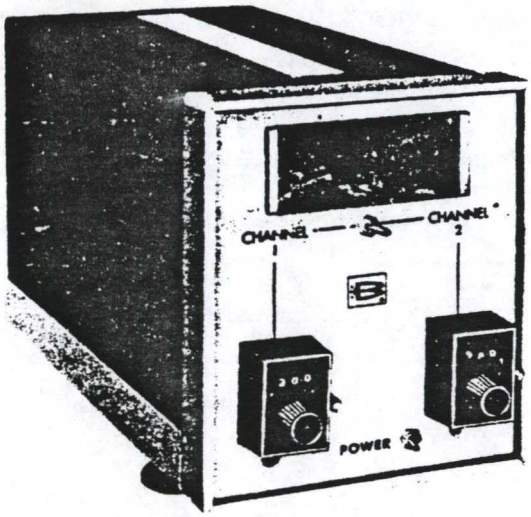

Model 5841

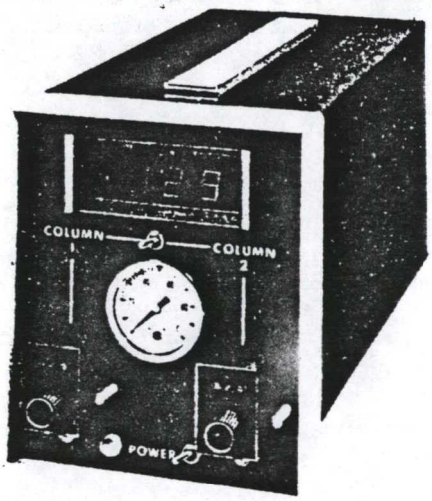

Model 5840

CAUTION

It is recommended that this publication be read in its entirety before performing any operation. Failure to understand and follow these instructions could result in serious personal injury and/or damage to the equipment.

NOTE!

KVB71 66500-2052

Section 1 INTRODUCTION

1-1 General Description

Brooks Models 5840 and 5841 Mass Flow Controllers provide precise measurement and automatic control of carrier gases, thus eliminating the need for continuous monitoring and readjustment to maintain a stable gas flow.

Model 5840 is designed for measurement and control of carrier gases in the dual column gas chromatograph and has one gas inlet and two individually controlled gas outlets. Model 5841 has two gas inlets and two individually controlled gas outlets and is designed for gas blending and proportioning.

The flow rate for each gas outlet stream is set with a precision potentiometer and maintained at flow setting independent of changes in upstream or downstream pressure conditions, with a closed loop control system. The mass flow rate is displayed on a digital rate indicator.

The flow measurement and control module consists of two Brooks Thermal Mass Flow Sensors and control valves mounted on a common block, dual channel comparison amplifier, power supplies, set-point potentiometers, digital display, and pressure gauge (5840 only) all mounted in a compact enclosure.

1-2 Specifications

CAUTION: Do not operate this instrument in excess of the below specified values.

a. Standard Ranges — Model 5840: Argon, Helium, Hydrogen, and Nitrogen.
0 - 50 sccm, 0 - 100 sccm, 0 - 200 sccm, 0 - 500 sccm
Other ranges available upon request: Minimum full scale flow rate 0 to 10 sccm, maximum full scale flow rate 0 to 5000 sccm.

b. Standard Ranges — Model 5841: Each Channel 0 - 10 sccm, 0 - 20 sccm, 0 - 50 sccm, 0 - 100 sccm, 0 - 200 sccm, 0 - 500 sccm, 0 - 1000 sccm, 0 - 2000 sccm, 0 - 5000 sccm

c. Power Requirements: 100 vac 50/400 Hz, 115 vac 50/400 Hz, 230 vac 50/400 Hz

d. Maximum Safe Working Pressure: 150 psi

e. Pressure Differential: 5 to 50 psi

f. Temperature Range: 40°F to 150°F (gas and electrical environmental)

g. Gas Connections: 1/8" or 1/4" Swagelok

h. Set-Point Repeatability: ±0.15%

i. Accuracy: ±1.0% full scale including linearity (max. temperature variation: ±10°F.)

j. Time Constant: 2 seconds

k. Flow Rate Display: 3-1/2 Digit LED

l. Pressure Gauge: 0 to 100 psi (5840 only)

m. Dimensions: Refer to Figure 2-1.

Section 2 INSTALLATION

2-1 Receipt of Equipment

When the equipment is received the outside packing case should be checked for any damage incurred during shipment. If the packing case is damaged, the local carrier should be notified at once regarding his liability. A report should be submitted ot the Product Service Department, Brooks Instrument Division, Emerson Electric Co., Hatfield, Pennsylvania 19440.

Remove the envelope containing the shipping list. Carefully remove the equipment from the packing case. Make sure spare or replacement parts are not discarded with the packing material. Inspect for damaged or missing parts.

2-2 Return Shipment

Do not return any assembly or part without a return material report. The return material report is available from all District Sales Offices and the Product Service Department, Hatfield, Pennsylvania. Information describing the problem, corrective action, if any, and the work to be accomplished at the factory must be included.

2-3 Service Information

Should this equipment require repair or adjustment, contact the nearest Brooks District Sales Office.

It is important that servicing be performed only by trained and qualified service personnel. If this equipment is not properly serviced, serious personal injury and/or damage to the equipment could result.

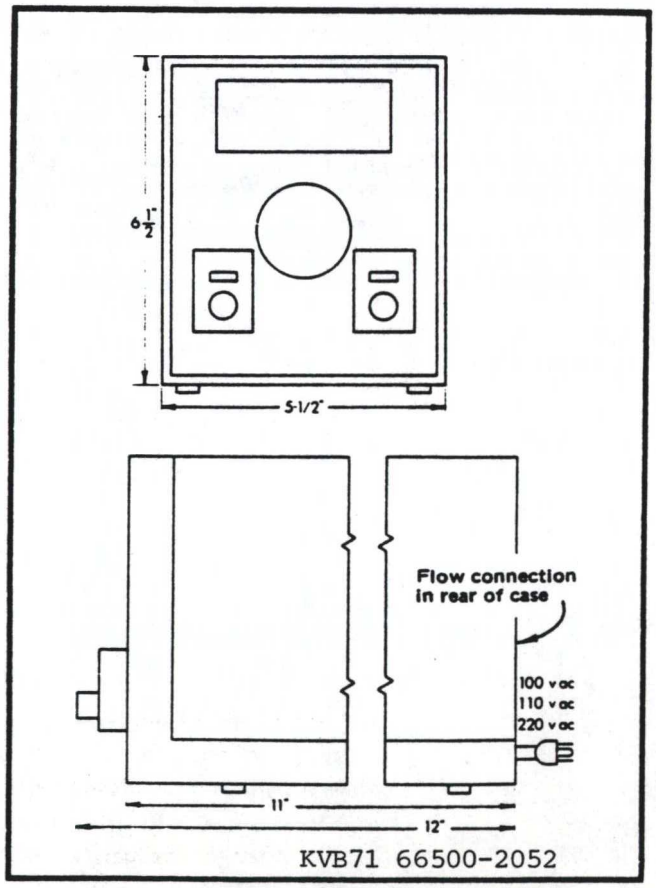

Figure 2-1 Dimensions, Models 5840. 5841

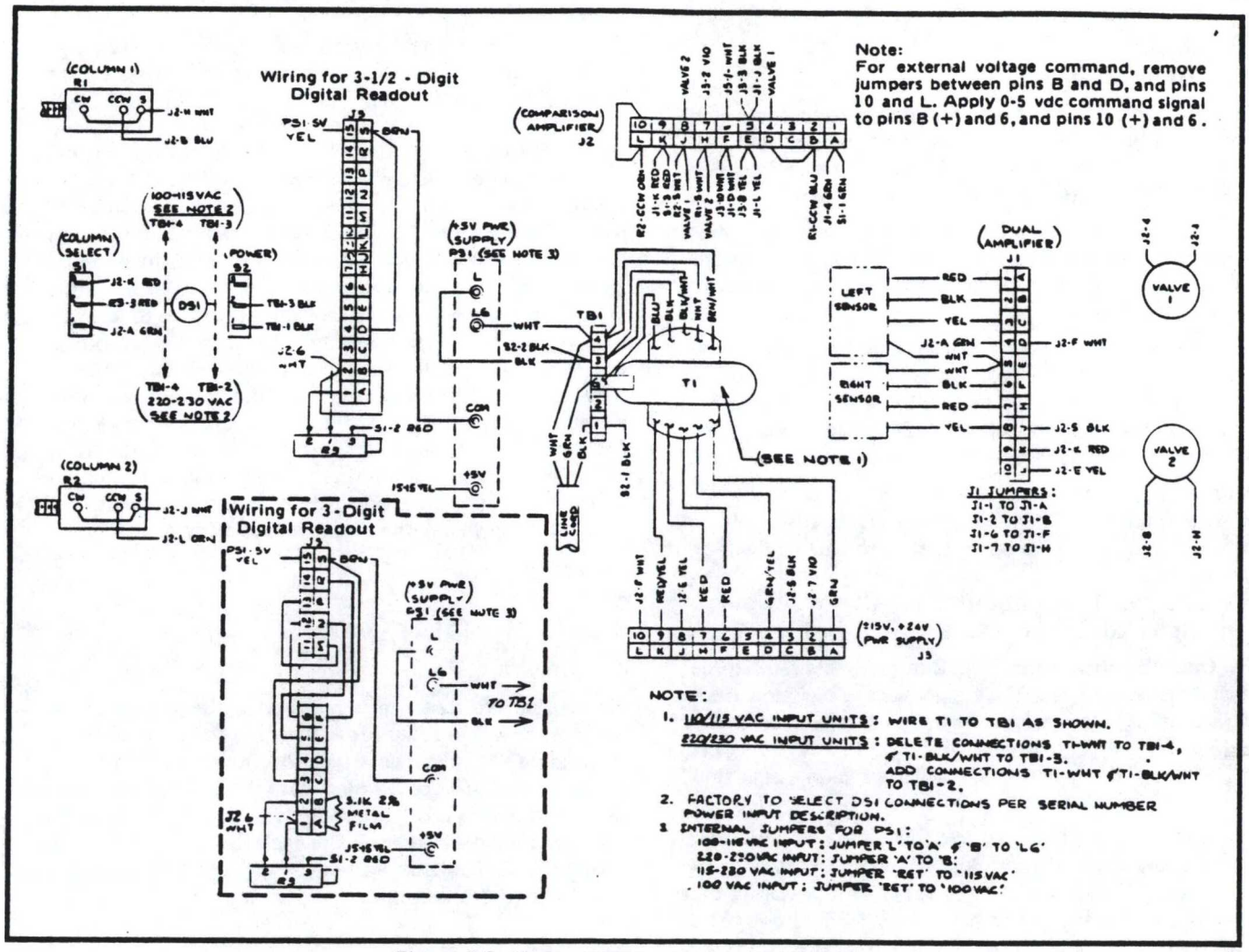

Figure 2-2 Internal Wiring, Models 5840, 5841

2-4 Installation

The Dual Channel Controller should be located in a clean dry atmosphere which is relatively free of shock and vibration. The instrument must be level within ±2° and is supplied with leveling feet at the front corners of the instrument, and a spirit level at the top of the enclosure. When properly leveled, the digital display will indicate zero or slightly positive at no flow.

All gas connections to the controller are either 1/8" or 1/4" Swagelok.

Section 3 OPERATION

3-1 Operating Procedure

CAUTION: Do not operate this instrument in excess of specifications listed in Section 1-2. Before placing the unit into operation, make sure all gas connections are tight and all electrical connections have been completed. Ensure that the instrument is level within ±2°.

To place the instrument into operation, proceed as follows:

a. Apply power to the instrument.
b. Allow the instrument to warm up for approximately 10 minutes.

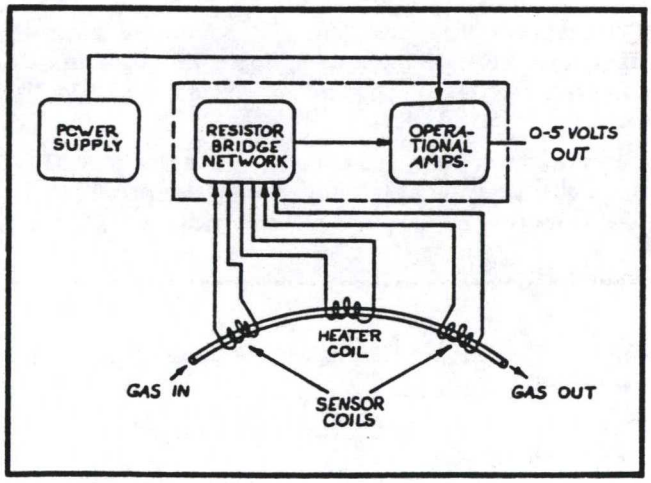

Figure 3-1 Flow Sensor Operational Diagram

c. Slowly introduce gas flow into the system.
d. Set the appropriate controls to bring the instrument to the desired operating level.
e. Switch the toggle switch on the front panel to desired channel to be monitored on readout.
f. Actual flow rate is displayed on digital readout.

3-2 Theory of Operation, Flow Sensor (Refer to Figure 3-1)

When line voltage is applied to the power supply, the ac line voltage is stepped down, rectified, filtered and regulated to provide a plus (+) 15 volt dc and minus (–) 15 volt dc output to the flow sensor.

A constant current amplifier powers a heater coil that uniformally heats the gas flow stream. As a result, both the upstream and downstream sensor coils are heated by the gas flow stream.

At zero, or no flow, a balanced bridge circuit is established to provide a zero or no flow output signal. As gas flows within the sensor, a temperature differential is created between the upstream and downstream sensor coils. This difference is directly proportional to the mass flow rate.

The resulting differential is applied to the input of the differential amplifier. The amplifier generates a 0-5 volt dc output that is directly proportional to the mass flow rate.

3-3 Theory of Operation, Flow Control System (Refer to Figures 3-2 and 5-1 thru 5-8)

The Dual Channel Mass Flow Controller contains three integral power supplies. The supply for the digital readout consists of a power transformer T1, a full wave bridge rectifier CR1, CR2, CR3 and CR4, ripple filter capacitors C1 and C2, and regulator VR1 which supplies a regulated + 5 vdc output. Refer to Figures 5-1 and 5-2.

A separate plug in P.C. board contains a ±15 vdc supply for powering the flow sensors, dual amplifier and dual comparison amplifier, and a +12 vdc supply for powering the flow control valves. Refer to Figures 5-3 and 5-4. The ±15 vdc supply utilizes power transformer T1, full wave bridge rectifier CR1, CR2, CR3 and CR4, ripple filter capacitors C1, C2, C3 and C4, zener diode regulators CR9 and CR10, and series transistors Q1 and Q2. The emitters of Q1 and Q2 provide a regulated ±15 volt dc output. The +12 volt supply utilizes transformer T1, a full wave bridge rectifier CR5, CR6, CR7 and CR8, ripple filter capacitor C5, and regulator U1 which provides a regulated +12 vdc output.

The command (set point) potentiometer is a precision 10 turn, 1k ohm potentiometer with an integral turns counting dial permitting accurate and repeatable adjustments of the mass flow rate to 1 part in 1000. Refer to Figure 5-8. Constant current from the command potentiometer source current section (CR3, Q4, and U2 pins 1, 2, 4, 8, 12, 13) is fed through the command potentiometer to circuit common. When a value is selected on the command pot, the voltage developed across it is applied to the non-inverting terminal 6 of the comparison operational amplifier U2 pins 4, 5, 6, 7, 8, 9, 10, 13). The comparison op-amp turns on driver transistor Q6 which drives the base of the solenoid control valve current control transistor Q5. Current flowing through the solenoid valve causes the valve to open allowing greater flow through the flow sensor. The voltage developed by the transducer is applied to the inverting terminal 7 of the comparison amplifier and comes out reversed polarity which throttles back on the drive transistor Q6 until equalibrium is established. Adjustment R16 is set to produce 5.0 volts across the command pot when set to its maximum value, and R21 is adjusted to produce a zero output when the command pot is set at zero.

Section 4 MAINTENANCE

4-1 General

No routine maintenance is required to be performed on the mass flow controller other than an occasional cleaning. If cleaning becomes necessary, the flow sensor and final control valve may be cleaned with Freon; flush in both directions and air dry thoroughly. The in-line filtering element should periodically be replaced or ultrasonically cleaned. The 2 micron element is accessible by removing the inlet fitting and spring.

4-2 Flow Sensor

The user should not attempt to disassemble or repair the flow sensor module. Should the flow sensor become inoperative, consult the factory.

4-3 Final Control Valve

The final control valve may be disassembled in the field by the user for cleaning or servicing. Parts should be cleaned with Freon or may be ultrasonically cleaned. Disassemble the valve as follows:

1. Remove the hex nut on top of valve assembly.

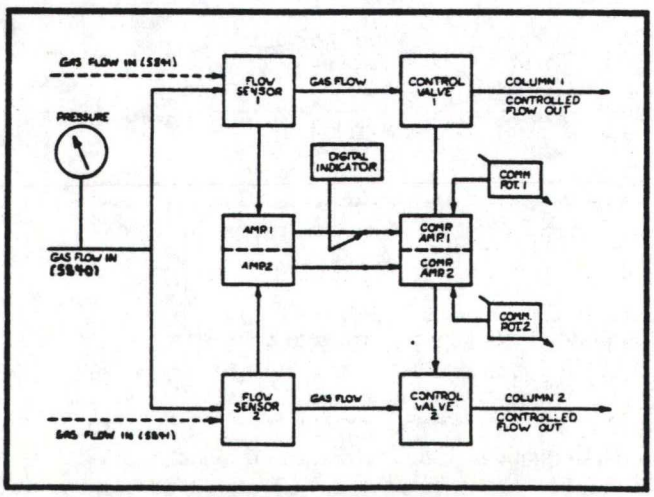

Figure 3-2 Flow Control System Block Diagram

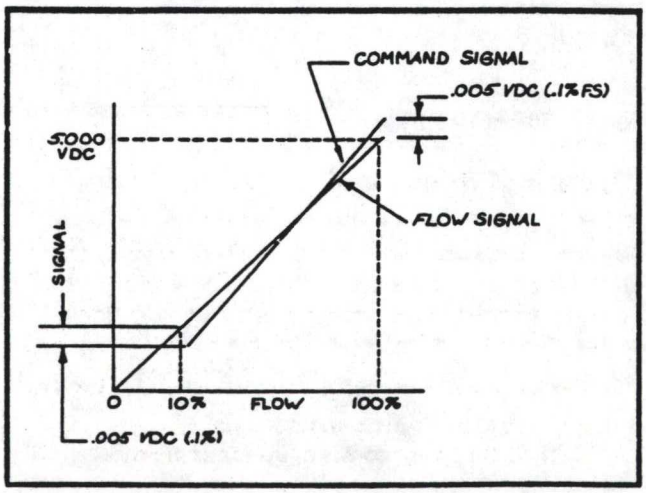

Figure 4-1 Command Pot/Comparison Amp. Alignment

2. Carefully remove the cover/coil assembly.
3. Remove the hex retaining ring and carefully remove the valve stem assembly from the valve base.
4. Remove the plunger assembly.
5. Remove the orifice.

Clean parts and carefully reassemble in reverse of the above procedure. It is recommended all O-rings be replaced upon reassembly of the valve.

4-4 Controller Adjustments

Each control system must have final adjustments made to compensate for resistance tolerances in the command potentiometer and comparison amplifier. These adjustments are performed by the factory during assembly, however, if either the command pot or the comparison amplifier is replaced in the field, these adjustments must be performed by the user or an authorized service representative. Proceed as follows:

a. Introduce flow into the system and set command pot to full flow.
b. Using a digital voltmeter, monitor the command signal at the command pot plus and minus leads and monitor the flow signal at the green and white (column 1) or the red and white (column 2) leads.
c. Refer to Figures 5-7 and 5-8. Adjust potentiometer R3 (column 1) or R16 (column 2) for a command signal of approximately 5.000 vdc and note the millivolt difference between the command and flow signals.
d. Set command pot to 10% flow and adjust potentiometer R8 (column 1) or R21 (column 2) to obtain a minimum difference between the command signal and the flow signal.
e. Alternately check and adjust the 10% and 100% points until the best straight line can be achieved between the command and flow signals. Refer to Figure 4-1.

4-5 Changing Gas Type and Capacity

Should it become necessary to change the capacity, or type of gas being metered, the flow sensor must be modified and recalibrated. Consult the factory.

4-6 Calibration Adjustments

It is recommended the calibration be performed only by an authorized Brooks Service Representative. However, these adjustments may be performed by the user if accurate calibration facilities are available. Proceed as follows:

a. Instrument must be level within ±2°.
b. Remove front panel/chassis assembly from case. The dual amplifier board is located inside the small metal cover next to control valves. Cut-outs are provided to gain access to the adjustments without removing the cover. On earlier models without cutouts, the dual amplifier cover must be removed to perform the adjustments. Refer to Figure 5-6 for location of adjustment components.
c. Apply line power and allow approximately 10 minutes warm-up time.
d. Set channel selector switch to channel to be calibrated.
e. With a no-flow condition, adjust the applicable ZERO potentiometer for a zero output indication on the digital readout.
f. Introduce gas flow into the system and adjust flow for approximate maximum flow rate for which mass flow controller was originally calibrated.
g. Perform a timed calibration run and collect in suitable calibration equipment.
h. While observing digital readout, adjust Span pot to obtain corresponding maximum flow rate. (Output of Dual Amplifier at maximum full span is 5.000 vdc.)
i. Reduce flow to 50% and correct flow verses signal error with the linearity pot.
j. Perform above procedure on other channel if necessary.

Section 5 TROUBLESHOOTING

5-1 General

A troubleshooting table is provided as an aid in basic troubleshooting to determine if major components are defective. To further isolate problem areas, voltage checks are shown in Figures 5-1, 5-4, and 5-8. If the unit is found to be defective refer to Section 6 Parts List for a list of available replacement parts which can be replaced in the field, or contact the nearest Brooks District Sales Office.

Section 6 PARTS LIST

6-1 Recommended Spare and Replacement Parts

The following recommended spare and replacement parts are available and may be replaced in the field by the user. When ordering parts please specify: Brooks Serial Number, complete model number, part description, part number and quantity.

Dual Amplifier P. C. Assembly
Part Number S-097-Z-543

Dual Channel Comparison Amplifier P. C. Assembly
Part Number S-097-Z-549-AA-A

Power Supply P. C. Assembly, ±15 volt and +12 volt
Part Number S-097-Z-551-AA-A

Power Supply P. C. Assembly, 5 volt
Part Number S-097-Z-580-AA-A

Power Transformer
Part Number W-911-B-032-AA-A

Digital Readout Module, 3-1/2 Digit (3-Digit discont'd)
Part Number W-544-Z-073

Command Potentiometer
Part Number W-635-D-010-GJE

Pressure Gauge 100 psi (5840)
Part Number F-369-Z-058-AA-A

Toggle Switch SPDT
Part Number W-859-D-006-LZ-E

Filter Element
Part Number A-306-Z-034-BV-A

Neon Lamp, (Power ON Ind.) 125 vac
Part Number W-505-C-008-PZ-Z

Gasket, Dual Thermal Sensor Cover (5840)
Part Number A-375-E-076-SU-A

Gasket, Valve Block-to-Sensor Block (5840)
Part Number A-375-E-074-SU-A

O-Rings, Flow Control Valve 9/16 ID x 11/16 OD x 1/16 W
Part Number F-375-B-015-SU-A

O-Ring, Flow Control Valve Orifice-to-Block
Part Number F-375-B-146-SU-A

O-Ring, Gas Connection Adapter-to-Block 7/32 ID x 11/32 OD x 1/16 W
Part Number F-375-B-009-SU-A

O-Ring, 5/32 ID x 9/32 OD x 1/16 W. (Located behind filter element)
Part Number F-375-B-007-SU-A

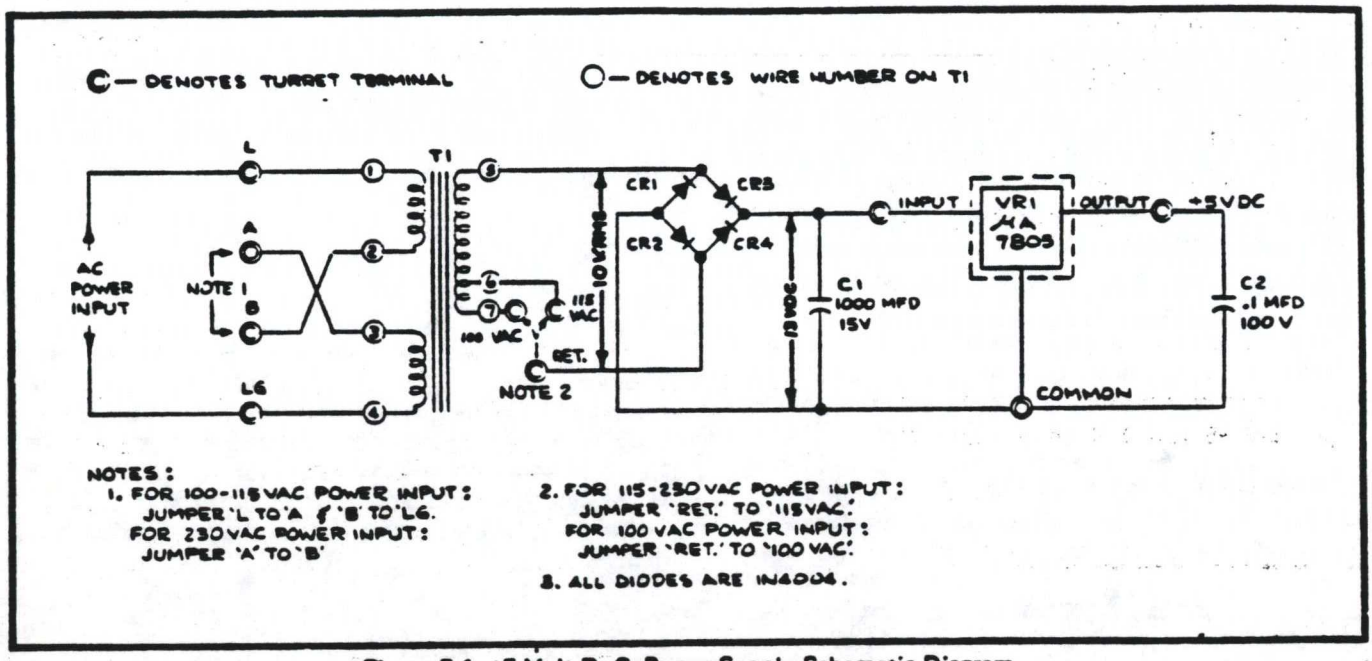

Figure 5-1 +5 Volt D. C. Power Supply Schematic Diagram

Troubleshooting Chart

PROBLEM	POSSIBLE CAUSE	CHECK/REMEDY
No Output Indication	No power-in	Check for 115 vac to transformer
	Faulty Indicator	Check for output from sensor module
	Obstruction in sensor	Flush sensor both directions with non-residuous solvent. Air dry thoroughly.
	Clogged Filter	Ultrasonically clean or replace filter element.
Indicator will not zero	Sensor not level	Check level. Must be within ± 2°.
	Gas leak	Check downstream gas connections.
Out of Calibration	Sensor not level	Check level. Must be within ± 2°.
	Gas leak	Check all gas connections.
	Dirty Sensor	Flush with non-residuous solvent. Air dry thoroughly.
	Change in composition of metered gas	Consult factory. Unit must be calibrated on type of gas metered.
	Shift in electronics	DO NOT ATTEMPT TO CALIBRATE UNIT, SERVICE OR DISASSEMBLE SENSOR. Consult Factory.

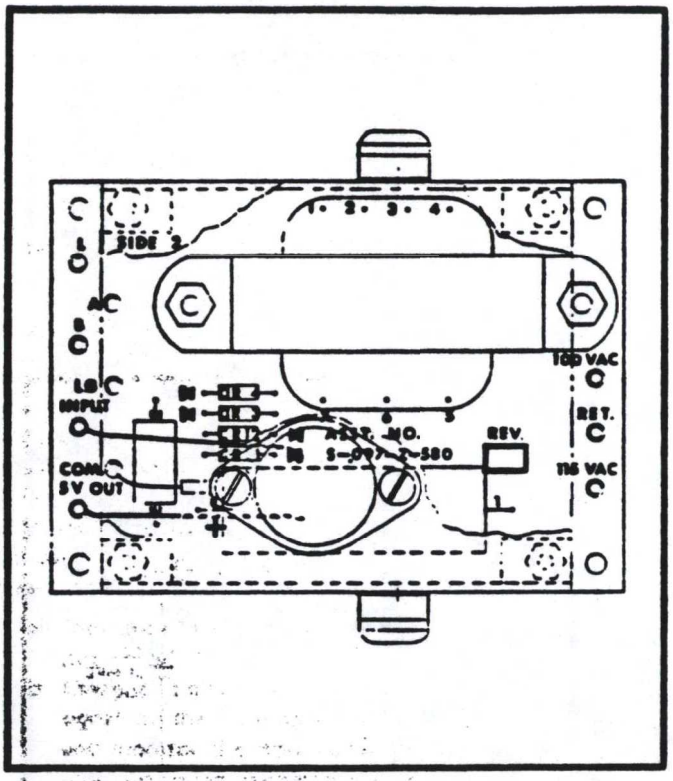

Figure 5-2 +5 Volt D. C. Power Supply P. C. Assembly

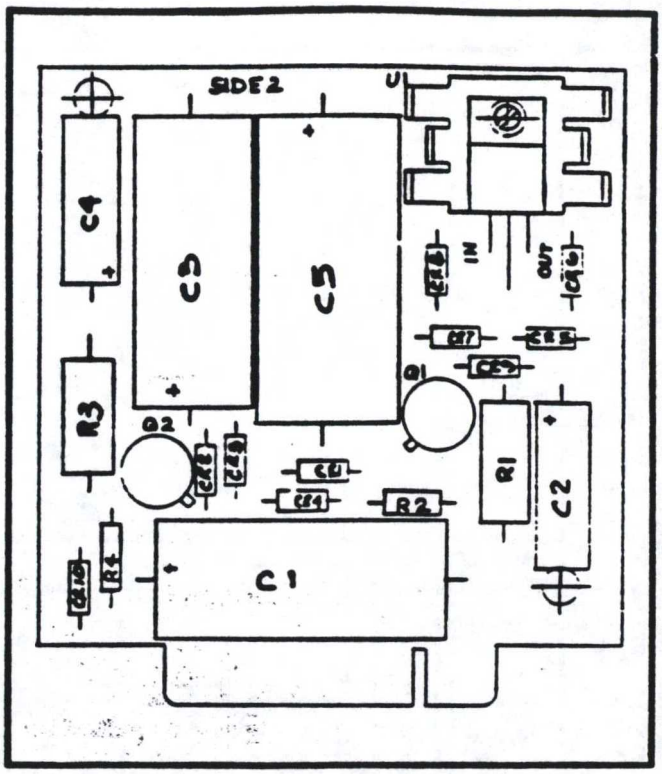

Figure 5-3 +12 Volt, ±15 Volt D. C. Power Supply P. C. Assembly

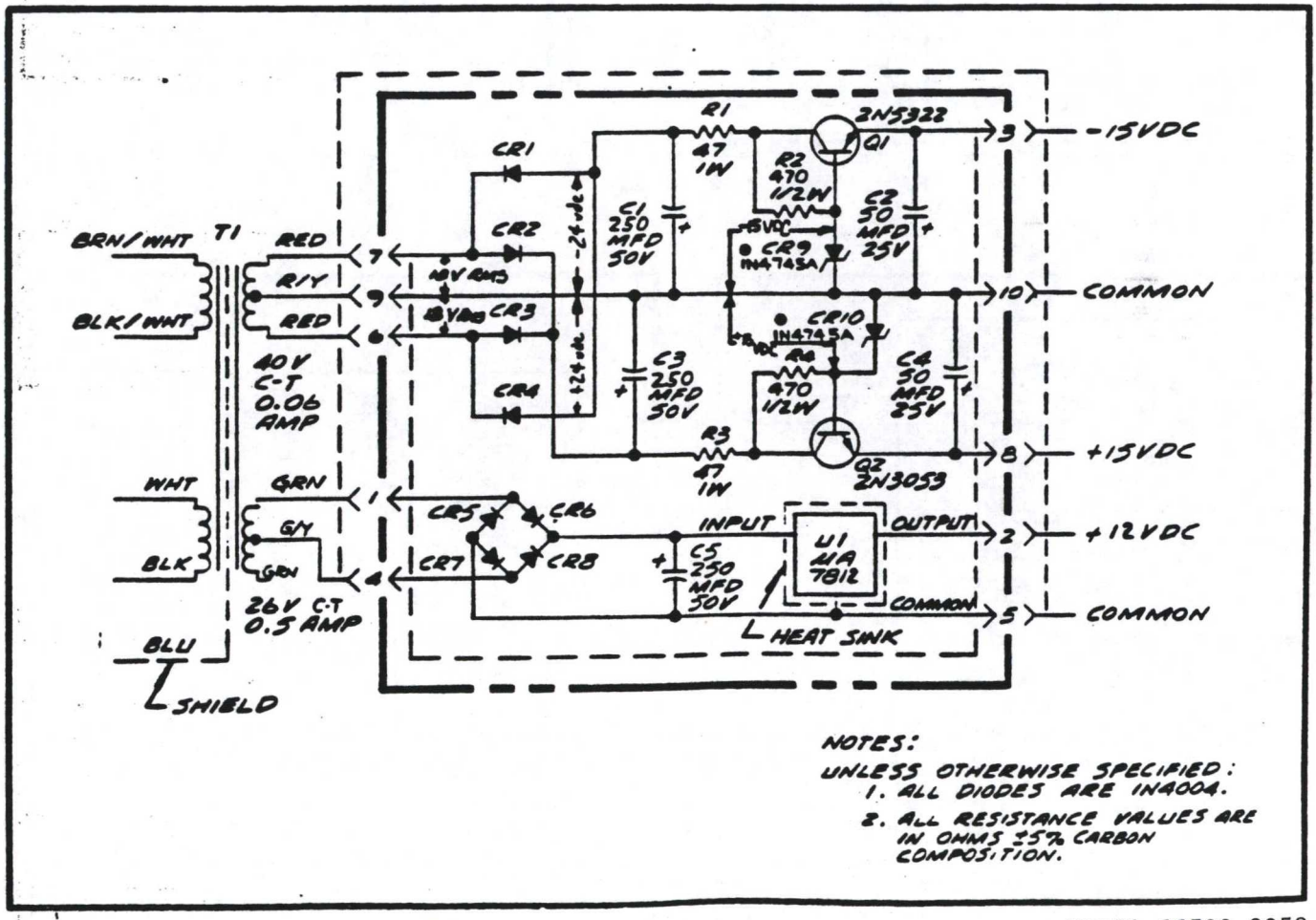

Figure 5-4 +12 Volt, ±15 Volt D C. Power Supply Schematic Diagram

KVB71 66500-2052

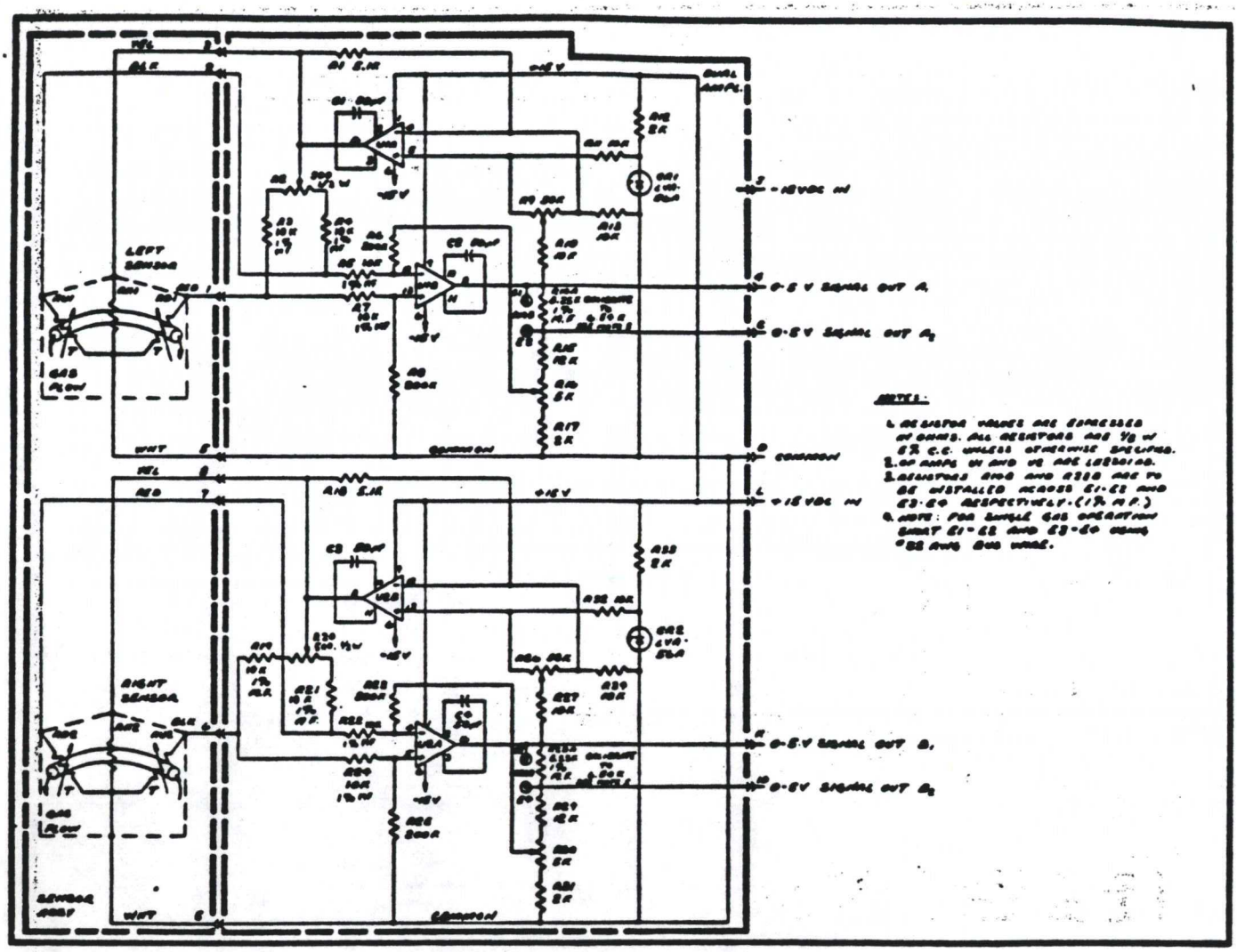

Figure 5-5 Dual Amplifier Schematic Diagram

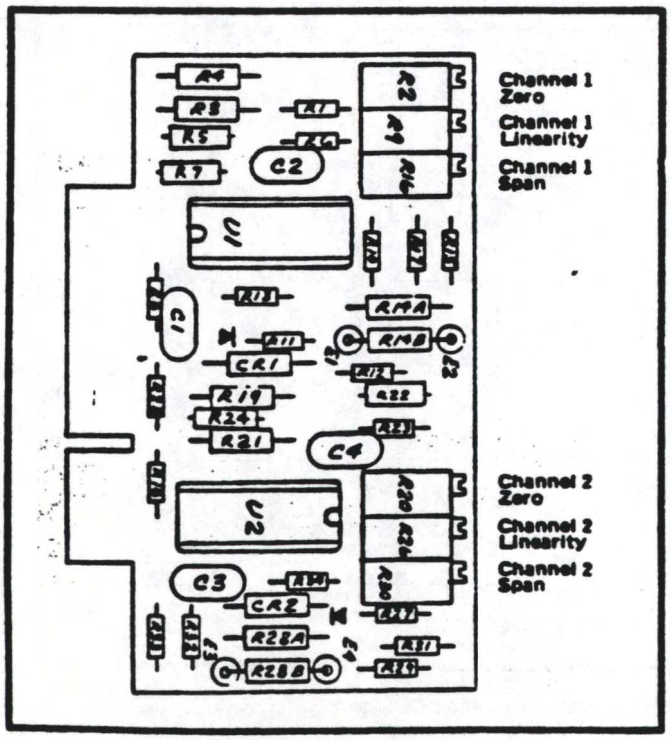

Figure 5-6 Dual Amplifier P.C. Assembly

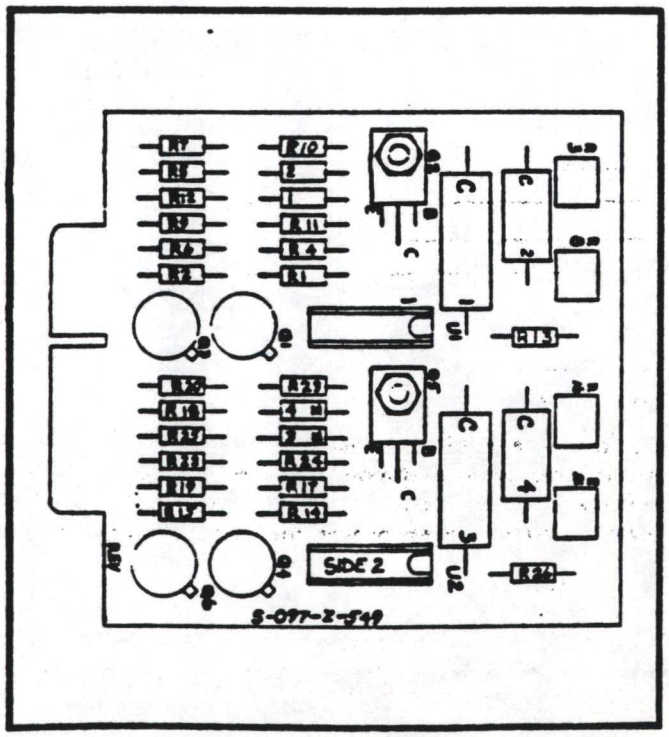

Figure 5-7 Dual Comparison Amplifier P. C. Assembly

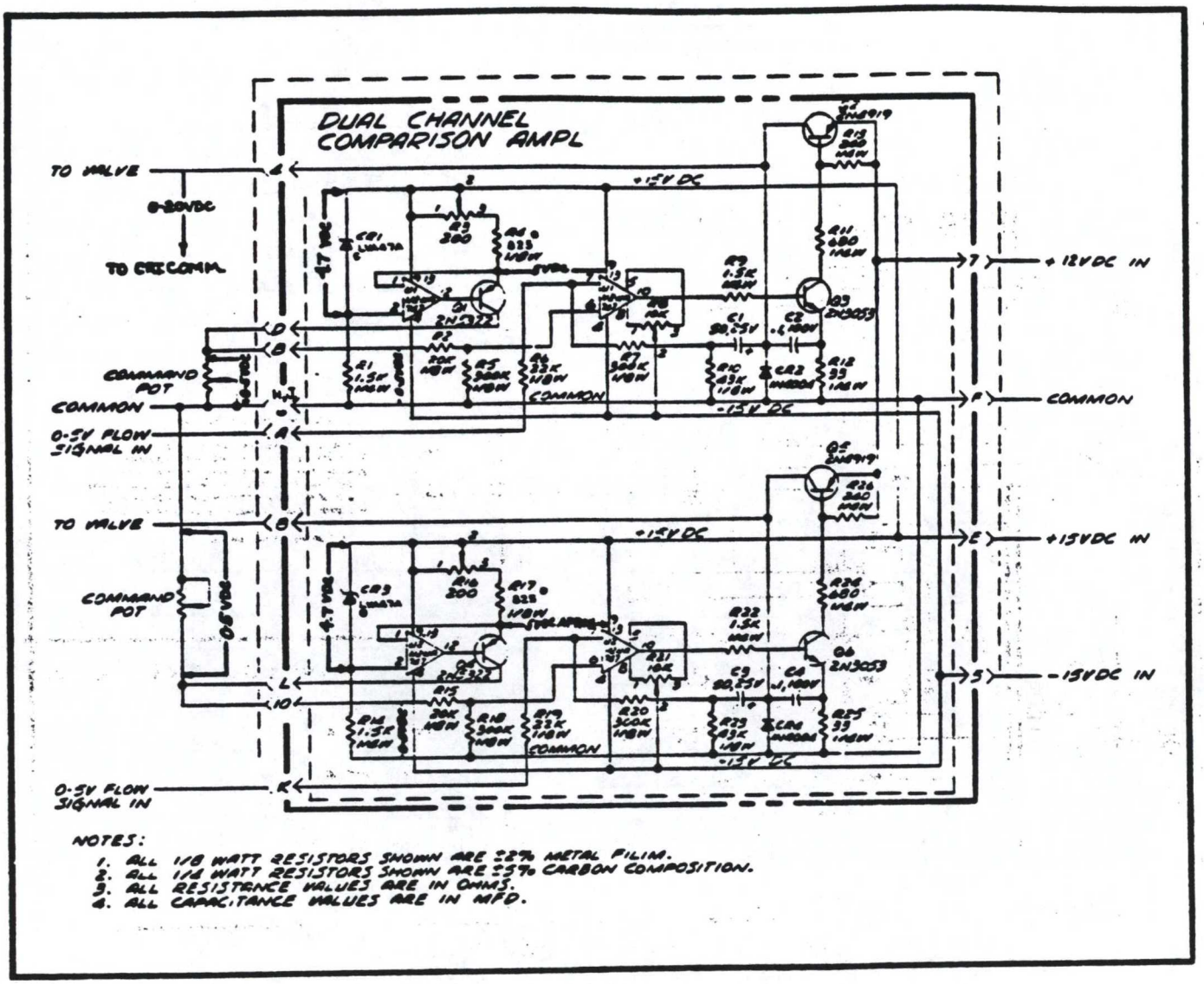

Figure 5-8 Dual Comparison Amplifier Schematic Diagram

Guarantee

If at any time within one year after shipment but not thereafter it is proved that any part of the equipment furnished by us was defective when shipped by us we will replace the same free of charge F. O. B. our plant. Notice of this claim must be made to us within one year after delivery. Our liability is limited to replacement of such defective parts or equipment. There are no guarantees or warranty expressed or implied other than those herein specifically mentioned.

Brooks Instrument Division shall not in any event be liable for any consequential damages, secondary charges, expenses for erection or disconnecting or losses resulting from any alleged defect in the apparatus.

It is understood that corrosion or erosion of materials is not covered by our guarantee.

MASS FLOWMETER TEST DATA

CUSTOMER K.V.B.
SERIAL NO. 8112 14 36340 Col #1
MODEL NO. 5841A1A2MM
GAS Air
RANGE 0-1000 SCCM
PRESSURE 15 PSIG
CALIBRATION NO. C 211
CALIBRATOR OBS
DATE 8 Feb 1982

1. CALIBRATION:

APPROX. % OF RANGE	SIGNAL OUTPUT [redacted]	SCCM ACTUAL FLOW	% ERROR
0	00.0	0	.0
25	25.0	251.43	-.143
50	50.0	499.48	+.052
75	75.0	750.95	-.095
100	100.0	1002.28	-.228
50	50.0	500.26	-.026
0	00.0	0	0

FLOW @ 100%

EMITTER VOLTAGE _____ VDC
SENSOR VOLTAGE _____ MV
VALVE VOLTAGE _____ VDC
ORIFICE SIZE .014

CALIBRATION NOTES: _____

Brooks Instrument Division
Emerson Electric Company
Hatfield, Pennsylvania 19440
(215) 362-3500

KVB71 66500-2052

MASS FLOWMETER TEST DATA

CUSTOMER K.V.B
SERIAL NO. 8112 H 36340 Col #2
MODEL NO. 5841 A1A2MM
GAS N_2
RANGE 0-1000 SCCM
PRESSURE 15 PSIG
CALIBRATION NO. C 211
CALIBRATOR 085
DATE 8 Feb 82

1. CALIBRATION:

APPROX. % OF RANGE	SIGNAL OUTPUT [redacted]	SCCM ACTUAL FLOW	% ERROR
0	00.0	0	0
25	25.0	253.70	-.370
50	50.0	500.31	-.031
75	75.0	748.78	+.122
100	100.0	1000.33	-.033
50	50.0	500.68	-.068
0	00.0	0	0

FLOW @ 100%

EMITTER VOLTAGE _____ VDC
SENSOR VOLTAGE _____ MV
VALVE VOLTAGE _____ VDC
ORIFICE SIZE .014

CALIBRATION NOTES: _____

Brooks Instrument Division
Emerson Electric Company
Hatfield, Pennsylvania 19440
(215) 362-3500

KVB71 66500-2052

APPENDIX F

EPA PROTOCOL 1 CALIBRATION GAS CERTIFICATIONS
FIELD CALIBRATION GAS ANALYSIS DATA SHEETS

Scott Specialty Gases

Scott Environmental Technology, Inc. a division of

2600 CAJON BLVD. SAN BERNARDINO, CA 92411 PHONE (714) 887-2571

Date Shipped 10-14-82
Our Project No: 48777
Your P.O. No: 26886
Page 1 of 1

KVB
P.O. BOX 19518
IRVINE, CA. 92714

CERTIFICATE OF ANALYSIS – EPA PROTOCOL GASES*

(Concentrations are in mole % or ppm)

Cylinder Number AAL5954 Certified Accuracy ±1 % NBS Traceable Analysis Dates: First 3-23-82 Last 10-12-82

COMPONENTS	CERTIFIED CONC	EXPIRATION DATE	ANALYTICAL PRINCIPLE	PRIMARY STANDARD NBS/SRM's	REPLICATE CONCENTRATIONS FIRST	SECOND
NITRIC OXIDE	87.31 PPM	4-12-83	CL	SRM 1685B	87.94 PPM	87.31 PPM
				&SRM 1683B		
NITROGEN BALANCE						

Cylinder Number _____ Certified Accuracy _____ % NBS Traceable Analysis Dates: First _____ Last _____

COMPONENTS	CERTIFIED CONC	EXPIRATION DATE	ANALYTICAL PRINCIPLE	PRIMARY STANDARD NBS/SRM's	REPLICATE CONCENTRATIONS FIRST	SECOND

RECEIVED
OCT 26 1982
KVB, INC.
A RESEARCH-COTTRELL CO.

*We hereby certify the cylinder gas has been analyzed according to EPA Protocol No: 1

Analyst JANICE Approved By James Ross

The only liability of this Company for gas which fails to comply with this analysis shall be replacement thereof by the Company without extra cost.

CERTIFIED REFERENCE MATERIALS ■ EPA PROTOCOL GASES ■ ACUBLEND® ■ CALIBRATION & SPECIALTY GAS MIXTURES
PURE GASES ■ ACCESSORY PRODUCTS ■ CUSTOM ANALYTICAL SERVICES

KVB71 66500-2052

TROY, MICHIGAN / PLUMSTEADVILLE, PENNSYLVANIA

KVB®

CALIBRATION GAS ANALYSIS DATA SHEET

Western Engineering Division
Technical Services

Date 4-10-83 Operator FISHER

Reference

Instrument ID/SN _____ Model 10

Manufacturer Thermo Electron

Zero Gas Composition _____ Manufacturer SCOTT SPECIALTY

Bottle ID AAL 4737

Certified Span Gas

Composition NO, NOx Concentration 87.31 ppm NO

Manufacturer SCOTT SPECIALTY

Bottle ID AAL 5954 Accuracy ± 1 %

Certification: ☐ NBS/SRM ☒ EPA Protocol 1

☐ EPA Reference Method _____

Trial Gas

Bottle ID AAL 2469 Composition NO, NOx Mfgr Scott Specialty

Labeled Concentration 197, 200 Rated Accuracy ± 1 %

Instrument Range 0 - 250 ppm

Calibration Data

Run No.	Indicated Concentration*		Difference
1	.792	198	1
2	.798	199.5	2.5
3	.798	199.5	2.5
Average		199	2

*Zero and span checks between runs.

.36 OR-1 KVB71 66500-2052

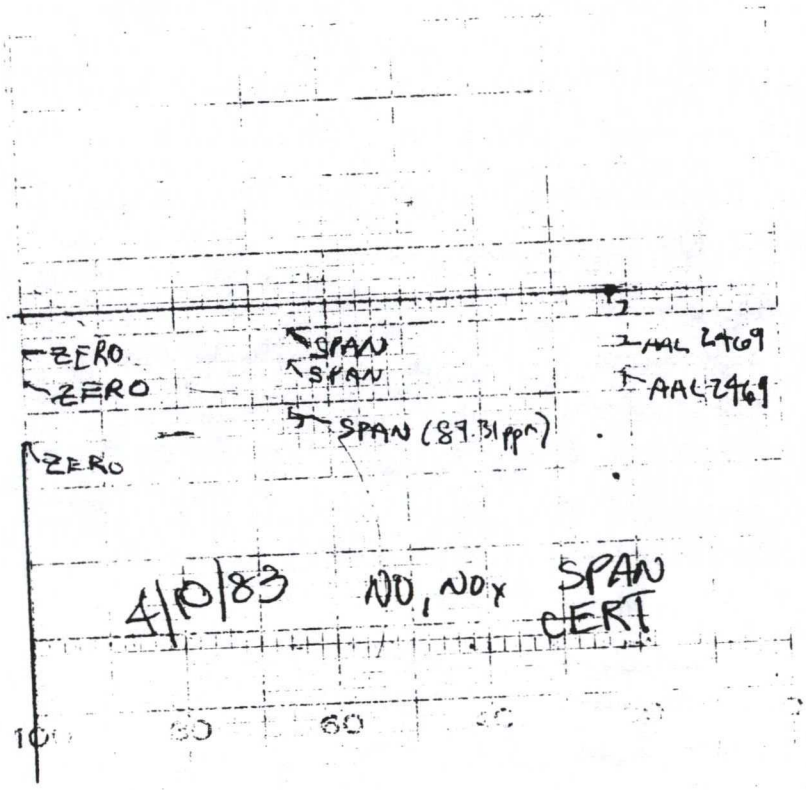
ZERO
ZERO
ZERO
SPAN
SPAN
SPAN (89.31 ppm)
AAL 2469
AAL 2469
4/10/83 NO, NOx SPAN CERT
100
80
60

KVB

CALIBRATION GAS ANALYSIS DATA SHEET

Western Engineering Division
Technical Services

Date 4-18-83 Operator M. FISHER

Reference

Instrument ID/SN _____ Model AR-600R

Manufacturer ANARAD

Zero Gas Composition N_2 Manufacturer SCOTT SPECIALTY

Bottle ID AAL 5211

Certified Span Gas

Composition CO Concentration 886.3 ppm

Manufacturer Scott Specialty Gases

Bottle ID AAL 7069 Accuracy ± 1 %

Certification: ☐ NBS/SRM ☒ EPA Protocol 1

☐ EPA Reference Method _____

Trial Gas

Bottle ID AAL519 Composition CO, CO_2, O_2 Mfgr Scott

Labeled Concentration 325.9 ppm, 10.49%, 3.99% Rated Accuracy ± 1 %

Instrument Range 0 - 2000

Calibration Data

Run No.	Indicated Concentration*		Difference
1	.163	326	Ø
2	.162	324	-2
3	.160	320	-6
Average		323.3	-2.7

*Zero and span checks between runs.

KVB71 66500-2052

KVB®

CALIBRATION GAS ANALYSIS DATA SHEET

Western Engineering Division
Technical Services

Date 4-18-83 Operator FISHER

Reference

Instrument ID/SN _____ Model AR-600R

Manufacturer ANARAD

Zero Gas Composition Blended Air Manufacturer Scott Specialty

Bottle ID AAL 4737

Certified Span Gas

Composition CO_2 Concentration 12.22%

Manufacturer Scott Specialty

Bottle ID AAL 9193 Accuracy ± 1 %

Certification: ☐ NBS/SRM ☒ EPA Protocol 1

☐ EPA Reference Method _____

Trial Gas

Bottle ID AAL 519 Composition CO, CO_2, O_2 Mfgr Scott

Labeled Concentration 325.9 ppm, 10.49%, 3.99% Rated Accuracy ± 1 %

Instrument Range 0-25 %

Calibration Data

Run No.	Indicated Concentration*		Difference
1	.418	10.45	.04
2	.418	10.45	.04
3	.418	10.45	.04
Average		10.45	.04

*Zero and span checks between runs.

KVB71 66500-2052

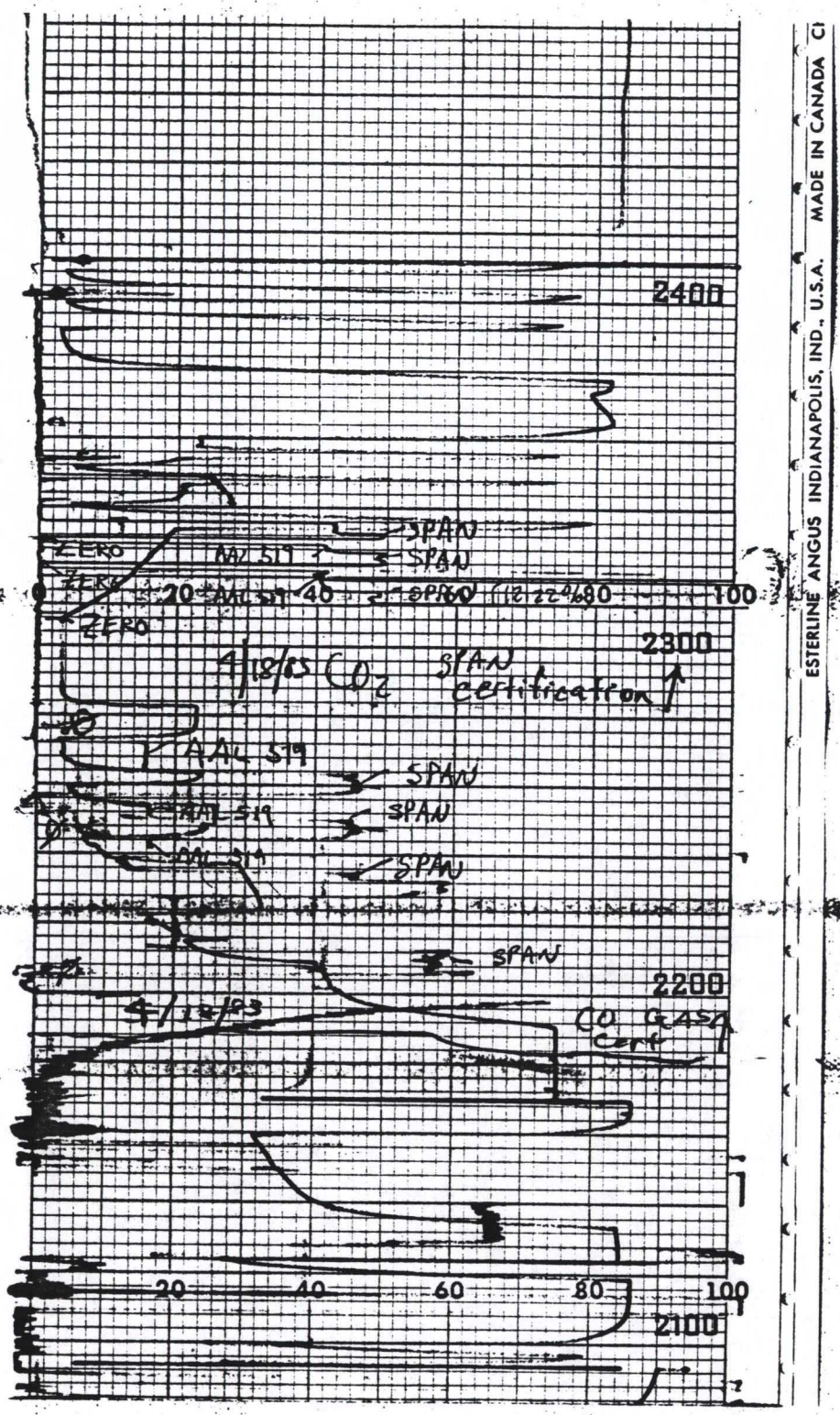

CO / CO_2 GAS certifications

KVB71 66500-2052

Scott Environmental Technology Inc.

Plumsteadville, PA 18949
(215) 766-8861

Troy, MI 48084
(313) 589-2950

San Bernardino, CA 92411
(714) 887-2571

SPECIALTY GAS DIVISION

KVB
1310 E. EDINGER ST.
SANTA ANA, CA. 92705

Date: 12-30-82
Our Project No.: 49329
Your P.O. No.: 27021

Gentlemen:

Thank you for choosing Scott for your Specialty Gas needs. The analyses for the gases ordered, as reported by our laboratory, are listed below. Results are in volume percent, unless otherwise indicated.

ANALYTICAL REPORT

Cyl. No. AAL519 — Analytical Accuracy ±1%

Component	Concentration
OXYGEN	3.99%
CARBON DIOXIDE	10.49%
CARBON MONOXIDE	325.9 PPM
NITROGEN	BALANCE
GRAVIMETRIC MASTER*	

Cyl. No. AAL599 — Analytical Accuracy ±1%

Component	Concentration
OXYGEN	3.99%
CARBON DIOXIDE	10.50%
CARBON MONOXIDE	325.[illegible] PPM
NITROGEN	BALANCE
GRAVIMETRIC MASTER*	

Cyl. No. AAL395 — Analytical Accuracy ±1%

Component	Concentration
OXYGEN	4.01%
CARBON DIOXIDE	10.50%
CARBON MONOXIDE	325.4 PPM
NITROGEN	BALANCE
GRAVIMETRIC MASTER*	

Cyl. No. AAL1642 — Analytical Accuracy ±1%

Component	Concentration
NITRIC OXIDE	82.0 PPM
NOX	84.0 PPM
NITROGEN	BALANCE
GRAVIMETRIC MASTER*	

CERTIFIED

*CERTIFIED TO HAVE BEEN BLENDED AGAINST NBS CERTIFIED WEIGHTS AND VERIFIED CORRECT BY INDEPENDENT ANALYSIS.

Analyst _____

Approved By James Ross

KVB71 66500-2052

The only liability of this Company for gas which fails to comply with this analysis shall be replacement thereof by the Company without extra cost.

CERTIFIED REFERENCE MATERIALS ■ EPA PROTOCOL GASES
ACUBLEND® ■ CALIBRATION & SPECIALTY GAS MIXTURES ■ PURE GASES
ACCESSORY PRODUCTS ■ CUSTOM ANALYTICAL SERVICES

Scott Specialty Gases Scott Envir en Technology, Inc.
PLUMSTEADVILLE, PA. 18949 PHONE: 215-766-8861 TWX: 5 665-9344

Date Shipped 10/22/82
Our Project No: 317922 (48863)
Your P.O. No: 26894
Page 1 of 2

KVB
ATTN: ROGER GRIFFEN
1310 E. EDDINGER
SUITE E
SANTA ANA, CA 92705

CERTIFICATE OF ANALYSIS – EPA PROTOCOL GASES*
(Concentrations are in mole % or ppm)

Cylinder Number AAL-9760 Certified Accuracy ±1 % NBS Traceable Analysis Dates: First 10/14/82 Last 10/21/82

COMPONENTS	CERTIFIED CONC	EXPIRATION DATE	ANALYTICAL PRINCIPLE	PRIMARY STANDARD NBS/SRM's	REPLICATE CONCENTRATIONS FIRST	SECOND
OXYGEN	9.044%	4/21/83	Paramagnetic	2658, 2657	9.046%	9.043%
NITROGEN	BALANCE					

Cylinder Number AAL-9193 Certified Accuracy ±1 % NBS Traceable Analysis Dates: First 10/15/82 Last 10/22/82

COMPONENTS	CERTIFIED CONC	EXPIRATION DATE	ANALYTICAL PRINCIPLE	PRIMARY STANDARD NBS/SRM's	REPLICATE CONCENTRATIONS FIRST	SECOND
CARBON DIOXIDE	12.22%	4/22/83	Thermal Conductivity	1675, 1674	12.21%	12.23%
NITROGEN	BALANCE					

*We hereby certify the cylinder gas has been analyzed according to EPA Protocol No: 1

Analyst Penrose Hallowell
Penrose Hallowell, Jr.

Approved By
Francis Nevill

The only liability of this Company for gas which fails to comply with this analysis shall be replacement thereof by the Company without extra cost.

CERTIFIED REFERENCE MATERIALS ▪ EPA PROTOCOL GASES ▪ ACUBLEND® ▪ CALIBRATION & SPECIALTY GAS MIXTURES
PURE GASES ▪ ACCESSORY PRODUCTS ▪ CUSTOM ANALYTICAL SERVICES
TROY, MICHIGAN / SAN BERNARDINO, CALIFORNIA

KVB71 66500-2052

APPENDIX G

INSTRUMENT DATA SHEETS AND STRIP CHARTS

KVB71 66500-2052

KVB

MOBILE LABORATORY DATA

Company RUSTON / ARCO ALASKA Location KUPARUK, Prudhoe Bay

Unit No. P 2202 B Capacity _____ Data Taken By FISHER

Unit Type GAS TURBINE Burner Type _____

1. Test No.	1-1		1-2		1-3		Calibration	
2. Date	5/18		5/18		5/18		5/18	
3. Time	1100		1140		1200		1200	
4. Load, MW	80%		80%		80%			
5. Fuel Type	GAS		GAS		GAS			
6. Probe Position and Port ID	14	W	14	W	14	W		
7. Oxygen (%)	17.7		17.68		17.68			
8. NOx/15% O_2 (ppm)	34.0	62.25	34.0	62.3	32.6	59.3		
9. NO/15% O_2 (ppm)	31.5	57.68	31.8	58.2	31.4	57.1		
10. Carbon Dioxide (%)-Stack	2.13		2.2		2.2			
11. Carbon Monoxide (ppm) uncor/cor	20	36.6	30	54.9	30	54.6		
12. Hydrocarbons (ppm) uncor/cor	—		—					
13. Sulfur Dioxide (ppm) uncor/cor	—		—					
14. Atmos. Temp. (°F) wet/dry		10		10		10		
15. Relative Humidity (%)								
16. Atmos. Pressure (in. Hg)	30.05		30.04		30.04			
17. Calibration: (ppm) as found/cor							Pre Test	
18. NO (Cyl # AAL 5954 ; 87.3 ppm psig)						Ø	87.3	87.3
19. CO (Cyl # AAL 519 ; 325.9 ppm psig)						Ø	325.9	325.9
20. O_2 (Cyl # AAL 4737 ; 20.95% psig)						Ø	20.8	20.95
21. CO_2 (Cyl # AAL 519 ; 12.49% psig)						Ø	12.49	12.49
22. SO_2 (Cyl # ; psig)								
23.								
24.								
25.								
26.								
27.								

KVB71 66500-2052

KVB

MOBILE LABORATORY DATA

Company RUSTON / ARCO ALASKA Location KUPARUK / Prudhoe Bay

Unit No. P 2202 B Capacity _____ Data Taken By FISHER

Unit Type GAS TURBINE Burner Type _____

1. Test No.	1-4		1-5		2-1		Calibrate	
2. Date	5/18		5/18		5/18		5/18	
3. Time	1215		1300		1425		1430	
4. Load, MW	80%		80%		80%		80%	
5. Fuel Type	GAS		GAS		GAS		GAS	
6. Probe Position and Port ID	14	W	14	W	14	W	14	W
7. Oxygen (%)	17.8		17.83		17.83			
8. NOx/15% O_2 (ppm)	33.1	62.5	32.7	62.4	32.6	62.2		
9. NO/15% O_2 (ppm)	31.8	60.1	31.7	60.5	31.1	59.3		
10. Carbon Dioxide (%)-Stack	2.2		2.2		2.2			
11. Carbon Monoxide (ppm) uncor/cor	20	37.8	10	19.1	10	19.1		
12. Hydrocarbons (ppm) uncor/cor	—		—		—			
13. Sulfur Dioxide (ppm) uncor/cor	—		—		—			
14. Atmos. Temp. (°F) wet/dry		10		13		13		
15. Relative Humidity (%)								
16. Atmos. Pressure (in. Hg)	30.04		30.08		30.05			
17. Calibration: (ppm) as found/cor								
18. 87.3 ppm NO (Cyl # AAL 5954 ; 1275 psig)							87.6	87.3
19. 325.9 ppm CO (Cyl # AAL 519 ; 1800 psig)							325.9	325.9
20. 20.95% O_2 (Cyl # AAL 4737 ; 1100 psig)							20.95	20.95
21. 10.49% CO_2 (Cyl # AAL 519 ; 1800 psig)							10.49	10.49
22. SO_2 (Cyl # ; psig)								
23.								
24.								
25.								
26.								
27.								

KVB71 66500-2052

KVB

MOBILE LABORATORY DATA

Company RUSTON / ARCO ALASKA Location KUPARUK / Prudhoe Bay

Unit No. P 2202 B Capacity H.P. Data Taken By FISHER

Unit Type GAS TURBINE Burner Type M-20 COMPLIANCE #1 RUN

1. Test No.	2-2		2-3		2-4		2-5	
2. Date	5/18		5/18		5/18		5/18	
3. Time	1435		1440		1445		1450	
4. Load, MW	80%		80%		80%		80%	
5. Fuel Type	GAS		GAS		GAS		GAS	
6. Probe Position and Port ID	14	W	14	W	14	W	14	W
7. Oxygen (%)	17.68		17.75		17.75		17.83	
8. NOx/15% O_2 (ppm)	31.1	56.6	31.6	58.8	31.8	59.1	32.2	61.4
9. NO/15% O_2 (ppm)	30.7	55.9	30.4	56.5	30.8	57.3	31.4	59.9
10. Carbon Dioxide (%)-Stack	2.25		2.25		2.25		2.25	
11. Carbon Monoxide (ppm) uncor/cor	10	18.2	10	18.6	10	18.6	10	19.1
12. Hydrocarbons (ppm) uncor/cor	—		—		—		—	
13. Sulfur Dioxide (ppm) uncor/cor	—		—		—		—	
14. Atmos. Temp. (°F) wet/dry		13		13		13		13
15. Relative Humidity (%)								
16. Atmos. Pressure (in. Hg)	30.05		30.05		30.05		30.05	
17. Calibration: (ppm) as found/cor							Post	Test
18. 87.3 ppm NO (Cyl # AAL 5954 ; 1275 psig)						Ø	87.5	87.3
19. 325.9 ppm CO (Cyl # AAL 519 ; 1800 psig)						Ø	325.9	325.9
20. 20.95% O_2 (Cyl # AAL 4737 ; 1100 psig)							20.95	20.95
21. 10.49% CO_2 (Cyl # AAL 519 ; 1800 psig)						Ø	10.49	10.49
22. SO_2 (Cyl # ; psig)								
23.								
24.								
25.								
26.								
27.								

KVB71 66500-2052

Record instrument calibrations and drift over the duration of the gas traverse. Reset calibrations in preparation for the next run.

Date/Time 5-18-83 / 1455

NO Calibration After Test

Anlayzer Type TECO S/N

High Range Gas Conc. 87.31 ppm % Full Scale 87.31

Zero Gas Ø/N_2 ppm % Full Scale Ø

O_2 Calibration After Test

Analyzer Type Teledyne S/N

Atmospheric Conc: 20.9%, % Full Scale 83.8 %

Zero Gas Ø % Full Scale Ø %

Zero and Span Drift Data

Turbine Type Ruston S/N

Date: 5-18-83

Test No. 2-2 thru 2-5

#1 Run of M-20

	INITIAL CALIBRATION ppm or %	FINAL CALIBRATION ppm or %	DIFFERENCE INIT.-FINAL ppm or %	% OF SPAN
NO Zero Gas	Ø	Ø	Ø	Ø
NO Span Gas	87.3	87.5	0.2 *	0.2
O_2 Zero Gas	—	—	—	—
O_2 Span Gas	20.95	20.95	Ø *	Ø

$$\% \text{ of Span} = \frac{\text{Absolute Value of Difference}}{\text{Instrument Span}} \times 100$$

* Corrected for zero drift, i.e., if zero drift over test perido is +2 ppm then 2 ppm shall be subtracted from the difference between the initial and final readings

KVB71 66500-2052

KVB

MOBILE LABORATORY DATA

Company RUSTON / ARCO ALASKA Location KUPARUK / Prudhoe Bay

Unit No. 2202 B Capacity _____ Data Taken By FISHER

Unit Type GAS TURBINE Burner Type _____

M-20 COMPLIANCE #2 RUN

1. Test No.	2-6		2-7		2-8		2-9	
2. Date	5/18		5/18		5/18		5/18	
3. Time	1505		1510		1515		1520	
4. Load, MW	80%		80%		80%		80%	
5. Fuel Type	GAS		GAS		GAS		GAS	
6. Probe Position and Port ID	14	W	14	W	14	W	14	W
7. Oxygen (%)	17.58		17.75		17.75		17.8	
8. NOx/15% O_2 (ppm)	32.1	52.0	32.3	60.1	32.0	59.5	32.7	61.8
9. NO/15% O_2 (ppm)	31.4	55.4	31.7	58.9	31.2	58.0	31.5	59.5
10. Carbon Dioxide (%)-Stack	2.25		2.25		2.25		2.25	
11. Carbon Monoxide (ppm) uncor/cor	44	77.7	38	70.7	26	48.3	26	49.1
12. Hydrocarbons (ppm) uncor/cor	—		—		—		—	
13. Sulfur Dioxide (ppm) uncor/cor	—		—		—		—	
14. Atmos. Temp. (°F) wet/dry		13		13		13		13
15. Relative Humidity (%)								
16. Atmos. Pressure (in. Hg)	30.05		30.05		30.05		30.05	
17. Calibration: (ppm) as found/cor	Pre Test					ZERO	Post Test	
18. 87.3 ppm NO (Cyl # AAL 5454 ; 1775 psig)	87.5	87.3				Ø	87.3	87.3
19. 325.9 ppm CO (Cyl # AAL 519 ; 1800 psig)	325.9	325.9				Ø	325.9	325.9
20. 20.95% O_2 (Cyl # AAL 4737 ; 1100 psig)	20.95	20.95				Ø	20.95	20.95
21. 10.49% CO_2 (Cyl # AAL 519 ; 1800 psig)	10.49	10.49				Ø	10.49	10.49
22. SO_2 (Cyl # ; psig)								
23.								
24.								
25.								
26.								
27.								

KVB71 66500-2052

Record instrument calibrations and drift over the duration of the gas traverse. Reset calibrations in preparation for the next run.

Date/Time 5-18-83 / 1525

NO Calibration After Test

Anlayzer Type TECO S/N

High Range Gas Conc. 87.3 % Full Scale 87.3

Zero Gas Ø % Full Scale Ø

O_2 Calibration After Test

Analyzer Type Teledyne S/N

Atmospheric Conc: 20.9%, % Full Scale 83.8

Zero Gas Ø % Full Scale Ø

Zero and Span Drift Data

Turbine Type Ruston S/N

Date: 5-18-83

Test No. 2-6 thru 2-9

#2 Run M-20

	INITIAL CALIBRATION ppm or %	FINAL CALIBRATION ppm or %	DIFFERENCE INIT.-FINAL ppm or %	% OF SPAN
NO Zero Gas	Ø	Ø	Ø	Ø
NO Span Gas	87.3	87.3	Ø *	Ø
O_2 Zero Gas	—	—	—	—
O_2 Span Gas	20.95	20.95	Ø *	Ø

$$\% \text{ of Span} = \frac{\text{Absolute Value of Difference}}{\text{Instrument Span}} \times 100$$

* Corrected for zero drift, i.e., if zero drift over test perido is +2 ppm then 2 ppm shall be subtracted from the difference between the initial and final readings

KVB71 66500-2052

KVB

MOBILE LABORATORY DATA

Company RUSTON / ARCO ALASKA Location KUPARUK / Prudhoe Bay

Unit No. P 2202 B Capacity _____ Data Taken By FISHER

Unit Type GAS TURBINE Burner Type _____

M-5 COMPLIANCE #3 RUN

1. Test No.	2-10		2-11		2-12		2-13	
2. Date	5/18		5/18		5/18		5/18	
3. Time	1535		1540		1545		1550	
4. Load, MW	80%		80%		80%		80%	
5. Fuel Type	GAS		GAS		GAS		GAS	
6. Probe Position and Port ID	14	W	14	W	14	W	14	W
7. Oxygen (%)	17.75		17.75		17.8		17.8	
8. NOx/15% O_2 (ppm)	32.3	60.1	33.4	62.1	32.4	61.2	34.6	65.4
9. NO/15% O_2 (ppm)	31.3	58.2	32.6	60.6	31.3	59.1	33.3	62.9
10. Carbon Dioxide (%)-Stack	2.25		2.25		2.25		2.5	
11. Carbon Monoxide (ppm) uncor/cor	36	66.9	40	74.4	40	75.6	40	75.6
12. ~~Hydrocarbons (ppm) uncor/cor~~ CO	↓ 16		↓ 20		↓ 20		↓ 20*	← CORR. FOR ZERO DRIFT
13. Sulfur Dioxide (ppm) uncor/cor	—		—		—		—	
14. Atmos. Temp. (°F) wet/dry		13		13		13		13
15. Relative Humidity (%)								
16. Atmos. Pressure (in. Hg)	30.05		30.05		30.05		30.05	
17. Calibration: (ppm) as found/cor	Pre Test					ZERO	Post Test	
18. 87.3 ppm NO (Cyl #AAL 5954 ; 1250 psig)	87.7	87.7				Ø	87.7	87.3
19. 325.9 ppm CO (Cyl #AAL 519 ; 1775 psig)	325.9	325.9				20	360.0	325.9 1% off
20. 20.95% O_2 (Cyl #AAL 4737 ; 1050 psig)	20.95	20.95				Ø	20.75	20.95
21. 10.49% CO_2 (Cyl #AAL 519 ; 1775 psig)	10.49	10.49				Ø	10.49	10.49
22. SO_2 (Cyl # ; psig)								
23.								
24.								
25.								
26.								
27.								

KVB71 66500-2052

Record instrument calibrations and drift over the duration of the gas traverse. Reset calibrations in preparation for the next run.

Date/Time 5-18-83 / 1555

NO Calibration After Test

Anlayzer Type TECO S/N

High Range Gas Conc. 87.3 % Full Scale 87.3

Zero Gas Ø % Full Scale Ø

O_2 Calibration After Test

Analyzer Type Teledyne S/N

Atmospheric Conc: 20.9%, % Full Scale 83.8

Zero Gas Ø % Full Scale Ø

Zero and Span Drift Data

Turbine Type Ruston S/N

Date: 5-18-83

Test No. 2-10 thru 2-13

#3 Run M-20

	INITIAL CALIBRATION ppm or %	FINAL CALIBRATION ppm or %	DIFFERENCE INIT.-FINAL ppm or %	% OF SPAN
NO Zero Gas	Ø	Ø	Ø	Ø
NO Span Gas	87.3	87.7	0.4 *	0.4
O_2 Zero Gas	—	—	—	—
O_2 Span Gas	20.95	20.75	0.2 *	0.8

$$\% \text{ of Span} = \frac{\text{Absolute Value of Difference}}{\text{Instrument Span}} \times 100$$

* Corrected for zero drift, i.e., if zero drift over test perido is +2 ppm then 2 ppm shall be subtracted from the difference between the initial and final readings

KVB71 66500-2052

KVB

MOBILE LABORATORY DATA

Company RUSTON / BWC Location KURARUK ALASKA / ARCO

Unit No. P 2202 B Capacity _____ Data Taken By FISHER

Unit Type GAS TURBINE Burner Type _____

1. Test No.	STACK CALIBRATION							
2. Date	5/18/93							
3. Time	1610 +							
4. Load, MW								
5. Fuel Type								
6. Probe Position and Port ID								
7. Oxygen (%)								
8. NOx/15% O_2 (ppm)								
9. NO/15% O_2 (ppm)								
10. Carbon Dioxide (%)-Stack								
11. Carbon Monoxide (ppm) uncor/cor								
12. Hydrocarbons (ppm) uncor/cor								
13. Sulfur Dioxide (ppm) uncor/cor								
14. Atmos. Temp. (°F) wet/dry								
15. Relative Humidity (%)								
16. Atmos. Pressure (in. Hg)								
17. Calibration: (ppm) as found/cor			ZERO					
18. 87.3 ppm NO (Cyl # AAL 5954 ; 1250 psig)	86	87.3	.05					
19. 375.9 ppm CO (Cyl # AAL 519 ; 1775 psig)			Ø					
20. 20.95% O_2 (Cyl # AAL 4737 ; 1050 psig)	20.7	20.95						
21. 10.49% CO_2 (Cyl # AAL 519 ; 1775 psig)			Ø					
22. SO_2 (Cyl # ; psig)								
23.								
24.								
25.								
26.								
27.								

KVB71 66500-2052

KVB

MOBILE LABORATORY DATA

Company RUSTON / BWC Location KUPARUK / ARCO ALASKA

Unit No. P 2202 B Capacity _____ Data Taken By FISHER

Unit Type GAS TURBINE Burner Type _____

O_2 Traverse ~~M-5 COMPLIANCE #1 RUN~~

1. Test No.	1-1		1-2		1-3		1-4	
2. Date	5/18		5/18		5/18		5/18	
3. Time	1740		1748		1755		1805	
4. Load, MW	84%		84%		84%		84%	
5. Fuel Type	GAS		GAS		GAS		GAS	
6. Probe Position and Port ID	1	W	2	W	3	W	4	W
7. Oxygen (%)	18.0		17.93		17.8		17.8	
8. NOx/15% O_2 (ppm)	37.2	75.0	37.2	73.3	37.2	70.3	36.5	68.9
9. NO/15% O_2 (ppm)	36	72.6	36	70.9	36	68.0	35.2	66.5
10. Carbon Dioxide (%)-Stack	2.25		2.25		2.25		2.25	
11. Carbon Monoxide (ppm) uncor/cor	50*	100.8	50*	98.5	50*	94.4	50*	94.4
12. ~~Hydrocarbons (ppm) uncor/cor~~ CO	↓ 5		↓ 5		↓ 5		↓ 5	
13. Sulfur Dioxide (ppm) uncor/cor	—		—		—		—	
14. Atmos. Temp. (°F) wet/dry		13		13		13		13
15. Relative Humidity (%)								
16. Atmos. Pressure (in. Hg)	30.05		30.05		30.05		30.05	
17. Calibration: (ppm) as found/cor	Pre Test							
18. 87.3 ppm NO (Cyl # AAL 5954 ; 1250 psig)								
19. 325.9 ppm CO (Cyl # AAL 519 ; 1775 psig)								
20. 20.95% O_2 (Cyl # AAL 4737 ; 1050 psig)								
21. 10.49% CO_2 (Cyl # AAL 519 ; 1775 psig)								
22. SO_2 (Cyl # ; psig)								
23.								
24. *CO zero drifted								
25.								
26.								
27.								

← CORR. FOR ZERO DRIFT

KVB71 66500-2052

KVB

MOBILE LABORATORY DATA

Company RUSTON / BWC Location KUPARUK / ARCO ALASKA

Unit No. P 2202 B Capacity _____ Data Taken By FISHER

Unit Type GAS TURBINE Burner Type _____

O_2 TRAVERSE

1. Test No.	1-5		1-6		1-7		1-8	
2. Date	5/18		5/18		5/18		5/18	
3. Time	1815		1825		1835		1840	
4. Load, MW	84%		84 %		84 %		84 %	
5. Fuel Type	GAS		GAS		GAS		GAS	
6. Probe Position and Port ID	5	W	6	W	7	W	8	W
7. Oxygen (%)	17.8		17.8		17.8		17.8	
8. NOx/15% O_2 (ppm)	34.5	65.2	34.0	64.2	35.0	66.1	36.7	69.3
9. NO/15% O_2 (ppm)	33.3	62.9	32.8	62.0	33.8	63.8	35.5	67.1
10. Carbon Dioxide (%)-Stack	2.25		2.25		2.25		2.5	
11. Carbon Monoxide (ppm) uncor/cor	50*	94.4	50*	94.4	50*	94.4	50*	94.4
12. ~~Hydrocarbons (ppm) uncor/cor~~ CO	↓ 5		↓ 5		↓ 5		↓ 5	
13. Sulfur Dioxide (ppm) uncor/cor	—		—		—		—	
14. Atmos. Temp. (°F) wet/dry		13		13		13		13
15. Relative Humidity (%)								
16. Atmos. Pressure (in. Hg)	30.05		30.05		30.05		30.05	
17. Calibration: (ppm) as found/cor						ZERO	Post Test	
18. 87.3 ppm NO (Cyl # AAL 5954 ; 1250 psig)						Ø	87.3	
19. 375.4 ppm CO (Cyl # AAL 519 ; 1775 psig)						45	380	
20. 20.95% O_2 (Cyl # AAL 4737 ; 1050 psig)							20.95	
21. 10.49% CO_2 (Cyl # AAL 519 ; 1775 psig)						Ø	10.49	
22. SO_2 (Cyl # ; psig)								
23.								
24.								
25. * CO Zero Drifted								
26.								
27.								

* Not corr. to ZERO
CORR. FOR ZERO DRIF

KVB71 66500-2052

RUSTON TURBINE / ARCO ALASKA

Response Time Test 5/18/83

UNIT # 2202 B

			TIME (sec)	CALIB / SAMPLE (ppm)	
I	ZERO	TO SAMPLE	1612 - 1618 (395)	.05	18.5
	SPAN	TO SAMPLE	1623 - 1630 420	86	30.5
II	ZERO	TO SAMPLE	1633(25) - 1636(20) 175	.02	31
	SPAN	TO SAMPLE	1639(15) - 1642 165	86	29.5
III	ZERO	TO SAMPLE	1644(25) - 1647(50) 205	.05	19.5
	SPAN	TO SAMPLE	* 1650(25) - 1654 215	85.5	9.1
IV	SPAN	TO SAMPLE	1702(55) - 1705(03) 128	85.5	32.0
	ZERO	TO SAMPLE	1707(32) - 1710(24) 172	.05	6.0

* Pressure from Calibration Gas Bottles popped impinger. Hence, it took a long time to reach a steady reading and it was low.

O_2 Traverse : 5-10 min / point

Point	O_2	NO
1	18.0	36
2	17.93	36
3	17.8	36
4	17.8	35.2
5	17.8	33.3
6	17.8	32.8
7	17.8	33.8
8	17.8	35.5

KVB71 66500-2052

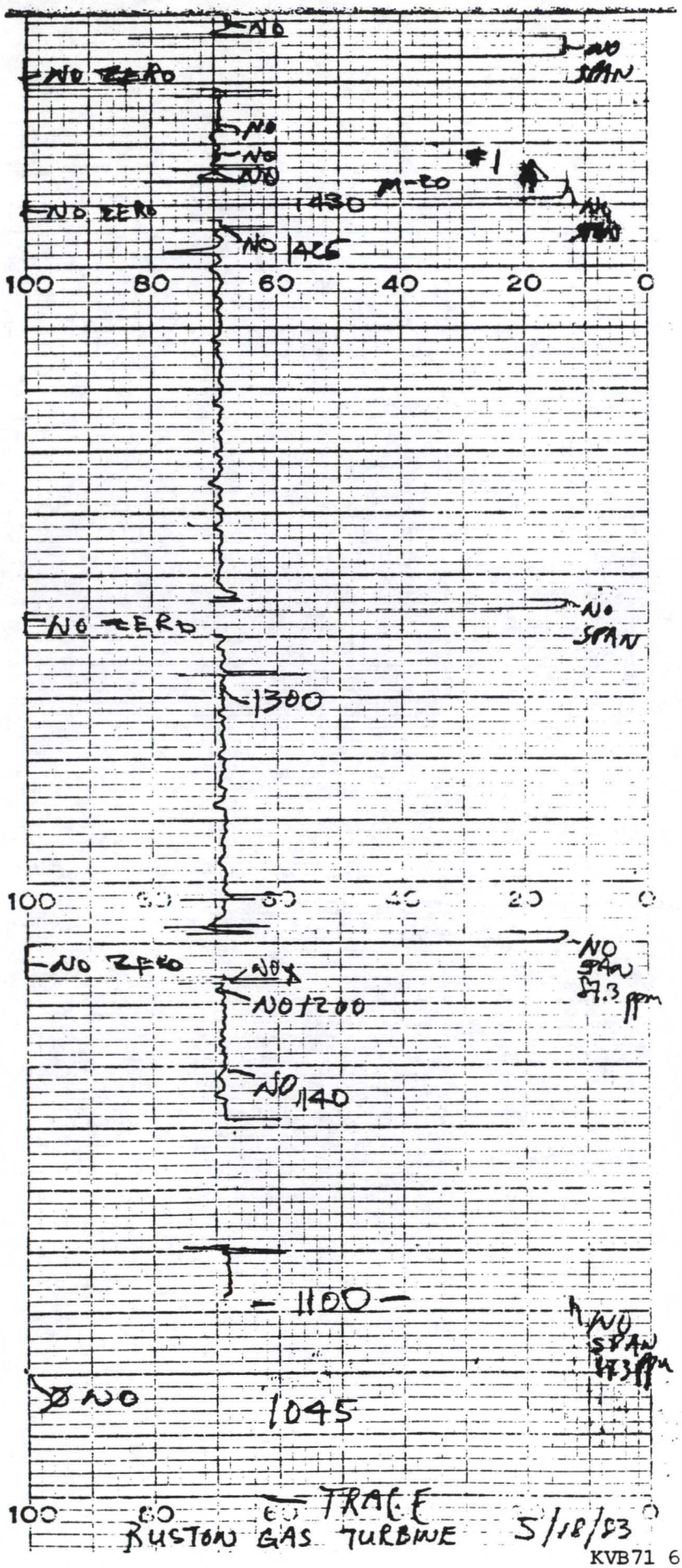

KVB71 66500-2052

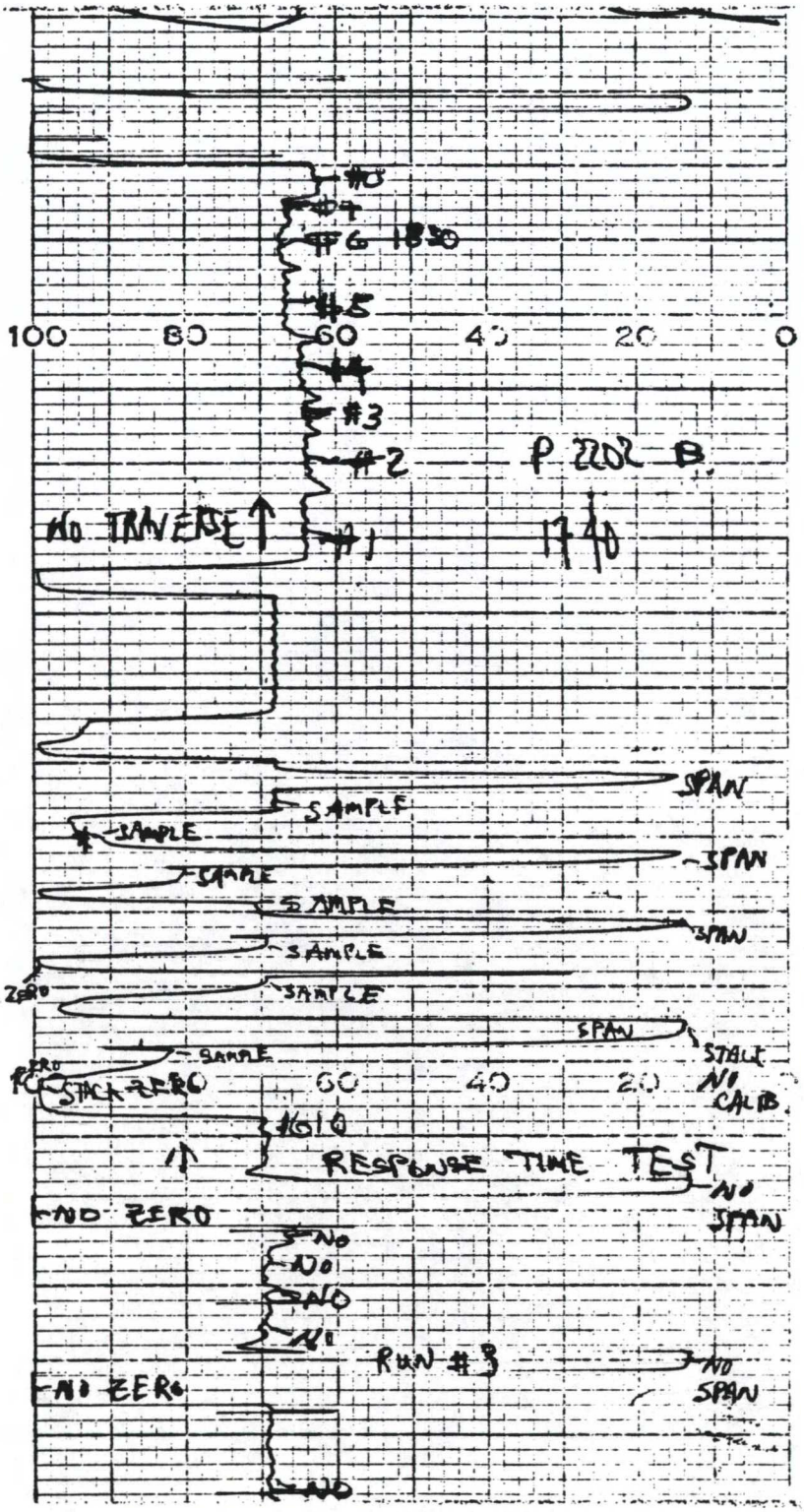
#6
#7
#6 1830
#5
100
80
60
40
20
0
#4
#3
#2
P 2202 B.
NO TRAVERSE
#1
1740
SPAN
SAMPLE
SAMPLE
SPAN
SAMPLE
SAMPLE
SPAN
SAMPLE
ZERO
SAMPLE
SPAN
STACK
ZERO
SAMPLE
STACK ZERO
60
40
20
NO CALIB.
#10
RESPONSE TIME TEST
NO SPAN
NO ZERO
NO
NO
NO
NO
RUN #3
NO SPAN
NO ZERO
NO

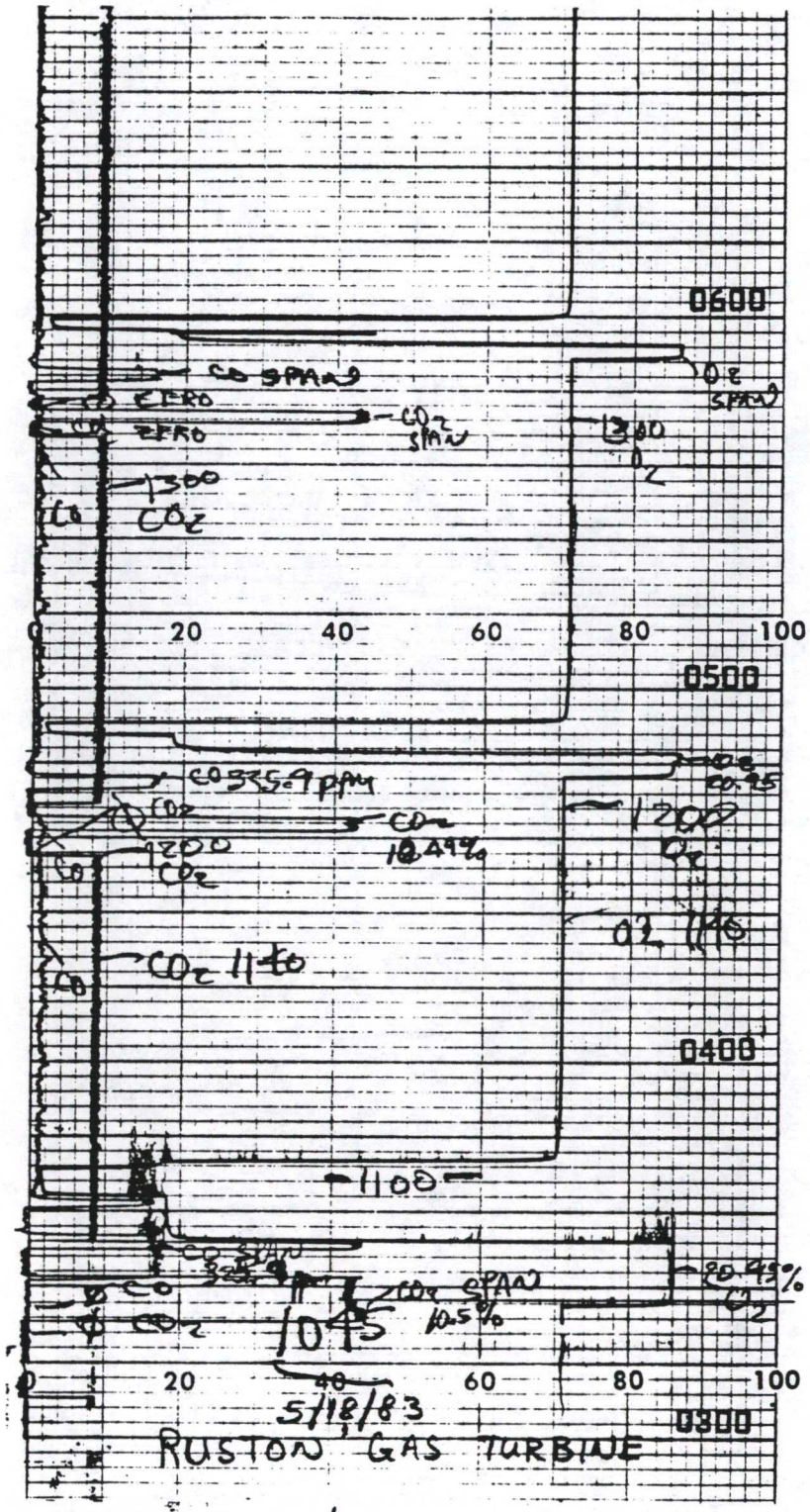

CO/CO_2/O_2
5/18/83

KVB71 66500-2052

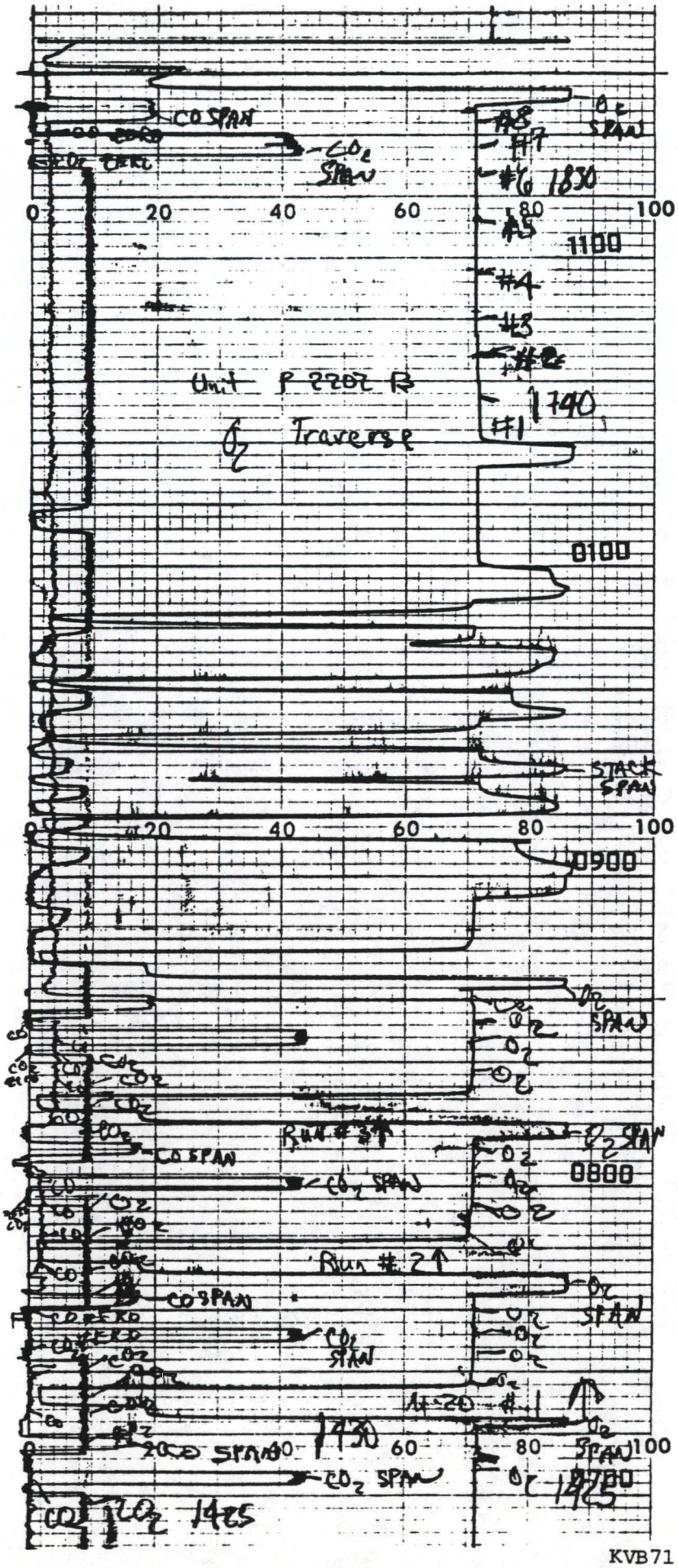

KVB71 66500-2052

Response Time

Ruston / BWC ARCO ALASKA

5/19/83

		TIME (sec)	READINGS (ppm) NO
I	ZERO TO SAMPLE	0953 (24) 0958 276	.05 / 39
	SPAN TO SAMPLE	1004 (35) 1008 215	85.5 / 39
II	ZERO TO SAMPLE	1011 (53) 1015 (08) 195	0.05 / 39
	SPAN TO SAMPLE	1020 (55) 1024 (15) 200	87 / 40
III	ZERO TO SAMPLE	1028 (20) 1031 (40) 200	0.5 / 39
	SPAN TO SAMPLE	1036 (50) 1037 (0) 190	87 / 40

KVB

MOBILE LABORATORY DATA

Company RUSTON BWC / ARCO ALASKA Location KUPARUK Prudhoe Bay

Unit No. P 22DL A Capacity _____ Data Taken By FISHER

Unit Type GAS TURBINE Burner Type _____

M-20 COMPLIANCE RUN #1

1. Test No.	1-1		1-2		1-3		1-4	
2. Date	5/19		5/19		5/19		5/19	
3. Time START @ 1100	1107		1114		1121		1128	
4. Load, MW	84%		84%		84%		84%	
5. Fuel Type	GAS		GAS		GAS		GAS	
6. Probe Position and Port ID	1	S	2	S	3	S	4	S
7. Oxygen (%)	17.3		17.5		17.3		17.3	
8. NOx/15% O_2 (ppm)	38.7	63.1	42.0	72.4	41.5	67.65	40.5	66.0
9. NO/15% O_2 (ppm)	38.5	62.8	41.1	70.9	40.8	66.5	40.0	65.2
10. Carbon Dioxide (%)-Stack	2.13		2.25		2.38		2.38	
11. Carbon Monoxide (ppm) uncor/cor	75	122.3	84	144.9	87	141.8	82	133.7
12. ~~Hydrocarbons (ppm) uncor/cor~~ CO	↓ 55		↓ 64		↓ 67		↓ 62	← CORR. FOR ZERO DRIFT
13. Sulfur Dioxide (ppm) uncor/cor	—		—		—		—	
14. Atmos. Temp. (°F) wet/dry		13		13		13		13
15. Relative Humidity (%)								
16. Atmos. Pressure (in. Hg)	29.86		29.86		29.86		29.86	
17. Calibration: (ppm) as found/cor	Pre Test							
18. 87.3 ppm NO (Cyl # AAL 5954 ; 1175 psig)	87.3							
19. 325.9 ppm CO (Cyl # AAL 519 ; 1675 psig)	325.9							
20. 20.95 ppm O_2 (Cyl # AAL 4737 ; 810 psig)	20.95							
21. 10.49 CO_2 (Cyl # AAL 519 ; 1675 psig)	10.49							
22. SO_2 (Cyl # ; psig)								
23.								
24.								
25.								
26.								
27.								

KVB71 66500-2052

365

MOBILE LABORATORY DATA

Company RUSTON BWC / ARCO ALASKA Location KUPARUK Prudhoe Bay

Unit No. P2202 A Capacity _____ Data Taken By FISHER

Unit Type GAS TURBINE Burner Type _____

M-20 COMPLIANCE RUN #1

1. Test No.	1-5		1-6		1-7		1-8	
2. Date	5/19/83		5/19/83		5/19/83		5/19/83	
3. Time	1135		1142		1149		1156	
4. Load, MW	84%		84%		84%		84%	
5. Fuel Type	GAS		GAS		GAS		GAS	
6. Probe Position and Port ID	5	S	6	S	7	S	8	S
7. Oxygen (%)	17.3		17.3		17.3		17.3	
8. NOx/15% O_2 (ppm)	38.4	62.6	37.7	61.5	37.3	60.8	38.0	61.9
9. NO/15% O_2 (ppm)	37.5	61.1	36.3	59.2	36.1	58.8	36.8	60.0
10. Carbon Dioxide (%)-Stack	2.38		2.38		2.38		2.38	
11. Carbon Monoxide (ppm) uncor/cor	38	61.9	38	61.9	20	32.6	29	47.3
12. ~~Hydrocarbons (ppm) uncor/cor~~ CO	↓ 18		↓ 18		↓ Ø		↓ 9	← CORR. FOR ZERO DRIF
13. Sulfur Dioxide (ppm) uncor/cor	—		—		—		—	
14. Atmos. Temp. (°F) wet/dry		13		13		13		13
15. Relative Humidity (%)								
16. Atmos. Pressure (in. Hg)	29.86		29.86		29.86			
17. Calibration: (ppm) as found/cor					ZERO		Post Test	
18. 87.3 ppm NO (Cyl # AAL 5954 ; 1115 psig)						Ø	85.7	87.3
19. 325.9 ppm CO (Cyl # AAL 519 ; 1675 psig)						20	325.0	325.9
20. 20.95 O_2 (Cyl # AAL 4739 ; 800 psig)						Ø	20.75	20.95
21. 10.49 CO_2 (Cyl # AAL 519 ; 1675 psig)						Ø	10.49	10.49
22. SO_2 (Cyl # ; psig)								
23.								
24.								
25.								
26.								
27.								

KVB71 66500-2052

Record instrument calibrations and drift over the duration of the gas traverse. Reset calibrations in preparation for the next run.

Date/Time 5-19-83 / 1200

NO Calibration After Test

Anlayzer Type TECO S/N

High Range Gas Conc. 87.3 % Full Scale 87.3

Zero Gas Ø % Full Scale Ø

O_2 Calibration After Test

Analyzer Type Teledyne S/N

Atmospheric Conc: 20.9%, % Full Scale 83.8

Zero Gas Ø % Full Scale Ø

Zero and Span Drift Data

Turbine Type Ruston S/N

Date: 5-19-83

Test No. 1-1 thru 1-8

#1 Run M-20

	INITIAL CALIBRATION ppm or %	FINAL CALIBRATION ppm or %	DIFFERENCE INIT.-FINAL ppm or %	% OF SPAN
NO Zero Gas	Ø	Ø	Ø	Ø
NO Span Gas	87.3	85.7	1.6 *	1.6
O_2 Zero Gas	—	—	—	—
O_2 Span Gas	20.95	20.75	0.2 *	0.8

$$\% \text{ of Span} = \frac{\text{Absolute Value of Difference}}{\text{Instrument Span}} \times 100$$

* Corrected for zero drift, i.e., if zero drift over test perido is +2 ppm then 2 ppm shall be subtracted from the difference between the initial and final readings

KVB71 66500-2052

KVB

MOBILE LABORATORY DATA

Company RUSTON BWC / ARCO ALASKA Location KUPARUK, PRUDHOE BAY

Unit No P 2202 A Capacity _____ Data Taken By FISHER

Unit Type GAS TURBINE Burner Type _____

M-20 COMPLIANCE RUN #2

1. Test No.	2-1		2-2		2-3		2-4	
2. Date	5/19/83		5/19/83		5/19/83		5/19/83	
3. Time START 1347	1354		1401		1408		1415	
4. Load, MW	84%		84%		84%		84%	
5. Fuel Type	GAS		GAS		GAS		GAS	
6. Probe Position and Port ID	1	S	2	S	3	S	4	S
7. Oxygen (%)	17.88		18.0		17.95		17.95	
8. NOx/15% O_2 (ppm)	40.4	78.3	41.7	84.1	40.9	81.1	40.2	79.7
9. NO/15% O_2 (ppm)	39.4	76.4	40.6	81.9	40	79.3	39.0	77.3
10. Carbon Dioxide (%)-Stack	2.25		2.25		2.25		2.25	
11. Carbon Monoxide (ppm) uncor/cor	33	64.0	37	74.6	20	39.7	18	35.7
12. Hydrocarbons (ppm) uncor/cor	–		–		–		–	
13. Sulfur Dioxide (ppm) uncor/cor	–		–		–		–	
14. Atmos. Temp. (°F) wet/dry		17		17		17		17
15. Relative Humidity (%)								
16. Atmos. Pressure (in. Hg)	29.7		29.7		29.7		29.7	
17. Calibration: (ppm) as found/cor	Pre Test							
18. 87.3 ppm NO (Cyl # AAL 5954 ; 1115 psig)		87.3						
19. 325.9 ppm CO (Cyl # AAL 519 ; 1675 psig)		325.9						
20. 20.95% O_2 (Cyl # AAL 4737 ; 800 psig)		20.95%						
21. 10.49% CO_2 (Cyl # AAL 519 ; 1675 psig)		10.49%						
22. SO_2 (Cyl # ; psig)								
23.								
24.								
25.								
26.								
27.								

7.45
3.07

KVB71 66500-2052

KVB

MOBILE LABORATORY DATA

Company RUSTON BWC / ARCO ALASKA Location KUPARUK PRUDHOE BAY

Unit No. P 2202 A Capacity _____ Data Taken By FISHER

Unit Type GAS TURBINE Burner Type _____

M-20 COMPLIANCE RUN #2

1. Test No.	2-5		2-6		2-7		2-8	
2. Date	5/19/83		5/19/83		5/19/83		5/19/83	
3. Time	1422		1432		1439		1446	
4. Load, MW	84%		84%		84%		84%	
5. Fuel Type	GAS		GAS		GAS		GAS	
6. Probe Position and Port ID	5	S	6	S	7	S	8	S
7. Oxygen (%)	17.95		17.95		17.95		17.95	
8. NOx/15% O_2 (ppm)	37.0	73.4	36	71.4	35.4	70.2	38.7	76.8
9. NO/15% O_2 (ppm)	35.8	71.0	35	69.4	34.2	67.8	37.8	75.0
10. Carbon Dioxide (%)-Stack	2.25		2.25		2.25		2.25	
11. Carbon Monoxide (ppm) uncor/cor	22	43.6	22	43.6	24	47.6	25	49.6
12. Hydrocarbons (ppm) uncor/cor	—		—		—		—	
13. Sulfur Dioxide (ppm) uncor/cor	—		—		—		—	
14. Atmos. Temp. (°F) wet/dry		17		17		17		17
15. Relative Humidity (%)								
16. Atmos. Pressure (in. Hg)	29.75		29.75		29.8		29.8	
17. Calibration: (ppm) as found/cor						Zero	Post	Test
18. 87.3 ppm NO (Cyl # AAL 5954 ; 1100 psig)						Ø	87.7	87.3
19. 325.9 ppm CO (Cyl # AAL 519 ; 1650 psig)						Ø	325.9	325.9
20. 20.95% O_2 (Cyl # AAL 4737 ; 775 psig)							21.5	20.95
21. 10.49% CO_2 (Cyl # AAL 519 ; 1650 psig)						Ø	10.49	10.49
22. SO_2 (Cyl # ; psig)								
23.								
24. Break in run @ 1424 Due to								
25. a break in the sampling train @								
26. the H_2O knockout impingers. Quickly								
27. repaired and test continued.								

KVB71 66500-2052

Record instrument calibrations and drift over the duration of the gas traverse. Reset calibrations in preparation for the next run.

Date/Time 5-19-83 /1450

NO Calibration After Test

Anlayzer Type TECO S/N

High Range Gas Conc. 87.3 % Full Scale 87.3

Zero Gas Ø % Full Scale Ø

O_2 Calibration After Test

Analyzer Type Teledyne S/N

Atmospheric Conc: 20.9%, % Full Scale 83.8

Zero Gas Ø % Full Scale Ø

Zero and Span Drift Data

Turbine Type RUSTON S/N

Date: 5-19-83

Test No. 2-1 thru 2-8

#2 Run M-20

	INITIAL CALIBRATION ppm or %	FINAL CALIBRATION ppm or %	DIFFERENCE INIT.-FINAL ppm or %	% OF SPAN
NO Zero Gas	Ø	Ø	Ø	Ø
NO Span Gas	87.3	87.7	0.4 *	0.4
O_2 Zero Gas	—	—	—	—
O_2 Span Gas	20.95	21.5	0.55 *	2.2

$$\% \text{ of Span} = \frac{\text{Absolute Value of Difference}}{\text{Instrument Span}} \times 100$$

* Corrected for zero drift, i.e., if zero drift over test perido is +2 ppm then 2 ppm shall be subtracted from the difference between the initial and final readings

KVB71 66500-2052

KVB

MOBILE LABORATORY DATA

Company RUSTON BWC/ARCO ALASKA Location KUPARUK PRUDHOE BAY

Unit No. P 2202 A Capacity _____ Data Taken By FISHER

Unit Type GAS TURBINE Burner Type _____

M-20 COMPLIANCE RUN #3

1. Test No.	3-1		3-2		3-3		3-4	
2. Date	5/19/83		5/19/83		5/19/83		5/19/83	
3. Time START @ 1515	1522		1529		1536		1543	
4. Load, MW	84 %		84 %		84 %		84 %	
5. Fuel Type	GAS		GAS		GAS		GAS	
6. Probe Position and Port ID	1	S	2	S	3	S	4	S
7. Oxygen (%)	17.0		17.0		16.88		17.0	
8. NOx/15% O_2 (ppm)	40.5	61.0	40.2	60.6	40.1	58.62	39.8	60.0
9. NO/15% O_2 (ppm)	40	60.3	40	60.3	39.6	57.9	39.3	59.2
10. Carbon Dioxide (%)-Stack	2.38		2.38		2.38		2.38	
11. Carbon Monoxide (ppm) uncor/cor	98	147.6	102	153.6	95	138.9	62	93.4
12. ~~Hydrocarbons (ppm) uncor/cor~~ CO	↓ ~~66~~		↓ ~~70~~		↓ ~~63~~		↓ ~~30~~	← CORR. FOR ZERO DRIFT
13. Sulfur Dioxide (ppm) uncor/cor	—		—		—		—	
14. Atmos. Temp. (°F) wet/dry		17		17		17		17
15. Relative Humidity (%)								
16. Atmos. Pressure (in. Hg)	29.8		29.8		29.8		29.8	
17. Calibration: (ppm) as found/cor	Pre Test							
18. 87.3 ppm NO (Cyl # AAL 5954 ; 1100 psig)		87.3						
19. 325.9 ppm CO (Cyl # AAL 519 ; 1650 psig)		325.9						
20. 20.95% O_2 (Cyl # AAL 4737 ; 750 psig)		20.95						
21. 10.49% CO_2 (Cyl # AAL 519 ; 1650 psig)		10.49						
22. SO_2 (Cyl # ; psig)								
23.								
24.								
25.								
26.								
27.								

KVB71 66500-2052

KVB

MOBILE LABORATORY DATA

Company RUSTON BWC / ARCO ALASKA Location KUPARUK PRUDHOE BAY

Unit No. P 2202 A Capacity _____ Data Taken By FISHER

Unit Type GAS TURBINE Burner Type _____

M-20 COMPLIANCE RUN #3

1. Test No.	3-5		3-6		3-7		3-8	
2. Date	5/19/83		5/19/83		5/19/83		5/19/83	
3. Time	1550		1557		1604		1611	
4. Load, MW	84 %		84 %		84 %		84 %	
5. Fuel Type	GAS		GAS		GAS		GAS	
6. Probe Position and Port ID	5	S	6	S	7	S	8	S
7. Oxygen (%)	17.08		17.08		17.08		17.08	
8. NOx/15% O_2 (ppm)	38.1	58.6	36.7	56.4	36.4	56.0	36.2	55.7
9. NO/15% O_2 (ppm)	37.2	57.7	35.8	55.0	35.4	54.4	35.3	54.3
10. Carbon Dioxide (%)-Stack	2.38		2.38		2.38		2.38	
11. Carbon Monoxide (ppm) uncor/cor	57	87.6	36	55.3	52	79.9	52	79.9
12. Hydrocarbons (ppm) uncor/cor	↓ 25		↓ 4		↓ 20		↓ 20	
13. Sulfur Dioxide (ppm) uncor/cor	—		—		—		—	
14. Atmos. Temp. (°F) wet/dry		17		17		17		17
15. Relative Humidity (%)								
16. Atmos. Pressure (in. Hg)	29.8		29.8		29.8		29.8	
17. Calibration: (ppm) as found/cor					ZERO		Post Test	
18. 87.3 ppm NO (Cyl # AAL 5954 ; 1100 psig)					Ø		87.7	
19. 325.9 ppm CO (Cyl # AAL 519 ; 1650 psig)					32		370	
20. 20.95% O_2 (Cyl # AAL 4737 ; 750 psig)					Ø		20.95	
21. 10.49% CO_2 (Cyl # AAL 519 ; 1650 psig)					Ø		10.49	
22. SO_2 (Cyl # ; psig)								
23.								
24.								
25.								
26.								
27.								

← CORR. FOR ZERO DRIFT

KVB71 66500-2052

Record instrument calibrations and drift over the duration of the gas traverse. Reset calibrations in preparation for the next run.

Date/Time 5-19-83 / 1615

NO Calibration After Test

Anlayzer Type TECO S/N

High Range Gas Conc. 87.3 % Full Scale 87.3

Zero Gas Ø % Full Scale Ø

O_2 Calibration After Test

Analyzer Type Teledyne S/N

Atmospheric Conc: 20.9%, % Full Scale 83.8

Zero Gas Ø % Full Scale Ø

Zero and Span Drift Data

Turbine Type RUSTON S/N

Date: 5-19-83

Test No. 3-1 thru 3-8

#3 RUN M-20

	INITIAL CALIBRATION ppm or %	FINAL CALIBRATION ppm or %	DIFFERENCE INIT.-FINAL ppm or %	% OF SPAN
NO Zero Gas	Ø	Ø	Ø	Ø
NO Span Gas	87.3	87.7	0.4 *	0.4
O_2 Zero Gas	—	—	—	—
O_2 Span Gas	20.95	20.95	Ø *	Ø

$$\% \text{ of Span} = \frac{\text{Absolute Value of Difference}}{\text{Instrument Span}} \times 100$$

* Corrected for zero drift, i.e., if zero drift over test perido is +2 ppm then 2 ppm shall be subtracted from the difference between the initial and final readings

KVB71 66500-2052

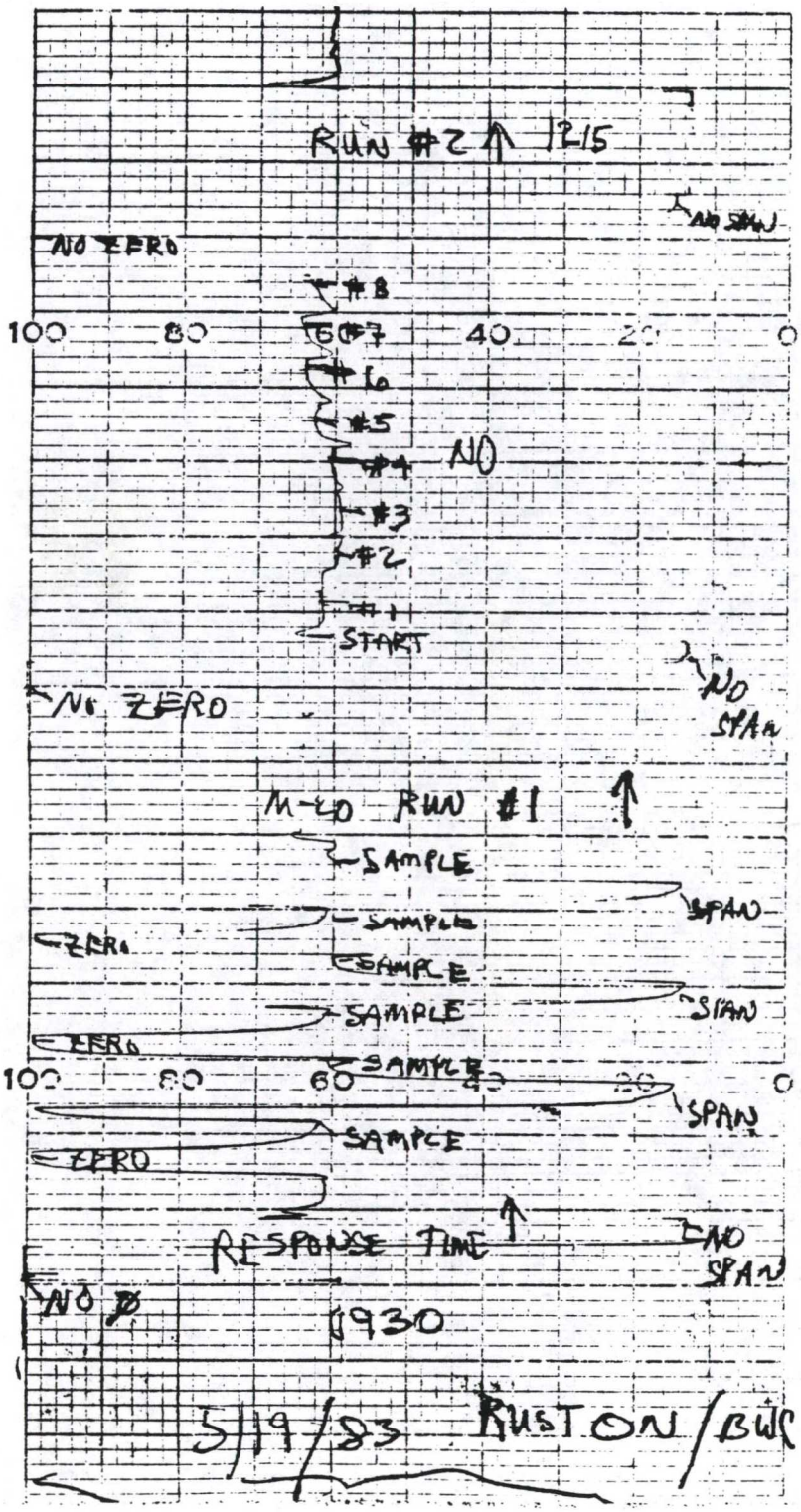

KVB71 66500-2052

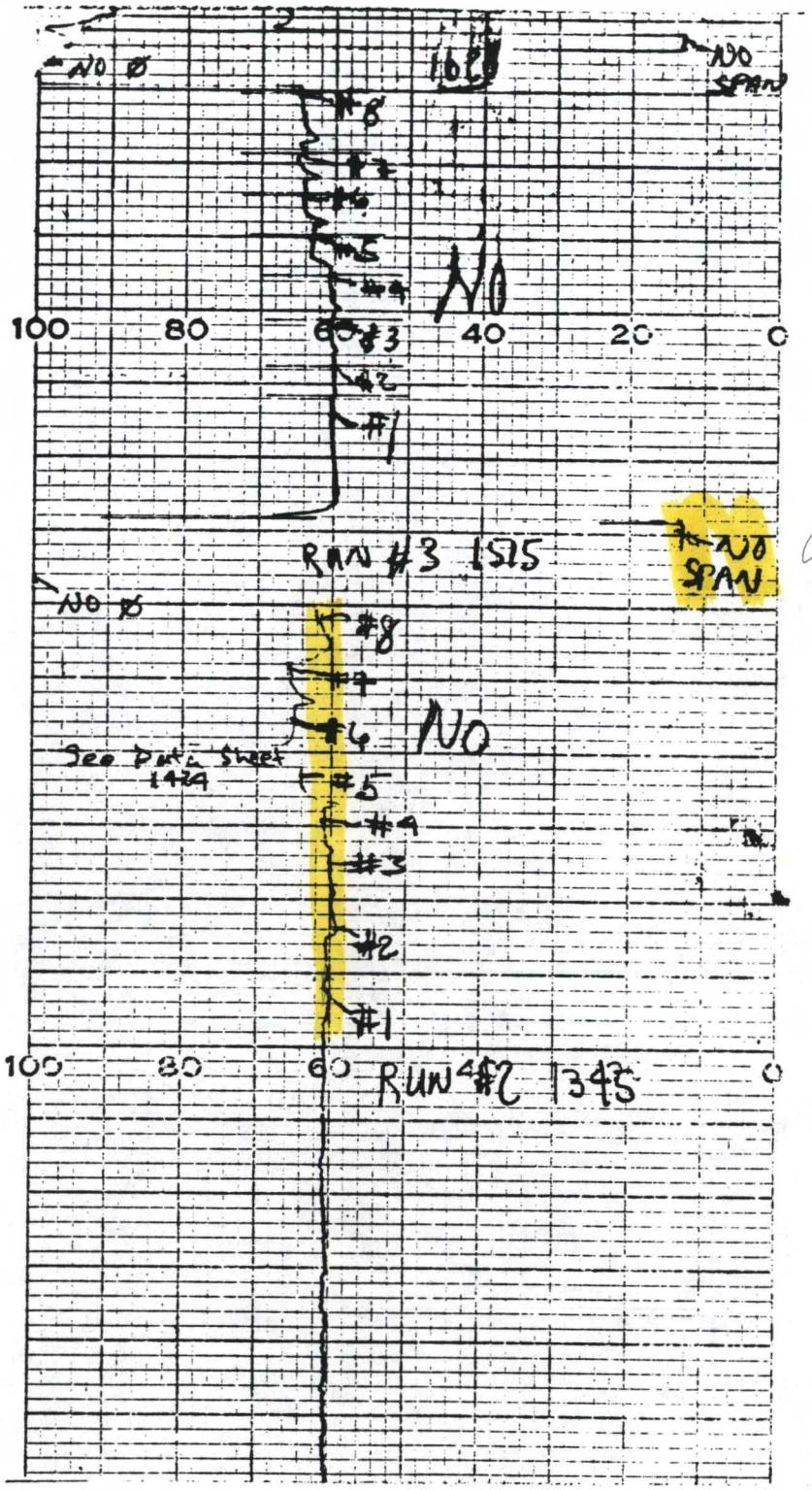

87.3

KVB71 66500-2052

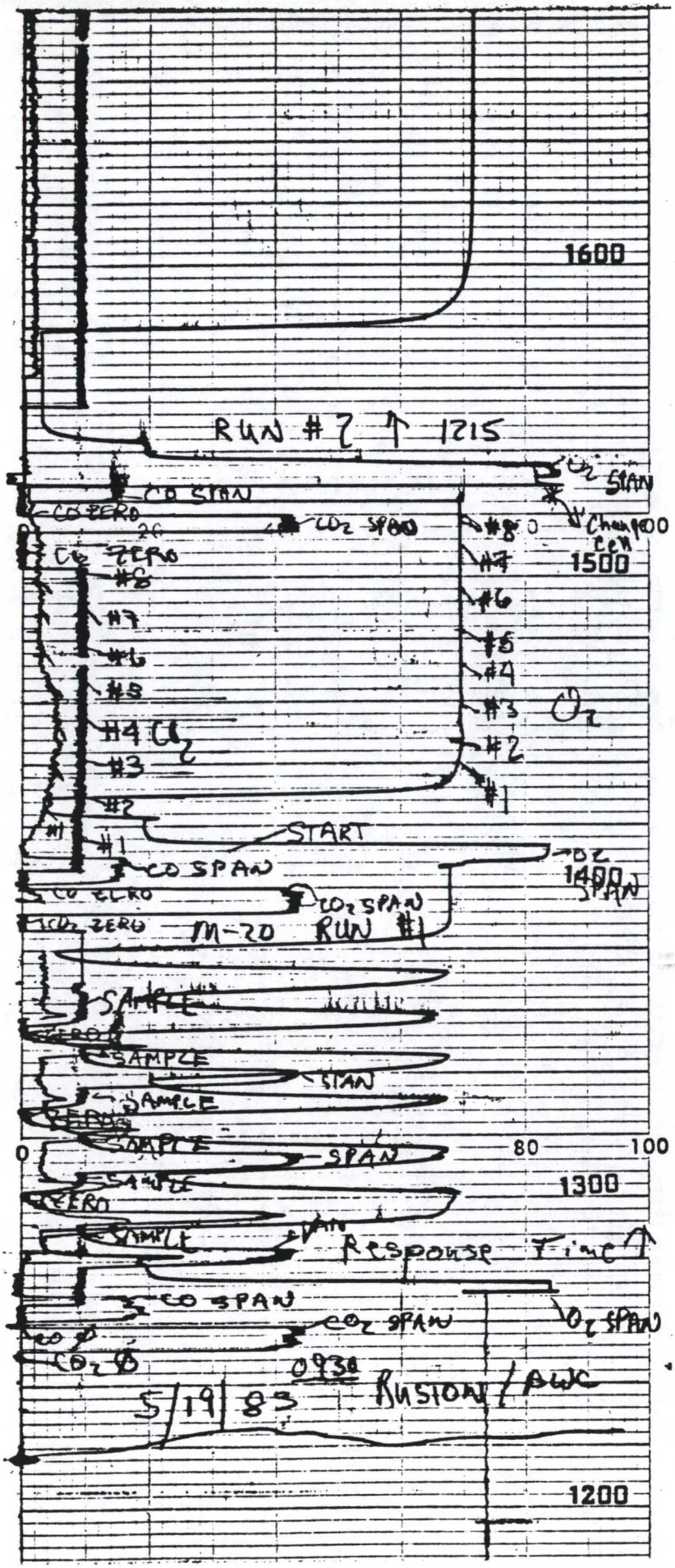

KVB71 66500-2052

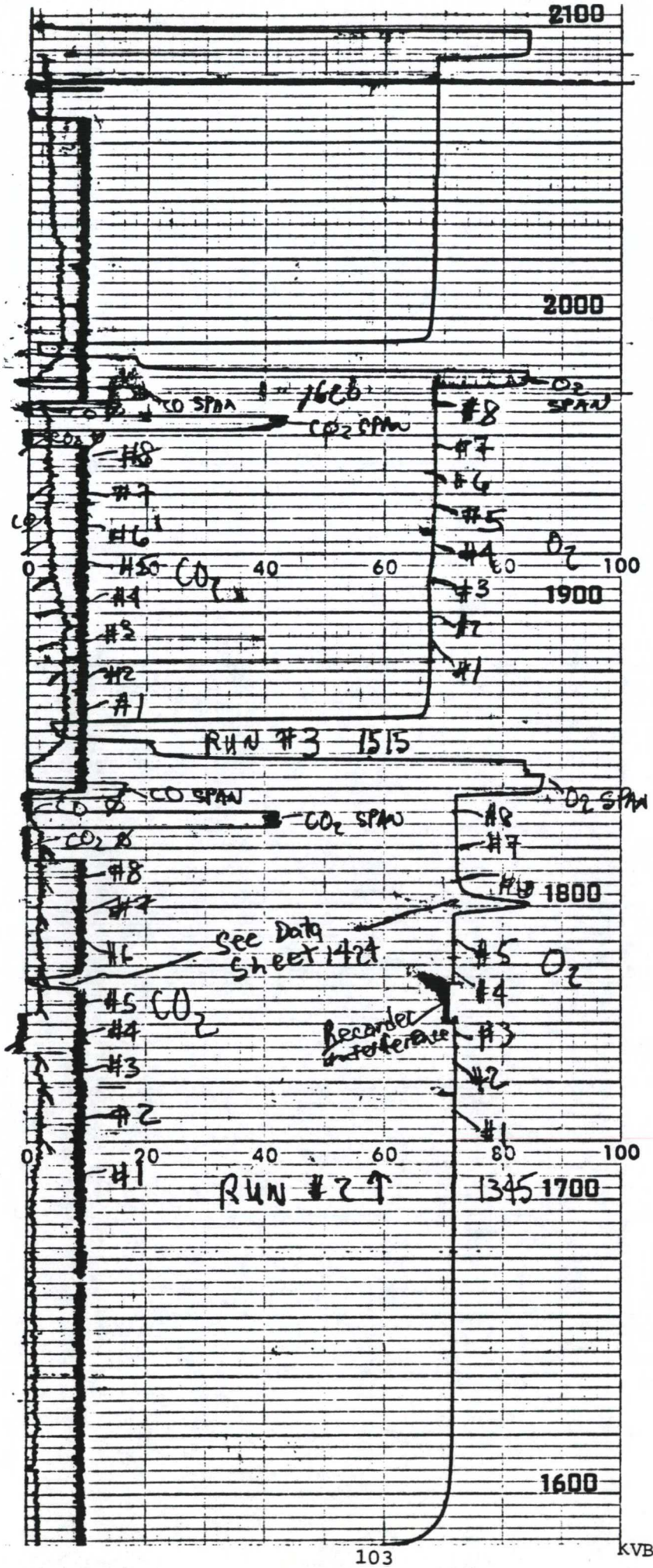

KVB71 66500-2052

EN 590 Portable Package Residence Time

External Plumbing :

3/8" O.D. Sample Line $= 30\,ft \times \left(\frac{.021\,ft}{2}\right)^2 \pi =$ .01 ft^3

knock out flask $= .5\,gal \times \left(\frac{1\,ft^3}{7.5\,gal}\right) =$ .067 ft^3

Internal Plumbing :

Condenser $= .25\,gal \times \left(\frac{1\,ft^3}{7.5\,gal}\right) =$ .033 ft^3

1/4" O.D. Internal Tubing $\cong 15\,ft \times \left(\frac{.015\,ft}{2}\right)^2 \pi =$ .003 ft^3

Pumphead + filter housing $\cong .2\,gal \times \left(\frac{1\,ft^3}{7.5\,gal}\right) =$ .027 ft^3

Total estimated system volume = .14 ft^3

Calibrated orifice reading (OR-1) = 0.36 " H_2O = .37 SCFM

Sys. Residence Time $= .14\,ft^3 \div .37\,ft^3/min = .38\,min$

$= .38\,min \times \frac{60\,sec}{min} =$ **23 seconds**

Mark Fisher
6/10/83

KVB71 66500-2052

HOMER R. DULIN CO.

729 EAST WILLOW STREET
LONG BEACH, CALIFORNIA 90806
424-8533 636-4096

CALIBRATION CERTIFICATION

SUBMITTED BY: KVB

FLOWMETER SERIAL NO. ---- TUBE NO. ----

MANUFACTURER KVB MFG. SERIAL NO. OR-1

REMARKS: P Inches H20 vs SCFM Air @ 29.82 Inches Hg & 74°F
ACCURACY See Data

INDICATED		ACTUAL	
P INCHES H20	$\sqrt{\Delta P}$	SCFM	
7.00	2.646	1.607	
6.00	2.449	1.492	
5.00	2.236	1.358	
4.00	2.0	1.214	
3.00	1.732	1.053	
2.00	1.414	0.861	
1.00	1.0	0.623	
0.50	0.707	0.443	
0.10	0.316	0.207	
0.05	0.224	0.153	

Flowmeter Certified with HOMER R. DULIN CO.

Equipment No. 12400 Accuracy 0.2% Calib. Due 6/81

NBS No. Cert. No. 213.09/217246

Our standards are certified by or are traceable to the National Bureau of Standards and comply with MIL-C-45662A.

P.O. No. 24282 Shipper No. ----

6-16-81	6-16-82	R Dulin
CALIBRATION DATE	RECALIBRATION DATE	CALIBRATION TECHNICIAN

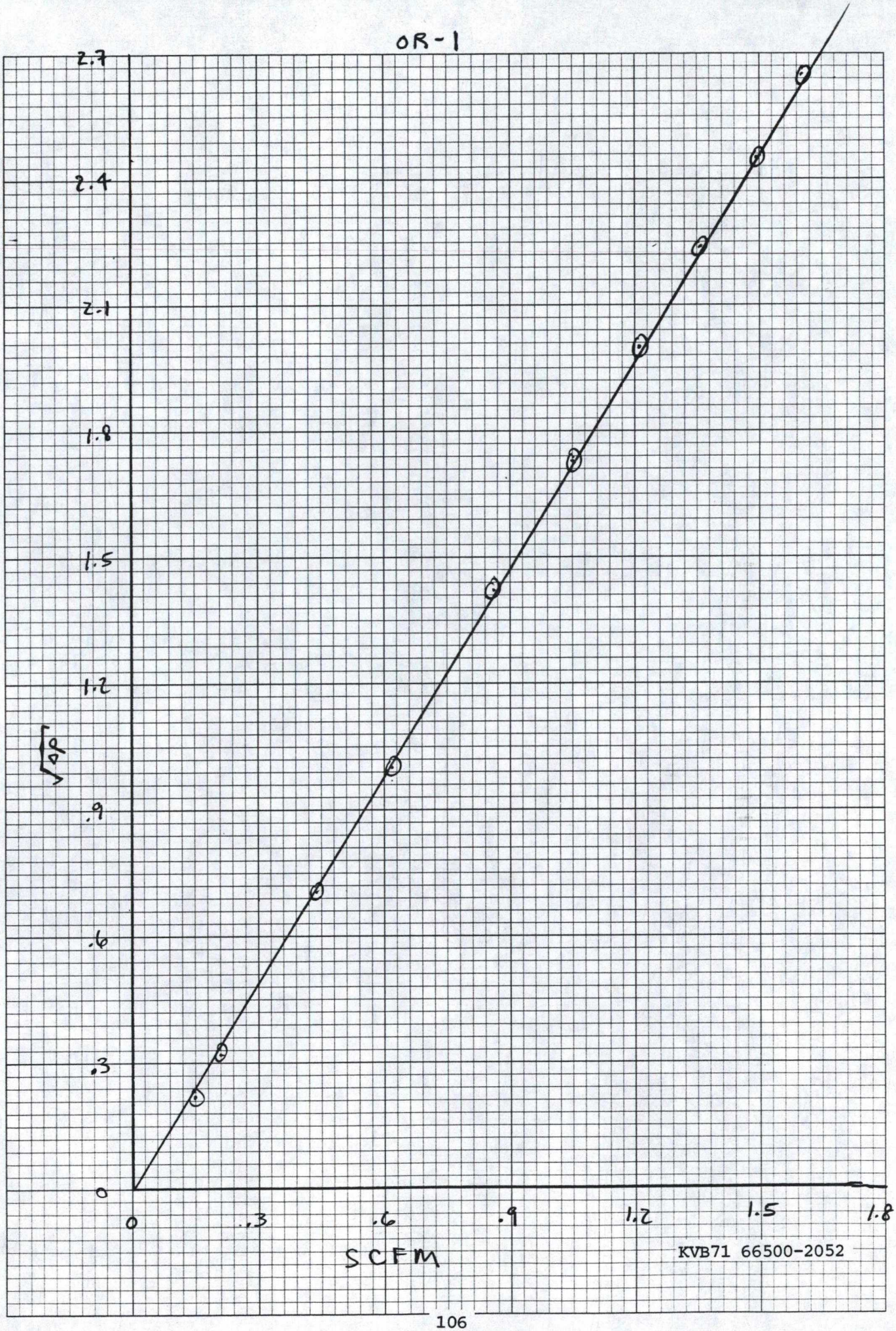

46 0700
K&E 10 X 10 TO THE INCH • 7 X 10 INCHES
KEUFFEL & ESSER CO. MADE IN U.S.A.

APPENDIX H

CONTROL ROOM DATA SHEETS

TABLE E-1. UNIT OPERATING DATA SUMMARY

						Turbine Data							Pump Data			
Test No.	Date 1983	Unit P2202	Barometric Press. " Hg	Rel. Humid. %	Load %	Temp. In °F	Temp Out °F	Temp. of Oper. °F	Turb/ Pump Speed RPM	Gas Gener. Speed RPM	Fuel Press. Diff. $\sqrt{\Delta P}$ " Hg	Avail. hp of Turb. at Turb. Speed hp	Suction Press. psig	Disch. Press. psig	Water Flow MBbls/hr	Pump Calc. hp
1	5/18	B	30.05	69	80.1	21.6	814	800	5775	9900	5.4	4350	81.0	2200	3.25	3482
2	5/18	B	30.05	69	80	25.5	820	800	5750	9900	5.4	4340	88.8	2200	3.25	3470
3	5/19	A	29.86	68	82.6	42.4	856	856	5950	9900	5.43	4420	78.3	2163	3.46	3649
4	5/19	A	29.75	68	85	41.5	818	819	6000	9900	5.46	4440	78.5	2175	3.56	3776

KVB71 66500-2052

KVB71 66500-2052

CHARACTERISTIC CURVE SHEET

39192

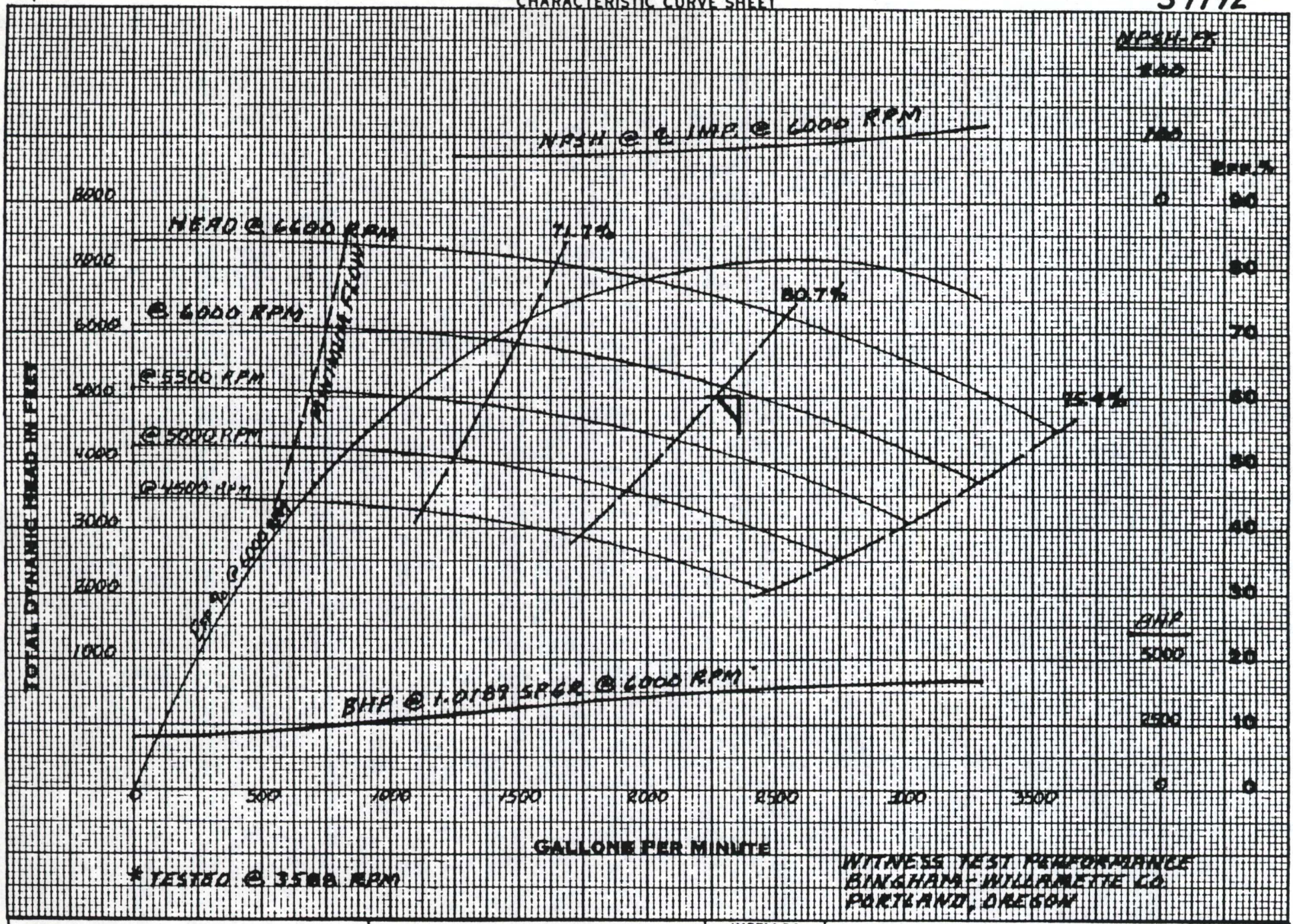

RUSTON GAS TURBINES STEARNS-ROGER/ARCO WATER FLOOD INJECTION PUMP CUST. P.O. No. = 80048-00020 PUMP S/N = 1B411 (1BL63)	PUMP ENGINEERING DEPT. BINGHAM-WILLAMETTE COMPANY PORTLAND OREGON & SHREVEPORT LA BINGHAM-WILLAMETTE LTD. VANCOUVER B.C. & CAMBRIDGE ONTARIO CS/DH 2/27/82	IMPELLER MAX. DIA. 11¼" MIN. DIA EYE AREA 25.5 SQ IN	6 x 8 x 11 B MSD 5 STG PUMP DIA. IMPELLER 10.20" N.P.S.H REQUIRED	IMPELLER PATT. STG.) 1) 613 MSD 2/3) 613 MSD 9/10 4/5) 813 CPB 1/2	AS * SHOWN R.P.M. CURVE No 39192

Form No. 3122

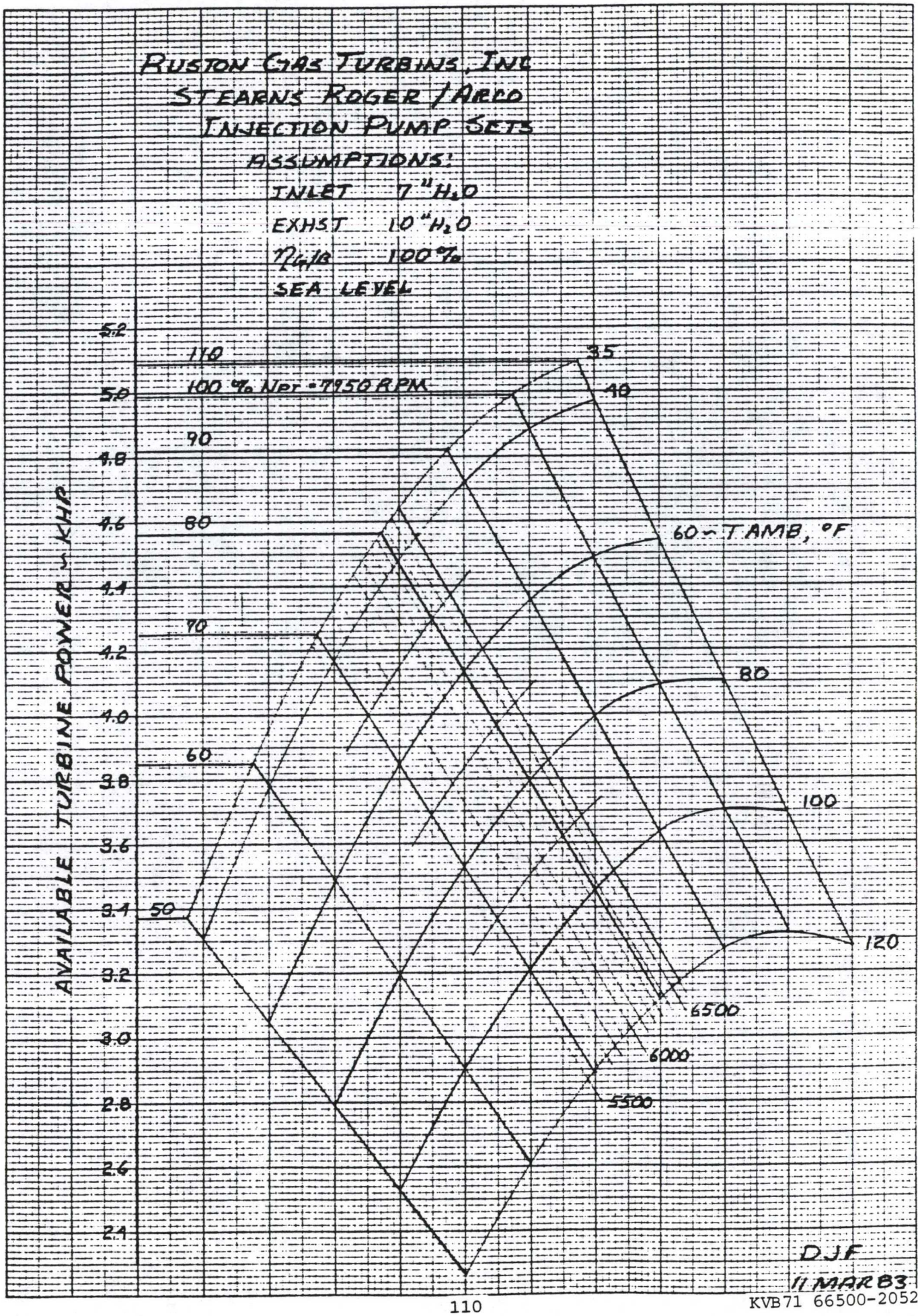

KVB71 66500-2052

L. L. RIDGWAY COMPANY, INC.
PRINTED IN U.S.A.
40-0602
10 DIVISIONS PER HALF INCH BOTH WAYS

KVB

GAS TURBINE OPERATING DATA

Company Ruston Gas Turbines Location Arco Alaska - Kuparuk

Unit No. P2202 B Capacity ~ 4360 HP Data Taken By Prodon

Unit Type TB 5000 Burner Type CAN

1. Test No.	1-1	1-2	1-4	1-5
2. Date	5/18	→	→	→
3. Time	10:13	11:13	12:13	1:13
4. Load, ~~[illegible]~~ (HP, calculated)	3480	3482	3483	3482
5. Fuel Type	GAS	GAS	GAS	GAS
6. Ambient Temp. (°F) ~~wet~~ RH/dry	69% / 22	→	→	→
7. Ambient Press (in.Hg)	30.05	30.04	30.04	
8. Relative Humidity	69%	69	69	69
9. Fuel Flow (cfm or lb/hr) $\sqrt{\Delta P}$ (in H_2O)	5.4	5.4	5.4	5.4
10. Compressor Inlet T (°F)				
11. ~~Compressor~~ Pump Disch (~~in.Hg~~ PSIG) :	2200	2200	2200	2200
12. Turbine Inlet T (°F)	22	22	21.2	21.2
13. Turbine Outlet T (°F)	810	810	815	820
14. Turbine RPM	5800	5800	5750	5750
15. Generator RPM	9900	→	→	→
16. Water Injection (gpm or lb/hr)	N/A	NA	NA	NA
17. HP Available	4360	4360	4340	4340
18. % of load	79.8	79.9	80.3	80.2
19. Pump Eff. (%) (approx)	.808	.808	.808	.808
20.				
21.				
22.				
23.				
24.				
25.				
26.				
27.				

KVB71 66500-2052

KVB

GAS TURBINE OPERATING DATA

Company Ruston Gas Turbines Location Arco Alaska - Kuparuk

Unit No. P2202B Capacity _____ Data Taken By Prodan

Unit Type TB 5000 Burner Type Can

1. Test No.	2-1	2-8	2-13	
2. Date	5-18	→	→	→
3. Time	14:17	15:17	16:17	
4. Load, ~~HP~~ (HP calc.)	3467	3467	3470	3477
5. Fuel Type	GAS	GAS	GAS	GAS
6. Ambient Temp. (°F) ~~wet~~ RH%/dry	69% / 22	→	→	→
7. Ambient Press (in.Hg)	30.05			
8. Relative Humidity	69	69	69	69
9. Fuel Flow (cfm or lb/hr) $\sqrt{\Delta P}$ (in H_2O)	5.4	5.4	5.4	5.4
10. Compressor Inlet T (°F)				
11. ~~Compressor~~ Pump Disch (~~in.Hg~~ PSIG) :	2200	2200	2200	2200
12. Turbine Inlet T (°F)	24.8	25.7	25.7	25.7
13. Turbine Outlet T (°F)	820	820	820	820
14. Turbine RPM	5750	5750	5750	5750
15. Generator RPM	9900	→	→	→
16. Water Injection (gpm or lb/hr)	N/A	NA	NA	NA
17. HP Available	4340	4340	4340	4340
18. % of load	79.9	79.9	80.0	80.1
19. Pump eff. (%)	.808	.808	.808	.808
20.				
21.				
22.				
23.				
24.				
25.				
26.				
27.				

KVB71 66500-2052

KVB

GAS TURBINE OPERATING DATA

Company Ruston Gas Turbines Location Arco Alaska - Kuparuk

Unit No. P2202 A Capacity ~ 4440 HP Data Taken By Prodan

Unit Type TR 5000 Burner Type CAN

1. Test No.	1-1		1-2	1-8
2. Date	5-19-83	5-19-83 →		
3. Time	9:10		11:10	12:10
4. Load, ~~MW~~ (HP Calc.)	3612		3605	5711
5. Fuel Type	GAS		GAS	GAS
6. Ambient Temp. (°F) ~~wet~~/dry	113		113	113
7. Ambient Press (in.Hg)	29.86		29.86	29.86
8. Relative Humidity	68		68	68
9. Fuel Flow (cfm or lb/hr) $\sqrt{\Delta P}$ in"H_2O	5.4		5.4	5.45
10. Compressor Inlet T (°F)				
11. ~~Compressor~~ Pump Disch (~~in.Hg~~ psig)	2150		2175	2175
12. Turbine Inlet T (°F)	23		20	20
13. Turbine Outlet T (°F)	850		860	860
14. Turbine RPM	5950		5950	5950
15. Generator RPM	9900		9900	9900
16. Water Injection (gpm or lb/hr)	NA		NA	NA
17. HP Available	4420		4420	4420
18. % of load	81.7		81.6	81.0
19. Pump eff (%)	.808	→		
20.				
21.				
22.				
23.				
24.				
25.				
26.				
27.				

KVB71 66500-2052

KVB

GAS TURBINE OPERATING DATA

Company Ruston Gas Turbines Location Arco Alaska - Kuparuk

Unit No. P 2202 A Capacity ~ 4440 HP Data Taken By Prodan

Unit Type TB 5000 Burner Type CAN

1. Test No.	2-1	2-8	3-5	3-8
2. Date	5/17/83	→	→	→
3. Time	13:50	14:50	15:50	16:50
4. Load, ~~Bhp~~ (HP Calc)	3778	3755	3716	3855
5. Fuel Type	GAS	GAS	GAS	GAS
6. Ambient Temp. (°F) ~~wet~~/dry	117	117	117	117
7. Ambient Press (in.Hg)	29.7	29.8	29.8	29.8
8. Relative Humidity	~ 68	~ 68	~ 68	~ 68
9. Fuel Flow (cfm or lb/hr) $\sqrt{\Delta P}$ in H_2O	5.45	5.45	5.45	5.5
10. Compressor Inlet T (°F)				
11. ~~Compressor~~ Pump Disch (~~in.Hg~~ PSIG)	2175	2175	2175	2175
12. Turbine Inlet T (°F)	22	22	23	23
13. Turbine Outlet T (°F)	860	860	850	855
14. Turbine RPM	6000	6000	6000	6000
15. Generator RPM	9900	9900	9900	9900
16. Water Injection (gpm or lb/hr)	NA	NA	NA	NA
17. HP Available	4440	4440	4440	4440
18. % of load	85.0	84.6	83.7	86.8
19. Pump eff (%)	.808	→	→	→
20.				
21.				
22.				
23.				
24.				
25.				
26.				
27.				

KVB71 66500-2052

Multiply	By	To obtain
inches	25.40	mm
ft³/min	7.482	US GPM
US gal	3.786	liters
UK gal	1.201	US gal
lb	0.4536	kg
lb/min H_2O	0.1199	US GPM

Multiply	By	To obtain
bar	100	k Pa
psi	2.311	ft H_2O
psi	6.895	k Pa
ft³/min	1.6992	m³/hr
hp	0.7457	kw
Btu/sec	1.0547	kw

RUSTON GAS TURBINES, INC.
ENGINEERING DATA

SUBJECT: EMMISSIONS TEST P22028

JOB NAME: _____ JOB NO. 8004B UNIT 2

PREPARED BY: DJF APPROVED BY: DJF DATE: 18 MAY 83 REF. _____

SHEET NO. 1 OF 2

REL HUM = 69% @ NOON

TIME	NPT	NGG	TIN	TAVE	TOP	$\sqrt{\Delta P}$ FUEL ORI "H_2O
10:13	5800	9900	-5.5°C 22°F	810°F	800	5.4 (7.4) CIRC. CHART
11:13	5800	9900	-5.5°C	810°F	800	5.4 (7.4)
12:13	5750	9900	-6.0°C 21.2°F	815°F	800	5.4 (7.4)
1:13	5750	9900	-6.0°C 21.2	820°F	800	5.4 (7.4) (Taylor ↑)
2:17	5750	9900	-4.0°C 24.8°F	820°F	800 °F	5.4 (7.4)
3:17	5750	9900	-3.5°C 25.7°F	820°F	800	5.4 (7.4)
4:17	5750	9900	-3.5°C 25.7°F	820°F	800	5.4 (7.4)
5:17	5750	9900	-3.5°C 25.7°F	820°F	800	5.4 (7.5)

EN26

Multiply	By	To obtain
inches	25.40	mm
ft³/min	7.482	US GPM
US gal	3.786	liters
UK gal	1.201	US gal
lb	0.4536	kg
lb/min H_2O	0.1199	US GPM

Multiply	By	To obtain
bar	100	k Pa
psi	2.311	ft H_2O
psi	6.895	k Pa
ft³/min	1.6992	m³/hr
hp	0.7457	kw
Btu/sec	1.0547	kw

Ft. GPM
3960. K

RGT

RUSTON GAS TURBINES, INC.
ENGINEERING DATA

SUBJECT Emmissions Test P2202B

JOB NAME

JOB NO. 8004B UNIT 2

PREPARED BY DJF APPROVED BY DJF DATE 18 MAY 83 REF.

SHEET NO. 2 OF 2

TIME	FLOW MBPH	P_{SUC} PSIG	P_{DIS} PSIG	$\approx \eta_p$	HP_{CAL}	$HP_{AVAIL.}$	% LOAD
10:13	3.25 (2275) GPM	82	2200 (4895 ft)	~.808	3480	4360	79.8
11:13	3.25	81	2200 4897	~.808	3482	4360	79.9
12:13	3.25 (2275)	80	2200 (4899 ft)	~.808	3483	4340	80.3
1:13	3.25	81	2200	~.808	3482	4340	80.2
2:17	3.25	90	2200 4876	~.808	3467	4340	79.9
3:17	3.25	90	2200	~.808	3467	4340	79.9
4:17	3.25 2275	88	2200 4881	~.808	3470	4340	80.0
5:17	3.25 2275	84	2200 4890	~.808	3477	4340	80.1

KVB71 66500-2052

EN26

Multiply	By	To obtain
inches	25.40	mm
ft³/min	7.482	US GPM
US gal	3.786	liters
UK gal	1.201	US gal
lb	0.4536	kg
lb/min H_2O	0.1199	US GPM

Multiply	By	To obtain
bar	100	k Pa
psi	2.311	ft H_2O
psi	6.895	k Pa
ft³/min	1.6992	m³/hr
hp	0.7457	kw
Btu/sec	1.0547	kw

RGT

RUSTON GAS TURBINES, INC.
ENGINEERING DATA

SUBJECT EMMISSIONS TEST P2202A

JOB NAME

PREPARED BY DJF APPROVED BY DJF DATE 19MAY83 REF

JOB NO 80048 UNIT 1

SHEET NO 1 OF 2

TIME	NPT	NGG	TIN	TAVE	TOP	$\sqrt{\Delta P_{O.F}}$
9:10	5950	9900	+5.0°C	850	815	5.4
10:10	5950	9900	5.0°C	855	815	5.45
11:10	5950	9900	6.5°C	860	820	5.4
12:10	5950	9900	6.5 22°F	860	820	5.45
1:50	6000	9900	5.5°C	860	820	5.45
2:50	6000	9900	5.5	860	820	5.45
3:50	6000	9900	5.0	850	815	5.45
4:50	6000	9900	5.0	855	820	5.50

REL HUM = 68% @ NOON

KVB71 66500-2052

Multiply	By	To obtain
inches	25.40	mm
ft³/min	7.482	US GPM
US gal	3.786	liters
UK gal	1.201	US gal
lb	0.4536	kg
lb/min H_2O	0.1199	US GPM

Multiply	By	To obtain
bar	100	k Pa
psi	2.311	ft H_2O
psi	6.895	k Pa
ft³/min	1.6992	m³/hr
hp	0.7457	kw
Btu/sec	1.0547	kw

RUSTON GAS TURBINES, INC.
ENGINEERING DATA

SUBJECT EMMISSIONS TEST

JOB NAME P2202A

JOB NO 80078

SHEET NO 2 OF 2

PREPARED BY DJF

APPROVED BY DJF

DATE 19 MAY 83

REF

TIME	FLOW	P_{SUC}	P_{DIS}	$\times \eta_p$	HP_{CAL}	HP_{AVE}	% LOAD
9:10	3.45 2415	79	2150 4790	.808	3612	4420	81.7
10:10	3.50 2450	78	2150	.808	3668	4420	83.0
11:10	3.40 2380	78	2175 4846	.808	3605	4420	81.6
12:10	3.5 2450	78	2175 4846	.808	3711	4420	84.0
1:50	3.56 2492	76	2175 4851	.808	3778	4440	85.0
2:50	3.54 2478	77	2175 4848	.808	3755	4440	84.6
3:50	3.50 2450	75	2175 4853	.808	3716	4440	83.7
4:50	3.65 2555	86	2175 4828	.808	3855	4440	86.8

KVB71 66500-2052

EN26

APPENDIX I

PARTICULATE DATA SHEETS

LOCATION KUPARUK EN 546
UNIT P 2202B FUEL GAS
OPERATORS Fisher / Prodan

TEST NUMBER	1
DATE	5/18/83
AMBIENT TEMPERATURE, °F	60 (INSIDE ROOM NEXT TO INLET AIR DUCT)
METER VOL. (START/END)	6951.53 / 7062.11

Page 1 of 1

System Checks

	Initial	Final
Nozzle Size: 3/16		
Pitot		
Thermometer		
Leak Rate, CFM	<.01	<.01
VAC, "Hg	25	18
Initials	DAP/MF	DAP/MF
Test for	Ruston Turbines	

System Data

Id = 1.064

Meter Box #EN546 ΔH@=
Date last Cal. 3/22/83
Probe #
Liner Material SS
Nozzle #
Diameter (in) .1875
Thermometer #
Date last Cal.

Imp.	Vol. (End)		Vol. (Start)		ΔVol. (ml)
#1	173	−	100	=	73
#2	101	−	100	=	1
#3	3	−	0	=	3
				Total	

#4 (Silica Gel)	g (End)		g (Start)		Δ grams
	567.7	−	543	=	24.7

Total Vol. H_2O 101.7 ml

Filter # 5

Particulate Wts
Filter ___ mg
Front Half
Acetone ___ mg
EPA-5
Total ___ mg

Sampling Time Per Point, Min.	Particulate Wt., mg	Condensate Vol., ml	Fuel Flow gal/hr	Load MW	C_{pitot}	Stack Press. In.Hg-Gauge	Barometric Pressure
180		101.7		80%	.83	-.85	30.08

Sample Point	Time	METER CONDITIONS ΔPs	ΔH	Meter Reading	TEMPERATURES, °F Stack	Probe	Oven	Impingers In	Impingers Out	Meter In	Meter Out	O_2, %	Vac.
13W	0	2.2	.55	6951.53	771	—	—	82	63	80	79	17.6	8
	15	2.15	.58	6959.87	776	—	—	82	59	89	82	17.7	8
	30	2.15	.57	6970.13	773	—	—	82	60	90	96	17.7	8
	45	2.15	.56	6978.95	772	—	—	83	63	90	98	17.7	7.9
	60	2.2	.56	6987.73	773	—	—	83	65	100	93	17.8	7.9
	75	2.2	.56	6996.73	774	—	—	83	67	101	95	17.6	7.9
	90	2.2	.56	7005.83	775	—	—	85	59	102	97	17.6	7.7
	105	2.2	.56	7014.89	774	—	—	84	56	102	97	17.6	7.7
	120	2.2	.56	7023.79	776	—	—	84	57	102	98	17.7	7.7
	135					—	—						
	150					—	—						
	165	2.2	.56	7050.70	776	—	—	84	66	101	98	17.6	7.7
	180	2.2	.56	7059.70	777	—	—	84	66	104	99	17.6	7.7
				7062.11									
Average		2.19	.56	110.58	774.3					95.14		17.65	7.90

TEST RESULTS

Test Averages:
ΔP_s = 2.19 T_{stack} = 774.3 °F
ΔH = .56 T_{meter} = ___ °F

Sample Vol. = 110.58 Ft^3 (meter)

Percent O_2 = 17.65

$MW_{stack\ gas}$ = ___ (~28)

Velocity = ___ ft/sec

Total Sample Time = 180 min.

Comments:

KVB71 66500-2052

Note: $\bar{\Delta P} = \left(\frac{\sum_i \sqrt{\Delta P_i}}{M} \right)^2$

RUSTON/BWC

PARTICULATE EMISSIONS CALCULATIONS

TEST #	1	DATE	5-18-83
LOCATION	STACK	UNIT NUMBER	P 2202 B
SAMPLING TRAIN AND METHOD	EN 546/WET IMP.	DATA BY	PRODAN
FUEL	GAS	BARAMETRIC PRESSURE (IN. HG)	30.08
REFERENCE TEMP. (R)	530	PITOT FACTOR	.83
NOZZLE DIA. (IN.)	.1875	STACK AREA (FT2)	12.57
STACK TEMP. (R)	1234.3	STACK PRESS. (IN. H2O)	-.85
STACK GAS SPEC. GRAVITY	1.003	EXCESS O2 (%)	17.65
METER TEMP. (R)	555.14	ORIFICE DIFF. PRESS. (IN.H2O)	.56
METER CORR. FACTOR	1.064	SAMPLE TIME (MIN.)	180
VELOCITY HEAD (IN. H2O)	2.19	SAMPLE VOLUME (CF)	110.58
TOTAL LIQUID COLLECTED (ML)	101.7	TOTAL PARTICULATES (MG)	17

SAMPLE GAS VOLUME	(SCF)	112.813
WATER VAPOR	(SCF)	4.813
MOISTURE CONTENT	(%)	4.092
ABSOLUTE STACK PRESSURE	(IN. H20)	408.238
STACK GAS FLOW RATE, ACTUAL	(ACFM)	94099.012
STACK GAS FLOW RATE, WET	(WSCF)	40528.378
STACK GAS FLOW RATE, DRY	(DSCF)	38869.922
STACK GAS VELOCITY	(FT./MIN.)	7485.999
ISOKINETICS	(%)	105.681 103.9
CONCENTRATION	(GRAINS/DSCF)	2E-03
CONCENTRATION	(GRAMS/DSCM)	5.3224E-03
CONCENTRATION	(LB/DSCF)	3.3E-07
EMISSIONS	(NG./JOULE)	8.03
EMISSIONS	(LB./MMBTU)	.021
MATERIAL FLOW RATE	(LB./HR.)	.775

KVB, INC
KVB71 66500-2052

TEST NO. 1 PAGE _____

SAMPLING STATION RUSTON / BWC DATE 5-18-83

WATER VAPOR AND GAS DENSITY CALCULATIONS

PERCENT WATER VAPOR IN GASES

A. GAS PRESSURE AT METER, IN. HG (ABSOLUTE) _____

B. VAPOR PRESSURE OF WATER AT IMPINGER TEMP., IN. HG _____

C. VOLUME OF METERED GAS, CU.FT. _____

D. VOLUME OF WATER VAPOR METERED, B*C/A, CU.FT. _____

E. VOLUME OF WATER VAPOR CONDENSED, CU.FT. _____

F. TOTAL VOLUME OF WATER VAPOR IN GAS SAMPLE, D+E, CU.FT. _____

G. TOTAL VOLUME OF GAS SAMPLE, C+E, CU.FT. _____

H. PERCENT WATER VAPOR IN SAMPLED GAS, 100*F/G _____

GAS DENSITY CORRECTION FACTOR

COMPONENT	VOLUME PERCENT/100	x MOISTURE CORRECTION	x MOL. WT.	= WEIGHT PER MOLE WET BASIS
WATER 4.092%	.04092	1.0	18.0	0.74
CARBON DIOXIDE	.0225 DRY BASIS	0.9591	44.0	0.95
CARBON MONOXIDE	Ø DRY BASIS	0.9591	28.0	Ø
OXYGEN	.1775 DRY BASIS	0.9591	32.0	5.45
NITROGEN & INERTS	.8 DRY BASIS	0.9591	28.2	21.64
			AVERAGE MOLECULAR WEIGHT	28.78

J. DENSITY OF GAS REFERRED TO AIR = $\frac{\text{AV. MOL. WT.}}{28.95}$ = .994

K. GAS DENSITY CORRECTION FACTOR = $\sqrt{\frac{1.00}{J}}$ = 1.003

KVB71 66500-2052

LOCATION Kuparuk - Arco/Alaska EN546
UNIT P 22028
FUEL Gas
OPERATORS Fisher/Prozan

TEST NUMBER	2
DATE	5/18/83
AMBIENT TEMPERATURE, °F	62 (Inside Room - Next to Inlet Air Duct)
METER VOL. (START/END)	7062.51 / 7173.25

Page 1 of 1

System Checks

	Initial	Final
Nozzle Size: 3/16		
Pitot		
Thermometer		
Leak Rate, CFM	<.01	<.01
VAC, "Hg	21"	22"
Initials	DAP/MF	DAP/MF
Test for	Rustom Turbines	

System Data

Y_d = 1.064

Meter Box # EN546 $\Delta H@$ =
Date last Cal. 3/22/83
Probe #
Liner Material SS
Nozzle #
Diameter (in) .1875
Thermometer #
Date last Cal.

Imp.	Vol. (End)		Vol. (Start)		ΔVol. (ml)
#1	164	−	100	=	64
#2	111	−	100	=	11
#3	3	−	0	=	3
				Total	78
#4 (Silica Gel)	g (End) 593.5	−	g (Start) 568.3	=	Δ grams 25.2
				Total Vol. H_2O	103.2 ml

Filter# #6

Particulate Wts
Filter ___ mg
Front Half
Acetone ___ mg
EPA-5
Total ___ mg

Sampling Time Per Point, Min.	Particulate Wt., mg	Condensate Vol., ml	Fuel Flow gal/hr	Load MW	C_{pitot}	Stack Press. In.Hg-Gauge	Barometric Pressure
180		103.2		80%	.83	-.85	30.06

Sample Point	Time	Meter Conditions ΔPs	ΔH	Meter Reading	Temperatures, °F Stack	Probe	Oven	Impingers In	Impingers Out	Meter In	Meter Out	O_2, %	Vac.
13	0	2.35	.60	7062.51	781	—	—	83	58	82	81	17.7	10.5
	15	2.40	.62	7071.27	779	—	—	83	58	88	85	17.8	10.7
	30	2.4	.62	7080.31	782			83	62	95	89	17.8	10.6
	45	2.4	.62	7089.48	783			83	58	100	93	17.8	10.7
	60	2.4	.62	7098.73	785			84	60	101	95	17.7	10.7
	75	2.4	.62	7108.08	786			85	62	102	97	17.8	10.7
	90	2.4	.62	7117.36	785			87	61	102	97	17.7	10.7
	105	2.4	.62	7126.70	785			88	59	102	98	17.7	10.7
	120	2.4	.62	7136.0	786			88	61	102	98	17.7	10.7
	135	2.4	.62	7145.35	785			88	62	102	98	17.8	10.7
	150	2.4	.62	7154.59	787			88	63	102	98	17.8	10.7
	165	2.4	.62	7164.00	784			88	64	102	98	17.8	10.7
	180	2.4	.62	7173.25	785			90	67	102	98	17.7	10.8
Average		2.4	.62	110.74	784					96.4		17.75	

TEST RESULTS

Test Averages:
ΔP_s = 2.4 T_{stack} = 784.1 °F
ΔH = .62 T_{meter} = 96.4 °F
Sample Vol. = 110.74 Ft^3 (meter)
Percent O_2 = 17.75
$MW_{stack\ gas}$ = ___ (~28)
Velocity = ___ ft/sec
Total Sample Time = 180 min.

Comments:

KVB71 66500-2052

Note: $\bar{\Delta P} = \left(\frac{\sum_{i}^{M} \sqrt{\Delta P_i}}{M} \right)^2$

RUSTON/BWC

PARTICULATE EMISSIONS CALCULATIONS

TEST #	2	DATE	5-18-83
LOCATION	STACK	UNIT NUMBER	P 2202 B
SAMPLING TRAIN AND METHOD	EN 546/WET IMP.	DATA BY	PRODAN
FUEL	GAS	BARAMETRIC PRESSURE (IN. HG)	30.06
REFERENCE TEMP. (R)	530	PITOT FACTOR	.83
NOZZLE DIA. (IN.)	.1875	STACK AREA (FT2)	12.57
STACK TEMP. (R)	1244	STACK PRESS. (IN. H2O)	-.85
STACK GAS SPEC. GRAVITY	1.003	EXCESS O2 (%)	17.75
METER TEMP. (R)	556.4	ORIFICE DIFF. PRESS. (IN.H2O)	.62
METER CORR. FACTOR	1.064	SAMPLE TIME (MIN.)	180
VELOCITY HEAD (IN. H2O)	2.4	SAMPLE VOLUME (CF)	110.74
TOTAL LIQUID COLLECTED (ML)	103.2	TOTAL PARTICULATES (MG)	9.1

SAMPLE GAS VOLUME	(SCF)	112.662
WATER VAPOR	(SCF)	4.884
MOISTURE CONTENT	(%)	4.155
ABSOLUTE STACK PRESSURE	(IN. H2O)	407.966
STACK GAS FLOW RATE, ACTUAL	(ACFM)	98926.623
STACK GAS FLOW RATE, WET	(WSCF)	42247.229
STACK GAS FLOW RATE, DRY	(DSCF)	40491.745
STACK GAS VELOCITY	(FT./MIN.)	7870.057
ISOKINETICS	(%)	101.312
CONCENTRATION	(GRAINS/DSCF)	1E-03
CONCENTRATION	(GRAMS/DSCM)	2.85287E-03
CONCENTRATION	(LB/DSCF)	1.8E-07
EMISSIONS	(NG./JOULE)	4.441
EMISSIONS	(LB./MMBTU)	.012
MATERIAL FLOW RATE	(LB./HR.)	.433

KVB, INC

KVB71 66500-2052

TEST NO. 2 PAGE _____

SAMPLING STATION RUSTON / BWC DATE 5-18-83

WATER VAPOR AND GAS DENSITY CALCULATIONS

PERCENT WATER VAPOR IN GASES

A. GAS PRESSURE AT METER, IN. HG (ABSOLUTE) _____

B. VAPOR PRESSURE OF WATER AT IMPINGER TEMP., IN. HG _____

C. VOLUME OF METERED GAS, CU.FT. _____

D. VOLUME OF WATER VAPOR METERED, B×C/A, CU.FT. _____

E. VOLUME OF WATER VAPOR CONDENSED, CU.FT. _____

F. TOTAL VOLUME OF WATER VAPOR IN GAS SAMPLE, D+E, CU.FT. _____

G. TOTAL VOLUME OF GAS SAMPLE, C+E, CU.FT. _____

H. PERCENT WATER VAPOR IN SAMPLED GAS, 100×F/G _____

GAS DENSITY CORRECTION FACTOR

COMPONENT	VOLUME PERCENT/100	× MOISTURE CORRECTION	× MOL. WT.	= WEIGHT PER MOLE WET BASIS
WATER 4.155%	.04155	1.0	18.0	0.75
CARBON DIOXIDE	.0225 DRY BASIS	.9585	44.0	0.95
CARBON MONOXIDE	Ø DRY BASIS	.9585	28.0	Ø
OXYGEN	.1772 DRY BASIS	.9585	32.0	5.44
NITROGEN & INERTS	.8003 DRY BASIS	.9585	28.2	21.63
			AVERAGE MOLECULAR WEIGHT	28.77

J. DENSITY OF GAS REFERRED TO AIR = $\frac{\text{AV. MOL. WT.}}{28.95}$ = .994

K. GAS DENSITY CORRECTION FACTOR = $\sqrt{\frac{1.00}{J}}$ = 1.003

KVB71 66500-2052

LOCATION Kuparuk
UNIT P 2202A FUEL GAS
OPERATORS Fisher / Prodan

TEST NUMBER	3
DATE	5/19/83
AMBIENT TEMPERATURE, °F	65°F (in room @ Turbine inlet air)
METER VOL. (START/END)	7173.61 / 7288.26

Page 1 of 1

System Checks

	Initial	Final
Pitot		
Thermometer		
Leak Rate, CFM	<.01	<.01
VAC, "Hg	22	21
Initials	DAP/MF	DAP/MF
Test for	Rustom Turbine	

System Data

Y_d = 1.064

Meter Box #EN546 ΔH@= ____
Date last Cal. 3/22/83
Probe # ____
Liner Material SS
Nozzle # ____
Diameter (in) .1875
Thermometer # ____
Date last Cal. ____

Imp.	Vol. (End)	Vol. (Start)	ΔVol. (ml)
#1	233	98	135
#2	44	102	(58)
#3	7	Ø	7
		Total	84

#4 (Silica Gel)	g (End)	g (Start)	Δ grams
	598.9	568.6	30.3

Total Vol. H_2O 114.3 ml

Filter# 7

Particulate Wts
Filter ____ mg
Front Half
Acetone ____ mg
EPA-5
Total ____ mg

Sampling Time Per Point, Min.	Particulate Wt., mg	Condensate Vol., ml	Fuel Flow gal/hr	Load MW	C_{pitot}	Stack Press. In.Hg-Gauge	Barometric Pressure
180		114.3		84%	.83	-1.2	29.86

Sample Point	Time	METER CONDITIONS ΔPs	ΔH	Meter Reading	TEMPERATURES, °F Stack	Probe	Oven	Impingers In	Impingers Out	Meter In	Meter Out	O_2, %	Vac.
0910 13	0	2.5	.62	7173.61	797	398	303	190	60	85	82	17.55	12.5
0925	15	2.5	.62	7182.30	792	445	297	255	56	92	88	17.6	12.3
0940	30	2.5	.62	7191.92	790	448	290	240	54	98	91	17.5	12.3
0955	45	2.5	.62	7201.00	790	440	303	270	54	101	95	17.5	12.3
1010	60	2.5	.62	7210.45	793	442	300	250	55	101	95	17.5	12.3
1025	75	2.5	.62	7219.70	796	435	305	262	54	102	97	17.5	12.3
1040	90	2.5	.62	7229.25	795	432	295	244	54	102	98	17.5	12.3
1055	105	2.5	.62	7238.51	795	430	300	255	54	102	98	17.5	12.3
1110	120	2.5	.62	7247.86	794	435	300	260	54	103	98	17.5	12.3
1125	135	2.5	.62	7257.25	795	435	300	250	54	103	99	17.5	12.3
1140	150	2.5	.62	7266.52	797	432	305	260	55	103	99	17.5	12.3
1155	165	2.5	.62	7275.83	796	435	305	265	55	104	99	17.5	12.3
1210	180	2.5	.62	7285.18	797	435	300	268	55	104	100	17.5	12.3
1215				7288.26									
	180												
Average		2.5	.62	114.65	794.4					97.7		17.51	

TEST RESULTS

Test Averages:
ΔPs = 2.5 T_{stack} = 794.4 °F
ΔH = .62 T_{meter} = 97.7 °F

Sample Vol. = 114.65 Ft^3 (meter)

Percent O_2 = 17.51

$MW_{stack\ gas}$ = ____ (~28)

Velocity = ____ ft/sec

Total Sample Time = 185 min.

Comments:

KVB71 66500-2052

Note: $\bar{\Delta P} = \left(\frac{\sum_i^m \sqrt{\Delta P_i}}{m} \right)^2$

RUSTON/BWC

PARTICULATE EMISSIONS CALCULATIONS

TEST #	3	DATE	5-19-83
LOCATION	STACK	UNIT NUMBER	3
SAMPLING TRAIN AND METHOD	EN 546/M-5	DATA BY	PRODAN
FUEL	GAS	BARAMETRIC PRESSURE (IN. HG)	29.86
REFERENCE TEMP. (R)	530	PITOT FACTOR	.83
NOZZLE DIA. (IN.)	.1875	STACK AREA (FT2)	12.57
STACK TEMP. (R)	1254.4	STACK PRESS. (IN. H20)	-1.2
STACK GAS SPEC. GRAVITY	1.004	EXCESS O2 (%)	17.51
METER TEMP. (R)	557.7	ORIFICE DIFF. PRESS. (IN.H20)	.62
METER CORR. FACTOR	1.064	SAMPLE TIME (MIN.)	180
VELOCITY HEAD (IN. H20)	2.5	SAMPLE VOLUME (CF)	114.65
TOTAL LIQUID COLLECTED (ML)	114.3	TOTAL PARTICULATES (MG)	27.1

SAMPLE GAS VOLUME	(SCF)	115.595
WATER VAPOR	(SCF)	5.41
MOISTURE CONTENT	(%)	4.471
ABSOLUTE STACK PRESSURE	(IN. H20)	404.896
STACK GAS FLOW RATE, ACTUAL	(ACFM)	101720.679
STACK GAS FLOW RATE, WET	(WSCF)	42756.107
STACK GAS FLOW RATE, DRY	(DSCF)	40844.623
STACK GAS VELOCITY	(FT./MIN.)	8092.337
ISOKINETICS	(%)	103.052
CONCENTRATION	(GRAINS/DSCF)	4E-03
CONCENTRATION	(GRAMS/DSCM)	8.28034E-03
CONCENTRATION	(LB/DSCF)	5.2E-07
EMISSIONS	(NG./JOULE)	11.976
EMISSIONS	(LB./MMBTU)	.031
MATERIAL FLOW RATE	(LB./HR.)	1.267

KVB,INC

KVB71 66500-2052

TEST NO. 3 PAGE

SAMPLING STATION RUSTON / BWC DATE 5-19-83

WATER VAPOR AND GAS DENSITY CALCULATIONS

PERCENT WATER VAPOR IN GASES

A. GAS PRESSURE AT METER, IN. HG (ABSOLUTE) _____

B. VAPOR PRESSURE OF WATER AT IMPINGER TEMP., IN. HG _____

C. VOLUME OF METERED GAS, CU.FT. _____

D. VOLUME OF WATER VAPOR METERED, B×C/A, CU.FT. _____

E. VOLUME OF WATER VAPOR CONDENSED, CU.FT. _____

F. TOTAL VOLUME OF WATER VAPOR IN GAS SAMPLE, D+E, CU.FT. _____

G. TOTAL VOLUME OF GAS SAMPLE, C+E, CU.FT. _____

H. PERCENT WATER VAPOR IN SAMPLED GAS, 100×F/G _____

GAS DENSITY CORRECTION FACTOR

COMPONENT	VOLUME PERCENT/100	× MOISTURE CORRECTION	× MOL. WT.	= WEIGHT PER MOLE WET BASIS
WATER 4.471%	.04471	1.0	18.0	.81
CARBON DIOXIDE	.0233 DRY BASIS	.9553	44.0	0.98
CARBON MONOXIDE	Ø DRY BASIS	.9553	28.0	Ø
OXYGEN	.1733 DRY BASIS	.9553	32.0	5.3
NITROGEN & INERTS	.8034 DRY BASIS	.9553	28.2	21.64
			AVERAGE MOLECULAR WEIGHT	28.73

J. DENSITY OF GAS REFERRED TO AIR = $\frac{\text{AV. MOL. WT.}}{28.95}$ = .992

K. GAS DENSITY CORRECTION FACTOR = $\sqrt{\frac{1.00}{J}}$ = 1.004

KVB71 66500-2052

LOCATION Kuparuk
UNIT P2202A FUEL GAS
OPERATORS Fisher / Prodan

TEST NUMBER	4
DATE	5/19/83
AMBIENT TEMPERATURE, °F	65 (in Room @ inlet air to Turbine)
METER VOL. (START/END)	7288.52 / 7400.79

Page 1 of 1

System Checks

	Initial	Final
Pitot		
Thermometer		
Leak Rate, CFM	<.01	<.01
VAC, "Hg	22"	22"
Initials	DAP/MF	DAP/MF
Test for	Rustom Turbines	

System Data

Yd = 1.064
Meter Box #FN546 ΔH@=
Date last Cal. 3/22/83
Probe #
Liner Material SS
Nozzle #
Diameter (in) .1875
Thermometer #
Date last Cal.

Imp.	Vol. (End)		Vol. (Start)		ΔVol. (ml)
#1	150	−	100	=	50
#2	132	−	100	=	32
#3	4	−	-0-	=	4
			Total		86
#4 (Silica Gel)	g (End) 558.7	−	g (Start) 532.8	=	Δ grams 25.9
			Total Vol. H_2O		111.9 ml

Filter# #8

Particulate Wts
Filter ____ mg
Front Half
Acetone ____ mg
EPA-5
Total ____ mg

Sampling Time Per Point, Min.	Particulate Wt., mg	Condensate Vol., ml	Fuel Flow gal/hr	Load MW	C_{pitot}	Stack Press. In.Hg-Gauge	Barometric Pressure
180		111.9		84%	.83	−1.2	29.75

TEST RESULTS
Test Averages:
ΔPs = 2.7 Tstack = 811.1 °F
ΔH = .66 Tmeter = 96.5 °F
Sample Vol. = 112.27 Ft^3 (meter)
Percent O_2 = 17.55
MW stack gas = ____ (~28)
Velocity = ____ ft/sec
Total Sample Time = 180 min.

Sample Point	Time	ΔPs	ΔH	Meter Reading	Stack	Probe	Oven	Impingers In	Impingers Out	Meter In	Meter Out	O_2, %	Vac.
13	0	2.7	.66	7288.52	816	325	260	180	57	86	83	17.6	12.0
	15	2.7	.66	7297.68	811	400	305	210	56	90	85	17.6	12.1
	30	2.7	.66	7306.90	810	425	295	235	58	92	86	17.5	12.1
	45	2.7	.66	7316.14	810	435	310	265	56	99	92	17.5	12.3
	60	2.7	.66	7325.60	811	435	305	260	57	101	96	17.5	12.3
	75	2.7	.66	7334.78	811	440	295	250	58	102	97	17.5	12.3
	90	2.7	.66	7344.15	810	430	315	265	59	102	98	17.5	12.4
	105	2.7	.66	7353.51	812	435	290	260	56	102	98	17.5	12.4
	120	2.7	.66	7363.01	812	435	290	255	57	102	98	17.6	12.4
	135	2.7	.66	7372.47	812	432	295	255	57	102	98	17.5	12.4
	150	2.7	.66	7381.95	812	440	290	250	56	102	98	17.6	12.5
	165	2.7	.66	7391.40	808	430	315	260	56	102	98	17.5	12.5
	180	2.7	.66	7400.79	809	435	295	255	57	102	98	17.5	12.5
	180												
Average		2.7	.66	112.27	811.1					96.5		17.55	

Comments:

KVB71 66500-2052

Note: $\bar{\Delta P} = \left(\frac{\sum_{i}^{M} \sqrt{\Delta P_i}}{M} \right)^2$

RUSTON/BWC

PARTICULATE EMISSIONS CALCULATIONS

TEST #	4	DATE	5-19-83
LOCATION	STACK	UNIT NUMBER	P 2202 A
SAMPLING TRAIN AND METHOD	EN 546/M-5	DATA BY	PRODAN
FUEL	GAS	BARAMETRIC PRESSURE (IN. HG)	29.75
REFERENCE TEMP. (R)	530	PITOT FACTOR	.83
NOZZLE DIA. (IN.)	.1875	STACK AREA (FT2)	12.57
STACK TEMP. (R)	1271.1	STACK PRESS. (IN. H2O)	-1.2
STACK GAS SPEC. GRAVITY	1.004	EXCESS O2 (%)	17.55
METER TEMP. (R)	556.5	ORIFICE DIFF. PRESS. (IN.H2O)	.66
METER CORR. FACTOR	1.064	SAMPLE TIME (MIN.)	180
VELOCITY HEAD (IN. H2O)	2.7	SAMPLE VOLUME (CF)	112.27
TOTAL LIQUID COLLECTED (ML)	111.9	TOTAL PARTICULATES (MG)	8.6

SAMPLE GAS VOLUME	(SCF)	113.033
WATER VAPOR	(SCF)	5.296
MOISTURE CONTENT	(%)	4.476
ABSOLUTE STACK PRESSURE	(IN. H2O)	403.4
STACK GAS FLOW RATE, ACTUAL	(ACFM)	106609.71
STACK GAS FLOW RATE, WET	(WSCF)	44058.976
STACK GAS FLOW RATE, DRY	(DSCF)	42087.007
STACK GAS VELOCITY	(FT./MIN.)	8481.282
ISOKINETICS	(%)	97.793
CONCENTRATION	(GRAINS/DSCF)	1E-03
CONCENTRATION	(GRAMS/DSCM)	2.68726E-03
CONCENTRATION	(LB/DSCF)	1.7E-07
EMISSIONS	(NG./JOULE)	3.933
EMISSIONS	(LB./MMBTU)	.01
MATERIAL FLOW RATE	(LB./HR.)	.424

KVB, INC

KVB71 66500-2052

TEST NO. 4 PAGE _____

SAMPLING STATION RUSTON / BWC DATE 5-19-83

WATER VAPOR AND GAS DENSITY CALCULATIONS

PERCENT WATER VAPOR IN GASES

A. GAS PRESSURE AT METER, IN. HG (ABSOLUTE) _____

B. VAPOR PRESSURE OF WATER AT IMPINGER TEMP., IN. HG _____

C. VOLUME OF METERED GAS, CU.FT. _____

D. VOLUME OF WATER VAPOR METERED, B×C/A, CU.FT. _____

E. VOLUME OF WATER VAPOR CONDENSED, CU.FT. _____

F. TOTAL VOLUME OF WATER VAPOR IN GAS SAMPLE, D+E, CU.FT. _____

G. TOTAL VOLUME OF GAS SAMPLE, C+E, CU.FT. _____

H. PERCENT WATER VAPOR IN SAMPLED GAS, 100×F/G _____

GAS DENSITY CORRECTION FACTOR

COMPONENT	VOLUME PERCENT/100	× MOISTURE CORRECTION	× MOL. WT.	= WEIGHT PER MOLE WET BASIS
WATER 4.476%	.04476	1.0	18.0	0.81
CARBON DIOXIDE	.0232 DRY BASIS	.9552	44.0	0.98
CARBON MONOXIDE	Ø DRY BASIS	.9552	28.0	Ø
OXYGEN	.1749 DRY BASIS	.9552	32.0	5.35
NITROGEN & INERTS	.8019 DRY BASIS	.9552	28.2	21.6
			AVERAGE MOLECULAR WEIGHT	28.74

J. DENSITY OF GAS REFERRED TO AIR = $\frac{\text{AV. MOL. WT.}}{28.95}$ = .993

K. GAS DENSITY CORRECTION FACTOR = $\sqrt{\frac{1.00}{J}}$ = 1.004

KVB71 66500-2052

KVB

PARTICULATE WEIGHT DETERMINATION

Unit RUSTON / BWC Date(s) 3/24/83 By FISHER

	~~Container (C)~~ or Filter (F) Number						
	5	6	7	8			
Ml Evap.							
41.5% R.H. 74°F Initial Wt 1050 Trial 1 3/24	0.6652	0.6618	0.6554	0.6605			
75°F 1450 40.5% R.H. 2 3/24	0.6652	0.6618	0.6554	0.6604			
71°F 0830 39.5% R.H. 3 3/25	0.6651	0.6618	0.6554	0.6603			
4							
Avg Weight	0.6652	0.6618	0.6554	0.6604			
37% R.H. 80°F 6/2 Final Wt 1 0745	0.6652	0.6620	0.6546	0.6580			
37% R.H. 80°F 1245 2 6/3	0.6653	0.6621	0.6546	0.6583			
39% R.H. 83°F 1630 3 6/3	0.6653	0.6621	0.6550	0.6583			
4							
Avg Weight	0.6653	0.6621	0.6547	0.6582			
Final Wt Avg, gm	0.6653	0.6621	0.6547	0.6582			
Initial Wt Avg, gm	0.6652	0.6618	0.6554	0.6604			
Δ Wt, mg	0.1	0.3	-0.7	-2.2			
Blank Corr., mg	~~0.1~~	~~0.3~~	~~Ø~~	~~Ø~~			
Particulate Wt, mg	0.1	0.3	Ø	Ø			
Point Assignment							

Balance Make Torbal EA-1

S/N 146066

KVB71 66500-2052

KVB

PARTICULATE WEIGHT DETERMINATION

Unit RUSTON BWC Date(s) 6/2/83 By FISHER

	Container (C) or Filter (F) Number						
	1	2	3	4	6	7	8
Ml Evap.	1-Imp 493	1-PROBE 287	2-Imp 478	2-PROBE 225	3-Imp 495	3-PROBE 290	4-Imp 507
37% R.H. 80°F Initial Wt 0800 Trial 1 6/2	109.7470	108.2901	105.5008	105.2079	104.2922	104.2440	101.1346
37% R.H. 80°F 1015 2 6/2	109.7472	108.2898	105.5006	105.2078	104.2918	104.2439	101.1347
37% R.H. 81°F 1200 3 6/2	109.7471	108.2900	105.5007	105.2080	104.2920	104.2441	101.1345
4							
Avg Weight	109.7471	108.2900	105.5007	105.2079	104.2920	104.2440	101.1346
39% R.H. 80°F 1230 Final Wt 1 6/3	~~109.7610~~	~~108.2930~~	~~105.5057~~	~~105.2110~~	~~104.3024~~	~~104.2608~~	~~101.1424~~
39% R.H. 83°F 1620 2 6/3	~~109.7613~~	108.2933	105.5069	105.2117	104.3029	104.2615	101.1431
39% R.H. 80°F 1230 3 6/6	109.7620	108.2936	105.5070	105.2120	104.3033	104.2616	101.1433
37% R.H. 80°F 0800 4 6/7	109.7621	108.2935	105.5070	105.2119	104.3031	104.2616	101.1432
Avg Weight	109.7621	108.2935	105.5070	105.2119	104.3031	104.2616	101.1432
Final Wt Avg, gm	109.7621	108.2935	105.5070	105.2119	104.3031	104.2616	101.1432
Initial Wt Avg, gm	109.7471	108.2900	105.5007	105.2079	104.2920	104.2440	101.1346
Δ Wt, mg	15.0	3.5	6.3	4.0	11.1	17.6	8.6
Blank Corr., mg	1.0	0.6	1.0	0.5	1.0	0.6	1.0
Particulate Wt, mg	14.0	2.9	5.3	3.5	10.1	17.0	7.6
Point Assignment							

Balance Make Torbal EA-1

S/N 146066

KVB71 66500-2052

KVB

PARTICULATE WEIGHT DETERMINATION

Unit RUSTON BWC Date(s) 6/2/83 By FISHER

	Container (C) or Filter (F) Number						
	9	10					
Ml Evap.	4-PROBE 376	H_2O Blank 100					
37% R.H. 80°F Initial Wt 0800 Trial 1 6/2	100.6319	97.8013					
37% R.H. 80°F 1015 6/2 2	100.6319	97.8013					
37% R.H. 81°F 1200 6/2 3	100.6319	97.8013					
4							
Avg Weight	100.6319	97.8013					
37% R.H. 80°F 1230 Final Wt 1 6/3	~~100.6328~~	~~97.8011~~					
37% R.H. 1620 83°F 2 6/3	100.6337	97.8015					
37% R.H. 1230 80°F 3 6/6	100.6337	97.8014					
37% R.H. 0800 80°F 4 6/7	100.6337	97.8016					
Avg Weight	100.6337	97.8015					
Final Wt Avg, gm	100.6337	97.8015					
Initial Wt Avg, gm	100.6319	97.8013					
Δ Wt, mg	1.8	0.2					
Blank Corr., mg	.8	.02/ml					
Particulate Wt, mg	1.0						
Point Assignment							

Balance Make Torbal EA-1

S/N 146066

KVB71 66500-2052

KUPARUK - 5/17/83

1300 - 1630 Equip setup

Velocity TRAVERSE P 2202 B

pT. 1	= 1/2"	13	28 7/8
2	= 1 1/2	14	32 1/2
3	= 2 5/8	15	35
4	3 3/4	16	37
5	5	17	38 5/8
6	6 3/8	18	40 1/4
7	7 3/4	19	41 5/8
8	9 3/8	20	43
9	11	21	44 1/4
10	13	22	45 3/8
11	15 1/2	23	46 1/2
12	19 1/8	24	47 1/2

Pump - BWP (Bingham Willimantic Pump/BWP

39832.3
41384.8

KVB71 66500-2052

NOx

37.38 9.4 lbs/Hr
38.85 11.7 lbs/Hr

KVB

GAS VOLUME DATA

JOB: RUSTON / ARCO ALASKA

PITOT TUBE TRAVERSE

TEST NUMBER: P 2202 A				TEST NUMBER: P 2202 A			
DATE: 5/19/83 TIME: 0730				DATE: 5/19/83 TIME: 0730			
FLUE OR STACK TEMPERATURE (°F.) 13°				FLUE OR STACK TEMPERATURE (°F.) 13°			
POINT	H. ΔP	√H. Temp	VELOCITY FT./SEC. O2	WEST POINT ΔP	Temp	√H. O2	VELOCITY FT./SEC.
1	2.8	744		1.1	695		
2	3.2	794		1.5	785		
3	3.6	802		1.7	807		
4	3.6	806		1.8	808		
5	3.8	807	17.6	1.8	808	17.5	
6	3.8	807		1.9	808		
7	3.6	808		1.9	208		
8	3.6	808		2.0	808		
9	3.5	808		2.0	808		
10	3.3	808	17.6	2.1	808	17.55	
11	3.1	808		2.2	806		
12	2.6	808		2.4	808		
13	2.2	806		2.4	808		
14	2.1	806		2.1	806		
15	2.1	805	17.6	2.0	807	17.55	
16	2.1	805		1.8	807		
17	2.1	805		1.8	807		
18	2.1	804		1.7	805		
19	2.2	804		1.7	805		
20	2.2	804	17.6	1.7	804	17.6	
21	2.2	802		1.8	804		
22	2.3	802		1.8	804		
23	2.2	802		1.8	804		
24	2.1	801		1.8	804		
		1.2			1.2		
Point	13 ← M-5						
	T_s = 801.6						
AVERAGE VELOCITY (FT./SEC.)				AVERAGE VELOCITY (FT./SEC.)			
FLUE OR STACK AREA (SQ. FT.)				FLUE OR STACK AREA (SQ. FT.)			
GAS VOLUME (CFM)				GAS VOLUME (CFM)			

South

AVERAGE GAS VOLUME (CFM) – 136

GAS ANALYSIS

TEST NO.				
LOCATION				
CO_2				
O_2				
CO				
SO_2				
H_2O				
N_2				

GAS VELOCITY DATA

TEST NUMBER		
PITOT TUBE CORRECTION FACTOR - Fs		
DENSITY OF GAS REF. TO AIR - Gd		
FLUE OR STACK PRESSURE (″HG) - Pa		

CALCULATIONS

TEST NUMBER: _____

$$V_s = 2.9\,(F_s)\sqrt{\frac{29.92}{Pa} \times \frac{1.00}{Gd}\,(T_s)}\sqrt{H}$$

$$V_s = 2.9\,(\quad)\sqrt{\frac{29.92}{\quad} \times \frac{1.00}{\quad}(\quad)}\sqrt{H}$$

$$V_s = (\quad)\sqrt{H}$$

TEST NUMBER: _____

$$V_s = 2.9\,(\quad)\sqrt{\frac{29.92}{\quad} \times \frac{1.00}{\quad}(\quad)}\sqrt{H}$$

$$V_s = (\quad)\sqrt{H}$$

PLANT CONDITIONS

FUEL TYPE

FUEL CONSUMPTION RATE

MATERIAL PRODUCTION RATE

KVB71 66500-2052

SEE PAGE _____ FOR FLUE OR STACK TRAVERSE LAYOUT.

FORM E-14

PAGE

KVB

GAS VOLUME DATA

JOB: RUSTIN TURBINE / ARCO ALASKA – PRUDHOE BAY NORTH SLOPE (BWC PUMP)

Fisher / Prodan

PITOT TUBE TRAVERSE

AMBIENT T° = 75°

TEST NUMBER: P 2202 B				TEST NUMBER:			
DATE: 5/17/83 TIME:				DATE: 5/17/83 TIME:			
FLUE OR STACK TEMPERATURE (°F.)				FLUE OR STACK TEMPERATURE (°F.)			
~~POINT~~ WEST	ΔP ~~H.~~	~~√H.~~ T°	O2 ~~VELOCITY FT./SEC.~~	~~POINT~~ NORTH	ΔP ~~H.~~	~~√H.~~ T	VELOCITY FT./SEC.
West 1	1/2"	2.9	693		1.5	690	
2	1 1/2"	3.1	723		1.7	740	
3	2 5/8"	3.3	723		1.9	740	
4	3 3/4"	3.6	733		1.9	740	
5	5"	3.9	728	17.7	1.9	740	17.6
6	6 3/8"	3.9	725		1.9	743	
7	7 3/4"	3.8	741		1.9	743	
8	9 3/8"	3.7	743		2.0	743	
9	11"	3.7	760		2.0	743	
10	13"	3.4	760	17.6	2.1	740	17.6
11	15 1/2"	3.1	753		2.1	744	
12	19 1/8"	2.9	751		2.3	744	
13	28 7/8"	2.3	756		2.5	744	
14	32 1/2"	2.1	758		2.1	742	
15	35"	2.0	758	17.6	2.0	742	17.7
16	37"	1.9	759		1.8	742	
17	38 5/8"	2.0	756		1.7	740	
18	40 1/4"	2.0	754		1.6	740	
19	41 5/8"	2.0	750		1.6	740	
20	43"	2.1	744	17.8	1.6	740	17.9
21	44 1/4"	2.1	740		1.6	739	
22	45 3/8"	2.1	742		1.7	740	
23	46 1/2"	2.1	734		1.7	740	
24	47 1/2"	2.1	735		1.7	740	
	STATIC PRESS – .85				– .88		
		2.71	742.5	Total Avg.	2.26		
				Total Avg.			740.8
AVERAGE VELOCITY (FT./SEC.)				AVERAGE VELOCITY (FT./SEC.)			
FLUE OR STACK AREA (SQ. FT.)				FLUE OR STACK AREA (SQ. FT.)			
GAS VOLUME (CFM)				GAS VOLUME (CFM)			

AVERAGE GAS VOLUME (CFM) –

GAS ANALYSIS

TEST NO.				
LOCATION				
CO_2				
O_2				
CO				
SO_2				
H_2O				
N_2				

GAS VELOCITY DATA

TEST NUMBER		
PITOT TUBE CORRECTION FACTOR - Fs		
DENSITY OF GAS REF. TO AIR - GD		
FLUE OR STACK PRESSURE ("HG) - PA		

CALCULATIONS

TEST NUMBER: _____

$$V_s = 2.9\,(F_s)\sqrt{\frac{29.92}{Pa} \times \frac{1.00}{Gd}\,(T_s)}\sqrt{H}$$

$$V_s = 2.9\,(\quad)\sqrt{\frac{29.92}{\quad} \times \frac{1.00}{\quad}\,(\quad)}\sqrt{H}$$

$$V_s = (\quad)\sqrt{H}$$

TEST NUMBER: _____

$$V_s = 2.9\,(\quad)\sqrt{\frac{29.92}{\quad} \times \frac{1.00}{\quad}\,(\quad)}\sqrt{H}$$

$$V_s = (\quad)\sqrt{H}$$

PLANT CONDITIONS

FUEL TYPE

FUEL CONSUMPTION RATE

MATERIAL PRODUCTION RATE

KVB71 66500-2052

SEE PAGE _____ FOR FLUE OR STACK TRAVERSE LAYOUT.

FORM E-14

EN 546

Unit P 2802 B ARCO ALASKA / RUSTIN

5/18/83

* Point B West Port (28 7/8")

$\overline{\Delta P} = 2.3$

$T_s = 740.8 + 460 = 1200.8$ CFM ~ .7

$T_m \cong 95 + 460 = 555$

$P_s = \frac{-.85}{13.6} + 30.08 = 30.074$

$M.W \cong 28.0$

$\% H_2O \cong 10\%$

$F_{Pitot} = .83$

$V = 85.48(.83)\sqrt{\frac{1201\,(2.3)}{(28)(30.074)}}$

128.5

$$d = 24\sqrt{\frac{\frac{.7}{(1-.1)} \cdot \frac{1201}{555} \cdot \frac{30.08}{30.074} \cdot \frac{1}{60\,min}}{F\,(128.5)}}$$

$= .2$ 3/16" or 1/4"

Nozzle = 3/16"

$K = \left(\frac{555}{1201}\right)\left(\frac{30.07}{30.08}\right)(.9)(.1875)^2 \times .3272$

$= .00478$

$V = 84.74\sqrt{\Delta P}$

$CFM = .00478(84.74)\sqrt{\Delta P}$

$= .405\sqrt{\Delta P}$

$.61 = .405\sqrt{2.3}$

$\Delta P = 2.3$

$\boxed{\Delta H = .58}$

CFM	ΔP	ΔH	√ΔH
.405	1.0	.29	.54
.496	1.5	.36	.6
.573	2.0	.53	.73
.64	2.5	.62	.79
.701	3.0	.73	.855
.758	3.5	.92	.96

KVB71 66500-2052

5/19/83

RUSTON / BWC ARCO ALASKA KUPARUK

Unit P 2202 A

EN 546

$\bar{\Delta p} = 2.3$

$T_s = 801.6 + 460 = 1262$

$T_m = 555$

$P_s = \frac{-1.2}{13.6} + 29.86 = 29.77$

M.W ~ 28

% H_2O = 10%

$F_{pitot} = .83$

$$K = \left(\frac{555}{1262}\right)\left(\frac{29.77}{29.86}\right)(.9)(.1875)^2(.3272)$$

$$= .00454$$

$$V = 85.48(.83)\sqrt{\frac{1262}{28}\,\frac{\sqrt{\Delta p}}{29.77}}$$

$$= 87.3\sqrt{\Delta p}$$

2.3 ΔP
.6 CFM
ΔH

$$CFM = .3963\sqrt{\Delta p}$$

ΔP	CFM	$\sqrt{\Delta H}$	ΔH
1.5	.485	.6	.36
2.0	.56	.69	.48
2.5	.63	.79	.62
3.0	.69	.87	.76

KVB71 66500-2052

EN 546

T_s = 1262

UNIT # P 2202 A

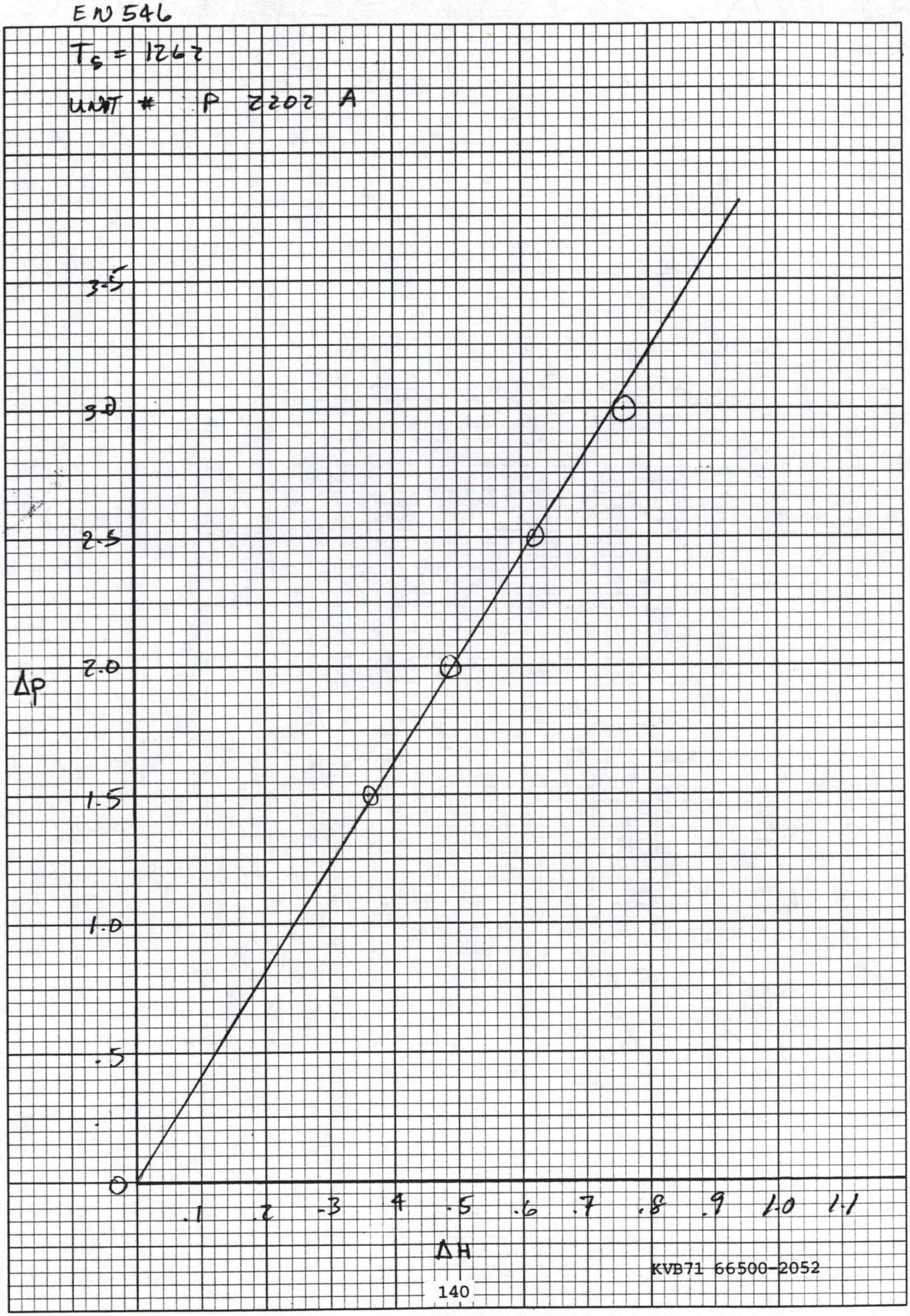

KVB71 66500-2052

46 0780
K+E 10 X 10 TO THE INCH • 7 X 10 INCHES
KEUFFEL & ESSER CO. MADE IN U.S.A.

EN 546 Unit P 2202 A

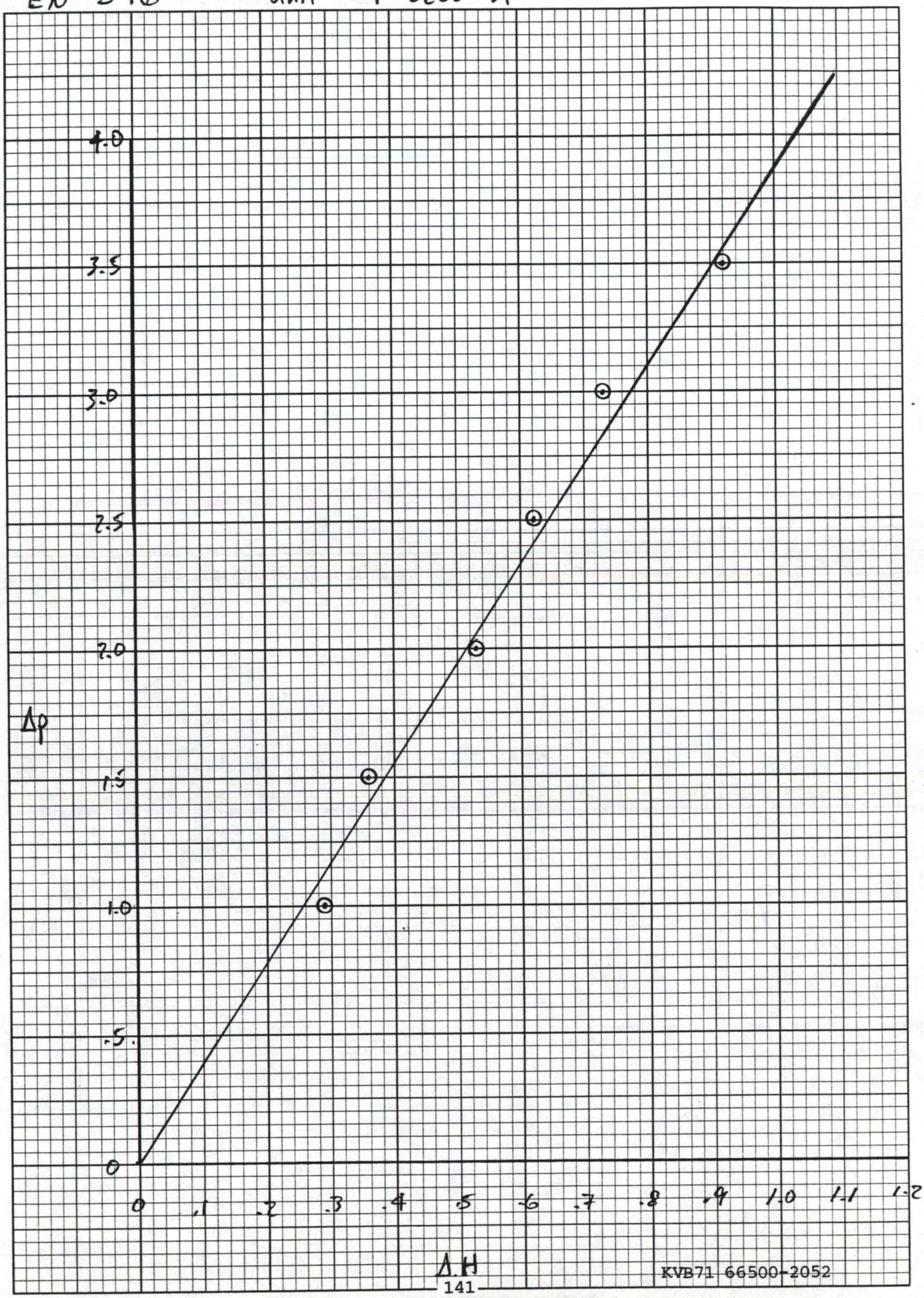

KVB71 66500-2052

46 0780
K&E 10 X 10 TO THE INCH • 7 X 10 INCHES
KEUFFEL & ESSER CO. MADE IN U.S.A.

APPENDIX J

GAS TURBINE NEW SOURCE PERFORMANCE STANDARDS

KVB71 66500-2052

INTEROFFICE MEMORANDUM

TO: All California Engineers

DATE: Nov. 30, 1979

FROM: R. D. Griffin

NO.: IO-617

SUBJECT: GAS TURBINE NEW SOURCE PERFORMANCE STANDARDS

In speaking with Doug Bell of the EPA (919/541-5477), Emissions Standards Division, concerning the NOx limits on gas turbines for NSPS, several errors were uncovered in the basic equation for calculating NOx. According to Mr. Bell, the equation (as published in the Federal Register on September 10, 1979) should read:

$$NOx = (NOx_{obs}) \left(\frac{P_{ref}}{P_{obs}}\right)^{0.5} e^{[19(H_{obs} - 0.00633)]} \left(\frac{288°K}{T_{amb}}\right)^{1.53}$$

where

NOx = NOx at ± 5.0, standard conditions

NOx_{obs} = NOx at 15% O_2

P_{obs} = Pressure observed at combustor inlet

P_{ref} = 101.3 kilopascals (1 standard atmosphere)

e = 2.718

H_{obs} = Specific humidity (lb water/lb dry air)

T_{amb} = Ambient temperature (°K) at test

These corrections will probably not be published for some time (according to Mr. Bell), but we should be aware of them.

Reference Test Method 20 is, of course, now required for NSPS compliance testing on gas turbines.

Roger Griffin

RDG:gc

KVB71 66500-2052

KVB®
A Research-Cottrell Energy Company

18006 SKYPARK BOULEVARD
P.O. BOX 19518
IRVINE, CALIFORNIA 92714
(714) 641-6200