Sauer-Sundstrand Company

Construction Completion Report
Sauer-Sundstrand Facility
Ames, Iowa

May 1997

MONTGOMERY WATSON

TRANSMITTAL

MONTGOMERY WATSON

11107 Aurora Avenue
Des Moines, Iowa 50322

Tel: 515 253 0830
Fax: 515 253 9592

RECEIVED
MAY 27 1997
IRSP. BRANCH

Date: May 22, 1997

To: Ms. Elizabeth Koesterer
RCRA Branch
US. EPA, Region VII
726 Minnesota Avenue
Kansas City, KS 66101

From: Keri Lewis

Re: Sauer Sundstrand

Done
B.K.

The following items are enclosed:

No. of Copies	Description
3	O&M Manual, Appendix B-3 - Manufacturer's O&M Manual, Heat Tracing

This data is submitted:

- [ ] At your request
- [ ] For your action
- [ ] For your approval
- [x] For your files
- [ ] For your review
- [ ] For your information

General Remarks:

Ms. Koesterer-

Please replace the contents of the Sauer-Sundstrand Construction Completion Report, O&M Manual, Appendix B-3 - Manufacturer's O&M Manual, Heat Tracing, with the attached.

Keri Lewis
Keri Lewis

CONSTRUCTION COMPLETION REPORT

FOR

SAUER-SUNDSTRAND FACILITY
AMES, IOWA

Prepared for

SAUER-SUNDSTRAND COMPANY
AMES, IOWA

RECEIVED
MAY 16 1997
IRSP. BRANCH

Project No. 1217070.05090440

May 1997

Prepared by

Montgomery Watson
11107 Aurora Avenue
Des Moines, Iowa 50322
515-253-0830

LICENSED PROFESSIONAL ENGINEER
JEFFREY
COON
11975
IOWA

I hereby certify that this engineering document was prepared by me or under my direct personal supervision and that I am a duly licensed Professional Engineer under the laws of the State of Iowa.

Jeffrey L. Coon, P.E. — Date: 5/14/97

License Number: 11975

My license renewal date is: December 31, 1998

Pages or sheets covered by this seal: Entire Document

TABLE OF CONTENTS

	PAGE
SECTION 1 - INTRODUCTION	1
Objective	1
Background	1
Site Description	1
Site History	2
SECTION 2 - CONSTRUCTION ACTIVITIES	4
Overview	4
Interception Trench Installation	4
Interception Trench	4
Collection Sump	5
Conveyance System Installation	5
Conveyance Piping	5
Valves	6
Pump	6
Pressure Transducer	6
Heat Tracing	6
Temperature Detector	7
Flow Meter	7
Standpipe Level Sensor	7
Dewatering	7
Electrical System	7
Control System	8
Sump Water Level	8
Pump Operation	8
Standpipe High Water Level	9
Water Flow	9
Water and Air Temperatures	9
Manual System Operation	9
SECTION 3 - SYSTEM STARTUP	10
SECTION 4 - CONSTRUCTION COMPLETION PUNCH LIST	12
SECTION 5 - OPERATION AND MAINTENANCE ACTIVITIES	13
Operation and Maintenance Manual	13
System Sampling	13
Groundwater Sampling	13

TABLE OF CONTENTS

APPENDIX A - AS-BUILT DRAWINGS A-1

APPENDIX B - PHOTOGRAPHIC LOG B-1

APPENDIX C - OPERATION AND MAINTENANCE MANUAL C-1

LIST OF TABLES

TABLE NO.		PAGE
3-1	Monitoring Results - Groundwater Remedial System	11
5-1	Initial Groundwater Elevations	14

LIST OF FIGURES

FIGURE NO.		FOLLOWING PAGE
1-1	Site Vicinity Map	1
1-2	Groundwater Analytical Results, September-October 1994	2
1-3	Areal Extent of VOCs in Groundwater, January - February 1990	2
5-1	Initial Shallow Groundwater Flow, February 4-6, 1997	14

SECTION 1

INTRODUCTION

OBJECTIVE

This Construction Completion Report (CCR) has been prepared to document the construction activities conducted during implementation of the approved corrective measure (groundwater remedial system) at the Sauer Sundstrand site in Ames, Iowa (site).

As presented in the Corrective Measures Study (CMS) Report, the groundwater interception trench was installed to achieve the following objectives:

- Prevent off-site migration of groundwater containing concentrations of volatile organic compounds (VOCs) above Maximum Contaminant Levels (MCLs).
- If an MCL has not been established for a VOC, prevent off-site migration of groundwater containing concentrations of VOCs that represent an unacceptable human health or environmental risk.
- Reduce the concentration of VOCs above MCLs in the on-site groundwater.

BACKGROUND

Site Description

Site Location. The site is located in Ames, Iowa, within the Northeast 1/4 of the Northwest 1/4 of Section 6, Township 83 North, Range 23 West, Story County, Iowa (Figure 1-1). Land use near the site consists of general industrial use to the west and south. On the northern side of 13th Street, the land is zoned for general commercial use. Land further north is zoned for agricultural use. The land east of Interstate 35 is primarily used for agricultural purposes, and most of this eastern area is located outside the corporate limits of the City of Ames. Residential land use located within one mile of the site is limited.

Site Hydrogeology. As presented in the RCRA Facility Investigation (RFI) Report, the subsurface geology at the site consists mainly of dense, gray, clay-rich glacial till interbedded with numerous and discontinuous sand units. Two main water-bearing zones appear to exist in the unconsolidated sediments of the site. A shallow water-bearing zone occurs from the water table (generally encountered at approximately 4 to 6 feet below ground surface) to a depth of approximately 15 to 20 feet below ground surface where the geology changes from soft, sandy clay, containing numerous sand pockets of limited horizontal and vertical extent to a hard, gray, silty clay.

Underlying the shallow water-bearing zone is the intermediate water-bearing zone which consists of numerous sand lenses interspersed throughout a dense, gray, clay-rich glacial till. Sand layers in the till have been encountered at depths ranging from approximately 15 to 50 feet below ground surface. The intermediate groundwater sand units are generally thicker than those encountered in the shallow water bearing zone; however, they too appear discontinuous. Based

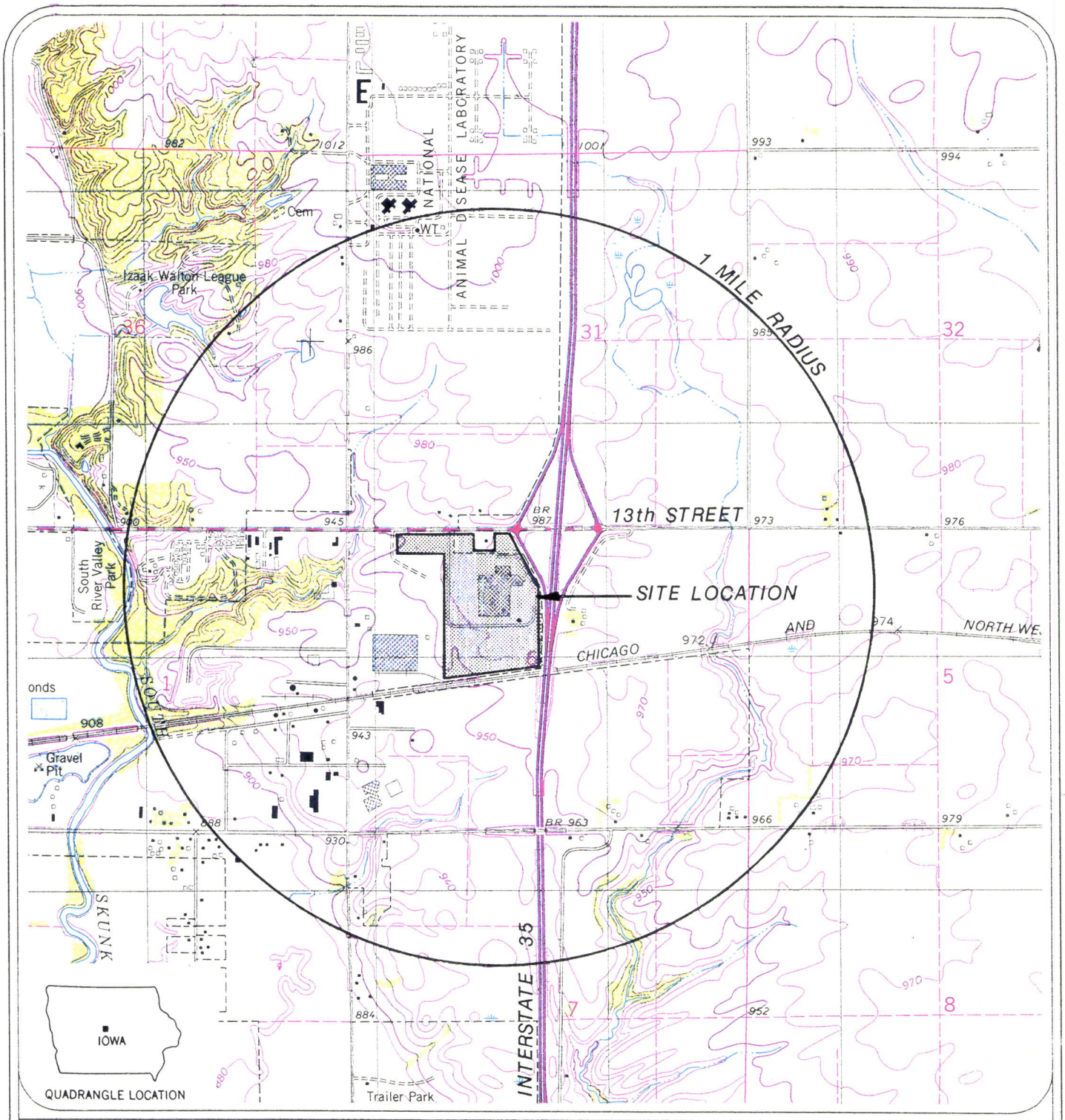

MAP SOURCE: U.S.G.S. 7.5 MINUTE SERIES TOPOGRAPHIC MAP
AMES EAST QUADRANGLE

0 2000
SCALE IN FEET

MONTGOMERY WATSON

SAUER-SUNDSTRAND FACILITY
AMES, IOWA

SITE VICINITY MAP

FIGURE 1-1

BDR

upon information presented in the RFI Report, it was concluded that the lower conductivity of the intermediate zone restricts vertical flow of water from the shallow sand units to those in the intermediate zone.

Extent of Groundwater Impacts. During the RFI, evidence of VOCs in groundwater were observed at monitoring well locations in the central and southwestern portions of the site (Figure 1-2). The highest concentrations of total VOCs in groundwater were detected at monitoring well locations MW-11, MW-R13 and MW-19. VOC concentrations in groundwater samples collected from downgradient monitoring well locations MW-21, MW-22 and MW-23 were generally below Method Detection Limits (MDLs). An isolated detection of acetone was observed in MW-23 at a concentration of 66 µg/L (Figure 1-2).

Historic groundwater monitoring data suggests the VOC plume is migrating in the direction of shallow groundwater flow toward the southwest. As presented in the RFI Report, results from a pre-RFI investigation conducted in January and February 1990 indicated the highest VOC concentrations were detected at MW-R13 (Figure 1-3). When results of the 1990 sampling event are compared with those resulting from the RFI (September and October 1994), the location of maximum VOC concentrations apparently shifted downgradient from the vicinity of MW-R13 to MW-11, located approximately 350 feet to the southwest.

Further comparison of the 1990 and 1994 sampling events indicates that VOC concentrations have generally decreased in the upgradient portion of the plume. Decreases were particularly notable in the vicinity of MW-10, MW-11, MW-R13, MW-R14 and MW-R17 (Figures 1-2 and 1-3). Concurrently, increases in constituent concentrations were noted at several downgradient monitoring locations including MW-28, MW-31, MW-18 and MW-19 (Figures 1-2 and 1-3). The observed shift in the center of the plume mass is consistent with interpretations of groundwater flow presented in the RFI Report. As presented in the RFI Report, some constituent concentrations were detected above MCLs at MW-19; however, none of the off-site monitoring locations contained concentrations above MCLs (Figures 1-2 and 1-3).

Site History

Facility Operations. The Sauer-Sundstrand facility operates as a manufacturer of hydrostatic transmission power systems for use primarily in farm machinery and construction equipment. The facility began operations in 1972 under the ownership of Sundstrand Corporation. On January 1, 1987, Sundstrand entered into a joint venture with Sauer Getriebe AG (Sauer) and began operation as the Sundstrand-Sauer Company. When Sundstrand sold its interest in the joint venture to Sauer on March 31, 1989, ownership of the real estate was transferred to Susa Holding of Story County. Operations of the Sundstrand-Sauer Company continued until December 31, 1989 when an independent entity, Sauer-Sundstrand Company, was established. Sauer-Sundstrand has operated the facility since January 1, 1990.

RCRA History. On March 29, 1991, an Administrative Order on Consent (Consent Order) Docket Number VII-91-H-0009 was entered into between the United States Environmental Protection Agency (USEPA), Sundstrand Corporation, Sauer-Sundstrand Company and Susa Holding Inc. (Respondents). An RFI was conducted pursuant to Section VI.B.6 of the Consent Order. The RFI was conducted in accordance with a set of project plans prepared by Harding

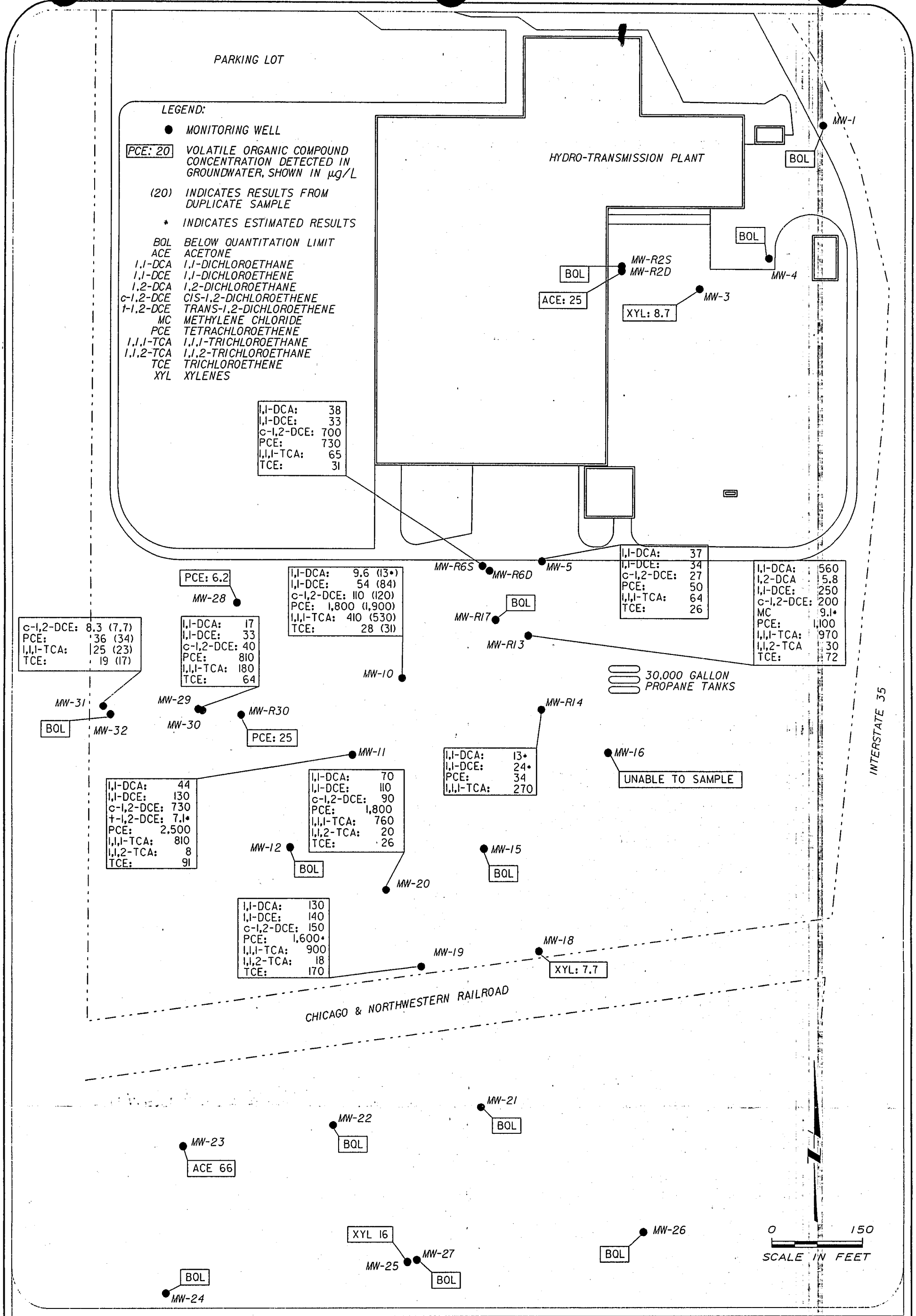

NOTE: DATA TAKEN FROM HARDING LAWSON ASSOCIATES JUNE 1995 REPORT.

MONTGOMERY WATSON

SAUER-SUNDSTRAND FACILITY
AMES, IOWA

GROUNDWATER ANALYTICAL RESULTS SEPT.–OCT. 1994

FIGURE 1-2

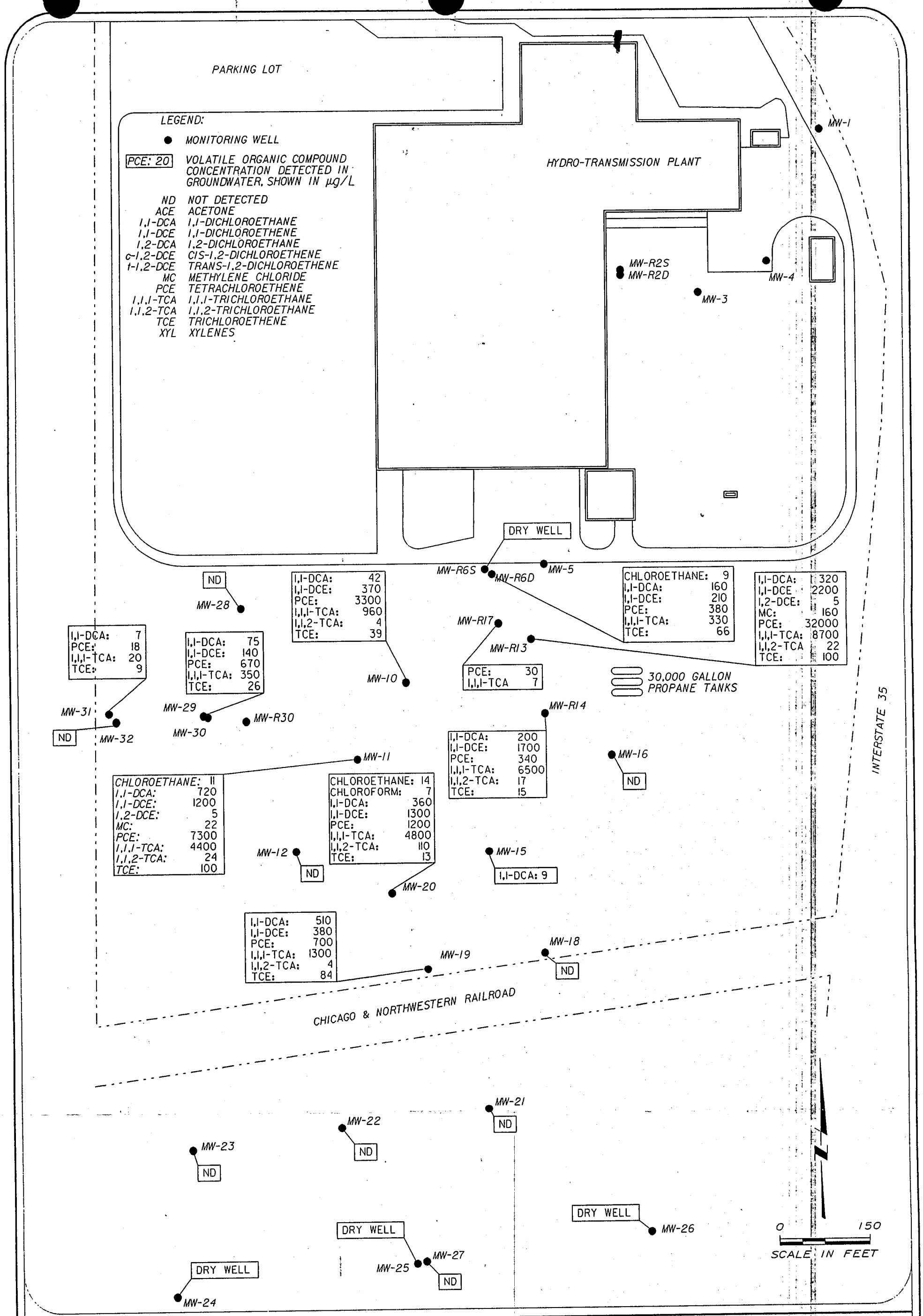

NOTE: DATA TAKEN FROM HARDING LAWSON ASSOCIATES JUNE 1995 REPORT.

MONTGOMERY WATSON

SAUER-SUNDSTRAND FACILITY
AMES, IOWA

AREAL EXTENT OF VOCs IN GROUNDWATER JAN.–FEB. 1990

FIGURE 1-3

Lawson Associates (HLA) including a Data Collection Quality Assurance Plan (DCQAP), as modified by the USEPA Notice of Approval with Modifications Letter dated August 3, 1993; a Health and Safety Plan (HSP); a Project Management Plan (PMP); a Data Management Plan (DMP); and a Community Relations Plan (CRP). The objective of the RFI was to assess impacts to soil and groundwater from the release, or potential release, of hazardous constituents from Solid Waste Management Units (SWMUs) at the facility.

Investigation activities were implemented at the site from September through October 1994 by HLA. Following the investigation, an RFI Report was prepared by HLA and submitted to the USEPA on June 9, 1995 in accordance with the Consent Order. The RFI Report defined the source, degree, and extent of constituents in the groundwater; and identified actual or potential receptors in the source area. On January 29, 1996, USEPA comments on the June 1995 RFI Report were received by HLA. A letter of Response to Technical Comments was submitted to the USEPA on March 18, 1996 to address these comments.

In March 1996, Montgomery Watson was retained to initiate the CMS phase of RCRA activities for the site. CMS activities at the site were conducted by Sauer-Sundstrand, voluntarily, in an effort to proactively address identified constituents in the groundwater at the site. A CMS Report was prepared and submitted to the USEPA on or about April 30, 1996. The CMS Report served to identify and evaluate potential remedial alternatives for the releases that had been identified at the site.

Comments on the April 1996 CMS Report were received by Montgomery Watson during a June 13, 1996, telephone conversation with the USEPA. A letter of response, which served as an addendum to the CMS Report, was submitted to the USEPA on July 5, 1996 to address these comments.

A Construction Work Plan (CWP) was prepared and submitted to the USEPA in September 1996. The CWP served to document the overall management strategy, construction quality assurance procedures and schedule for implementing the groundwater remedial system at the site. Comments on the CWP were received by Montgomery Watson during an October 15, 1996 telephone conversation with the USEPA. A letter of response and appropriate revised pages for inclusion into the September 1996 CWP were submitted to the USEPA on October 18, 1996 to address these comments.

SECTION 2

CONSTRUCTION ACTIVITIES

OVERVIEW

The groundwater remedial system (system) consists of a groundwater interception trench, conveyance system, and associated electrical and control systems installed to collect impacted groundwater for discharge to the City of Ames sewage treatment plant. As-built drawings of the system are included in Appendix A..

Construction activities at the site commenced on October 28, 1996. Montgomery Watson Constructors, Inc. (MWCI) served as the general contractor for installation of the system. The interception trench and sump were installed by Industrial Builders, Inc. of Fargo, North Dakota; the conveyance system, including conveyance piping and mechanical equipment, was installed by C&K Heating & Air Conditioning & Plumbing of Ames, Iowa; and the electrical components were installed by ABC Electric, Inc. of Des Moines, Iowa. Sauer-Sundstrand retained Mechanical Comfort Inc. of Ames, Iowa under separate contract to establish an interactive electrical interface between the system and Sauer-Sundstrand's Programmable Logic Controller (PLC) software. A photographic log of construction activities is included in Appendix B.

INTERCEPTION TRENCH INSTALLATION

Interception Trench

The interception trench alignment was surveyed by Snyder and Associates of Ankeny, Iowa along the western, southern, and a small portion of the eastern boundaries of the defined contaminant plume in accordance with Montgomery Watson's construction drawings dated September 1996. The interception trench was installed by Industrial Builders, Inc. using a trenchless technology in which a specialized trenching machine excavates the trench, inserts a drainage pipe, and backfills the trench with granular backfill material, all in one continuous operation. The trench was installed to an approximate depth of 25 feet and consists of two legs with a total length of approximately 750 linear feet. During trench installation, the curvature of the western end of the trench was reduced to accommodate the limitations of the trenching machine in negotiating curves. The western end of the trench was therefore terminated approximately 15 feet south of the endpoint shown on the original construction drawings. This minor modification has not affected the trench design criteria.

A 4-inch perforated, corrugated high density polyethylene (HDPE) pipe was installed at the base of the trench on granular backfill approximately 6 inches above the trench bottom. The drainage piping, manufactured by Advanced Drainage Systems Inc., was encased with Carriff Corporation's highway grade drain sleeve to minimize the potential of passing fines from the backfill material. Perforations in the drainage pipe allow infiltration of approximately 30 gallons per minute (gpm) along the length of the pipe. A vertical collection sump, installed near MW-20, is physically connected to each leg of the trench drainage pipe and serves as the main point of collection/removal. Each leg of the trench is constructed with a 0.5 percent slope

towards the sump to facilitate water flow and velocity. Cleanouts encased in 6-inch Schedule 80 polyvinyl chloride (PVC) stickups with locked compression caps are installed at the end of each trench leg.

The interception trench was backfilled with granular backfill material to within 5 feet of the ground surface. A coarse backfill material as identified in the specifications was not locally available; it was determined that a finer grade substitute material was acceptable for use as trench backfill. Periodic cleaning may be required to remove accumulated sediment from the collection pipe and sump.

Following installation, the interception trench drainage pipe was successfully pigged, thereby verifying that no obstructions were present in the below grade drainage pipe system. Backfilling to grade level was completed with mechanically compacted (i.e., via the use of construction equipment) native soil to minimize seepage of surface water into the trench.

Collection Sump

The collection sump consists of a corrugated 18-inch HDPE pipe installed vertically to an approximate depth of 22 feet. The bottom 10 feet of the pipe are perforated and encased in Carriff Corporation's highway grade drain sleeve to minimize the potential of backfill material infiltration. The space directly around the sump is backfilled with pea gravel to the top of the perforated pipe section, followed by a 2-foot bentonite seal and native soil to grade level. The collection sump is physically connected to the interception trench drainage pipe and is completed with a 2 foot above-grade stick-up sealed with a lockable cover.

CONVEYANCE SYSTEM INSTALLATION

The conveyance system, installed by C&K Heating & Air Conditioning & Plumbing, transports collected groundwater from the sump to a discharge point located within the on-site wastewater treatment building.

Conveyance Piping

Two-inch single wall HDPE conveyance piping was installed from the buried ball valve to the treatment room at an approximate burial depth of 5 feet below grade. Connection of pipe sections and other connections were accomplished by performing the industry standard butt fusion procedure. Two-inch PVC pipe was installed from the buried ball valve to the sump. The conveyance piping was connected to the sump using a standard pitless adapter installed into the sidewall of the sump. The piping was then installed underground along the route identified in the construction drawings. The conveyance piping transects a roadway just before entering the treatment building. Routing across this existing road surface was accomplished by boring under the road. Once alongside the treatment building the pipe penetrates the ground surface and enters the building through a wall penetration. Inside the treatment room the conveyance piping transitions to 2-inch Schedule 80 PVC piping installed approximately 2 feet above the finished floor elevation. Blind tees were included to allow incorporation of a treatment system, if required at a future date. A sample tap was installed for sample collection. The conveyance piping discharges into a 4-inch PVC standpipe which connects to the sanitary sewer used as the

discharge point from the existing treatment facility. Connection to the standpipe is elevated to prevent backflow of water from the treatment facility into the collection system. The standpipe is vented through the roof of the treatment facility. As a modification to accommodate emergency overflow from the standpipe, a bypass, equipped with a liquid trap, was installed 1 foot above the standpipe level sensor over top of an existing treatment system tank.

Valves

Ball valves were installed in the conveyance piping to control the flow rate through the system, isolate the flow meter, and redirect flow through an auxiliary treatment system, if required. A ball valve with an extension handle was installed in the conveyance piping under hand-hole #3, near the sump, to isolate that section of piping and to prevent backflow into the sump when the pump is removed.

A PVC check valve was installed in the conveyance piping upstream of the discharge into the standpipe to prevent backflow of water from the treatment facility into the collection system. A check valve was also installed in the pump discharge pipe within the collection sump to prevent backflow into the sump when the pump is not operating.

Pump

A Model 40S10-3 Grundfos submersible pump was installed in the sump to transfer collected groundwater through the conveyance system. The base of the pump was located 4 feet, 4 inches above the bottom of the sump. The pump is also equipped with a Franklin 1 horsepower, 3 phase, 460 volt, Type 304 stainless steel motor. The pump is equipped with a pump shroud to facilitate cooling of the motor by directing water along the motor to the pump inlet. The 1 1/2-inch PVC pump discharge pipe (as identified in the construction drawings) fractured as the pump was removed from the sump during prestartup activities. To eliminate the brittleness during cold weather conditions and to supply more rigidity, the discharge pipe was replaced with 1 1/2-inch galvanized pipe.

Pressure Transducer

A KPSI Model 210 S submersible pressure transducer was installed in the sump at the base of the pump, 4 feet, 5 inches above the sump bottom. The transducer determines water level in the sump by measuring the pressure exerted by the water column, thereby providing the information necessary to activate and deactivate the pump. The transducer is housed within a perforated, 2-inch Schedule 40 PVC sleeve attached vertically to the interior of the sump. The PVC sleeve provides protection to the transducer against water turbulence caused by cycling of the pump.

Heat Tracing

Raychem® Chemelex™ 5BTV1-CR 110 volt heat trace cable was installed on the section of exterior conveyance pipe from 5 feet below grade to 1 foot inside the treatment building in an attempt to prevent pipeline freeze-up during cold weather conditions. The heat trace cable was secured with aluminum tape, and the pipe itself insulated with 2-inch insulation embossed with aluminum jacketing.

Temperature Detector

A Foxboro PR-13BBS-003 platinum resistance temperature detector was installed in the section of conveyance piping immediately upstream of the building penetration to monitor the groundwater temperature and detect freezing conditions. The temperature detector has a 3 1/2-inch probe inserted within the interior of the pipe which measures the temperature of the water and relays this information to the temperature transmitter and PLC module located within the main control panel. Additional sensors were installed and connected to the PLC module by Mechanical Comfort, Inc. which monitor the outside temperature and the air temperature within the treatment room.

Flow Meter

A Sparling Tigermag Model 625 magnetic flow meter was installed within the conveyance piping within the treatment building, immediately downstream of the building penetration. The flow meter has wafer style connections, Type 316 stainless steel electrode and grounding rings, and a Teflon® liner. Electrical signals from the flow meter are fed to the main control panel which displays total and instantaneous flow rate information.

Standpipe Level Sensor

A Magnetrol Trident 91S, model 91S-A1A0-F10 ultrasonic level control and model 9B1-1221-001 Type 316 stainless steel transducer were installed in the PVC discharge standpipe within the treatment room, 1 foot above the conveyance system connection. The sensor is installed as an emergency device to deactivate the sump pump in the event of water backup within the discharge standpipe.

DEWATERING

In order to expedite the field construction activities, dewatering efforts were undertaken. Water collected during construction activities was stored in polytanks, allowed to settle, and ultimately discharged to the City of Ames sanitary sewer system. Severe subfreezing weather conditions arrived before Montgomery Watson could complete the discharge of all the containerized water. As a result, the liquid began to freeze within the polytanks. To melt the ice, Montgomery Watson utilized several electric immersion heaters to thaw out the liquids prior to discharge to the sanitary sewer system.

ELECTRICAL SYSTEM

The electrical system was installed by ABC Electric, Inc. Four 2-inch PVC electrical conduits were installed from the treatment room to hand-hole #3 in the same trench as the conveyance piping. During the installation, warning tape was buried above the conduit which supplies 460 volt electrical current from the treatment room to the collection sump. As mentioned previously, routing across the existing road surface was accomplished by boring under the road. PVC coated galvanized conduit was installed from hand-hole #3 to the electrical station installed near the collection sump. The electrical station near the sump is installed on a 5-foot by 3-foot by 8-inch preformed, reinforced concrete pad and contains various switches, a duplex service outlet/receptacle and a step down transformer used by the components at the sump.

The main electrical panel is installed along the eastern interior wall of the treatment room, next to the exit door. Panel lights signal pump operation, high and low sump water levels and a high water level within the standpipe. A hand/off/auto switch was installed to allow for manual or automatic operation of the pump.

The sump pump is supplied with 460 volt AC electrical power; the heat tracing, flow meter, and standpipe level sensor are supplied with 120 volt AC electrical power; and the pressure transducer is supplied with 24 volt DC power. The pressure transducer provides a 4 to 20 mA output, the flow meter provides both 4 to 20 mA and pulse outputs for tracking flow rate and total flow, respectively, and an integral control relay provides an output signal from the standpipe level sensor.

A Foxboro RTT20-I1BNQOFA-D1F1 temperature transmitter was installed in the main electrical panel to transmit the groundwater temperature from the temperature probe to the PLC. The transmitter is supplied with 24 volt DC power and provides a 4 to 20 mA output to the PLC. The temperature transmitter is calibrated to read from 0 to 150° F.

A Newport INF7000 digital indicator was mounted on the front of the electrical panel to provide an easily accessible readout of water flow rate and total flow. The digital indicator is supplied with 120 volt AC power and accepts a 4 to 20 mA input signal from the flow meter. The indicator display toggles between flow rate and total flow.

CONTROL SYSTEM

Mechanical Comfort, Inc. established the interface between the system and Sauer-Sundstrand's PLC software. Inputs to the PLC consist of 1) the sump water level, 2) current flow to the pump, 3) indication of a high level condition in the standpipe, 4) total water flow and flow rate, and 5) water, outside air and treatment room air temperatures. Outputs from the PLC are signals to 1) activate/deactivate the sump pump; and 2) provide status of sump water level and standpipe high water level panel lights. The pump operation panel lights are controlled by the status of the pump starter. PLC control of the system is accomplished by operating with the hand/off/auto switch in the auto position.

Sump Water Level

The water level in the collection sump is determined based upon the pressure exerted by the depth of the water column. This information is then converted to a 4 to 20 mA signal from the pressure transducer and relayed to the electrical panel. The water level is the water column height above the bottom of the transducer and is indicated on the PLC computer display. Signals from the PLC activate the pump when the sump water level reaches a preset high level and deactivate the pump when the sump water level reaches a preset low level. Both the low and high water levels are specified by the operator on the computer display. Signals from the PLC activate the sump low and high water level alarm lights installed in the electrical panel.

Pump Operation

A PLC input from a current transformer indicates current flow to the pump and signals pump operation. Indication of pump operation is included on the PLC computer display. Activation of

the appropriate pump run/off lights installed in the electrical panel is based on the status of the pump starter, which is triggered by the signal sent by the pressure transducer located within the sump.

Standpipe High Water Level

A high water level in the discharge standpipe is indicated by a signal sent from the standpipe level probe to the PLC. In the event of a high level condition, signals from the PLC deactivate the groundwater pump and activate the standpipe high water level light installed in the electrical panel. Reactivation of the pump is accomplished by manually resetting the momentary switch located on the face of the main electrical panel.

Water Flow

Signals from the flow meter indicating water flow rate and total flow are directed to both the PLC and the flow indicator installed in the main electrical panel. Water flow rate and total flow are included on the PLC computer display. If a flow rate less than 12 gpm is detected for 1 minute while the pump is activated, the PLC will deactivate the pump; reactivation of the pump is accomplished by manually resetting the momentary switch located on the face of the main electrical panel.

Water and Air Temperatures

A 4 to 20 mA signal is sent from each temperature probe to the PLC indicating water or air temperatures. Water, outside air and treatment room air temperatures are included in the information on the PLC computer display.

Manual System Operation

Operation of the system with the hand/off/auto switch in the hand position overrides automatic control by the PLC. Consequently the pump will not be deactivated under low sump water level, high standpipe water level or low flow conditions.

SECTION 3

SYSTEM STARTUP

The conveyance piping was pressure tested on January 30, 1997 at 50 psig for three consecutive hours. Operation of the system was initiated on February 6, 1997. Performance of each of the system components was tested and confirmed. The flow meter was programmed to display flow rate and total flow in cubic feet per minute and cubic feet, respectively. The system was set to activate and deactivate the pump at sump water levels of 110 inches and 56 inches, respectively, although the pump activation level may be revised in the future as the site is dewatered. The flow indicator installed in the electrical panel only displays cumulative, totalized flow.

The system was operated intermittently at first as the interface between the system and PLC was finalized. Continuous operation of the system began on February 13, 1997. Flow from the system was restricted to between 15 and 20 gallons per minute (gpm) as requested by the City of Ames Water and Pollution Control Department (WPCD) to allow the City of Ames WPCD facility's biological treatment processes to acclimate to the constituents being discharged.

Split samples from the system discharge were collected with the City of Ames WPCD on February 19, 1997 at the conclusion of the first week of continuous system operation. Analyses consisted of select volatile organic compounds (VOCs), total suspended solids (TSS) and total iron; results are provided in Table 3-1. All constituent concentrations were below the maximum expected concentrations provided to the City of Ames WPCD on July 31, 1996. System flow rate and cumulative flow are also reported in Table 3-1.

TABLE 3-1

MONITORING RESULTS
GROUNDWATER REMEDIAL SYSTEM

Constituent	Concentration 02-19-97 Sample	Concentration City of Ames WPCD 02-19-97 Split Sample	Concentration 03-05-97 Sample	Concentration 03-19-97 Sample	Concentration 04-17-97 Sample	Maximum Expected Concentration[a]
Total Suspended Solids (mg/L)	12	10	< 5.0	< 5.0	< 5.0	980
Total Iron (mg/L)	0.79	0.6	0.21	0.21	1.9	28
Volatile Organic Compounds (µg/L)						
Acetone	< 20	< 10	[b]	< 20	< 20	44
1,1-Dichloroethane	32.0	37	[b]	30.8	26.5	370
1,2-Dichloroethane	< 1.0	[b]	[b]	< 1.0	< 1.0	3.9
1,1-Dichloroethylene	44.8	44	[b]	39.4	35.4	170
cis-1,2-Dichloroethylene	184	170[c]	[b]	172	165	490
trans-1,2-Dichloroethylene	3.3	[d]	[b]	3.2	3.5	4.7
Methylene Chloride	< 10	[b]	[b]	< 10	< 10	6.1[e]
Tetrachloroethylene	1,370	1,200	[b]	1,110	1,180	1,700
1,1,1-Trichloroethane	236	230	[b]	< 1.0	194	650
1,1,2-Tirchloroethane	5.7	[b]	[b]	4.6	4.9	20
Trichloroethylene	82.7	85	[b]	70.4	70.6	110
Total Xylenes	< 3.0	< 5	[b]	< 3.0	< 3.0	11
Flow Rate (gallons per minute)	17.4	[f]	16.9	21.7	22.3	30
Total Flow (gallons)	100,545	[f]	226,348	381,322	696,296	

[a] From July 31, 1996 letter, Montgomery Watson.
[b] Not Analyzed.
[c] cis and trans
[d] Included as a combination of cis and trans.
[e] Suspect laboratory artifact during investigation activities.
[f] Not Recorded

WPCD = Water and Pollution Control Department

SECTION 4

CONSTRUCTION COMPLETION PUNCH LIST

Adverse weather conditions precluded completion of construction activities prior to system startup. Additionally, minor punch list items require completion. Given favorable weather conditions, construction activities are scheduled to be completed by late spring/early summer, 1997.

Due to water and ice build-up in hand-hole #3 during winter construction, permanent wiring connections from the electrical station near the sump to the pump could not be completed as designed. Therefore, temporary wiring to the pump was established to allow for system startup in February. Permanent wiring to the pump will be installed, and buried conduit will be swabbed to removed accumulated moisture in early Spring 1997.

The flow indicator installed in the electrical panel will be reconfigured to allow display of both flow rate and total flow.

A concrete pad and bumper posts will be installed around the sump for protection. Hand-hole #1 near the treatment room will be reset or trimmed as necessary so it is flush with the ground surface.

Areas disrupted during construction activities will be graded so that slopes promote natural drainage across the site. Disturbed areas will be seeded with prairie flower seed to establish a vegetative cover for erosion control. Lawn areas disturbed during construction will be reseeded with grass seed.

SECTION 5

OPERATION AND MAINTENANCE ACTIVITIES

OPERATION AND MAINTENANCE MANUAL

An Operation and Maintenance (O&M) Manual has been developed for the site and is included as Appendix C of this CCR. The O&M Manual was prepared to provide a comprehensive guide to operation and maintenance of the system. Included in the O&M Manual are specific, manufacturer-recommended maintenance procedures and frequencies, as detailed in the Manufacturer's O&M Manuals, as well as copies of the actual Manufacturer's O&M Manuals.

SYSTEM SAMPLING

As required by the Sauer-Sundstrand facility's Non-Domestic Wastewater Discharge Permit No. 6593-3 (Permit No. 6593-3) issued by the City of Ames WPCD, samples were collected from the system discharge after one week, 3 weeks, 5 weeks, two months and three months of system operation. Samples were analyzed for select VOCs (Week 1, Month 2 and Month 3 samples only), TSS and total iron. Results are presented in Table 3-1. In general, VOC concentrations have decreased since operation of the system began, and all constituent concentrations have been consistently below the maximum expected concentrations provided to the City of Ames WPCD on July 31, 1996.

As required by Permit No. 6593-3, system sampling will continue on a monthly basis in order to establish the concentration pattern of each of the VOC constituents expected to be discharged to the City of Ames sanitary sewer. It is expected monitoring frequency requirements will be reduced following the first several months of system operation, based on the initial results obtained. Because concentrations have been low, monthly sampling for TSS and total iron will be discontinued.

Flow rates and cumulative flow during the first three months of system operation are presented in Table 3-1. The system began operating at maximum capacity on March 19, 1997. As of April 17, 1997, 696,296 gallons have been pumped from the system to the City of Ames sanitary sewer.

GROUNDWATER SAMPLING

Initial groundwater elevations were measured between February 4, 1997 and February 6, 1997, prior to startup of the system. Results are presented in Table 5-1. As shown in Figure 5-1, initial shallow groundwater flow is generally directed towards the southwest which is in the direction of the interception trench.

Groundwater samples will be collected on an annual basis. The first annual sampling event will be conducted during the third quarter of 1997; annual sampling will proceed accordingly. Sampling will continue for a period of up to five years, at which time the effectiveness of the remedial system will be reevaluated to determine whether CMS objectives have been fulfilled.

Annual site sampling reports will be prepared and submitted to the US EPA no later than March 1, following each annual sampling event.

TABLE 5-1

INITIAL GROUNDWATER ELEVATIONS
FEBRUARY 4-6, 1997

Well No.	Top of Casing NGVD Elevation (ft)	Groundwater Elevation (ft)
Shallow Wells		
1	973.71	967.4
R2S	970.49	961.94
3	969.05	963.28
4	970.39	965.11
5	965.82	958.03
R6S	965.39	957.46
10	964.22	955.1
11	963.26	958.06
12	959.7	948.96
R13	965.67	956.85
R14	965.83	954.86
15	957.99	951.98
16	965.9	954.98
18	956.73	950.34
19	954.31	947.67
20	956.66	950.36
28	957.17	952.54
29	955.57	950.69
31	953.6	947.81
PZ-1	953.81	948.99
PZ-2	951.42	947.96
Deep Wells		
R2D	970.41	960.53
R17	965.77	944.25
R30	958.21	950.15
32	954.16	944.09

NGVD = National Geodetic Vertical Datum

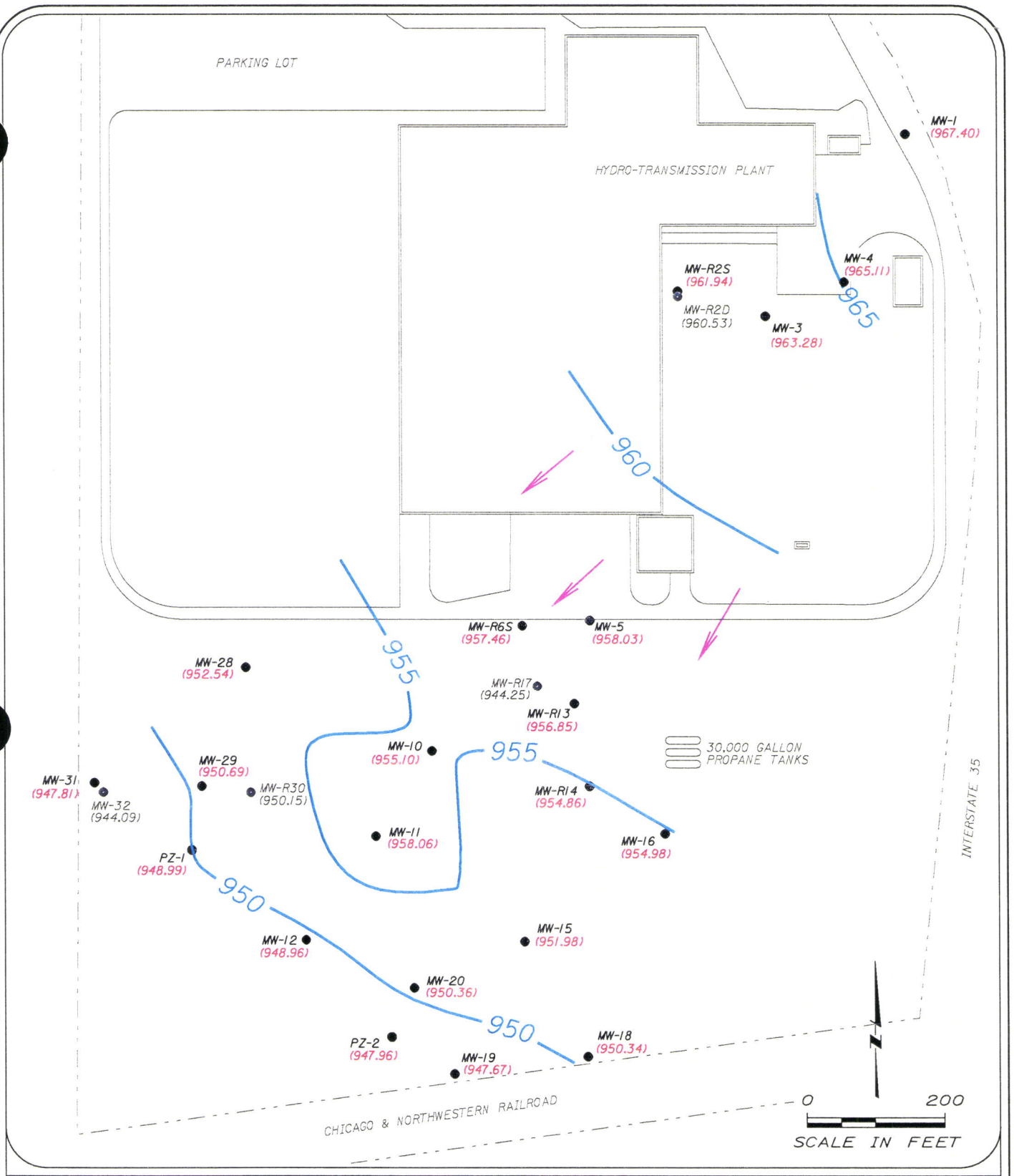

LEGEND:

- ● MONITORING WELL
- (947.81) SHALLOW GROUNDWATER ELEVATION IN FEET NGVD
- SHALLOW GROUNDWATER ELEVATION CONTOUR
- INFERRED DIRECTION OF GROUNDWATER FLOW

MONTGOMERY WATSON

SAUER-SUNDSTRAND FACILITY
AMES, IOWA

INITIAL SHALLOW GROUNDWATER FLOW FEBRUARY 4–6, 1997

FIGURE 5-1

AB608

SAUER SUNDSTRAND COMPANY
AMES, IOWA

GROUNDWATER INTERCEPTION SYSTEM DESIGN AS-BUILT DRAWINGS

MAY 1997

MONTGOMERY WATSON

Des Moines, Iowa

LICENSED PROFESSIONAL ENGINEER
JEFFREY COON 11975
IOWA

I hereby certify that this engineering document was prepared by me or under my direct personal supervision and that I am a duly licensed Professional Engineer under the laws of the State of Iowa.

JEFFREY L. COON, P.E. 5/14/97
DATE

My license renewal date is December 31, 1998

Pages or Sheets covered by this seal:
G-01, G-02, C-01 through C-05, E-01 through E-03

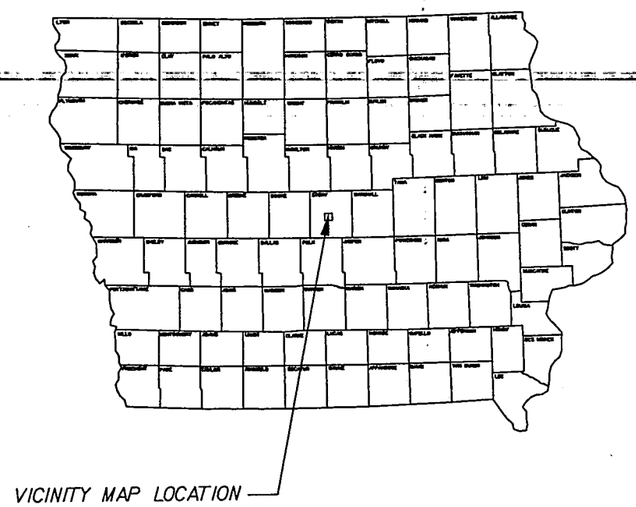

PROJECT LOCATION MAP

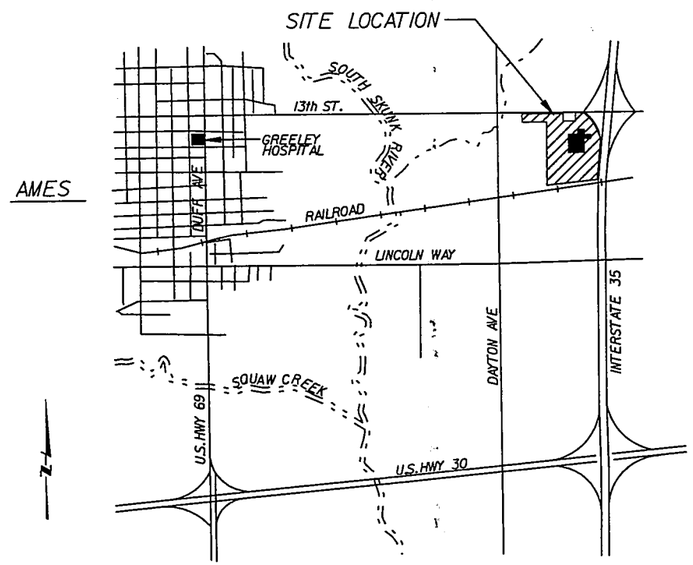

VICINITY MAP

SHEET INDEX

SHEET	DESCRIPTION
GENERAL	
G-01	COVER SHEET
G-02	LOCATION MAPS, SHEET INDEX AND DETAIL IDENTIFICATION
CIVIL	
C-01	PRE-EXISTING CONDITIONS
C-02	INTERCEPTION TRENCH PLAN AND PROFILE
C-03	CONVEYANCE PIPING PLAN AND PROFILE
C-04	TREATMENT BUILDING MODIFICATIONS
C-05	DETAILS AND SECTIONS
ELECTRICAL	
E-01	ELECTRICAL PLAN VIEW
E-02	DIAGRAMS AND SCHEMATICS
E-03	CONDUIT DEVELOPMENT, SCHEDULES & DETAILS

SECTION AND DETAIL IDENTIFICATION

SECTION IDENTIFICATION

(1) SECTION CUT SHOWN ON DRAWING AS:

SECTION NUMBER

2
C-02

SHEET NUMBER WHERE THE SECTION DRAWING IS LOCATED. SEE NOTE 1

(2) ON SHEET NUMBER C-02 THIS SECTION IS IDENTIFIED AS:

SECTION NUMBER

SECTION 2
SCALE: AS DESIGNATED C-01

SHEET ON WHICH THE SECTION CUT IS SHOWN. SEE NOTES 1 & 2

DETAIL IDENTIFICATION

(1) DETAIL IDENTIFICATION SHOWN ON DRAWING AS:

DETAIL LETTER

A
C-09

THE DETAIL NAME IS OPTIONAL AND LOCATED HERE, FOLLOWING DETAIL CALLOUT

SHEET NUMBER WHERE THE DETAIL DRAWING IS LOCATED. SEE NOTES 1 & 2

(2) ON SHEET NUMBER C-09 THIS DETAIL IDENTIFIED AS:

DETAIL LETTER

DETAIL NAME A
SCALE: AS DESIGNATED C-03

SHEET ON WHICH DETAIL IS CALLED OUT. SEE NOTES 1 & 2

NOTE DETAIL IDENTIFICATION

DETAIL LETTER — A/C-09 — SHEET ON WHICH DETAIL APPEARS

NOTES:

(1) IF PLAN AND SECTION (OR DETAIL CALL-OUT AND DETAIL) ARE SHOWN ON SAME SHEET, THE SHEET NUMBER IS REPLACED BY A HORIZ. LINE.

(2) IF DETAIL OR SECTION IS CALLED OUT ON NUMEROUS SHEETS THE DRAWING NUMBER MAY BE REPLACED BY "VAR".

REV	DATE	BY	DESCRIPTION

SCALE: NONE

WARNING 0 ½ 1 — IF THIS BAR DOES NOT MEASURE 1" THEN DRAWING IS NOT TO SCALE.

DESIGNED
DRAWN J. DRISCOLL
CHECKED K. LEWIS

SUBMITTED
PROJECT ENGINEER REG. NO. DATE
MONTGOMERY WATSON REG. NO. DATE

MONTGOMERY WATSON
Des Moines, Iowa

SAUER SUNDSTRAND COMPANY AMES, IOWA
GROUNDWATER INTERCEPTION SYSTEM DESIGN
AS-BUILT DRAWINGS

LOCATION MAPS, SHEET INDEX AND DETAIL IDENTIFICATION

SHEET G-02

JOB No. 1217070.05090440 FILE No. ____ Date: 5/97

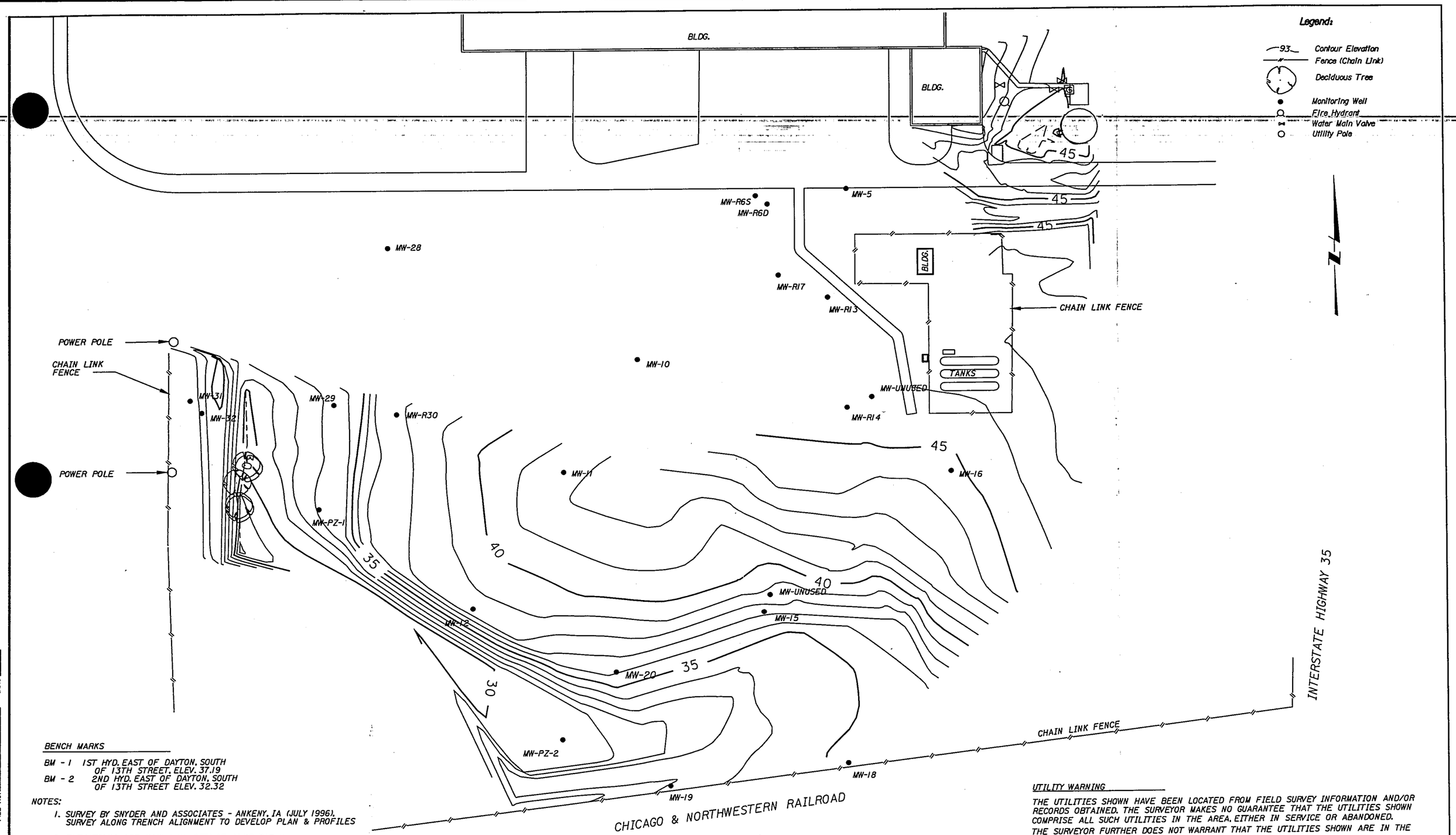

BENCH MARKS

BM - 1 1ST HYD. EAST OF DAYTON, SOUTH OF 13TH STREET, ELEV. 37.19
BM - 2 2ND HYD. EAST OF DAYTON, SOUTH OF 13TH STREET ELEV. 32.32

NOTES:

1. SURVEY BY SNYDER AND ASSOCIATES - ANKENY, IA (JULY 1996), SURVEY ALONG TRENCH ALIGNMENT TO DEVELOP PLAN & PROFILES
2. ELEVATIONS ARE BASED ON CITY OF AMES DATUM. USGS ELEVATIONS = INDICATED ELEVATIONS + 918.16'

UTILITY WARNING

THE UTILITIES SHOWN HAVE BEEN LOCATED FROM FIELD SURVEY INFORMATION AND/OR RECORDS OBTAINED. THE SURVEYOR MAKES NO GUARANTEE THAT THE UTILITIES SHOWN COMPRISE ALL SUCH UTILITIES IN THE AREA, EITHER IN SERVICE OR ABANDONED. THE SURVEYOR FURTHER DOES NOT WARRANT THAT THE UTILITIES SHOWN ARE IN THE EXACT LOCATION INDICATED.

REV	DATE	BY	DESCRIPTION

SCALE: 1" = 50'

WARNING: 0 ½ 1 — IF THIS BAR DOES NOT MEASURE 1" THEN DRAWING IS NOT TO SCALE.

DESIGNED
DRAWN J. DRISCOLL
CHECKED K. LEWIS

SUBMITTED
PROJECT ENGINEER REG. NO. DATE
MONTGOMERY WATSON REG. NO. DATE

MONTGOMERY WATSON
Des Moines, Iowa

SAUER SUNDSTRAND COMPANY AMES, IOWA
GROUNDWATER INTERCEPTION SYSTEM DESIGN
AS-BUILT DRAWINGS

PRE-EXISTING CONDITIONS

SHEET C-01

JOB No. 1217070.05090440 FILE No. Date: 5/97

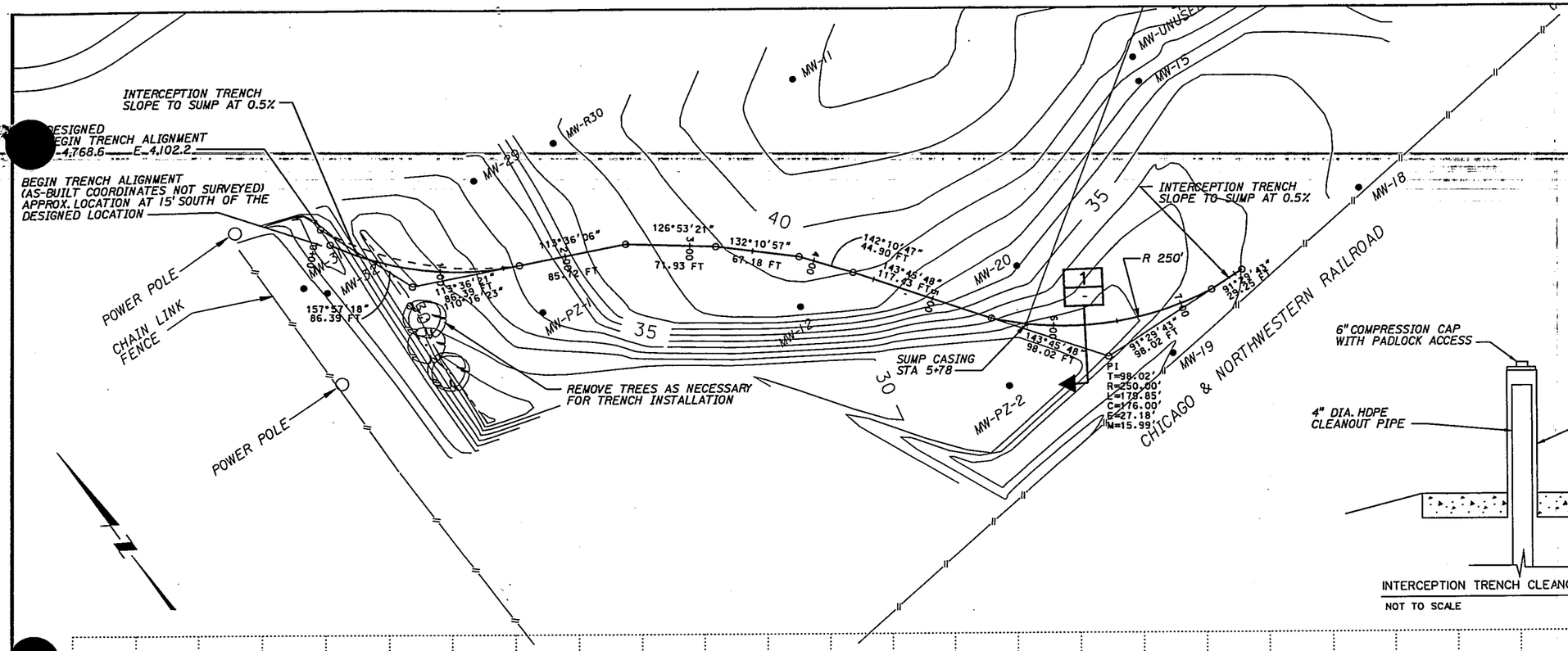

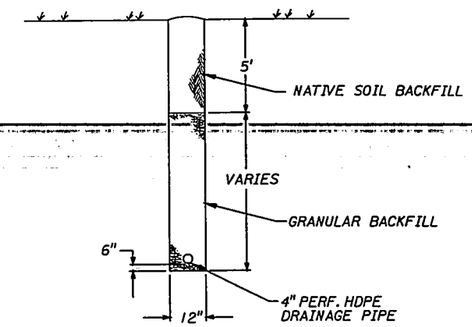

INTERCEPTION TRENCH TYPICAL SECTION | 1 | -

NOT TO SCALE

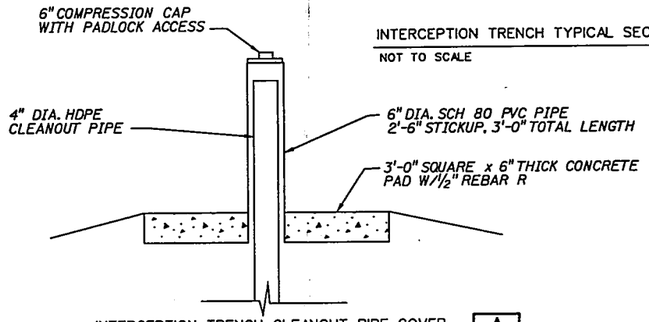

INTERCEPTION TRENCH CLEANOUT PIPE COVER | A | -

NOT TO SCALE

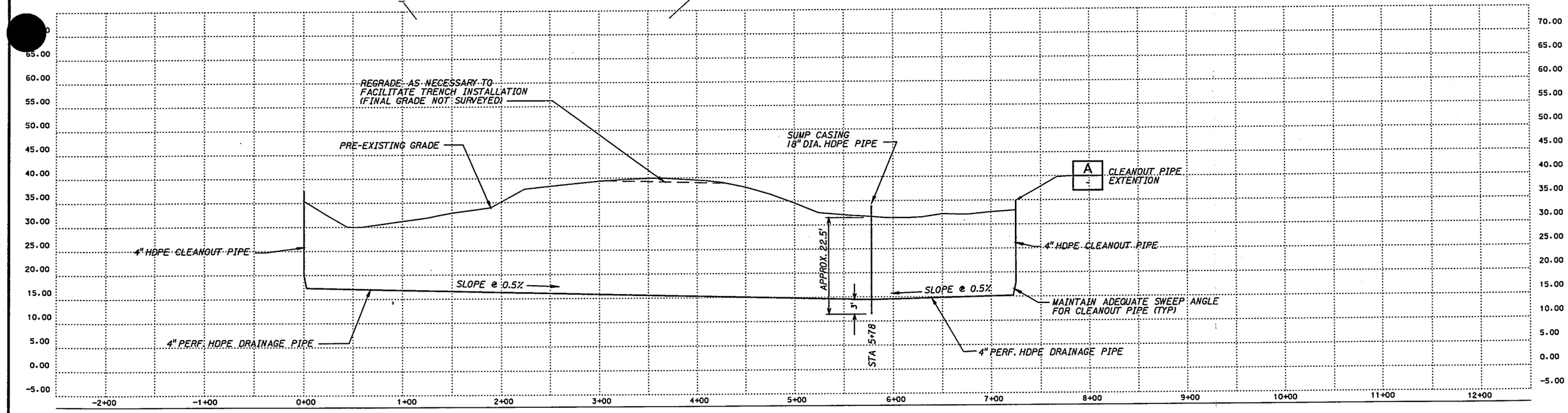

REV	DATE	BY	DESCRIPTION

SCALE: HORIZ. 1" = 50' VERT. 1" = 10' V.E. = 5x

WARNING 0 1/2 1 IF THIS BAR DOES NOT MEASURE 1" THEN DRAWING IS NOT TO SCALE.

DESIGNED
DRAWN J. DRISCOLL
CHECKED K. LEWIS

SUBMITTED
PROJECT ENGINEER REG. NO. DATE
MONTGOMERY WATSON REG. NO. DATE

MONTGOMERY WATSON
Des Moines, Iowa

SAUER SUNDSTRAND COMPANY AMES, IOWA
GROUNDWATER INTERCEPTION SYSTEM DESIGN
AS-BUILT DRAWINGS

INTERCEPTION TRENCH PLAN AND PROFILE

SHEET C-02

JOB No. 1217070.05090440 FILE No. Date: 5/97

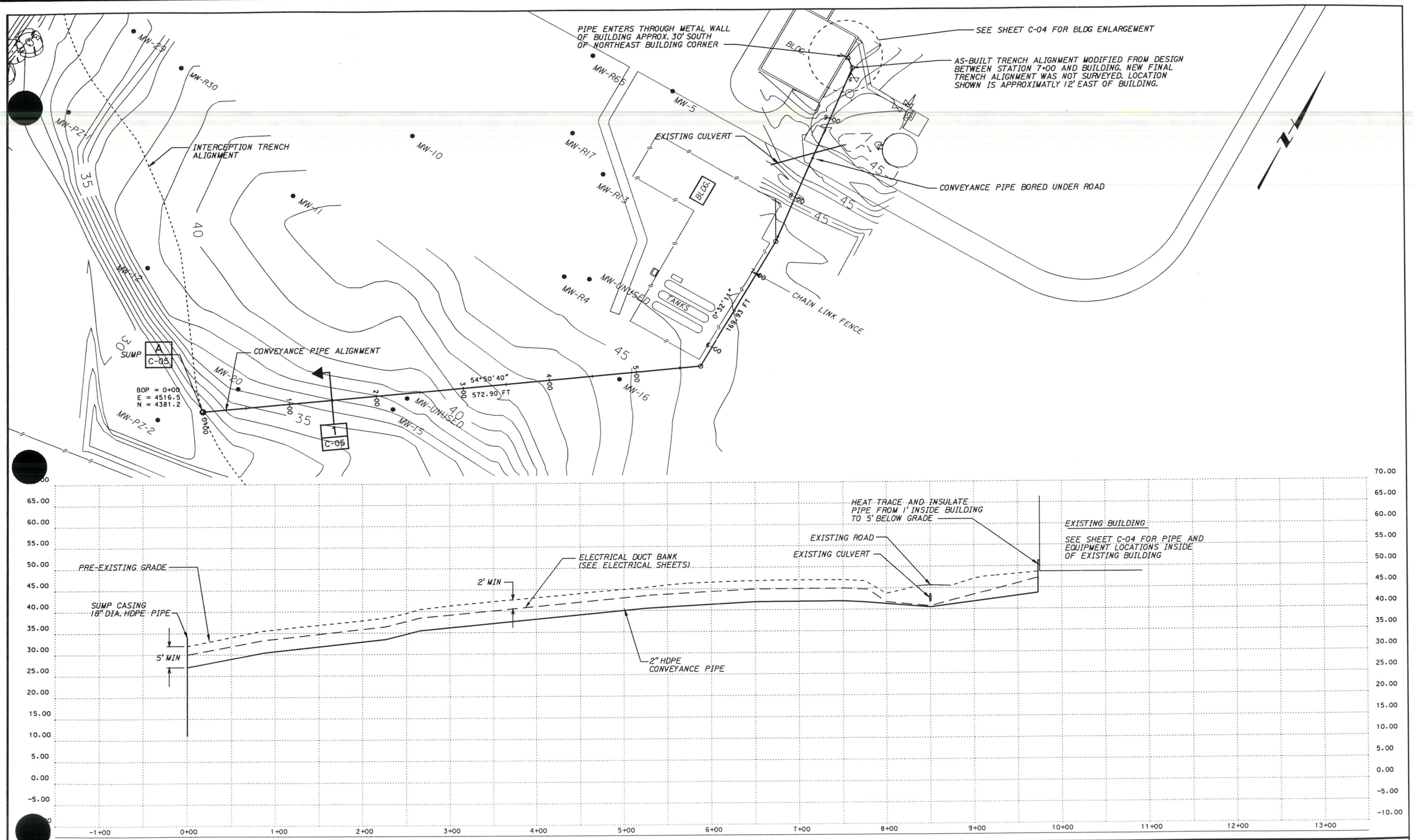

REV	DATE	BY	DESCRIPTION

SCALE:
HORIZ: 1" = 50'
VERT: 1" = 10'
V.E. = 5x

WARNING
0 ½ 1
IF THIS BAR DOES NOT MEASURE 1" THEN DRAWING IS NOT TO SCALE.

DESIGNED
DRAWN J. DRISCOLL
CHECKED K. LEWIS

SUBMITTED
PROJECT ENGINEER REG. NO. DATE
MONTGOMERY WATSON REG. NO. DATE

MONTGOMERY WATSON
Des Moines, Iowa

SAUER SUNDSTRAND COMPANY AMES, IOWA
GROUNDWATER INTERCEPTION SYSTEM DESIGN
AS-BUILT DRAWINGS

CONVEYANCE PIPING PLAN AND PROFILE

SHEET
C-03

JOB No. 1217070.05090440 FILE No. _____ Date 5/97

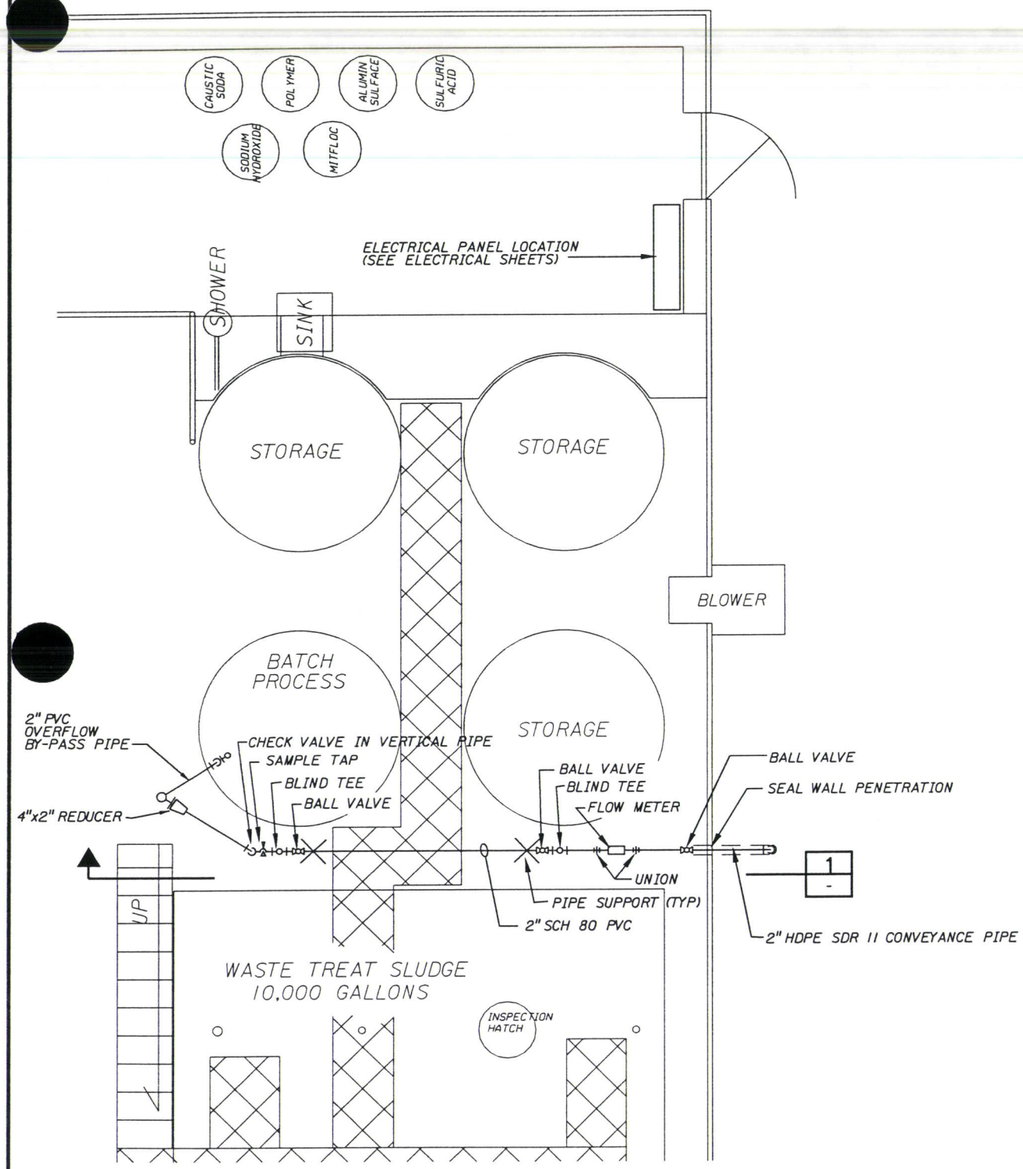

TREATMENT BUILDING - PLAN VIEW

3/8" = 1'-0"

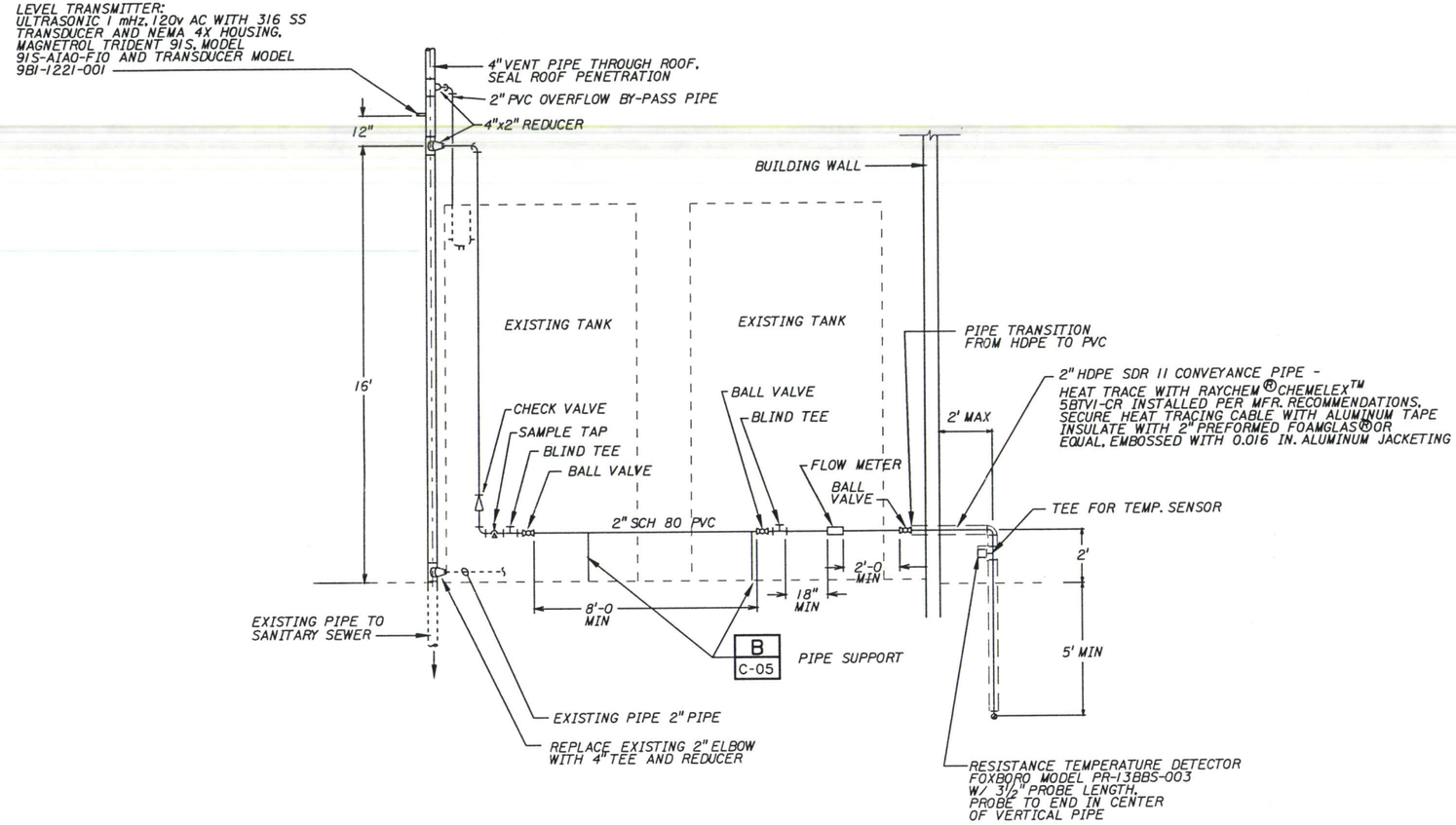

SECTION 1

3/8" = 1'-0" -

NOTES:

1. CONVEYANCE PIPE TO BE HDPE SDR-11 OUTSIDE BUILDING AND SCH 80 PVC INSIDE BUILDING (SIZE AS SHOWN)

REV	DATE	BY	DESCRIPTION

SCALE: AS SHOWN

WARNING: 0 1/2 1 — IF THIS BAR DOES NOT MEASURE 1" THEN DRAWING IS NOT TO SCALE.

DESIGNED
DRAWN J. DRISCOLL
CHECKED K. LEWIS

SUBMITTED
PROJECT ENGINEER REG. NO. DATE
MONTGOMERY WATSON REG. NO. DATE

MONTGOMERY WATSON
Des Moines, Iowa

SAUER SUNDSTRAND COMPANY AMES, IOWA
GROUNDWATER INTERCEPTION SYSTEM DESIGN AS-BUILT DRAWINGS
TREATMENT BUILDING MODIFICATIONS

SHEET C-04

JOB No. 1217070.05090440 FILE No. _____ Date: 5/97

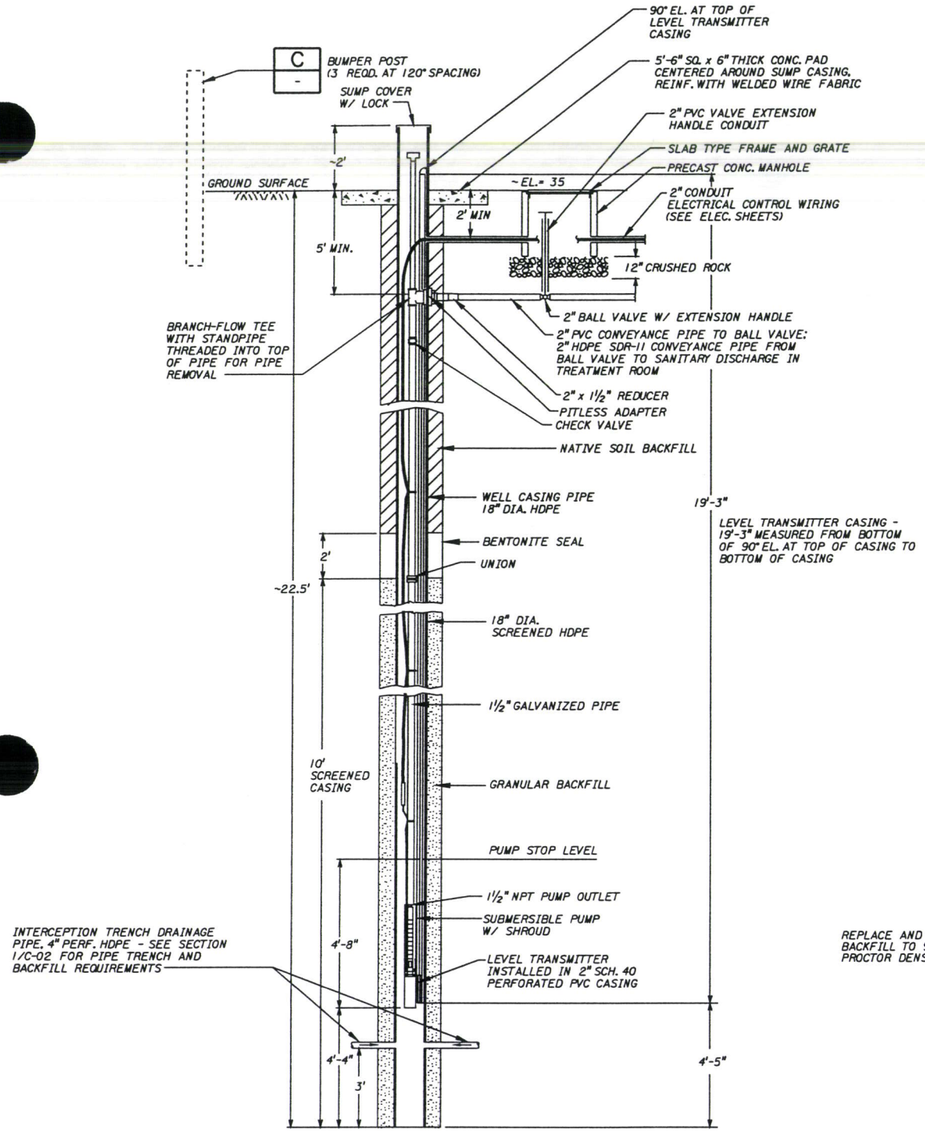

EXTRACTION SUMP — A / C-03
NOT TO SCALE

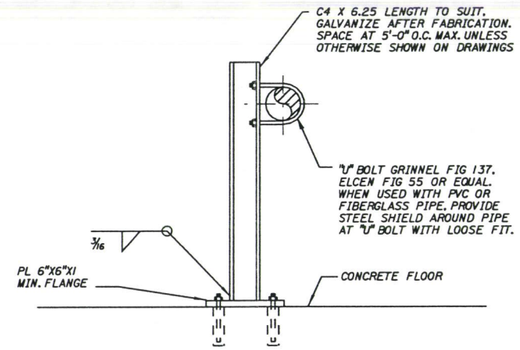

PIPE SUPPORT — B / C-04
NOT TO SCALE

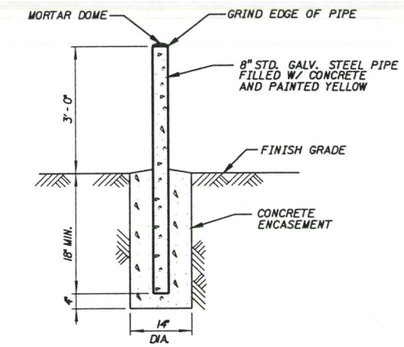

BUMPER POST DETAIL — C / -
NOT TO SCALE

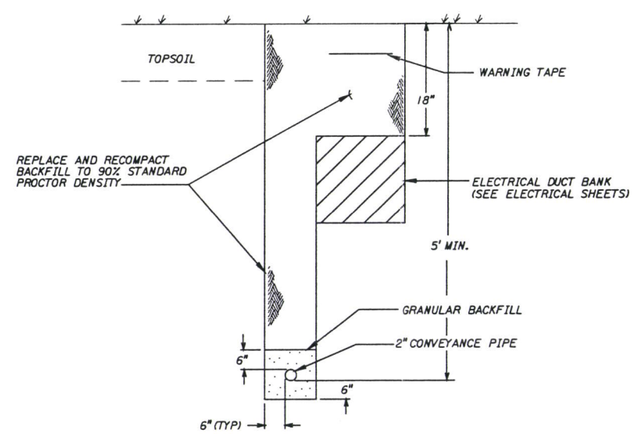

TRANSPORT PIPE TRENCH SECTION — 1 / C-03
NOT TO SCALE

REV	DATE	BY	DESCRIPTION

SCALE: AS SHOWN

WARNING: 0 ½ 1 — IF THIS BAR DOES NOT MEASURE 1" THEN DRAWING IS NOT TO SCALE.

DESIGNED
DRAWN J. DRISCOLL
CHECKED K. LEWIS

SUBMITTED
PROJECT ENGINEER — REG. NO. — DATE
MONTGOMERY WATSON — REG. NO. — DATE

MONTGOMERY WATSON
Des Moines, Iowa

SAUER SUNDSTRAND COMPANY AMES, IOWA
GROUNDWATER INTERCEPTION SYSTEM DESIGN
AS-BUILT DRAWINGS

DETAILS AND SECTIONS

SHEET C-05

JOB No. 1217070.05090440 FILE No. ____ Date: 5/97

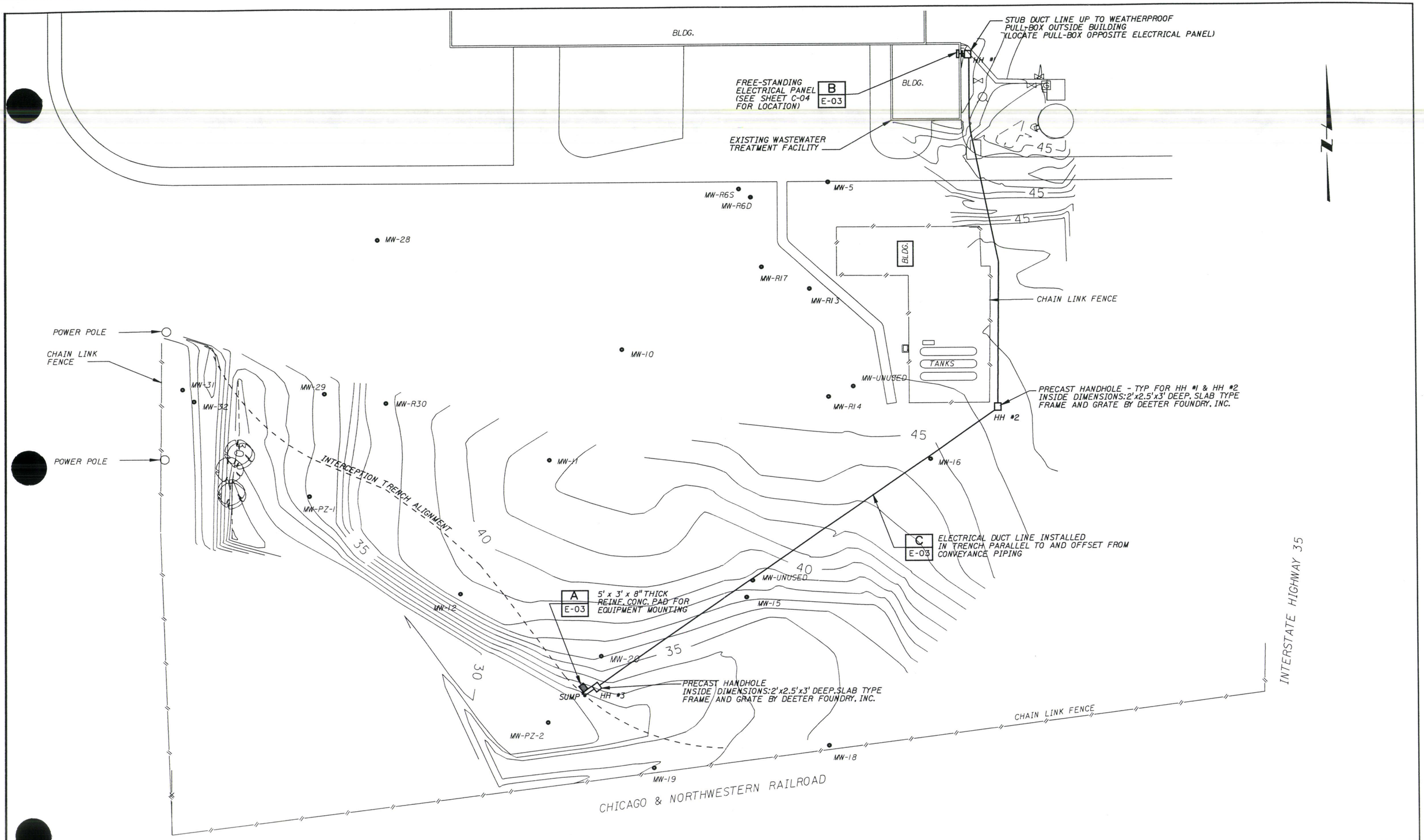

REV	DATE	BY	DESCRIPTION

SCALE: 1" = 50'

WARNING: 0 ½ 1 — IF THIS BAR DOES NOT MEASURE 1" THEN DRAWING IS NOT TO SCALE.

DESIGNED
DRAWN J. DRISCOLL
CHECKED K. LEWIS

SUBMITTED
PROJECT ENGINEER REG. NO. DATE
MONTGOMERY WATSON REG. NO. DATE

MONTGOMERY WATSON
Des Moines, Iowa

SAUER SUNDSTRAND COMPANY AMES, IOWA
GROUNDWATER INTERCEPTION SYSTEM DESIGN
AS-BUILT DRAWINGS

ELECTRICAL - PLAN VIEW

SHEET E-01

JOB No. 1217070.05090440 FILE No. Date: 5/97

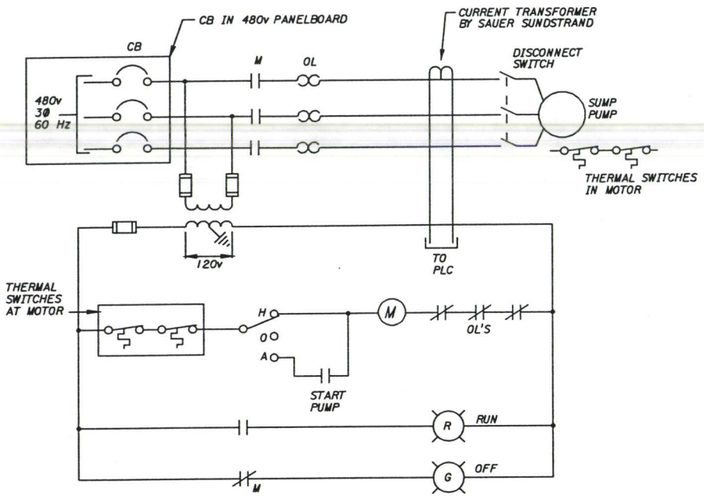

ELEMENTARY SCHEMATIC - SUMP PUMP

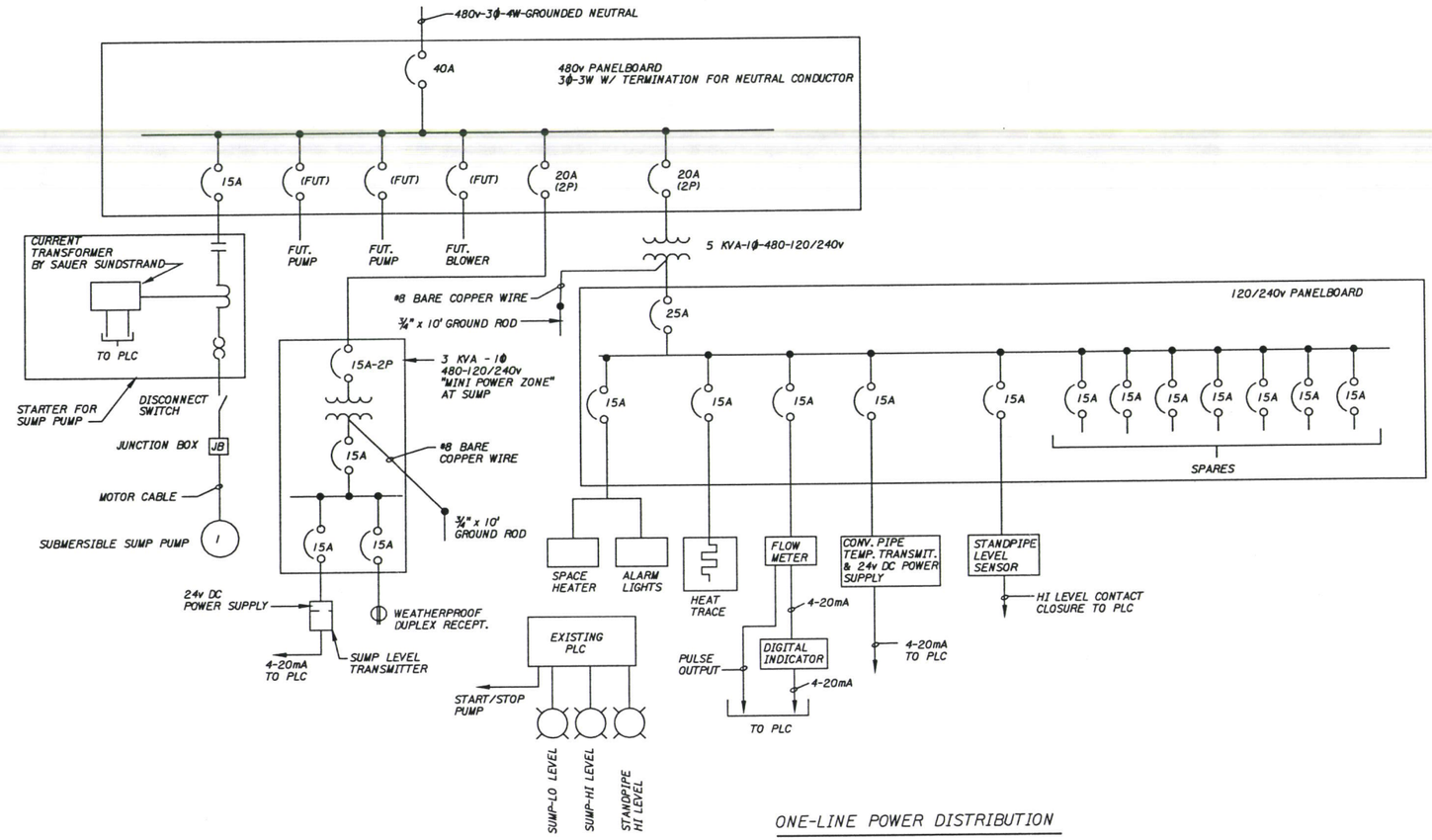

ONE-LINE POWER DISTRIBUTION

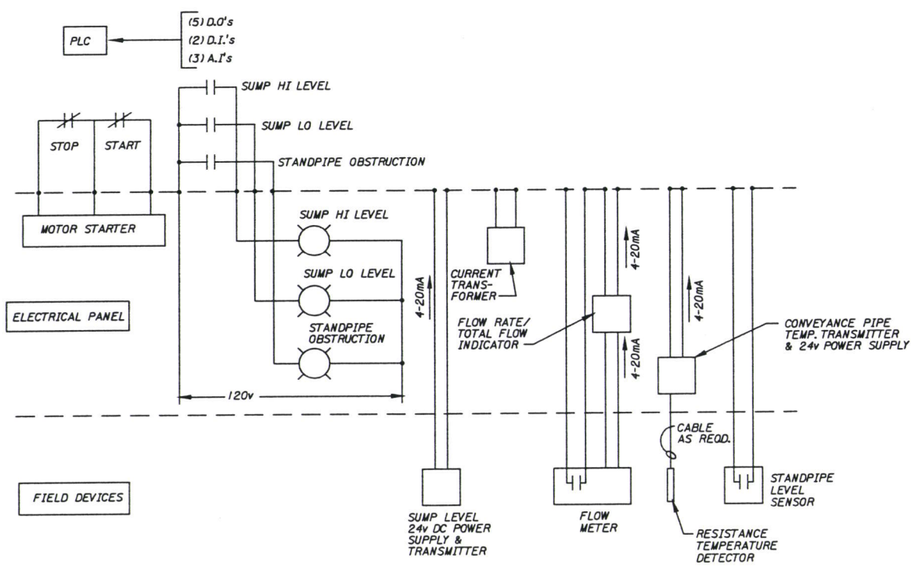

PLC INTERFACE DIAGRAM

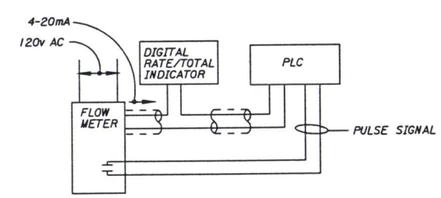

FLOW METER SCHEMATIC

REV	DATE	BY	DESCRIPTION

SCALE: NONE

WARNING: 0 1/2 1 — IF THIS BAR DOES NOT MEASURE 1" THEN DRAWING IS NOT TO SCALE.

DESIGNED
DRAWN J. DRISCOLL
CHECKED K. LEWIS

SUBMITTED
PROJECT ENGINEER — REG. NO. — DATE
MONTGOMERY WATSON — REG. NO. — DATE

MONTGOMERY WATSON
Des Moines, Iowa

SAUER SUNDSTRAND COMPANY AMES, IOWA
GROUNDWATER INTERCEPTION SYSTEM DESIGN
AS-BUILT DRAWINGS

DIAGRAMS AND SCHEMATICS

SHEET E-02

JOB No. 1217070.05090440 FILE No. Date: 5/97

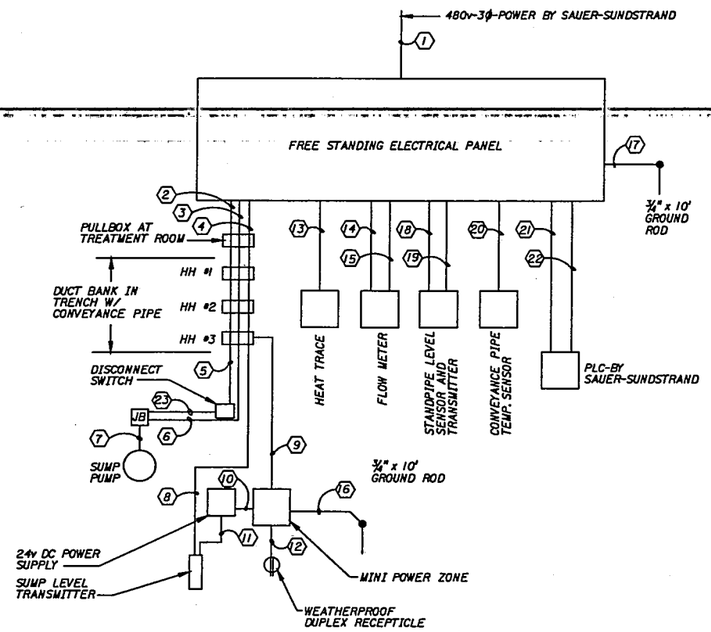

CONDUIT DEVELOPMENT

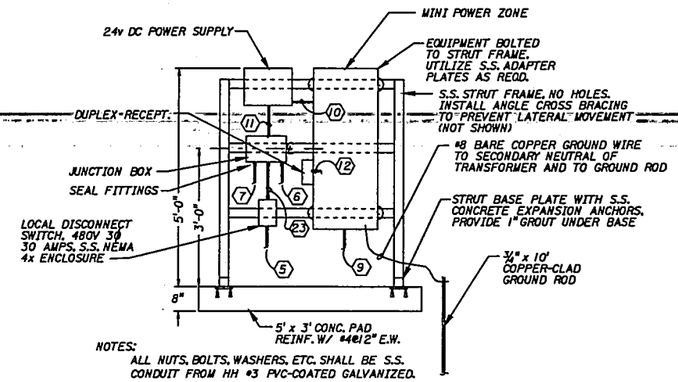

EQUIPMENT MOUNTING DETAIL AT SUMP — A / E-01

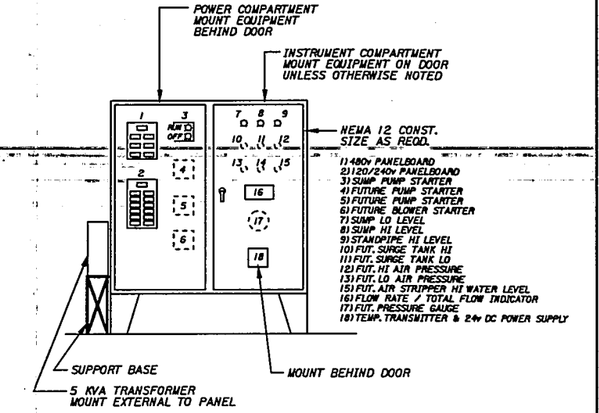

ELECTRICAL PANEL - LAYOUT — B / E-01

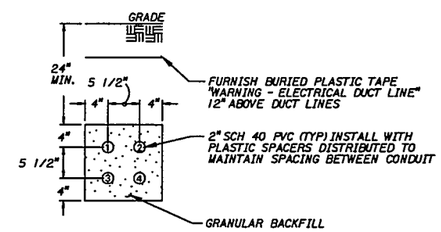

DUCT BANK DETAIL — C / E-01

DUCT NO.	FILL	REMARKS
1	3#8, 2#10, 2#12 GND	480V POWER
2	2#12	MOTOR THERMAL SW.
3	2.C #16 SH	4-20mA SUMP LEVEL
4	-	SPARE

CONDUIT NO.	CONDUIT SIZE	FILL	FROM	TO	REMARKS
1	-	-	SAUER-SUNDSTRAND	480v PANELBOARD	INCOMING 480v POWER
2	1"	3#8, 2#10, 2#12 GND	ELECTRICAL PANEL	PULL-BOX	480v POWER
3	¾"	2#12	ELECTRICAL PANEL	PULL-BOX	MOTOR THERMAL SWITCHES
4	¾"	2/c #16 SH	ELECTRICAL PANEL	PULL-BOX	4-20mA SUMP LEVEL
5	¾"	3#8, 1#12 GND	HH #3	DISCONNECT SWITCH	480v POWER (3 PHASE)
6	¾"	2#12	HH #3	JB FOR MOTOR CABLE	MOTOR THERMAL SWITCHES
7	-	MOTOR CABLE	SUMP PUMP	JB FOR MOTOR CABLE	BY MOTOR SUPPLIER
8	¾"	2/c #16 SH	SUMP LEVEL TRANSMITTER	HH #3	4-20mA SUMP LEVEL
9	¾"	2#10, 1#12 GND	HH #3	MINI POWER ZONE	480v POWER (1 PHASE)
10	¾"	2#12, 1#12 GND	MINI POWER ZONE	24v DC POWER SUPPLY	120v POWER
11	-	TRANS. CABLE	LEVEL TRANSMITTER	24v DC POWER SUPPLY	BY TRANSMITTER SUPPLIER
12	¾"	2#12, 1#12 GND	MINI POWER ZONE	DUPLEX RECEPTICLE	120v POWER
13	¾"	2#12, 1#12 GND	ELECTRICAL PANEL	HEAT TRACE	120v POWER
14	¾"	4#12, 1#12 GND	ELECTRICAL PANEL	FLOW METER	120v POWER/PULSE SIGNAL
15	¾"	2/c #16 SH	ELECTRICAL PANEL	FLOW METER	4-20mA FLOW SIGNAL
16	-	1#8 BARE COPPER	MINI POWER ZONE-SEC. NEUT.	GROUND ROD	GROUND
17	-	1#8 BARE COPPER	5 KVA TRANSFORMER-SEC. NEUT.	GROUND ROD	GROUND
18	¾"	2#12, 1#12 GND	120/240v PANELBOARD	STANDPIPE LEVEL SENSOR	120v POWER
19	¾"	2#12	120/240v PANELBOARD	STANDPIPE LEVEL SENSOR	HI LEVEL CONTACT CLOSURE
20	¾"	AS REQD.	CONV. PIPE TEMP. SENSOR	TEMP. TRANSMITTER	AS REQD. BY MFG.
21	¾"	11#14, 1#12 GND	120/240v PANELBOARD	PLC	PLC (5) DO's - (2) DI
22	1¼"	(3) 2/c #16 SH	120/240v PANELBOARD	PLC	PLC AI's (4-20mA)
23	¾"	3#8, 1#12 GND	DISCONNECT SWITCH	JB FOR MOTOR CABLE	480v POWER (3 PHASE)

CONDUIT SCHEDULE

CIRCUIT	DESCRIPTION	DIRECTORY	DIRECTORY	DESCRIPTION	CIRCUIT
-	2 POLE-25A	MAIN	-	-	-
1	1 POLE-15A	SP. HTR./AL. LGTS.	HEAT TRACE	1 POLE-15A	2
3	1 POLE-15A	FLOW METER	TEMP. SENSOR	1 POLE-15A	4
5	1 POLE-15A	LEVEL SENSOR	SPARE	1 POLE-15A	6
7	1 POLE-15A	SPARE	SPARE	1 POLE-15A	8
9	1 POLE-15A	SPARE	SPARE	1 POLE-15A	10
11	1 POLE-15A	SPARE	SPARE	1 POLE-15A	12

SCHEDULE: 120/240v, 1 PHASE PANELBOARD - ELECTRIC PANEL

NOTE: ALL FEEDER CIRCUIT BREAKERS SHALL BE GFI TYPE.

CIRCUIT	DESCRIPTION	DIRECTORY	DIRECTORY	DESCRIPTION	CIRCUIT
-	2 POLE-15A	MAIN	-	-	-
1	1 POLE 15A	LEVEL SENSOR	RECEPTICLE	1 POLE-15A	2
3	BLANK	-	-	BLANK	4
5	BLANK	-	-	BLANK	6
7	BLANK	-	-	BLANK	8

SCHEDULE: 120/240v, 1 PHASE PANELBOARD - SUMPS

NOTE: ALL FEEDER CIRCUIT BREAKERS SHALL BE GFI TYPE.

CIRCUIT	DESCRIPTION	DIRECTORY	DIRECTORY	DESCRIPTION	CIRCUIT
-	3 POLE-40A	MAIN	-	-	-
1 3 5	3 POLE-15A	SUMP PUMP	FUTURE	PUMP	2 4 6
7 9 11	FUTURE	PUMP	FUTURE	BLOWER	8 10 12
13 15	2 POLE-20A	5 KVA TRANSFORMER	SUMP MINI POWER ZONE	2 POLE-15A	14 16
17	BLANK	-	-	BLANK	18

SCHEDULE: 480v, 3PHASE - 3WIRE PANELBOARD

REV	DATE	BY	DESCRIPTION

SCALE: NONE

WARNING 0 ½ 1 — IF THIS BAR DOES NOT MEASURE 1" THEN DRAWING IS NOT TO SCALE.

DESIGNED
DRAWN J. DRISCOLL
CHECKED K. LEWIS

SUBMITTED
PROJECT ENGINEER — REG. NO. — DATE
MONTGOMERY WATSON — REG. NO. — DATE

MONTGOMERY WATSON
Des Moines, Iowa

SAUER SUNDSTRAND COMPANY AMES, IOWA
GROUNDWATER INTERCEPTION SYSTEM DESIGN
AS-BUILT DRAWINGS
CONDUIT DEVELOPMENT, SCHEDULES & DETAILS

SHEET E-03

JOB No. 1217070.05090440 FILE No. ____ Date: 5/97

Photograph 1 - Trenching machine

Photograph 2 - Operation of trenching machine

SAUER-SUNDSTRAND COMPANY
AMES, IOWA

MONTGOMERY WATSON

PHOTO LOG

Photograph 3 - Trench box, sump installation

Photograph 4 - Sump installation

SAUER-SUNDSTRAND COMPANY
AMES, IOWA

MONTGOMERY WATSON

PHOTO LOG

Photograph 5 - Drainage pipe connection to sump

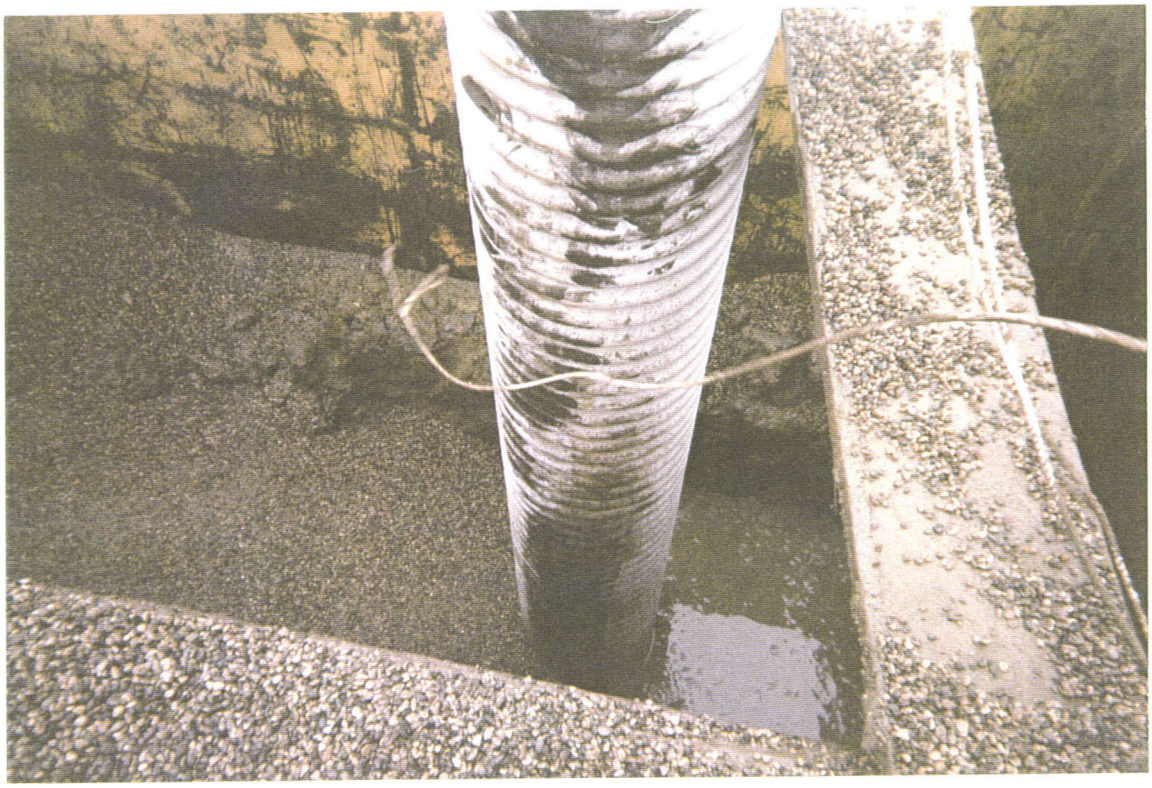

Photograph 6 - Backfill around sump

SAUER-SUNDSTRAND COMPANY
AMES, IOWA

MONTGOMERY WATSON

PHOTO LOG

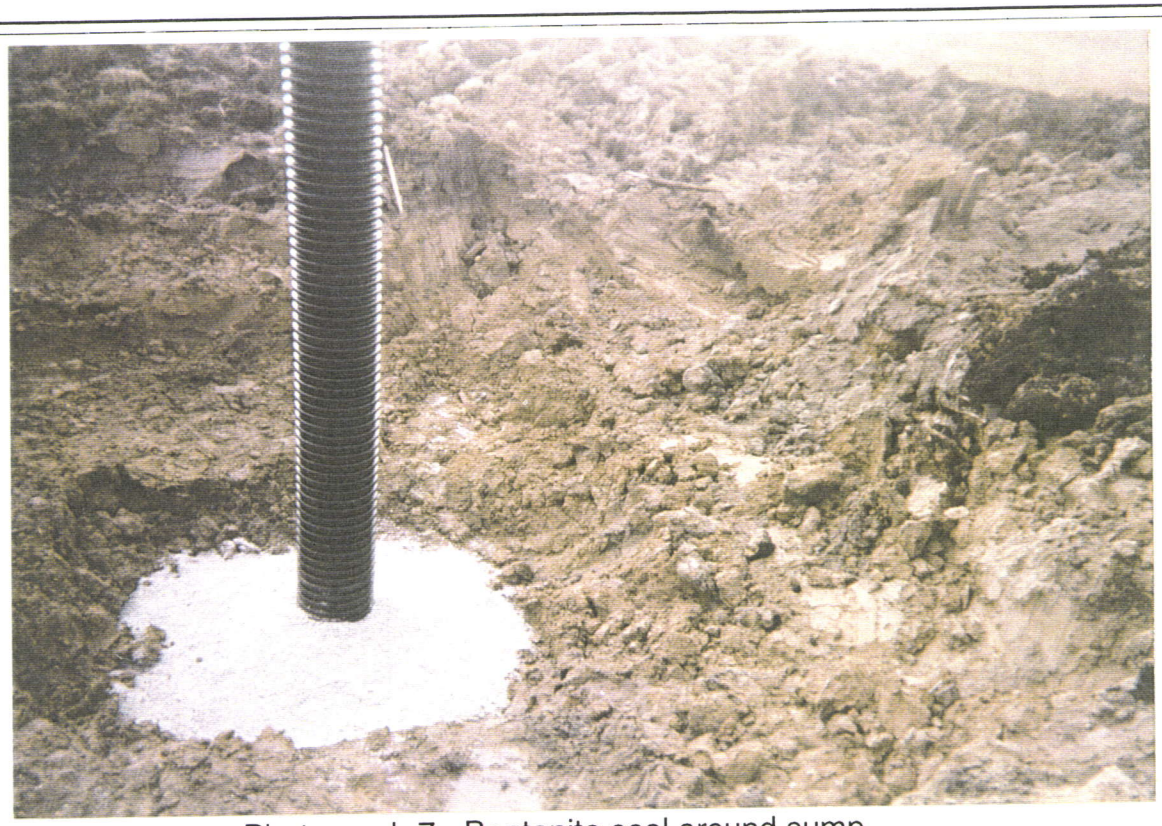

Photograph 7 - Bentonite seal around sump

Photograph 8 - Backfilled sump casing

SAUER-SUNDSTRAND COMPANY
AMES, IOWA

MONTGOMERY WATSON

PHOTO LOG

Photograph 9 - Drainage pipe termination, western leg of trench

Photograph 10 - Drainage pipe termination, western leg of trench

SAUER-SUNDSTRAND COMPANY
AMES, IOWA

MONTGOMERY WATSON

PHOTO LOG

Photograph 11 - Cleanout, western leg of trench

Photograph 12 - Conveyance pipe

SAUER-SUNDSTRAND COMPANY
AMES, IOWA

MONTGOMERY WATSON

PHOTO LOG

Photograph 13 - Trenching for conveyance pipe

Photograph 14 - Conveyance pipe bored under road

SAUER-SUNDSTRAND COMPANY
AMES, IOWA

MONTGOMERY WATSON

PHOTO LOG

Photograph 15 - Conveyance pipe outside treatment room

Photograph 16 - Heat tracing conveyance pipe

Photograph 17 - Insulating conveyance pipe

Photograph 18 - Completed conveyance pipe at treatment building

SAUER-SUNDSTRAND COMPANY
AMES, IOWA

MONTGOMERY WATSON

PHOTO LOG

Photograph 19 - Electrical conduit

Photograph 20 - Boring electrical conduit under road

Photograph 21 - Electrical warning tape in trench

Photograph 22 - Conveyance pipe connection to sump

Photograph 23 - Electrical conduit connection to sump

Photograph 24 - Electrical components at sump

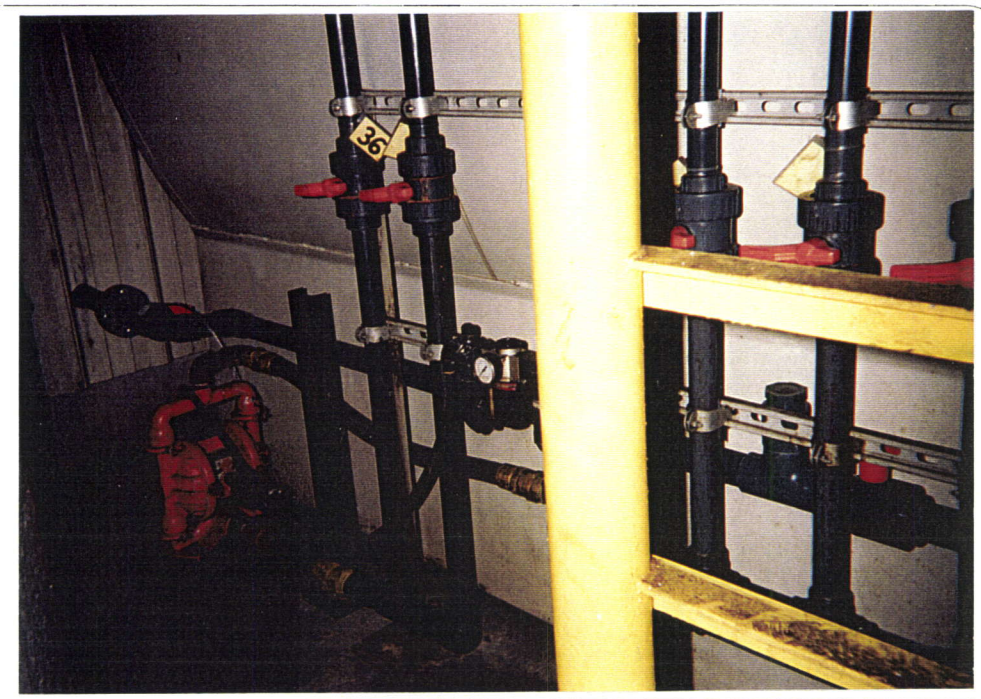

Photograph 25 - Conveyance pipe in treatment room

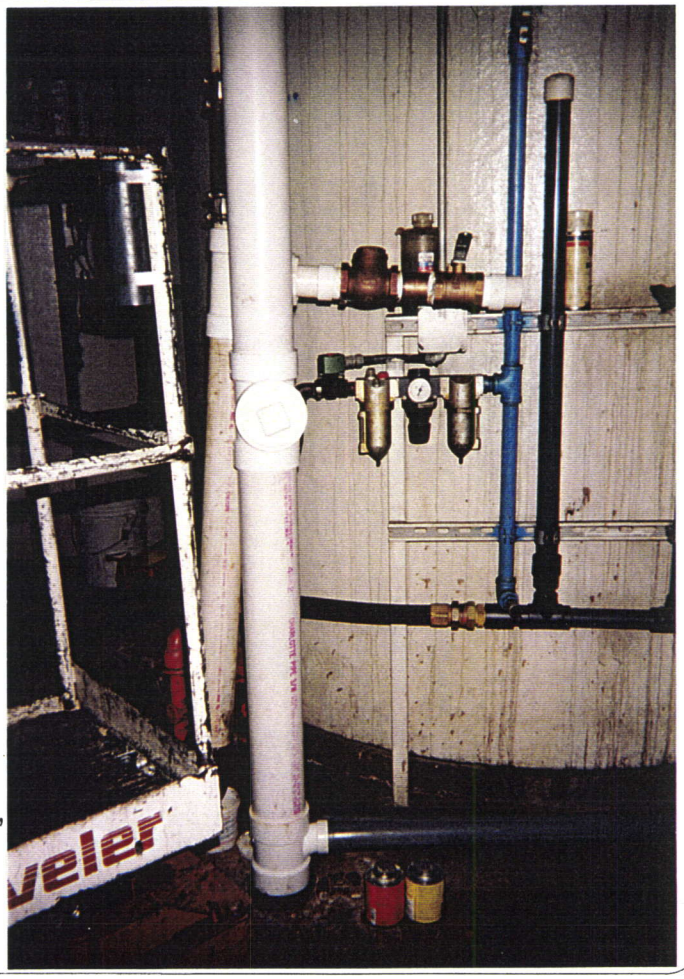

Photograph 26 - Modified connection to standpipe, Sauer-Sundstrand treatment system discharge

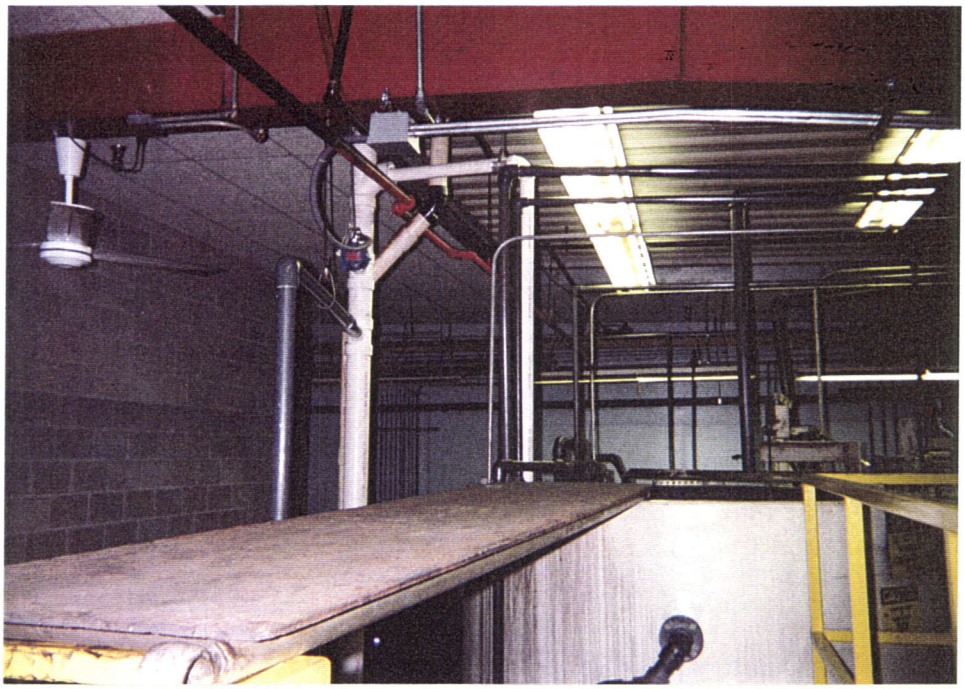

Photograph 27 - Standpipe with bypass into adjacent tank

Photograph 28 - Bypass liquid trap in adjacent tank

OPERATION AND MAINTENANCE MANUAL

FOR

SAUER-SUNDSTRAND FACILITY
AMES, IOWA

Prepared for

SAUER-SUNDSTRAND COMPANY
AMES, IOWA

Project No. 1217070.05090440
May 1997

Prepared by

Montgomery Watson
11107 Aurora Avenue
Des Moines, Iowa 50322
515-253-0830

LICENSED PROFESSIONAL ENGINEER
JEFFREY COON 11975
IOWA

I hereby certify that this engineering document was prepared by me or under my direct personal supervision and that I am a duly licensed Professional Engineer under the laws of the State of Iowa.

Jeff L. Coon — 5/14/97

Jeffrey L. Coon, P.E. — **Date**

License Number: 11975

My license renewal date is: December 31, 1998

Pages or sheets covered by this seal: Entire Document

TABLE OF CONTENTS

	PAGE
SECTION 1 - INTRODUCTION	1
Objective	1
Site Description	1
Site History	1
Facility Operations	1
RCRA History	2
SECTION 2 - DESCRIPTION OF GROUNDWATER REMEDIAL SYSTEM	4
Overview	4
Interception Trench	4
Interception Trench	4
Collection Sump	5
Conveyance System	5
Conveyance Piping	5
Ball Valves	6
Check Valves	6
Pump	6
Pressure Transducer	6
Heat Tracing	6
Temperature Detector	7
Flow Meter	7
Standpipe Level Sensor	7
Electrical System	7
Temperature Transmitter	8
Digital Indicator	8
Control System	8
Sump Water Level	8
Pump Operation	9
Standpipe High Water Level	9
Water Flow	9
Water and Air Temperatures	9
Manual System Operation	9
SECTION 3 - SYSTEM OPERATION AND ROUTINE MAINTENANCE	10
Interception Trench	10
Conveyance System	10
Conveyance Pump	10
Pressure Transducer	12
Temperature Detectors	13

TABLE OF CONTENTS

PAGE

SECTION 3 - SYSTEM OPERATION AND ROUTINE MAINTENANCE (CONTINUED)

Flow Meter 13
- Standpipe Level Sensor 14
- Standpipe Bypass Liquid Trap 14

Electrical System 14
- Electrical Power 14
- Temperature Transmitter 14
- Digital Indicator 14

Control System 15
- Programmable Logic Controller 15
- Electrical Panel Controls 15

SECTION 4 - SYSTEM AND SITE MONITORING 17

System Sampling 17
Groundwater Sampling 17

APPENDIX A - AS-BUILT DRAWINGS

APPENDIX B - MANUFACTURER'S INSTALLATION, OPERATION AND MAINTENANCE MANUALS

APPENDIX B-1 - MANUFACTURER'S O&M MANUAL, PUMP

APPENDIX B-2 - MANUFACTURER'S O&M MANUAL, PRESSURE TRANSDUCER

APPENDIX B-3 - MANUFACTURER'S O&M MANUAL, HEAT TRACING

APPENDIX B-4 - MANUFACTURER'S O&M MANUAL, WATER TEMPERATURE DETECTOR

APPENDIX B-5 - MANUFACTURER'S O&M MANUAL, FLOW METER

APPENDIX B-6 - MANUFACTURER'S O&M MANUAL, STANDPIPE LEVEL SENSOR

APPENDIX B-7 - MANUFACTURER'S O&M MANUAL, TEMPERATURE TRANSMITTER

APPENDIX B-8 - MANUFACTURER'S O&M MANUAL, DIGITAL INDICATOR

APPENDIX C TRENCH CLEANOUT COMPRESSION CAP/SUMP COVER KEYS

APPENDIX D - OPERATION AND MAINTENANCE LOG

APPENDIX E - PACKING SLIP, REPLACEMENT O-RINGS

SECTION 1

SECTION 1

INTRODUCTION

OBJECTIVE

This Operation and Maintenance (O&M) Manual has been prepared to provide a comprehensive guide to operation and maintenance of the groundwater remedial system (system) installed at the Sauer-Sundstrand Company (Sauer-Sundstrand) facility in Ames, Iowa (site). The system was installed to meet the following objectives:

- Prevent off-site migration of groundwater containing concentrations of volatile organic compound s (VOCs) above Maximum Contaminant Levels (MCLs).
- If an MCL has not been established for a VOC, prevent off-site migration of groundwater containing concentrations of VOCs that represent an unacceptable human health or environmental risk.
- Reduce the concentration of VOCs above MCLs in the on-site groundwater.

This O&M Manual addresses specific, manufacturer-recommended maintenance procedures and frequencies, as well as the site groundwater and remedial system monitoring schedule and procedures. As-built drawings for the system are included in Appendix A. The manufacturer-supplied installation, operation and maintenance manuals (Manufacturer's O&M Manuals) are included in Appendix B.

SITE DESCRIPTION

The site is located in Ames, Iowa, within the Northeast 1/4 of the Northwest 1/4 of Section 6, Township 83 North, Range 23 West, Story County, Iowa. Land use near the site consists of general industrial use to the west and south. On the northern side of 13th Street, the land is zoned for general commercial use. Land further north is zoned for agricultural use. The land east of Interstate 35 is primarily used for agricultural purposes, and most of this eastern area is located outside the corporate limits of the city of Ames. Residential land use located within one mile of the site is limited.

SITE HISTORY

Facility Operations

The Sauer-Sundstrand facility operates as a manufacturer of hydrostatic transmission power systems for use primarily in farm machinery and construction equipment. The facility began operations in 1972 under the ownership of Sundstrand Corporation. On January 1, 1987, Sundstrand entered into a joint venture with Sauer Getriebe AG (Sauer) and began operation as the Sundstrand-Sauer Company. When Sundstrand sold its interest in the joint venture to Sauer on March 31, 1989, ownership of the real estate was transferred to Susa Holding of Story

County. Operations of the Sundstrand-Sauer Company continued until December 31, 1989 when an independent entity, Sauer-Sundstrand Company, was established. Sundstrand-Sauer has operated the facility since January 1, 1990.

RCRA History

On March 29, 1991, an administrative Order on Consent (Consent Order) Docket Number VII-91-H-0009 was entered into between the United States Environmental Protection Agency (USEPA), Sundstrand Corporation, Sauer-Sundstrand Company and Susa Holding Inc. (Respondents). A RCRA facility investigation (RFI) was conducted pursuant to Section VI.B.6 of the Consent Order in accordance with a set of project plans prepared by Harding Lawson Associates (HLA). The objective of the RFI was to assess impacts to soil and groundwater from the release, or potential release, of hazardous constituents from Solid Waste Management Units at the facility.

Investigation activities were implemented at the site from September through October 1994 by HLA. Following the investigation, an RFI Report was prepared by HLA and submitted to the USEPA on June 9, 1995 in accordance with the Consent Order. The RFI Report defined the source, degree, and extent of constituents in the groundwater; and identified actual or potential receptors in the source area. On January 29, 1996, USEPA comments on the June 1995 RFI Report were received by HLA. A letter of Response to Technical Comments was submitted to the USEPA on March 18, 1996 to address these comments.

In March 1996, Montgomery Watson was retained to initiate the corrective measures study (CMS) phase of RCRA activities for the site. CMS activities at the site were conducted by Sauer-Sundstrand, voluntarily, in an effort to proactively address identified constituents in the groundwater at the site. A CMS Report was prepared and submitted to the USEPA on or about April 30, 1996. The CMS Report served to identify and evaluate potential remedial alternatives for the releases that had been identified at the site. Comments on the April 1996 CMS report were received by Montgomery Watson during a June 13, 1996, telephone conversation with the USEPA. A letter of response, which served as an addendum to the CMS report, was submitted to the USEPA on July 5, 1996 to address these comments.

A Construction Work Plan(CWP) was prepared and submitted to the USEPA in September 1996. The CWP served to document the overall management strategy, construction quality assurance procedures and schedule for implementing the approved corrective measure (groundwater interception trench) at the site. Comments on the CWP were received by Montgomery Watson during an October 15, 1996 telephone conversation with the USEPA. A letter of response and appropriate revised pages for inclusion into the September 1996 CWP were submitted to the USEPA on October 18, 1996 to address these comments.

Construction activities at the site commenced on October 28, 1996. Montgomery Watson Constructors, Inc. (MWCI) served as the general contractor for installation of the system. The interception trench and sump were installed by Industrial Builders, Inc. of Fargo, North Dakota; the conveyance system, including conveyance piping and mechanical equipment, was installed by C&K Heating & Air Conditioning & Plumbing of Ames, Iowa; and the electrical components

were installed by ABC Electric, Inc. of Des Moines, Iowa. Sauer-Sundstrand retained Mechanical Comfort, Inc. of Ames, Iowa under separate contract to establish an interface between the system and Sauer-Sundstrand's Programmable Logic Controller (PLC) software. Operation of the system was initiated on February 6, 1997. The system was operated intermittently at first as the interface between the system and PLC was finalized. Continuous operation of the system began on February 13, 1997.

SECTION 2

DESCRIPTION OF GROUNDWATER REMEDIAL SYSTEM

OVERVIEW

The system consists of a groundwater interception trench, conveyance system and associated electrical and control systems installed to collect impacted groundwater for discharge to the City of Ames Water Pollution Control Department (WPCD). As-built drawings of the system are included in Appendix A.

INTERCEPTION TRENCH

The interception trench consists of the following components, which are described in more detail below:

- Interception Trench
- Collection Sump

Interception Trench

A groundwater interception trench was installed along the western, southern, and a small portion of the eastern boundaries of the defined contaminant plume using a specialized trenching machine that excavated the trench, inserted a drainage pipe, and backfilled the trench with granular backfill material, all in one continuous operation. During trench installation, the curvature of the western end of the trench was reduced to accommodate the limitations of the trenching machine in negotiating curves. The western end of the trench was terminated approximately 15 feet south of the endpoint shown on the original design drawings due to the sharp angle and the presence of subsurface obstructions. This minor modification has not affected the trench design criteria.

The trench is installed to an approximate depth of 25 feet and consists of two legs with a total length of approximately 750 linear feet. A drainage pipe consisting of Advanced Drainage Systems, Inc. 4-inch perforated, corrugated high density polyethylene (HDPE) pipe fitted with Carriff Corporation's highway grade drain sleeve is installed at the base of the trench, approximately 6 inches above the trench bottom. Perforations in the drainage pipe allow infiltration of approximately 30 gallons per minute (gpm) along the length of the pipe. A vertical collection sump, installed near MW-20, is physically connected to each leg of the trench drainage pipe and serves as the main point of collection/removal. Each leg of the trench is constructed with a 0.5 percent slope towards the sump to facilitate water flow and velocity. Cleanouts encased in 6-inch Schedule 80 polyvinyl chloride (PVC) stickups with locked compression caps are installed at the end of each trench leg. Keys to the compression caps are included in Appendix C. (Note: Keys are included only in one copy of the document submitted to Sauer-Sundstrand and one copy retained by Montgomery Watson.)

SECTION 2

The interception trench is backfilled with granular backfill material to within 5 feet of the ground surface. A coarse backfill material as identified in the specifications was not locally available; it was determined that a finer grade substitute material was acceptable for use as trench backfill. Periodic cleaning may be required to remove accumulated sediment from the collection pipe and sump.

Following installation, the interception trench drainage pipe was successfully pigged, thereby verifying that no obstructions were present in the below grade drainage pipe system. Backfilling to grade level was completed with native soil to minimize seepage of surface water into the trench.

Collection Sump

The collection sump consists of a corrugated 18-inch HDPE pipe installed vertically to an approximate depth of 22 feet. The bottom 10 feet of the pipe are perforated and encased in Carriff Corporation's highway grade drain sleeve to minimize the potential of backfill material infiltration. The space directly around the sump is backfilled with pea gravel to the top of the perforated pipe section, followed by a 2-foot bentonite seal and native soil to grade level. The collection sump is physically connected to the interception trench drainage pipe and is completed with a 2 foot above-grade stick-up sealed with a lockable cover. Keys to the cover are included in Appendix C. (Note: Keys are included only in one copy of the document submitted to Sauer-Sundstrand and one copy retained by Montgomery Watson.)

CONVEYANCE SYSTEM

The conveyance system consists of the following components, which are described in more detail below:

- Conveyance Piping
- Ball Valves
- Check Valves
- Pump
- Pressure Transducer
- Heat Tracing
- Temperature Sensor
- Flow Meter
- Standpipe Level Sensor

Conveyance Piping

Single wall 2-inch HDPE conveyance piping is installed from the buried ball valve to the treatment room at an approximate burial depth of 5 feet below grade; 2-inch PVC pipe is installed from the buried ball valve to the sump. The conveyance piping is connected to the sump using a standard pitless adapter installed into the sidewall of the sump. The piping follows the route identified in the as-built drawings. The conveyance piping transects a roadway and, once alongside the treatment building, penetrates the ground surface and enters the building through a wall penetration. Inside the treatment room, the conveyance piping transitions to 2-inch Schedule 80 PVC piping installed approximately 2 feet above the finished floor elevation.

Blind tees are included to allow incorporation of a treatment system, if required at a future date. A sample tap is installed for sample collection. The conveyance piping discharges into a 4-inch PVC standpipe which connects to the sanitary sewer used as the discharge point from the existing treatment facility. Connection to the standpipe is elevated to prevent backflow of water from the treatment facility into the collection system. The standpipe is vented through the roof of the treatment facility. As a modification to accommodate emergency overflow from the standpipe, a bypass, equipped with a liquid trap, is installed 1 foot above the standpipe level sensor over top of an existing treatment system tank.

Ball Valves

True Union PVC ball valves are included in the conveyance piping to control flow rate through the system, isolate the flow meter, and redirect flow through an auxiliary treatment system, if required. A ball valve with an extension handle is installed in the conveyance piping under hand-hole #3 to isolate that section of piping and to prevent backflow into the sump when the pump is removed.

Check Valves

An Asahi PVC swing check valve is installed in the conveyance piping upstream of the discharge into the standpipe to prevent backflow of water from the treatment facility into the collection system. A check valve is also installed in the pump discharge pipe within the collection sump to prevent backflow into the sump when the pump is not in operation.

Pump

A Model 40S10-3 Grundfos submersible pump is located in the sump to transfer collected groundwater to the City of Ames WPCD. The base of the pump is located 4 feet, 4 inches above the bottom of the sump. The pump is equipped with a Franklin 1 horsepower, 3 phase, 460 volt, Type 304 stainless steel motor as well as a pump shroud to facilitate cooling of the motor by directing water along the motor to the pump inlet. The pump discharge pipe within the sump is 1 1/2-inch galvanized pipe.

Pressure Transducer

A KPSI Model 210 S submersible pressure transducer was installed in the sump at the base of the pump, 4 feet, 5 inches above the sump bottom. The transducer determines water level in the sump by measuring the pressure exerted by the water column, thereby providing the information necessary to activate and deactivate the pump. The transducer is housed within a perforated, 2-inch Schedule 40 PVC sleeve attached vertically to the interior of the sump. The PVC sleeve provides protection to the transducer against water turbulence caused by cycling of the pump. Supply voltage to the pressure transducer is 24 DC, and the transducer provides a 4 to 20 mA output.

Heat Tracing

Raychem® Chemelex™ 5BTV1-CR 110 volt heat trace cable is installed on the section of exterior conveyance pipe from 5 feet below grade to 1 foot inside the treatment building in an

attempt to prevent pipeline freeze-up during cold weather conditions. The heat trace cable is secured with aluminum tape, and the pipe itself is insulated with 2-inch insulation embossed with aluminum jacketing. The heat trace cable is supplied with 120 volt AC power.

Temperature Detector

A Foxboro PR-13BBS-003 platinum resistance temperature detector is installed in the section of conveyance piping immediately upstream of the building penetration to monitor the groundwater temperature and detect freezing conditions. The temperature detector has a 3 1/2-inch probe inserted within the interior of the pipe which measures the temperature of the water and relays this information to the temperature transmitter and PLC module located within the main control panel. Additional sensors are installed and connected to the PLC module which monitor the outside temperature and the air temperature within the treatment room.

Flow Meter

A Sparling Tigermag Model 625 magnetic flow meter is located in the conveyance piping within the treatment building, immediately downstream of the building penetration. The flow meter has wafer style connections, Type 316 stainless steel electrode and grounding rings, and a Teflon® liner. Electrical signals from the flow meter are fed to the main control panel which displays total and instantaneous flow rate information. The flow meter is supplied with 120 volt AC power and provides both 4 to 20 mA and pulse outputs for tracking flow rate and total flow, respectively.

Standpipe Level Sensor

A Magnetrol Trident 91S, model 91S-A1A0-F10 ultrasonic level control and model 9B1-1221-001 Type 316 stainless steel transducer are installed in the PVC discharge standpipe within the treatment room, 1 foot above the conveyance system connection. The sensor is installed as an emergency device to deactivate the sump pump in the event of water backup within the discharge standpipe. The sensor is supplied with 120 volt AC power, and an integral control relay provides an output signal from the sensor.

ELECTRICAL SYSTEM

Electrical work installed within the sump is rated as Explosion Proof. All other locations are considered nonhazardous.

Four 2-inch PVC electrical conduits are installed from the treatment room to hand-hole #3 in the same trench as the conveyance piping. Warning tape is buried above the conduit which supplies 460 volt electrical current from the treatment room to the collection sump. PVC-coated galvanized conduit was installed from hand-hole #3 to the electrical station installed near the collection sump. The electrical station near the sump is installed on a 5-foot by 3-foot by 8-inch preformed, reinforced concrete pad and contains various switches, a duplex service outlet/receptacle and a step down transformer used by the components at the sump.

The main electrical panel is installed along the eastern interior wall of the treatment room, next to the exit door. Panel lights signal pump operation, high and low sump water levels and a high water level within the standpipe. A hand/off/auto switch is installed to allow for manual or automatic operation of the pump.

The sump pump is supplied with 460 volt AC electrical power; the heat tracing, flow meter, and standpipe level sensor are supplied with 120 volt AC electrical power; and the pressure transducer is supplied with 24 volt DC power. The pressure transducer provides a 4 to 20 mA output, the flow meter provides both 4 to 20 mA and pulse outputs for tracking flow rate and total flow, respectively, and an integral control relay provides an output signal from the standpipe level sensor.

The electrical system includes the following components, which are described in more detail below:

- Temperature Transmitter
- Digital Indicator

Temperature Transmitter

A Foxboro RTT20-I1BNQOFA-D1F1 temperature transmitter is installed in the main electrical panel to transmit the groundwater temperature from the temperature probe to the PLC. The transmitter is supplied with 24 DC power and provides a 4 to 20 mA output to the PLC. The temperature transmitter is calibrated to read from 0 to 150° F.

Digital Indicator

A Newport INF7000 digital indicator is mounted on the front of the main electrical panel to provide an easily accessible readout of water flow rate and total flow. The digital indicator is supplied with 120 volt AC power and accepts a 4 to 20 mA input signal from the flow meter. The indicator display toggles between flow rate and total flow.

CONTROL SYSTEM

The system operation is tied into a PLC, with inputs to the PLC consisting of 1) the sump water level, 2) current flow to the pump, 3) indication of a high level condition in the standpipe, 4) total water flow and flow rate, and 5) water, outside air and treatment room air temperatures. Outputs from the PLC are signals to 1) activate/deactivate the sump pump; and 2) activate/deactivate the sump low water level, sump high water level and standpipe high water level panel lights. The pump operation panel lights are controlled by the status of the pump starter. PLC control of the system is accomplished by operating with the hand/off/auto switch in the auto position.

Sump Water Level

The water level in the collection sump is determined based upon the pressure exerted on the pressure transducer by the depth of the water column. This information is converted to a 4 to 20 mA signal by the pressure transducer and relayed to the electrical panel. The water level is

the water column height above the bottom of the transducer and is indicated on the PLC computer display. Signals from the PLC activate the pump when the sump water level is at or above a preestablished high level and deactivate the pump when the sump water level is at or below a preset low level. Both the low and high water levels are specified by the operator on the computer display. Signals from the PLC activate the sump low and high water level alarm lights installed in the electrical panel.

Pump Operation

A PLC input from a current transformer indicates current flow to the pump and signals pump operation. Indication of pump operation is included on the PLC computer display. Activation of the appropriate pump run/off lights installed in the electrical panel is based on the status of the pump starter which is triggered by the signal sent by the pressure transducer located within the sump.

Standpipe High Water Level

A high water level in the discharge standpipe is indicated by a signal sent from the standpipe level probe to the PLC. In the event of a high level condition, signals from the PLC deactivate the groundwater pump and activate the standpipe high water level light installed in the electrical panel. Reactivation of the pump is accomplished by manually resetting the momentary switch located on the face of the main electrical panel.

Water Flow

Signals from the flow meter indicating water flow rate and total flow are directed to both the PLC and the flow indicator installed in the main electrical panel. Water flow rate and total flow are included on the PLC computer display. If a flow rate less than 12 gpm is detected for 1 minute while the pump is activated, the PLC will deactivate the pump; reactivation of the pump is accomplished by manually resetting the momentary switch located in the face of the main electrical panel.

Water and Air Temperatures

A 4 to 20 mA signal is sent from each temperature probe to the PLC indicating water or air temperature. Water, outside air and treatment room air temperatures are included in the information on the PLC computer display.

Manual System Operation

Operation of the system with the hand/off/auto switch in the hand position overrides automatic control by the PLC. Consequently, the pump will not be deactivated under low sump water level, high standpipe water level or low flow conditions.

SECTION 3

SECTION 3

SYSTEM OPERATION AND ROUTINE MAINTENANCE

In order to ensure proper operation of the groundwater collection system, maintenance checks and functional operational checks should be performed on the individual components as described in the following sections. A maintenance log is included in Appendix D which should be used to record maintenance activities.

INTERCEPTION TRENCH

In order to assess the accumulation of sediments within the collection trench and sump, the collection sump should be mechanically probed every six months. Based on the findings of this evaluation, or if a noticeable decrease in the yield of water is observed, the trench may require cleaning. Trench cleaning should be conducted on an as-needed basis using high pressure water jetting via the cleanouts provided at the end of each trench leg. Waters generated during the cleaning procedures should be containerized (i.e., poly tanks, frac tanks), filtered as necessary and eventually processed through the system. Filtered solids should be drummed waiting ultimate disposal arrangements.

CONVEYANCE SYSTEM

Conveyance Pump

A majority of the problems that may develop with the submersible conveyance pump would be electrical in nature. If the PLC and/or the control panel display indicates that the pump is in run condition, and the pump is not in operation, the following troubleshooting measures may be adopted.

- The pump motor is not receiving electrical power and, therefore, the circuit between the starter and the pump motor should be checked for an open circuit.
- If electrical power is present, the voltage between the starter and the pump motor should be checked to ensure the supplied voltage is in the range required by the motor.
- If the power supply is providing adequate voltage, the thermal overload should be inspected for proper operation.
- Check the power switch at the remote power station to ensure that it is not tripped and is in the "on" position, thereby, completing the circuit to the pump.
- Other possible reasons for the pump not operating could be a defective capacitor, cable or the motor itself.

In the event the pump is not operational and the control panel lights are not lit, check the following:

- Check the fuses or circuit breakers within the control panels to ensure that they are not faulty and/or have not been tripped.
- Check the manual on/off switch at the remote power station and the hand/off/auto switch at the main electrical panel to ensure that they are in the on and hand or auto positions, respectively.
- Check to ensure that there is adequate liquid level within the sump.

In the event that the O-rings within the pump are determined to be worn out, the entire pump needs to be shipped to the supplier for repair. Replacement of worn O-rings or other pump repairs requires specialized tools which are not readily available to the common market. The manufacturer has these tools on hand and performs these procedures on a regular basis. Note that the cost for a one time replacement of the O-rings (parts and labor) by the supplier is covered by the purchase of the replacement O-rings as provided in Appendix E.

To remove the sump pump first deactivate the electrical feed from the remote power station by simply turning the electrical switch on the panel to the off position. Ensure that the switch is mechanically tagged or secured so that accidental re-energizing of the circuit cannot occur. Close the ball valve located beneath hand-hold #3 to prevent water from draining from the conveyance pipe back into the sump. Next remove the protective cover from the sump by unscrewing if from the sump. Reach down inside the sump, grab the metal "T" handle and pull straight up. This vertical movement will disconnect the pump from the pitless adapter and allow it to be removed from the sump. [CAUTION: The pump is heavy and, due to the depth the pump is set, it is extremely cumbersome to handle! It is suggested that removal of the pump **not** be attempted by a single individual.] Once the pump is out of the well and placed on the ground, physical disconnection can take place. Refer to the manufacturer's O&M Manual for the procedures to disconnect the electrical wires from the pump.

To reinstall the pump, make sure the electrical wires are connected, place the pump within the sump, align the pitless adapter sections and push down hard until the two components slide together and "lock." Completely open the ball valve beneath hand-hold #3. Next reactivate the pump by turning on the electrical feed to the pump and watch to see if bubbling occurs within the sump which might indicate that the pitless connector is not properly set. If bubbling occurs, shut off the pump, reset the pitless connection and reactivate the pump, again looking for any unusual bubbling within the sump.

For other operating problems as listed below, refer to Section 7 of the Manufacturer's O&M Manual included in Appendix B-1.

- Pump runs but does not deliver water.
- Pump runs but at reduced capacity.
- Pump cycles too much.
- Fuses blow or circuit breakers trip frequently.

Pressure Transducer

The submerged pressure transducer provides information used in determining the depth of the water level in the collection sump. If for some reason the transducer stops functioning properly, the PLC will not receive appropriate signals. Under such a condition the pump will either not be activated when required or will be constantly operated and thus potentially run dry after some time. As a result, the pump will not convey the contaminated groundwater to the treatment system as designed.

As a maintenance activity to ensure proper functioning of the conveyance system, the operation of the pressure transducer should be validated once every six months. This activity can be performed by ensuring the following:

- The pump is in run condition when the water level indicated by the display is in the preset low and high water level range. Also the pump is discharging groundwater during this period based upon opening the sample tap and visually observing a voluminous output of water through the tap (to make sure that the pump is not running dry.)

- The pump is off when the water level indicated by the display is at the preset low water level.

- Verifying the height of the water column noted on the PLC readout by physically measuring the height of the water surface within the sump and comparing the two readings.

- Verifying the depth of the transducer by removing the transducer from the PVC protective casing, measuring the length of the cable and comparing against the original length measurement of 19 feet 5 inches (base of transducer to tip of cable).

Other maintenance activities include checking the pressure transducer's vent filter and vapor trap located within the upper portion of the transducer's vent line. This device is installed to protect internal components from mildew and corrosion by removing moisture from the vent line. The vapor trap contains a drying tube filled with a granular drying agent (desiccant) which absorbs moisture from the air passing through it. As the desiccant becomes saturated with moisture, thereby losing it's drying capability, the desiccant changes color from blue to a pinkish-red. Visual observation of the vapor trap for this color change should be made on a quarterly basis, and the vapor trap should be switched out with a "fresh" unit as required. New desiccant units can be purchased from the manufacturer, or the desiccant can be rejuvenated by heating the granular material as discussed in the Manufacturer's O&M Manual included in Appendix B-2.

The pressure transducer should be removed from the sump and inspected once every six months, or more often as deemed necessary. Visually inspect the surfaces of the transducer for algeal or mineral accumulations or other unusual conditions. Periodic cleaning to remove surface accumulations should be performed utilizing a mild detergent on an as-needed basis.

Although the KPSI submersible pressure transducer is designed for rugged use, it should be protected from overpressure and sharp impact. To remove the transducer from the sump, grab the transducer support cable and pull vertically from the PVC casing, taking care not to kink the cable and taking care not to alter the tie connection point. When lowering back into the sump, the water surface should be penetrated slowly, and the transducer must not be dropped from above the surface of the water. The transducer must then be set at the preestablished depth and secured. Direct probing of the diaphragm or attempts to remove protective screens can damage the sensor and should be avoided.

A copy of the Manufacturer's O&M Manual has been included in Appendix B-2.

Heat Tracing

The heat trace cable serves the purpose of preventing freezing of water in the conveyance pipe as it transitions from below grade to the interior of the treatment room.

A copy of the Manufacturer's O&M Manual is included in Appendix B-3.

Temperature Detectors

The temperature detectors serve the purpose of relaying the water, treatment room and outside temperatures to the PLC. The functional operation of the water temperature detector should be determined every six months using the Field Test procedures described in the maintenance section on page 5 of the Manufacturer's O&M Manual. The accuracy of the treatment room and outside air temperature readings can be compared by taking readings with a hand held thermometer and comparing them against the PLC read out. Should a significant deviation exist between the hand held readings and the PLC readout, a problem may exist with the detector, or an adjustment to the PLC programming may be necessary.

A copy of the Manufacturer's O&M Manual for the water temperature detector has been included in Appendix B-4.

Flow Meter

The flow meter serves the purpose of measuring instantaneous flow rate and tracking total flow information. Although the flow meter does not require any routine maintenance, it should be routinely checked for proper functional operation by visual inspection of the readings. If the readings seem to be erratic or inaccurate, refer to the Troubleshooting Chart on page 21 in section 7.2 of the Manufacturer's O&M Manual. Note that the flow rate reading on the flow meter should match the flow rate read out on the PLC. A difference in the cumulative flow reading exists due to the time difference between when the system was activated and when the PLC unit was installed, as well as differences resulting from resetting of the PLC readout.

A copy of the Manufacturer's O&M Manual is provided in Appendix B-5.

Standpipe Level Sensor

The standpipe level sensor serves the purpose of preventing overflow in the standpipe in the event of an obstruction by signaling the PLC to shut off the pump. Since the sensor will not be used continuously as part of the system operation, and is used only as an emergency safety measure, its operation should be validated every six months. This can be done by using the "On Demand Self Test" procedures described on page 11 of the Manufacturer's O&M Manual. The self test simulates a wet condition, and thus the level control should be able to transmit a no run condition to the pump via the PLC. If the level sensor is not functioning properly, the troubleshooting procedures provided in the Manufacturer's O&M Manual should be adopted.

A copy of the Manufacturer's O&M Manual has been included in Appendix B-6.

Standpipe Bypass Liquid Trap

On a monthly basis the liquid trap of the bypass piping should be checked to ensure that it contains liquid. If it is low or dry, enough liquid should be added to create a liquid barrier to block gases or vapors which might be emitting from the sewer system

ELECTRICAL SYSTEM

Electrical Power

Electrical power to the sump pump can be interrupted by placing either the on/off switch located at the electrical station installed near the collection sump or the hand/off/auto switch located in the main electrical panel in the "off" position. Placing the main electrical panel hand/off/auto switch in the "off" position interrupts all power to the remote sump location. Mechanisms for interruption of power to all other system components are internal to the main electrical panel which should only be accessed by an electrician.

Temperature Transmitter

The temperature transmitter serves the purpose of transmitting the temperature detected by the temperature detector to the PLC. If the temperature transmitter is not functioning properly, there may be no signal sent to the PLC or the signal sent may not be accurate and thus the PLC will not indicate an accurate response. The temperature transmitter should be inspected for proper functional operation every six months.

A copy of the Manufacturer's O&M Manual is included in Appendix B-7.

Digital Indicator

The digital indicator located on the front of the main control panel serves the purpose of displaying the flow rate and the total flow. In order to ensure that the data displayed by the digital indicator is accurate, the displayed data should be validated once a month. This activity can be performed by visually observing flow rates and cumulative flow increase during the period when the pump is running. The increase in the total cumulative flow can be compared to the anticipated flow through the pump in the observation time. Note that the flow rate reading on

the flow meter should match the flow rate read out on the indicator. A difference in the cumulative flow reading exists due to the time difference between when the system was activated and when the digital indicator was installed, as well as differences resulting from resetting of the digital indicator readout.

A copy of the Manufacturer's O&M Manual is included in Appendix B-8.

CONTROL SYSTEM

Programmable Logic Controller

By insuring proper operation of the individual components of the various system components (i.e., the Interception Trench, the Conveyance System and the Electrical System), it can be determined if a malfunction in the system can be attributed to the PLC module. Should a malfunction of the PLC unit be suspected, troubleshooting should be referred to the mechanical contractor (Mechanical Comfort, Inc.) who installed the unit.

Electrical Panel Controls

Both electrical power panels (the main panel and the remote power station) contain on/off control switches located on the exterior of the panels. In the case of the main electrical control panel, a hand/off/auto switch is present. Each switch circuit is identified in the electrical drawings (see as-built Drawings, Appendix A) as to which electrical component it regulates. The switches open or close the circuit depending on the switch setting.

When the hand/off/auto switch is placed in the auto position, operation of the system is automatically controlled by the PLC. The PLC will operate the sump pump based on the preset high and low sump water levels. If a high level condition is signaled by the standpipe level sensor, the PLC will deactivate the pump. The PLC will also deactivate the pump if a flow rate less than 12 gpm is detected for 1 minute while the pump is activated. In either case, the system must be manually reactivated by resetting the momentary switch (black circular button) located on the face of the main electrical panel. The switch is reset by depressing the switch and holding it for five seconds. Once released, the circuit is reset, and the system will again continue to operate in the auto mode. Note: Before reactivating the system after it has been shut down by a safety device, the reason for the shutdown should be determined and appropriate corrective measures undertaken. Typically, unless specifically noted, the hand/off/auto should be positioned in the auto setting.

When the hand/off/auto switch is positioned in the hand position, automatic control of the system by the PLC is overridden. This is important to note as more frequent monitoring may be required to ensure no system upsets occur when operating in the manual (hand) mode. The sump pump will not be deactivated under high standpipe water level, low flow or low sump water level conditions. The pump will run continuously regardless of whether there is sufficient water present within the collection sump. Operation of the pump in a dry condition will damage the pump.

When in auto or manual mode, deactivation of the sump pump can be accomplished by turning either the hand/off/auto or remote on/off switch to the off position. Before reactivating the pump, make sure the consequences of doing so have been considered. For example, reactivating the pump will force water through the system; therefore, make sure all valves are open and the sample tap is closed.

SECTION 4

SECTION 4

SYSTEM AND SITE MONITORING

SYSTEM SAMPLING

As required by the Sauer-Sundstrand facility's Non-Domestic Wastewater Discharge Permit No. 6593-3, system sampling must be performed on a monthly basis in order to establish the concentration pattern of each of the VOC constituents expected to be discharged to the City of Ames sanitary sewer. It is expected that monitoring frequency requirements will be reduced following the first several months of system operation, based on the initial results obtained. Because concentrations have been low, monthly sampling for total suspended solids and total iron will be discontinued.

GROUNDWATER SAMPLING

Groundwater samples must be collected on an annual basis. The first annual sampling event will be conducted during the third quarter of 1997; annual sampling will proceed accordingly. Sampling will continue for a period of up to five years, at which time the effectiveness of the remedial system will be reevaluated to determine whether CMS objectives have been fulfilled.

Annual site sampling reports will be prepared and submitted to the USEPA no later than March 1, following each annual sampling event.

APPENDIX A

SAUER SUNDSTRAND COMPANY
AMES, IOWA

GROUNDWATER INTERCEPTION SYSTEM DESIGN AS-BUILT DRAWINGS

MAY 1997

LICENSED PROFESSIONAL ENGINEER
JEFFREY COON 11975
IOWA

I hereby certify that this engineering document was prepared by me or under my direct personal supervision and that I am a duly licensed Professional Engineer under the laws of the State of Iowa.

JEFFREY L. COON, P.E. — DATE 5/14/97

My license renewal date is December 31, 1998

Pages or Sheets covered by this seal:
G-01, G-02, C-01 through C-05, E-01 through E-03

MONTGOMERY WATSON

Des Moines, Iowa

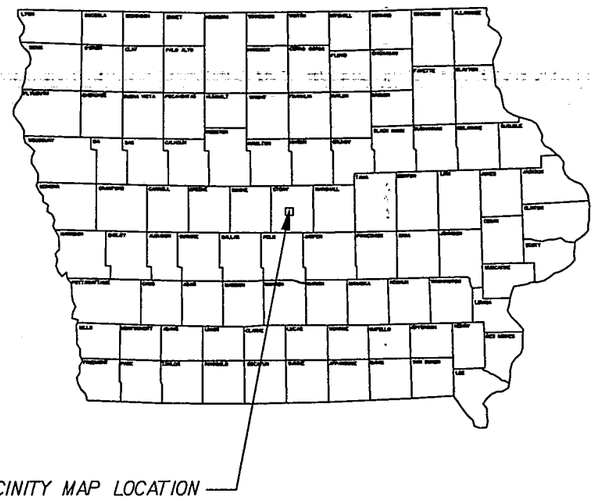

PROJECT LOCATION MAP

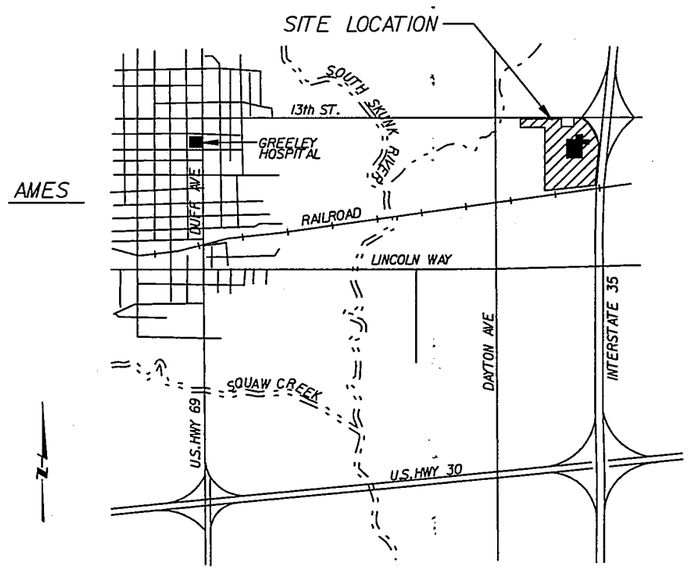

VICINITY MAP

SHEET INDEX

SHEET		DESCRIPTION
GENERAL	G-01	COVER SHEET
	G-02	LOCATION MAPS, SHEET INDEX AND DETAIL IDENTIFICATION
CIVIL	C-01	PRE-EXISTING CONDITIONS
	C-02	INTERCEPTION TRENCH PLAN AND PROFILE
	C-03	CONVEYANCE PIPING PLAN AND PROFILE
	C-04	TREATMENT BUILDING MODIFICATIONS
	C-05	DETAILS AND SECTIONS
ELECTRICAL	E-01	ELECTRICAL PLAN VIEW
	E-02	DIAGRAMS AND SCHEMATICS
	E-03	CONDUIT DEVELOPMENT, SCHEDULES & DETAILS

SECTION AND DETAIL IDENTIFICATION

SECTION IDENTIFICATION

(1) SECTION CUT SHOWN ON DRAWING AS:

SECTION NUMBER

2
C-02

SHEET NUMBER WHERE THE SECTION DRAWING IS LOCATED, SEE NOTE 1

(2) ON SHEET NUMBER C-02 THIS SECTION IS IDENTIFIED AS:

SECTION NUMBER

SECTION 2
SCALE: AS DESIGNATED C-01

SHEET ON WHICH THE SECTION CUT IS SHOWN, SEE NOTES 1 & 2

DETAIL IDENTIFICATION

(1) DETAIL IDENTIFICATION SHOWN ON DRAWING AS:

DETAIL LETTER

A
C-09

THE DETAIL NAME IS OPTIONAL AND LOCATED HERE, FOLLOWING DETAIL CALLOUT

SHEET NUMBER WHERE THE DETAIL DRAWING IS LOCATED, SEE NOTES 1 & 2

(2) ON SHEET NUMBER C-09 THIS DETAIL IDENTIFIED AS:

DETAIL LETTER

DETAIL NAME A
SCALE: AS DESIGNATED C-03

SHEET ON WHICH DETAIL IS CALLED OUT, SEE NOTES 1 & 2

NOTE DETAIL IDENTIFICATION

DETAIL LETTER — SHEET ON WHICH DETAIL APPEARS

A/C-09

NOTES:

(1) IF PLAN AND SECTION (OR DETAIL CALL-OUT AND DETAIL) ARE SHOWN ON SAME SHEET, THE SHEET NUMBER IS REPLACED BY A HORIZ. LINE.

(2) IF DETAIL OR SECTION IS CALLED OUT ON NUMEROUS SHEETS THE DRAWING NUMBER MAY BE REPLACED BY 'VAR'.

REV	DATE	BY	DESCRIPTION

SCALE: NONE

WARNING 0 ½ 1 — IF THIS BAR DOES NOT MEASURE 1" THEN DRAWING IS NOT TO SCALE.

DESIGNED
DRAWN J. DRISCOLL
CHECKED K. LEWIS

SUBMITTED
PROJECT ENGINEER REG. NO. DATE
MONTGOMERY WATSON REG. NO. DATE

MONTGOMERY WATSON
Des Moines, Iowa

SAUER SUNDSTRAND COMPANY AMES, IOWA
GROUNDWATER INTERCEPTION SYSTEM DESIGN
AS-BUILT DRAWINGS
LOCATION MAPS, SHEET INDEX AND DETAIL IDENTIFICATION

SHEET G-02

JOB No. 1217070.05090440 FILE No. _____ Date: 5/97

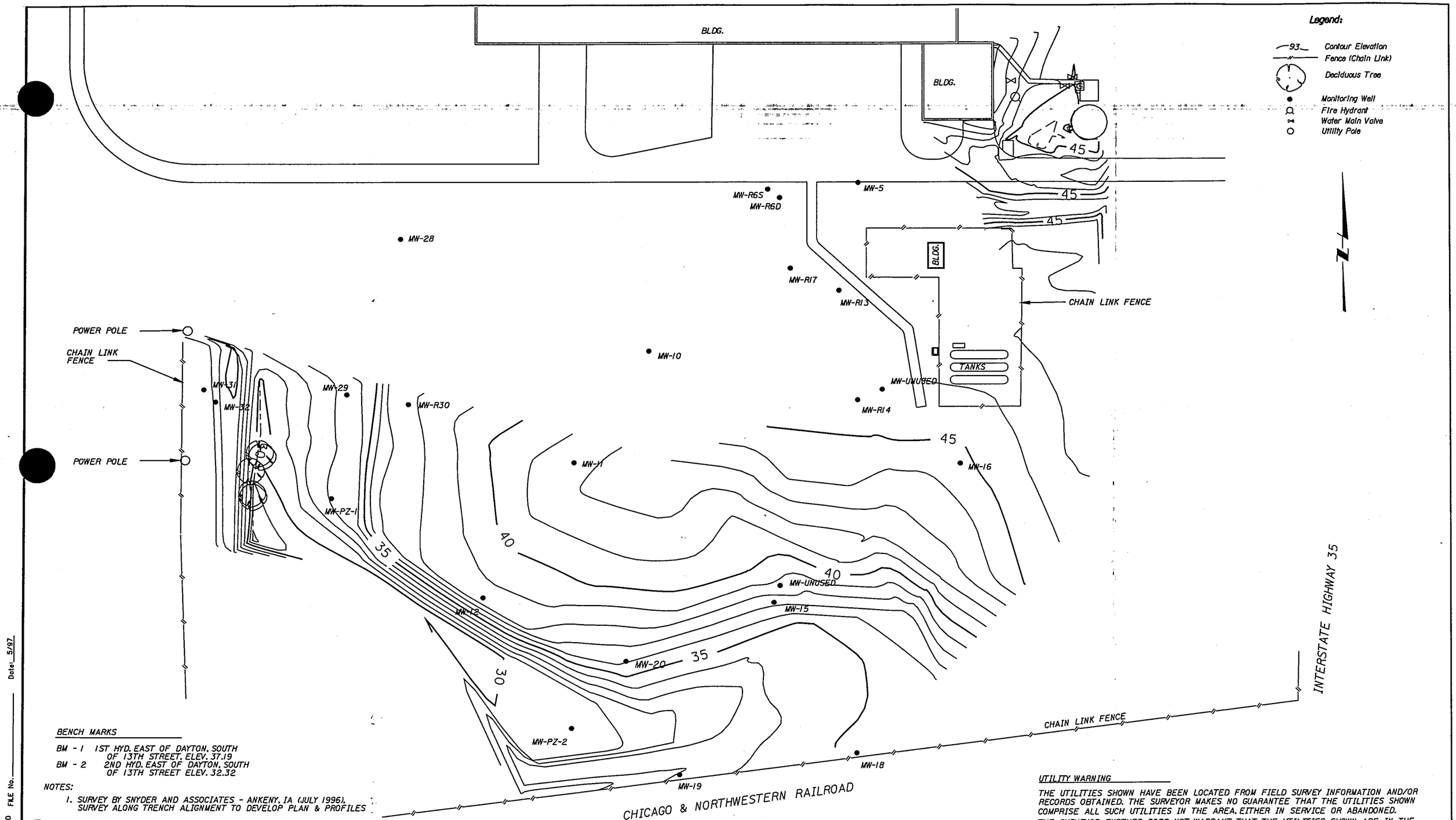

BENCH MARKS

BM - 1 1ST HYD. EAST OF DAYTON, SOUTH OF 13TH STREET. ELEV. 37.19

BM - 2 2ND HYD. EAST OF DAYTON, SOUTH OF 13TH STREET ELEV. 32.32

NOTES:

1. SURVEY BY SNYDER AND ASSOCIATES - ANKENY, IA (JULY 1996). SURVEY ALONG TRENCH ALIGNMENT TO DEVELOP PLAN & PROFILES
2. ELEVATIONS ARE BASED ON CITY OF AMES DATUM. USGS ELEVATIONS = INDICATED ELEVATIONS + 918.16'

UTILITY WARNING

THE UTILITIES SHOWN HAVE BEEN LOCATED FROM FIELD SURVEY INFORMATION AND/OR RECORDS OBTAINED. THE SURVEYOR MAKES NO GUARANTEE THAT THE UTILITIES SHOWN COMPRISE ALL SUCH UTILITIES IN THE AREA, EITHER IN SERVICE OR ABANDONED. THE SURVEYOR FURTHER DOES NOT WARRANT THAT THE UTILITIES SHOWN ARE IN THE EXACT LOCATION INDICATED.

REV	DATE	BY	DESCRIPTION

SCALE: 1" = 50'

WARNING: 0 ½ 1 — IF THIS BAR DOES NOT MEASURE 1" THEN DRAWING IS NOT TO SCALE.

DESIGNED

DRAWN J. DRISCOLL

CHECKED K. LEWIS

SUBMITTED

PROJECT ENGINEER REG. NO. DATE

MONTGOMERY WATSON REG. NO. DATE

MONTGOMERY WATSON
Des Moines, Iowa

SAUER SUNDSTRAND COMPANY AMES, IOWA

GROUNDWATER INTERCEPTION SYSTEM DESIGN
AS-BUILT DRAWINGS

PRE-EXISTING CONDITIONS

SHEET C-01

JOB No. 1217070.05090440 FILE No. Date: 5/97

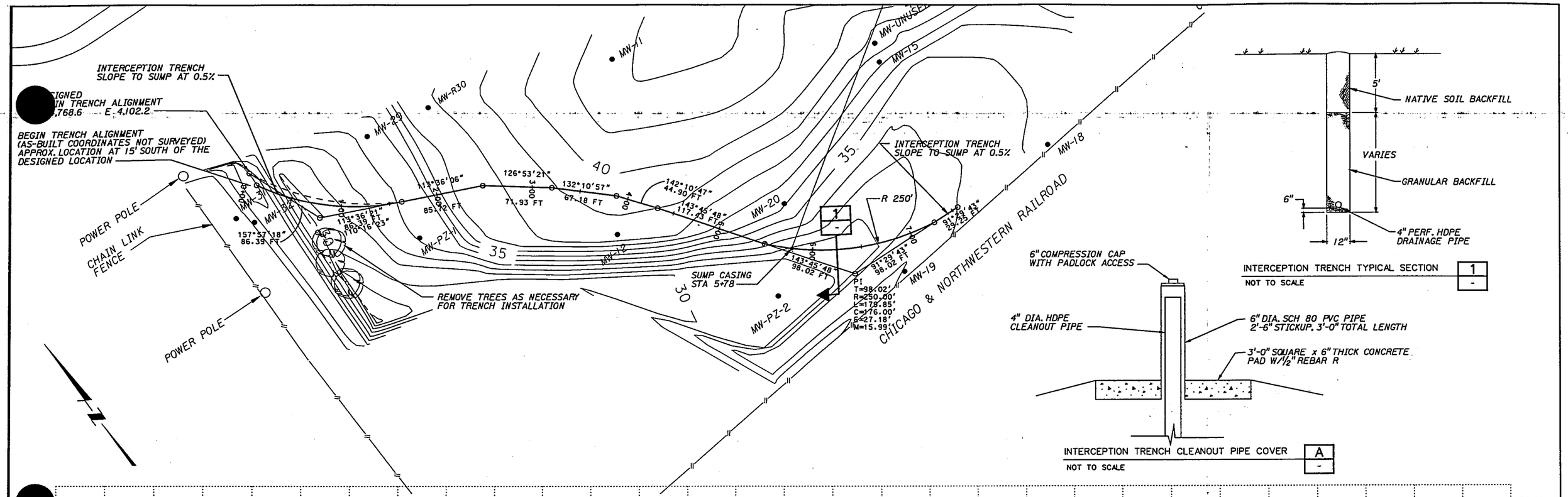

INTERCEPTION TRENCH TYPICAL SECTION — 1 / -

NOT TO SCALE

INTERCEPTION TRENCH CLEANOUT PIPE COVER — A / -

NOT TO SCALE

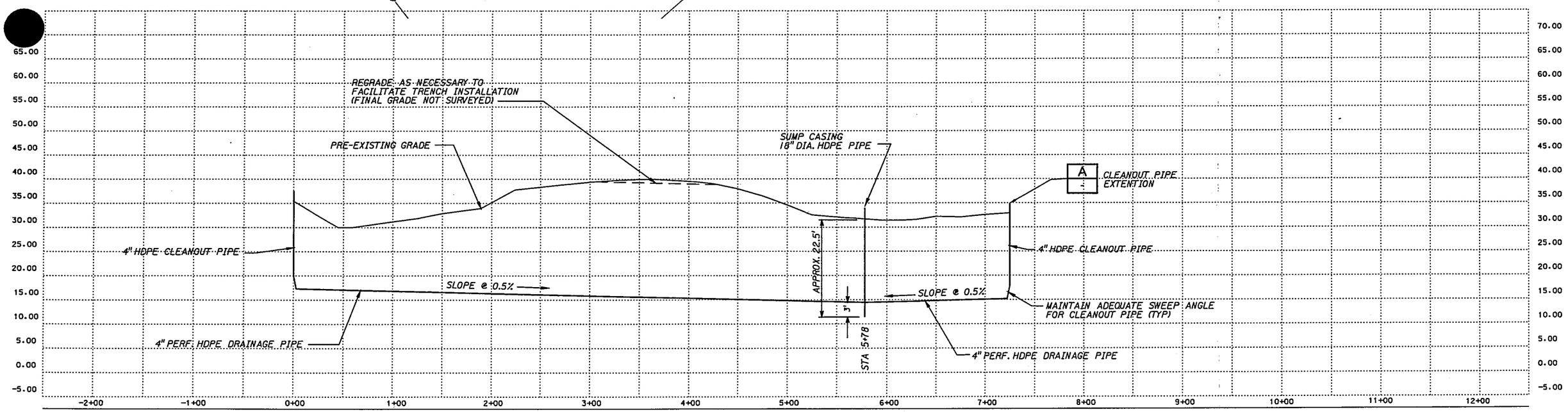

REV	DATE	BY	DESCRIPTION

SCALE: HORIZ. 1" = 50' VERT. 1" = 10' V.E. = 5x

WARNING: 0 1/2 1 — IF THIS BAR DOES NOT MEASURE 1" THEN DRAWING IS NOT TO SCALE.

DESIGNED
DRAWN J. DRISCOLL
CHECKED K. LEWIS

SUBMITTED
PROJECT ENGINEER REG. NO. DATE
MONTGOMERY WATSON REG. NO. DATE

MONTGOMERY WATSON
Des Moines, Iowa

SAUER SUNDSTRAND COMPANY AMES, IOWA
GROUNDWATER INTERCEPTION SYSTEM DESIGN
AS-BUILT DRAWINGS

INTERCEPTION TRENCH PLAN AND PROFILE

SHEET C-02

JOB No. 1217070.05090440 FILE No. Date 5/97

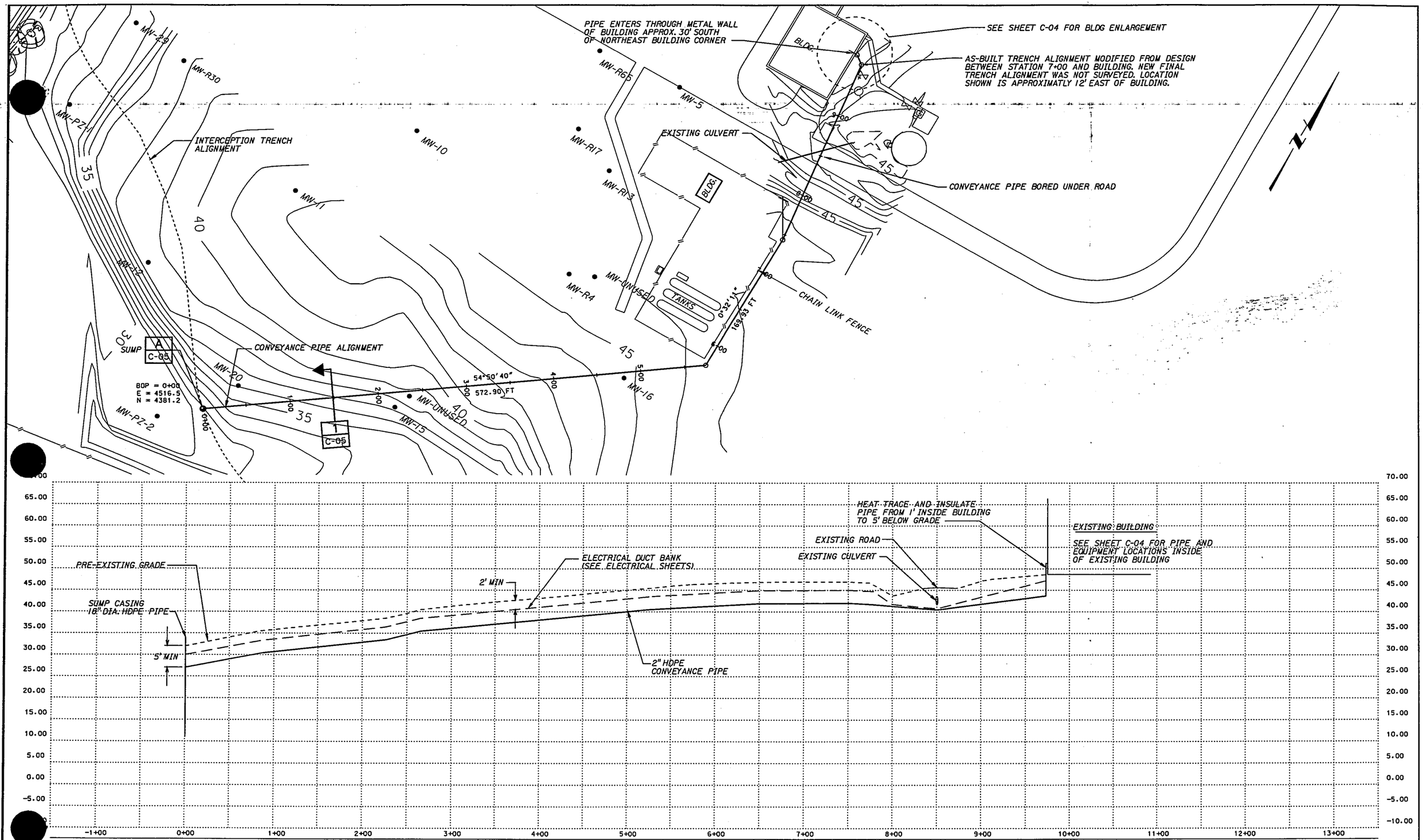

REV	DATE	BY	DESCRIPTION

SCALE:
HORIZ: 1" = 50'
VERT: 1" = 10'
V.E. = 5x

WARNING
0 ½ 1
IF THIS BAR DOES NOT MEASURE 1" THEN DRAWING IS NOT TO SCALE.

DESIGNED
DRAWN J. DRISCOLL
CHECKED K. LEWIS

SUBMITTED
PROJECT ENGINEER REG. NO. DATE
MONTGOMERY WATSON REG. NO. DATE

MONTGOMERY WATSON
Des Moines, Iowa

SAUER SUNDSTRAND COMPANY AMES, IOWA
GROUNDWATER INTERCEPTION SYSTEM DESIGN
AS-BUILT DRAWINGS

CONVEYANCE PIPING PLAN AND PROFILE

SHEET
C-03

JOB No. 1217070.05090440 FILE No. Date: 5/97

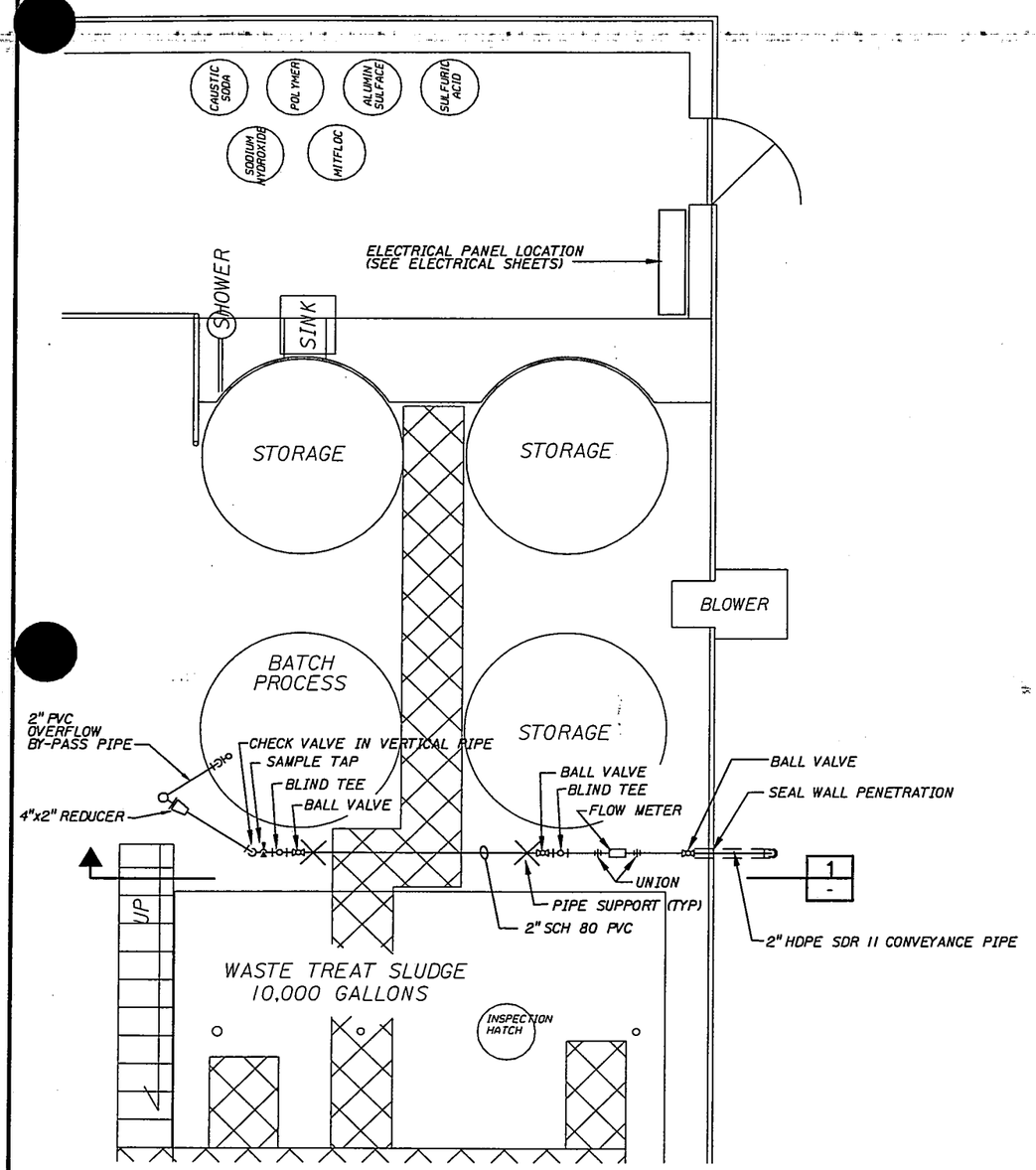

TREATMENT BUILDING - PLAN VIEW

3/8" = 1'-0"

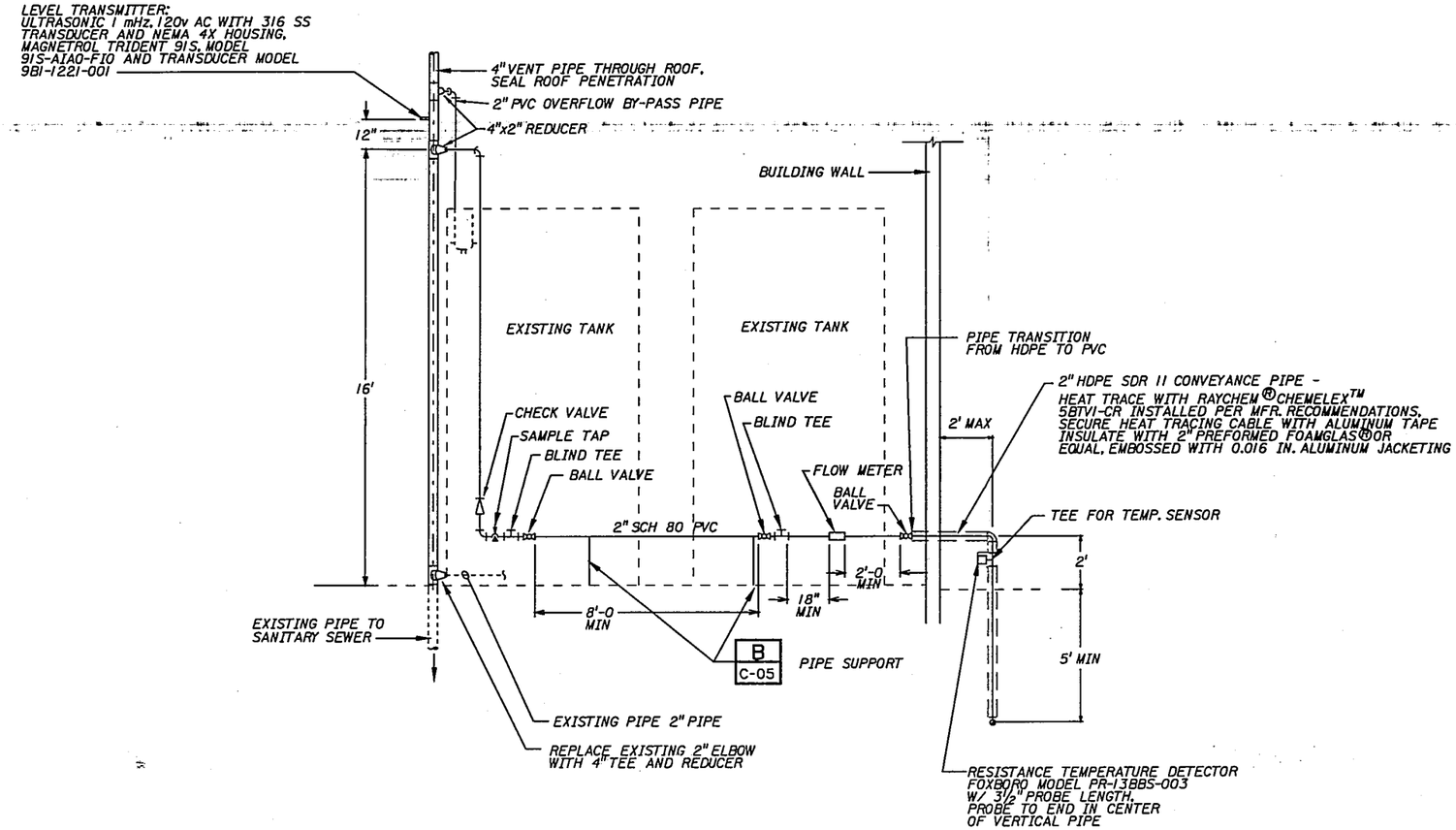

SECTION 1 / -

3/8" = 1'-0"

NOTES:

1. CONVEYANCE PIPE TO BE HDPE SDR-11 OUTSIDE BUILDING AND SCH 80 PVC INSIDE BUILDING (SIZE AS SHOWN)

JOB No. 1217070.05090440 FILE No. _____ Date: 5/97

REV	DATE	BY	DESCRIPTION

SCALE: AS SHOWN

WARNING: 0 1/2 1 — IF THIS BAR DOES NOT MEASURE 1" THEN DRAWING IS NOT TO SCALE.

DESIGNED
DRAWN J. DRISCOLL
CHECKED K. LEWIS

SUBMITTED
PROJECT ENGINEER REG. NO. DATE
MONTGOMERY WATSON REG. NO. DATE

MONTGOMERY WATSON
Des Moines, Iowa

SAUER SUNDSTRAND COMPANY AMES, IOWA
GROUNDWATER INTERCEPTION SYSTEM DESIGN
AS-BUILT DRAWINGS

TREATMENT BUILDING MODIFICATIONS

SHEET C-04

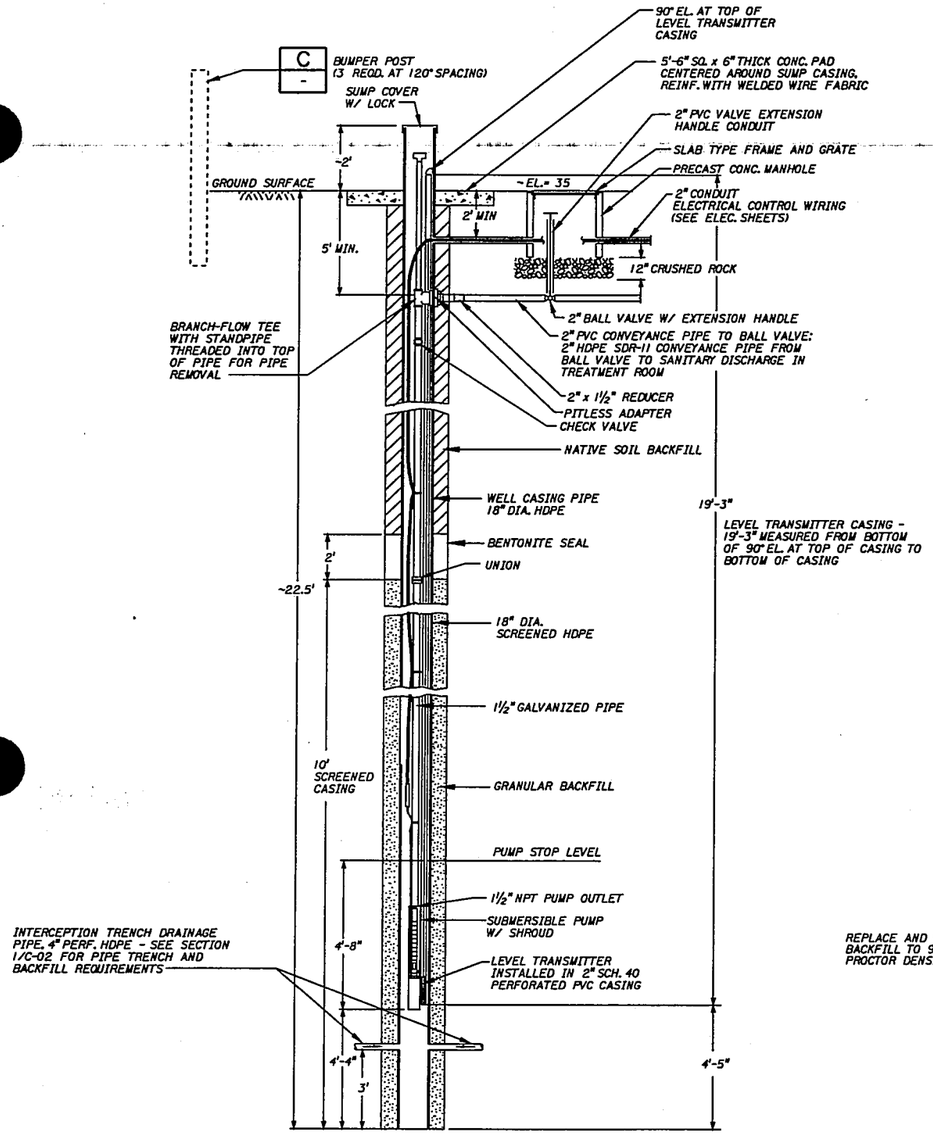

EXTRACTION SUMP — A / C-03
NOT TO SCALE

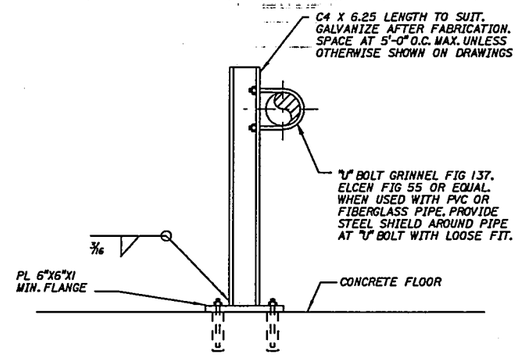

PIPE SUPPORT — B / C-04
NOT TO SCALE

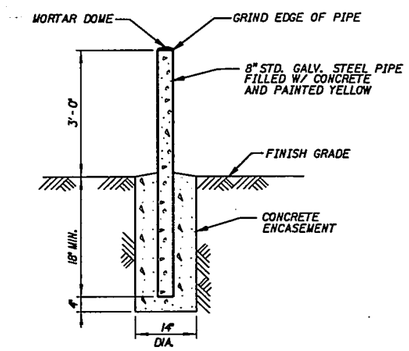

BUMPER POST DETAIL — C / -
NOT TO SCALE

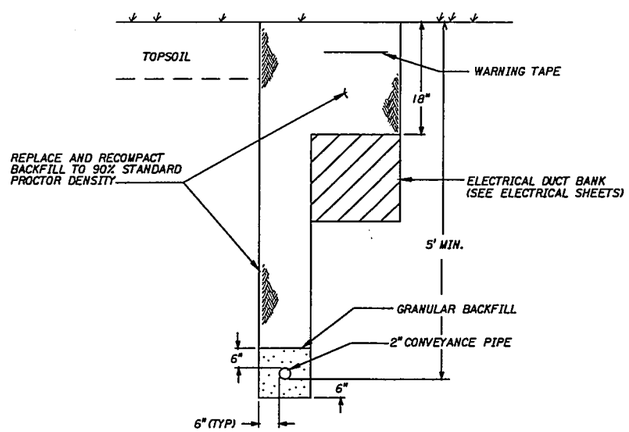

TRANSPORT PIPE TRENCH SECTION — 1 / C-03
NOT TO SCALE

REV	DATE	BY	DESCRIPTION

SCALE: AS SHOWN

WARNING: 0 ½ 1 — IF THIS BAR DOES NOT MEASURE 1" THEN DRAWING IS NOT TO SCALE.

DESIGNED
DRAWN J. DRISCOLL
CHECKED K. LEWIS

SUBMITTED
PROJECT ENGINEER — REG. NO. — DATE
MONTGOMERY WATSON — REG. NO. — DATE

MONTGOMERY WATSON
Des Moines, Iowa

SAUER SUNDSTRAND COMPANY AMES, IOWA
GROUNDWATER INTERCEPTION SYSTEM DESIGN
AS-BUILT DRAWINGS

DETAILS AND SECTIONS

SHEET C-05

JOB No. 1217070.05090440 FILE No. _____ Date: 5/97

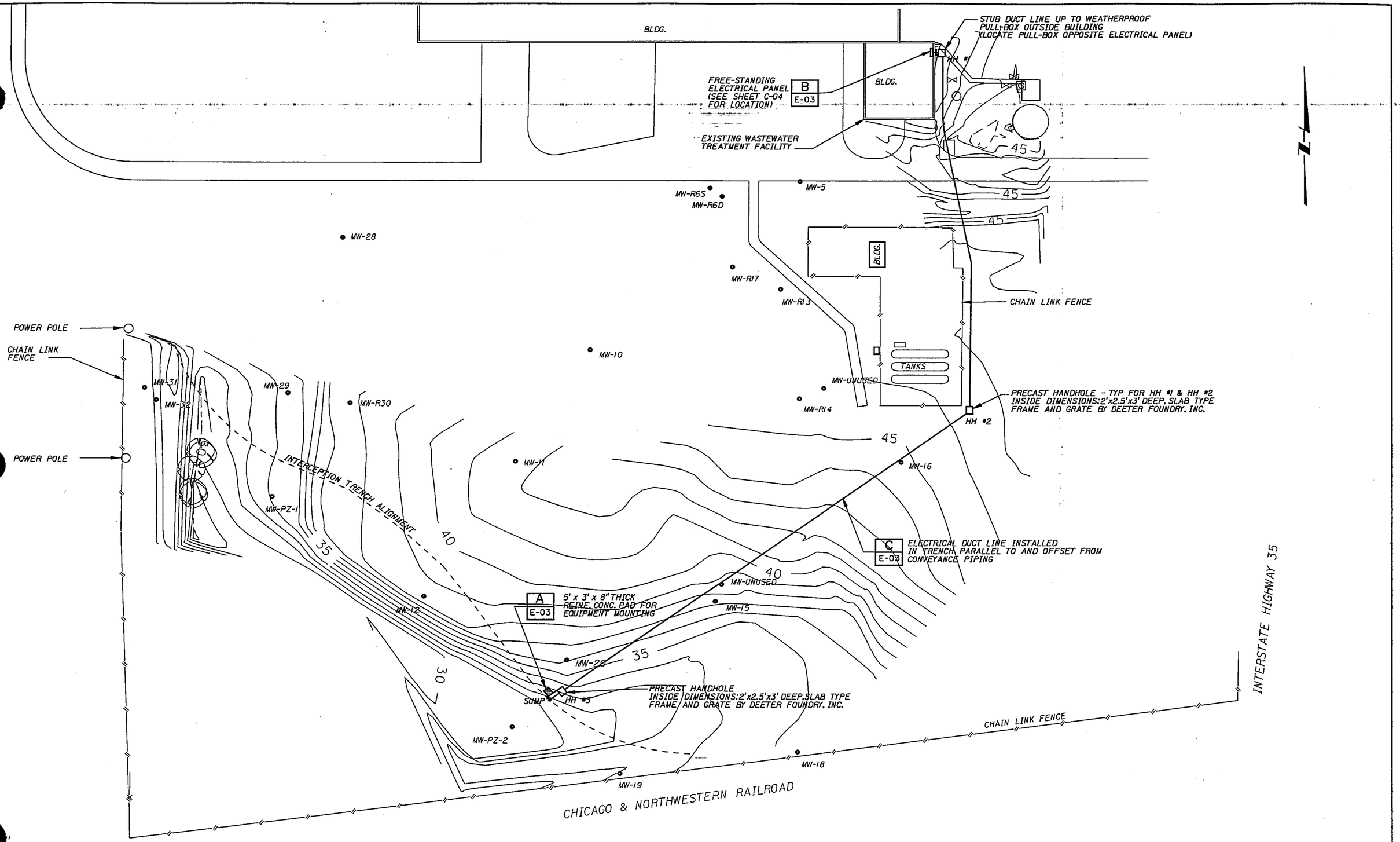

REV	DATE	BY	DESCRIPTION

SCALE: 1" = 50'

WARNING: 0 ½ 1 — IF THIS BAR DOES NOT MEASURE 1" THEN DRAWING IS NOT TO SCALE.

DESIGNED
DRAWN J. DRISCOLL
CHECKED K. LEWIS

SUBMITTED
PROJECT ENGINEER — REG. NO. — DATE
MONTGOMERY WATSON — REG. NO. — DATE

MONTGOMERY WATSON
Des Moines, Iowa

SAUER SUNDSTRAND COMPANY AMES, IOWA
GROUNDWATER INTERCEPTION SYSTEM DESIGN
AS-BUILT DRAWINGS

ELECTRICAL - PLAN VIEW

SHEET E-01

JOB No. 1217070.05090440 FILE No. _____ Date: 5/97

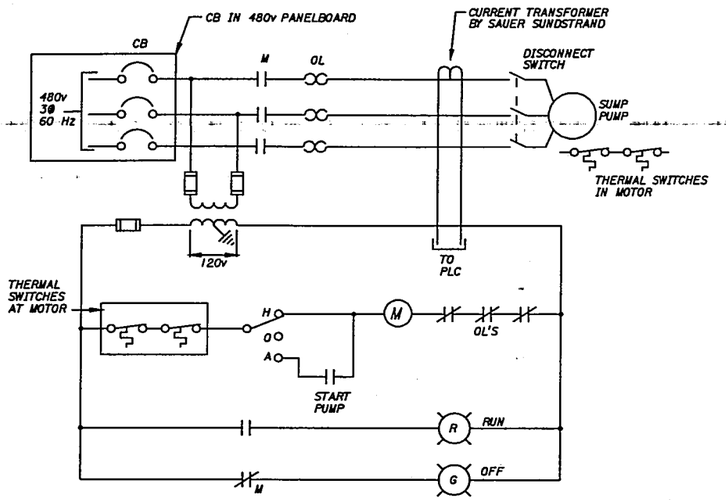

ELEMENTARY SCHEMATIC - SUMP PUMP

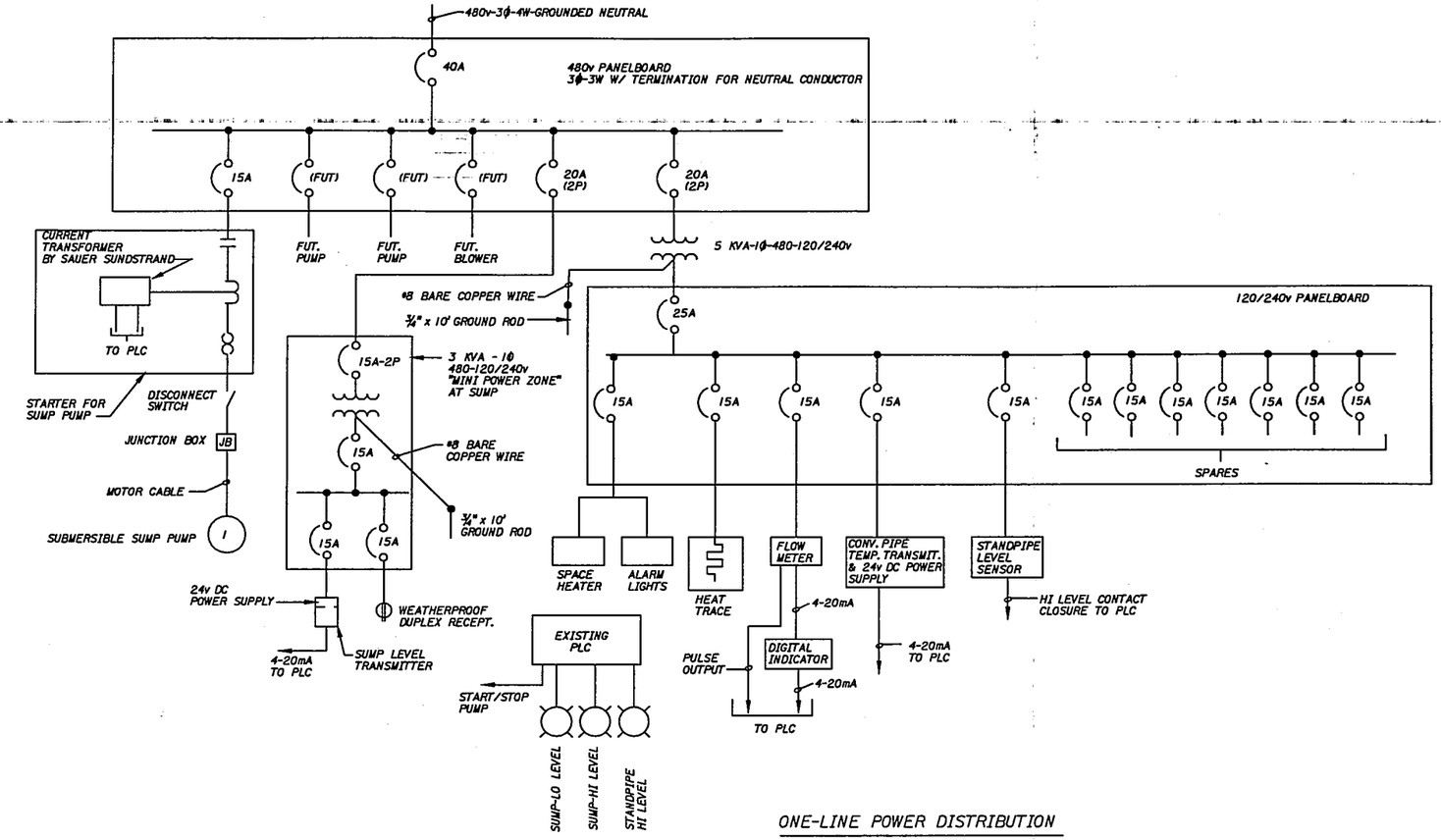

ONE-LINE POWER DISTRIBUTION

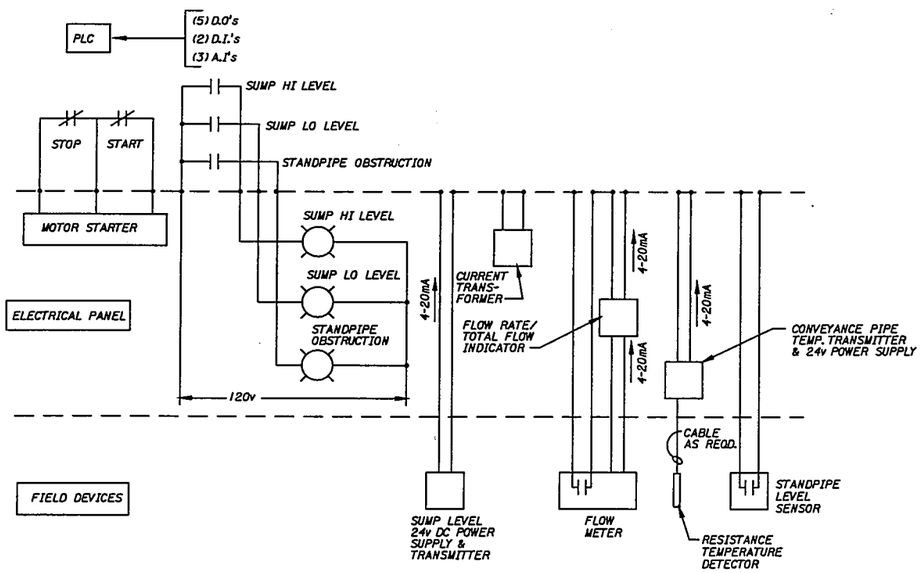

PLC INTERFACE DIAGRAM

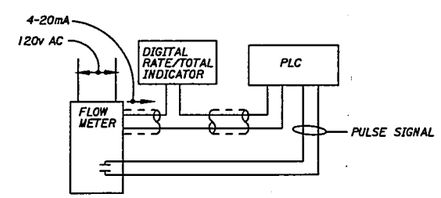

FLOW METER SCHEMATIC

REV	DATE	BY	DESCRIPTION

SCALE: NONE

WARNING: 0 1/2 1 — IF THIS BAR DOES NOT MEASURE 1" THEN DRAWING IS NOT TO SCALE.

DESIGNED
DRAWN J. DRISCOLL
CHECKED K. LEWIS

SUBMITTED
PROJECT ENGINEER REG. NO. DATE
MONTGOMERY WATSON REG. NO. DATE

MONTGOMERY WATSON
Des Moines, Iowa

SAUER SUNDSTRAND COMPANY AMES, IOWA
GROUNDWATER INTERCEPTION SYSTEM DESIGN
AS-BUILT DRAWINGS

DIAGRAMS AND SCHEMATICS

SHEET E-02

JOB No. 1217070.05090440 FILE No. ____ Date: 5/97

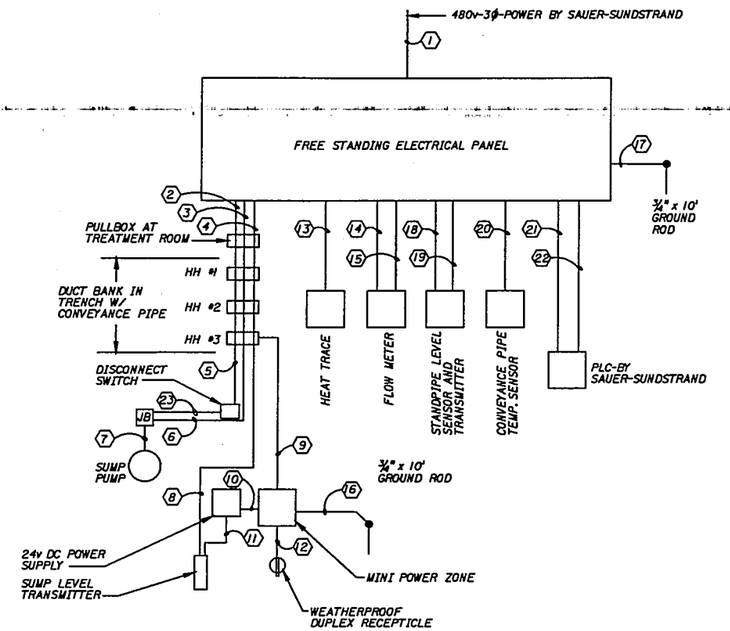

CONDUIT DEVELOPMENT

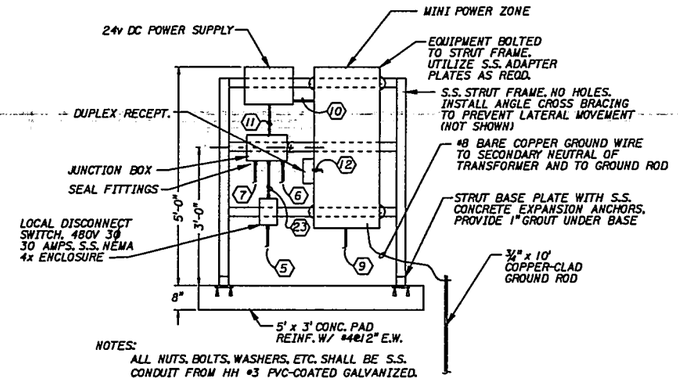

NOTES:
ALL NUTS, BOLTS, WASHERS, ETC. SHALL BE S.S.
CONDUIT FROM HH #3 PVC-COATED GALVANIZED.

EQUIPMENT MOUNTING DETAIL AT SUMP — A / E-01

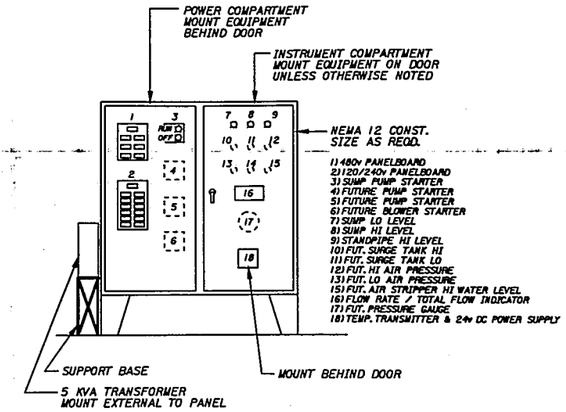

ELECTRICAL PANEL - LAYOUT — B / E-01

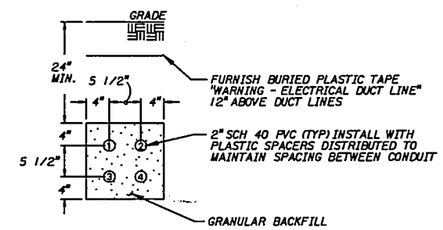

DUCT BANK DETAIL — C / E-01

DUCT NO.	FILL	REMARKS
1	3#8, 2#10, 2#12 GND	480V POWER
2	2#12	MOTOR THERMAL SW.
3	2,C #16 SH	4-20mA SUMP LEVEL
4	-	SPARE

CONDUIT NO.	CONDUIT SIZE	FILL	FROM	TO	REMARKS
1	-	-	SAUER-SUNDSTRAND	480v PANELBOARD	INCOMING 480v POWER
2	1"	3#8, 2#10, 2#12 GND	ELECTRICAL PANEL	PULL-BOX	480v POWER
3	¾"	2#12	ELECTRICAL PANEL	PULL-BOX	MOTOR THERMAL SWITCHES
4	¾"	2/c #16 SH	ELECTRICAL PANEL	PULL-BOX	4-20mA SUMP LEVEL
5	¾"	3#8, 1#12 GND	HH #3	DISCONNECT SWITCH	480v POWER (3 PHASE)
6	¾"	2#12	HH #3	JB FOR MOTOR CABLE	MOTOR THERMAL SWITCHES
7	-	MOTOR CABLE	SUMP PUMP	JB FOR MOTOR CABLE	BY MOTOR SUPPLIER
8	¾"	2/c #16 SH	SUMP LEVEL TRANSMITTER	HH #3	4-20mA SUMP LEVEL
9	¾"	2#10, 1#12 GND	HH #3	MINI POWER ZONE	480v POWER (1 PHASE)
10	¾"	2#12, 1#12 GND	MINI POWER ZONE	24v DC POWER SUPPLY	120v POWER
11	-	TRANS. CABLE	LEVEL TRANSMITTER	24v DC POWER SUPPLY	BY TRANSMITTER SUPPLIER
12	¾"	2#12, 1#12 GND	MINI POWER ZONE	DUPLEX RECEPTICLE	120v POWER
13	¾"	2#12, 1#12 GND	ELECTRICAL PANEL	HEAT TRACE	120v POWER
14	¾"	4#12, 1#12 GND	ELECTRICAL PANEL	FLOW METER	120v POWER/PULSE SIGNAL
15	¾"	2/c #16 SH	ELECTRICAL PANEL	FLOW METER	4-20mA FLOW SIGNAL
16	-	1#8 BARE COPPER	MINI POWER ZONE-SEC. NEUT.	GROUND ROD	GROUND
17	-	1#8 BARE COPPER	5 KVA TRANSFORMER-SEC. NEUT.	GROUND ROD	GROUND
18	¾"	2#12, 1#12 GND	120/240v PANELBOARD	STANDPIPE LEVEL SENSOR	120v POWER
19	¾"	2#12	120/240v PANELBOARD	STANDPIPE LEVEL SENSOR	HI LEVEL CONTACT CLOSURE
20	¾"	AS REQD.	CONV. PIPE TEMP. SENSOR	TEMP. TRANSMITTER	AS REQD. BY MFG.
21	¾"	11#4, 1#12 GND	120/240v PANELBOARD	PLC	PLC (5) DO's - (2) DI
22	1¼"	(3) 2/c #16 SH	120/240v PANELBOARD	PLC	PLC AI's (4-20mA)
23	¾"	3#8, 1#12 GND	DISCONNECT SWITCH	JB FOR MOTOR CABLE	480v POWER (3 PHASE)

CONDUIT SCHEDULE

CIRCUIT	DESCRIPTION	DIRECTORY	DIRECTORY	DESCRIPTION	CIRCUIT
-	2 POLE-25A	MAIN	-	-	-
1	1 POLE-15A	SP. HTR./AL. LGTS.	HEAT TRACE	1 POLE-15A	2
3	1 POLE-15A	FLOW METER	TEMP. SENSOR	1 POLE-15A	4
5	1 POLE-15A	LEVEL SENSOR	SPARE	1 POLE-15A	6
7	1 POLE-15A	SPARE	SPARE	1 POLE-15A	8
9	1 POLE-15A	SPARE	SPARE	1 POLE-15A	10
11	1 POLE-15A	SPARE	SPARE	1 POLE-15A	12

SCHEDULE: 120/240v, 1 PHASE PANELBOARD - ELECTRIC PANEL

NOTE: ALL FEEDER CIRCUIT BREAKERS SHALL BE GFI TYPE.

CIRCUIT	DESCRIPTION	DIRECTORY	DIRECTORY	DESCRIPTION	CIRCUIT
-	2 POLE-15A	MAIN	-	-	-
1	1 POLE 15A	LEVEL SENSOR	RECEPTICLE	1 POLE-15A	2
3	BLANK	-	-	BLANK	4
5	BLANK	-	-	BLANK	6
7	BLANK	-	-	BLANK	8

SCHEDULE: 120/240v, 1 PHASE PANELBOARD - SUMPS

NOTE: ALL FEEDER CIRCUIT BREAKERS SHALL BE GFI TYPE.

CIRCUIT	DESCRIPTION	DIRECTORY	DIRECTORY	DESCRIPTION	CIRCUIT
-	3 POLE-40A	MAIN	-	-	-
1 3 5	3 POLE-15A	SUMP PUMP	FUTURE	PUMP	2 4 6
7 9 11	FUTURE	PUMP	FUTURE	BLOWER	8 10 12
13 15	2 POLE-20A	5 KVA TRANSFORMER	SUMP MINI POWER ZONE	2 POLE-15A	14 16
17	BLANK	-	-	BLANK	18

SCHEDULE: 480v, 3PHASE - 3WIRE PANELBOARD

REV	DATE	BY	DESCRIPTION

SCALE: NONE

WARNING 0 ½ 1 — IF THIS BAR DOES NOT MEASURE 1" THEN DRAWING IS NOT TO SCALE.

DESIGNED
DRAWN J. DRISCOLL
CHECKED K. LEWIS

SUBMITTED
PROJECT ENGINEER REG. NO. DATE
MONTGOMERY WATSON REG. NO. DATE

MONTGOMERY WATSON
Des Moines, Iowa

SAUER SUNDSTRAND COMPANY AMES, IOWA
GROUNDWATER INTERCEPTION SYSTEM DESIGN
AS-BUILT DRAWINGS
CONDUIT DEVELOPMENT, SCHEDULES & DETAILS

SHEET E-03

JOB No. 1217070.05090440 FILE No. _____ Date: 5/97

Installation and Operating Instructions

Grundfos Redi-Flo4 Stainless Steel Submersible Pumps for Environmental Applications

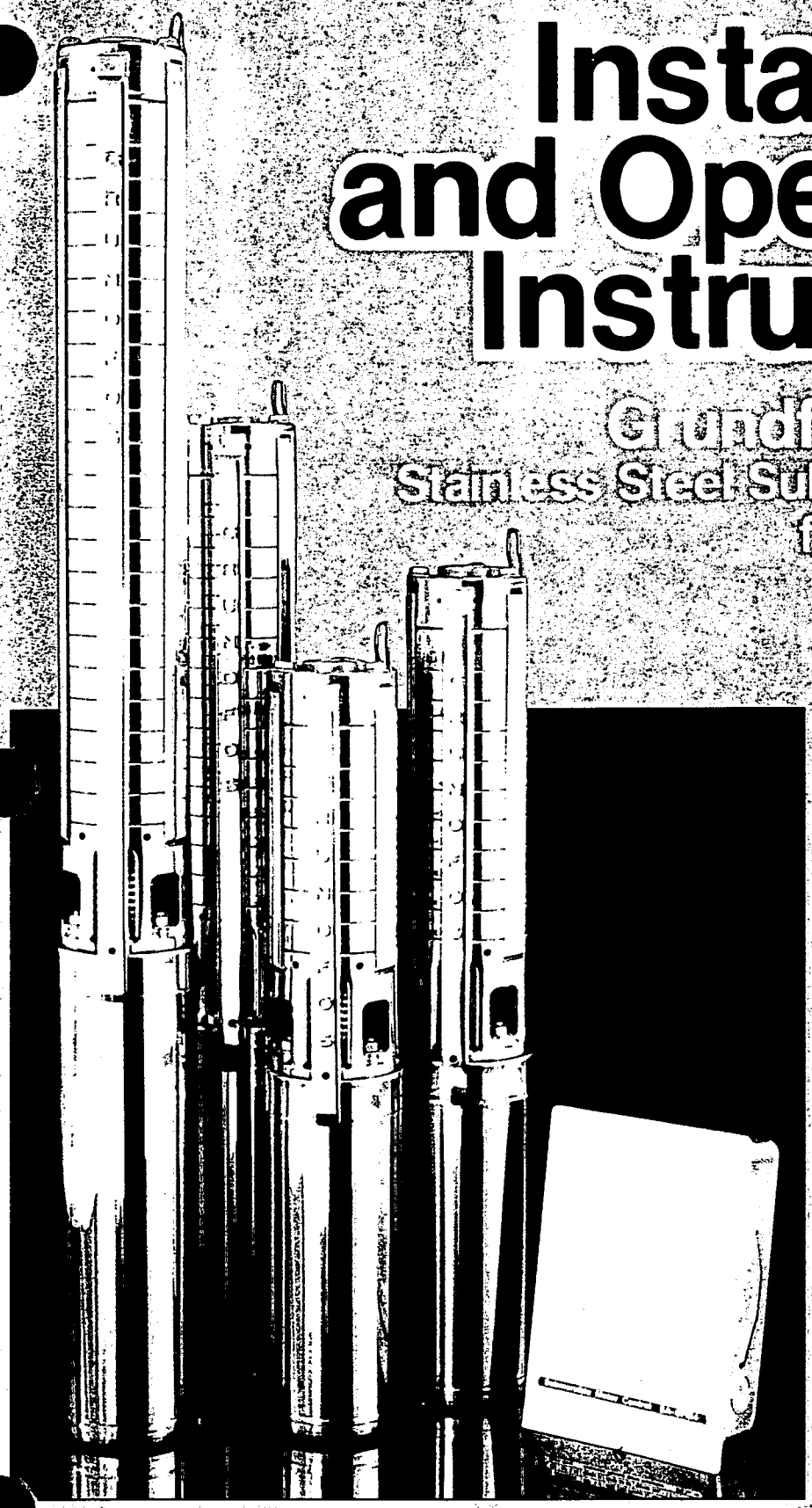

1. Shipment Inspection — Page 1
2. Pre-Installation Checklist — Page 1
3. Wire Cable Type — Page 2
4. Installation — Page 2
5. Electrical — Page 3
6. Start-Up — Page 4
7. Troubleshooting — Page 4

Please leave these instructions with the pump

Installation and Operating Instructions

TABLE OF CONTENTS

SECTION 1
Shipment Inspection . . . . . Page 1

SECTION 2
Pre-Installation Checklist . . . . . Page 1

SECTION 3
Wire Cable Type . . . . . Page 2

SECTION 4
Installation . . . . . Page 2

SECTION 5
Electrical . . . . . Page 3
- Engine Driven Generators 3
- Control Box, Single-Phase Motors 3
- High Voltage Surge Arresters 3
- Control Box and Surge Arrester Grounding 3
- Wiring Checks 3

SECTION 6
Start-Up . . . . . Page 4
Operation . . . . . Page 4

SECTION 7
Troubleshooting . . . . . Page 4
- Preliminary Tests 5
- Troubleshooting Chart 6
- Table A 7
- Table B 7
- Table C 8
- Table D 9

Installation and Operating Instructions

GRUNDFOS

Redi-Flo4

Your Grundfos Redi-Flo4 Environmental Pump is of the utmost quality. Combined with proper installation, your Grundfos pump will give you many years of reliable service.

To ensure the proper installation of the pump, carefully read the complete manual before attempting to install the pump.

SECTION 1.

Shipment Inspection

Examine the components carefully to make sure no damage has occurred to the pump-end, motor, cable or control box during shipment.

This Grundfos Redi-Flo4 Environmental Pump should remain in its shipping carton until it is ready to be installed. The carton is specially designed to protect it from damage. During unpacking and prior to installation, **make sure that the pump is not contaminated, dropped or mishandled.**

The motor is equipped with an electrical cable. **Under no circumstance should the cable be used to support the weight of the pump.**

You will find a loose data plate wired to the pump. It should be securely mounted at the well or attached to the control box.

SECTION 2.

Pre-Installation Checklist

Before beginning installation, the following checks should be made. They are all critical for the proper installation of this submersible pump.

☑ A. CONDITION OF THE WELL

If the pump is to be installed in a new well, the well should be fully developed and bailed or blown free of cuttings and sand. Dispose of discharged materials in accordance with the specific job site requirements. The stainless steel construction of the Redi-Flo4 Environmental Pump makes it resistant to abrasion; however, no pump, made of any material, can forever withstand the destructive wear that occurs when constantly pumping sandy groundwater.

Determine the maximum depth of the well, and the drawdown level at the pump's maximum capacity. Pump selection and setting depth should be based on this data.

The inside diameter of the well casing should be checked to ensure that it is not smaller than the size of the pump and motor.

☑ B. CONDITION OF THE WATER

Redi-Flo4 pumps are designed for pumping cold groundwater that is free of air or gases. Decreased pump performance and life expectancy can occur if the groundwater is not cold or contains air or gases.

☑ C. INSTALLATION DEPTH

Pumping sand or well sediment can occur when the pump motor is installed lower than the top of the well screen or within five feet of the well bottom. This can reduce the performance and life expectancy of the pump and should be avoided.

If the pump is to be installed in a lake, containment pond, tank or larger diameter well, the water velocity passing over the motor must be sufficient to ensure proper motor cooling. The minimum recommended water flow rates which ensure proper cooling are listed in Table A.

☑ D. ELECTRICAL SUPPLY

The motor voltage, phase and frequency indicated on the motor nameplate should be checked against the actual electrical supply.

SECTION 3.

Wire Cable Type

The type of wire used between the pump and control box should be approved for submersible pump applications. The conductor insulation should have a continuous Teflon® jacket with no splices and must be suitable for use with submersible pumps.

SECTION 4.

Installation

The riser pipe or hose should be properly sized and selected based on estimated flow rates and friction-loss factors.

A back-up wrench should be used when attaching a riser pipe or metallic nipple to the pump. The pump should only be gripped by the flats on the top of the discharge chamber. **The body of the pump, cable guard or motor should not be gripped under any circumstance.**

If steel riser pipe is used:

An approved pipe thread compound should be used on all joints. Make sure the joints are adequately tightened in order to resist the tendency of the motor to loosen the joints when stopping and starting.

When tightened, the first section of the riser pipe must not come in contact with the check valve retainer in the discharge chamber of the pump.

After the first section of the riser pipe has been attached to the pump, the lifting cable or elevator should be clamped to the pipe. **Do not clamp the pump.** When raising the pump and riser section, be careful not to place bending stress on the pump by picking it up by the pump-end only.

Make sure that the electrical cables are not cut or damaged in any way when the pump is being lowered in the well.

The drop cable should be secured to the riser pipe at frequent intervals using an approved clip or tape to prevent sagging, looping and possible cable damage.

If plastic or flexible riser pipe is used:

Use the correct compound recommended by the pipe manufacturer or specific job specifications. Besides making sure that joints are securely fastened, the use of a torque arrester is recommended when using these types of pipe.

Do not connect the first plastic or flexible riser section directly to the pump. Always attach a metallic nipple or adapter into the discharge chamber of the pump. When tightened, the threaded end of the nipple or adapter must not come in contact with the check valve retainer in the discharge chamber of the pump.

The drop cable should be secured to the riser pipe at frequent intervals using an approved clip or tape to prevent sagging, looping and possible cable damage.

IMPORTANT- Plastic and flexible pipe tend to stretch under load. This stretching must be taken into account when securing the cable to the riser pipe. Leave enough slack between clips or taped points to allow for this stretching. This tendency for plastic and flexible pipe to stretch will also affect the calculation of the pump setting depth. If the depth setting is critical, check with the manufacturer of the pipe to determine how to compensate for pipe stretch.

When these types of pipe are used, it is recommended that a safety cable be attached to the pump to lower and raise it. The discharge piece of Redi-Flo4 submersibles is designed to accommodate this cable. (Figure 4)

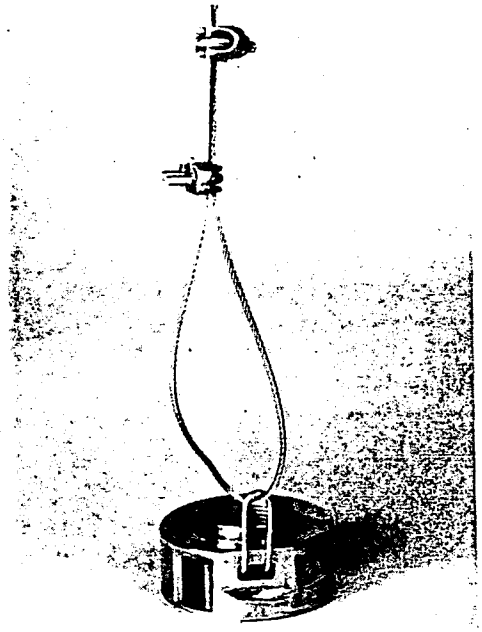

Protect the well from contamination:

While installing the pump, proper care should be used not to introduce foreign objects or contaminants into the well. The well should be finished off above grade to protect against surface water from entering the well, causing contamination.

NOTE: Teflon® is a registered trademark of DuPont.

SECTION 5.

Electrical

WARNING: To reduce the risk of electric shock during operation of this pump requires the provision of acceptable grounding. If the means of connection to the supply connected box is other than grounded metal conduit, ground the pump back to the service by connecting a copper conductor, at least the size of the circuit supplying the pump, to the grounding screw provided within the wiring compartment.

All electrical work should be performed by a qualified electrician in accordance with the latest edition of the National Electrical Code, local codes and regulations.

Verification of the electrical supply should be made to ensure the voltage, phase and frequency match that of the motor. Motor voltage, phase, frequency and full-load current information can be found on the nameplate attached to the motor. Motor electrical data can be found in Table C.
If voltage variations are larger than ± 10%, do not operate the pump.
Direct on-line starting is used due to the extremely fast run-up time of the motor (0.1 second maximum), and the low moment of inertia of the pump and motor. Direct on-line starting current (locked rotor amp) is between 4 and 6.5 times the full-load current.

Engine-Driven Generators

If the Redi-Flo4 pump is going to be operated using an engine driven generator, we suggest the manufacturer of the generator be contacted to ensure the proper generator is selected and used. See Table B for generator sizing guide.

Control Box, Single-Phase Motors

Single-phase motors must be connected as indicated in the motor control box. A typical single-phase wiring diagram using a Grundfos control box is shown. (Figure 5-A)

High Voltage Surge Arresters

A high voltage surge arrester should be used to protect the motor against lightning and switching surges. The correct voltage-rated surge arrester should be installed on the supply(line) side of the control box.(Figure 5-B) **The arrester must be grounded in accordance with the National Electric Code, local codes and regulations.**

Control Box and Surge Arrester Grounding

The control box shall be permanently grounded in accordance with the National Electrical Code and local codes or regulations. The ground wire should be a bare copper conductor at least the same size as the drop cable wire size. The ground wire should be run as short a distance as possible and be securely fastened to a true grounding point.

True grounding points are considered to be: a grounding rod driven into the water strata, steel well casing submerged into the water lower than the pump setting level, and steel discharge pipes without insulating couplings. If plastic discharge pipe and well casing are used, a properly sized bare copper wire should be connected to a stud on the motor and run to the control panel. Do not ground to a gas supply line. Connect the grounding wire to the ground point first and then to the terminal in the control box.

Wiring Checks

Before making the final wiring connections of the drop cable to the control box terminal, it is a good practice to check the insulation resistance to ensure that the cable is good. Measurements for a new installation must be at least 1,000,000 ohm. Do not start the pump if the measurement is less than this. If it is higher, finish wiring and verify that all electrical connections are made in accordance with the wiring diagram. Check to ensure the control box and high voltage surge arrester have been grounded.

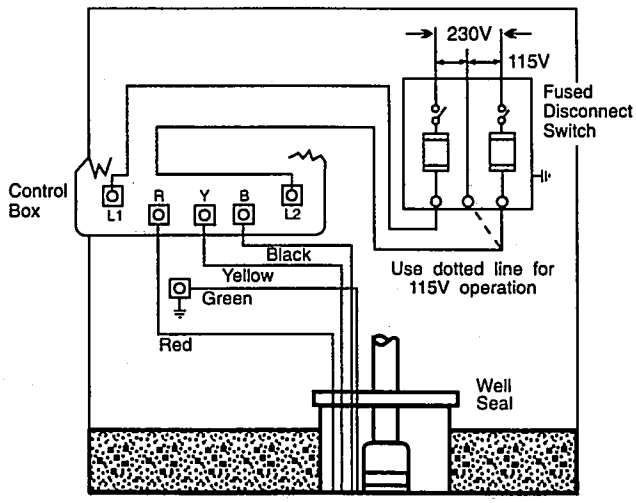

Single Phase Wiring Diagram for Grundfos Control Boxes

(Figure 5-A)

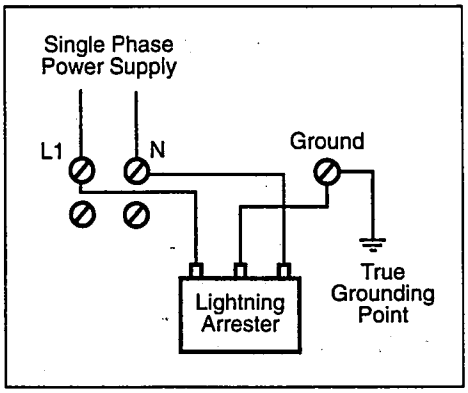

Single Phase Hookup

(Figure 5-B)

SECTION 6.

Start-Up

After the pump has been set into the well and the wiring connections have been made, the following procedures should be performed.

A. Attach a temporary horizontal length of pipe with installed gate valve to the riser pipe.

B. If required, make provisions to capture discharged fluids for disposal.

C. Adjust the gate valve one-third open.

D. Start the pump and let it operate until the water runs clear of sand and silt.

E. As the water clears, slowly open the gate valve in small increments until the desired flow rate of clear water is reached. The pump should not be operated beyond its maximum flow rating and should not be stopped until the groundwater runs clear.

F. If the groundwater is clean and clear when the pump is first started, the valve should still be opened until the desired flow rate is reached.

G. Disconnect the temporary piping arrangements and complete the final piping connections.

H. **Under no circumstances should the pump be operated for any prolonged period of time with the discharge valve closed.** This can result in motor damage due to overheating. A properly sized relief valve should be installed at the well head to prevent the pump from running against a closed valve.

I. Start the pump and test the system. Check and record the voltage and current draw on each motor lead.

Operation

A. The pump and system should be periodically checked for water quantity, pressure, drawdown, periods of cycling, and operation of controls. **Under no circumstances should the pump be operated for any prolonged periods of time with the discharge valve closed.** This can result in motor and pump damage due to overheating.

A properly sized relief valve should be installed at the well head to prevent the pump from running against a closed valve.

B. If the pump fails to operate, or there is a loss of performance, refer to Troubleshooting, Section 7.

SECTION 7.

Troubleshooting

The majority of problems that develop with submersible pumps are electrical, and most of these problems can be corrected without pulling the pump from the well. The following charts cover most of the submersible service work. As with any troubleshooting procedure, start with the simplest solution first; always make all the above-ground checks before pulling the pump from the well.

Usually only two instruments are needed – a combination voltmeter/ammeter, and an ohmmeter. These are relatively inexpensive and can be obtained from most water systems suppliers.

WHEN WORKING WITH ELECTRICAL CIRCUITS, USE CAUTION TO AVOID ELECTRICAL SHOCK. It is recommended that rubber gloves and boots be worn and that care is taken to have metal control boxes and motors grounded to power supply ground or steel drop pipe or casing extending into the well. WARNING: Submersible motors are intended for operation in a well. When not operated in a well, failure to connect motor frame to power supply ground may result in serious electrical shock.

Preliminary Tests

SUPPLY VOLTAGE

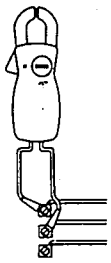

How to Measure

By means of a voltmeter, which has been set to the proper scale, measure the voltage at the control box. On single-phase units, measure between line and neutral.

What it Means

When the motor is under load, the voltage should be within ± 10% of the nameplate voltage. Larger voltage variation may cause winding damage.

Large variations in the voltage indicate a poor electrical supply and the pump should not be operated until these variations have been corrected.

If the voltage constantly remains high or low, the motor should be changed to the correct supply voltage.

CURRENT MEASUREMENT

How to Measure

By use of an ammeter, set on the proper scale, measure the current on each power lead at the control box. See the Electrical Data, Table C, for motor amp draw information.

Current should be measured when the pump is operating at a constant discharge pressure with the motor fully loaded.

What it Means

If the amp draw exceeds the listed service factor amps (SFA), check for the following:

1. Loose terminals in control box or possible cable defect. Check winding and insulation resistances.
2. Too high or low supply voltage.
3. Motor windings are shorted.
4. Pump is damaged causing a motor overload.

WINDING RESISTANCE

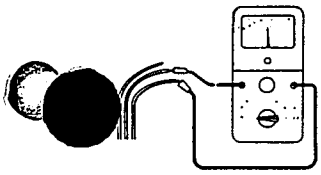

How to Measure

Turn off power and disconnect the drop cable leads in the control box. Using an ohmmeter, set the scale selectors to Rx1 for values under 10 ohms and and Rx10 for values over 10 ohms.

Zero-adjust the meter and measure the resistance between leads. Record the values.

Motor resistance values can be found in the Electrical Data, Table C. Cable resistance values are in Table D.

What it Means

If all the ohm values are normal, and the cable colors correct, the windings are not damaged. If any one ohm value is less than normal, the motor may be shorted. If any one ohm value is greater than normal, there is a poor cable connection or joint. The windings or cable may also be open. If some of the ohm values are greater than normal and some less, the drop cable leads are mixed. To verify lead colors, see resistance values in Electrical Data, Table C.

INSULATION RESISTANCE

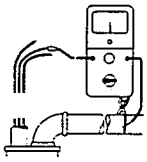

How to Measure

Turn off power and disconnect the drop cable leads in the control box. Using an ohm or mega ohmmeter, set the scale selector to Rx100K and zero-adjust the meter.

Measure the resistance between the lead and ground (discharge pipe or well casing, if steel).

What it Means

For ohm values, refer to table below. Motors of all Hp, voltage, phase and cycle duties have the same value of insulation resistance.

OHM VALUE	MEGAOHM VALUE	CONDITION OF MOTOR AND LEADS
		Motor not yet installed:
2,000,000 (or more)	2.0	New Motor
1,000,000 (or more)	1.0	Used motor which can be reinstalled in the well.
		Motor in well (Ohm readings are for drop cable plus motor):
500,000 - 1,000,000	0.5 - 1.0	A motor in reasonably good condition.
20,000 - 50,000	0.02 - 0.5	A motor which may have been damaged by lightning or with damaged leads. Do not pull the pump for this reason.
10,000 - 20,000	0.01 - 0.02	A motor which definitely has been damaged or with damaged cable. The pump should be pulled and repairs made to the cable or the motor replaced. The motor will still operate, but probably not for long.
less than 10,000	0 - 0.01	A motor which has failed or with completely destroyed cable insulation. The pump must be pulled and the cable repaired or the motor replaced. The motor will not run in this condition.

Troubleshooting Chart

FAULT	POSSIBLE CAUSES	HOW TO CHECK	HOW TO CORRECT
A. Pump Does Not Run	**1.** No power at pump panel.	Check for voltage at panel.	If no voltage at panel, check feeder panel for tripped circuits.
	2. Fuses are blown or circuit breakers are tripped.	Remove fuses and check for continuity with ohmmeter.	Replace blown fuses or reset circuit breaker. If new fuses blow or circuit breaker trips, the electrical installation and motor must be checked.
	3. Defective controls.	Check all safety and pressure switches for operation. Inspect contact in control devices.	Replace worn or defective parts.
	4. Motor and/or cable are defective.	Turn off power. Disconnect motor leads from control box. Measure the lead to lead resistances with the ohmmeter (Rx1). Measure lead to ground values with ohmmeter (Rx100K). Record measured values.	If open motor winding or ground is found, remove pump and recheck values at the surface. Repair or replace motor or cable.
	5. Defective capacitor.	Turn off the power, then discharge capacitor. Disconnect leads and check with an ohm-meter (Rx100K). When meter is connected, the needle should jump forward and slowly drift back.	If there is no needle movement, replace the capacitor.
B. Pump Runs But Does Not Deliver Water	**1.** Groundwater level in well is too low or well is collapsed.	Check well drawdown.	Lower pump if possible. If not, throttle discharge valve and install water level control.
	2. Integral pump check valve is blocked.	Install pressure gauge, start pump, gradually close the discharge valve and read pressure at shut-off. After taking reading, open valve to its previous position. Convert PSI to feet (For water: PSI x 2.31 ft/PSI = _____ ft.), and add to this the total vertical distance from the pressure gauge to the water level in the well while the pump is running. Refer to the specific pump curve for the shut-off head for that pump model. If the measured head is close to the curve, pump is probably OK.	If not close to the pump curve, remove pump and inspect discharge section. Remove blockage, repair valve and valve seat if necessary. Check for other damage. Rinse out pump and reinstall.
	3. Inlet strainer is clogged.	Same as B.2 above.	If not close to the pump curve, remove pump and inspect. Clean strainer, inspect integral check valve for blockage, rinse out pump and reinstall.
	4. Pump is damaged.	Same as B.2 above.	If damaged, repair as necessary. Rinse out pump and reinstall.
C. Pump Runs But at Reduced Capacity	**1.** Drawdown is larger than anticipated.	Check drawdown during pump operation.	Lower pump if possible. If not, throttle discharge valve and install water level control.
	2. Discharge piping or valve leaking.	Examine system for leaks.	Repair leaks.
	3. Pump strainer or check valve are clogged.	Remove pump and inspect.	Clean, repair, rinse out pump and reinstall.
	4. Pump worn.	Same as B.2 above.	If not close to pump curve, remove pump and inspect.

Troubleshooting (continued)

FAULT	POSSIBLE CAUSES	HOW TO CHECK	HOW TO CORRECT
D. Pump Cycles Too Much	**1.** Pressure switch is not properly adjusted or is defective.	Check pressure setting on switch and operation. Check voltage across closed contacts.	Re-adjust switch or replace if defective.
	2. Level control is not properly set or is defective.	Check setting and operation.	Re-adjust setting (refer to manufacturer data). Replace if defective.
	3. Plugged snifter valve or bleed orifice.	Examine valve and orifice for dirt or corrosion.	Clean and/or replace if defective.
E. Fuses Blow or Circuit Breakers Trip	**1.** High or low voltage.	Check voltage at pump panel. If not within ± 10%, check wire size and length of run to pump panel.	If wire size is correct, contact power company. If not, correct and/or replace as necessary.
	2. Control box wiring and components.	Check that control box parts match the parts list. Check to see that wiring matches wiring diagram. Check for loose or broken wires or terminals.	Correct as required.
	3. Defective capacitor.	Turn off power and discharge capacitor. Check using an ohmmeter (Rx100K). When the meter is connected, the needle should jump forward and slowly drift back.	If no meter movement, replace the capacitor.
	4. Starting relay (Franklin single phase motors only).	Check resistance of relay coil with an ohmmeter (Rx1000). Check contacts for wear.	Replace defective relay.

Table A

Minimum Water Flow Requirements for Submersible Pump Motors

MOTOR DIAMETER	CASING OR SLEEVE I.D. IN INCHES	MIN. FLOW PAST THE MOTOR (GPM)
4"	4	1.2
	5	7
	6	13
	7	21
	8	30

NOTES: 1. A flow inducer or sleeve must be used if the water enters the well above the motor or if there is insufficient water flow past the motor.

2. The minimum recommended water velocity over 4" motors is 0.25 feet per second.

Table B

Guide for Engine-Driven Generators in Submersible Pump Applications

	MINIMUM KILOWATT RATING OF GENERATOR FOR THREE-WIRE SUBMERSIBLE PUMP MOTORS	
MOTOR HP	EXTERNALLY REGULATED GENERATOR	INTERNALLY REGULATED GENERATOR
0.33 HP	1.5 KW	1.2 KW
0.50	2.0	1.5
0.75	3.0	2.0
1.0	4.0	2.5
1.5	5.0	3.0

NOTES:

1. Table is based on typical 80°C rise continuous duty generators with 35% maximum voltage dip during start-up of single phase motors.
2. Contact the manufacturer of the generator to assure the unit has adequate capacity to run the submersible motor.
3. If the generator rating is in KVA instead of kilowatts, multiply the above ratings by 1.25 to obtain KVA.

Table C

Electrical Data - 60 Hz Submersible Pump Motors

GRUNDFOS MOTORS

4 Inch (Two Wire) Motors - Control Box Not Required

60 Hz

HP	Ph	VOLT	Ser. Fact.	Circ. Brk. or Stnd. Fuse	Dual Element Fuse	AMPERAGE Full Load	AMPERAGE Lock Rotor	AMPERAGE S.F. Amps	FULL LOAD Eff.	FULL LOAD Power Factor	Line-to-Line Resistance(Ohms) Blk-Yel	Line-to-Line Resistance(Ohms) Red-Yel	KVA Code **	Maximum Thrust (lbs)	GRUNDFOS PART NO.
											Delta				
SINGLE PHASE															
1/3	1	230	1.75	15	5	3.0	25.5	4.4	47.3	63.0	6.8-8.2		S	750	79.952301
1/2	1	230	1.60	15	7	4.3	34.5	5.9	50.6	64.7	5.2-6.3		R	750	79.952302
3/4	1	230	1.50	20	9	6.6	40.5	8.0	57.0	70.0	3.2-3.8		N	750	79.952303
1	1	230	1.40	25	12	8.0	47.4	9.6	59.8	74.3	2.5-3.1		M	750	79.952304
1 1/2	1	230	1.30	35	15	10.6	60.8	13.1	64.3	77.2	1.9-2.3		L	750	79.952305

4 Inch (Three Wire) Motors

SINGLE PHASE

1/3	1	230	1.75	15	5	3.0	14.0	4.4	47.0	63.0	6.8-8.3	17.3-21.1	L	750	79.453301
1/2	1	230	1.60	15	7	4.3	20.0	5.9	50.7	64.6	4.7-5.7	15.8-19.6	L	750	79.453302
3/4	1	230	1.50	20	9	6.6	30.8	8.0	57.3	70.0	3.2-3.9	14-17.2	L	750	79.453303
1	1	230	1.40	25	12	8.0	36.3	9.6	59.8	74.5	2.6-3.1	10.3-12.5	K	750	79.453304
1 1/2	1	230	1.30	30	15	9.7	44.0	11.5	67.5	84.1	1.9-2.3	7.8-9.6	H	750	79.453305

Franklin Motors

(refer to the Franklin Submersible Motors Application Maintenance Manual)

Table D
Total Resistance of Drop Cable (OHMS)

The values shown in this table are for copper conductors. Values are for the total resistance of drop cable from the **Control box to the motor and back.**

To determine the resistance:

1. Disconnect the drop cable leads from the control box.
2. Record the size and length of drop cable.
3. Determine the cable resistance from the table.
4. Add drop cable resistance to motor resistance. Motor resistances can be found in the Electrical Data Chart, Table C.
5. Measure the resistance between each drop cable lead using an ohmmeter. Meter should be set on Rx1 and zero-balanced for this measurement.
6. The measured values should be approximately equal to the calculated values.

Wire Resistances

Distance From Control Box to Pump Motor (FT.)	12 AWG Wire Resistance (OHMS)	14 AWG Wire Resistance (OHMS)
10	0.03	0.05
20	0.06	0.10
30	0.10	0.15
40	0.13	0.21
50	0.16	0.26
60	0.19	0.31
70	0.23	0.36
80	0.26	0.41
90	0.29	0.46
100	0.32	0.51
110	0.36	0.57
120	0.39	0.62
130	0.42	0.67
140	0.45	0.72
150	0.49	0.77
160	0.52	0.82
170	0.55	0.87
180	0.58	0.93
190	0.62	0.98
200	0.65	1.03

Redi-Flo4

LIMITED WARRANTY

Redi-Flo4 Environmental Pumps manufactured by GRUNDFOS Pumps Corporation (GRUNDFOS) are warranted to the original user only to be free of defects in material and workmanship for a period of 18 months from date of installation, but not more than 24 months from date of manufacture. GRUNDFOS' liability under this warranty shall be limited to repairing or replacing at GRUNDFOS' option, without charge, F.O.B. GRUNDFOS' factory or authorized service station, any product of GRUNDFOS manufacture. GRUNDFOS will not be liable for any costs of removal, installation, transportation, or any other charges which may arise in connection with a warranty claim. Products which are sold but not manufactured by GRUNDFOS are subject to the warranty provided by the manufacturer of said products and not by GRUNDFOS' warranty. GRUNDFOS will not be liable for damage or wear to products caused by abnormal operating conditions, accident, abuse, misuse, unauthorized alteration or repair, or if the product was not installed in accordance with GRUNDFOS' printed installation and operating instructions.

To obtain service under this warranty, the defective product must be returned to the distributor or dealer of GRUNDFOS products from which it was purchased together with proof of purchase and installation date, failure date, and supporting installation data. Unless otherwise provided, the distributor or dealer will contact GRUNDFOS or an authorized service station for instructions. Any defective product to be returned to GRUNDFOS or a service station must be sent freight prepaid; documentation supporting the warranty claim and/or a Return Material Authorization must be included if so instructed.

GRUNDFOS WILL NOT BE LIABLE FOR ANY INCIDENTAL OR CONSEQUENTIAL DAMAGES, LOSSES, OR EXPENSES ARISING FROM INSTALLATION, USE OR ANY OTHER CAUSES. THERE ARE NO EXPRESS OR IMPLIED WARRANTIES, INCLUDING MERCHANTABILITY OR FITNESS FOR A PARTICULAR PURPOSE, WHICH EXTEND BEYOND THOSE WARRANTIES DESCRIBED OR REFERRED TO ABOVE.

Some jurisdictions do not allow the exclusion or limitation of incidental or consequential damages and some jurisdictions do not allow limitations on how long implied warranties may last. Therefore, the above limitations or exclusions may not apply to you. This warranty gives you specific legal rights and you may also have other rights which vary from jurisdiction to jurisdiction.

GRUNDFOS®

GRUNDFOS PUMPS CORP. • 2555 Clovis Ave. • Clovis, CA 93612
Sales Support Centers: Allentown, PA • Atlanta, GA • Chicago, IL
Canada: Mississauga, ONT

L-RF-IO-001 | Rev. 10/93
PRINTED IN USA

APPENDIX B-2

MANUFACTURER'S O&M MANUAL, PRESSURE TRANSDUCER

User's Manual

KPSI

Temperature Conversion

°F	°C	°F	°C	°F	°C
-328	-200	32	0	284	140
-292	-180	41	5	320	160
-256	-160	50	10	356	180
-220	-140	59	15	392	200
-184	-120	68	20	414	212
-148	-100	77	25	428	220
-130	-90	86	30	482	250
-112	-80	104	40	572	300
-94	-70	122	50	662	350
-74	-60	140	60	752	400
-58	-50	158	70	842	450
-40	-40	176	80	932	500
-22	-30	194	90	1112	600
-4	-20	212	100	1292	700
14	-10	248	120	1472	800

Temperature

$°F = 1.8\ °C + 32$

$°C = (°F - 32) \div 1.8$

KPSI User's Manual

Table of Contents

Introduction	2
Order Entry	3
Payment Options	3
Method of Delivery	3
Delivery Times	3
Customer Advocate	4
800 Number Application Support	4
Product Quality and Traceability	4
Talking to Real People	5
Fax-on-Demand	5
Intrinsic Safety	5
Moisture Protection	5
Warranty Protection	7
Repairable Products	7
Characteristics of KPSI Transducers	7
Care and Handling	8
Series 820 Sacrificial Anode	8
Polyurethane & Tefzel Jacketed Cable	9
Chemical Resistance of Polyurethane	10
Chemical Resistance of Tefzel	10
Quick Tips	10
Installation, Cable Lengths, Vacuum Readings Reverse Signal, Drying Transducers, Electrical Electrical Outputs, ½" Conduit Fitting, 4-20 mA Connection, VDC Connection, Lightning Strikes, Bending of Cable, Cable Compression, Quick Check, Securing Cable, Splicing, Marine Growth, ¼" NPT Pressure Fitting	
Water Level Transducers from KPSI	17
Application Diagrams	19

Introduction

KPSI is an ISO 9001 certified U.S. manufacturer of submersible and above ground pressure transducers for environmental, industrial and municipal applications. Our factory is located at 34 Research Drive, Hampton, Virginia 23666. Sales and Application support is offered from both our factory and our West Coast Sales office at 503 Vista Bella #11, Oceanside, California 92057.

KPSI transducers have been specified in hundreds of projects throughout the United States and Canada by geologists, system integrators, national engineering firms and a variety of government agencies. Many original equipment manufacturers (OEM) of dataloggers, data acquisition products, display instrumentation, PLC, SCADA and control systems specify our products for use with their offerings.

Typical applications include, but are not limited to, pump control, tank level monitoring, reservoirs, weirs, flumes, site remediation, stormwater/well monitoring, pump/pipeline pressures, steam, corrosive fluids, hydraulic systems, engine test stands, injection molding, air brakes, refrigerant gases and compressor pressures.

We strive to become a world leader in cost-effective pressure instrumentation through innovative solutions to pressure measurement problems. Critical to our success has been the ongoing implementation of services that directly respond to the changing needs of our customers.

Order Entry

We accept orders any way you wish to provide them . . . fax, phone, mail. In fact, many of our customers prefer to give us orders verbally with us providing the confirming copies. This lessens their paperwork and substantially speeds the order entry process. To ensure accuracy, all orders are reviewed by two technical specialists before being submitted for production. Orders are scheduled into production within 12 to 24 hours of receipt of order.

Payment Options

Net 30 terms are available upon approved credit. We also accept Visa/MasterCard, corporate/personal checks, money orders and cash. Many of our orders are shipped C.O.D.

Method of Delivery

All orders are shipped (FOB) from our factory in Hampton, Virginia. We typically use UPS but will use any shipper you specify. And, yes, we will drop-ship to addresses in Canada and the United States.

Delivery Times

We ship from stock a wide variety of all-media pressure sensors required by original equipment manufacturers. Shipment for standard products is typically 4 weeks but we do offer two Expedited Shipment Options for selected products (Series 27, 28, 30, 700, 710, 720, 730, 200S, 210S):

Option 1: Shipment 5 working days from receipt of order is $60.00 per unit.

Option 2: Shipment 10 working days from receipt of order is $30.00 per unit.

Customer Advocate

Rachel Newhouse is your advocate. Her office is in Hampton, Virginia, just steps from the production floor. Call her at 800-678-7226 if you have any questions about your order's delivery date, the manner in which it arrived or its contents. She is fully authorized to do "whatever it takes" to get detailed answers to your questions in as fast and efficient a manner as possible.

800 Number Application Support

Knowledgeable technical assistance is provided through our Sales and Application offices by calling 800-328-3665. We work with customers to understand their specific needs and then recommend the pressure measurement device that best fits their application.

Product Quality and Traceability

All pressure transducers are shipped with their own calibration sheet that specifies each unit's performance over temperature and pressure. This information is NIST traceable. We also keep a duplicate record of each calibration sheet in our record archives in Hampton, Virginia. Should you misplace your calibration sheet, you can call our Customer Advocate (Rachel Newhouse at 800-678-7226) and have a duplicate faxed or mailed to

you. In emergencies, Rachel will gladly provide the information during a phone discussion.

Talking to Real People

Yes, we do phones . . . our own phones. When you call during our regular office hours you get a cheery welcome from a "real, live person" who will answer your questions immediately or quickly find someone who can. During evenings and weekends, your call will be forward to our easy to use voice mail system. Our communications policy places highest priority on returning all messages promptly.

Fax-on-Demand

When all you want is information about KPSI, just dial 757-766-0849 24 hours a day, 7 days a week to reach our Fax-on-Demand Service. You will quickly be able to access data sheets, application bulletins, new product releases and a host of other documents that will help you solve your application problems.

Intrinsic Safety

Several of our products have FM, UL and CSA certification for intrinsic safety. To our knowledge, KPSI is the only manufacturer of submersible pressure transmitters who offers intrinsic safety on such a device.

Moisture Protection

KPSI supplies, free of charge, a Series 810 Vent Filter and Vapor Trap with each submersible pressure transducer to ensure reliable operation and long life.

The Series 810 is a replaceable vent tube dehumidifier intended for use with our submersible pressure transducers. This device protects sensitive electronic components from mildew, corrosion, rust and prevents the formation of a liquid column in the vent tube. Any such column directly affects calibration.

The Series 810 connects to the existing vent tube via a 10 inch flexible tube. The acrylic drying tube is 6 inches in length and ¾ inches in diameter. Inserted in each pull-off molded polypropylene drying tube end cap is a 20 micron polypropylene filter.

The drying tube is filled with 30 grams of indicating desiccant (drying agent). The maximum flow rate through the drying tube is 300 cubic centimeters per minute, more than sufficient to allow the transducer to respond to barometric changes. As air passes through the drying tube, moisture is absorbed by the desiccant. The desiccant changes from blue to a rose red as its drying capacity becomes diminished.

The desiccant can be rejuvenated after normal use by spreading it in a layer one granule deep and heating for one hour at 205° C or 400° F. The heating temperature is very important for if it is lower than 205° C or 400° F the desiccant will not rejuvenate. Alternatively, spare vent filters can be ordered by calling 800-328-3665. The Series 810 vent filter and water vapor trap can be

exposed to air, industrial gases, refrigerants, organic liquids and solvents. It should not be used when ammonia is present.

Warranty Protection

KPSI warrants its products against defects in material and workmanship for 12 months from date of shipment. Products not subjected to misuse will be repaired or replaced. THE FOREGOING IS IN LIEU OF ANY OTHER EXPRESSED OR IMPLIED WARRANTIES. KPSI reserves the right to make changes to any product herein and assumes no liability arising out of the applications or use of any product or circuit described. Products set out in this manual are not intended for life support applications.

Repairable Products

Depending upon the extent of damage, we can repair all of our pressure transducers having an amplified signal (i.e., 0-5 VDC or 4-20 mA). All repairs are performed by competent, expertly trained KPSI employees.

Characteristics of KPSI Transducers/Transmitters

All KPSI transducers incorporate our isolated diaphragm sensors which are specifically designed for use with hostile fluids and gases.

These sensors utilize a silicon pressure cell that has been fitted into a stainless steel package with an integral, compliant stainless steel barrier diaphragm. This sensor assembly is housed in a rugged 316 stainless steel (SS) case which provides for a variety of

pressure inputs. Our devices feature internal signal conditioning. Standard outputs are 4 to 20 mA and 0 to 5 VDC. Other outputs are available upon request.

All units have surge and reverse polarity protection. For ease of use in the field, KPSI transducers are permanently etched with our logo and name, wiring information, part number (P/N), serial number (S/N), date of manufacture (DOM), range, excitation and output.

Care and Handling

KPSI submersible transducers are designed for rugged use. But, they need protection from overpressure and sharp impact. When lowering them into a liquid, penetrate the surface slowly and only to the depth necessary. Avoid dropping the unit from above the surface. Clean transducers by rinsing them in a mild detergent. Direct probing of the diaphragm or attempt to remove protective screens (Series 700) can damage the sensor.

Product Descriptions

Series 820 Sacrificial Anode

KPSI offers the Series 820 zinc Sacrificial Anode as cathodic protection against galvanic corrosion for our submersible pressure transducers. Galvanic corrosion occurs when dissimilar metals are placed in contact with an electrolyte. This condition causes a potential difference to exist between the two metals, causing electron flow between them. Corrosion of the less corrosion-resistant metal is increased, and attack of the more resistant metal is decreased. The Series 820

Sacrificial Anode is clamped to the exterior of the transducer.

KPSI sacrificial anodes are made from a special zinc alloy formulated to guarantee continued effectiveness over long periods. Because the anodes are 95% galvanic, they will not corrode unless there is an electrolytic demand. The 2.38" diameter anodes maintain a high driving potential throughout their 12 month life, are self-sluffing and always expose new zinc for the best possible protection. For those applications where cable buoyancy is a problem, the 21 ounce sacrificial anode can be substituted for hanging weights.

Polyurethane & Tefzel Jacketed Cable

Most installations of our submersible pressure transducers connect our cable to a junction box. From this junction box, end-users run their own cable to the required instrumentation. Specifications for our polyurethane and Tefzel jacketed cable are as follows:

Weight	0.05 lbs/ft
Min. OD	0.28"
Max. OD	0.31"
Conductors	3,4
Insulation	PVC
Imprint	KPSI Hampton, VA

Shield	36 gauge spiral tinned copper
Wire	22 AWG (19/34) tinned copper stranding
Vent Tube	polyethylene, .060" OD

Chemical Resistance of Polyurethane

Potable Water, Waste Water, Borax, Butane, Animal Fat, Carbonic Acid, Citric Acid, Cod Liver Oil, Corn Oil, Glycerin, Glycol, Mineral Oils, Potassium Nitrate, Potassium Sulfate, Silicone Oils, Stoddard Solvent, Tannic Acid (10), Tartaric Acid, Turbine Oil.

Chemical Resistance of Tefzel

Acetic Acid (Glacial), Acetic Anhydride, Acetone, Aluminum Chloride, Anti-Freeze, Bromine, Calcium Chloride, Calcium Hydroxide, Chlorine, Copper Chloride, Ferrous Chloride, Hydrochloric Acid, Ketones, Lacquer Thinners, Sulfuric Acid.

Quick Tips

Installation

Most installations either suspend our submersible transducer in a perforated 1 ½" or 2" PVC instrumentation still well or attach the transducer (using our optional ½" M NPT fitting) to a rigid conduit. A minority of applications use our optional bracket to clamp the transducer to a fixed object (i.e., wall, ladder, step) or require the unit to be suspended without any protective still well or attachment device.

In all installations, care should be taken to ensure no damage occurs to the cable as cable damage represents one of the most frequent causes of transducer failure.

Cable Lengths

The maximum length of cable to be used with our submersible pressure transducers is largely dependent upon the type of electrical output of the pressure transducer. For a 0-5 VDC output, a maximum cable length of 100 feet is recommended as a voltage output is prone to electrical interference. This is not necessarily true for a 4-20 mA output.

A 4-20 mA signal can be transmitted much longer distances depending upon such factors as temperature, wire size, length of wire, power supply and voltage requirements of any devices to be powered.

At 25 C the 22 AWG conducting copper wire used in our polyurethane jacketed cable has a resistance of 16.45 ohms per 1000 feet.

Using Ohms Law (E=IR) where E=voltage, I=current and R=resistance, one finds that a 20 mA signal requires .329 volts to drive it along 1000 feet of 22 AWG copper wire (E=16.45 x .020).

To find out how much voltage is required to drive our Series 200S submersible pressure transducer's 4-20 mA signal 10,000 feet, just add the minimum power requirement of the 200S (9 VDC) to the resistance offered by 10,000 feet of our polyurethane jacketed cable (10,000÷1000 x .329=3.29). The resulting power requirement is 12.29 VDC (9 + 3.29).

If you also had a meter readout, datalogger or any other loop-powered instrumentation on this circuit you would have to add their voltage requirements in order to find the power supply required.

Vacuum Readings

This is a must for effective site remediation work requiring vapor extraction. Consult sales department for most appropriate transducer to use if you need to monitor pressure below atmosphere.

Reverse Signal

For some applications, it is important to know how far the water is from the top of the tank or the surface of the ground. If specified by the customer, our factory can set the transducer so that zero pressure reads full scale electrical output and maximum pressure reads zero output.

Drying Transducers

If you happen to get water in your vent tube and in the submersible pressure transducer, coil the cable and place the cable and transducer in a pan and place the pan in an oven at 50° C for 2 hours. This on-site remedy may do the trick. Be careful that the oven temperature does not exceed 50° C. Otherwise, you may damage the transducer and cable.

Alternatively, you may suspend the cable and unit in a vertical position overnight to allow water to drain from the transducer and the cable vent tube.

Variety of Electrical Outputs

Most applications call for a 0-5 VDC, 4-20 mA or a mV output. But where necessary, our transducers offer a broad choice of possibilities including, among others, 0-10 VDC, 0-2.5 VDC, 0-100 m, ratio metric mV/V.

½" Conduit Fitting

Submersible pressure transducers can be attached to a rigid conduit and the cable run through the conduit. To achieve this, all of our submersible transducers can be fitted with a ½" NPT male conduit fitting where the cable exits the transducer. This fitting can then be mated to a standard rigid conduit.

4-20 mA Connection

To connect a 2 wire 4-20 mA transducer to the power supply and readout take the + (red) lead of the transducer and connect it to the + terminal of the power supply. Connect the - (black) lead of the transducer to the + input terminal of the readout. Connect the - input terminal of the readout to the - terminal of the power supply. (See illustration on last page of this manual.)

VDC Connection

To connect a 3 wire VDC output transducer to the power supply and the readout connect the - terminal of the power supply to the - input terminal of the readout. Connect the - excitation (black) lead of the transducer to the - input terminal of the readout. Connect the + input terminal of the readout to the signal lead (white) of the transducer. Connect the + terminal of the power supply

to the + lead (red) of the transducer. (See illustration on last page of this manual.)

Lightning Strikes

This is one of the toughest problems to guard against. Our research team is working hard to come up with an economical means to prevent our units from being hit by lightning.

We have 2 pilot programs underway. The first uses lightning arrestors welded to the back of our submersible pressure transducers. Craig Spangler (800-678-7226), one of our research engineers, will be more than happy to discuss this project with you. Second, Karl Schmidt of Transtronics (913-841-3089) is housing our transducers in a plastic shell and extending the pressure sensing port with non-conductive tubing. He is reporting some successes in avoiding lightning damage.

However, we have not found a satisfactory solution . . . yet. We do recommend that the cable shield be connected to earth ground, not the power supply - input. Also, all metal materials that come into contact with our transducer should be grounded to earth ground.

Bending of Cable

Our polyurethane and Tefzel jacketed cables are quite flexible. Care needs to be taken to ensure that when bending the cable to suit your installation you do not crimp the vent tube inside the cable. Consequently, do not bend the cable more than a radius of 1 inch.

Cable Compression

Many users require a compression fitting to secure our Tefzel and polyurethane jacketed cable as it enters a junction box. You can put approximately 15 ft/lbs of force on this cable without damaging the cable or pinching the vent tube.

Transducer Quick Check

Ever wonder if your submersible transducer is working but you are unable to lift the cable up and down to check? Blow into the open end of the Series 810 vent filter. This causes an increase in pressure on the back side of our pressure sensor. If the transducer is working you will see a change in output. Typically, the average individual can exert about 1 PSI (27" of H_20) by blowing into the tube.

Securing Submersible Cable

Installers often use cable hangers (Chinese finger grips) that are typically used for hanging electrical cables and are readily available from most electronic supply stores. The cable hanger slides onto the cable from the bare-wire end. The cable hanger can be positioned anywhere on the underwater cable by pushing the ends together. Once positioned, the cable hanger expands and provides a snug grip on the underwater cable.

When mounting the transducer in a well casing, the cable hanger can be secured to a hook on the well plate or an eyebolt may be attached to the side of the well casing. The cable hanger loop is then secured to the eyebolt by using any number of types of fasteners.

A similar technique can be used when working in still wells for surface water level measurement. In this case, the loop-end of the cable hanger can be attached directly to a screw or bolt bored into the still well shelf.

Cable Splicing Kit

Our field installable cable splice allows you to splice our polyurethane and Tefzel cable. It is most commonly used for well applications where the more expensive Tefzel cable is required for suspension in corrosive media where the liquid level is fairly shallow but the well is hundreds of feet in depth. It also is used in those emergency situations where cable must be spliced together to get an application up and running.

Marine Growth

Warm ocean waters do encourage marine growth on our 316 SS submersible pressure transducers. Although no perfect solution has been found for this, we do know some users who are trying novel approaches.

You might try wrapping our transducers with copper wire similar to that found in wire scouring pads for doing dishes. Marine growth occurs on the copper and eventually erodes the copper and drops off or the copper is manually removed during routine maintenance. Alternatively, there are various companies that will impregnate/coat the 316 stainless steel with antifouling chemicals or coatings.

¼" NPT Pressure Fitting

Many of our submersible pressure transducers can be fitted with a removable or welded ¼" NPT male pressure fitting. Not only does this help when calibrating instrumentation, but it is extremely useful for those applications where one needs to tap into a pressure line that lies at the bottom of a tank, well or shallow pit.

Water Level Transducers from KPSI

Part No.	Description
Series 21	In-Line
Series 169	Depth (mV Out)
Series 173	Depth (mV Out)
Series 178	Irrigation (5% Static Accuracy)
Series 27,28,30	Bubbler
Series 200 S	Environmental
Series 210 S	High Accuracy
Series 700	Industrial (1% Static Accuracy)
Series 710	Industrial (0.25% Static Accuracy)
Series 720	Industrial (0.50% Static Accuracy)
Series 730	Industrial (0.1% Static Accuracy)
Options	Installed polyurethane and Tefzel jacketed vented cable (Specify Length)
	½" M NPT Conduit Attachment

	Mounting Clamp
Series 810	Vent Filter/Water Vapor Trap
Series 820	Sacrificial Anode
Micro-P	4 ½ Digit Readout
	Relay Option
	Isolated 4-20 mA Output

Note: Information contained in this User's Guide is subject to change without notice. Contact our Information Hotline (800-328-3665) for updates.

KPSI is a US manufacturer of all-media above ground and submersible pressure transducers. All products are shipped from our factory at 34 Research Drive, Hampton, Virginia 23666. Warranty and repair questions are handled by our staff in Hampton. They can be reached by calling 800-678-7226.

Application support and ordering information is supplied by our Sales and Application staff in Oceanside, California (800-328-3665) and in Hampton, Virginia (800-678-7226).

Customer Representatives are available from Monday through Friday from 8 A.M. until 5 P.M.

FAX: 619-967-0563

We accept fax orders 24 hours a day, 7 days a week.
VISA/MASTERCARD ACCEPTED

KPSI . . . Your pressure measurement source!

Applications Diagrams

General Installation

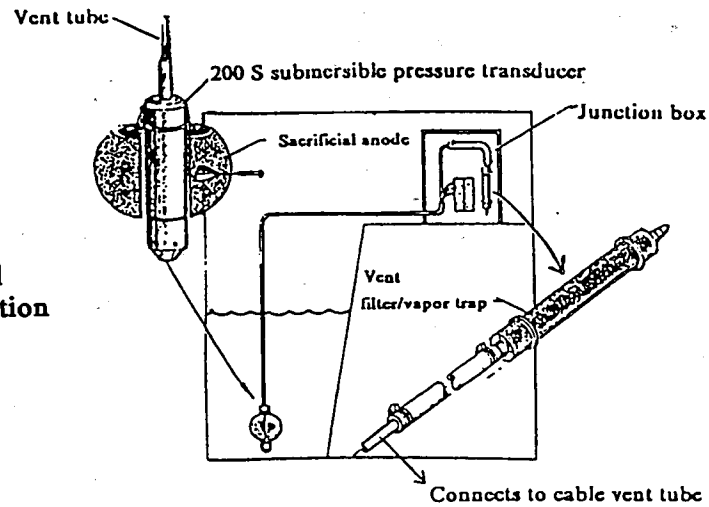

Series 810 attached to vented cable

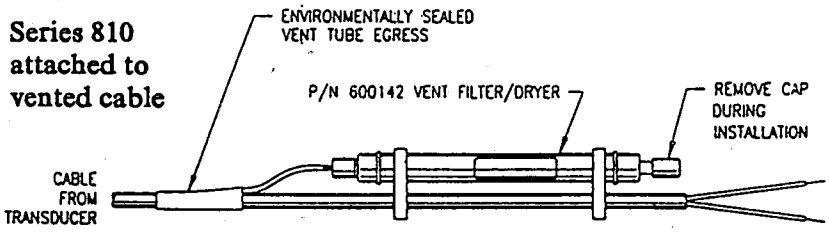

0-5 VDC Configuration

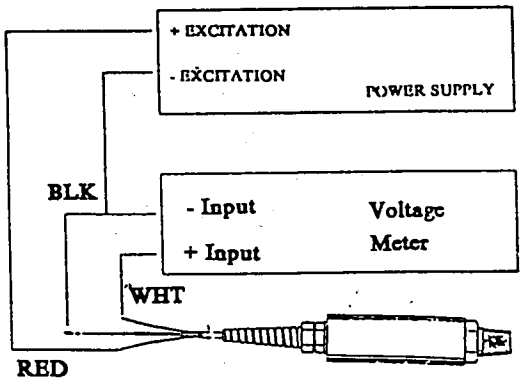

Note: This is a typical single-ended installation. Refer to your power supply and instrumentation manufacturer for the specifics of your application.

4-20 mA Configuration

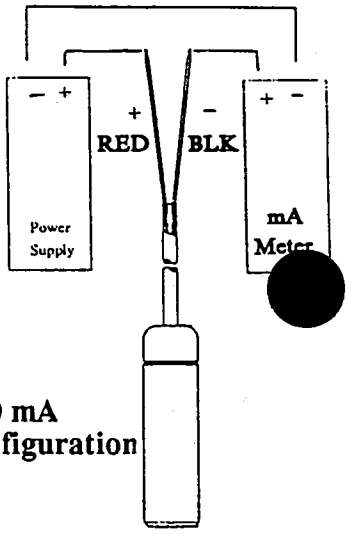

Note: This is a typical current loop installation. Refer to your power supply and instrumentation manufacturer for the specifics of your application.

Pressure Conversion

PSI	MBAR	BAR	MM HG	MM H20	IN HG	IN H20
1	68.95	.0690	51.71	703.1	2.036	27.68
2	137.9	.1379	103.4	1406	4.072	55.36
3	206.8	.2068	155.1	2109	6.108	83.04
4	275.8	.2758	206.8	2812	8.144	110.7
5	344.7	.3447	258.6	3515	10.18	138.4
6	413.7	.4137	310.3	4218	12.22	166.1
7	482.6	.4826	362.0	4922	14.25	193.8
8	551.6	.5516	413.7	5625	16.29	221.4
9	620.5	.6205	465.4	6328	18.32	249.1
10	689.5	.6895	517.1	7031	20.36	276.8
14.7	1014	1.014	760.2	10340	29.93	406.9
15	1034	1.034	775.7	10550	30.54	415.2
20	1379	1.379	1034	14060	40.72	553.8
25	1724	1.724	1293	17580	50.90	692.0
30	2068	2.068	1551	21090	61.08	830.4
40	2758	2.758	2068	28120	81.44	1107
50	3447	3.447	2586	35150	101.8	1384
100	6895	6.895	5171	70310	203.6	2768
150	10340	10.34	7757	105500	305.4	4152
200	13790	13.79	10340	140600	407.2	5538
250	17240	17.24	12930	175800	509.0	6920

Altitude

PSI	14.7	14.43	14.18	13.9	13.67	12.7	10.1	6.75	2.72
FEET	0	500	1000	1500	2000	4000	10K	20K	40K

California

503 Bella, #11
Oceanside, California 92057
P: 800-328-3665
F: 619-967-0563
Web Site: www.kpsi.com

Virginia

34 Research Drive
Hampton, Virginia 23666
P: 800-678-7226
F: 757-865-8744
E-Mail: kpsi@cts.com

APPENDIX B-3

MANUFACTURER'S O&M MANUAL, HEAT TRACING

Raychem

Installation and
Maintenance Guide

Auto-Trace®
Heat-Tracing Systems for Ordinary and Hazardous Division 2 Locations

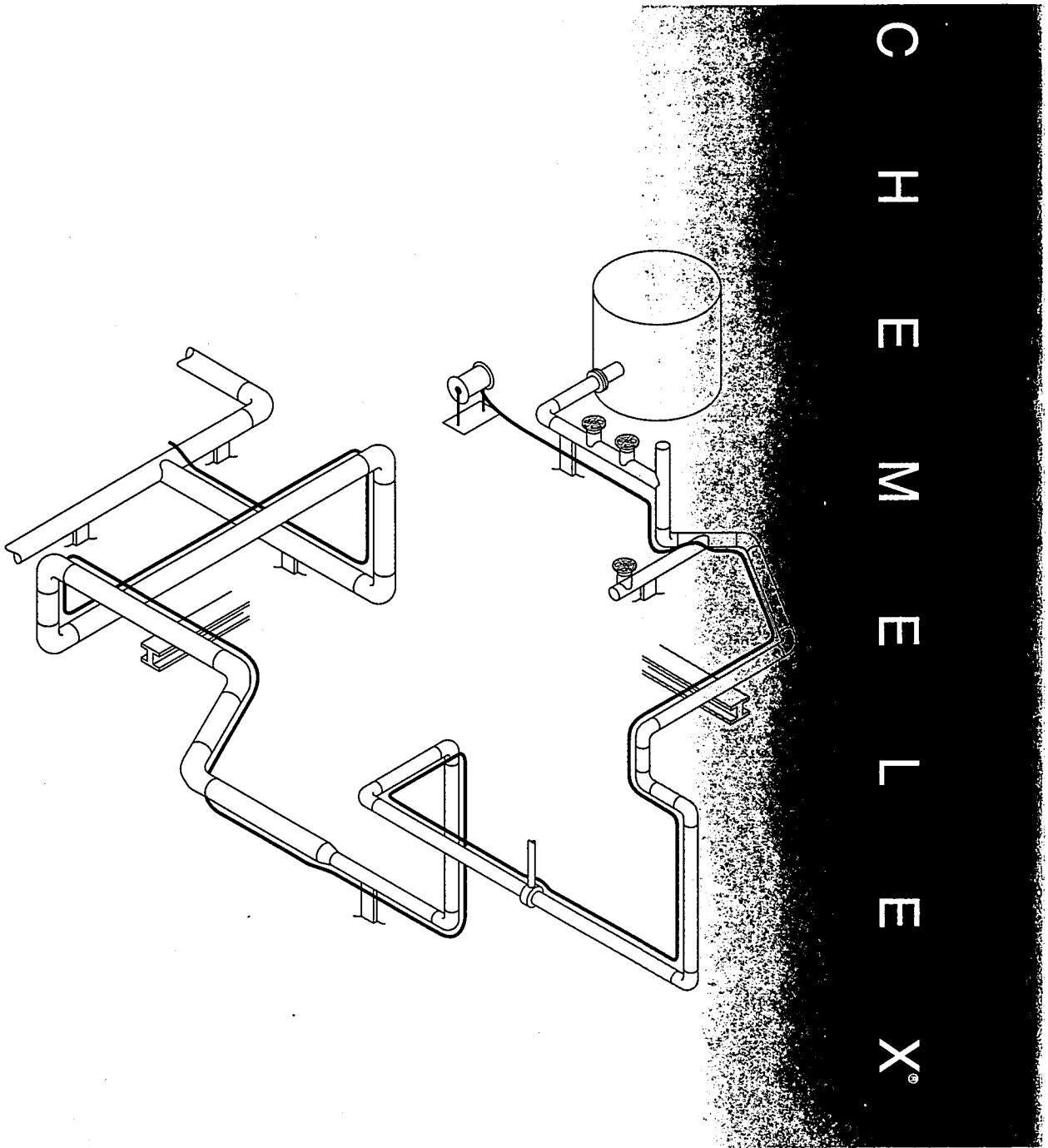

CHEMELEX®

⚠

WARNING: Fire and shock hazard. This heat tracing system must be installed correctly to ensure proper operation and to prevent shock and fire. Read these important warnings and carefully follow all the installation instructions.

- **To minimize the danger of fire from sustained electrical arcing if the heating cable system is damaged or improperly installed, use a ground-fault protection device (GFPD). Arcing may not be stopped by conventional circuit breakers.**
- **Failure to properly install the correct component kits can cause arcing and fire. Do not use other kits or substitute parts. Do not use vinyl electrical tape. Use only AutoMatrix or PolyMatrix connection kits and follow the installation instructions supplied with them.**
- **Damaged heating cable or components can cause electrical shock, arcing and fire. Do not attempt to repair or energize damaged cable. Remove damaged sections at once and replace them with a new length using the appropriate Raychem splice kit. Replace damaged components.**
- **The black heating cable core and fibers are electrically conductive and can short. They must be properly insulated and kept dry.**
- **Damaged bus wires can overheat or short. Do not break bus wire strands when stripping the heating cable.**
- **Damaged heating cable can cause electrical arcing or fire. Do not use metal attachments such as pipe straps or tie wire. Use only Raychem approved tapes and cable ties to secure the cable to the pipe.**
- **Re-use of a grommet, or use of the wrong grommet, can cause leaks, cracked components, shock or fire. Be sure the type of grommet is correct for the heating cable being installed. Use a new grommet whenever the cable has been pulled out of the termination.**

Table of Contents

1.0	**General Information**	1
	1.1 Use of the Manual	1
	1.2 Electrical Codes	1
	1.3 Safety Guidelines	1
2.0	**Heating Cable Installation**	2
	2.1 Heating Cable Storage	2
	2.2 Preinstallation Checks	2
	2.3 Heating Cable Installation	3
3.0	**Heating Cable Connections**	15
4.0	**Thermostat Controls**	17
	4.1 Ambient-Sensing Thermostats	17
	4.2 Line-Sensing Thermostats	17
5.0	**Thermal Insulation**	18
	5.1 Preinstallation Inspection	18
	5.2 Insulation Installation	18
	5.3 Postinstallation Inspection	19
6.0	**Power Supply and Electrical Protection**	20
	6.1 Voltage Rating	20
	6.2 Electrical Loading	20
	6.3 Ground-Fault Protection	20
7.0	**Commissioning**	21
	7.1 Precommissioning Tests	21
	7.2 Ambient-Sensing Controlled Systems	21
	7.3 Line-Sensing Controlled Systems	21
	7.4 Backup (Redundant) Systems	21
8.0	**Preventive Maintenance**	22
	8.1 Maintenance Procedures	22
	8.2 Maintenance Records	22
	8.3 Repairs	22
	8.4 Pipe Equipment Maintenance	22
9.0	**Heating Cable Testing**	23
	9.1 Insulation Resistance Testing	23
	9.2 Insulation Resistance Criteria	25
10.0	**Troubleshooting Guide**	26
	10.1 Troubleshooting Flowchart	26
	10.2 Questions, Steps, and Corrective Actions	32
11.0	**Fault Location Techniques**	37
	11.1 Ratio Method	37
	11.2 1/R Method	37
	11.3 Capacitance Method	37
	11.4 Raychem DET-2200 Fault Locator	39
Appendix A	**Inspection Record**	44

1.0 General Information

1.1 Use of the Manual

This manual covers Raychem Chemelex self-regulating heat-tracing systems for industrial pipe systems in ordinary and hazardous Division 2 locations only. Contact your Raychem representative for other applications and products (such as RMI™) and for Division 1 locations.

This manual assumes that the proper heat-tracing design has been completed according to the *Chemelex Design Guide for Insulated Pipes and Tubing, Chemelex Heat-Tracing Systems for Ordinary and Division 2 Locations* ("Chemelex design guide") or the TraceCalc® software.

Chemelex self-regulating heat-tracing systems are approved only when used with AutoMatrix™ and PolyMatrix® connection component systems. Follow the installation instructions included with the connection components kits. For the Raychem warranty to apply, the instructions in this manual and in the termination kits must be followed.

Use the proper Chemelex heating cable for the specific application. Refer to the *Chemelex Design Guide for Insulated Pipes and Tubing, Chemelex Heat-Tracing Systems for Ordinary and Division 2 Locations.*

1.2 Electrical Codes

Sections 427 (pipelines and vessels) and 500 (classified locations) of the 1993 National Electrical Code (NEC), and Part 1 of the Canadian Electrical Code, Sections 18 (hazardous locations) and 62 (Fixed Electric Space and Surface Heating), govern the installation of electrical heat-tracing systems. All heat-tracing-system installations must be in compliance with these and any other applicable national or local codes.

1.3 Safety Guidelines

The safety and reliability of any heat-tracing system depends on both the quality of the products selected and the manner in which they are designed, installed, and maintained. Incorrect handling, installation, or maintenance of any of the system components can cause underheating or overheating of the pipe or damage to the heating cable system and may result in system failure, electric shock, or fire. The information, warnings, and instructions contained in this guide are important. Read and follow them carefully to minimize these risks and to insure that the system performs reliably.

Throughout the guide the following symbol:

⚠ **Warning:**

identifies particularly important safety warnings that must be followed to reduce risk of fire.

2.0 Heating Cable Installation

2.1 Heating Cable Storage

Store the heating cable and components in a clean and dry place.

Store them at temperatures between -40°F and 140°F (-40°C and 60°C).

Do not store the heating cable in high-traffic areas. Protect it from mechanical damage.

2.2 Preinstallation Checks

Step 1. Check the materials received

Verify the heating cable catalog number and quantity against the bill of materials. The heating cable catalog number is printed on the cable jacket, immediately following the words "HEATING CABLE" as shown in Figure 2.1.

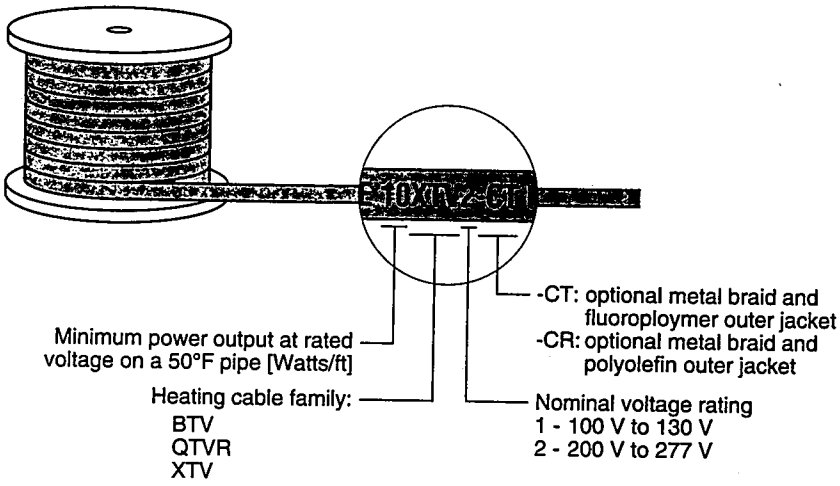

Figure 2.1. Cable catalog number

Check that the correct components and quantities are present.

Inspect the heating cable and components for in-transit damage.

For braided heating cable only, measure the cable insulation resistance for each reel by using the procedure outlined for Test A, in section 9.1 on page 24.

Step 2. Check the pipe to be heat-traced

Verify that the pipe has been pressure-tested, and that all equipment and supports are installed.

Verify that any paint or coatings used on the pipe are dry.

Walk the pipe system and plan the routing of the heating cable on the pipe. Note the accessibility of all parts of the line, including power locations.

Remove any sharp edges or burrs that could damage the heating cable.

Step 3. Plan the installation

Compare design drawings with the actual pipe and note any differences in:

- Pipe length and pipe sizes.
- The number of valves, indicator gauges, flanges, and other components.

- The number of pipe supports. These may not be marked on the design drawing, but there should be a note indicating the amount of heating cable designed into each circuit for pipe supports.

Step 4. Mark location of terminations

While walking the pipe, mark the location of power connections, splices, and tees on the pipe with a vivid-color spray paint or a marker.

In cases where the connection kit cannot be mounted on the pipe, brackets or other supports will have to be made.

2.3 Heating Cable Installation

Use the "run and loop" method to install the cable on the pipe. The run and loop method involves three steps:

1. Paying out the cable.

2. Attaching the cable to the pipe.

3. Wrapping heat sinks.

Important:

- *Extra heating cable allowances will have to be made for heat sinks, such as pumps and valves, and for service loops at connections. Do not cut the heating cable from the reel until it is attached over the entire length of pipe and all allowances are verified.*
- *If the heating cable will be left exposed for some time, protect the ends of the heating cable with plastic bags to prevent water from getting in.*
- *Do not drag the cable over the ground or pull it over sharp edges.*
- *If the cable snags while paying out, stop pulling! Correct the problem before continuing.*
- *Do not walk on the cable or run over it with equipment.*

2.3.1 Paying out the cable

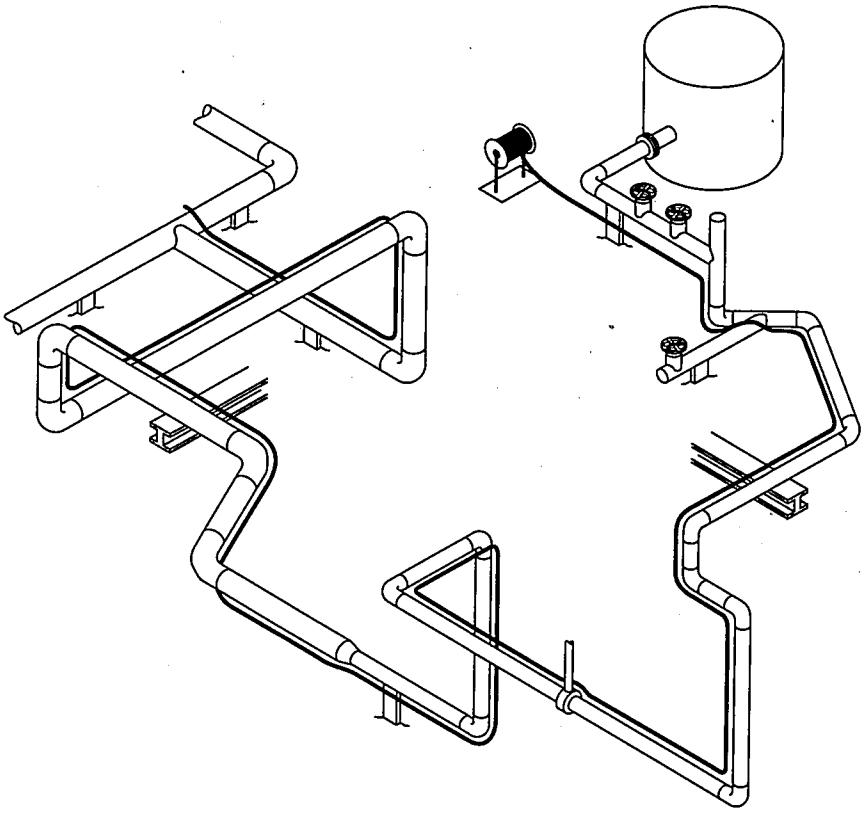

Figure 2.2. Paying out the cable

Mount the reel on a holder and place it near either end of the pipe run to be traced. Use a reel holder that pays out smoothly with little tension. Avoid jerking the cable while pulling.

Pay out the cable and loosely string it along the pipe, making sure that the cable is always next to the pipe when crossing obstacles. If the cable is on the wrong side of a crossing pipe or I-beam, you will have to reinstall it or cut and splice it.

Should multiple heating cables be required, there are two ways of paying out multiple heating cables along a pipe. Both ways are described below.

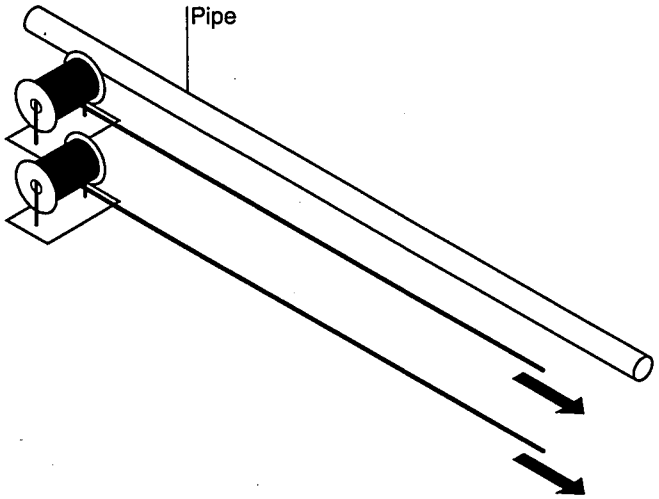

Figure 2.3. Multiple cables paid out from two reels

One method is to pay out heating cable from multiple reels simultaneously (see Figure 2.3). This method works with two or more heating cables. However, it may increase waste by leaving unused lengths from multiple reels.

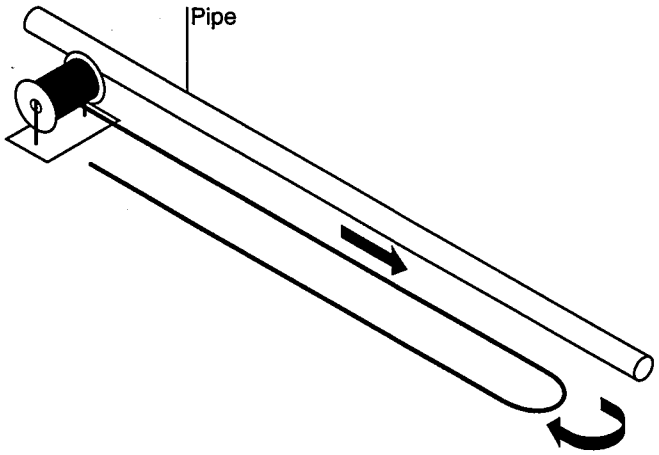

Figure 2.4. Multiple cable run paid out from one reel

Alternatively, a single reel may be used (see Figure 2.4). This method is generally the easiest for relatively straight, simple pipe runs. With this method, one large loop is pulled for the entire circuit while one end remains secured with tape at the beginning of the circuit.

2.3.2 Attaching the heating cable

The heating cable may be installed straight, spiraled, or in multiple runs as required by the design.

a. Straight heat tracing

Whenever possible position the heating cable on the lower section of the pipe as shown in Figure 2.5 to protect it from damage.

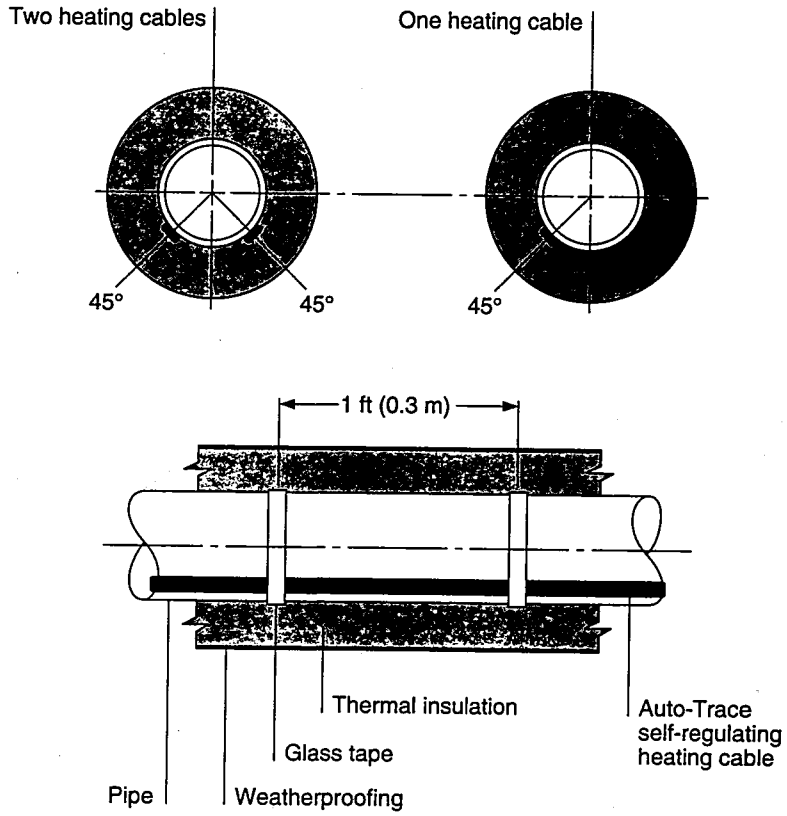

Figure 2.5. Positioning the heating cable

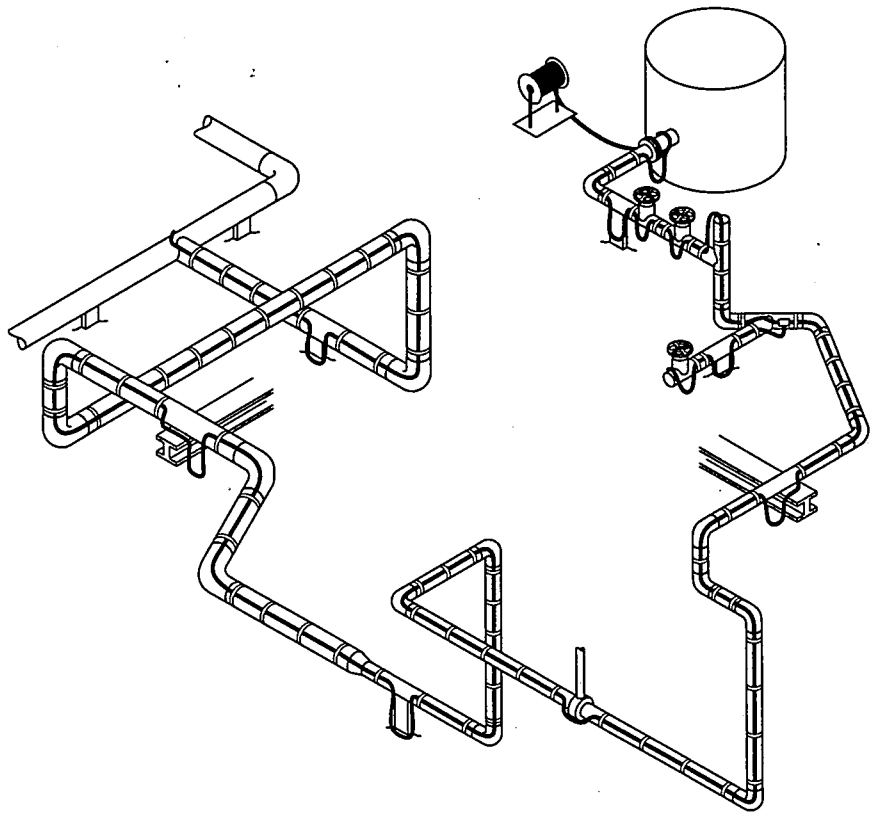

Figure 2.6. Attaching the heating cable

Starting from the end opposite to the reel, tape the heating cable on the pipe at every foot as shown in Figure 2.6. If aluminum tape is used, apply it over the entire length of the heating cable after the cable has been secured with glass tape (per instructions in Section 2.3.3). Work your way back to the reel.

Leave 18 inches of heating cable at the power connection, at all sides of splices and tees, and at the end seal to provide for service loops as shown in Figure 3.1.

Provide extra heating cable allowance for each heat sink (pipe support, valve, flange, instrument) by pulling extra material from the reel and leaving it as a loop taped in front of and behind the heat sink. Obtain the required loop length from the design drawing or the Chemelex design guide.

b. Spiraled heat tracing

When the design calls for spiraling, begin by suspending a loop at every 10-foot pipe section as shown in Figure 2.7.

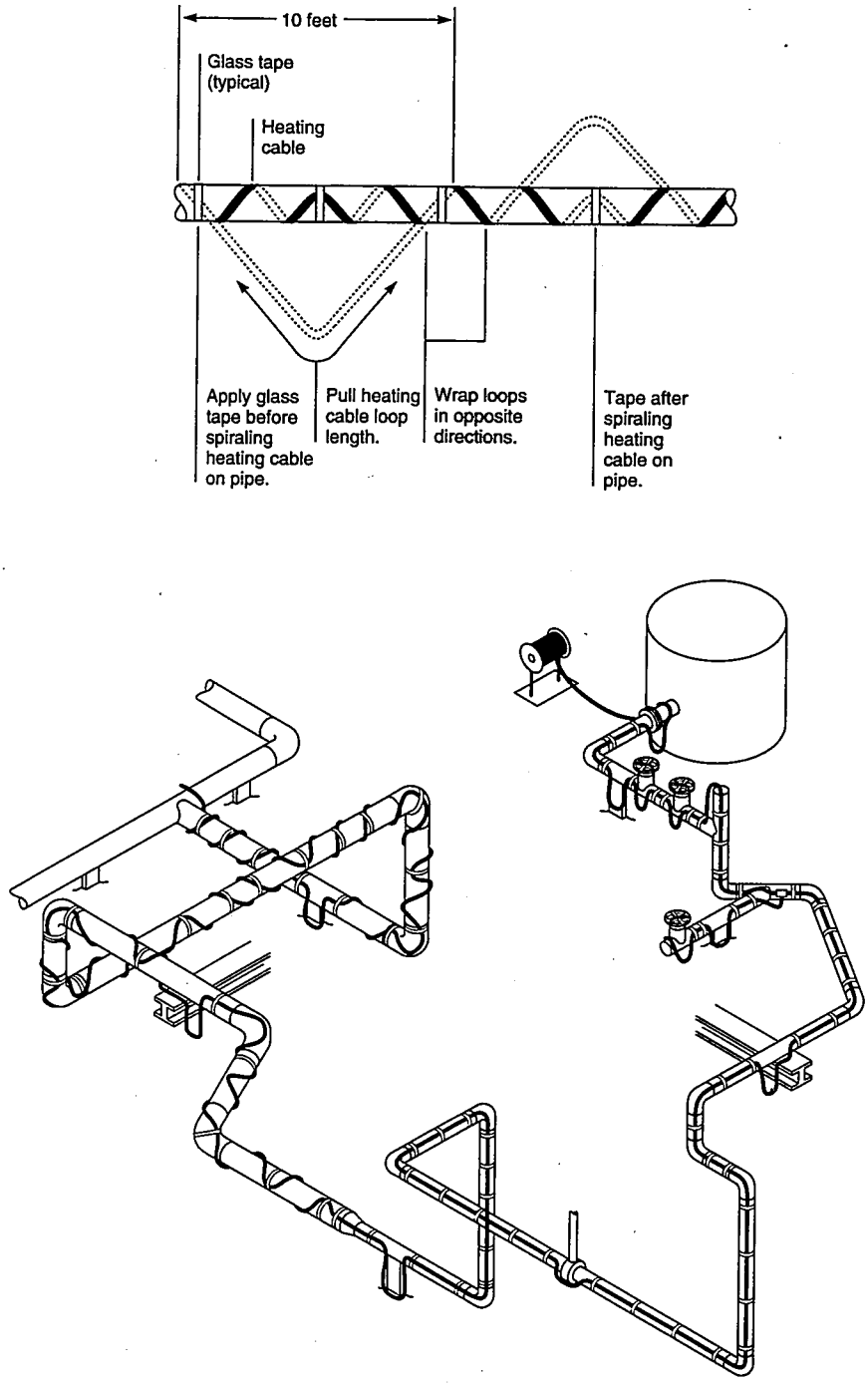

Figure 2.7. Spiraling the heating cable

To determine the loop length, obtain the spiral factor from the drawing and multiply by ten. For example, if a spiral factor of 1.3 is called for, leave a 13-foot loop of heating cable at every 10-foot section of pipe.

To do this, pull the required amount of heating cable at every 10-foot mark, then attach the heating cable to the pipe and let it hang in a loop. Grasp the loop in its center and wrap it around the pipe. Even out the distance between spirals by sliding the wraps along the pipe. Use glass tape to secure the center of the loop to the pipe. Secure the heating cable flat to the pipe to obtain good contact.

c. Multiple-cable heat-tracing

There are two situations where multiple heating cables may be required:

- *Redundant heat-tracing* is used in situations where a backup is required. Therefore every heat sink must be traced with both runs of heating cable.

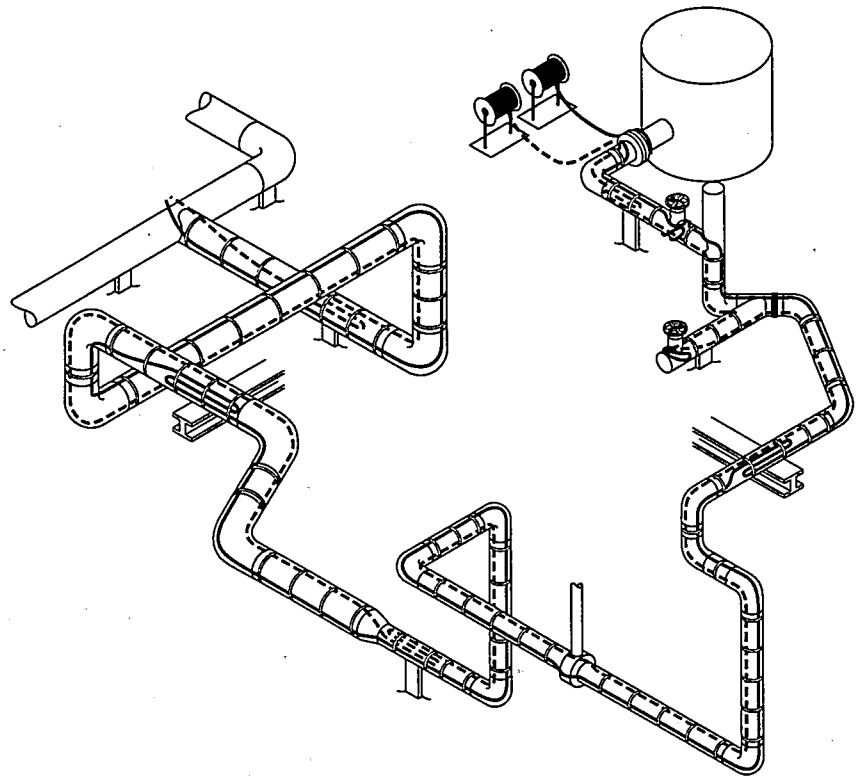

Figure 2.8. Double heat-tracing

- *Double or multiple heat tracing* is used when single heat tracing alone cannot compensate for larger heat losses. Double heat tracing should have extra heating cable installed only as called out on the design drawing. It is recommended to supply the extra heating cable alternately from both runs in order to balance out both circuit lengths. When heat-tracing serviceable equipment such as valves and pressure gauges that may have to be removed later, loops should be left in to allow for future access.

2.3.3 Securing the heating cable

Use one of the following Raychem attachment methods to secure the heating cable onto the pipe: GT-66 or GS-54 fiberglass tape, AT-180 aluminum tape, or cable ties.

a. GT-66 fiberglass tape

- General purpose tape for installation at 40°F (5°C) and above.
- Use in applications below 266°F (130°C).
- Apply at 1-foot intervals.

b. GS-54 fiberglass tape

- Recommended for low-temperature installation at -40°F (-40°C) and above.
- Use in applications below 356°F (180°C).
- Apply at 1-foot intervals.

c. AT-180 aluminum tape

- Recommended for heat-tracing pump bodies or odd-shaped equipment, or as called out in the design drawing as a heat-transfer aid.
- Use in applications below 300°F (150°C).
- Install at temperatures above 32°F (0°C).
- Tape lengthwise under and/or over the heating cable as required by the design drawing or specification.

d. Cable ties

- Recommended in applications where the pipe surface prevents proper tape adhesion.
- Recommended for temperatures below 180°F (82°C).
- Cable ties must be hand-tightened only!

⚠

WARNING: Damage to the heating cable can cause electrical arcing or fire. Do not use metal attachments such as pipe straps or tie wire. Use only Raychem-approved tapes or cable ties.

Important:

- *Before taping the heating cable to the pipe, make sure all heat-tracing allowances for flanges, valves, supports, and other components have been verified.*
- *Do not use vinyl-based tapes. Some vinyl tapes (electrical or duct tapes) can reduce the operating life of heating cables.*

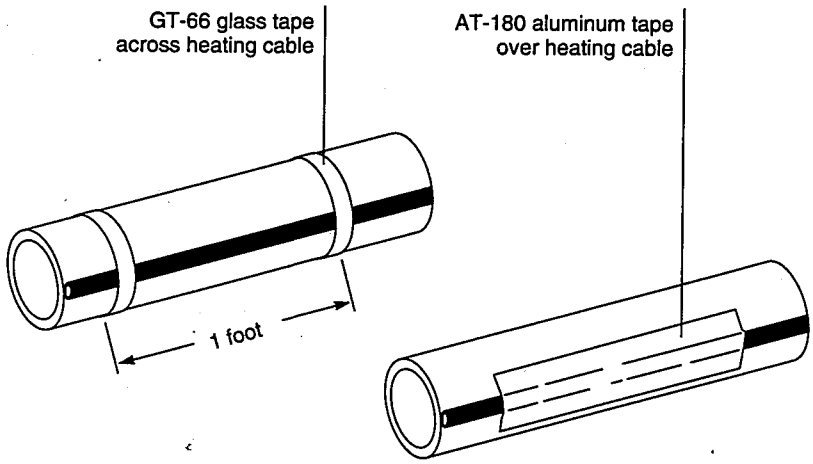

Figure 2.9. Securing the heating cable

2.3.4 Wrapping heat sinks

Finally, wrap the remaining loops over valves, flanges, pipe supports, pumps, and other components as shown in the illustrations that follow (Figures 2.10 – 2.17).

a. Welded pipe support shoe (side view)

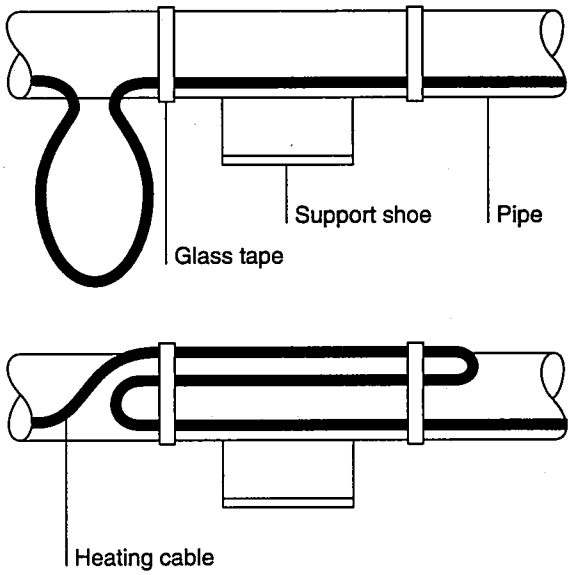

Figure 2.10. Welded pipe support shoe

b. Welded pipe support

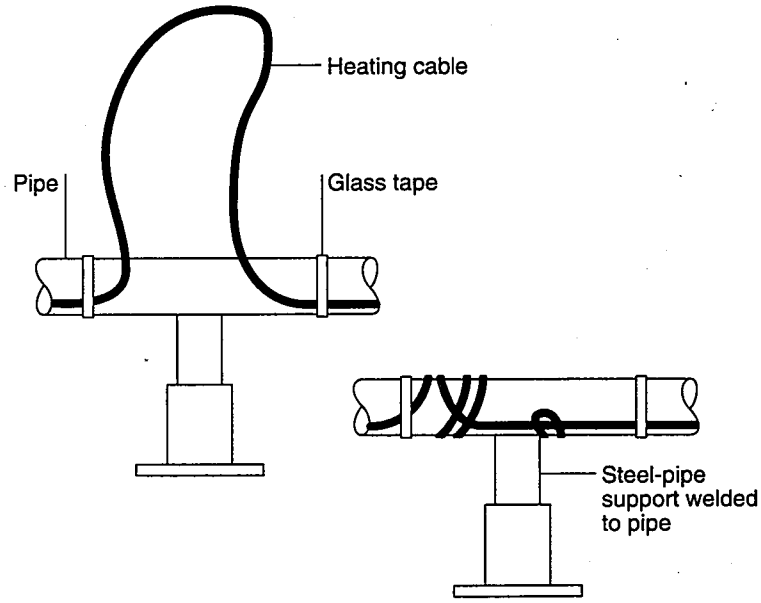

Figure 2.11. Welded pipe support

c. Flange

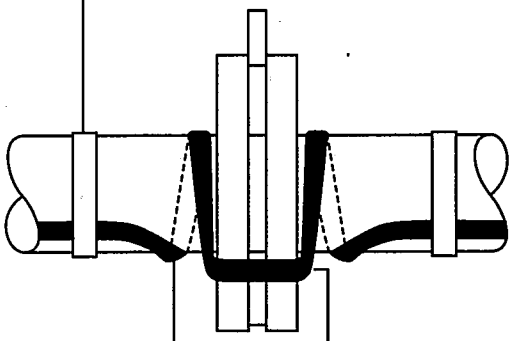

Figure 2.12. Pipe flange

d. Elbow

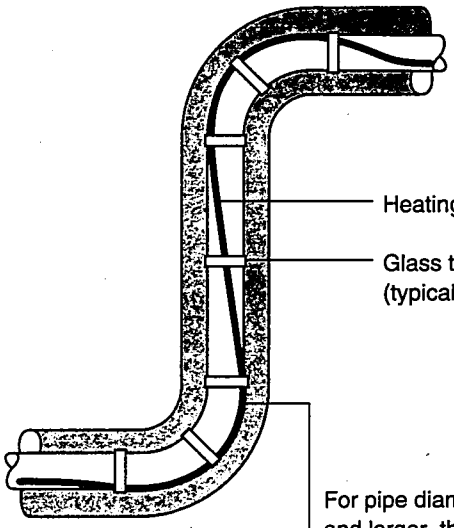

For pipe diameters of 2" and larger, the heating cable should be installed on the outside (long) radius of the elbow.

Figure 2.13. Elbow (greater than 2" pipe)

e. Dead leg tee

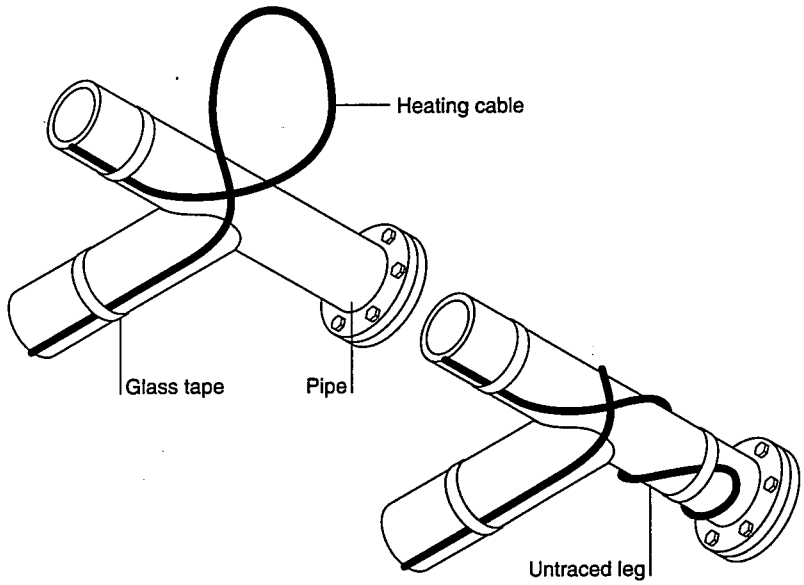

Figure 2.14. Dead leg tee

f. Pressure gauge

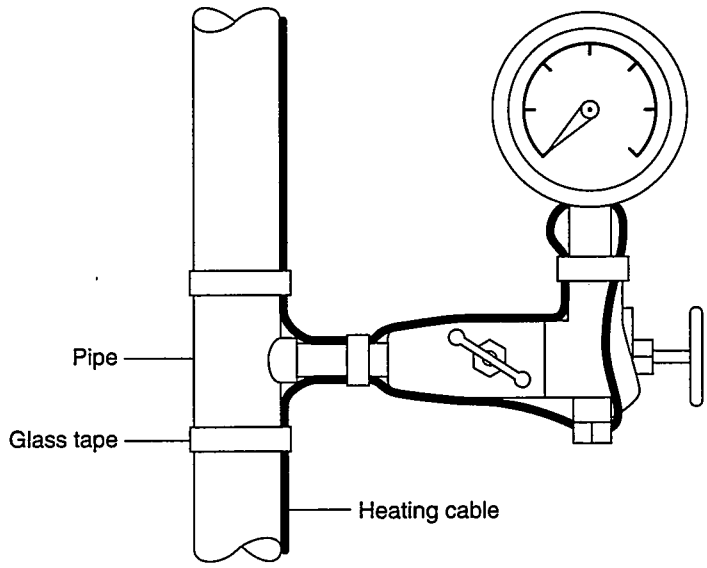

Figure 2.15. Pressure gauge

g. Split case centrifugal pump

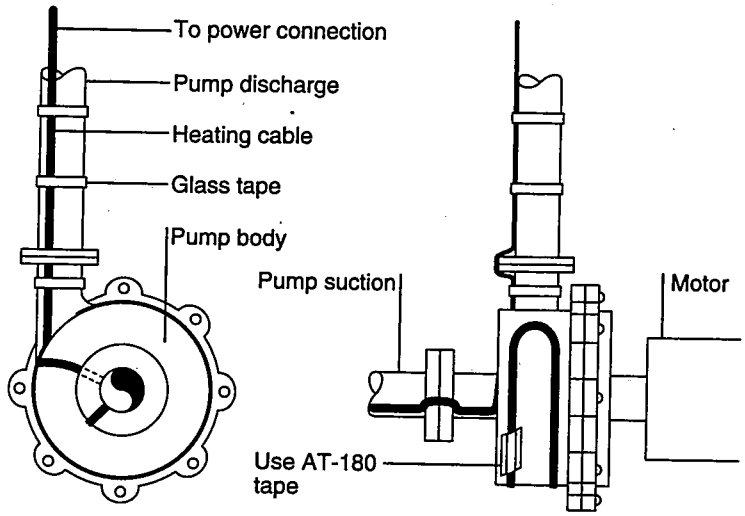

Figure 2.16. Split case centrifugal pump

h. Valve (typical)

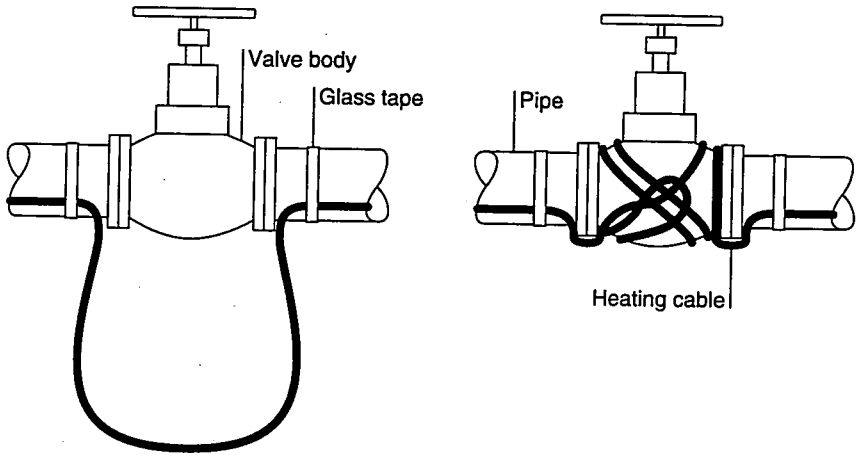

Figure 2.17. Gate valve

3.0 Heating Cable Connections

Detailed assembly instructions are provided with the connection kits. Read these instructions carefully and install the connection components accordingly.

Each heating cable circuit requires one power connection and at least one end seal. Splices and tees are used as required. Each tee requires one extra end seal (see Figure 3.1):

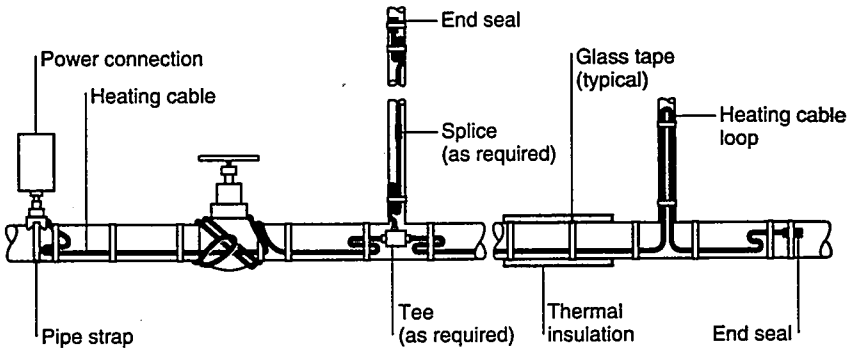

Figure 3.1. Typical system

⚠

WARNING: The black heating cable core and fibers are electrically conductive and can short. They must be properly insulated and kept dry.

Damaged bus wires can overheat or short. Do not break bus wire strands when stripping the heating cable.

Keep in mind the following points when installing connections:

- Before installing connection kits, check the heating cable insulation resistance (refer to Section 9).
- Use only Raychem AutoMatrix or PolyMatrix connection kits with Auto-Trace heat-tracing systems (see Figure 3.2). Using other kits, substitute parts, or vinyl electrical tape will void agency approval and product warranty, and can cause electrical arcing or fire.
- Be sure the connection kit you have is the proper one for the heating cable and the application. Part numbers should be called out on the drawing.
- Connection kits use grommets or heat-shrinkable tubing for environmental sealing. Grommets are designed to fit specific heating cables only. Be sure the proper grommets are used by checking the installation instructions supplied with the connection kit being installed.
- Special adapters are available for mounting on small pipe sizes. Be sure to use these adapters if installing cables on pipes of 1 inch or less.
- Verify that the proper size pipe for mounting component kits onto the pipe clamp is included with the materials.
- Connection kits should be mounted on top of the pipe when practical. Electrical conduit leading to power connection kits must have low-point drains installed to avoid condensation entry into the heating system. All heating cable connections must be mounted above grade level.
- Follow the recommendations for stripping Auto-Trace heating cables; they are included in the installation instructions provided with the connection kits. Be sure bus wires are clean and free of conductive core materials before making electrical connections.
- Be sure to leave a minimum-18-inch service loop at all terminations for future maintenance, except when temperature-sensitive fluids are involved or when the pipe is smaller than 1 inch.

Component Family	PolyMatrix		AutoMatrix
Description	NEMA 4X rated, engineered thermoplastic for corrosive environments		NEMA 4 rated, cast aluminum for noncorrosive environments
Power connection kit without junction box	PMKG-LP		
Power connection kit with junction box	PMKG-JLP Single entry	PMKG-J2LP Dual entry	AMG-BCII Single or dual entry
Splice kit	PMKG-LS	PMKG-JS	AMG-BSII
Tee kit	PMKG-LT	PMKG-JY	AMG-BYII
End seal kit	PMKG-LE		PMKG-LE

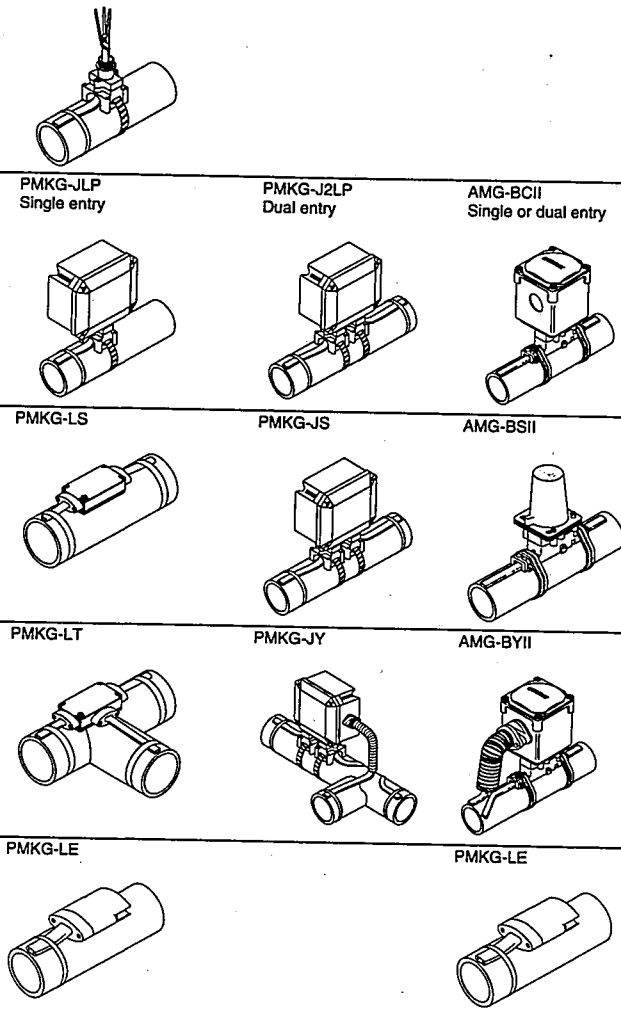

Figure 3.2. Components overview

4.0 Thermostat Controls

The most common type of control system is a thermostat. While there are more sophisticated control systems available, such as Chemelex MoniTrace®, this section deals with thermostats only. Refer to the appropriate MoniTrace installation instructions if required.

- Make sure the thermostat you are installing is the correct one for the area classification as well as for the weather exposure.
- Make sure that the heating-cable load you are connecting is within the rating of the thermostat switch. Check the design drawings for the heating cable load.
- The electrical conduit that feeds wiring to the thermostat must have a low-point drain so condensation will not enter the thermostat enclosure.
- Make sure that the line voltage you are connecting to the thermostat is correct. Follow the installation instructions enclosed with the thermostat for proper wiring.

4.1 Ambient-Sensing Thermostats

Ambient-sensing thermostats energize the circuit when the ambient temperature drops below the set point.

- Thermostats must be mounted above grade level and out of sunlight. Mount the thermostat where it will be exposed to the coldest temperature and the highest wind.
- Be sure to wire the phase wire to the normally closed contact.

4.2 Line-Sensing Thermostats

Line-sensing thermostats sense the pipe temperature by means of a bulb attached to the pipe and connected to the thermostat body via a capillary tube.

- Install the sensing bulb on the pipe at a 90-degree angle from the heating cable so that the heating cable does not thermally interfere with the sensing bulb. Be sure the sensing bulb is firmly attached with aluminum tape to the pipe in order to get good thermal contact between the bulb and the pipe.
- The bulb should be located at least 3 feet (1 meter) from any heat sinks, such as valves, pipe supports, and pumps. Ideally, the bulb should be located at the end of the heating cable circuit.
- Thermostats can be used for temperature control, high-temperature cutout, and high or low alarms. Be sure you use the proper wiring diagram for the control method desired.
- Be sure that you have set the control to the proper temperature.
- Mount the thermostat on a nearby wall or support, or install a mounting stanchion. Thermostats must be mounted above grade level. In all cases, protect the capillary tube from physical damage. To prevent damage, mount the thermostat and the capillary tube where they will be away from foot and equipment traffic.
- Seal the insulation where the capillary tube exits the insulation to prevent water entry.

5.0 Thermal Insulation

After the heating cable is installed, thermal insulation should be installed as soon as possible to minimize potential heating cable damage.

5.1 Preinsulation Inspection

- Visually inspect the heating cable for signs of mechanical damage. If damage is found, either replace the entire heating cable circuit, or cut out the damaged section and splice in a new section using the appropriate splice kit.
- Inspect all connections for proper assembly. Make sure all cable entries have a grommet properly installed and that the compression plates and caps are tightened. Verify that all electrical connections of low-profile splices and tees have been made, because they will be insulated and inaccessible for future inspection.
- Using a 2500-volt Megger, inspect the insulation resistance of the circuit (per instructions in Section 9).

5.2 Insulation Installation

Both the pipe and the insulation must be dry when a pipe is thermally insulated. Wet insulation is ineffective.

5.2.1 Insulation

It is important to use the type and thickness of thermal insulation specified on the design drawing. If another thickness is used, the heating-cable type or amount may have to be changed.

- Insulation should be carved to allow for low-profile components so there is no gap in the insulation closure.
- In the standard single-cable installation, rigid insulation need not be oversized.
- Where multiple or redundant heating cables are used, rigid insulation (such as calcium silicate and foam glass) should be oversized by 1/2 inch (13 millimeters) on pipes and tubing that are 4 inches or smaller. Larger pipe sizes do not require oversized insulation.

5.2.2 Cladding

Weatherproof the thermal insulation. Seal all joints with sealing compound. All places where valve stems, conduits, connection enclosures, thermostat capillary tubes, and other components penetrate through the insulation jacketing must be sealed with a suitable compound to keep water out. Ensure that the edges of these clearance holes and cable transitions do not rub on the cable and cause mechanical damage.

Metal banding is the preferred method to keep metal jacketing in place. If sheet-metal jacketing is secured with sheet-metal screws, be sure the screws are not long enough to penetrate the thermal insulation and damage the heating cable. Seal the metal seam with suitable compound.

5.3 Postinsulation Inspection

The following steps are required after insulating the pipe:

- Mark the insulation.
- Megger each circuit.

5.3.1 Marking

When the insulation and weatherproofing is complete, attach "Electric Traced" labels on the outside of the insulation as required by NEC Article 427-13. These labels should be installed where they are visible from normal operations. Place labels at alternate sides about every 10 feet (3 meters).

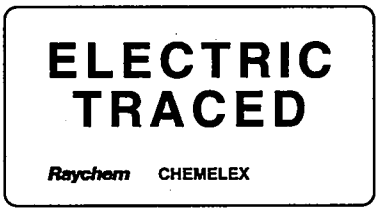

Figure 5.1. Electric Traced label (ETL)

Other labels, which identify the location of splices, tees, and end connections installed underneath the thermal insulation, are supplied with these components and should be used.

5.3.2 Postinsulation Meggering

After the insulation is completed, Megger each circuit to confirm that the cable has not been damaged (per instructions in Section 9).

6.0 Power Supply and Electrical Protection

6.1 Voltage Rating

Ensure that the source voltage corresponds to the heating cable rating and the design drawing.

6.2 Electrical Loading

Overcurrent devices are sized according to the heating cable type, source voltage, and circuit length to allow start-up at designed ambient temperatures. The drawing specifies the size and type of overcurrent device. If devices other than those specified are used, consult the Chemelex design guide or call the factory for the appropriate sizing information.

6.3 Ground-Fault Protection

If the heating cable is improperly installed, or physically damaged to the point that water contacts the bus wires, sustained arcing or fire could result. If arcing does occur, the fault current may be too low to trip conventional circuit breakers.

Therefore, all heating cable circuits should be protected with a 30-mA ground-fault protection device (GFPD). This device will minimize the risk of fire or arcing by shutting off the power to the circuit whenever a significant ground-fault current is detected. Suitable circuit breakers with ground-fault protection are listed in the "Electrical Design" section of the Chemelex design guide.

Since such devices require an effective ground path, braided heating cables* must be used to trace plastic, stainless steel, painted surfaces or any other poor or nonconductive surfaces.

NEC Article 427-22 requires ground-fault devices on all branch circuits powering nonbraided (base) heating cables.

The Institute of Electrical and Electronics Engineers, Std 515-1989 (IEEE Recommended Practice for the Testing, Design, Installation, and Maintenance of Electrical Resistance Heat Tracing for Industrial Applications), recommends the use of ground-fault breakers with a 30-mA trip level for pipe systems in classified areas,** areas requiring a high degree of maintenance, or those areas that may be exposed to physical abuse or corrosive atmospheres.

* Type -CT or -CR heating cables

** Class I, Division 2, Groups B, C, and D
Class II, Division 2, Groups F and G
Class III, Division 2

7.0 Commissioning

7.1 Precommissioning Tests

Visually inspect the pipe, insulation, and connections to the heating cable to make sure that no physical damage has occurred.

- Turn off all branch circuit breakers.
- Megger the system (per instructions in Section 9) to determine whether damage has occurred that may not be readily visible.

7.2 Ambient-Sensing Controlled Systems

If the actual ambient temperature is higher than the desired thermostat setting, turn the thermostat setting up high enough to turn on the system, or (with some models) manually set the selector switch to the ON position.

- Turn on the main circuit breaker.
- Turn on the branch circuit breakers.
- After a minimum of five minutes measure the voltage, amperage, ambient temperature, and pipe temperature for each circuit and record this in the Inspection Record (see Appendix A). This information is needed for future maintenance and troubleshooting.
- When the system is completely checked out, reset the thermostat to the proper temperature.

7.3 Line-Sensing Controlled Systems

Set the thermostat to the desired control temperature, or to a setting high enough to turn the circuit on if the pipe temperature is above the control temperature.

- Turn on the main circuit breaker.
- Turn on the branch circuit breakers.
- Allow the system to reach the control point. This may take up to four hours for most circuits. Large, liquid-filled pipes may take longer.
- Measure the voltage, amperage, and pipe temperature for each circuit and record this in the Inspection Record (see Appendix A). This information is needed for future maintenance and troubleshooting.
- When the system is completely checked out, reset the thermostat to the proper temperature.

7.4 Backup (Redundant) Systems

Follow the procedure above for the type of control system installed, but commission the systems one at a time. Start up the primary system, qualify it, then shut it down. Then start the backup system, qualify it, and shut it down.

8.0 Preventive Maintenance

8.1 Maintenance Procedures

Recommended maintenance for Auto-Trace heat-tracing systems consists of performing the commissioning testing on a regular basis. Procedures for this testing are described in Section 7.

- For systems controlled by line-sensing thermostats, check the system at least twice a year. Systems controlled by ambient-sensing thermostats should be checked before each winter.
- If the inspection reveals a low pipe-temperature, or the circuit fails the Megger test, immediately determine the nature of the problem and make the necessary repairs as required. Refer to Section 10 for troubleshooting assistance.

8.2 Maintenance Records

Appendix A shows a blank Inspection Record that should be filled out during all maintenance and repair work, and kept for future reference.

8.3 Repairs

WARNING: Damage to cables or components can cause sustained electrical arcing or fire. Do not attempt to repair damaged heating cable. Do not energize cables that have been damaged by fire. Replace damaged cable at once by removing the entire damaged section and splicing in a new length using the appropriate Raychem splice kits.

Do not re-use grommets. Use new grommets whenever the heating cable has been pulled out of the terminations.

Use only Raychem-recommended cable, terminations, and methods when replacing any damaged heating cable, connections, thermal insulation, or weatherproofing.

- Record all repairs and measurements on the Inspection Record (see Appendix A).
- Retest the system after repairs are made.

8.4 Pipe Equipment Maintenance

Important:

- *Avoid abusing, cutting, twisting, or tugging the heating cables during maintenance. The cable is intended to be re-installed after the equipment is serviced. Therefore, be careful when removing the cable from pipe and equipment.*
- *After maintenance work is done and the cable is re-installed, be sure to Megger the circuit before re-energizing (refer to Section 9).*

De-energize all circuits that may be affected by maintenance.

Protect the heating cable from mechanical or thermal damage during such maintenance work.

The recommended cable installation methods allow for extra cable at all pipe appurtenances (such as valves, pumps, and pressure gauges) that are likely to incur maintenance work.

9.0 Heating Cable Testing

Insulation resistance testing is a reliable indicator of the electrical integrity of the system when all the installation instructions are properly followed.

Insulation resistance testing is recommended at five stages during the installation process and as part of regularly scheduled maintenance. Accordingly, perform the testing:

- Before installing the cable
- Before installing components
- Before installing the thermal insulation
- After installing the thermal insulation
- Prior to initial start-up
- As part of the regular system inspection
- After any maintenance or repair work

9.1 Insulation Resistance Testing

Insulation resistance testing (meggering) should be conducted at three voltages—500, 1000, and 2500 Vdc—as discussed in ANSI IEEE Standard 141-1986, Section 11.11.9. Significant problems may not be detected if testing is done only at 500 or 1000 volts.

For **nonbraided** cable, measure the insulation resistance between the bus wires and the metal pipe.

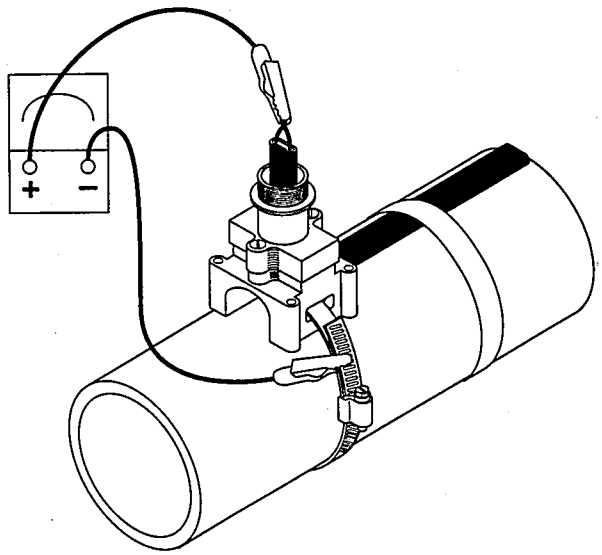

Figure 9.1. Meggering nonbraided cable

For **braided heating cables with outer jackets** (-CT or -CR types):

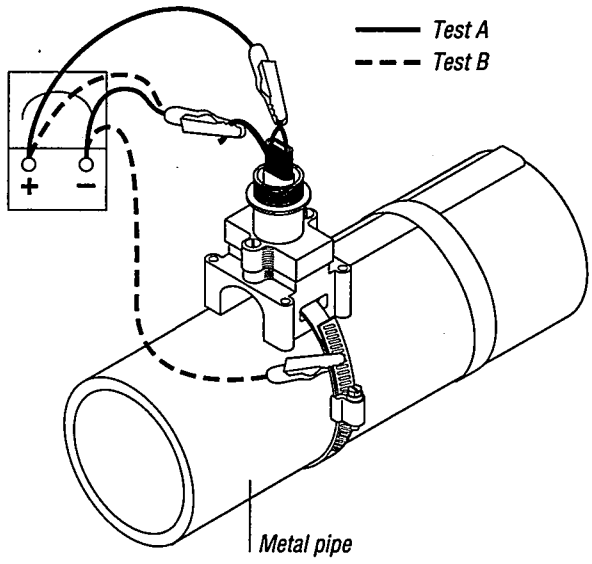

Figure 9.2. Meggering -CT or -CR heating cables

First measure the resistance between the heating cable bus wires and the braid (Test A); then measure the insulation resistance between the braid and the metal pipe (Test B).

Note: System checkout and regular maintenance procedures normally require that meggering be performed from the distribution panel only. Remove both power feed wires from the terminal block or breaker and proceed as if testing heating cable bus wires (as described here).

Procedure:

1. Disconnect the thermostat if installed.
2. Set test voltage at 0 Vdc.
3. Connect the negative (-) lead to the heating cable metallic braid (or pipe if using nonbraided cable).
4. Connect the positive (+) lead to both heating cable bus wires simultaneously.
5. Turn on the Megger and set the voltage to 500 Vdc; apply the voltage for 1 minute. Record the insulation resistance in the Inspection Record (Appendix A).
6. Repeat step 5 at 1000 and 2500 Vdc.
7. Turn off the Megger.
8. Discharge phase connections to ground with a suitable grounding rod if the Megger does not self-discharge. Disconnect the Megger.
9. If using braided cable, repeat this test between braid and pipe.
10. Reconnect the thermostat.

9.2 Insulation Resistance Criteria

A clean, dry, properly installed circuit should measure thousands of megohms, regardless of the heating cable length or measuring voltage (0 – 2500 Vdc). The following criteria are provided to assist in determining the acceptability of an installation where optimum conditions may not apply:

- All insulation resistance values should be greater than 1000 megohms.
- Insulation resistance values from Test A, for any particular circuit, should not vary more than 25 percent as a function of measuring voltage.
- Insulation resistance values from Test B, for any particular circuit, should not vary more than 25 percent as a function of measuring voltage.
- If any of the above conditions is not met, consult the Troubleshooting Guide (Section 10).

10.0 Troubleshooting Guide

This guide provides step-by-step assistance in troubleshooting potential heating cable problems. Designed to help determine and, if necessary, locate the cause of a problem, the guide consists of two parts:

1. A series of connected flowcharts.

2. A numbered series of questions, steps, and corrective actions that correspond to each item on the flowcharts.

Test procedures mentioned throughout this guide can be found in the following sections of this manual:

- Section 9, which outlines the insulation testing (Megger) procedures.

- Section 11, which describes fault location techniques that use the Raychem DET-2200 fault locator, capacitance measurements, and ratiometric resistance measurements.

10.1 Troubleshooting Flowchart

The symptoms most frequently associated with heat-tracing problems are a cold pipe, circuit breaker tripping, and Megger test failures during commissioning or maintenance testing. You will find these symptoms analyzed on the flowchart, which the following directions will help you use:

- If the pipe temperature fails to reach the required level, start with step 1 of the flow chart (Section 10.1.1).

- If circuit breaker tripping occurs, or the circuit fails to meet the insulation resistance criteria (Megger test), skip steps 1 through 22 on the flowchart and go directly to step 23 (Section 10.1.2).

10.1.1 Cold Pipe

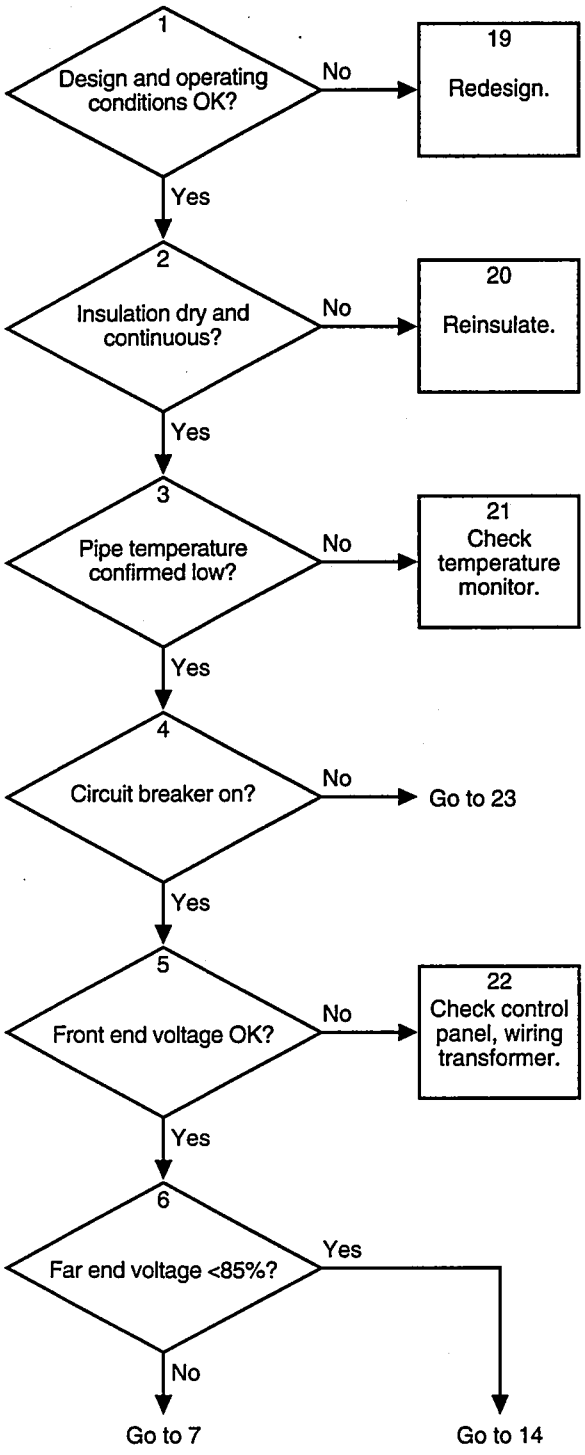

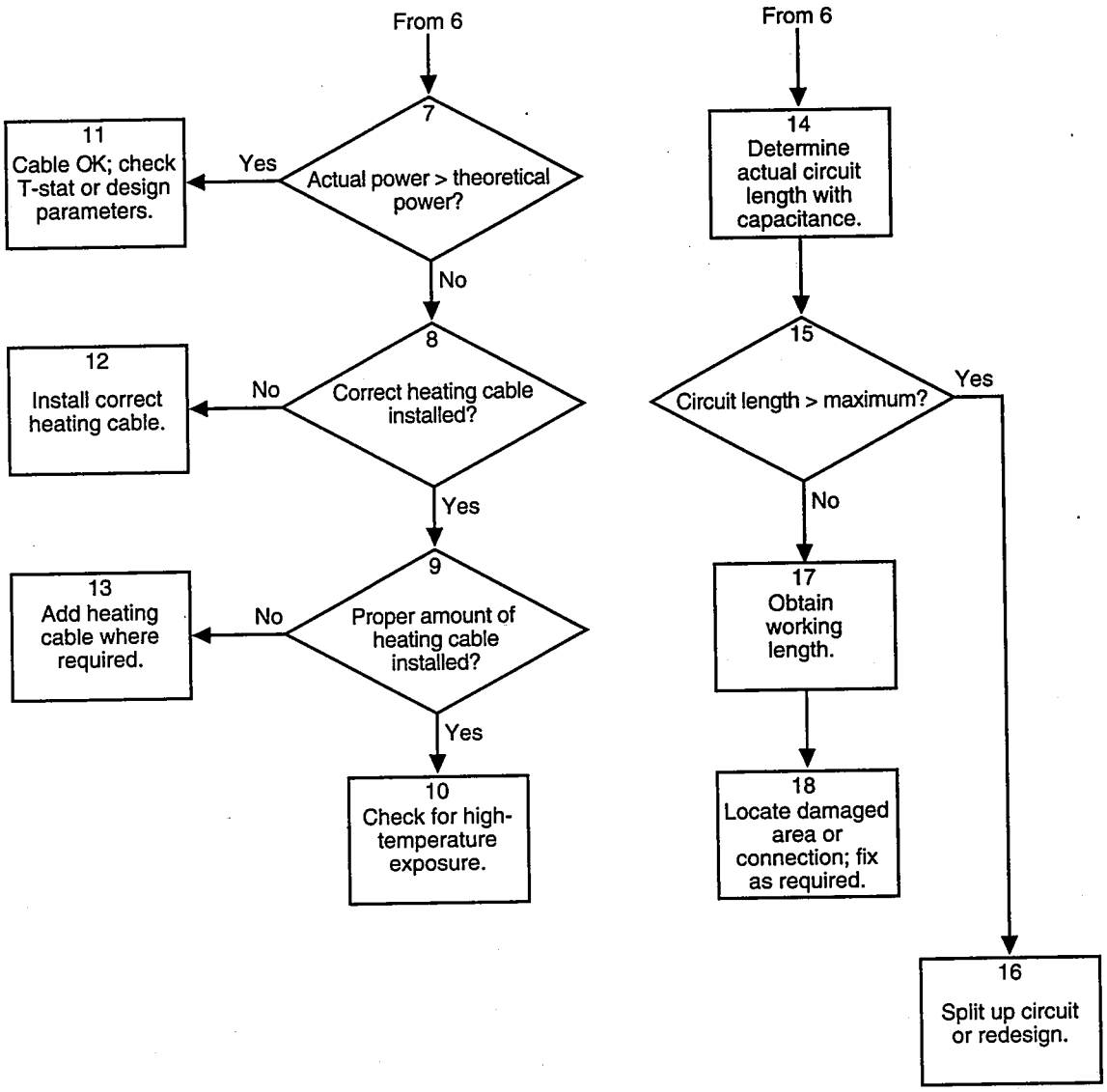
From 6
7
Actual power > theoretical power?
Yes
11
Cable OK; check T-stat or design parameters.
No
8
Correct heating cable installed?
No
12
Install correct heating cable.
Yes
9
Proper amount of heating cable installed?
No
13
Add heating cable where required.
Yes
10
Check for high-temperature exposure.
From 6
14
Determine actual circuit length with capacitance.
15
Circuit length > maximum?
Yes
No
17
Obtain working length.
18
Locate damaged area or connection; fix as required.
16
Split up circuit or redesign.

10.1.2 Circuit Breaker Tripping and Test Failures

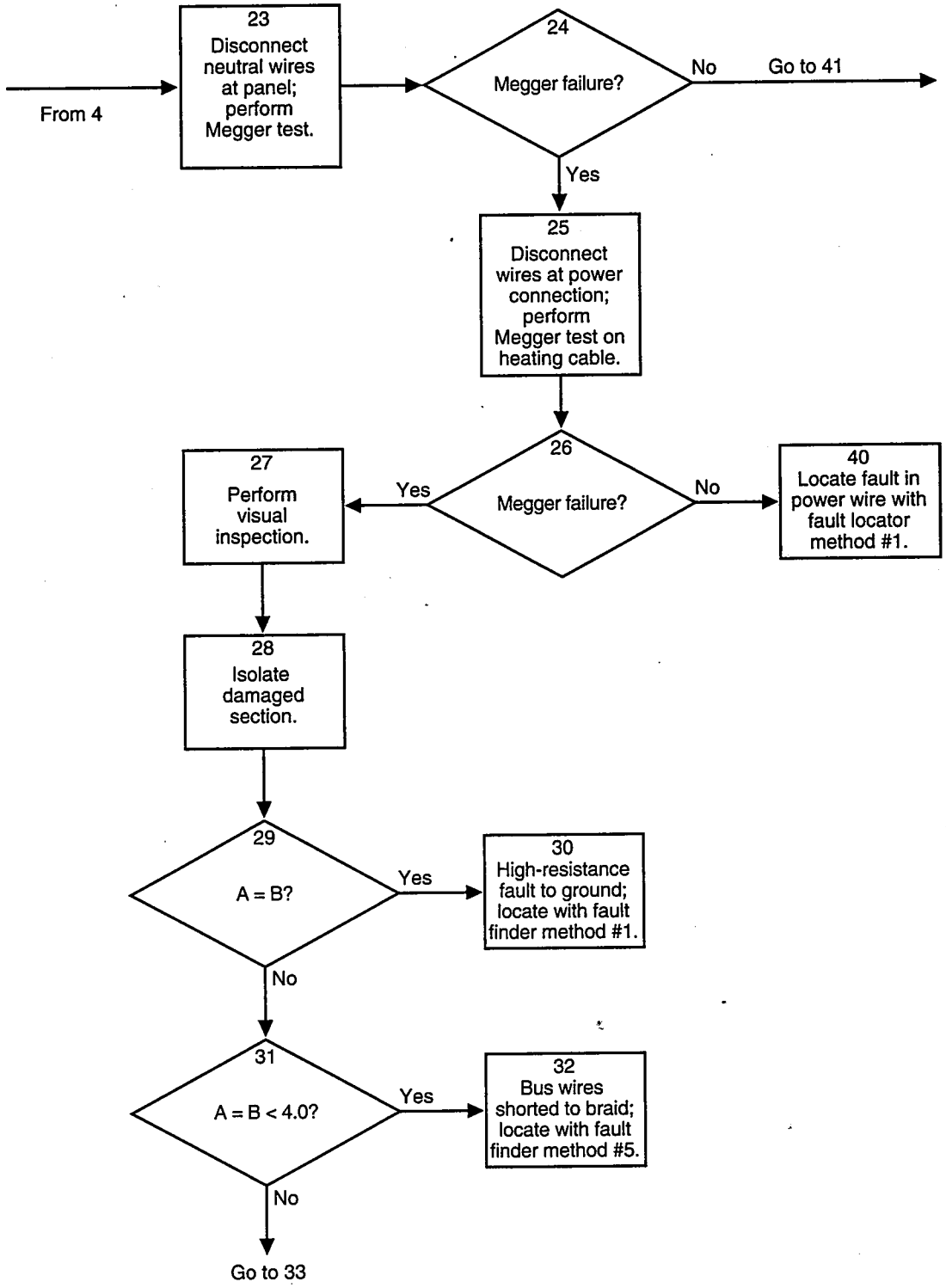

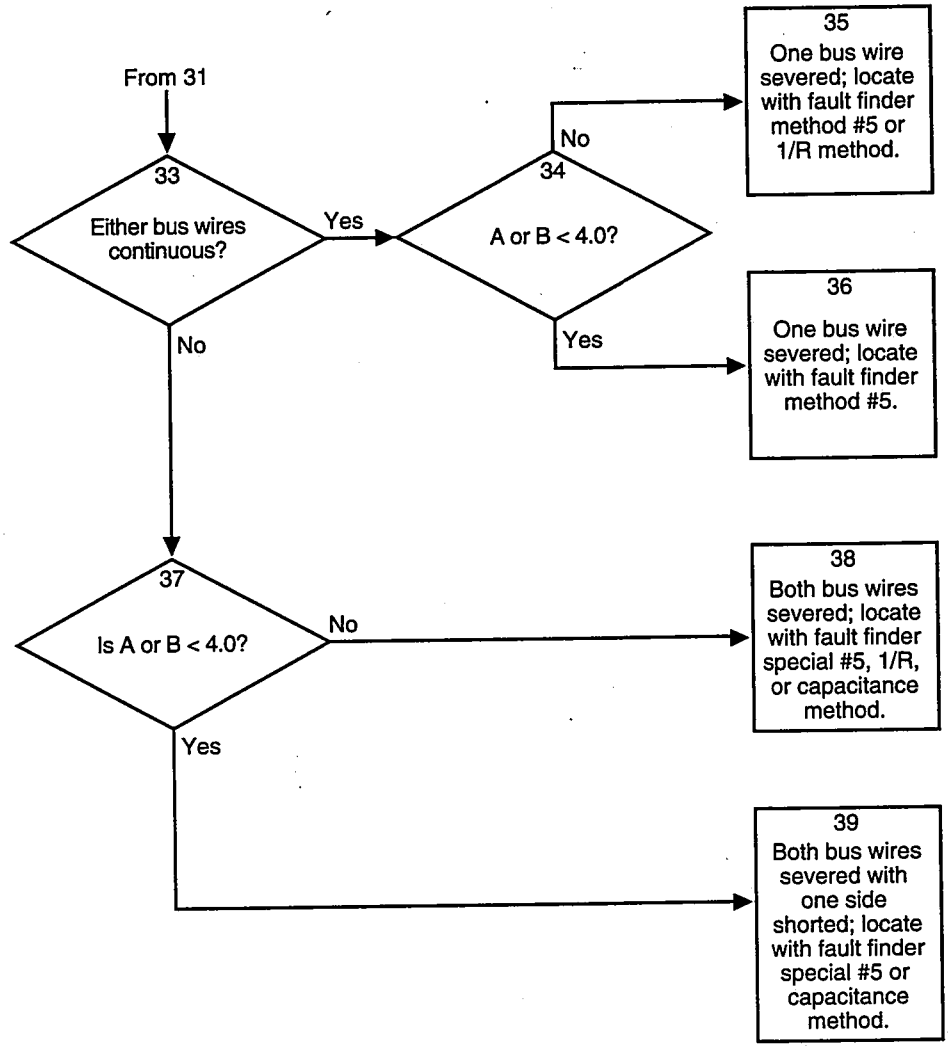
From 31
33
Either bus wires continuous?
Yes
No
34
A or B < 4.0?
No
Yes
35
One bus wire severed; locate with fault finder method #5 or 1/R method.
36
One bus wire severed; locate with fault finder method #5.
37
Is A or B < 4.0?
No
Yes
38
Both bus wires severed; locate with fault finder special #5, 1/R, or capacitance method.
39
Both bus wires severed with one side shorted; locate with fault finder special #5 or capacitance method.

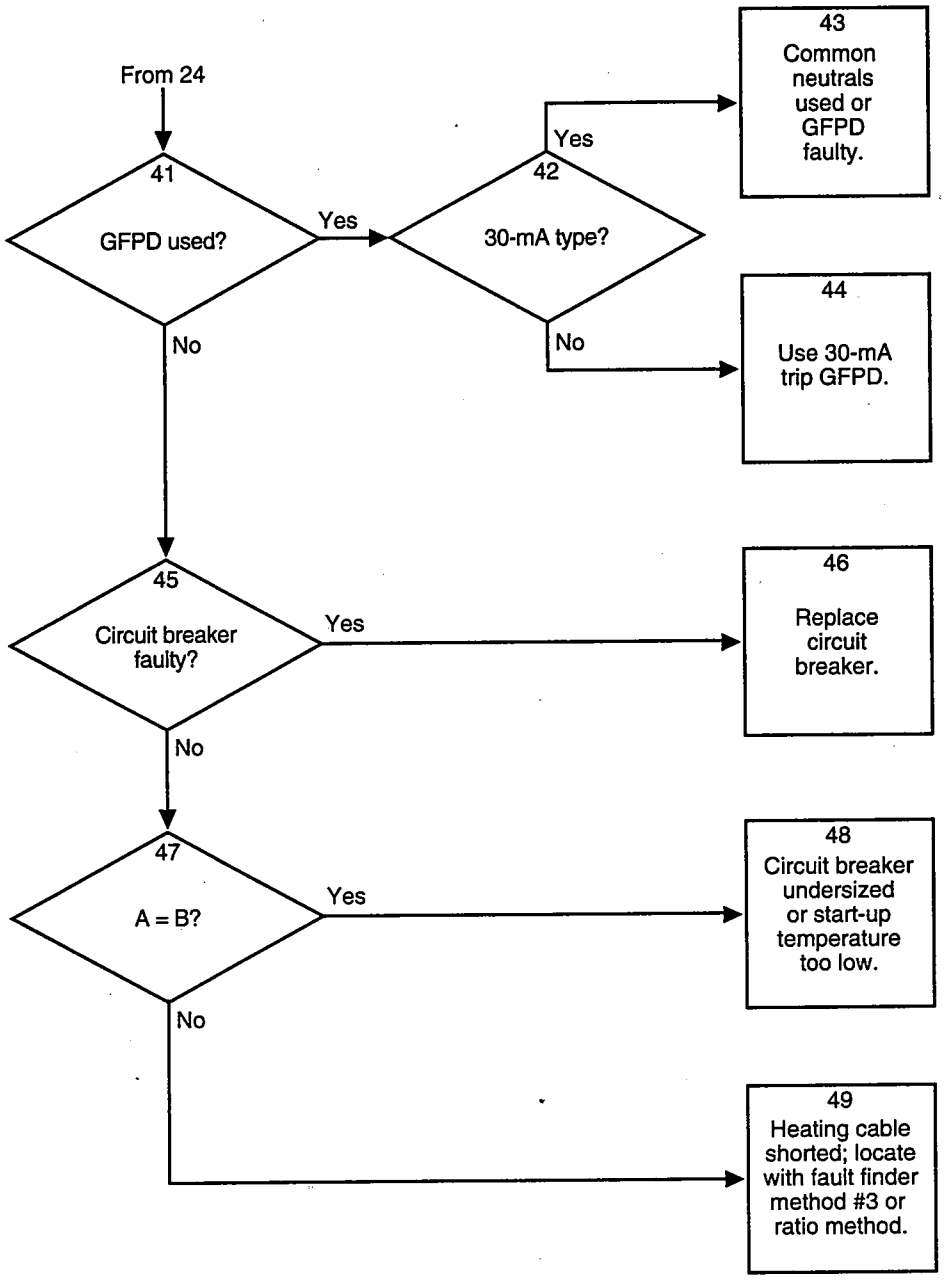
From 24
41
GFPD used?
Yes
No
42
30-mA type?
Yes
No
43
Common neutrals used or GFPD faulty.
44
Use 30-mA trip GFPD.
45
Circuit breaker faulty?
Yes
No
46
Replace circuit breaker.
47
A = B?
Yes
No
48
Circuit breaker undersized or start-up temperature too low.
49
Heating cable shorted; locate with fault finder method #3 or ratio method.

10.2 Questions, Steps, and Corrective Actions

1. Design and operating conditions OK?

Before proceeding further, make sure the "No Flow" condition revealed by operation is not due to a closed valve, failed actuator, damaged pump, or similar condition. Next, verify that the design is correct for the operating conditions. If the system is new and has not previously been checked for functionality, then the design parameters could be suspect. GO TO 19.

2. Insulation dry and continuous?

Heat tracing cannot compensate for missing or wet insulation. Wet insulation loses its insulating capability. Make sure the insulation is continuous, dry, and weatherproofed. If not, GO TO 20.

3. Pipe temperature confirmed low?

With a portable temperature probe, record the actual pipe temperature. If the pipe's actual temperature is not confirmed as being cold, then the monitoring equipment is faulty. GO TO 21.

4. Circuit breaker ON?

If the circuit breaker has tripped, a fault occurred in the circuit. GO TO 23.

5. Front end voltage OK?

At the power connection box, record the voltage at the front of the heating cable. If the measured voltage is less than expected, GO TO 22.

6. Far end voltage <85%?

Record the voltage at the far end of the heating cable. If this value is less than 85% of the value at the front end as recorded in step 5, then the circuit is too long, damaged, or poorly spliced. GO TO 14.

7. Actual power > theoretical power?

Record the actual circuit amperage at least two minutes after energizing the circuit. Theoretical power is defined as the total circuit length multiplied by the heat loss at the actual pipe temperature plus extras for heat sinks such as valves, pipe supports, and other components. (Consult the Chemelex design guide or TraceCalc software). Actual power is defined as the circuit amperage multiplied by the front end voltage recorded in step 5. If the actual power is greater than the theoretical power, the heating cable is operating properly. GO TO 11.

8. Correct heating cable installed?

If the actual power is less than the theoretical power, the wrong type of heating cable may be installed. The heating cable catalog number is printed on the cable every two feet (see Section 2.2, Step 1 and Figure 2.1). GO TO 12.

9. Proper amount of heating cable installed?

If the heating cable type is correct, not enough may be installed to cover heat sinks such as valves, pipe supports, and other components. Remove the insulation at all suspect heat sinks and verify installed heating cable footage. If insufficient, GO TO 13.

10. Check for high-temperature exposure.

If everything else checks out, the circuit may have been exposed to higher than rated temperatures. Call your local Chemelex field services or 1-800-545-6258 assistance. END.

11. Cable OK; check T-state or design parameters.

The heating cable is operating properly. Check the set point on the temperature controller and adjust as necessary. Also verify the design parameters; redesign if necessary. END. .

12. Install correct heating cable.

If an incorrect heating cable was chosen, the system will not maintain the temperature. Replace with the correct heating-cable type, voltage, and wattage. In a few cases, insufficient wattage can be adjusted by increasing the voltage. Consult the Chemelex design guide or TraceCalc software for power outputs at alternate voltages. END.

13. Add heating cable where required.

If insufficient amounts of heating cable were installed at heat sinks, splice in extra heating cable with two splice kits or add a branch with one tee kit and an end termination. END.

14. Determine actual circuit length with capacitance.

-CT or -CR heating cable lengths can be measured from the power connection. Record the capacitance of the circuit as measured between the bus wires and the braid. Multiply this value by the heating cable capacitance factor in Table 11.1 in Section 11 to obtain the actual cable length. Base heating cable lengths must be estimated by measuring pipe length and uncovering insulation at heat sinks to determine extra heating cable installed.

15. Circuit length > maximum?

If the actual heating cable length is not greater than the maximum allowed per the Chemelex design guide or TraceCalc software, GO TO 17.

16. Split up the circuit or redesign.

The installed heating cable length is greater than allowed for a given circuit. Split the circuit in two circuits, or redesign the circuit. END.

17. Obtain working length.

Record the amperage of the operating section of the circuit and multiply by the voltage recorded in step 5. Divide this total by the watts/length (as determined from the Chemelex design guide) to obtain the length of operating heating cable.

18. Locate damaged area or connection; fix as required.

Locate the end of the working length of heating cable on the pipe, remove insulation, and repair the cable using approved components. END

19. Redesign.

If the operating temperature, desired maintain temperature, pipe size, insulation type or thickness, or ambient conditions differ from what the system was originally designed for, redesign the circuit using the Chemelex design guide or TraceCalc software, and reinstall.

20. Reinsulate.

Heating cables cannot overcome lack of insulation. Replace all damaged, missing, or wet insulation. END

21. Check temperature monitor.

The temperature monitoring equipment is faulty or poorly insulated, or may need field calibration. Some RTD probes' mounting hardware have been shown to cause a lower than actual recorded pipe temperature. Insulate RTD mounting hardware as necessary. Field calibration is required when the installed probe does not have the same amount of contact with the pipe as when originally calibrated. Raychem recommends applying AT-180 aluminum tape over the probe to help correct the differences.

22. Check control panel, wiring, and transformer.

The control system is not operating correctly. Check for miswired thermostats, a faulty relay or contactor, or an incorrectly programmed control system. Undersized power feed wires can cause a voltage drop to the heating cable. The taps on the transformer may need to be adjusted. END.

23. Disconnect wires at panel; perform Megger test.

At the panel, disconnect the circuit's power feed wires, neutral included. Test the circuit from the feed wires to ground as outlined in Section 9.1.

24. Megger failure?

The circuit is failing the Megger test if the recorded value is below the insulation resistance criteria provided in Section 9.2. If the circuit passes these criteria, GO TO 41.

25. Disconnect wires at power connection; perform Megger test on the heating cable.

At the power connection box on the pipe, disconnect the heating cable from the power feed wires, neutral included. Test the circuit from the heating cable to the braid per Section 9.1.

26. Megger failure?

The heating cable is failing the Megger test if the recorded value is below the insulation resistance criteria provided in Section 9.2. If the circuit passes these criteria, GO TO 40.

27. Visual inspection.

On new system installations, inspect all heating cable connections for proper cable preparation and component assembly. On any system, check for heating cable damage around heavily maintained equipment and any section of pipe with damaged or recently repaired insulation.

28. Isolate damaged section?

Isolate the damaged section of the heating cable by separating and checking individual lengths between all connections.

29. A = B?

Record the resistance between the heating cable bus wires at the front end of the heating cable (measurement A), and at the far end (measurement B). If the two values are not equal, GO TO 31.

30. High resistance fault to ground; locate with fault finder method #1.

A high impedance fault occurred in the heating cable between the connections. Use the fault locator method #1 (refer to section 11.4.2) to locate the fault.

31. A & B < 4.0?

If both A and B are small (less than 4 ohms), a bus-to-bus short is likely. GO TO 32. If not, continue to 33.

32. Bus wires shorted to braid; locate with fault finder method #5.

The heating cable bus wires are continuous but shorted together and to the braid. This fault can be located by employing the Raychem fault finder method #5 (refer to section 11.4.4) or a time domain reflectometer (TDR). The location can also be approximated by employing the ratio method. Refer to Section 11.1.

33. Either bus wire continuous?

Perform a continuity test to determine if either of the bus wires are continuous throughout the heating cable length. If neither are continuous, GO TO 37.

34. A OR B < 4.0?

At least one bus wire was continuous. If either A or B is small (less than 4 ohms), then one bus wire was severed and shorted to the other bus wire; GO TO 36. If A and B are large, GO TO 35.

35. One bus wire is severed; locate with fault finder method #5 or 1/R method.

One of the heating cable bus wires is severed and there is a high-resistance fault to the braid. The fault can be located using fault finder method #5 (Section 11.4.4) or a TDR. The fault location may be approximated using the 1/R method. (Refer to Section 11.2) END.

36. One bus wire is severed; locate with fault finder method #5.

One of the bus wires is severed and shorted to the other bus wire. This fault can be located by using fault locator method #5 (Section 11.4.4) or a TDR. END.

37. Is A or B < 4.0?

The heating cable has been severed. If either A or B is small (less than 4 ohms), then one of the bus wires is shorted together; GO TO 39. If A and B are large, GO TO 38.

38. Both bus wires are severed; locate with fault finder method #5 or the 1/R or capacitance methods.

The heating cable is severed and both halves have high resistance faults to the braid. This fault may be located by using the fault locator special method #5 (Section 11.4.5) or a TDR. The 1/R method (Section 11.2) can approximate the fault location. If resistance to ground is 1 megohm or larger, the capacitance method (Section 11.3) can also approximate the fault location. END.

39. Both bus wires are severed with one shorted; locate with fault finder method #5 or capacitance method.

The heating cable is severed and one half has a bus-to-bus short. This fault can be located by using fault locator special method #5 (Section 11.4.5) or a TDR. The 1/R method (Section 11.2) can approximate the fault location. The capacitance method (Section 11.3) can also approximate the fault location. END.

40. Locate fault in power wire with fault locator method #1.

A fault occurred in the power feed wires between the panel and the power connection box. Use fault locator method #1 (Section 11.4.2) to locate the fault. END.

41. GFPD used?

Since the circuit has meggered fine, something else is wrong. If a ground-fault protection device (GFPD) is not used, GO TO 45.

42. 30-mA type?

If the GFPD has a 30-mA trip level, GO TO 43. If a ground-fault circuit interrupter (GFCI) or other ground-fault device with less than a 30-mA trip level was used, GO TO 44.

43. Common neutrals used or ground-fault protection device (GFPD) faulty.

The GFPD is faulty or operated incorrectly. Ground-fault protection devices cannot share or swap power wires from different loads. Each device needs a separate set of feed wires to the equipment. The faulty GFPD can be checked with an amperage probe. Replace if necessary. Some GFPDs have been shown to nuisance-trip because of capacitance loads induced from long power feed wires or because radios are keyed nearby. END.

44. Use 30-mA trip ground-fault protection device (GFPD).

Ground-fault circuit interrupters (GFCIs) or 5-mA trip level devices are personnel protection devices and may be too sensitive for industrial equipment. Heating cable circuits can produce up to 10 mA of leakage under normal conditions. Install 30-mA devices to eliminate nuisance tripping. END.

45. Circuit breaker faulty?

If ground-fault protection devices were not used, the breaker may be defective. Record the start-up load. If the circuit's load is less than the breaker size, the breaker needs to be replaced. END.

46. Replace circuit breaker.

Replace the defective circuit breaker. If the problem persists, GO TO 47.

47. A = B?

If the circuit breaker is operating correctly, it may just be undersized. Check the heating cable resistance at the front end (measurement A) and at the far end (measurement B). If the resistance readings are equal, the heating cable is OK and the breaker is undersized; GO TO 48. If the resistance readings do not match, an internal short occurred; GO TO 49.

48. Circuit breaker undersized or start-up temperature too low.

The heating cable is OK. However, the circuit breaker may be undersized for the application. Breaker size is specified as a function of heating cable length and start-up temperature. Consult the Chemelex design guide or TraceCalc software, and replace as required. END.

49. Heating cable shorted; locate with fault finder method #3 or ratio method.

If an internal short is present and the circuit meggered OK, look for wiring problems. Inspect all junction boxes and heating cable components for crossed wires or moisture. The fault can be located with fault finder method #3 (Section 11.4.3), or approximated with the resistance ratio method (Section 11.1). END.

11.0 Fault Location Techniques

11.1 Ratio Method

This method approximates the location of a bus wire short by using an ohmmeter.

Measure the bus-to-bus heating cable resistance from the front end (measurement A) and the back end (measurement B) of the suspected section.

The approximate location of the fault, expressed as a percentage of the heating cable length from the front end, is:

$$D = \frac{A}{(A+B)} \cdot 100\%$$

Example: A = 1.2 ohms
B = 1.8 ohms

Fault location: D = 1.2 / (1.2 + 1.8) x 100%
= 40%

The fault is located 40% into the circuit as measured from the front end.

11.2 1/R Method

This method approximates the location of a fault where the heating cable has been severed. The method is recommended for nonbraided heating cables. For braided cables (-CT or -CR) more accurate methods are available, such as the capacitance method (Section 11.3).

The approximate location of the fault, expressed as a percentage of the heating cable length from the front end, is:

$$D = \frac{1/A}{(1/A+1/B)} \cdot 100\%$$

Example: A = 21.27 ohms
B = 92.0 ohms

Fault location D = (1/92) / (1/21.27 + 1/92) x 100%
= 81%

The fault is located 80.9% from the back end of the circuit.

11.3 Capacitance Method

This method approximates the location of a fault where the heating cable core has been severed. The method is suitable for braided (-CT or -CR) heating cables only.

Record the capacitance reading from one end of the heating cable. The capacitance reading should be measured between both bus wires twisted together (positive lead) and the braid (negative lead).

Multiply the measured capacitance with the heating cable's capacitance factor as listed in Table 11.1 on the next page.

Example: 20XTV2-CT
Recorded capacitance: 16.2 nF
Capacitance factor = 9.62 ft/nF
Fault location = 16.2 x 9.62
= 156 feet from reading location

As an alternate, capacitance values from both the front and the back end can be used. The ratio of one capacitance value taken from one end (A) divided by the sum of both A and B (A + B) and then multiplied by 100 yields the distance from the first end, expressed as a percentage of the heating circuit length.

Table 11.1 Heating Cable Capacitance Factors

Cable catalog numbers	Capacitance factor
3BTV1-CR	6.85 ft/nF
3BTV2-CR	
3BTV1-CT	
3BTV2-CT	
5BTV1-CR	6.85
5BTV2-CR	
5BTV1-CT	
5BTV2-CT	
8BTV1-CR	5.92
8BTV2-CR	
8BTV1-CT	
8BTV2-CT	
10BTV1-CR	4.97
10BTV2-CR	
10BTV1-CT	
10BTV2-CT	
10QTV1-CT	4.67
10QTVR1-CT	
10QTV2-CT	4.67
10QTVR2-CT	
15QTV1-CT	3.27
15QTVR1-CT	
15QTV2-CT	4.67
15QTVR2-CT	
20QTV1-CT	3.27
20QTVR1-CT	
20QTV2-CT	3.27
20QTVR2-CT	
5XTV1-CT	10.72
5XTV2-CT	11.13
10XTV1-CT	10.51
10XTV2-CT	10.75
15XTV1-CT	9.66
15XTV2-CT	9.86
20XTV1-CT	8.30
20XTV2-CT	9.62

11.4 Raychem DET-2200 Fault Locator

The Raychem DET-2200 fault locator is designed to locate a variety of electrical faults in heating cable circuits. The components of the fault locator are numbered and labeled in Figure 11.1 below. The procedures that follow describe the locating methods applicable to the most commonly encountered faults. Not all methods are described. See DET-2200 user manual for complete details.

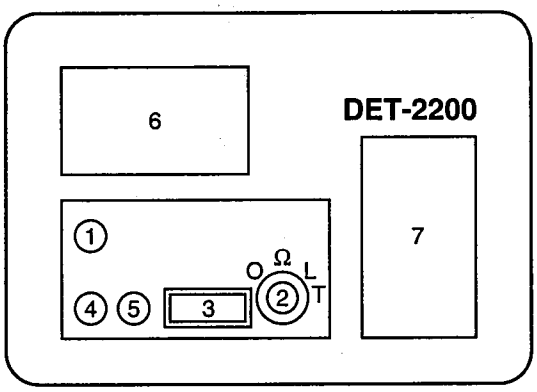

1. Battery condition indicator.
2. Function switch
   O = Off
   Ω = Loop resistance check
   L = Set loop length
   T = Test
3. Display
4. "Set Digit" push button
5. "Select Digit" push button
6. Charging module
7. Megger

Figure 11.1. Raychem DET-2200 fault finder

11.4.1 Entering the length with the DET-2200

The following procedure enters a length of 1000 in memory:

1. Set the function switch to "L."
2. Press the "Select Digit" button (5) once, thus selecting the first digit.
3. Press the "Set Digit" button (4) twice to advance the digit to the number "1."
4. Press the "Select Digit" button (5) once more to enter the first digit in memory and select the second digit.
5. Depress the "Set Digit" button (4) to advance the digit to number "0." Repeat steps 4 and 5 until all digits have been entered. The desired length is now held in memory.
6. Now follow the procedure corresponding to the proper fault type to locate the fault.

11.4.2 DET-2200 method #1: Locating ground faults

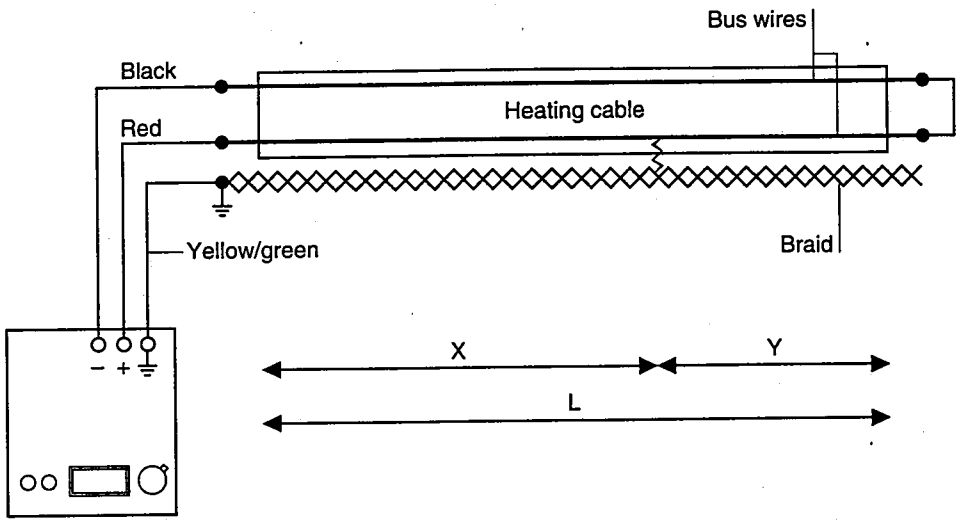

Figure 11.2. DET-2200 method #1

1. Go to the end seal, expose both bus wires, and twist them together. Make sure both bus wires are insulated from ground and braid.

2. Connect the red test lead (+) to one of the heating cable bus wires, the black test lead (-) to the other bus wire, and the yellow/green test lead (ground) to the braid, or to the metal pipe for nonbraided cable.

3. Turn the knob to position L and set the test length to 1000 as described in Section 11.4.1.

4. Turn the knob to the measurement position (T). The DET-2200 will display a 0, 1, or 2 as the test is performed. If the value is greater than 1000, switch the red and black test leads, then turn the knob to length (L) and back to measurement (T). Record the indicated length X.

5. Twist the bus wires together at the front end of the circuit. Go to the other end of the circuit and repeat steps 1 through 4. Record the newly indicated length Y.

6. The fault is located at a distance (D) expressed as:

$$D = \frac{X}{(X+Y)} \cdot l$$

   where l = the actual heating cable length

7. Turn off the fault finder.

8. Locate the fault by walking off a distance D along the pipe. It is usually more accurate to walk off the shortest distance along the pipe. Expose the heating cable by removing the insulation and visually locate the fault. The location accuracy will depend on the amount of heat tracing or valves, supports, and other components. Extend the exposed area further if the fault cannot be identified.

11.4.3 DET-2200 method #3: Locating bus wire to bus wire shorts

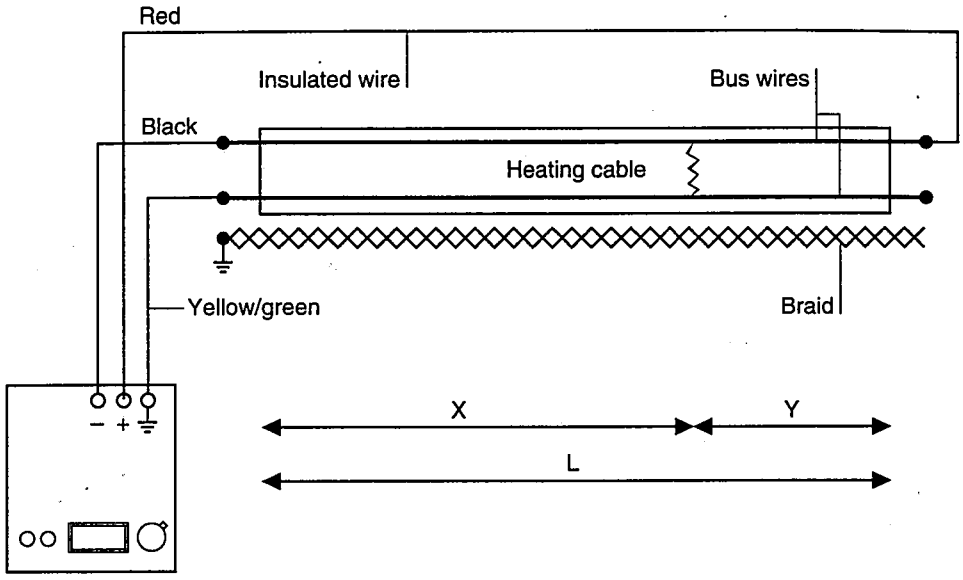

Figure 11.3 DET-2200 method #3

1. String an insulated copper bus wire along the pipe so as to extend the test lead to the far end of the heating cable. The bus wire can be of any length (even an entire reel of wire), but should not move or change during the test. The far end connection can be made to either bus wire. Make sure the joint is insulated from the braid and ground.

2. Connect the red test lead (+) of the DET-2200 to the insulated bus wire, and the black test lead (-) to the same heating cable bus wire as shown above. This can be checked by setting the knob to loop resistance check (Ω); the correct bus wire connection will show the smallest value.

3. Turn the knob to position L and set the test length to 1000 as described above.

4. Turn the knob to the measurement position (T). The display will show a 0, 1, and 2 as the test is performed. Record the indicated distance X.

5. Disconnect the test leads and connect the insulated wire to the heating cable wire previously connected to the black test lead. Go to the other end of the cable, disconnect the insulated wire, and connect the black test lead to the bus wire. Connect the red test lead to the insulated wire, and the yellow/green test lead to the other bus wire.

6. Repeat steps 3 through 5 above and record the value from the back end of the heating cable as Y.

7. The fault is located at a distance (D) expressed as:

$$D = \frac{X}{(X+Y)} \cdot l$$

   where l = the actual heating cable length.

8. Turn off the fault finder.

9. Locate the fault by walking off a distance D along the pipe. Expose the heating cable by removing the insulation and visually locate the defect. The location accuracy will depend on the amount of heat tracing on valves, supports, and other components. Extend the exposed area further if the fault cannot be identified.

11.4.4 DET-2200 method #5: Locating shorts between both bus wires and ground

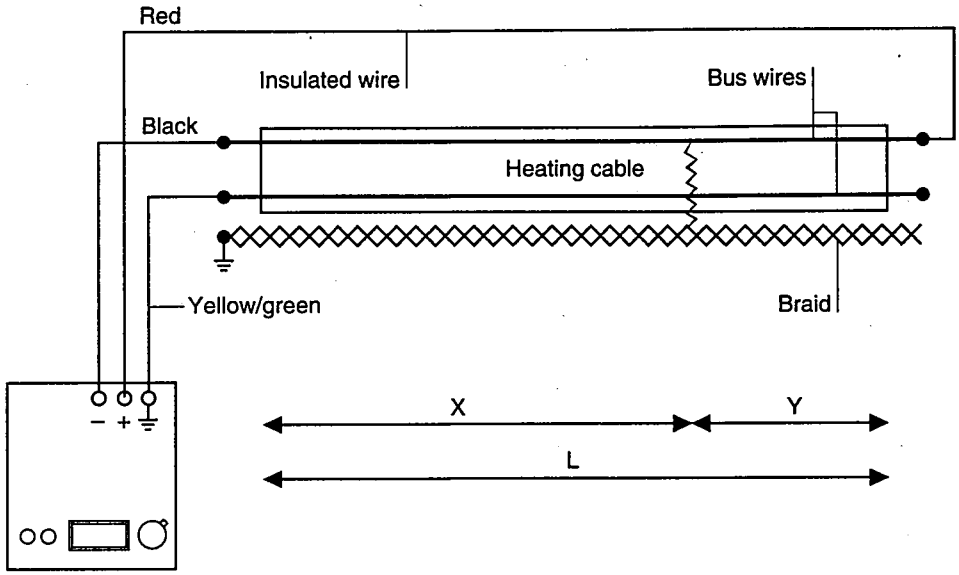

Figure 11.4 DET-2200 method #5

1. String an insulated copper bus wire along the pipe length so as to extend the lead to the far end of the heating cable. Make sure the joint is insulated from the braid. The far end connection can be made to either bus wire.

2. Connect the red test lead (+) to the insulated bus wire, and the black test lead (+) to the same heating cable bus wire as shown above. The correct wiring can be verified by switching the DET-2200 to L; the correct wiring will show the lowest value. Connect the yellow/green test lead to the heating cable braid.

3. Turn the knob to position L and set the test length to 1000 as described above.

4. Turn the knob to the measurement position (T). The DET-2200 will display a 0, 1, and 2 as the test is performed. Record the indicated distance X.

5. Disconnect the test leads and connect the insulated wire to the heating cable bus wire previously connected to the black test lead. Go to the other end of the heating cable, disconnect the insulated wire and connect the black test lead. Connect the red (+) test lead to the insulated wire, and the yellow/green test lead to the braid.

6. Repeat steps 3 through 5 and record the value as Y.

7. The fault is located at a distance (D) expressed as:

$$D = \frac{X}{(X+Y)} \cdot l$$

   where l = the actual heating cable length.

8. Turn the knob to the off position (O).

9. Locate the fault by walking off a distance D along the pipe. Expose the heating cable by removing the insulation, and visually locate the defect. The location accuracy will depend on the amount of heat tracing on valves, supports, and other components. Extend the exposed area further if the fault cannot be identified.

11.4.5 Special method #5

All the procedures for this method are the same as for the previous methods, except that the heating cable bus wire and braid are interchanged. The yellow/green test lead is connected to either heating cable bus wire, the black test lead to the braid, the red test lead to the insulated wire, and the insulated wire to the far end braid.

Appendix A Inspection Record

Raychem

INSPECTION RECORD

Circuit number:

Heating cable type:

Circuit length:

Inspection date:						
Visual inspection inside connection boxes for signs of overheating, corrosion, moisture, loose connections, and other problems.*						
Proper electrical connection, ground, and bus wires insulated over full length.*						
Damaged or wet thermal insulation; damaged, missing, or cracked lagging or weatherproofing; gaps in caulking.						
End seal, covered splices, and tees properly labeled on insulation cladding.*						
Thermostats checked for moisture, corrosion, set point, switch operation, capillary damage, and protection.						
Megger test	**Ohms**					
Test A	500 V					
	1000 V					
	2500 V					
Test B *	500 V					
	1000 V					
	2500 V					
Power check						
Circuit voltage	Panel					
	Circuit end*					
Circuit amps after 10 min.						
Pipe temperature (°F)						
Power = volts x amps/feet						

* Commissioning testing only

Raychem Field Offices

United States

Anchorage area
Tel (907) 272-4167
Fax (907) 272-5914

Atlanta area
Tel (404) 952-0030
Fax (404) 952-1394

Chicago area
Tel (708) 572-6300
Fax (708) 572-1469

Cincinnati area
Tel (513) 563-3570
Fax (513) 563-3534

Dallas area
Tel (214) 484-9600
Fax (214) 484-5052

Houston area
Tel (713) 266-3773
Fax (713) 266-3705

Los Angeles area
Tel (714) 833-3630
Fax (714) 833-1158

San Francisco area
Tel (415) 361-4900
Fax (415) 361-6711

Canada

Calgary area
Tel (403) 264-3770
Fax (403) 264-3777

Montreal area
Tel (800) 561-0795
Fax (514) 633-8085

Toronto area
Tel (800) 387-3993
Fax (416) 671-0972

Vancouver area
Tel (604) 291-6633
Fax (604) 291-1167

Europe

European Headquarters
United Kingdom
Raychem Ltd.
Chemelex Division
Faraday Road
Dorcan, Swindon
Wiltshire, SN3 5HH
Tel (44) 793 528 171
Fax (44) 793 482 629

France
Tel (33) 1 34 20 24 00
Fax (33) 1 34 20 21 02

Germany
Tel (69) 2281 6126
Fax (69) 2281 6127

Asia

Japan
K.K. Raychem
Tel (81) 45 972 7177
Fax (81) 45 972 1862

Asian Headquarters
Raychem (H.K.) Ltd.
Unit 601 World Finance Centre
South Tower
Harbour City
Kowloon, Hong Kong
Tel (852) 730 9435
Fax (852) 735 4827

Korea
Raychem Far East Inc.
Tel (82) 2 557 7752
Fax (82) 2 555 2908

AutoMatrix, Auto-Trace, Chemelex, MoniTrace, RMI, and PolyMatrix are trademarks of Raychem Corporation.

Raychem Corporation
Chemelex Division
300 Constitution Drive
Menlo Park, CA 94025-1164
1-800-545-6258
Fax (415) 361-6711

All of the above information, including illustrations, is believed to be reliable. Users, however, should independently evaluate the suitability of each product for their application. Raychem makes no warranties as to the accuracy or completeness of the information, and disclaims any liability regarding its use. Raychem's only obligations are those in the Standard Terms and Conditions of Sale for this product, and in no case will Raychem be liable for any incidental, indirect, or consequential damages arising from the sale, resale, use, or misuse of the product. Specifications are subject to change without notice. In addition, Raychem reserves the right to make changes in materials or processing, which do not affect compliance with any applicable specification, without notification to Buyer.

APPENDIX B-4

MANUFACTURER'S O&M MANUAL, WATER TEMPERATURE DETECTOR

Instruction

MI
016-131
June 1986

PLATINUM RESISTANCE TEMPERATURE DETECTORS

PR Series, Style C

INTRODUCTION

Description

Foxboro Platinum Resistance Temperature Detectors (RTD's) utilize the change in electrical resistance of a platinum wire due to a temperature change as the sensitive portion of the sensor element assembly (see Figure 1). Sensors may be single or dual element and are available in either bare sheath or well-type assemblies.

The PR-□□B is designed for bare sheath mounting and requires a bushing for direct mounting to the process vessel. Models PR-□□N and PR-□□U are designed for mounting in a well. A spring-loading device keeps the element tip pressed against the bottom of the well for metal-to-metal contact. This improves thermal response time and minimizes the effects of shock and vibration.

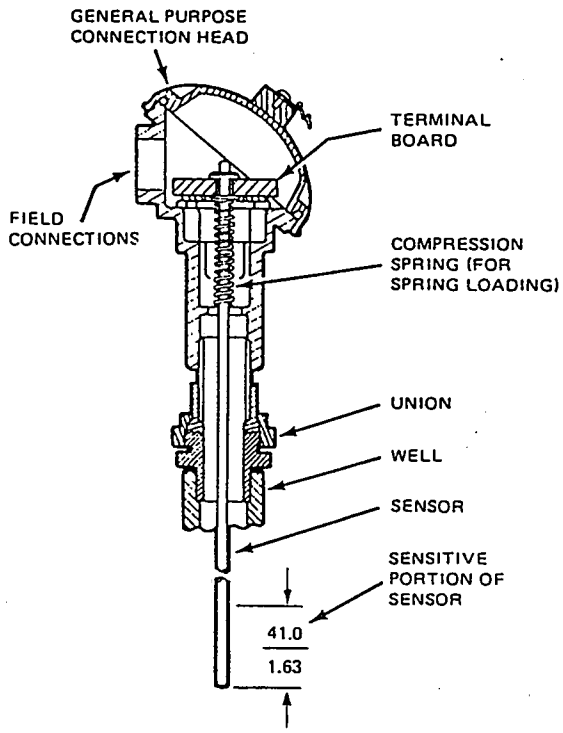

Figure 1. Platinum RTD

Standard Specifications

Calibration:
- IEC-B: International Standard IEC 751-1983. Resistance of 100.000 ±0.12 Ω at 0°C (32°F). Alpha is 0.00385 Ω/Ω/°C. Reference, Technical Information TI 005-028.
- SAMA: SAMA Standard RC21-4. Curves PR 279 (°C) and PR 278 (°F). Resistance of 98.129 ±0.1 Ω at 0°C (32°F). Alpha is 0.003923 Ω/Ω/°C. Reference TI 5-27a.

Temperature Limits: The maximum temperature limit is determined by the lowest upper range limit of the sheath, sensor, or assembly.
- Connection Head: 105°C (220°F)
- AISI Type 316 Stainless Steel (316 ss)Sheath Sensor: -200 and +480°C (-320 and +900°F)
- Inconel Sheath Sensor: -40 and +650°C (-40 and +1200°F)

Accuracy:
- IEC-B Calibration Sensor: ±0.3 + 0.005 (T)°C
- SAMA Calibration Sensor: ±0.26 K (±0.5°F) or ±0.25% of temperature reading, whichever is larger, for 480°C (900°F) and below; ±0.5% of reading between 480 and 650°C (900 and 1200°F).

Minimum Immersion: To minimize thermal conduction errors, an immersion length of at least 90 mm (3.5 in) is required.

CONTENTS . . .

Introduction 1
Installation 2
Maintenance 5

FOXBORO®

©1986 by The Foxboro Company

®Registered Trademark

INSTALLATION

****
* WARNING *
****

In applications where the RTD is installed in a closed vessel under pressure, or in an open vessel below the surface level of the fluid, the RTD must not be removed during process operation as process fluid will leak out. If sensor removal is required during process operation, sensor must be installed in a well.

Sensor Assembly With Well (PR-□□U and PR-□□N)

When the RTD and well are purchased together, they are shipped fully assembled (with spring loading device installed) (see Figures 2, 3, and 4) making installation much simpler. After installing the well, it is only necessary to connect the field wiring to the terminal board in the head. See "Wiring" section for electrical connections.

Sensor Assembly Without Well (PR-□□U and PR-□□N)

****
* CAUTION *
****

When a sensor assembly is received without a well, the bare sensor and terminal board must be removed from the connection head prior to installation. Removal will prevent wires from bare sensor to terminal board from shearing.

1. Remove connection head cover.
2. Remove terminal board screws, slide terminal board and bare sensor assembly out. See Figure 2.
3. Thread connection head assembly into well.
4. Insert bare sensor assembly into well.

   NOTE
   Spring compression should be noticeable when terminal board is pushed down to insert screws. There must be firm contact between sensor tip and bottom of well to achieve proper thermal response.

5. Reinsert terminal board screws.
6. See "Wiring" section for electrical connections.

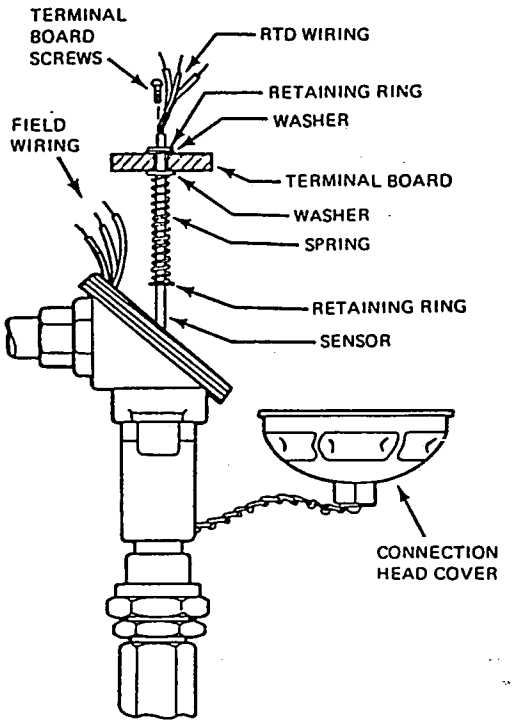

Figure 2. Connection Head (General Purpose)

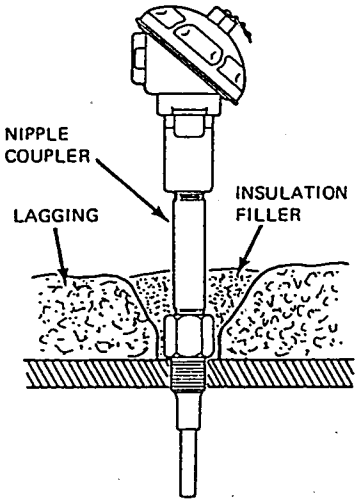

Figure 3. Lagging Well/Insulated Vessel

****
* CAUTION *
****

Insulation filler should be added after installation of RTD to avoid error due to heat radiation.

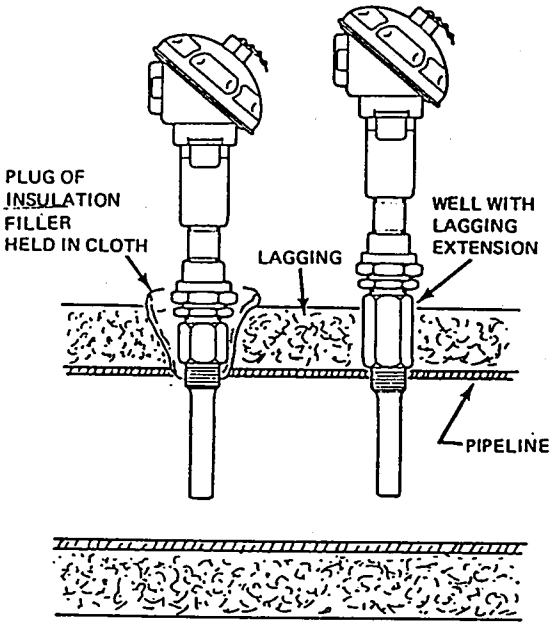

Figure 4. Lagging Well/Insulated Pipeline

Sensor Assembly With Bare Sheath (PR-□3B)

Three types of couplings are available for connecting a bare sheath assembly to the process.

Packing-Gland Coupling

The packing-gland coupling allows for adjustments of depth. It can be used in wells, kettles, vessels, pipelines, tanks, etc.

When installing packing gland in wells, etc., tighten bushing first (see Figure 5). Then moderately tighten jam nut.

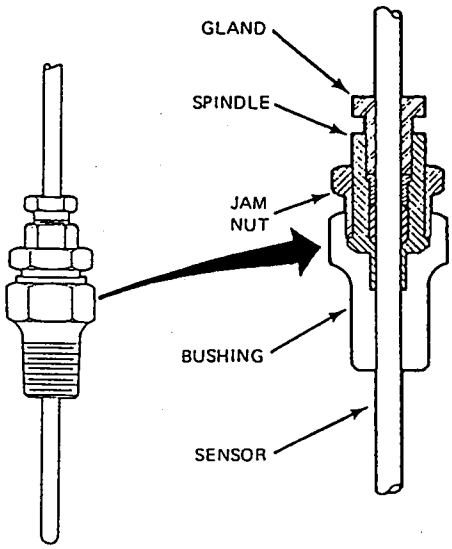

Figure 5. Packing-Gland Coupling

To make further depth adjustments, loosen the gland nut and slide sensor to desired position. Tighten gland nut to secure sensor sheath. See "Wiring" section for electrical connections.

Compression Coupling

```
*************
*  CAUTION  *
*************
```

The compression coupler has a ferrule mounted internally (see Figure 6). Once the compression coupler has been tightened onto the bare sensor it cannot be relocated.

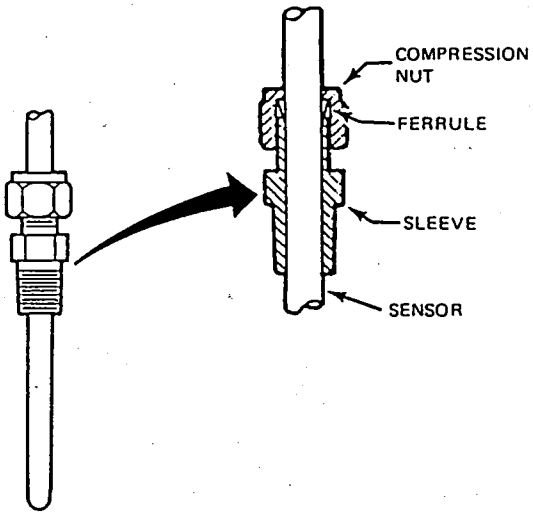

Figure 6. Compression Coupling

1. When installing, make sure the compression coupling is in the desired position before tightening.

2. See "Wiring" section for electrical connections.

Spring-Loaded Coupling

Bare sheath RTD's can be furnished with a spring-loading device. A split nut clamps to the sensor sheath at the correct location so that turning the jam nut compresses the spring and forces the tip of the RTD against the bottom of the well.

1. When installing, attach fittings or adapters as necessary to accommodate the jam nut assembly (see Figure 7).

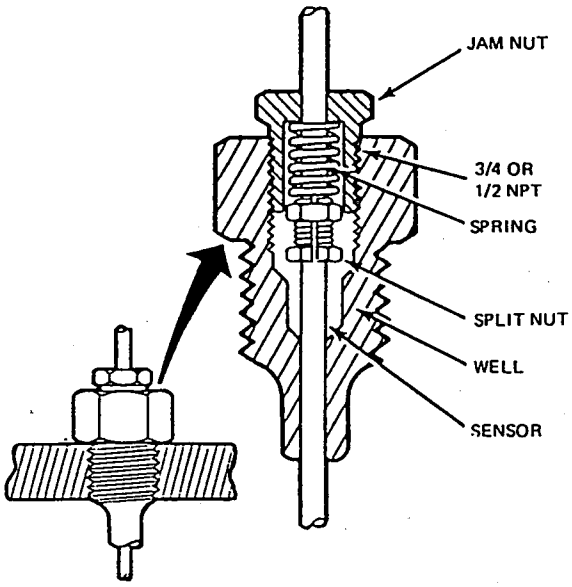

Figure 7. Spring-Loaded Coupling

2. Insert the sensor into the well and press down firmly. Pencil mark the sheath at the location where the jam nut will first engage its adapter or well threads.

3. Remove the RTD. With the jam nut and spring installed and sliding freely on the upper portion of the sheath, install the split nut so that the upper edge of this nut is at the marked location.

4. Install the RTD. Tighten the jam nut with moderate force to ensure firm seating of the tip against the bottom of the well.

5. See "Wiring" section for electrical connections.

Explosionproof Assembly (PR-□4)

Flameproof and explosionproof head used specifically for the PR-□4 assembly to protect conductors in conduit systems within hazardous areas; designed for use in Class I, Groups C and D; Class II, Groups E and G; and Class III hazardous locations. The head contains a compression spring to maintain RTD tip contact with the bottom of the well.

Wiring

****
* CAUTION *
****

Because of the sensitivity of the signals in these wires, RTD external connecting wiring should run entirely independent of other wiring in a separate conduit isolated from earth (ground) and situated so that steam, water, or other fluids cannot enter the conduit to cause leakage currents, short circuits, or earthing (grounding). Do not run power wires in the same conduit with RTD extension cable.

****
* CAUTION *
****

To protect the RTD assembly from vibration and strain, do not connect rigid conduit directly to the connection head; use flexible conduit if a conduit connection is required.

To make field wiring connections, remove connection head cover and follow Table 1 and Figure 8.

Table 1.

TERMINAL	COLOR	REMARKS
A	White	Dual Element Only
B	Green or Red	Dual Element Only
C	Black or Red	Dual Element Only
D	White	--
E	Green or Red	--
F	Black or Red	--

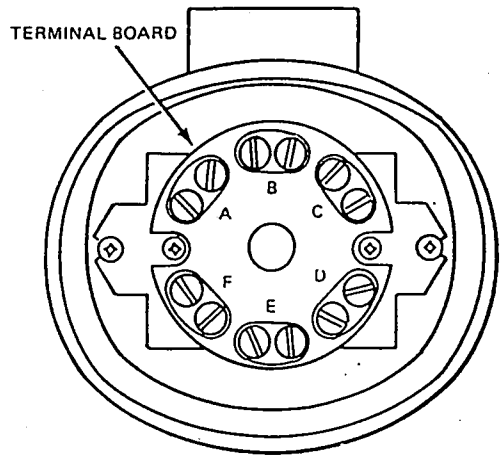

Figure 8. Connection Head/Terminal Board

MAINTENANCE

Field Test

To determine functional operation of sensor, Technical Information TI 005-028 (IEC Calibration) or TI 5-27a (SAMA Calibration) is required for correct Resistance/Temperature relationship.

1. Insert sensitive portion of sensor [89 mm (3.5 in) minimum] into a known temperature, such as an ice bath or room temperature (see Figure 9).

2. Refer to proper TI (TI 5-27a or TI 005-028) for correct resistance.

3. Connect ohmmeter to terminals indicated in Table 2. Result is shown in last column.

Table 2.

FROM TERMINAL	TO TERMINAL	RESULT
SINGLE ELEMENT		
D	E	Value from TI
D	F	Value from TI
D	To Sheath	Open Circuit Indicated
DUAL ELEMENT		
A	B	Value from TI
A	C	Value from TI
A	To Sheath	Open Circuit Indicated
D	E	Value from TI
D	F	Value from TI
D	To Sheath	Open Circuit Indicated

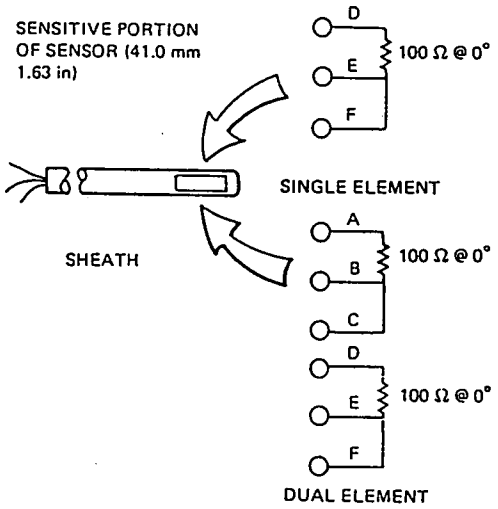

Figure 9. Single/Dual Element Wiring

Disassembly

Spring-Loaded RTD

NOTE
If it becomes necessary to replace a spring-loaded RTD, the following procedure must be followed.

1. Remove connection head cover. Disconnect field and sensor wiring. Note sensor wiring.

2. Remove terminal board screws (see Figure 10) and withdraw terminal board and sensor.

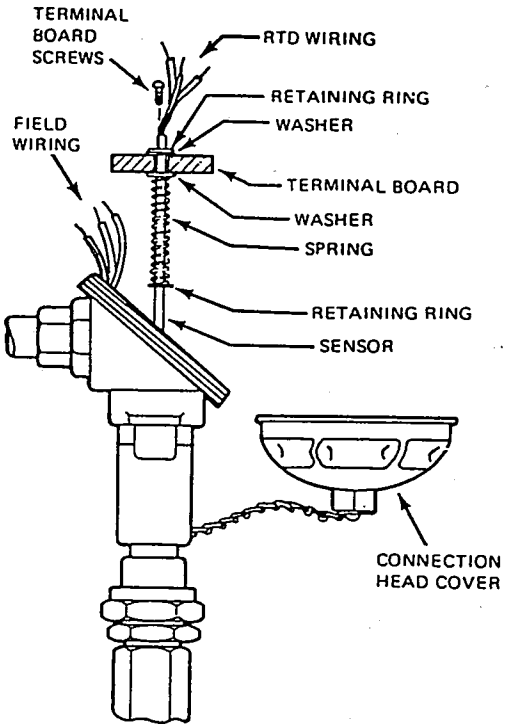

Figure 10. Spring-Loaded RTD

3. Using retaining ring pliers, pull off retaining rings. Slide terminal board, spring, and washers off sensor.

Assembly

Spring-Loaded RTD

1. Using replacement retaining ring, install lower retaining ring as shown in Figure 11.

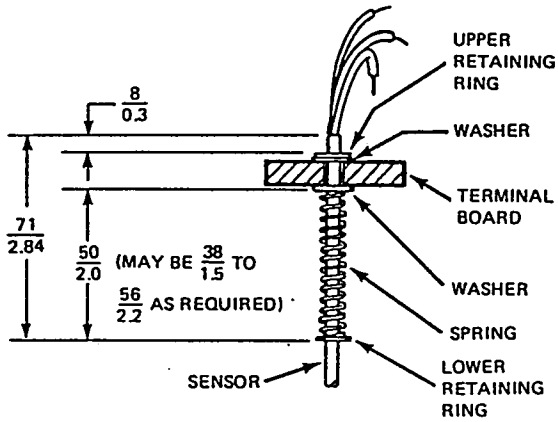

Figure 11. Sensor/Spring/Terminal Board

2. Slide on spring, washer, terminal board and washer from top of sensor.

3. Install upper retaining ring in position shown in Figure 11.

4. Insert sensor assembly into well.

NOTE

Spring compression should be noticeable when terminal board is pushed down to insert screws. There must be firm contact between sensor tip and bottom of well to achieve proper thermal contact.

5. Reinsert terminal board screws.

6. Connect field and sensor wiring to terminal board. Refer to "Wiring" section.

7. Install connection head cover.

ISSUE DATES
AUG 1984
JUN 1986

APPENDIX B-5

MANUFACTURER'S O&M MANUAL, FLOW METER

TIGERMAG™

INSTALLATION OPERATION & MAINTENANCE MANUAL

Issue Date: July 1996
Supercedes: June 1993

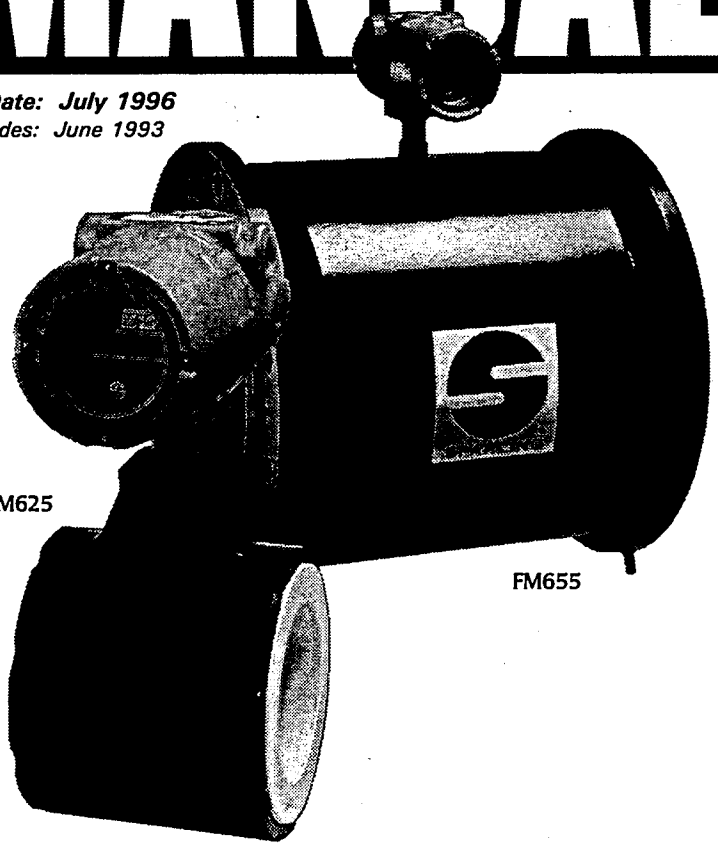

SPARLING

TABLE OF CONTENTS

Page

SECTION 1 -GENERAL 1

1.1 Measuring System 1
1.2 Operating Principal 1
1.3 Application to Magnetic Flow Measurement 1
1.4 Interference 2
1.5 System Operation 3
1.6 Automatic Gain Control 4
1.7 Construction 4
1.8 Specifications 5
1.9 Interchangeability 7

SECTION 2 - PRE-INSTALLATION 8

2.1 Receiving and Inspection 8
2.2 Storage 8
2.3 Return of Equipment 8

SECTION 3 - INSTALLATION 8

3.1 Application Considerations 8
3.2 Site Selection 9
3.3 Rotating the Transmitter Display 9
3.4 Pipe Connections 10
3.5 Special Mounting Bolts & Gaskets . 11
3.6 Grounding 14
3.7 Electrical Connections 15
3.8 Remote Mounted Transmitter 17

SECTION 4 - START-UP 19

SECTION 5 - CALIBRATION 19

SECTION 6 - MAINTENANCE 19

SECTION 7 - TROUBLESHOOTING 20

7.1 General 20
7.2 Troubleshooting Chart 20
7.3 Electronics Self Test 22
7.4 Electronics Module Replacement .. 23
7.5 Sensor Testing 23
7.6 Coil Continuity Testing 24
7.7 Coil Insulation Test 24
7.8 Electrode Circuit Continuity Test .. 24
7.9 Electrode Circuit Insulation Test ... 25

Page

SECTION 8 – REPLACEMENT PARTS LIST 25

APPENDIX 1- PROGRAMMING 26

APPENDIX 2 - FACTORY SET-UP 36

FIGURES

1.1 Measuring Principal 1
1.2 Fast Changing Flows 2
1.3 Noise Rejection 2
1.4 Block Diagram 3
1.5 Dimensions 7
3.1 Full Pipe Required 9
3.2 Rotating the Display 9
3.3 FM625 Gasket Installation 12
3.4 FM625 Sensor Position 12
3.5 FM655 Gasket Installation 13
3.6 FM655 Sensor Position 13
3.7 Grounding ..... [illegible]
3.8 Conduit Connections ..... [illegible]
3.9 Electrical Connections I/O PCB 16
3.10 I/O Board Jumper Position 16
3.11 Sensor Wiring - Remote Transmitter 17
3.12 Remote Mounting Bracket 17
3.13 Remote Mounted Transmitter 18
7.1 Access to Electronics 22
7.2 Electrode Cable Simulate Position 22
7.3 Removing the Electronics Module . 23
7.4A Coil ResistanceTesting 24
7.4B Coil Insulation Testing 24
7.5 Electrode Cable PCB 24

TABLES

1. Flow/Dimensions Table 7
2. Gasket Material 10
3. Meter I.D. 10
4. Torque, Flange & Bolt Specifications 11

1.0 General

1.1 Measuring System

The Sparling TIGERMAG™ Model FM625 and FM655 flowmeters are obstructionless devices for monitoring the volumetric flow of conductive liquids in full closed pipes.

The flowmeter consists of a sensor (wafer or flanged) with a non-magnetic liner and a measuring transmitter.

1.2 Operating Principle

Operation is based on Faraday's Law of Magnetic Induction. An electrically conductive liquid flowing through a magnetic field induces a voltage which is perpendicular to this field and to the direction of the flow. This voltage is proportional to the average flow velocity. See Figure 1.1.

The mathematical formula describing Faraday's law reads:

$E = B \times L \times V$

E = Induced voltage
B = Magnetic field intensity (flux density)
L = Distance between the electrodes (pipe diameter)
V = Average flow velocity of liquid

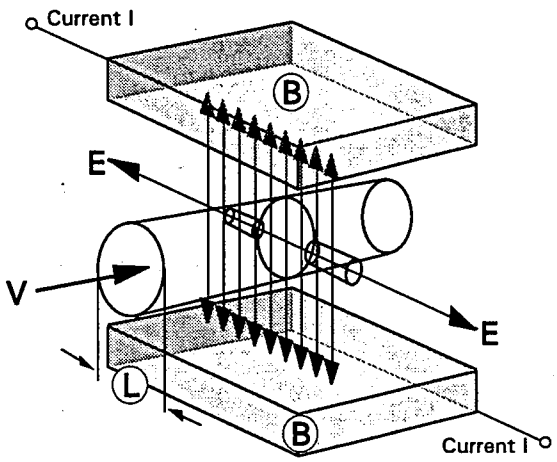

Measuring Principle
Figure 1.1

1.3 Application to Magnetic Flow Measurement

In a magnetic flowmeter the liquid acts as a moving conductor as it flows through the pipe. The induced voltage (E) in the liquid is measured by two sensing electrodes mounted opposite each other in the meter sensing head.

The length of the conductor is equal to the distance between sensing electrodes and also the internal diameter (D) of the pipe. The flux density is proportional to the coil current (I), times a constant (k). The above formula can be restated as follows:

$$E = I \times k \times D \times V$$

$$V = \frac{\text{flow}}{\text{cross sectional area}} = \frac{Q}{A}$$

$$E = \frac{Q \times I \times 4 \times k}{D^2}$$

Note that if I is held constant, E is proportional to Q or *the induced voltage is directly proportional to the average flow rate* (V).

1.4 Interference

1.4.1 Electrochemical Interference

The signal voltage is measured by two electrodes. Galvanic elements form on the surface areas between the ion-conducting liquid and the metal electrodes. The polarization voltages which result are dependent on temperature, pressure, and the chemical composition of the electrodes and liquid. These are direct voltages which cannot be predicted and which can be different at each electrode. The signal voltage must be separated from the interference direct voltage. Proper grounding eliminates these unpredictable voltages from interfering with the signal voltage.

1.4.2 Induction Interference (Quadrature)

Electrode cables connect the electrodes with the meter electronics. Because these cables must run within the magnetic field, a voltage is induced which is proportional to the rate of change of the magnetic field strength. The meter design minimizes the length of conductor within the magnetic field in order to keep the value of this interference as low as possible.

1.4.3 Pulp Noise

Liquids which contain pulp such as paper stocks or food mixtures can create high levels of electrode interference voltages as the pulp contacts the electrode. The TIGERMAG™ utilizes a suppression technique by which these interference voltages are rejected if they create an electrode signal which varies excessively from the immediately preceding signal.

This feature compares each sampled flow signal to the previous signal. Signals which vary from the preceding signal by more than 0-30% (selectable) are rejected. This feature provides a stable output during the cycles when spurious signals are interfering, yet permits rapid response to true flowrate changes.

In Figure 1.2, signals at 2, 3 and 4 are outside the tolerance band. A stable output of the signal at 1 is produced and held at that value until two successive signals are within the change tolerance, as occurs at 5.

In Figure 1.3, signal 3 is within tolerance when compared to signal 2. The new output is displayed at 3, a delay of only two coil cycles. This rapid response permits the meter to be used on rapidly changing flows even when the noise rejection feature is used.

This feature permits the use of the TIGERMAG™ automatic zeroing pulsed DC magmeter in applications which had previously required AC meters. See Noise Suppression in the Appendix 1, Programming, section 1.9.4.

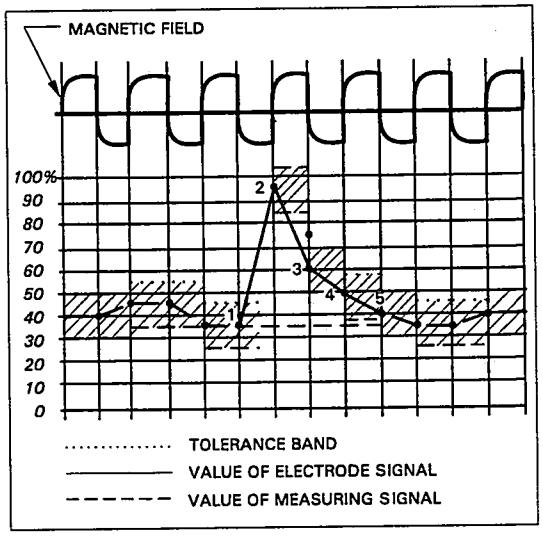

Fast Changing Flows
Figure 1.2

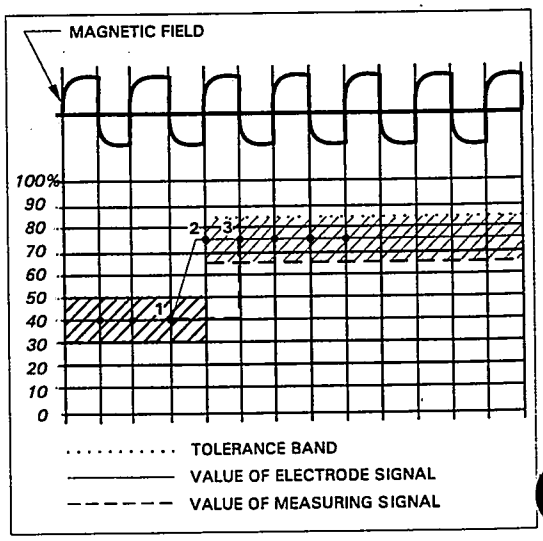

Noise Rejection
Figure 1.3

1.4 Interference Cont'd.

1.4.4 Other Interference Voltages

Pipes and the liquids within them are often used as a conductor for electrical grounding. This creates a voltage potential between electrodes which can be high relative to the signal voltage. **Proper grounding of the flowmeter to the liquid is necessary to achieve correct meter operation. Grounding rings should be installed if the flowing medium has a voltage potential, if piping is non-conductive (plastic or *lined*) or if conductivity is below 20 micromhos/cm. See Section 3.6 – Grounding.**

1.5 System Operation

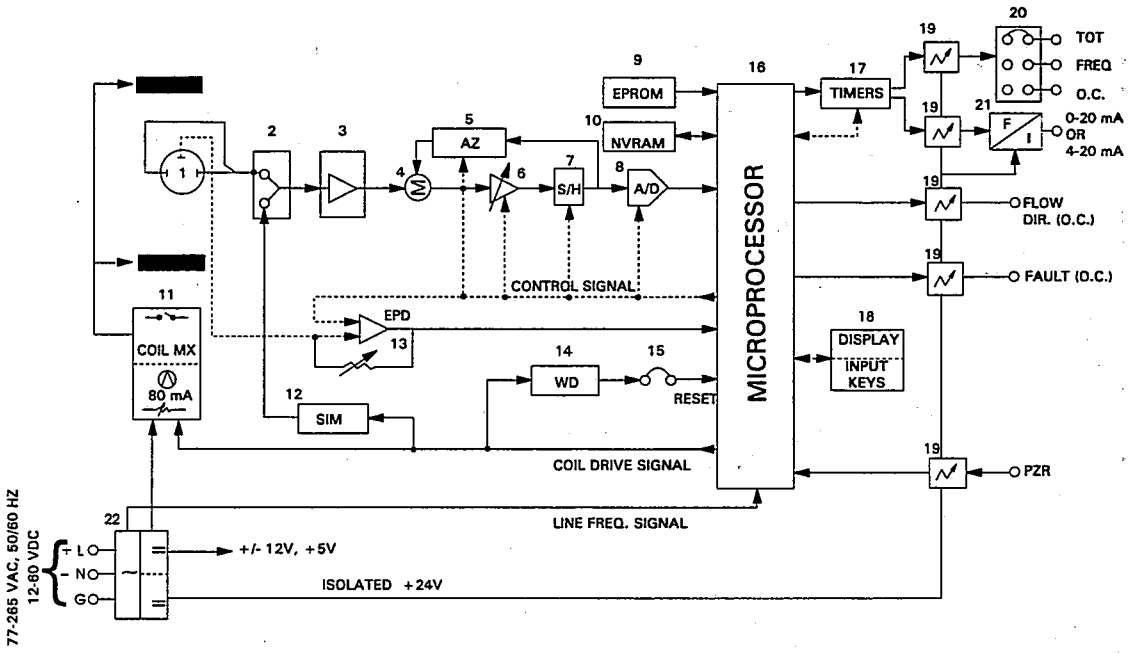

1. Measuring Sensor
2. Electrode Cable PCB
3. Input Amplifier
4. Summing Point
5. Autozero Circuit
6. Variable Gain Stage
7. Sample and Hold
8. Analog to Digital Converter
9. Erasable PROM (program)
10. Nonvolatile RAM (constants)
11. Coil Current Multiplexer
12. Built-in Simulator
13. Adjustable Emply Pipe Detection (option)
14. Watchdog Timer
15. Enabling Jumper
16. Microprocessor
17. Solid State Timer
18. LCD Display with Hall Effect Switches
19. Optocouplers
20. Selecting Jumper (I/O PCB)
21. Frequency to Current Converter
22. Power Supply Section

Block Diagram
Figure 1.4

The Sparling TIGERMAG™ uses the autozeroing, bi-polar, pulsed-DC measuring technique. The circuitry in Figure 1.4 energizes the coil with 80 mA of current at approximately 20 Hz (see Figure 1.5). The signal generated at the electrodes is measured near the end of each measuring cycle to eliminate the capacitive effects of coatings. The Hi-Z (10^{12} Ω) input impedance eliminates the resistive effects. The field current alternates to a positive and negative state and the two measured signals are averaged to eliminate the effect of a zero offset—auto-zeroing.

1.6 Automatic Gain Control

The TIGERMAG™ incorporates automatic gain control. Electrode signals are automatically amplified to maintain proper signal levels at all flows. This makes accurate flow measurement with the display and with the pulse or frequency outputs completely independent of the settings of full scale. Rangeability of these outputs is in excess of 100:1 (from 0.3 feet per second to 33 feet per second). Rangeability at stated accuracies is 33:1 when the minimum velocity of 1 foot per second is considered.

1.7 Construction

1.7.1 Sensor

The FM625 consists of a ceramic or optional *Teflon*® (PTFE) lined stainless steel sensor which is shrink fitted into a cast aluminum or optional steel housing. The FM655 flow sensor is a welded fabrication of 304 stainless steel, fitted with two carbon steel flanges. The flow sensor contains a non-conductive liner of ceramic, polyurethane, *Teflon*®, hard rubber, soft rubber, or neoprene. BothTIGERMAGS™ are structurally sound waterproof assemblies capable of handling a wide range of highly corrosive and abrasive liquids.

Electrodes in ceramic-lined meters over 0.50" are sealed by a double "O"-ring seal. The primary O-ring seal is ethylene propylene. This seal is backed by a secondary seal of viton. The combination of seals makes the meter suitable for nearly all conductive liquids. In ceramic lined meter sizes from 0.10" to 0.50", one Viton "O" ring is used. The electrodes in all other liners are self-sealing.

All internal cavaties of the FM625 sensor housing are filled with a high temperature silicone potting compound to prevent the possibility of moisture damage and to avoid the possibility of collection of explosive gases.

▼ **WHEN PROPERLY CONNECTED WITH LIQUID-TIGHT CONDUIT, THE REMOTE FLOW SENSOR WILL WITHSTAND ACCIDENTAL SUBMERGENCE. SEE FIGURE 3.13.**

1.7.2 Transmitter

The transmitter is housed in a CSA and Factory Mutual approved, NEMA-4X and NEMA-7 instrument enclosure. The power and signal electrical connections are made in a separate section of the housing which is isolated from the electronics.

1.8 Specifications

Power Requirements See Nameplate

Fuses Slo-Blo (12-60 Vdc) ..... 2.0 amp
Slo-Blo (77-265 Vac) ..... 1.0 amp
Spare fuse provided on connector PCB.

Wire Size Power ..... 16 AWG; 14 AWG Max
Signal ..... 18 AWG

Ground Cable Third wire ground of power cable

Accuracy
(Frequency Output)

±0.5% of rate
(1-33 fps) 1"-72" ±0.01 ft/sec. below 1.0 ft/sec.
± 0.01fps below 1.0 fps (Frequency output)

±1% of rate
(1-33 fps) for units smaller than 1"

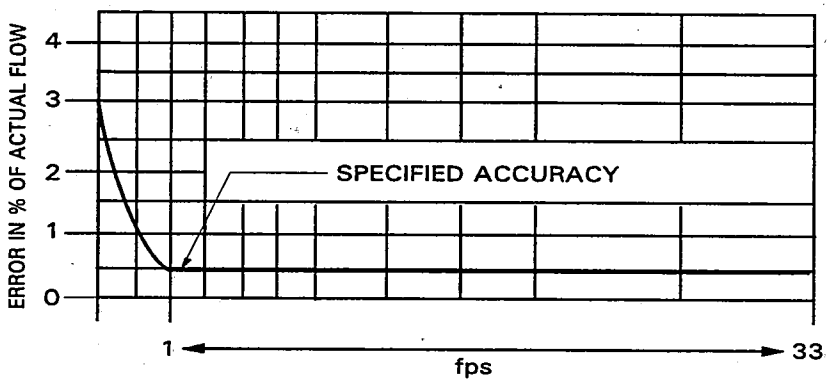

Reference Conditions 25°C, 6 fps full scale. Temperature effect, 0.025% Full Scale/°C. Voltage effect, 0.3% Rate/10% fluctuation. Accuracy statement based on digital outputs

Repeatability Within ±0.1% full scale

Power Consumption Less than 11 VA

Output Signals Simultaneous isolated analog and digital
Analog: 0 to 20 or 4-20 mAdc into 800 ohms max.
Digital: Scaled pulse or frequency (selectable)
a. Scaled, 24 Vdc pulse with 25/50/100 ms on-time width, 0-10 Hz max (up to 50 ms on-time) into 150 ohm impedance min.
b. Scaled frequency. 15 Vdc square wave, 50/50 duty cycle, 0 -1000 Hz max.

Note: Either (a) or (b) with transistor open collector to common, jumper selectable.

Fault Open collector. Active on self test failure, empty pipe and during programming.

Input Signal Positive zero return (PZR). Connect to remote dry contact to drive analog and digital outputs to zero when an empty pipe condition can occur.

Minimum Conductivity 5 micromho/cm

1.8 Specifications Cont'd.

Flow Direction Open collector (rating: 100mA at 30 Vdc). Active in reverse flo

Full Scale Velocity Ranges 0-3 to 0-33 fps (0-1 to 0-10 mps)

Ambient Temp Limits -20° to 140°F (-30° to 60°C) (Display may darken above 150°F)

Process Temp

Integral Mount
Hard rubber, Soft rubber, Neoprene, Polyurethane....-40 - 180°F
Teflon, Ceramic: .....-40 - 212°F

Remote Mount (opt)
Teflon, Ceramic: .....-40 - 266°F

High Temp Coils (opt)
Teflon: .....-40 - 350°F
Ceramic: .....-40 - 420°F

Temperatures above 212° F (100° C) require mounting the electronics separately (max. distance 15 feet at liquid conductivity of 5 micromhos and min. velocity of 1 fps).

Storage Temp Limits -20° to 140° F (-30° to 60° C)

Construction

Metering Tube .....Model 625 – Cast Aluminum (Steel optional)
Model 655 – 304 SS welded, epoxy coated
Flanges ..... Carbon steel ANSI compatible
Lining .....Model 625 – Aluminum Oxide 99.5% or PTF
Model 655 – Polyurethane, Aluminum Oxide 99.5%
PTFE, Hard Rubber, Soft rubber, Neoprene
Electrodes ..... 316 SS. Others as required
Housing (XMTR) ..... Cast Aluminum, Hi-build Epoxy Coated

Protection rating NEMA-4X, NEMA-7

Electrical rating

General Purpose
FM Approved* for Class I, Division 1, Groups B, C, D;
Class II Groups E, F, G
CE Rated

Hazardous Locations
CSA Approved* for Class 1, Division 2, Groups A, B, C, D
Cenelec (optional)

*FM and CSA applies to integrally mounted transmitters up to 150 psi only.

1.9 Interchange-ability

The TIGERMAG™ transmitter is designed to be used with any FM625 or FM655 sensor. Electronics are completely interchangeable. Each electronics module is software configured to the sensor. FM655 0.5"- 4" sizes have the same face to face dimensions as FM625 wafer-style meters (0.5"- 4") See Figure 1.5.

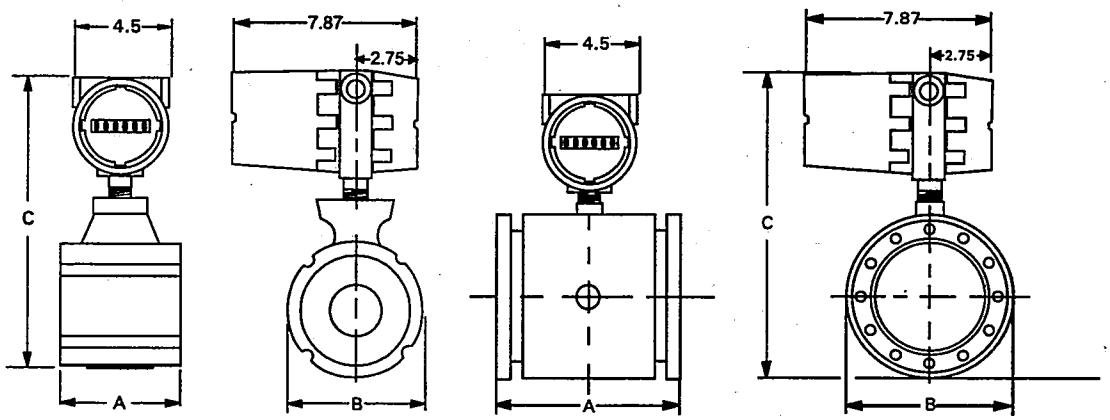

Dimensions
Figure 1.5

Table 1 – Flow & Dimensions Table

Nominal Meter Size		Nominal Flow Rates - Full Scale GPM						Dimensions (Inches)					Weight			
		Ceramic			Other											
		±1%	Min	Max	±1%	Min	Max	A	B		C		625		655	
Inches	mm	1 FPS	3 FPS	33 FPS	1 FPS	3 FPS	33 FPS	625/655	625	655	625	655	lbs	kg	lbs	kg
0.1	2.5	0.04	0.12	1.3	N/A	N/A	N/A	4.00	2.31	N/A	9.0	N/A	15	7	N/A	N/A
0.25	6	0.22	0.67	7.2	N/A	N/A	N/A	4.00	2.31	N/A	9.0	N/A	15	7	N/A	N/A
0.5	12	0.50	1.5	16.5	0.9	2.7	29	4.00	2.31	3.50	9.0	9.60	15	7	18	8
1.0	25	1.62	4.85	53.4	2.3	6.9	76	4.00	2.92	4.25	9.6	10.00	15	7	20	9
1.5	40	4.40	13.2	145.2	5.5	16.5	182	4.00	3.62	5.00	10.5	11.10	20	9	26	12
2.0	50	7.00	21.0	231.0	9.8	29.4	323	4.00	4.12	6.00	11.0	12.00	20	9	30	14
3.0	80	20.30	61.8	680.0	22.9	68.8	757	6.00	5.70	7.50	13.0	14.00	30	14	48	22
4.0	100	35.40	106.1	1168.0	40.4	121	1333	6.00	6.60	9.00	14.1	15.10	35	16	55	25
6.0	150	N/A	N/A	N/A	85	254	2800	13.00	N/A	11.75	N/A	18.25	N/A	N/A	75	34
8.0	200	N/A	N/A	N/A	145	436	4800	13.00	N/A	14.25	N/A	20.75	N/A	N/A	105	48
10.0	250	N/A	N/A	N/A	236	709	7800	17.75	N/A	17.13	N/A	23.63	N/A	N/A	155	70
12.0	300	N/A	N/A	N/A	333	1000	11000	19.00	N/A	20.13	N/A	26.63	N/A	N/A	235	107
14.0	350	N/A	N/A	N/A	409	1227	13500	20.88	N/A	22.88	N/A	29.38	N/A	N/A	365	166
16.0	400	N/A	N/A	N/A	545	1636	18000	22.88	N/A	24.63	N/A	31.13	N/A	N/A	460	209
18.0	450	N/A	N/A	N/A	667	2000	22000	26.75	N/A	26.13	N/A	32.62	N/A	N/A	555	252
20.0	500	N/A	N/A	N/A	879	2636	29000	27.13	N/A	28.63	N/A	35.13	N/A	N/A	625	284
24.0	600	N/A	N/A	N/A	1273	3818	42000	32.25	N/A	33.13	N/A	39.63	N/A	N/A	860	391
30.0	750	N/A	N/A	N/A	1909	5727	63000	43.00	N/A	39.88	N/A	46.38	N/A	N/A	1325	602
36.0	900	N/A	N/A	N/A	3175	9630	95255	47.25	N/A	45.00	N/A	51.50	N/A	N/A	1800	818
42.0	1050	N/A	N/A	N/A	4350	13000	142650	51.25	N/A	53.25	N/A	59.75	N/A	N/A	2280	1036
48.0	1200	N/A	N/A	N/A	5600	16900	186000	51.63	N/A	59.50	N/A	64.75	N/A	N/A	3500	1590
54.0	1350	N/A	N/A	N/A	7144	21433	235800	53.00	N/A	67.50	N/A	74.00	N/A	N/A	4000	1818
60.0	1500	N/A	N/A	N/A	8500	25500	280500	65.00	N/A	74.00	N/A	79.75	N/A	N/A	5200	2364
66.0	1650	N/A	N/A	N/A	10300	31000	341000	65.00	N/A	81.00	N/A	86.25	N/A	N/A	6500	2955
72.0	1800	N/A	N/A	N/A	12700	38100	419100	72.00	N/A	88.00	N/A	94.50	N/A	N/A	9000	4091

Note 1: Dimensions and chart values for 150 lb. flanges (ANSI template). Allow 1/8" to 1/4" for liner.
Note 2: Allow 1/4" for 0.5 to 6" meters and 1/2" for 8" and larger meters for grounding rings and gaskets.

2.0 Pre-Installation

2.1 Receiving & Inspection

When the equipment is received, the outside of the package should be inspected for damage. If any damage or shortage is found, notation to that effect should be made on the carrier's delivery receipt.

Visually inspect the sensor and transmitter for damage from rough handling or faulty packaging. If concealed damage is discovered, notify the delivering carrier at once and request an inspection. Confirm telephone conversations in writing. If inspection is not made, prepare an affidavit stating that you notified the transportation company and that they failed to inspect. Save containers and packaging material.

It is essential that the carrier be notified within 15 days from the date of delivery in order to be in a position to present your claim. Make your claim promptly.

Unpacking and handling of TIGERMAG™ Magnetic Flowmeters should be consistent with the procedures used to handle field instruments.

2.2 Storage

This equipment should be stored in a clean, dry environment. Do not store outside in an unprotected area. Observe the storage temperature requirements. Unpowered storage should not exceed two years.

2.3 Return of Equipment

Obtain an RGA ***(Returned Goods Authorization)*** number from the factory prior to returning any materials. The RGA number should be marked on the outside of the package. Failure to obtain authorization will unnecessarily delay any work to be performed at the factory.

3.0 Installation

3.1 Application Considerations

The TIGERMAG™ can be used to accurately measure the volumetric flow rate of liquids having a conductivity of at least 5 micromho/cm.

The presence of entrained air or gases in the process liquid will not prevent meter operation, but will produce a positive (+) error equal to the % by volume gas entrainment.

▼ **FULL SCALE FLOW RATES SHOULD BE SELECTED ABOVE 3 FEET PER SECOND (1 METER PER SECOND) FOR BEST ACCURACY.**

3.2 Site Selection

Select a pipe location which will always be full of liquid. The equipment should be located where the flowmeter will be accessible for adjustment. Provide a minimum of 18" clearance to the electronics enclosure.

The meter may be located in any position from vertical to horizontal. Flow may be in either direction through the meter. Vertical installation with the liquid flowing upwards, minimizes the possibility of slurry separation and assures a full pipe condition.

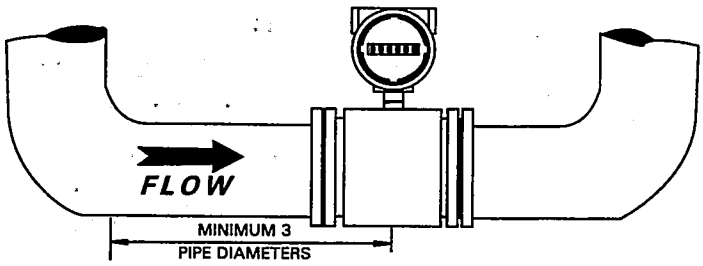

Full Pipe Required
Figure 3.1

Horizontal installation requires that the sensing electrodes be positioned in the horizontal plane. See Figure 3.4.

Provide at least three pipe diameters of straight piping approach between an upstream elbow and the midpoint of the meter. In small meters this can be achieved within the meter itself. More straight approach should be provided after valves or multiple elbows. Provide at least 10 diameters after expanders or laterals which are smaller diameter than the line size.

3.3 Rotating the Transmitter Display

The transmitter can be rotated 90 degrees in either direction. ***Do not rotate the transmitter more than 90 degrees in either direction.*** See Figure 3.2. Loosen the lock nut securing the transmitter to the standoff. Rotate the transmitter by hand in the desired direction. Tighten the lock nut to prevent further rotation and to prevent moisture entering the enclosure.

Additional rotation can be achieved by removing the meter from the line and reversing the flow through the meter. Excessive rotation of the transmitter can damage internal wiring. ***Do not rotate the transmitter more than 90 degrees in either direction.***

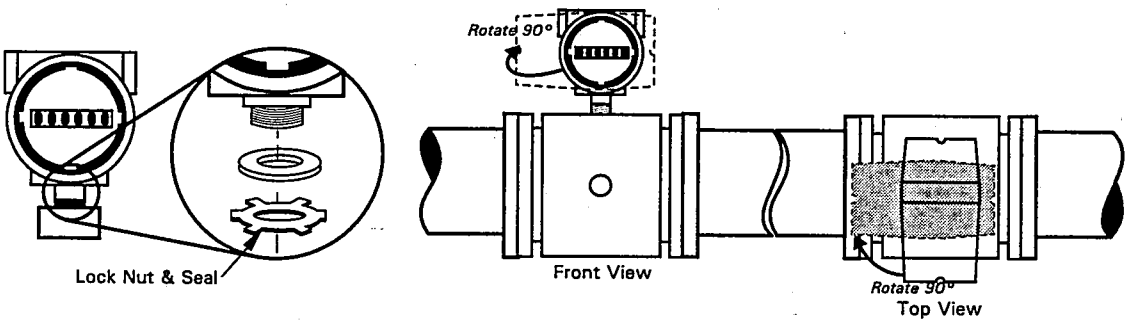

Rotating the Display
Figure 3.2

3.4 Pipe Connections

MODEL FM625 FLANGELESS (WAFER) SENSOR

The flangeless sensor is installed between two process pipe flanges. The sensor contains a non-conductive ceramic or *Teflon®* liner. The integrity of this liner must be maintained for the flowmeter to function. ***CARE SHOULD BE TAKEN DURING INSTALLATION TO INSURE THAT THIS LINER IS NOT DAMAGED.*** Depending upon meter size, four (4) or eight (8) steel bolts are required for installation of the FM625. These bolts are used to install the meter between existing flanges. See Table 4. Gaskets are required between the meter and the pipe flanges and between grounding rings and the mating surfaces.

Install the two bolts at the bottom of the meter. Place the meter temporarily between the flanges to confirm correct positioning. The meter should rest directly on the bolts. Remove the meter.

▼ ***REINSTALL THE METER TAKING CARE TO KEEP THE GASKET CENTERED. INSTALL ALL BOLTS AND TIGHTEN FINGER TIGHT. COMPLETE INSTALLATION WITH TORQUE WRENCH. IT IS IMPORTANT THAT THE BOLTS BE TIGHTENED ALTERNATELY SO THAT EXCESSIVE FORCE IS NOT APPLIED TO A CONCENTRATED POINT. SEE FIGURE 3.3. DO NOT EXCEED THE TORQUE LIMITS IN TABLE 4.***

MODEL FM655 FLANGED SENSOR

The flanged sensor is installed between two process pipe flanges. The sensing head tube interior is covered with an electrically non-conductive liner which overlaps the flange seal surfaces. The integrity of this liner must be maintained for the flowmeter to function. ***CARE SHOULD BE TAKEN DURING INSTALLATION TO INSURE THAT THIS LINER IS NOT DAMAGED. FLANGE GASKETS MUST BE USED.***

▼ ***THE GASKETS, METER FLANGES, AND MATING PIPE FLANGES SHOULD BE DUSTED WITH GASKET TALC PRIOR TO INSTALLATION TO PREVENT DAMAGE TO THE LINER SHOULD IT BE NECESSARY TO REMOVE THE METER FROM THE LINE. DO NOT USE GRAPHITE TO DUST THE GASKET. A CONDUCTIVE FILM WILL COAT THE METER INTERIOR AND CAUSE A MALFUNCTION. DO NOT EXCEED THE TORQUE LIMITS IN TABLE 4.***

Gasket material should be selected which is compatible with the piping and process conditions. The table below contains typical satisfactory gasket materials. Do not use spiral wound metal gaskets as they may cause liner damage.

Table 2 – Gasket Material

LINER MATERIAL	GASKET MATERIAL
Ceramic	Teflon
Teflon	Teflon Coated Asbestos
Hard or Soft Rubber	Asbestos Neoprene Rubber
Neoprene	Asbestos Neoprene Rubber
Polyurethane	Asbestos Neoprene Rubber

Table 3 – Meter I.D.

Nominal I.D.	Actual I.D.			
	Ceramic		Other	
in	in	mm	in	mm
0.10	0.125	3.17	N/A	N/A
0.25	0.302	7.67	N/A	N/A
0.50	0.452	11.48	0.60	15.24
1.00	0.812	20.62	0.97	24.64
1.50	1.34	34.04	1.50	38.10
2.00	1.69	42.93	2.00	50.80
3.00	2.90	73.66	3.06	77.72
4.00	3.80	96.52	4.06	103.12
6.0	N/A	N/A	6.00	152.40
8.0	N/A	N/A	7.75	196.85
10.0	N/A	N/A	10.00	254.00
12.0	N/A	N/A	12.00	304.80
14.0	N/A	N/A	13.00	330.20
16.0	N/A	N/A	15.00	381.00
18.0	N/A	N/A	17.00	431.80
20.0	N/A	N/A	19.00	482.60
24.0	N/A	N/A	22.90	581.66
30.0	N/A	N/A	29.00	736.60
36.0	N/A	N/A	34.60	878.84
42.0	N/A	N/A	40.60	1031.24
48.0	N/A	N/A	46.60	1183.64
54.0	N/A	N/A	52.30	1328.42
66.0	N/A	N/A	64.25	1631.95
72.0	N/A	N/A	70.00	1778.00

3.5 Special Mounting Bolts & Gaskets

Sparling provides carbon steel mounting hardware with wafer meter sizes 0.1", 4", On flanged meters, ***special length*** mounting bolts are provided for meter sizes 0.5", 1.5" and 3" only. Gaskets are provided for ceramic sensors only.

Optional 304SS mounting bolts for these sizes are available at extra cost.

▼ ***FM655 METER SIZES 0.5" - 4" HAVE THE SAME FACE-TO-FACE DIMENSIONS AS FM625 WAFER-STYLE METERS (0.5" - 4") SEE FIGURE 1.5.***

Table 4 – Torque, Flange & Bolt Specifications

Nom. Meter Size(in)	Maximum Torque		ANSI / AWWA Flange & Bolt Specs						DIN Flange & Bolt Specs					
	ft-lbs	kg-m	Mating Flange	Pressure Rating	OD Inch	Bolt Circle	Hole Dia	Bolt Size	Mating Flange	Pressure Rating	OD mm	Bolt Circle	Hole Dia	Bolt Size
0.1	17	2.3	0.5	150	3-1/2	2-3/8	4 @ 5/8	7/16-14 x 6-3/4	15	10	95	65	4 @ 14	M10 X 170
	17	2.3	0.5	300	3-3/4	2-5/8	4 @ 5/8	1/2-13 x 6-3/4	15	25	95	65	4 @ 14	M12 X 170
	17		0.5	600	3-3/4	2-5/8	4 @ 5/8	1/2-13 x 6-3/4						
0.25	17	2.3	0.5	150	3-1/2	2-3/8	4 @ 5/8	7/16-14 x 6-3/4	15	10	95	65	4 @ 14	M10 X 170
	17	2.3	0.5	300	3-3/4	2-5/8	4 @ 5/8	1/2-13 x 6-3/4	15	25	95	65	4 @ 14	M12 X 170
	17		0.5	600	3-3/4	2-5/8	4 @ 5/8	1/2-13 x 6-3/4						
0.5	17	2.3	0.5	150	3-1/2	2-3/8	4 @ 5/8	7/16-14 x 6-3/4	15	10	95	65	4 @ 14	M10 X 170
	17	2.3	0.5	300	3-3/4	2-5/8	4 @ 5/8	1/2-13 x 6-3/4	15	25	95	65	4 @ 14	M12 X 170
	17		0.5	600	3-3/4	2-5/8	4 @ 5/8	1/2-13 x 6-3/4						
1.0	17	2.3	1	150	4-1/2	3-1/8	4 @ 5/8	7/16-14 x 6-3/4	25	10	115	85	4 @ 14	M12 X 170
	17	2.3	1	300	4-7/8	3-1/2	4 @ 3/4	5/8-11 x 7-1/2	25	25	115	85	4 @ 14	M12 X 170
	17		1	600	4-7/8	3-1/2	4 @ 3/4	5/8-11 x 7-1/2						
1.5	17	2.3	1.5	150	5	3-7/8	4 @ 5/8	1/2-13 x 6-3/4	40	10	150	110	4 @ 18	M16 X 190
	17	2.3	1.5	300	6-1/8	4-1/2	4 @ 7/8	3/4-10 x 7-1/2	40	25	150	110	4 @ 18	M16 X 190
	17		1.5	600	6-1/8	4-1/2	4 @ 7/8	3/4-10 x 7-1/2						
2.0	17	2.3	2	150	6	4-3/4	4 @ 3/4	5/8-11 x 7-1/2	50	10	165	125	4 @ 18	M16 X 190
	17	2.3	2	300	6-1/2	5	8 @ 3/4	5/8-11 x 7-1/2	50	25	165	125	4 @ 18	M16 X 190
	17		2	600	6-1/2	5	8 @ 3/4	5/8-11 x 7-1/2						
3.0	24	3.3	3	150	7-1/2	6	4 @ 3/4	5/8-11 x 9-1/2	80	10	200	160	8 @ 18	M16 X 240
	24	3.3	3	300	8-1/4	6-5/8	8 @ 7/8	3/4-10 x 10-1/2	80	25	200	160	8 @ 18	M16 X 240
4.0	30	4	4	150	9	7-1/2	8 @ 3/4	5/8-11 x 9-1/2	100	10	220	180	8 @ 18	M12 X 240
	30	4	4	300	10	7-7/8	8 @ 7/8	3/4-10 x 10-1/2	100	25	235	190	8 @ 22	M20 X 260
6.0	92	12.7												
8.0	133	18.4												
10.0	70	9.7												
12.0	83	11.5												
14.0	100	13.8												
16.0	110	15.2												
18.0	110	15.2												
20.0	115	15.9												
24.0	135	18.7												
30.0	140	19.4												
36.0	140	19.4												
42.0	140	19.4												
48.0	140	19.4												
54.0	190	26.3												
60.0	190	26.3												
66.0	190	26.3												
72.0	190	26.3												

All specifications per Customer requirements and in compliance with recognized standards such as: ANSI / AWWA/ DIN

FM625
Gasket Installation

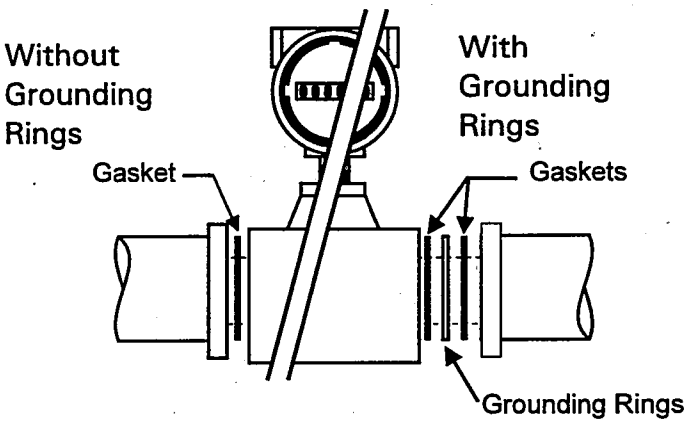

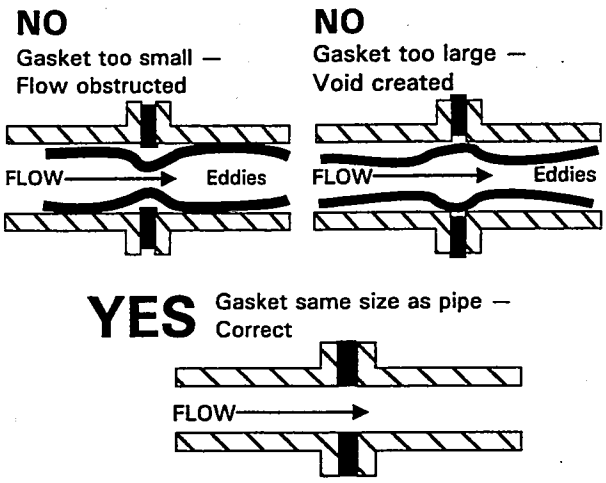

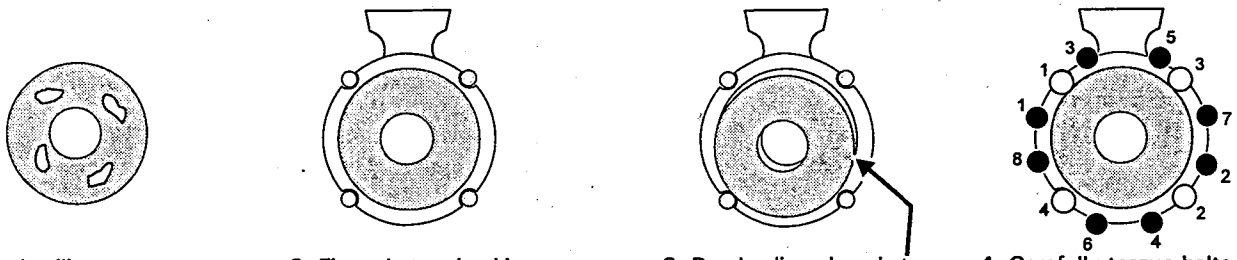

1. Apply silicone grease or other viscous fixative to gasket for temporary positioning
2. Fit gaskets, checking to ensure it is perfectly centered
3. Poorly aligned gasket - can cause catastrophic leaks and flow errors
4. Carefully torque bolts with Bolt torque sequence above

○ 4 Bolt Pattern
● 8 Bolt Pattern See Table 3.1

Gasket Installation
Figure 3.3

Sensor Position

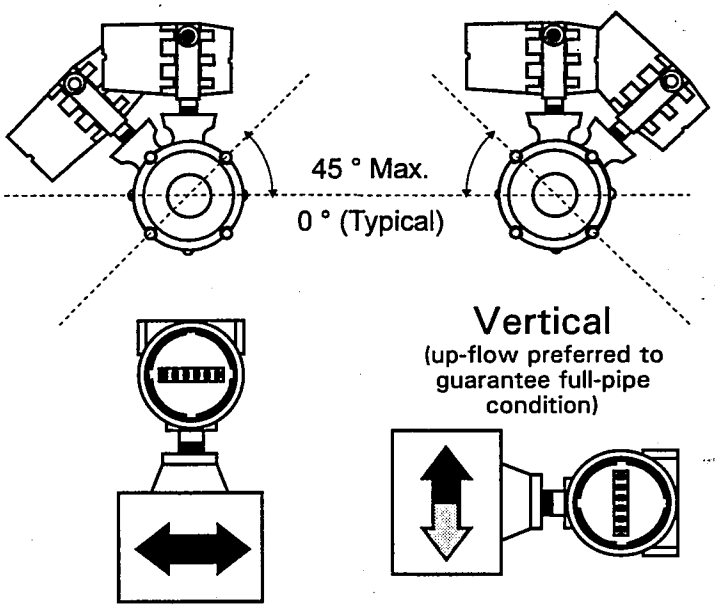

Sensor Position
Figure 3.4

Sensor Alignment

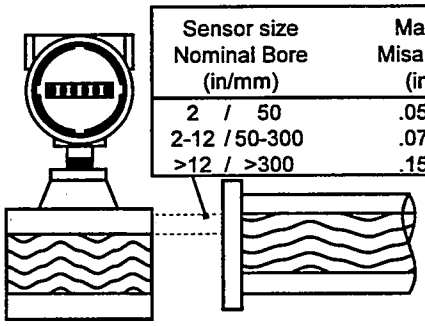

Sensor size Nominal Bore (in/mm)	Maximum Misalignment (in/mm)
2 / 50	.059 / 1.5
2-12 / 50-300	.079 / 2
>12 / >300	.157 / 4

FM655
Gasket Installation

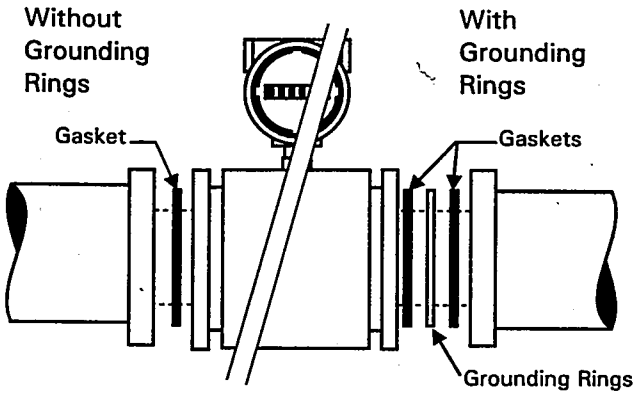

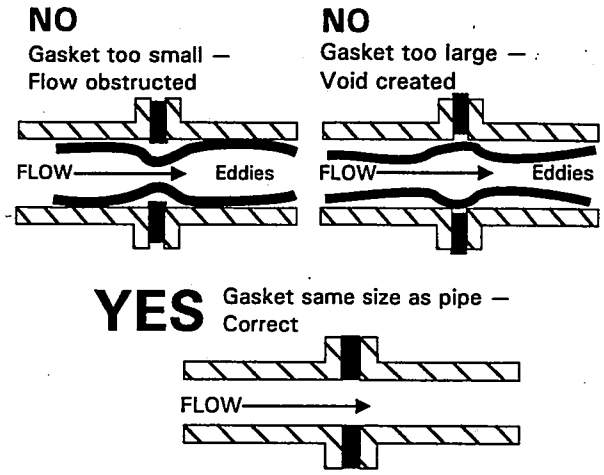

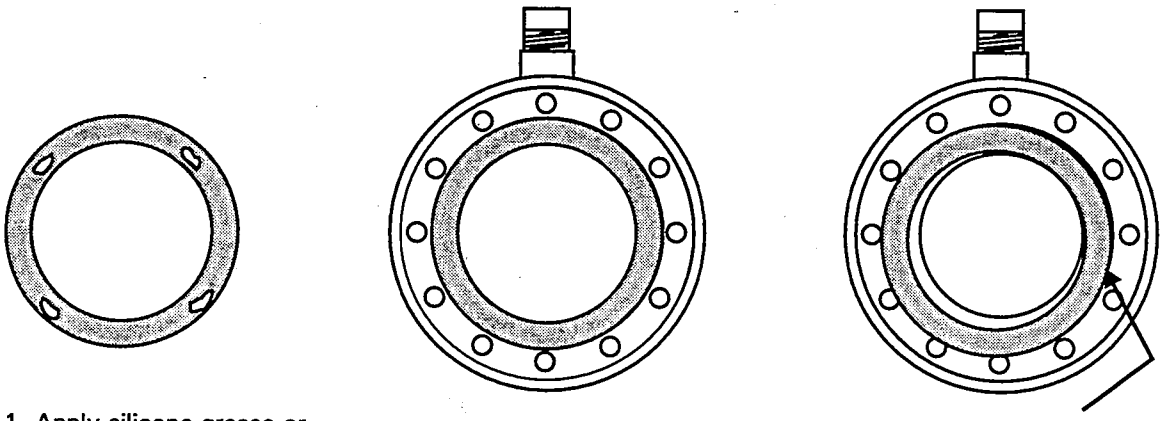

1. Apply silicone grease or other viscous fixative to gasket for temporary positioning
2. Fit gaskets, checking to ensure it is perfectly centered
3. Poorly aligned gasket - can cause catastrophic leaks and flow errors

Gasket Installation
Figure 3.5

Sensor Position

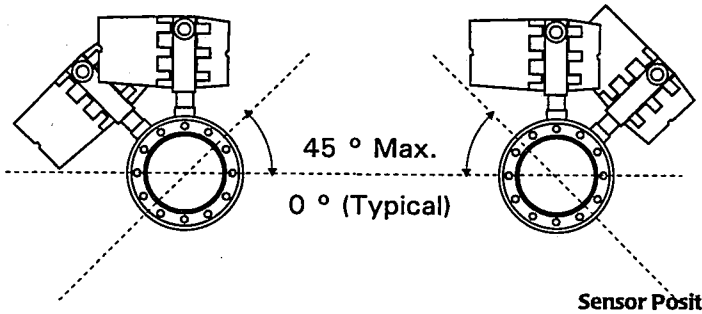

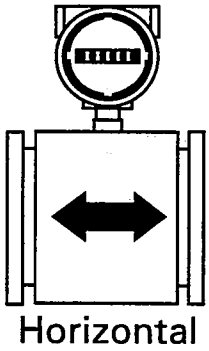

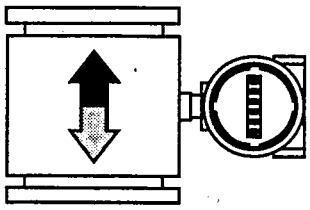

Sensor Position
Figure 3.6

3.6 Grounding

Mounting in Unlined Metal Pipelines

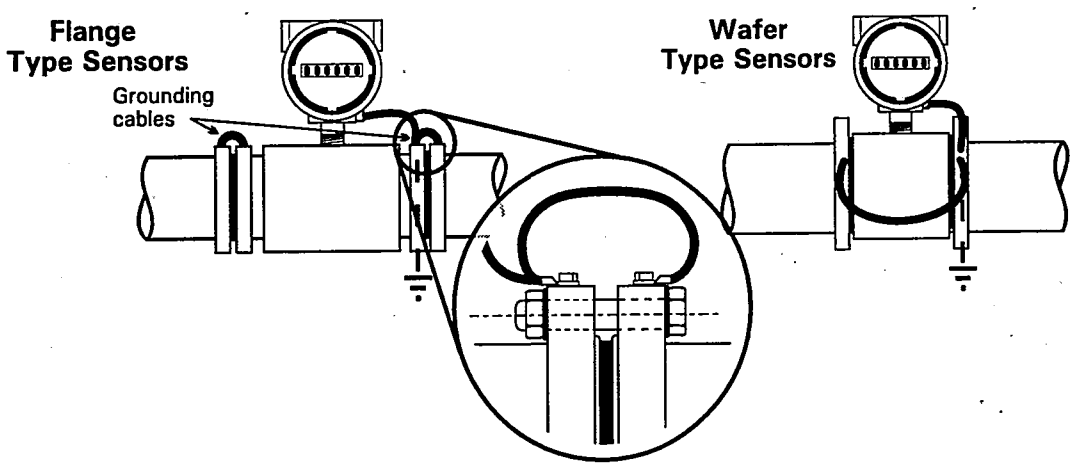

Mounting in Plastic or Lined Pipeline, or where Conductivity <20 micromhos/cm

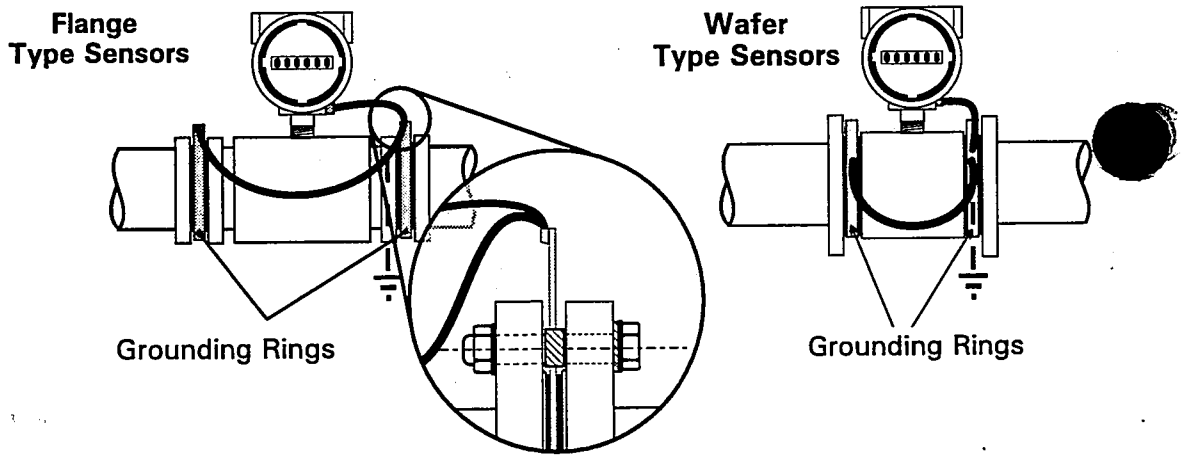

Mounting in Pipes with Cathodic Protection

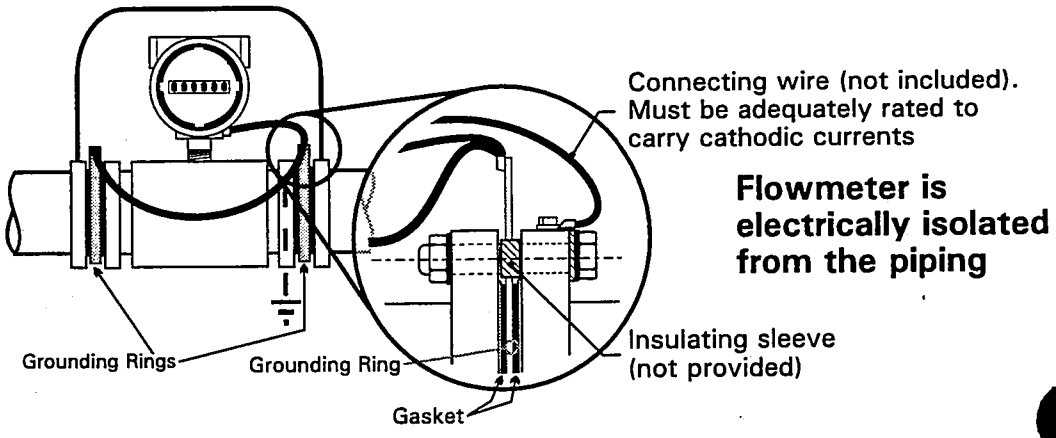

Grounding
Figure 3.7

3.6 Grounding Cont'd.

DC and AC voltages can be transmitted through conductive fluids which can lead to magnetic flow meter instrument errors. Adequate grounding between the liquid and the instrument is essential to ensure correct flow measurement. Magnetic flow meters should always be grounded at four places: 1) Flowmeter tube, 2) Transmitter, 3) Receiving instrument, 4) the fluid.

▼ **EXTERNAL GROUNDING RINGS SHOULD BE INSTALLED ON ANY METER WHERE THERE IS LINED OR NON-CONDUCTIVE PIPE OR CONDUCTIVITY IS LESS THAN 20 MICROMHOS/CM. SEE FIGURE 3.7.**

The grounding rings are in continuous contact with the process liquid providing a direct means for grounding electrical noise in the liquid. The electrical noise potential in the process liquid is at a similar level to the electrical ground plane to which the ac power supply ground is connected. This grounding method stabilizes the electrical field within the sensor measuring section permitting accurate flow detection. Grounding resistance must be less than 20 ohms.

▼ **CONTACT OUR TECHNICAL SUPPORT GROUP IF PROCESS LIQUID NEEDS TO BE MAINTAINED AT A POTENTIAL ABOVE OR OTHER THAN GROUND.**

3.7 Electrical Connections

Unscrew the small blind cover of the electronics enclosure to gain access to the I/O PCB. Separate 3/4" NPT conduit entrances are provided for power and signal wiring. Conduit connections should follow good practice and should be routed from below the meter. If conduit cannot be routed from below, provide moisture traps and seals to prevent moisture from entering the meter enclosure. See Figure 3.8. ***Be sure to tighten conduit connections.***

CAUTION

WATERTIGHT CONDUIT, FITTINGS AND SEALS ARE REQUIRED TO MAINTAIN THE MOISTURE-FREE INTEGRITY OF ALL ENCLOSURES AND ELECTRONICS IN THE SYSTEM. ENTRY OF MOISTURE MAY VOID SPARLING'S WARRANTY. ALL FITTINGS MUST CONFORM TO NEMA-6 CLASSIFICATIONS

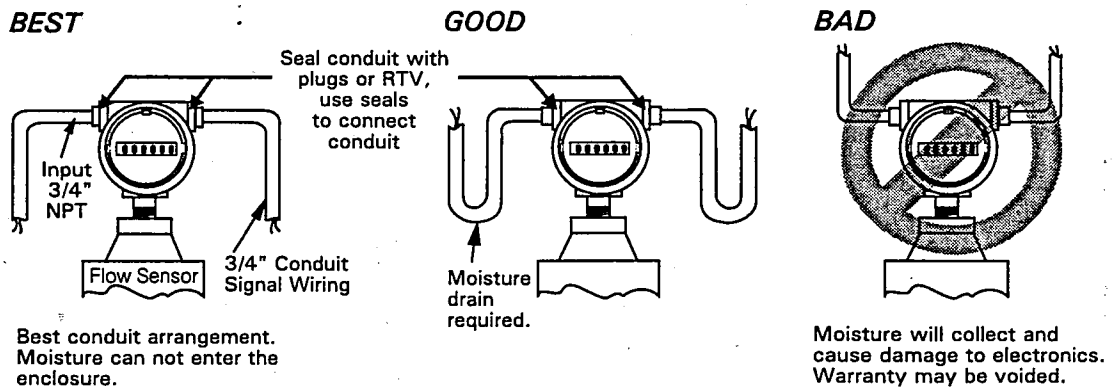

Conduit Connections
Figure 3.8

3.7

Electrical Connections

Cont'd.

A connection diagram is located in the cover of the connection section and in Figure 3.9. Determine which of the outputs (4-20 mA, fault, flow direction, pulse or frequency) are to be used. Connect the required outputs as shown in Figure 3.9. Install 1N4004 diodes across the load when driving inductive loads. If required, connect the Positive Zero Return (PZR) input. Note that meter output is forced to zero when terminals 4 and 5 are connected together through relay contacts.

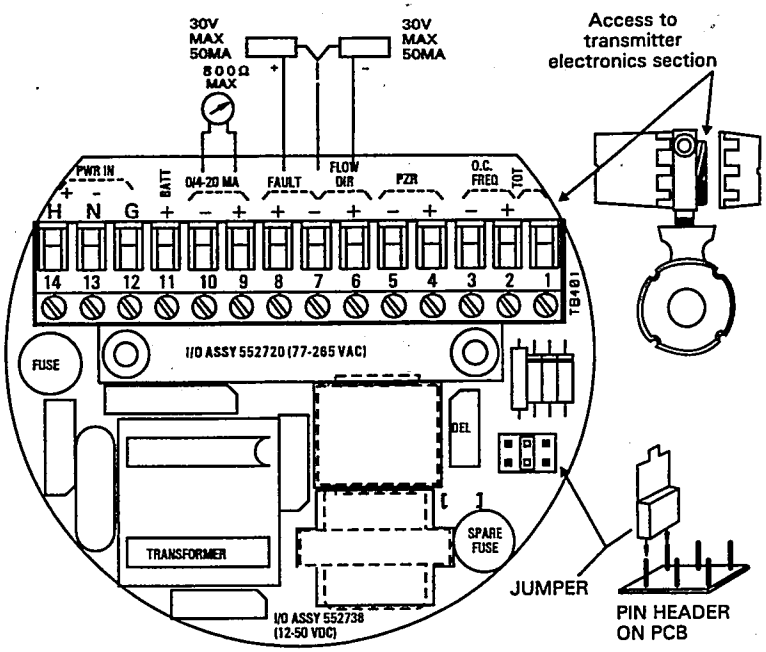

Electrical Connections I/O PCB
Figure 3.9

Connect power leads to terminals 13 and 14 on the terminal strip. Be sure to connect a good ground to terminal 12. Check the position of the jumper on the I/O board. Place the jumper as shown below for desired output. See Figure 3.9 & 3.10.

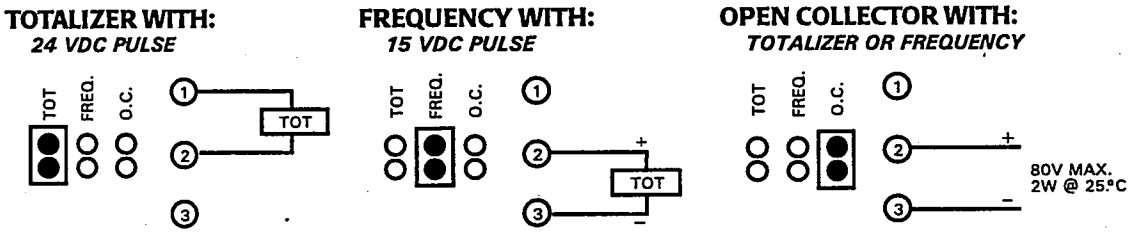

I/O Board Jumper Position
Figure 3.10

WARNING

FOR PROPER OPERATION, MAG-COMMAND SOFTWARE MUST BE CONFIGURED TO MATCH YOUR I/O SELECTION. REFER TO PAGE 30, APPENDIX A, SECTION 1.8 SET OUTPUTS.

3.7 Electrical Connections Cont'd.

The external load on the outputs must be within the limits specified. Calculate the external load by summing the input resistance, including all interconnecting cable. Signal cable of 18-22 gauge is normally adequate.

External load limits	Analog output	800 ohms max. impedance
	Pulse output	150 ohms min. impedance

Both outputs are floating and use the same isolated ground. If both outputs are used simultaneously, only one of the common legs can be grounded. If both are grounded, a ground loop will occur causing erroneous signals.

CAUTION

ONLY ONE LOAD MAY HAVE A LEG STRAPPED TO GROUND UNLESS THE LOADS ARE ISOLATED FROM EACH OTHER

The TIGERMAG™ series is equipped standard with a switching power supply which accommodates power sources of 77-265 Vac 50/60 Hz. An optional 12-60 Vdc power supply is available. No adjustments or jumpers are required.

3.8 Remote Mounted Transmitter

Remote mounting of the electronics is required when process temperatures exceed 212° F (100° C), when pipe vibration is excessive or when flooding is possible. Remote mounting should be used when high process temperatures exist at high ambient temperatures.

A bracket for wall or pipe mounting is furnished as part of the optional remote mounting kit. Interconnecting cable is supplied between the sensor and transmitter enclosure. Also supplied is a sensor mounted NEMA-7 rated junction box and a transmitter-mounted junction box in which coil and electrode connections are made.

The standard interconnecting cable length is 15 feet. Shorter or longer cables should be ordered from the factory. The cable may be shortened in the field. **DO *NOT* SPLICE CABLE IN THE FIELD.**

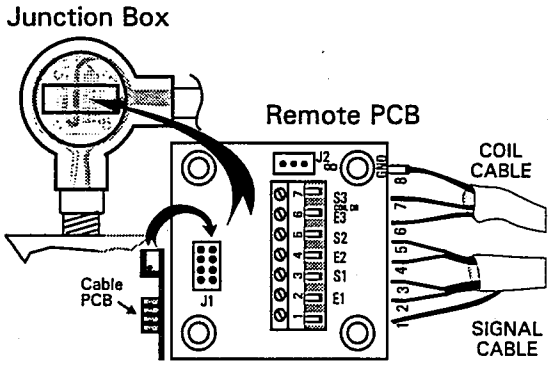

Sensor Wiring - Remote Transmitter
Figure 3.11

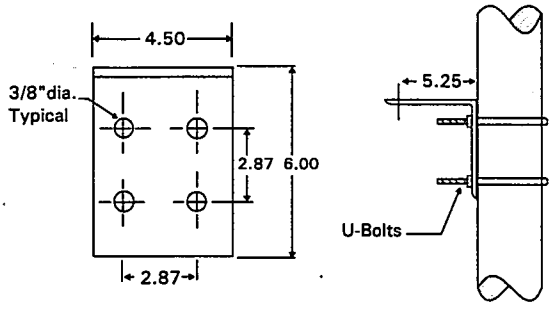

Remote Mounting Bracket
Figure 3.12

CAUTION

DO NOT MAKE CONNECTIONS WHILE POWER IS APPLIED. DISCONNECT POWER BEFORE PROCEEDING.

3.8

Remote Mounted Transmitter

Cont'd.

Connect terminals 1 through 7 and ground both junction boxes with the special cable provided. See Figure 3.11. Installation in metal conduit is required for RFI protection as well as physical protection. See Figure 3.13. Also see Section 3.7 for electrical connections.

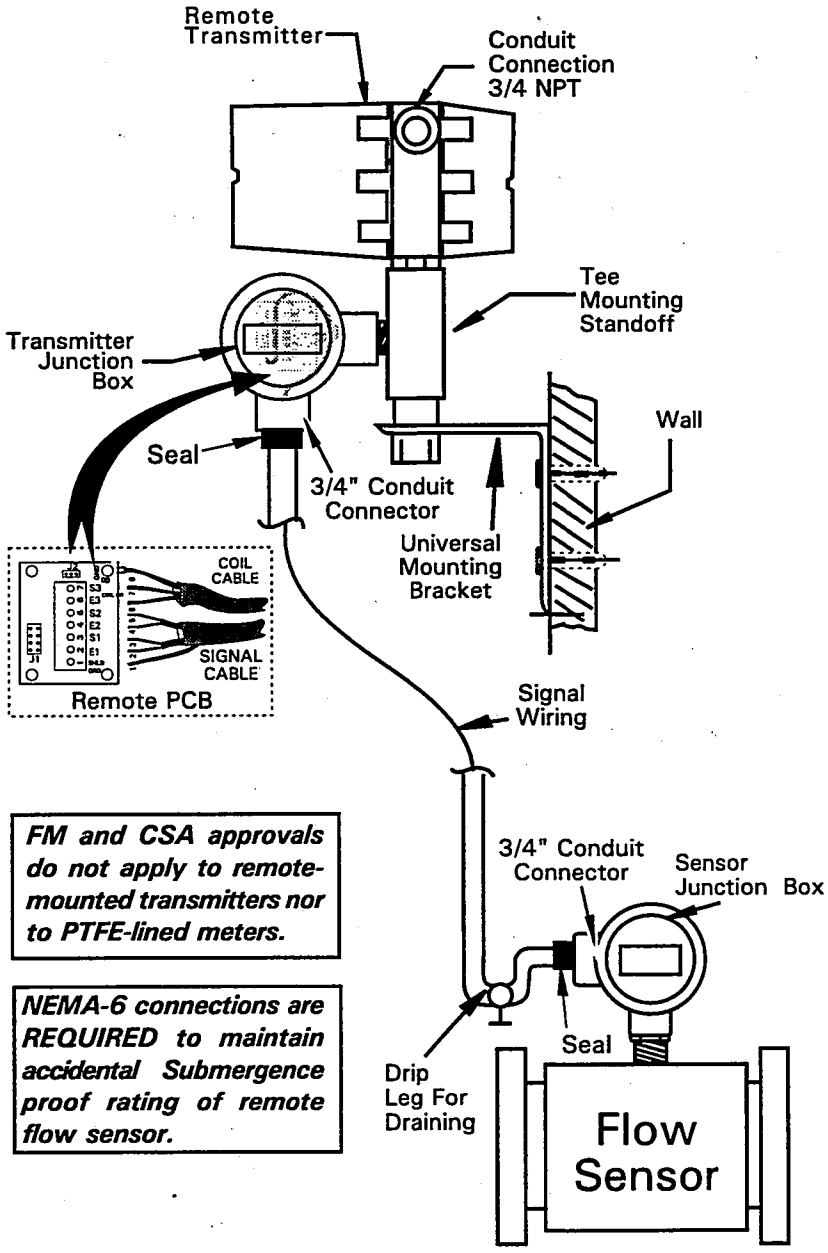

FM and CSA approvals do not apply to remote-mounted transmitters nor to PTFE-lined meters.

NEMA-6 connections are REQUIRED to maintain accidental Submergence proof rating of remote flow sensor.

Remote Mounted Transmitter
Figure 3.13

WARNING

CONDENSATE DRAINING THROUGH CONDUIT CAN BE AVOIDED BY USING DRIP LEGS, DRAINS AND SEALS WHICH WILL NOT LET MOISTURE INTO THE ELECTRICAL ENCLOSURE.

WATERTIGHT METAL CONDUIT, FITTINGS AND SEALS ARE REQUIRED TO MAINTAIN THE MOISTURE-FREE INTEGRITY OF ALL ENCLOSURES AND ELECTRONICS IN THE SYSTEM. ENTRY OF MOISTURE MAY VOID SPARLING'S WARRANTY. ALL FITTINGS MUST CONFORM TO NEMA-6 CLASSIFICATIONS.

4.0 Start-Up

SECTION IV - START-UP

Prior to applying power, the following checks should be made:

a) Check the flowmeter nameplate to insure that the power supply voltage is correct.
b) Verify that all electrical connections are correct. See Figures 3.9 and 3.11.
c) Check the polarity of external loads connected to the outputs.
d) Check to see that the two hall effect switches on the front of the transmitter are in place with the dark side of the switch ***facing up*** towards the LCD display. Do not remove these switches unless authorized by factory personnel. If you suspect that one of the hall effect switches is defective, contact the factory.

5.0 Calibration

All flowmeters are calibrated before leaving the factory. No field recalibration is required.

The 4 and 20 mA current level may be checked if desired by following the procedure in Appendix I DIAGNOSTICS. The meter can be used as a current calibrator to ***check connected equipment***. See Appendix 1, para. 2.2.2.

6.0 Maintenance

No routine maintenance is required.

7.0 Trouble-shooting

The following sections describe field tests and bench tests that can be performed Sparling's magnetic flow meters.

7.1 General

Each flowmeter is rigorously tested during production. The final test stage is a wet flow calibration in a Sparling precision primary flow laboratory traceable to the National Institute of Standards and Technology (NIST).

Before troubleshooting, carefully verify the operating conditions of the meter:

1. Verify the interconnecting wiring by using a local milliammeter connected to the current output with no other load connected.
2. Verify that the sensor is completely filled with liquid. An empty or partially full sensor will continue to send a flow signal even with no flow.
3. Verify that any flow test comparison is valid before assuming that the meter is in error.
4. If in doubt, verify the conductivity of the liquid to see that it exceeds 5 micromho/cm.

7.2 Trouble-shooting Chart

The following trouble shooting chart should assist in correcting meter malfunction. For additional assistance, contact Technical Support 800/800-FLOW (818/444-0571 in California).

WARNING

a) "WARNING - EXPLOSION HAZARD - SUBSTITUTION OF COMPONENTS MAY IMPAIR SUITABILITY FOR CLASS 1, DIVISION 2";

"AVERTISSEMENT - RISQUE D'EXPLOSION- LA SUBSTITUTION DE COMPOSANTS PEUT RENDRE CE MATERIEL INACCEPTABLE POUR LES EMPLACEMENTS DE CLASSE 1, DIVISION 2".

b) "THIS EQUIPMENT IS SUITABLE FOR USE IN CLASS 1, DIVISION 2, GROUPS (AS APPLICABLE) OR NON-HAZARDOUS LOCATIONS ONLY".

Troubleshooting Chart

SYMPTOM	POSSIBLE CAUSE AND CURE
1. Erratic Reading (Output Wandering)	1. A. Installation a. Is sensor properly grounded? A good liquid ground is required. b. Empty pipe? Pipe must be full of liquid. c. Air in pipe? De-aerate d. Chemical being injected upstream of flowmeter? Change the chemical dosage downstream of the flowmeter. B. Electrical a. VFD's? Need additional filtering and improved grounding. b. Marginal Connection (particularly for remote units)? Rewire to insure good contacts. C. Moisture intrusion? Use leak tight fittings and keep the covers tight. D. Program errors? Default and reprogram.
2. Inaccurate Reading	2. A. Run simulator test (47000/K). If not OK, reprogram. B. Coil drive blown? Electronic module has to be returned to factory for repair C. Mixed transmitters & sensors? Insure that sensor and transmitter has the same serial number. (This happens when you have more than one unit and the electronics are remote). D. Conductive coating? Clean sensor.
3. Output Incorrect (Pulse & Analog)	3. A. Disconnect wires and check circuit output with DVM. Reprogram current output. If program is OK, hardware failure, return to factory. B. For pulse output need oscilloscope. If there is flow no pulse output , hardware failure, return to factory.
4. Analog Output Zero	4. A. No external power required, unit is not loop powered. If external voltage was connected, electronics are damaged and should be returned back to factory for repair.
5. Display Readings Locked	5. A. Program errors? Reprogram B. Cable PCB offset connector? Check connector is properly engaged
6. Meter Reads Zero	6. Did it ever work? A. Blown coil drive? Return for repair B. Offset cable PCB connection? Properly engage connector. C. Not properly wired (remote units)? Re-wire correctly D. Conductive coating? Clean sensor.
7. Blank Display	7. A. Blown fuse? Replace Fuse B. Power supply damage? Return for repair.
8. Display is turning black around edges	8. Temperature is too high inside the enclosure. Relocate the meter or shield against the heat source. Continuing to power the meter in this condition will permanently damage the display.
9. Display is difficult to read	9. Improve the lighting conditions if ambient light is dim. Remove large cover and adjust the pot directly below the display for best contrast while viewing from the intended viewing angle.

If the above steps fail to correct the problem, try different flow rates and disconnecting loads temporarily and see if the problem persists. Perform simulator check and call the factory. ***Please have the following information available when you call:***

- Meter serial number.
- Description of the problem. (Display, current output, totalizer/frequency, all of the above.)
- When does the symptom occur or repeat?
- What are the flow rates, the orientation of the meter in the pipeline, environmental conditions, output loads on the meter, pipe material and grounding technique?
- How did you verify the discrepancy?

Contact Technical Support 800/800-FLOW (in California 818/444-0571) for additional assistance.

7.3 Electronics Self Test

Using the MAG-COMMAND™ magnetized screwdriver, enter programming mode by ho the magnet to the "NO" switch for five seconds. See Appendix for detailed instructio Answer NO to all prompts until the DIAGNOSTICS menu appears. Answer YES to the DIAGNOSTICS menu. Follow the menu instructions.

At this point, it will be necessary to remove the cover to gain access to the electrode cable PCB.

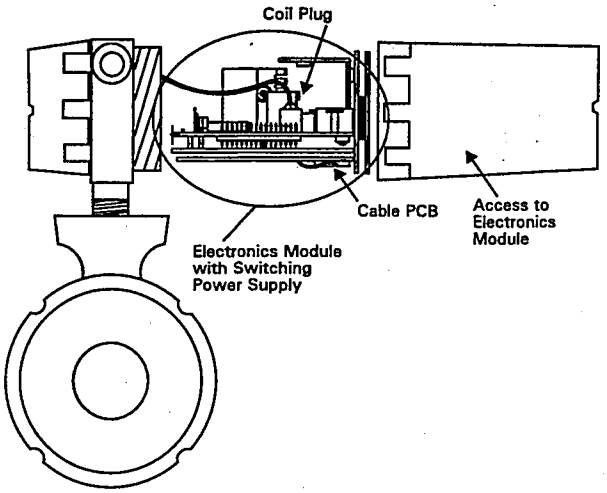

Access to Electronics
Figure 7.1

Remove the electrode cable PCB and rotate it 90 degrees as shown in Figure 7.2. Conti to follow the instructions in the menu. The meter will self-test, timing circuits and inte electronics. If it obtains the same values as were factory stored, it will answer "PASSE

This confirms that the electronics are functioning correctly. Note: If running simulator in "operate" mode, 4-20 mA, pulse and display will go to $\frac{47.000}{K}$.

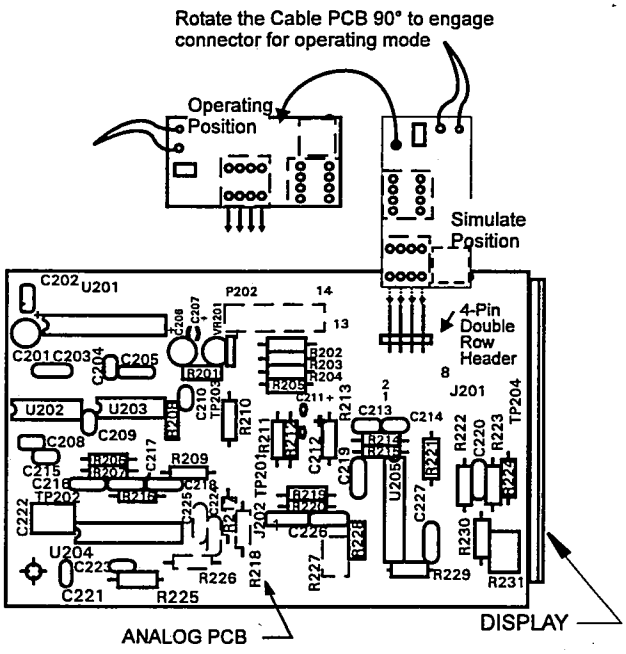

Electrode Cable - Simulate Position
Figure 7.2

7.4 Electronics Module Replacement

WARNING

DO NOT REMOVE ELECTRONICS MODULE WHILE POWER IS APPLIED. DISCONNECT POWER BEFORE PROCEEDING

To remove the electronics module, first unscrew the larger enclosure cover and remove the screw fastening the module bracket. Now unplug the electrode cable PCB and coil cable PCB. See Figure 7.1, 7.2 and 7.3.

Grasp the module at each side and pull firmly while rocking the boards gently from side to side. ***Do not pull the module out by the display.***

▼ ***METER ELECTRONICS ARE CONTAINED IN A PLUG IN MODULE. THIS MODULE CONTAINS NO USER SERVICEABLE PARTS.***

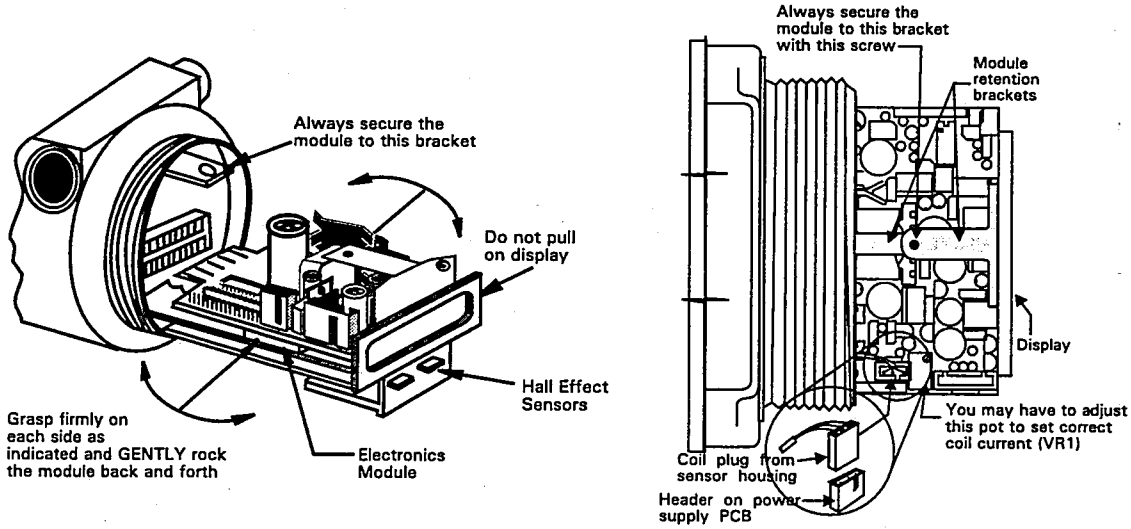

Removing the Electronics Module
Figure 7.3

When re-installing the electronics module, observe the connector in the bottom of the electronics enclosure. Line up the electronics module with the connector. Plug in the replacement module. Plug in coil and electrode PCB's. **Be certain the plug wires are routed properly and will not interfere with the housing cover. Don't forget to replace the screw that fastens the module to the bracket.**

Apply power and observe display. Now, reprogram any values which were modified from factory preset levels. To obtain factory settings, look at meter calibration record shipped with meter. If not available, call factory with the serial number and request another copy of the meter calibration record.

7.5 Sensor Testing

The sensor consists of a measuring section with electrodes and coils in an aluminum or steel enclosure. The following paragraphs describe field tests that can be performed by the instrument technician. Defective sensors should be returned to the factory for repair. **OBTAIN A RETURNED GOODS AUTHORIZATION (RGA) PRIOR TO RETURNING MATERIALS TO PREVENT DELAYS.**

7.6 Coil Continuity Testing

WARNING

DO NOT MAKE OR BREAK COIL CONNECTION WHILE POWER IS APPLIED. DISCONNECT POWER BEFORE PROCEEDING.

Unplug coil cable plug. Using a short 22 gauge (or appropriate) test lead, connect ohmmeter between coil wires and measure resistance. See Figure 7.4A.

▼ **COIL RESISTANCE SHOULD MEASURE 270 OHMS ±10%.**

If the coil resistance is too high or low (including open and short circuits) the sensor must be returned to the factory for inspection and/or repair.

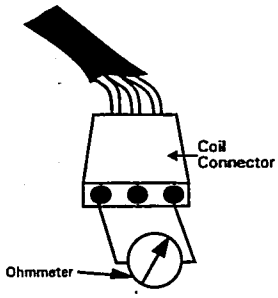

Coil Resistance Testing
Figure 7.4A

7.7 Coil Insulation Test

Required test equipment: Insulation tester 10^{12} ohm

Disconnect power and signal cables. Disconnect coil connector, Figure 7.4B. Connect insulation tester between coil wire and housing ground. Test the insulation at 500 Vdc. A reading below 10,000 meg ohms indicates moisture in the sensor. The sensor must be returned to the factory for inspection and/or repair.

Connect insulation tester between coil wire and housing ground. Test the insulation at 500 Vdc. A reading below 10,000 meg ohms indicates moisture in the sensor. The sensor must be returned to the factory for inspection and/or repair.

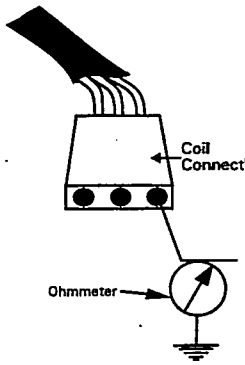

Coil Insulation Testing
Figure 7.4B

7.8 Electrode Circuit Continuity Test

Remove sensor from the pipeline. Drain sensor and dry interior thoroughly. Unplug coil and electrode cable PCBs.

Connect ohmmeter to E1 (center conductor of one electrode cable, see Figure 7.5) and to the electrodes which are accessible through the open sensor. Use the sensing electrodes which are located opposite each other in the center of the sensor. Do not use the grounding electrodes. Measure 0 ohms for one electrode and ∞ ohms (open) for the other. Connect ohmmeter to E2 and repeat the above procedure

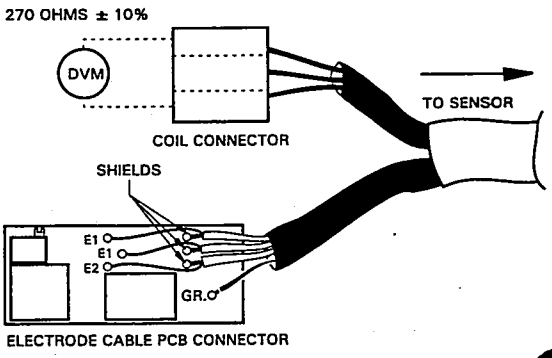

Electrode Cable PCB
Figure 7.5

HART® is a registered trademark of Rosemount Inc.
Teflon® is a registered trademark of DuPont

7.9 Electrode Circuit Insulation Test

Unplug coil and electrode cable PCB.

Connect insulation tester three ways (see Figure 7.5.):

1. Between top post labeled E1 and shield.
2. Between center post labeled E1 and shield.
3. Between bottom post labeled E2 and shield.

Any leakage or fault indication will determine that the sensor should be returned to the factory for inspection and repair.

8.0 Replacement Parts List

Description	*Part Number*
1. Electronics Module, 77 - 265 Vac	552712
Electronics Module, 12 - 60 Vdc	552704
2. I/O PCB	
12-60 Vdc	552738
77-265 Vac	552720
3. Fuse, Slo-Blo, (12-60 Vdc) 2.0 amp	148743
Fuse, Slo-Blo (77-265 Vac) 1.0 amp	148446
4. Kit, remote mount for Transmitter	552415
Assembly includes:	
a) Mounting bracket	
b) Tee mounting standoff	
c) Cable grip	
d) Sensor junction box (2)	
e) 15 ft. cable assembly	
5. Remote mount PCB	550071
6. Replacement remote mount cable	
3 conductor	142860
2 conductor	139924
7. Grounding rings	Contact Factory

Your TIGERMAG™ can be fitted with an optional digital communication capability utilizing HART® protocol. In order to operate this feature, you must have a Sparling model KP601 transmitter interface. Consult factory for more details.

A.1

Appendix 1
Programming Firmware Ver. 5.3 & Ver. 6.0

1.1

General

The 16 character alpha-numeric display is located directly above two magnetically operated Hall effect switches. The left switch is labeled "YES" and the right switch is labeled "NO". THESE SWITCHES ARE THE ONLY CONTROLS REQUIRED TO SELECT AND CHANGE PARAMETERS ON THE TIGERMAG. DO NOT ADJUST POTS.

The TIGERMAG is configured to the user's installation (programmed) using the MAG-COMMAND magnetic probe furnished with each meter. It can also be programmed with any high strength magnet. See Figure A1.1. Either switch is activated by momentarily holding the MAG-COMMAND probe close to the switch.

IT IS NOT NECESSARY TO OPEN THE ELECTRONICS COMPARTMENT IN ORDER TO CHANGE PROGRAM SETTINGS.

Refer to Figure A 1.2 to determine how to get to each section of the program.

1.2

Entering Data

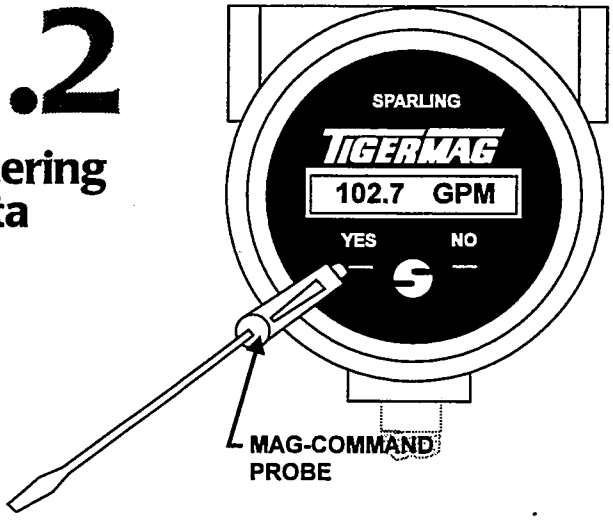

Figure A 1.1
Tigermag Display

Alphanumeric data is required for the password and to enter or change constants. When data is required, the cursor will be positioned under the first character. A "NO" answer will cause the next valid character to be displayed in turn. A "YES" answer accepts the displayed character or digit and moves the cursor to the next position. After answering "YES" to the last character, you will be prompted with the entire data just entered. Answer "NO" if you wish to change. Answer "YES" when it is correct.

Your display may be either constant or an alternating display, like this:

COUNT=00001478

alternating with

100.000 GAL/COUNT

however, in this manual the meter display will be shown in a box like this:

102.7 GPM

1.3 Display Modes

Answer "YES" when the meter is in operation to toggle the display modes. A "YES" will change the display from showing flow rate (the default) to showing both rate and total alternately or showing the totalizer counter only.

SHOW TOT

SHOW RATE

SHOW TOT RATE

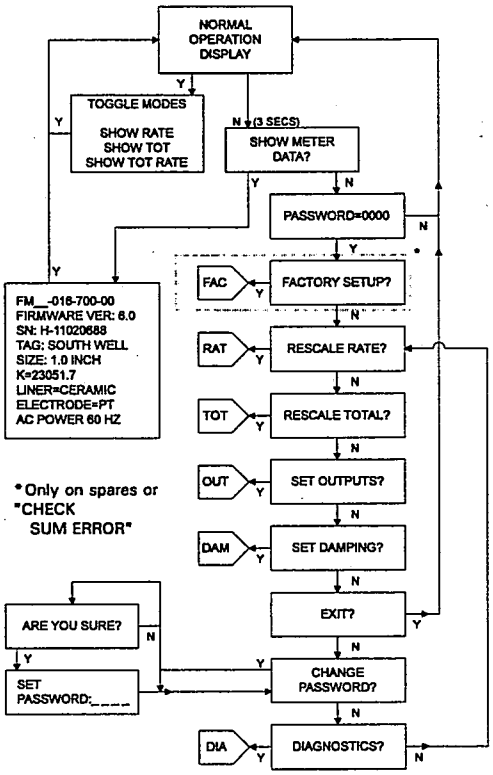

Figure A 1.2
Main Program

1.4 Show Meter Data

Hold the MAG-COMMAND probe next to the "NO" switch for approximately 5 seconds. The meter will respond:

SHOW METER DATA?

a) Answer "YES" and the meter will display the model number, firmware version, serial number, tag number, K factor (pulses/gallon) liner and electrode material. As each data line is displayed a "YES" answer will display the next item. *A **'NO'** answer at any item (or lack of response for 12 seconds) will return the meter to the operating display.*

b) A failure to answer this prompt within a few seconds will automatically bring the PASSWORD menu. See Section 1.5.

c) Answer "NO" and the PASSWORD prompt appears. A failure to enter a correct password will return the meter to operation.

1.5 Password Entry

PASSWORD = 0000

To go beyond this point, a valid password is required. Every meter is shipped with the default password "0001". Any user with a valid password can change the password.

The meter password is entered by responding to each digit of the password with a "YES" or "NO". A "YES" moves the cursor under the next digit to the right. A "NO" scrolls to the next higher value for the underlined digit and then back to 0 again. The same 12 second time limit applies to each digit selection, i.e., a lack of response advances the cursor to the next position. Upon entry of a valid password, the meter enters a program mode and activates the fault output to signal remotely that programming is taking place.

▼ **Default Password "0001"**

1.6 Rescale Rate

RESCALE RATE?

A "YES" answer enters the Rescale Rate loop. A "NO" answer continues to the next menu item.

A menu is presented to select the engineering units in which rate is displayed and scaled. By answering "NO" each menu selection is presented in turn. A "YES" selection chooses the unit displayed and moves on to the next item.

1.6.1 Select Rate Units

RATE UNITS = GPM

An answer of "YES" will display the rate in "GPM". Otherwise answer "NO". A "NO" answer will bring the other pre-defined choices in turn, i.e., liters/min., cu. ft./sec., liters/sec., cubic meters/hour, million gallons/day, ft./sec, meters/sec. and ???. Answer "YES" to the predefined rate units or to "???". A "NO" to each item brings you back to the beginning of the loop. *A "YES" answer is required to one of the selections to leave the loop.*

Select one of the presented units of measure by answering "YES" and skip to Sec. 1.6.2. If no appropriate choice is diaplayed, select "???" and define your own units in 1.6.1a.

1.6.1a User Defined Rate Units

RATE UNITS = AAA

Note the cursor under the first A. Select the three alphabetic or numeric characters which you want displayed for your selected rate units by answering "NO" until the correct character is displayed in the current cursor position. A "YES" answer then accepts that character and moves the cursor one position to the right. A "YES" to the last character brings the conversion factor menu.

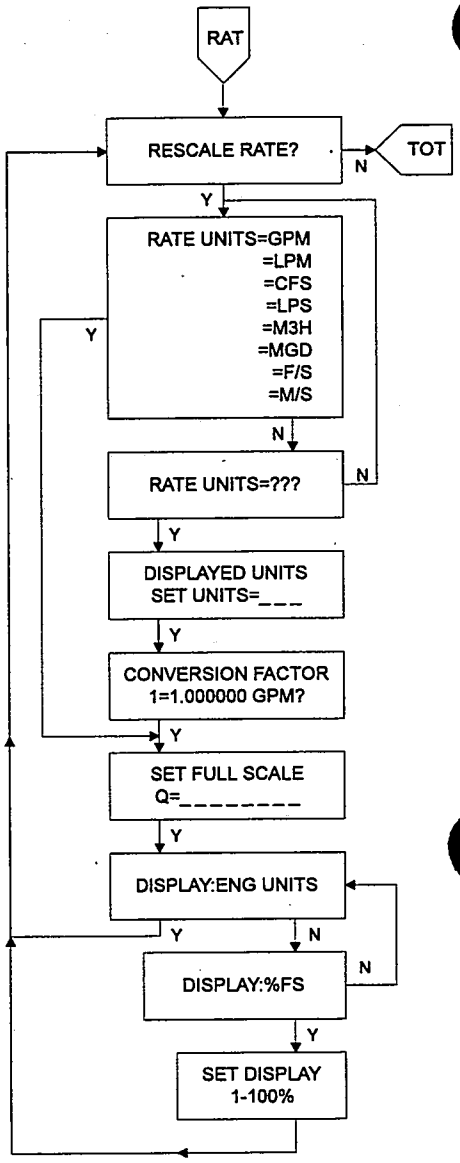

Figure A 1.3
Rescale Rate Flowchart

1.6.1b Conversion Factor

1 = 1.200000 GPM?

The conversion factor is defined as U.S. GPM/user unit. Enter the number of GPM which is equal to 1 of your selected units.

Example: To set the conversion factor for gallons per hour, enter the number of gallons per minute which is equal to 1 gallon per hour. One gallon per minute is equal to 0.016666 gallons per hour (1 ÷ 60). In this case, enter 0.0166666.

1.6 Rescale Rate Cont'd.

1.6.2 Set Full Scale

The full scale flow rate defines only the flow rate at which the current output is set to 20 mA and at which the frequency output is set to 1000 Hz. *It does not affect the display or the accuracy of the frequency or pulse output.*

Q=5.000000 GPH?

In the case above, entering 5.0 GPH here will set the current output to 20 milliamps when the fluid flow reaches 5.0 GPH. Full scale flow is selected in the units defined in 1.6.1 above. Thus, if "GPH" were defined, full scale would be defined in GPH not GPM. By answering "YES" or "NO" to each digit, it is possible to enter the full scale flow rate. A full scale below 1 FPS or above 35 FPS will receive a warning of "OUT OF RANGE LOW" or "OUT OF RANGE HIGH". Unit is still functional, but is operating out of recommended range.

1.6.3 Select Rate as Percent of Full Scale

DISPLAY:RATE UNITS

A "YES" answer will display flow in engineering units as defined in 1.6.2 "NO" displays rate as a percentage of full scale. Either choice will affect only the format of the display and nothing else.

1.7 Rescale Total

RESCALE TOTAL

A "YES" answer enters the Rescale Total loop. A "NO" answer continues to the next menu item.

RESET TOTALIZER?

This is a warning that any change of totalizer scaling will automatically reset the internal totalizer(s). A "NO" answer ends this loop.

1.7.0 Count Direction

The internal totalizer can be programmed to totalize in the forward direction only or to totalize separately for forward and reverse.

COUNT:FWD ONLY

Answer "YES" to count in the forward direction ***only*** (shown in the "operate" mode as "COUNT=")

COUNT:FWD,REV

Answer "YES" to have separate internal counters for forward and reverse flow (displayed as "F CNT=" and "R CNT=" respectively).

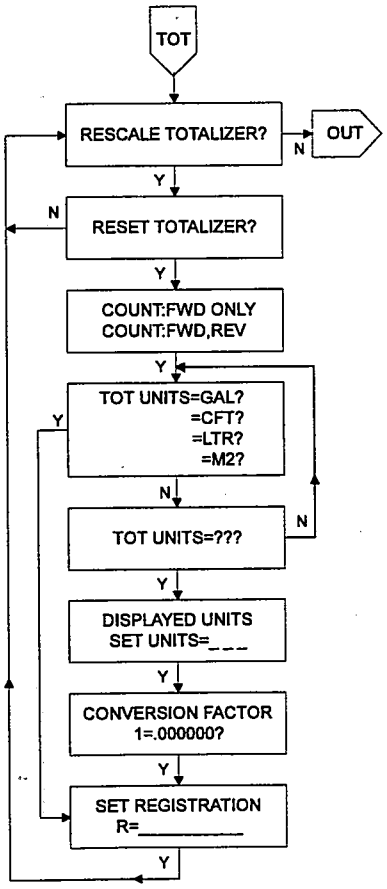

Figure A1.4
Rescale Total Flow Chart

1.7 Rescale Total Cont'd.

1.7.1 Select Total Units

A menu is presented to select the engineering units in which totalization or frequency is displayed and scaled. By answering "NO" each menu selection is presented in turn. A "YES" selects the unit displayed and moves on to the next item.

TOT UNITS=GAL

Answer "NO" to view the available pre-defined totalization units. Select "YES" to the preferred engineering units for totalization. One of the options will be ???. This permits the definition of any desired units. A "YES" must be selected to one of the options to exit this loop.

1.7.1a User Defined Totalizer Units

TOT UNITS = AAA

Select the desired 3 character abbreviation as in 1.6.1a on the previous page.

1.7.1b Conversion Factor

1=1.2500000 GAL?

Enter the number of U.S. gallons which is equivalent to 1 of your selected units.

For example, the conversion factor from U.S. Gallons to Imperial Gallons is 1.25 because there are 1.25 U.S. Gallons to each 1 Imperial Gallon.

1.7.2 Set Registration

R=100.000 GAL?

Enter the number of your engineering units of totalization which is equivalent to one count of the internal totalizer and external "TOT" output. This is normally an even number such as 0.1, 1, 10, 100, etc. In the above case 100 gallons will produce one totalizer pulse.

1.8 Set Outputs

OUTPUT:4-20 MA

This permits the selection of 4-20 or 0-20 mA dc outputs. Answer "YES" to the output desired. Most North American installations will use 4-20.

1.8.1 Select Pulse or Frequency

OUTPUT:TOT

This selects the totalizer output of 0-10 Hz 25/50/100 ms, 24 Vdc. The frequency output of 0-1000 Hz, 50/50 duty cycle is selected by answering "NO" to "OUTPUT: TOT" and "YES" to "OUTPUT:FREQ".

A jumper located on the I/O board under the small cover must be correctly set in the "**totalizer**" or "**frequency**" position. Be sure that connections are properly made for the selected outputs (see Figure 3.9). Set the jumper in the "**open collector position**" if an unpowered signal is preferred. Refer to page 16, Section 3.7, Electrical Connections.

1.8 Set Outputs Cont'd.

1.8.2 Set Flow Direction

FLOW DIR:FWD

This allows the user to reverse the normal flow direction. The default flow direction is from left to right as you face the display. *If flow is in the opposite direction a minus sign (-) will appear in the display, the flow direction output will be active and the internal totalizer will be inhibited in the count forward direction.* Apart from that, the meter will operate properly in either direction. Both pulse and analog outputs will operate in both directions. Answer "NO" to reverse the normal flow direction.

1.8.3 Empty Pipe Detection (Optional)

Disabled on default, it must be enabled in the factory. It allows the user to set the EPD control between 0 (=off) and 9 as part of "SET OUTPUTS?" menu. Numerically, this represents approximate delay in seconds before the activation of EPD state (outputs driven to zero, totalizer on hold, message "OUTPUT INHIBITED" on display). Note EPD setting functions like a "volume" control, with "0" serving as an "EPD-off" click and "1" thru "9" enabling various levels of detection. Typical setting may be between 3 and 6, the lower the number, the higher the possibility of "false" detection of a single air bubble. Factory setting is "0" (off).

1.8.4 Hart Protocol (Optional)

Selects between "HART" and OFF" if HART is installed.

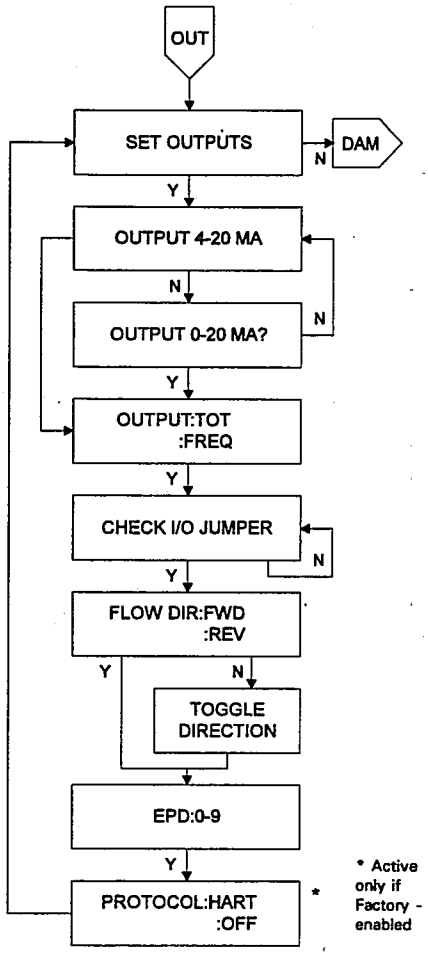

Figure A 1.5
Set Outputs Flow Chart

1.9 Damping Adjustments

SET DAMPING?

Display and current output are damped *independently.* Answer "YES" to enter this loop.

1.9.1 Display Damping

DISP DAMPING - 5

A "NO" answer scrolls from 0 (no damping) through 9 (maximum damping). Answer "YES" to the desired degree of display damping. Some experimentation may be necessary to obtain optimum results.

1.9.2 Current Damping

CURRENT DAMP=15

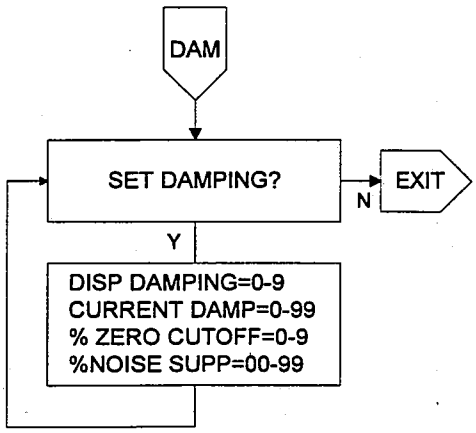

Figure A 1.6
Set Damping Flow Chart

Current damping may be selected from 0-99 seconds. This corresponds approximately to the number of seconds to respond 90% of the way to a step change in input.

1.9 Damping Adjustments Cont'd.

1.9.3 Low Flow Cutoff

% ZERO CUTOFF = 2

This is the minimum flow rate below which meter outputs are forced to zero. The number entered corresponds to the selected percentage of full scale as set for "Q" in Section 1.6.2. Choices range from 0 (low flow cutoff disabled) through 9%.

1.9.4 Pulp Noise Suppression

NOISE SUPP = 0-9

This feature provides a method of rejecting noisy signals received at the electrodes. These signals are frequently associated with pulp flow such as found in paper processing or in juice processing.

Pulp noise rejection ignores any single flow signal which differs excessively from the preceding signal. As soon as two consecutive signals are received which are within the accepted range, the meter responds to the signal as being a true flow signal.

If pulp noise is encountered, select a suppression amount required to stabilize the signal. Zero is arbitrarily defined as disabling noise suppression. Nine is the highest noise suppression choice which corresponds to 30% above or below the previous signal. See Manual Section 1.4.3.

2.0 Exit Programming

EXIT?

A "YES" answer stores the changes which have been made and returns the meter to operation. A "NO" goes to the next menu item.

2.1 Change Password

CHANGE PASSWORD?

ARE YOU SURE?

Answer "NO" to return to CHANGE PASSWORD. Answer "NO" again to continue to the next item.

A "YES" answer permits changing the password by scrolling through the four available digits. Be sure to record the new password.

▼ ***FAILURE TO RE-ENTER THE NEW PASSWORD WILL RESULT IN NOT BEING ABLE TO REPROGRAM AT A LATER DATE.***

2.2 Diagnostics

DIAGNOSTICS?

Answer "YES" to enter the diagnostics loop. A "NO" answer returns to the RESCALE RATE menu.

WARNING

IT IS RECOMMENDED THAT DIAGNOSTICS NOT BE PERFORMED UNLESS MALFUNCTION IS SUSPECTED. REFER TO THE TROUBLE-SHOOTING SECTION FOR COIL AND ELECTRODE TESTS WHICH CAN BE PERFORMED.

WARNING—THE METER TOTALIZERS AND RATE WILL CEASE TO BE UPDATED WHILE YOU ARE IN THIS LOOP. OUTPUTS WILL BE HELD AT THEIR LAST VALUE. THE METER CONTINUES TO OPERATE HOWEVER.

2.2.1A Check HART Transmission (Ver. 6.0 when equipped)

Toggle between MARK and SPACE by selecting "NO". Enter next box by selecting "YES".

2.2.1B Check Coil Current (*Perform this test last*)

▼ ***DISCONNECT POWER BEFORE PROCEEDING.***

Remove cover from the electronics side of the transmitter housing. Connect a mA meter in series per diagram A 1.9. After connections are made, power the meter back up.

Enter password "0001" to enter programming loop. Select "YES" to step through menu choices until you reach the diagnostics menu.

DIAGNOSTICS?

Answer "YES"

STOP COIL DRIVE?

Answer "YES"

JUMPER E101 OUT?

Remove Jumper E101 per Figure A 1.8 then answer "YES".

COIL=HIGH

The mA meter should read a coil current of 80.00 mA ± 0.05 mA. If necessary, adjust pot VR_1 to achieve this current. To test low coil, enter "NO".

COIL=LOW

The mA meter should read a coil current of -80 mA ± 0.05 mA. In fecessary, adjust pot as VR_1 to achieve this current. Enter "YES".

JUMPER REPLACED?

Reinstall Jumper E101 then answer "YES" to leave this test.

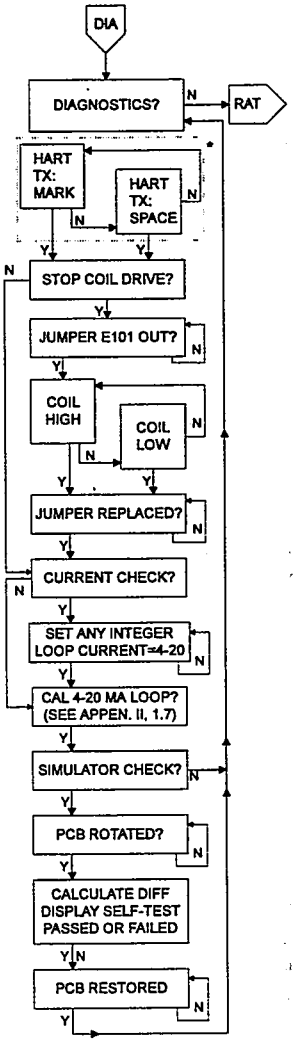

Figure A 1.7
Diagnostics Flow Chart

2.2

Diagnostics Cont'd.

Answer "NO" to all options until you reach diagnostic main menu

DIAGNOSTICS

Enter "YES" to exit programming.

▼ ***TO AVOID DAMAGE TO YOUR COIL DRIVER YOU MUST COMPLETE THE FOLLOWING STEPS:***

DISCONNECT POWER.
DISCONNECT JUMPERS AND mA METER.
RESTORE ORIGINAL METER CONNECTIONS AND CLOSE METER HOUSING.

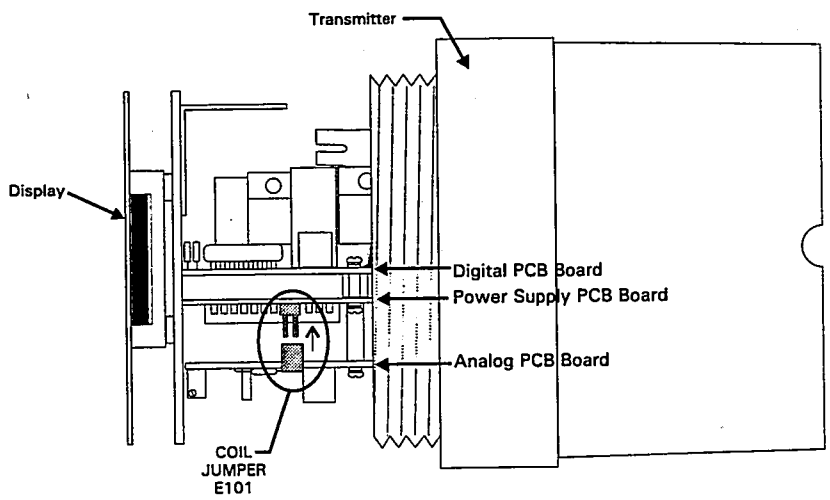

Figure A 1.8
Coil Jumper E101

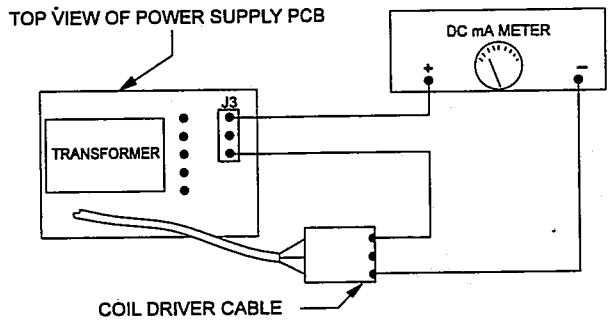

Figure A 1.9
Coil Current Test

2.2.2 CHECK CURRENT LOOP

LOOP CURRENT=04

By answering "NO" the loop current can be scrolled by 1 mA increments, from 4 mA up to 20 mA and then back to 4. Answer "NO"to step to the next desired value. Answering "YES" at any time will exit the loop. Check the 4 mA and 20 mA positions with a digital milliammeter. Each should be accurate within ±0.02 mA (no damping is used).

The current output can also be used to test other equipment in the current loop such as recorders and controllers.

2.2.3 Simulator

SIMULATOR CHECK?

Answer "YES" to enter the self test mode.

PCB ROTATED?

Rotate the electrode PCB to the test position. See Figure 1.10. Then answer "YES". The meter will then compare the signal level injected into the meter with that set by the factory.

SELF-TEST PASSED

The electronics are working satisfactorily.

SELF-TEST FAILED

The electronics are not operating accurately. Replace the electronics module. See Section 7.3.

Answer "YES" to return to the Diagnostics menu.

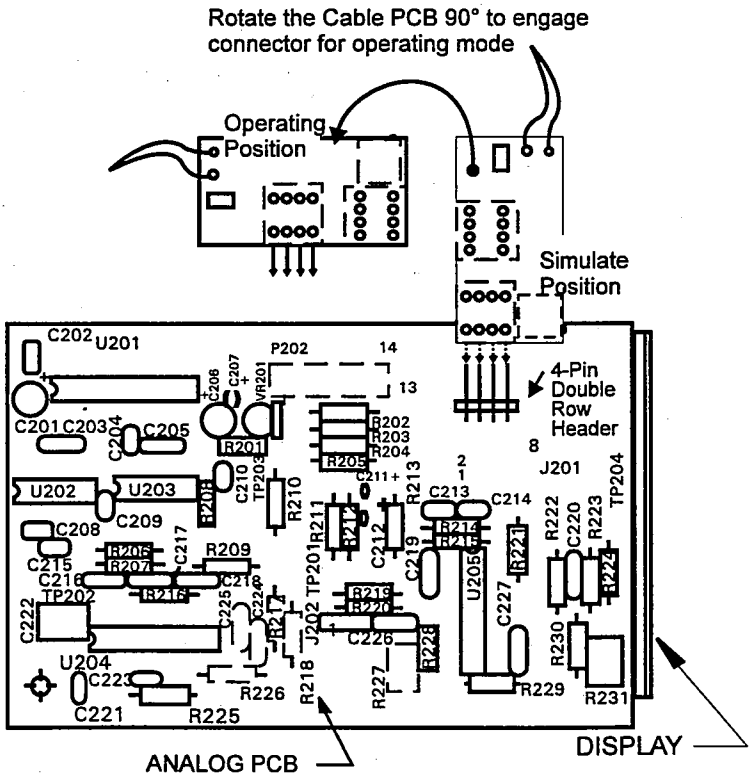

Figure A 1.10
Electrode Cable - Simulate Position

A.2

Appendix 2
Factory Set-Up

1.1 General

The Factory set-up menu is available in only two instances:

- Recovery from "CHECK SUM ERROR".
- Installation of spare electronics modules (not factory calibrated).

▼ ***ALL NUMBERS SHOWN ARE EXAMPLES ONLY. CHECK YOUR METER RECORD TO FIND YOUR SPECIFIC VALUES.***

▼ ***THE FACTORY SET-UP MENU SHOULD BE ACCESSED ONLY WHEN CONFIGURING SPARE ELECTRONIC MODULES TO A GIVEN FLOW SENSOR. CONTACT FACTORY FOR INSTRUCTIONS.***

1.2 Factory Set-Up

In this menu, data is entered which customizes a universal set of electronics to the specific sensor. This is normally a factory function ***and is done in the field only when spare electronics are stocked*** in the field or when a "CHECK SUM ERROR" occurs. Note: Replacement ***ELECTRONICS*** ordered from the factory (not for stock purposes) are pre-programmed for a specific sensor serial number and will not require entry into the factory set-up loop.

Enter the programming loop as described in Appendix 1, 1.1-1.5

1.3 Setting the Calibration Constant "K"

K-2000.0000?

Set "K" to the value stamped on the sensor nameplate.

1.4 Setting the Offset

O=1.0000000?

Set "O" (the offset in Hz) to the correct value. The correct value of "O" is located on the Nameplate (S.N.H-16000000 and above) and on the meter data printout furnished with each meter. Select proper sign of the offset (+ or -) by replying "YES" to:

SIGN:PLUS

SIGN:MINUS

1.5 Exit

When replacing the electronics with another module from the same size sensor, exit at this point and the meter will function properly.

EXIT

DO NOT PROCEED UNLESS:

- RECOVERING FROM "CHECK SUM ERROR" –or–
- Replacement electronics are supplied as a "spare" unprogrammed module –or–
- Replacement module is from a meter of a different size

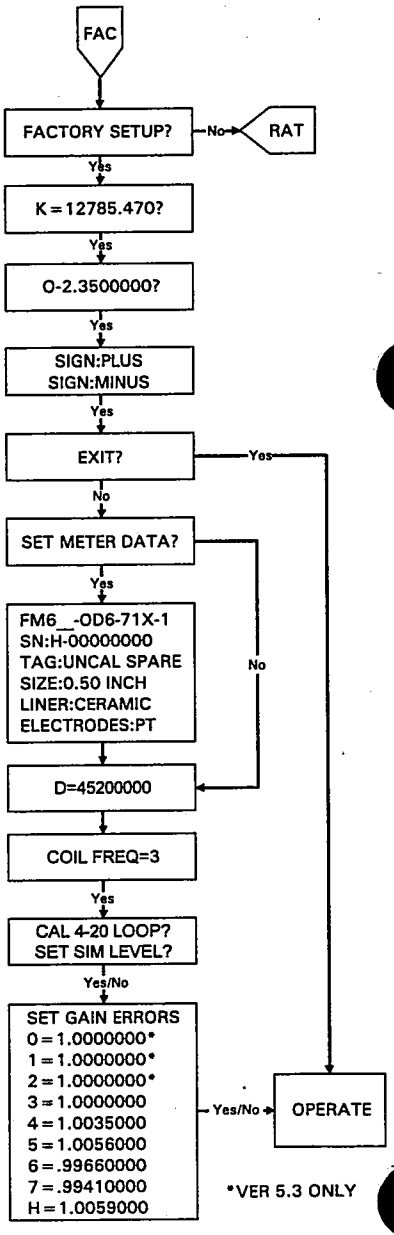

Figure A 2.1
Diagnostics Flow Chart

1.6 Set Meter Data

This permits setting the model number, serial number, tag number, nominal meter size, liner, electrode material, actual diameter (see Figure A 1.5) and the coil frequency.

▼ ***NOTE: WHEN PROGRAMMING AN UNCALIBRATED SPARE, TAG NUMBER WILL READ "UNCAL SPARE". THIS MUST BE CHANGED IN ORDER TO PROTECT METER FROM UNAUTHORIZED OR ACCIDENTAL RE-ENTRY INTO FACTORY SET-UP MENU.***

When the display reads:

SET METER DATA?

Answer "YES" to enter the SET METER DATA loop. Set each item from Tag or meter record until the display reads:

TAG: UNCAL SPARE

Answer "NO" to any character to change it. Change the tag to replace the word UNCAL SPARE with your own tag information. If you do not have tag numbers, simply remove the word "SPARE".

▼ ***CAUTION: WHEN EXITING THE SET METER DATA LOOP, ACCESS TO THE FACTORY SET-UP MENU WILL NOT BE POSSIBLE.***

1.7 Cal 4-20 Loop

▼ **YOU MUST RECALIBRATE 4-20 mA LOOP WHENEVER "CHECK SUM ERROR" MESSAGE APPEARS.**

Answer "YES" and the display reads "LOSE OLD DATA?". Now to set new calibration, connect an external digital current meter (DMM) to the current output in series with or in place of field wiring (If you were to answer "NO" the display would read "CALIBR UN-CHANGED"). While display shows "SET 4MA OUTPUT", hold the magnet over the "NO" and watch the current increase on the DMM. As it passes the 3.9 mA mark, apply brief magnet strokes to "NO" until the DMM reads 4.00 ±0.05 mA. Reply "YES" to that and to the prompt "OUTPUT=4MA?" that follows. A "NO" answer will restart the adjustment. The 20 mA level is set in the same manner.

1.8 Set Sim Level

A "YES" answer resets the stored values used by the simulator to confirm proper meter operation. The PCB must be rotated 90°. Answer "YES" if correcting a "CHECK SUM ERROR", otherwise answer "NO".

1.9 Set Gain Errors

Automatic ranging uses 8 gain levels. Each level can be individually trimmed in software to enhance **INTERCHANGEABILITY** of electronics. These gain levels require resetting when recovering from a "CHECK SUM ERROR". ***Set the gain correction to the data supplied with the meter. Also set "H", a slope correction factor.***

▼ **WHEN EXCHANGING ELECTRONICS, DO NOT CHANGE THESE CORRECTION FACTORS AS THE GAIN ERRORS AND "H" RELATE TO THE *ELECTRONICS* RATHER THAN THE SENSOR.**

2.0 Finalizing

The meter will return to operation as soon as "H" is set.

Sparling Instruments Co., Inc.
4097 N. Temple City Blvd. • El Monte, CA 91731 • Ph (818) 444-0571 • Fax (818) 452-0723

IDS 625/655 B 9/96 1000

Copyright 1996 by Sparling Instruments Co., Inc. All rights reserved.

SPARLING INSTRUMENTS CO., INC.

PRODUCT DATA SHEET

SERIES 600
MAGNETIC FLOWMETERS

MODEL 625 TIGERMAG™
FLANGELESS ELECTROMAGNETIC FLOWMETERS

PDS-625
Issue Date: July 1996
Supersedes: December 1995

DESCRIPTION

The Model 625 is a microprocessor-based electromagnetic flowmeter utilizing the latest bi-polar pulsed DC technology. It is designed to measure the flow of conductive liquids in full pipes. The sensor and the transmitter are integral and enclosed in a NEMA 7 explosion-proof housing. The sensor housing is cast aluminum (standard) or steel (optional).

The sensor liner may be aluminum oxide (ceramic) or Teflon-lined stainless steel flow tube—the best choices for aggressive applications. The sensing electrodes are stainless steel. A variety of electrodes and electrode seals are available to allow you to tailor the meter to your process.

The Model 625 combines technically advanced circuitry for ease of installation and maintenance-free operation.

APPLICATIONS

Process Chemicals, Wastewater, Polymers, Acids, Alkalis, Raw Water, Sludges, Slurries, Sewage, Cooling Water, nearly any conductive liquid.

PRINCIPLE OF OPERATION

The Model 625 magnetic flowmeter operates in accordance with Faraday's Law which states that the voltage induced in a conductor moving through a magnetic field is proportional to the velocity of that conductor. The magnetic flowmeter utilizes liquid as the conductor.

STANDARD FEATURES

- Two year warranty
- Bi-polar Pulsed DC Coils
- NEMA-4X and NEMA 7 explosion proof enclosures
- Auto Zero
- FM Approved for Class I, Division 1 & 2, Groups B,C,D, Class II, Division 1, Groups E, F, G
- CSA Approved for Class I, Division 2
- CE Approved
- Cenelec Approved (optional)
- Proven TIGERMAG™ electronics with MAG-COMMAND™
- NIST-Traceable Calibration
- Flangeless Wafer Design
- Low Flow Cut-off
- Built-in Noise Rejection
- Field Programmable
- Selectable Damping
- User-defined Engineering Units
- Bi-directional Flow
- Positive Zero Return
- Isolated Analog Output
- Scaled Pulse Output
- Self-test Function
- 16–Digit Display, Rate/Total
- Password Protection
- Aluminum Flow Sensor Housing

Ceramic–lined

INSTALLATION

The Model 625 **TIGERMAG™** can be installed in any orientation from vertical to horizontal. Exposure to excess vibration and pump noise should be avoided. The meter must be mounted at a point in the line which is always full of process liquid under flowing conditions. A vertical installation with liquid flowing up is ideal in that it assures a full pipe.

The meter may be installed between: ANSI 150 or 300 lb., AWWA, DIN, PN10 or 16, or British Standard flanges. (See Figure 1).

Only three diameters of straight pipe length are required from the center of the meter to normal obstructions to obtain specified accuracies. In the smaller sizes all of the necessary straight pipe is contained within the meter itself.

The FM625 utilizes an advanced switching power supply that accommodates voltages from 77 - 265 Vac 50/60 Hz (12-60 Vdc optional).

The use of grounding rings is recommended. Use of grounding rings is required if adjacent piping is lined or non-conductive.

When properly connected with liquid-tight conduit, the remote-mounted flow sensor will withstand accidental submergence.

Sparling Instruments Co., Inc.
4097 N. Temple City Blvd. • El Monte, CA 91731 USA
Phone (818) 444-0571 • Fax (818) 444-2314

MEMBER MCAA Measurement Control & Automation Association

ISO 9001 DNV Certification, Inc. Certificated Firm

Litho in U.S.A. Sparling and are Trademarks.

CERTIFIED ACCURACY

Each TIGERMAG™ is wet-flow calibrated in Sparling's Primary Flow Lab traceable to the National Institute of Standards and Technology. A certificate of accuracy is furnished with each meter.

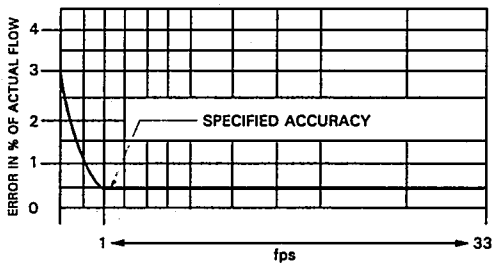

REMOTE MOUNTED TRANSMITTER

Remote mounting of the electronics is required for high temperature operation (over 212°F or 100°C), when pipe vibration is excessive, or when flooding is possible. Connections for power and signal are made in the transmitter housing.

A bracket for wall/pipe mounting is furnished as part of the optional remote mounting kit. Interconnecting cable is supplied between the sensor and transmitter enclosure. Also supplied is a sensor mounted NEMA-7 rated junction box in which coil and electrode connections are made.

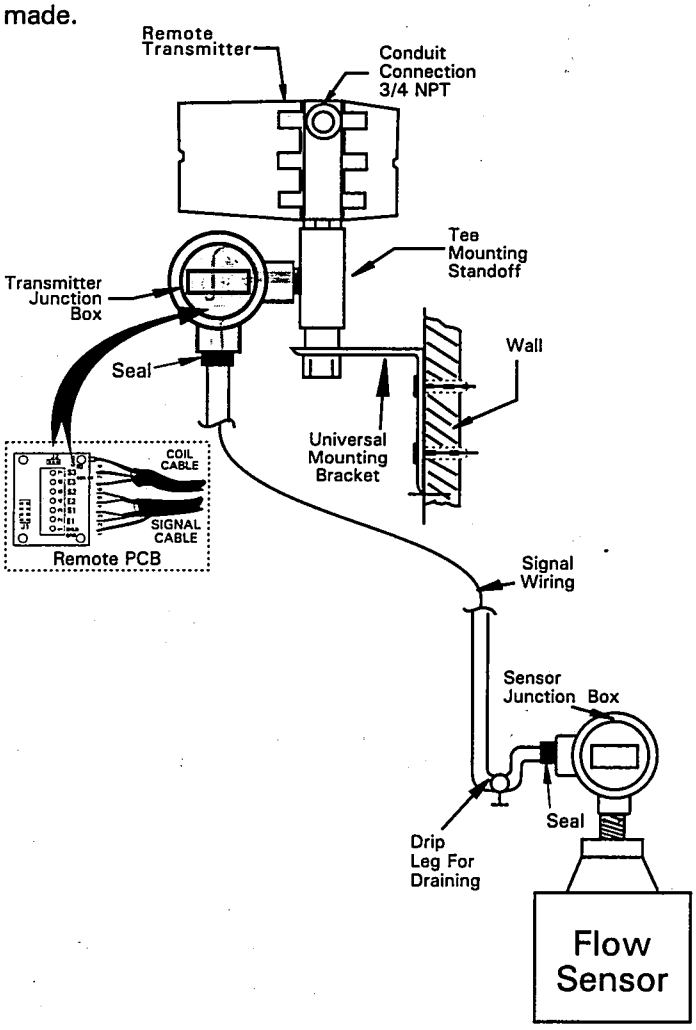

Remote Mounted Transmitter
Figure 1

HI-Z CIRCUITRY

The Sparling **TIGERMAG™** provides superior performance in liquids which tend to deposit non-conductive coatings. The **TIGERMAG™** utilizes Hi-Z circuitry which produces a high input impedance to the transmitter's pre-amplifier (10^{12} ohms). (See Fig 2). If the impedance of the coating is negligible as compared to the impedance of the receiving instrument. The voltage drop across the electrode coating will also be negligible. This eliminates the need for electrode cleaners.

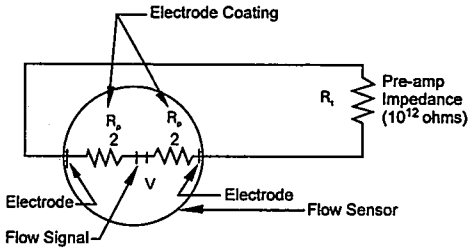

Hi Z Circuitry
Figure 2

PZR – Positive Zero Return

PZR is activated by closing a contact which drives the meters 4-20 mA output to zero. This is useful when process lines are empty or the flow to the meter is shut off.

EMPTY PIPE DETECTION (optional)

The Sparling **TIGERMAG™** is designed to detect absence or inadequate volume of process fluid in the pipe and will hold the output signal to 4 mA or zero. One of the most important values of this feature is that it prevents false totalization possible with other meters under partially filled pipe conditions.

TABLE 1
Flowrates produced with Ceramic liner

Meter Size Inches Nominal	Gallons Per Minute*		
	Accuracy at 1 fps	Min. Full Scale 3 fps	Max. Full Scale 33 fps
1/10	.04 ± 1.0%	.12	1.3
1/4	.22 ± 1.0%	.67	7.2
1/2	.50 ± 1.0%	1.50	16.5
1	1.62 ± 0.5%	4.85	53.4
1-1/2	4.40 ± 0.5%	13.20	145.2
2	7.00 ± 0.5%	21.00	231.0
3	20.30 ± 0.5%	61.80	680.0
4	35.40 ± 0.5%	106.10	1168.0

TABLE 2
Flowrates produced with Teflon liner

Meter Size Inches Nominal	Gallons Per Minute*		
	Accuracy at 1 fps	Min. Full Scale 3 fps	Max. Full Scale 33 fps
1/2	.9 ± 1.0%	2.7	29
1	2.3 ± 0.5%	6.9	76
1-1/2	5.5 ± 0.5%	16.5	182
2	9.8 ± 0.5%	29.4	323
3	22.9 ± 0.5%	68.8	757
4	40.4 ± 0.5%	121.2	1333

*GPM calculated at actual meter ID

DIMENSIONS - MODEL 625
CERAMIC AND TEFLON LINERS
ALUMINUM AND STEEL SENSORS

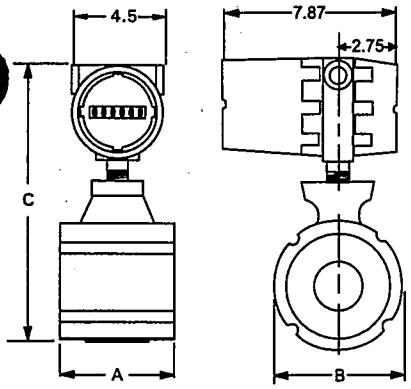

Meter Size Inches	Dimensions in Inches			Shipping Weights				Mating Flange Size
				Ceramic-lined		Teflon-lined		
	A	B	C	Lbs.	Kg.	Lbs.	Kg.	
1/10	4.06	2.31	9.00	15	7	N/A	N/A	1/2
1/4	4.06	2.31	9.00	15	7	N/A	N/A	1/2
1/2	4.06	2.31	9.00	15	7	15	7	1/2
1	4.06	2.92	9.62	15	7	15	7	1
1-1/2	4.06	3.62	10.50	20	9	20	9	1-1/2
2	4.06	4.12	11.00	20	9	20	9	2
3	6.06	5.70	13.00	30	14	30	14	3
4	6.06	6.60	14.10	35	16	35	16	4

See PDS 655 for 1/2" - 72" flanged meters

HOW TO ORDER A TIGERMAG™ MODEL 625

Base Model Number

FM625- TIGERMAG

Size
AA = 0.10", OA = 0.25", OD = 0.50", OF = 1", OG = 1.5", 02 = 2", 03 = 3", 04 = 4"

Table 3 - Liner Material
3 Teflon liner/Aluminum sensor (1/2 - 4" sizes)
4 Teflon liner/Steel sensor (1/2 - 4" sizes)
6 Ceramic (Aluminum Oxide 99.5%) liner/Aluminum sensor (1/10 - 4" sizes)
7 Ceramic (Aluminum Oxide 99.5%) liner/Steel sensor (1/10 - 4" sizes)

Table 4 - Electrode Material
1 316SS 2 Hastelloy C 5 Tantalum 6 Fused Platinum* 9 Monel
3 316SS Bullet Nosed 4 Titanium 8 Zirconium 7 Platinum*

Table 5 - Mounting Bolts, Nuts and Washers
0 Standard Carbon Steel
1 None required
2 Stainless Steel, type 304

Table 6 - Transmitter Mounting
0 Sensor mounted; NEMA-4X, NEMA-7
1 Remote mounted 15 feet. Required at temperatures >212°F (See note 1). Sensor suitable for accidental submergence-proof.
2 Sensor mounted with 5" standoff for insulated pipes
3 Remote mounted 15 feet with 5" standoff for insulated pipes (See note 1)
4 Remote mounted, 15 feet of cable, with permanent submergence proof sensor

Table 7 - Other option (Ceramic models only)
0 Standard O-rings (Ethylene Propylene and Viton 1" - 4") (Viton only 0.1" - 0.5")
1 Ethylene Propylene O-rings only
2 Kalrez O-rings
3 Viton O-rings only
4 3A-approved construction. 1" - 4" only. Table 4, opt. 1 & Table 5, opt. 2 only.

Special Notes for Construction
___ Hart® protocol
___ High temperature coils - required for temperatures over 266°F (Must be ordered with a remote mount option from Table 6 and one of the three options below)
  ___ Ceramic liner - max temp 420°F (includes Kalrez O-Rings)
  ___ Ceramic liner/fused electrodes - max temp: 420°F (O-Rings not req'd.)
  ___ *Teflon®* liner - max temp: 350°F
___ Empty Pipe Detection
___ 12-60 Vdc Power
___ KP601 ProgrammerSpecial cable length (over 15 feet = $5.00/ft. - Max. 100 ft.)
___ Cenelec Approval

FM625 _ _ _ _ _ _ _

(*) Some ceramic liner sizes are available with Platinum fused electrodes Consult factory for availability

SPECIFICATIONS

Accuracy: (Frequency Output)	±0.5% of rate (1-33 fps) 1"-4" ±0.01 ft/sec. below 1.0 ft/sec. ± 0.01 fps below 1.0 fps ±1.0% of rate (1-33 fps) for units smaller than 1"
Temperature Effect:	±0.025 % FS/°C
Full Scale Velocity Ranges:	From 0-3 to 0-33 fps (0-1 to 0-10 mps)
Minimum Velocity:	0.3 fps (0.1 mps)
Repeatability:	Within ±0.1% full scale
Electrodes:	Stainless steel standard (others available)
Liner:	Ceramic (aluminum oxide 99.5%) or *Teflon®* PTFE
Outputs:	Simultaneous isolated analog and digital Analog: 4-20 (standard) or 0-20 mAdc (optional) into 800 ohms max. Digital: Scaled pulse or frequency (selectable) a. Scaled, 24 Vdc pulse with 25/50/100 ms on-time width, 0-10 Hz max (up to 50ms on time) into 150 ohm impedance min. b. Scaled frequency. 15 Vdc square wave, 50/50 duty cycle, 0-1000 Hz max.
Mag-Command™:	Selection and change of meter parameters by magnetic probe without opening the enclosure.
Display:	16 Digit Alphanumeric LCD (rate and total)
Conductivity:	Minimum 5 micromho/cm
Power Requirements:	77 - 265 Vac 50/60 Hz (12-60 Vdc optional)
Power Consumption:	Less than 11 VA
Enclosures:	
Transmitter:	Cast aluminum epoxy coated. Integral and or remote mounted (NEMA-4X and NEMA-7)
Sensor:	Cast Aluminum or fabricated steel. Epoxy coated.
Electrical Rating[1]:	FM Approved for Class I, Division 1 Groups B, C, D; Class II Groups E, F, G CSA Approved for Class 1, Division 2 CE Approved
Pre-amp Impedance:	10^{12} ohms minimum.
Ambient Temp:	-20° to 140°F (-30° to 60°C). Display may darken above 150°F (70°C).
Process Temp:	
Integral Mount:	Teflon, Ceramic ..... -40 - 212°F
Remote Mount (opt)	Teflon, Ceramic ..... -40 - 266°F
High Temp Coils (opt)	Teflon ..... -40 - 350°F Ceramic ..... -40 - 420°F
Selectable Damping:	0-99 sec.
Pressure Rating :	
Ceramic Sensor:	Full Vacuum to 740 psi up to 2", 460 psi for 3" & 4"
Teflon Sensor:	300 psi
Low Flow Cut-off:	Selectable 0-9% of F.S.
Options:	• Remote Mounted Enclosure • Empty Pipe Detection • Electrode Materials: Titanium, Hastelloy C, Zirconium, Tantalum, Platinum, Monel • Process Temperature to 420°F (216°C)[2] • 12-60 Vdc operation • 3A Sanitary Approval • Digital Communications (HART Protocol) • Permanent Submergence-proof • Hookup for 48 Vdc battery backup available for 77-265 Vac Service • Cenelec approval

Notes: 1. FM Approval applies to 150 psi and integral mount only.
2. Ceramic lined units only

TEFLON® is a trademark of E.I. Dupont HART® Rosemount

MODEL FM-625 SPECIFICATIONS

1.0.0 The magnetic flowmeter shall be microprocessor-based, flangeless and shall be mounted between AWWA, ANSI, DIN, or BS flanges. It shall indicate, totalize, and transmit flow in full pipes.

1.1.0 The magnetic flowmeter shall utilize DC bi-polar pulsed coil excitation, automatically re-zeroing after every cycle.

1.1.1 The accuracy shall be ±1% on sizes 1/10"-1/2" and ±0.5% of rate on sizes 1"-4" of rate over a 33:1 turndown at all flow rates above 1 fps. Accuracy shall be verified by calibration in a flow laboratory traceable to the U.S. National Institute of Standards and Technology.

1.1.2 The flow sensor liner shall be ceramic (aluminum oxide) or *Teflon®*. The housing shall be (aluminum or steel).

1.1.3 The integrally-mounted flow sensor and transmitter shall be FM approved for Class I, Division 1 & 2, Groups B, C, D and Class II, Division 1, Groups E, F, G environments without use of air purge, CSA Approved for Class I, Division 2. Optional Cenelec approval available.

1.1.4 The electronics shall be integrally or remote mounted.

1.1.5 If remote mounted, the flowmeter sensor and transmitter shall retain NEMA-4X and NEMA-7 ratings. The transmitter shall be furnished with universal wall/pipe mounting bracket, and 15 feet of cable (standard).

1.1.6 The flowmeter shall be suitable for operation at temperatures from -40°F to 266°F and at pressures from full vacuum to 740 psi. Temperatures to 420°F (optional) (see notes 2 and 3).

1.1.7 The remote mounted flowsensor shall be accidental submergence-proof 30ft/48 hours and retain NEMA-4X and NEMA-7 ratings. The remote mounted flowsensor may be permanent submergence proof and retain NEMA-4X and NEMA-7 ratings.

1.2.0 The meter shall incorporate HI-Z circuitry. The preamplifier input impedance shall not be less than 10^{12} ohms. External ultrasonic electrode cleaners shall not be acceptable.

1.3.0 Available outputs shall be 1) Isolated analog 4-20 mAdc into 800 ohms standard; 2) scaled pulse 24 Vdc with selectable 25/50/100 ms on time, maximum frequency 10 Hz or 0-1000 Hz frequency, for 0-100% flowrate, 15 Vdc; 3) fault, with open collector; 4) flow direction with open collector; 5) Positive Zero Return (PZR) for external relay contacts. Output 2 can be open collector if required.

1.4.0 Low flow cutoff shall be selectable from 0-9% of FS.

1.5.0 A 16 character alphanumeric display shall indicate user-defined flow units and total flow. All menu advice and commands shall be visible on this display.

1.6.0 The flowmeter shall incorporate the MAG-COMMAND feature allowing menu selection and changes to be made from outside the housing via Hall-effect sensors. It shall not be necessary to remove covers, panels or fasteners to accomplish calibration or program changes.

1.6.1 The meter shall have an output current check function exercised by MAG-COMMAND or communicator which will increment the current from 4 to 20mA to allow the checking of attached instruments without the running of liquids thru the process pipes.

1.6.2 The meter shall incorporate a built-in input simulator to allow the simulation of a fixed flowtube signal to the front-end of the eledtronics without externally connected devices or the running of liquids thru the process pipes.

1.6.3 The meter software shall incorporate a password feature preventing inadvertent program changes.

1.7.0 The flowmeter shall have a switching power supply having an operating range from 77 - 265 Vac 50/60 Hz (12-60 Vdc). Power consumption shall not exceed 11 VA.

1.8.0 All printed circuit boards shall be contained in a plug-in module and be interchangeable for any size without requiring test equipment.

1.9.0 The flowmeter shall be inherently bidirectional.

2.0.0 The flowmeter shall be furnished with black oxide coated steel bolts.

2.1.0 The flowmeter manufacturer shall have meters of the DC pulse type in similar flowing mediums for a minimum of five years.

2.2.0 The manufacturer shall provide an application performance guarantee with submittals.

2.3.0 The flowmeter shall be warranted against defective workmanship or materials for a period of two years from date of shipment.

3.0.0 Totalized flow and programmed configuration shall be maintained in memory for up to ten years.

4.0.0 The flowmeter shall be MODEL 625 TIGERMAG™ as manufactured by Sparling Instruments Co.

Specifications subject to change without notice.

Copyright 1996 Sparling Instruments Co., Inc. All rights reserved

APPENDIX B-6

MANUFACTURER'S O&M MANUAL, STANDPIPE LEVEL SENSOR

Magnetrol®
STI

Echotel® III
Trident Series 91S/92S
Ultrasonic Level Controls
With Continuous Self-Test

Instruction Manual and Parts List

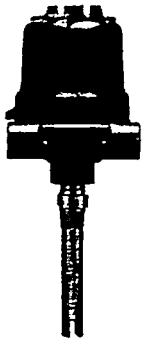

Series 91S

Series 92S

MODEL IDENTIFICATION

Each control has a nameplate on which the part number is shown. The part number is coded to identify the makeup of [illegible] specific unit. Listed below are the definitions of each [illegible]tion of the part number. By comparing a specific part number against these charts, the user can determine exactly which options the unit contains.

PART NUMBER CONSTRUCTION

Electronics 9 □ S - □ □ □ □ - □ 1 □

Number of Set Points
- 1 = One set point
- 2 = Two set points

Output Signal
- A1A = 10 amp DPDT
- L1H = Opto-isolated output
- T1W = Two-wire, 8 or 16 mA current shift* (must use Input code 2)

Input
- 0 = 120 VAC
- 1 = 240 VAC
- 2 = 24 VDC
- 3 = 12 VDC

Housing
- E = NEMA 4X/7/9, aluminum sand cast, ¾" NPT, single conduit*
- F = NEMA 4X/7/9, aluminum sand cast, ¾" NPT, dual conduit **
- Y = NEMA 4X/7/9, 316 stainless steel, ¾" NPT, single conduit
- 7 = NEMA 4X/7/9 Group B, aluminum die cast, 1" NPT dual conduit***

[illegible]nting
- 0 = Integral
- 1 = Remote

* Two wire, single point only
** Relay, single point
*** Dual point or Group B housing

PART NUMBER CONSTRUCTION

Transducer Assembly 9 □ □ - □ □ □ 1 - □ □ □

Transducer design (Insertion length units of measure)
- B = Standard
- D = Metric

Set points
- 1 = One set point
- 2 = Two set points

Process connection
- 1 = ¾" NPT
- 2 = 1" NPT
- B = 1" 150 lb. flange
- C = 1½" 150 lb. flange
- D = 2" 150 lb. flange
- E = 1" 300 lb. flange
- F = 1½" 300 lb. flange
- G = 2" 300 lb. flange
- H = 1" 600 lb. flange
- J = 1½" 600 lb. flange
- K = 2" 600 lb. flange

Transducer material
- 22 = 316/316L stainless steel
- 23 = 316Ti stainless steel
- HC = Hastelloy C
- MM = Monel

Transducer length
Specify length in inches or centimeters (from 1 to 230 inches [3 to 584 cm]); maximum length 230 inches

Connecting Cable 3 7 0 - 0 1 □ □ - □ □ □

Remote Housing

Cable Type
- A1 = RG178 for 1 set point
- A2 = RG178 for 2 set point
- B1 = RG58 for 1 set point
- B2 = RG58 for 2 set point

Cable Length
Length of cable from remote amplifier to remote transducer in feet (300 feet max.)

GENERAL INFORMATION

PRINCIPLE OF OPERATION

The Trident Series 91S/92S operates on a two crystal pulsed or "transmit-receive" principle which applies a high frequency electronic burst to the transmit crystal. The signal is then converted into ultrasonic sound energy and transmitted across the sensing gap toward the receive crystal. When air is in the gap, the high frequency sound energy will be attenuated, thereby not allowing the energy to be received. When there is liquid in the gap, the sound energy will propagate across the gap and the relay control or current shift output will indicate such a reception of the signal.

Self testing is accomplished without any additional crystals and a minimum of additional circuitry. The electronics detection circuit looks for low amplitude signals that pass between the crystals through the frame of the sensor. This allows the entire sensor, including the bond between the crystals and the sensor face, to be tested along with the electronics.

UNPACKING/SPECIAL HANDLING CONSIDERATIONS

Before unpacking the unit, please familiarize yourself with the procedures and cautions regarding the handling of Electrostatic Discharge (ESD) sensitive equipment.

CAUTION: TRIDENT SERIES 91S/92S UNITS ARE ELECTROSTATIC DISCHARGE (ESD) SENSITIVE INSTRUMENTS. FOLLOW ESD PROCEDURES WHEN SERVICING THIS EQUIPMENT TO AVOID CIRCUIT DAMAGE.

ESD PROCEDURES

Certain electronic components can be damaged from discharges of static electricity. Handle circuit boards **only** by their edges, avoiding contact with the components on the board.

For installation, troubleshooting, or service, observe the following procedures:

1. Keep all subassemblies/parts in anti-static bags at all times, until replacement is required. Remove ESD subassemblies from anti-static bags **only** when:
   - located at static-free workstation
   - bag must be grounded if in field location
   - after conductive area of package is neutralized
   - use with anti-static mat
2. Personnel must be neutralized to a static-free workstation by a grounding wrist strap connected to the station or to a field ground.
3. Avoid contacting ESD sensitive devices with clothing.
4. Be sure test equipment is properly grounded.

Unpack the instrument carefully. Report any concealed damage to the carrier within 24 hours. Check the nameplate model number to be sure it agrees with the packing slip and purchase order. Check and record the serial number for future reference when ordering parts.

PRELIMINARY OPERATIONAL CHECK

SINGLE POINT/DUAL POINT MODELS

CAUTION: Phono jack plugs are fragile. Do not pull plugs from PC board by pulling coaxial cable.

1. **See appropriate wiring for Four-Wire/Two-Wire and single point/dual point models (pages 3–8) and wire unit.**
2. Fill a suitable container with water.
3. Place transducer gap in the liquid.
   Single point models: The control output relay must actuate or the current shift value change from 8 mA to 16 mA* and the red LED marked DS1 will illuminate on the amplifier board.
   Dual point models: Place the lower transducer gap in the liquid and confirm current shift value change to 16 mA. Continue to immerse the upper transducer gap in the liquid, and watch for the red LED marked DS1 on top point board to illuminate.
4. Remove transducer from the liquid. The control output must deactuate or current shift value return to 8 mA* and the green LED marked DS2 will illuminate. In case of malfunction consult the Troubleshooting section on page 12.

* Two wire models only.

MANUAL SELF-TEST

1. With power applied to the instrument and no liquid in the sensor gap, press switch S2 marked WET. Red LED marked DS1 will illuminate.
2. Press switch S1 marked MALF. With P2 jumper in (H) position both LEDs (DS1 & DS2) will illuminate. With P2 jumper in (L) position, both LEDs (DS1 & DS2) will extinguish. Output current should be 19 mA or 5 mA respectively.

MOUNTING POSITION AND LOCATION

MOUNTING POSITION AND LOCATION

Unit may be mounted in any position or orientation. Refer to Figures 1 and 2.

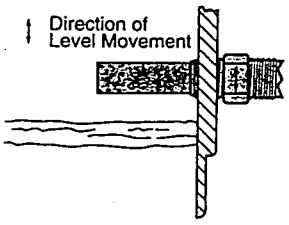

Figure 1
Horizontal Mounting
(91S only)

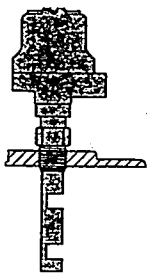

Figure 2 – Vertical Mounting

MOUNTING POSITION AND LOCATION cont.

When installed in a nozzle or pipe, the transducer gap must extend into the tank beyond the inside tank wall. Refer to Figure 3.

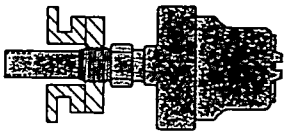

Figure 3 – Horizontal Mounting in Nozzle

All wiring, conduit and electrical fittings must conform to local electrical codes for the location selected.

FOUR-WIRE MODELS (RELAY/OPTO-ISOLATED)
INSTALLATION/WIRING

WIRING—FOUR-WIRE MODELS (RELAY/OPTO-ISOLATED)

1. Screw transducer into the vessel opening using pipe compound or thread tape. If flanged, bolt unit to mating flange with proper gasket.
2. Remove housing cover.

CAUTION: Never tighten unit to the tank connection by turning the housing. Use a wrench on the transducer mounting nut flats. Use thread tape or suitable pipe compound on threads. Do not over tighten.

3. No. 14 AWG wire size is recommended for power and control circuit wiring. The power and control circuit terminal blocks are marked for proper identification.
4. Route wires into housing. Prevent moisture seepage into the enclosure by installing approved seal-drain fittings in the conduit run leading to the unit.

NOTE: FOR 91S 120/240 VAC W/OPTO-ISOLATED OUTPUT, REFER TO FIGURE 5 ON PAGE 4. FOR 91S 24 VDC W/OPTO-ISOLATED OUTPUT, REFER TO FIGURE 6 ON PAGE 4.

WIRING—FOUR-WIRE MODELS (RELAY/OPTO-ISOLATED) cont.

5. Run power leads to power terminal block TB1 on left side of power supply PC board. Power to properly marked terminals ((+)L1, (–)N and ⏚). Refer to Figure 4 for 120/240 VAC version.
6. Run control circuit wiring to terminal block TB2.
7. Dress wiring to ensure no interference or contact with cover or circuit board components.

NOTE: OBSERVE ALL APPLICABLE ELECTRICAL CODES AND PROPER WIRING PROCEDURES.

NOTE: IF REMOTE SELF-TEST IS USED, FOLLOW INSTRUCTIONS ON PAGE 5.

8. If using the malfunction relay, run wiring to lower portion of TB1 as shown in Figure 4.
9. Replace housing cover.

CAUTION: In hazardous areas, do not power the unit until the conduit is sealed and enclosure cover is screwed down securely.

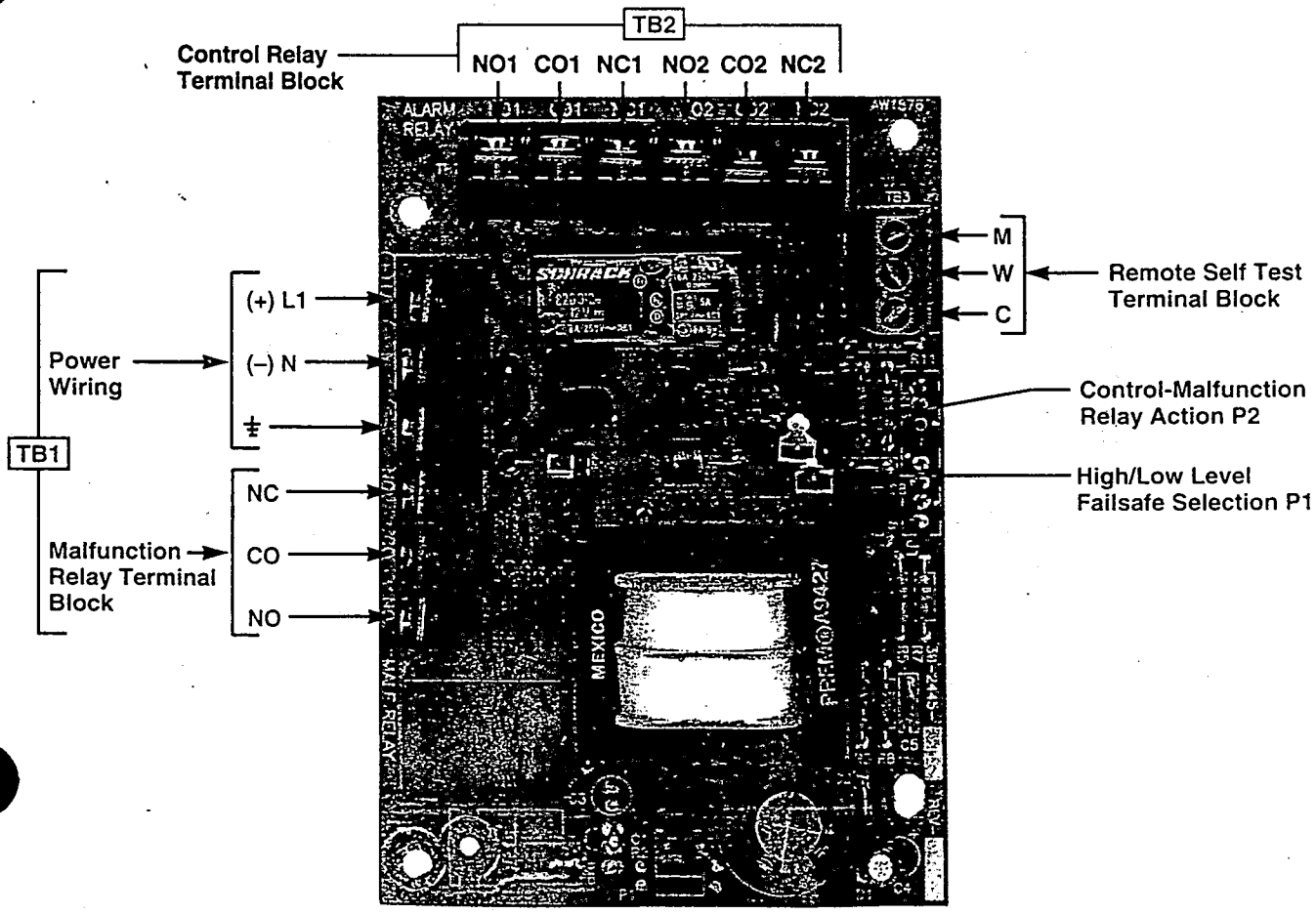

Figure 4
91S 10 Amp 120/240 VAC Power Supply Board

FOUR-WIRE MODELS (RELAY/OPTO-ISOLATED)

INSTALLATION/WIRING cont.

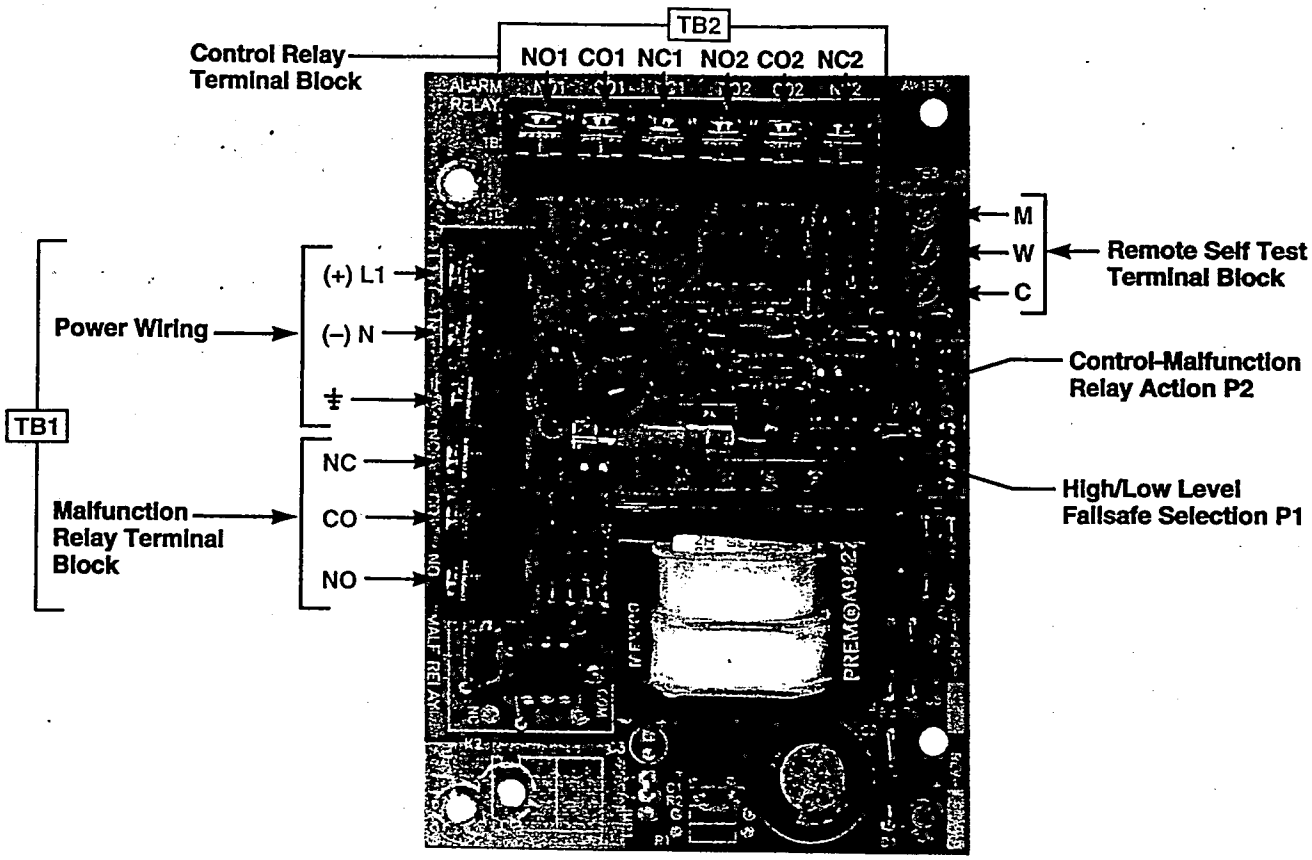

Figure 5
91S 120/240 VAC W/Opto-Isolated Output

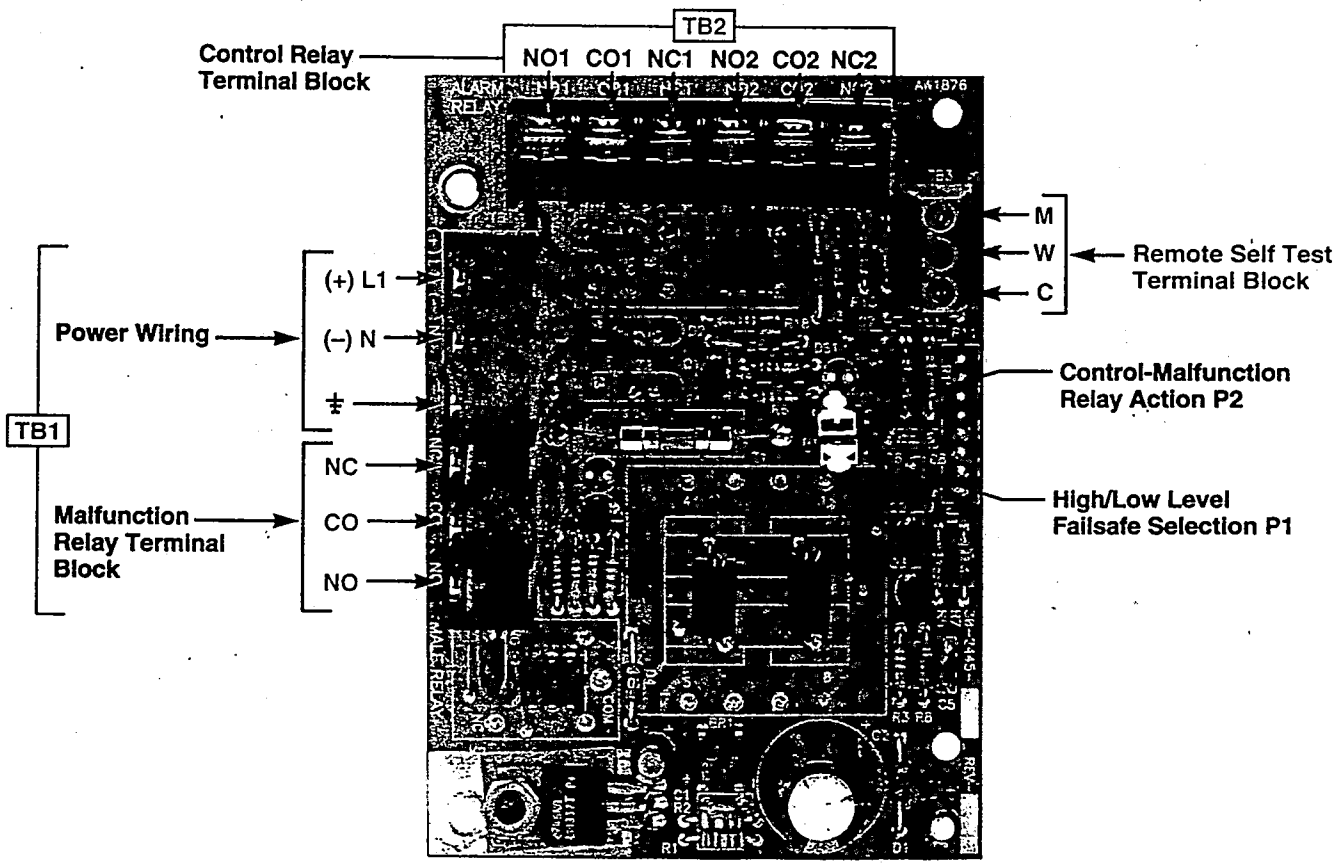

Figure 6
91S 24 VDC W/Opto-Isolated Output

FOUR-WIRE MODELS (RELAY/OPTO-ISOLATED)

INSTALLATION/WIRING cont.

DUAL POINT WIRING

1. Run power leads to power terminal block TB1 on the lower left side of the power supply board. Refer to Figure 8.
2. Run control circuit wiring for upper control point to TB2 and lower control point to TB3.
3. If using malfunction relay, run wiring to upper terminals marked TB1. Remember, only one malfunction relay is present for both boards.
4. Auto fill or auto empty can be accomplished with the use of one control relay.

REMOTE MANUAL SELF-TEST WIRING

Remote self test is accomplished by connecting remote test switches to terminal block TB3 for 91S. For 92S, connect remote test switches to TB4 and TB5.

Note: The remote manual self test terminal block is not available on the two-wire loop-powered single and dual point versions.

1. Use single twisted pair 18-22 AWG wire to connect to TB3 on single point power supply board.
2. Determine whether or not a manual test on wet condition or malfunction is desirable.

DO NOT WIRE SEPARATE 12 VDC POWER SOURCE TO GENERATE POWER FOR REMOTE PUSH BUTTON SELF TEST. POWER IS ALREADY AT THE TERMINALS.

3. Run one wire of the twisted pair to the (W) or (M) position. Run the second wire of the pair to the blank terminal position marked (C).

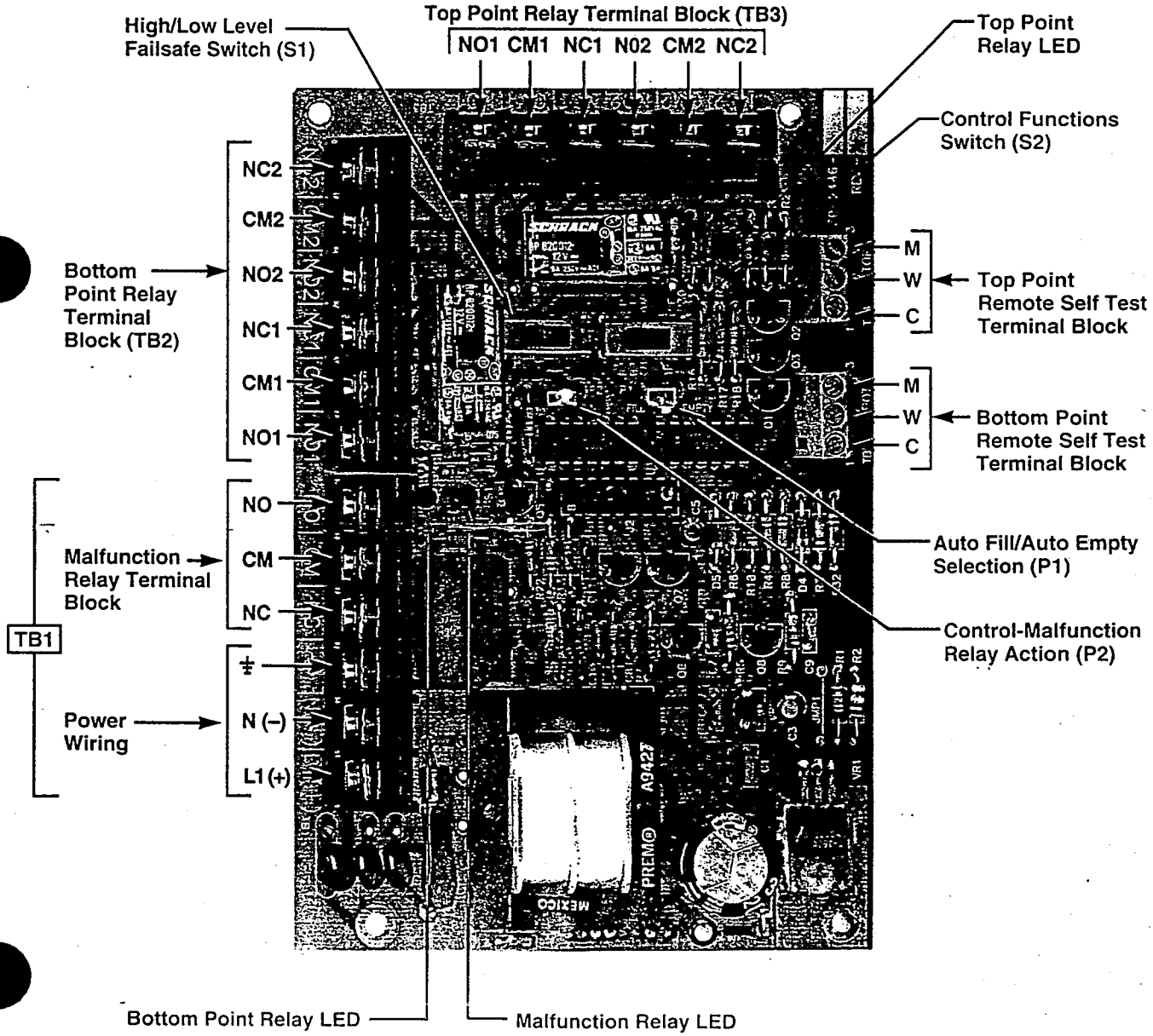

Figure 8
92S Dual Point Power Supply Board

REMOTE AMPLIFIER INSTALLATION

Remote amplifiers must be used where high process temperatures prohibit integral mounting of the electronics. A remote amplifier allows more convenient servicing when the transducer is mounted at an inconvenient location.

1. Install amplifier housing using mounting bracket. Provide adequate clearance to remove housing cover.
2. Remove housing cover.

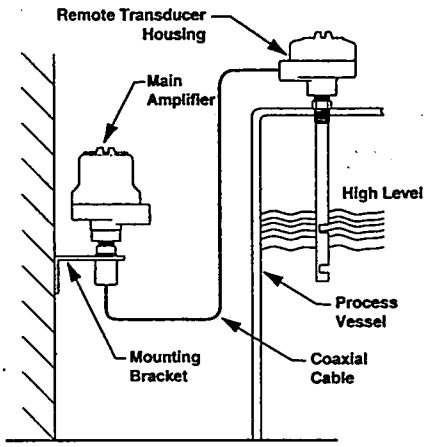

Figure 9
Remote Installation

3. No. 14 AWG wire size is recommended for power and control circuit wiring. The power and control terminal blocks are marked for proper identification.
4. Route power and control circuit through side housing connection.
5. Run power leads to power terminal strip on left side of PC board. Refer to Figure 4 on page 3.
6. Run control circuit leads to terminal block TB2. If an opto-isolated device is available, wire to the same contacts desired.
7. Run coaxial cable from transducer or remote transducer termination board through the bottom housing connection.
8. Plug coaxial cable to amplifier as follows:
   Cables from OUT1 and OUT2 on remote transducer termination board plug into J1 and J2 on the amplifier board in any order. If this is a dual point design, cables from OUT1 and OUT2 on remote transducer termination board plug into one amplifier board marked A; cables from OUT3 and OUT4 plug into the second amplifier board marked B. The order of the boards does not matter. Cables from OUT2 and OUT4 on termination board must plug into J2 on respective board.

CAUTION: Do not interchange transducer connection cables (OUT1 & OUT2 with OUT3 & OUT4).

9. Dress wiring to ensure no interference or contact with cover or circuit board components.

NOTE: OBSERVE ALL APPLICABLE ELECTRICAL CODES AND PROPER WIRING PROCEDURES.

REMOTE AMPLIFIER INSTALLATION cont.

10. Prevent moisture seepage into the enclosure by installing approved seal-drain fittings in the conduit run leading into the unit.

CAUTION: In hazardous areas, do not power the unit until the conduit is sealed and the enclosure cover is screwed down securely.

11. Replace housing cover.

REMOTE TRANSDUCER INSTALLATION

1. Screw transducer into tank opening using pipe compound or thread tape. If flanged, bolt unit to mating flange with proper gasket.

NOTE: Refer to Coaxial Cable Installation section below before installing cables.

2. To prevent cable damage, DO NOT remove transducer from tank with coaxial cable connected to the amplifier.

CAUTION: Never tighten transducer to tank connection by turning housing. Use wrench on transducer mounting nut flats. Use thread tape or suitable pipe compound on threads. Do not over tighten.

COAXIAL CABLE INSTALLATION

Transducers are furnished with dual coaxial cables. If unit purchased is not equipped with remote transducer housing, coaxial cable must be run in conduit to the amplifier.

If a remote transducer housing is furnished, the coaxial cables from the transducer will terminate inside the housing in phono jacks. Connect phono jacks IN1 and IN2 on the remote terminal board to J1 and J2 on the main amplifier board. Connect coaxial cable to jacks OUT1 and OUT2 on remote transducer termination board. 92S will have an additional pair of cables terminating in IN3 and IN4 (Coaxial cable extensions must be run in conduit.) Refer to Figure 10

CAUTION: To retain explosion proof/vapor proof rating, coaxial cable must be run in properly sealed conduit.

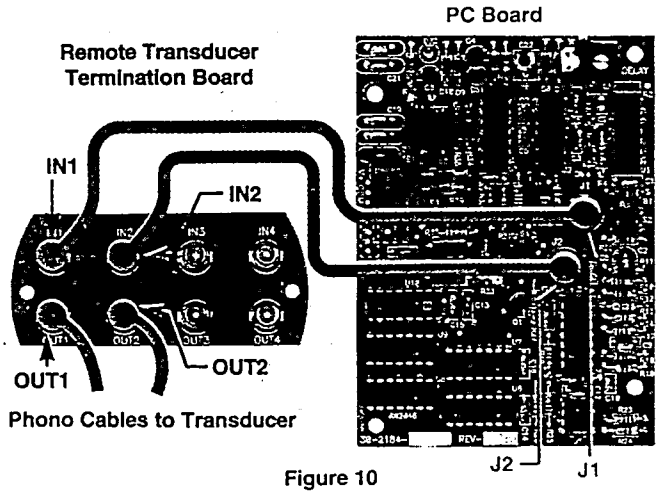

Figure 10

FOR USER SELECTIONS AND OPERATIONAL TESTING, TURN TO PAGE 9.

WIRING—TWO-WIRE MODELS

All power and control connections are made at the two position terminal strip on the amplifier board. 16-24 AWG twisted shielded pair wire is recommended.

NOTE: Observe all local electrical codes and proper wiring procedures.

1. Make sure the power source is turned off.
2. Unscrew and remove housing cover.
3. Pull power supply and control wires through conduit connection.
4. Connect power leads to proper terminals of TB1 on amplifier PC board as shown in Figure 11.

WIRING—TWO-WIRE MODELS cont.

5. Select High/Low failsafe setting by placing jumper in desired position. For low level failsafe, position jumper between the middle pin and the pin next to the L mark on P2. For high level failsafe, position jumper between the middle pin and the pin next to the H mark on P2. Refer to Figure 11.
6. For dual point 92S units, power each amplifier board from a separate power supply.
7. Dress wiring to guard against interference or contact with cover or circuit board components.
8. Prevent moisture seepage into housing by installing an approved seal-drain fitting in the conduit run leading to the unit.
9. Installation is complete. Replace housing cover.

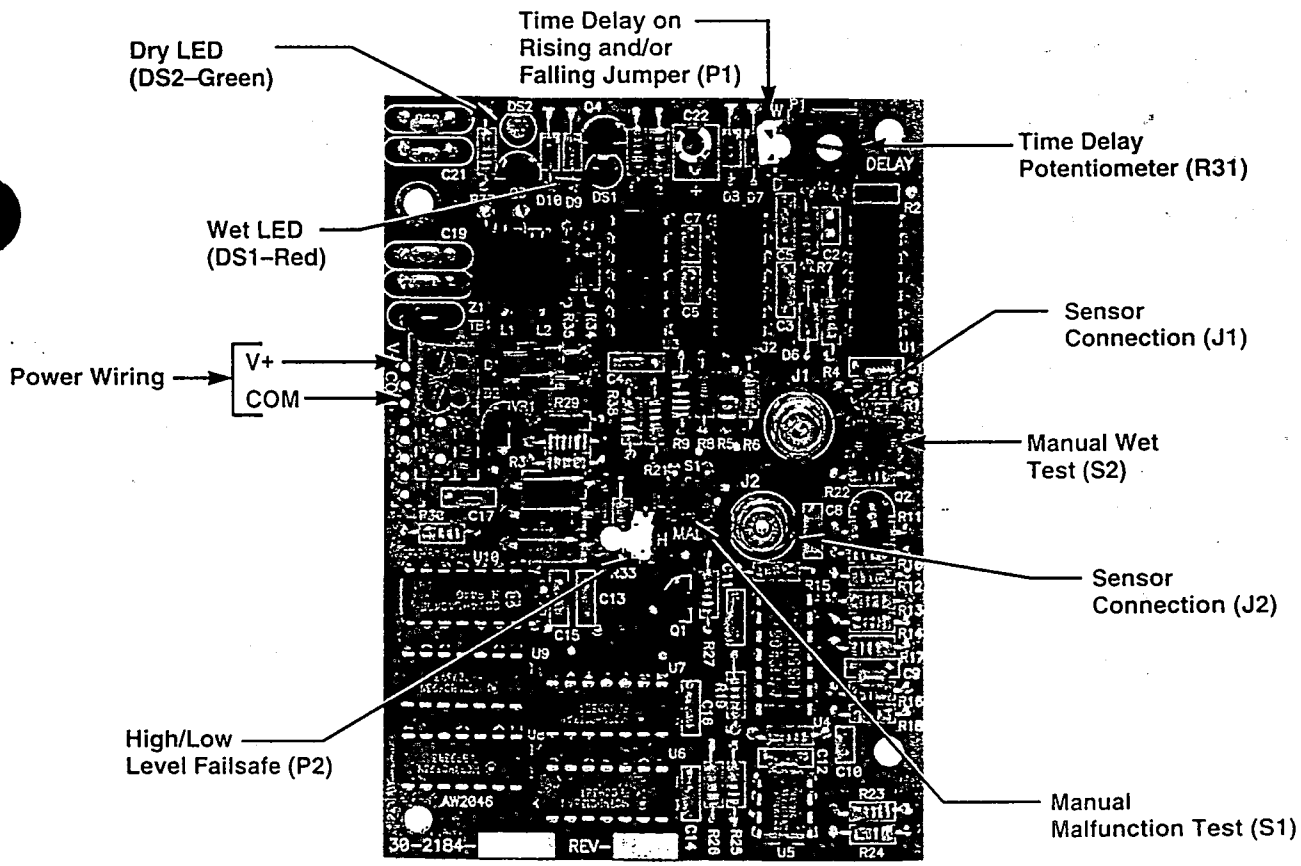

Figure 11
Two-Wire 91S Main Amplifier Board

TWO-WIRE MODELS
INSTALLATION/WIRING cont.

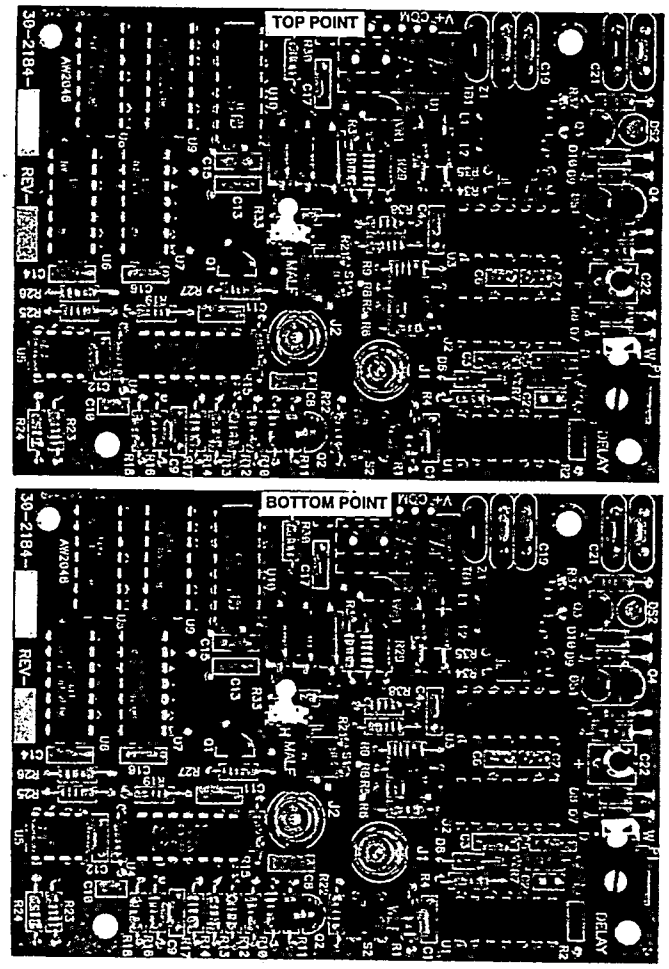

Figure 12
Dual Point 92S Main Amplifier Board

REMOTE AMPLIFIER INSTALLATION

Remote amplifiers must be used where high process temperatures prohibit integral mounting of the electronics. A remote amplifier allows more convenient servicing when the transducer is mounted at an inconvenient location.

1. Install amplifier housing using mounting bracket. Provide adequate clearance to remove housing cover.
2. Remove housing cover.

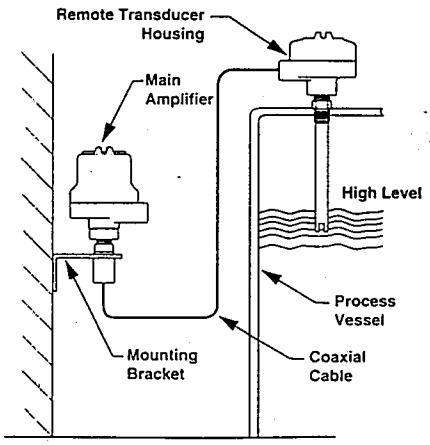

Figure 13
Remote Installation

REMOTE AMPLIFIER INSTALLATION CONT.

3. No. 14 AWG wire size is recommended for power and control circuit wiring. The power and control terminal blocks are marked for proper identification.
4. Route power and control circuit through side housing connection.
5. Run power leads to power terminal strip on left side of PC board. Refer to Figure 11 on page 7.
6. Run control circuit leads to terminal block TB1.
7. Run coaxial cable from transducer or remote transducer termination board through the bottom housing connection.
8. Plug coaxial cable to amplifier as follows:
   Cables from OUT1 and OUT2 on remote transducer termination board plug into J1 and J2 on the amplifier board in any order.
9. Dress wiring to ensure no interference or contact with cover or circuit board components.

NOTE: OBSERVE ALL APPLICABLE ELECTRICAL CODES AND PROPER WIRING PROCEDURES.

10. Prevent moisture seepage into the enclosure by installing approved seal-drain fittings in the conduit run leading into the unit.

CAUTION: In hazardous areas, do not power the unit until the conduit is sealed and the enclosure cover is screwed down securely.

11. Replace housing cover.

REMOTE TRANSDUCER INSTALLATION

1. Screw transducer into tank opening using pipe compound or thread tape. If flanged, bolt unit to mating flange with proper gasket.

NOTE: Refer to Coaxial Cable Installation section below before installing cables.

2. To prevent cable damage, DO NOT remove transducer from tank with coaxial cable connected to the amplifier.

CAUTION: Never tighten transducer to tank connection by turning housing. Use wrench on transducer mounting nut flats. Use thread tape or suitable pipe compound on threads. Do not over tighten.

COAXIAL CABLE INSTALLATION

Transducers are furnished with dual coaxial cables. If unit purchased is not equipped with remote transducer housing, coaxial cable must be run in conduit to the amplifier.

If a remote transducer housing is furnished, the coaxial cables from the transducer will terminate inside the housing in phono jacks. Connect phono jacks IN1 and IN2 on the remote terminal board to J1 and J2 on the main amplifier board. Connect coaxial cable to jacks OUT1 and OUT2 on remote transducer termination board. (Coaxial cable extensions must be run in conduit.) Refer to Figure 10 on page 6.

CAUTION: To retain explosion proof/vapor proof rating, coaxial cable must be run in properly sealed conduit.

BOARD LAYOUT USER SELECTION DESIGNATIONS

Wet LED (DS1)
An LED which illuminates **red** when liquid fills the sensor tip or gap.

Dry LED (DS2)
An LED which illuminates **green** when air is in the sensor tip or gap.

Time Delay Potentiometer (R31)
The adjustable time delay (R31) can be variable from 0.5 to 30 seconds. This can be used under turbulent conditions to reduce relay chattering.

High/Low Level Failsafe (P2–Single, S1–Dual)
The term failsafe denotes the position the relay contacts assume when power to the unit is lost. To set a high level failsafe (relay energized dry), place jumper between middle pin and (H) pin on P2. To set low level failsafe (relay energized wet), place jumper between middle pin and (L) pin.

Time Delay on Rising and/or Falling Jumper (P1)
The jumper (P1) can be set to delay on wet or to delay on dry. Setting in the (W) position adjusts the delay on a dry to wet transition with a fixed 0.5 second delay on a wet to dry transition. Set in the (D) position adjusts the delay on a wet to dry transition with a fixed 0.5 second delay on a dry to wet transition. Totally removing jumper provides delay on rising and falling level.

Auto Fill/Auto Empty Selection (P1–Dual point)
A jumper which allows the selection of an automatic fill or automatic empty function.

Control–Malfunction Relay Action (P2–Dual point)
A jumper which allows joint or independent actuation of the control and malfunction relay. Independent (I) allows separate action of each relay while joint (J) ties the control with malfunction together if either changes state.

Top Point Relay LED
An LED on the power supply board which illuminates **red** when control relay tied to top point changes state.

Bottom Point Relay LED
An LED which illuminates **red** when the control relay tied to the bottom point energizes.

Malfunction Relay LED
An LED illuminates **red** when the malfunction relay is energized, indicating a normal condition. In case of a failure, light will go off.

Control Function Switch (S2)
A three position switch which allows the user to select the control function of the dual point unit. Select from simple Bottom Point–Top Point operation, Control Function–Bottom Point, or Control Function–Top Point.

USER SELECTIONS

RELAY WIRING

Series 91S/92S units have a number of different relay wiring options. The table below lists relay contact positions for all possible combinations of power failure, state of the transducer gap and failsafe switch position. Each user must decide, from consideration of the overall system, which combinations of the above constitutes failsafe and alarm conditions; and, select the appropriate relay wiring and failsafe positions.

Relay Wiring Chart

Sensor Condition	Failsafe Jumper on Amplifier	Failsafe Jumper on Power Supply	Alarm Relay	Malfunction Relay
Wet	L	L	Energized	Energized
Dry	L	L	De-Energized	Energized
Malfunction	L	L	De-Energized	De-Energized
Wet	H	H	De-Energized	Energized
Dry	H	H	Energized	Energized
Malfunction	H	H	De-Energized	De-Energized

Selector switch definitions on power supply board

Designation	Function	Action
P1	High (H) or Low (L) level failsafe	Allows energized state of alarm relay to set for wet or dry condition. H = de-energized when wet L = de-energized when dry
P2*	Joint (J) or Independent (I) Malfunction	J = alarm relay will always de-energize with a malfunction. I = with a malfunction & failsafe jumper (P1) in (H) position, alarm relay will energize (or remain energized if sensor was dry when malfunction was detected)

* The malfunction relay always de-energizes on a fault detection.

TIME DELAY

All Series 91S/92S units are provided with an adjustable time delay of approximately 0.5 to 30 seconds. The time delay potentiometer is on the upper right corner of the amplifier PC board and marked DELAY. There is a jumper selector to the left of the potentiometer marked P1. This is the wet and/or dry time delay. The time delay can be made on rising and/or falling level. When the jumper is placed in the (W) position, there will be an adjustable delay on a dry to wet transition, with a fixed 0.5 second delay on wet to dry transition. When the jumper is set in the (D) position, the delay will be on a wet to dry transition with a fixed delay of 0.5 seconds on a dry to wet transition. If no jumper is placed on the pins, the delay will be in both directions. Minimum time delay occurs with potentiometer adjustment fully counterclockwise. Increase time delay by turning clockwise. Refer to Figure 11 on page 7.

USER SELECTIONS cont.

REFER TO FIGURE 11 ON PAGE 7 FOR THE FOLLOWING CHARTS.

LED Indication (Two-Wire/Amplifier Board)

	Function	Action
DS-1	Wet LED	Illuminates red when wet (16 mA)
DS-2	Dry LED	Illuminates green when dry (8 mA)
P1	Time delay (0.5-30 sec.) for rising and/or falling level	(W) wet delay=adj. delay on a dry to wet transition (D) dry delay=adj. delay on a wet to dry transition
P2*	High or low level malfunction mode	(H) = 19 mA (L) = 5 mA

* Disabled when used with relay/opto-isolated outputs.

Selector Switch Definitions for Amplifier PC Board

	Function	Action
S1	Malfunction test switch	Forces a malfunction condition when pressed
S2	Wet test switch	Forces a wet condition when pressed (sensor must be in dry state)
J1	Sensor connection 1	Provides connection to sensor
J2	Sensor connection 2	Provides connection to sensor

REFER TO FIGURE 4 ON PAGE 3 FOR THE FOLLOWING CHARTS.

Single Point, Power Supply PC Board Selections

	Function	Action
DS1	Alarm relay LED	Illuminates red when relay is energized
DS2	Malfunction relay LED	Illuminates red when relay is energized
TB3	Remote manual self test	Allows a remote normally open test switch to be wired externally for manual testing of unit

DUAL POINT DESIGN

The 92S is a dual point design that can be used for simple two point alarming functions, auto fill or auto empty capability. Additionally, with the auto fill or auto empty function, a separate high or low level alarm contact closure can be obtained. Review the chart below for switch selections and jumper positioning.

Independent/Joint Relay Operation

Jumper at 'P2'	Function
Independent (I)	Relays K2 and K3 operate independently of malfunction relay
Joint (J)	Relays K2 and K3 de-energize when any malfunction occurs

CF* = Control Function
TP = Top Point
BP = Bottom Point
HL = High Level
LL = Low Level
NO = Normally Open
NC = Normally Close
CM = Common

* CF = Either Auto Fill or Auto Empty functions

Automatic Function

Jumper at 'P1'	Function
Fill	Auto fill function between two points
Empty	Auto empty function between two points

See page 12 for more information

Control Functions Table for Dual Point

Switch S2	Jumper at P1	Function	Output at	
BP-TP	N/A	2 point operation	TB2 for top point (K2)	TB3 for bottom point (K3)
BP-CF	Fill	auto fill & bottom point	TB2 auto fill (K2)	TB3 bottom point (K3)
	Empty	auto empty & bottom point	TB2 auto empty (K2)	TB3 bottom point (K3)
TP-CF	Fill	auto fill & top point	TB2 auto fill (K2)	TB3 top point (K3)
	Empty	auto empty & top point	TB2 auto empty (K2)	TB3 top point (K3)

Dual Point, Power Supply Board Designations

	Function	Action
TB1	terminal block for line voltage & malfunction relay	power & malfunction connection
TB2	terminal block for top point or control function	alarm connection
TB3	terminal block for top or bottom point	alarm connection
TB4 & TB5 (top)(bottom)	remote push to test for manual self test	external test switch
P1	auto fill–auto empty	designation of control function
P2	independent or joint	independent or joint alarm with malfunction relays
S1	High (H) or Low (L) level failsafe	power & malfunction indication H - de-energize wet L - de-energize dry
S2*	control function switch	BP-TP BP-CF TP-CF
DS1	malfunction alarm LED	illuminates red when energized
DS2	top point alarm LED	
DS3	bottom point LED alarm	

* See corresponding chart

SELECTION DESCRIPTION

High and Low Level Function: When switch S2 is at BP-TP the standard two set point operation is selected. When the bottom gap goes wet, relay K3 energizes and when the top gap goes wet, relay K2 energizes.

Function		Relay K2	Relay K3
bottom point	wet	N/A	energizes (TB3)
	dry	N/A	de-energizes (TB3)
top point	wet	energizes (TB2)	N/A
	dry	de-energizes (TB2)	N/A

USER SELECTIONS cont.

AUTO FILL OR AUTO EMPTY FUNCTION FOR BOTTOM POINT

When switch S2 is at BP-CF, the control function of either auto fill (if jumper at P1 is at FILL) or auto empty (if jumper at P1 is at EMPTY) is selected along with independent operation for the bottom point.

Auto Fill

Function		Relay K2	Relay K3
Both points	dry	energizes	de-energizes
bottom point	wet	energizes	energizes
	dry	energizes	stays energized
top point	wet	de-energizes	stays energized
	dry	stays de-energized	stays energized

Auto Empty

Function		Relay K2	Relay K3
Both points	dry	de-energizes	de-energizes
bottom point	wet	de-energizes	energizes
	dry	de-energizes	de-energizes
top point	wet	energizes	stays energized
	dry	stays energized	stays energized

AUTO FILL OR AUTO EMPTY FUNCTION FOR TOP POINT

When switch S2 is at TP-CF, the control function of either auto fill (if jumper at P1 is at FILL) or auto empty (if jumper at P1 is at EMPTY) is selected along with independent operation for the top point.

Auto Fill

Function		Relay K2	Relay K3
Both points	dry	energizes	de-energizes
bottom point	wet	stays energized	de-energizes
	dry	energizes	de-energizes
top point	wet	de-energizes	energizes
	dry	stays de-energized	de-energizes

Auto Empty

Function		Relay K2	Relay K3
Both points	dry	de-energizes	de-energizes
bottom point	wet	de-energizes	de-energizes
	dry	de-energizes	de-energizes
top point	wet	energizes	energizes
	dry	stays energized	de-energizes

ON DEMAND SELF-TEST (Integral or Remote Units)

SELF-TEST

With the transducer properly connected to the amplifier, check to ensure all cable connections are correct.

By pressing and holding the Wet Test Switch when the sensor is dry, a wet sensor condition will be simulated. This allows a manual self test of the system and a convenient method of verifying the time delay settings.

The Malfunction Test Switch immediately forces a malfunction condition when it is pressed. This is true whether the sensor is wet or dry. When the switch is released, the true condition will be indicated (if any dry to wet delay has been set, there will be a delay before a wet sensor will be indicated).

Setting the High/Low Malfunction current jumper (P2) to the L position will cause a malfunction to force a loop current of 5 mA and extinguish both LEDs if a malfunction is detected. If this jumper is set to the H position, both LEDs will illuminate and the loop current will be forced to 19 mA if a malfunction occurs.

NOTE: If this board is part of a relay output model 91S, this jumper must be placed in the L position for proper operation.

REMOTE SELF-TESTING

Self testing is accomplished automatically and continuously on the 91S/92S. Additionally, a manual self test operation can be performed on the circuit board with S1 (malfunction) or S2 (wet) or can be wired into the terminal block of the power supply board (TB3), or (TB4 & TB5) for 92S. An external push button switch may be connected using a twisted pair to actuate a remote wet test or a malfunction test. The power source for this push button test is internal to the 91S/92S.

NOTE: The remote push to test is available on all versions of the four-wire models.

OPTO-ISOLATED OUTPUT

An opto-isolator consists of a Light Emitting Diode (LED) and a phototransistor (refer to Figure 14). The phototransistor contains a light sensitive base that allows the transistor to conduct current only when it is exposed to light. The phototransistor provides a clean digital pulse, and since it is not directly connected (wired) to the LED, complete electrical isolation is achieved between the input and the output of the opto-isolator.

The opto-isolator is encased in a plastic/epoxy case, to prevent "stray" light from affecting the output. The output is floating, meaning that it can be referenced to anything (preventing ground potential differences). *It is polarity sensitive and has limits on voltage and current like any other electronic component.*

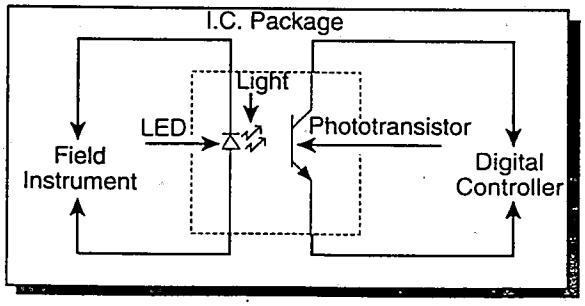

Figure 14

USER SELECTIONS cont.

OPTO-ISOLATED OUTPUT cont.

The opto-isolator will not eliminate the need for relay outputs. The relay is still the best electrical method for switching high current loads. The opto-isolator however, is a better solution for use with digital controllers.

The following illustrations depict methods for connecting the opto-isolator to a digital controller.

Figure 15 shows a configuration that allows for a "current-shift" output. The states are: 8 mA when the phototransistor is "open" and 16 mA when the phototransistor is closed.

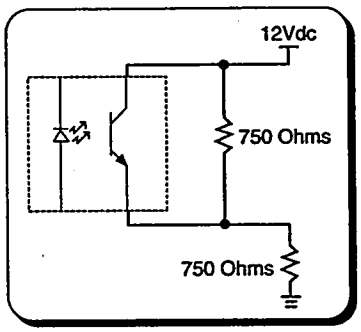

Figure 15

OPTO-ISOLATED OUTPUT cont.

Figure 16 shows a configuration that allows for a "voltage-shift" output. The states are: 0 Vdc when the phototransistor is "open" and 5 Vdc when the phototransistor is closed. The output is taken across the 2.7K Ohm resistor.

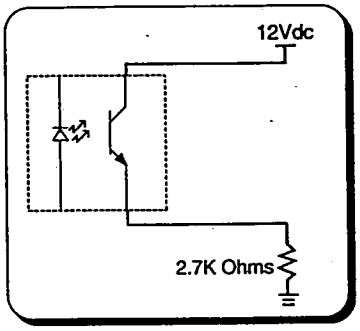

Figure 16

TROUBLESHOOTING

CAUTION: In hazardous areas, do not remove housing until power is disconnected and atmosphere is determined to be safe.

Sensor wetted, unit powered, but control relay does not energize.

1. Check terminals for loose connection.
2. Check coaxial cable jack plugs for improper seating or central wire rolled loose from pin.
3. Check coaxial cable for breaks, or signal wire shorted to ground shield.
4. Check the time delay—it should be fully counter-clockwise.

Control output will not deactivate

1. Check transducer for plugged gap.
2. Make sure manual self test wiring is deactivated.
3. Check for dense foam or liquid in gap.

No change in signal with level change.

1. Verify that the power wiring is properly connected and the correct voltage is applied. A minimum of 10 VDC is required at TB1 for loop powered units.
2. Check the control circuit wiring on models with relay or opto-isolator outputs.
3. Both the four-wire models and the two-wire models have status LEDs on the amplifier board. If only the green LED (DS2) is illuminated, a dry condition is indicated, while the red LED (DS1) alone indicates a wet condition.

The 'WET' and 'MALFUNCTION' conditions may be simulated by pressing the associated test switches on the amplifier board. Set the time delay to its minimum value to facilitate testing

4. If this model is other than a two-wire version, the power supply/relay board has LEDs that illuminate to indicate when the relays are energized. DS1 illuminates when the alarm relay is energized and DS2 on the power supply board illuminates when the malfunction relay is energized. Refer to the failsafe jumper table and verify that the relay action is correct.
5. If the manual self-test operations indicate that the system is operating properly but the output does not change when the liquid level passes the sensing point, check the sensor gap for any condition that may prevent liquid from contacting the sensor faces on rising level, or from draining from the gap on falling level.
6. Disconnect the control wiring and use a milliammeter to perform the following tests. Get a power supply to generate 1.5 to 8 Vdc; a 1.5 Vdc battery will suffice. Use Ohm's Law (R = E/I) to calculate the resistance value necessary to limit the current to 15 mA with the voltage you are supplying. For example, if you supply a 9 Vdc battery, the resistance value would be 600 Ohms (9V/0.015 A = 600 Ohms). Build a series circuit with the power supply, the resistor, and the milliammeter. For the control opto-isolator, connect the circuit to the NO1 and CO1 terminals of TB2. For the malfunction opto-isolator, connect the circuit to terminals NO and CO of TB1; this has created a circuit loop. With the sensor in the liquid and the HLFS/LLFS switch in the HLFS position, the milliammeter should read 15 mA. Remove the sensing element from the liquid. The milliammeter should read approximately 0 mA.

   Optionally, you can substitute a LED for the milliammeter. With the sensor in the liquid the LED will turn on.

SPECIFICATIONS & AGENCY APPROVALS

ELECTRICAL SPECIFICATIONS

TWO-WIRE 91S/92S

Description	Specification
Supply voltage	10-35 VDC
Current loop loads	650 Ohms with 24 VDC power source 1200 Ohms with 35 VDC power source
Analog output	8 mA (dry) or 16 mA (wet) – 5 mA or 19 mA for fault conditions
Self-test (Automatic and Manual)	Continuous: Verifies operation of electronics, transducer, and crystal bond integrity. Also, a local on-demand self-test to force a malfunction condition.
Time delay	Variable potentiometer 0.5-30 seconds on rising and/or falling level
Failsafe	Field selectable–high or low level
Repeatability	±0.078" (1.98 mm)
Power consumption	1 watt maximum
Electronics temperature	–40° F to +160° F (–40° C to +71° C)
Transducer temperature	–40° F to +325° F (–40° C to +163° C) (metallic materials)
Pressure (operational)	1500 PSIG @ –40° F to +325° F (103 BAR –40° C to +163° C)

FOUR-WIRE 91S/92S

Description	Specification
Supply voltage	12 or 24 VDC 120 or 240 VAC, 50/60 Hz
Outputs	Two relay outputs. One or two control alarm relay(s)* rated at 10 Amp DPDT gold flash contacts and one malfunction or self-test fault relay rated at 10 Amp SPDT. Independent or joint interaction on the two relays via a field selectable jumper.
Self-test (Automatic and Manual)	Continuous: Verifies operation of electronics, transducer, and crystal bond integrity. Also, a local on-demand self-test to force a malfunction condition.
Time delay	Variable potentiometer 0.5-30 seconds on rising and/or falling level
Failsafe	Field selectable–High or Low level
Repeatability	±0.078" (1.98 mm)
Power consumption	2.50 VA nominal
Electronics temperature	–40° F to +160° F (–40° C to +71° C)
Transducer temperature	–40° F to +325° F (–40° C to +163° C) (metallic materials)
Pressure (operational)	1500 PSIG @ –40° F to +325° F (103 BAR –40° C to +163° C)

* One control = single point
Two control = dual point

AGENCY APPROVALS (TWO-WIRE MODELS)

Model	Agency	Specifications
91S/92S-T1W2-E1X w/ 9B1/9B2-XXX1-XXX	FM*	IS/I, II, III/1/A, B, C, D, E, F & G
		Entity–Indoor & Outdoor NEMA 4X
	CSA*	Class I, Group A, B, C & D
		TYPE 4X, NEMA 4X/7/9 Housing Class II, Group E, F & G, Class III Indoor & Outdoor CSA Enc 4

I.S. when connected through a certified ZEMA safety barrier rated 28 V or less and 360 ohms or more.

AGENCY APPROVALS (FOUR-WIRE MODELS)

Model	Agency	Specifications
91S/92S-A1AX-X1X 91S/92S-L1HX-X1X w/ 9B1/9B2-XXX1-XXX	FM*	NEMA 4X/7/9 Housing
		Class I, Div. 1, Groups B, C, D
		Class II, III, Div. 1, Groups E, F, G
	CSA*	TYPE 4X, Non-Hazardous
		TYPE 4X, NEMA 4X/7/9 Housing Class I, Div. 1, Groups B, C, D Class II, III, Div. 1, Groups E, F, G

*Pending Approvals

PRESSURE AND TEMPERATURE RATINGS

Transducer	Operating/Non-Operating Pressure		Temperature
	PSIG	BAR	
316 SS/ 316 SS Ti	1500	103	–40° F to +325° F (–40° C to +163° C)
Hastelloy C	1500	103	–40° F to +325° F (–40° C to +163° C)
Monel	1500	103	–40° F to +325° F (–40° C to +163° C)

SPECIFICATIONS

DIMENSIONAL SPECIFICATIONS Inches (mm)

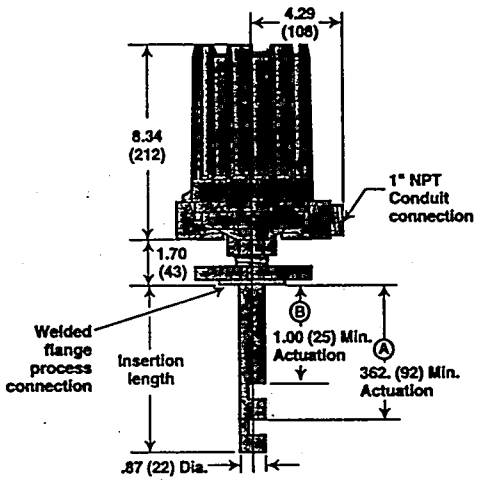

Figure 17
Integral NEMA 4X/7/9 Housing
(Dual Point–Relay or Two-Wire)

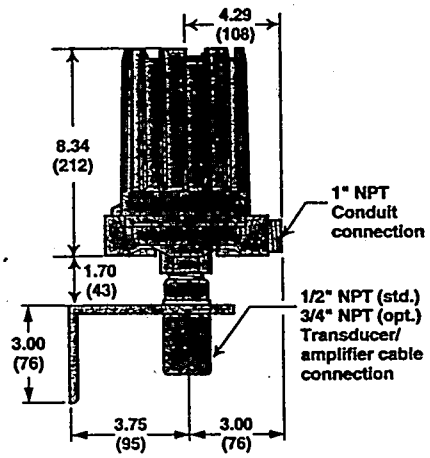

Figure 18
Remote Group B, NEMA 4X/7/9,
(Dual Point–Relay or Two-Wire)

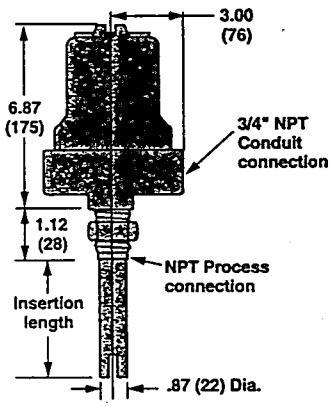

Figure 19
Integral NEMA 4X/7/9 Housing (Four-wire)

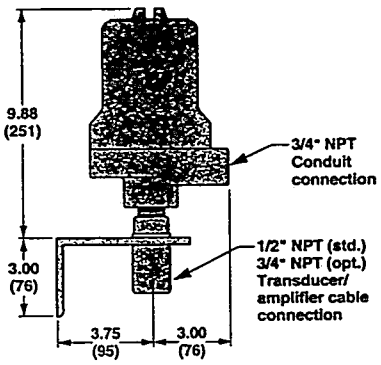

Figure 20
Remote NEMA 4X/7/9 Housing (Two-Wire)

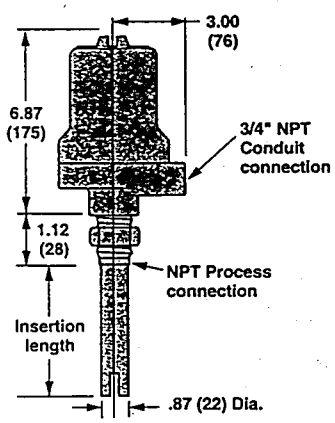

Figure 21
Integral NEMA 4X/7/9 Housing (Two-wire)

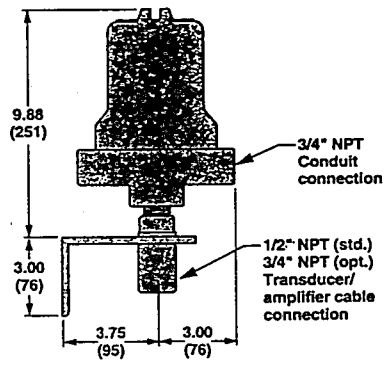

Figure 22
Remote NEMA 4X/7/9 Housing (Four-Wire)

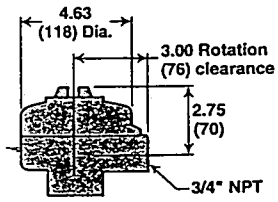

Figure 23
Remote Transducer Housing

REPLACEMENT PARTS

No.	Description		Part Number			
			120 VAC	240 VAC	24VDC	12VDC
1	Amplifier Board	Single Pt. Relay	030-2184-003			
		Dual Pt. Relay	030-2184-003			
		Single—two-wire	030-2184-001			
		Dual—two-wire	030-2184-001			
2	Single Point Power Supply PC Board	10 Amp DPDT	030-2445-001	030-2445-003	030-2445-007	030-2445-005
		Opto-Isolated	030-2445-002	030-2445-004	030-2445-008	030-2445-006
3	Dual Point Power Supply PC Board	10 Amp DPDT	030-2446-001	030-2446-002	030-2446-003	030-2446-004
		Opto-Isolated	030-2446-006	030-2446-007	030-2446-008	030-2446-009
4	Housing Cover	NEMA 4X/7/9, Aluminum sand cast	002-6204-600			
		NEMA 4X/7/9, Aluminum die cast Group B	004-9174-007			
		NEMA 4X/7/9, 316 Stainless steel	02-6204-605			
5	Cover Seal	O-Ring	012-2101-345			
6	Housing Base	NEMA 4X/7/9, Aluminum sand cast, Single conduit (¾" NPT)	004-9104-003			
		NEMA 4X/7/9, Aluminum sand cast, Double conduit (¾" NPT)	004-9182-003			
		Aluminum die cast, Double conduit, (1" NPT)	004-9173-008			
		NEMA 4X/7/9, 316 Stainless steel Single conduit, (¾" NPT)	04-9140-002			
7	Remote Transducer Housing	Aluminum sand cast	04-9105-001			
		Aluminum die cast				
		316 Stainless steel	04-9142-001			
8	Remote Cover Seal	O-Ring	12-2101-345			
9	Remote Transducer Base	Aluminum sand cast, Single conduit, (¾" NPT)	04-9104-001			
		316 Stainless steel, Single conduit, (¾" NPT)	04-9140-001			
10	Remote Transducer Termination Board Bracket	Mounting bracket	05-6634-001			
11	Transducer Termination Board	Remote PCB	030-2172-001			
12	Remote Electronics Mounting Bracket	Mounting bracket (½" NPT)	036-3805-001			
13	Coaxial Cable*	RG 178 (1 to 50 feet)	037-3155-XXX			
		RG 58 (51 to 300 feet)	037-3156-XXX			

* Two pairs for dual point

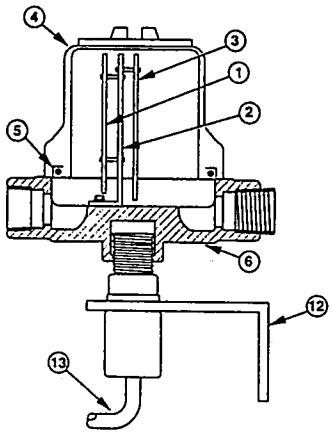

Figure 24

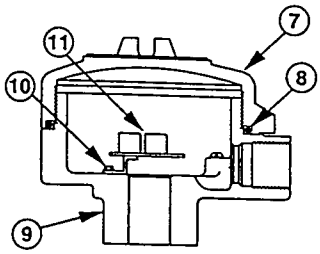

Figure 25

Transducer replacement parts

1a. Order the 9B1/9D1 Series model number from the unit's nameplate.

1b. Construct part number from Transducer Part Number section under Model Identification from page 1.

Figure 26

Sensor mounting flanges (Optional)

Raised face mounting flanges are available in the sizes and material shown below. Specify the part number as an additional line item when placing an order. Consult factory for additional flanges.

Flange		Part Number			
Size	Rating	316 SS	304 SS	Carbon Steel	Hastelloy C
1½"	150 lb.	04-5867-001	04-5867-011	04-5867-021	04-5867-031
2"		04-5867-002	04-5867-012	04-5867-022	04-5867-032
3"		04-5867-003	04-5867-013	04-5867-023	C/F
4"		04-5867-004	04-5867-014	04-5867-024	C/F
5"		04-5867-005	04-5867-015	04-5867-025	C/F
1½"	300 lb.	04-5867-006	04-5867-016	04-5867-026	04-5867-036
2"		04-5867-007	04-5867-017	04-5867-027	04-5867-037
3"		04-5867-008	04-5867-018	04-5867-028	C/F
4"		04-5867-009	04-5867-019	04-5867-029	C/F
5"		04-5867-010	04-5867-020	04-5867-030	C/F
1½"	600 lb.	04-5867-045	C/F	04-5867-046	C/F

C/F = Consult Factory

IMPORTANT

PRODUCT WARRANTY

All Magnetrol/STI electronic and ultrasonic level and flow controls are warranted free of defects in materials or workmanship for one full year from the date of original factory shipment.

If returned within the warranty period; and, upon factory inspection of the control, the cause of the claim is determined to be covered under the warranty; then, Magnetrol/STI will repair or replace the control at no cost to the purchaser (or owner) other than transportation.

Magnetrol/STI shall not be liable for misapplication, labor claims, direct or consequential damage or expense arising from the installation or use of equipment. There are no other warranties expressed or implied, except special written warranties covering some Magnetrol/STI products.

QUALITY ASSURANCE

The quality assurance system in place at Magnetrol/STI guarantees the highest level of quality throughout the company. Magnetrol/STI is committed to providing full customer satisfaction both in quality products and quality service.

Magnetrol's quality assurance system is registered to ISO 9001 and Z299.1 affirming its commitment to known international quality standards providing the strongest assurance of product/service quality available.

Assured quality & service cost less

SERVICE POLICY

Owners of Magnetrol/STI controls may request the return of a control or any part of a control for complete rebuilding or replacement. They will be rebuilt or replaced promptly. Controls returned under our service policy must be returned by Prepaid transportation. Magnetrol/STI will repair or replace the control at no cost to the purchaser (or owner) other than transportation if:

a. Returned within the warranty period; and
b. The factory inspection finds the cause of the claim to be covered under the warranty.

If the trouble is the result of conditions beyond our control; or, is NOT covered by the warranty, there will be charges for labor and the parts required to rebuild or replace the equipment.

In some cases it may be expedient to ship replacement parts; or, in extreme cases a complete new control, to replace the original equipment before it is returned. If this is desired, notify the factory of both the model and serial numbers of the control to be replaced. In such cases, credit for the materials returned will be determined on the basis of the applicability of our warranty.

No claims for misapplication, labor, direct or consequential damage will be allowed.

RETURN MATERIAL PROCEDURE

So that we may efficiently process any materials that are returned, it is essential that a "Return Material Authorization" (RMA) number be obtained from the factory, prior to the material's return. This is available through Magnetrol/STI's local representative or by contacting the factory. Please supply the following information:

1. Company Name
2. Description of Material
3. Serial Number
4. Reason for Return
5. Application

Any unit that was used in a process must be properly cleaned in accordance with OSHA standards, before it is returned to the factory.

A Material Safety Data Sheet (MSDS) must accompany material that was used in any media.

All shipments returned to the factory must be by prepaid transportation.

All replacements will be shipped F.O.B. factory.

STI Controls, L.P.
a subsidiary of Magnetrol International, Incorporated
5300 Belmont Road • Downers Grove, Illinois 60515-4499 • 708-969-4028 • Fax 708-969-9489

Magnetrol®
5300 Belmont Road • Downers Grove, Illinois 60515-4499 • 708-969-4000 • Fax 708-969-9489
6291 Dorman Road • Mississauga, Ontario L4V-1H2 • 905-678-2720 • Fax 905-678-7407
Heikensstraat 6 • B 9240 Zele, Belgium • 052 45.11.11 • Telex 25944 • Fax 052 45.09.93
Regent Business Ctr., Jubilee Rd. • Burgess Hill, Sussex RH15 9TL U.K. • 01444-871313 • Fax 01444-871317

BULLETIN: 51-623.0
EFFECTIVE: November 1995
SUPERSEDES: NEW

APPENDIX B-7

MANUFACTURER'S O&M MANUAL, TEMPERATURE TRANSMITTER

Instruction

MI 020-453
September 1996

RTT20
I/A Series® Temperature Transmitter

Installation, Configuration, Operation, Calibration, and Maintenance

Style A

FOXBORO®
A SIEBE COMPANY

MI 020-453 – September 1996

Foxboro, Fox, and I/A Series are trademarks of The Foxboro Company.
Siebe is a registered trademark of Siebe, plc.
HART is a trademark of the HART Communication Foundation.
Ryton is a trademark of Phillips Petroleum Co.

Copyright 1996 by The Foxboro Company
All rights reserved

Contents

Figures v

Tables vi

Introduction 1

General Description 1

Transmitter Identification 2

Unpacking 2

Reference Documents 3

Standard Specifications 3
- Operating Conditions 3
- Functional Specifications 3
- Performance Specifications 6
- Physical Specifications 6

Communications 7
- Output Types vs. Integral and Remote Configurators 7
- Software Compatibility 7

Installation 9

Transmitter Mounting 9
- DIN Rail Mount 9
- Pipe or Surface Mount 9
- Bare Sensor Mount 10
- Thermowell Mount 10
- Mounting Basic Transmitter in Old Style Housing 10

Positioning Transmitter to View Optional Indicator 11

Optional Custody Transfer Lock and Seal 11

Transmitter Wiring 12
- Electrical Safety Requirements 12
- Conduit Drainage 14
- Hazardous Locations 14
- Sensor Connections and Wiring 16
- Loop Wiring 17
- Grounding (Earthing) 24
- HART Multidrop Communication 24
- Attaching Remote Configurators 25

Configuration 27
Configurable Parameters 27
Parameter Descriptions 30
Indicator/Configurator 34
Configuration Procedure 35

Operation 37

Calibration 39
Trimming 4 - 20 mA output 39
1-, 2-, 3-, or 5-Point Calibration 39
Custom Curve Calibration 39

Maintenance 41
Troubleshooting Problems 41
Replacement of Integrally Mounted Sensor 43
Replacement of Basic Transmitter 43

Index 45

Figures

1	Transmitter Identification	2
2	DIN Rail Mount	9
3	Pipe or Surface Mount	9
4	Bare Sensor Mount	10
5	Thermowell Mount	10
6	Locating New Holes in Existing Mounting Plate	11
7	Custody Transfer Lock and Seal Option	11
8	Recommended Conduit Routing	14
9	RTD Wiring	16
10	Thermocouple or Voltage Wiring	17
11	Typical Transmitter Wiring to an I/A Series System	20
12	Wiring Transmitter to Terminals in an I/A Series System	21
13	Voltage and Load Limits	21
14	Typical Transmitter Wiring With a 4-20 mA Output	23
15	Wiring Several 4 to 20 mA Transmitters to a Common Power Supply	23
16	Typical Multidrop Network	25
17	Minimum Load Between Power Supply and Configurator	25
18	Maximum Load Between Transmitter and Configurator	26
19	1-Line and 3-Line Indicator	35
20	Addition of Indicator/Configurator	35
21	Indicator Configurator Flowchart with Transmitter Revision 02 Software	36
22	4-20 mA Output Calibration Setup	39

Tables

1 Reference Documents 3
2 Operating Conditions 3
3 Range Limits, Maximum Span, and Accuracy 5
4 Electrical Safety Specifications 12
5 RTT20 With Intelligent Output (Code -D) 28
6 RTT20 With Hart Output (Code -T) 29
7 RTT20 with 4-20 mA Output (Code -I) 30

Introduction

General Description

The Model RTT20 I/A Series Temperature Transmitter is a microprocessor-based, two-wire device for converting various mV and ohm type sensors into a linear 4-20 mA or digital output. A standard two-wire system provides a nominal 24 V dc power to the transmitter and also carries the output signal to a receiver tied into the loop wiring. There are three different output types with communications capabilities as follows:

Output Code -I: 4-20 mA without remote communications

Output Code -T: 4-20 mA output with HART communications protocol

Output Code -D: Intelligent 4-20 mA or FoxCom digital output (user configurable) with Foxboro communication protocol

The microprocessor-based transmitter was designed for easy installation in a wide variety of applications. The major differences between the three output types is in communications. The optional 1-Line and 3-Line Indicator/Configurators are designed to enable the user to locally reconfigure any transmitter database. A single indicator can be easily moved from one transmitter to another. No tools are required to install or remove it. Simply plug it in and make the desired adjustments to the transmitter. Then remove it and move on to the next transmitter. The 4-20 mA transmitter (Output Code -I) can only be adjusted using these Indicator/Configurators because there is no remote communications capability. Whenever the local Indicator/Configurators are used for reconfigurations, the loop must be put in manual. As a safety feature, the output will be held at the last value until the transmitter is returned to the operational mode.

The HART and Intelligent transmitters have an internal modem to enable the database to be remotely reranged or reconfigured as follows:

HART protocol – with a HART Model 275 Communicator (Foxboro Model HT991) or with the Foxboro DOS-based configuration software (AB0991) in conjunction with the MOD991 modem.

Intelligent Foxboro protocol – with a Hand-Held Terminal (Model HHT), a DOS-based personal computer software (Model PC10), and/or from an I/A Series System.

All of the remote configurators can communicate with the transmitter from any wiring termination point in the loop, allowing installations in hazardous locations or areas which are not at grade level. Communication between the remote configurator and the transmitter is based upon the Frequency Shift Keying (FSK) technique. Since the FSK tones do not add any current to the two-wire system, reading transmitter data does not interfere with the output signal. When new configuration data is being downloaded into the transmitter, however, the output is interrupted and the loop must therefore be put in manual. The intelligent transmitter can also be digitally integrated into an I/A Series System and reconfigured with any of the system workstations, eliminating the need for the separate configurator.

The microprocessor-based transmitter has been designed to accept a wide variety of mV and resistive sensors:

- Thermocouples
- RTDs (2, 3 or 4 wire)
- Millivolt dc sources
- Resistive Sensors (Ohms measurement)
- Dewpoint Sensors (Foxboro Model 2781)

The input and output characteristics are determined by the configuration information loaded into the transmitter at the factory. This configuration can be easily changed using the Indicator/Configurators or any of the various remote configurators.

Transmitter Identification

See Figure 1 for transmitter data plate contents. For a complete explanation of the Model Number code, see PL 008-659.

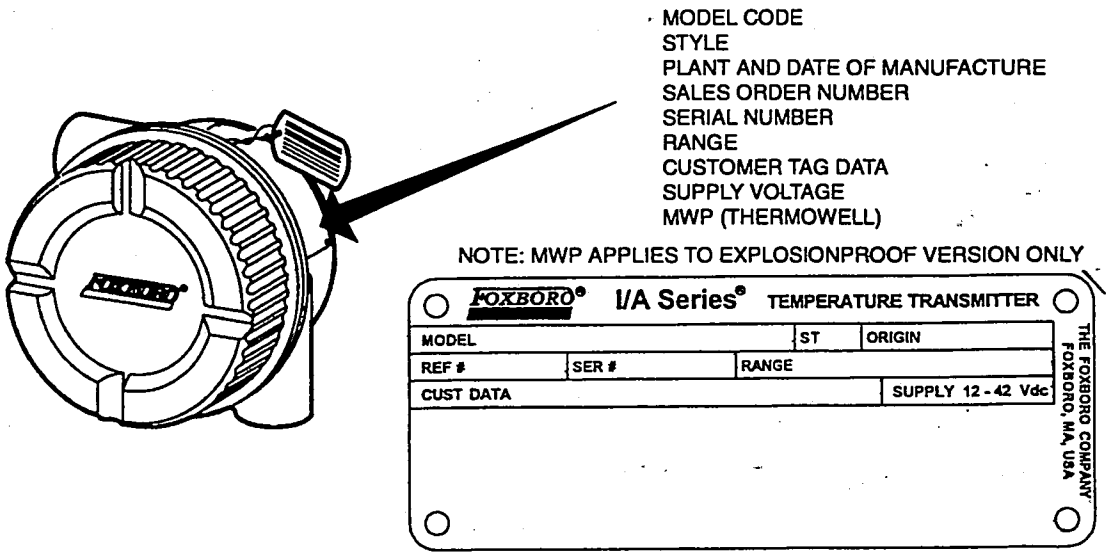

Figure 1. Transmitter Identification

Unpacking

Upon receipt, inspect the package for any sign of damage that may have occurred in shipping. Immediately report any shipping damage to the shipping agent/carrier. The carrier may not honor any claims unless all shipping material is retained for examination. After examining the packaging and removing the contents, save the carton and packaging material in the event the transmitter needs to be returned for any reason.

Reference Documents

This document contains information on installation, wiring, and maintenance of the RTT20 Transmitter. Additional information about the transmitter and the remote configurators are contained in the documents listed in Table 1.

Table 1. Reference Documents

Document	Description
MI 020-350	Wiring Guidelines for Foxboro Intelligent Transmitters
MI 020-460	Operation, Calibration, and Configuration Using a HART Communicator
MI 020-469	Operation, Calibration, and Configuration Using a Model HHT Hand-Held Terminal
MI 020-479	PC10 Intelligent Transmitter Configurator
PL 008-659	Parts List - RTT20 I/A Series Temperature Transmitter
DP 020-460	Dimensional Print - I/A Series Temperature Transmitter

Standard Specifications

Operating Conditions

Table 2. Operating Conditions

Influence	Reference Operating Conditions	Normal Operating Conditions
Ambient Conditions		
Without Integral Display	24 ±2°C (75 ±3°F)	-40 to +85°C (-40 to +185°F)
With Integral Display	24 ±2°C (75 ±3°F)	-29 to +70°C (-20 to +158°F)
Relative Humidity	50 ±10%	0 to 100% (noncondensing)
Supply Voltage	30 ±0.5 V dc	12 to 42 V dc
Vibration	0 m/s^2 (0 g)	30 m/s^2 (3 g) maximum

Functional Specifications

Input Types and Range Limits	See Table 3.
Span Limits	Minimum: 5°C (10°F). Maximum: See Table 3.
Output Types	4-20 mA. Smart HART. Intelligent (4-20 mA or FoxCom Digital).
Two-Wire Transmitter	The same two wires are used for input power, output signal, and remote communication.
Input Response Time	With minimum damping, the 90% response time for an 80% input step is 1.2 seconds.

Electronic Damping	4-20 mA Version: 1.2 seconds. Intelligent Version: Damping is configurable to settings of 0.00, 0.25, 0.50, 1, 2, 4, 8, 16, and 32 seconds. HART Version: Damping is set as a floating decimal point value between 0 and 32 seconds.
Turn On Time	Two-wire Sensor: 3.5 seconds. Three- and Four-wire Sensors: 7 seconds.
Minimum Power Supply Current	35 mA
Output	Ranging: Zero and span adjustment are non-interacting. Failsafe (User-Configurable): Downscale: 3.6 to 3.8 mA. Upscale: 20.75 to 23.0 mA. Underrange Current: Down to 3.8 mA. Overrange Current: Up to 20.75 mA. Action: Direct or Reverse.
Output Update Rate	4-20 mA: 6 times per second (all output versions). HART Digital: 2 times per second. FoxCom Digital: 10 times per second.
Electromagnetic Compatibility (EMC)	The RTT20 complies with the requirements of the European EMC Directive 89/336/EEC.
Isolation	500 V ac, rms.

Supply Voltage Requirements and External Loop Load Limitations

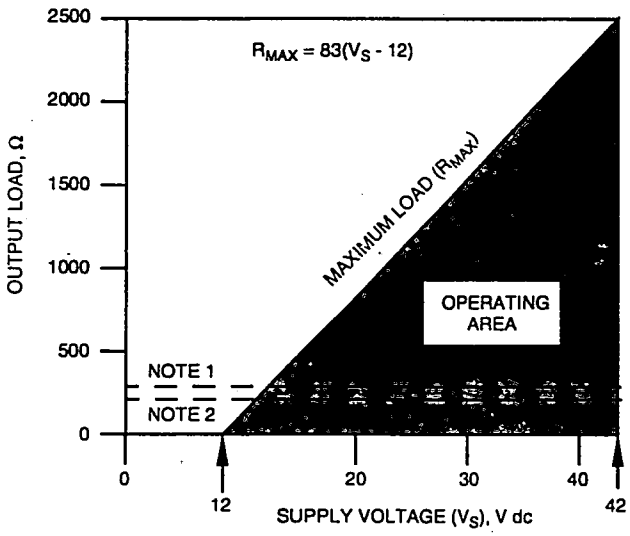

NOTES:
1. MINIMUM LOAD WITH HART COMMUNICATION IS 250 Ω.
2. MINIMUM LOAD WITH FOXBORO HHT OR PC10 CONNECTED 200 Ω.
3. CONNECTING AN HHT TERMINAL, PC10 CONFIGURATOR, OR HART COMMUNICATOR WHILE OPERATING BELOW THE MINIMUM SPECIFIED LOAD MAY CAUSE COMMUNICATION PROBLEMS.

Table 3. Range Limits, Maximum Span, and Accuracy (a)

Input Type	Model Code Letter	See Note	Range Limits		Maximum Span		± Digital Accuracy (b)	
			°C	°F	°C	°F	°C	°F
RTD (2, 3, or 4 wire)								
Pt100 DIN/IEC	Q	c	-200 and +850	-328 and +1562	1050	1890	0.05	0.09
Pt100 DIN/IEC	A	d	-200 and +850	-328 and +1562	1050	1890	0.05	0.09
Pt100 SAMA	P	e	-200 and +650	-328 and +1202	850	1530	0.05	0.09
Ni 200	D	f	-130 and +315	-202 and +599	445	801	0.44	0.79
Ni 120, Minco	G		-80 and +320	-112 and +608	400	720	0.03	0.05
Ni 100	I	g	-60 and +250	-76 and +482	310	558	0.04	0.07
Cu 10	F	h	-70 and +150	-94 and +302	220	396	0.51	0.92
Thermocouple								
Type B	B	k	+43 and +1820	+109 and +3308	1777	3199	0.51	0.92
Type C	C	k	0 and +2320	+32 and +4208	2320	4176	0.38	0.68
Type E	E	k	-270 and +1000	-454 and +1832	1270	2286	0.08	0.14
Type J	J	k	-210 and +1200	-346 and +2129	1410	2538	0.11	0.20
Type K	K	k	-270 and +1372	-454 and -2502	1642	2956	0.14	0.25
Type L	L	m	-200 and +900	-328 and +1652	1100	1980	0.13	0.23
Type N	N	k	-270 and +1300	-454 and +2372	1570	2862	0.15	0.27
Type R	R	k	-50 and +1768	-58 and +3214	1818	3272	0.42	0.76
Type S	S	k	-50 and +1768	-58 and +3214	1818	3272	0.49	0.88
Type T	T	k	-270 and +400	-454 and +752	670	1206	0.10	0.18
Type U	U	m	-200 and +600	-328 and -1112	800	1440	0.09	0.16
Other								
Millivolt	M		-15 and +115 mV dc		130 mV dc		6 µV	
Resistance	O		0 and 500 Ω		500 Ω		20 mΩ	
Dew Point	W		-45 and +96°C (-50 and +205°F)		142°C (255 °F)		0.05°C (0.09 °F)	
Custom	Z		2 to 22-point user-configurable curve					

(a) For 4-20 mA output accuracy, add ±0.05% to digital accuracy.
(b) Digital accuracy is either the listed value or ±0.01% of span, whichever is greater. For thermocouples only, add the applicable cold junction error to digital accuracy:
Integral: ±0.2°C (±0.4 °F).
Remote: Depends on accuracy of remote sensor.
(c) IEC/DIN 751; alpha = 0.00385 (1984) ASTM-B Standard Accuracy.
(d) IEC/DIN 751; alpha = 0.00385 (1984) ASTM-A High Accuracy.
(e) SAMA Standard RC 21-4; alpha = 0.003923.
(f) Foxboro NR 226/227. Refer to TI 005-24a.
(g) DIN 43760.
(h) Foxboro CR 228/229. Refer to TI 005-24a.
(k) NIST Monogram 125, DIN IEC 584.
(m) DIN 43710 (1985).

Performance Specifications

(Under Reference Operating Conditions unless otherwise specified)

Accuracy	Refer to Table 3.
Repeatability and Linearity	Included in accuracy.
Long-Term Stability	Digital Output: <0.05% of input reading (mV or Ω) per year. 4-20 mA Output: Digital Stability plus 0.043% of span per year.
Ambient Temperature Effect	Error is less than 1/2 the reference accuracy per 28 °C (50 °F).
Relative Humidity Effect	<0.01% of calibrated span from 0 to 100% RH, noncondensing.
Vibration Effect	<0.05% at 30 m/s^2 (3 g).
Mounting Position Effect	None.
Supply Voltage Effect	Digital Output: None. 4-20 mA Output: ≤0.005% per volt.
Output Load Effect	Digital Output: None. 4-20 mA Output: ≤0.005% per volt.

Physical Specifications

Basic Transmitter

Polycarbonate with molded ryton terminal block.
Screw terminals of nickel over copper-plated steel.

Mounting Options

Option	Code	Bracket	Hardware
Mounting Set	-M1	Epoxy-Coated Steel	Plated Steel
Stainless Steel Mounting Set	-M2	Stainless Steel	Stainless Steel
DIN Rail Hardware	-D1	Aluminum and Plastic	Plated Steel

Enclosure Construction

Epoxy-coated, low-copper aluminum.

Environmental Protection

Housing: NEMA 4X, IP66.

Approximate Mass

Basic Transmitter Package: 0.13 kg (0.28 lb).
Pipe or Surface Mount Housing: 1.47 kg (3.25 lb).
1-Line Indicator: Add 0.02 kg (0.05 lb).
3-Line Indicator: Add 0.06 kg (0.13 lb).

Communications

Output Types vs. Integral and Remote Configurators

There are three different Model RTT20 transmitters with respect to the output type:

- 4-20 mA.
- 4-20 mA with HART Protocol Communications.
- Intelligent (user selectable 4-20 mA or digital) using Foxboro communication protocol.

The following table indicates which output type can be used with the various configurators.

Configurator Type	4-20 mA (Code-I)	HART (Code-T)	Intelligent (Code-D)
1-Line Indicator/Configurator (option -L1)	Yes	Yes	Yes
3-Line Indicator/Configurator (option -L3)	Yes	Yes	Yes
HART Model 275	No	Yes	No
Rosemount Model 268	No	No	No
Foxboro HT991	No	Yes	No
Foxboro AB0991 Software	No	Yes	No
Foxboro Model HHT	No	No	Yes
Foxboro Model PC10	No	No	Yes
Foxboro I/A Series System	No	No	Yes

Please refer to the next section for the applicable software compatibility requirements of the various configurators.

Software Compatibility

Software in the various Foxboro intelligent devices is periodically revised. Also, as new intelligent devices are introduced, the various remote configurator software is also revised.

All Transmitter Outputs

Transmitter Software

This instruction has been written for the Foxboro Model RTT20 transmitter with Revision 02 software. The transmitter software revision can be determined by using any of the various remote configurators.

1-Line or 3-Line Indicators/Configurator

There is no software in the integral indicators. When installed, they connect directly to the microprocessor and operate using the transmitter software. Therefore, the indicators can be used with any version transmitter software and do not need to be *upgraded* as the transmitter software changes.

HART Output (Code -T)

Foxboro Software AB0991

Version 3.0 or later required for proper operation with transmitter.

HART Model 275

The HART Communicator needs to have the device description (DDs) loaded into it to operate properly. Many HART Foundation members, including Foxboro, can load the necessary DDs into a HART Communicator. If the communicator was purchased from Foxboro (Foxboro Model Code HT991 is the HART Model 275 Communicator), the DDs for the Model RTT20 transmitter will have already been loaded.

NOTE: The Rosemount Model 268 is not compatible with HART-based devices other than Rosemount's. The Foxboro RTT20 device descriptions (DDs) cannot be loaded into the Rosemount Model 268 Configurator.

Intelligent Output (Code -D)

Foxboro Hand-Held Terminal (Model HHT)

Software Part Number L0122EV Rev D or later.

Foxboro Model PC10 Configurator

Software Version 4.0 or later.

Foxboro I/A Series System

Software Version 4.2 or later.

If any of your remote configurators needs software upgrades, please contact your nearest Foxboro sales office or representative.

Installation

The following material provides information and procedures for installing the RTT20 Transmitter. For dimensional information, refer to DP 020-460.

NOTE: Use a suitable thread sealant on all connections.

Transmitter Mounting

The basic transmitter can be mounted on a DIN rail or to a flat surface. The transmitter in a field housing can be pipe mounted, surface mounted, mounted directly to a bare sensor, or thermowell mounted. See Figures 2 through 5. For extremely high process temperatures, a remote mounted sensor is recommended. Also, the mounting stability can influence how the sensor is attached to the transmitter. If the process vessel is highly insulated and the thermowell has considerable lagging, a remote mounted transmitter attached to a 50 mm (2 inch) pipe is recommended. When mounting the transmitter, take into account the necessary room to remove the cover if you wish to use the indicators or remote configurators at the transmitter. The housing can be mounted in any position. The module can be rotated in 90 degree increments to align the optional indicator for easy viewing.

DIN Rail Mount

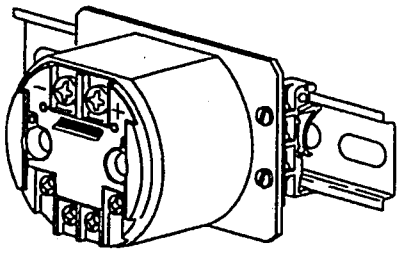

Figure 2. DIN Rail Mount

Pipe or Surface Mount

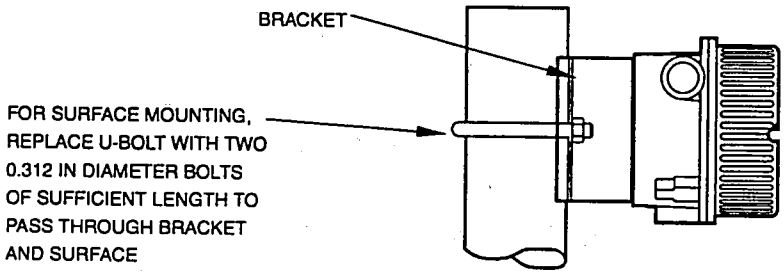

Figure 3. Pipe or Surface Mount

Bare Sensor Mount

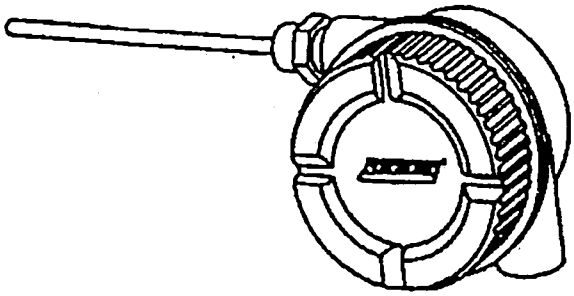

Figure 4. Bare Sensor Mount

Thermowell Mount

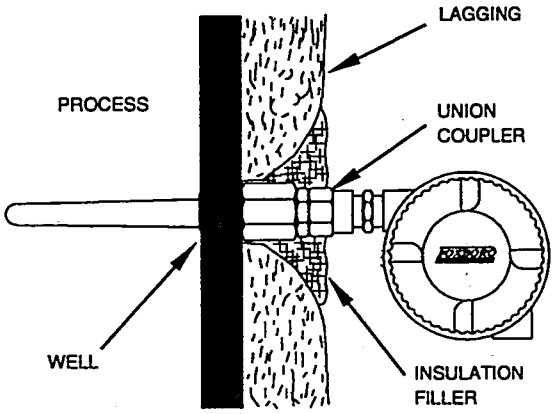

Figure 5. Thermowell Mount

Mounting Basic Transmitter in Old Style Housing

The RTT20 can be used as a replacement for existing E93, E94, 893, and RTT10 temperature transmitters. When replacing the old style transmitter with a new RTT20 module, any RTT20 can be used if the label on the outside of the housing shows an explosionproof electrical code. If the electrical code information on the data plate is any European agency (CENELEC, BASEEFA, KEMA, etc.) or any other intrinsically safe agency approval (FM or CSA), the RTT20 module must be labeled for intrinsic safety. Refer to the Parts List for applicable part numbers.

The transmitter can be mounted in the old housing by replacing the existing mounting plate with a new one supplied when a –D3 option is specified or by drilling two holes in the existing mounting plate. Replace the existing mounting plate as follows:

1. Remove the housing cover of your existing transmitter.
2. Remove the transmitter and mounting plate from the housing.
3. Install the new mounting plate using the four screws that fastened the old mounting plate.

4. Fasten the RTT20 Transmitter to the new mounting plate with two screws provided.

To drill your existing mounting plate, locate the holes per Figure 6.

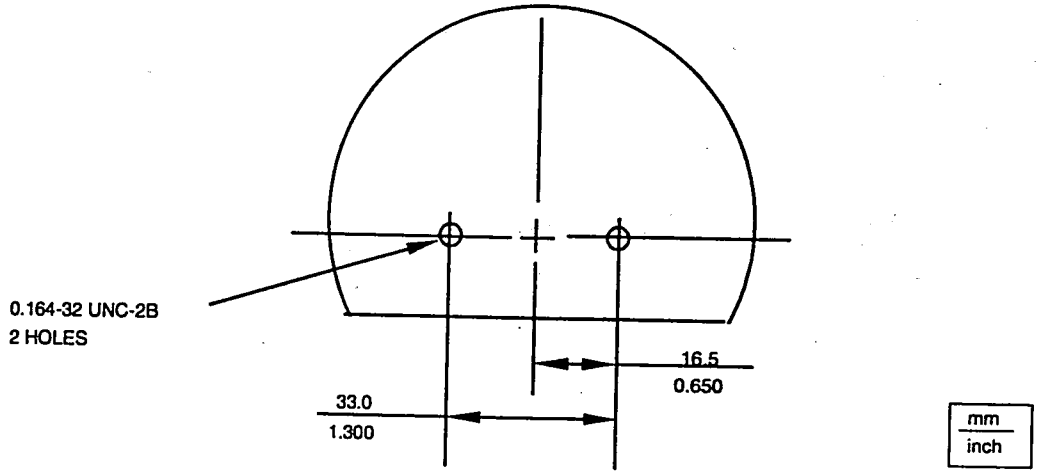

Figure 6. Locating New Holes in Existing Mounting Plate

Positioning Transmitter to View Optional Indicator

The transmitter can be rotated in 90° increments to align the indicator for easy viewing. To do this, simply remove the two mounting screws, rotate the transmitter, and replace the mounting screws.

Optional Custody Transfer Lock and Seal

The housing custody transfer lock, shown in Figure 7, is provided as an option (–A1). It is generally used in custody transfer operations or on transmitters with certain agency certifications. Access to the inside of the housing requires breaking the seal wire, loosening the 5/32 hex recess screw, and turning the clamp.

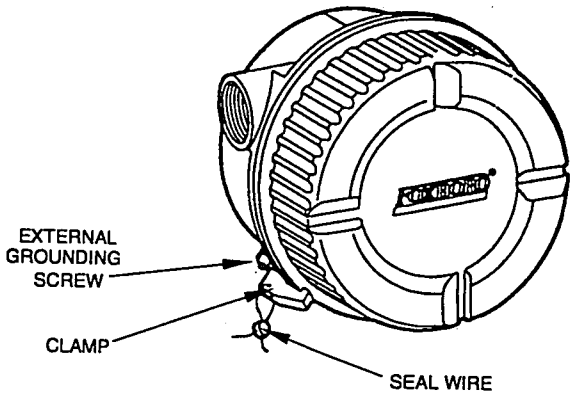

Figure 7. Custody Transfer Lock and Seal Option

Transmitter Wiring

NOTES:
1. Review suggested wiring practices as described in MI 020-350 to ensure proper communications capability and to minimize the effects of RFI.
2. Foxboro recommends the use of transient/surge protection in installations prone to high levels of electrical transients and surges.

Electrical Safety Requirements

The data plate attached to the outside of the transmitter housing contains electrical safety certifications. To maintain certification, the transmitter must be installed in accordance with the agency requirements. Refer to Figure 1 for location of the data plate and to Table 4 for Electrical Safety Specifications.

DANGER: To prevent possible explosions and to maintain explosionproof, dust-ignitionproof protection, observe applicable wiring practices. Plug any unused conduit opening with a metal pipe plug, which engages a minimum of five full threads.

WARNING: To maintain IEC IP66 and NEMA Type 4X protection, any unused conduit opening must be plugged with a metal plug. In addition, the threaded housing cover must be installed. Hand tighten cover as much as possible so that the O-ring is fully captured.

NOTES:
1. These transmitters have been designed to meet the electrical safety description listed in Table 4. For detailed information or status of testing laboratory approvals/certifications, contact Foxboro.
2. Not all product variations apply to all codes listed in Table 4.

Table 4. Electrical Safety Specifications

Testing Laboratory, Type of Protection, and Area Classification	Application Conditions	Electrical Safety Design Code
CENELEC intrinsically safe EEx ia, Gas Group IIC, Zone 0.	Temperature Class T4-T6.	EA
CENELEC flameproof EEx d, Gas Group IIC, Zone 1.	Temperature Class T6.	ED
CSA intrinsically safe, Class I, Division 1, Groups A, B, C, and D; Class II, Division 1, Groups E, F, and G; and Class III, Division 1 hazardous locations.	Connect per TI 005-105. Temperature Class T6 at 40°C (104°F); T4 at 85°C (185°F) max. ambient	CA
CSA Class I, Division 2, Groups A, B, C, and D hazardous locations.	Temperature Class T6 at 40°C (104°F); T4 at 85°C (185°F) max. ambient.	

Table 4. Electrical Safety Specifications (Continued)

Testing Laboratory, Type of Protection, and Area Classification	Application Conditions	Electrical Safety Design Code
CSA explosionproof, Class I, Division 1, Groups B, C, and D; dust-ignitionproof, Class II, Division 1, Groups E, F, and G: and Class III, Division 1 hazardous locations.	Connect to source not exceeding 42.4 V. Temperature Class T6 at 40°C (104°F); T5 at 85°C (185°F) max. ambient.	CD
CSA Class I, Division 2, Groups A, B, C, and D hazardous locations.	Temperature Class T6 at 40°C (104°F); T4 at 85°C (185°F) max. ambient.	
CSA Class I, Division 2, Groups A, B, C, and D hazardous locations.	Temperature Class T6 at 40°C (104°F); T4 at 85°C (185°F) max. ambient.	CN
FM intrinsically safe, Class I, Division 1, Groups A, B, C, and D; Class II, Division 1, Groups E, F, and G; and Class III, Division 1 hazardous locations.	Connect per TI 005-101. Temperature Class T6 at 40°C (104°F); T4 at 85°C (185°F) max. ambient.	FA
FM nonincendive, Class I, II, and III, Division 2, Groups A, B, C, D, F and G hazardous locations.	Temperature Class T6 at 40°C (104°F); T4 at 85°C (185°F) max. ambient.	
FM explosionproof, Class I, Division 1, Groups B, C, and D: dust-ignitionproof, Class II, Division 1, Groups E, F, and G; and Class III, Division 1 hazardous locations.	Connect to source not exceeding 42.4 V. Temperature Class T6 at 40°C (104°F); T5 at 85°C (185°F) max. ambient.	FD
FM nonincendive, Class I, II, and III, Division 2, Groups A, B, C, D, F and G hazardous locations.	Temperature Class T6 at 40°C (104°F); T4 at 85°C (185°F) max. ambient.	
FM nonincendive, Class I, II, and III, Division 2, Groups A, B, C, D, F and G hazardous locations.	Temperature Class T6 at 40°C (104°F); T4 at 85°C (185°F) max. ambient.	FN
KEMA European nonsparking/nonincendive "N", Gas Group IIC, Zone 2.	Temperature Class T4-T6.	KN
SAA intrinsically safe Ex ia, Gas Group IIC, Zone 0.	Temperature Class T4.	AA
SAA nonsparking Ex n, Gas Group IIC, Zone 2.	Connect to source not exceeding 42.4 V. Temperature Class T4.	
SAA flameproof Ex d, Gas Group IIC, Zone 1.	Temperature Class T6.	AD
SAA nonsparking Ex n, Gas Group IIC, Zone 2.	Connect to source not exceeding 42.4 V Temperature Class T4.	
SAA nonsparking Ex n, Gas Group IIC, Zone 2.	Connect to source not exceeding 42.4 V Temperature Class T4.	AN

Conduit Drainage

The transmitter is completely sealed to resist moisture. However, improper routing of conduit for the power or sensor wires can allow moisture to collect inside the housing and provide conductivity paths between the various screw terminals. This can cause errors until the housing is dried out. Therefore it is preferable to run conduit below the transmitter as shown in Figure 8. If you must run conduit above the transmitter, a conduit seal at the housing is advisable.

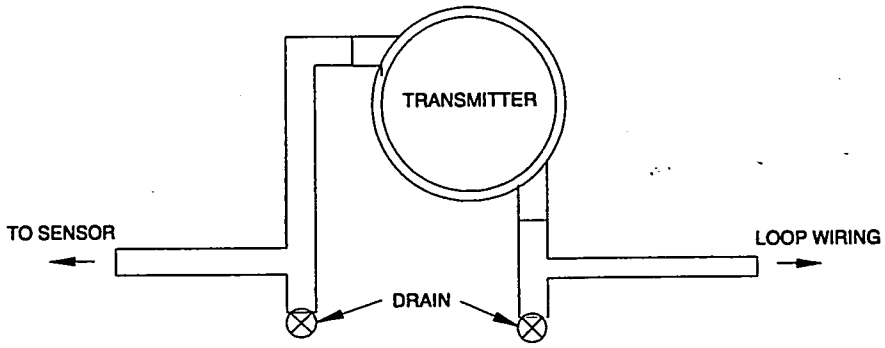

Figure 8. Recommended Conduit Routing

In extremely humid environments where the conduit cannot be installed with recommended conduit drains as shown in Figure 8, Foxboro recommends installing a poured conduit seal at the conduit entries of the housing. This will eliminate the conduit moisture from entering the housing. Make sure to use a silicone sealing compound at all threaded connections between the poured seal and the transmitter housing.

One manufacturer of poured conduit seals is Cooper Industries, Crouse-Hinds Division (Phone 315-477-7000 in U.S.A.).

Description	Part Number
Connection for 1/2 inch conduit thread	EYS 116
Sealing Compound	CHICO A3
Fiber Fill	CHICO X4

Hazardous Locations

General

When using the RTT20 transmitter in a hazardous location, care must be taken to ensure proper installation practices per the applicable agency requirements. The housing was designed for explosionproof installations. In addition, the basic transmitter is available for intrinsically safe and nonincendive operation. Each transmitter and housing has a label indicating the hazardous location approvals (refer to Table 4). To maintain the certified rating, the transmitter must be installed per the applicable code requirements.

WARNING: The following information can only be considered as general information and the user is responsible for proper installation in hazardous areas per the applicable agency codes and guidelines.

Conduit Seals in Hazardous Locations

When installing the transmitter as explosionproof in a Division 1 area, the National Electrical Code requires conduit seals at the boundary between the hazardous divisions. Therefore, when the conduit is routed from a Division 1 to a Division 2 area, there must be a conduit seal. There also must be a conduit seal when the conduit is routed out of a Division 1 or Division 2 area into a nonhazardous location.

In addition to the conduit seals at the hazardous division boundaries, section 501-5(a)(1) of the NEC code requires that for Class I, Division 1 explosionproof locations, a conduit seal must be installed within 18 inches (457 mm) of a device that "may produce arcs, sparks, or high temperatures" to eliminate pressure piling. Pressure piling is the result of a flame traveling down the conduit run, thereby pressurizing the explosionproof housing.

NOTE: Sources of ignition are not present in the RTT20 transmitter. Also, Factory Mutual (FM) has tested the housing with various lengths of conduit to simulate the pressure piling effect. Therefore, per NEC 501-5(a)(1), conduit seals are not required within 18 inches (457 mm) of the housing.

Process Seals in Hazardous Locations

The National Electrical Code NEC 501-5(f)(3) requires a secondary seal to eliminate the possibility of process fluid entering the control room if the primary process seal should fail. Foxboro-supplied integrally mounted sensors (bare or thermowell mount) are attached to the single compartment housing without a secondary seal. Therefore, in hazardous locations, if the integrally mounted bare sensor were to fail, or the thermowell failed, there could be a direct path for the process fluid to enter the control room through the transmitter housing and conduit. A process seal of this type is very difficult to install in the field conduit. Also, the poured or molded "conduit seals" to prevent pressure piling are only required to withstand 6 inH2O differential pressure. Therefore, a "conduit seal" is not an acceptable "process seal" to comply with section 501-5(f)(3). In these applications, Foxboro recommends that the sensor should be remotely mounted from the transmitter housing.

Sensor Connections and Wiring

RTD or Ohm Applications.

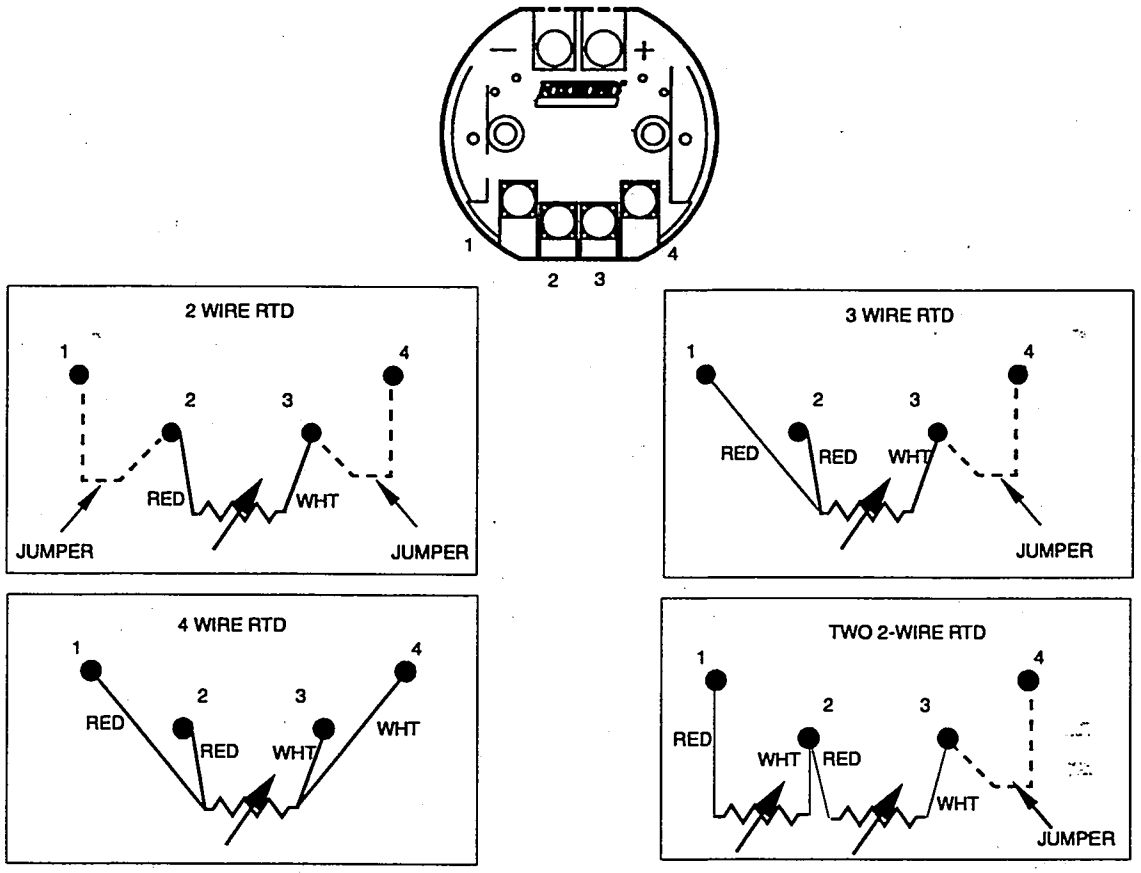

Figure 9. RTD Wiring

Three and four lead RTDs are compensated up to 40 Ω for each lead. This is approximately equal to 1220 m (4000 ft) of 20 gauge wire. The total resistance including the RTD and the two lead wires is:

$$\frac{180\ \text{mV}}{0.3\ \text{mA}} = \frac{0.180\ \text{V}}{0.0003\ \text{A}} = 600\ \Omega$$

Therefore, if a platinum RTD is used to measure a maximum temperature of 1292 °F (700 °C), the RTD resistance is 345 Ω and the maximum permissible lead wire resistance (for both leads combined) is:

$$600\ \Omega - 345\ \Omega = 255\ \Omega$$

You may calculate the maximum permissible lead wire resistance for other RTD applications in a similar manner.

For a dual RTD (two 2-wire), the RTDs must be the same type. Also, for a single 2-wire RTD, or two 2-wire RTDs, the leads are in series with the sensing portion of the RTD, so lead length should be no longer than one foot (close coupled to transmitter). If the distance needs to be greater than a foot, change the RTD to a 3- or 4-wire RTD.

Thermocouple or Voltage Applications

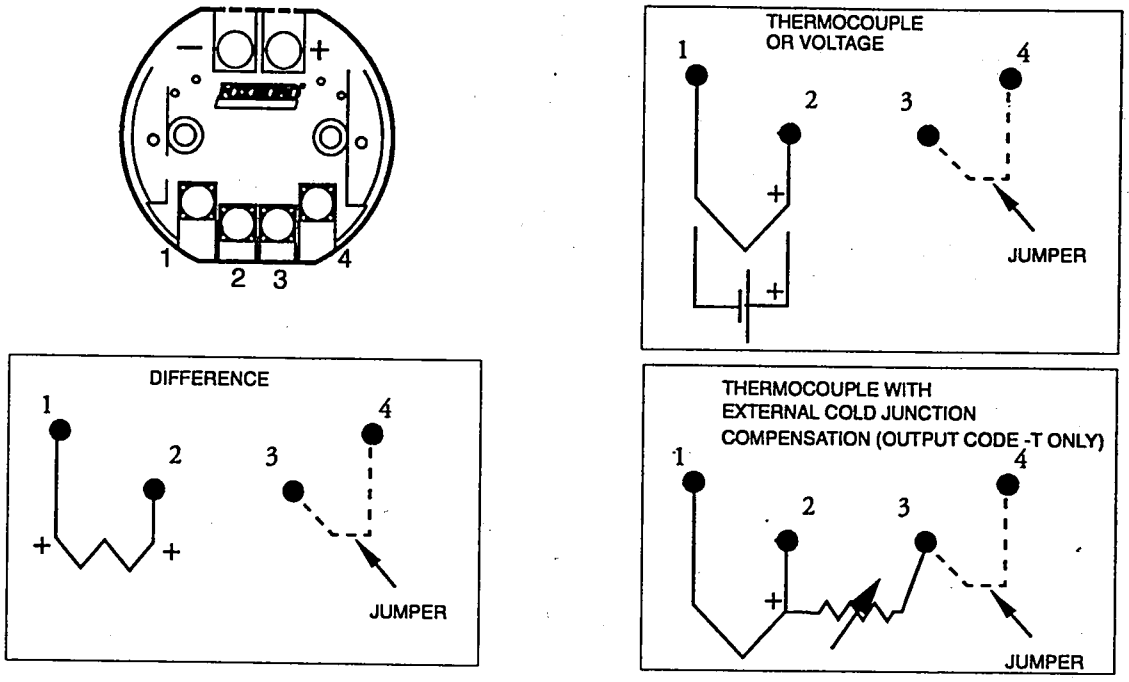

Figure 10. Thermocouple or Voltage Wiring

Thermocouple extension wire must be the same type as the thermocouple used. Foxboro recommends that extension wires should be twisted with an overall shield to avoid extraneous noise pickup. The shield should be grounded at the sensor.

Assuming the resistance of the thermocouple junction to be negligible, the maximum resistance of the two lead wires is:

$$\frac{180\ \text{mV} - \text{T/C}_{\text{mVoutput}}}{0.005\ \text{mA}}$$

Example:

For a Type J thermocouple operated at 1200 °F, the approximate output is 36 mV (reference junction at 32 °F). The maximum lead resistance (both leads combined) is:

$$\frac{180\ \text{mV} - 36\ \text{mV}}{0.005\ \text{A}} = 28,000\Omega$$

Loop Wiring

Wiring a Transmitter to an I/A Series System

The RTT20 temperature transmitter can be wired to various Fieldbus Modules (FBMs) of an I/A Series System as follows:

Conventional Output Code -I

The 4 to 20 mA output of the transmitter can be connected to an analog FBM01 or FBM04, just like any other analog 4 to 20 mA output device. The Output Code -I transmitter does not include a modem, therefore, there will not be any bi-directional communications between the transmitter and the control system. Transmitter power is supplied through the FBM or from a remote power supply. Reconfiguration of the transmitter database can only be accomplished by using the integral Indicator/Configurator (option -L1 or -L3).

HART Output Code -T

Foxboro I/A Series System will not integrate the HART *digital* output directly in the control system. There will not be any bi-directional communications between the transmitter and the control system which eliminates the multi-drop wiring capability. Therefore, the 4 to 20 mA output can only be wired to the analog FBM01 or FBM04. To ensure proper communications with the HART Model 275 Communicator (Foxboro Model HT991), Foxboro AB0991 software or any other HART-based remote configurator, a minimum load of at least 250 ohms must be located between the FBM and the point in the loop wiring where the remote configurator is attached (refer to Figure 17). Transmitter power is supplied through the FBM or from a remote power supply.

Intelligent Output Code -D

The Intelligent Temperature Transmitter, as well as all other Foxboro intelligent devices, can be attached to the I/A Series System in four different ways as follows:

1. The transmitter can be configured for 4 to 20 mA output and wired to an analog FBM01 or FBM04. With this configuration, only the measurement is transmitted to the system via the 4 to 20 mA signal. There will not be any bidirectional communications between the transmitter and the control system. To ensure proper communications with the model HHT or PC10 Configurator, a minimum load of at least 200 ohms must be located between the FBM and the point in the loop wiring where the remote configurator is attached (refer to Figure 17). Transmitter power is supplied through the FBM or from a remote power supply.
2. The transmitter output can be configured for digital output and wired to FBM18 or 39. This is the most popular wiring, because all of the measurements and diagnostic messages are transmitted 10 times per second to the FBM. Also, any transmitter parameter can be remotely configured from any I/A Series workstation without the need for a remote configurator. The minimum load to ensure proper bi-directional communications is built into the FBM18 and 39, and the transmitter power is supplied by the FBM.
3. The transmitter output can be configured for digital output and wired to FBM43, 44, or 46. All of the measurements and diagnostic messages are transmitted 10 times per second to the FBM. Also, any transmitter parameter can be remotely configured from any I/A Series workstation without the need for a remote configurator. The minimum load to ensure proper bi-directional communications is built into the FBM43, 44, and 46, and the transmitter power is supplied either by

the FBM or from a remote power supply. For remote indication of the digital output, you must use a Foxboro RDM10 indicator.

4. The transmitter output can be configured for 4 to 20 mA output and wired to FBM43, 44 or 46. All of the measurements and diagnostic messages are transmitted two times per second to the FBM. Also, any transmitter parameter can be remotely configured from any I/A Series workstation without the need for A remote configurator. The minimum load to ensure proper bi-directional communications is built into the FBM43, 44 and 46, and the transmitter power is supplied either by the FBM or a remote power supply. This wiring is popular for emergency shut down loops, where the digital signal is being transmitted to the I/A Series System while the transmitter mA output is still active and tied into the emergency shut down system, such as a PLC, with a remote power supply. This wiring configuration allows other 4 to 20 mA devices (indicators, recorders, etc) to be tied into the loop wiring, even though the transmitter is still communicating digitally to the I/A Series System

Note: When using FBM43, 44 or 46, all of the Intelligent Foxboro devices wired to that particular FBM must all be configured for the same output type (all configured for digital or all configured for 4 to 20 mA).

When digitally integrating a transmitter to an I/A Series System, refer to the following I/A Series documents for setting up the control system:

B0193RA	Measurement Integration
B0193MW	Intelligent Transmitter Maintenance Environment
B0193GZ	Intelligent Field Device Configurator

Wiring a Transmitter Having a Digital Output Signal

CAUTION: Ensure that the transmitter output is configured for "digital output" before attaching it to an FBM18, 39, 43, 44, or 46. Also, make sure that the transmitter Device Name is the same as the letterbug used for that channel in your I/A Series System, or set the transmitter device name to DevNam before installation.

Transmitters with digital output signal connect to an I/A Series System. Transmitters may be connected to an FBM18 or FBM39. If all transmitters are configured for the same type of output (4-20 mA or digital), they may be connected to an FBM43, 44 or 46. This instruction identifies wire terminations in the transmitter and in the I/A Series System enclosure. For other system wiring details, refer to the Installation Instructions provided with the I/A Series System.

The maximum total resistance for each transmitter loop is 420 Ω. For example, if an intrinsically safe barrier with a resistance of 340 Ω is used, the maximum wire resistance is 80 Ω. Maximum recommended length for field wire is 600 m (2000 ft). Transmitter power is supplied by a Model FBM18 or FBM39 Input Module. To wire one or more transmitters to an I/A Series System, proceed as follows:

1. Remove the cover from the transmitter housing.
2. Run signal wires (0.50 mm^2 or 20 AWG, typical) through one of the transmitter conduit connections as shown in Figure 11. Use twisted signal pair to protect the digital output and/or remote communications from electrical noise. Screened (shielded) cable may be required in some locations. Refer to MI 020-350 for recommended wiring practices.

NOTE: Do not run transmitter wires in same conduit as mains (ac power) wires.

3. Connect the signal wires to the transmitter "+" and "–" terminal screws.
4. Reinstall the cover on the transmitter housing.
5. To connect the transmitter signal wires to the I/A Series System, use the applicable illustration shown in Figure 12. Note that the type of wire terminations used depends on the type of system enclosure purchased. Also refer to the Installation Instructions in the documentation provided with the I/A Series system.

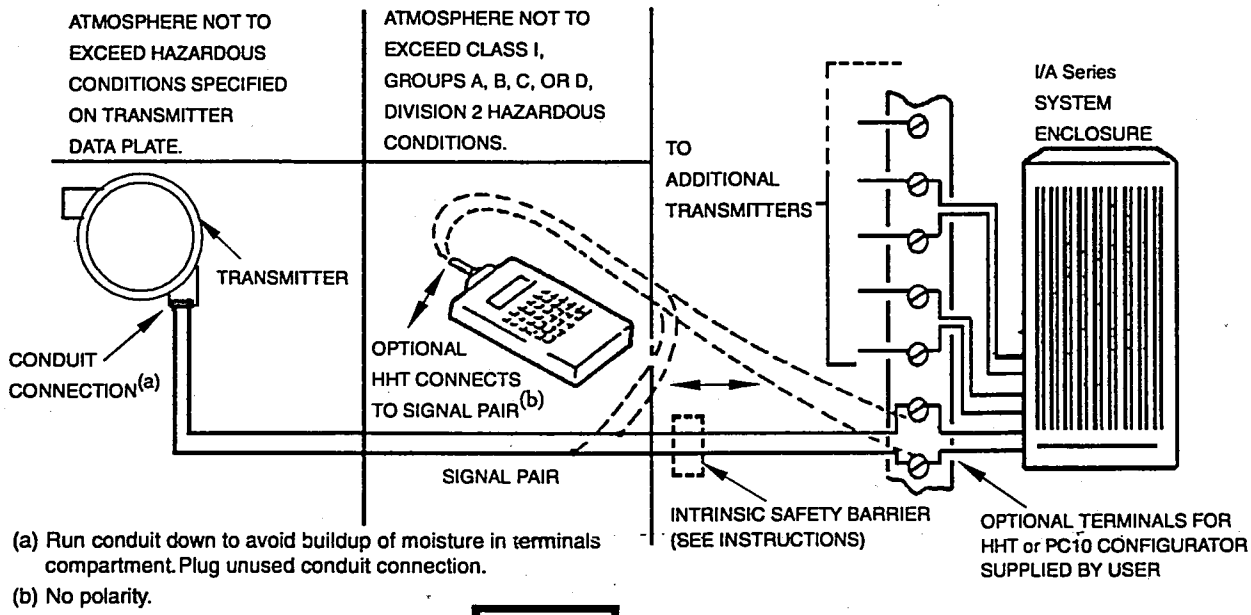

(a) Run conduit down to avoid buildup of moisture in terminals compartment. Plug unused conduit connection.

(b) No polarity.

WARNING

The hand-held terminal (HHT) is certified as specified on the agency plate attached to the HHT. If used with a transmitter located in a more hazardous atmosphere, make provision to locate and connect the HHT in an area within its certification level. Locating or connecting the HHT in a hazardous area for which it is not certified may result in an explosion.

Figure 11. Typical Transmitter Wiring to an I/A Series System

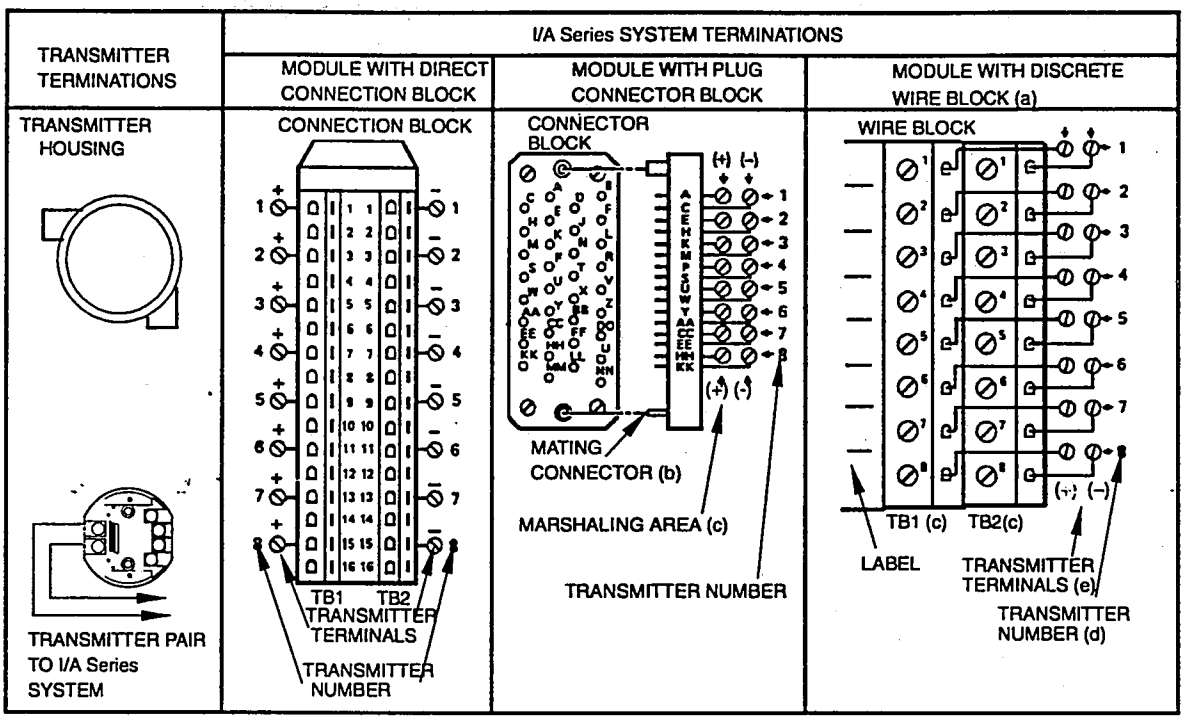

(a) Terminals are also identified by label on side of wire block.
(b) Burndy Part Number MSD 34 PM 118 or equivalent, supplied by user.
(c) TB3, if present, is not used.
(d) If terminals are from an FBM04 Module, only four transmitters can be connected; use terminal sets 1 through 4.
(e) Polarity at transmitter is shown in parentheses.

Figure 12. Wiring Transmitter to Terminals in an I/A Series System

Wiring a Transmitter Having a 4-20mA Output Signal

When wiring a transmitter with 4-20 mA output signal, the supply voltage and loop load must be within specified limits. The supply voltage vs. output load relationship is shown in Figure 13. Any combination of supply voltage and loop load resistance in the shaded area can be used. To determine the loop load resistance (transmitter output load), add the series resistance of each component in the loop, excluding the transmitter.

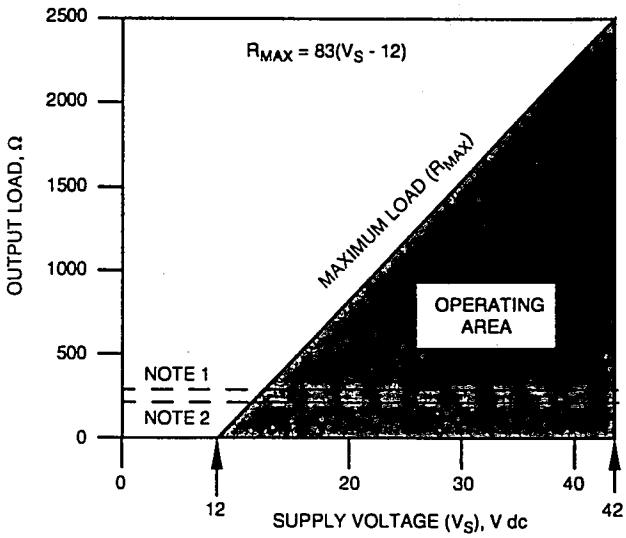

NOTES:
1. MINIMUM LOAD WITH HART COMMUNICATION IS 250 Ω.
2. MINIMUM LOAD WITH FOXBORO HHT OR PC10 CONNECTED IS 200 Ω.

Figure 13. Voltage and Load Limits

The maximum output load resistance, R_{MAX}, is determined by the formula:

$$R_{MAX} = 83\,(V_s - 12)$$

CAUTION: Connecting an HHT Terminal, PC10 Configurator, or HART Communicator while operating below the specified minimum load may cause output disturbances and/or communication problems.

Even though the transmitter has various filters to reduce or eliminate electrical noise, the power supply should have less than 2% ripple.

To wire one or more transmitters to a power supply, proceed with the following steps.

1. Remove the cover from the transmitter housing.
2. Run signal wires (0.50 mm^2 or 20 AWG, typical) through one of the transmitter conduit connections as shown in Figure 14. Use twisted pair to protect the 4-20 mA output and/or remote communications from electrical noise. Maximum recommended length for signal wires is 1800 m (6000 ft). Screened (shielded) cable may be required in some locations.

NOTE: Do not run transmitter wires in same conduit as mains (ac power) wires.

3. Connect the power supply and receiver loop wires to the transmitter "+" and "–" terminal screws.
4. Connect receivers (such as controllers, recorders, indicators) in series with power supply and transmitter as shown in Figure 14.
5. Reinstall the cover onto the transmitter housing.
6. If wiring additional transmitters to the same power supply, repeat Steps 1 through 5 for each additional transmitter. The setup with multiple transmitters connected to a single power supply is shown in Figure 15. Refer to MI 020-350 for details.
7. The remote configurator can be connected in the loop (subject to hazardous location restrictions) as shown in Figure 14, Figure 17, and Figure 18.

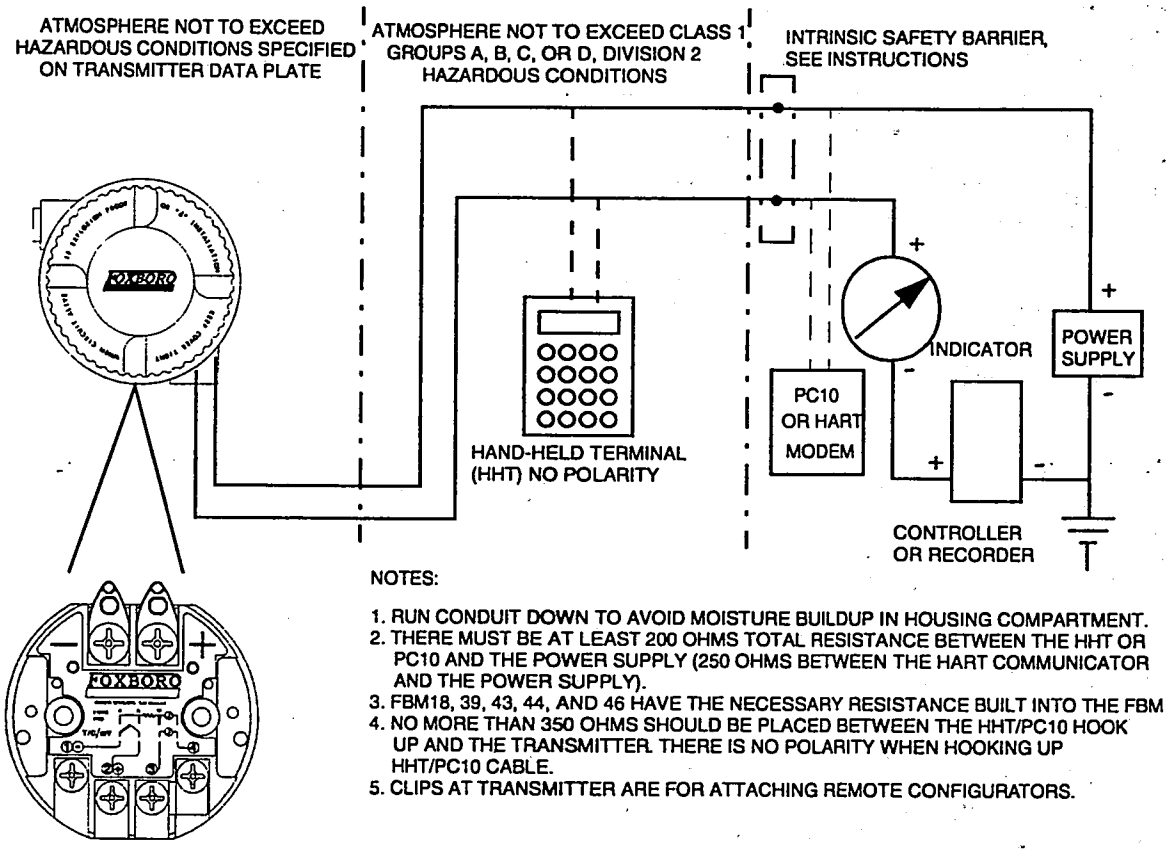

Figure 14. Typical Transmitter Wiring With a 4-20 mA Output

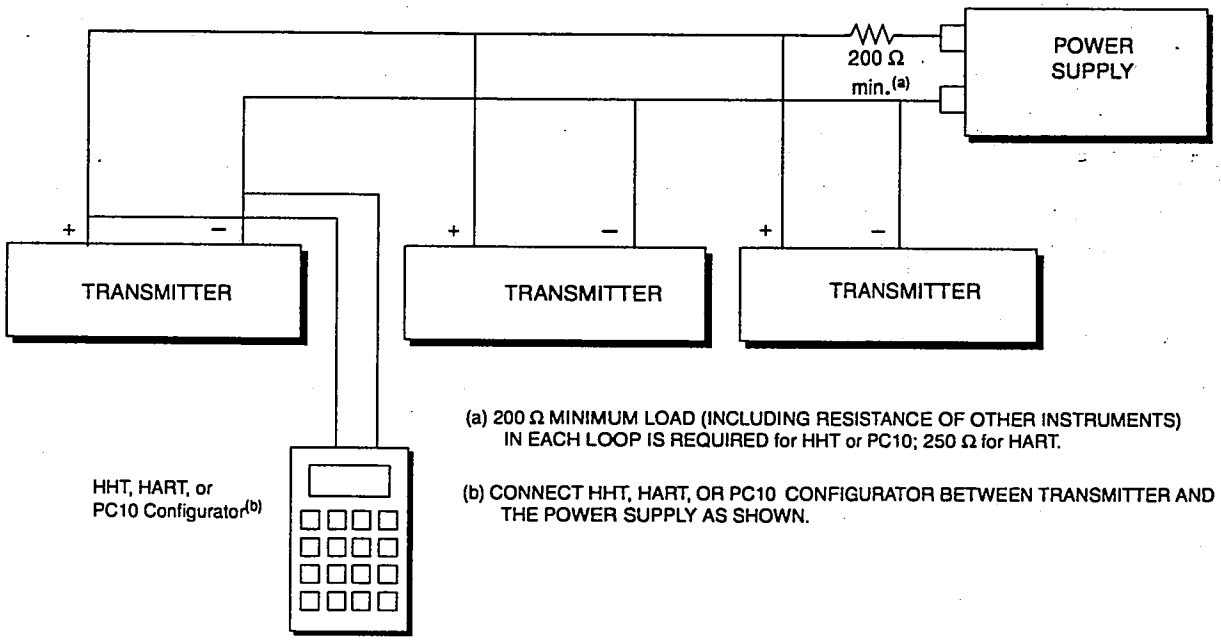

Figure 15. Wiring Several 4 to 20 mA Transmitters to a Common Power Supply

Grounding (Earthing)

The transmitter will operate with the loop wiring floating or grounded. If the loop wiring is grounded, the preferred method is to ground the negative lead close to the power supply. Never ground the loop at more than one point.

The transmitter is an isolated device, so the sensor wiring can be grounded. If a grounded thermocouple is used, that will be the one ground point for the sensor wiring.

Shielded cable around the loop wiring should be grounded at the power supply and floating (ungrounded) at the transmitter. Do not ground the loop shield to the transmitter

Shielded cable around the sensor wiring should be grounded at the sensor, not at the transmitter.

The electronic module is not metallic and therefore does not need to be grounded. For certain installations, a ground screw inside the housing is provided. For certain electrical safety certifications, an external ground screw is provided (see Figure 7 for location).

HART Multidrop Communication

"Multidropping" refers to the connection of several transmitters to a single communications transmission line. Communications between the host computer and the transmitters takes place digitally with the analog output of the transmitter deactivated. With the HART communications protocol, up to 15 transmitters cam be connected on a single twisted pair of wires or over leased telephone lines.

The application of a multidrop installation requires consideration of the update rate necessary from each transmitter, the combination of transmitter models, and the length of the transmission line. Multidrop installations are not recommended where Intrinsic Safety is a requirement. Communication with the transmitters can be accomplished with commercially available Bell 202 modems and a host implementing the HART protocol. Each transmitter is identified by a unique address (1-15) and responds to the commands defined in the HART protocol.

Figure 16 shows a typical multidrop network. Do not use this figure as an installation diagram. Contact the HART Communications Foundation (512-794-0369) with specific requirements for multidrop applications.

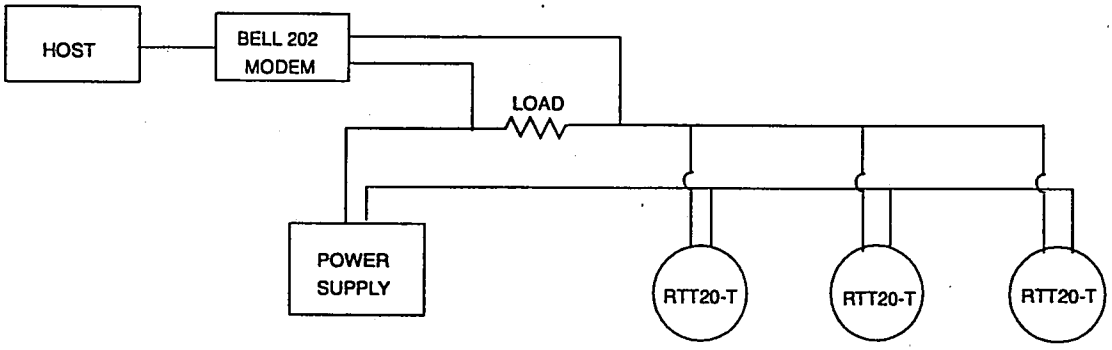

Figure 16. Typical Multidrop Network

The HART 275 Communicator (Foxboro HT991) and the Foxboro AB0991 software can operate, configure, and calibrate the RTT20-T in the same way as it can a RTT20-T in a standard point-to-point installation.

NOTE: RTT20 Transmitters are set to address 0 at the factory, allowing them to operate in the standard point-to-point manner with a 4-20 mA output signal. To activate multidrop communication, the transmitter address must be changed to a number from 1 to 15. This change deactivates the 4-20 mA analog output.

Attaching Remote Configurators

When attaching remote configurators to a loop containing a transmitter with a 4 to 20 mA output, the placement of the configurator in relation to loads in the loop is important. Figure 17 and Figure 18 show restrictions on the connection of the configurator in the loop.

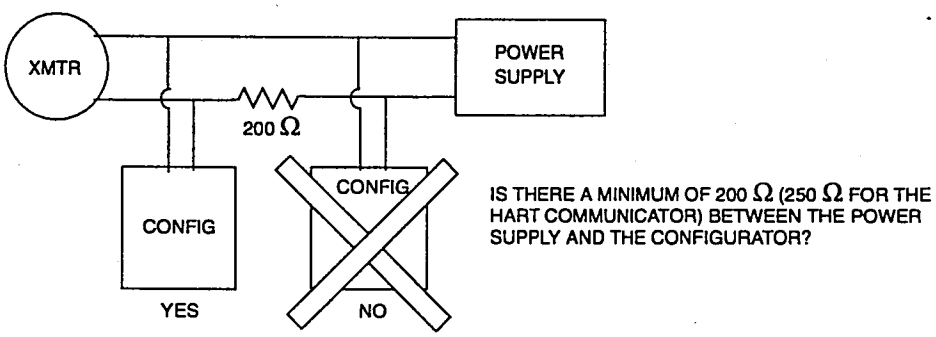

Figure 17. Minimum Load Between Power Supply and Configurator

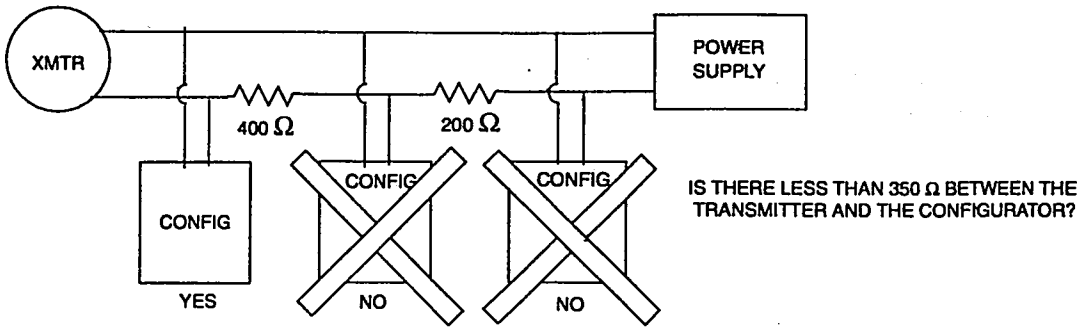

Figure 18. Maximum Load Between Transmitter and Configurator

Configuration

The RTT20 Transmitters are programmed internally with the characteristics of all the sensor types that can be attached. Configuration is therefore simplified to selecting a few operating parameters.

The RTT20 Transmitter may be configured before or after installation in the field. It may be useful to configure the transmitter on the bench before installation to ensure that all the configurable parameters are configured correctly for each application. To configure the transmitter on the bench:

1. Connect the transmitter to a 24 V dc power supply (see Figure 13 for allowable power supply voltage and output load limitations).
2. Make sure there is a load of at least 200 Ω in the loop for output code -D and 250 Ω for output code -T to ensure proper communications (not required with output code -I).
3. If the transmitter is not supplied with an integral sensor, attach the sensor to be used to the proper screws (see Figures 9 and 10). The transmitter can be configured without a sensor on the bench, although the FAILSAFE parameter must be configured for OFF.
4. Review all of the configurable parameters and change any as required using the optional Indicator/Configurator or applicable remote configurator.

If the transmitter is to be configured in the field, proceed with the installation (loop wiring, sensor wiring, and mechanical installation), and then review the configurable parameters and reconfigure as required.

Configurable Parameters

The RTT20 Transmitter is microprocessor based. All adjustments to the transmitter can only be performed via the integral or remote configurators.

NOTE: Remote configurators can only be used with the HART and Intelligent versions. The 4-20 mA version (Output Code -I) does not contain a modem, so remote communications are not available. Therefore, all adjustments can be performed with the 1- or 3-line integral indicators only.

There are no mechanical jumpers, potentiometers, or switches that are normally part of an analog type transmitter. The following pages list all of the configurable parameters and the factory default for each of the three different output types. The factory default values have been customized if the transmitter was ordered with optional feature -C1 or -C2. The tables also show which parameters are configurable with the integral vs. remote configurators. Following the tables is an explanation for each parameter.

Table 5. RTT20 With Intelligent Output (Code -D)

Parameter	Capability	Factory Default	Configurable with Integ. Indic.	Configurable with Remote Config.	Application Requirement
Descriptors					
Tag Number	12 characters max	Per S.O.	No	Yes	_____
Tag Name	14 characters max	Tag Name	No	Yes	_____
Location	14 characters max	Location	No	Yes	_____
Device Name	6 characters max	DevNam	No	Yes	_____
Output					
Output	4-20 mA/Digital	4-20 mA	No	Yes	_____
EGUs	C, F, K, R, mV, ohms	Note 1	Yes	Yes	_____
Linearization Mode	EGU or Dewpoint	EGU	No	Yes	_____
Input					
Input	per Model Code	per Model Code	Yes	Yes	_____
Measurement Mode	2, 3 or 4 wire	3 wire RTD	Yes	Yes	_____
Lower Range Value (LRV)	per Model Code	Note 1	Yes	Yes	_____
Upper Range Value (URV)	per Model Code	Note 1	Yes	Yes	_____
Cold Junction EGU	C, F	C	No	Yes	_____
Other					
Sensor Fault Detection	On/Off	On	Yes	Yes	_____
Failsafe (mA output only)	On/Off	On	Yes	Yes	_____
Failsafe Value	Note 2	21.00 mA	No	Yes	_____
Power Supply Freq. (Hz)	50/60	60	No	Yes	_____
Power Supply Filter	Standard/High	High	No	Yes	_____
Damping	0 to 32 seconds	0	No	Yes	_____
Sensor Validation	0.0 to 10.0 seconds	0.5	No	Yes	_____
Intelligent Smoothing	0 to 30 seconds	10	No	Yes	_____
Calibrators Initials	6 characters max	CALINT	No	Yes	_____
1-Line Indicator/Configurator					
Push Buttons	Enable or Disable	Enable	No	Yes	_____
Display	Note 3	EGU	No	Yes	_____
3-Line Indicator/Configurator					_____
Push Buttons	Enable or Disable	Enable	No	Yes	_____
Display (Top line)	Note 3	EGU	No	Yes	_____
Display (Bottom line)	7 characters max	FOXBORO	No	Yes	_____
Configuration Language	Eng, Fr, Ger, Span	English	Yes	No	_____

NOTES:

1. Transmitter configured for 0 to 100 Deg C if calibrated range is not provided.
2. The mA failsafe value is user configurable between 3.6 and 3.8 mA for downscale failsafe or between 20.75 and 23.0 mA for upscale failsafe. Factory default is 3.6 mA for downscale failsafe or 21.00 mA for upscale.
3. The indicator can be configured to display the output in any one of five different ways as follows:
   - EGUs = displays the measured value (temperature)
   - % = displays the percent of output based upon the calibrated range
   - mA = displays the mA output value between 4 and 20 mA
   - EGU and mA = alternates between the EGU and mA value
   - % and EGU = alternates between the % and the EGU

Table 6. RTT20 With HART Output (Code -T)

Parameter	Capability	Factory Default	Configurable with Integ. Indic.	Remote Config.	Applic. Req.
Descriptors					
Tag Number	8 characters max	Per S.O.	No	Yes	_____
Tag Name (Description)	16 characters max	Tag Name	No	Yes	_____
Message	32 characters max	Blank	No	Yes	_____
Output					
EGUs	C, F, K, R, mV, ohms	Note 1	Yes	Yes	_____
Linearization Mode	EGU/Dewpoint	EGU	No	Yes	_____
Burst Mode	On/Off	Off	No	Yes	_____
Multidrop Address	0 to 15	0	No	Yes	_____
Input					
Input	per Model Code	per Model Code	Yes	Yes	_____
Measurement Mode	2, 3 or 4 wire	3 wire RTD	Yes	Yes	_____
Lower Range Value (LRV)	per Model Code	Note 1	Yes	Yes	_____
Upper Range Value (URV)	per Model Code	Note 1	Yes	Yes	_____
Cold Junction	Internal, External, Fixed	Internal	No	Yes	_____
Cold Junction EGU	C, F	C	No	Yes	_____
Other					
Sensor Fault Detection	On/Off	On	Yes	Yes	_____
Failsafe	On/Off	On	Yes	Yes	_____
Failsafe Value	Note 2	21.00 mA	No	Yes	_____
Failsafe Reset	Auto/Latched	Auto	No	Yes	_____
Power Supply Freq. (Hz)	50/60	60	No	Yes	_____
Power Supply Filter	Standard/High	High	No	Yes	_____
Damping	0 to 32 seconds	0	No	Yes	_____
Sensor Validation	0.0 to 10.0 seconds	0.5	No	Yes	_____
Intelligent Smoothing	0 to 30 seconds	10	No	Yes	_____
1-Line Indicator/Configurator					
Push Buttons	Enable or Disable	Enable	No	Yes	_____
Display	Note 3	EGU	No	Yes	_____
3-Line Indicator/Configurator					_____
Push Buttons	Enable or Disable	Enable	No	Yes	_____
Display (Top line)	Note 3	EGU	No	Yes	_____
Display (Bottom line)	7 characters max	FOXBORO	No	Yes	_____
Configuration Language	Eng, Fr, Ger, Span	English	Yes	No	_____

NOTES:

1. Transmitter configured for 0 to 100 Deg C if calibrated range is not provided.
2. The mA failsafe value is user configurable between 3.6 and 3.8 mA for downscale failsafe or between 20.75 and 23.0 mA for upscale failsafe. Factory default is 3.6 mA for downscale failsafe or 21.00 mA for upscale.
3. The indicator can be configured to display the output in any one of five different ways as follows:
   - EGUs = displays the measured value (temperature)
   - % = displays the percent of output based upon the calibrated range
   - mA = displays the mA output value between 4 and 20 mA
   - EGU and mA = alternates between the EGU and mA value
   - % and EGU = alternates between the % and the EGU

Table 7. RTT20 with 4-20 mA Output (Code -I)

Parameter	Capability	Factory Default	Application Requirement
Output			
Units	C, F, R, or K	C	_____
Input			
Input	per Model Code	per Model Code	_____
Measurement	2, 3, or 4 Wire	3 Wire RTD	_____
Zero (LRV)	per Model Code	Note 1	_____
Full Scale (URV)	per Model Code	Note 1	_____
Other			
Sensor Fail Safe	On/Off	On	_____
Fail Safe Report	Low, High, Off	High	_____
3-Line Indicator/Configurator			
Configuration Language	English, German, French, Spanish	English	_____

NOTES:
1. Transmitter configured for 0 to 100 Deg C if calibrated range is not provided.
2. All adjustments to the 4-20 mA transmitter (Output Code -I) can only be performed using the optional 1-line or 3-line Indicator/Configurator. Remote communications are not available.

Parameter Descriptions

To help guide you through the configuration of the transmitter, the following is a brief description of the configurable parameters. Please remember that not all parameters are applicable to all three different types of outputs, and not all parameters are configurable from the integral Indicator/Configurators.

Descriptors (Applicable to Intelligent and HART Output Versions Only)

Tag Number	Normally configured to the plant tag number, such as *TT301B*. The Tag Number is the primary identifier when communicating with a transmitter using a remote configurator. This field is different than the bottom line of the 3-line indicator, unless both are configured to be the same.
Tag Name or Message	Normally configured as the Tag Name, such as *BOILER TEMP.*

Location Normally configured to show where the transmitter is located, such as *PLANT 2A*.

Device Name This field is only applicable to Intelligent transmitters configured for digital output and wired to FBM18, 39, 43, 44, or 46. This field is the "letterbug" of the transmitter to ensure that the system is digitally connected to the correct transmitter. The default for this parameter is *DevNam* for secure protocol with I/A Series Control systems with 3.0 or later software.

Output

Output This parameter is applicable to the Intelligent output version only. The output is configurable for *4-20 mA* output or *digital*. Digital is used only when the output is to be digitally integrated to I/A Series System through FBM18, 39, 43, 44, or 46. When configured for digital output, communications between the transmitter and the control system occur at 10 times per second.

Engineering Unit (EGU) Configurable to C, F, K, or R for thermocouple or RTD sensors. If the input is configured for *mV* or *ohms*, the engineering units should be mV or ohms, respectively.

Linearization Mode Configurable for *EGU* or *Dewpoint*. This parameter should be set to EGU to make the output linear with temperature. It should be configured for Dewpoint only when the output wants to be linear with Dewpoint (for example, when using Foxboro 2781 Dewpoint sensor).

Burst Mode Applicable to HART output version only. In the *Off* position, digital communications over the HART network occur at 2 times per second. This parameter should be turned *On* only if the transmitter is communicating digitally to a HART compatible control system and the multidrop address is set to 0. When in the Burst mode, it provides faster digital communications (approx 3 times per second) from the transmitter to the host control system. Burst mode cannot be used with multidrop wiring.

Multidrop Address Applicable to HART output version only. The default of *0* allows the transmitter to operate in the standard point-to-point, two wire 4-20 mA mode. If the transmitter is to be multidrop wired, the address must be changed to a number from *1* to *15*. All transmitters installed in a multidrop node must have a different multidrop address, and Burst mode must be configured *Off*. With multidrop operation, the analog current value will be fixed at 4 mA. A maximum of 15 transmitters can be multidropped (networked) over a single pair of wires. For intrinsically safe applications, the maximum number of transmitters per multidrop node is 3 or 4, depending upon the barrier used. However, the HART Communication Foundation does not recommend multidrop installations for intrinsically safe applications.

Input

Input	Configurable for all popular RTDs and thermocouples. When an RTD is selected, you must also select whether it is a 2-, 3-, or 4-wire sensor (Measurement Mode). Can also be configured for various mV or ohms sources.
Measurement Mode	Selected to match the number of wires coming from the sensor (2-, 3-, or 4-wire).
Lower Range Value (LRV) or Zero	This is the measurement value corresponding to the 4 mA point. This value can be electronically changed without the need for calibration equipment.
Upper Range Value (URV) or Full Scale	This is the measurement value corresponding to the 20 mA point This value can be electronically changed without the need for calibration equipment.
Cold Junction	The cold junction reference is used with thermocouple input and HART Output (code –T) only. The junction can be programmed for *Internal, External,* or *Fixed.*
Cold Junction (EGU)	The engineering units that are displayed on the remote configurators for the cold junction temperature can be configured for *F* or *C.* Used with thermocouple input only.

Other

Sensor Fault Detection or Sensor Failsafe	The transmitter checks for sensor problems every three seconds. If configured for *ON* and a fault is detected, the output goes to the configured failsafe condition. If configured for *OFF,* the output will not be forced to the failsafe value when a sensor fault is detected.
Failsafe (mA output only)	If the transmitter detects an internal fault or a sensor fault (when configured for *ON*), the mA will be driven to the failsafe value.
Failsafe Value or Failsafe Report	When the Failsafe is turned On and a fault is detected, the output will be driven below 4 mA or above 20 mA. On the 4-20 mA version (Code-I), the values are set at 3.6 and 21 mA. On the HART and Intelligent versions, the milliamp failsafe current is adjustable between 3.6 and 3.8 mA for downscale and between 20.75 and 23.00 mA for upscale failsafe.
Failsafe Reset	When a transmitter or sensor fault occurs and the problem has been corrected, the output will return to normal operation if configured to *AUTO.* If configured for *LATCHED,* the power supply will have to be turned off and back on before the transmitter will resume normal operation. This parameter is applicable to HART output (code -T) only,
Power Supply Freq	Should be set to the AC frequency of the power supply, either *50* or *60 Hz.*
Power Supply Filter	This parameter helps eliminate noise originating from the power supply. This should always be set to *HIGH.* Set to *STD* only if you require extremely fast response with the damping value set for 0 seconds.

Damping The basic transmitter has a response time of approximately 1.2 seconds for a 90% response to an 80% input step. For processes which have temperature swings that are beyond the Intelligent Smoothing band, and require a damped output, increase the damping to a higher value. The damping is selectable between 0 and 30 seconds. Before increasing the damping, it is suggested that you increase the Intelligent Smoothing time and the Sensor Validation time to the maximum before increasing the damping value.

Sensor Validation Adjustable between 0 and 10 seconds. This is the lag time that the microprocessor holds and compares the input to past inputs. If the value does not match the pattern determined by three different filters, that value is discarded rather than used as a measurement. Increasing the sensor validation time eliminates spikes due to input (sensor) noise.

Intelligent Smoothing Any process or electrical noise is eliminated by a digital filtering algorithm and is smoothed by averaging the input over an adjustable time period. The averaging time can be set between 0 and 30 seconds. The Intelligent smoothing action is bypassed with 0 seconds, or maximized with 30 seconds. When the input changes quickly, the smoothing band is exceeded and the output tracks the input, temporarily bypassing the smoothing action. Once the input settles at a new value, the filtering algorithm is automatically reactivated, eliminating noise and producing an accurate and stable output. The smoothing band is approximately ±0.6 ohms or ±0.5 mV, depending upon input configuration (RTD vs. T/C), and is not adjustable. Therefore at a 100 °C measurement, the intelligent smoothing band is approximately ±2 °C for an RTD or ±8 °C for a thermocouple.

Calibrators Initials The 6-character field can be used to designate who calibrated the transmitter. It can also be used to insert the date of last calibration (*Jun 96*, for example).

1-Line Indicator/Configurator

Push Buttons Configurable to *Enable* or *Disable* from the remote configurators. *Disable* would be selected for security reasons only if you do not want anyone to reconfigure the transmitter from the integral Indicator. This is not a configurable parameter on the 4-20 mA output version (output code -I), because the transmitter can *only* be reconfigured through the Indicator.

Display The indicator can be configured to display the output in any one of five different ways as follows:

EGUs = displays the measured value (temperature)
% = displays the percent of output based upon the calibrated range
mA = displays the mA output value between 4 and 20 mA
EGU and mA = alternates between the EGU and mA value
% and EGU = alternates between the % and the EGU

3-Line Indicator/Configurator

Push Buttons	Configurable to *Enable* or *Disable* from the remote configurators. *Disable* would be selected for security reasons only if you do not want anyone to reconfigure the transmitter from the integral Indicator. This is not a configurable parameter on the 4-20 mA output version (Output Code -I), because the transmitter can be reconfigured *only* through the Indicator.
Display	The top line of the 3-line indicator can be configured to display the output in any one of five different ways as follows: *EGUs* = displays the measured value (temperature *%* = displays the percent of output based upon the calibrated range) *mA* = displays the mA output value between 4 and 20 mA *EGU and mA* = alternates between the EGU and mA value *% and EGU* = alternates between the % and the EGU
Display (Bottom line)	Normally configured to the plant tag number, such as TT301B.
Configuration Language	The configuration language used by the 3-line indicator can be configured to *English, French, Spanish* or *German.*

Indicator/Configurator

An optional 1-Line or 3-Line Indicator/Configurator can be added to your transmitter or moved from transmitter to transmitter. See Figure 19.

In normal operating mode, the 1-Line Indicator displays the output on its 4-digit display. It also automatically displays alternating flashing message "FAIL" and "SAFE" to denote a sensor or transmitter fault. An indication of -999 or 9999 indicates that the output has exceeded the limits of the display. In configuration mode, it displays configuration selections as four-digit codes.

In normal mode, the 3-Line Indicator displays the output on the first line of its display. In configuration mode, it displays configuration values. The second line of this indicator is an 11-segment bargraph that displays readings in percent of calibrated range. Temperatures outside the calibrated range are indicated by a left-pointing (underrange) or right-pointing (overrange) arrow. The third line displays seven character user configurable tag information in normal mode.

In normal operating mode, the 3-Line Indicator also automatically displays the following fault messages:

- 9999.9°C (or F) on the first line of the display to denote that the temperature exceeds the limit of the display. The third line will read DFAIL.
- Alternating flashing message "FAIL" and "SAFE" on the third line of the display to denote a sensor or transmitter fault.

In configuration mode, this line displays the menu item.

Addition of the Indicator/Configurator is accomplished by merely plugging it in. See Figure 20.

1-LINE INDICATOR 3-LINE INDICATOR

Figure 19. 1-Line and 3-Line Indicator

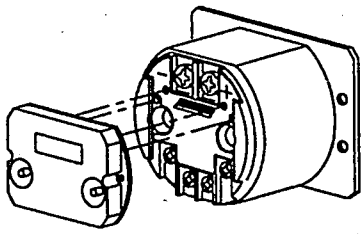

Figure 20. Addition of Indicator/Configurator

Changing the configuration with the Indicator/Configurator is similar to setting the time on a digital watch. The transmitter steps through a menu of parameters in response to the NEXT/NO and ENTER/YES buttons on the indicator faceplate. See Tables 5 through 7. Whenever the buttons are being used to reconfigure a transmitter, if neither button is pressed during a 2-minute period, the transmitter returns to normal operation. Also, if the power is interrupted for more than 10 seconds in the configuration mode, the transmitter returns to normal operation.

Press the NEXT/NO button to move to the next item in the menu structure or to answer "No" to a prompt question. Press the ENTER/YES button to accept or enter an item or to answer "Yes" to a prompt question.

Configuration Procedure

1. Connect a 24 V dc power supply to the transmitter. Observe correct polarity of the power supply and transmitter connections.
2. Turn on the power supply and wait until the display is functional (typically 5 to 8 seconds).
3. Following the configurator flowchart (Figure 21), use the NEXT/NO button to go to the first parameter to be reconfigured and press ENTER/YES. Continue to follow the flowchart to configure your transmitter.
   Note that the flowchart shows both a four-digit code and text in each box. The code is displayed on a 1-Line Indicator and an abbreviated form of the text on the third line of a 3-Line Indicator.

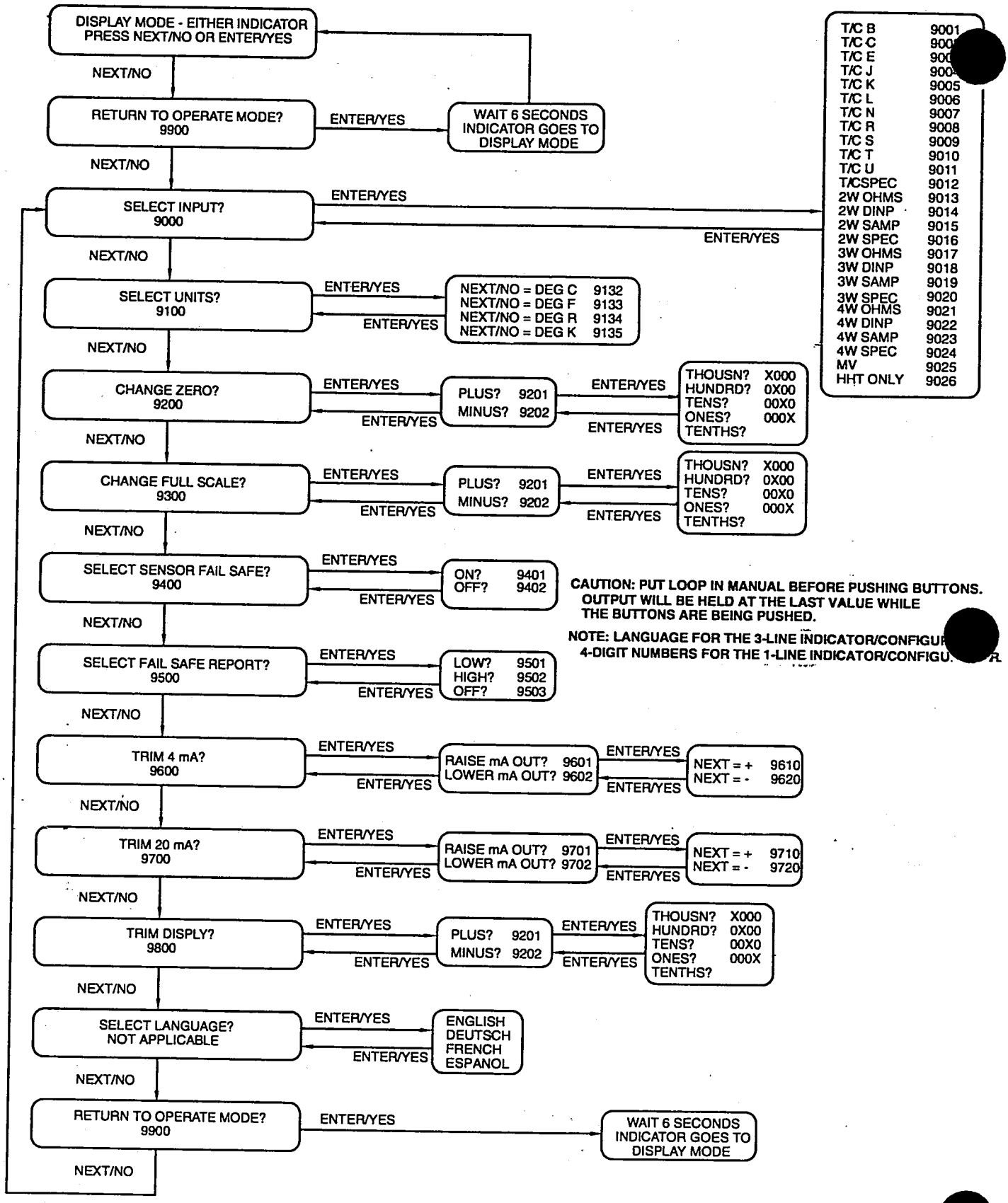

Figure 21. Indicator Configurator Flowchart with Transmitter Revision 02 Software

Operation

In normal operation, the RTT20 Transmitter continuously receives input signals from RTDs, thermocouples, ohms sensors, or dc mV sources and transmits a linear 4-20 mA dc or FoxCom digital output signal. The 4-20 mA output and configurable parameters can be displayed via a PC10 Configurator, HHT Terminal, or HART Communicator and the optional 1-Line or 3-Line Indicator/Configurator.

The optional indicators can be configured to display the output in any one of five different ways as follows:

EGUs = displays the measured value (temperature)
% = displays the percent of output based upon the calibrated range
mA = displays the mA output value between 4 and 20 mA
EGU and mA = alternates between the EGU and mA value
% and EGU = alternates between the % and the EGU

The 1-Line Indicator displays the output on its 4-digit display. It also automatically displays alternating flashing messages "FAIL" and "SAFE" to denote a sensor or transmitter fault. An indication of -999 or 9999 indicates that the output has exceeded the limits of the display.

The 3-Line Indicator displays the output on the first line of its display. The second line of this indicator is an 11-segment bargraph that displays readings in percent of calibrated range. Temperatures outside the calibrated range are indicated by a left-pointing (underrange) or right-pointing (overrange) arrow. The third line displays seven character user configurable tag information. It also automatically displays the following fault messages:

- 9999.9°C (or F) on the first line of the display to denote that the temperature exceeds the limit of the display. The third line will read DFAIL.
- Alternating flashing messages "FAIL" and "SAFE" on the third line of the display to denote a sensor or transmitter fault.

When a sensor or transmitter fault occurs and the problem has been corrected, the output automatically resumes normal operation. On the HART version, the power supply must be cycled if the Failsafe Reset is configured as Latched.

Calibration

The RTT20 Transmitter has an advanced self-calibration routine that greatly extends the time between recalibrations. Every three seconds, the transmitter checks the zero and full scale output against highly accurate and stable internal voltage signals that are referenced back to the factory calibration stored in nonvolatile EEPROM memory. Any adjustments are made automatically without interrupting the output signal.

Trimming 4 - 20 mA output

If you have a 4-20 mA output, you may trim the output at 4 mA and 20 mA by connecting a digital voltmeter and precision resister in the output loop (see Figure 22) and adjusting the output in Configuration mode. For procedure using the integral indicator/configurator, see flowchart in Figure 21. For procedure using a remote configurator, see MI 020-479 (PC10 Configurator), MI 020-469 (HHT Terminal), or MI 020-460 (HART Communicator).

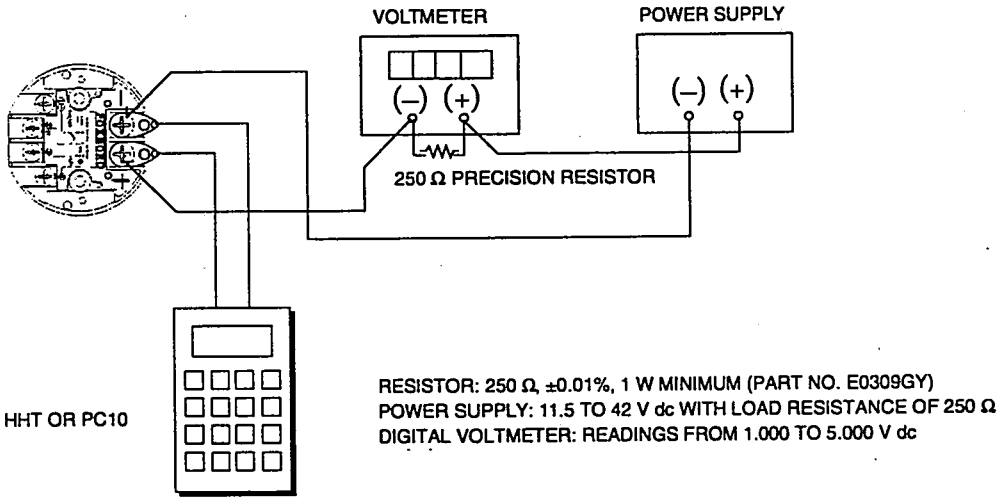

Figure 22. 4-20 mA Output Calibration Setup

1-, 2-, 3-, or 5-Point Calibration

A 1-, 2-, 3-, or 5-point calibration may be done using a PC10 Configurator, HHT Hand-Held Terminal, or HART Communicator. See MI 020-479, MI 020-469, or MI 020-460 respectively. This type of calibration cannot be done using the optional indicator/configurator.

Custom Curve Calibration

Your transmitter may be calibrated to a custom curve using a PC10 Configurator, HHT Hand-Held Terminal, or HART Communicator. See MI 020-479, MI 020-469, or MI 020-460 respectively. This type of calibration cannot be done using the optional indicator/configurator.

Maintenance

The RTT20 Transmitter basic unit has no moving parts and is a completely sealed unit. If there is a problem, refer to the following troubleshooting section for possible corrective actions. If you cannot find any external problem, contact you local Foxboro representative or return the transmitter to Foxboro for repair.

CAUTION: The transmitter is completely sealed unit and cannot be repaired. Any attempt to open the basic transmitter will void the warranty.

DANGER: For nonintrinsically safe installations, to prevent a potential explosion in a Division 1 hazardous area, deenergize transmitter before you remove threaded housing cover. Failure to comply with this warning could result in an explosion resulting in severe injury or death.

Troubleshooting Problems

Normally, any problem activates a fault message on the optional indicators or remote configurators, alerting the user that there is a problem. The following lists various problems and corrective actions:

Communication Failures with Remote Configurators

- Confirm that the power supply meets specifications for current, voltage, ripple, and noise.
- Follow troubleshooting information in HHT Hand-Held Terminal, PC10 Configurator, or HART Communicator instruction, MI 020-469, MI 020-479, or MI 020-460 respectively.
- Refer to Fault Analysis section of the applicable remote configurator.
- Refer to Attaching Remote Configurators.

Nothing Displayed on Indicator

- Confirm that transmitter is in the operational mode by using a remote configurator.
- Carefully clean the four gold-plated pins on the back of the indicator and reinstall.
- Install indicator in another transmitter that is working properly.

High Output

- Check the process variable to see if it exceeds the Upper Range Value (URV).
- Check for open or shorted sensor leads.

- Check loop wiring for corroded connections.
- Check the calibrated range to ensure that the process variable is less than the URV.
- Check that the transmitter is configured for the correct sensor type.
- On transmitter with HART output (Code -T), turn power supply off and then back on if Failsafe Reset parameter is configured as Latched.

Low Output

- Check the process variable to see if it is below the Lower Range Value (LRV).
- Check for open or shorted sensor leads.
- Check the calibrated range to ensure that the process variable is more than the LRV.
- Check that the transmitter is configured for the correct sensor type.
- On transmitter with HART output (Code -T), turn power supply off and then back on if Failsafe Reset parameter is configured as Latched.

No Output

- Check wiring for breaks.
- Make sure that there is at least 12 V dc at the transmitter loop wiring screws.
- Check wiring polarity.

Erratic Output

- Check for multiple grounds.
- Check for intermittent shorts or opens in the loop wiring.

Transmitter with Output Code -D (Installed as a 4-20 mA Transmitter) displays a Constant Output of 12 mA

- Transmitter is configured for digital output. Reconfigure for analog 4-20 mA output.

Transmitter Output Less Than 20 mA Under All Conditions

- Make sure that there is at least 12 V dc at the transmitter loop wiring screws. This problem is usually the result of too much load for the power supply, and when the transmitter "wants" to output 20 mA, the voltage at the transmitter drops to less than 12 volts.

Indicator Displays Message

- -999 or 9999 on 1-Line Indicator denotes an output greater than the capability of the display.
- FAIL and SAFE (alternately) on 1-Line Indicator denotes a transmitter or sensor fault.
- 9999.9°C (or F) on the first line and DFAIL on the third line of a 3-Line indicator denotes an output greater than the capability of the display.

- FAIL and SAFE (alternately) on the third line of a 3-Line Indicator denotes a transmitter or sensor fault.

Display Indicates Transmitter or Sensor Fault

- Check that transmitter is properly configured for the sensor connected.
- Check sensor wiring connections per transmitter wiring section of this instruction.

Replacement of Integrally Mounted Sensor

1. Turn off transmitter power source.
2. Remove the housing cover by rotating it counterclockwise. Loosen and turn custody transfer lock first if applicable.
3. Disconnect sensor wires from transmitter terminals.
4. Remove sensor.
5. Install new sensor by reversing Steps 1-4 above.

CAUTION: When replacing housing cover, hand tighten it as much as possible so that O-ring is fully captured.

Replacement of Basic Transmitter

1. Turn off transmitter power source.
2. Remove the housing cover by rotating it counterclockwise. Loosen and turn custody transfer lock first if applicable.
3. Disconnect input and output wires from transmitter terminals.
4. Remove Basic Transmitter by removing two screws that secure it to the housing or DIN rail.
5. Install new transmitter by reversing Steps 1-4 above.

CAUTIONS:
1. When replacing the two mounting screws, do not overtighten.
2. When replacing housing cover, hand tighten it as much as possible so that O-ring is fully captured.

Index

B
Burst Mode 31

C
Calibration 39
Communications 7
Conduit Drainage 14
Conduit Seals 15
Configuration 27
Custody Transfer Lock and Seal 11

E
Electrical Safety Requirements 12

G
General Description 1
Grounding (Earthing) 24

I
Identification 2
Indicator/Configurator 34
Installation 9

L
Loop Wiring 17

M
Maintenance 41
Mounting 9
Multidrop Communication 24

O
Operation 37

P
Positioning Transmitter 11

R
Reference Documents 3
Remote Configurators 25
Replacement of Basic Transmitter 43
Replacement of Integrally Mounted Sensor 43

S
Sensor Connections and Wiring 16
Software Compatibility 7
Specifications 3

T
Troubleshooting 41

U
Unpacking 2

W
Wiring 12

APPENDIX B-8

MANUFACTURER'S O&M MANUAL, DIGITAL INDICATOR

INFINITY® SERIES

THE NEW STANDARD FOR QUALITY

INF7

INFINITY™ Rate Meter / Totalizer Clock • Batch Controller

Operator's Manual

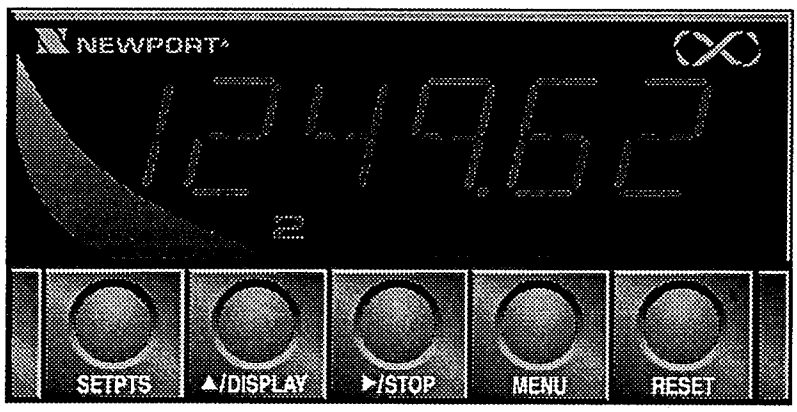

Newport Electronics, Inc.

Additional products from

Newport Electronics, Inc.

THE NEW STANDARD FOR QUALITY

Counters	Rate Meters
Frequency Meters	Timers
PID Controllers	Totalizers
Clock/Timers	Strain Gauge Meters
Printers	Voltmeters
Process Meters	Multimeters
On/Off Controllers	Soldering Iron Testers
Recorders	pH pens
Relative Humidity	pH Controllers
Transmitters	pH Electrodes
Thermocouples	RTDs
Thermistors	Thermowells
Wire	Flow Sensors

In the U.S.A. and Canada: 1-800-NEWPORT
In Mexico: (95) 800-NEWPORT
Or call your local NEWPORT Office.

This documentation may not be copied, photocopied, reproduced, translated, or reduced to any electronic medium or machine-readable form, in whole or in part, without prior written consent of NEWPORT ELECTRONICS, INC.

© Copyright 1995 NEWPORT ELECTRONICS, INC. ALL RIGHTS RESERVED.

This product may be covered by one or more of the following patents: U.S. Patents Des. 336,895; 5,274,577/FRANCE Brevet No. 91 12756/SPAIN 2039150/U.K. Patent No. 2248954 and other international patents pending. The bezel design is a registered trademark in the U.S. of NEWPORT ELECTRONICS, INC.

From the Technical Library of: _____

MAL0395ABM5B

http://www.newportelect.com
e-mail: info@newportelect.com

Table of Contents - P7000 Counter-Timer

HOW TO USE THIS MANUAL

This manual is organized to follow a sequence of setting up the meter, configuring it, and operating it. The table of contents reflects this sequence. The contents also show that the manual contains a lot of information; we have taken care to answer likely questions and provide all the information you may need. We have purposely included all sections in the contents, not to intimidate you, but to allow you to use it as an index–**to easily pinpoint specific information and go directly to it.**

As always, read those sections that contain the information you need–and leave those that don't.

SECTION 1 INTRODUCTION **Page**

1.1 Description 1-1
1.2 Features 1-1
1.3 Meter Modes 1-2
1.3.1 Rate Meter/Totalizer 1-2
1.3.2 Rate Meter/Totalizer/Square Root Extractor 1-2
1.3.3 Batch Controller 1-2
1.3.4 Clock 1-2
1.4 Optional Boards Overview 1-3
1.4.1 Isolated Pulse Input Board 1-3
1.4.2 Isolated Analog Input Board 1-3
1.4.3 Isolated Analog Output Board 1-4
1.4.4 Isolated Parallel BCD Output Board 1-4
1.4.5 Dual Relay Output Board 1-4
1.4.6 Isolated RS-232 Serial Communications Board 1-4
1.4.7 Isolated RS-485 Serial Communications Board 1-5
1.5 Available Models and Options 1-5

SECTION 2 SETUP

2.1 Unpacking 2-1
2.2 Safety Precautions 2-4
2.2.1 Power Voltage 2-4
2.2.2 Power Wiring 2-5
2.2.3 Humidity 2-5

Table of Contents

		Page
2.2.4	Fumes and Gases	2-5
2.3	Assembly/Disassembly	2-5
2.3.1	Opening the Meter	2-5
2.3.2	Checking and Installing Jumpers	2-9
2.3.2.1	Main Board Jumpers	2-10
2.3.2.2	Optional Input and Output Boards Jumper Information	2-12
2.3.3	Installing Optional Boards	2-13
2.3.3.1	Isolated Pulse Input Board	2-15
2.3.3.2	Isolated Analog Input Board	2-16
2.3.3.3	Isolated Analog Output Board	2-17
2.3.3.4	Isolated Parallel BCD Output Board	2-18
2.3.3.5	Dual Relay Output Board	2-19
2.3.3.6	Isolated RS-232 Serial Communications Board	2-19
2.3.3.7	Isolated RS-485 Serial Communications Board	2-20
2.3.4	Reinserting Main Board Assembly Into the Case	2-20
2.3.5	Wiring	2-20
2.3.5.1	P1 - AC Power Wiring	2-21
2.3.5.2	Battery Backup Connections	2-21
2.3.5.3	P2 - Control and Input/Output Wiring	2-22
2.3.5.4	Basic Meter Input Wiring	2-23
2.3.5.5	Isolated Pulse Input Board Wiring	2-23
2.3.5.6	Isolated Analog Input Board Wiring	2-23
2.3.5.7	Isolated Analog Output Board Wiring	2-23
2.3.5.8	Isolated Parallel BCD Output Board Wiring	2-23
2.3.5.9	Dual Relay Output Board Wiring	2-24
2.3.5.10	Isolated RS-232 or RS-485 Serial Communications Board Wiring	2-24
2.4	Bench-Top Assembly	2-24
2.5	Panel-Mount Assembly	2-27
SECTION 3	**FRONT AND REAR FEATURES**	
3.1	Front-Panel Displays and Buttons	3-1
3.2	Rear Connectors	3-2
SECTION 4	**BASIC CONCEPTS AND APPROACHES TO SETUP AND CONFIGURATION**	
4.1	Choosing an Operating Mode	4-1
4.2	Mode-Associated Measurements	4-2
4.3	Using Scale Factors	4-2
4.4	Using Offsets	4-2
4.5	Automatic Scale and Offset	4-2
4.6	Overflow Values and Exponential Format	4-3
4.7	Negative-True Logic	4-3
4.8	Different Meter Modes	4-3

		Page
4.9	Setpoints	4-4
4.9.1	Setpoint Assignments	4-4
4.9.2	Configuring Setpoints	4-6
4.10	Resets and Stops	4-6
4.10.1	Power-On (Hard) Reset	4-6
4.10.2	Configuration (Cold) Reset	4-6
4.10.3	Setpoint-Only Reset	4-7
4.10.4	Rate and Sq Rt Mode Resets	4-7
4.10.4.1	RESET-A	4-7
4.10.4.2	RESET-B	4-8
4.10.4.3	RESET-C	4-8
4.10.4.4	Front-Panel RESET	4-8
4.10.5	Batch Mode Resets	4-9
4.10.5.1	RESET-A	4-9
4.10.5.2	RESET-B	4-9
4.10.5.3	RESET-C	4-9
4.10.5.4	Front-Panel RESET	4-10
4.10.5.5	Autoreset	4-10
4.10.6	STOP	4-10
4.11	Counting Up or Down	4-10
4.11.1	Counting Up	4-11
4.11.2	Counting Down	4-11
4.12	An Example Showing Setpoint and Reset Control	4-12
SECTION 5	**CONFIGURING THE METER**	
5.1	Parameters, Choices, and Settings	5-1
5.2	The Basics of Configuration	5-2
5.3	Lockouts	5-3
5.3.1	Lockouts and Corresponding Actions	5-4
5.3.2	Setting Lockouts	5-7
5.3.3	Removing the S1-A Jumper for Added Security	5-8
5.4	Other Meter Parameters	5-8
5.4.1	MODE (Operating Mode)	5-8
5.4.2	CNFG 1 through CNFG 4 (Configuration Parameters)	5-8
5.4.3	AVG.CNF (Running Average Configuration)	5-16
5.4.4	IN.SC.OF (Input Scale and Offset)	5-17
5.4.5	OT.SC.OF (Output Scale and Offset)	5-18
5.4.6	RTE DP (Rate Decimal Point)	5-20
5.4.7	RTE OF (Rate Offset)	5-20
5.4.8	RTE SC (Rate Scale)	5-21
5.4.9	TOT DP (Total Decimal Point)	5-21
5.4.10	TOT OF (Total Offset)	5-22
5.4.11	TOT SC (Total Scale)	5-22
5.4.12	AL TI (Alarm Time)	5-23

		Page
5.4.13	GATE T (Gate Time)	5-23
5.4.14	BAUD, SER.CNF, DAT FT, BUS FT, ADDRES, SER TI (Baud Rate, Serial Configuration, Data Format, Bus Format, Device Address, Serial Time)	5-24
5.4.15	SET TI (Set Time)	5-27
5.4.16	BAT DP (Batch Decimal Point)	5-28
5.4.17	B LOAD (Batch Load)	5-28
5.4.18	BAT SC (Batch Scale)	5-29
5.4.19	CAL VZ, CAL VS, CALmAZ, and CALmAS (Calibrate Voltage Zero, Calibrate Voltage Span, Calibrate milliAmp Zero, Calibrate milliAmp Span)	5-29
5.5	Step-by-Step Programming Example 1: Rate Mode; Shaft RPM from a Gear-Tooth Detector	5-29
5.5.1	Determining the Rate Scale (RTE SC)	5-30
5.5.2	Configuring the Meter	5-30
5.6	Step-by-Step Programming Example 2: Linear Flow; Adding TOTAL to RATE with Excitation from the Basic Meter	5-32
5.6.1	Determining the Rate Decimal Point (RTE DP) and Rate Scale (RTE SC)	5-32
5.6.2	Determining the Total Decimal Point (TOT DP) and Total Scale (TOT SC)	5-33
5.6.3	Configuring the Meter	5-33
SECTION 6	**OPERATING THE METER**	
6.1	Rate Mode	6-1
6.2	Sq Rt Mode	6-2
6.3	Batch Mode	6-2
APPENDICES		
A	**Basic Meter:** General Information, Specifications, Jumper Configuration, and Wiring	A1
B	**Isolated Pulse Input Board:** General Information, Specifications, Jumper Configuration, and Wiring	B1
C	**Isolated Analog Input Board:** General Information, Specifications, Jumper Configuration, Wiring, and Calibration	B1
D	**Isolated Analog Output Board:** General Information, Specifications, Wiring, and Calibration	D1
E	**Isolated Parallel BCD Output Board:** General Information, Specifications, Jumper Configuration, And Wiring	E1
F	**Dual Relay Output Board:** General Information, Specifications, Jumper Configuration, and Wiring	F1

Page

G Isolated RS-232 and RS-485 Serial Communications Boards:
General Information and Specifications G-1
H Error Messages H-1
J Factory Preset Configuration Settings/ User Settings J-1
K Ramp Specifications K-1

Notes:

1. Introduction

1.1 DESCRIPTION

The P7000 Counter Timer is a multifunctional panel meter that can measure counts, rates, flows, times, totals and batches from pulse and analog input sources over the range of 0.2 to 20,000 Hz.

The meter can function in four different modes and be applied to a wide range of applications, serving functions as simple as displaying incoming pulses–or as complex as detecting out-of-limits conditions, triggering alarms, and channeling communications for a process control system.

The front panel displays values and messages with six, 14-segment LEDs, indicates which mode-associated measurement is being displayed through three Measurement LEDs, and indicates alarm status through four Setpoint LEDs. Five buttons below the LED display allow easy front-panel configuration and access to the meter's many features. These features can also be accessed through digital communications.

The meter can be mounted in a panel or simply placed on a bench top.

1.2 FEATURES

The following list outlines the P7000 meter's features.

- Six-digit display
- Microprocessor-based, with nonvolatile memory-no battery backup required
- Configurable via front-panel push buttons and/or through RS-232 or RS-485 ports
- High accuracy
- Large digital offset enabling easy scaling in engineering units
- Five open-collector outputs for RATE, TOTAL, BATCH count, BAT NO (Number of Batches), and TIME
-
- Programmable decimal point selection
- Read/Display/Output rates up to 25 per second
- Plug-in input and output optional boards

1.3 METER MODES

The P7000 meter can be configured to operate in four different modes. These are Rate Meter/Totalizer (Rate), Rate Meter/Totalizer/Square Root Extractor (Sq Rt), Batch Controller (Batch), and Clock (C).

1.3.1 RATE METER/TOTALIZER

As a rate meter/totalizer, the meter measures the rate, totalizes and displays pulses in any engineering units required, and provides unregulated sensor excitation. The meter can also provide running averages and process time in HH:MM:SS format in this mode.

With the addition of the Isolated Analog Input Board, analog signals can be received and displayed in the required engineering units.

1.3.2 RATE METER/TOTALIZER/SQUARE ROOT EXTRACTOR

As a rate meter/totalizer/Square Root Extractor, the meter can accept dc signals from any typical differential flow transmitter and extract the square root to provide highly accurate flow values. Digital calculation ensures accurate readings–which can be displayed in any engineering units desired.

This mode requires the Isolated Analog Input Board.

1.3.3 BATCH CONTROLLER

As a batch controller, the meter can count the batch, number of batches completed, and the grand total of pulses received. In addition, it has an internal timer for process time displayed in HH:MM:SS format. Any of the above functions can be displayed during the process without interrupting or stopping the process.

1.3.4 CLOCK

As a clock, the meter can function in real, 24-hour time mode using the HH:MM:SS display format. It can also function as a 99-hour process timer. Time is derived from the power line frequency, 50 or 60 Hz, which ensures accuracy. If power fails and the meter is equipped with a backup battery, the clock function continues working (although the display will not be lit). Refer to Section 2.3.5.2 for information on battery backup.

The clock mode is always active, running in the background of the other three modes.

1.4 OPTIONAL BOARDS OVERVIEW

The P7000 meter is designed to accommodate numerous optional boards.

These boards transform the meter into a single instrument that "can do it all." On the input end, they allow the meter to accept signals from a wider variety of sources, and on the output end, to communicate with, or control a wide variety of other devices.

1.4.1 ISOLATED PULSE INPUT BOARD

The Isolated Pulse Input Board is a signal conditioning board that allows the meter to accept low- and high-level input signals from sources whose pulses may be too weak for the Main Board of the meter to handle, or that need selectable hysteresis and/or regulated excitation. This board is used mainly for weak magnetic pick-ups, high-level line voltage sources, and NAMUR sources.

If this board is used, the Isolated Analog Input Board cannot be used.

(See Appendix B for specifications, jumper configuration, wiring, and applications for the Isolated Pulse Input Board.)

1.4.2 ISOLATED ANALOG INPUT BOARD

The Isolated Analog Input Board is a signal conditioning board that converts analog signals to frequency and allows the meter to accept input signals from non-pulsed or direct current sources. This board is often used with differential pressure flow transmitters to provide linear flow values. (First-time installation requires calibration using calibration data on the back of the board.)

If this board is used, the Isolated Pulse Input Board cannot be used.

(See Appendix C for specifications, jumper configuration, wiring, and applications for the Isolated Analog Input Board.)

1.4.3 ISOLATED ANALOG OUTPUT BOARD

The Isolated Analog Output Board converts display readings into voltage or current output. This board is often used as a control board in process applications. (First-time installation requires calibration using calibration data on the back of the board.)

(See Appendix D for specifications, jumper configuration, wiring, calibration, and applications for the Isolated Analog Output Board.)

1.4.4 ISOLATED PARALLEL BCD (BINARY-CODED DECIMAL) OUTPUT BOARD

The Isolated Parallel BCD Output Board produces binary-coded decimal output for direct communication with a printer or with an intelligent device such as a PLC (Programmable Logic Controller).

If this board is used, the Dual Relay Output Board cannot be used.

(See Appendix E for specifications, jumper configuration, wiring, and applications for the Isolated Parallel BCD Output Board.)

1.4.5 DUAL RELAY OUTPUT BOARD

The Dual Relay Output Board enables setpoint-triggered switching to an external device.

If this board is used, the Isolated Parallel BCD Output Board cannot be used.

(See Appendix F for specifications, jumper configuration, wiring, and applications for the Dual Relay Output Board.)

1.4.6 ISOLATED RS-232 SERIAL COMMUNICATIONS BOARD

The Isolated RS-232 Serial Communications Board provides an isolated digital communications channel between a single meter and a computer, serial printer, or other device.

If this board is used, the RS-485 Serial Communications Board cannot be used.

(See Appendix G for specifications, jumper configuration, wiring, and applications for the Isolated RS-232 Serial Communications Board.)

1.4.7 ISOLATED RS-485 SERIAL COMMUNICATIONS BOARD

The Isolated RS-485 Serial Communications Board provides an isolated digital communications channel where multiple meters (addressed from 0 to 199) can communicate with a single computer.

If this board is used, the RS-232 Serial Communications Board cannot be used.

(See Appendix G for specifications, jumper configuration, wiring, and applications for the Isolated RS-485 Serial Communications Board.)

1.5 AVAILABLE MODELS AND OPTIONS

The following models and options are available. Optional boards are either installed at the time of purchase, or available as separate items and installed by the user after purchase.

BASIC MODELS

MODEL NUMBER	DESCRIPTION
INF70	Red LED Display, 115 V ac, 50/60 Hz
INF71	Red LED display, 230 V ac, 50/60 Hz
INF72	Green LED display, 115 V ac, 50/60 Hz
INF73	Green LED display, 230 V ac, 50/60 Hz

INPUT OPTIONS

MODEL NUMBER	DESCRIPTION
0	No optional input board; Basic Meter accepts low level and high level pulses from TTL/CMOS sources, open collector outputs and contact closures; provides 14-20 V unregulated sensor excitation
1 (P7A1)	Isolated Pulse Input Board. Single-input for magnetic pick-ups with low- and high-level signals; direct connection to NPN, PNP, or NAMUR sensors. Includes electrically floating, regulated sensor excitation rated 12.6 V @ 70 mA or 8.2 V or 5 V
2 (P7A5)	Isolated Analog Input Board. Input ranges of 0-1 mA, 4-20 mA, 0-5 V, 1-5 V, and 0-10 V are jumper selectable. Standard factory default calibration: 4-20 mA dc = 0-10000

CONTROL/BCD OUTPUT OPTIONS

MODEL NUMBER	DESCRIPTION
0	No optional output board; standard five open-collector outputs
1 (BCD1)	Isolated Parallel BCD (Binary-Coded Decimal) Output Board
2 (REL1)	Dual Relay Output Board; 7-amp, Form-C relays

NOTE: Choose only one Control/BCD output option per meter. A 40-socket plug is included with the BCD option.

ANALOG OUTPUT OPTIONS

MODEL NUMBER	DESCRIPTION
0	No analog output board
1 (ANO2)	Isolated Analog Output Board: Configurable output; 0-20 mA, 4-20 mA, 0-5 V, 0-10 V. Standard factory default calibration: 0-10000 = 4-20 mA dc

DATA COMMUNICATIONS OPTIONS

MODEL NUMBER	DESCRIPTION
0	No serial communications board
1 (RS21)	Isolated RS-232 Serial Communications Board*
2 (RS41)	Isolated RS-485 Serial Communications Board**

NOTE: Choose only one option per meter. Both computer communications come with a 6-foot communications cable with phone plug termination.

* Recommend purchase of 9SC2 or 25SC2 (see OPTIONS below)
** Recommend purchase of 9SC4 or 25SC4 (see OPTIONS below)

OPTIONS

MODEL NUMBER	DESCRIPTION
FS	Custom Factory Calibration/Configuration
OH6	Optional Housing
FP4	Option Housing Blank Front Panel Lens
BL	Blank Front Panel Lens
9SC2	9-pin serial connector for RS-232 port
9SC42	9-pin serial connector for RS-485 port
25SC2	25-pin serial connector for RS-232 port
25SC4	25-pin serial connector for RS-485 port
RP18	19-inch Rack Panel for 1 meter
RP28	19-inch Rack Panel for 2 meters
RP38	19-Inch Rack Panel for 3 meters

Notes:

2. Setup

2.1 UNPACKING

Unpack all items and make sure that every item on the packing list is present. The items you should receive are listed below. If something is missing, contact our Customer Service Department at 1-800-NEWPORT or call (714) 540-4914.

Also, inspect the shipping container and enclosed equipment for any signs of damage. Take particular note of any evidence of rough handling in transit. Immediately report any damage to the shipping agent.

NOTE: The shipping agent will not honor any claims unless all shipping material is saved for their examination. After examining and removing contents, save all packing material and containers in the event that reshipment is required.

You should receive the following items :

QTY	DESCRIPTION	ILLUSTRATION
1	Basic meter with main board (and optional boards if ordered by number); in plastic case with sleeve, panel gasket, two thumbnuts	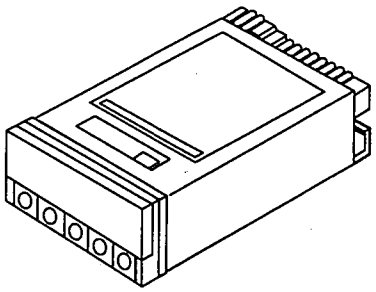
1	Front-panel button cover available with return of the postcard (see meter box)	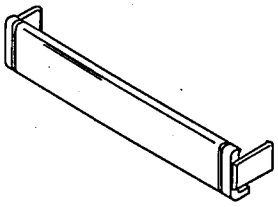

2

Setup

QTY	DESCRIPTION	ILLUSTRATION
1	Orange, 3-socket power connector (P1); for AC input	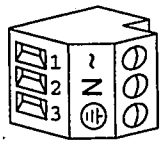
1	Gray, 3-socket input connector (P3); for signal input	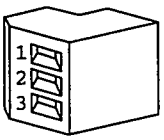
1	Rear cover with holddown screw	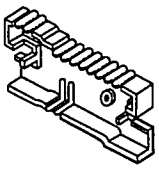
1	20-Socket Ribbon Connector (P2)	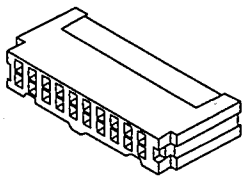
2	Panel-mount gasket (1 spare)	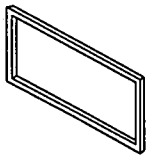

QTY	DESCRIPTION	ILLUSTRATION
1	Operator's manual	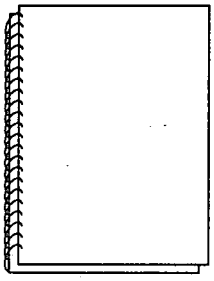
1	Quick Reference Guide	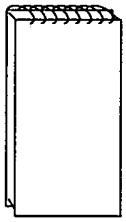

2.2 SAFETY PRECAUTIONS

The P7000 meter is protected in accordance with Class II of IEC 348 and VDE 0411.

> *WARNING: If your meter is to be wired to sensors or to control inputs that could have hazardous potentials, these potentials will be carried to the 20-pin output connector (P2) at the rear. They will also be present on the meter's circuit boards. Follow all instructions carefully, inserting the electronics into the case and installing connectors BEFORE connecting the meter to any source of power.*
>
> *DO NOT contact any exposed metal parts, install optional board(s), change jumpers, or in any way disassemble or assemble the meter while it is connected to AC voltage.*

Note the following information and guidelines for safe operation of your meter:

2.2.1 POWER VOLTAGE

Your power source voltage rating should agree with the voltage under which the meter has been configured to operate. The first thing you should do is verify this.

The meter's operating voltage is shown in the VOLTS: entry of the ID and Serial Number Label. Figure 2-1 shows a this label. It is located on the meter packing box and is clearly visible. (Another label is also affixed to the meter case.)

> ®NEWPORT ELECTRONICS, INC.
> 2229 SOUTH YALE ST. SANTA ANA CA. 92704-4426 USA
> FOR TECHNICAL HELP CALL 1-800-NEWPORT, (714) 540-4914
>
> **MODEL:**
> **SERIAL NO.:**
> **PART NO.:**
> **VOLTS:** **WATTS:**

Figure 2-1. ID and Serial Number Label

2.2.2 POWER WIRING

The meter has no power-on switch; it will be ON when power is applied.

Section 2.3.5 shows you how to wire not only the AC power connector, but all other connectors as well.

2.2.3 HUMIDITY

Do not expose the meter to rain or condensing moisture.

2.2.4 FUMES AND GASES

Do not operate the meter in flammable or explosive atmospheres.

2.3 ASSEMBLY/DISASSEMBLY

2.3.1 OPENING THE METER

Your meter is fully assembled, but not wired. In most cases, if you have ordered optional boards with the meter, these boards will already be installed. You will need to remove only the rear cover to complete wiring, but you will have to open the meter to do one or more of the following:

a. Check or reconfigure the Transformer Jumpers on the Main Board so that they correspond to your line voltage (W1 and W2 for 115 V ac, or W3 for 230 V ac). See Section 2.3.2.1.

b. Access jumpers on the Main and optional boards. See Section 2.3.2.

c. Install optional boards. See Section 2.3.3.

Figures 2-2 and 2-3, show the meter with the standard front bezel and with the optional housing, respectively. Using the appropriate figure as a guide, follow these simple instructions to open the meter:

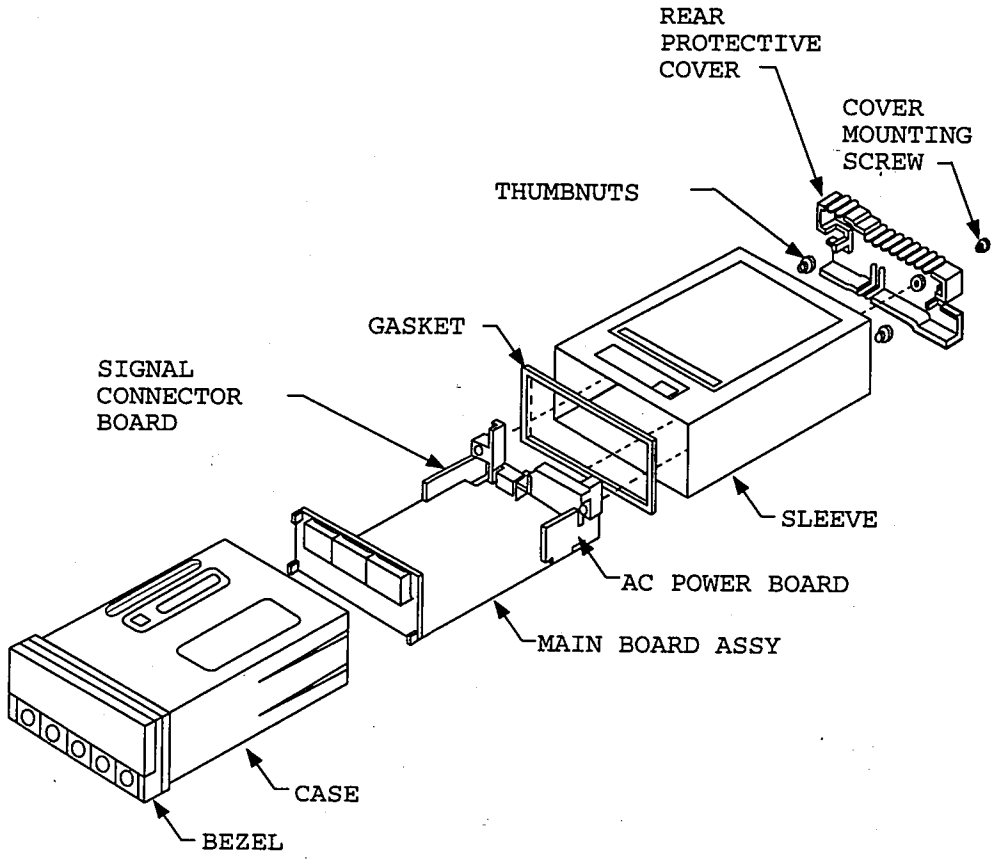

Figure 2-2. Exploded View of the Meter with the Standard Bezel

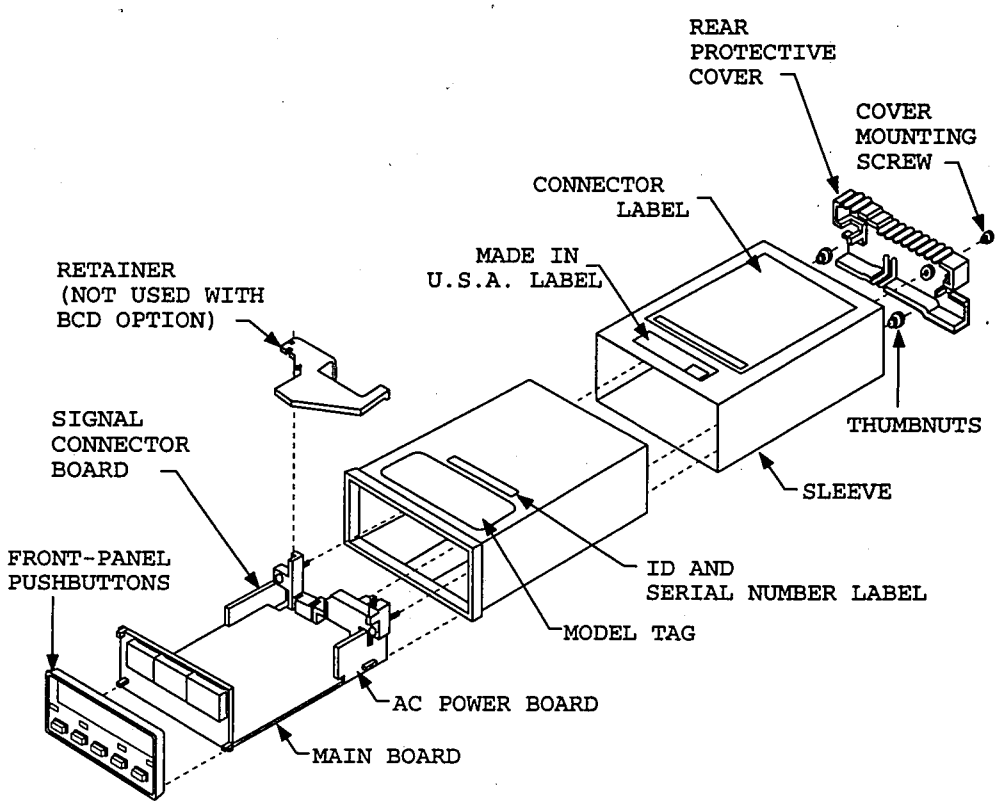

Figure 2-3. Exploded View of the Meter in the Optional Housing

1. If power connections have already been made and power is on, disconnect or turn OFF the power.

2. Remove the cover mounting screw that secures the rear protective cover to the meter, and remove the Rear Protective Cover.

   If you are simply wiring the meter–but not checking jumpers or installing or removing boards–this is as far as the meter needs to be disassembled. Go to Section 2.3.5.

3. Remove all wiring connectors from the rear of the meter.

4. Remove the two thumbnuts that secure the case to the sleeve.

5. Remove the sleeve completely by sliding it back from the front bezel.

6. Using Figure 2-4 as a guide, bend the side-panel detents on the case outward and pull the board assembly out of the case by the mounting screw stem.

These six steps are known as "accessing the Main Board assembly."

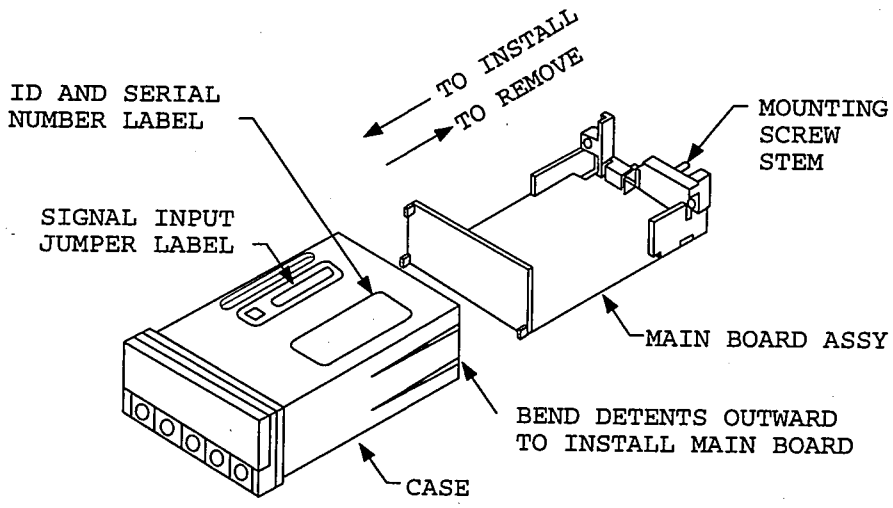

Figure 2-4. Removing the Main Board Assembly from the Case

The meter is now disassembled to the point where you can check and configure jumpers and install boards.

NOTE: When the sleeve is removed from the case in Step 5 above, the Connector Label on the case will be exposed. See Figure 2-5. Use this label for reference when wiring or connecting plugs.

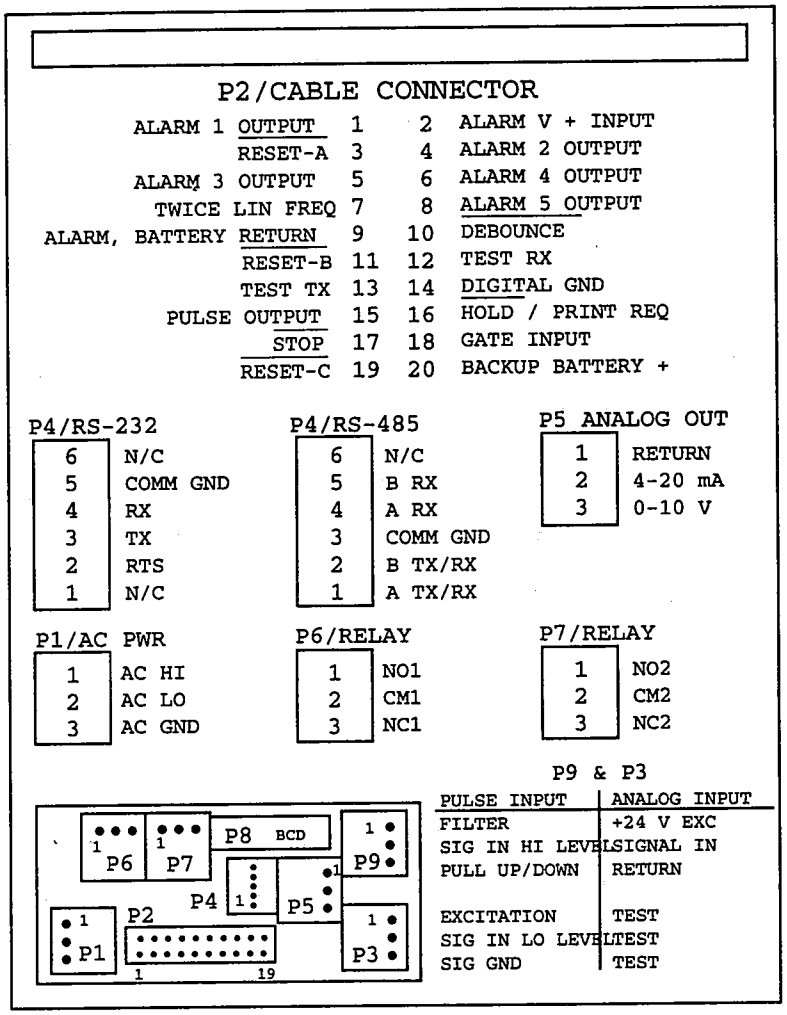

Figure 2-5. Connector Label

2.3.2 CHECKING AND INSTALLING JUMPERS

This section contains figures and instructions for checking and installing jumpers, but it gives full information on the Main Board only. If you have any optional boards, refer to the appropriate appendix for specific jumper information.

> **NOTE:** When referring to jumpers and the corresponding boards, the view is from the REAR of the meter.

2.3.2.1 MAIN BOARD JUMPERS

Using Figure 2-6 and Table 2-1, configure or check Main Board jumpers.

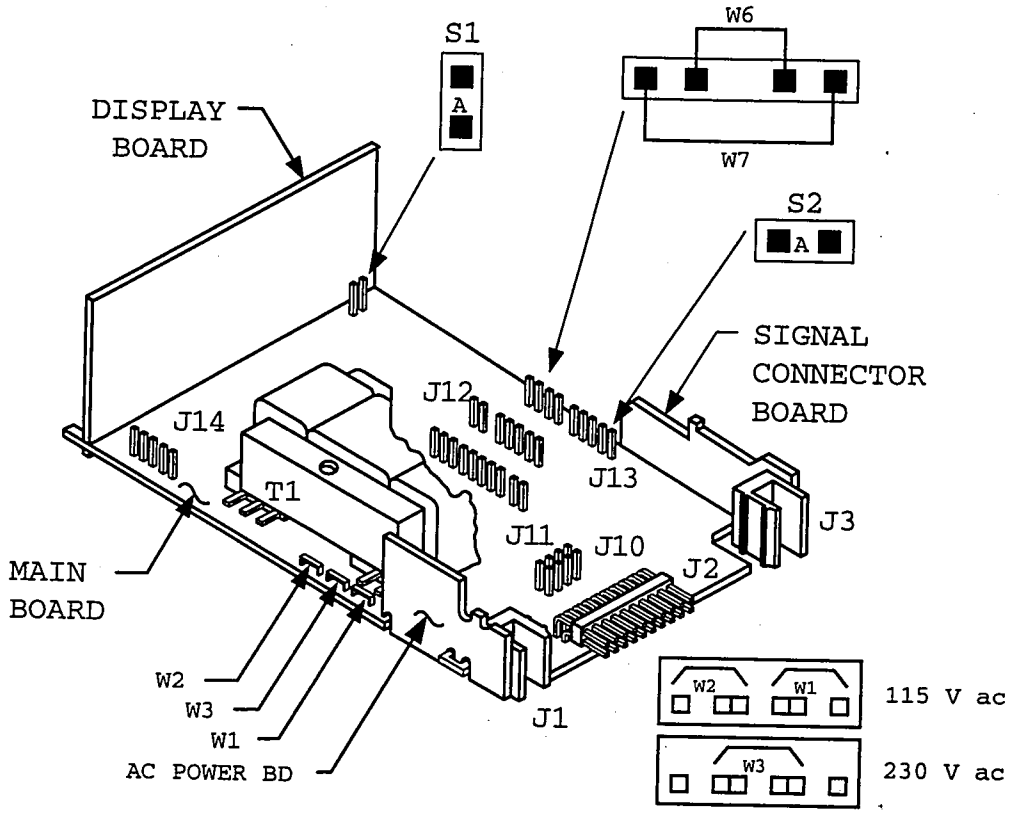

Figure 2-6. Main Board Jumpers

TABLE 2-1. MAIN BOARD JUMPERS

JUMPER	LOCATION, VIEWING THE BOARD FROM THE REAR OF THE METER	FUNCTION
S1-A	On the right, immediately behind the Display board	Enables push buttons to control lockout programming
S2-A	First two pins of J13 on the right side of the Main Board	Channels non-isolated excitation out to P3-1; remove if input board used
W1 and W2	Left side	Enables 115 V operation
W3	Left side	Enables 230 V operation
W6 and W7	Right side of Main Board next to J13	Bypasses isolation circuitry used for option boards; remove if input board used

If your line voltage is 115 V ac, jumpers W1 and W2 (but NOT W3) should be installed.

If your line voltage is 230 V ac, jumper W3 (but NOT W1 or W2) should be installed.

NOTE: When referring to jumpers, the letter S means "switch" and the letter W means "wire." Switch jumpers are caps that bridge two pins; they can easily be moved from one position to another. Wire jumpers are soldered in; they must be cut when "removed" and resoldered if reinstalled.

If no optional input board is used, jumper S2-A should be installed on the first two pins of J13. This jumper brings non-isolated excitation out to the P3-1 connection. Wire jumpers W6 and W7 should also be in place. These jumpers bypass the isolation circuitry used for optional boards. See Figure 2-6.

If one of the optional input boards is used, S2-A should be removed (or be installed on only one pin), and W6 and W7 should be removed.

S1-A allows front-panel control of the three lockouts so that you can lock and unlock meter features. You may want to remove this jumper later to lock in certain settings that you don't want to be changed. (See Section 5.3.) It should be installed when the meter is first configured.

2.3.2.2 OPTIONAL INPUT AND OUTPUT BOARDS JUMPER INFORMATION

BOARD TYPE	JUMPER(S) PRESENT	CONFIGURING INFORMATION	NOTES
Isolated pulse input	Yes	Appendix B	–
Isolated analog input	Yes	Appendix C	A one-time calibration is needed when installed the first time.
Isolated analog output	No	Appendix D	A one-time calibration is needed when installed the first time.
Isolated BCD output	Yes	Appendix E	–
Dual relay output	Yes	Appendix F	–
RS-232 output	No	Appendix G	–
RS-485 output	No	Appendix G	–

2.3.3 INSTALLING OPTIONAL BOARDS

> **NOTE:** When referring to installing optional boards, the view is from the REAR of the meter.

Figure 2-7 shows the Main Board and Figure 2-8 shows an exploded view of the meter with the optional board locations. In Figure 2-7, the "front" of the board refers to the side with the Display Board; the back is the side with J1 and J2 connections. Refer to Figures 2-7 and 2-8 as you insert optional boards. All boards must be jumpered before insertion. See Section 2.3.2.

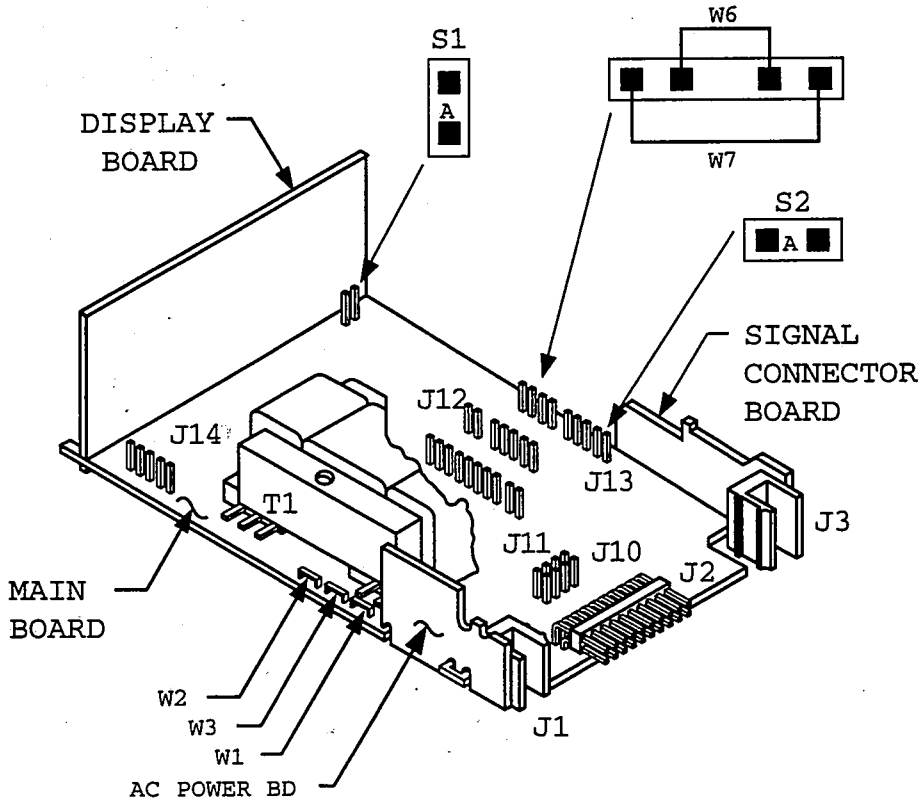

Figure 2-7. Main Board

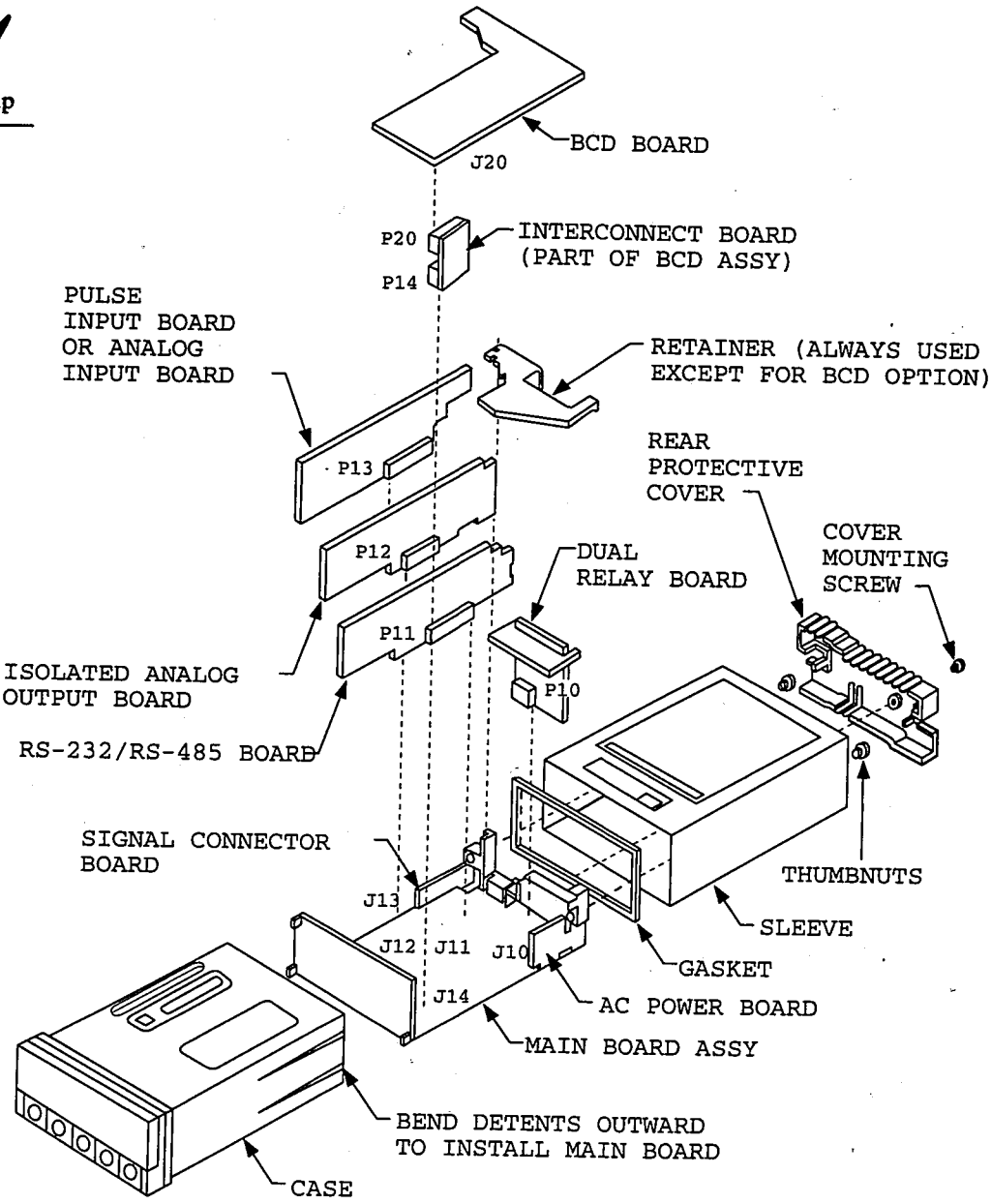

Figure 2-8. Exploded View of Main and Optional Boards

2.3.3.1 ISOLATED PULSE INPUT BOARD

The Isolated Pulse Input Board plugs into J13 on the right side of the Main Board. J13 consists 10-pins with a gap at pin 5.

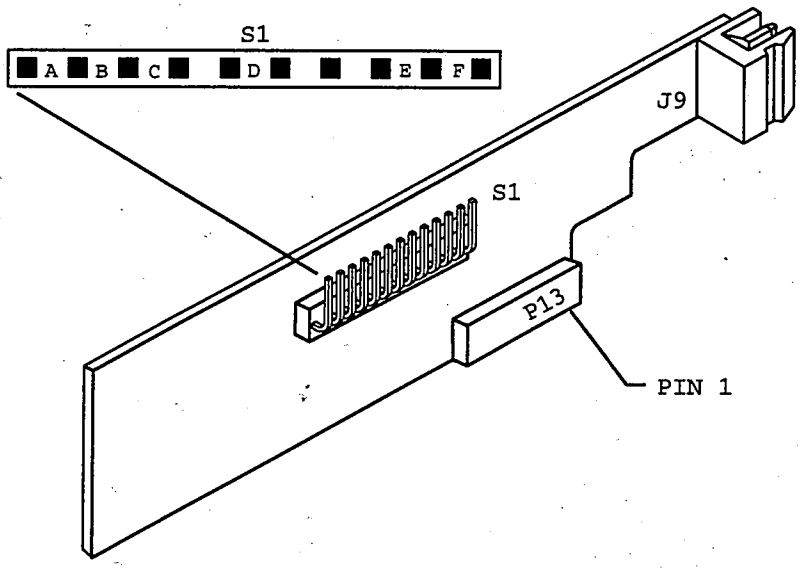

Figure 2-9. Isolated Pulse Input Board

Follow these steps before installing the board:

1. Remove (or connect to a single pin) jumper S2-A, the black jumper clip on the first two pins of J13 on the Main Board.

2. Remove wire jumpers W6 and W7, the two soldered-in connections to the immediate right of J13.

3. Plug the input board onto the J13 jack.

The Pulse Input Board and Analog Input Board can be installed at J13. However, only one can be installed at a time.

Refer to Appendix B to configure this board.

2.3.3.2 ISOLATED ANALOG INPUT BOARD

The solder side of the Isolated Analog Input Board contains calibration data for precisely calibrating the board. Make sure you copy the data before you install the board.
Record them here:

Input 1 @ 4 mA = _____

Input 2 @ 20 mA = _____

Input 1 @ 0 V = _____

Input 2 @ 5 V = _____

The Isolated Analog Input Board plugs into J13 also. See section 2.3.3.1, Steps 1 through 3.

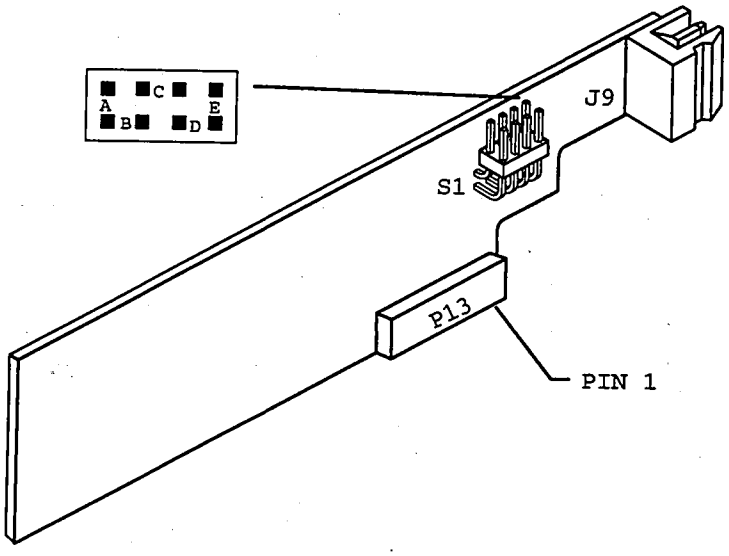

Figure 2-10. Isolated Analog Input Board

The Analog Input Board and Pulse Input Board can be installed at J13. However, only one can be installed at a time.

Refer to Appendix C to configure this board.

2.3.3.3 ISOLATED ANALOG OUTPUT BOARD

The solder side of the Analog Output Board contains calibration data for precisely calibrating the board. Make sure you copy the data readings–CAL VZ (Calibrate Voltage Zero), CAL VS (Calibrate Voltage Span), CALmAZ (Calibrate milliAmp Zero), and CALmAS (Calibrate milliAmp Span)–before you install the board. Record them here:

CAL VZ = _____

CAL VS = _____

CALmAZ = _____

CALmAS = _____

The Analog Output Board plugs into J12, between J13 (on the right edge of the Main Board) and the transformer. J12 consists of 8 pins with a gap at pin 6.

NOTE: Future analog output boards will be supplied with a 10-pin connector for use with a DC powered version of this instrument.

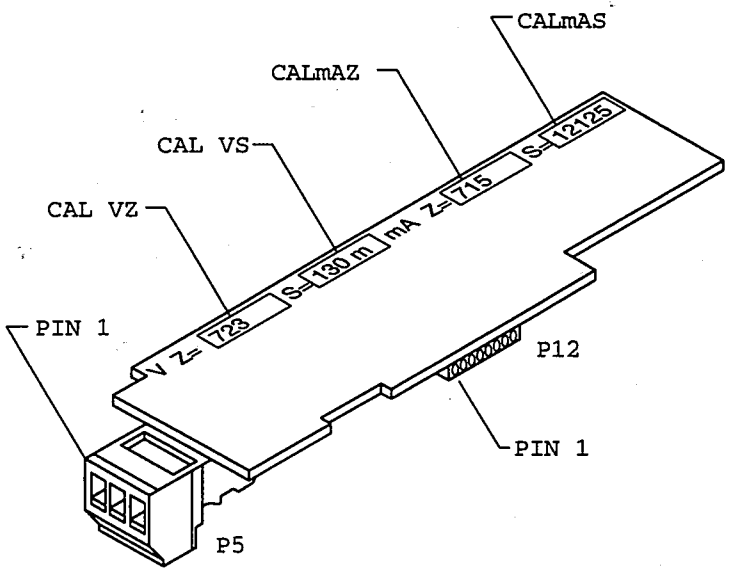

Figure 2-11. Isolated Analog Output Board

Refer to Appendix D to configure this board.

2.3.3.4 ISOLATED PARALLEL BCD (BINARY-CODED DECIMAL) OUTPUT BOARD

The Isolated Parallel BCD Output Board mounts above (and parallel to) the Main Board using the small vertical Interconnector Board as a support. **Note that this board is inserted component-side down.**

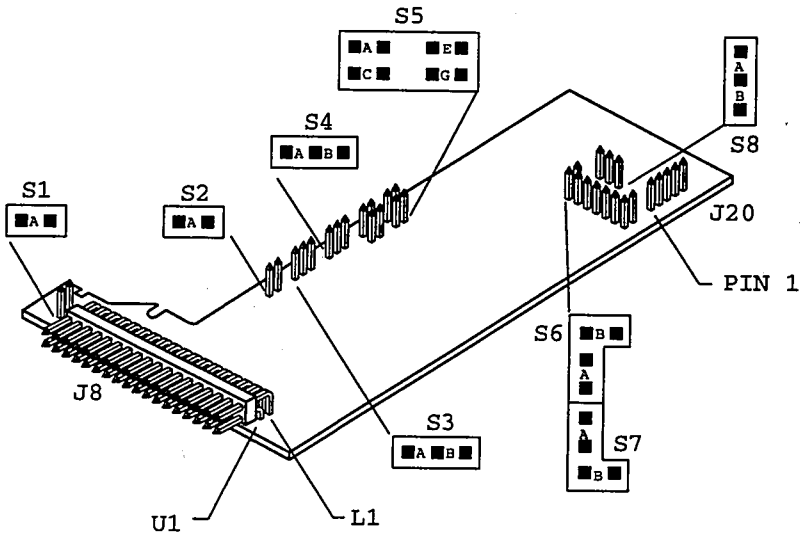

Figure 2-12. Isolated Parallel BCD Output Board

1. Insert the P14 plug of the Interconnect Board onto the J14 pins on the Main Board. J14 consists of 5 vertical pins on the left side of the Main Board, immediately behind the Display Board..

2. Insert the P20 connector of the Interconnect Board onto the J20 pins on the BCD Board. (See Figure 2-8.)

The Isolated Parallel BCD Output Board is installed at J14.

Refer to Appendix E to configure this board.

2.3.3.5 DUAL RELAY OUTPUT BOARD

The Dual Relay Board is a vertical board that plugs into J10, the double row of 4 pins each at the rear of the Main Board.

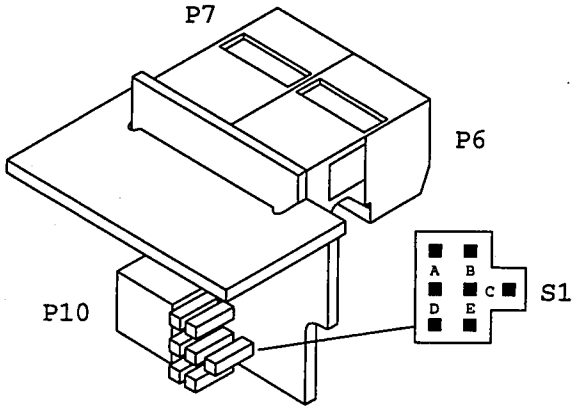

Figure 2-13. Dual Relay Output Board

Refer to Appendix F to configure this board.

2.3.3.6 ISOLATED RS-232 SERIAL COMMUNICATIONS BOARD

The Isolated RS-232 Serial Communications Board plugs into J11, to the right of the transformer.

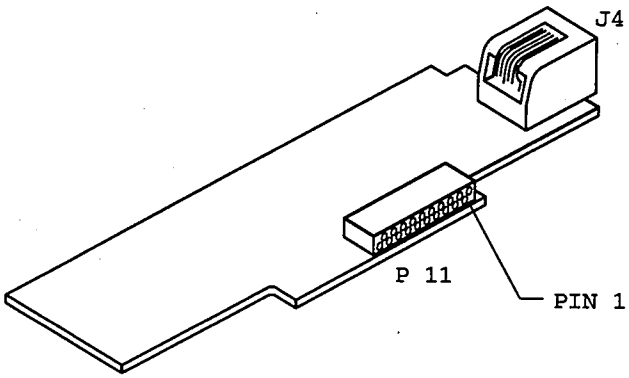

Figure 2-14. Isolated RS-232 Serial Communications Board

J11 consists 11 pins with a gap at pin 9. **(Note that the mating socket of the communications board does not mate with pin 11 of J11; this pin is reserved for future use.)**

2.3.3.7 ISOLATED RS-485 SERIAL COMMUNICATIONS BOARD

The Isolated RS-485 Serial Communications Board mounts in a manner identical to that of the RS-232 board in the previous section.

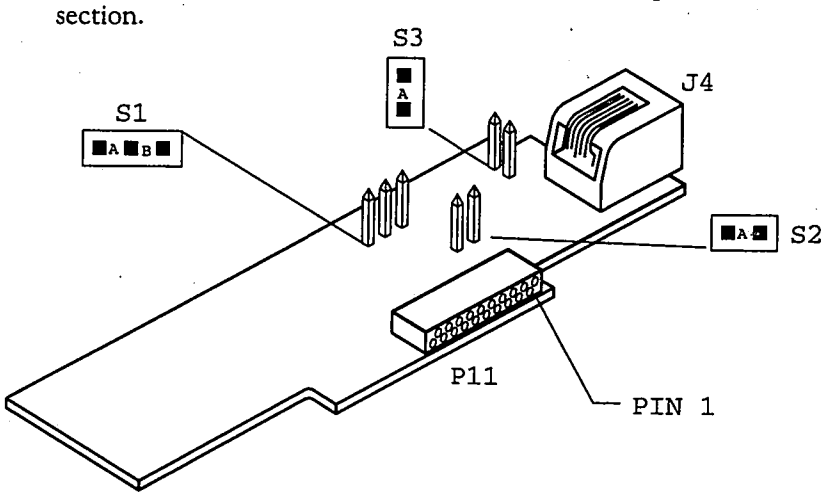

Figure 2-15. Isolated RS-485 Serial Communications Board

2.3.4 REINSERTING THE MAIN BOARD ASSEMBLY INTO THE CASE

Reinsert the Main Board into the case once Main Board jumpers have been configured (Section 2.3.2.1) and optional boards have been configured and installed (Sections 2.3.2.2 through 2.3.3).

Spread the side-panel detents of the case, and carefully slide the Main Board all the way in.

You are now ready to wire your meter.

2.3.5 WIRING

The way you connect your input wiring to your meter depends on your pulse or input source, and the types of optional boards you have installed. Therefore, this section contains complete instructions for wiring only the AC Power connector (P1), and guidelines for wiring the input/output control connector (P2). You will be referred to the appropriate appendix for specific wiring instructions based on your optional board configuration.

2.3.5.1 P1 - AC POWER WIRING

CAUTION: As mentioned in Section 2.2.2, the meter has no power ON/OFF switch. The meter will be ON when power is applied.

Wire your power (from a wall socket or other source) to P1, the orange, 3-socket connector that plugs into the 3 pins on the left side as you view the meter from the rear. Refer to Figure 2-16 and Table 2-2 below.

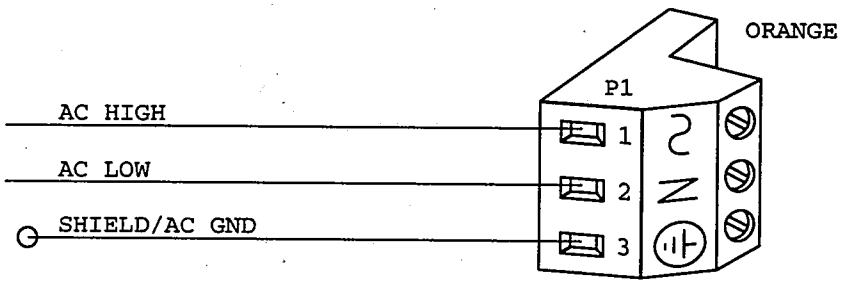

Figure 2-16. P1, AC Power Connector Wiring

TABLE 2-2. P1, AC POWER CONNECTOR WIRING

WIRE COLOR		CONNECTION	CONNECTOR PIN
USA	INTERNATIONAL		
Black	Brown	AC High (HI)	1
White	Blue	AC Low (LOW)	2
Green	Green/Yellow	AC GND	3

2.3.5.2 BATTERY BACKUP CONNECTIONS

The purpose of the battery backup is to allow the internal clock to continue to run when a loss of the AC power is experienced. All other functions will cease to operate until AC power is resumed. The minimum requirements of the battery needed is 7-12 Vdc at 50 mA.

Connect the negative lead of your battery to P2-9 (ALARM, BATTERY RETURN) and the positive lead of your battery to P2-20 (BACKUP BATTERY).

2.3.5.3 P2 - CONTROL INPUT/OUTPUT WIRING

P2, the 20-socket ribbon connector plugs into the center rear of the Main Board, sends out the setpoint transistor collectors and permits remote control of significant meter features. Table 2-3 describes the function of each pin.

TABLE 2-3. P2, INPUT/OUTPUT CONNECTIONS

P2 SOCKET/ PIN NO.	DESCRIPTION/FUNCTION
P2-1	Setpoint 1 transistor open-collector output
P2-2	Input of external V+ used for setpoint transistors so that internal diodes can clamp inductive-load spikes
P2-3	$\overline{\text{RESET-A}}$: When grounded in Rate or Sq Rt Modes, resets TOTAL to 0, resets TOTAL setpoint latches; in Batch Mode, starts a new BATCH count, increments BAT NO (Number of Batches), resets BATCH-count setpoint latches, and clears any STOP (See Section 4.10)
P2-4	Setpoint 2 transistor open-collector output
P2-5	Setpoint 3 transistor open-collector output
P2-6	Setpoint 4 transistor open-collector output
P2-7	Twice-line-frequency, 5-V pulse output (also used by microcontroller to detect line failure)
P2-8	Setpoint 5 transistor open-collector output
P2-9	Return ground connection: SP-transistor external supply and/or backup battery ground
P2-10	Debounce capacitor for P3-2 signal input (tie to ground for contact input)
P2-11	$\overline{\text{RESET-B}}$: When grounded in Rate or Sq Rt Modes, starts a new AVG RTE (Average Rate) period, resets RATE setpoint latches; in Batch Mode, resets BAT NO (Number of Batches) to 0 (if count is up) or to Setpoint 4 value (if count is down), and resets BAT NO setpoint latches (if SP4 has been assigned) (See Section 4.10)
P2-12	TTL-level Test RX
P2-13	TTL-level Test TX
P2-14	Meter digital ground (internally connected to P2-9)
P2-15	Programmable Pulse Output (see AL TI, Section 5.4.12)

continued next page

continued from previous page

P2 SOCKET/ PIN NO.	DESCRIPTION/FUNCTION
P2-16	HOLD/PRINT REQUEST: When grounded, if enabled by CF4.3 and CF4.4, freezes displayed value/initiates print out (V01 Command)
P2-17	STOP: When grounded in rate or sq rt modes, stops the clock until released; in batch mode, **sets all setpoint outputs to their active states**
P2-18	GATE: Nonisolated input: Can be used as the input signal or to gate P3/P9 inputs
P2-19	RESET-C: when grounded in rate or sq rt modes, resets the clock to SET TI (Set Time, see Section 5.4.15), and resets TIME setpoint latches; in Batch, resets the clock to SET TI, resets the grand TOTAL to 0, resets a TOTAL setpoint latch (See Section 4.10)
P2-20	Backup battery +V input

2.3.5.4 BASIC METER INPUT WIRING

If you are going to be operating the meter as a basic meter–with no optional boards–see Appendix A for further wiring instructions.

2.3.5.5 ISOLATED PULSE INPUT BOARD WIRING

If your meter has the isolated pulse input board, see Appendix B for wiring.

2.3.5.6 ISOLATED ANALOG INPUT BOARD WIRING

If your meter has the isolated analog input board, see Appendix C for wiring.

2.3.5.7 ISOLATED ANALOG OUTPUT BOARD WIRING

If your meter has the isolated analog output board, see Appendix D for wiring.

2.3.5.8 ISOLATED PARALLEL BCD OUTPUT BOARD WIRING

If your meter has the isolated parallel BCD output board, see Appendix E for wiring.

2.3.5.9 DUAL RELAY OUTPUT BOARD WIRING

If your meter has the dual relay output board, see Appendix F for wiring.

2.3.5.10 ISOLATED RS-232 OR RS-485 SERIAL COMMUNICATIONS BOARD WIRING

If your meter has either the Isolated RS-232 or RS-485 Serial Communications Board, see Appendix G for wiring or connections.

2.4 BENCH-TOP ASSEMBLY

Bench-top assembly refers to regular assembly where the meter is used on a bench top rather than mounted in a panel. It actually consists of the final steps in setting up the meter, and requires that the following already be done:

1. Your line voltage rating has been checked against the meter rating on the ID and serial number label on the meter. See Section 2.2.1.

2. You have configured all jumpers–those on the Main Board as well as those on any optional boards. See Section 2.3.2.1 for main board jumper configuration and Appendices B through G for optional board jumper configuration.

3. You have installed all optional boards and inserted the Main Board assembly back into the case. See Sections 2.3.3 and 2.3.4.

4. You have wired P1, the AC power connector, and P2 the input/output control connector. See Sections 2.3.5.1 and 2.3.5.2.

5. You have wired all connectors for optional boards; connectors are not connected to the meter, but are ready to be connected. See Appendices B through G.

If all of these steps have been done, continue here using Figure 2-17 as a guide:

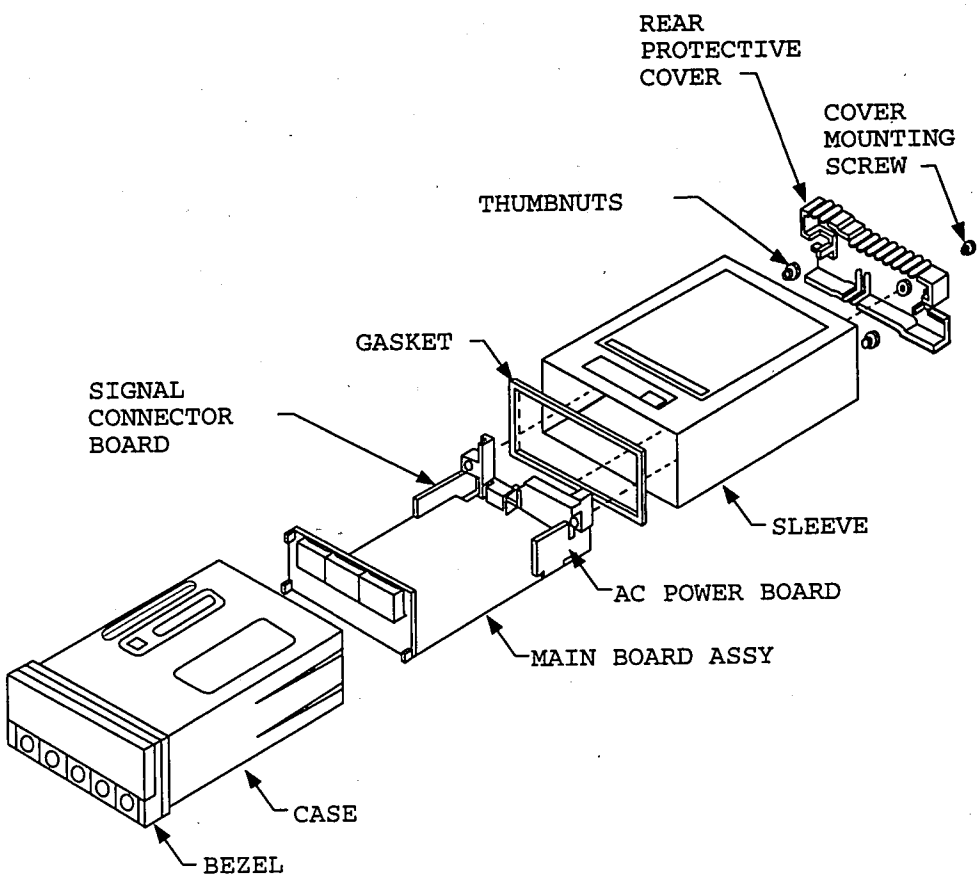

Figure 2-17. Exploded View of the Meter

6. Replace the sleeve, sliding it all the way forward to the bezel. Secure it with the two thumbnuts.

7. Set P1, the AC Power connector, aside and connect or reconnect all other connectors to the back of the meter using Figures 2-18 and 2-19 as a guides.

> **NOTE:** The P1 connector is "keyed"; it is shaped in such a way that it fits only the J1 male pins.

Connect P1 last.

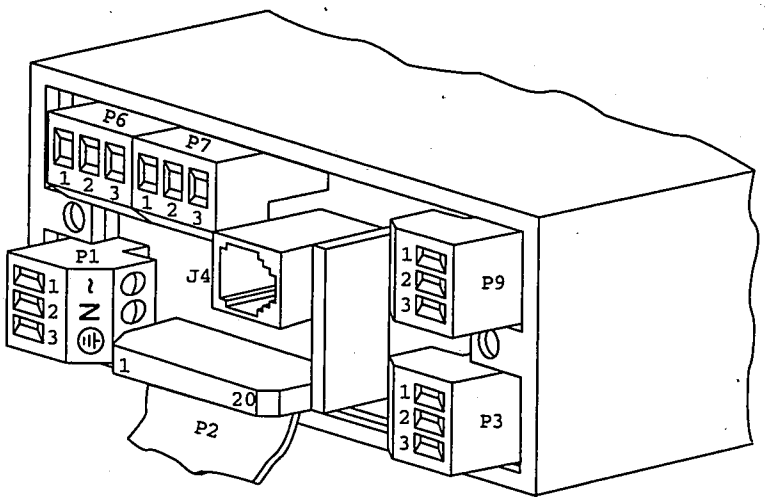

Figure 2-18. Rear View of the Meter with the Dual Relay and Serial Communications Boards

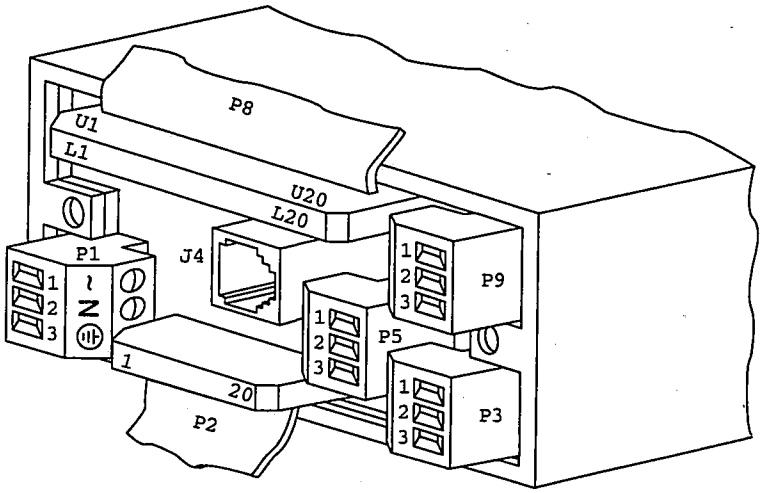

Figure 2-19. Rear View with the BCD, Serial Communications, and Analog Output Boards

8. Replace the rear protective cover and secure it with the cover mounting screw.

Your meter is now ready for operation. It can be positioned in any orientation without affecting operation.

2.5 PANEL-MOUNT ASSEMBLY

The meter can be mounted in a panel so that the front of the meter is flush with the vertical panel surface. Panel mounting can be seen as simply "sandwiching" the panel between the inner case and the outer sleeve in the last phases of assembly. It requires that the following already be done:

1. Your line voltage rating has been checked against the meter rating on the ID and serial number label on the meter case. See Section 2.2.1.

2. You have configured all jumpers–those on the main board as well as those on any optional boards. See Section 2.3.2.1 for main board jumper configuration and Appendices B through G for optional board jumper configuration.

3. You have installed all optional boards and inserted the main board assembly back into the case. See Sections 2.3.3 and 2.3.4.

4. You have wired P1, the AC power connector, and P2 the input/output control connector; connectors are not installed in the meter, but are ready to be. See Sections 2.3.5.1 and 2.3.5.2.

5. You have wired all connectors for optional boards; connectors are not connected to the meter, but are ready to be. See Appendices B through G.

If all of these steps are done, continue here using Figure 2-20 as a guide:

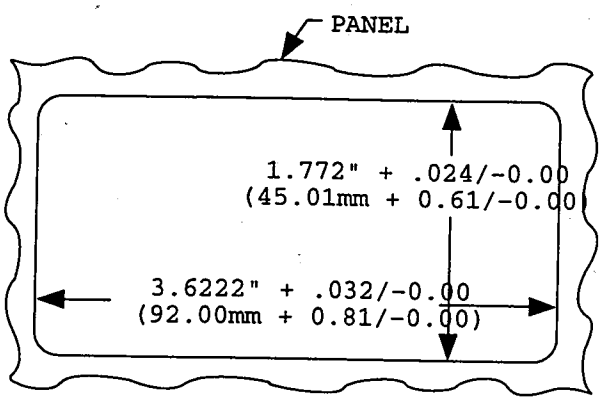

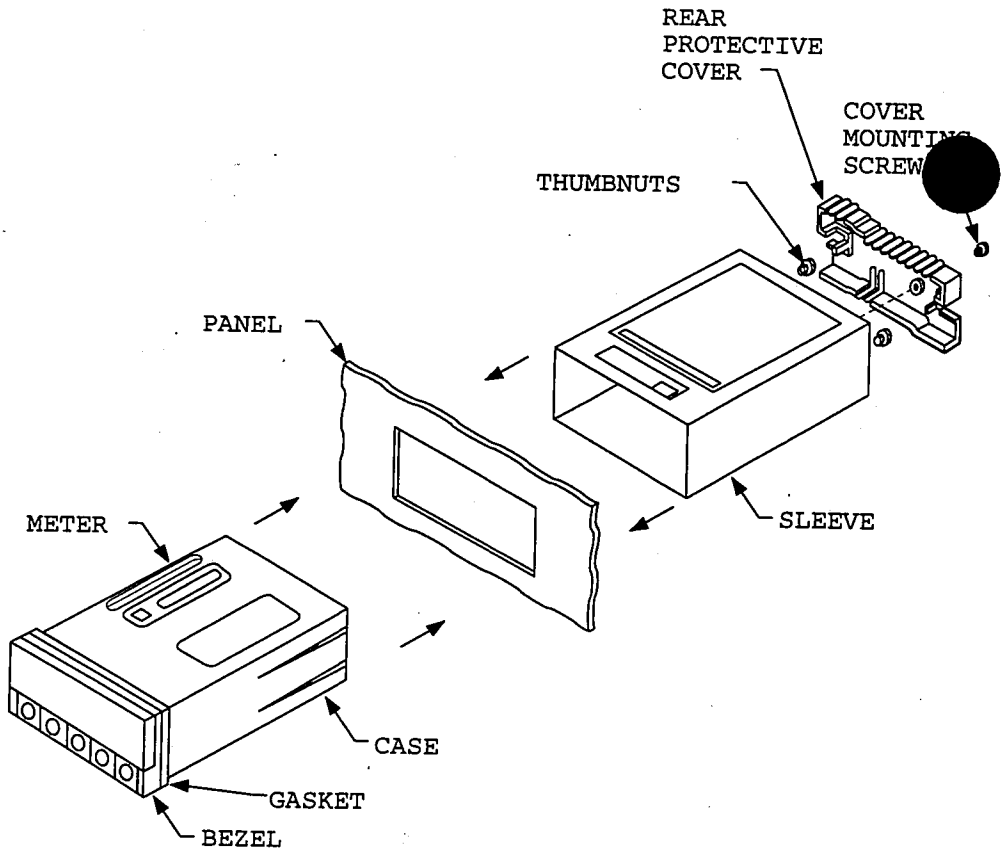

Figure 2-20. Panel-Mount Assembly

6. Punch or cut a hole in the panel using the panel cutout dimensions in Figure 2-20. Remove burrs and paint the panel as required.

7. Insert the panel-mount gasket around the rear of the case and slide it forward to the bezel (if it's not already in place).

8. Working from the front of the panel, insert the case assembly, rear end first, all the way into the panel cutout such that the gasket firmly backs the panel surface.

9. Working from the rear of the panel, slide the sleeve forward over the case and up to the panel surface.

The panel should now be sandwiched between the bezel-backed gasket in front and the sleeve in back.

10. Replace the thumbnuts that secure the sleeve tabs to the case.

11. Set P1, the AC power connector, aside and connect or reconnect all other connectors to the back of the meter using Figures 2-18 and 2-19 in Section 2.4 as guides.

NOTE: The P1 connector is "keyed"; it is shaped in such a way that it fits only the J1 male pins.

Connect P1 last.

12. Replace the rear protective cover and secure it with the cover mounting screw.

Your meter is now ready for operation.

Notes:

3. Front and Rear Features

3.1 FRONT-PANEL DISPLAYS AND BUTTONS

Refer to Figure 3-1 as you read about front panel displays and buttons.

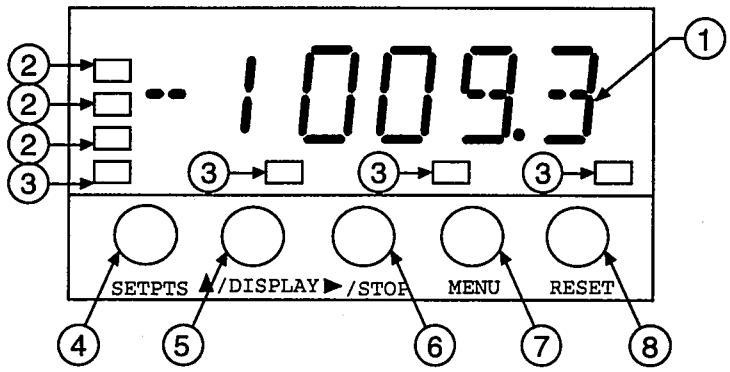

Figure 3-1. Front Panel

TABLE 3-1. FRONT-PANEL DISPLAYS AND BUTTONS

ITEM	FRONT-PANEL BUTTON OR FEATURE	DESCRIPTION/FUNCTION
1	6-Digit Display	6-Digit, 14-segment, 0.54-inch LED display produces alphanumeric readout; programmable decimal point; red with green option
2	Measurement	Green LEDs; designate which measurement is being displayed (See DISPLAY, below)
3	Setpoint LEDs	Red LEDs; designate which setpoints are active; when flashing, designate which setpoint is being viewed and/or set
4	SETPTS Button	In Run mode changes to Setpoint Mode and allows setting of five setpoints; allows value change by pressing the ▲/DISPLAY button and the ▶/STOP button

continued next page

continued from previous page

ITEM	FRONT-PANEL BUTTON OR FEATURE	DESCRIPTION/FUNCTION
5	▲ /DISPLAY Button	Two-Function button: In Run Mode, sequences the display through mode-associated measurements; in Configuration and Setpoint Modes, sequences through possible digit and numerical settings • In Rate-Run Mode, sequences the display through unlocked values of RATE, AVG RT, TOTAL, and TIME • In Sq Rt-Run Mode, sequences the display through unlocked values of SQ RT, AVG RT, TOTAL and TIME • In Batch-Run Mode, sequences the display through unlocked values of BATCH, BAT NO, TOTAL and TIME • In Setpoint and Configuration Modes, sequences through possible alphanumeric settings: For numbers,increments the flashing digit by 1; for alphabetical settings, sequences to the next possible setting
6	▶/STOP Button (STOP enabled by CF4.8=1)	Two-Function button: In run mode, imposes STOP condition; in configuration and setpoint modes, accesses the next digit or choice • In batch-run mode, if CF4.8=1, puts all setpoints in their ACTIVE states and displays STOP. (After 3 seconds, the ▶/STOP button can be pressed again to reset alarms and return to run mode) • Inactive in rate-run or sq rt-run modes • In setpoint mode advances the flashing digit one place to the right, making the new digit accessible for resetting by the ▲/DISPLAY button

continued next page

continued from previous page

ITEM	FRONT-PANEL BUTTON OR FEATURE	DESCRIPTION/FUNCTION
		• In configuration mode, advances the flashing digit one place to the right, making the new digit accessible for resetting by the ▲/DISPLAY button; advances the displayed choice to the next choice in sequence
7	MENU Button (Enabled by L3C.8=0; disabled by L3C.8=1 and removal of S1)	• In run mode, terminates measurements and switches to Configuration Mode • In configuration mode, stores new values in EEPROM (nonvolatile memory) and advances the display to the next parameter to be programmed
8	RESET Button (Enabled by CF4.7=0)	• In Run Mode, RESETs the value of the measurement on display to zero (or to the reset value designated by configuration) Also RESETs any latched alarms assigned to the displayed measurement • In setpoint mode, switches back to run mode; any new setpoint values entered with the ▶/STOP button and the ▲/DISPLAY button that have not been stored are discarded • In configuration mode, the first press backs up one parameter (Menu item); the second one RESETs the meter and returns to run mode

3.2 REAR CONNECTORS

Figure 3-2 shows the rear of the meter with the Dual Relay Board, and a serial communications board. Figure 3-3 shows it with the Isolated Parallel BCD Output Board, a serial communications board, Isolated Analog Output Board, and Analog or Pulse Input Board. Figure 3-4 shows the connector label with pin assignments.

Refer to these figures as you read about rear connections and connectors in Table 3-2.

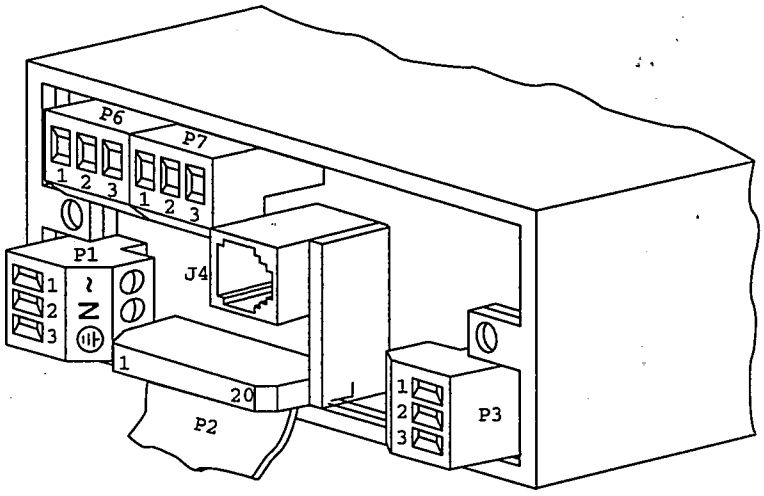

Figure 3-2. Rear View of the Meter with the Dual Relay using P6 and P7 and Serial Communications Boards using J4

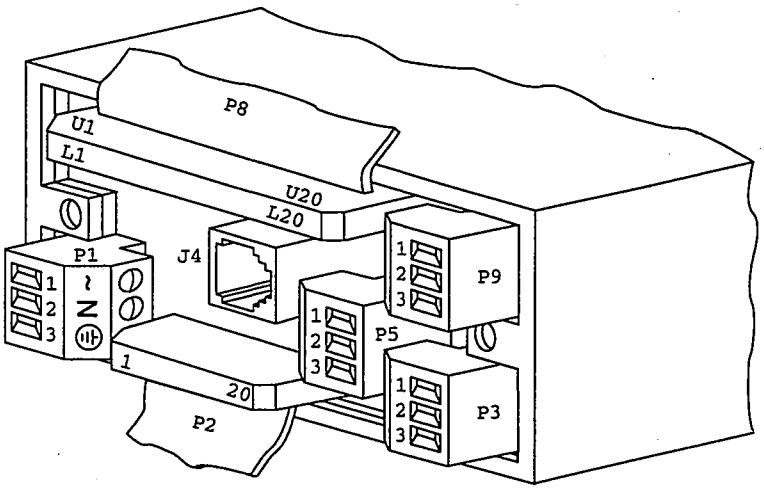

Figure 3-3. Rear View with the BCD using P8, Serial Communications using J4, Analog Output Board using P5 and Analog Input or Pulse Input Board, using P3 & P9.

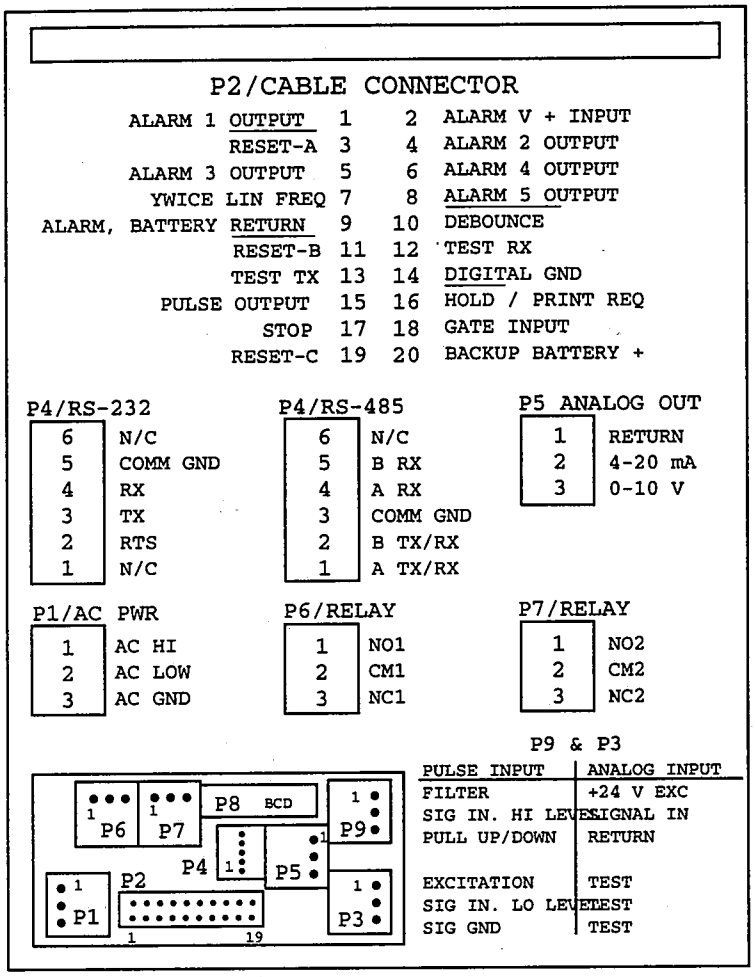

Figure 3-4. Connector Label

TABLE 3-2. REAR CONNECTORS

CONNECTOR NUMBER	DESCRIPTION
P1	AC Power Connector; 3-socket connector for AC power input
P2	Control Input/Output connector; 20-socket ribbon connector sends out setpoint transistor collectors and allows remote control of certain meter features

continued next page

continued from previous page

CONNECTOR NUMBER	DESCRIPTION
P3	Input and Excitation connector; 3-socket input connector for unregulated excitation for Basic Meter; low level input and excitation for Isolated Pulse Input Board. **Not used withAnalog Input Board (test points for factory use only)**
P4	Isolated RS-232 or RS-485 serial communications board connection for digital communications; 4-spring RJ-11 or 6-spring RJ-12 telephone jack (6-foot cable furnished with either board)
P5	Isolated Analog Output connector; 3-socket output connectors for optional analog output
P6 and P7	Dual Relay connector; 3-socket output connectors for optional 7-amp, Form-C relays
P8	Isolated parallel BCD output board connector; 40-socket connector for optional BCD output; connects to ribbon cable
P9	3-Socket optional input board connector; for isolated pulse input board, high-level input and filter connections; for isolated analog input board, input, excitation, and common return

4. Basic Concepts and Approaches to Setup and Configuration

Your application and what you need to accomplish will dictate setup and configuration of the meter. This section shows you how the meter works; it contains information that will help you see how your meter can best be connected to peripheral devices, or to resets and alarms.

4.1 CHOOSING AN OPERATING MODE

One of the first decision you need to make is to determine what MODE you want the meter to run in. There are two rate modes—Rate and Sq Rt—that count per unit time, and one counting mode—Batch.

If you need to measure a simple rate, you should use Rate Mode. If your input signal is proportional to the square of the quantity that you are measuring, you should use Sq Rt mode. Differential pressure transducers produce this type of input and almost always require the use of the isolated analog input board. If you need to count, especially on numerous levels, you should use Batch Mode.

4.2 MODE-ASSOCIATED MEASUREMENTS

Each mode has 4 associated measurements that can be displayed by pressing the ▲/DISPLAY button on the front panel. Table 4-1 shows these measurements for each mode.

TABLE 4-1. MODE-ASSOCIATED MEASUREMENTS

MODE	ASSOCIATED MEASUREMENT			
Rate	RATE	AVG RT	TOTAL	TIME
Sq Rt	SQ RT (Square Root)	AVG RT (Average Rate)	TOTAL	TIME
Batch	BATCH (unit count)	BAT NO (Number of Batches)	TOTAL	TIME

For instance, if the meter is in Rate Mode, you can press the ▲/DISPLAY button to sequence through display readings of RATE, AVG RT (Average Rate), TOTAL, and TIME.

When any mode-associated measurement (except TIME) is on the display, the corresponding Measurement LED is lit. The first measurement in any mode (RATE, SQ RT, or BATCH) corresponds to the top LED.

The factory preset operating mode of the meter is Rate. The factory preset Rate units are Hertz–cycles per second–which the meter interprets as pulses per second.

4.3 USING SCALE FACTORS

One of the great features of the meter is that the input units can be converted to units other than Hertz (frequency), and the associated TOTAL can also have independent units. This is accomplished by using scale factors.

Input units are converted to other display units by using a rate scale factor (RTE SC) for Rate and Sq Rt Modes, or a Batch scale factor (BAT SC) for the Batch Mode. For instance, you are in Rate Mode, filling barrels of wine; you want to show the rate of filling in gallons per minute, but the total in barrels. You would use the RTE SC parameter to convert the incoming signal from Hertz to gallons per minute, and the TOT SC parameter to convert the total from pulses to barrels. When the meter is running and you press the ▲/DISPLAY button to view readings, the RATE reading will be in gallons per minute, and the TOTAL reading in barrels.

4.4 USING OFFSETS

The meter allows you not only to scale RATE and TOTAL values, but to offset them as well. For instance, you have a dam that is 1000 feet above sea level. You have scaled the incoming signal so that the display reads in feet. Now you want to offset this reading so that it reflects the height above sea level. You would use a Rate Offset (RTE OF) of 1000. When you press the ▲/DISPLAY button to view the RATE reading, it will show the height of the water above sea level.

4.5 AUTOMATIC SCALE AND OFFSET

The Automatic Scale and Offset feature is a function that automatically sets the scale factors of the input signal and the Rate reading to 1, and the offset values of the input signal and Rate

reading to 0. It provides a quick way to "wipe out" scale factors and offsets so that they can be reconfigured easily. This feature is enabled by setting configuration choice CF4.8 to 1. (See Section 5.4.2.)

4.6 OVERFLOW VALUES AND EXPONENTIAL FORMAT

If your source signal units are Hertz, the meter is counting many pulses every second. This means that the TOTAL count can climb very quickly. If you are in this or a similar situation, you will almost always want to convert TOTAL units to other units that scale down the count. When the meter encounters a count too large to show on the 6-digit display, it begins using exponential format like this:

3.23 E8

The E designates the exponent of 10. In this example 3.23 E8 = $3.23 * 10^8 = 323000000$. The exponent power can be seen as the number of places the decimal point should be moved to the right.

4.7 NEGATIVE-TRUE LOGIC

In places throughout this manual, you will see a bar over certain words, like this:

$\overline{\text{RESET-A}}$

This bar indicates Negative-true logic, also referred to as a NOT condition. This means that the indicated function must "go low" to be activated. In the example above, your input voltage to the connector pin that controls a $\overline{\text{RESET-A}}$ must be low in order to activate the reset.

4.8 DIFFERENT METER MODES

Modes are ways in which the meter operates or can be configured.

1. Run Mode is the generic term that defines the operating mode of the meter when it is not being configured or at a STOP. There are four kinds of Run Modes: Rate, Sq Rt, Batch, and Clock. (Since Clock always runs in the background, it is not configurable as a Run Mode.)

Run Mode is accessed under the following conditions:

a. Whenever power is applied to the meter
b. When the RESET button is pressed twice in the middle of the Parameter list, (or three times if the display shows a submenu) in Configuration Mode
c. At the end the Parameter list in Configuration Mode
d. At the end of the setpoint sequence in Setpoint Mode
e. After a 3-second STOP has been initiated (and terminated when the ▶/STOP button is pressed again) in Batch-Run Mode

Whenever the meter starts operating in, or reverts to, Run Mode, the word RUN momentarily shows on the display. If the meter is in Rate, Sq Rt, or Batch Mode, one of the Measurement LEDs is also lit.

2. Configuration Mode is the mode that allows you to configure the meter. It is accessed by pressing the MENU button. Most setpoint assignments can be configured in this mode; the only assignments that cannot be configured are the setpoint values. See Section 5 for more information on configuring the meter.

3. Setpoint Mode. This mode allows you to configure the setpoint values only. It is accessed by pressing the SETPTS button. See the Section 4.9 for more information on setpoints.

4.9 SETPOINTS

One of the most important functions of the meter is to monitor counts and rates, and at certain pre-determined values, initiate appropriate responses. These pre-determined values are called setpoints and the responses they initiate may be alarms, resets, or any other type of action that must be carried out at a certain time.

The meter has a total of 5 setpoints, numbered in sequence—Setpoint 1, Setpoint 2, etc. Each one is associated with a transistor that brings about a response.

4.9.1 SETPOINT ASSIGNMENTS

In a strict sense, setpoints are nothing more than reference points awaiting assignments. Each one must be assigned the following attributes or characteristics:

1. A specific measurement (such as TOTAL) to which it applies

2. A setpoint value: a specific value that when crossed causes the setpoint to become "active"

3. A directional reference indicating whether the setpoint is active ABOVE or BELOW the setpoint value

4. The normal state (open or closed) of the associated transistor

5. The type of output (normal, latched, or pulsed) that is initiated when the setpoint is activated. In Rate and Sq Rt Modes, output can also be hysteretic.

When the Dual Relay Board is used, setpoints are assigned into groups of 3 and 2 each, and one set point in each group is assigned to a specific relay by positioning the S1 jumpers on the relay board. See Appendix F for more information.

Certain setpoints are always associated with certain RESETs. In Batch Mode, when counting down, the Setpoint 3 value is always used when an Autoreset or a $\overline{\text{RESET-A}}$ is initiated.

Table 4-2 shows which setpoints are assigned to which measurement in each mode:

TABLE 4-2. SETPOINT ASSIGNMENTS FOR EACH MODE

	MODE		
SETPOINT	RATE	SQ RT	BATCH
1	TOTAL	TOTAL	BATCH Count
2	TOTAL	TOTAL	BATCH Count
3	RATE	RATE	BATCH Count
4	RATE	RATE	BAT NO or TOTAL
5	TIME	TIME	TIME

For example, if you are in Rate Mode, you can use Setpoints 1 and 2 to trigger appropriate responses based on the TOTAL reading.

4.9.2 CONFIGURING SETPOINTS

All setpoint assignments except for the setpoint value are configured with parameters CNFG 1 through CNFG 3 (see Section 5). They are set to specific values through the SETPTS button on the front panel.

To set any setpoint value from Run Mode, press the SETPTS button. The display will momentarily show STPT 1, then display the current setting. Press the ▶/STOP button to move to any digit, and the ▲/DISPLAY button to set the digit. Press the SETPTS button to store the setting and to move to the next setpoint. The meter will automatically reset and revert to Run Mode at the end of the setpoint sequence.

> **NOTE:** Once you are in the setpoint configuration mode and you do not press any buttons within approximately 30 seconds, the meter will automatically return to the run mode.

Setpoints 1 through 4 have corresponding LEDs that light when they are accessed or activated in Run Mode.

4.10 RESETS AND STOPS

Resets are actions that cause a measurement value to revert to a specific number, or a meter condition to revert to a specific state. They are often used to start a counting cycle over and to deactivate alarms. Resets can be automatic, initiated by setpoints or control devices connected to the meter through the P2 connector; or manual, initiated by the front-panel RESET button, or by an external button connected to P2-2.

4.10.1 POWER-ON (HARD) RESET

A power-on or hard reset occurs when power is restored to the meter. It loads (copies) nonvolatile memory values into operating memory and resets measurement values. The TIME display flashes showing the last time count.

4.10.2 CONFIGURATION (COLD) RESET

A cold reset loads new nonvolatile memory settings into operating memory after the meter has been configured or setpoint values have been changed. (Lockout L3C.7 must be set to 0 to enable storage

of new settings in nonvolatile memory.) A cold reset resets all measurement values except TIME, and the meter reverts to Run Mode using the new settings. It is done by pressing the RESET button two times during configuration. It is also done automatically after the last parameter is viewed and saved in Configuration Mode.

A cold reset can also be done through serial communications. Refer to the Serial Communications Manual for additional information.

4.10.3 SETPOINT-ONLY RESET

A Setpoint-Only Reset returns the meter to Run Mode after writing new setpoint values in operating memory only. New values are prevented from being stored in nonvolatile memory by purposely setting Lockout L3C.7 to 1. This condition is desirable when setpoints are changed very often. Locking out nonvolatile memory storage assures that the EEPROM chip's life isn't shortened by constant setpoint changes. The meter continues to use values set in this way until power is disconnected.

A Setpoint-Only Reset is done by changing setpoints with the SETPT button, then pressing the RESET button. The NOSTOR error message will appear on the display, indicating that setpoint values have not been stored in nonvolatile memory.

4.10.4 RATE AND SQ RT MODE RESETS

> **NOTE:** Access to configuration bits (i.e. CF1.2, CF2.1, CF3.3 and CF4.1) are via the configuration menus CNFG 1, CNFG 2, CNFG 3 and CNFG 4.

4.10.4.1 $\overline{\text{RESET-A}}$

$\overline{\text{RESET-A}}$ is activated through the P2-3 pin on the 20-socket ribbon connector at the rear of the Main Board. It can be configured to act either on the pulse edge (CF4.1=0) or pulse level (CF4.1=1). It does the following:

1. Resets the TOTAL counter to 0; the display will reflect any TOT OF (Total Offset) value.

2. Unlatches a latched alarm (output) assigned to TOTAL (when CF3.3 and CF3.4=1).

3. Terminates a pulsed alarm (output) assigned to TOTAL if the associated setpoint is not designated in the AL TI (Alarm Time) parameter.

$\overline{\text{RESET-A}}$ does not terminate a pulsed alarm if the associated setpoint is assigned a pulse duration in the AL TI parameter.

4.10.4.2 $\overline{\text{RESET-B}}$

$\overline{\text{RESET-B}}$ is activated through P2-11. It does the following:

1. Makes the AVG RT (Average Rate) equal to the latest RATE measurement (starts a new AVG RT period)
2. Unlatches a latched alarm (output) assigned to RATE (Setpoints 3 and 4)
3. Resets the hysteresis action as follows:

   If active BELOW, compares reading with Setpoint 3.

   If active ABOVE, compares reading with Setpoint 4.
4. Terminates a pulsed alarm (output) assigned to RATE if the associated setpoint is not designated in AL TI.

4.10.4.3 $\overline{\text{RESET-C}}$

$\overline{\text{RESET-C}}$ is activated through P2-19. It sets the TIME to the configured SET TI (Set Time) value.

4.10.4.4 FRONT-PANEL RESET

The front-panel reset is activated by pressing the RESET button. It can be disabled by setting the CF4.7 choice to equal "1". It initiates the actions of $\overline{\text{RESET-A}}$, $\overline{\text{RESET-B}}$, or $\overline{\text{RESET-C}}$, depending upon which measurement is displayed.

Table 4-3 shows the reset function for the measurement displayed in the RATE, AVERAGE RATE, TOTAL or TIME both standard and square-root modes

TABLE 4-3. FRONT-PANEL RESETS IN RATE AND SQ RT MODES

DISPLAYED MEASUREMENT	RESET FUNCTION
RATE	$\overline{\text{RESET-B}}$ (but does not change AVG RT)
AVG RT	Replaces AVG RT with latest RATE
TOTAL	$\overline{\text{RESET-A}}$
TIME	$\overline{\text{RESET-C}}$

4.10.5 BATCH MODE RESETS

4.10.5.1 $\overline{\text{RESET-A}}$

$\overline{\text{RESET-A}}$ is activated through the P2-3 pin on the 20-socket ribbon connector at the rear of the Main Board. It can be configured to act either on the pulse edge (CF4.1=0) or pulse level (CF4.1=1). It does the following:

1. Resets the BATCH counter to 0 if the meter is counting up (CF1.8=0); resets to the Setpoint 3 value if the meter is counting down (CF1.8=1)
2. Increments BAT NO (Number of Batches) by 1.
3. Unlatches a latched alarm (output) assigned to BATCH (when CF3.3=1 and CF3.4=1) and removes a STOP condition initiated by either the front-panel ▶/STOP button or P2-17.
4. Terminates a pulsed alarm (output) assigned to BATCH if the associated setpoint is not designated in the AL TI (Alarm Time) parameter.

$\overline{\text{RESET-A}}$ does not terminate a pulsed alarm if the associated setpoint is assigned a pulse duration in the AL TI parameter.

4.10.5.2 $\overline{\text{RESET-B}}$

$\overline{\text{RESET-B}}$ is activated through P2-11. It does the following:

1. Resets the BAT NO (Number of Batches) to 0 if the meter is counting up (CF2.7=0) or to the Setpoint 4 value if the meter is counting down. (When counting down, SP 4 must be assigned to BAT NO).
2. Unlatches a latched alarm (output) assigned to BAT NO.
3. Terminates a pulsed alarm (output) assigned to BAT NO if the associated setpoint is not designated in the AL TI (Alarm Time) parameter.

4.10.5.3 $\overline{\text{RESET-C}}$

$\overline{\text{RESET-C}}$ is activated through P2-19. It does the following:

1. Resets the TOTAL counter to 0; the display will reflect any TOT OF (Total Offset) value.
2. Unlatches a latched alarm (output) assigned to TOTAL.
3. Sets the TIME to the configured SET TI value (if CF4.7=0).

4.10.5.4 FRONT-PANEL RESET

The front-panel reset is activated by pressing the RESET button. It can be disabled by setting the CF4.7 choice to 1. It initiates the actions of RESET-B, or RESET-C, depending upon which measurement is displayed.

Table 4-4 shows the front-panel reset functions for the BATCH mode.

TABLE 4-4. FRONT-PANEL RESETS IN BATCH MODE

DISPLAYED MEASUREMENT	RESET FUNCTION
BATCH	Loads B LOAD Value
BAT NO	RESET-B
TOTAL	Resets the total counter to zero
TIME	Resets time to SET TI value

A front-panel RESET also unlatches a possible latched alarm.

4.10.5.5 AUTORESET

Autoreset is a specific type of automatic reset. It is an internal RESET-A. It uses 0 and the Setpoint 3 value exactly like RESET-A:

Resets the BATCH counter to 0 if the meter is counting up (CF1.8=0); resets to the Setpoint 3 value if the meter is counting down (CF1.8=1).

You must set the CF2.6 choice to 1 to enable the Autoreset function.

4.10.6 STOP

The front-panel ▶/STOP button works only in Batch Mode. If configuration choice CF4.8=1, the button is enabled; pressing it activates all setpoints, which should trigger alarms that halt or safeguard the system. After 3 seconds, pressing the ▶/STOP button again resets all alarms and returns the meter to Run Mode.

4.11 COUNTING UP OR DOWN

Another decision you will have to make when setting up the meter is whether you want to count up or down. Generally, counting up is easier than counting down.

For instance, you're baking a batch of pies and you know that the pies must be in the oven for 45 minutes. You have two options: You can count up from 0, and at 45 minutes perform a reset that sets the time back to 0; or you can count down from 45, and at 0 perform a reset that sets the time back to 45.

If you are using the Rate Mode or Sq Rt Mode, counting up and down applies to the TOTAL count only. In Batch mode, counting up and down applies to all counts, BATCH, BAT NO, and TOTAL.

Note that most counting routines involve interdependent reset, setpoint, and configuration settings.

4.11.1 COUNTING UP

For TOTAL counts, the meter counts UP by using the following equation:

Display Count = (count * TOT SC) + TOT OF

In order to make the count positive and go up, you must make TOT SC (the TOTAL scale factor) positive. (See Section 5.4.11.) TOT OF represents the number from which you are counting up.

To make BATCH count up, you must set configuration choice CF1.8 to 0. To make BAT NO count up, you must set configuration choice CF2.7 to 0. (See Section 5.4.2.)

4.11.2 COUNTING DOWN

For TOTAL counts, the meter counts DOWN by using the same equation it uses to count up:

Display Count = (count * TOT SC) + TOT OF

In order to make the count positive but go down, you must make TOT SC (the TOTAL scale factor) negative. TOT OF represents the number from which you are counting down.

To make BATCH count down, you must set CF1.8 to equal "1". To make BAT NO count down, you must set configuration choice CF2.7 to equal "1".

4.12 AN EXAMPLE SHOWING SETPOINT AND RESET CONTROL

Figure 4-1 shows a setup where setpoints and resets control filling of barrels on a conveyor belt. The signal source is a flow meter with a 4-20-mA signal. The flow is directed toward two valves, a "fast" valve that delivers a large quantity of liquid quickly, and a "slow" valve that delivers a much smaller quantity slowly.

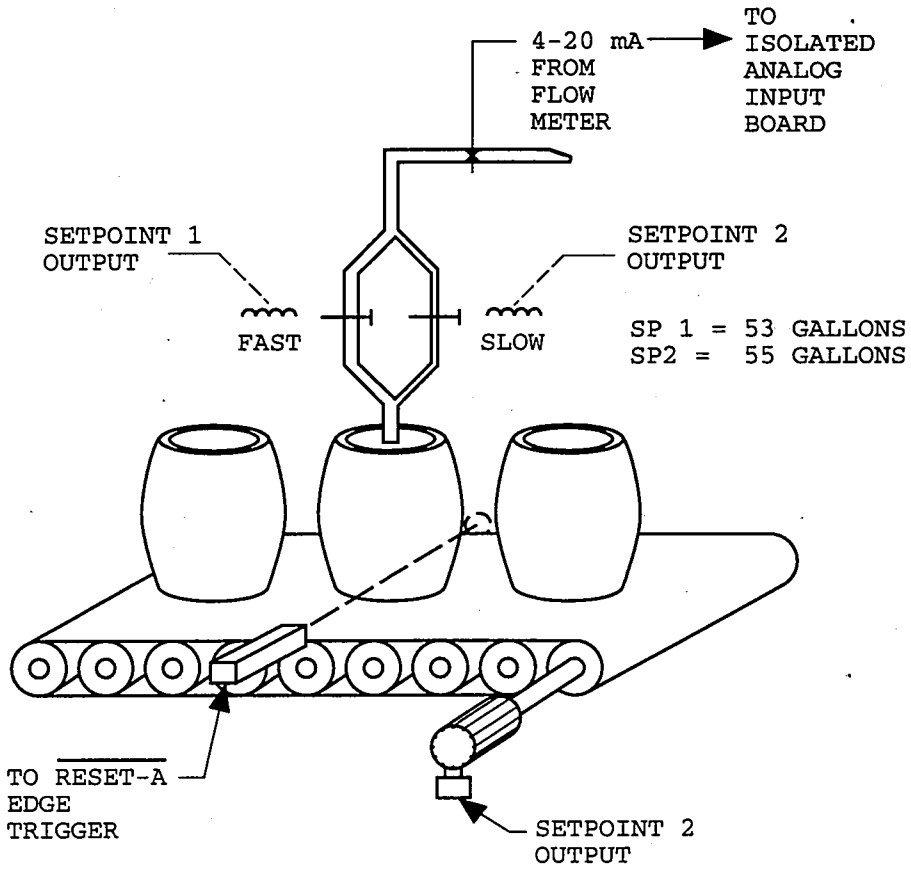

Figure 4-1. Setup using Setpoints and Resets

Here are the system connections and settings:

Mode:	Rate
Setpoint 1:	Value, 53; assigned to TOTAL, active ABOVE; enables closing of fast valve
Setpoint 2:	Value, 55: assigned to TOTAL, active ABOVE; enables closing of slow valve and moving of conveyor belt
$\overline{\text{RESET-A}}$:	Edge-triggered by barrel position sensor; resets TOTAL (as configured by TOT OF), enables opening of fast and slow valves and stopping of conveyor belt
TOT OF:	0; TOTAL count resets to 0
TOT SC:	As required to convert display units to gallons; the meter counts up

When the system is in action, barrels move from left to right. Just after a barrel has been completely filled, the conveyor belt moves forward and an empty barrel hits the sensor that triggers a $\overline{\text{RESET-A}}$. This stops the conveyor belt, positioning the empty barrel beneath the flow output, and opens the fast and slow filling valves. The edge-triggered reset also deactivates Setpoints 1 and 2, and resets the TOTAL count to 0, but allows it to climb immediately as the barrel is filled. When the TOTAL (the volume of the barrel) reaches 53 gallons, Setpoint 1 is activated and the fast valve closes. The slow valve continues to deliver a very low flow that can easily be shut off at exactly 55 gallons. When TOTAL reaches 55 gallons, Setpoint 2 is activated and the slow valve also closes. The conveyor belt simultaneously moves forward and the next empty barrel triggers a $\overline{\text{RESET-A}}$, deactivating Setpoints 1 and 2, setting the TOTAL count to 0, and starting the filling process all over again.

Notes:

4

Basic Concepts

5. Configuring the Meter

Configuration is the process of telling the meter exactly how you would like it to operate.

The meter must be ON to configure it. When power is applied, the meter starts to function immediately in Run Mode. To access Configuration Mode, simply press the MENU button. The display will show L1 CNF (explained below), and configuration can start.

5.1 PARAMETERS, CHOICES, AND SETTINGS

Your meter always operates within certain guidelines called parameters. When power is applied, the meter "consults" these parameters and operates accordingly. The parameter list is accessed by repeated pressing of the MENU button. The parameters that appear on the display after the appearance of the MODE parameter depend on the MODE setting.

Each parameter has a number of possible choices. Choices are accessed by pressing the ▶/STOP button, and set by pressing the ▲/DISPLAY button. For example, the MODE parameter, has three choices: Rate, Sq Rt (Square Root), and Batch. If you set the MODE to Rate, the meter functions as a Rate Meter/Totalizer; if you set it Sq Rt, it functions as a Rate Meter/Totalizer/Square Root Extractor; and if you set it to Batch, it functions as a Batch Controller.

Settings are stored by pressing the MENU button which also brings up the next parameter on the display.

While in the Configuration Mode, pressing the RESET button once displays the previous parameter. Pressing the RESET button two times resets the meter; all changes are stored in nonvolatile memory (EEPROM), and the meter reverts to Run Mode. The meter also resets and reverts to Run Mode at the end of the parameter sequence.

5.2 THE BASICS OF CONFIGURATION

The following is a brief outline for configuring the meter:

1. To access any parameter, press the MENU button repeatedly until the desired parameter appears.

2. Press the ▶/STOP button repeatedly until the desired choice appears. A flashing digit or word indicates that that choice is current and can be changed.

3. Press the ▲/DISPLAY button repeatedly until the desired setting appears.

4. Press the ▶/STOP button to advance to a new choice; press the MENU button to save the new settings and to advance to the next parameter. The display will show STORED when changed settings are saved.

The configuration of some parameters varies slightly from these general instructions; specific instructions for each parameter are detailed in Section 5.4.

Table 5-1 shows you the parameter list for each meter mode.

TABLE 5-1. PARAMETERS FOR EACH MODE

PARA-METER	RATE MODE	SQ RT MODE	BATCH MODE
1	L1 CNF	L1 CNF	L1 CNF
2	L2 CNF	L2 CNF	L2 CNF
3	L3 CNF	L3 CNF	L3 CNF
4	MODE	MODE	MODE
5	CNFG 1	CNFG 1	CNFG 1
6	CNFG 2	CNFG 2	CNFG 2
7	CNFG 3	CNFG 3	CNFG 3
8	CNFG 4	CNFG 4	CNFG 4
9	AVG.CNF	AVG.CNF	IN.SC.OF
10	IN.SC.OF	IN.SC.OF	OT.SC.OF
11	OT.SC.OF	OT.SC.OF	BAT DP
12	RTE DP	RTE DP	B LOAD
13	RTE OF	RTE OF	BAT SC
14	RTE SC	RTE SC	TOT DP
15	TOT DP	TOT DP	TOT OF

continued next page

continued from previous page

PARA-METER	RATE MODE	SQ RT MODE	BATCH MODE
16	TOT OF	TOT OF	TOT SC
17	TOT SC	TOT SC	AL TI
18	AL TI	AL TI	BAUD
19	GATE T	BAUD	SER.CNF
20	BAUD	SER.CNF	DAT FT
21	SER.CNF	DAT FT	BUS FT
22	DAT FT	BUS FT	ADDRES
23	BUS FT	ADDRES	SER TI
24	ADDRES	SER TI	SET TI
25	SER TI	SET TI	CAL VZ
26	SET TI	CAL VZ	CAL VS
27	CAL VZ	CAL VS	CALmAZ
28	CAL VS	CALmAZ	CALmAS
29	CALmAZ	CALmAS	
30	CALmAS		

5.3 LOCKOUTS

The first three parameters in each meter mode, L1 CNF, L2 CNF, and L3 CNF, are called Lockouts because their sole function is to control access to **other** parameters. When you initially configure your meter, all choices of each Lockout should be set to 0 (this is the factory preset value). This ensures that all meter parameters are displayed, and are therefore accessible for change during configuration. After configuration, you may want to return to the Lockouts and set certain ones to equal "1". This locks out the corresponding parameters so that they don't appear on the display in future programming attempts, and therefore cannot be altered.

For example, you have completely configured your meter, and it is particularly important that your settings for BAUD and SER.CNF (Serial Configuration) parameters not be altered. Using Table 5-2 as a guide, you would look for the Lockout choice controlling display of BAUD and SER.CNF. L2C.6=1 would then be programmed into the meter.

5.3.1 LOCKOUTS AND CORRESPONDING ACTIONS

Table 5-2 shows you each Lockout and the parameters or functions it controls. The factory preset for all Lockouts is 0. **Factory presets are asterisked.**

TABLE 5-2. LOCKOUTS AND CORRESPONDING ACTIONS

PARA-METER	CHOICE	SETTING	ENABLES/ DISABLES	METER FUNCTION
L1 CNF	L1C.1	0* 1	Enables Disables	Display and setting of Setpoints 1 and 2 using the SETPTS button
	L1C.2	0* 1	Enables Disables	Display and setting of Setpoints 3 and 4 using the SETPTS button
	L1C.3	0* 1	Enables Disables	Display and setting of Setpoint 5 using the SETPTS button
	L1C.4	0* 1	Enables Disables	Display and setting of CNFG 1 parameter (Setpoint and display brightness configuration)
	L1C.5	0* 1	Enables Disables	Display and setting of CNFG 2 parameter (Setpoint and line frequency configuration)
	L1C.6	0* 1	Enables Disables	Display and setting of CNFG 3 parameter (Setpoint and input/ output configuration)
	L1C.7	0* 1	Enables Disables	Display and setting of CNFG 4 parameter (Input/output and reset configuration)

continued next page

Table 5-2 (cont'd)

PARA-METER	CHOICE	SETTING	ENABLES/ DISABLES	METER FUNCTION
	L1C.8	0* 1	Enables Disables	Display and setting of AVG.CNF parameter (Filter configuration) in Rate and Sq Rt Modes
L2 CNF	L2C.1	0* 1	Enables Disables	Display and setting of IN.SC.OF parameter (Input Scale and Offset configuration)
	L2C.2	0* 1	Enables Disables	Display and setting of OT.SC.OF parameter (Output Scale and Offset configuration)
	L2C.3	0* 1	Enables Disables	Display and setting of RTE DP, RTE OF, and RTE SC parameters (RATE decimal point, offset, and scale configuration)
	L2C.4	0* 1	Enables Disables	Display and setting of TOT DP, TOT OF, and TOT SC parameters (TOTAL decimal point, offset, and scale configuration)
	L2C.5	0* 1	Enables Disables	Display and setting of AL TI parameter (Alarm pulse time configuration)
	L2C.6	0* 1	Enables Disables	Display and setting of BAUD, SER.CNF, DAT FT, BUS FT, ADDRES, and SER TI parameters (Serial communications configuration)
	L2C.7	0* 1	Enables Disables	Display and setting of SET TI parameter (TIME configuration)

continued next page

Table 5-2 (cont'd)

PARA-METER	CHOICE	SETTING	ENABLES/ DISABLES	METER FUNCTION
	L2C.8	0* 1	Enables Disables	Display and setting of GATE T parameter (Gate Time configuration) in Rate Mode only
L3 CNF	L3C.1	0* 1	Enables Disables	Display of RATE, SQ RT, and BATCH using the ▲DISPLAY button in Run Mode
	L3C.2	0* 1	Enables Disables	Display of AVG RT, and BAT NO using the ▲DISPLAY button in Run Mode
	L3C.3	0* 1	Enables Disables	Display of TOTAL using the ▲DISPLAY button in Run Mode
	L3C.4	0* 1	Enables Disables	Display of TIME using the ▲DISPLAY button in Run Mode
	L3C.5	0* 1	Enables Disables	Display and setting of MODE parameter (Operating mode configuration)
	L3C.6	0* 1	Enables Disables	Display and setting of CAL VZ,CAL VS, CALmAZ, and CALmAS parameters (Analog output configuration)
	L3C.7	0* 1	Enables Disables	EEPROM (nonvolatile) storage of changed settings
	L3C.8	0* 1	Enables Disables	the MENU button (Disabled only with removal of S1-A)

5.3.2 SETTING LOCKOUTS

The following instructions show you how to set the Lockouts.

1. Press the MENU button repeatedly until L1 CNF appears on the display. (If you are in Run Mode you will need to press the MENU button only once.)

> **NOTE:** If L1 CNF, L2 CNF, and L3 CNF do not appear on the display, the S1-A jumper has been removed from the Main Board. If this is a first-time configuration, you must open the meter as decribed in Section 2.3.1 and install the jumper as decribed in Section 2.3.2.1. **If this is not a first-time configuration, the jumper may have been removed intentionally to ensure that certain operating parameters are not changed.**

2. Press the ▶/STOP button. The display will show either L1C.1=0 or L1C.1=1.

3. Press the ▲/DISPLAY button one or two times to toggle the setting to equal to 0 (to enable the corresponding parameter) or 1 (to disable the corresponding parameter). Refer to Table 5-2 for the definitions of each submenu as you continue on.

4. Press the ▶/STOP button to advance to L1C.2, then press the ▲/DISPLAY button to set it. Advance to, and set all 8 choices in L1 CNF in turn.

5. Press the MENU button to save the settings of L1 CNF and advance to the next Lockout, L2 CNF. Set all choices as you did those of the L1 CNF, then press the MENU button to save the settings and advance to L3 CNF. Set and save all choices.

6. Press the RESET button two times to exit Configuration Mode. The meter will reset and revert to Run Mode.

For on-line production measurement and control, you may want to lock out all programming choices that won't be changed from one run to another. Locking out all but frequently adjusted parameters will shorten the MENU parameter list considerably.

If you have locked out certain features as a security measure, there is no guarantee that a knowledgeable person won't access the Lockouts, unlock the choices, and reconfigure the corresponding parameters. How do you remove the Lockouts completely so that settings cannot be changed at all? See the next section.

5.3.3 REMOVING THE S1-A JUMPER FOR ADDED SECURITY

As an added measure of security after configuration and setting certain lockouts, you may also remove the S1-A jumper on the Main Board. This prevents the Lockouts themselves from appearing during configuration and gives you the utmost security in safeguarding settings.

Open the meter as described in Section 2.3.1 and remove the S1-A jumper as described in Section 2.3.2.1.

5.4 OTHER METER PARAMETERS

This section explains the function of all parameters following the Lockouts.

5.4.1 MODE

MODE refers to the mode in which the meter operates. There are three choices: Rate, Sq Rt, and Batch. The factory preset mode is Rate.

Press the MENU button repeatedly until the display shows MODE. Press the ▶/STOP button. The display will show the current mode. Press the ▲/DISPLAY button to set the desired mode, then press the MENU button to store the setting.

If you change the MODE to a new setting, the meter will automatically RESET and revert to RUN. To continue configuring the meter, press the MENU button 5 times to sequence past the first 4 parameters and bring up the fifth one, CNFG 1.

5.4.2 CNFG 1 THROUGH CNFG 4 (Rate, Sq Rt, Batch)

CNFG 1 through CNFG 4 are configuration parameters that assign attributes to setpoints (Section 4.9.1), control the display, and configure input/output.

Press the ▶/STOP button to advance to L1C.2, then press the ▲/DISPLAY button to set it. Continue on by pressing the ▶/STOP button and the ▲/DISPLAY button until all 8 submenus of L1 CNF have been set. Press the MENU button to save your selections and the display will show L2 CNF. You may now proceed to set all of the parameters in this menu just as you did in L1 CNF. L3 CNF and L4 CNF are configured the same way.

Table 5-3 shows configuration parameters CNFG 1 through CNFG 4. Factory preset values are asterisked.

TABLE 5-3. CONFIGURATION PARAMETERS CNFG 1 THROUGH CNFG 4

PARAM	CHOICE	SETTING	RESULTING ACTION		
			RATE MODE	SQ RT MODE	BATCH MODE
CNFG 1	CF1.1	0*	SP 1 output is normally CLOSED; SP 1 is assigned to TOTAL		SP 1 output is normally CLOSED; SP 1 is assigned to BATCH count
		1	SP 1 output is normally OPEN; SP 1 is assigned to TOTAL		SP 1 output is normally OPEN; SP 1 is assigned to BATCH count
	CF1.2	0*	SP 2 output is normally CLOSED; SP 2 is assigned to TOTAL		SP 2 is normally CLOSED; SP 2 is assigned to BATCH count
		1	SP 2 output is normally OPEN; SP 2 is assigned to TOTAL		SP 2 output is normally OPEN; SP 2 is assigned to BATCH count
	CF1.3	0*	SP 3 output is normally CLOSED; SP 3 is assigned to RATE if CF1.7=0; SP 3 used for AVG RT if CF1.7=1		SP 3 output is normally CLOSED; SP 3 is assigned to BATCH count
		1	SP 3 is normally OPEN; SP3 is assigned to RATE if CF1.7=0; SP 3 used for AVG RT if CF1.7=1		SP 3 is normally OPEN; SP 3 is assigned to BATCH count
	CF1.4	0*	SP 4 is normally CLOSED; SP 4 is assigned to RATE if CF1.8=0; SP 4 used for AVG RT if CF1.8=1		SP 4 is normally CLOSED; SP 4 is assigned to TOTAL if CF1.7=0; for BAT NO if CF1.7=1

continued next page

continued from previous page

PARAM	CHOICE	SETTING	RESULTING ACTION: RATE MODE	RESULTING ACTION: SQ RT MODE	RESULTING ACTION: BATCH MODE
	CF1.4	1	SP 4 is normally OPEN; SP4 is assigned to RATE if CF1.8=0; SP 4 used for AVG RT if CF1.8=1		SP 4 is normally OPEN; SP 4 is assigned to TOTAL if CF1.7=0; for BAT NO if CF1.7=1
	CF1.5	0*	SP 5 is normally CLOSED; SP 5 is assigned to TIME		
		1	SP 5 is normally OPEN; SP 5 is assigned to TIME		
	CF1.6	0*	Meter display is bright		
		1	Meter display is dimmed 50%		
	CF1.7	0*	SP 3 is assigned to RATE		SP 4 is assigned to TOTAL
		1	SP 3 is assigned to AVG RT		SP 4 is assigned to BAT NO
	CF1.8	0*	SP 4 is assigned to RATE		BATCH counts up
		1	SP 4 is assigned to AVGRT		BATCH counts down
CNFG 2	CF2.1	0*	SP 1 output is active ABOVE SP 1 value		
		1	SP 1 output is active BELOW SP 1 value		
	CF2.2	0*	SP 2 output is active ABOVE SP 2 value		
		1	SP 2 output is active BELOW SP 2 value		
	CF2.3	0*	SP 3 output is active ABOVE SP 3 value		
		1	SP 3 output is active BELOW SP 3 value		

continued next page

continued from previous page

PARAM	CHOICE	SETTING	RESULTING ACTION		
			RATE MODE	SQ RT MODE	BATCH MODE
	CF2.4	0*	SP 4 output is active ABOVE SP 4 value		
		1	SP 4 output is active BELOW SP 4 value		
	CF2.5	0*	SP 5 output is active ABOVE SP 5 value		
		1	SP 5 output is active BELOW SP 5 value		
	CF2.6	0*	SP 3 action is not delayed		RESET action is normal (manual by the front-panel RESET button or external P2-2 reset)
		1	SP 3 action is delayed for 4 alarm readings		At SP 3 value, meter Autoresets to 0; or at 0, meter Autoresets to SP3 value
	CF2.7	0*	SP 4 action is not delayed		BAT NO counts up
		1	SP 4 action is delayed for 4 alarm readings		BAT NO counts down from SP 4 value if CF1.7=1
	CF2.8	0	Meter is set for 60 Hz power		
	(See Appendix J for factory setting)	1	Meter is set for 50 Hz power		

continued next page

continued from previous page

PARAM	CHOICE	SETTING	RESULTING ACTION: RATE MODE	RESULTING ACTION: SQ RT MODE	RESULTING ACTION: BATCH MODE
CNFG 3	CF3.1 (Analog Output)	0	Analog output = disabled		
		1*	RATE is sent		BATCH count is sent
		2	AVG RT is sent		BAT NO is sent
		3	TOTAL is sent		
		4	Output is ramped (See Appendix K for Ramp Specs)		
	CF3.2 (BCD Output)	0	BCD output = disabled		
		1*	RATE is sent		BATCH count is sent
		2	AVG RT is sent		BAT NO is sent
		3	TOTAL is sent		
		4	TIME is sent		
	CF3.3 (SP 1)	0*	SP 1 output is normal (unlatched)		
		1	SP 1 output is latched		
		2	SP 1 output is pulsed with 70 to 140 ms duration unless SP 1 is the designated setpoint in the AL TI parameter, in which case pulse duration is set by AL TI		
	CF3.4 (SP 2)	0*	SP 2 output is normal (unlatched)		
		1	SP 2 output is latched		
		2	SP 2 output is pulsed with 70 to 140 ms duration unless SP 2 is the designated setpoint in the AL TI parameter, in which case pulse duration is set by AL TI		

continued next page

continued from previous page

PARAM	CHOICE	SETTING	RESULTING ACTION		
			RATE MODE	SQ RT MODE	BATCH MODE
	CF3.5 (SP 3)	0*	SP 3 output is normal (unlatched)		
		1	SP 3 output is latched		
		2	SP 3 output is pulsed with 70 to 140 ms duration unless SP 3 is the designated setpoint in the AL TI parameter, in which case pulse duration is set by AL TI		
		3	Setpoints 3 and 4 act as low and high thresholds, respectively, for SP 4 hysteretic action (CF3.6=3)		
	CF3.6 (SP 4)	0*	SP 4 output is normal (unlatched)		
		1	SP 4 output is latched		
		2	SP 4 output is pulsed with 70 to 140 ms duration unless SP 4 is the designated setpoint in the AL TI parameter, in which case pulse duration is set by AL TI		
		3	SP 4 output is hysteretic		
	CF3.7 (SP 5)	0*	SP 5 output is normal (unlatched)		
		1	SP 5 output is latched		
		2	SP 5 output is pulsed with 70 to 140 ms duration unless SP 5 is the designated setpoint in the AL TI parameter, in which case pulse duration is set by AL TI		
	CF3.8	0*	No input rate cutoff; all positive and negative rates are counted		
		1	0 input rate cutoff; only positive input rates are counted		

continued next page

continued from previous page

PARAM	CHOICE	SETTING	RESULTING ACTION		
			RATE MODE	SQ RT MODE	BATCH MODE
		2	100 Hz input rate cutoff; only input rates >100 Hz are counted	5% of display full scale cutoff; only input rates reading ≥5% of display full scale are counted	
		3	300 Hz input rate cutoff; only input rates >300 Hz are counted	10% of display full scale cutoff; only input rates reading 10% of display full scale are counted	
	CF3.9	0	Meter waits up to 11 s for final pulse before computing RATE		
		1*	Meter waits up to 2 s for final pulse before computing RATE		
		2	Meter waits up to 0.5 s for final pulse before computing RATE		
		3	Meter waits up to 0.15 s for final pulse before computing RATE		

continued next page

continued from previous page

PARAM	CHOICE	SETTING	RESULTING ACTION: RATE MODE	SQ RT MODE	BATCH MODE
CNFG 4	CF4.1	0*	External $\overline{\text{RESET}}$ A (P2-3) triggered on pulse edge		
		1	External $\overline{\text{RESET}}$ A (P2-3) triggered on pulse level		
	CF4.2	0	Calibrated Analog Output = Voltage		
		1*	Calibrated Analog Output = Current		
	CF4.3	0*	Display HOLD (P2-16) = disabled		
		1	Display HOLD (P2-16) = enabled		
	CF4.4	0*	Print Request (P2-16) = disabled		
		1	Print Request (P2-16) via V01 communications = enabled (Appendix G)		
	CF4.5	0*	10-ms output pulse on P2-15 at the end of each RATE measurement		Pulse output on P2-15 is low when input rate is cut off, high if rate is not cut off
		1	Output pulse on P2-15 is low for 100 ± 40 ms: repeat rate is configured by SER TI (Serial Time)		
	CF4.6	0*	BCD binary address decimal point is right justified (See Appendix E)		
		1	BCD binary address decimal point is left justified (See Appendix E)		
	CF4.7	0*	Front-panel RESET = enabled		
		1	Front-panel RESET = disabled		

continued next page

continued from previous page

PARAM	CHOICE	SETTING	RESULTING ACTION: RATE MODE	RESULTING ACTION: SQ RT MODE	RESULTING ACTION: BATCH MODE
CNFG 4	CF4.1	0*	External $\overline{\text{RESET}}$ A (P2-3) triggered on pulse edge		
		1	External $\overline{\text{RESET}}$ A (P2-3) triggered on pulse level		
	CF4.2	0	Calibrated Analog Output = Voltage		
		1*	Calibrated Analog Output = Current		
	CF4.3	0*	Display HOLD (P2-16) = disabled		
		1	Display HOLD (P2-16) = enabled		
	CF4.4	0*	Print Request (P2-16) = disabled		
		1	Print Request (P2-16) via V01 communications = enabled (Appendix G)		
	CF4.5	0*	10-ms output pulse on P2-15 at the end of each RATE measurement	Pulse output on P2-15 is low when input rate is cut off, high if rate is not cut off	
		1	Output pulse on P2-15 is low for 100 ± 40 ms: repeat rate is configured by SER TI (Serial Time)		
	CF4.6	0*	BCD binary address decimal point is right justified (See Appendix E)		
		1	BCD binary address decimal point is left justified (See Appendix E)		
	CF4.7	0*	Front-panel RESET = enabled		
		1	Front-panel RESET = disabled		

continued next page

TABLE 5-4. AVG RT VALUES

TOTAL VALUES IN AVERAGE	CHOICE			
	AVG.1	AVG.2	AVG.3	AVG.4
1	0	0	0	0
2	1	0	0	0
4	0	1	0	0
8	1	1	0	0
16	0	0	1	0
32	1	0	1	0
64	0	1	1	0
128	1	1	1	0
256	0*	0*	0*	1*
512	1	0	0	1
1024	0	1	0	1
2048	1	1	0	1
4096	0	0	1	1
8192	1	0	1	1
16384	0	1	1	1
32768	1	1	1	1

The fifth choice, AVG.5, selects the filter type, adaptive or fixed. AVG.5=0 selects the ABC* (Adaptive Bandwidth Control) filter which keeps track of the signal history and detects systematic changes. When changes occur, it repeatedly reduces the number of values in the average. When the input rate is changing slowly, ABC repeatedly extends the number of readings averaged, so that excellent noise reduction is obtained.

AVG.5=1 selects the fixed-number-average filter, similar to the time constant of an analog first-order filter. Although much slower than the ABC filter, this fixed filter does give the familiar single-exponential response to step and ramp input changes. The AVG.5 factory preset value is 0.

5.4.4 IN.SC.OF (Rate, Sq Rt, Batch)

IN.SC.OF (Input Scale and Offset) is used to calibrate analog input, using the calibration data on the back of the Isolated Analog Input Board. (The Isolated Pulse Input Board may be used in a situation where it also requires calibration, but this is rare.)

* *Patent applied for.*

IN.SC.OF can also be used to calibrate both the Isolated Analog Input Board and the incoming signal.

See Appendix C for more information and calibration instructions.

5.4.5 OT.SC.OF (Rate, Sq Rt, Batch)

OT.SC.OF (Output Scale and Offset) converts the meter reading to the desired analog output signal. It takes two data points–each based on an actual display reading–and uses them to produce the corresponding analog output values. Analog output can be either direct acting or reverse acting.

Internally, the meter takes the two data points and calculates the scale (the slope of the line defined by the two points) and the offset (the output when the display reading is 0). Then it automatically converts display readings according to the calculated values using the following equation:

Output = (Display reading * SCale) + OFfset

You must know the desired output that the display readings correspond to.

OT.SC.OF can also be used to set the slope of an analog output ramping function. (See Appendix K.)

Use Table 5-5 to configure OT.SC.OF. Read from left to right starting with the Press command. The first line reads, "Press the MENU button repeatedly until the display reads OT.SC.OF."

TABLE 5-5. OT.SC.OF CONFIGURATION

STEP	PRESS:	THE DISPLAY SHOWS:	UNTIL THE DISPLAY SHOWS:	COMMENTS
1	MENU repeatedly		OT.SC.OF	You are now ready to configure OT.SC.OF
2	▶/STOP	READ 1		

continued next page

Table 5-5 (cont'd)

STEP	PRESS:	THE DISPLAY SHOWS:	UNTIL THE DISPLAY SHOWS:	COMMENTS
3	▶/STOP	000000.		Now enter the display reading of the "low"output signal: Press the ▲/DISPLAY button repeat edly to set the flashing digit; press the ▶/STOP button to move to new digits
4	MENU	OUTPT 1		
5	▶/STOP	000000.		Enter the output value that you would like the READ 1 to correspond to: Press the ▲/DISPLAY button repeat edly to set the flashing digit; press the ▶/STOP button to move to new digits When you press the MENU button next, the first data point will be saved
6	MENU	READ 2		
7	▶/STOP	000000.		Enter the display reading of the "high" output signal: Press the ▲/DISPLAY button repeat edly to set the flashing digit; press the ▶/STOP button to move to new digits
8	MENU	OUTPT 2		
9	▶/STOP	000000.		Enter the output value that you would like the READ 2 to correspond to: Press the ▲/DISPLAY button repeat edly to set the flashing digit; press the ▶/STOP button to move to new digits When you press the MENU button next, the first data point will be saved
10	MENU	RTE DP		You have successfully calculated OT.SC.OF

NOTE: If you receive an error message just after pressing the MENU button for the last time, note the message and see Appendix H.

Factory preset settings pertain to current output and are as follows:

READ 1	= 0	OUT 1	= 4 mA
READ 2	= 10000	OUT 2	= 20 mA

5.4.6 RTE DP (Rate, Sq Rt)

RTE DP (Rate Decimal Point) is used to select the resolution of the RATE display. The factory preset value is RRRRRR.

Press the MENU button repeatedly until the display reads RTE DP. Press the ▶/STOP button to display the current decimal point position. The display will show RRRRRR and the decimal point will flash. Change the position of the decimal point by pressing the ▲/DISPLAY button repeatedly, then press the MENU button to store the desired position.

The settings for this parameter are interdependent with settings for setpoints and those for offsets (IN.SC.OF and RTE OF).

If you receive an ERR 02 message, the placement of your decimal point has left insufficient display places to accommodate one of the setpoints. The meter sets that setpoint to the maximum value possible with the restrictive decimal point position and continues.

If you receive an ERR O1 message, the placement of the decimal point has left insufficient display places to accommodate a programmed offset value. The meter cannot continue. You must choose a decimal point setting that allows display of all offset digits.

5.4.7 RTE OF (Rate, Sq Rt)

RTE OF (Rate Offset) allows you to directly enter a known RATE offset. It does not affect TOTAL readings in any way. The factory preset is 0.

Please note that RTE OF is entered in display units, the units of measure corresponding to the RATE display reading. Factory preset display units are Hertz (Hz), pulses per second.

Press the MENU button repeatedly until the display shows RTE OF.

Press the ▶/STOP button; the display will show the current offset; the first digit will flash. Press the ▲/DISPLAY button to set the flashing digit, and advance to the next one by pressing the ▶/STOP button. When the desired number has been entered, press the MENU button. The meter will store RTE OF and advance to the next parameter.

The setting for this parameter is interdependent with that for RTE DP.

5.4.8 RTE SC (Rate, Sq Rt)

RTE SC (RATE Scale) allows you to directly enter a known RATE scale. It is used to convert input units to other display units. It does not affect TOTAL readings in any way. The factory preset operator is MULTIP and the factory preset value is 000001.

Press the MENU button repeatedly until the display reads RTE SC. Press the ▶/STOP button; the display will flash the current scale, either DIVIDE or MULTIP. Press the ▲/DISPLAY button to toggle the display to the correct operator, then press the ▶/STOP button. The display will show the current scale factor in 6 digits. Set each digit by repeated pressing of the ▲/DISPLAY button, and move to new digits and the decimal point by pressing the ▶/STOP button. (You may move the decimal point to any position here; it is not interdependent with other parameter settings.)

Press the MENU button to store RTE SC and advance to the next parameter

5.4.9 TOT DP (Rate, Sq Rt, Batch)

TOT DP (Total Decimal Point) allows you to select the resolution of the TOTAL display. The factory preset is TTTTTT.

Press the MENU button repeatedly until the display reads TOT DP, then press the ▶/STOP button. The display will show TTTTTT and the current decimal point will flash. Change the position of the decimal point by pressing the ▲/DISPLAY button repeatedly, then press the MENU button to store the desired position.

The setting for this parameter is interdependent with that for TOT OF.

If you receive an ERR 02 message, the placement of your decimal point has left insufficient display places to accommodate one of the

setpoints. The meter adjusts the decimal point and continues after displaying an ERR O2.

If you receive an ERR O1 message, the placement of the decimal point has left insufficient display places to accommodate the programmed TOT OF value. The meter cannot continue. You must choose a decimal point setting that allows display of all offset digits. Press the ▶/STOP button, reconfigure the decimal point position, then press the MENU button to store the desired position. The meter will advance to the next parameter.

5.4.10 TOT OF (Rate, Sq Rt, Batch)

TOT OF (Total Offset) allows you to offset the displayed TOTAL value. This value is loaded onto the TOTAL display when a RESET-C is initiated in Batch Mode, or a RESET-A is initiated in Rate or Sq Rt Modes. The factory preset value is 0. The maximum allowable offset is 500.

Please note that TOT OF is entered in display units–the units of measure corresponding to the TOTAL display reading. Factory preset display units are pulses or counts.

Press the MENU button repeatedly until the display shows TOT OF. Press the ▶/STOP button; the display will show the current offset; the first digit will flash. Press the ▲/DISPLAY button to set the flashing digit, and advance to the next one by pressing the ▶/STOP button. When the desired number has been entered, press the MENU button. The meter will store TOT OF and advance to the next parameter.

The setting for this parameter is interdependent with that for TOT DP.

5.4.11 TOT SC (Rate, Sq Rt, Batch)

TOT SC (TOTAL Scale) is used to convert TOTAL to units other than those of the input. It does not affect RATE readings in any way. The factory preset is MULTIP and the factory preset value is 000001.

Press the MENU button repeatedly until the display reads TOT SC. Press the ▶/STOP button; the display will flash the current scale, either DIVIDE or MULTIP. Press the ▲/DISPLAY button to toggle the display to the correct operator, then press the ▶/STOP button. The display will show the current scale factor in 6 digits. Set each

digit by repeated pressing the ▲/DISPLAY button, and move to new digits and the decimal point by pressing the ▶/STOP button. (You may move the decimal point to any position here; it is not interdependent with other parameter settings.)

Press the MENU button to store TOT SC and advance to the next parameter.

5.4.12 AL TI (Rate, Sq Rt, Batch)

AL TI (Alarm Time) defines the pulse duration in seconds of one (and only one) setpoint that is set to Pulsed in choices CF3.3 through CF3.7. (Any pulsed setpoint that is not the designated setpoint as defined by AL TI, defaults to a pulse duration of 70 to 140 ms.) The factory preset setpoint is 0 and the factory preset time is 00:00.

When the setpoint is set to 0, AL TI is used to ramp the analog output function. (Configuration choice CF3.1 must be set to 4.) The pulse duration becomes the ramp time–the time it takes to completely open a closed valve. (See Appendix K.)

Press the MENU button repeatedly until the display shows AL TI, then press the ▶/STOP button. The display will show the designated setpoint (which should flash) followed by an equal sign and the corresponding pulse duration. Press the ▲/DISPLAY button repeatedly to set the setpoint, then press the ▶/STOP button and the ▲/DISPLAY button to advance to, and set, the digits of the pulse duration. Pulse duration cannot exceed 99.99 s. Press the MENU button to store AL TI and advance to the next parameter.

5.4.13 GATE TI (Rate)

GATE T (Gate Time) refers to the length of time in which the meter accepts input pulses for a single rate calculation. The longer GATE T, the better the resolution. (GATE T, is not used for the rate calculation; a similar, but much more accurate method called Measurement Time is used.)

There are 5 choices: (approximately) 0.03 s, 0.10 s, 0.30 s, 1.00 s, and 3.00s. The factory preset value is 0.30 s.

Press the MENU button repeatedly until the display reads GATE T. Press the ▶/STOP button. The display will flash the current setting. Press ▲/ DISPLAY repeatedly to sequence through the possible choices, then press the MENU button to store the desired GATE T and advance to the next parameter.

5.4.14 BAUD, SER.CNF, DAT FT, BUS FT, ADDRES, SER TI (Rate, Sq Rt, Batch)

BAUD, SER.CNF, DAT FT, BUS FT, ADDRES, and SER TI are parameters that configure RS-232 and RS-485 board communications.
BAUD (RS-232, RS-485)

BAUD refers to the data transfer rate through the communications channel linking two or more devices. There are seven choices:

300, 600, 1200, 2400, 4800, 9600, and 19,200

The factory preset is 9600.

Press the MENU button until the display shows BAUD, then press the ▶/STOP button. The display will flash the current baud rate. Press the ▲/DISPLAY button repeatedly to sequence through the seven possible rates, then press the MENU button to store the desired rate and advance to the next parameter.

SER.CNF (RS-232, RS-485)

SER.CNF (Serial Configuration) sets the serial communications format. Table 5-6 shows SER.CNF settings; factory preset values are asterisked.

TABLE 5-6. SERIAL COMMUNICATIONS CONFIGURATION AS SET BY SER.CNF

PARAM.	CHOICE	SETTING	RESULTING ACTION
SER.CNF	SER.1	0	No parity
		1*	Sets the parity bit to ODD
		2	Sets the parity bit to EVEN
	SER.2	0*	Sets the stop bit to one
		1	Sets the stop bit to two
	SER.3	0	Sends longs messages in several pieces
		1*	Sends long messages in a single piece

Press the MENU button until the display shows SER.CNF, then press the ▶/STOP button. The display will flash the current setting for SER.1. Press the ▲/DISPLAY button repeatedly to sequence through and choose one of three possible settings, then press the ▶/STOP button to advance to the next choice. Set SER.2 and SER.3 similarly. Press the MENU button to store the settings and advance to the next parameter.

DAT FT (RS-232, RS-485)

DAT FT (Data Format) controls the message response to Point-to-Point Continuous Transmission and V01 commands. It determines whether or not certain characters or values are sent along with the basic message. Factory preset values are asterisked.

TABLE 5-7. MESSAGE RESPONSE AS SET BY DAT FT

PARAM	CHOICE	SET'G	DISABLES /ENABLES	RESULTING ACTION: RATE MODE	RESULTING ACTION: SQ. RT MODE	RESULTING ACTION: BATCH MODE
DAT FT	DAT.1	0 1*	Disables Enables	Addition of alarm status character to the message		
	DAT.2	0 1*	Enables Disables	Addition of RATE value to the message		Addition of BATCH count to the message
	DAT.3	0 1*	Enables Disables	Addition of AVG RT value to the message		Addition of BAT NO to the message
	DAT.4	0 1*	Disables Enables	Addition of TOTAL value to the message		
	DAT.5	0 1*	Disables Enables	Addition of TIME to the message		
	DAT.6	0 1*	Disables Enables	Addition of RATE unit of measurement		Addition of BATCH count unit of measurement
	DAT.7	0 1*	Disables Enables	Addition of AVG RT unit of measurement		Addition of BAT NO unit of measurement
	DAT.8	0 1*	Disables Enables	Addition of TOTAL unit of measurement		

Press the MENU button until the display shows DAT FT, then press the ▶/STOP button. The display will flash the current setting for DAT.1. Press the ▲/DISPLAY button one or two times to set the choice to 0 or 1, then press the ▶/STOP button to advance to the next choice. Set choices DAT.2 through DAT.8 similarly. Press the MENU button to store the settings and advance to the next parameter.

BUS FT (RS-232, RS-485)

BUS FT (Bus Format) configures the serial communications format. Table 5-8 shows BUS FT settings; factory preset values are asterisked.

TABLE 5-8. BUS CONFIGURATION AS SET BY BUS FT

PARAM	CHOICE	SETTING	RESULTING ACTION: RATE MODE	RESULTING ACTION: SQ RT MODE	RESULTING ACTION: BATCH MODE
BUS FT	BUS.1	0*	Does not add a check sum to the message		
		1	Adds a check sum to the message		
	BUS.2	0	Does not add a line feed <LF> to the message		
		1*	Adds a line feed <LF> to the message		
	BUS.3	0*	Does not add a command ECHO in front of the message		
		1	Adds a command ECHO in front of the message		
	BUS.4	0*	Sets the meter to Point-to-Point Mode		
		1	Sets the meter to Multipoint Mode		
	BUS.5	0*	Sets Point-to-Point Mode to Continuous		
		1	Sets Point-to-Point Mode to Command		
	BUS.6	0*	In Point-to-Point Mode, sets RTS handshake to Message		
		1	In Point-to-Point Mode, sets RTS handshake to Character		
	BUS.7	0*	Sets the meter for RS-232 communications		
		1	Sets the meter for RS-485 communications		
	BUS.8	0*	Separator for DAT FT choices 1, 2, 3, and 4 is the SPACE		
		1	Separator for DAT FT choices 1, 2, 3, and 4 is the <CR> (Carriage Return)		

Press the MENU button until the display shows BUS FT, then press the ▶/STOP button. The display will flash the current setting for BUS.1. Press the ▲/DISPLAY button one or two times to set the choice to 0 or 1, then press the ▶/STOP button to advance to the next choice. Set choices BUS.2 through BUS.8 similarly. Press the MENU button to store the settings and advance to the next parameter.

ADDRES (RS-232, RS-485)

ADDRES (Address) specifies the meter ID. It is important in RS-485 communications (when multiple meters share the same bus) that each meter have a different address. The address can be from 0 to 199.

Press the MENU button repeatedly until the display shows ADDRES, then press the ▶/STOP button. The meter will show the current address. Press the ▲/DISPLAY button repeatedly to set each digit, and the ▶/STOP button to advance to the next digit. Press the MENU button to store the desired address and advance to the next parameter.

SER TI (RS-232, RS-485)

SER TI (Serial Time) specifies the interval of time in seconds between consecutive transmissions in Point-to Point or Continuous Mode. The SER TI value can be from 1 to 59999 s. A zero setting sends transmissions as fast as possible. The factory preset value is 1 s.

Press the MENU button repeatedly until the display shows SER TI, then press the ▶/STOP button. The display will show the current SER TI value with the first digit flashing. Set each digit by repeated pressing of the ▲/DISPLAY button and advance to the next digit by pressing the ▶/STOP button. Press the MENU button to store the desired SET TI and advance to the next parameter.

5.4.15 SET TI (Rate, Sq Rt, Batch)

SET TI is the time in HH:MM:SS format that is loaded on the TIME display when the front-panel RESET button is pressed.

The clock can run on two cycles, a 24-hour cycle and a 99-hour cycle. If you set HH less than 24, it runs on the 24-hour cycle. If you set HH greater than 24 and less than or equal to 99, the clock runs on the 99-hour cycle. The factory preset value is 12:00:00; the clock will run on the 24-hour cycle.

Press the MENU button until the display shows SET TI, then press the ▶/STOP button. The display will show the current setting with the first digit flashing. Set each digit by pressing the ▲/DISPLAY button repeatedly, and go on to new digits by pressing the ▶/STOP button. Press the MENU button to store the desired time and advance to the next parameter.

5.4.16 BAT DP (Batch)

BAT DP (Batch Decimal Point) sets the BATCH decimal point position. The factory preset value is RRRRRR.

Press the MENU button repeatedly until the display shows BAT DP, then press the ▶/STOP button. The display will show BBBBBB and the current decimal point will flash. Change the position of the decimal point by pressing the ▲/DISPLAY button repeatedly, then press the MENU button to store the desired position.

If you receive an error message, press the ▶/STOP button, reconfigure the decimal point position, then press the MENU button to store the desired position.

NOTE: The meter will show an error message, STORED then B LOAD. You will then need to press the RESET button one time to go back to BAT DP and reposition the decimal point.

5.4.17 B LOAD (Batch)

B LOAD (Batch Load) is the loading value of the BATCH count (unit count). This value is loaded onto the display when the front panel RESET button is pressed while BATCH is displayed.

It can be used to reset the BATCH count to a positive number when operation has been halted and you want to load a specific BATCH value so that the operation will pick up exactly where it left off. In this case, you would configure the B LOAD value just before resuming operation; immediately after resuming operation, a RESET-B would load the desired BATCH value on the display.

The factory preset value is 0.

Press the MENU button repeatedly until the display shows B LOAD, then press the ▶/STOP button. The display will show the current B LOAD in 6 digits with the first digit flashing. Press the ▲/DISPLAY button repeatedly to set each digit, then press the ▶/STOP button to advance to next digit. Press the MENU button to store the desired B LOAD and advance to the next parameter.

5.4.18 BAT SC (Batch)

BAT SC (Batch Scale) is the BATCH scale factor. The factory preset is MULTIP and the factory preset value is 000001.

Press the MENU button repeatedly until the display shows BAT SC, then press the ▶/STOP button; the display will flash the current scale, either DIVIDE or MULTIP. Press the ▲/DISPLAY button to toggle the display to the correct scale, then press the ▶/STOP button. The display will show the current scale factor in 6 digits. Set each digit by repeated pressing of the ▲/DISPLAY button, and advance to new digits by pressing the ▶/STOP button. Press the MENU button to store BAT SC and advance to the next parameter.

5.4.19 CAL VZ, CAL VS, CALmAZ, CALmAS

CAL VZ (Calibrate Voltage Zero), CAL VS (Calibrate Voltage Span), CALmAZ (Calibrate milliamp Zero), CALmAS (Calibrate milliamp Span) are parameters that are used to calibrate the Isolated Analog Output board.

See Appendix D for more information and calibration instructions.

5.5 STEP-BY-STEP PROGRAMMING EXAMPLE 1: RATE MODE; SHAFT RPM FROM A GEAR-TOOTH DETECTOR

Figure 5-1 shows the Basic Meter receiving TTL or CMOS pulses from a detector measuring the teeth on a gear.

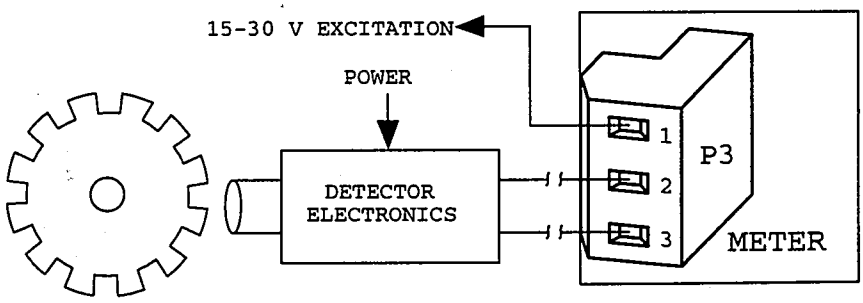

Figure 5-1. Basic Meter Connection to a Gear Detector

5.5.1 DETERMINING THE RATE SCALE (RTE SC)

TOTAL is not used in a shaft-speed application, no digital communications are used, and the example has no Analog Output. Therefore, many associated parameters will not be used.

The first step in this application is to decide what units you want the meter to display. Let's say that you want the meter to display revolutions per minute.

Rotation of the shaft produces X revolutions per minute (RPM) times N gear teeth to produce RPM*N pulses per minute. The meter's factory preset RATE units are Hertz (Hz), pulses per second. Therefore, the display would show RPM*N/60. To get a reading in RPM:

RTE SC = 60/N

If N = 12 (12 teeth on the gear),

RTE SC = 60/12 = 5.00000

5.5.2 CONFIGURING THE METER

This section shows you how to configure the meter for the first example. There are only a limited number of parameters that need to be changed from factory preset values, but all parameters that affect RATE up to RTE SC will be covered in case the corresponding preset values have been changed through experimentation or previous configuration.

1. Set all Lockouts to 0 (Section 5.3.2). All possible parameters will be displayed in sequence when you repeatedly press the MENU button.

2. Set the MODE to Rate (Section 5.4.1). The meter will reset and revert to Run Mode when you press the MENU button to store the selected MODE.

3. Press the MENU button five times to advance past MODE to CNFG 1. Set all CNFG parameters equal to 0 (Section 5.4.2).

4. Make sure IN.SC.OF is programmed to set the scale to 1 and the offset to 0 (Appendix C). Input the following values:

INPUT 1 = 0
READ 1 = 0
INPUT 2 = 100000
READ 2 = 100000

5. Set RTE DP to RRRRR.R (Section 5.4.6). This gives 0.1 RPM resolution.

   Ignore any ERR 02 message. This indicates a setpoint overflow that can easily be corrected when or if you set setpoints later.

6. Set RTE OF equal to 0 (Section 5.4.7).

7. Set RTE SC to MULTIP and a scale of 5 as calculated above (Section 5.4.8).

This concludes RATE programming. All other parameters (for TOTALs, Alarm Time, Gate Time, Serial Communications, etc.) have no effect on RATE measurements.

See Section 4.9.2 and Section 5.4.2 to program setpoints.

See Section 5.6 for adding TOTALs to a different example.

If you want the clock to run in the background, set SET TI (Section 5.4.15). To start TIME, press the ▲/DISPLAY button until you see TIME and the reading in HH:MM:SS is displayed, then press the RESET button.

After all parameters have been set to required values, you may want to set the corresponding Lockouts equal to 1 so that your settings cannot be changed.

Assuming the meter has been connected to the flowmeter and is operating correctly in Rate Mode, it will display the RATE in GPM when the ▲/DISPLAY button is pressed.

If the shaft in this example drove a mill roller, conveyor belt, vehicle wheel or other rotary-to-linear device, TOTAL could be used to measure distance or amount of product passed.

5.6 STEP-BY-STEP PROGRAMMING EXAMPLE 2: LINEAR FLOW; ADDING TOTAL TO RATE WITH EXCITATION FROM THE BASIC METER

In this example, the pulse source is a 100-pulse-per-gallon linear flowmeter (i.e., a turbine meter) which is powered by the unregulated 16 V excitation from the Basic Meter. See Figure 5-2.

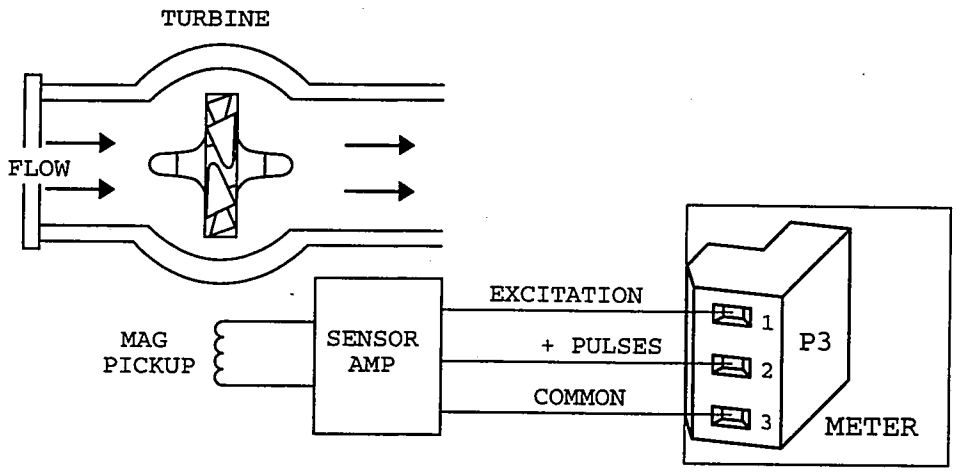

Figure 5-2. Basic Meter Connection to a Shaft Position Detector

To demonstrate the meter's scale and offset capability, set the RATE display to GPM (gallons per minute), but the TOTAL to Cubic Feet. This can be done because the decimal point location, scale factor and offset settings for RATE are completely independent of those for TOTAL.

An external signal (e.g., a limit switch closure or timing pulse) is connected to P2-3 (RESET-A) and is used to reset the TOTAL.

5.6.1 DETERMINING THE RATE DECIMAL POINT (RTE DP) AND RATE SCALE (RTE SC)

Once again the pulse source does not have an offset, so the only RATE parameters to be set are the decimal point (RTE DP) and scale factor (RTE SC).

Selecting the RTE DP position as RRRR.RR gives a possible full scale reading of 9999.99 GPM, or (dividing by 60) 166.67 gal/s. With 100 pulses per gallon, the maximum pulse rate would be

16.67 kHz.

Without offset,

$$\text{RTE SC} = \frac{\text{Desired Reading}}{\text{Actual Input Reading}}$$

$$= \frac{9999.99}{16667} = 0.60000$$

This is an easy MULTIP scale factor.

5.6.2 DETERMINING THE TOTAL DECIMAL POINT (TOT DP) AND TOTAL SCALE (TOT SC)

Selecting the decimal point as TTTTT.T gives a full-tank value of 99,999.9 cubic feet, where each cubic foot = 7.481 gallons.

The number of pulses N received for 1 cubic foot is

$$N = 1.0 * 7.481 * 100 = 748.1$$

$$\text{RTE SC} = \frac{\text{Desired Reading}}{\text{Actual Input Reading}}$$

$$\text{RTE SC} = \frac{1}{748.1}$$

This yields a DIVIDE scale of 748.1.

5.6.3 CONFIGURING THE METER

This section shows you how to configure the meter for the second example. There are only a limited number of parameters that need to be changed from the factory preset values, but all parameters up to TOT SC will be covered in case the corresponding factory presets have been changed through experimentation or previous configuration.

1. Set all Lockouts equal to 0 (Section 5.3.2). All possible parameters will be displayed in sequence when you repeatedly press the MENU button.

2. Set the MODE until you see Rate on the display (Section 5.4.1). The meter will reset and revert to Run Mode when you press the MENU button to store the selected MODE.

3. Press the MENU button five times to advance past MODE to CNFG 1. Set all CNFG parameters to 0 (Section 5.4.2).

4. Make sure IN.SC.OF is programmed to set the scale to 1 and the

offset to 0 (Appendix C). Input the following values:

INPUT 1	= 0
READ 1	= 0
INPUT 2	= 100000
READ 2	= 100000

5. Set RTE DP to RRRR.RR as discussed in Section 5.4.6.

   Ignore any ERR 02 message. This indicates a setpoint overflow that can easily be corrected when or if you set setpoints later.

6. Set RTE OF equal to 0 (Section 5.4.7).

7. Set RTE SC to MULTIP and a scale of 0.6 as calculated in Section 5.4.8.

8. Set TOT DP to TTTTT.T as discussed in Section 5.4.9. This gives you 0.1 Cubic Foot resolution.

   Ignore any ERR 02 message. This indicates a setpoint overflow that can easily be corrected when or if you set setpoints later.

9. Set TOT OF equal to 0 (Section 5.4.10).

10. Set the TOT SC to DIVIDE and the factor to 748.1 (Section 5.4.11).

This concludes RATE and TOTAL programming.

See Sections 4.9.2 and 5.4.2 to program setpoints.

If you want the Clock to run in the background, set SET TI (Section 5.4.15). To start TIME, press the ▲/DISPLAY until you see TIME on the display and the reading in HH:MM:SS is displayed, then press the RESET button.

After all parameters have been set to required values, you may want to set the corresponding Lockouts equal to 1 so that your settings cannot be changed.

Assuming the meter has been connected to the flowmeter and is operating correctly in Rate Mode, it will display the RATE in GPM and the TOTAL in Cubic Feet when the ▲/DISPLAY button is pressed.

6. Operating the Meter

This section contains simple instructions for operating the meter in different modes.

Once your meter is configured and power is applied, it will start to operate in Run Mode immediately. Operating it is very simple.

6.1 RATE MODE

The meter can display four different measurements in Rate Mode: RATE, AVG RT (Average Rate), TOTAL, and TIME.

1. To display any one of these measurement values, press the ▲ /DISPLAY button and wait. The meter will flash the name of the measurement briefly, then display the corresponding value. Press the ▲ /DISPLAY button repeatedly to sequence through all four Rate Mode measurements.

2. To reset measurement values and associated latched alarms, perform the following resets:

   a. $\overline{\text{RESET-A}}$ to reset the TOTAL count and TOTAL latched alarms

   b. $\overline{\text{RESET-B}}$ to start a new AVG RT period, reset RATE latched alarms, or reset hysteretic action

   c. $\overline{\text{RESET-C}}$ to reset the TIME as configured by the SET TI value

You can also press the front-panel RESET button. This will perform a $\overline{\text{RESET-A}}$, $\overline{\text{RESET-B}}$, or $\overline{\text{RESET-C}}$, depending on which quantity is displayed. (See Section 4.10.4.4.)

6.2 SQ RT MODE

The meter can display four different measurements in Sq Rt Mode: SQ RT, AVG RT (Average Rate), TOTAL, and TIME.

1. To display any one of these measurement values, press the ▲ /DISPLAY button button and wait. The meter will flash the name of the measurement briefly, then display the corresponding value. Press the ▲ /DISPLAY button repeatedly to sequence through all four Sq Rt Mode measurements.

2. To reset measurement values and associated latched alarms, perform the following resets:

   a. $\overline{\text{RESET-A}}$ to reset the TOTAL count and TOTAL latched alarms

   b. $\overline{\text{RESET-B}}$ to start a new AVG RT period, reset RATE latched alarms, or reset hysteretic action

   c. $\overline{\text{RESET-C}}$ to reset the TIME as configured by the SET TI value

You can also press the front-panel RESET button. This will perform a $\overline{\text{RESET-A}}$, $\overline{\text{RESET-B}}$, or $\overline{\text{RESET-C}}$, depending on which quantity is displayed. (See Section 4.10.4.4.)

6.3 BATCH MODE

The meter can display four different measurements in Batch Mode: BATCH, BAT NO (Number of Batches), TOTAL, and TIME.

1. To display any one of these measurement values, press the ▲/DISPLAY button and wait. The meter will flash the name of the measurement briefly, then display the corresponding value. Press the ▲/DISPLAY button repeatedly to sequence through all four Batch Mode measurements.

2. To reset measurement values and associated latched alarms, perform the following resets:

   a. $\overline{\text{RESET-A}}$ to reset the BATCH count and unlatch BATCH latched alarms

   b. $\overline{\text{RESET-B}}$ to reset the BAT NO and unlatch BAT NO latched alarms

   c. $\overline{\text{RESET-C}}$ to reset the TOTAL, unlatch TOTAL latched alarms, and reset TIME as configured by the SET TI value

   You can also press the front-panel RESET button. This will load the B LOAD value, or perform a $\overline{\text{RESET-B}}$ or $\overline{\text{RESET-C}}$, depending on which quantity is displayed. (See Section 4.10.5.4.)

3. To stop operation, press the ▶/STOP button. This will activate all setpoints and put the system in an alarm state. Press the ▶/STOP button again after 3 seconds to reset alarms and resume operation.

Notes:

6

Operating the Meter

Appendices

APPENDIX A
BASIC METER: GENERAL INFORMATION, SPECIFICATIONS, JUMPER CONFIGURATION, AND WIRING

A.1 GENERAL INFORMATION

The Basic Meter is defined as the meter with no optional boards. It accepts input pulses with a low level less than 1 V and a high level greater than 3.5 V from most active sources including TTL or CMOS sources, inactive sources such as open collector outputs and contact closures, and provides unregulated sensor excitation (14 - 20 V at 75 mA).

As the Basic Meter, the meter can operate in Rate Meter/Totalizer, Batch Controller, and Clock Modes. These modes are shown on the display as RATE, BATCH, and TIME.

A.2 SPECIFICATIONS

DISPLAY

TYPE:	14-segment, red or green LED
DIGIT HEIGHT:	0.54-inch (13.7-mm)
DECIMAL POINTS:	Six positions, programmable
LEADING ZEROS:	Blanked
OVERRANGE INDICATION:	Displayed in exponential format
DIMMING:	100% and 50% brightness levels, programmable
DISPLAY UPDATE TIME:	0.03 to 3 s, programmable
INDICATOR LIGHTS:	4 alarms and 3 status modes

POWER

AC VOLTAGE:	115 V ac or 230 V ac ± 15 %
CONSUMPTION:	10 watts, max
POWER FAILURE:	Counter values and time stored in nonvolatile memory
BATTERY BACKUP: (FOR INTERNAL CLOCK ONLY.)	6-12 Vdc @ 50 mA

A

Basic Meter

MAIN BOARD

SETPOINT OUTPUT:	5 open-collector transistors
POWER RATING:	150 mA dc @ 1 V sink, 30 V when open

GENERAL

THRESHOLD:	1 V to 3.5 V
PROTECTION LEVEL:	24 V
FREQUENCY RANGES:	0.2 Hz to 20 kHz
TRIGGER SLOPE:	Positive
CONNECTION:	3-Socket Input Plug
SENSOR EXCITATION:	14 to 20 V @ 75 mA non-regulated
INPUT RESISTANCE:	30 kΩ pull-up resistor to +5 V
ACCURACY:	.001% of reading ±1LSD, ±trigger error

CASE

MATERIAL:	94V-O UL-rated polycarbonate
DIMENSIONS:	(HxWxD) 1.89 x 3.78 x 5.86 in. (48 x 96 x 149 mm)

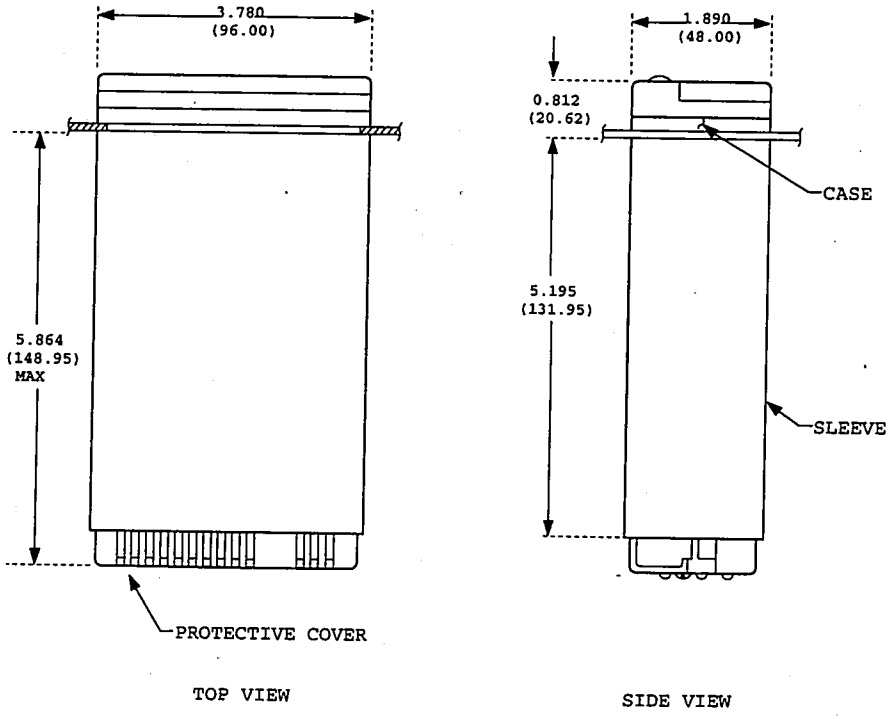

Figure A-1. Meter in the Regular Housing

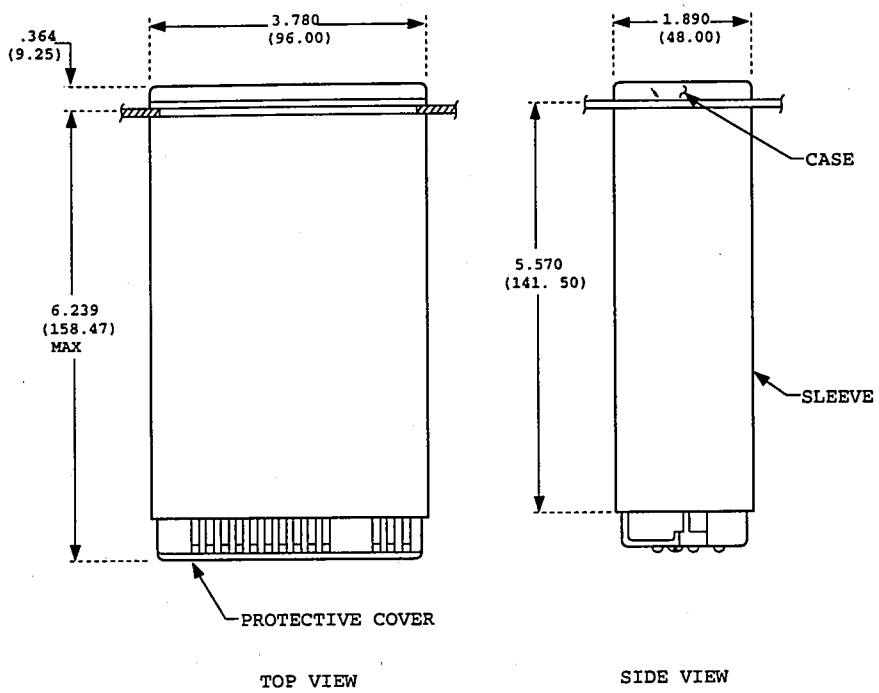

Figure A-2. Meter in the Optional Housing

A.3 MAIN BOARD JUMPER LOCATIONS AND CONFIGURATION

Figure A-3 shows the locations of Main Board jumpers.

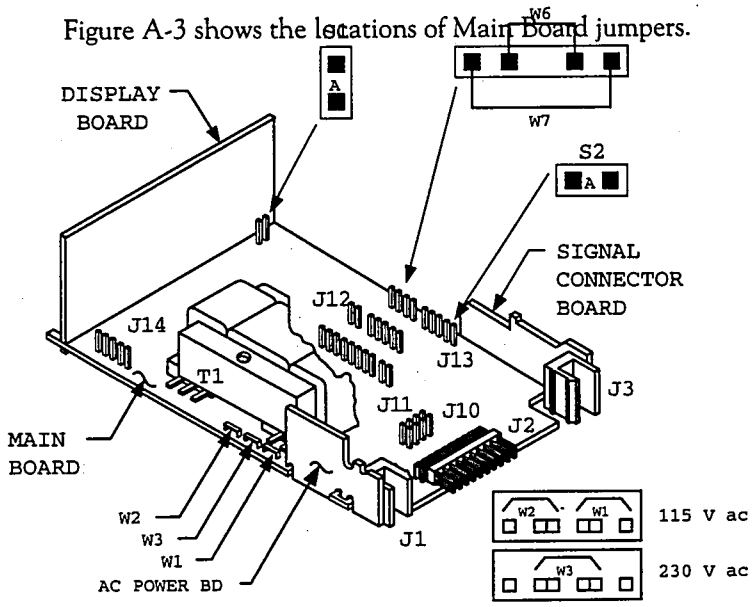

Figure A-3. Main Board Jumper Locations

Two push-on jumpers and two wired-in jumpers on the Main Board allow the Basic Meter to measure pulses and provide non-isolated excitation.

TABLE A-1. MAIN BOARD JUMPERS

JUMPER	LOCATION, VIEWING THE BOARD FROM THE REAR OF THE METER	FUNCTION
S1-A	On the right, immediately behind the Display Board	Enables push buttons to control lockout programming
S2-A	First two pins of J13 on the right side of the Main Board	Channels non-isolated excitation out to P3-1; remove if input board used
W1 and W2	Left side	Enables 115-V operation
W3	Left side	Enables 230-V operation
W6 and W7	Right side of Main Board next to J13	Bypasses isolation circuitry used for option boards; remove if input board used

See Appendix J for factory preset settings.

For non-isolated excitation, make sure jumper S2-A is installed on the rear two pins of J13 at the left rear of the main board.

A.4 WIRING

For the Basic Meter, input is wired to P3-2, the common ground to P3-3, and jumpers S2-A, W6 and W7 channel unregulated excitation to P3-1. Refer to Figure A-4.

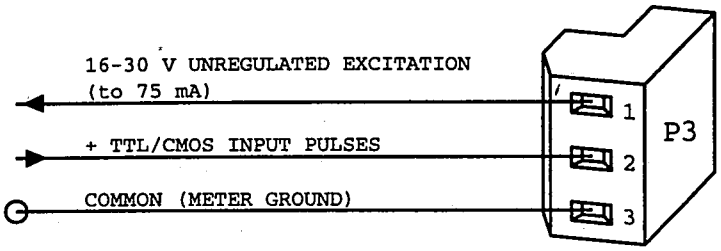

Figure A-4. Basic Meter Wiring

A.4.1 TTL OR CMOS PULSE SOURCE

Input from the pulse source is wired to P3-2 and the common ground to P3-3. Jumpers S2-A, W6, and W7 channel unregulated excitation to P3-1 (14 to 20 V at 75 mA).

Figure A-5 shows the connection of a TTL or CMOS pulse source to the basic meter. The same wiring applies to any TTL/CMOS source output.

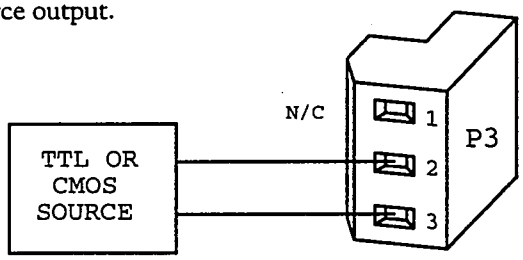

Figure A-5. TTL Source to the Basic Meter

The pulse source (including any wiring drop) should have a low threshold less than 1 V, and a high threshold greater than 3.5 V but not over 25 V. The meter provides a 30 kΩ pullup to its 5 V supply. The meter's pullup current lifts the pulse level when the signalling device is in the "open" state. Added external pullup current can be required if you have both high pulse frequency (i.e., higher than 5 kHz) and high capacitance (e.g., leads over 100 feet long).

If excitation from the meter is not required, S2-A may or may not be installed.

For pulse sources that need to be isolated from the meter's control/output logic levels (on P2), or that need amplification, use the Isolated Pulse Input Board. See Appendix B.

A.4.2 OPEN COLLECTOR OUTPUTS

Figure A-6 shows the unregulated meter excitation of a sensor with an NPN transistor output feeding the meter with pulses, going low when the NPN is shut.

PNP outputs can also be connected to the meter, but an external pulldown resistor is required to override the internal pullup at the meter's input.

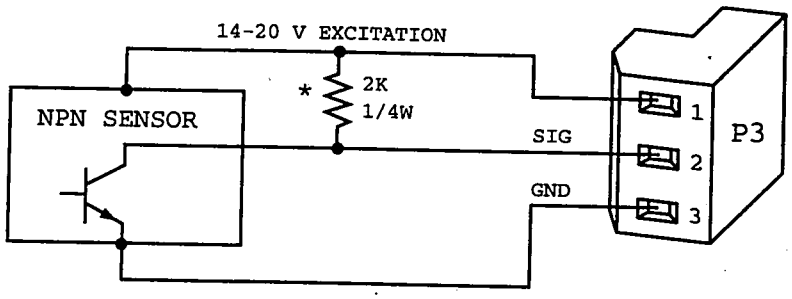

*Anti-noise resistor for long leads

Figure A-6. NPN Sensor to the Basic Meter

Figure A-6 also applies to most Darlington NPN outputs, since the meter's lower threshold is more than 1 V.

A.4.3 CONTACT-CLOSURE INPUT

Figure A-7 shows a contact-closure input to the Basic Meter. Internal pullup is provided, and when P2-9 is shorted to (jumpered to) P2-10, a debounce filter is also provided. (If P2 is wired, connect these two adjacent lines).

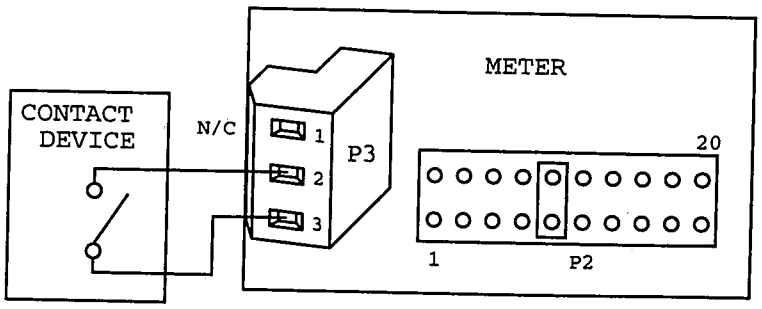

Figure A-7. Contact-Closure Input to the Basic Meter

APPENDIX B
ISOLATED PULSE INPUT BOARD: GENERAL INFORMATION, SPECIFICATIONS, JUMPER CONFIGURATION, AND WIRING

B

Isolated Pulse Input Board

B.1 GENERAL INFORMATION

The Pulse Input Board conditions low-amplitude pulses for both low-level (>20 mV rms) and high-level (up to 230 V rms) input signals. It provides galvanic isolation (354 V, IEC spacing), selectable hysteresis, filtering, clamping of overscale pulses, and regulated 5, 8.2 or 12.6 V excitation.

B.2 SPECIFICATIONS

SENSOR EXCITATION:	5, 8.2, and 12.6 V regulated, selectable
CONNECTION:	2, 3-socket input plugs
INPUT SENSITIVITY	
LOW LEVEL:	20 mV rms
HIGH LEVEL:	2 - 5 V (See Table B-2)
MAXIMUM INPUT	
LOW LEVEL:	60 V rms
HIGH LEVEL:	230 V rms
INPUT IMPEDANCE	
LOW LEVEL:	100 kΩ pullup to excitation
HIGH LEVEL:	150 kΩ pullup to excitation in parallel with 90 kΩ minimum
NAMUR SENSOR PROVISIONS:	1 kΩ series resistor with 8.2 V excitation
CONTACT CLOSURE FREQUENCY RANGE:	8 ON/OFF per second

B.3 JUMPER LOCATIONS AND CONFIGURATION

Figure B-1 shows the Isolated Pulse Input Board jumper locations.

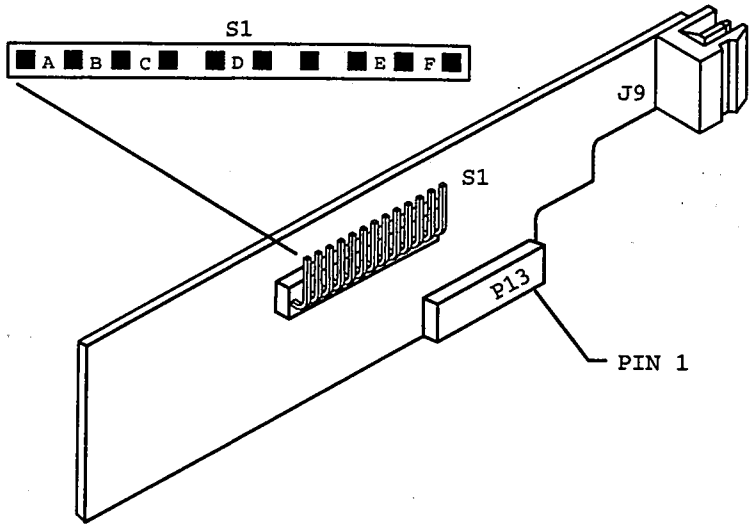

Figure B-1. The Isolated Pulse Input Board

Jumpers have the following functions. Factory presets are asterisked:

S1-B*	Enables 12.6 V Excitation
S1-C	Enables 5.0 V Excitation
S1-A	Enables 8.3 V Excitation
None	Enables 8.1 V Excitation
S1-D	Shifts low-level thresholds positively (See Table B-3)
S1-E	Counts pulse on high-to-low transition
S1-F*	Counts pulse on low-to-high transition

Table B-1 shows excitation voltage for different S1 positions. The factory preset is asterisked.

TABLE B-1. ISOLATED PULSE INPUT BOARD EXCITATION VOLTAGES

	EXCITATION VOLTAGE LIMITS (V)	
S1 POSITION	LOWER LIMIT	UPPER LIMIT
S1-B*	11.8	13.3
S1-A	7.9	8.8
S1-C	4.75	5.3

High-level signal input (on connector P9-2) threshold levels are as shown in Table B-2

TABLE B-2. ISOLATED PULSE INPUT BOARD: HIGH-LEVEL INPUT THRESHOLDS

EXCITATION (V_{cc})		4.75	5.3	7.9	8.8	11.8	13.3
High Threshold (V)	Min	1.40		2.3		3.5	
	Max		1.65		2.75		4.1
Low Threshold (V)	Min	0.75		1.25		1.9	
	Max		0.95		1.55		2.3

Table B-3 shows low-level signal input (on connector P3-2) and corresponding threshold limits. The factory preset condition is asterisked.

TABLE B-3. ISOLATED PULSE INPUT BOARD: LOW-LEVEL INPUT THRESHOLDS

EXCITATION(V_{cc})			4.7	5.25	7.5	8.5	11.8	13.2
S1-D Removed*	High Threshold (mV)	Min	9		16		28	
		Max		21		31		45
	Low Threshold (mV)	Min	–6		–6		–6	
		Max		8		9		9
S1-D Installed	High Threshold (mV)	Min	15		26		43	
		Max		30		44		65
	Low Threshold (mV)	Min	2		6		11	
		Max		16		21		29

In Tables B-2 and B-3, the two voltages given for each switching level show the hysteresis (the voltage difference between the low-to-high switch point and the high-to-low transition). Hysteresis eliminates multiple counts when the incoming pulses are noisy.

There is also an Input Jumper Label on the case showing jumper options for both the Isolated Pulse Input Board and the Isolated Analog Input Board.

B.4 HIGH-LEVEL PULSE CONDITIONING

The board's high-level input provides a 150 k pullup to the selected excitation voltage (with jumpers configured as shown in Tables B-2 and B-3). This input is buffered with 90 k series resistance and clamping diodes to ground and excitation so that overscale and/or bipolar pulses are readied for the 2/4 V hysteretic pulse detection levels (as shipped).

Tying P9-2 to ground (P3-3), provides a low-pass filter with a corner of about 8 Hz (20 ms nominal time constant) for noise rejection, suitable for relay contacts up to 8 cycles per second (with about 50% duty cycle).

SPST (Single-Pole Single-Throw) switches can use the 1 kΩ internal resistor between the input (P9-2) and P9-3 as a pullup or pulldown, by tying P9-3 to +V or ground (P3-3), as appropriate.

B.5 LOW-LEVEL PULSE CONDITIONING

If P3-2 is used as the input instead of P9-2, very low amplitude pulses can be detected, as shown by the tables in Section B.3. Jumper S1-C is provided to optimize the detection levels for unipolar pulses: when installed, it moves the switching thresholds up by about half of the hysteresis voltage.

The low-level input provides a 100 kΩ pullup to Excitation, 50 kΩ series resistance, and clamps to Excitation and ground. The internal filter corner is at approximately 50 kHz (3 s time constant) so that operation over the full pulse frequency rating (20 kHz) is achieved.

B.6 EXCITATION FOR SENSORS

The tables in Section B.3 show jumper configuration producing 12.6, 8.2 or 5 V of excitation to drive input devices. Like both the high-level and low-level inputs, this excitation is galvanically isolated from the rest of the meter (i.e., the control input/outputs on P2).

Excitation current is limited to 50 mA. Up to 70 mA is available when V_{CC} = 12.6 is selected. However, the 12.6 V may drop to 11.0 V.

B.7 WIRING

High-level input (up to 230 V) is wired to P9-2. Low-level signals (20 mV and up) are wired to P3-2 and P3-3.

Excitation is channeled to P3-1. S1-A, S1-B or S1-C select 8.2, 12.6 or 5 V excitation respectively.

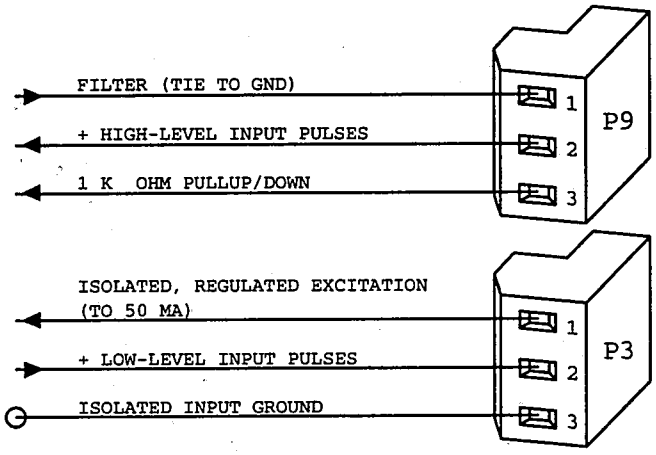

Figure B-2. Isolated Pulse Input Board Wiring

B.7.1 LOW-LEVEL INPUTS

Figure B-3 shows the Pulse Input Board used to condition the bipolar output of a low-level (20 mV rms or more) magnetic pickup. The regulator voltage jumper S1 should be in the S1-C position to lower the excitation voltage to 5 V and the threshold below 20 mV.

Low-level unipolar outputs (with the same voltage swings) can be matched by using Jumper S1-D on that board, which elevates the two switching thresholds by approximately half of the hysteresis of each range.

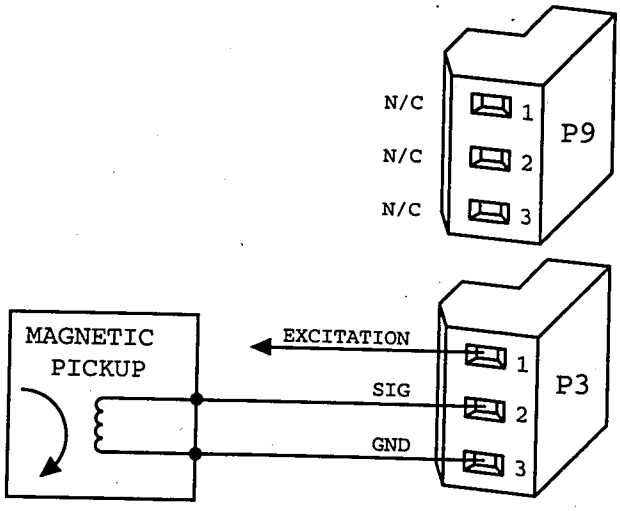

Figure B-3. Low-level Magnetic Pickup Input to the Isolated Pulse Input Board

B.7.2 NAMUR PROXIMITY SENSOR

Figure B-4 shows the use of the Pulse Input Board with a NAMUR proximity sensor (less than 1 mA when ON, more than 3 mA when OFF). The 1 kΩ resistor is built in, and the 8.2 V excitation is obtained by removing jumpers S1-A, S1-B, S1-C, and S1-D. Installing S1-A increases the excitation by about 0.2 V.

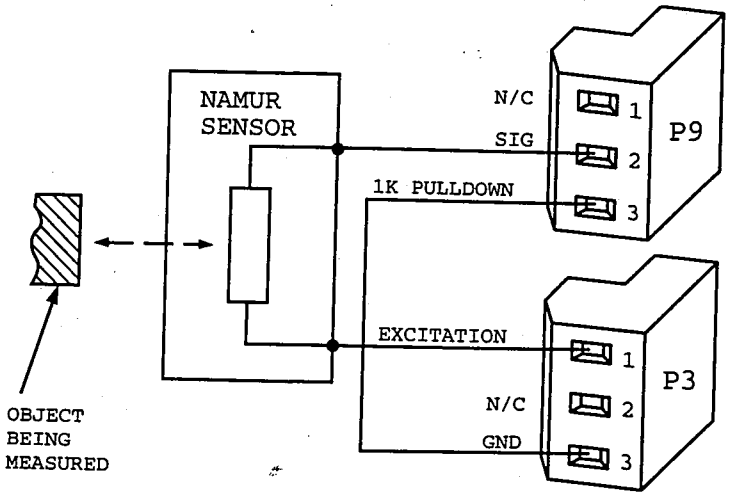

Figure B-4. NAMUR Sensor Input to the Isolated Pulse Input Board

B.7.3 NPN TRANSISTOR OR CONTACT-CLOSURE

Figure B-5 illustrates the use of the Pulse Input Board with sensor NPN transistor or contact closure output. Contact closures benefit from the debounce filter connection, P9-1 to ground (P3-3).

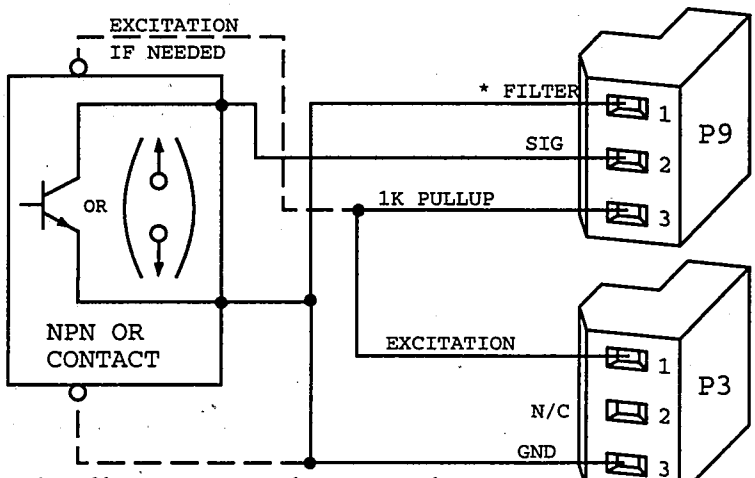

*Use filter connection for contact closure

Figure B-5. NPN Input to the Isolated Pulse Input Board

Darlington inputs with low-levels up to 1.9 V are accepted by the Pulse Input Board. See Figure B-6.

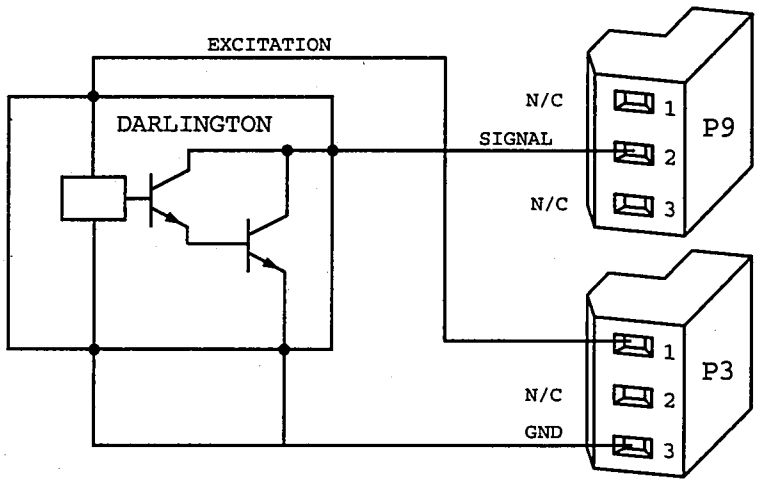

Figure B-6. Darlington Input to the Isolated Pulse Input Board

B.7.4 PNP TRANSISTOR OR CONTACT-CLOSURE

Figure B-7 shows the use of the Pulse Input Board with sensor PNP transistor or contact closure to the + excitation supply.

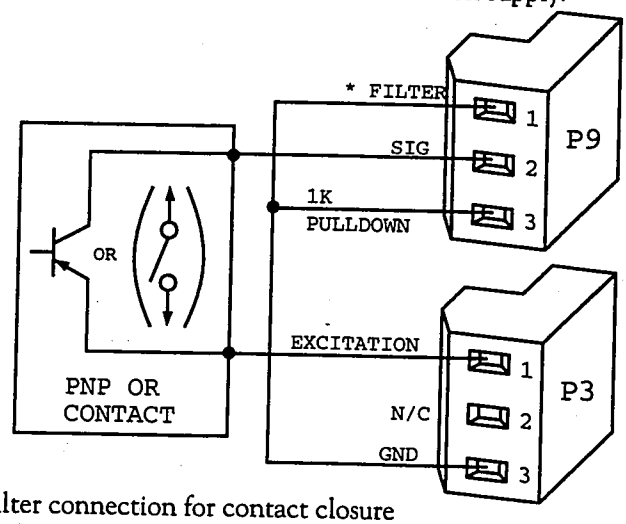

*Use filter connection for contact closure

Figure B-7. PNP Input to the Isolated Pulse Input Board

B.7.5 LOW-LEVEL UNIPOLAR SOURCE OUTPUT

Figure B-8 shows a wiring scheme useful for low-level unipolar outputs such as light-modulated resistances (install S1-C and S1-D).

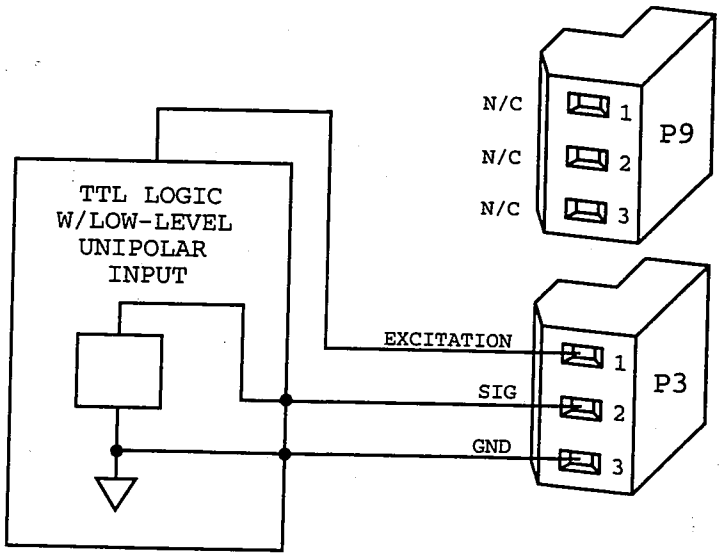

Figure B-8. Low-Level Unipolar Input to the Isolated Pulse Input Board

B.7.6 WIRING TABLE

Table B-4 shows suggested wiring, jumper configuration, and signal levels for numerous Isolated Pulse Input Board signal sources.

TABLE B-4. ISOLATED PULSE INPUT BOARD WIRING

SIGNAL SOURCE	WIRING CONFIGURATION	JUMPER CONFIG-URATION	SIGNAL LEVEL	
			LOW/MIN	HIGH/MAX
TTL	P9-2, Signal P9-3, Ground P3-2, Leave open or tie to high-level excitation P3-1, Excitation output; 5 V up to 50 mA	S1-C	< 0.4 V	> 2.0 V
NPN Open Collector, 2-or 3-wire	P9-2, Signal P3-3, Ground P3-2, Leave open or tie to high-level excitation P3-1, Excitation output; 12.6 V up to 70 mA P9-3, Connect to P3-1	S1-B	< 1.4 V	
PNP Open Collector	Same as NPN above, but connect P9-3 to P3-3 (ground)	S1-B		> 6 V (voltage drop on switch must be <6 V)
NAMUR 2-wire	P3-1, Positive P9-2, Return P9-3, Connect to P3-3 (ground)	S1-A	OFF: I <1.0 mA	ON: I >2.9 mA
Low-Level Pickup	P3-2, Signal P3-3, Ground P9-2, Leave open or tie to high-level excitation	S1-C	20 mV rms up to 1 kHz 50 mV rms @ 20 kHz	

continued next page

continued from previous page

SIGNAL SOURCE	WIRING CONFIGURATION	JUMPER CONFIG-URATION	SIGNAL LEVEL	
			LOW/MIN	HIGH/MAX
Low-Level POT	P3-2, Signal P3-3, Ground	S1-D, S1-A for 8.2 V Excitation S1-B for 12.5 V Excitation S1-C for 5 V Excitation	See Table B-3	See Table B-3
Contact Closure	P9-2 and P3-3, Contact P9-1, Connect to P3-3 (ground)	S1-B	ON time > 50 ms	OFF time > 75 ms

APPENDIX C
ISOLATED ANALOG INPUT BOARD: GENERAL INFORMATION, SPECIFICATIONS, JUMPER CONFIGURATION, WIRING, AND CONFIGURATION

C

Isolated Analog Input Board

C.1 GENERAL INFORMATION

The Isolated Analog Input Board converts voltage ranges from 400 mV to 10 V and current ranges from 1 mA to 20 mA to a pulse-rate range of 0 to 10 kHz, nominal, providing 354 V of galvanic isolation (IEC spacing) and excitation up to 25 mA. When the meter is equipped with this board, it can totalize (integrate) current or voltage input and provide digital square root capability to calculate flow rate from inputs proportional to differential pressure.

Note that this board requires a one-time calibration. See Section C.9.

This board enables the meter to operate in the Rate Meter/Totalizer/Square Root Extractor Mode. This mode is shown on the display as SQ RT.

The conversion factor between input voltage or current and the output pulse rate is calibrated to an exact number by using the calibration data on the back of the board and the IN.SC.OF (Input Scale and Offset) parameter. See Section C.9 for this calibration procedure.

As shipped, 4 mA produces approximately 280 Hz (or, with jumper change, 2 kHz) and 20 mA produces approximately 8.5 kHz.

C.2 SPECIFICATIONS

CONNECTION:	3-Socket Input Connector
SIGNAL RANGE:	0 - 5 V dc, 1 -5 V dc, 0 - 10 V dc, 0 - 1 mA dc, 4 - 20 mA dc*
INPUT RESISTANCE:	25 ohms
ISOLATION, SIG GND TO DIG GND:	354 Vp
LOW-LEVEL SHUTOFF:	Programmable
NON-LINEARITY MAX:	0.02% FS
ACCURACY:	0.05% FS at 25°C
TEMPCO:	50 ppm/°C

* Calibration data are provided for 4-20 mA and 0-5 V ranges only

C

Isolated Analog Input Board

C.3 JUMPER LOCATIONS AND CONFIGURATION

Figure C-1 shows the locations of Isolated Analog Input Board jumpers.

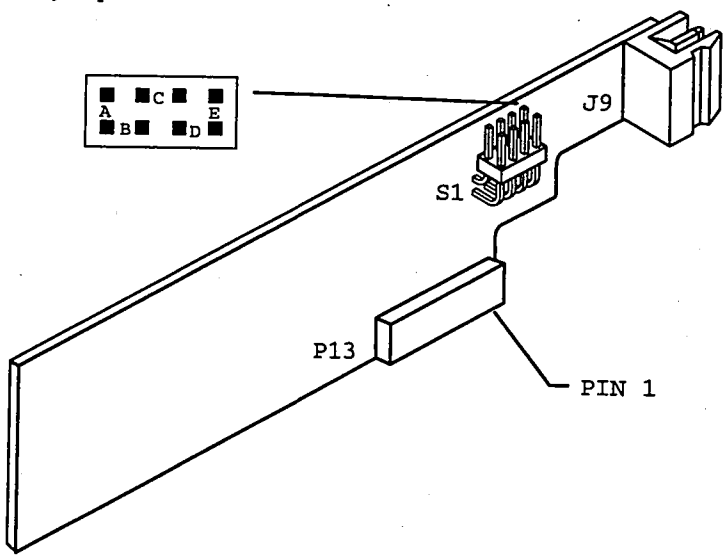

Figure C-1. Isolated Analog Input Board

Jumpers establish the indicated ranges with +input to P9-2 and return from P9-3. The factory preset condition is asterisked:

TABLE C-1. ISOLATED ANALOG INPUT BOARD RANGE TABLE

RANGE	USE JUMPERS
4 - 20 mA	S1-B*, S1-C*, S1-E*
0 - 1 mA	S1-C, S1-D
0 - 400 mV	S1-C
0 - 5 V	None
1 - 5 V	S1-B
0 - 10 V	S1-A

There is also an Input Jumper Label on the case showing jumper options for both the Isolated Pulse Input Board and the Isolated Analog Input Board.

C.4 CURRENT SHUNTS

Table C-1 shows that current inputs are accommodated by placing a current shunt to ground with the meter sensitivity on the 400 mV range. (Note: This is accomplished internally via the jumpers.)

This low current-loop voltage compliance (low voltage drop) can be useful if the loop supply has a limited voltage range.

C.5 EXCITATION FOR SENSORS

If needed, P9-1 can supply regulated 24 V excitation up to 25 mA.

For current-loop transmitters driven by the meter's P9-1, the return is to P9-2, with no connection to P9-3.

For voltage-output devices or externally-powered current loops, the input is to P9-2 and return is connected to P9-3.

C.6 NORMAL-MODE REJECTION

The Isolated Analog Input Board provides two single-pole filters in tandem to provide the line-frequency rejection obtained by the selected gate time (GATE T). For the usual 0.30 s gate time, the 60 Hz rejection exceeds 60 dB (e.g., a line-frequency noise of 1% of full-scale signal causes only a 10 ppm change). At 50 Hz, this rejection drops by 3 dB, to 500:1.

C.7 RESPONSE TIME

For a step in the RATE, both RATE and TOTAL will be correct to 99% after 150 ms plus one gate time of 0.10 s or longer.

C.8 WIRING

With jumpers S2-A, W6 and W7 removed, the Isolated Analog Input Board furnishes +24 V excitation on P9-1, takes in analog voltage/current signals on P9-2, and has the common return on P9-3. The P3 connector is not used. Refer to Figure C-2.

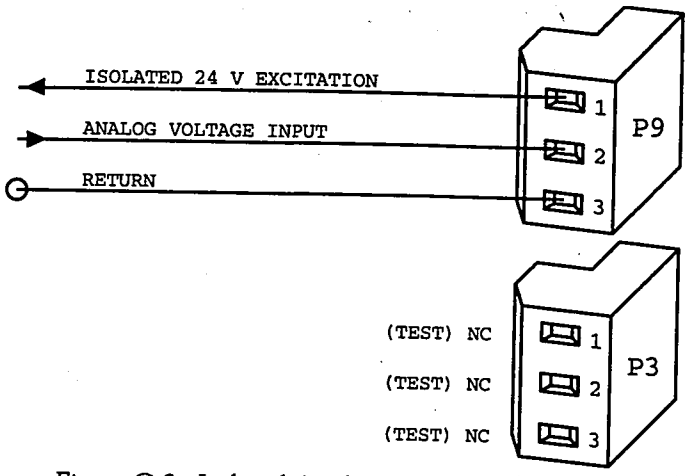

Figure C-2. Isolated Analog Input Board Wiring

C.8.1 DIFFERENTIAL PRESSURE TO ANALOG INPUT BOARD

Figure C-3 illustrates a differential-pressure flow transducer driving the meter via a current-loop transmitter with loop power supplied by the meter.

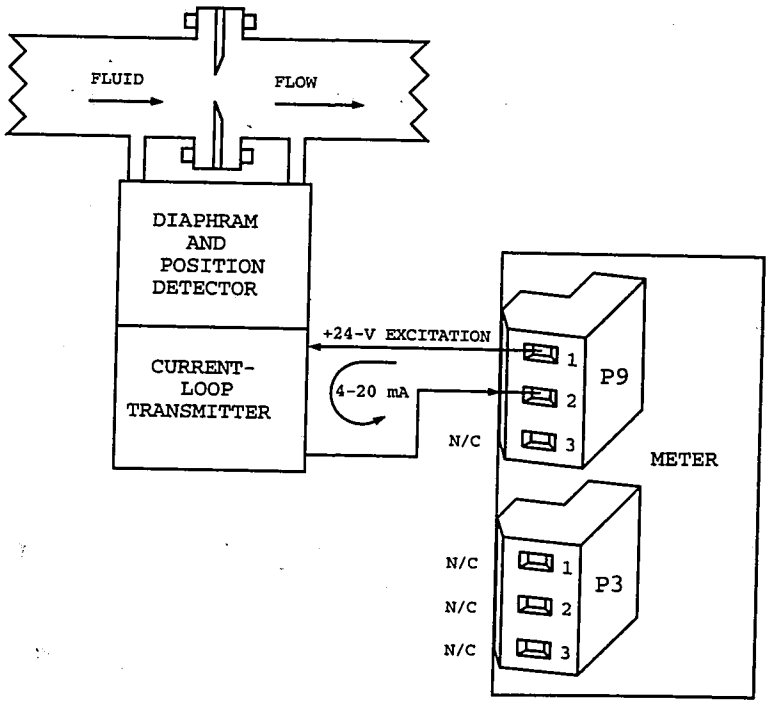

Figure C-3. Differential Pressure Input to the Isolated Analog Input Board

C.8.2 MULTIPHASE WATTS TRANSDUCER WITH SELF-POWERED TRANSMITTER OUTPUT

Figure C-4 shows a multiphase watts transducer with a self-powered transmitter output. The meter can now function as a wattmeter and a watthour meter.

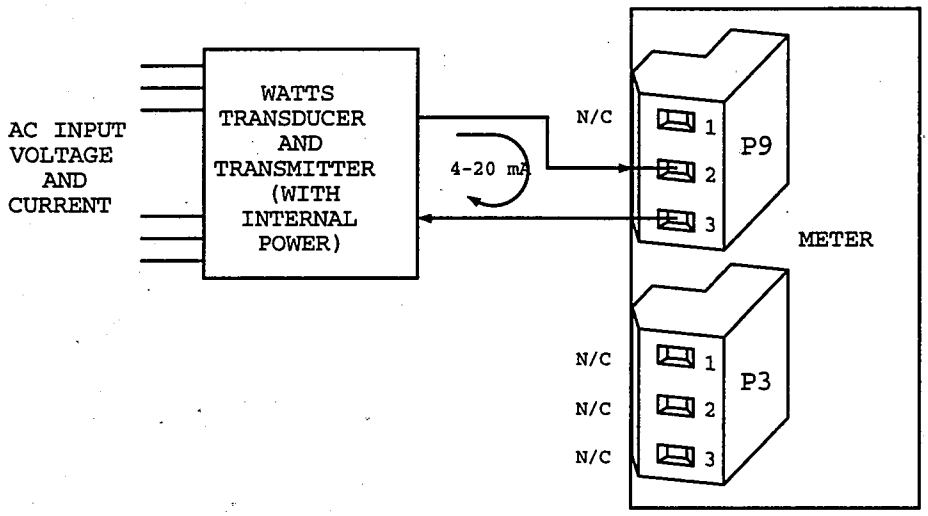

Figure C-4. Multiphase Watts Transducer Connection to the Isolated Analog Input Board

C.9 ONE-TIME-ONLY INPUT CALIBRATION

Once installed, this board must be calibrated using the IN.SC.OF (Input Scale and Offset) parameter and the calibration data on the back of the board. Figure C-5 shows the back of the board and the single label containing the data.

C

Isolated Analog Input Board

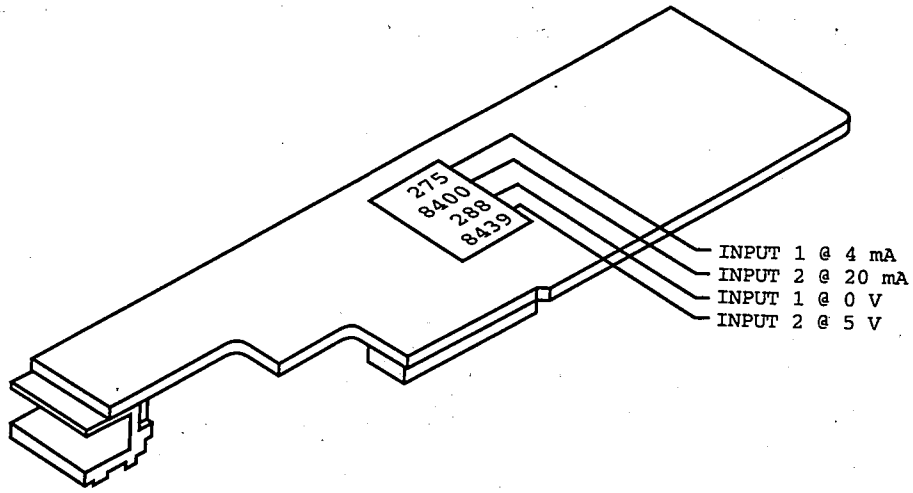

Figure C-5. Back of the Isolated Analog Input Board

Reading from top to bottom, the numbers correspond to the following data:

Input 1 @ 4 mA
Input 2 @ 20 mA
Input 1 @ 0 V
Input 2 @ 5 V

The first and second numbers correspond to actual meter readings in Hertz when the input is 4 mA and 20 mA, respectively. They are used as low and high data points to calibrate a board with Current input. The third and fourth numbers correspond to actual meter readings in Hertz when the input is 0 V and 5 V, respectively. These numbers are used as low and high data points to calibrate a board with Voltage input.

The meter takes two data points and calculates the scale (the slope of the line defined by the two points) and the offset (the reading if the input signal were 0). It then automatically converts incoming signals according to the calculated values using the following equation:

Display reading = (Input signal + OFfset) * SCale

If you recorded the calibration data just before installing the board, they are in Section 2.3.3.2.

Re-write the numbers here so that they are handy when you do the calibration:

Input 1 @ 4 mA = _____

Input 2 @ 20 mA = _____

Input 1 @ 0 V = _____

Input 2 @ 5 V = _____

The meter must be in the Rate Mode to configure IN.SC.OF.

Use Table C-2 to configure IN.SC.OF. Read from left to right, starting with the PRESS command. The first line reads, "Press MENU button repeatedly until the display shows IN.SC.OF. You are now ready to configure IN.SC.OF."

TABLE C-2. IN.SC.OF CONFIGURATION

	PRESS:	THE DISPLAY WILL SHOW:	UNTIL THE DISPLAY SHOWS:	COMMENTS
1	MENU repeatedly		IN.SC.OF	You are now ready to configure IN.SC.OF
2	▶/STOP	INPUT 1		Enter the actual reading of the "low" input signal. If your input is current, it will be Input 1 @ 4 mA; if your input is voltage, it will be Input 1 @ 0 V:
3	▶/STOP	000000.		Press the ▲/DISPLAY button repeatedly to set the flashing digit; press the ▶/STOP button to move to new digits

continued next page

continued from previous page

	PRESS:	THE DISPLAY WILL SHOW:	UNTIL THE DISPLAY SHOWS:	COMMENTS
4	MENU	READ 1		
5	▶/STOP	000000.		Enter the value that you would like the just-entered INPUT 1 to show on the display. This should be 0 (Hz): Press the ▲/DISPLAY button repeatedly to set the flashing digit; press the ▶/STOP button to move to new digits When you press the MENU button next, the first data point will be saved
6	MENU	INPUT 2		
7	▶/STOP	000000.		Enter the actual reading of the "high" input signal. If your input is current, it will be INPUT 2 @ 20 mA; if your input is voltage, it will be INPUT 2 @ 5 V: Press the ▲/DISPLAY button repeatedly to set the flashing digit; press the ▶/STOP button to move to new digits
8	MENU	READ 2		
9	▶/STOP	000000.		Enter the value that you would like the just-entered INPUT 2 to "read" on the display. This should be 10000 (Hz):

continued next page

continued from previous page

	PRESS:	THE DISPLAY WILL SHOW:	UNTIL THE DISPLAY SHOWS:	COMMENTS
				Press the ▲/DISPLAY button repeatedly to set the flashing digit; press the ▶/STOP button to move to new digits When you press the MENU button next, the first data point will be saved
10	MENU	OT.SC.OF		You have successfully calibrated your Isolated Analog Input Board, or successfully calculated IN.SC.OF

NOTE: If you receive an error message just after pressing the MENU button for the last time, note the message and see Appendix H.

C.10 CALIBRATING THE INPUT SIGNAL

After you calibrate the Isolated Analog Input Board, you should test the input signal to make sure that your source is also calibrated. If possible, reduce the input to 0 and note the display reading; it should be 0 Hz. Then turn up the input so that it's fully open; the display should read 10,000 Hz. If your readings differ significantly from these, or you see that an intermediate input level gives you the wrong meter reading, you should perform another IN.SC.OF calibration that calibrates both the input signal and the Isolated Analog Input Board.

There are two requirements that must be met before calibrating:

1. The scale factors of IN.SC.OF and RTE SC must be set to 1, and the offsets of IN.SC.OF and RTE OF must be set equal to 0.

   You can do this manually by accessing these parameters one by one (Section 5), or automatically by using the Automatic Scale and Offset feature. The automatic procedure is much easier.

To use the Automatic Scale and Offset feature, set configuration choice CF4.8 equal to 1 (Section 5.4.2.). This sets the scale factors equal to 1 and the offsets equal to 0. Reset the meter by pressing the RESET button two times. At this point, old scale factors and offsets have been "erased." Now return to CF4.8 and set it equal to 0. This allows the scale factors and offsets to be altered as needed when you do the calibration.

2. You must know the desired meter readings that you want the "low" and "high" input levels to correspond to. This is very easy if you can turn input down all the way and turn it up all the way: The desired meter reading for 0 input is 0 Hz; the desired meter reading for maximum input level is 10,000 Hz.

   For intermediate inputs, somewhere between 0 and the maximum input, you will have to consult calibration data previously obtained for your input-to-flow measurement setup.

Use Table C-2 to configure IN.SC.OF for input signal/Analog Input calibration.

TABLE C-2. IN.SC.OF CONFIGURATION

	PRESS:	THE DISPLAY WILL SHOW:	UNTIL THE DISPLAY SHOWS:	COMMENTS
1	MENU repeatedly		IN.SC.OF	You are now ready to configure IN.SC.OF
2	▶/STOP	INPUT 1		
3	▶/STOP	000000.		Enter the actual meter reading of the "low"input signal
4	MENU	READ 1		Enter the value that you would like the just-entered INPUT 1 to show on the display. This will be 0 (Hz) if INPUT 1 was 0.
5	▶/STOP	000000.		When you press the MENU button next, the first data point will be saved

continued next page

continued from previous page

	PRESS:	THE DISPLAY WILL SHOW:	UNTIL THE DISPLAY SHOWS:	COMMENTS
6	MENU	INPUT 2		
7	▶/STOP	000000.		Enter the actual meter reading of the "high"input signal
8	MENU	READ 2		Enter the value that you would like the just-entered INPUT 2 to show on the display. This will be 10,000 (Hz) if INPUT 2 corresponded to a maximum input level
9	▶/STOP	000000		When you press the MENU button next, the first data point will be saved
10	MENU	OT.SC.OF		You have successfully calibrated your input signal and Isolated Analog Input Board

Notes:

APPENDIX D
ISOLATED ANALOG OUTPUT BOARD: GENERAL INFORMATION, SPECIFICATIONS, WIRING, AND CALIBRATION

D

Isolated Analog Output Board

D.1 GENERAL INFORMATION

The Isolated Analog Output Board converts meter output to independently scaled and offset unipolar voltage and/or unipolar current providing 354 V of galvanic isolation (IEC spacing). When the meter is equipped with this board, it can simultaneously transmit voltage (to 10 V) and current (to 21 mA, and 24 mA total), but only one type of output is calibrated. (For precise accuracy on both outputs at once, the non-calibrated output must be calibrated for gain and offset by external means.)

Precise analog levels are generated from digital code using a proprietary ASIC chip. Load resistance for the voltage output can be as low as 500Ω (20 mA at 10 V out) when current output is not used. Loop resistance for the current output can be as high as 600Ω (12 V compliance).

The OT.SC.OF parameter is used to convert a wide range of meter readings to the desired current or voltage output span (see Section 5.4.5).

The board can be configured to output RATE, AVG RT, and TOTAL readings in Rate and Sq Rt Modes; and BATCH count, BAT NO, and TOTAL readings in the Batch Mode. Output can also be configured as a ramp function for slow opening and closing of electrical valves. (See Section D.5.)

D.2 SPECIFICATIONS

ACCURACY:	±.05% of FS @ 25°C
STEP RESPONSE:	10 to 90% full-scale 50 ms
TURNDOWN RATIO (OFFSET/SPAN):	100 with 0.01% resolution
TEMPCO:	50 ppm/°C

D.3 JUMPER LOCATIONS AND CONFIGURATION

The Isolated Analog Output Board has no jumpers. All configuration is done via the front panel.

D.4 WIRING/CONNECTIONS

Table D-1 shows the Isolated Analog Output Board connections.

TABLE D-1. ISOLATED ANALOG OUTPUT BOARD WIRING/CONNECTIONS

CONNECTOR/ PIN NO.	PIN/ TERMINAL	FUNCTION
P-5	1	Return
	2	4-20 mA (Connection to current-receiving device)
	3	0-10 V (Connection to voltage-receiving device)

D.5 ENABLING TRANSMISSION OF ANALOG OUTPUT DATA

The output configuration of the Isolated Analog Output Board is controlled by setting CF3.1 (see Section 5.4.2). The setting determines which analog value is sent. The factory preset value is asterisked. Refer to Table D-2

TABLE D-2. ISOLATED ANALOG OUTPUT BOARD: OUTPUT CONFIGURATION AS SET BY CF3.1

CHOICE	SETTING	RESULTING ACTION		
		RATE MODE	SQ RT MODE	BATCH MODE
CF3.1	0	Analog output is disabled		
	1*	RATE is sent		BATCH count is sent
	2	AVG RT is sent		BAT NO is sent
	3	TOTAL is sent		
	4	Output is ramped (See Appendix K)		

D.6 ONE-TIME-ONLY OUTPUT CALIBRATION

Once installed, this board must be calibrated using the four data points printed on the back of the board. These four points are

CAL VZ (Calibrate Voltage Zero), CAL VS (Calibrate Voltage Span), CALmAZ (Calibrate milliAmp Zero), CALmAS (Calibrate milliAmp Span). If you recorded them just before installing the board, they are in Section 2.3.3.3.

Re-write the numbers here so that they are handy when you do the calibration:

CAL VZ = _____

CAL VS = _____

CALmAZ = _____

CALmAS = _____

Use Table D-3 to calibrate the board. Read from left to right, starting with the PRESS command. The first line reads, "Press the MENU button repeatedly until the display shows CAL VZ. You are now ready to calibrate the Isolated Analog Output Board."

Table D-3. ISOLATED ANALOG OUTPUT BOARD CALIBRATION

	PRESS:	THE DISPLAY WILL SHOW:	UNTIL THE DISPLAY SHOWS:	COMMENTS
1	MENU repeatedly		CAL VZ	You are now ready to calibrate the Isolated Analog Output Board
2	▶/STOP	XXXXX		The first digit will flash. Input the CAL VZ data point by pressing the ▲/DISPLAY button to set the flashing digit, and the ▶/STOP button to move on to new digits. When you press the MENU button, this value will be stored

continued next page

Table D-3 (cont'd)

	PRESS:	THE DISPLAY WILL SHOW:	UNTIL THE DISPLAY SHOWS:	COMMENTS
3	MENU	CAL VS		
4	▶/STOP	XXXXX		Input the CAL VS data point. Press the ▲/DISPLAY button to set the flashing digit, and the ▶/STOP button to move on to new digits. When you press the MENU button, this value will be stored
5	MENU	CALmAZ		
6	▶/STOP	XXXXX		Input the CALmAZ data point. Press the ▲/DISPLAY button to set the flashing digit, and the ▶/STOP button to move on to new digits. When you press the MENU button, this value will be stored
7	MENU	CALmAS		
8	▶/STOP	XXXXX		Input the CALmAS data point. Press the ▲/DISPLAY button to set the flashing digit, and the ▶/STOP button to move on to new digits. When you press the MENU button, this value will be stored
9	MENU			The meter will immediately Reset and revert to Run Mode This concludes calibration.

APPENDIX E
ISOLATED PARALLEL BCD OUTPUT BOARD: GENERAL INFORMATION, SPECIFICATIONS, JUMPER CONFIGURATION, AND WIRING

E

Isolated Parallel BCD Output Board

E.1 GENERAL INFORMATION

The Isolated Parallel BCD Output Board produces binary-coded decimal output for direct connection to a printer or to an intelligent device such as a PLC (Programmable Logic Controller).

E.2 SPECIFICATIONS

BCD TYPE:	Isolated, stored, buffered, addressable, tri-state
DIGIT ADDRESSING:	3 or 6 digit at a time
OUTPUT LEVEL:	TTL/CMOS-compatible, 10 LSTTL loads
POWER:	External 5 V dc for isolated BCD; internal 5 V dc for non-isolated BCD

E.3 JUMPER LOCATIONS AND CONFIGURATION

Figure E-1 shows the locations of Isolated Parallel BCD Output Board jumpers.

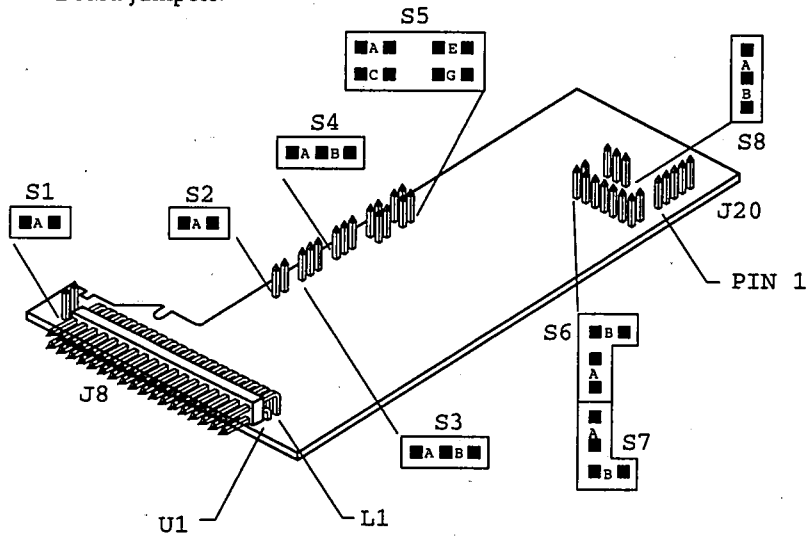

Figure E-1. Isolated Parallel BCD Output Board Jumpers

Table E-1 shows the function of BCD board jumpers. Asterisked jumpers are installed factory presets.

TABLE E-1. ISOLATED PARALLEL BCD OUTPUT BOARD JUMPERS

JUMPER	FUNCTION
S1-A	Installation brings OVERFLOW signal to P8-U18
S2-A	Installation enables 3-digit multiplex; removal enables 6-digit readout
S3-A	Installation enables 3-digit multiplex or 1-line board address
S3-B*	Installation enables 4-line board address
S4-A	Installation enables 3-digit multiplex
S4-B*	Installation enables 6-digit readout
S5-A	P8-U20 must be low to enable board; removal enables board when high or open
S5-C	P8-L20 must be low to enable board; removal enables board when high or open
S5-E	P8-U19 must be low to enable board; removal enables board when high or open
S5-G	P8-L19 must be low to enable board; removal enables board when high or open
S6-A S6-B S7-A S7-B	Installation selects internal power; removal selects isolated power
S8-A	Installation selects output data that is negative-true
S8-B*	Installation selects output data that is positive-true

E.4 WIRING

All 6 digits of BCD are brought out to J8 (40 pins), but the upper 3 digits of data can also be multiplexed onto the lower 3 digit lines so that the data can be read 3 digits at a time if desired. J8 mates with a standard 40-pin connector, P8.

Figure E-2 shows an end-on view of P8. "U" designates the upper row of pins; "L" designates the lower row of pins.

```
U1- - - - - - - - - - - -
L1 - - - - - - - - - - - -
```

Figure E-2. End-On View of P8

Table E-2 shows the pin assignments for P8.

TABLE E-2. P8 PIN ASSIGNMENTS

FUNCTION	P8 PIN	P8 PIN	FUNCTION
BCD 400K	L-1	U-1	BCD 800K
BCD 100K	L-2	U-2	BCD 200K
ISO GND	L-3	U-3	SPARE
BCD 40K	L-4	U-4	BCD 80K
BCD 10K	L-5	U-5	BCD 20K
BCD 4K	L-6	U-6	BCD 8K
BCD 1K	L-7	U-7	BCD 2K
D.P. 2	L-8	U-8	D.P. 4
BCD 400	L-9	U-9	BCD 800
BCD 100	L-10	U-10	BCD 200
BCD 40	L-11	U-11	BCD 80
BCD 10	L-12	U-12	BCD 20
BCD 4	L-13	U-13	BCD 8
BCD 1	L-14	U-14	BCD 2
ISO GND	L-15	U-15	D.P. 1
$\overline{\text{DATA READY}}$	L-16	U-16	POLARITY
ISO V+	L-17	U-17	$\overline{\text{HOLD}}$
OVERFLOW	L-18	U-18	OVERFLOW
ADDRESS $\overline{B4}$	L-19	U-19	ADDRESS $\overline{B8}$
ADDRESS $\overline{B1}$	L-20	U-20	ADDRESS $\overline{B2}$

E.5 50-LINE CABLE COMPATIBILITY

The 40 lines of P8 are compatible with lines 9 through 48 of some 50-line busses. (The left-most 8 and right-most 2 are not used by this BCD option.)

E.6 ENABLING TRANSMISSION OF BCD DATA

The output configuration of the Isolated Parallel BCD Output Board is controlled by setting CF3.2 (see Section 5.4.2). The setting determines which BCD value is sent.

TABLE E-3. ISOLATED PARALLEL BCD OUTPUT BOARD: OUTPUT CONFIGURATION AS SET BY CF3.2

CHOICE	SETTING	RESULTING ACTION		
		RATE MODE	SQ RT MODE	BATCH MODE
CF3.2	0	BCD output is disabled		
	1	RATE is sent		BATCH count is sent
	2	AVG RT is sent		BAT NO is sent
	3	TOTAL is sent		
	4	TIME is sent		

E.7 $\overline{\text{HOLD}}$ CONTROL

P8-U17 is the $\overline{\text{HOLD}}$ line, referenced to the same ground as the BCD output (on P8-L15 and P8-L3). Pulling this line low freezes the BCD outputs. This is useful for a slow reading device or for asymmetric cable delays.

When released, all 6 digits of the BCD data are updated together.

E.8 $\overline{\text{DATA READY}}$ TIMING PULSES

The tri-state BCD outputs are always valid to within a few nanoseconds; a single update pulse controls all digits.

To generate a timing marker, P8-L16, $\overline{\text{DATA READY}}$, goes active low for approximately 200 µs at the time of each update. The polarity of this line is NOT CHANGED by S8, the data polarity control jumper.

E.9 BRINGING OUT THE BCD OVERFLOW LINE

P8-U18 can be used for BCD OVERFLOW by installing jumper S1-A. If this line is used for another purpose by some other equipment on the BCD bus, remove this jumper.

E.10 THREE-DIGIT-AT-A-TIME MULTIPLEX

When jumpers S2-A, S3-A, and S4-A are installed, P8-L20 and S5-C control the times when the upper 3 digits of the 6-digit BCD value appear on the output line (P8-U9 through P8-L14).

When jumper S5-C is installed, a LOW level on P8-L20 activates the upper 3 digit outputs; a high or open level disables them.

When jumper S5-C is removed, a high or open level on P8-L20 enables the upper 3 digits and a low level disables them.

When the upper 3 digits are NOT enabled, the lower 3 digits can be enabled the same way as jumper S5-A and P8-U20; they will appear on the same 12 lines.

E.11 SIX-DIGIT-AT-A-TIME BOARD ADDRESS

Jumpers S2-A and S4-A are removed for full parallel (6-digit) output.

When jumper S3-A is installed, the outputs are enabled by line P8-L20 ALONE: A low level enables the outputs when jumper S5-C is installed, and a high or open level does the job if S5-C is removed.

When jumper S3-A is removed, the outputs are enabled only when the selected 4-line address is applied to P8-U19, L19, U20, and L20. Each of these four is exclusive-ORed with its jumper, and the subsequent four outputs are ANDed to create a 1-of-16 enable mode.

If jumper S5-A is installed, P8-U20 must be LOW to enable the board.

If jumper S5-C is installed, P8-L20 must be LOW to enable the board.

If jumper S5-E is installed, P8-U19 must be LOW to enable the board.

If jumper S5-G is installed, P8-L19 must be LOW to enable the board.

If any of these jumpers are removed, the corresponding line must go HIGH or OPEN to assist the board enable; if all four jumpers are removed, for example, the board outputs are enabled ONLY when all four lines are HIGH or OPEN. A ground on any of the four input lines causes the outputs to go to the high impedance state.

E.12 SELECTING DATA POLARITY: JUMPER S8

Inserting the jumper in S8-B (the usual shipping position) makes the output data (including decimal point code) positive-true.

Placing the jumper in S8-A converts the data to negative-true.

E.13 DECIMAL POINT ADDRESS CODE

P8-U15, P8-L8, and P8-U8 output a 3-digit positive-true binary code for the location of the decimal point: 001 for the extreme right position, and 110 for the extreme left position (just to the right of the left-hand digit).

E.14 APPLYING NON-ISOLATED/ISOLATED POWER

Non-isolated power from the meter is enabled by installing jumpers S6-A, S6-B, S7-A, and S7-B. This bridges the isolation separation distance on the board. Current drawn is less than 10 mA.

To isolate these outputs from the other meter circuits, remove S6-A, S6-B, S7-A, and S7-B, and connect an external, nominal 5-V supply to P8-L17, with its ground return connected to P8-L15.

E.15 DRIVING A PRINTER

Direct connection of the 24 BCD lines and the 3 decimal point address lines is all that is needed for positive-true printers that accept a binary-coded decimal point address (which do not print the decimal point).

If your printer has more than 6 digits, tie the unused inputs to ground or V+, or leave them open (whichever produces blanks in those locations).

APPENDIX F
DUAL RELAY OUTPUT BOARD: GENERAL INFORMATION, SPECIFICATIONS, JUMPER CONFIGURATION, AND WIRING

F.1 GENERAL INFORMATION

The Dual Relay Output Board provides two isolated (354 V per IEC spacing, 500 test), 7-ampere Form C electro-mechanical relays that enable setpoint-triggered switching to an external device. Each relay can accommodate a single setpoint. 200 Ω, 2500pf snubbers are provided for each normally open contact.

F

Dual Relay Output Board

F.2 SPECIFICATIONS

OUTPUT TYPE:	Dual Form C relays
POWER RATING FOR RESISTIVE LOADS:	Normally open contact, 8 amp; 30 V dc or 230 V ac Normally closed contact, 7 amp; 30 V dc or 230 V ac

F.3 JUMPER LOCATIONS AND CONFIGURATION

Figure F-1 shows the locations of Dual Relay Output Board jumpers, the P10 connector connecting the board to the Main Board, and the positions of P6 and P7, the output connectors.

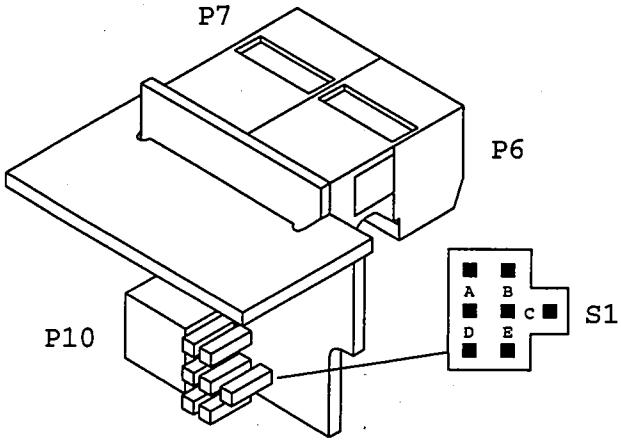

Figure F-1. Dual Relay Board Jumpers and Connectors

F

Dual Relay Output Board

Table F-1 shows which jumpers are assigned to each relay. Relay 1 corresponds to the P6 connector. Relay 2 corresponds to the P7 connector. Factory presets are asterisked.

TABLE F-1. DUAL RELAY BOARD JUMPERS

JUMPER	FUNCTION
S1-A*	Assigns SP 1 to Relay 1 (P6)
S1-E*	Assigns SP 2 to Relay 2 (P7)
S1-D	Assigns SP 3 to Relay 1 (P6)
S1-C	Assigns SP 4 to Relay 2 (P7)
S1-B	Assigns SP 5 to Relay 2 (P7)

Table F-2 shows the pin assignments for the P6 and P7 connectors.

TABLE F-2. PIN ASSIGNMENTS FOR P6 AND P7

CONNECTOR	PIN	FUNCTION
P-6 (Relay 1 Connection)	1	NO1 (Normally Open) 1
	2	Common 1
	3	NC1 (Normally Closed) 1
P-7 (Relay 2 Connection)	1	NO2 (Normally Open) 2
	2	Common 2
	3	NC2 (Normally Closed) 2

APPENDIX G
ISOLATED RS-232 AND RS-485 SERIAL COMMUNICATIONS BOARDS: GENERAL INFORMATION, SPECIFICATIONS

G.1 GENERAL INFORMATION

The Isolated Serial RS-232 Communications Board provides an isolated digital communications channel between a single meter and another meter or device, or between a single meter and a computer. The Isolated Serial RS-485 Communications Board adheres to the IEC standard, providing an isolated channel between up to 32 meters and a single computer or intelligent device--but can actually address up to 199 devices.

G.2 SPECIFICATIONS

G

Isolated RS-232 and RS-485 Serial Communications Board

RS-232

BAUD RATES:	300, 600, 1200, 2400, 4800, 9600, and 19,200
CONNECTION:	RJ-11, 4-wire telephone jack; data in, data out, RTS, GND
RECEIVE CAPABILITY:	Allows for on-line setup and configuration monitoring and changes
TRANSMIT CAPABILITY:	Programmable to send RATE, AVG RT, TOTAL, and TIME (with or without units) in Rate and Sq Rt Modes; programmable to send BATCH count, BAT NO, TOTAL, and TIME (with or without units) in Batch Mode

RS-485

BAUD RATES:	300, 600, 1200, 2400, 4800, 9600, and 19,200
CONNECTION:	RJ-12, 6-wire telephone jack, Full or Half Duplex
RECEIVE CAPABILITY:	Allows for on-line setup and configuration monitoring and changes
TRANSMIT CAPABILITY:	Programmable to send RATE, AVG RT, TOTAL, and TIME (with or without units) in Rate and Sq Rt Modes; programmable to send BATCH count, BAT NO, TOTAL, and TIME (with or without units) in Batch Mode
MODES:	Alarm and normal
ADDRESSING:	0 (common address), 1 to 199

See the Serial Communications manual for more information on these boards.

Notes:

G

Isolated RS-232 and RS-485 Serial Communications Board

APPENDIX H
ERROR MESSAGES

H.1 FLASHING ERR 01

ERR 01 indicates an OFFSET OVERFLOW. This happens when an offset value is too large to be displayed using the corresponding decimal point position. For example, you enter an offset value of 1000, then program the decimal point 3 places to the left. This would drive the resulting number, 1000.000, to seven digits, "overflowing" the 6-digit limit.

This condition must be corrected immediately because the meter is unable to continue calculations.

TO CORRECT: Press the MENU button and the meter will show the left-most decimal point position possible for the chosen offset. Press the MENU button again and the revised (meter-chosen) decimal point will be stored.

You can also press the RESET button. This will restore the decimal point to the previous setting.

H.2 FLASHING ERR 02

ERR 02 indicates a SETPOINT OVERFLOW. This happens when a setpoint value is too large to be displayed using the corresponding decimal point position. For example, you enter a setpoint value of 5000, then program the decimal point 3 places to the left. This would drive the resulting number, 5000.000, to seven digits, "overflowing" the 6-digit limit.

This condition is momentary; the display will flash ERR 02, self-correct by adjusting the decimal point to the far right position (not shown on the display), then return to Run Mode.

NOTE: This condition will not be shown if there is a simultaneous Offset Overflow (ERR 01), because the display will indicate the more serious error.

TO CORRECT: When the meter flashes ERR 02, it shifts the decimal point to accommodate the programmed setpoint value.

If you want to change the setpoint value as opposed to changing the decimal position, reprogram the setpoint in the usual manner with the SETPTS button, then adjust the decimal point accordingly.

The meter will also flash ERR 02 when the offset value for IN.SC.OF is larger than 38,000.

H.3 NOSTOR

During configuration, a NOSTOR message indicates that the attempt to store a newly set parameter or setpoint value in non-volatile memory (EEPROM) has failed. This results when the Lockout Choice L3C.7 has been set equal to 1.

TO CORRECT: Set L3C.7 equal to 0. This enables nonvolatile memory storage of changed parameter values.

There are times when you may want to disable nonvolatile memory storage (L3C.7=1) because you are changing setpoints very often (see Section 4.10.3). In this case, when you change the setpoint, the new value is written in operating memory only. The meter will display the NOSTOR message–assuring you that nonvolatile memory has not been changed–but will revert to Run Mode using the newly configured values in operating memory. These values will be in effect until power is removed.

As a reminder, after changing a setpoint, make sure you store the new value by pressing the SETPTS button. If you press the RESET button without first pressing the SETPTS button to store the value, that value is discarded and the meter continues to use the "old" value.

APPENDIX J
FACTORY PRESET CONFIGURATION SETTINGS/USER SETTINGS

This appendix shows the meter's factory preset settings. Each parameter contains a blank space or column entitled "User Setting" where you can enter your meter's actual settings. This is a very helpful reference, especially if you have multiple meters and need to keep track of the operating parameters of each one.

The following user settings correspond to this meter:

Serial No.	_____
Other ID	_____
Location	_____
Date	_____

J

Factory Preset and User Settings

MAIN BOARD JUMPERS

MAIN BOARD JUMPERS	FACTORY PRESETS	FUNCTION	USER SETTING
S1-A	Installed in all cases	Enables Lockout programming	
S2-A	Installed if no input board is installed	Channels non-isolated excitation to P3-1	
W1 and W2	Installed if meter is configured for 115 V operation	Enables 115 V Operation	
W3	Installed if meter is configured for 230 V operation	Enables 230 V operation	
W6 and W7	Installed if no input board is installed	Bypasses isolation circuitry for optional boards	

ISOLATED PULSE INPUT BOARD JUMPERS

PULSE INPUT BOARD JUMPERS	FACTORY PRESETS	FUNCTION	USER SETTING
S1-B S1-F	Installed Installed	Enables 12.6 V excitation Counts pulse on low-to-high transition	

ISOLATED ANALOG INPUT BOARD JUMPERS

ANALOG INPUT BOARD JUMPERS	FACTORY PRESETS	FUNCTION	USER SETTING
S1-B S1-C S1-E	Installed	Enables 4-20 mA input	

ISOLATED ANALOG OUTPUT BOARD JUMPERS

This board has no jumpers.

ISOLATED PARALLEL BCD OUTPUT BOARD JUMPERS

BCD OUTPUT BOARD JUMPERS	FACTORY PRESETS	FUNCTION	USER SETTING
S3-B S4-B S8-B	Installed Installed Installed	Enables 4-line board address Enables 6-digit readout Output Data is positive-true	

DUAL RELAY BOARD JUMPERS

DUAL RELAY BOARD JUMPERS	FACTORY PRESETS	FUNCTION	USER SETTING
S1-A S1-E	Installed Installed	Assigns SP 1 to Relay 1(P6) Assigns SP 2 to Relay 2(P7)	

ISOLATED RS-232 SERIAL COMMUNICATIONS BOARD JUMPERS

This board has no jumpers.

ISOLATED RS-485 SERIAL COMMUNICATIONS BOARD JUMPERS

RS-485 BOARD JUMPERS	FACTORY PRESETS	FUNCTION	USER SETTING
S1-B	Installed	Enables Full Duplex communication	

SETPOINTS

SETPOINT	FACTORY PRESET	USER SETTING
1	100.	
2	200.	
3	300.	
4	400.	
5	12:00:00	

L1 CNF, L2 CNF, L3 CNF (LOCKOUTS)

All Lockouts are set equal to 0; the corresponding meter functions are all ENABLED.

LOCKOUT	CHOICE	FACTORY SETTING	ENABLED METER FUNCTION	USER SETTING
L1 CNF	L1C.1	0	Display and setting of Setpoints 1 and 2 through SETPTS button	
	L1C.2	0	Display and setting of Setpoints 3 and 4 through SETPTS button	
	L1C.3	0	Display and setting of Setpoint 5 through SETPTS button	

continued next page

continued from previous page

LOCKOUT	CHOICE	FACTORY SETTING	ENABLED METER FUNCTION	USER SETTING
	L1C.4	0	Display and setting of CNFG 1 parameter	
	L1C.5	0	Display and setting of CNFG 2 parameter	
	L1C.6	0	Display and setting of CNFG 3 parameter	
	L1C.7	0	Display and setting of CNFG 4 parameter	
	L1C.8	0	Display and setting of AVG.CNF parameter	
L2 CNF	L2C.1	0	Display and setting of IN.SC.OF parameter	
	L2C.2	0	Display and setting of OT.SC.OF parameter	
	L2C.3	0	Display and setting of RTE DP, RTE OF, and RTE SC parameters	
	L2C.4	0	Display and setting of TOT DP, TOT OF, and TOT SC parameters	
	L2C.5	0	Display and setting of AL TI parameter	
	L2C.6	0	Display and setting of BAUD, SER.CNF, DAT FT, BUS FT, ADDRES, and SER TI parameters	

continued next page

continued from previous page

LOCKOUT	CHOICE	FACTORY SETTING	ENABLED METER FUNCTION	USER SETTING
	L2C.7	0	Display and setting of SET TI parameter	
	L2C.8	0	Display and setting of GATE T parameter	
L3 CNF	L3C.1	0	Display of RATE, SQ RT, and BATCH through the ▲/DISPLAY button in Run Mode	
	L3C.2	0	Display of AVG RT, and BAT NO through the ▲/DISPLAY button in Run Mode	
	L3C.3	0	Display of TOTAL through the ▲/DISPLAY button in Run Mode	
	L3C.4	0	Display of TIME through the ▲/DISPLAY button in Run Mode	
	L3C.5	0	Display and setting of MODE parameter	
	L3C.6	0	Display and setting of CAL VZ, CALVS, CALmAZ, and CALmAS parameters	
	L3C.7	0	EEPROM (non-volatile) storage of changed settings	
	L3C.8	0	MENU button	

MODE

Factory preset MODE = Rate (Rate Meter/Totalizer Mode)

User Setting = _____

CNFG 1 THROUGH CNFG 4

In the following table, NC means Normally Closed.

PARAM	CHOICE	FACTORY SETTING	RESULTING ACTION			USER SETTING
			RATE	SQ RT	BATCH	
CNFG 1	CF1.1	0	SP 1 NC; SP 1 assigned to TOTAL		SP 1 NC; SP 1 assigned to BATCH count	
	CF1.2	0	SP 2 NC; SP 2 assigned to TOTAL		SP 2 NC; SP 2 assigned to BATCH count	
	CF1.3	0	SP 3 NC; SP 3 assigned to RATE if CF1.7=0; SP 3 used for AVG RT if CF1.7=1		SP 3 NC; SP 3 assigned to BATCH count	
	CF1.4	0	SP 4 NC; SP 4 assigned to RATE if CF1.8=0; SP 4 used for AVG RT if CF1.8=1		SP 4 NC; SP 4 assigned to TOTAL if CF1.7=0; for BAT NO if CF1.7=1	
	CF1.5	0	SP 5 NC; SP 5 assigned to TIME			
	CF1.6	0	Meter display bright			
	CF1.7	0	SP 3 assigned to RATE		SP 4 assigned to TOTAL	
	CF1.8	0	SP 4 assigned to RATE		BATCH counts up	

continued next page

continued from previous page

PARAM	CHOICE	FACTORY SETTING	RESULTING ACTION RATE	SQ RT	BATCH	USER SETTING
CNFG 2	CF2.1	0	SP 1 output active ABOVE SP 1 value			
	CF2.2	0	SP 2 output active ABOVE SP 2 value			
	CF2.3	0	SP 3 output active ABOVE SP 3 value			
	CF2.4	0	SP 4 output active ABOVE SP 4 value			
	CF2.5	0	SP 5 output active ABOVE SP 5 value			
	CF2.6	0	SP 3 action undelayed		RESET action normal	
	CF2.7	0	SP 4 action undelayed		BAT NO counts up	
	CF2.8 115 V Models	0	Meter set for 60 Hz power			
	CF2.8 230 V Models	1	Meter set for 50 Hz power			
CNFG 3	CF3.1 (Analog Output)	1	RATE sent		BATCH count sent	
	CF3.2 (BCD Output)	1	RATE sent		BATCH count sent	
	CF3.3 (SP 1)	0	SP 1 output normal (unlatched)			
	CF3.4 (SP 2)	0	SP 2 output normal (unlatched)			

continued next page

continued from previous page

PARAM	CHOICE	FACTORY SETTING	RESULTING ACTION RATE	SQ RT	BATCH	USER SETTING
	CF3.5 (SP 3)	0	SP 3 output normal (unlatched)			
	CF3.6 (SP 4)	0	SP 4 output normal (unlatched)			
	CF3.7 (SP 5)	0	SP 5 output normal (unlatched)			
	CF3.8	0	Cutoff disabled			
	CF3.9	1	Meter waits up to 2 s for final pulse before computing RATE		SP 3 value converted to equivalent input pulses for fast comparison	
CNFG 4	CF4.1	0	External $\overline{\text{RESET A}}$ (P2-3) triggered on pulse edge			
	CF4.2	1	Calibrated Analog Output = Current			
	CF4.3	0	Display HOLD (P2-16) = disabled			
	CF4.4	0	Print Request (P2-16) = disabled			
	CF4.5	0	10-ms output pulse on P2-15 at end of each RATE measurement		Pulse output on P2-15 low when input rate cut off, high if rate not cut off	
	CF4.6	0	BCD binary address decimal point right justified (See Appendix E)			
	CF4.7	0	Front-panel RESET = enabled			
	CF4.8	0	Autoscof = disabled		Front-panel STOP = disabled	

AVG.CNF (Running Average Configuration)

FACTORY PRESET AVERAGE				TOTAL VALS IN AVG	USER SETTING AVERAGE				TOTAL VALS IN USER AVG
1	2	3	4		1	2	3	4	
0	0	0	1	256					

AVG.5 factory preset is 0 (ABC - Adaptive Bandwidth Control - Filter)

AVG.5 User Setting = _____

IN.SC.OF (Input Scale and Offset)

If an Isolated Analog Input Board is ordered as a part of the meter and installed at the factory, IN.SC.OF has no INPUT and READ factory presets; the board was calibrated at the factory using the calibration data on the back of the board.

If an Isolated Analog Input Board had not been ordered, or was ordered separately using the board model number, INPUT and READ factory preset values are a scale of 1 and an offset of 0.

User Settings:
INPUT 1 = _____
READ 1 = _____
INPUT 2 = _____
READ 2 = _____

OUT.SC.OF (Output Scale and Offset)

METER VALUE	FACTORY SETTING	FUNCTION	USER SETTING	USER FUNCTION
READ 1	0	Calibrates		
OUT 1	4 mA	CURRENT		
READ 2	10000	output		
OUT 2	20 mA			

RTE DP (Rate Decimal Point)

Factory setting is RRRRRR.

User Setting = _____

RTE OF (Rate Offset)

Factory setting is 0.

User Setting = _____

RTE SC (RATE Scale)

Factory setting is MULTIP; factory preset value is 000001.

User Setting = _____

TOT DP (TOTAL Decimal Point)

Factory setting is TTTTTT.

User Setting = _____

TOT OF (Total Offset)

Factory setting is 0.

User Setting = _____

TOT SC (Total Scale)

Factory setting is MULTIP; factory preset value is 000001.

User Setting = _____

AL TI (Alarm Time)

Factory setting is 0 = 00:00 (Designated setpoint is 0; alarm time is 00:00)

User Setting = _____

GATE T (Gate Time)

Factory setting is 0.30 s.

User Setting = _____

BAUD (Data Transfer Rate)

Factory setting is 9600.

User Setting = _____

SER.CNF (Serial Configuration)

SER.CNF CHOICE	FACTORY SETTING	RESULTING ACTION	USER SETTING
SER.1	1	Sets parity bit to ODD	
SER.2	0	Sets stop bit to one	
SER.3	1	Sends long messages in single piece	

DAT FT (Data Format)

DAT FT CHOICE	FACTORY SETTING	ENABLED ADDITION TO MESSAGE			USER SETTING
		RATE MODE	SQ RT MODE	BATCH MODE	
DAT.1	1	Alarm status character			
DAT.2	1	RATE value		BATCH count	
DAT.3	1	AVG RT value		BAT NO	
DAT.4	1	TOTAL value			
DAT.5	1	TIME			
DAT.6	1	RATE unit of measure		BATCH count unit of measure	

continued next page

continued from previous page

DAT FT CHOICE	FACTORY SETTING	ENABLED ADDITION TO MESSAGE			USER SETTING
		RATE MODE	SQ RT MODE	BATCH MODE	
DAT.7	1	AVG RT unit of measure		BAT NO unit of measure	
DAT.8	1	TOTAL unit of measure			

BUS FT (Bus Format)

BUS FT CHOICE	FACTORY SETTING	RESULTING ACTION			USER SETTING
		RATE MODE	SQ RT MODE	BATCH MODE	
BUS.1	0	Does not add check sum to message			
BUS.2	1	Adds line feed <LF> to message			
BUS.3	0	Does not add command ECHO in front of message			
BUS.4	0	Sets meter to Point-to-Point Mode			
BUS.5	0	Sets Point-to-Point Mode to Continuous			
BUS.6	0	In Point-to-Point Mode, sets RTS handshake to Message			
BUS.7	0	Sets meter for RS-232 communications			
BUS.8	0	Separator for DAT FT choices 1, 2, 3, and 4 is SPACE			

ADDRES (Address)

Factory setting is 001.

User Setting = _____

SER TI (Serial Time)

Factory setting is 1 s.

User Setting = _____

SET TI (Set Time)

Factory setting is 12:00:00.

User Setting = _____

BAT DP (Batch Decimal Point)

Factory setting is RRRRRR.

User Setting = _____

B LOAD (Batch Load)

Factory setting is 0.

User Setting = _____

BAT SC (Batch Scale)

Factory setting is MULTIP; Factory preset value is 000001.

User Setting = _____

CAL VZ, CAL VS, CALmAZ, CALmAS

There are no factory preset CAL VZ, CAL VS, CALmAZ, and CALmAS values: If no Isolated Analog Output Board is used, these parameters are not used. If an Isolated Analog Output Board is ordered as a part of the meter and installed at the factory, the board has been calibrated using exact CAL VZ, CAL VS, CALmAZ, and CALmAS values from the back of the board.

User Setting:

CAL VZ = _____

CAL VS = _____

CALmAZ = _____

CALmAS = _____

Notes:

APPENDIX K
RAMP SPECIFICATIONS

K.1 DEFINITION

The ramping function is an output choice for the Isolated Analog Output Board as configured by CF3.1=4. It uses Setpoints 1 and 2 to slowly open and close an electrical valve. The opening interval (the amount of time it takes to completely open the valve) is determined by the AL TI parameter, and the slope of the opening over time is determined by the scale of the OT.SC.OF parameter.

K.1.2 EXAMPLE

Figure K-1 shows an example of a setup where the ramp function is used. The signal source is a flow measurement from a differential pressure flow meter that is converted to a 4-20 mA signal by the Isolated Analog Input Board. An electrical valve controls the flow to a 100,000 gallon tank. When the valve is fully open, the signal is 20 mA; when the valve is fully closed, the signal is 4 mA. Figure K-2 shows the graph of the valve opening and closing over time.

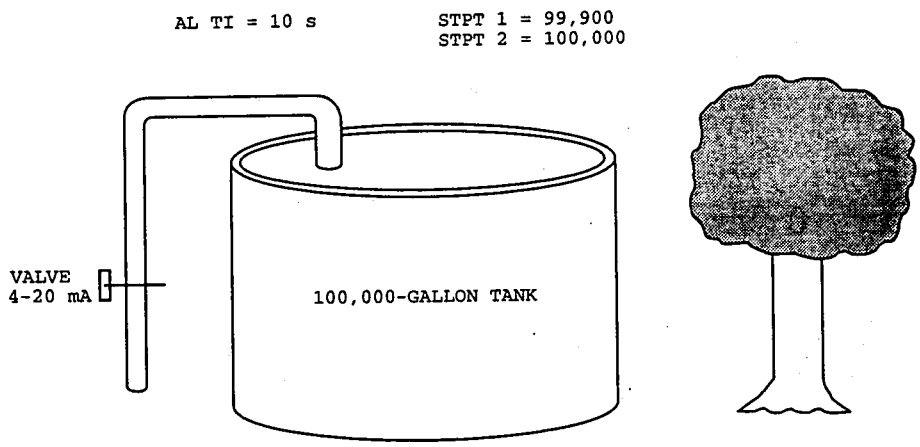

Figure K-1. A Setup Using Ramped Analog Output

When the tank is ready to be filled, a RESET-A is performed. This causes the electrical valve to slowly open and start filling the tank. The valve opens according to the slope of OT.SC.OF and the time specified by AL TI, which in this case is 10 s. It remains fully open delivering about 600 gallons per minute until Setpoint 1 is activated at

99,900 gallons. At this point, the filling valve starts ramping shut, using the negative slope of OT.SC.OF. It stops when it reaches approximately 8% fullscale (about 40 gallons per minute), then closes completely when Setpoint 2 is activated at 100,000 gallons.

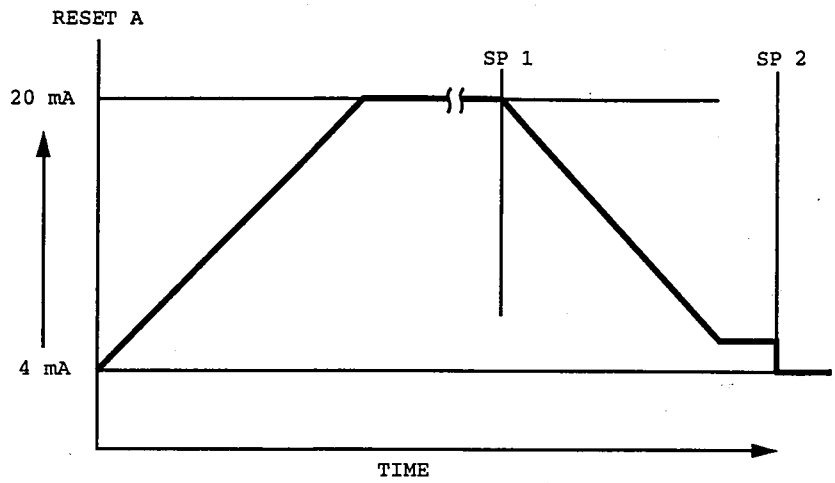

Figure K-2. Opening and Closing of the Valve Over Time

K.1.3 GUIDELINES

Follow these guidelines to use the ramping function with analog output:

1. Assign Setpoints 1 and 2 to TOTAL (Section 4.9) and set setpoint values as dictated by your application.

2. Set configuration choice CF3.1 to 4 (Section 5.4.2).

3. Configure OT.SC.OF (Section 5.4.5) so that the opening valve is open well before Setpoint 1.

4. Configure AL TI (Section 5.4.12) so that the Setpoint digit is 0 and the corresponding time is the amount of time it takes to completely open the valve. This time is usually about 10 s.

Warranty

All Products from NEWPORT ELECTRONICS, INC. are warranted against defective material and workmanship for a period of one (1) year from the date of delivery.

If the unit should malfunction, it must be returned to the factory for evaluation. NEWPORT's Customer Service Department will issue an Authorized Return (AR) number immediately upon phone or written request. Upon examination by NEWPORT, if the unit is found to be defective it will be repaired or replaced at no charge. However, this WARRANTY is VOID if the unit shows evidence of having been tampered with or shows evidence of being damaged as a result of excessive corrosion; or current, heat, moisture or vibration; improper specification; misapplication; misuse or other operating conditions outside of NEWPORT's control. Components which wear or which are damaged by misuse are not warranted. These include contact points, fuses, and triacs.

In addition to our standard warranty period, NEWPORT ELECTRONICS will extend the warranty period for one (1) additional year only if the warranty card enclosed with each instrument is returned to NEWPORT.

Newport is glad to offer suggestions on the use of its various products. Nevertheless, NEWPORT warrants only that the parts manufactured by it will be as specified and free of defects. NEWPORT MAKES NO OTHER WARRANTIES OR REPRESENTATIONS OF ANY KIND WHATSOEVER, EXPRESSED OR IMPLIED, EXCEPT THAT OF TITLE, AND ALL IMPLIED WARRANTIES INCLUDING ANY WARRANTY OF MERCHANTABILITY AND FITNESS FOR A PARTICULAR PURPOSE ARE HEREBY DISCLAIMED. LIMITATION OF LIABILITY: The remedies of purchaser set forth herein are exclusive and the total liability of NEWPORT with respect to this order, whether based on contract, warranty, negligence, indemnification, strict liability or otherwise, shall not exceed the purchase price of the component upon which liability is based. In no event shall NEWPORT be liable for consequential, incidental or special damages.

Every precaution for accuracy has been taken in the preparation of this manual; however, NEWPORT neither assumes responsibility for any omissions or errors that may appear nor assumes liability for any damages that result from the use of the products in accordance with the information contained in the manual.

SPECIAL CONDITIONS: Should this equipment be used in any nuclear installation or activity, purchaser will indemnify NEWPORT and hold NEWPORT harmless from any liability or damage whatsoever arising out of the use of the equipment in such a manner.

Return Requests

Direct all warranty and repair requests/inquiries to the NEWPORT Customer Service Department. BEFORE RETURNING ANY PRODUCT(S) TO NEWPORT, YOU MUST OBTAIN AN AUTHORIZED RETURN (AR) NUMBER FROM NEWPORT'S CUSTOMER SERVICE DEPARTMENT (IN ORDER TO AVOID PROCESSING DELAYS). The assigned AR number should then be marked on the outside of the return package and on any correspondence.

The purchaser is responsible for shipping charges, freight, insurance and proper packaging to prevent breakage in transit. NEWPORT's warranty does not apply to defects resulting from action of the purchaser, mishandling, improper interfacing, operation outside of design limits, improper repair, or unauthorized modification.

FOR **WARRANTY** RETURNS, please have the following information available BEFORE contacting NEWPORT:

1. P.O. number under which the product was PURCHASED,
2. Model and serial number of the product under warranty, and
3. Repair instructions and/or specific problems relative to the product.

FOR **NON-WARRANTY** REPAIRS, consult NEWPORT for current repair charges. Have the following information available BEFORE contacting NEWPORT:

1. P.O. number to cover the COST of the repair,
2. Model and serial number of product, and
3. Repair instructions and/or specific problems relative to the product.

It is our policy to comply with all applicable safety and EMC/EMI regulations worldwide. We are constantly pursuing certification of our products to the European New Approach Directives. We will add the CE mark to every appropriate device upon certification.

For technical or application assistance please call:

Newport Electronics, Inc.
2229 South Yale Street • Santa Ana, CA • 92704-4426
TEL: (714) 540-4914, (800)-NEWPORT • FAX: (714) 546-3022

Newport Technologies, Inc.
976 Bergar • Laval (Quebec) • H7L 5A1 • Canada
TEL: (514) 335-3183 • FAX: (514) 856-6886

Newport Electronics Ltd.
25 Swannington Road • Broughton Astley • Leicestershire • LE9 6TU • England
TEL: 44 (1455) 285998 • FAX: 44 (1455) 285604

Newport Electronics B.V.
Postbus 8034 • 1180 LA Amstelveen • The Netherlands
TEL: (31) 20 6418405 • FAX: (31) 20 6434643

Newport Electronics Spol S.R.O.
Ostravska 767 • 73301 Karvina • Czech Republic
TEL: 42 (69) 6311899 • FAX: 42 (69) 6311114

Newport Electronics GmbH
Daimlerstrasse 26 • D-75392 Deckenpfronn • Germany
TEL: 49 (07056) 3017 • FAX: 49 (07056) 8540

Newport Electronique S.A.R.L.
9 rue Denis Papin • 78190 Trappes • France
TEL: 33 (1) 30.62.14.00 • FAX: 33 (1) 30.69.91.20

In Mexico
TEL: (95) 800-NEWPORT

Newport Electronics, Inc.

11051ML-01 Rev. B

APPENDIX C

NOTE: Keys are included only in one copy of the document submitted to Sauer-Sundstrand and one copy retained by Montgomery Watson.

APPENDIX D

SAUER SUNDSTRAND
GROUNDWATER REMEDIATION SYSTEM
OPERATION AND MAINTENANCE LOG

SITE NAME:	Sauer-Sundstrand Co.	**VISIT DATE:**	_____
SITE LOCATION:	Ames, Iowa	**ARRIVAL TIME:**	_____
CLIENT CONTACT:	Mr. George Charbonneau	**DEPARTURE TIME:**	_____
CLIENT PHONE #:	(515) 239-6617	**TECHNICIAN:**	_____

Operation and Maintenance Checklist

- ☐ Check Color of Pressure Transducer Desiccant Unit
- ☐ Measure Depth of Water Column Within Sump
- ☐ Mechanically Probe Collection Sump to Assess Accumulation of Sediments
- ☐ Inspect Pressure Transducer
- ☐ Measure Length of Pressure Transducer Cable
- ☐ Visually Inspect Interior of Hand-holes No. 1, 2, and 3
- ☐ Panel Meter Reading: Flow Rate: _____ Cumulative Flow: _____
- ☐ Flow Meter Reading: Flow Rate: _____ Cumulative Flow: _____
- ☐ Visual Inspect Aboveground Piping
- ☐ Check for Water Block Within Bypass Liquid Trap
- ☐ Confirm Function of Standpipe Level Sensor
- ☐ Confirm Operation of Water Temperature Detector
- ☐ Inspect Temperature Transmitter
- ☐ Check Accuracy of Ambient Air Temperature Sensors
- ☐ General Housekeeping

Additional Comments and Observations:

_____
_____
_____
_____
_____
_____
_____

APPENDIX E

PICKING SHEET

IRO PRODUCTS, INC
51 RENSEN ST, SUITE A
LANSING, MI 48910
(517) 887-1222

ORDER DATE: 04/17/97
ORDER NUMBER: 0006276
DATE TO SHIP: 04/17/97
CUSTOMER NO: MONAIL1
SALESPERSON: DAWN PETTENGILL

SOLD TO:
MONTGOMERY WATSON INC
2100 CORPORATE DRIVE
ADDISON IL 60101
CONFIRM TO: DICK ANDROS

SHIP TO:
MONTGOMERY WATSON INC
ATTENTION STEVE NELSON
2100 CORPORATE DRIVE
ADDISON IL 60101

CUSTOMER P.O.	SHIP VIA	F.O.B	TERMS
46-003-P01	UPS GT	LANSING	2% 10 DAYS, NET 30

LOCATION	ITEM NO.	UNIT	ORDERED	SHIPPED	BACK ORD
	*4020-04 #3533	EACH	1.00	1	Ø
	ON PARTS KIT FOR GRUNDFOS PUMP				

CUSTOMER TO SEND GRUNDFOS 40S 10-3 PUMP PURCHASED ON PO 46-003-P01 TO FACTORY FOR REPAIR OF PARTS

INCLUDED IN THE KIT SHOULD IT BE NECESSARY TO REPAIR IN THE FUTURE / LABOR INCLUDED IN KIT PRICE

PLEASE SEE CUSTOMER SERVICE FOR INCLUSION OF MANUALS WITH THIS SHIPMENT

RECEIVED BY: RECEIVED DATE:

SHIP DATE: 4-18-97 PACKAGED BY: F

SHIPPING: #/PACKAGES 1