322511

7307

FILE PLAN
1.06

AIR SAMPLING AND ANALYSIS
FINAL REPORT
RICHARDSON FLATS
PARK CITY, UTAH

AUGUST 1992

ADMINISTRATIVE
RECORD

PREPARED BY:

Sella M. Burchette
Environmental Response Team

AND

Theresa A.N. Bourbon
ERT/REAC

Environmental Response Branch
Emergency Response Division
Office of Emergency & Remedial Response

Table of Contents

EXECUTIVE SUMMARY

INTRODUCTION

BACKGROUND

METHODOLOGIES

METEOROLOGY

RESULTS/DISCUSSION

CONCLUSION

LIST OF FIGURES

Figure 1 Air Sample Locations, Richardson Flats, Park City, Utah, June 10-11, 1992

Figure 2 Frequency of Wind Speed and Direction, Richardson Flats, Park City, Utah, June 10, 1992

Figure 3 Frequency of Wind Speed and Direction, Richardson Flats, Park City, Utah, June 11, 1992

EXECUTIVE SUMMARY

On June 10 and 11, 1992 five (5) sampling locations were selected to ascertain the extent of heavy metal contaminated suspended particulate matter migration in the air pathway from the site known as Richardson Flats, Park City, Utah. Eighty-plus (80%) percent of the 160 acre subject area is "covered" with various types of grasses and bush. This cover has been placed there by the potentially responsible party (PRP). The PRP denied the Environmental Protection Agency (EPA) site access thereby limiting sampling locations to the property's perimeter boundary. While split samples were requested by the PRP, collocated samples were provided as filter splits are not possible. Seventeen (17) samples were submitted for analysis. No samples indicated detectable levels of cadmium, lead or arsenic. Four samples at four different locations, two each on different days indicated traces levels of zinc at the limit of quantitation level of the analytical method. The results indicate no release of heavy metal contaminated particulate matter from Richardson Flats. (Refer to Discussion section).

INTRODUCTION

On June 10, 11, 1992, air samples were collected at the Richardson Flats site in Park City, Utah for the purpose of assessing the extent of migration of heavy metal contaminated particulate matter from exposed, potentially air entrainable tailing piles. This sampling will attempted to identify any changes in the migration of air contaminants since the time of the original sampling effort conducted by the Ecology & Environment Field Investigation Team in July 1986. At the time of this sampling effort, most of the 160 acre subject area was not covered/vegetated. In addition, Hazardous Ranking Scoring (HRS) was previously based on photo-documentation of wind blown tailing material.

BACKGROUND

In brief synopsis, the site is located 3.5 miles northeast of Park City, Summit County, Utah. From 1975 to 1981, the 160 acre site was used for placement of mine tailings from mines owned by the United Park City Mines (UPCM). Tailings were placed at depths of up to ten feet. In 1983, UPCM began to use soil to cover the tailings. This is an on-going project which was approximately seventy-five percent complete during the time of a site visit in April, 1992. A security fence has been put in place surrounding the site. Also, the site is a municipal/sanitary landfill. This land was leased by UPCM to the city of Park City and was used for landfill purposes in the mid 1970's. In 1990, a highway was placed through the middle of the landfill creating two sections (one on each side of the highway.) Refuse in the path of the highway was removed, placed on top of the undisturbed landfill sections and covered with soil.

The site lies in a rural area with very widely scattered residences. It is within 1.5 miles of Prospector Square, a new

residential community which supports Park City. Only three residences are within a one mile radius of the site. Types of material handled by this facility are mine tailings and municipal/sanitary refuse. The volumes of contaminated materials to be addressed are 2 million tons of mine tailings and an unknown quantity of municipal/sanitary refuse. The contaminants of concern are metals from the mine tailings, potential metals, volatile organics, BNA's, and pesticides from the landfill.[1]

METHODOLOGIES

Logistical complications precluded our use of Hi-Volume samplers in this effort. Medium volume samplers (10 liters per minute) were utilized with a 0.8 micron, 37 millimeter mixed cellulose-ester filter over an 8 hour sample period. The total sample volumes were minimum of 4155 liters. For details, refer to Section 2.0 Methodology of the Response, Engineering, Analytical Contract (REAC) report in Appendix A. Samples were prepared by the procedures set forth in the 40 Code of Federal Regulation (CFR) Part 50, Appendix G:Reference Method for the Determination of Lead in Suspended Particulate Matter Collected for Ambient Air. The solutions from the digested samples were analyzed by National Institute of Occupational Safety & Health (NIOSH) Method 7300 for Elements. For details, refer to Appendix B.

METEOROLOGY

Historical information indicates the Richardson Flats tailings lie in a small topographic basin of approximately 800 acres. The configuration of the basin was expected to have a pronounced effect on local air flow. The basin is situated at 6600 feet elevation and is surrounded by ridges of the Wasatch Mountains that range from 6700 to 7600 feet in height. Silver Creek enters the basin from the west-southwest then angles to the north. Daytime up valley air flows were anticipated to originate from the west, northwest.[2] This, however, were not the conditions we experienced while sampling. It would have been to our benefit had the winds held true to anticipated behavior as our sample locations in closest proximaty to the exposed piles were on the southern side of the property boundary.

On June 10, 1992, frontal movement created wind activities with no relative consistency. At 21% overall, winds originated from the southwest at 7-10 knots (18%) and 11-16 knots (3%). As displayed in modified Figure 1, winds were extremely inconsistent over the course of the sample period. It is difficult to designate one sample location over the other as upwind and downwind locations. Based upon time percentages, Location 2 would qualify as upwind. None of the other samples were situated "downwind" for any extended length of time.

On June 11, 1992, relatively stable winds persisted throughout the course of the sampling effort. Winds emanated from the southeast

approximately 94% of the day and due east 5% maintaining speed of 11-16 knots 34% of the day and 7-10 knots 63 %. Such winds assign upwind positions to locations 1 and 2, and relative downwind to 4,5,and 3 respectively. See modified Figure 1, June 11, 1992.

RESULTS/DISCUSSION

Table 1, Air Sampling Results, summarizes the samples and locations which showed any detectable levels for the compound of concern: lead, cadmium, arsenic and zinc. Table 1.1 displays tabulated results for all compounds. The only contaminant detected at any level was zinc at 0.0001 mg/m^3 ($0.1\mu g/m^3$) which is the limit of quantitation for the analysis. These levels were noted at locations 1 (County Road East) and 3 (Highway 40) on the 10th and 4 (NW corner of the site) and 5 (Highway 248) on the 11th.

No samples on any day under any wind condition exhibited elevated levels of contaminants. June 11th sampling was a better sampling day with respect to the ability to assign "classic" upwind-downwind sampling locations. In lieu of this scenario, 0.0001mg/m^3 of zinc at locations 4 and 5 and versus nondetects and 1 and 2 is still negligible and should not be viewed as a release.

It is worth noting that restriction from site access precluded the implementation of the optimum sampling strategy to determine an off-site release. The best sampling approach would have been to position samplers in the middle of the exposed area, the perimeter of the exposed area, and distance stratified locations (also allowing for wind degree variability) to the property boundary and off-site.

CONCLUSION

Based upon the information presented in these reports, there is no demonstrable release presently occurring at the Richardson Flats site. The vegetative cover placed there by the PRP has reduced the previously documented (1986 FIT report) particulate migration from the site. Any uncapped area will present a potential for particulate migration; and therefore, it should be recommended, if it has not already occurred, that the PRP should complete its vegetating process at Richardson Flats thereby diminishing any potential for particulate migration off-site.

TABLE 1. AIR SAMPLING RESULTS

RICHARDSON FLATS
PARK CITY, UTAH
JUNE 10 - 11, 1992

Sample Location	Volume of Air Sampled (Liters)	Zinc Data (mg/m^3)[1]	Arsenic Data (mg/m^3)	Date Sampled	Sample Number
#1, County Road East	4816	.0001	ND[2]	June 10	10251
#3, Highway 40	4862	.0001	ND	June 10	10252
#4, NW Corner of Site	5182	.0001	ND	June 11	10269
#5, Highway 248	5121	.0001	ND	June 11	10271
Trip Blank	0	ND	.01	NA[3]	10274
Lot Blank #2	0	ND	.01	NA	10261

[1] mg/m^3 - milligrams per cubic meter.
[2] ND - Not detected at the instrument limit of quantitation.
[3] NA - Not applicable, lot and trip blanks apply to the entire sampling effort.

/bourbon/fr-4642

Table 1.1
Results of the Analysis for Arsenic, Zinc, Cadmium, and Lead, in Air
Richardson Flats, WA # 3- 642

Sample ID	Sampling Location	Air Volume (liters)	Conc. Arsenic (mg/m3)	LOQ Arsenic (mg/m3)	Conc. Zinc (mg/m3)	LOQ Zinc (mg/m3)	Conc. Cadmium (mg/m3)	LOQ Cadmium (mg/m3)	Conc. Lead (mg/m3)	LOQ Lead (mg/m3)
10251 A	#1, Country Rd. E	4816	ND	0.0021	0.0001	0.0001	ND	0.0001	ND	0.0015
10253 A	#2, Country Rd. N	4663	ND	0.0021	ND	0.0001	ND	0.0001	ND	0.0015
10252 A	#3, Highway 40	4862	ND	0.0021	0.0001	0.0001	ND	0.0001	ND	0.0014
10257 A	#4, NW Corner Site	4990	ND	0.0020	ND	0.0001	ND	0.0001	ND	0.0014
10259 A	#5, Highway 248	5121	ND	0.0020	ND	0.0001	ND	0.0001	ND	0.0014
10261 A	Lot Blank 1*	-	ND	0.01	ND	0.0005	ND	0.0005	ND	0.007
10267 A	#3, High 40	6331	ND	0.0016	ND	0.0001	ND	0.0001	ND	0.0011
10269 A	#4, NW - Site	5182	ND	0.0019	0.0001	0.0001	ND	0.0001	ND	0.0014
10263 A	#1, Cou Rd. E	4587	ND	0.0022	ND	0.0001	ND	0.0001	ND	0.0015
10265 A	#2, Cou Rd. N	4155	ND	0.0024	ND	0.0001	ND	0.0001	ND	0.0017
10271 A	#5, Highway 248	5121	ND	0.0020	0.0001	0.0001	ND	0.0001	ND	0.0014
10274	Trip Blank *	-	0.01	0.01	ND	0.0005	ND	0.0005	ND	0.007
10275	Field Blank *	-	ND	0.01	ND	0.0005	ND	0.0005	ND	0.007
10261 A	Lot Blank 2*	-	0.01	0.01	ND	0.0005	ND	0.0005	ND	0.007
10261 A	Lot Blank 3*	-	ND	0.01	ND	0.0005	ND	0.0005	ND	0.007
10261 A	Lot Blank 4*	-	ND	0.01	ND	0.0005	ND	0.0005	ND	0.007
10261 A	Lot Blank 5*	-	ND	0.01	ND	0.0005	ND	0.0005	ND	0.007

ND denotes not detected
LOQ denotes Limit of Quantitation
* denotes that units for these values are milligrams (mg)

Figures

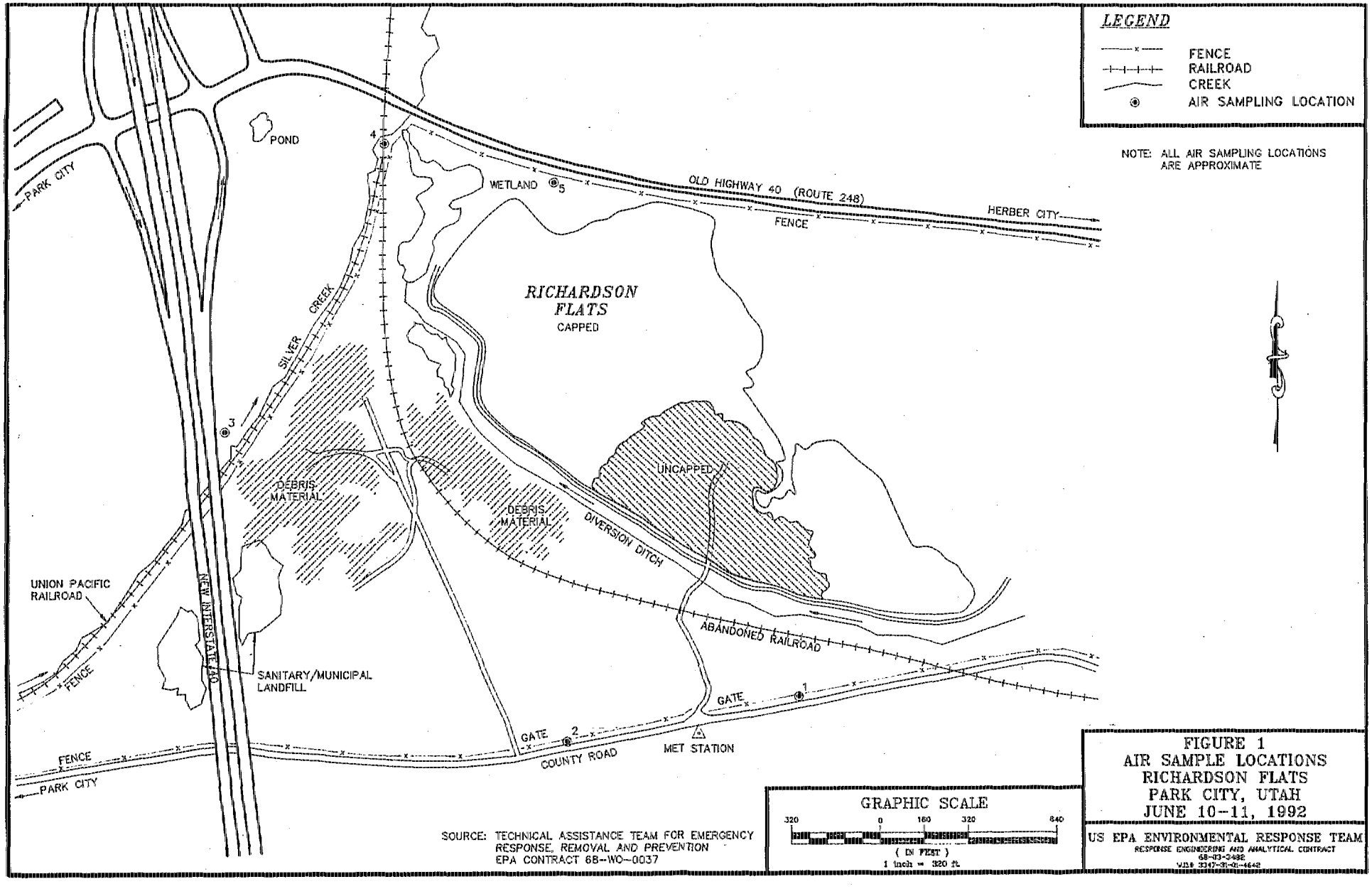

SOURCE: TECHNICAL ASSISTANCE TEAM FOR EMERGENCY RESPONSE, REMOVAL AND PREVENTION
EPA CONTRACT 68-WO-0037

FIGURE 1
AIR SAMPLE LOCATIONS
RICHARDSON FLATS
PARK CITY, UTAH
JUNE 10-11, 1992

US EPA ENVIRONMENTAL RESPONSE TEAM
RESPONSE ENGINEERING AND ANALYTICAL CONTRACT
68-03-3482
WIN 3347-31-01-4642

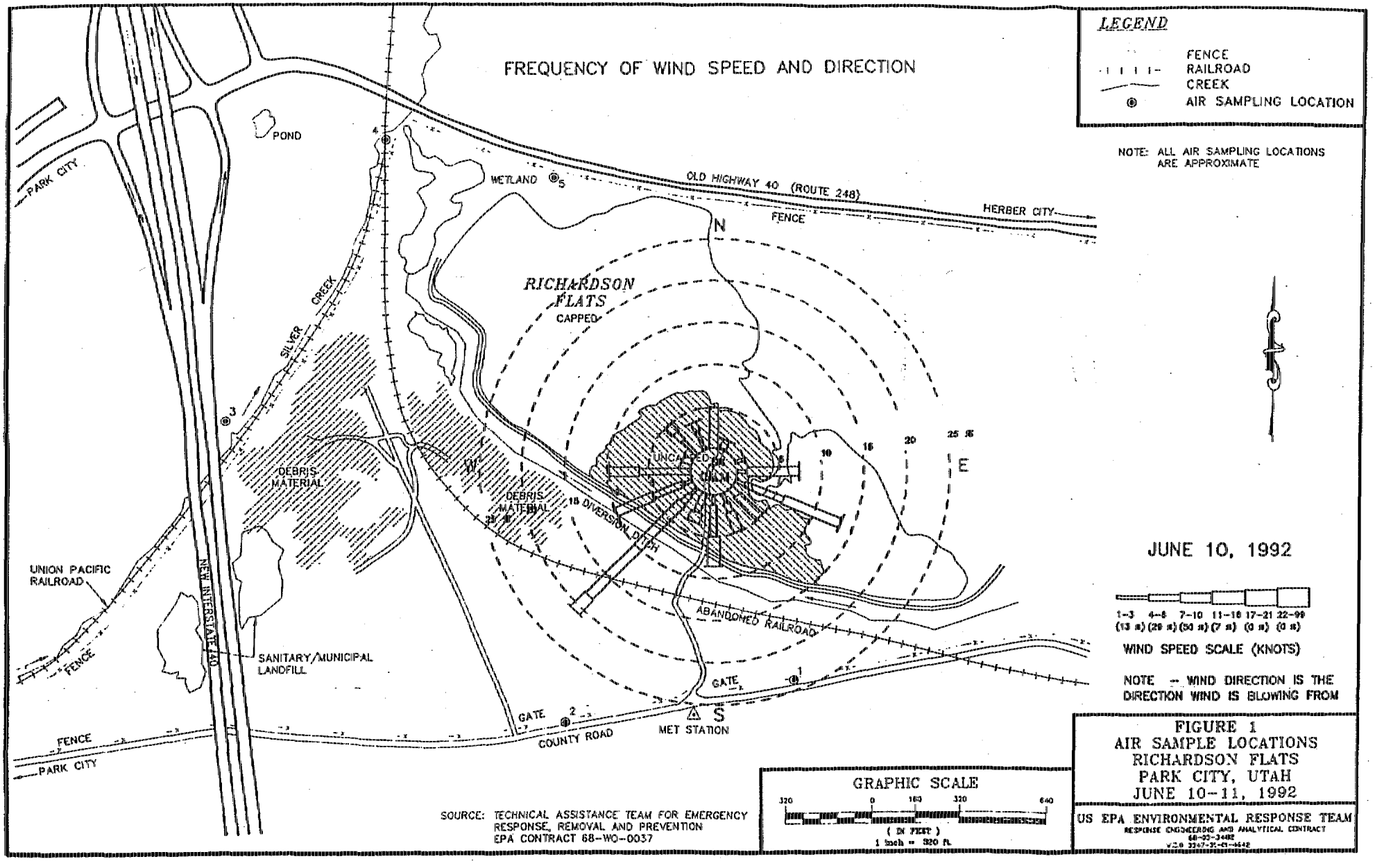
FREQUENCY OF WIND SPEED AND DIRECTION
LEGEND
FENCE
RAILROAD
CREEK
AIR SAMPLING LOCATION
NOTE: ALL AIR SAMPLING LOCATIONS ARE APPROXIMATE
POND
PARK CITY
WETLAND
OLD HIGHWAY 40 (ROUTE 248)
HERBER CITY
FENCE
N
RICHARDSON FLATS
CAPPED
SILVER CREEK
DEBRIS MATERIAL
DEBRIS MATERIAL
UNCAPPED
18 DIVERSION DITCH
ABANDONED RAILROAD
UNION PACIFIC RAILROAD
NEW INTERSTATE 40
SANITARY/MUNICIPAL LANDFILL
FENCE
GATE
GATE
COUNTY ROAD
MET STATION
S
E
FENCE
PARK CITY
JUNE 10, 1992
1-3 4-6 7-10 11-16 17-21 22-99
(13 %) (29 %) (50 %) (7 %) (0 %) (0 %)
WIND SPEED SCALE (KNOTS)
NOTE -- WIND DIRECTION IS THE DIRECTION WIND IS BLOWING FROM
GRAPHIC SCALE
320 0 160 320 640
(IN FEET)
1 inch = 320 ft.
SOURCE: TECHNICAL ASSISTANCE TEAM FOR EMERGENCY RESPONSE, REMOVAL AND PREVENTION
EPA CONTRACT 68-WO-0037
FIGURE 1
AIR SAMPLE LOCATIONS
RICHARDSON FLATS
PARK CITY, UTAH
JUNE 10-11, 1992
US EPA ENVIRONMENTAL RESPONSE TEAM
RESPONSE ENGINEERING AND ANALYTICAL CONTRACT

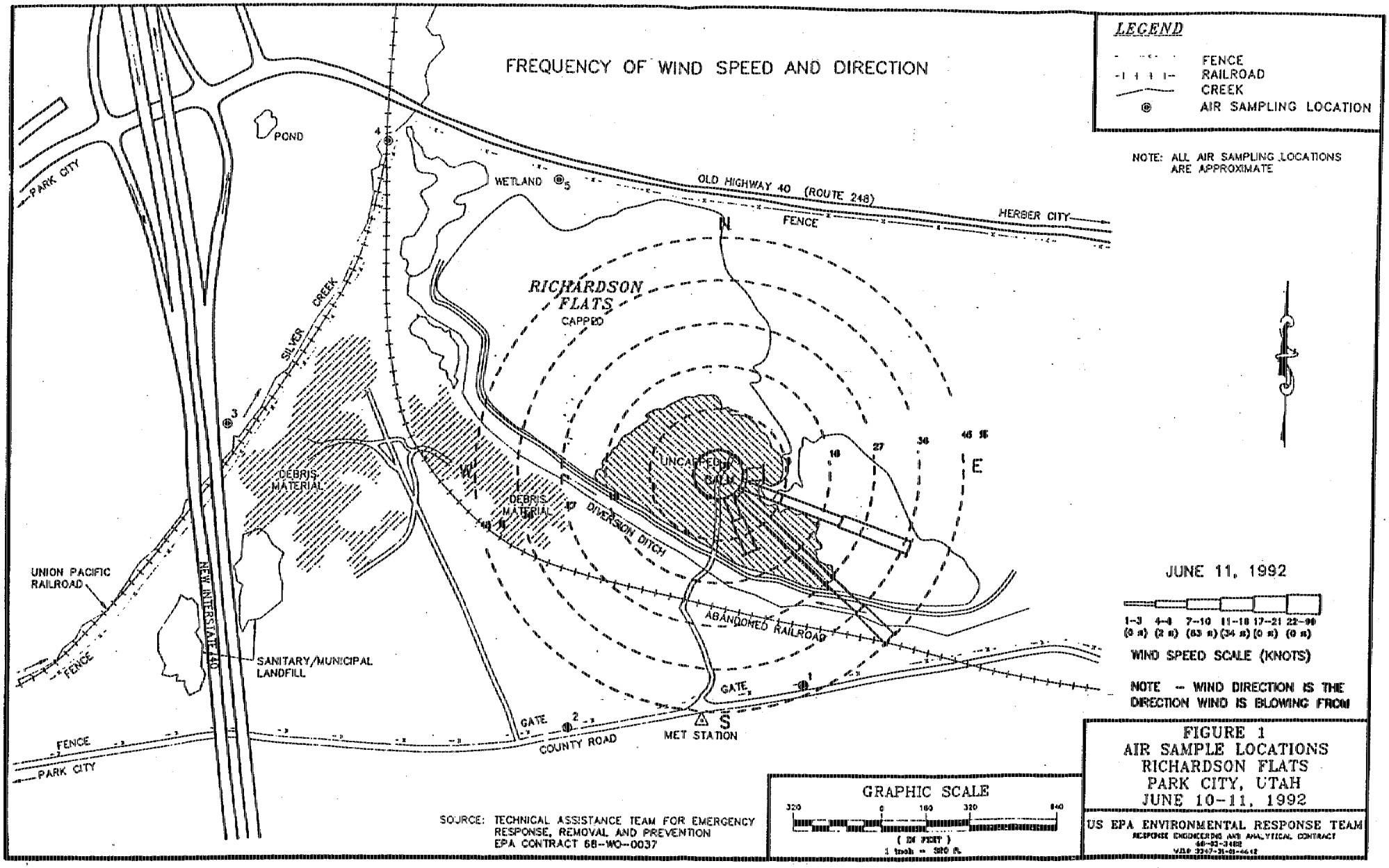

FIGURE 1
AIR SAMPLE LOCATIONS
RICHARDSON FLATS
PARK CITY, UTAH
JUNE 10-11, 1992

FIGURE 2 FREQUENCY OF WIND SPEED AND DIRECTION

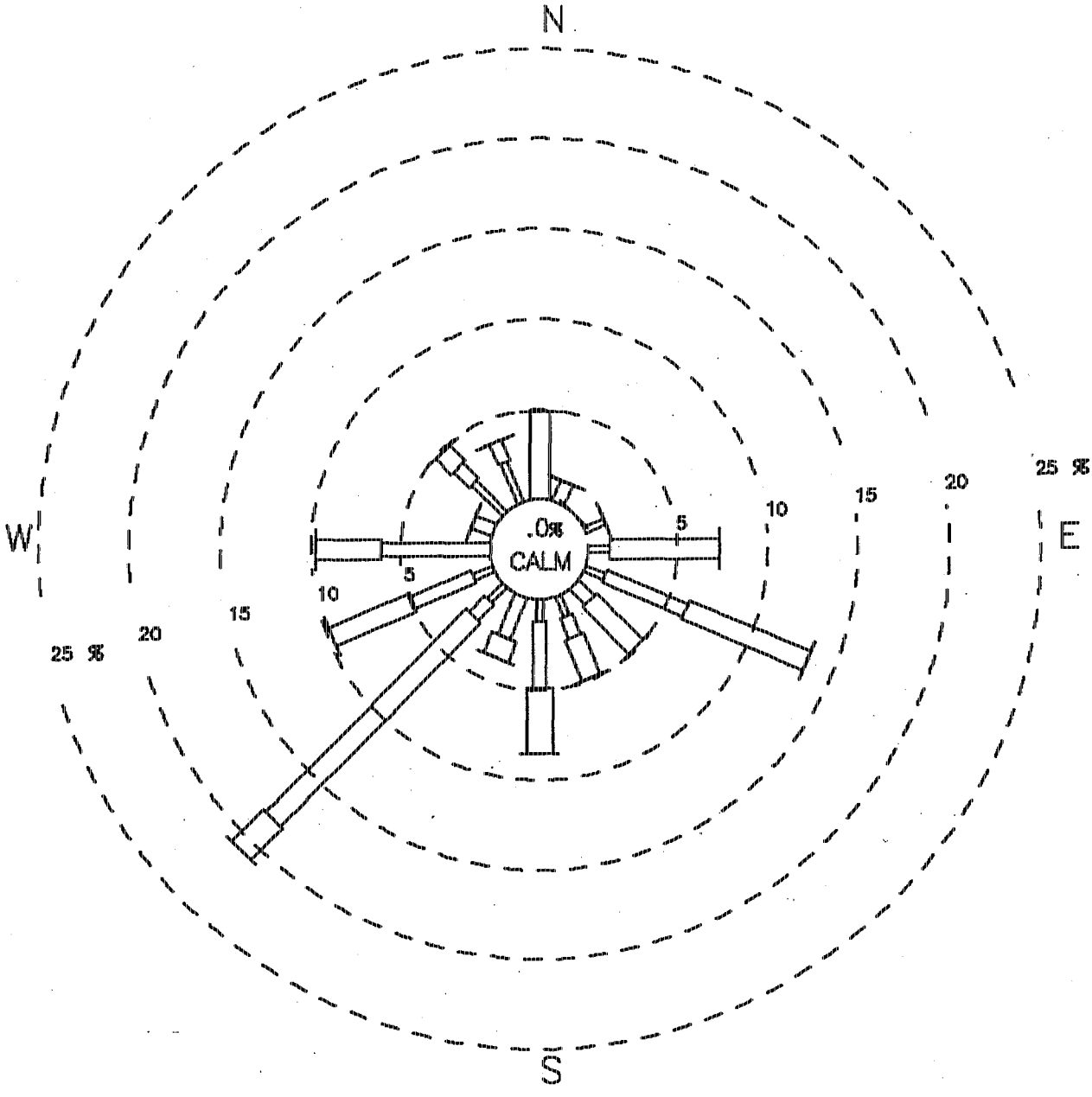

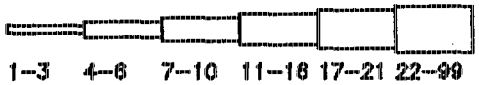

WIND SPEED SCALE (KNOTS)

NOTE — WIND DIRECTION IS THE DIRECTION WIND IS BLOWING FROM

RICHARDSON FLATS
PARK CITY, UTAH
JUNE 10, 1992
U.S. EPA/ERT & REAC
CONTRACT # 68–03–3482
WA# 3347–31–01–4642

FIGURE 3 FREQUENCY OF WIND SPEED AND DIRECTION

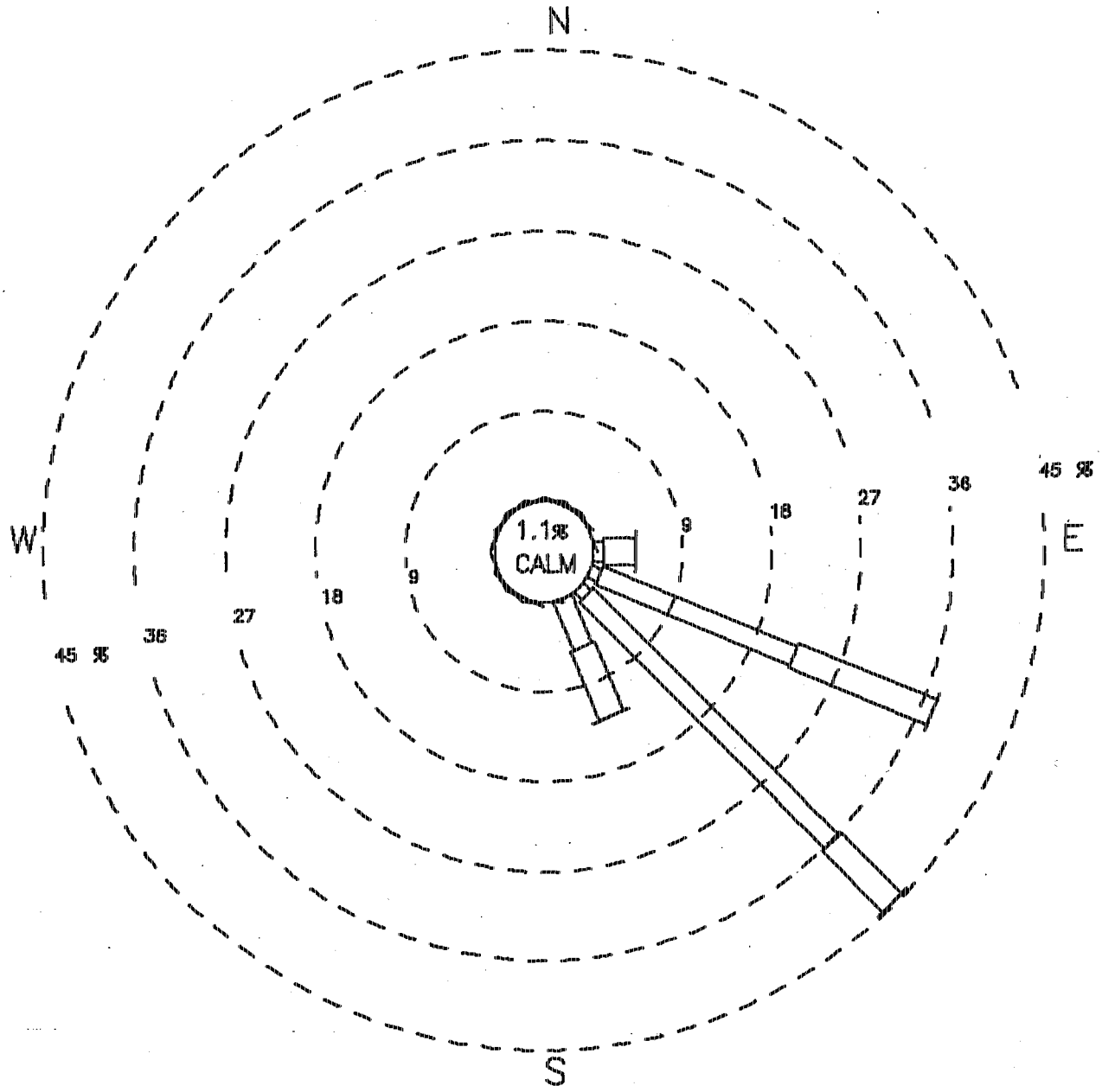

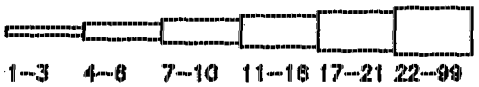

1–3	4–6	7–10	11–16	17–21	22–99
(0 %)	(2 %)	(63 %)	(34 %)	(0 %)	(0 %)

WIND SPEED SCALE (KNOTS)

NOTE – WIND DIRECTION IS THE DIRECTION WIND IS BLOWING FROM

RICHARDSON FLATS
PARK CITY, UTAH
JUNE 11, 1992
U.S. EPA/ERT & REAC
CONTRACT # 68–03–3482
WA# 3347–31–01–4642

Appendix A

AIR SAMPLING AND ANALYSIS
FINAL REPORT
RICHARDSON FLATS
PARK CITY, UTAH

AUGUST 1992

EPA Work Assignment No.: 3-642
Weston Work Order No.: 3347-31-01-4642
EPA Contract No.: 68-03-3482

Prepared by:

Roy F. Weston, Inc.

Theresa A.N. Bourbon
Task Leader

8/21/92
(Date)

W. Scott Butterfield
Project Manager

8/21/92
(Date)

Prepared for:

U.S. EPA/ERT

Sella Burchette
Work Assignment Manager

/bourbon/fr-4642

TABLE OF CONTENTS

LIST OF TABLES

LIST OF FIGURES

1.0 INTRODUCTION

1.1 Project Objectives
1.2 Site Background

2.0 METHODOLOGY

2.1 Sampling Activities
2.2 Standard Operating Procedures (SOPs)

3.0 RESULTS

3.1 June 10, 1992
3.2 June 11, 1992

4.0 DISCUSSION OF RESULTS

4.1 June 10, 1992
4.2 June 11, 1992

REFERENCES

APPENDICES

A. Field Sampling Data Sheets
B. REAC Final Analytical Report

LIST OF TABLES

Table 1 Air Sampling Results, Richardson Flats, Park City, Utah, June 10 - 11, 1992

LIST OF FIGURES

Figure 1 Air Sample Locations, Richardson Flats, Park City, Utah, June 10-11, 1992

Figure 2 Frequency of Wind Speed and Direction, Richardson Flats, Park City, Utah, June 10, 1992

Figure 3 Frequency of Wind Speed and Direction, Richardson Flats, Park City, Utah, June 11, 1992

1.0 INTRODUCTION

1.1 Project Objectives

On June 8, 1992, the Response Engineering and Analytical Contract (REAC) received Work Assignment (WA) #3-642 from the U.S. EPA/ERT. The WA requested that air sampling be performed to determine the existance and extent of airborne contamination migrating from the Richardson Flats site. The U.S. EPA/ERT-REAC field activities took place in June of 1992.

1.2 Site Background

The Richardson Flats site is located approximately 3.5 miles north of Park City, Utah. It is a silver mine tailings disposal site, located on 160 acres, that has been partially covered with soil by the owners. The United States Environmental Protection Agency (U.S. EPA) Region VIII On-Scene Coordinator (OSC), Michael Zimmerman, contacted the U.S. EPA/Environmental Response Team (U.S. EPA/ERT) in Edison, NJ, for assistance with this investigation.

The site has been inactive since the early 1980s. The types of materials handled by the site were heavy metals in tailings and municipal/sanitary refuse. The volume of contaminated materials to be addressed is two million tons of tailings and an unknown quantity of municipal/sanitary refuse. The contaminants of concern are lead, cadmium, arsenic, and zinc. A site map has been adapted from the Richardson Flat Tailings Workplan, provided by the Ecology & the Environment (E&E) Technical Assistance Team (TAT) (Figure 1, Air Sample Locations).

2.0 METHODOLOGY

The U.S. EPA/ERT-REAC field team completed a site walk-through on June 9, 1992. Sampling began on June 10, 1992, and continued through June 11, 1992. Since site accesss was denied, air samples were collected at five locations along the perimeter of the site. The winds were light to heavy (0 - 16 knots) and variable in direction (Figures 2, 3 - Frequency of Wind Speed and Direction, June 10 and 11) over the two sampling days. The sampling locations were chosen on the first day of sampling, apparently in designated upwind and downwind positions. Since the winds changed so much during the day, the locations remained the same for both days, while the upwind and downwind designations changed every day.

2.1 Sampling Activities

Five sampling locations had been chosen by the Region VIII EPA personnel and used for previous sampling efforts. The REAC team did not sample at these same locations since site access was denied. However, five locations along the perimeter were chosen by the U.S. EPA/ERT Work Assignment Manager, based upon the wind direction, to determine if there were any off-site air emissions from the pile. All of the samples collected by the U.S. EPA/ERT and REAC team were collected as replicates. Each sampling location had two pumps set out and two samples collected. One of the samples from each location were provided to the potentially responsible party (PRP), United Park City Mines (UPCM) personnel as "splits". This procedure allows the PRP to have the samples independently analyzed, in the event that they want to perform their own analysis.

Medium flow sampling pumps were used at a flow rate of 10 liters per minute (L/min) for a duration of approximately eight hours per day. Samples were collected from the five sampling locations for two days. Calibrations of the sampling pumps were conducted prior to the sampling effort by means of a primary flow standard (bubble meter), and at the beginning and end of each sampling period using a calibrated secondary flow standard (rotameter). The actual flow rates and sampling periods employed can be referenced in the field data sheets in Appendix A.

On the first day of sampling (June 10, 1992) there were scattered showers; however, the pumps were stopped and the sampling media covered. The showers did not impact the sampling effort. On the second day of sampling (June 11, 1992) there was a brief downpour in the afternoon, at approximately 2:30 pm. The pumps at locations 4 and 5 were not covered quickly enough, and the sampling media became wet. These sample cassettes were exchanged for new sampling media (cassettes) for the remainder of the sampling period on that day. The two samples from locations 4 and 5 were submitted to the laboratory as one sample per location with a total volume for each set of samples. It was requested that the pairs of samples be analyzed as one sample for each location.

A meteorological station was deployed on site to measure and document weather conditions during the sampling effort (Figures 1, Air Sample Locations). The wind direction data collected on site documents where the wind was coming from, as is the standard practice when wind direction data is reported, as opposed to where the wind was going towards (Figures 2, 3). In this way, the sampling locations opposite of the reported wind direction are the locations that would most likely be impacted by airborne contaminants migrating off site (e.g. if the wind was coming from the southwest, a sample collected in the northeast area of the site would be most likely to be contaminated by airborne concentrations of contaminants).

2.2 Standard Operating Procedures (SOPs)

The following U.S. EPA/ERT-REAC SOPs were followed for this project:

ERT/REAC SOP #2002, Sample Documentation
ERT/REAC SOP #4010, Chain of Custody
ERT/REAC SOP #2004, Sample Packaging and Shipment
ERT/REAC SOP #2003, Sample Storage, Preservation, and Handling
ERT/REAC SOP #2001, General Field Sampling Guidelines
ERT/REAC SOP #2005, Quality Assurance/Quality Control Samples
ERT/REAC SOP #2063, Air Sampling For Metals (NIOSH 7300 Elements)
REAC SOP # 2062, Rotameter Calibration
REAC SOP # 2060, RAM - 1 Operation

3.0 RESULTS

The raw analytical data, analytical methods used, and specific analytical information can be referenced in Appendix B, REAC Final Analytical Report.

3.1 June 10, 1992

The results for the samples collected at locations 2, 4, and 5 were non-detect for all the parameters tested (arsenic, zinc, cadmium, and lead). The results for the samples collected from locations 1 and 3 were non-detect for all the parameters except zinc. The concentration detected for zinc in both cases was .0001 milligrams per cubic meter (mg/m^3), which is also the

analytical quantitation limit. The analytical data is presented in Table 1.

3.2 June 11, 1992

The results for the samples collected at locations 1, 2, and 3 were non-detect for all the parameters tested. The results for the samples collected from locations 4 and 5 were non-detect for all the parameters except zinc. The concentration detected for zinc in both cases was .0001 mg/m^3, which is also the analytical quantitation limit. The analytical data is presented in Table 1.

4.0 DISCUSSION OF RESULTS

In two of the blanks (trip blank and lot blank #2), there were quantifiable concentrations of arsenic found. These concentrations were .01 mg/m^3, which is also the analytical quantitation limit. Since the arsenic values for all the samples were not detected at the analytical quantitation limit (ND), these values do not affect the sample results (Table 1). It is possible that these concentrations represent laboratory contamination.

4.1 June 10, 1992

The concentrations of zinc detected in the samples from locations 1 and 3 are low (quantitation limit), and there were no parameters detected at the other three locations. The winds were very variable (Figure 2) but primarily came from the southwest. Sampling location 3 was in the path of the wind, and considering that the site was surrounded by mountains, sampling location 1 could also have been in the path of the wind (See Figure 1) due to possible wind channelling effects.

4.2 June 11, 1992

The concentrations of zinc detected in the samples from locations 4 and 5 are low (quantitation limit), and there were no parameters detected at the other three locations. These two samples are also the same samples that had gotten wet in the rainshower, and the filter cassettes were changed in the middle of the sampling period. Both filters collected from each of these locations were analyzed as one sample per location and the results calculated for a total volume. The winds were variable (Figure 3) but were primarily coming from the southeast. Sampling locations 4 and 5 were in the northwest areas of the site, which is supported by the wind data that was collected on site.

REFERENCES

Ecology & the Environment (E&E) Technical Assistance Team (TAT), "Richardson Flat Tailings Sampling QA/QC Workplan", Work Order # EUT0039SBA, June 1992.

Ecology & the Environment (E&E) Field Investigation Team (FIT), "Revised Analytical Results Report of Air Sampling at Richardson Flat Tailings", TDD# R8-8608-05, September 1987.

TABLE 1. AIR SAMPLING RESULTS

RICHARDSON FLATS
PARK CITY, UTAH
JUNE 10 - 11, 1992

Sample Location	Volume of Air Sampled (Liters)	Zinc Data (mg/m^3)[1]	Arsenic Data (mg/m^3)	Date Sampled	Sample Number
#1, County Road East	4816	.0001	ND[2]	June 10	10251
#3, Highway 40	4862	.0001	ND	June 10	10252
#4, NW Corner of Site	5182	.0001	ND	June 11	10269
#5, Highway 248	5121	.0001	ND	June 11	10271
Trip Blank	0	ND	.01	NA[3]	10274
Lot Blank #2	0	ND	.01	NA	10261

[1] mg/m^3 - milligrams per cubic meter.
[2] ND - Not detected at the instrument limit of quantitation.
[3] NA - Not applicable, lot and trip blanks apply to the entire sampling effort.

APPENDIX A
Field Sampling Data Sheets

Richardson Flats
Final Report
August 1992

APPENDIX A
Field Sampling Data Sheets

Richardson Flats
Final Report
August 1992

ENVIRONMENTAL RESPONSE TEAM
AIR SAMPLING WORKSHEET

Roy F. Weston, Inc.
REAC Project, Edison, NJ
EPA Contract No. 68-03-3482

SITE Richardson Flats
SAMPLERS TNB, JP, SB
DATE 6/11/92

W.A. # 3347-31-01-4642
EPA WAM Burchette
REAC TL Baurbon

SAMPLE NO.	10271 A	10271 B			
Sample Location	5	5			
Remarks	Highway 248-Bridge	UPCM *			
Pump No.	2238	1508			
Collection Media	.8u MCEF NIOSH	.8u MCEF NIOSH			
Analysis Requested	7300	7300			
Time of Day	8:06am	8:06am			
Time/Counter (Start)	06175.8	10533.2			
Time/Counter (Stop)	06656.7	11012.6			
Total Sampling Time	480.9 m	479.4 m			
Pump Fault	Y/N	Y/N	Y/N	Y/N	Y/N
Flow Rate (Start)	10 l/m	10 l/m			
Flow Rate (Stop)	10 l/m	10 l/m			
Flow Rate (Average)	10 l/m	10 l/m			
Volume Sampled	4,809 l	4,794 l			

Air Monitoring Data
HNU — — N/A
OVA — —
TNB HEK/RAM-1 set w/datalogger
#652399 Ram #4

WEATHER PARAMETERS
Weather Conditions met stn. on site Temperature — Windspeed —
Wind direction — Pressure — Humidity — Met ID 298 - wpak.

GENERAL COMMENTS: Cloudy / sunny

* UPCM samples = "Splits" for PRP

rd/BATZ/WORKSHEET

ENVIRONMENTAL RESPONSE TEAM
AIR SAMPLING WORKSHEET

Roy F. Weston, Inc.
REAC Project, Edison, NJ
EPA Contract No. 68-03-3482

SITE: Richardson Flats
SAMPLERS: INA, JP, SB
DATE: 6/10/92

W.A. #: 3347-31-01-4642
EPA WAM: Burchette
REAC TL: Bourbon

SAMPLE NO.	10251A	10251B	10253A	10253B	10274
Sample Location	1	1	2	2	Trip Blank
Remarks	Upwind - County Rd. East	United Park City Mines *	Bet. gates County Rd.	UPCM *	N/A
Pump No.	2245	1505	2240	2248	N/A
Collection Media	MCEF	MCEF	MCEF	MCEF	MCEF
Analysis Requested	NIOSH 7300	NIOSH 7300	NIOSH 7300	NIOSH 7300	NIOSH 7300
Time of Day	10:50am	10:50am	10:36am	10:36am	N/A
Time/Counter (Start)	02446.5	11238.4 [timer out]	11146.9	09795.7	N/A
Time/Counter (Stop)	03128.1	time from 2245	11613.2	10262.1	N/A
Total Sampling Time	481.6 m	481.6 m	466.3 m	466.4 m	N/A
Pump Fault	Y/N	Y/N	Y/N	Y/N	~~Y/N~~
Flow Rate (Start)	10 l/m	10 l/m	10 l/m	10 l/m	NA
Flow Rate (Stop)	10 l/m	10 l/m	10 l/m	10 l/m	
Flow Rate (Average)	10 l/m	10 l/m	10 l/m	10 l/m	
Volume Sampled	4816 l	4816 l	4663 l	4664 l	0 l
Air Monitoring Data	N/A →				
HNU					
OVA					
LEL/RAM					

WEATHER PARAMETERS
Weather Conditions: met station on site — Temperature: ___ — Windspeed: ___
Wind direction: ___ — Pressure: ___ — Humidity: ___ — Met ID: 299

GENERAL COMMENTS: Sunny, some clouds, occ. showers (no heavy rain)

rd/BATZ/WORKSHEET

* United Park City mines - UPCM - (PRP): we will be giving them one cassette from each location as "splits".

ENVIRONMENTAL RESPONSE TEAM
AIR SAMPLING WORKSHEET

Roy F. Weston, Inc.
REAC Project, Edison, NJ
EPA Contract No. 68-03-3482

SITE: Richardson Flats
SAMPLERS: TNB, JP, SB
DATE: June 10, 1992

W.A. #: 3342-31-01-4642
EPA WAM: Burdette
REAC TL: Bourbon

SAMPLE NO.	10252A	10252B	10257A	10257B	
Sample Location	3	3	4	4	
Remarks	Hiway 40	UPCM *	NW corner of site - near old RR Trestle	UPCM *	
Pump No.	1504	2242	1508	2238	
Collection Media	MCEF	MCEF	MCEF	MCEF	
Analysis Requested	NIOSH 7300	NIOSH 7300	NIOSH 7300	NIOSH 7300	
Time of Day	05713.8	07911.0	10033.9	05676.7	
TNB Time/Counter (Start)	9:54am	9:54am	10:09am	10:09am	
Time/Counter (Stop)	06200.0	08397.0	10532.9	06175.5	
Total Sampling Time	486.2 m	486.0 m	499 m	498.8 m	
Pump Fault	Y/N	Y/N	Y/N	Y/N	Y/N
Flow Rate (Start)	10 l/m	10 l/m	10 l/m	10 l/m	
Flow Rate (Stop)	10 l/m	10 l/m	10 l/m	10 l/m	
Flow Rate (Average)	10 l/m	10 l/m	10 l/m	10 l/m	
Volume Sampled	4,862 l	4,860 l	4,990 l	4988 l	
Air Monitoring Data	N/A →				
HNU					
OVA					
LEL/RAM					

WEATHER PARAMETERS
Weather Conditions: Met Stn. on site Temperature: ___ Windspeed: ___
Wind direction: ___ Pressure: ___ Humidity: ___ Met ID: 208 w. park

GENERAL COMMENTS: Sunny, some clouds, occ. showers - no heavy rain

*UPCM - "Split" samples for PRP

rd/BATZ/WORKSHEET

ENVIRONMENTAL RESPONSE TEAM
AIR SAMPLING WORKSHEET

Roy F. Weston, Inc.
REAC Project, Edison, NJ
EPA Contract No. 68-03-3482

SITE Richardson Flats
SAMPLERS TNB, JP, SB
DATE 6/11/92

W.A. # 3347-31-01-4642
EPA WAM Burchette
REAC TL Bourbon

SAMPLE NO.	10263A	10263B	10265A	10265B	
Sample Location	1	1	2	2	
Remarks	County Rd. E ~~1505TNB~~	UPCM *	County Rd. W	UPCM *	
Pump No.	1505	2245	2247	2234	
Collection Media	.8u MCEF	.8u MCEF	.8u MCEF	.8u MCEF	
Analysis Requested	NIOSH 7300	NIOSH 7300	NIOSH 7300	NIOSH 7300	
Time of Day	8:37am	8:37am	8:25am	8:25am	
Time/Counter (Start)	11238.4	03128.1	05844.0	11761.5	
Time/Counter (Stop)	Timer out	03586.8	06259.5	12177.0	
Total Sampling Time	458.7m	458.7m	415.5m	415.5m	
Pump Fault	Y/N	Y/N	Y/N	Y/N	Y/N
Flow Rate (Start)	10 l/m	10 l/m	10 l/m	10 l/m	
Flow Rate (Stop)	10 l/m	10 l/m	10 l/m	10 l/m	
Flow Rate (Average)	10 l/m	10 l/m	10 l/m	10 l/m	
Volume Sampled	4,587 l	4,587 l	4,155 l	4,155 l	
Air Monitoring Data					
HNU	—	—	N/A		
OVA	—	—			
~~LEL~~/RAM-1	set out w/ datalogger				
TNB	—	—			

Ram REAC-7 datalogger
RAM #5

WEATHER PARAMETERS met. stn. on-site
Weather Conditions — Temperature — Windspeed —
Wind direction — Pressure — Humidity — Met ID 298

GENERAL COMMENTS: overcast, sunny

* UPCM samples = "Splits" for PRP

rd/BATZ/WORKSHEET

ENVIRONMENTAL RESPONSE TEAM
AIR SAMPLING WORKSHEET

Roy F. Weston, Inc.
REAC Project, Edison, NJ
EPA Contract No. 68-03-3482

SITE Richardson Flats
SAMPLERS TNB, JP, SB
DATE 6/11/92

W.A. # 3347-31-01-4642
EPA WAM Borchette
REAC TL Bourbon

SAMPLE NO.	10267A	10267B	10269A	10269B	
Sample Location	3	3	4	4	
Remarks	Highway 40	UPCM *	NW Corner	UPCM *	
Pump No.	2248 TNB	2348 TNB 1504	2248	2248	
Collection Media	.8u MCEF	.8u MCEF	.8u MCEF	.8u MCEF	
Analysis Requested	NIOSH 7300	NIOSH 7300	NIOSH 7300	NIOSH 7300	
Time of Day	7:50am	7:50am	8 am	8am	
Time/Counter (Start)	11613.2	08397.0	06200.0	10262.1	
Time/Counter (Stop)	12104.9	08888.7	06718.2	10780.9	
Total Sampling Time	491.7m	491.7m	518.2 m	518.8m	
Pump Fault	Y/N	Y/N	Y/N	Y/N	Y/N
Flow Rate (Start)	10 l/m	10 l/m	10 l/m	10 l/m	
	Ck. - rotameter at 63			Ck. rotameter @ 65 => 13 l/m	
Flow Rate (Stop)	15.75 l/m	10 l/m	10 l/m	16 l/m	
Flow Rate (Average)	12.88 l/m	10 l/m	10 l/m	13 l/m	
	6/15/92 TNB				6/15/92 TNB
Volume Sampled	6331 l	4,917 l	5,182 l	6,744 l	
Air Monitoring Data	N/A				
HNU					
OVA					
LEL/RAM					
					TNB

WEATHER PARAMETERS
Weather Conditions met stn. on site Temperature ___ Windspeed ___
Wind direction ___ Pressure ___ Humidity ___ Met ID 298 - W.pak

GENERAL COMMENTS: cloudy / sunny

* UPCM samples - "splits" for PRP

rd/BATZ/WORKSHEET

Appendix B

APPENDIX B
REAC Final Analytical Report

Richardson Flats
Final Report
August 1992

WESTON®
MANAGERS DESIGNERS·CONSULTANTS

REAC SUPPORT ORGANIZATION
GSA RARITAN DEPOT
2890 WOODBRIDGE AVENUE
BLDG. 209 ANNEX
EDISON, NJ 08837-3679
908-632-9200 • FAX: 908-632-9205

DATE: July 17, 1992

TO: R. Singhvi EPA/ERT

FROM: V. Kansal S&A Section Chief VCK

SUBJECT: DOCUMENT TRANSMITTAL UNDER WORK ASSIGNMENT # 3-642

Attached please find the following document prepared under this work assignment:

Richardson Flats

Central File WA# 3-642 (w/attachment)
W.S. Butterfield
S. Burchette
T. Bourbon
M. Barkley

ANALYTICAL REPORT

Prepared by
Roy F. Weston, Inc.

Richardson Flats
Park City, UT

July 17, 1992

EPA Work Assignment No. 3-642
Project No. 3347-31-01-4642
EPA Contract No. 68-03-3482

Submitted to
S. Burchette
EPA-ERT

Theresa A. M. Bourbon 7/16/92
T. Bourbon Date
Task Leader

Analysis by:
AETNA/AXIA

Vinod Kansal 7/17/92
V. Kansal Date
S. & A. Section Chief

Prepared by:
J. Hunter

W. S. Butterfield 7/17/92
W. S. Butterfield Date
Project Manager

Reviewed by:
M. Barkley

Table of Contents

Introduction		Page 1
Case Narrative		Page 1
Section I		
Procedure for Arsenic, Zinc, Cadmium, and Lead in Air		Page 2
Results of the Analysis for Arsenic, Zinc, Cadmium, and Lead in Air	Table 1.1	Page 3
Section II		
QA/QC for Arsenic, Zinc, Cadmium, and Lead		Page 4
Results of the Blank Spike Analysis	Table 2.1	Page 5
Section III		
Chain of Custody		Page 6
Communications		Page 7
Appendix A Data for Arsenic, Zinc, Cadmium, and Lead in Air		Page F64001

Appendix will be furnished on request.

INTRODUCTION

REAC Laboratory, in response to ERT work assignment # 3-642, provided analytical services for samples collected from the Richardson Flats site, located in Park City, Utah, on June 10, 1992 and June 11, 1992. These services involved the sub-contracting of the analysis of air samples for arsenic, zinc, cadmium, and lead; the performance of a QA/QC data validation review; and the production of an analytical report summarizing the results.

Number of Samples	Matrix	Analysis	Laboratory
17	Air	As, Zn, Cd, & Pb	AETNA/AXIA

CASE NARRATIVE

There are no qualifications to the data. However the following items should be noted;

1) The results for zinc, lead and chromium were less than the quantitation limit for all the blanks. Consequently, blank subtraction was not performed. Three of the five blanks had positive results for arsenic at the detection limit. However, all the sample results for arsenic were non-detects. Therefore blank subtraction was not performed on the arsenic analyses.

2) The ICP instrument detection limits were based upon a study performed by the subcontracting laboratory.

3) One of the blank spike percent recovery values (arsenic: 111 %) was above the 90% to 110% limits. The data validator did not qualify the data because;

a) All the results for arsenic were non-detects.
b) The bias was small and on the high side, and consequently should not affect the detection limits.

ANALYTICAL PROCEDURE FOR ARSENIC, ZINC, CADMIUM, AND LEAD IN AIR

The subcontractor followed the procedures set forth in 40 Code of Federal Regulations Part 50 Appendix G to prepare the samples and the procedures set forth in NIOSH Method 7300 to analyze the solutions of the digested samples. The results of the analyses are listed in Table 1.1.

Table 1.1

Results of the Analysis for Arsenic, Zinc, Cadmium, and Lead, in Air

Richardson Flats, WA # 3- 642

Sample ID	Sampling Location	Air Volume (liters)	Conc. Arsenic (mg/m3)	LOQ Arsenic (mg/m3)	Conc. Zinc (mg/m3)	LOQ Zinc (mg/m3)	Conc. Cadmium (mg/m3)	LOQ Cadmium (mg/m3)	Conc. Lead (mg/m3)	LOQ Lead (mg/m3)
10251 A	#1, Country Rd. E	4816	ND	0.0021	0.0001	0.0001	ND	0.0001	ND	0.0015
10253 A	#2, Country Rd. N	4663	ND	0.0021	ND	0.0001	ND	0.0001	ND	0.0015
10252 A	#3, Highway 40	4862	ND	0.0021	0.0001	0.0001	ND	0.0001	ND	0.0014
10257 A	#4, NW Corner Site	4990	ND	0.0020	ND	0.0001	ND	0.0001	ND	0.0014
10259 A	#5, Highway 248	5121	ND	0.0020	ND	0.0001	ND	0.0001	ND	0.0014
10261 A	Lot Blank 1*	-	ND	0.01	ND	0.0005	ND	0.0005	ND	0.007
10267 A	#3, High 40	6331	ND	0.0016	ND	0.0001	ND	0.0001	ND	0.0011
10269 A	#4, NW - Site	5182	ND	0.0019	0.0001	0.0001	ND	0.0001	ND	0.0014
10263 A	#1, Co Rd. E	4587	ND	0.0022	ND	0.0001	ND	0.0001	ND	0.0015
10265 A	#2, Co Rd. N	4155	ND	0.0024	ND	0.0001	ND	0.0001	ND	0.0017
10271 A	#5, Highway 248	5121	ND	0.0020	0.0001	0.0001	ND	0.0001	ND	0.0014
10274	Trip Blank *	-	0.01	0.01	ND	0.0005	ND	0.0005	ND	0.007
10275	Field Blank *	-	ND	0.01	ND	0.0005	ND	0.0005	ND	0.007
10261 A	Lot Blank 2*	-	0.01	0.01	ND	0.0005	ND	0.0005	ND	0.007
10261 A	Lot Blank 3*	-	ND	0.01	ND	0.0005	ND	0.0005	ND	0.007
10261 A	Lot Blank 4*	-	ND	0.01	ND	0.0005	ND	0.0005	ND	0.007
10261 A	Lot Blank 5*	-	ND	0.01	ND	0.0005	ND	0.0005	ND	0.007

ND denotes not detected

LOQ denotes Limit of Quantitation

* denotes that nits for these values are milligrams (mg)

QA/QC FOR ARSENIC, ZINC, CADMIUM, AND LEAD

Results of Blank Spike Analysis

Two blank spike analyses were performed. The first (QC Spike # 1) had 30 ug of As, Zn, Cd, and Pb added. The percent recoveries for QC Spike # 1 ranged from 101 to 111. The percent recovery for arsenic was outside the QC limits. The percent recoveries for QC Spike # 1 are listed in Table 2.1. The second (QC Spike # 2) had 40 ug of As, Zn, Cd, and Pb added. The percent recoveries for QC Spike # 2 ranged from 101 to 108. The percent recoveries for QC Spike # 2 are listed in Table 2.1.

Table 2.1
Results of the Blank Spike Analysis
Richardson Flats, WA # 3-642

QC Spike # 1

Analyte	Analyte Mass in Blank (ug)	Mass Spiked (ug)	Blank Spike Analyte Mass (ug)	Blank Spike % Recovery
Arsenic	ND	30	33.19	111 *
Zn	ND	30	30.49	102
Cadmium	ND	30	30.37	101
Lead	ND	30	30.72	102

* denotes that this value is outside the recommended limits
The percent recovery limits are from 90% to 110%
ND denotes not detected

QC Spike # 2

Analyte	Analyte Mass in Blank (ug)	Mass Spiked (ug)	Blank Spike Analyte Mass (ug)	Blank Spike % Recovery
Arsenic	ND	40	43.11	108
Zinc	ND	40	40.27	101
Cadmium	ND	40	40.95	101
Lead	ND	40	40.32	102

The percent recovery limits are from 90% to 110%
ND denotes not detected

Roy F. Weston, Inc.
REAC, Edison, N.J.
EPA Contract 68-03-3482

CHAIN OF CUSTODY RECORD/LAB WORK REQUEST

No: 58-4

Project Name: Richardson Flats, Park City, Utah
Project Number: 3347-31-01-4642
RFW Contact: John Johnson or Debbie Weeks Phone: 908-632-9200

SHEET NO. 1 OF 1

2.3966

SAMPLE IDENTIFICATION — ANALYSES REQUESTED

REAC #	Sample No.	Sampling Location	Matrix	Date Collected	# of Bottles (cassettes)	Container/ Preservative	Vol. Coll.	NIOSH 7300	
JP	10251 A	#1, County Rd. E	A	6/10/92	N/A	.8u MCEF	4816 l	✓ *	TNB
	10253 A	#2, County Rd. W	A	6/10/92	N/A	.8u MCEF	4,663 l	✓	
	10252 A	#3, Highway 40	A	6/10/92	N/A	.8u MCEF	4,862 l	✓	
	10257 A	#4, NW corner Site	A	6/10/92	N/A	.8u MCEF	4,990 l	✓	
	10259 A	#5, Highway 248	A	6/10/92	N/A	.8u MCEF	5,121 l	✓	
	10261	Lot Blanks - 5 cass.	A	6/10/92	N/A	.8u MCEF	0 l	✓	
	10267 A	#3, Highway 40	A	6/11/92	N/A	.8u MCEF	6331 l	✓	
★	10269 A	#4, NW Corner Site	A	6/11/92	2	.8u MCEF	5,182 l	✓	
	10263 A	#1, County Rd. E	A	6/11/92	1	.8u MCEF	4,587 l	✓	
	10265 A	#2, County Rd. W	A	6/11/92	1	.8u MCEF	4,155 l	✓	
★	10271 A	#5, Highway 248	A	6/11/92	1	.8u MCEF	5,121 l	✓	
JP	10274	Trip Blank	A	6/11/92	1	.8u MCEF	0 l	✓	
~~JP~~ TNB	10275	Field Blanks	A	6/11/92	2	.8u MCEF	0 l	✓	
								TNB	
									TNB
								TNB	

*** NIOSH 7300 method - only Lead, Arsenic, Cadmium, and Zinc parameters

Matrix:
SD - Sediment, DS - Drum Solids, DL - Drum Liquids, X - Other
PW - Potable Water, GW - Groundwater, SW - Surface Water, SL - Sludge
S - Soil, W - Water, O - Oil, A - Air

Special Instructions:
Preliminary results due TNB 7/3/92
Final Analytical report due 8/3/92
★ These are 1 sample, analyze both cassettes as 1 sample!

FOR SUBCONTRACTING USE ONLY
FROM CHAIN OF CUSTODY #

Items/Reason	Relinquished By	Date	Received By	Date	Time	Items/Reason	Relinquished By	Date	Received By	Date	Time
13/Analysis	Thomas A. Bourbon		[illegible]	6/15/92	14:10						

TNB

By #10257 [illegible]
By #[illegible] [illegible]

#10271 - [illegible]

00000 SC 90 TOC 6/15/92

REAC SUPPORT ORGANIZATION
GSA RARITAN DEPOT
WOODBRIDGE AVENUE
BUILDING 209, BAY F
EDISON, NJ 08837
PHONE: 201-632-9200

Axia Service/AETNA
Dept. W101
151 Farmington Ave
Hartford, CT 06156

Attn: Ethel Patricio
Re: Project # 3347-31-01-4642, Richardson Flats

June 11, 1992

As per Weston REAC Purchase Order number 08-81877, dated 06/11/92, please analyze samples according to the following parameters:

Analysis/Method	Matrix	# of samples
Metals Pb,Cd,As,Zn/NIOSH 7300	MCEF filter	20
Data package including diskette deliverables* as per CLP or attached Deliverables Requirements		

Samples are expected to arrive at your laboratory on June 12th, 1992. All applicable QA/QC analysis will be performed on our sample matrix. A preliminary data package including a signed copy of our Chain of Custody is due at REAC on June 26th, 1992, with the complete data package by July 13, 1992. If your laboratory cannot meet the delivery date, please give best delivery date possible.

Should any questions or problems arise concerning this project, please call Debbie Weeks at (908)603-8023. For any billing questions, please call Cindy Snyder at (908) 632-9200. Thank you.

Sincerely,

Misty Barkley

Misty Barkley
Analytical Projects Control Group Leader
Roy F. Weston, Inc. / REAC Project

MB:dw Attachments

The estimated cost of this project will be $1300.00.

cc. R. Singhvi
S. Burchette
Central File
4642Con.axia
V. Kansal
Subcontracting File
Sample Receiving
C. Snyder
T. Bourbon
Debbie Weeks

AXIA SERVICES, INC.
INDUSTRIAL HYGIENE LABORATORY
REPORT OF LABORATORY SAMPLE ANALYSIS

Report Number: 23906

Debbie Weeks
Roy F. Weston
Woodbridge Avenue
Building 209; Bay F
Edison, NJ 08837

Date Received: 06/15/92
Date Analyzed: 06/16/92

Account Code: A-15704
Project Number: 3347-31-01-4642
Sampling Location: Richardson flats
Method of Analysis: Inductively Coupled Plasma Emission Spectroscopy - NIOSH 7300

Sample Identification	Air Volume (Liters)	Arsenic (mg/m^3)	Zinc (mg/m^3)	Cadmium (mg/m^3)	Lead (ug/m^3)
10251 A	4816	< 0.0021	0.0001	< 0.0001	< 1.5
10253 A	4663	< 0.0021	< 0.0001	< 0.0001	< 1.5
10252 A	4862	< 0.0021	0.0001	< 0.0001	< 1.4
10257 A	4990	< 0.0020	< 0.0001	< 0.0001	< 1.4
10259 A	5121	< 0.0020	< 0.0001	< 0.0001	< 1.4
10261 BLK	Blank	< 0.01 mg	< 0.0005 mg	< 0.0005 mg	< 7 ug
10267 A	6331	< 0.0016	< 0.0001	< 0.0001	< 1.1
10269 A	5182	< 0.0019	0.0001	< 0.0001	< 1.4
10263 A	4587	< 0.0022	< 0.0001	< 0.0001	< 1.5
10265 A	4155	< 0.0024	< 0.0001	< 0.0001	< 1.7
10271 A	5121	< 0.0020	0.0001	< 0.0001	< 1.4
10274	Blank	0.01 mg	< 0.0005 mg	< 0.0005 mg	< 7 ug
10275	Blank	< 0.01 mg	< 0.0005 mg	< 0.0005 mg	< 7 ug
10261 BL2	Blank	< 0.01 mg	< 0.0005 mg	< 0.0005 mg	< 7 ug
10261 BL3	Blank	< 0.01 mg	< 0.0005 mg	< 0.0005 mg	< 7 ug
10261 BL4	Blank	0.01 mg	< 0.0005 mg	< 0.0005 mg	< 7 ug
10261 BL5	Blank	< 0.01 mg	< 0.0005 mg	< 0.0005 mg	< 7 ug

Comments:
1. The less than (<) designation indicates that sample results were less than quantitation limits.
2. 10257 and 10271 Filter torn and partially unseated.
3. Bay #20259A contained filter #10260.

Ethel T. Patricio, Laboratory Director
Aetna Life & Casualty
575 Pigeon Hill Road
Windsor, CT 06095
Conveyor: W101
(203) 683-3647

Patricia Murray, I. H. Chemist
Analyst

c: Tony Maleski, AXIA Services, Inc., VVV4

AIHA ACCREDITED LABORATORY #2

AETNA LIFE AND CASUALTY INDUSTRIAL HYGIENE LABORATORY
METALS DATA WORKSHEET (AIR SAMPLES)

Analyst: PATTI
Return to: PATTI
Account Name: ROY F. WESTON
Attention: DEBBIE WEEKS
Address: EDISON, NJ

Circle One: AXIA AETNA
Circle One: IHSP ASPER IH MAIL-IN
Report Number(s): 23906

Account Code: A-15704
Date Received: 6/15/92
Date Analyzed: 6/16/92
Method: Inductively Coupled Plasma Emission Spectroscopy (ICP)
Aetna Methods 11, 13, 14, 18

Reference Number:
Abbreviations:
Comments:

Quality Control: IN OUT

Sample ID	Analyte	Sample	Sample Volume (mls)	Blank (ug/ml)	Blank Volume (mls)	LOQ (ug/ml)	Air Volume (L)	Sample (ug)	RESULTS (ug/m3)	RESULTS (mg/m3)	LOQ (ug/m3)	LOQ (mg/m3)
10265A	As	0.956	10		10	1.00	4155	<LOQ	<LOQ	<LOQ	2.4	0.0024
	Zn	0.031	10		10	0.05	4155	<LOQ	<LOQ	<LOQ	0.12	0.0001
	Cd	0.023	10		10	0.05	4155	<LOQ	<LOQ	<LOQ	0.12	0.0001
	Pb	0.280	10		10	0.70	4155	<LOQ	<LOQ	<LOQ	1.68	0.0017
10271A	As	0.957	10		10	1.00	5121	<LOQ	<LOQ	<LOQ	1.95	0.0020
	Zn	0.052	10		10	0.05	5121	0.5	0.1	0.0001	0.10	0.0001
	Cd	0.023	10		10	0.05	5121	<LOQ	<LOQ	<LOQ	0.1	0.0001
	Pb	0.297	10		10	0.70	5121	<LOQ	<LOQ	<LOQ	1.4	0.0014
10274	As	1.006	10		10	1.00	0	10.1		0.01 mg		
	Zn	0.041	10		10	0.05	0	<LOQ		<0.0005 mg		
	Cd	0.023	10		10	0.05	0	<LOQ		<0.0005 mg		
	Pb	0.285	10		10	0.70	0	<LOQ		<7 ug		
10275	As	0.911	10		10	1.00	0	<LOQ		<0.01 mg		
	Zn	0.041	10		10	0.05	0	<LOQ		<0.0005 mg		
	Cd	0.024	10		10	0.05	0	<LOQ		<0.0005 mg		
	Pb	0.246	10		10	0.70	0	<LOQ		<7 ug		
10261 BL2	As	0.905	10		10	1.00	0	<LOQ		<0.01 mg		
	Zn	0.034	10		10	0.05	0	<LOQ		<0.0005 mg		
	Cd	0.023	10		10	0.05	0	<LOQ		<0.0005 mg		
	Pb	0.246	10		10	0.70	0	<LOQ		<7 ug		
10261 BL3	As	0.998	10		10	1.00	0	<LOQ		<0.01 mg		
	Zn	0.035	10		10	0.05	0	<LOQ		<0.0005 mg		
	Cd	0.030	10		10	0.05	0	<LOQ		<0.0005 mg		
	Pb	0.292	10		10	0.70	0	<LOQ		<7 ug		
10261 BL4	As	1.015	10		10	1.00	0	10.2		0.01 mg		
	Zn	0.038	10		10	0.05	0	<LOQ		<0.0005 mg		
	Cd	0.026	10		10	0.05	0	<LOQ		<0.0005 mg		
	Pb	0.321	10		10	0.70	0	<LOQ		<7 ug		
[illegible]	[illegible]	[illegible]	[illegible]		[illegible]	[illegible]	[illegible]	[illegible]		<0.01 mg		
	[illegible]	[illegible]	[illegible]		[illegible]	[illegible]	[illegible]	[illegible]		<0.0005 mg		
	Cd	0.026	10		10	0.05	0	<LOQ		<0.0005 mg		
	Pb	0.321	10		10	0.70	0	<LOQ		<7 ug		

Analyst: _____

F65 003

Executive: _____
E. Patricia

Rev. 2/3/92

FOR WESTON/REAC USE ONLY			
Project Name:	WA#:	Report#	Date:

Deliverable Checklist for Metal Analyses

All the following information must be included in the data package.
(Please check all blanks and submit the list together with the report)

____ Case narrative

✓ Chain of custody (signed with date of receipt)

✓ All sample preparation logs (include all re-extractions)

✓ Compositions of matrix spike solution and the volume used

____ Worksheet of % solid or % moisture

____ Analysis logs, if applicable

✓ Tabulated sample results (including the duplicate analysis results)

✓ Tabulated spike recovery results

____ Summary of the calibration curves for all specified elements

✓ Method numbers for all analytes

Raw Data (Instrument Printouts) for:

____ Each initial calibration standards

____ ICV

____ CCVs

____ ICB

____ CCBs

____ Method blank

____ MS/MSDs

____ Sample analyses

____ Sample dilution analyses

____ Instrument detection limit

Patricia Murray MRS
Signature

6/19/92
Date

AETNA LIFE & CASUALTY

INDUSTRIAL HYGIENE LABORATORY

REPORT FOR METALS ANALYSIS BY ICP

Control Number: 23906
e of Analysis: 06/16/1992

		QC Spike 1		QC Spike 2	
nalyst	Analyte	Measured	%Recovery	Measured	%Recovery
PM	As	33.19	110.6333	43.11	107.775
PM	Cd	30.37	101.2333	40.27	100.675
PM	Pb	30.72	102.4	40.95	102.375
PM	Zn	30.49	101.6333	40.32	100.8

NOTE: QC RECOVERIES BETWEEN 90 AND 110% ARE IN CONTROL.

t's Signature: Patricia Murray

ement: cd Intensity: 67140.0
lement: zn Intensity: 46015.0
lement: pb Intensity: 64430.0
ement: as Intensity: 20735.0

	cd	EM	10253
	pb	EM	10823

LANK REPLICATE #2

	as	EM	5889
	zn	EM	3898
	cd	EM	9925
	pb	EM	10965

LANK REPLICATE #3

	as	EM	5673
	zn	EM	3833
	cd	EM	9746
	pb	EM	10744

	as	AV	5803.0	SD	114.5	CV	2.0	CONC	0.000
	zn	AV	3845.7	SD	47.3	CV	1.2	CONC	0.000
	cd	AV	9974.7	SD	257.1	CV	2.6	CONC	0.000
	pb	AV	10844.0	SD	112.0	CV	1.0	CONC	0.000

STANDARD #1 REPLICATE #1 1003 6/16/92

	zn	EM	47128
	cd	EM	68013

TANDARD #1 REPLICATE #2

	zn	EM	46801
	cd	EM	68950

TANDARD #1 REPLICATE #3

	zn	EM	47371
	cd	EM	68296

	zn	AV	47100.0	SD	286.0	CV	0.6	CONC	1.000
	cd	AV	68419.7	SD	480.6	CV	0.7	CONC	1.000

TANDARD #2 REPLICATE #1 1006 6/16/92

	as	EM	21054
	pb	EM	66341

TANDARD #2 REPLICATE #2

	as	EM	21021
	pb	EM	65700

STANDARD #2 REPLICATE #3

	as	EM	21399
	pb	EM	66417

	as	AV	21158.0	SD	209.4	CV	1.0	CONC	10.000

blank REPLICATE #3

as	0.372	peak-noisy
zn	0.035	window-edge
cd	0.011	window-edge
pb	0.159	peak-noisy

as	AV	0.354	SD	0.0228	CV	6.44
zn	AV	0.038	SD	0.0026	CV	6.75
cd	AV	0.013	SD	0.0022	CV	17.61
pb	AV	0.134	SD	0.0236	CV	17.63

30 ug REPLICATE #1 1019 6/16/92

as	3.148
zn	3.039
cd	3.000
pb	3.145

30 ug REPLICATE #2

as	3.357
zn	3.040
cd	3.096
pb	3.072

30 ug REPLICATE #3

as	3.452
zn	3.068
cd	3.015
pb	2.999

as	AV	3.319	SD	0.1559	CV	4.70
zn	AV	3.049	SD	0.0164	CV	0.54
cd	AV	3.037	SD	0.0516	CV	1.70
pb	AV	3.072	SD	0.0726	CV	2.36

40 ug REPLICATE #1 1023 6/16/92

as	4.191
zn	4.048
cd	4.024
pb	4.147

40 ug REPLICATE #2

as	4.414
zn	4.026
cd	4.015
pb	4.078

40 ug REPLICATE #3

as	4.328
zn	4.022
cd	4.041
pb	4.061

as	AV	4.311	SD	0.1124	CV	2.61
zn	AV	4.032	SD	0.0142	CV	0.35
cd	AV	4.027	SD	0.0127	CV	0.32
pb	AV	4.095	SD	0.0455	CV	1.11

	as		0.811					peak-noisy
	zn		0.056					
	cd		0.023					window-edge
	pb		0.235					
	as	AV	0.837	SD	0.0419	CV	5.01	
	zn	AV	0.054	SD	0.0018	CV	3.30	
	cd	AV	0.024	SD	0.0012	CV	4.89	
	pb	AV	0.229	SD	0.0066	CV	2.88	

.0253A REPLICATE #1 1046 6/16/92

as	0.839	peak-noisy
zn	0.041	
cd	0.025	
pb	0.229	

.0253A REPLICATE #2

as	0.761	
zn	0.044	
cd	0.023	peak-noisy
pb	0.242	

.0253A REPLICATE #3

as	0.862	
zn	0.042	
cd	0.023	
pb	0.265	

as	AV	0.821	SD	0.0528	CV	6.44	
zn	AV	0.043	SD	0.0013	CV	3.12	
cd	AV	0.024	SD	0.0009	CV	4.02	
pb	AV	0.245	SD	0.0183	CV	7.46	

.0252A REPLICATE #1 1049 6/16/92

as	0.821	
zn	0.059	window-edge
cd	0.021	peak-noisy
pb	0.243	peak-noisy

.0252A REPLICATE #2

as	0.938	
zn	0.061	window-edge
cd	0.024	peak-noisy
pb	0.284	

.0252A REPLICATE #3

as	0.880	peak-noisy
zn	0.064	window-edge
cd	0.024	peak-noisy
pb	0.237	peak-noisy

as	AV	0.880	SD	0.0586	CV	6.66	
zn	AV	0.061	SD	0.0024	CV	3.90	
cd	AV	0.023	SD	0.0017	CV	7.40	
pb	AV	0.255	SD	0.0256	CV	10.05	

ppm std REPLICATE #1 1053 6/16/92

as	10.458	
zn	0.055	window-edge
cd	9.992	

STANDARD #2 REPLICATE #2

as	EM	22232
pb	EM	68776

STANDARD #2 REPLICATE #3

as	EM	22277							
pb	EM	67706							
as	AV	22232.0	SD	45.0	CV	0.2	CONC	10.000
pb	AV	67994.7	SD	684.3	CV	1.0	CONC	10.000

L0257A REPLICATE #1 1105 6/16/92

as	0.928	
zn	0.042	
cd	0.037	peak-noisy
pb	0.307	

L0257A REPLICATE #2

as	0.932	peak-noisy
zn	0.047	window-edge
cd	0.028	
pb	0.284	peak-noisy

L0257A REPLICATE #3

as	0.937	
zn	0.046	
cd	0.027	peak-noisy
pb	0.264	

as	AV	0.932	SD	0.0049	CV	0.52
zn	AV	0.045	SD	0.0028	CV	6.17
cd	AV	0.031	SD	0.0054	CV	17.76
pb	AV	0.285	SD	0.0217	CV	7.62

L0259A REPLICATE #1 1109 6/16/92

as	0.945	peak-noisy
zn	0.034	
cd	0.028	peak-noisy
pb	0.340	peak-noisy

L0259A REPLICATE #2

as	0.948	window-edge
zn	0.033	
cd	0.027	window-edge
pb	0.304	window-edge

L0259A REPLICATE #3

as	1.004	peak-noisy
zn	0.039	peak-noisy
cd	0.027	
pb	0.323	window-edge

as	AV	0.965	SD	0.0332	CV	3.44
zn	AV	0.035	SD	0.0032	CV	9.06
cd	AV	0.027	SD	0.0010	CV	3.46
pb	AV	0.322	SD	0.0181	CV	5.62

STANDARD #1 REPLICATE #1 1325 6/16/92

	as		10.430					
	zn		0.057					window-edge
	cd		9.979					
	pb		10.317					
0 ppm std			REPLICATE #3					
	as		10.122					
	zn		0.057					window-edge
	cd		10.482					
	pb		10.283					
	as	AV	10.239	SD	0.1669	CV	1.63	
	zn	AV	0.058	SD	0.0017	CV	3.01	
	cd	AV	10.242	SD	0.2523	CV	2.46	
	pb	AV	10.339	SD	0.0698	CV	0.68	
0261 blk 1			REPLICATE #1					1337 6/16/92
	as		0.948					
	zn		0.037					
	cd		0.032					window-edge
	pb		0.287					peak-noisy
0261 blk 1			REPLICATE #2					
	as		0.917					peak-noisy
	zn		0.040					
	cd		0.025					peak-noisy
	pb		0.226					window-edge
0261 blk 1			REPLICATE #3					
	as		0.941					peak-noisy
	zn		0.040					
	cd		0.024					
	pb		0.278					
	as	AV	0.935	SD	0.0162	CV	1.74	
	zn	AV	0.039	SD	0.0017	CV	4.45	
	cd	AV	0.027	SD	0.0045	CV	16.71	
	pb	AV	0.264	SD	0.0327	CV	12.42	
0261 blk2			REPLICATE #1					1346 6/16/92
	as		0.997					
	zn		0.034					
	cd		0.022					peak-noisy
	pb		0.211					window-edge
0261 blk2			REPLICATE #2					
	as		0.847					peak-noisy
	zn		0.034					
	cd		0.023					
	pb		0.301					peak-noisy
10261 blk2			REPLICATE #3					
	as		0.870					window-edge
	zn		0.036					
	cd		0.025					peak-noisy
	pb		0.227					
	as	AV	0.905	SD	0.0811	CV	8.96	
	zn	AV	0.034	SD	0.0011	CV	3.10	
	cd	AV	0.023	SD	0.0011	CV	4.82	

0263A REPLICATE #3

as		0.903					
zn		0.044					
cd		0.023					peak-noisy
pb		0.236					peak-noisy
as	AV	0.893	SD	0.0475	CV	5.32	
zn	AV	0.044	SD	0.0013	CV	2.96	
cd	AV	0.021	SD	0.0029	CV	13.73	
pb	AV	0.260	SD	0.0212	CV	8.16	

0 ppm std REPLICATE #1 1359 6/16/92

as	10.049
zn	0.059 window-edge
cd	10.568
pb	10.858

0 ppm std REPLICATE #2

as	10.466
zn	0.059
cd	10.524
pb	10.768

0 ppm std REPLICATE #3

as	10.379
zn	0.059
cd	10.559
pb	10.562

as	AV	10.298	SD	0.2201	CV	2.14	
zn	AV	0.059	SD	0.0004	CV	0.64	
cd	AV	10.550	SD	0.0229	CV	0.22	
pb	AV	10.729	SD	0.1519	CV	1.42	

ppm std REPLICATE #1 1403 6/16/92

as	0.912
zn	1.089
cd	1.089
pb	1.264

ppm std REPLICATE #2

as	0.873 peak-noisy
zn	1.091
cd	1.071
pb	1.347

ppm std REPLICATE #3

as	0.936 peak-noisy
zn	1.095
cd	1.080
pb	1.235

as	AV	0.907	SD	0.0318	CV	3.51	
zn	AV	1.092	SD	0.0029	CV	0.27	
cd	AV	1.080	SD	0.0091	CV	0.84	
pb	AV	1.282	SD	0.0584	CV	4.56	

0265A REPLICATE #1 1418 6/16/92

as	0.905
zn	0.032

	as	AV	1.006	SD	0.0115	CV	1.14	
	zn	AV	0.041	SD	0.0016	CV	4.00	
	cd	AV	0.023	SD	0.0009	CV	4.10	
	pb	AV	0.285	SD	0.0093	CV	3.26	

275 REPLICATE #1 1436 6/16/92

as	0.917	window-edge
zn	0.043	
cd	0.026	window-edge
pb	0.266	peak-noisy

275 REPLICATE #2

as	0.909	
zn	0.041	
cd	0.023	window-edge
pb	0.241	window-edge

275 REPLICATE #3

as	0.905	peak-noisy
zn	0.039	window-edge
cd	0.024	peak-noisy
pb	0.236	window-edge

as	AV	0.911	SD	0.0062	CV	0.68	
zn	AV	0.041	SD	0.0021	CV	5.09	
cd	AV	0.024	SD	0.0016	CV	6.44	
pb	AV	0.248	SD	0.0161	CV	6.50	

ppm std REPLICATE #1 1440 6/16/92

as	1.002
zn	1.072
cd	1.067
pb	1.255

ppm std REPLICATE #2

as	0.950	peak-noisy
zn	1.082	
cd	1.103	
pb	1.264	

ppm std REPLICATE #3

as	0.962
zn	1.084
cd	1.055
pb	1.317

as	AV	0.971	SD	0.0272	CV	2.80	
zn	AV	1.080	SD	0.0063	CV	0.59	
cd	AV	1.075	SD	0.0252	CV	2.34	
pb	AV	1.279	SD	0.0335	CV	2.62	

0 ppm std REPLICATE #1 1443 6/16/92

as	10.391	
zn	0.064	window-edge
cd	10.764	
pb	10.712	

.0 ppm std REPLICATE #2

as	10.767

0261	blk	5		REPLICATE	#1				1455 6/16/92
	as			1.007					
	zn			0.031					
	cd			0.029					
	pb			0.309					
0261	blk	5		REPLICATE	#2				
	as			0.979				peak-noisy	
	zn			0.034					
	cd			0.027				peak-noisy	
	pb			0.352				peak-noisy	
0261	blk	5		REPLICATE	#3				
	as			0.911				peak-noisy	
	zn			0.016				peak-noisy	
	cd			0.029				window-edge	
	pb			0.309					
	as		AV	0.966	SD	0.0494	CV	5.11	
	zn		AV	0.027	SD	0.0094	CV	34.87	
	cd		AV	0.028	SD	0.0010	CV	3.44	
	pb		AV	0.323	SD	0.0245	CV	7.57	
0261	blk	5		REPLICATE	#1				1501 6/16/92
	as			1.019				peak-noisy	
	zn			0.032					
	cd			0.028				window-edge	
	pb			0.345				peak-noisy	
261	blk	5		REPLICATE	#2				
	as			1.009					
	zn			0.033					
	cd			0.030					
	pb			0.324				peak-noisy	
0261	blk	5		REPLICATE	#3				
	as			1.017					
	zn			0.031					
	cd			0.029					
	pb			0.341					
	as		AV	1.015	SD	0.0053	CV	0.53	
	zn		AV	0.032	SD	0.0011	CV	3.29	
	cd		AV	0.029	SD	0.0012	CV	4.01	
	pb		AV	0.337	SD	0.0113	CV	3.36	

05 6/16/92	0.932	0.045	0.031	0.285
259A	as	zn	cd	pb
. 6/16/92	0.965	0.035	0.027	0.322
TANDARD #1	zn	cd		
25 6/16/92	1.000	1.000		
TANDARD #2	as	pb		
28 6/16/92	10.000	10.000		
ppm std	as	zn	cd	pb
30 6/16/92	0.851	1.023	1.031	1.230
0 ppm std	as	zn	cd	pb
33 6/16/92	10.239	0.058	10.242	10.339
261 blk 1	as	zn	cd	pb
337 6/16/92	0.935	0.039	0.027	0.264
261 blk2	as	zn	cd	pb
346 6/16/92	0.905	0.034	0.023	0.246
267 A	as	zn	cd	pb
349 6/16/92	0.922	0.037	0.022	0.230
269A	as	zn	cd	pb
52 6/16/92	0.892	0.053	0.021	0.272
3A	as	zn	cd	pb
. 6/16/92	0.893	0.044	0.021	0.260
0 ppm std	as	zn	cd	pb
59 6/16/92	10.298	0.059	10.550	10.729
ppm std	as	zn	cd	pb
03 6/16/92	0.907	1.092	1.080	1.282
0265A	as	zn	cd	pb
18 6/16/92	0.956	0.031	0.023	0.280
0271A	as	zn	cd	pb
428 6/16/92	0.957	0.052	0.023	0.297
0274	as	zn	cd	pb
432 6/16/92	1.006	0.041	0.023	0.285
275	as	zn	cd	pb
436 6/16/92	0.911	0.041	0.024	0.248
ppm std	as	zn	cd	pb
440 6/16/92	0.971	1.080	1.075	1.279
) ppm std	as	zn	cd	pb
3 6/16/92	10.544	0.063	10.657	10.695
261 blk 3	as	zn	cd	pb
447 6/16/92	0.998	0.035	0.030	0.292