ecology and environment, inc.
1776 SOUTH JACKSON STREET, DENVER, COLORADO 80210, TEL. 303-757-4984
International Specialists in the Environment

335379
7185

SF FILE NUMBER

FILE PLAN
2.0

June 29, 1992

Mike Zimmerman, OSC
U.S. Environmental Protection Agency
Region VIII (8HWM-ER)
999 18th Street, Suite 500
Denver, CO 80202-2405

Subject: UPCM Comments on the Richardson Flat Work Plan; TDD #T08-9204-015; PAN EUT0039SBA.

Dear Mike,

Following are the TAT's response to the UPCM comments. Please give me a call with your thoughts, comments, or questions.

1. Total metals, not dissolved metals, should be tested for in groundwater. Dissolved metals in groundwater are easily oxidized or precipitated during sample collection procedures. Analysis for dissolved metals only could provide results which are low and do not reflect the contamination which may be present. Also, in shallow groundwaters, metals which enter in dissolved form can be oxidized to a precipitated form. Total metal is the concentration of dissolved plus precipitated metal. We believe that total metal concentration will be more meaningful information when comparing background to downgradient concentrations.

2. Analytical methods for sample analysis can be found in U.S. EPA Manual SW-846. The appropriate EPA method numbers are as follows.

Inorganics.....6010
Pesticides.....8080
BNAs.....8270
VOCs.....8240

3. Depth of cover on the tailings will be determined by spectrophotometric means using x-ray fluorescence (XRF). Field XRF equipment will be used to qualify the difference in metals concentration of the tailings and of the cover material.

4. Standard operations for procedures applicable to the sampling tasks are attached.

recycled paper

5. The TAT will provide UPCM with copies of all field data sheets that are generated for the site.

We hope that this response properly addresses the UPCM comments.

Sincerely,

Scott Keen

Scott Keen

3.2 Sampling Techniques

3.2.1 Surface Soil Sample Collection Methods

Surface soil samples, whether composite or grab, should be collected using the following guidance:

- Avoid leaves, sticks, roots and rocks unless they are specifically needed. Screening may be necessary.
- Avoid mixing soil types unless specifically required.
- Samples should be collected to a uniform depth and from a uniform area.
- Anomalies such as animal burrows, root channels, desiccation cracks, sand lenses, and other aspects which may influence pollutant migration should be recorded. Consider taking the sample below the root or turf zone.
- To provide a more representative sample, three to six subsamples may be collected in a consistent pattern surrounding the designated sample locations and composited.
- Samples should be thoroughly homogenized either by tumbling/mixing or by multiple subdivision, unless analyses for volatile compounds are anticipated (the laboratory will use only a few grams of soil from a sample jar, so the sample should be well mixed from top to bottom).

An effective field compositing method requires use of large stainless steel mixing pans. These can be obtained from scientific, restaurant, or hotel supply houses. They can be decontaminated and are able to stand rough handling in the field. Sub-samples are placed in the pans, broken up, then mixed using a large stainless steel scoop. Careful observance of the soil will indicate the completeness of the mixing.

The soil is spread evenly in the bottom of the pan after mixing is complete. The soil is quartered and a small sample taken from each quarter and placed in the sample container. Excess soil is disposed of as waste. Case must be taken to avoid cross contamination when using a single mixing pan to composite several samples. To demonstrate the effectiveness of the pan decontamination process, rinsate blank samples may be required (see Section 4.2.1).

Surface soil sample collection methods of preference include scoop/trowel techniques, hand-held augers, soil punches, and ring samplers. Descriptions of each follow.

3.2.1.1 Scoop or Hand Trowel

Due primarily to its convenience, the scoop or trowel is generally the tool of choice for surface soil sampling. The scoop or trowel

should be made of stainless steel and, if possible, decontaminated under laboratory conditions prior to initiation of field work. It is transported to the field in a clean, sealed plastic bag or other appropriate sealed container to ensure cleanliness. If possible, sufficient scoops/trowels should be available to avoid collection of more than one sample with one trowel. When multiple sampling with a single unit is required, the tool must be decontaminated between samples. Decontamination, if necessary, may also require the preparation of one or more rinsate blanks.

To collect a surface soil sample with a scoop or trowel:

- Gently scrape away obvious leaves, rocks, etc. from the sample location, unless needed, with a clean spoon or knife;
- Collect soil from a predetermined area and to a predetermined depth, depending on the volume of soil required;
- Collect the VOA sample, if any, and place it into the appropriate sample container (if one homogenizes a VOA sample more than likely the contaminant of concern will volatize);
- Place the sample in a stainless steel bowl or mixing pan and record its appearance;
- Homogenize the sample, depending on the analyses required, by mixing with the scoop/trowel;
- Remove leaves, twigs, roots, bark, rocks, etc; and
- Transfer sample to an appropriate sample container, label it, and prepare it for storage/shipping.

Limitations

It is often difficult to collect identical sample volumes from different locations using the scoop or trowel. Consequently, this method should be avoided when volume, depth, and/or area are critical factors.

3.2.1.2 Hand-Held Augers

Commonly used hand-held augers include the Iwan, ship, closed-spiral, and open-spiral augers (Figure 3-1). Samples are generally collected using one of the following two techniques:

- Bore a hole to the desired sample depth, extract the auger, and remove the soil from the auger flights or bucket to a stainless steel mixing pan using a stainless steel spoon or knife (works with Iwan style or other similar augers); or
- Bore a hole to a point just above the desired sample depth, remove the auger and replace the auger tip with a tube corer, push the corer into the soil to the desired sample depth, and extract the corer with sample (several adjacent cores may be

FIGURE 3-1

HAND AUGERS

Ship Auger

Closed-Spiral Auger

Open-Spiral Auger

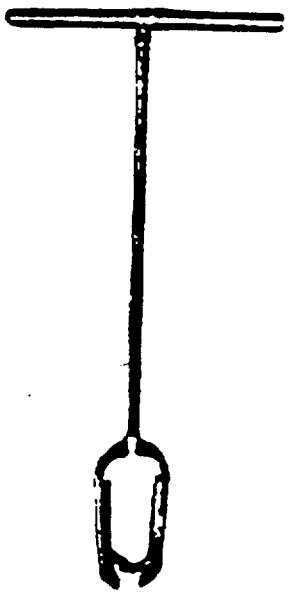

Iwan Auger

necessary to collect the desired sample volume at a specific depth).

As with the scoop/trowel technique, care should be taken to avoid collection of grass, etc., unless specifically required. Also, sample appearance should be recorded as described previously, prior to homogenization and transfer to the sample container.

Limitations

The auger methods are not recommended in predominately sand (unless wet) or clay soils.

3.2.1.3 Soil Punch

The soil punch is a thin walled, 15 cm to 20 cm long steel tube that extracts short cores from the soil. The tube is driven into the soil by the sampler's foot or with a wooden mallet, extracted with the sample core, and the soil is then pushed out of the tube into a stainless steel mixing bowl. Frequently encountered soil punches include the short King-tube samplers or the tube type density samplers used by the Corps of Engineers. The latter is machined to a predetermined volume and is designed to be handled and shipped as a soil-tube unit. A number of similar devices are available for collecting short cores from surface soils.

The soil punch is fast and can be adapted to a number of analytical schémes provided precautions are taken to avoid contamination during shipping and in the laboratory. This method is potentially most useful in the collection of surface soil samples for volatile organic analysis. The tubes can be sealed with a Teflon plug and coated with a vapor sealant, such as paraffin or nonreactive sealant. These tubes can be decontaminated on the outside and shipped to the laboratory for analyses.

3.2.1.4 Ring Sampler

Ring samples consist of a seamless steel ring, approximately 15 to 30 cm in diameter, which is driven into the soil to a depth of 15 to 20 cm. The ring is extracted as a soilring unit and the soil removed for analysis. This device allows a constant surface area of soil to be sampled at each location and should be used when analytical results will be expressed on a per unit area basis.

Limitations

Removal of ring sampler cores is often difficult in very loose sandy soil and in very tight clayey soils. The loose soil will not stay in the ring. The clayey soil is often difficult to break loose from the underlying soil layers.

This device has not been used extensively for collecting samples for chemical analysis but the technique should offer a useful method for collecting samples either for area contamination measurements or for taking large volume samples.

3.2.2 Subsurface Soil Sample Collection Methods

Subsurface soil samples, whether composite or grab, should be collected using the following guidance:

- Avoid mixing soil types or geologic formations in a single sample;
- Drain excess water from samples prior to packaging;
- Sample appearance, including texture, wetness, grain size distribution, degree of roundness, color, etc., should be recorded per the United Soil Classification System;
- Anomalies such as root channels, fractures, sand lenses and other aspects which may influence pollutant migration should be recorded; and
- Samples should be thoroughly homogenized either by tumbling/mixing or by multiple subdivision, unless analyses for volatile compounds are anticipated.

Subsurface soil samples are collected using a variety of manual or mechanically assisted techniques. The choice of a particular method depends primarily on the soil type or geologic formation to be sampled and the sample depth. Descriptions of several of the most popular techniques follow.

3.2.2.1 Handheld Augers

A handheld auger (Figure 3-2) may be used to collect subsurface as well as surface soil samples. Sampling techniques are identical to those described in Section 3.2.1.2. Sample depth is generally limited to a maximum of ten feet and the method is most applicable to cohesive soils above the water table from which disturbed samples are acceptable. Collection of undisturbed samples is possible through the use of tubecoring tips. However, in such cases care must be taken to thoroughly clean out the bottom of the borehole and scrape off the top 1/4 inch of core so that sloughed soil from the borehole walls is not inadvertently sampled.

The choice of auger design is dependent on soil conditions. Ship augers are recommended for use in cohesive soils while open spiral augers are best suited for loosely consolidated deposits. Closed spiral augers work well in dry clay and gravelly soils, and the Iwan auger is useful in a variety of soils.

Limitations

Hand augers generally result in collection of mixed samples and it is frequently difficult to define locations of changing strata. The method is not useful in hard or cemented soils, in noncohesive soils

FIGURE 3-2

SAMPLING TRIER,
AUGER and HAND CORER

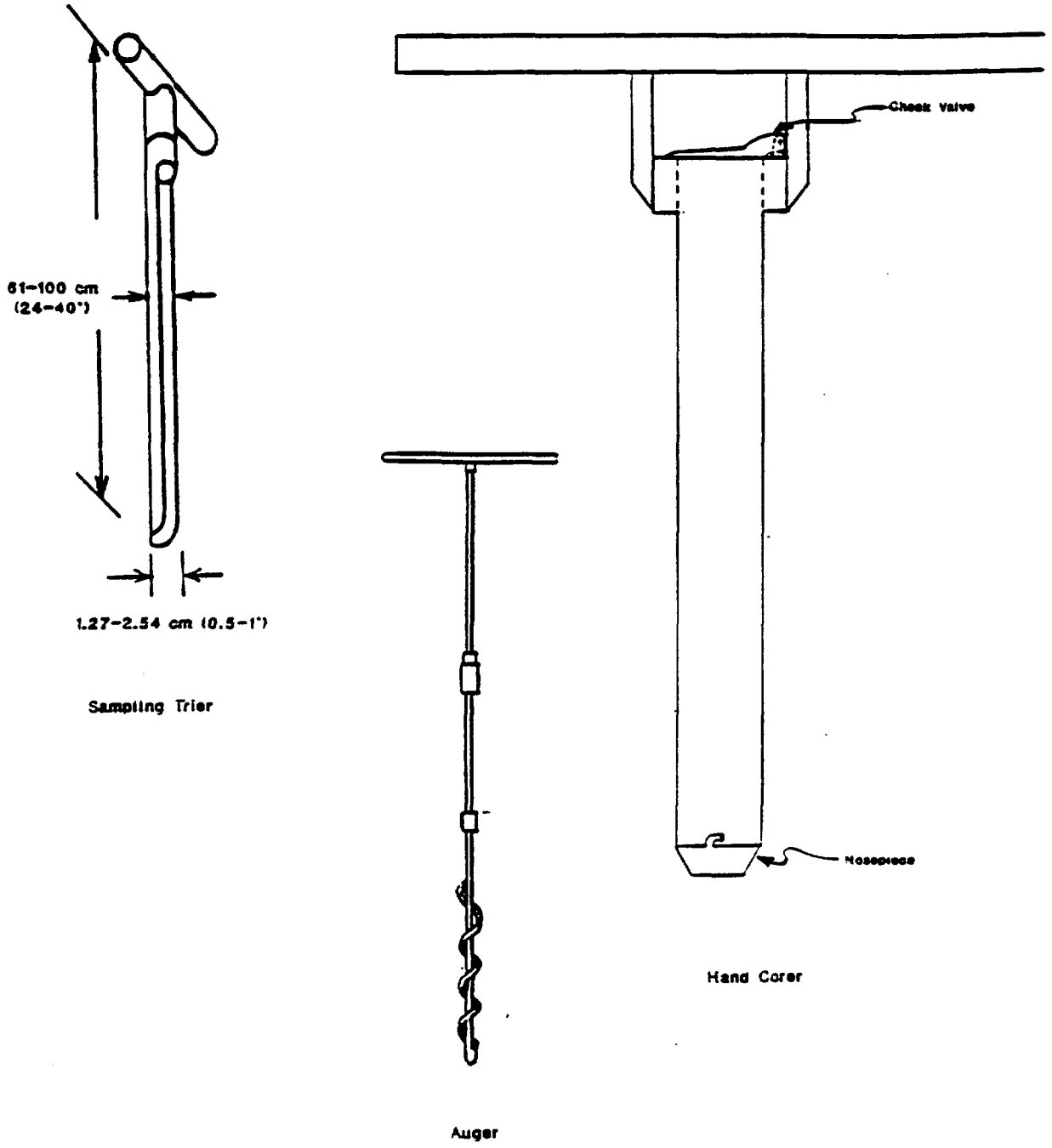

where collapse or slough is likely, or cobbly soils. Depth of sampling is generally limited to ten feet.

3.2.2.2 Trier/Hand Corer

A slotted sampling trier (Figure 3-2) or hand corer (Figure 3-2) is useful for collection of shallow subsurface samples (maximum depth of approximately three feet). The trier or corer is simply pushed into the ground and the soil core extracted. Advantages of the method include its ability to collect undisturbed cores and, in the case of the trier, allow visual observation of the core prior to placement in a sample jar.

Limitations

The trier and corer are not recommended for use in rocky or compacted/cemented soils.

3.2.2.3 Powered Hand Augers

A variety of powered hand augers are available to increase depth and penetration capabilities of manual auger techniques (Figure 3-3). Sampling methods utilized with power augers are identical to those used with hand augers. Advantages of these units are their portability and their ability to penetrate soils that were not possible with a hand auger. Portable power augers are also relatively easy to use. Disadvantages of the drills are their difficulty in penetrating cobbly or rootbound soils. These augers become increasingly difficult to operate with depth, and are best suited for boreholes less than ten feet deep.

3.2.2.4 Backhoe/Trenching

Trenching and test pitting are excellent methods of obtaining waste samples from dumps and landfills. While borings may be useful at greater depths, drilling through a landfill or dump creates unusual hazards (e.g., hitting pockets of explosive gases, rupturing buried containers, or potentially contaminating the transfer by penetrating confining layers beneath a landfill). Additionally, the samples gathered by drilling are not representative of the heterogeneous conditions found in a landfill. Trenching and test pitting allow a larger, more representative area to be observed, permit selection of specific samples from the pile of spoiled or stockpiled material (biased grab sampling), and, with reasonable precautions, allow the retrieval of intact, buried containers.

Backhoe and trenching methods involve the creation of shallow excavations for the purpose of obtaining detailed information about shallow subsurface conditions. It is a less cost effective sampling method than hand auguring, but far cheaper than hiring a drill rig.

Additionally, sampling from excavations at hazardous waste sites necessarily involves consideration of several health and safety issues, including the possibility of sidewall collapse and concentration of toxic or explosive gases within the excavation. Backfilling of the trench may require the segregation of hazardous materials to a collec-

FIGURE 3-3

POWERED HAND AUGER

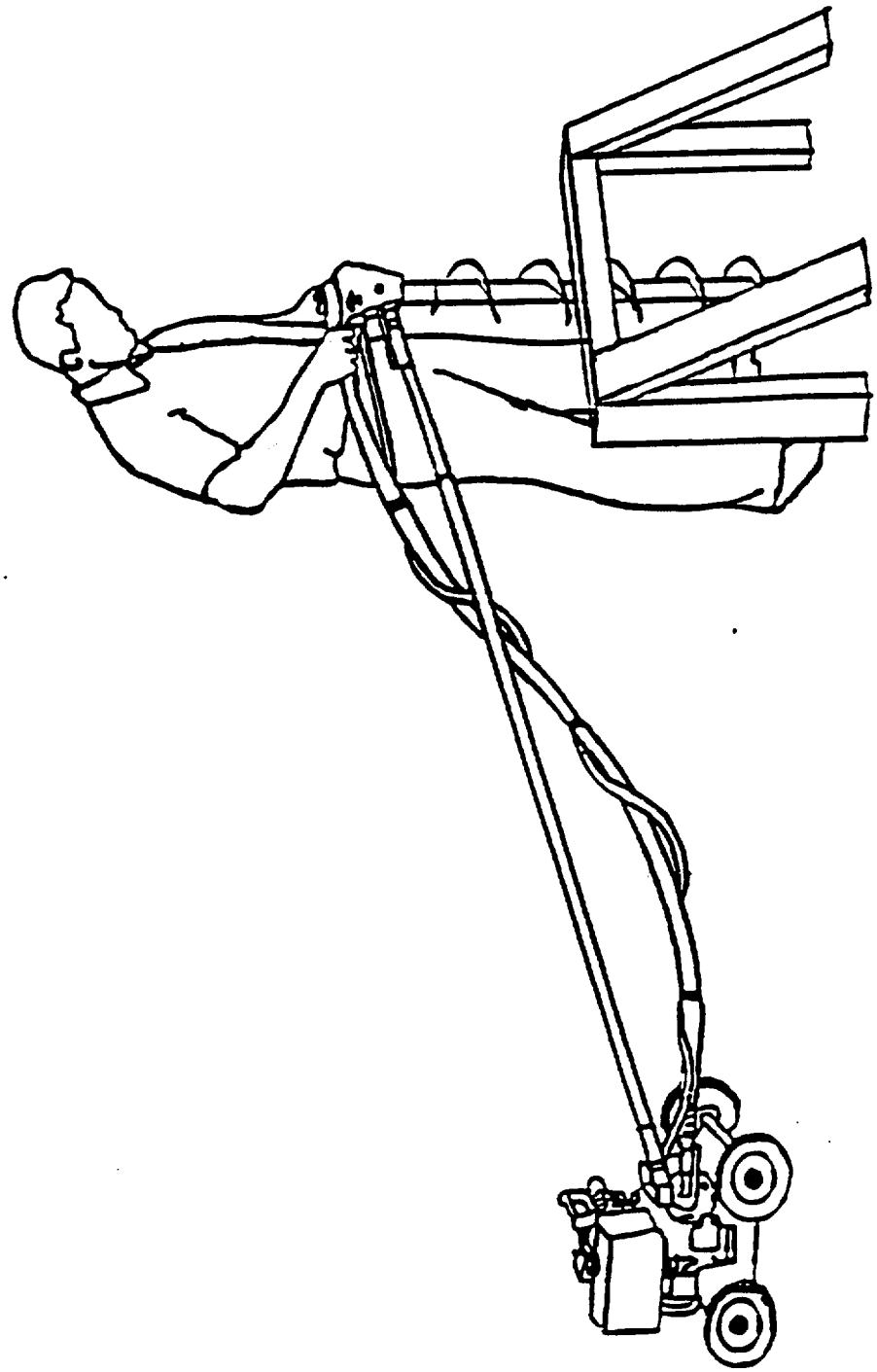

Powered Hand Auger

tion area and addition of clean fill to make up the lost volume. The "hazardous material" may be defined by look (oily, colored) or by air monitoring.

The following guidelines for construction of test pits and trenches, and collection of samples are taken from EPA's A Compendium of Field Operations Methods: Volume 1.

Test pits and trenches may be excavated by hand or by power equipment to permit detailed explanation and clear understanding of the nature and contamination of the insitu materials. The size of the excavation will depend primarily on the following:

- The purpose and extent of the exploration;
- The space required for efficient excavation;
- The chemicals of concern;
- The economics and efficiency of available equipment.

Test pits normally have a cross section that is four to ten feet square; test trenches are usually three to six feet wide and may be extended for any length required to reveal conditions along a specific line. Fifteen feet is considered to be the economical vertical limit of excavation. However, larger and deeper excavations have been used when special problems justified the expense.

The construction of test pits and trenches should be planned and designed in advance as much as possible. However, field conditions may necessitate revisions to the initial plans. The field supervisor should determine the exact depth and construction. The test pits and trenches should be excavated in compliance with applicable safety regulations as specified by the health and safety officer.

If the depth exceeds four feet and people will be entering the pit or trench, Occupational Safety and Health Administration (OSHA) requirements must be met: walls must be braced with wooden or steel braces, ladders must be in the hole at all times, and a temporary guardrail must be placed along the surface of the hole before entry. It is advisable to stay out of test pits as much as possible. If possible, the required data or samples should be gathered without entering the pit. Samples of leachate, ground water, or sidewall soils can be collected with telescoping poles, etc.

Stabilization of the sides of test pits and trenches, when required, generally is achieved by sloping the walls at a sufficiently flat angle or by using sheeting. Benching or terracing can be used for deeper holes. Shallow excavations are generally stabilized by sheeting. Test pits excavated into fill are generally much more unstable than pits dug into natural inplace soil.

Sufficient space should be maintained between trenches or pits to place soil that will be stockpiled for cover, as well as to allow access and free movement by haul vehicles and operating equipment. Excavated soil should be stockpiled to one side, in one location, preferably downwind, away from the edge of the pit to reduce pressure on the pit walls.

Dewatering may be required to assure the stability of the side walls, to prevent the bottom of the pit from heaving, and to keep the excavation dry. This is an important consideration for excavations in cohesionless material below the ground water table. Liquids removed as a result of dewatering operations must be handled as potentially contaminated materials.

The overland flow of water from excavated saturated soils and the erosion or sedimentation of the stockpiled soil should be controlled. A temporary detention basin and a drainage system should be planned to prevent the contaminated wastes from spreading.

Sampling Guidelines

Sampling from test pits can be performed by "disturbed" and "undisturbed" methods. Sampling should begin from within the pit or trench only after proper safety precautions have been initiated.

Disturbed samples are those that have been collected in a manner in which the in situ physical structure and fabric of the soil have been disrupted. Disturbed sampling techniques typically include sampling from the walls or floors of the test pit by means of scraping or digging with a trowel, rockpick, or shovel. These samples should be collected after the face or floor of the pit is scraped clean. The sample is collected without sluff and at a specific measured depth. Large disturbed samples can be taken directly from the backhoe bucket during excavation; however, care must be taken to assure that the sample is actually from the unit desired and does not include slough or scraped material from the sides of the trench.

"Relatively undisturbed" samples can be obtained from test pits. Typically, an undisturbed sample is collected by isolating by hand a large cube of soil at the base or side of the test pit. This sample can be cut using knives, shovels, and the like. Care is taken to keep disturbances to a minimum. After the block of soil is removed, it is placed in an airtight, padded container for shipment to the lab. The overexcavated sample is "trimmed" at the laboratory to the size required for the designated test. In some instances (e.g., in soft cohesive soil), it may be possible to get an undisturbed sample by pushing a Shelby tube or other similar sampling device into an undisturbed portion of the test pit and by using a backhoe.

Backfilling Guidelines

Before backfilling, the on site crew should photograph all significant features exposed by the test pit and trench and should include in the photograph a scale to show dimensions. Photographs of test pits should be marked to include site number, test pit number, depth, description of feature, and date of photograph. In addition, a geologic description of each photograph should be entered in the logbook. All photographs should be indexed and maintained for future reference.

After inspection, backfill material should be returned to the pit

under the direction of the field supervisor.

If a low permeability layer is penetrated (resulting in ground water flow from an upper contaminated flow zone into a lower uncontaminated flow zone), backfill material must represent original conditions or be impermeable. Backfill could consist of a soil/bentonite mix prepared in a proportion specified by the field supervisor (representing a permeability equal to or less than original conditions). Backfill should be covered by "clean" soil and graded to the original land contour. Revegetation of the undisturbed area may also be required.

3.2.2.5 Hand-Driven Split-Spoon Samplers

A hand-driven split-spoon sampler provides a means to obtain relatively undisturbed core samples. The depth will again be limited by the soil type and also the number of sampling rod sections available for the split-spoon. When the split-spoon is opened, the core should be visually inspected for varying strata which are present. Samples should be obtained from each, using a stainless steel scoop.

3.2.2.6 Truck or Trailer Mounted Drilling Methods

Truck and/or trailer mounted drills represent extensions of the capabilities of powered hand augers. Drilling techniques such as solid or hollow-stem augers, cable tool and air-rotary can be used with several sampling devices, including split-spoons and Shelby tubes, to collect shallow and deep subsurface samples. The choice of a particular drilling and sampling method depends on the depth required, geologic formation, and program objectives. Descriptions of methods most frequently used are provided below.

Solid-Stem Continuous Flight Augers

Samples can be recovered by several methods when using solid stem continuous flight augers. Samples may be obtained from cuttings deposited at the top of the hole as the auger advances, by pulling the augers out of the hole at certain intervals and sampling the material adhering to the auger bit or cutter head, or by driving a split spoon sampler into undisturbed soil at the bottom of the boring. The first method is relatively quick and easy but it is often difficult to define the depth from which the sample was collected. The second provides better control over sample depth (although as depth increases some mixing of deep and shallow materials is inevitable while the augers are pulled), but is labor intensive. Neither technique allows for collection of undisturbed samples. Split spoon sampling is the preferred method for collecting relatively undisturbed samples representative of subsurface conditions.

Hollow-Stem Continuous Flight Augers

As with solid-stem augers, samples can be collected directly from the ground surface or flights of the hollow-stem auger. The hollow-stem method also allows for collection of relatively undisturbed samples,

through the use of split-spoon samplers (Figure 3-4), core barrel samplers, and other similar devices. To collect undisturbed samples through a hollow-stem auger the following general steps are employed:

- Drill to a point immediately above the desired sample depth;
- Remove the drill rods and center bit from the hole;
- Attach the sampling device to the drill rod and lower it down the hole;
- Drive the sampler beyond the lead auger to a predetermined distance;
- Record the number of blows required to drive the sampler in six inch increments;
- Retrieve the drill rod and sampler.

Once the sample is retrieved, the split-spoon sampler can be opened and the sample logged and removed. Most core barrels are constructed with an inner tube that contains the sample. The outer tube is first removed and the inner tube is split to expose the sample, similar to a split-spoon. Some inner tubes are made of transparent plastic so the sample can be inspected before the tube is cut open. Split-spoons can also be fitted with brass or stainless steel sleeves and catch baskets to assist in recovering a sufficient sample volume.

In addition to split-spoons and core barrels, continuous cores can be collected as the augers are advanced using the wireline method. A thin-walled sample tube and special latching mechanism are placed within the deepest hollow-stem auger. The latching arrangement permits the tube to remain stationary while the auger rotates. When the sample tube is full, it is pulled to the surface by a wireline hoist and exchanged for an empty sampler. Drive samplers can also be driven out the bottom of the augers with the wireline method. When sampling below the water table in loose sand formations, the water level within the auger must be kept at or above the ground water level as the plug is pulled to prevent sand from rising up into the stem before the sampling tube is driven into the formation. Samples of the water added to the hole must be collected to ensure that contaminants are not introduced.

Specific descriptions of split-spoon and core barrel type sampling methods, as provided in EPA's Compendium of Superfund Field Operations Methods, are as follows.

Split-Spoon Samplers

The split-spoon sampler is a thick-walled, steel tube that is split lengthwise. A cutting shoe is attached to the lower end; the upper end contains a check valve and is connected to the drill rods. When a boring is advanced to the point that a sample is to be taken, drill tools are removed and the sampler is lowered into the hole on the bottom of the drill rods.

FIGURE 3-4

SPLIT-SPOON
SAMPLER and PONAR GRAB

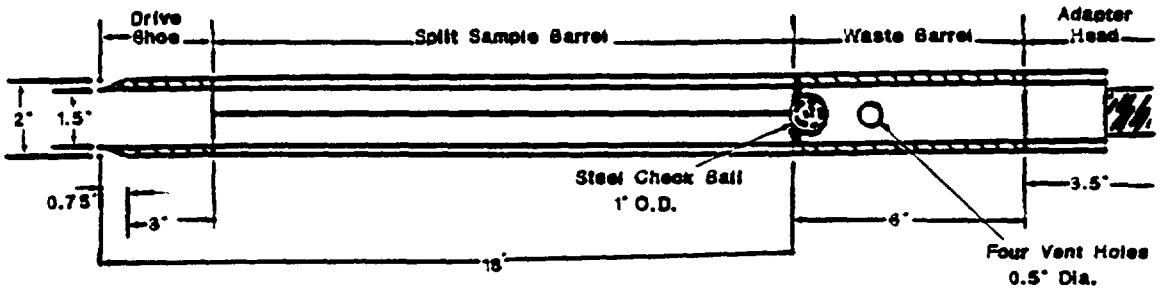

Split-Spoon Sampler

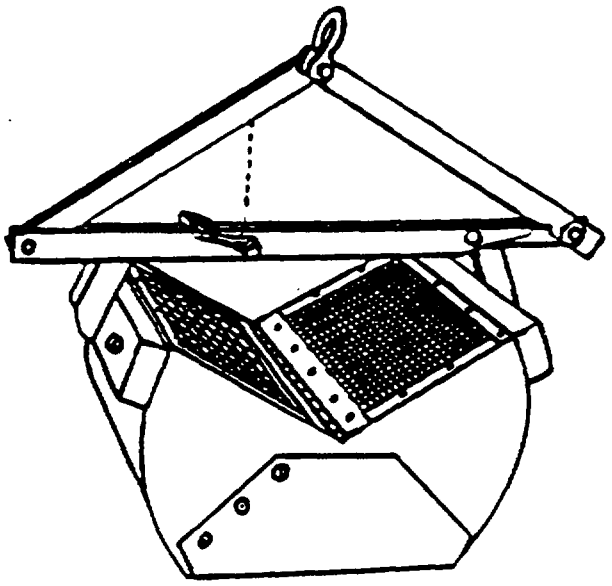

Ponar Grab

The sampler is typically driven 18 inches into the ground in accordance with a standard penetration test (ASTM D1586). The effort taken to drive the sampler the last 12 inches is recorded at six-inch intervals, and the sampler is removed from the boring. The density of the sampled material is obtained by counting the blows per foot as the split-spoon sampler is driven by a 140-pound hammer falling 30 inches. This field penetration test is valid from a lower limit of 5 to 10 blows per foot to an upper limit of 30 to 50 blows per foot. It is applicable to fairly clean, coarse-grained sands and gravels at a variety of water contents and saturated or nearly saturated fine-grained soils.

The standard-size split-spoon sampler has an inside diameter (ID) of 1.38 to 1.5 inches. When soil samples are taken for chemical analysis, it may be desirable to use a 2 or 2.5 ID sampler, which provides a larger volume of material but cannot be used to calculate aquifer properties by using the stated ASTM test method.

The split-spoon sampler is decontaminated between samples. In some instances, separate, previously decontaminated split-spoon samplers may be advisable for each sample taken to expedite the sampling process.

Aliquots are taken from the sampler at selected increments and are placed in jars or, where lenses or layers are evident, the material types should be separated into different jars.

Thin-Walled Tube Samplers

Thin-walled samplers, such as a Shelby tube, are used to take relatively undisturbed samples of soil from borings. The samplers are constructed of cold drawn steel tubing about 1 mm thick (for tubes two inches in diameter) or 3 mm thick (for tubes five inches in diameter). The lower end is bent to form a tapered cutting edge. The upper end is fastened to a check valve to help hold the sample in the tube when the tube is being withdrawn from the ground. Thin-walled tube samples are obtained by any one of several methods including pushed-tube, Pitcher sampler, Denison sampler, and piston sampler methods. Choosing the most appropriate method requires that field personnel use their own judgment. Since the purpose of thin-walled tube sampling is to obtain the highest quality undisturbed samples possible, special care should be taken in the sampling, handling, packaging, and shipping of these samples.

In obtaining pushed-tube samples, the tube is advanced by hydraulically pushing in one continuous movement with the drill rig. The maximum hydraulic pressure is recorded. At the end of the designated push interval and before lifting the sample, the tube is twisted to break the bottom of the sample.

Upon recovery of a thin-walled tube, the actual length of sample is measured and recorded (excluding slough or cuttings). At least 1/2 inch of soil is cleaned from each end of the tube, and the ends of the soil sample are squared off. Usually the top of the sample will contain cuttings or slough. These must be removed before sealing. The soil that

has been cleaned from the tube can be used for a visual classification of the sample. The resulting space at each end of the tube is filled with melted sealing material, such as approved wax, or with expandable packers. Previously decontaminated Teflon or stainless steel plugs are also used. After this initial sealing, a dry filler such as cuttings, sand, or paper can be placed in the remaining void areas, and sealing is again conducted. This filler prevents the sample from breaking the initial end seals during handling and shipment. The ends of the tube are then closed with tight-fitting metal or plastic caps, and the seam between the cap and tube is wrapped with tape. Finally, the ends are dipped in hot wax, completely covering the tape to ensure sealing.

Cable-Tool (Percussion) Drilling

The cable tool method is best suited for drilling relatively shallow holes in large, caving, gravelly formations with cobbles and boulders. It is also used effectively for detecting perched or narrow, confined water bearing zones. Sampling unconsolidated materials by the cable tool method present comparatively few difficulties. The depth from which the samples are obtained can be measured accurately.

Collecting samples by the cable tool method involves drilling and driving casing a short distance and then using a bailer to clean out the plug of material. Compact plugs may have to be loosened and mixed by the drill bit before the material can be picked up by the bailer. The casing may be driven about one foot (0.3 m) into interbedded sand and clay, or several feet in thick sand to isolate a sample.

Heaving sand conditions may interfere with sampling and logging when the cable tool method is used. There is no way to know what part of the sand formation is represented by the material inside the casing after the heave takes place. In addition, upward flow of the sand tends to separate fine fractions from coarse fractions. The usual practice is to discard materials that move up into the casing. Some drillers add water to the casing to control heaving. Be sure that the water added is from a controlled supply source and that samples of it are collected to check for contaminants.

More than one bailer load of material should be mixed together to provide a sample that is reasonably representative of the sampling interval. This is particularly important when sampling sand and gravel formations.

Several types of bailers can be used to remove the cuttings. A flat-valve bailer is worked down into a loose mass by a pumping action produced by lifting and dropping the bailer only a few inches. The driller often does this by pulling on the sand line. A sand pump with rod plunger is also useful for sampling work because the upward stroke of the plunger draws material up through the valve and into the bailer. The action produces some washing of the sample and this fact must be kept in mind. A dart-valve bailer is not as useful in sampling sand formations because it is effective only when enough clay is mixed with the sand to hold it in suspension in a mud slurry.

The method known as drive-core sampling provides the most accurate means of obtaining representative formation samples from unconsolidated strata. The method consists of driving a tube two to four feet (0.6 to 1.2 m) long into the material and then withdrawing it. To prevent loss of the core from the core barrel, the tube is overdriven - that is, it is driven a distance greater than its length in order to compact the material inside the tube. This practice permits recovery of the core in most cases, even when sampling clean sand or clean sand and gravel. The drive-core tube may be driven into a plug or material inside the casing after driving the casing a short distance, or it may be driven into the material below the bottom of the casing. The driller usually must determine the best procedure by trial in any given situation.

Air Rotary Drilling

Air rotary is an efficient method of drilling through both unconsolidated and consolidated deposits. It is of particular value in consolidated formations or formations that contain erratics or boulders that present serious problems for other drilling methods.

Some drawbacks to air rotary drilling are the fact that compressed air is used to force the cuttings to the surface. This air must be filtered to assure no trace contamination by oil carried in the compressed air. Several filters are available for this purpose, but are fairly costly. In addition, the agitation of both cuttings and ground water as they are brought to the surface will affect concentration of volatile compounds and affect the original soil structure for logging purposes. These factors should be considered and precautions taken if it appears that these conditions could jeopardize a drilling sampling program.

When collecting samples using the air rotary method of drilling, the cuttings are blown from a discharge point into a "cyclone" or other type of collection device. The exit velocities for these materials are fairly high so a sieve or strainer with a long handle is essential to catching the sample. Several scoops should be combined as a particular interval is penetrated to minimize the effects of sorting as the cuttings are brought to the surface.

3.2.2.7 Compositing Strategies

Methods for compositing subsurface soil samples are identical to those described for surface soils (Section 3.2.1). The subsurface composite sample can be obtained by mixing aliquots from the same soil type or formation from several holes as well as vertically from the same hole.

3.2.2.8 Summary

Regardless of the sampling method, each sample should be completely and accurately identified. Excess water should be drained from the samples before sending them to the laboratory. The depth from which the sample was collected, the thickness of material that it represents, and its sequence in the soil profile should be clearly documented.

It is important that all equipment coming in contact with the soil be decontaminated between sampling locations (see Section 3.3).

Many techniques exist for obtaining subsurface soil samples. It is important that the type of samples collected satisfy the purpose of the investigation. Discuss the type of samples needed with the project manager and driller to ensure the objectives of the sampling episode are met. Follow all health and safety guidelines when handling samples, because the sample often is the closest you will come into contact to hazardous materials. Dispose of any extra samples in an acceptable manner.

3.2.3 Sludge And Sediment Sample Collection Methods

Sludge and sediment samples, whether composite or grab, should be collected using the procedures outlined in Section 3.2.1 for surface soil. However, it must be noted that sludge may represent concentrated wastes (i.e., from bottom of sump or drum) and should therefore be handled with caution.

General items that should be considered when sampling sediments include the distance from the bank of a stream or pond one should be before sampling (i.e., bank versus bottom) and consideration of stream hydraulics in deposition of sediments (where are the erosion points versus main areas of sediment deposition).

Sludge and sediment sample collection methods of preference include hand/gravity corers, the ponar grab, the ekman grab, and scrape/scoop collection.

3.2.3.1 Hand Corer

This device is essentially the same type of thin-wall corer described for collecting soil samples (Figure 3-2). It is modified by the addition of a handle to facilitate driving the corer and a check valve on top to prevent washout during retrieval through an overlying water layer.

Hand corers are applicable to the same situations and materials as the scoop described in Section 3.2.1.1. It has the advantage of collecting an undisturbed sample that can profile any stratification in the sample as a result of changes in the deposition.

Some hand corers can be fitted with extension handles that will allow the collection of samples underlying a shallow layer of liquid. Most corers can also be adapted to hold liners generally available in brass or polycarbonate plastic. Care should be taken to choose a material that will not compromise the chemical integrity of the sample.

3.2.3.2 Gravity Corer

A gravity corer is a metal tube with a replaceable tapered nosepiece on the bottom and a ball or other type of check valve on the top. The check valve allows water to pass through the corer on descent but prevents washout during recovery. The tapered nosepiece facilitates cutting and reduces core disturbance during penetration. Most are constructed of brass or steel and many can accept plastic liners and additional weights (Figure 3-5).

Corers are capable of collecting samples of most sludges and sediments. They collect essentially undisturbed samples that represent the profile of strata that may develop in sediments and sludges during variations in the deposition process. Depending on the density of the substrata and the weight of the corer, penetration to depths of 30 inches can be attained. Care should be exercised when using gravity corers in vessels or lagoons that have liners, since penetration depths could exceed that of substrate and result in damage to the liner material.

There are many different types of corers that can be used for sludge or sediment sampling. Those most commonly used are presented in Table 3-1 with a discussion of disadvantages and advantages for each.

3.2.3.3 Ponar Grab

The Ponar grab (Figure 3-4) is a clamshell type scoop activated by a counter lever system. The shell is opened and latched in place and slowly lowered to the bottom. When tension is released on the lowering cable the latch releases and the lifting action of the cable on the lever system closes the clamshell.

Ponars are capable of sampling most types of sludges and sediments from silts to granular materials. They are available in a "Petite" version with a 36 square inch sample area that is light enough to be operated without a winch or crane. Penetration depths will usually not exceed several centimeters. Grab samplers, unlike the corers described above, are not capable of collecting undisturbed samples. As a result, material in the first centimeter of sludge cannot be separated from that at lower depths. The mechanical action of these devices create turbulence that may temporarily resuspend some settled solids. This disturbance can be minimized by slowly lowering the sampler the last half meter and allowing a very slow contact with the bottom. It is advisable, however, to only collect sludge or sediment samples after all overlying water samples have been obtained.

Although the Ponar grab is one of the most popular sediment samplers available, it is only one of many different kinds of bottom grabs available for collecting samples of this type. Although it has its advantages, it can become buried in soft bottom sediment and become difficult to remove. Table 3-2 provides a list of the most commonly used bottom grabs and the advantages and disadvantages for each.

FIGURE 3-5

GRAVITY CORERS and
PERISTALTIC-PUMP SAMPLER

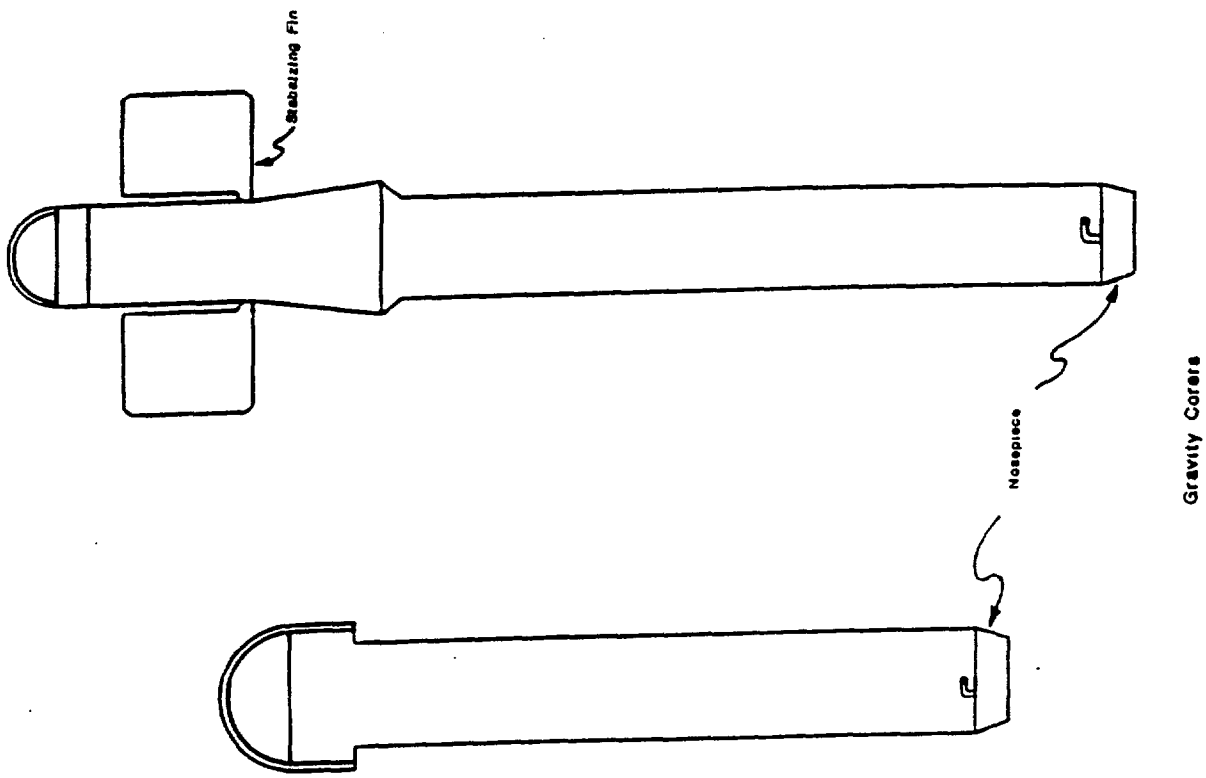

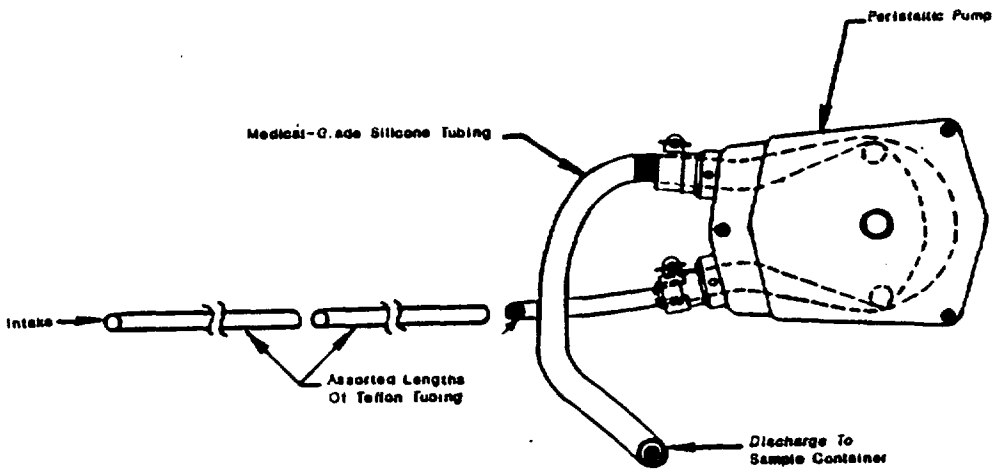

Peristaltic Pump Sampler

TABLE 3-2

COMPARISON OF BOTTOM GRABS

Device	Advantages	Disadvantages
Ponar	Safe, easy to use, prevents escape of material with end plates, reduces shock wave, combines advantages of others, preferred grab in most cases.	Can become buried in soft sediments.
Ekman	Use in soft sediments and calm waters, collects standard size sample (quantitative), reduces shock wave.	Not useful in rought water; not useful if vegetation on bottom.
Tall Ekman	Does not lose sediment over top; use in soft sediments and calm water, standard sample size, reduces shock wave.	Not useful in rough waters, other as for Ekman.
Peterson	Quantitative samples in the fine sediments, good for hard bottoms; sturdy and simple construction.	May lose sampled material, premature tripping, not easy to close; does not sample constant areas; limited sampling capacity.
Smith-McIntyre	Useful in bad weather, flange on jaws reduced material loss, screen reduces shock waves, good in all sediment types.	Large, complicated and heavy, hazardous, for samples to 7-cm depth only, shock weave created.
Hayward Orange Peel	Easy to operate, commercially available in various sizes, does not rust easily, does not require messenger, good bottom penetration, takes undisturbed sample of top sediment.	Difficult to determine sampling cover, two cables required, active washing during sampling, jaws do not close tightly, soft sediment fouls closing mechanism.
Diver	Can determine most representative sampling point and current velocity.	Requires costly equipment and special training.

TABLE 3-1

COMPARISON OF CORING DEVICES

Device	Advantages	Disadvantages
Kajak or K.B. Corer	Does not impede free flow of water, no pressure wave, easily applied to large area.	
Moore (Pfleger)	Valve allows sample to be held.	Careful handling necessary to avoid sediment rejection, not appropriate in soft sediments.
O'Connor	Can sample water with hard bottoms.	Not apporpriate in deep water.
Elgmork's	Sample easily removed, good in soft muds, easy to collect, easy to remove sample.	Not appropriate in hard sediments.
Jenkins	Good in soft sediments and for collecting an undisturbed sediment-water interface sample. Visual examination of benthic algal growth and rough estimates of mixing near the interface after storms can be made.	Complicated.
Enequist	Good in soft/medium sediments, closing mechanism.	Does not peentrate hard bottom.
Kirpicenko	Soft and hard bottoms, various sizes, closes automatically.	Not appropriate for stony bottoms.

3.2.3.4 Teflon Beaker

To obtain sediments from larger streams or farther from the shore of a pond or lake, a Teflon beaker attached to a telescoping aluminum pole by means of a clamp may be used to dredge sediments.

3.2.3.5 Scrape/Scoop Collection

A trowel, or scoop or the sample jar itself can be used when exposed material is being collected. Sludges from sewer lines, empty ponds, etc. are collected by scraping/scooping and are transferred to the sample jar. This method is not advised for sediments with a fairly high liquid content, as disruption will alter the environment and the liquid/solid ratio in samples.

3.2.3.6 Compositing Strategies

Aerial composites of sludge and sediment samples are generally derived using the mixing bowl technique as described in Section 3.2.1. As with the soil samples, care must be taken when compositing to regulate the volume and number of sub-samples used in the composite. Wet samples will tend to clump and not mix well, especially if subsamples contain different water contents.

3.2.3.7 Summary

In general, one should choose the type of sampler that meets the needs of the sampling program by considering the advantages and disadvantages of the sampler type. For the most part, equipment of simple construction is preferred due to ease of operation and maintenance plus lower expense.

3.2.4 Surface Water Sample Collection Methods

A number of issues should be addressed while developing a surface water sampling methodology. In particular, consideration should be given to the following:

- The solubility and density of the compound(s) of interest determines the appropriate sample collection depth;
- The degree of mixing between the source and sampling station;
- Factors such as safety and accessibility determine how far from the bank one samples;
- Water samples are to contain only liquids and suspended matter (no sludges, etc.);
- A background sample is needed from upstream of the source in question for all bodies of water (i.e., if a tributary adds to a source stream, both must have background;

- Samples to be analyzed for volatile organics should have no head space (or bubbles) in the sample jar, should be handled as little as possible, and should be collected above areas of turbulence (i.e., in streams);

- Cyclical effects should be considered, such as time of discharge from a facility, time of year and weather;

- Sampling should be performed moving from downstream to upstream locations.

- Note the discharge of the stream, if possible.

Coupling surface water sample locations with sediment sample locations is beneficial as the likelihood for contamination of one media by the other is high.

3.2.4.1 Sample Container

This is the easiest surface water sampling method, and is suitable for collecting samples from shallow depths.

- Sampler is positioned downstream of the sample location in order to prevent stirred sediment from contaminating the sample.

- The sample container is submerged with the mouth facing upstream (if flowing).

- Allow the bottle to fill completely, as evidenced by the cessation of air bubbles.

- Raise and cap the bottle.

- Wipe the bottle clean.

In surface water bodies with a shallow bottom, the sampler can dig a hole, wait for it to fill and clear, and then collect the water sample.

Advantages of this method are that it alleviates the need for transferring the sample, which could significantly alter it. This is especially important with samples collected for oil and grease analysis, since material may adhere to the transfer container, thus producing inaccurately low analytical results.

A disadvantage to this sampling method is that the outside of each sample container will require decontamination prior to packaging.

3.2.4.2 Bailer or Dipper

This method is similar to using the sample container, however, decontamination of the final sample jar may not be necessary. Specific sample depths cannot be guaranteed unless only the immediate surface is

sampled. The increased sample handling between the source and the final sample jar may increase the loss of volatile organics from the sample.

- Sampler is positioned downstream of the sample location in order to prevent stirred sediment from contaminating the sample.
- The sample container is submerged with the mouth facing upstream (if flowing).
- The dipper (Figure 3-6) or bailer is slowly submerged, allowed to fill, and slowly retrieved.
- The sample is then poured into the sample container by allowing the liquid to run down the inside of the jar.
- Cap the bottle and wipe the bottle clean if necessary.
- Decontaminate the bailer.

3.2.4.3 Weighted Bottle Sampler

The following guidelines for the use of a weighted-bottle sampler are taken from EPA's A Compendium of Superfund Field Operations Methods.

A weighted-bottle sampler is used to collect samples at any predetermined depth. The sampler consists of a glass bottle, a weighted sinker, a bottle stopper, and a line that is used to open the bottle and to lower and raise the sampler during sampling. This sampler can be either fabricated or purchased. The procedure for use is as follows:

- Assemble the weighted bottle sampler as shown in Figure 3-6.
- Gently lower the sampler to the desired depth so as not to remove the stopper prematurely.
- Pull out the stopper with a sharp jerk of the sampler line.
- Allow the bottle to fill completely, as evidenced by the cessation of air bubbles.
- Raise the sampler and cap the bottle.
- Wipe the bottle clean. The bottle can also be used as the sample container.

3.2.4.4 Pump and Tubing

While the use of a pump requires a power source (batteries or generator), it also allows for remote sampling and sampling at a specific depth. The depth is limited by the type and power of the pump and by the hydraulic head.

FIGURE 3-6

POND SAMPLER and
WEIGHTED-BOTTLE SAMPLER

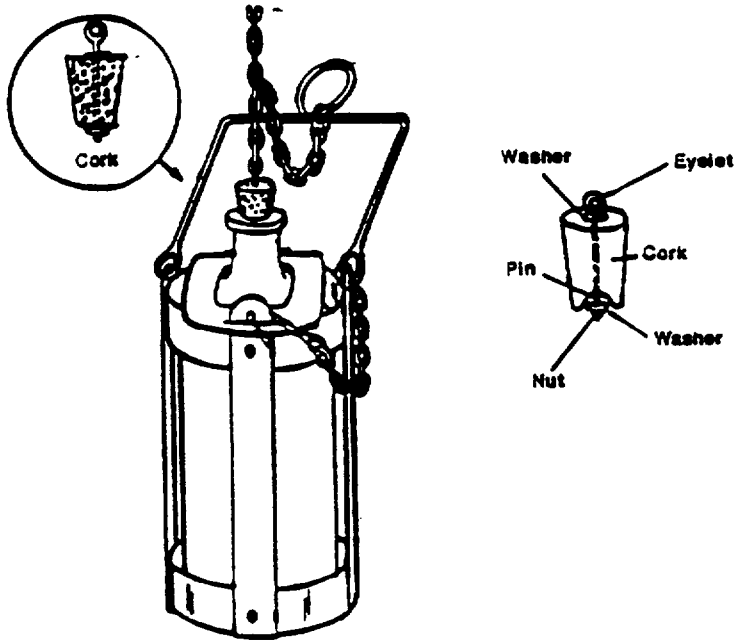

Weighted-Bottle Catcher
1000ml (1qt)

Weighted-Bottle Sampler

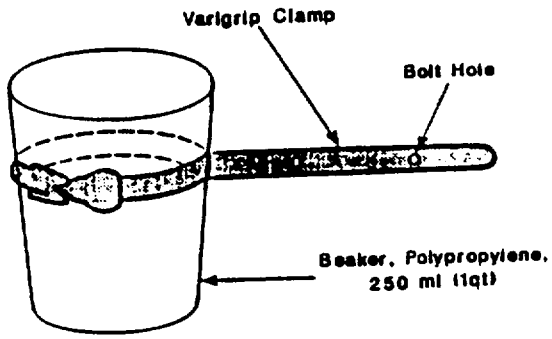

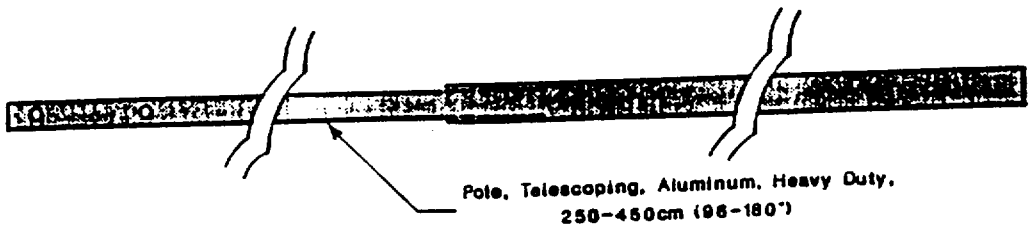

Pond Sampler

Peristaltic Pumps

Peristaltic pumps can be used to collect surface water samples and transfer them directly to the sample container (Figure 3-5). Advantages of the pumps are that they are easy to use, and the discharge tubing can be easily changed between samples to prevent cross contamination. Disadvantages of the pumps are that they require a power source, and are not recommended for collection of samples for volatile organics analysis when the pump must be located higher than the water surface. Directions for using a peristaltic pump are as follows:

1. Install clean, medical-grade silicone tubing in the pump head, per the manufacturer's instructions. Allow sufficient tubing on the discharge side to facilitate convenient dispensation of liquid into sample bottles, but only enough on the suction end for attachment to the intake line. This practice will minimize sample contact with the silicone pump tubing. (Some types of thinner Teflon tubing may be used.)

2. Select the length of suction intake tubing necessary to reach the required sample depth and attach the tubing to intake side of pump tubing. Heavy-wall Teflon of a diameter equal to the required pump tubing will suit most applications. (A heavier wall will allow for a slightly greater lateral reach.)

3. If possible, allow several liters of sample to pass through the system before actual sample collection. Collect this purge volume, and then return it to source after the sample aliquot has been collected.

4. Fill necessary sample bottles by allowing pump discharge to flow gently down the inside wall of the sample container with minimal entry turbulence.

3.2.4.5 Kemmerer Sampler

This apparatus allows the collection of surface waters at specified depths (Figure 3-7). The sampler is attached to a measured sampling line, and the messenger activated corking assembly is lifted open. The sampler is then lowered to the desired depth and the messenger is released, tripping the corking system. The sampler is retrieved and the contents transferred to the appropriate sample containers.

3.2.4.6 Glass Thieving Rod

Glass tubing can be used to collect surface water samples. Advantages of the method are the ability to sample stratified water bodies, such as a lagoon with a floating oil layer. Maximum sampling depths are limited to a few feet, and are dependent on the viscosity of the liquid being sampled. Disadvantages of the method are the relatively small volumes obtained by the tubes, difficulty in preventing drippage, and potential loss of oily sample fractions to the inside of the tube. To collect a sample, a glass tube generally of less than 20-mm is lowered

FIGURE 3-7

MODIFIED-KEMMERER SAMPLER

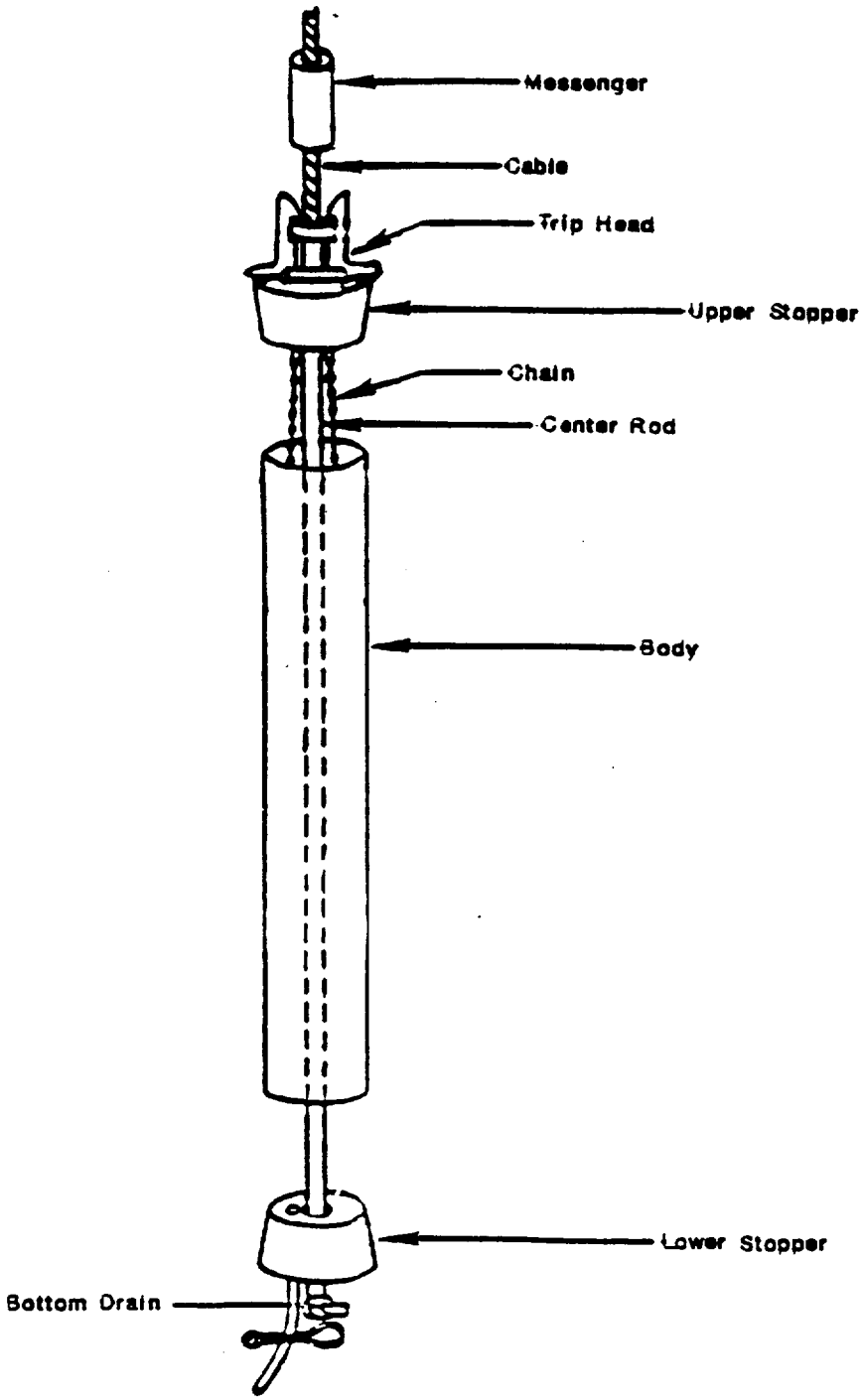

slowly into the source, so as to maintain the stratification of the source. The liquid on the inside and outside of the tube should be at the same height, indicating minimal disturbance while filling. Cap the top of the tube (usually with a thumb) to create a seal, and withdraw the tube from the source. Holding the end of the glass tube over the sample container, make a small break in the seal at the top to allow the sample to slowly drain into the sample container. This may need to be repeated several times to obtain sufficient sample volume.

3.2.4.7 Compositing Strategies

Composite surface water samples can be collected to represent an average discharge concentration over time, over a range of depths, or spatial locations. Time composites can also be used to sample seeps or other contaminant sources that have very low flow or discharge volumes. Automated systems can be programmed to collect sample aliquots at predetermined times.

3.2.5 Ground Water Sample Collection Methods

The following considerations should be addressed when preparing to collect ground water samples from wells:

- Background information should be recorded systematically using a method such as a "Ground Water Measurement Data Sheet" (Figure 3-8). Well information can be obtained from driller's logs, geotechnical reports, the facility owner, etc.

- The well owner should be notified of the proposed sampling and permission to access the well should be acquired. If the well is locked, arrangements should be made to obtain a key. Vehicle access to the well site should be determined, and if not possible, alternative arrangements to transport sampling equipment should be made.

- Preparation for fieldwork, which includes the selection of specific sampling equipment and collection techniques.

3.2.5.1 Monitoring Wells

This section outlines the steps necessary for obtaining ground water samples from a monitoring well. Construction methods may be found in EPA/600/2-851104 Section 2. An equipment checklist is provided in Table 3-3.

Removing Well Cap/Venting

As the well cap is removed, air monitoring of the breathing zone should be conducted using the appropriate instruments and health and safety procedures. Allowing the uncapped well to vent for several minutes prior to beginning sampling activities will enable gases that may have concentrated within the well to escape and dissipate.

FIGURE 3-8

GROUNDWATER MEASUREMENT DATA SHEET

SITE NAME: _____ WELL NO.: _____ DATE: _____

TYPE OF WELL: Monitoring _____ Domestic _____ Commercial/Industrial _____
Irrigation _____

ELEVATION: _____ MEASURING POINT AT: _____

CONSTRUCTED DEPTH: _____ DATUM: _____

1. FIELD OBSERVATIONS AND MEASUREMENTS

   a. FIELD PERSONNEL: _____

   b. WEATHER: _____

   c. CONDITION OF WELL: _____

   d. DEPTH TO STATIC WATER (from measuring point): _____

   e. MEASURED TOTAL DEPTH OF WELL: _____

   f. DIAMETER OF THE WELL: _____

   g. LENGTH OF WATER COLUMN (total depth - depth of wtr.): _____

   h. CALCULATED REQUIRED PURGE VOLUME: _____

   i. PURGING METHOD (type, model, composition, etc.):

      Hand Pump _____ Bailer _____

      Portable Unit _____ Dedicated Unit: _____

Date/ Time	Volume Purged	Temp	pH	Conduct. (umhos)	Turbidity	Other	Other

2. ADDITIONAL NOTES

_____

_____

_____

TABLE 3-3

MONITORING WELL SAMPLING EQUIPMENT CHECKLIST

Equipment	Use
Sample Containers	Appropriate to analyses desired
Sample Filtering	See Section 3.2.5.
Field Blanks	See Section 4.
Keys	For locked monitoring wells.
Pipe wrenches Propane torch Hammer and cold chisel	May be necessary to remove steel security caps on wells that have not been recently opened and sampled.
Electronic water level indicator/graduated depth sounder	Use to determine static water level and total depth of well.
Tape measure	Use to measure between increments on the water level indicator/depth sounder.
Pump	Use to purge or evacuate well prior to obtaining sample; it is not a recommended means to obtain a sample.
Generator	Power source for electric pumps.
Extension cord	For use with electric generators.
DOT approved storage drums	For storage of potentially contaminated purge water pending sample analysis.
Well bailer	Use to purge small amounts of standing water if pump is not used and to obtain ground water samples. Figure 3-9
Monofilament line/ Braided nylon cord	Use for lowering bailer into well; should be of sufficient strength to hold full bailer and overcome any resistance between well casing and bailer. Individual line/cord should be dedicated to each well.
Decontamination solutions/ water	Use for decontaminating bailer and water level indicator between wells.

TABLE 3-3 (Cont.)

MONITORING WELL SAMPLING EQUIPMENT CHECKLIST

Equipment	Use
Plastic pails, graduated	Use for measuring volume of water purged from well prior to sampling. Also used to contain potentially contaminated water until it can be disposed of properly.
Thermometer	Use to measure temperature of ground water.
Portable pH meter	Use to measure pH of ground water.
Portable specific conductivity meter	Use to measure specific conductivity of ground water.
Calibration solutions for conductivity and pH meters	Use to calibrate field instruments.
Field logbook	Used to record field observations.
Camera/film Sample tags Chain-of-custody records Receipt for sample forms Waterproof ink pen	Use to document sampling procedure.
Well sampling data sheets	Use to record well information and field measurements.
Disposable gloves	For personnel safety and to prevent cross contamination while handling equipment.
Field filtering unit (optional)	For filtration of samples.
Decontamination supplies: i.e., detergent, sponges, bottle brushes, Acetone or Methanol (reagent grade), paper towels	Use to clean sampling equipment between wells.
Water (organic-free or deionized)	Use for rinsing equipment between wells and for cleaning field instrument probes.

Water Level Measurements

The field measurements should include depth to standing water and total well depth. This information is required to calculate the volume of standing water in the well and provide a check on the integrity of the well (e.g., identify siltation problems). The measurements should be taken to the nearest 0.01 foot.

Electric Tape

a. The reference point (top of casing, top of security casing, pump base) should be constant through all measurements and should be recorded. The elevation of this reference point must be known and clearly marked at the well site;

b. A record of previous depth-to-water measurements of each well should be checked to see if the current measurement is reasonable. If not, then a second measurement should be made;

c. Always make the depth-to-water measurement immediately after opening the well. This measurement must occur before the well has been bailed or a sample taken;

d. Make sure the switch is in the "on" position;

e. Lower the probe into the well;

f. When the indicator light and/or buzzer goes on, slowly raise and lower the tape until the precise depth where the signal initiates is determined;

g. Mark the tape at the reference point, then measure the distance to the nearest measured increment on the tape. Add or subtract accordingly to obtain the depth to water;

h. To measure total well depth, lower the tape slowly into the well until a slight lessening of tension is observed. Raise and lower the tape, determining the precise point at which the tension eases, measure the depth as mentioned in step g. Special caution should be exercised to prevent snagging when measuring depths of wells with dedicated submersible pumps. Also, in deeper wells it may be necessary to add additional weight to the probe in order to make measurements possible.

i. The water level indicator should be at least wiped with a clean paper towel and rinsed/washed with distilled water, hexane and rinsed with distilled water after use. The time of the depth of water reading, point of reference, and depth to water level should be recorded in a water proof field notebook.

Steel Tape

a. This technique is identical to the electric tape method except that the bottom two feet of a weighted steel tape is chalked (powder) and lowered until contact with ground water. Approximate water depth should be known and the sound of an attached weight entering water must be noted. Chalk must not be contaminated.

b. Once water is contacted, lower the tape a few inches and mark tape at the reference point on the well head. Measure the distance from the top of the wetted chalk to the reference point.

Determining Water Volume to be Purged

The goal of well purging is to remove stagnant water in the well, and water in the disturbed formation/gravel pack surrounding the well screen prior to collecting a representative ground water sample. The EPA approved method, using a predetermined purge volume, is described below. In addition, alternatives for sampling slow recharge wells are provided.

Predetermined Purge Volume

A minimum of three casing volumes of standing water should be removed from the casing prior to sampling. The amount of water removed may be determined by collecting it in a graduated pail or drum, by the use of an in-line flow volume meter, or by previous knowledge of the pump capacity.

Using this method, the volume of standing water in the well must be calculated, and may be obtained using the following formula:

$$v = r^2 h \ (0.163)$$

where: v = static volume of water in well in gallons,
r = inside radius of well casing in inches,
h = length of water column in feet, and
0.163 = a constant conversion factor that compensates for the conversion of the casing radius from inches to feet, the conversion of cubic feet to gallons, and pi.

A water column volume table for various casing diameters is provided for fast calculations in Table 3-4.

It should be noted that to be truly assured that the well has been purged the stabilization of pH, conductivity and temperature will occur.

TABLE 3-4

Volume of Water in Casing or Hole

Diameter of Casing or Hole (In)	Gallons per foot of Depth	Cubic Feet per Foot of Depth	Liters per Meter of Depth	Cubic Meters per Meter of Depth
1	0.041	0.0055	0.509	0.509×10^{-3}
1½	0.092	0.0123	1.142	1.142×10^{-3}
2	0.163	0.0218	2.024	2.024×10^{-3}
2½	0.255	0.0341	3.167	3.167×10^{-3}
3	0.367	0.0491	4.558	4.558×10^{-3}
3½	0.500	0.0668	6.209	6.209×10^{-3}
4	0.653	0.0873	8.110	8.110×10^{-3}
4½	0.826	0.1104	10.26	10.26×10^{-3}
5	1.020	0.1364	12.67	12.67×10^{-3}
5½	1.234	0.1650	15.33	15.33×10^{-3}
6	1.469	0.1963	18.24	18.24×10^{-3}
7	2.000	0.2673	24.84	24.84×10^{-3}
8	2.611	0.3491	32.43	32.43×10^{-3}
9	3.305	0.4418	41.04	41.04×10^{-3}
10	4.080	0.5454	50.67	50.67×10^{-3}
11	4.937	0.6600	61.31	61.31×10^{-3}
12	5.875	0.7854	72.96	72.96×10^{-3}
14	8.000	1.069	99.35	99.35×10^{-3}
16	10.44	1.396	129.65	129.65×10^{-3}
18	13.22	1.767	164.18	164.18×10^{-3}
20	16.32	2.182	202.68	202.68×10^{-3}
22	19.75	2.640	245.28	245.28×10^{-3}
24	23.50	3.142	291.85	291.85×10^{-3}
26	27.58	3.687	342.52	342.52×10^{-3}
28	32.00	4.276	397.41	397.41×10^{-3}
30	36.72	4.909	456.02	456.02×10^{-3}
32	41.78	5.585	518.87	518.87×10^{-3}
34	47.16	6.305	585.68	585.68×10^{-3}
36	52.88	7.069	656.72	656.72×10^{-3}

1 Gallon = 3.785 Liters
1 Meter = 3.281 Feet
1 Gallon Water Weighs 8.33 lbs. = 3.785 Kilograms
1 Liter Water Weighs 1 Kilogram = 2.205 lbs.
1 Gallon per foot of depth = 12.419 liters per foot of depth
1 Gallon per meter of depth = 12.419×10^{-3} cubic meters per meter of depth

FIGURE 3-9

STANDARD BAILER

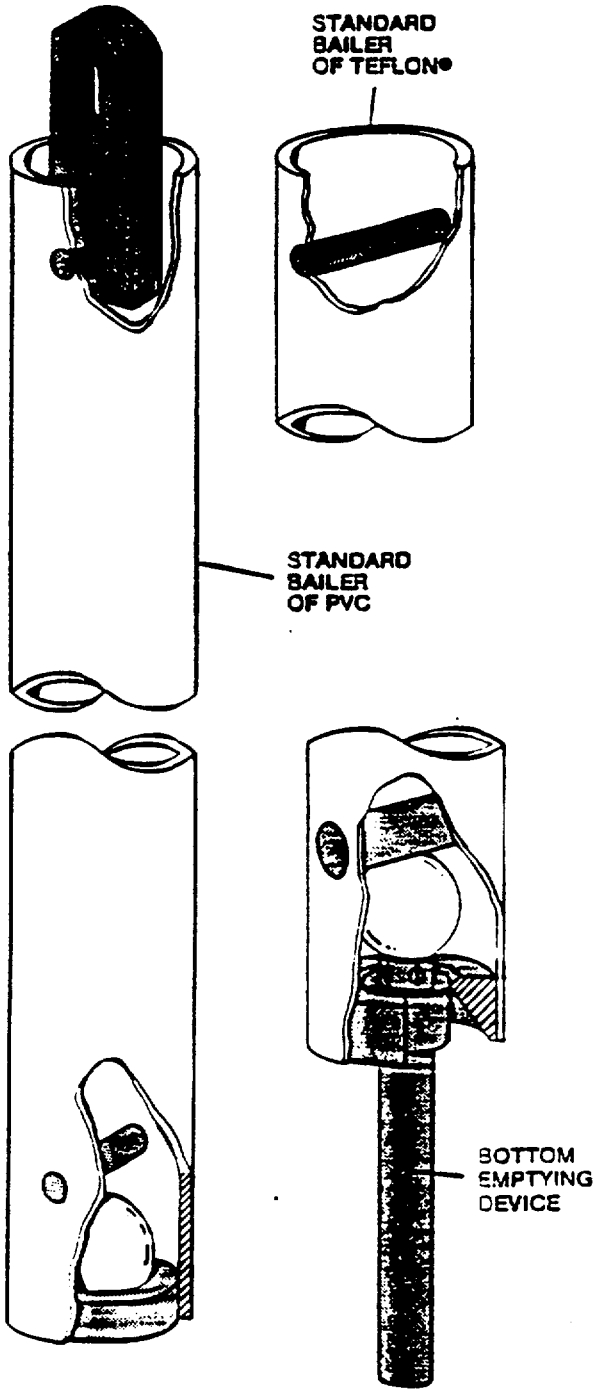

Slow Recharge Wells

Where slow-recharging wells are encountered, the three casing volume minimum requirement may be waived. There are currently several different approaches to purging and sampling wells that recharge slowly, including:

- Evacuating the well to dryness and allowing it to recover enough such that a full sample volume can be withdrawn from the well.
- Allowing the well to recharge after complete evacuation while taking several small incremental samples during recharge.

Purging Methods

The method used to purge a well is dependent upon the size (inside diameter) of the well to be sampled, depth to water, volume of water in the well, and well accessibility. The types of equipment available for well evacuation include hand-operated or motor-driven suction pumps, peristaltic pumps, compressed gas (air lift) pumps, submersible pumps, and bailers made of various materials, such as stainless steel, Teflon, and PVC.

Some pumps cause volatilization and produce high pressure differentials, which result in variability in the analysis of pH, specific conductance, metals, and volatile organic compounds. They are, however, acceptable for purging wells if sufficient time is allowed to let the water stabilize prior to sampling.

When purging equipment must be reused, it should be decontaminated, following the same procedures required for the sampling equipment. Clean gloves must be worn by the sampling personnel. Measures should be taken to prevent surface soils from coming in contact with the purging equipment and lines, which could introduce contaminants to the well. Purged water should be collected and screened with photoionization or organic vapor analyzers, pH, temperature, and conductivity meters. If these parameters and facility background data suggest that the water is hazardous, it should be drummed and disposed of properly following analysis of the collected sample.

Table 3-5 lists some of the pros and cons of the various well evacuation methods widely available for use.

Purging Rates

The rate at which wells are purged of stagnant water should be kept to a minimum. Purging rates should be maintained below the rates at which well development was performed. High purging rates can also cause additional development to occur with resulting increased turbidity of water samples. Well hydraulic performance information is therefore helpful in determining optimum purging rates.

TABLE 3-5

EVALUATION OF WELL EVACUATION METHODS

Well Evacuation Method	Best Used When:
Peristaltic pump (Figure 3-5)	Water table is within suction lift. Used on wells that require less than approximately four gallons of water removal for adequate evacuation. Good for slow recovery wells. Should not be used for the collection of samples for volatile organic analysis.
Centrifugal pump	Water table is within suction lift. Used on wells that have moderate to high recovery rates. Cannot be used for sampling.
Bailer (Teflon or stainless steel)	Recovery is slow and on wells where access is difficult.
Electric submersible pump	Pump is permanently installed or in deep, large diameter wells where use of low yield pumps is not practical.
Bladder-type (e.g., Geotech, Well Wizard)	Water table is below suction lift. Used when water table recovery rates are moderate to high. Pump must be completely submerged.

If using an electric pump or other pump with a constant flow rate, the total purge time can be calculated using the following equation:

$$\text{Total Purge Time (min)} = \frac{[\text{Volume of Stagnant Water in Well Casing (gal)}] \times [\text{Desired Number of Volumes}]}{\text{Pumping Rate (gallons/minute)}}$$

Decontamination of Purging Equipment

Sampling personnel should assume that sampling equipment, either new or used, is contaminated and, therefore, should be decontaminated according to the procedures appropriate for its construction and intended use. The decontamination of equipment should be performed at the laboratory of the sampling team. Field decontamination of sampling equipment should be performed only under extenuating circumstances such as logistical considerations and shortage of dedicated sampling equipment. When field decontamination cannot be avoided, the following general rules should be adhered to:

1) No equipment should be decontaminated in the field more than once between laboratory decontamination.

2) Equipment used to collect hazardous waste samples must be decontaminated before it can be used to collect environmental samples. In general, any decontaminated equipment should only be used to collect samples of "lower quality" than the first sample collected.

3) All decontamination and subsequent use of decontaminated equipment should be documented in a field logbook.

4) Equipment should never be reused if visual signs, such as discoloration, indicate that decontamination was insufficient.

Refer to Section 3.3.2 Decontamination of Sampling Equipment, for specific decontamination procedures.

Collection/Disposal of Purged Water

Purged water may need to be containerized (drummed) and should not be discharged directly on the ground in the immediate well vicinity. However, based upon the site background review, the location of the well in relation to the site, and screening of the purged water with a HNu, OVA, or specific conductance meter, the water may not need special handling. The disposal of purged water will be developed as part of the site specific sampling plan.

Sample Collection

Ground water sample collection should take place immediately following well purging. At times, the same device can be used for sample

collection as was used for well purging. However, water samples should not be collected with the centrifugal pump because of unacceptable aeration. If a well was evacuated with a centrifugal pump, it can be sampled with a bailer or peristaltic pump. Wells evacuated with a peristaltic or bladder pump or with a bailer can and probably should be sampled using the same method (except for volatile organics) to save time and avoid the additional chance of possible contamination by introducing more equipment into the well. Limit the liquid flow rate when sampling for volatiles to less than 100 ml/min to reduce the chances of loosing product.

Sampling equipment should be constructed of material compatible with the well construction and analytical objectives. Equipment with neoprene fittings, PVC bailers, tygon tubing, silicon rubber bladders, neoprene impellers, polyethylene, and viton may not be acceptable. An inert cable-chain (e.g., fluorocarbon resin-coated wire, monofilament, single strand stainless steel wire) should be used to raise and lower the bailer. If nylon cord is used, it should be discarded between each well.

Most samples are obtained with a stainless steel or Teflon bailer. When one is ready to collect a ground water sample, a new cable should be securely attached to a cleaned bailer. The other end of the rope should be fastened to the well casing or protective pipe. The cable should be of more than sufficient length to allow for water level drawdown while sampling. To acclimate the bailer to the well water, the initial three (3) bails should be properly disposed of. When transferring the sample water from the bailer to the appropriate sample containers, care should be taken to avoid agitation which promotes the loss of volatile constituents by aeration of the sample and outgassing of volatile chemical constituents. Bottom-draw bailer designs with check valves and syringe samplers minimize these sources of bias.

The time of sample collection, as well as the field test results for temperature, pH, and conductivity should be recorded in the field log book or on the Well Sampling Data Sheet.

Sample fractions should be collected in the following order: 1) volatiles; 2) fractions that require field filtration; 3) large volume samples (e.g., extractable organics, total metals, or nutrient anions).

After the well has been sampled, the bailer should be cleaned by washing with water, rinsing with acetone and methanol, and rinsing with distilled water. The cable and plastic sheet should be properly discarded as provided in the site safety plan and new materials provided for the next well.

In summary, follow the below guidelines when sampling a well:

- Positive gas displacement bladder pumps should be operated in a continuous manner so that they do not produce pulsating samples that are aerated in the return tube or upon discharge.

- Check valves should be designed and inspected to assure that

fouling problems do not reduce delivery capabilities or result in aeration of the sample.

- Sampling equipment (e.g., especially bailers) should never be dropped into the well, because this will cause degassing of the water upon impact.

- The contents should be transferred to a sample container in a way that will minimize agitation and aeration.

- Clean sampling equipment should not be place directly on the ground or other contaminated surfaces prior to insertion into the well.

Collection of Light Immiscibles (Floaters)

The approach to collecting floaters is dependent on the depth to the surface of the floating layer and the thickness of that layer. The floater must be collected prior to any purging activities. If the thickness of the floater is 2 feet or greater, a bottom valve bailer is the equipment of choice. When the thickness of the floating layer is less than 2 feet, but the depth to the surface of the floating layer is less than 15 feet, a peristaltic pump can be used to "vacuum" a sample. When the thickness of the floating layer is less than 2 feet and the depth to the surface of the floating layer is beyond the effective "reach" of a pump (greater than 25 feet), a bailer must be modified to allow filling only from the top.

Collection of Heavy Immiscibles (Sinkers)

The best method for collecting sinkers is to use a double check valve bailer. The sinkers must be collected prior to any purging activities.

Filtration Methods

Sample fractions intended for dissolved metals analyses are typically filtered in the field using a 0.45-micron membrane filter.

In-line filtering at the well head is the most convenient method, but requires that the well be pumped and equipped with a sample collection spigot sized to fit tubing that will accommodate a filter. In this method, the sample passes from the well through a short length of tubing, preferably tygon, through the filter, and into the sample container.

A second method is to collect the sample into a container, then transfer it to a second container using a filter barrel or a peristaltic pump with the filter located between the first container and the pump.

3.2.5.2 Domestic Well Sample Collection Methods

There are two goals associated with sampling domestic wells: obtaining water that is representative of aquifer conditions and obtaining

water representative of drinking water. The construction of most domestic wells is significantly different from that of a typical monitoring well. As such, special considerations must be addressed when sampling domestic wells. Informational needs specific to domestic wells, and usually obtainable from the well owner, include the following:

- Location of well on property;
- Presence of water treatment system and/or pressure tank;
- Presence of a sampling port prior to treatment system or pressure tank; and
- Well construction information unavailable from well logs (well depth, diameter, screened zone, casing material, static water level, type of pump in well, pumping characteristics, etc).

Domestic wells normally include a sanitary seal to protect from the introduction of foreign materials down the casing. A metal plate covers the well with a port for water discharge and a port for venting. The vent port is usually between 1/2 to 3/4 inches in diameter and protected by a screw-on cap. Depending on the age and maintenance of the well head, this cap may be rusted in place. Other than lifting the sanitary seal (with attached piping), the vent port is normally the only access to ground water.

Calculation of Stagnant Water Volume

Because domestic wells are typically sealed, access for water level measurements may not be possible. A field decision must be made concerning the removal of the vent port cap, which may be rusted in place, or lifting the sanitary seal to insert the measuring tape. Destruction of private property should always be avoided. Although functional harm cannot be done by breaking the vent port cap, lifting of the seal with attached piping (and submersible pump if included) can cause great harm. If access to ground water is not possible, the stagnant water volume must be calculated using information from the driller's log. If well access is available, care must be taken not to get the water probe tangled in the piping and/or pump system. Measurements for static water level and total depth are collected in the same manner described for monitoring wells.

Well Purging

Domestic well piping systems normally exit the ground and enter a pressure tank (30 - 100 gallons) and an optional treatment system (for excess hardness, iron, etc.). Sampling ports (spigots) may be located at any point in the system. Well purging time will depend on whether the spigot is located before or after the pressure tank. If located at the well head, the recommended three (3) static volumes should be purged (with owner's consent) or until temperature, pH and conductivity have stabilized as recommended in Section 3.2.5.1. Traditionally, domestic wells have been sampled after running the tap for 15 to 20 minutes, regardless of stored volumes. If located after the holding tank, the tank

volume must be added to the static volume so that in-line water can be removed. Flow rates from domestic wells vary widely so purge times must be calculated at each location.

Care should be exercised not to stress well systems by purging large amounts of water. During home use, pump systems typically run for short periods of time (a few minutes) to maintain pressure in the holding tank. By forcing the pump to work longer periods, damage can be caused to older systems. Domestic wells are completed many times in shallow and relatively unproductive aquifers. Long pumping periods may result in excessive drawdown and the eventual sucking of air. Age of the pump should be ascertained prior to purging so that when combined with general water chemistry information, condition of the system can be assessed. Particularly harsh water chemistry may result in premature aging of the pump. Generally, pumps less than five (5) years old should be able to handle any purging scenario. Always consult the owner for permission to run the tap for extended periods of time.

If purging well water from a spigot located prior to the holding tank, water should first be run from a spigot further down the line to start the pump running. After the pump begins to run, open the wellhead spigot. Without maintaining pressure on the pump, a faulty foot valve may empty all water in the piping system to the bottom of the well, requiring the system to be re-primed.

If a ground water temperature has been established while sampling other wells in the area, an abnormally high or low temperature reading is an indication that the measured water may have been held in a pressure/storage tank, and is not fresh from the aquifer. If continued purging fails to show an adjustment in temperature to that similar of other nearby wells, make a note in your log book or at the bottom of the Ground Water Measurement Data Sheet (Figure 3-8).

Listening for when the pump turns on is additional confirmation that the well is indeed being purged and that you are not simply draining the pressure tank or storage tank. On some wells it may be possible to turn the pump on with a switch at the well head. However, this is not recommended because of possible well damage.

Sample Collection

Water samples collected from domestic wells should be obtained from outlets as close as possible to the pump. Samples should not be collected from leaky or faulty spigots or spigots that contain screens or aeration devices. In addition, all samples should be collected prior to any filter, water softening devices. If this is not possible, the presence of a treatment device should be noted in the logbook. A steady-flowing water stream at moderate pressure is desirable in order to prevent splashing and dislodging particles in the faucet or water line.

The samples should be collected directly into the appropriate sample containers, with minimum agitation and contact with air.

Filtration Methods

Typically, water from domestic wells is not filtered so that analysis reflects the quality of water consumed by the public. If filtering is deemed appropriate, see Section 3.2.5.1.