7.0 TESTING AND MONITORING PLAN
40 CFR 146.90

MARQUIS BIOCARBON PROJECT

Facility Information

Facility name: MARQUIS BIOCARBON PROJECT

Facility contact: ELIZABETH STEINHOUR
DIRECTOR OF ENVIRONMENTAL AFFAIRS
10000 MARQUIS DRIVE, HENNEPIN, IL 61327
815.925.7300 / BETHSTEINHOUR@MARQUISENERGY.COM

Well name: MCI CCS 3

Well location: PUTNAM COUNTY, ILLINOIS
Non Responsive -- Geological information
[redacted]

Table of Contents

7.0 Testing and Monitoring Plan 5
7.1 Overall Strategy and Approach for Testing and Monitoring 5
7.1.1 Quality Assurance Procedures 14
7.1.2 Reporting Procedures 14
7.2 Carbon Dioxide Stream Analysis (40 CFR 146.90 (a)) 14
7.2.1 Sampling Location and Frequency 14
7.2.2 Analytical Parameters 15
7.2.3 Sampling Method – CO_2 Injection Stream Gases 15
7.2.4 Laboratory to be Used/Chain of Custody and Analysis Procedures 17
7.3 Continuous Recording of Operational Parameters (40 CFR 146.88 (e)(1), 146.89 (b), and 146.90(b)) 18
7.3.1 Monitoring Location and Frequency 18
7.3.2 Monitoring details 19
7.4 Corrosion Monitoring (40 CFR 146.90 (c)) 21
7.4.1 Monitoring Location and Frequency 21
7.4.2 Sample Description 22
7.4.3 Monitoring Details 22
7.5 Above Confining Zone Monitoring (40 CFR 146.90 (d)) 23
7.5.1 Monitoring Location and Frequency 23
7.5.2 Analytical Parameters 25
7.5.3 Monitoring and Sampling Methods 26
7.5.4 Laboratory to be Used/Chain of Custody Procedures 27
7.6 Mechanical Integrity Testing 27
7.6.1 Internal Mechanical Integrity Testing 27
7.6.2 External Mechanical Integrity Testing (40 CFR 146.90 (e)) 29
7.7 Pressure Fall-Off Testing (40 CFR 146.90 (f)) 29
7.7.1 Testing Location and Frequency 30
7.7.2 Testing Details 30
7.8 Carbon Dioxide Plume and Pressure Front Tracking (40 CFR 146.90 (g)) 31
7.8.1 Plume Monitoring Location and Frequency 31
7.8.2 Plume Monitoring Details 33

7.8.3 Pressure-Front Monitoring Location and Frequency 34
7.8.4 Pressure-Front Monitoring Details 35
7.8.5 Time-lapse 3D Seismic Validation using Deterministic Seismic Forward Modeling 35
7.9 References 40
Appendix 7.A Quality Assurance and Surveillance Plan 41

List of Tables

Table 7-1: General schedule and spatial extent for the testing and monitoring activities for the Marquis BioCarbon Project. 13

Table 7-2: Summary of analytes to be measured in the CO_2 stream. 15

Table 7-3: Sampling devices, locations, and frequencies for continuous monitoring. 18

Table 7-4: List of equipment coupon with material of construction. 22

Table 7-5: Monitoring schedule for the ACZ and shallow groundwater monitoring wells during the pre-operational and injection phases of the project. 24

Table 7-6: Summary of analytical and field parameters for groundwater samples. 26

Table 7-7: Preservation methods, container type, and holding times for analyte classes. 27

Table 7-8: Internal mechanical integrity monitoring details. 28

Table 7-9: External mechanical integrity tests. 29

Table 7-10: CO_2 plume monitoring activities. 32

Table 7-11: Pressure plume monitoring activities 34

List of Figures

Figure 7-1: CO_2 plume and associated AoR for the Marquis BioCarbon Project. 7

Figure 7-2: Stratigraphic column from characterization well MCI MW 1 located at the Marquis BioCarbon Project site. 9

Figure 7-3: Example of double-ended sample cylinder (Atlantic Analytical Laboratory, 2021). 16

Figure 7-4: Schematic of gas sampling system using a high-pressure cylinder (Atlantic Analytical Laboratory, 2021). 17

Figure 7-5: Type Corrosion coupon illustration in pipeline (top), types of coupons to be used for corrosion monitoring (below) (Cosasco, 2021). 23

Figure 7-6: 3D seismic baseline outline..... 33

Figure 7-7: Raw 2D seismic gathers with corresponding conditioned pre stack gathers (top). Forward model built from recorded logs (middle). Comparison of measured amplitude with incidence angle for modeled log response and 2D seismic data (bottom)..... 37

Figure 7-8: Change in simulated log response (left) and modeled time-lapse, pre-stack seismic amplitude difference (right) for CO_2 fluid replacement in lower Mt. Simon. 38

Figure 7-9: Change in amplitude versus incidence angle from pre- to post-injection demonstrate a change in the polarity of the seismic event associated with the top of the injection zone (left). AVA attributes derived from post-injection synthetics demonstrate a clear separation of the injection zone from the background trend (right). 39

7.0 Testing and Monitoring Plan

7.1 Overall Strategy and Approach for Testing and Monitoring

This Testing and Monitoring Plan describes how Marquis Carbon Injection, LLC will monitor the site pursuant to 40 CFR 146.90.

The Testing and Monitoring Plan has been developed in conjunction with the project risk assessment to reduce the risks associated with carbon dioxide (CO_2) injection into the subsurface at this site. Goals of the monitoring strategy include:

- Meeting the regulatory requirements of 40 CFR 146.90
- Protecting underground sources of drinking water (USDWs)
- Ensuring that the MCI CCS 3 well is operating as planned
- Providing data to validate and calibrate the geological and dynamic models used to predict the distribution of CO_2 within the injection zone
- Support area of review (AoR) re-evaluations over the course of the project

The Testing and Monitoring Plan will be adaptive over time; the plan can be adjusted to respond:

- As project risks evolve over the course of the project
- If significant differences between the monitoring data and predicted dynamic modeling results are identified
- If key monitoring techniques indicate anomalous results related to well integrity or the loss of containment

Figure 7-1 illustrates the modeled CO_2 plume at the end of the injection period. The AoR and Corrective Action Plan, Permit Section 2, (40 CFR 146.84 (b)) describes the data and computational techniques used to model the development of the CO_2 plume during injection. It describes the data collected in the characterization well (MCI MW 1) and how it was used to build the static earth model (SEM) also incorporating the two-dimensional (2D) seismic data. In addition, it explains how the data collected as part of this Testing and Monitoring Plan will be used to re-evaluate the AoR over the pre-operational and injection phases of the project (40 CFR 146.84 (e)).

Certain outcomes of the testing and monitoring activities described below may trigger action according to the Emergency and Remedial Response Plan, Permit Section 10, (40 CFR 146.94 (a)).

The Testing and Monitoring Plan will utilize several direct and indirect monitoring technologies throughout the injection and post-injection site care (PISC) phases of the project that will monitor:

- Daily activities of the injection operations

- Development of the CO_2 and pressure plumes in the storage formation over time
- Well integrity
- CO_2 or brine containment within the injection reservoir
- Groundwater quality in multiple aquifers, including the deepest USDW (Gunter Sandstone) and the deepest water-bearing formation above the caprock (Galesville Sandstone)

This plan includes two deep monitoring wells: one near the MCI CCS 3 well (MCI MW 2) and a second existing well (MCI MW 1) for far field monitoring.

Injection operations will be monitored through a range of continuous, daily, and quarterly techniques as detailed in the Well Operations Plan, Permit Section 6, (40 CFR 146.82(a)(8), 146.87). The water content and chemical composition of the CO_2 stream will be monitored downstream of the final compression (40 CFR 146.90 (a)). Corrosion coupons composed of the same material as the well components and CO_2-delivery pipeline will be placed in the delivery pipeline and analyzed on a quarterly basis for signs of corrosion and loss of mass that may be indicative of future potential well integrity issues (40 CFR 146.90 (c)).

Continuous recording devices will monitor wellhead injection pressure, temperature, and mass flowrate (40 CFR 146.90 (b)). The injection mass flowrate will be directly measured at the surface to monitor the cumulative mass of injected CO_2 and ensure compliance with the permit injection limits. The storage formation injection volume will be calculated using the mass flowrate combined with the pressure and temperature conditions in the storage formation. The injection volumes will, in turn, be used to update the computational models at regular intervals throughout the injection phase of the project. The annular pressure between the tubing and the injection casing strings and the annular fluid volumes will also be monitored on a continuous basis (40 CFR 146.90 (b)). These data will be linked to a Supervisory Control and Data Acquisition (SCADA) system to record the operations data, control injection rates, and initiate system shutdown, if required. The SCADA system can also be used to adjust the volume of annular fluid, and thereby pressure, in the annular space to meet the operational and regulatory objectives. Bottomhole pressure and temperature will be measured continuously until a steady state of flow is reached using retrievable pressure sensors to establish a wellhead-to-bottomhole pressure correlation that can be used to calculate the reservoir pressure at any time using the wellhead pressure data.

Non Responsive -- Geological information

[redacted]

Figure 7-1: CO_2 plume and associated AoR for the Marquis BioCarbon Project.

The well integrity of the injection and deep monitoring wells will be monitored using a range of internal and external mechanical integrity evaluation methods. Initially, a mechanical integrity test (MIT) will be performed on the MCI CCS 3 well following the well completion to confirm internal integrity as per the Pre-Operations Testing Plan, Permit Section 5, (40 CFR 146.82(a)(8), 146.87). External mechanical integrity will be confirmed through annual temperature logging and compared to baseline temperature logging data to identify any deflections from the temperature gradient that could indicate fluid flow behind the casing (40 CFR 146.90 (e)). The same internal and external integrity evaluation methods used with the MCI CCS 3 well will be used on the deep monitoring wells. However, the annular pressure will be measured daily and adjusted as needed.

Pressure fall-off (PFO) tests will be conducted in the Mt. Simon Sandstone in the characterization and injection wells when they are drilled to establish the hydrogeologic characteristics of the storage formation (Permit Section 6.0, Pre-Operational Testing Plan). During the injection phase of the project, a PFO test will be conducted in the MCI CCS 3 well at least once every five years. If there is an injection pressure increase of more than10%, over a period of one month, compared to the computational model, then a PFO test will be conducted sooner (40 CFR 146.90 (f)). The objective of the PFO testing is to periodically monitor for any changes in the near wellbore environment that would impact injectivity or cause injection pressures to increase (EPA, 2013). The formation characteristics obtained through the PFO testing will be compared to the results from previous tests to identify any changes over time and will be used to calibrate the computational models.

A deep groundwater well will be drilled as part of the Testing and Monitoring Plan for the project. This 'Above Confining Zone' (ACZ) well will be drilled to the top of the confining zone, the Eau Claire Formation. MCI ACZ 1 will be adjacent to the MCI CCS 3 well to monitor the aquifers above the confining layer (Figure 7-1). This well will be used for pressure and temperature monitoring as well as periodic fluid sampling in the Galesville Sandstone and the deepest USDW, the Gunter Sandstone. Potential CO_2 or brine migration into the Galesville Sandstone or the deepest USDW will be initially identified through pressure changes in the formation and will be confirmed through aqueous geochemistry data and analysis of stable isotopes (Permit Section 5.0, Pre-Operational Testing Plan). If confirmed, this would trigger external well integrity testing of the injection and deep monitoring wells and may trigger the emergency response actions found in the Emergency and Remedial Response Plan (Permit Section 10.0).

Non Responsive -- Geological information

[redacted]

Figure 7-2: Stratigraphic column from MCI MW 1 well located at the Marquis BioCarbon Project site.

The shallow groundwater monitoring program consists of four wells (MCI GW 1-4) located on land owned by Marquis and within the AoR as shown in Figure 7-1. One of these wells (MCI GW 2) is an existing well, the other three will be new wells.

To establish a baseline of the seasonal variation in the aqueous geochemistry of these shallow groundwater wells, sampling will be collected prior to the start of CO_2 injection. Throughout the injection and PISC phases of the project, the results of the aqueous geochemistry and stable isotope analyses will be compared to the baseline conditions for any indication of CO_2 or brine migration into the shallow groundwater aquifer. If indications of CO_2 or brine are found in the shallow groundwater aquifer, it will trigger the emergency response actions found in the Emergency and Remedial Response Plan (Permit Section 10).

Pressure and temperature sensors in the deep monitoring well (MCI MW 2) will be used to measure pressure and temperature variations in the storage formation in the pre-operational, injection, and PISC phases of the project (40 CFR 146.90 (g)). These gauges will continuously record data and will be retrieved on a quarterly basis for data download. This deep monitoring well will also be used to collect fluid samples from the storage formation to monitor for changes in the water chemistry over time and verify when the leading edge of the CO_2 plume reaches the MCI MW 2 well.

Pulsed neutron capture (PNC) logs will be acquired in the deep MCI MW 2 well and ACZ well to identify the intervals and concentration of CO_2 across the injection zone and primary confining zone. This pressure and PNC log data will also be used to calibrate the dynamic modeling over the injection and PISC phases of the project.

Several indirect monitoring techniques will be deployed to monitor the development of the CO_2 plume and the associated pressure front through the injection and post- injection project phases (40 CFR 146.90 (g)). Time-lapse three-dimensional (3D) surface seismic data will be used to qualitatively monitor the CO_2 plume development and calibrate the computational modeling results over time. The time-lapse 3D surface seismic data will also be used to verify CO_2 containment within the Mt. Simon formation. A robust deterministic seismic forward modeling project has been undertaken to demonstrate that this technique can successfully detect subsurface changes associated with CO_2 injection at this site (Section 7.8.5).

Background seismic activity will be monitored continuously using a site-specific microseismic monitoring network designed to optimize the accuracy of the event locations and event magnitudes (Section 8.3). The location of individual stations within this network can be adjusted as required in response to monitoring results or future AoR re-evaluations.

The project site is in an area of Illinois with low rates of seismic activity and risk (Permit Section 1, Project Narrative). The primary goals of continuous background seismicity monitoring are:

- Addressing public and stakeholder concerns related to induced seismicity
- Monitoring the spatial extent of the pressure front from the distribution of seismic events

- Identifying activity that may indicate failure of the confining zone and possible containment loss

Table 7-1 presents the general schedule and spatial extent for the monitoring activities in the baseline and injection phases of the project. Refer to the PISC and Site Closure Plan (Permit Section 9) for discussion of the monitoring plans related to the PISC phase. Changes to the monitoring schedule may occur over time as the project evolves. For instance, if anomalous results are identified in the existing monitoring data, confirmation sampling will be conducted within 10 days and additional monitoring data may be acquired through subsequent investigations into the anomalous results. Likewise, if the CO_2 plume behaves in a stable and predictable manner for many years through the injection phase of the project, some monitoring may be reduced in frequency. Any such changes to the Testing and Monitoring Plan will be made in consultation with the Underground Injection Control (UIC) Program Director (40 CFR 146.90 (j)).

Monitoring Activity	Baseline Data Frequency	Injection Phase Frequency*	Location	Formation top / Depth Range (ft, MD)
Assurance Monitoring:				
Shallow Groundwater Sampling	Once/quarter	Twice/year	GW-1, 2, 3 & 4 wells within AoR	Producing zone
Isotope Analysis	Twice/year	Once/year	GW-1, 2, 3 & 4 wells within AoR	0 – TD
Operational Monitoring:				
CO_2 Stream Analysis	NA	Quarterly	CO_2 Delivery Pipeline	NA
Corrosion Coupon Analysis	NA	Quarterly	CO_2 Delivery Pipeline	NA
Injection Pressure	NA	Continuous	Wellhead	Surface
Mass Injection Rate	NA	Continuous	Wellhead	Surface
Injection Volume (Calculated)	NA	Continuous	Storage Formation	Surface
Annular Pressure	NA	Continuous	Injection Well	Surface
Annular Fluid Volume	NA	Continuous	Injection Well	Surface
Temperature Measurement	Once Once	Annually Annually	Injection Well Deep Monitor Well	0 – TD 0 – TD
PFO Tests	Once	Every 5 years	Wellhead	Surface
Verification Monitoring:				
Fluid Sampling				
Gunter Sandstone	Twice/year	Twice/year	ACZ well	2,134
Galesville Sandstone	Twice/year	Twice/year	ACZ well	2,651
Upper Mt. Simon Sandstone	Twice/year	Twice/year	Deep monitor well	3,110
Isotope Analysis	Twice/year	Once/year	ACZ Well Deep monitor well	All samples
Pressure – Temperature Sensors	3 months prior to injection			

Monitoring Activity	Baseline Data Frequency	Injection Phase Frequency*	Location	Formation top / Depth Range (ft, MD)
Gunter Sandstone Galesville Sandstone Upper Mt. Simon Sandstone	Continuous Continuous Continuous	Continuous Continuous Continuous	ACZ Well ACZ Well Deep monitor well	2,134 2,651 3,100
PNC Logging	Once	Once/ year	Deep Monitor well ACZ Well	2,134 – TD 2,134 – TD
Microseismic Monitoring	6 months prior to injection	Continuous	Surface stations	TBD
Time-lapse 3D Surface Seismic Data	Once	Every 5 years and as required.	Surface	
*Minimum frequency				

Table 7-1: General schedule and spatial extent for the testing and monitoring activities for the Marquis BioCarbon Project.

7.1.1 Quality Assurance Procedures

Data quality assurance and surveillance protocols adopted by the project have been designed to facilitate compliance with the requirements specified in 40 CFR 146.90 (k). Quality assurance (QA) requirements for direct measurements within the injection zone, above the confining zone, and within the shallow USDW aquifer are described in the Quality Assurance and Surveillance Plan (QASP) that is attached to this document (Appendix 7.1). These measurements will be performed based on best industry practices and the QA protocols recommended by the service contractors selected to perform the work.

7.1.2 Reporting Procedures

Marquis Carbon Injection, LLC will report the results of all testing and monitoring activities to the EPA in compliance with the requirements under 40 CFR 146.91.

7.2 Carbon Dioxide Stream Analysis (40 CFR 146.90 (a))

Marquis Carbon Injection, LLC will analyze the CO_2 stream during the injection phase of the project to provide data representative of its chemical characteristics and to meet the requirements of 40 CFR 146.90 (a).

This section describes the measurements and sampling methodologies that will be used to monitor the chemical characteristics of the CO_2 injection stream.

7.2.1 Sampling Location and Frequency

Prior to injection, the CO_2 stream will be sampled at the wellhead during regular plant operations to obtain representative CO_2 samples that will serve as a baseline dataset. Currently, there is no plan to add tracers to the CO_2 stream.

Very little variation (<5%) is expected in the composition of the CO_2 that comes from the fermentation process CO_2 scrubbers due to the consistency of the process. In addition, the CO_2 stream will pass through two scrubbers prior to entering the compressor and the pipeline. As such, quarterly sampling of the CO_2 injection stream will be sufficient to accurately track the composition of the stream. In the first year of injection, samples will be taken at three monthly intervals after the start of injection. If a change greater than 10% from the average baseline conditions in any of the components in the CO_2 stream is noted during the quarterly sampling, a second sample will be obtained for verification. If the verification sample confirms that there is a change in the concentration of one of the constituents that would negatively impact the injection process, the CO_2 stream will then be sampled monthly until the cause of the change is found, and a new baseline can be formed.

7.2.2 Analytical Parameters

Samples of the injection stream will be collected for chemical analysis. Based on data obtained from historic sampling / testing, the samples will be analyzed for CO_2, H_2O, N_2, O_2, C_2H_5OH, CH_3CHO and H_2S. A determination has not been made as to the CO_2 compression system that will be used to inject the off gases into the MCI CCS 3 well. If the compressor design requires the use of a gas dehydration system to remove moisture from the gas stream, the testing may also include triethylene glycol (TEG) which is often used in the dehydration process (Table 7-2). Prior to injection, baseline samples of the injection stream will be collected in a sampling station that can purge and collect samples in a container that can be sealed prior to transfer to an accredited the laboratory. The species included for analysis may be expanded depending on the results of those analyses. Gas concentration analyses will be performed by a laboratory that holds a National Environmental Laboratory Accreditation and uses standardized procedures for gas chromatography, mass spectrometry, detector tubes, and photoionization. Samples of the CO_2 stream will be collected on a quarterly basis for chemical analysis.

Group	Constituent	Rational	Method[1]	CO_2 Spec
Gases	CO_2	Major constituent of CO_2 stream	ISBT 2.0	99%+
	N_2	Minor constituent of CO_2 stream	ISBT 4.0	<1 percent
	O_2	Indicator of atmospheric contamination	ISBT 4.0	<20 ppm
	H_2S	Minor constituent of CO_2 stream	ISBT 14.0	<20 ppm
	TEG	Carry-through gas from the dehydration system	TBD	None
Note 1: An equivalent method may be used with prior approval of the UIC Program Director.				

Table 7-2: Summary of analytes to be measured in the CO_2 stream.

7.2.3 Sampling Method – CO_2 Injection Stream Gases

Grab samples of the CO_2 stream will be obtained for analysis of the components present in the injection stream. Samples of the CO_2 stream will be collected at a location in the system where the material is representative of the material injected (i.e., between the compression system and the MCI CCS 3 well), using a ¼-inch sampling port in the flowline which are standard fitting sizes on double-ended sample cylinders provided by any nationally accredited environmental laboratory (Figure 7-3). Quick-connect fittings are attached to the cylinder's ¼-inch national pipe thread (NPT) fittings, and the cylinder is easily connected into the system. The CO_2 stream flows from the pipeline by opening a ball valve, through a pressure reducer, into the cylinder. The

pressure regulator will reduce the pressure of the CO_2 stream to approximately 250 pounds per square inch (psi) so that the CO_2 is in the gaseous state when collected rather than a super-critical liquid. The three-way valve upstream from the cylinder allows for greater control of the pressure in the system. Cylinders will be purged with sample gas (i.e., CO_2) at least five times prior to sample collection to remove laboratory-added helium gas and ensure a representative sample. During purging, the outlet of the sample cylinder will be connected to a ventilation line and vented to the atmosphere. Proper sampling technique is critical for any gas analysis program. Therefore, great care will be taken to ensure that the cylinder is not contaminated by atmospheric gas and the sample is representative of the CO_2 in the pipeline. A standard sampling procedure is shown below in Figure 7-4. Samples will be shipped to the lab after collection in accordance with the standard operating procedures (SOPs) found in Section B2 of the QASP (Appendix 7.1). Further details related to sampling methods can be found in Section B2 of the QASP.

Figure 7-3: Example of double-ended sample cylinder (Atlantic Analytical Laboratory, 2021).

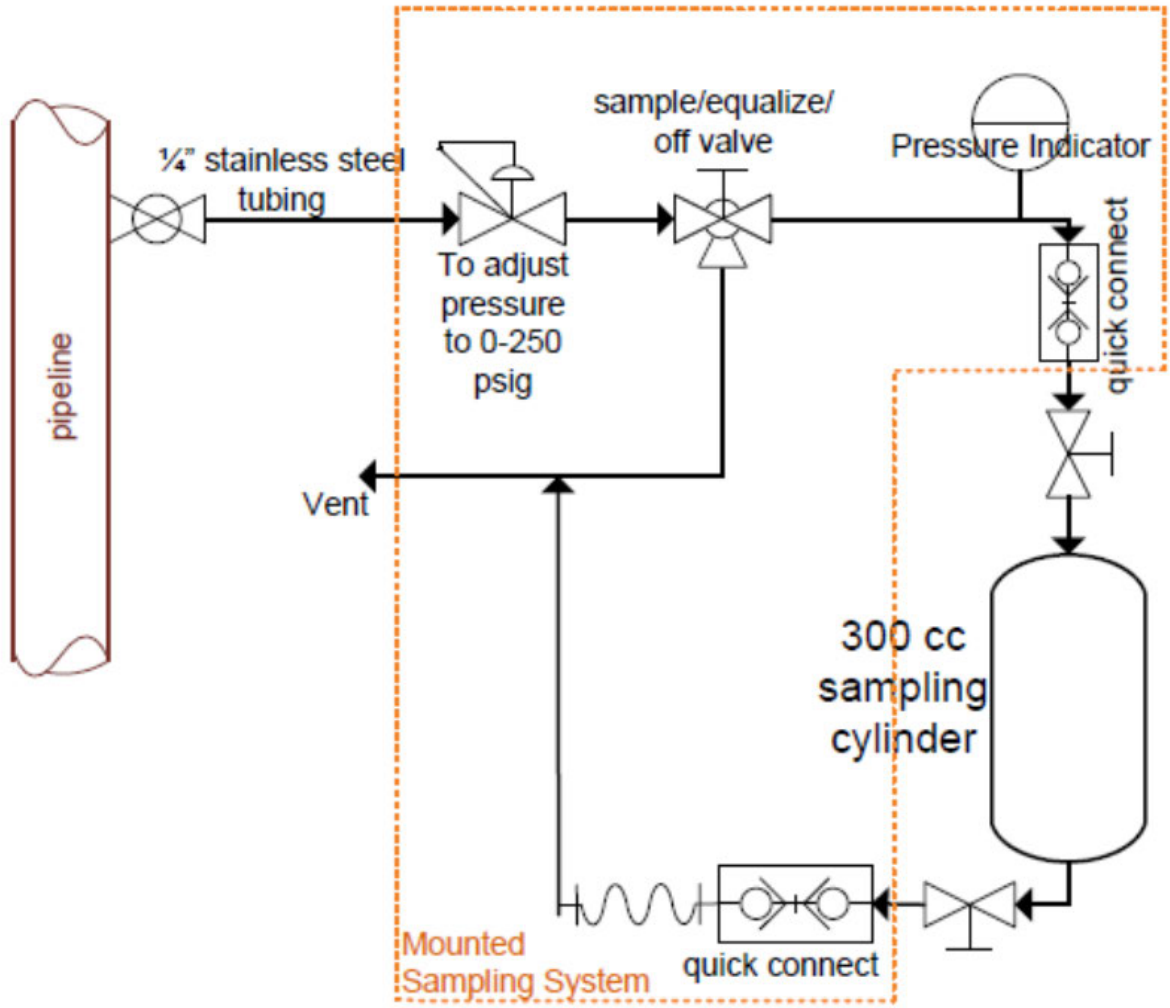

Figure 7-4: Schematic of gas sampling system using a high-pressure cylinder (Atlantic Analytical Laboratory, 2021).

7.2.4 Laboratory to be Used/Chain of Custody and Analysis Procedures

A nationally accredited environmental laboratory will analyze the CO_2 stream samples. The third-party laboratory will follow standard sample handling and chain-of-custody guidance (EPA 540-R-09-03, or equivalent). Details can be found in the QASP (Appendix 7.A).

7.3 Continuous Recording of Operational Parameters (40 CFR 146.88 (e)(1), 146.89 (b), and 146.90(b))

Marquis Carbon Injection, LLC will install and use continuous recording devices to monitor injection pressure, mass injection rate, and volume (calculated); the pressure on the annulus between the tubing and the long string casing; the annulus fluid volume added; and the temperature of the CO_2 stream, as required at 40 CFR 146.88 (e)(1), 146.89 (b), and 146.90 (b). The details are described in the following sections.

7.3.1 Monitoring Location and Frequency

Marquis Carbon Injection, LLC will perform the activities identified in Table 7-3 to monitor operational parameters and verify internal mechanical integrity of the MCI CCS 3 well. All monitoring will take place at the locations and frequencies shown in Table 7-3. All of the data recorded on a continuous basis will be connected to the main facility through a SCADA system. The hourly average value of the parameter being continuously monitored and logged shall be recorded for purposes of reporting. If the electronic data logging system is out of service, field monitoring of manual gauges and annulus pressure will be recorded at least twice per shift (i.e., every 4 hours) for periods when the MCI CCS 3 well is operational.

Parameter	Device(s)	Location	Min. Sampling Frequency	Min. Recording Frequency
CO_2 stream pressure (injection stream)	Pressure Gauge	Wellhead	Every 1 min.	Every 1 min.
Injection pressure (storage formation)	Pressure Gauge	Wellhead	Every 1 min.	Every 1 min.
Mass injection rate	Coriolis Meter	Wellhead	Every 10 sec.	Every 10 sec.
Annular pressure	Pressure Gauge	Wellhead	Every 1 min.	Every 1 min
Annulus fluid volume	Volume	Wellhead	Every 1 min.	Every 1 min
CO_2 stream temperature	Thermocouple	Wellhead	Every 1 min.	Every 1 min.
Injection temperature (storage formation)	Temperature Gauge	Tubing within injection zone	Every 1 min.	Every 1 min.
Notes: Sampling frequency refers to how often the monitoring device obtains data from the well for a particular parameter. For example, a recording device might sample a pressure transducer monitoring injection pressure once every two seconds and save this value in memory. Recording frequency refers to how often the sampled information gets recorded to digital format (such as a computer hard drive). For example, the data from the injection pressure transducer might be recorded to a hard drive once every minute.				

Table 7-3: Sampling devices, locations, and frequencies for continuous monitoring.

7.3.2 Monitoring Details

7.3.2.1 Continuous Recording of Injection Pressure

The CO_2 injection pressure will be monitored on a continuous basis at the wellhead of the MCI CCS 3 well to ensure that injection pressures do not exceed 90% of the fracture propagation pressure of the injection zone (40 CFR 146.88 (a)). Further details are found in the Well Operations Plan (Permit Section 6.0). If injection pressure exceeds 90% of the injection zone fracture pressure, then the injection process will be automatically shut down in accordance with the Well Operations Program.

A dynamic flow calculation will be made to correlate the wellhead pressure to the bottomhole pressure, and this calculation will be used for the initial injection conditions. The bottomhole gauges will be removed when a steady state of flow is achieved,

Any anomalies outside of the normal operating specifications may indicate that an issue has occurred with the well, such as a loss of mechanical integrity or blockage in the tubing or may be caused by a change in injection flowrate. Anomalous pressure measurements would trigger the need for further investigation of the cause of the change (40 CFR 146.89 (b)). The wellhead injection pressure will also be used to calibrate the computational modeling throughout the injection phase of the project.

The wellhead pressure of the injected CO_2 will be continuously measured by an electronic pressure transducer with analog output mounted on the CO_2 line associated with the MCI CCS 3 well. The transmitter will be electronically connected to the SCADA system located in the Control Building, which can shut down the system or change the flowrate depending on the pressures measured at the wellhead. The transducer will be calibrated prior to the start of injection operations, and annually thereafter.

7.3.2.2 Continuous Recording of Injection Mass Flowrate

The mass flowrate of CO_2 injected into the well will be measured by a Coriolis mass flow meter. This flow meter will be placed in the CO_2 delivery line near the well. The meter will have an analog output (Micro Motion Coriolis Flow and Density Meter Elite Series or similar). Two flow meters will be supplied; this will provide one spare flow meter to allow for flow meter servicing and calibration. The flow meter will be connected to the SCADA system for continuous monitoring and control of the CO_2 injection rate into the well. Using two flow meters will allow confirmation of accurate flow measurements. The mass flow meters will be calibrated annually.

7.3.2.3 Injection Volume

The injection volume into the reservoir will be calculated on a continuous basis based on the injection mass and the pressure and temperature conditions in the storage formation. The volume calculated will be used in the computational models to determine storage formation capacity and flow.

7.3.2.4 Continuous Recording of Annular Pressure

As described in the Well Operations Program, the pressure on the annulus between the injection tubing and the long-string casing will be measured by an electronic pressure transducer with analog output, such as a Foxboro I/A Series® IAP20 or similar, that is mounted on the wing valve/annular fluid line connected to the wellhead of the MCI CCS 3 well. The transmitter will be connected to the well control system and the SCADA system to regulate the annular pressure.

Annular pressures are expected to vary up to 20% during normal operations due to atmospheric and CO_2 stream temperature fluctuations. The annular pressure gauge will be calibrated annually and the transducer will be recalibrated according to the manufacturer's recommendations.

7.3.2.5 Continuous Recording of Annulus Fluid Volume

As described in the Well Operations Program, the volume of the annulus fluid between the injection tubing and the long-string casing will be measured using the accumulator levels and the brine reservoir level on the well control system. The accumulator levels will be measured using a level transmitter (Temposonics linear-position sensor R-series Model RH or equivalent). The brine reservoir level will be measured using a level transmitter (Omega LVCN414 series or equivalent). The transmitters will be connected to the well control system and to the SCADA system.

The annular fluid volume is expected to fluctuate as atmospheric and injection stream temperatures change. These changes are expected to be most dramatic during startup and shutdown operations.

7.3.2.6 Continuous Recording of CO_2 Stream Temperature

The temperature of the CO_2 injection stream will be continuously measured using an electronic thermocouple. The thermocouple will be mounted in a temperature well in the CO_2 line at a location close to the pressure transmitter near the wellhead. The transmitter will be electronically connected to the SCADA system. The transmitter will be calibrated prior to the start of injection operations and calibrated annually. The thermocouple for measuring surface injection temperature will be recalibrated annually or it will be replaced with a calibrated thermocouple.

7.3.2.7 Bottomhole Pressure and Temperature

Bottomhole pressure and temperature will be monitored prior to and during injection until steady state of flow is reached. The downhole pressure data will be used to establish a correlation between the storage formation pressure and the wellhead pressure for more accurate estimates of downhole pressure throughout injection. These data will also be used with the mass flow rate to calculate the volume injection rate of the CO_2 into the reservoir.

Two retrievable electronic pressure/temperature gauges, such as Pioneer Petrotech Services Model PPS25, or similar, will be set on a plug at the bottom of the tubing string. The gauges can record and store 1,000,000 sets of pressure/temperature data points. They will be recovered from the well via slickline and the data downloaded. Two gauges are used to confirm consistent measurements and provide backup if required. First, the relationship between wellhead pressure and formation pressure will be defined. Then this will be used as a point of compliance for maintaining injection pressure below 90% of formation fracture propagation pressure as per 40 CFR 146.88 (a). The downhole pressure and temperature data will also be used to calibrate the dynamic model.

The pressure/temperature gauges will be checked for visible damage each time they are removed from the wells. If no issues are apparent with the data or the physical appearance of the gauges, they will be recalibrated every three years, per the manufacturer's recommendation.

7.4 Corrosion Monitoring (40 CFR 146.90 (c))

To meet the requirements of 40 CFR 146.90 (c), Marquis Carbon Injection, LLC will monitor well materials (Table 7-4) and components during the operational period for loss of mass, thickness, cracking, pitting, and other signs of corrosion to ensure that the well components meet the minimum standards for material strength and performance. This section presents the procedures that will be followed to monitor the corrosion of well materials used in the casing and tubing. For Class VI injection wells, corrosion monitoring of the well materials is required on a quarterly basis (40 CFR 146.90 (c)).

7.4.1 Monitoring Location and Frequency

The corrosion coupons will be retrieved and analyzed every three months after the start of injection. If the coupons show evidence of corrosion, the MCI CCS 3 well itself can be assessed for signs of corrosion using well logging techniques such as multi-finger caliper logging or an ultrasonic casing evaluation tool.

Equipment Coupon	Material of Construction
Pipeline	Corrosion resistant material
Wellhead (non flow-wetted)	Carbon Steel Alloy
Long String Casing	Cr-13 Steel Alloy
Flow-wetted surface equipment (Injection Tree)	Corrosion resistant material
Injection Tubing	Corrosion resistant material
Packer and SCSSV	Corrosion resistant material

Table 7-4: List of equipment coupon with material of construction.

7.4.2 Sample Description

The coupons will be made from the same materials as the long string casing and tubing (Table 7-4). Prior to placement of the corrosion coupons in the CO_2 stream, they will be weighed and measured for thickness, width, and length as a baseline measurement.

7.4.3 Monitoring Details

Corrosion monitoring of well materials will be conducted using coupons placed in the CO_2 pipeline (Figure 7-5). The coupons will be made of the same material as the long string of casing and other well and piping materials. The coupons will be removed quarterly and assessed for corrosion using American Society for Testing and Materials (ASTM) G1-03: Standard Practice for Preparing, Cleaning, and Evaluating Corrosion Test Specimens (ASTM, 2017). This method measures the corrosivity of steel to both aqueous and non-aqueous liquids. Upon removal, coupons will be inspected visually for evidence of corrosion, which may include pitting, cracking, and loss of mass or thickness. The weight and size (thickness, width, length) of the coupons will also be measured and recorded each time they are removed and compared to the baseline measurements. Corrosion rate will be calculated as the weight loss during the exposure period divided by the duration (i.e., weight loss method).

If data from the coupon monitoring suggest there is the potential for corrosion of the well materials, the MCI CCS 3 well will be evaluated using wireline tools such as a multi-finger caliper or ultrasonic casing evaluation tool. The frequency of running these tubing and casing inspection logs will be contingent on the corrosion data from the coupon monitoring program. Wireline tools are lowered into the well to directly measure properties of the well casing that indicate corrosion. As the name implies, multi-finger calipers have several fingers and are capable of recording information measured by each finger so that the data can be used to produce highly detailed 3D images of the well. Ultrasonic tools are capable of measuring wall thickness in addition to the inner diameter of the well tubular. Consequently, these tools can also provide information about the outer surface of the casing.

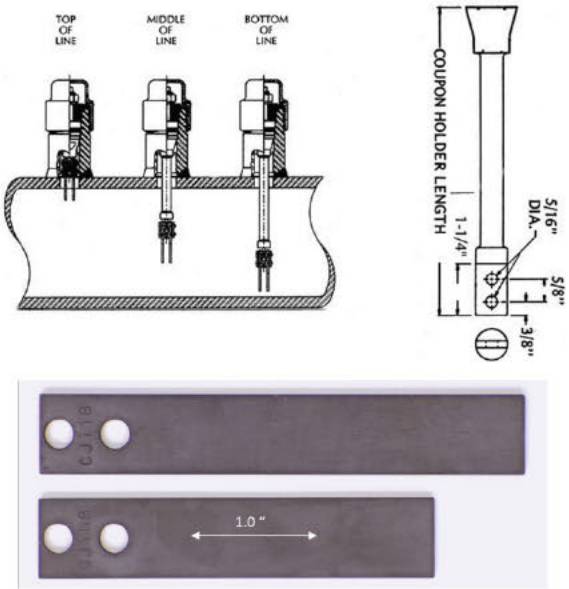

Figure 7-5: Type Corrosion coupon illustration in pipeline (top), types of coupons to be used for corrosion monitoring (below) (Cosasco, 2021).

7.5 Above Confining Zone Monitoring (40 CFR 146.90 (d))

Marquis Carbon Injection LLC will monitor groundwater quality and geochemical conditions above the confining zone during the operational period to meet the requirements of 40 CFR 146.90 (d).

7.5.1 Monitoring Location and Frequency

A deep groundwater well will be drilled as part of the Testing and Monitoring Plan for the project. This ACZ well (MCI ACZ 1) will be drilled to the top of the confining zone, the Eau Claire. It will be drilled adjacent to the MCI CCS 3 well to monitor for any CO_2 leakage or brine migration into the deep ACZ aquifers (Figure 7-1).

Table 7-5 shows the proposed deep ACZ monitoring methods, depths, and frequencies. In addition to the data collected for the Pre-Operational Testing Program (Permit Section 5.0), fluids from the Gunter Sandstone and the Galesville Sandstone will be sampled twice prior to the start of CO_2 injection to determine if there is any natural variability in the fluids in these formations.

Baseline shallow groundwater samples will be collected from four groundwater wells within the AoR (Figure 7-1) on a quarterly schedule starting prior to the start of injection to characterize the seasonal variations in shallow groundwater quality within the AoR (40 CFR 146.90 (d)).

Target Formation	Monitoring Activity	Depth (ft, MD)	Baseline Frequency	Injection Phase Frequency

Shallow Groundwater Wells	Groundwater Geochemistry	0 - TD	Once / quarter	Q2/ end Q3
Shallow Groundwater Wells	Stable Isotopes	0 - TD	Once / quarter	Q2
Gunter Sandstone	Pressure/ Temperature	2.134	Continuous	Continuous (Every minute)
Gunter Sandstone	Groundwater Geochemistry	2.134	Once / quarter	Q2/ end Q3
Gunter Sandstone	Stable Isotopes	2.134	Once / quarter	Q2
Galesville Sandstone	Pressure/ Temperature	2.651	Continuous	Continuous (Every minute)
Galesville Sandstone	Groundwater Geochemistry	2.651	Once / quarter	Q2/ end Q3
Galesville Sandstone	Stable Isotopes	2.651	Once / quarter	Q2/ end Q3

Table 7-5: Monitoring schedule for the ACZ and shallow groundwater monitoring wells during the pre-operational and injection phases of the project.

Migration of CO_2 or brine into the ACZ aquifers will likely first be identified through pressure changes in the aquifers. An increasing pressure trend in either aquifer would suggest that leakage across the confining layer is occurring. While any increasing trend in pressure or temperature will be evaluated, an increase in pressure or temperature greater than 5% above baseline values will warrant additional monitoring and inspections to rule out the possibility of fluid leakage out of the storage formation. Such an increase in pressure or temperature would initiate more frequent fluid sampling and analysis for geochemical parameters from the aquifer with the pressure/temperature increase. An increase in pressures or temperatures in one of the deep ACZ aquifers may also trigger additional external well integrity investigations in the injection or deep monitor well.

The accumulation of CO_2 or brine in an overlying aquifer will likely result in the following changes:

- Aqueous geochemistry parameters such as pH and alkalinity
- Reaction of cements, mineral surface coatings, and clay particles with the CO_2 may liberate cations and anions into the aqueous phase
- Oxygen and carbon isotopes may be used to differentiate between existing CO_2 sources (if present) within the AoR and the injected CO_2

If anomalous changes in the aqueous geochemistry are observed in the ACZ monitoring zones, new samples will be obtained from the affected aquifer to verify the changes. The frequency with which fluid samples are obtained from each of the ACZ aquifers for analysis will be increased. As a precautionary measure, the fluid sampling frequency for the shallow groundwater monitoring wells will also be increased. If the injected CO_2 has a unique isotopic signature from the existing isotopes in the overlying aquifers, a new round of samples will be collected for

isotopic analysis from the affected aquifer. Anomalous changes may also trigger the need for additional well integrity testing in both the deep monitoring well and the MCI CCS 3 well to ensure that no well integrity issues have developed since the last set of external MITs.

7.5.2 Analytical Parameters

Table 7-6 identifies the geochemical parameters to be monitored and the analytical methods to be used on all fluid samples collected from the ACZ well, shallow groundwater wells, and the deep monitoring well. Fluid samples collected from these wells will be analyzed for cations, trace metals, anions, pH, alkalinity, total dissolved solids (TDS), density, dissolved inorganic carbon, and conductivity/resistivity. The cations, anions, TDS, density, and conductivity/resistivity provide details of the overall geochemistry of these aquifers. Changes in these parameters during the injection phase of the project may provide an indication of CO_2 or brine movement above the confining layer. While pH and alkalinity may be indicators of CO_2 migration above the confining layer, the dissolved inorganic carbon analysis could provide direct evidence of CO_2 migration into these formations. Stable isotopes of C (in dissolved inorganic carbon), O, and H may provide an indication of fluid or CO_2 migration into the deep ACZ aquifers and may also provide information about the origin of any migrating fluids. The presence of Carbon-14 may provide an indication of CO_2 migration into the deep ACZ aquifers as any naturally occurring Carbon-14 originally in these aquifers would have decayed long ago.

The relative benefit of each analytical measurement will be evaluated throughout the design and initial injection testing phase of the project to identify the analytes best suited to meeting project monitoring objectives under site-specific conditions. If some analytical measurements are shown to be of limited use, they will be removed from the analyte list and not carried forward through the operational phases of the project. Any modification to the parameter list in Table 7-6 will be made in consultation with the UIC Program Director.

There are no plans to use tracers during operations. However, as the monitoring plan is designed to be adaptive as project risks evolve over time, this decision may be re-assessed later.

Parameters	Analytical Methods
Cations (Na, Ca, Mg, Ba, Sr, Fe, K)	ASTM D1976
Anions (Cl, Br, SO_4)	ASTM D4327
pH	ASTM D1293
Alkalinity	ASTM D3875
Total Dissolved Solids (TDS)	ASTM D5907
Density	ASTM D4052
Dissolved Inorganic Carbon	ASTM D513-11
Conductivity/Resistivity	ASTM D1125
Stable Isotopes of C, O, and H	ASTM STP 573
Carbon-14	

Table 7-6: Summary of analytical and field parameters for groundwater samples.

7.5.3 Monitoring and Sampling Methods

Pressure and temperature sensors will be placed in the tubing strings of the ACZ monitoring well to allow measurement of these parameters within the Gunter Sandstone and Galesville Sandstone. The wells will be configured to isolate these formations, so gauges measure the pressures/temperatures of these geologic formations separately. The gauges will be memory-style gauges (Pioneer Petrotech PPS25 or similar), that record and store data within the gauge. The gauges will be programmed to measure and record pressure and temperature every minute and would be set in the well three months prior to the start of injection to obtain baseline data. A pair of gauges will be placed in each zone to limit the possibility of data loss, and the gauges will be retrieved so that the data can be downloaded on a quarterly basis. The gauges will be placed back in the well after the data download.

For fluid sampling, a bailer or pump system will be used to collect the water samples. Prior to sample collection the well will be purged to remove stagnant water from the well and ensure representative water is collected from the formation. The amount of water that will be purged will be determined by the volume of water and/or field parameter stabilization. The fluid purged from the well will be monitored for field parameters, such as pH, specific conductance, and temperature, using a calibrated water quality meter (Horiba U-53, or similar). Once these parameters stabilize, it will be an indication that representative formation fluid is in the well at the time the sample is collected.

Preservation, preparation methods, container type, and holding times for the analyte classes are presented in Table 7-7. The analytical methods for the metals require acidification with nitric acid, and the samples will be filtered. The remainder of the analyses do not require preparation or preservation other than chilling the samples. The samples will be collected in either glass or

polyethylene bottles ranging in size from 50 milliliters (mL) to 1.5 liters (L). Hold times from the analytes range from 7 days for TDS to 1 year for the oxygen and hydrogen isotopes.

Parameters	Preservation/Preparation	Container	Holding Time
Total Metals by ICP Na, Ca, Mg, Ba, Sr, Fe, K	HNO_3 to pH<2, Filter 4-µm	1.5 L Poly	6 months
Anions Cl, Br, SO_4	Cool, 4±2°C, no chemical preservation	1 L Poly	28 days
pH	Cool, 4±2°C, no chemical preservation	1 L Poly	None
Alkalinity	Cool, 4±2°C, no chemical preservation	1 L Poly	28 days
Total Dissolved Solids	Cool, 4±2°C, no chemical preservation	1 L Poly	7 days
Specific Gravity	None	1 L Poly	None
Dissolved Inorganic Carbon	None	1 L Poly	7 days
H and O Stable Isotopes	None	50 mL Glass	1 year
C Stable Isotopes	Cool, 4±2°C, no chemical preservation	150 mL Poly	14 days
Carbon-14	Cool, 4±2°C, no chemical preservation	150 mL Poly	6 months

Table 7-7: Preservation methods, container type, and holding times for analyte classes.

7.5.4 Laboratory to be Used/Chain of Custody Procedures

The geochemical analyses will be performed by Intertek Laboratories and the isotopic analyses will be performed by Isotech Laboratories. These laboratories may be substituted with other accredited laboratories with equivalent capabilities without modification to the Testing and Monitoring Plan. Samples will be tracked using appropriately formatted chain-of-custody forms. See the QASP for additional information (Appendix 7.A).

7.6 Mechanical Integrity Testing

7.6.1 Internal Mechanical Integrity Testing

Internal mechanical integrity refers to the integrity or seal within the long casing string between the long casing string, tubing, and packer. The quality of this seal can be confirmed with an MIT and annular pressure monitoring. Both methods will be used during the injection phase of this project to monitor and confirm internal mechanical integrity. Table 7-8 presents the details for conducting the annular pressure MIT and the annular pressure monitoring.

Testing/Monitoring Method	Frequency	Location of Monitoring	Parameters Measured
Annular Pressure MIT	After completion or workover	Tubing/casing annulus	Ability to hold pressure testing
Annular Pressure Monitoring	Continuous	Tubing/casing annulus	Pressure, temperature, annular fluid volume

Table 7-8: Internal mechanical integrity monitoring details.

After the packer, tubing, and downhole equipment have been re-installed, the tubing/casing annulus will be filled with a corrosion-inhibited fluid, such as a potassium chloride (KCl) solution with additives. The temperature of the annular space will be allowed to stabilize, and an annular pressure MIT test will be conducted to ensure that there are no leaks in the tubing, casing, or packer. This approach is also described in the Pre-Operation Testing Program (Permit Section 5.0). The annular pressure test will be performed by pumping additional annular fluid into the annulus to increase the pressure to a pressure that exceeds the maximum injection pressure. The annular pressure will be monitored for a minimum of thirty-minutes (EPA, 2008). A change in pressure less than 3% of applied surface pressure would indicate normal internal mechanical integrity. If a pressure loss greater than 3% is observed, the cause of the poor mechanical integrity will be identified and corrected. Following the annular pressure test, the annular pressure will be relieved by releasing the fluid to a vessel for volumetric measurement. The volume of the recovered liquid returned from the annulus is expected to be proportional to the volume of the annulus and the amount of pressurization.

The annular pressure test will be repeated any time the packer has been released, for instance, during well workovers. An annular pressure test may also be repeated if there is an indication of lost internal integrity.

In addition to the annular pressure MIT, the annular pressure will be continuously monitored throughout the injection period in conjunction with the annular pressure monitoring and control system to ensure internal mechanical integrity. Once injection commences, injection pressure, annular pressure, and annular fluid volumes will be monitored continuously to ensure that internal well integrity and proper annular pressure is maintained.

If a change in the annular pressure or annular fluid volume displays a change of greater than 20% from baseline conditions, the cause of the change will be investigated. Note that changes in the temperature of the injection stream can result in changes in the temperature of the annular space and variations in annular pressure. Initial investigations would focus on correlations between the temperature of the injection stream and the variations in annular pressure.

7.6.2 External Mechanical Integrity Testing (40 CFR 146.90 (e))

Marquis Carbon Injection, LLC will conduct external integrity testing annually to meet the requirements of 146.89(c) and 146.90(e).

7.6.2.1 Testing Location and Frequency

External mechanical integrity refers to the absence of fluid movement through channels between the long casing string and the borehole or the intermediate casing string. Migration of fluids through this zone could result in contamination of USDWs; therefore, the external integrity of the MCI CCS 3 well will be confirmed throughout the injection phase of the project.

Temperature measurements will be acquired in the MCI CCS 3 well to monitor and ensure external mechanical integrity of the well. A baseline temperature measurement will be acquired in the MCI CCS 3 well after the well has been completed and the temperatures have returned to static conditions. Following the baseline log, temperature measurements will be acquired annually after the start of injection. The log will be run during a period without CO_2 injection and will be conducted over the entire well with the tool being conveyed through tubing above the packer. Temperature logging will also be used to monitor the external mechanical integrity of the deep monitoring wells on an annual basis (Table 7-9).

Test	Well	Depth Range (ft, MD)	Schedule
Temperature Measurements	Injection	0 – 3,100 (Upper Mt. Simon)	Annually
	Deep monitor	0 – 3,100 (Upper Mt. Simon)	Annually
Oxygen Activation Log	Injection	0 – 3,100 (Upper Mt. Simon)	As required
	Deep monitor	0 – 3,100 (Upper Mt. Simon)	As required

Table 7-9: External mechanical integrity tests.

7.6.2.2 Testing Details

The data from each annual logging event will be compared to the baseline log to determine if there are any inconsistencies between the logs. If inconsistencies appear, the cause of the deviations will be determined, and an oxygen-activation log will be performed over the zone where the inconsistency was found to substantiate results of the temperature measurements.

7.7 Pressure Fall-Off Testing (40 CFR 146.90 (f))

Marquis Carbon Injection, LLC will perform PFO tests during the injection phase as described below to meet the requirements of 40 CFR 146.90(f).

PFO testing involves the measurement and analysis of pressure data from a well after it has been shut-in. PFO tests provide the following information:

- Confirmation of hydrogeologic reservoir properties such as injectivity and average permeability
- Formation damage (skin) near the wellbore, which can be used to diagnose the need for well remediation/rehabilitation
- Changes in reservoir performance over time, such as long-term pressure buildup in the storage formation, that may indicate formation damage
- Average reservoir pressure that can be used to calibrate modeled predictions of reservoir pressure to verify that the operation is responding as modeled/predicted

7.7.1 Testing Location and Frequency

PFO testing will be performed in the MCI CCS 3 well once every five years during the injection operations. However, additional PFO testing may be performed opportunistically if the system is shut down for a maintenance event, and the fall-off data may be collected and analyzed. In addition, data from these tests can be used to determine the duration of shut-in desired for the scheduled PFO testing. The scheduled PFO tests will likely be performed during scheduled shutdown events to prevent additional system downtime.

7.7.2 Testing Details

A PFO test has a period of injection followed by a period of shut in. The bottom-hole pressure is then monitored and recorded for sufficient time during both phases of the testing to make a valid observation of the pressure fall-off curve. The optimal duration for the shut-in periods will be determined through the opportunistic PFO test completed prior to the first scheduled PFO. To reduce the wellbore storage effects attributable to the pipeline and surface equipment, the well will be shut-in at the wellhead nearly instantaneously with direct coordination with the injection facility operator. The programed injection rate will be maintained for a minimum of one week prior to the PFO. Additional data from the month prior to shut-in will also be included in the analysis of the PFO test. Downhole and wellhead pressure gauges will be used to record and monitor bottomhole pressures during the injection period and the fall-off period. Specifications for the pressure gauges are provided in the QASP.

Reservoir pressures will be measured to capture the change in bottom-hole pressure throughout the test period; this includes the rapidly changing pressures immediately following cessation of injection. The fall-off period will continue until radial flow conditions are observed as indicated by stabilization of the surface pressure and the plateau of the pressure derivative curve. The PFO test may also be truncated if boundary effects are encountered or if radial flow conditions are not observed. In addition to the radial flow regime, other flow regimes may be observed from the PFO test including spherical flow, linear flow, and fracture flow. The shut-in period of the fall off test is expected to last at least five days, but data collected during the opportunistic PFO test

will be used to assess the duration of this phase of the test. Analysis of PFO test data will be done using transient-pressure analysis techniques that are consistent with EPA guidance for conducting PFO tests (EPA, 1998, 2002).

Pressure gauges that are used for the purpose of the PFO test will be calibrated according to the recommendations of the manufacturer and current calibration certificates will be provided with the test results to EPA.

A report containing the PFO data and interpretation of the reservoir ambient pressure will be submitted to the permitting agency within 90 days of the test.

7.8 Carbon Dioxide Plume and Pressure Front Tracking (40 CFR 146.90 (g))

Marquis Carbon Injection, LLC will employ direct and indirect methods to track the extent of the CO_2 plume and the presence or absence of elevated pressure during the operation period to meet the requirements of 40 CFR 146.90 (g).

7.8.1 Plume Monitoring Location and Frequency

Table 7-10 presents a summary of the methods that Marquis Carbon Injection, LLC will use to monitor the location of the CO_2 plume, including the activities, locations, and frequencies. The parameters to be analyzed as part of fluid sampling in the injection zone and associated analytical methods are presented in Table 7-3. The corresponding QA procedures for these methods are presented in the QASP.

Fluid samples will be obtained for analysis from the Mt. Simon Sandstone intervals in accordance with the Pre-Operational Testing Plan. The final sampling interval will be determined after the MCI CCS 3 well has been drilled and the well logs have been analyzed.

PNC logs will be used to identify difference in reservoir fluids near the wells and will be used to aid in monitoring the migration of the injected CO_2. PNC logs operate by generating a pulse of high energy neutrons, subsequently measuring the neutron decay over time and across a wide energy spectrum (Conner et al., 2017).

Target Formation	Monitoring Activity	Monitoring Location(s)	Spatial Coverage	Frequency
Direct Plume Monitoring				
Upper Mt. Simon Sandstone	Fluid sampling	Deep monitor	3,100 – TD ft	Twice/ year until CO_2 breakthrough
Upper Mt. Simon Sandstone	Isotope analysis	Deep monitor	3,100 – TD ft	Once/ year until CO_2 breakthrough
Lower Mt. Simon Sandstone	Fluid sampling	Deep monitor	4,700 ft	Twice/ year until CO_2 breakthrough
Galesville, Eau Claire, and Mt. Simon Formations	PNC logging	Deep monitor ACZ-1	2,600 – TD ft 2,600 – TD ft 2,500 – TD ft	Once/ year Once/ year
Indirect Plume Monitoring				
Galesville, Eau Claire, and Mt. Simon Formations	Time-lapse 3D seismic	Surface	Over project AoR	Every 5 years or 4 million tons injected and as required.

Table 7-10: CO_2 plume monitoring activities.

Baseline PNC logs will be acquired in the deep monitoring, and ACZ monitoring well prior to the start of CO_2 injection. During injection, they will be acquired in both wells twice each year.

Time-lapse 3D surface seismic is proposed as the primary indirect technique to monitor the development of the CO_2 plume during and after injection. A pre-injection baseline 3D seismic survey will be acquired in early 2022 (Figure 7-6). The same seismic survey will then be acquired again at regular intervals, during and after the injection period and will be compared

back to the baseline survey. Various specific processing techniques (Calvert, 2005) will highlight the location of the CO_2 at the time of each subsequent survey acquisition.

At this time, no continuous CO_2 plume monitoring has been planned for the project. Likewise, no phased or adaptive monitoring has been planned for the project in terms of expanding the monitoring network. However, if the AoR is reassessed over the injection phase of the project, the Testing and Monitoring Plan will also be reassessed.

Non Responsive -- Geological information

[redacted]

Figure 7-6: 3D seismic baseline outline.

7.8.2 Plume Monitoring Details

As CO_2 is injected into the Mt. Simon Sandstone, the geochemistry of the fluids and C, O, and H isotopes in the formation are expected to change. Geochemical modelling will be used to predict the geochemical changes to the Mt. Simon Sandstone fluids once data from the Pre-Operational Testing has been analyzed. The results of the geochemical and isotope analysis will be delivered in the form of laboratory reports. Section 7.5 of this document details the sampling procedures that will be used. Table 7-6 summarizes the analytical and field parameters for the fluid sampling. Table 7-7: Preservation methods, container type, and holding times for analyte classes. summarizes the methods, containers, and preparation methods for the fluid sampling. Further information can also be found in the QASP (Appendix 7.A). The project will stop taking fluid samples from the upper Mt. Simon Sandstones once free phase CO_2 is encountered at the sampling ports.

PNC logging will be used to monitor the distribution and saturation of CO_2 adjacent to the wellbores in the ACZ and monitoring wells. The PNC logs will be acquired through the Galesville Sandstone to confirm the absence of CO_2 accumulations along the wellbore above the confining layer.

Technical details on PNC logging tools can be found in the QASP (Appendix 7.A).

Time-lapse 3D surface seismic data will be used to qualitatively monitor the CO_2 plume development and calibrate the computational modeling results over time. The planned 3D seismic surveys are specifically designed for the Marquis Biocarbon Project site. The previously acquired 2D seismic surveys provided insight into site-specific seismic characteristics, including seismic signal attenuation and the impact of background noise associated with the daily operations of the industrial plant. The 3D acquisition parameters will provide significant uplift in data quality beyond what is normally expected from 3D geometry over 2D.

The results of the geochemical and isotope analysis, PNC logging, and time-lapse 3D surface seismic data will all be integrated to develop a comprehensive understanding of the CO_2 plume development over time. PNC logging and time-lapse 3D surface seismic data can be incorporated into the SEM for comparison to the computational modelling predictions at different points in time. The data can be used to constrain the computational modelling results and produce better plume predictions over the course of the project.

If the CO_2 plume monitoring data diverges significantly from the modelled plume predictions, it may result in a reassessment of the AoR as per the AoR and Corrective Action Plan.

7.8.3 Pressure-Front Monitoring Location and Frequency

Table 7-11 presents the methods that Marquis Carbon Injection, LLC will use to monitor the position of the pressure front, including the activities, locations, and frequencies.

QA procedures for these methods are presented in the QASP. The pressure/temperature sensors will be programmed to measure and record pressure and temperature readings every minute. The gauges will be retrieved for data download on a quarterly basis. A pair of gauges will be place in each zone to limit the possibility of data loss.

Target Formation	Monitoring Activity	Monitoring Location(s)	Spatial Coverage	Frequency
Direct pressure front monitoring				
Upper Mt. Simon Sandstone	Pressure Monitoring	Deep Monitor Well	3,100 – 3,500 ft	Continuous
Indirect pressure front monitoring				
Eau Claire and Mt. Simon Formations, and Precambrian Basement	Microseismic Monitoring	Surface Stations	TBD through modelling	Continuous

Table 7-11: Pressure plume monitoring activities

Microseismic data will be recorded from a surface-based network of sensors on a continuous basis. These data will be sent to a cloud-based service via a cellular connection for data processing and archive. Baseline microseismic data will be acquired for four to six months prior to the start of injection operations.

No phased or adaptive monitoring has been planned for the project in terms of expanding the monitoring network. However, if the AoR is reassessed over the injection phase of the project, the Testing and Monitoring Plan will be reassessed (Permit Section 7.0).

7.8.4 Pressure-Front Monitoring Details

Pressure/temperature sensors will be placed on the tubing string of the deep monitor well to monitor the pressures in the upper Mt. Simon intervals (Table 7-11). The gauges will be memory-style gauges, such as Pioneer Petrotech PPS25 or similar, that would record and store the data within the gauge. Refer to the QASP for technical information on the potential pressure/ temperature gauges (Appendix 7.A). The gauges will be placed back in the well after the data download.

The pressure/temperature data will be stored as time stamped data pairs. It is expected that the pressures in the Mt. Simon Sandstone monitoring interval will begin to increase once injection operations begin. These data will be used to calibrate the computational modelling results over the injection and PISC phases of the project. Calibrating the computational model with pressure and temperature data from the storage formation will lead to more accurate predictions of pressure plume behavior over time. The AoR and Corrective Action Plan further describes how the pressure and temperature data will be used to calibrate the computational modelling, and how it might be used to trigger an early reassessment of the AoR (Permit Section 2.0).

The proposed microseismic monitoring array will have multiple surface stations. The number and physical locations of these stations will be determined using a network design process. Each standalone station will likely consist of a seismometer, digitizer, solar panel with battery backup, and a cell modem/ antenna. Triggered data will be processed to provide event magnitude and location information and results will be reviewed by a data processor and event data will be received by the project daily. The event locations will be incorporated in the SEM. Microseismic activity will provide qualitative information on the spatial extent of pressure plume over time.

7.8.5 Time-lapse 3D Seismic Validation using Deterministic Seismic Forward Modeling

A robust deterministic seismic forward modeling project has been undertaken to demonstrate that this technique can indirectly detect subsurface changes associated with CO_2 injection at this site. This modeling project was performed using data acquired at the project site, including Vertical Seismic Profile (VSP) data and wireline logging data recorded in the MCI MW 1 well and 2D seismic data from line MI-IL-4-21.

The initial phase of the project included conditioning the 2D seismic data and integrating the VSP results. Incident angle gathers are derived through ray tracing and an averaged amplitude decay curve was derived. Importantly, this is averaged spatially across 200 pre-stack gathers and temporally over the Mt. Simon (600-900 ms two-way time). This provides a measured, *in situ* amplitude versus offset (AVO) response independent of potential signal contamination.

Using the recorded sonics (compressional and shear) and bulk density logs, a 1.5D, full elastic wave equation forward model was built. This model was conditioned in a manner consistent to the 2D seismic and comparable angle gathers were derived. The corresponding amplitude decay curve was extracted and compared to the 2D seismic equivalent (Figure 7-7).

The modeled (from logs) and measured (from 2D seismic) amplitude decay curves compare very favorably. This implies that we can use seismic data acquired at this site in pre-stack seismic inversion studies to predict subsurface rock properties and how they will change over time as a result on CO_2 injection.

The final phase of the modeling exercise was twofold. A fluid replacement modeling workflow adjusts the pre-injection, recorded sonics (compressional and shear) and bulk density logs to simulate the expected log response after replacement of a portion of the formation water with CO_2. AVO synthetic gathers are then generated using the measured, pre-injections logs and the simulated, post-injection logs. The difference in these pre- and post-injection AVO synthetics quantifies the time-lapse seismic response that can be anticipated with injection of CO_2.

Figure 7-8 illustrates the difference in pre- and post-injection log and seismic amplitude responses for injection into the lower members of the Mt. Simon. This modeling was done for three zones in the Mt. Simon to capture the possible change in seismic response over the entire formation. A measurable change in both the logs and seismic response after fluid substitution of CO_2 is clearly visible in Figure 7-8. Injection into the upper and middle members of the formation gave similar results.

The synthetic, pre-stack gathers were processed to produce angle gathers via a workflow that is applicable to any future processing of the 3D seismic survey. These modeled, processed synthetic responses are presented to show the anticipated effect of injecting CO_2 on the seismic amplitude versus angle (AVA) response. Figure 7-9 captures these modeled changes for injection into the lower members of the Mt. Simon. Injection into the upper and middle portions of the Mt. Simon yielded analogous results. Based on this quantitative analysis, a measurable change in both polarity of the seismic event associate with the top of the injection zone and pre-stack seismic response is expected.

Non Responsive -- Geological information

[redacted]

Figure 7-7: Raw 2D seismic gathers with corresponding conditioned pre stack gathers (top). Forward model built from recorded logs (middle). Comparison of measured amplitude with incidence angle for modeled log response and 2D seismic data (bottom).

Non Responsive -- Geological information

Figure 7-8: Change in simulated log response (left) and modeled time-lapse, pre-stack seismic amplitude difference (right) for CO_2 fluid replacement in lower Mt. Simon.

Non Responsive -- Geological information

[redacted]

Figure 7-9: Change in amplitude versus incidence angle from pre- to post-injection demonstrate a change in the polarity of the seismic event associated with the top of the injection zone (left). AVA attributes derived from post-injection synthetics demonstrate a clear separation of the injection zone from the background trend (right).

This modeling exercise shows that the injection of CO_2 into the proposed intervals appreciably changes the velocities and densities of the formation and thus the seismic response. Changes in the seismic amplitudes and AVO/AVA attributes provide a direct quantification of the changes resulting from CO_2 injection and plume growth. The results of this modeling study strongly indicate that four-dimensional (4D) seismic monitoring is a viable and robust means of long-term monitoring for this site.

7.9 References

American Society of Testing and Materials, 2017. Standard Practice for Preparing, Cleaning, and Evaluating Corrosion Test Specimens, G1-03. 9 p.

Atlantic Analytical Laboratory, 2021. https://atlanticanalytical.com/

Bauer, R. A., Carney, M., & Finley, R. J., 2016. Overview of microseismic response to CO_2 injection into the Mt. Simon saline reservoir at the Illinois Basin-Decatur Project. International Journal of Greenhouse Gas Control, 54(Part 1), 378-388. https://doi.org/10.1016/j.ijggc.2015.12.015.

Calvert, R., 2005, Insights and methods for 4D reservoir monitoring and characterization: SEG, EAGE/SEG Distinguished Instructor Short Course, no. 8.

Conner, A. et al. Developing Best Practices for Evaluating Fluid Saturations with Pulsed Neutron Capture Logging Across Multiple Active CO_2-EOR Fields, Energy Procedia, Volume 114, 2017, Pages 3636-3648, ISSN 1876-6102.

Cosasco, 2021. https://www.cosasco.com/

EPA (United States Environmental Protection Agency). 2002. "UIC Pressure Falloff Testing Guideline." EPA Region 6, August 8, Third Revision; http://www.epa.gov/region6/water/swp/uic/guideline.pdf.

EPA (United States Environmental Protection Agency). 2008. "Determination of Mechanical Integrity of Injection Wells." EPA Region 5, February, https://www.epa.gov/sites/default/files/2015-09/documents/r5-deepwell-guidance5-determation-mechanical-integrity-200802.pdf

Lumley, D. (2019). The Role of Geophysics in Carbon Capture and Storage. In T. Davis, M. Landrø, & M. Wilson (Eds.), Geophysics and Geosequestration (pp. 11-53). Cambridge: Cambridge University Press. doi:10.1017/9781316480724.003

Malehmir, Alireza & Bellefleur, Gilles & Koivisto, Emilia & Juhlin, Christopher. (2017). Pros and cons of 2D vs 3D seismic mineral exploration surveys. First Break. 35. 49-55. 10.3997/1365-2397.35.8.89805.

Nanometrics, 2021, https://www.nanometrics.ca/

United States Environmental Protection Agency, 2013. Geologic Sequestration of Carbon Dioxide: Underground Injection Control (UIC) Program Class VI Well Testing and Monitoring Guidance, EPA 816-R-13-001. 142 p.

United States Environmental Protection Agency, 2011. Contract Laboratory Program Guidance for Field Samplers, EPA 540-R-09-03. 84 p.

Appendix 7.A Quality Assurance and Surveillance Plan

The Quality Assurance and Surveillance Plan is presented in a separate document accompanying this permit application.