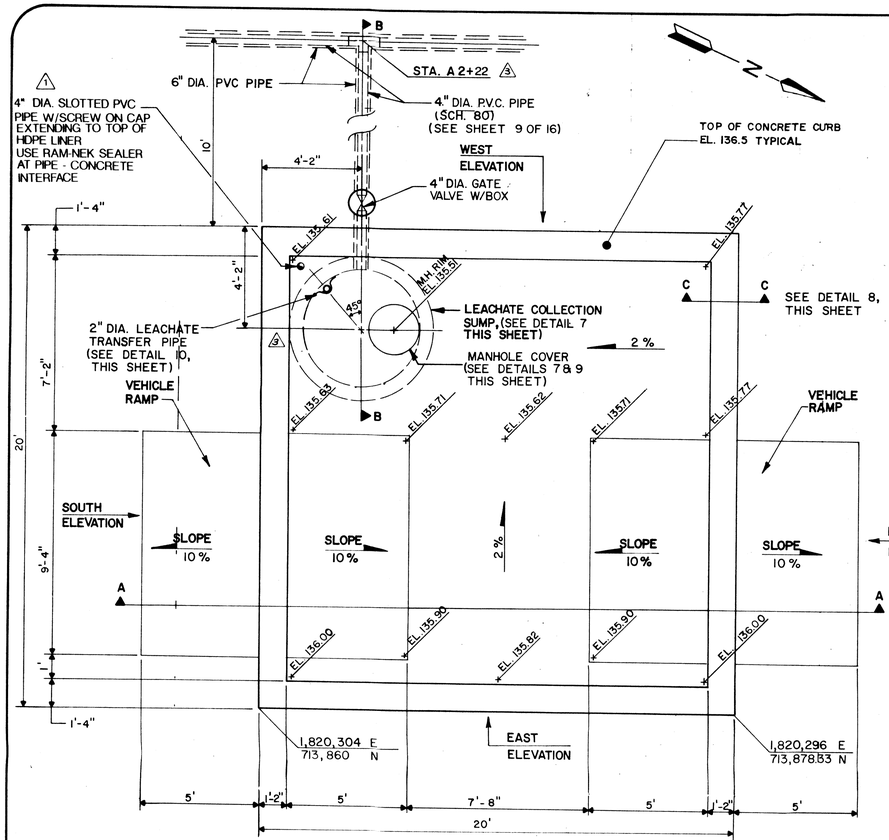

PLAN VIEW
SCALE: 1"=3'

NOTE:
FOR ELEVATION VIEWS (SEE DETAIL 27, SHEET 16 OF 16)

DETAIL 5

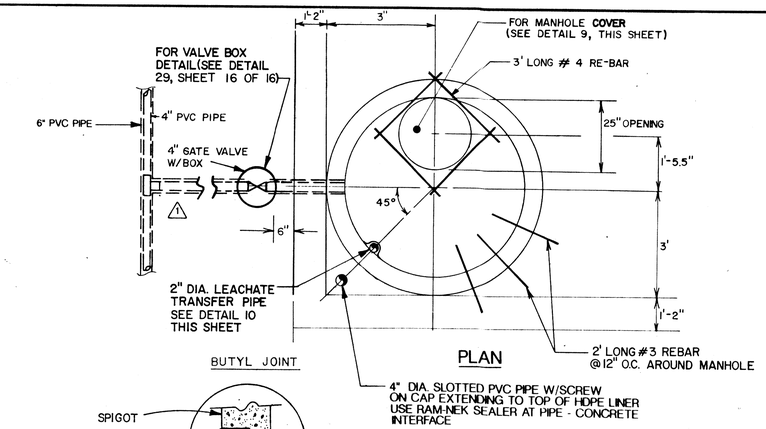

PLAN

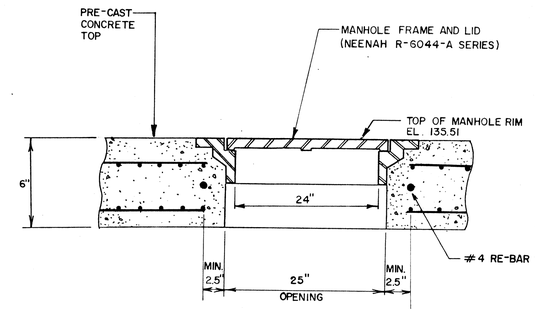

MANHOLE FRAME & COVER DETAIL

N.T.S.

DETAIL 9

MANHOLE DESIGN

MANHOLE DESIGN SPECIFICATIONS CONFORMS TO "PRECAST REINFORCED CONCRETE MANHOLE SECTIONS A.S.T.M. DESIGNATION C478 LATEST REVISION".

CONCRETE COMPRESSIVE STRENGTH 4000 P.S.I.

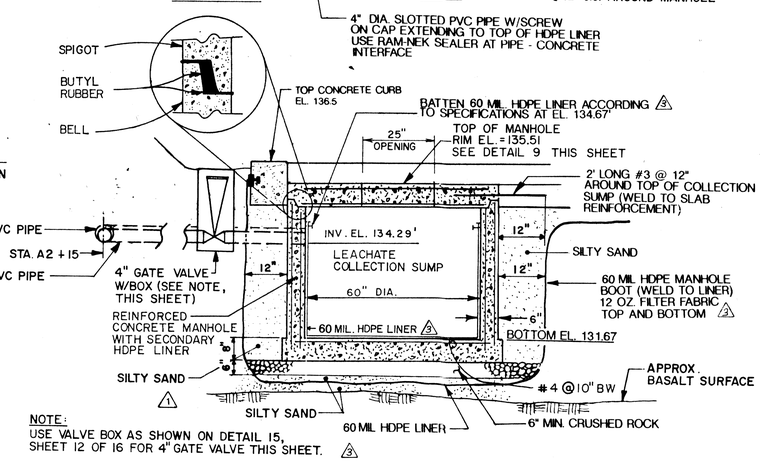

NOTE:
USE VALVE BOX AS SHOWN ON DETAIL 15, SHEET 12 OF 16 FOR 4" GATE VALVE THIS SHEET.

SECTION B-B
PRE-CAST CONCRETE MANHOLE
LEACHATE COLLECTION MANHOLE

N.T.S.

DETAIL 7

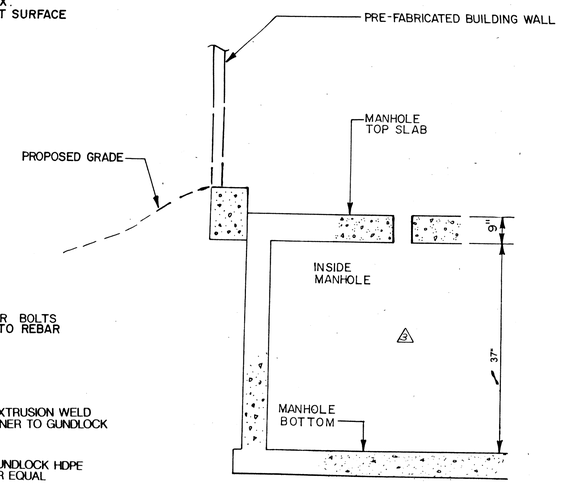

LEACHATE TRANSFER PIPE

N.T.S.

DETAIL 10

RECORD DRAWING

SHEET 10 OF 16

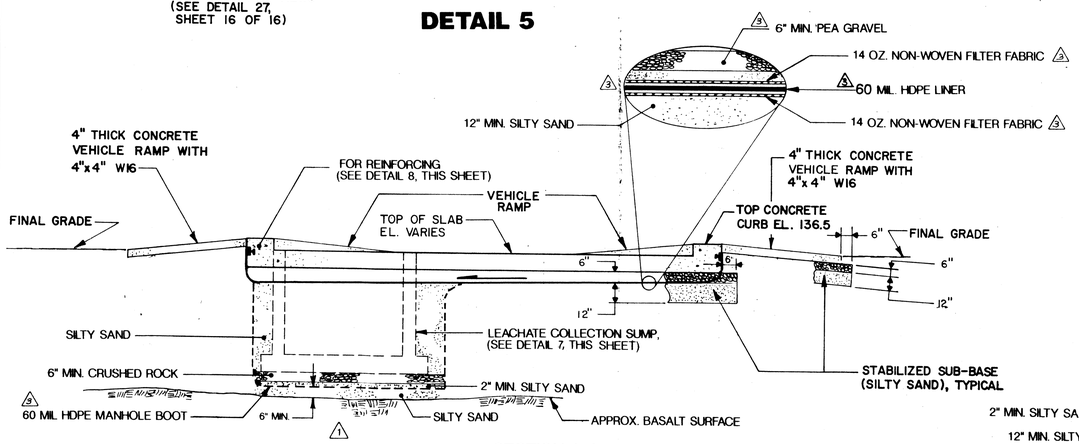

SECTION A-A
SCALE: 1" = 3' - 0"

DETAIL 6

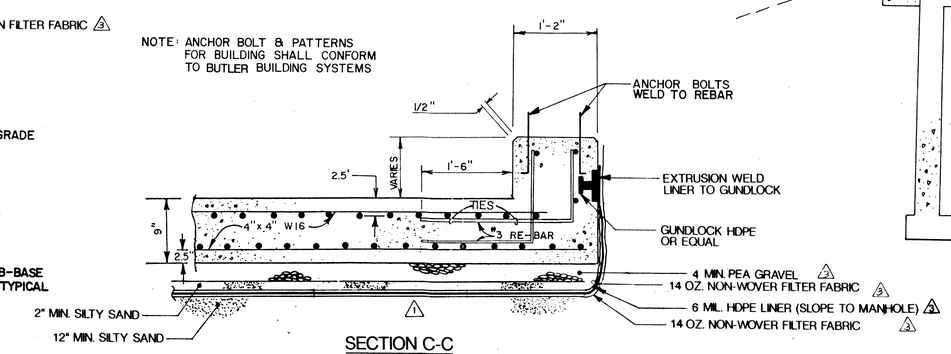

SECTION C-C
SLAB AND CURB

N.T.S.

DETAIL 8

DRAWING CONFIDENTIAL: THIS DRAWING AND ALL INFORMATION CONTAINED THEREON IS AND SHALL REMAIN THE PROPERTY OF G&M CONSULTING ENGINEERS, INC. AS AN INSTRUMENT OF PROFESSIONAL SERVICE. THIS INFORMATION SHALL NOT BE USED, IN WHOLE OR IN PART, WITHOUT THE FULL KNOWLEDGE AND PRIOR WRITTEN CONSENT OF G&M CONSULTING ENGINEERS.

SCALE VERIFICATION
THIS BAR REPRESENTS ONE INCH ON THE ORIGINAL DRAWING:
0 1"
USE TO VERIFY FIGURE SCALE

REV. NO.	DATE	DESCRIPTION	BY	APPR.
1	11-28-89	ADDITION OF SECONDARY CONTAINMENT FOR LEACHATE PIPING AND TRANSFER PAD.	O.D.	JJP
2	9-24-91	REVISED PER REC. DRAW.	A.A.A.	J.G.

DRAWING NO:	FLOO18-CWP-D10		
DRAWN BY:	Ken Carroll	DATE:	May 20, 1989
CHECKED:	D. Duncan	DATE:	May 20, 1989
APPROVED:	J. PETERSOHN	DATE:	MAY 20, 1989

GERAGHTY & MILLER ENGINEERS, INC.

LEACHATE TRANSFER PAD DETAILS

RCRA LANDFILL CLOSURE

MARTIN MARIETTA CORPORATION
THE DALLES, OREGON

BAY REPROGRAPHICS 201904