DER
WASTE MANAGEMENT
SEP 1 5 1989
HARRISBURG REGION

R-585-4-9-31

ENVIRONMENTAL PRIORITIES INITIATIVE
PRELIMINARY ASSESSMENT OF
HAMILTON TECHNOLOGY, INCORPORATED (PA - 2420)
PREPARED UNDER North Queen Street

TDD NO. F3-8903-09
EPA NO. PA-2420
CONTRACT NO. 68-01-7346

FOR THE

HAZARDOUS SITE CONTROL DIVISION
U.S. ENVIRONMENTAL PROTECTION AGENCY

JULY 31, 1989

NUS CORPORATION
SUPERFUND DIVISION

| SUBMITTED BY | REVIEWED BY | APPROVED BY |
|---|---|---|
| for THOMAS BACHOVCHIN<br>PROJECT MANAGER | ANDREW FREBOWITZ<br>SECTION SUPERVISOR | GARTH GLENN<br>REGIONAL OPERATIONS<br>MANAGER, FIT 3 |

Site Name: Hamilton Technology, Incorporated
TDD No.: F3-8903-09

## TABLE OF CONTENTS


| SECTION | | PAGE |
|---|---|---|
| 1.0 | INTRODUCTION | 1-1 |
| 1.1 | AUTHORIZATION | 1-1 |
| 1.2 | SCOPE OF WORK | 1-1 |
| 1.3 | SUMMARY | 1-1 |
| 2.0 | THE SITE | 2-1 |
| 2.1 | LOCATION | 2-1 |
| 2.2 | SITE LAYOUT | 2-1 |
| 2.3 | OWNERSHIP HISTORY | 2-4 |
| 2.4 | SITE USE HISTORY | 2-4 |
| 2.5 | PERMIT AND REGULATORY ACTION HISTORY | 2-7 |
| 2.6 | REMEDIAL ACTION TO DATE | 2-7 |
| 3.0 | ENVIRONMENTAL SETTING | 3-1 |
| 3.1 | WATER SUPPLY | 3-1 |
| 3.2 | SURFACE WATERS | 3-2 |
| 3.3 | HYDROGEOLOGY | 3-2 |
| 3.3.1 | GEOLOGY | 3-2 |
| 3.3.2 | SOILS | 3-5 |
| 3.3.3 | GROUNDWATER | 3-5 |
| 3.4 | CLIMATE AND METEOROLOGY | 3-6 |
| 3.5 | LAND USE | 3-6 |
| 3.6 | POPULATION DISTRIBUTION | 3-7 |
| 3.7 | CRITICAL ENVIRONMENTS | 3-7 |
| 4.0 | WASTE TYPES AND QUANTITIES | 4-1 |
| 4.1 | SOLID WASTE MANAGEMENT UNITS | 4-2 |
| 4.1.1 | WASTEWATER TREATMENT ROOM | 4-2 |
| 4.1.2 | ELECTROPLATING SLUDGE TANK | 4-3 |
| 4.1.3 | SLUDGE FILTER PRESS | 4-4 |
| 4.1.4 | WASTE SOLVENT STORAGE AREA | 4-4 |
| 4.1.5 | SOLVENT RECYCLING STILL | 4-5 |
| 4.1.6 | AIR SCRUBBER | 4-6 |
| 5.0 | FIELD TRIP REPORT | 5-1 |
| 5.1 | SUMMARY | 5-1 |
| 5.2 | PERSONS CONTACTED | 5-1 |
| 5.2.1 | PRIOR TO FIELD TRIP | 5-1 |
| 5.2.2 | AT THE SITE | 5-1 |
| 5.2.3 | WATER SUPPLY WELL INFORMATION | 5-1 |
| 5.3 | SITE OBSERVATIONS | 5-2 |
| 5.4 | EPA PRELIMINARY ASSESSMENT FORM | |
| 6.0 | REFERENCES FOR SECTIONS 1.0 THROUGH 5.0 | 6-1 |

**APPENDICES**


| | | |
|---|---|---|
| A | 1.0 RELEVANT PERMITS | A-1 |
| B | 1.0 PERMIT-RELATED CORRESPONDENCE | B-1 |
| C | 1.0 CLOSURE PLAN AND CORRESPONDENCE | C-1 |
| D | 1.0 HAMILTON TECHNOLOGY WASTE GENERATION REPORT | D-1 |
| E | 1.0 WASTE SHIPPING MANIFESTS | E-1 |
| F | 1.0 TREATMENT SYSTEM DESCRIPTION | F-1 |
| G | 1.0 TREATED EFFLUENT SAMPLING RESULTS | G-1 |

# SECTION 1

# 1.0 INTRODUCTION

## 1.1 Authorization

NUS Corporation performed this work under Environmental Protection Agency Contract No. 68-01-7346. This specific report was prepared in accordance with Technical Directive Document No. F3-8903-09 for the Hamilton Technology, Incorporated site, located in Lancaster, Pennsylvania.

## 1.2 Scope of Work

NUS FIT 3 was tasked to conduct an Environmental Priorities Initiative (EPI) preliminary assessment of the subject site.

## 1.3 Summary

The Hamilton Technology facility is a 4-story brick building, approximately 210,000 square feet in size, located in downtown Lancaster, Pennsylvania. Hamilton Technology, Incorporated, which employs 700 persons, designs, manufactures, and assembles arming devices under government contract. Wastes are generated, treated, and temporarily stored at this facility.

Production processes that generate the wastes include the manufacture and assembly of arming devices, the electroplating of metal parts, anodizing of aluminum, chromate conversion coating, chemical (acid) polishing, and bright dipping of metal parts. Treatment is utilized for chromium, cyanide, and acid/alkaline waste streams. The treated effluent from the destruction, reduction, and neutralization of the wastes is analyzed on a quarterly basis as required by the city of Lancaster, prior to discharge to the city sewer. The treated discharge has permit-by-rule status.

Sludge produced from the wastewater treatment process is run through a filter press, drummed, and hauled off site. The sludge is laden with cadmium, chromium, cyanide, and other hazardous constituents. Waste oils and waste solvents from all operations are transferred to a collection station and placed into labeled drums. These drums are hauled off site to a licensed disposal facility.

Raw materials, consisting of freon, 1,1,1-trichloroethane, and other flammable solvents in 55-gallon drums, are stored in a large room with a sunken concrete floor. The entire room is a containment area in the event of a spill. In addition, this room contains a large 5,000-gallon freon tank.

Hamilton Technology does not store any waste materials for longer than 90 days. Wastes are hauled by three separate companies to approved sites. This facility has no outside areas; all operations are inside the building.

All residents are supplied potable water by a public distribution system. There are no groundwater users in the site vicinity.

FIT 3 has identified six solid waste management units (SWMUs) at the facility. They are the wastewater treatment room, the electroplating sludge tank, the filter press, the waste solvent storage area, the solvent recycling still, and the permitted air scrubber. In addition, areas of concern include degreasers at the assembly line area, numerous 5-gallon (or less) metal safety cans, filled with various solvents and located at many work areas, and the 5,000-gallon freon tank. For a detailed description of each of the above-mentioned SWMUs and the wastes managed, please refer to section 4.1 of this report.

No evidence of releases or Notices of Violation have been discovered at this facility.

# SECTION 2

## 2.0 THE SITE

### 2.1 Location

The Hamilton Technology facility is located at 101 North Queen Street in Lancaster, Pennsylvania (see figure 2.1, page 2-2). The coordinates of the site are north 40° 02′ 24″ latitude and west 76° 118′ 21″ longitude. The facility may be located on the Lancaster, Pennsylvania 7.5 minute series United States Geological Survey (U.S.G.S.) topographic map. It is 7.5 inches north and 7.75 inches west of the southeastern corner of the map.[1]

### 2.2 Site Layout

The facility is a four-story brick building. There is no outside property. Floor nos. 3 and 4 (233 by 254 feet) are assembly areas. Long assembly line and individual work areas fill each floor. Two degreasers are located on floor no. 3 and one is on floor no. 4. Numerous five-gallon or less metal cans for solvents are scattered throughout the work areas. The second floor consists of office and clerical space. No waste is handled in this area.[2,3]

The first floor comprises the finishing and machining areas, the chemistry laboratory, the tool shop, the solvent storage area, the waste solvent and sludge storage area, the filter press, and various other work areas. The floor is predominantly a large open work area with various assembly and manufacturing areas and production devices arranged throughout. Along the walls are separate rooms containing the chemistry laboratory and storage areas (see figure 2.2, page 2-3).[2]

The northeastern corner of the floor contains the raw products storage room. It is a 43- by 55-foot room with a sunken concrete floor. Numerous 55-gallon drums of assorted solvents and a 5,000-gallon freon tank are located in this room. Adjoining this room, to the west, are the sludge tank and waste solvent storage area. It is an 18- by 43-foot area. The 2,693-gallon sludge tank is below the floor level in a pit measuring 18 by 18 feet by 40 inches deep. A steel grating on top of the tank allows for storage of 55-gallon drums of waste solvent. The filter press and solvent recycling still are in a 43- by 42-foot area to the west. The floor is concrete, but the area was not diked. Various 55-gallon drums were stored in this area, including dried sludge awaiting disposal. A large freight elevator, through which drummed sludge and waste solvents are loaded by the disposal company, is just south of the filter press.[2,3]

SOURCE: (7.5 MINUTE SERIES) U.S.G.S. LANCASTER, PA QUAD.

FIGURE 2.1

## SITE LOCATION MAP

## HAMILTON TECHNOLOGY, IND., LANCASTER, PA

SCALE 1:24000

NUS CORPORATION

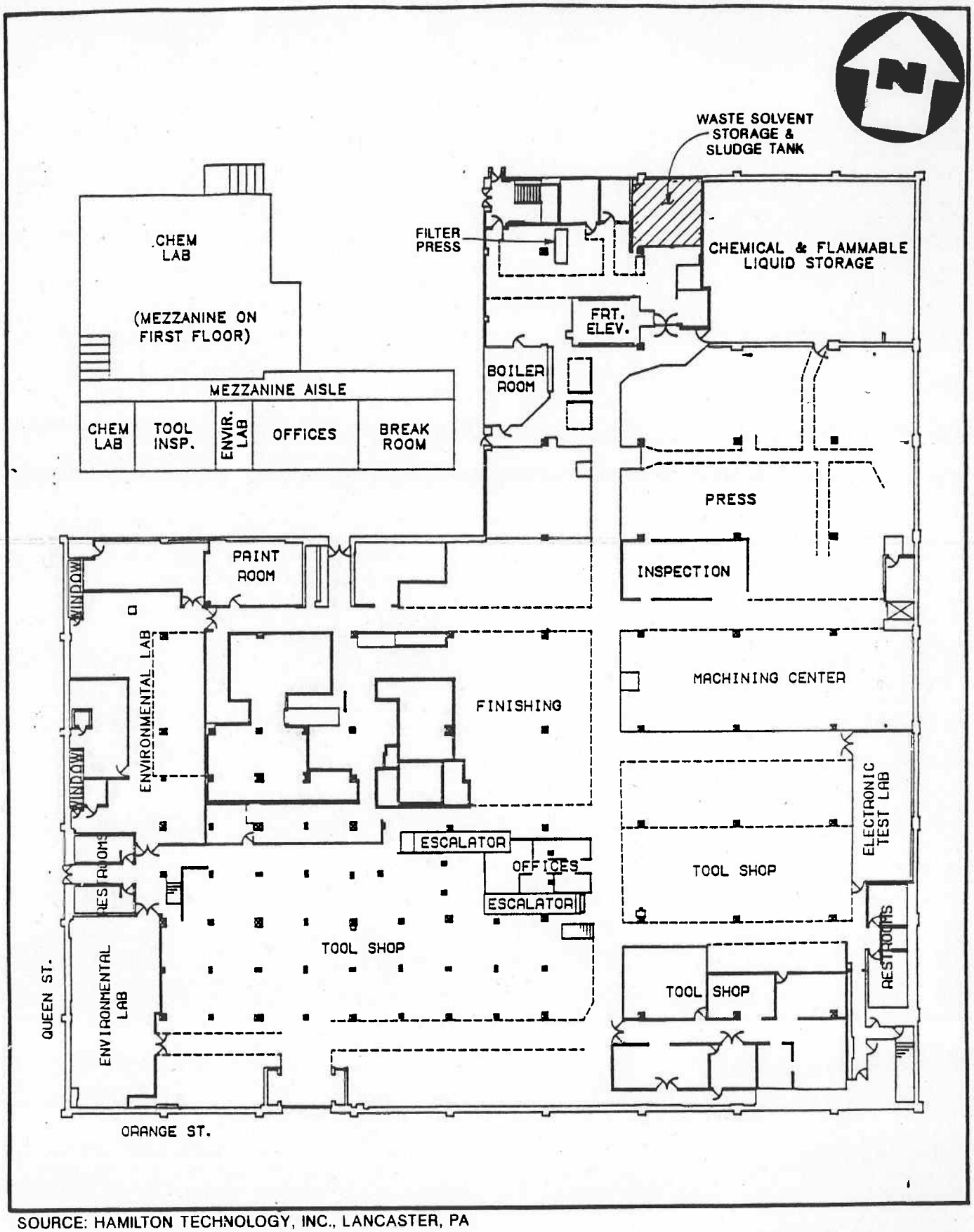


SOURCE: HAMILTON TECHNOLOGY, INC., LANCASTER, PA

FIGURE 2.2

SITE SKETCH (FIRST FLOOR)

HAMILTON TECHNOLOGY, IND., LANCASTER, PA

( NO SCALE )

NUS CORPORATION

A Halliburton Company

The wastewater treatment system is in a basement area on the western side of the building. It is roughly 45 by 32 feet in size, with a concrete floor and diked doors for containment purposes. The system utilizes approximately 13 separate tanks, ranging in volume from 200 to 3,500 gallons, and each representing various stages in the treatment process. Three distinct waste streams, cyanide, chromium, and acid/alkali, pass through separate stages until eventually discharging into the main sump. The main sump flows into the clarifier, which goes into the sludge thickening tank and is eventually pumped to the sludge tank in the other room. The tanks, connected in series, are situated above concrete catch basins. All tanks are labeled; all chemicals are added automatically. The treated effluent is discharged from this room and is sampled there. A second clarifier and thickening tank was added in 1987 for tumbling wastes from the finishing operations. The resultant sludge goes to the same tank for later disposal.[2,3] For a general schematic of facility-wide waste disposal, see figure 2.3 (page 2-5). A specific flow diagram of the waste treatment system is shown in figure 2.4 (page 2-6).

## 2.3 Ownership History

The building was originally Hess' Department Store. In September 1980, the building was bought by Hamilton Technology, Incorporated, a subsidiary of HMW Industries. The Hamilton Division of HMW Industries was taken over by the Clabir Corporation in early 1986. The facility changed hands again in late 1988, when it was purchased by the present owner, the Olin Corporation.[3]

## 2.4 Site Use History

The building was constructed in the early 1970s for Hess' Department Store. It is not known how long Hess' operated at this location; the building was vacant when purchased by HMW Industries in September 1980. After refurbishing, Hamilton Technology started production in the spring of 1981. Hamilton operates as a designer and manufacturer of arming devices for the government.[3]

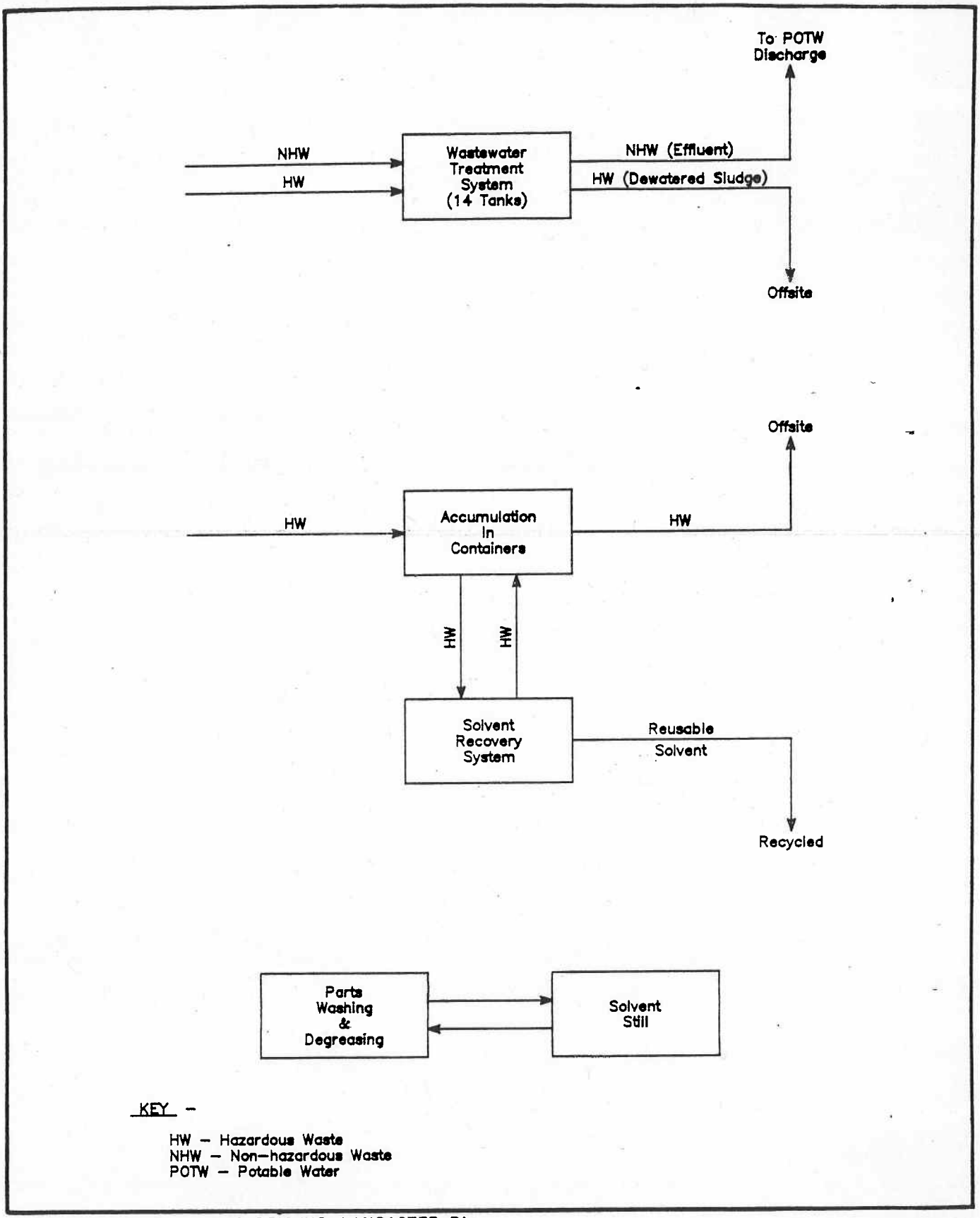


SOURCE: HAMILTON TECHNOLOGY, INC., LANCASTER, PA

FIGURE 2.3

FACILITY WIDE WASTE DISPOSAL SCHEMATIC
HAMILTON TECHNOLOGY, IND., LANCASTER, PA

( NO SCALE )

NUS CORPORATION
A Halliburton Company

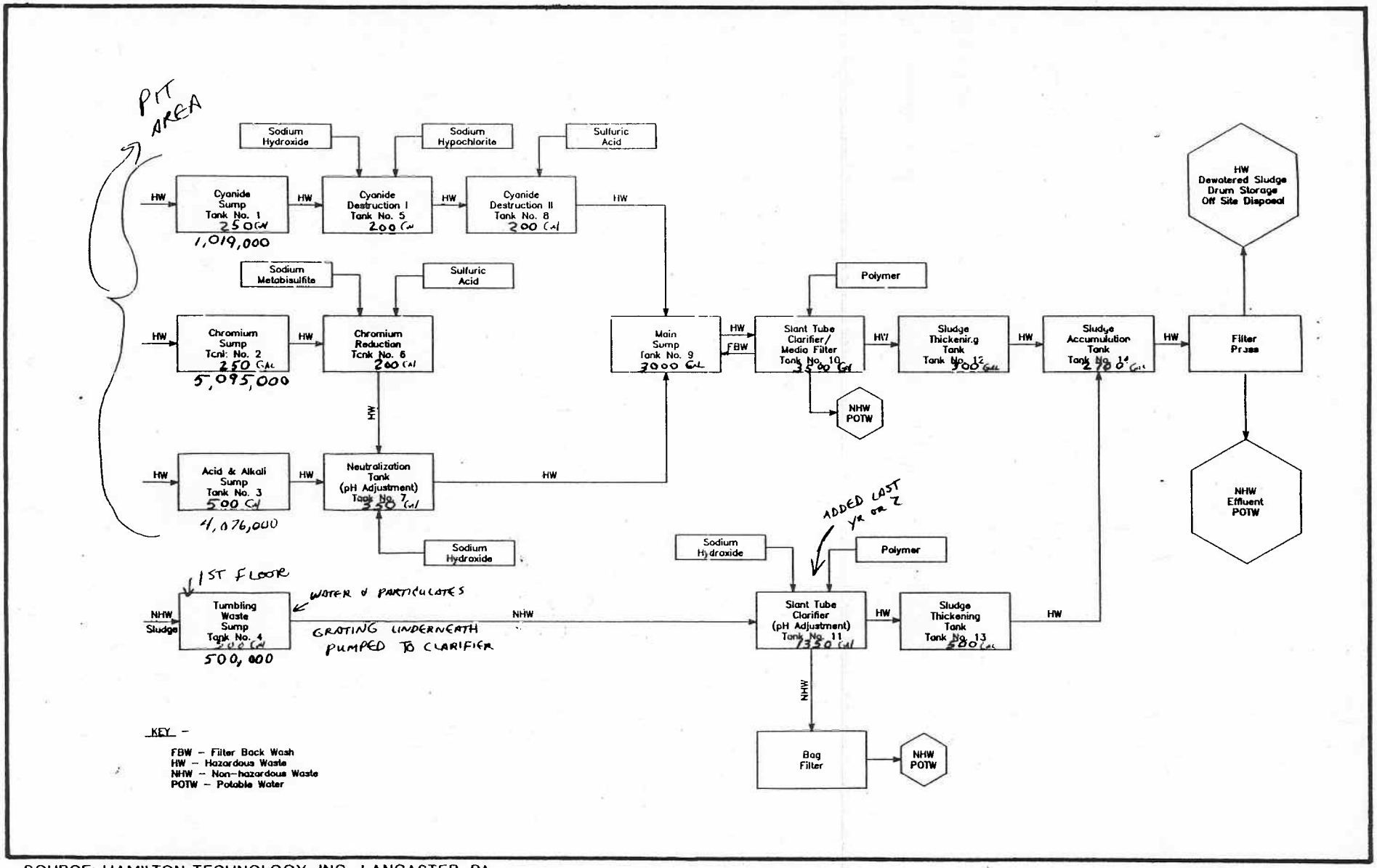


SOURCE: HAMILTON TECHNOLOGY, INC., LANCASTER, PA

WASTE WATER TREATMENT SYSTEM

HAMILTON TECHNOLOGY, IND., LANCASTER, PA

( NO SCALE )

FIGURE 2.4

NUS CORPORATION

## 2.5 Permit and Regulatory Action History

Hamilton Technology, Incorporated operates as a generator and treater of hazardous wastes. A Notification of Hazardous Waste Activity was filed in August 1980 and EPA I.D. No. PAD000800680 was assigned. A Part A Hazardous Waste Permit Application was submitted to EPA in November 1980. On July 21, 1981, EPA acknowledged the company's Part A submittal, and the facility began storing and treating wastes on site under interim status. Identified hazardous wastes that the facility was permitted to handle were classified as D001 (ignitability); D003 (reactivity); D006, D007, and D011 (EP toxicity); F001 (spent halogenated solvents); F003 and F005 (spent nonhalogenated solvents); F006 (electroplating sludge); and F007, F008, and F009 (plating bath sludges and solutions). A Part B application to store hazardous wastes was submitted in April 1983 and was withdrawn in July 1984, since the facility would not be storing wastes longer than 90 days.[3,4,5,6] See appendix A for relevant permits.

The facility treats and discharges effluent to the Lancaster sewer system. Permit-by-rule status for this situation was granted by the Pennsylvania Department of Environmental Resources (PA DER) in June 1983 (permit no. 28249). The city of Lancaster has allowed the discharge since April 1981 (permit no. 1020). Quarterly sampling of the treated discharge is required.[3,7,8] See appendix B for relevant correspondence.

Other valid permits issued by PA DER are for the vapor degreasers (36-327-003,005) and an air scrubber (36-318-102). A solid waste incinerator (City of Lancaster Permit No. 400451) was removed in the early 1980s.[3,9]

A closure plan was submitted to PA DER for a hazardous waste storage area in May 1985. A small room used to store waste solvent was emptied of all wastes and cleaned. The room, 42 by 43 feet in size, was in the far northwestern corner of the first floor, to the north and west of the freight elevator. This area currently contains the filter press and recycling still. All wastes are now in the waste solvent storage and sludge tank room (see figure 2.2, page 2-3). The plan was accepted by PA DER in June 1985.[3,10] See appendix C for the closure plan and related correspondence.

All wastes are disposed by licensed personnel less than 90 days after generation.[3]

## 2.6 Remedial Action to Date

According to Hamilton Technology, no remedial work has been required at the facility. No spill reports or Notices of Violation have been issued by PA DER, EPA, or the city of Lancaster.[3]

# SECTION 3

## 3.0 ENVIRONMENTAL SETTING

### 3.1 Water Supply

Water supply to the study area is provided by groundwater and surface water sources. The predominant supply system is operated by the city of Lancaster. This system maintains two surface water intakes: one on the Conestoga River and one on the Susquehanna River. Areas beyond the distribution system of this public supplier are expected to maintain individual domestic wells.[11]

The City of Lancaster Municipal Authority services the population within the majority of the study area and a large population outside of the study area. The Conestoga River intake has an allocated capacity of 12.0 million gallons per day (mgd), and the Susquehanna River intake is allocated 24.0 mgd. This system serves a total of 32,517 customers with the following breakdown and usage figures: 29,863 residential (5.0 mgd), 2,491 commercial (4.1 mgd), and 163 industrial (3.9 mgd). The Conestoga intake is approximately 1.6 miles east-northeast of the site. If topographic constraints prevail, the drainage from the site would enter the Conestoga River below the intake. However, due to the likelihood of a developed storm sewer controlling runoff, the actual drainage path from the site may contradict the apparent surface topography. Information regarding the storm sewer system of the city of Lancaster is not currently available. The Susquehanna River intake, 10 miles west-southwest of the site, is 9 stream miles above its confluence with the Conestoga River. Therefore, drainage from the site is not expected to enter this intake.[1,11]

Residents in areas outside of the city of Lancaster municipal supply system are expected to maintain individual domestic wells. These wells may potentially draw from any of the carbonate formations that underlie the study area. However, based on the locations of the unserviced areas, most individual domestic wells are presumed to draw from the Conestoga Formation. The closest residence to the site, in an unserviced area, is approximately 1.1 miles to the south. Based on location, the well maintained at this residence appears to draw from the Conestoga; however, no specific construction information is available. Within the study area, there are an estimated 1,071 people utilizing individual domestic wells.[11,12]

## 3.2 Surface Waters

All surface water drainage is to the Conestoga River watershed. The Conestoga River, which flows from northeast to southwest in large meandering bends, is one to 1.5 miles east of the facility. Warm-water fish and flora are indigenous to the river. A surface water intake for the City of Lancaster Municipal Authority is located upstream on the river, approximately 1.6 miles northeast of the facility.[1,13]

The Conestoga River is joined by Mill Creek approximately 2.75 miles south of Hamilton Technology. Mill Creek is classified as a high-quality water and provides a cold-water habitat for indigenous fish and flora. The Conestoga River eventually discharges into the Susquehanna River, 10 miles southwest of the facility. There are no wetlands within the study area.[1,13]

## 3.3 Hydrogeology

The geologic and hydrogeologic conditions in the study area were researched as part of the site investigation. A preliminary literature review was conducted to determine surface and subsurface geologic conditions, soil character, and the status of groundwater transport and storage.

### 3.3.1 Geology

The site is located within the Conestoga Section of the Piedmont Physiographic Province. This section is a lowland underlain chiefly by shale and carbonate rocks. It is bounded to the north by Triassic age rocks and to the south by uplands formed on crystalline igneous and metamorphic rocks. The resulting topography consists of gently rolling hills and valleys. The study area, underlain by carbonates, stands between 200 and 300 feet below the adjacent areas, underlain by noncarbonates. Structurally, the area has been subject to severe and recurring stress throughout geologic history. As a result, the underlying strata have been extensively folded and faulted. In the study area, the folding is steep and isoclinal.[12,14,15]

Specifically, the site is underlain by the Conestoga Formation of Cambrian and Ordovician age (see figure 3.1, page 3-4). This formation consists generally of gray, finely to coarsely crystalline limestone that commonly contains clay laminae. In the northeastern portion of the study area, this formation may also contain dolomite. The thickness of the Conestoga Formation beneath the site is estimated to be in excess of 1,000 feet.[12,14,15]

Stratigraphically underlying the Conestoga Formation and cropping out 2.2 miles north of the site is the Zooks Corner Formation. This formation is Cambrian in age and consists of thin- to thick-bedded, medium gray, very finely crystalline dolomite. This dolomite may also contain platy or shaly beds and many planar features, such as color banding, hard siliceous laminae. Also, this formation may be extensively interfingered with the underlying Ledger Formation. The thickness of the Zooks Corner Formation in the study area is estimated to be approximately 1,500 feet.[12,14]

Conformably underlying the Zooks Corner Formation is the Ledger Formation, also of Cambrian age. The Ledger Formation is also unconformably overlain by the Conestoga Formation throughout much of the study area. The Ledger crops out 0.8 mile north of the site and consists predominantly of massive, very light gray to light gray, medium to coarsely crystalline, sparkling dolomite. This formation may also contain a few laminae of limestone. The thickness of the Ledger Formation in the study area is estimated to be approximately 1,000 feet.[12,14]

Stratigraphically underlying the Ledger Formation is the Kinzers Formation of Early Cambrian age. This formation crops out over a small area, 2.5 miles northwest of the site. The lithology of the Kinzers is quite varied, although all variations are considered to be distinctive. One common type is thick-bedded to massive, very light gray to pinkish-gray, very finely crystalline limestone. It may also contain prominent anastomosing, argillaceous to silty, laminae and lobate masses, which tend to give rock a reticulated appearance. The Kinzers Formation may also contain considerable percentages of dolomite. The thickness of the Kinzers Formation is estimated to be between 300 and 600 feet.[12,14]

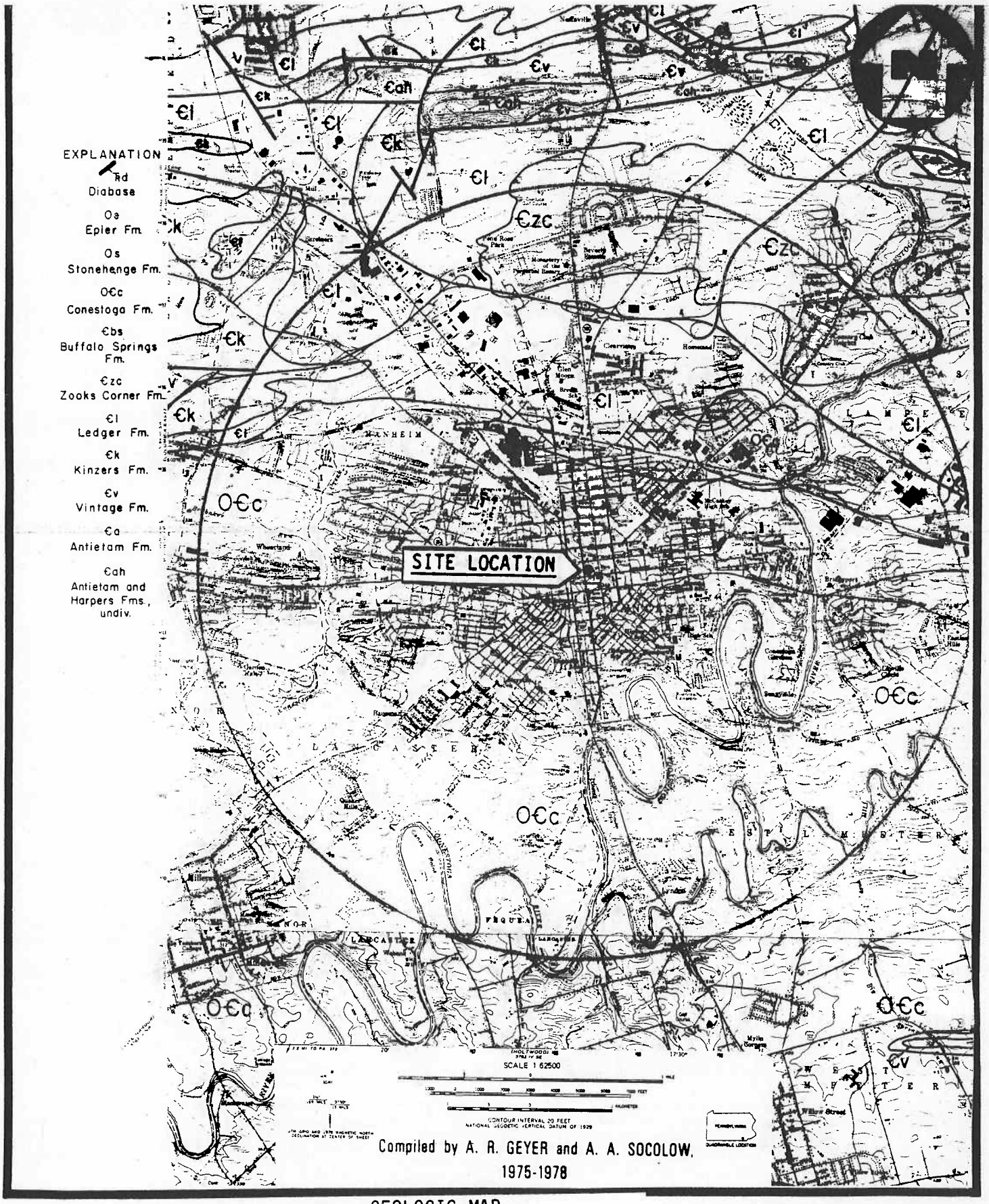


GEOLOGIC MAP

Figure 3.1

Hamilton Tech. Site
Lancaster County, Pennsylvania

NUS CORPORATION

Source: Atlas of Preliminary Geologic Quadrangle Maps of Pennsylvania. Map 61, 1981.

### 3.3.2 Soils

The soils at the site are classified as Urban land by the Soil Conservation Service. This classification is used where 85 percent or more of the surface is covered by roads, parking areas, buildings, or other structures. Also, the Urban land areas are often subjected to cut and fill activities to achieve leveling. Specifically, the site is completely developed, and the majority of the area is covered by the plant building and the parking lot. There are no soil pH or permeability figures presented in the Soil Conservation Survey for the Urban land classification due to its highly variable nature.[16]

### 3.3.3 Groundwater

The Ordovician and Cambrian age carbonates that underlie the study area are, in general, a viable source of water for domestic, industrial, and municipal uses. However, the productivity of these aquifers is considered to be highly variable. The productivity of wells in these carbonate aquifers depends on size, number, and extent of interconnectedness of the openings that occur along bedding and cleavage planes, joints, faults, and other fractures. These carbonate rocks form one complex, heterogeneous, water-table aquifer. There are no known barriers to groundwater flow noted within the study area.[11,12,14]

The uppermost aquifer beneath site is considered to be within the Conestoga Formation. Groundwater in this aquifer is under water-table conditions and is therefore believed to flow in the downward-sloping direction of the overlying topography. The flow direction may also be influenced by the orientation of the bedding and cleavage planes and the lineament of the joints and fractures. Wells in the Conestoga Formation, within Lancaster County, range in depth from 38 to 502 feet, and the median depth is reported to be 105 feet. The specific capacity of these wells ranges from 0.02 to 130 gallons per minute (gpm) per foot of drawdown. The median specific capacity is 2.2 gpm per foot. The reported yields are between 20 and 250 gpm. Two wells located approximately 500 feet south of the site tap the Conestoga Formation. These wells were constructed for industrial uses, and the current status of these wells is unknown. One of the wells is 155 feet deep, and the depth to the static water level is 23 feet below the surface. The second well is 265 feet deep, and the depth to the static water level is 41 feet below the surface. The average specific capacity of these wells is 8.2 gpm per foot.[11,12,14]

The Zooks Corner Formation is statistically less productive than the Conestoga Formation as an aquifer, within Lancaster County. Wells in the Zooks Corner range in depth from 8 to 400 feet, and the median reported depth is 76 feet. The specific capacity of wells in this formation ranges from 0.04 to 46 gpm per foot, and the median is 0.11 gpm per foot. Reported yields range from 3 to 105 gpm.[11,12,14]

The Ledger Formation is statistically comparable to the Conestoga Formation in terms of productivity. Well depths range from 10 to 500 feet, and the median is 78 feet. The specific capacity values range from 0.16 to 135 gpm per foot, and the median is 2.5 gpm per foot. Yields are reported to be between 2 and 550 gpm. The median yield is 30 gpm.[11,12,14]

The Kinzers Formation is of small areal extent with the study area. Wells tapping the Kinzers Formation, within Lancaster County, range in depth from 165 to 260 feet. The median depth is 55 feet. Yields to this aquifer range from 2 to 30 gpm.[11,12,14]

### 3.4 Climate and Meteorology

Lancaster County is in a humid, temperate region. The average temperature is 31.5°F in winter and 72.1°F during the summer months. The average temperature for the entire year is 52.1°F. The 1-year, 24-hour rainfall is approximately 2.5 inches. The total annual precipitation is 43.50 inches, while the total annual mean lake evaporation is 34 inches. The net annual precipitation is approximately 9.50 inches.[17]

### 3.5 Land Use

The Hamilton facility lies in the center of Lancaster, Pennsylvania. Land use in the immediate site vicinity is urban/commercial with businesses and residences intermixed. Outside of the downtown area, small industry and private residences predominate. Farther out, farmland and small rural villages are abundant.[1,2]

## 3.6 Population Distribution

Population was estimated using the Rand McNally Commercial Reference Map and Guide and the Lancaster, Pennsylvania 7.5 minute series topographic map. A house count was made, and the result was multiplied by 3.8 persons. Estimated population figures are as follows:

| | |
|---|---|
| 0 to 1 mile | 18,059 |
| 1 to 2 miles | 36,666 |
| 2 to 3 miles | 6,681 |

The total population within 3 miles of the site is 61,406 persons.[1,18]

## 3.7 Critical Environments

There are no critical environments or endangered species within a three-mile radius of the subject site.[19]

# SECTION 4

## 4.0 WASTE TYPES AND QUANTITIES

Hamilton Technology, Incorporated generates, treats, and stores a wide variety of wastes that are classified by the facility according to the following EPA RCRA waste ID numbers: D001 (ignitability); D003 (reactivity); D006, D007, and D011 (EP toxicity); F001 (spent halogenated solvents); F003 and F005 (spent nonhalogenated solvents); F006 (electroplating sludge); F007, F008, and F009 (plating bath sludges and solutions); and F019 (sludge from conversion coating of aluminum). The waste codes presented were derived from the facility's Notification of Hazardous Waste Activity and Part A Permit Application and may not totally represent all wastes present on site. The electroplating process generates a sludge and wastewater that is laden with cadmium, chromium, cyanide, and numerous other hazardous constituents. In addition, a wide variety of solvents is utilized at the facility.[3,20] See appendix D for a list of wastes generated at this facility.

Waste sludge is pumped to a 2,693-gallon tank and eventually feeds into the filter press. Dewatered sludge is then shoveled into drums for disposal. Disposal of the dried sludge is handled by the Envirite Corporation. Approximately 7 to 10 fifty-five-gallon drums are required before Envirite is called for disposal. In 1988, 9,020 pounds of sludge were disposed in this manner. EPA waste numbers for the sludge constituents include F006, D006, F007, D011, and F019. See appendix E for a sample manifest from this disposal practice.[2,3,20]

The wastewater stream undergoes various stages of treatment prior to discharge into the city sewer system. Treatment includes chromium reduction, cyanide destruction, and neutralization. In 1988, approximately 15,822 tons of treated effluent were discharged to the sewer. EPA waste numbers for the constituents in the wastewater include D003, D006, D007, D011, F007, F008, and F009. Sampling of this waste stream is conducted monthly (in-house) and quarterly (by the city of Lancaster).[3,20,21] For a schematic of the treatment system, refer to figure 2.4 (page 2-6). A description of the system is located in appendix F. Sample results for the quarter ending December 31, 1988 are found in appendix G.

Waste solvents and waste cutting oils that are not recycled are collected at a single station for later disposal. At this station, waste materials are segregated into the following labeled drums: trichloroethene, 1,1,1-trichloroethane, freon, ethanol (denatured), miscellaneous flammables, and waste oils. Approximate quantities disposed include 2,000 kilograms per quarter of 1,1,1-trichloroethane, 2,000 kilograms per quarter of freon, and 500 kilograms per quarter of mixed flammables. Specific amounts disposed in 1988 can be found in appendix D. Disposal is accomplished by Berkely Products Company or Safety Kleen Enviro-Systems. Sample manifests can be found in appendix E. Some solvents are recycled for reuse by the recycling still.[3,20,21]

## 4.0 WASTE TYPES AND QUANTITIES

Hamilton Technology, Incorporated generates, treats, and stores a wide variety of wastes that are classified by the facility according to the following EPA RCRA waste ID numbers: D001 (ignitability); D003 (reactivity); D006, D007, and D011 (EP toxicity); F001 (spent halogenated solvents); F003 and F005 (spent nonhalogenated solvents); F006 (electroplating sludge); F007, F008, and F009 (plating bath sludges and solutions); and F019 (sludge from conversion coating of aluminum). The waste codes presented were derived from the facility's Notification of Hazardous Waste Activity and Part A Permit Application and may not totally represent all wastes present on site. The electroplating process generates a sludge and wastewater that is laden with cadmium, chromium, cyanide, and numerous other hazardous constituents. In addition, a wide variety of solvents is utilized at the facility.[3,20] See appendix D for a list of wastes generated at this facility.

Waste sludge is pumped to a 2,693-gallon tank and eventually feeds into the filter press. Dewatered sludge is then shoveled into drums for disposal. Disposal of the dried sludge is handled by the Envirite Corporation. Approximately 7 to 10 fifty-five-gallon drums are required before Envirite is called for disposal. In 1988, 9,020 pounds of sludge were disposed in this manner. EPA waste numbers for the sludge constituents include F006, D006, F007, D011, and F019. See appendix E for a sample manifest from this disposal practice.[2,3,20]

The wastewater stream undergoes various stages of treatment prior to discharge into the city sewer system. Treatment includes chromium reduction, cyanide destruction, and neutralization. In 1988, approximately 15,822 tons of treated effluent were discharged to the sewer. EPA waste numbers for the constituents in the wastewater include D003, D006, D007, D011, F007, F008, and F009. Sampling of this waste stream is conducted monthly (in-house) and quarterly (by the city of Lancaster).[3,20,21] For a schematic of the treatment system, refer to figure 2.4 (page 2-6). A description of the system is located in appendix F. Sample results for the quarter ending December 31, 1988 are found in appendix G.

Waste solvents and waste cutting oils that are not recycled are collected at a single station for later disposal. At this station, waste materials are segregated into the following labeled drums: trichloroethene, 1,1,1-trichloroethane, freon, ethanol (denatured), miscellaneous flammables, and waste oils. Approximate quantities disposed include 2,000 kilograms per quarter of 1,1,1-trichloroethane, 2,000 kilograms per quarter of freon, and 500 kilograms per quarter of mixed flammables. Specific amounts disposed in 1988 can be found in appendix D. Disposal is accomplished by Berkely Products Company or Safety Kleen Enviro-Systems. Sample manifests can be found in appendix E. Some solvents are recycled for reuse by the recycling still.[3,20,21]

## 4.1 Solid Waste Management Units

FIT 3 has identified six SWMUs at the facility. They are the wastewater treatment room, the electroplating sludge tank, the filter press, the waste solvent storage area, the solvent recycling still, and the permitted air scrubber. Two of the four are permitted units, two involve waste solvents, and two involve waste streams generated by electroplating processes.[3,20,21]

### 4.1.1 SWMU No. 1
### Wastewater Treatment Room

Wastewater is treated through various processes in a single room; treated effluent is discharged to the city sewer system. The room has concrete floors and dikes.[3,21]

Date of Start-Up

The system was installed in 1981 and has been upgraded since that time.[3,21]

Date of Closure

The system is active; there are no closure plans.[3]

Wastes Managed

Electroplating wastewaters include cyanide, cadmium, chromium, and various constituents, as covered under EPA waste numbers D003, D006, D007, D011, F007, F008, and F009 (see appendices D, F, and G).[3,20,21]

Release Controls

Individual treatment tanks, connected in series, are situated above catch basins. The entire room is a containment area, with concrete floors and diking. Treated effluent is systematically released to the sewer system.[3,21]

History of Releases

No releases have been reported. No evidence of releases was observed during the site visit.[2,3]

### 4.1.2 SWMU No. 2
### Electroplating Sludge Tank

Waste sludge is pumped to this 2,693-gallon, 12- by 12-foot by 30-inch tank from the treatment room. It is constructed of 1/4-inch boiler plate steel. A steel grating over the top allows for storage of waste solvents (see SWMU no. 4).[2,3]

Date of Start-Up

The tank has been in use since 1981.[3]

Date of Closure

There are no plans to close this unit.[3]

Wastes Managed

Sludge from the electroplating wastewater stream contains numerous heavy metals, including cadmium, chromium, silver, and cyanide, as covered under EPA waste numbers F006, D006, D007, D011, and F019.[2,3,20]

Release Controls

The tank is constructed of 1/4-inch steel, has an epoxy coating to prevent corrosion, and has a high level alarm to protect against overfilling. The tank itself sits in a concrete pit capable of containing any spillage or leakage. The tank is emptied and inspected regularly.[2,3,21]

History of Releases

No releases have occurred to date. No evidence of releases was observed during the site visit.[2,3]

Date of Start-Up

This room was first used as storage in 1983.[3,10]

Date of Closure

There are no closure plans for this room.[3]

Wastes Managed

The six waste streams include trichloroethene, 1,1,1-trichloroethane, freon, ethanol (denatured), miscellaneous flammables, and waste oils.[3,20,21]

Release Controls

The drums are situated above the sludge tank, which sits in a large concrete pit and provides complete containment.[2,3,21]

History of Releases

There have been no releases at this unit. No evidence of releases was found during the site visit.[2,3]

### 4.1.5 SWMU No. 5
### Solvent Recycling Still

The still is located west of the filter press and recycles various solvents into 55-gallon drums.[2,3]

Date of Start-Up

The still has been operating since 1988.[3]

Date of Closure

There are no plans to close this unit.[3]

Wastes Managed

Recycled wastes are predominantly freon and ethanol.[3]

Release Controls

The unit rests on a concrete floor and recycles solvent directly into 55-gallon drums. No diking exists in this area, and a spill would not be completely contained.[2,3]

History of Releases

No releases have occurred at this unit. No evidence of release could be observed.[2,3]

**4.1.6 SWMU No. 6**
**Air Scrubber**

The air scrubber is located on the roof of the facility. It scrubs vapors vented from various processes and is permitted through October 1991.[2,3]

Date of Start-Up

This unit started operation in 1981.[3]

Date of Closure

This unit is permitted by PA DER through October 1991.[9]

Wastes Managed

Exhaust vapors from the plating and finishing areas and from the acid treatment tank and painting booths are discharged through the scrubber.[2,3,9]

Release Controls

This is a permitted unit.[2,3,9]

History of Releases

Releases of exhaust vapors are controlled and permitted.[2,3,9]

# SECTION 5

# 5.0 FIELD TRIP REPORT

## 5.1 Summary

On March 22, 1989, NUS FIT 3 members Thomas Bachovchin and Andrew Frebowitz visited Hamilton Technology, Incorporated, in Lancaster, Pennsylvania. Hamilton Plant engineer, Don Hafer, granted site access and accompanied the team during the assessment. The weather was cool and sunny; however, the facility is a single enclosed building with no outside activities. Permission to take photographs was not granted due to security requirements regarding the products that Hamilton Technology manufactures under government contract.

## 5.2 Persons Contacted

### 5.2.1 Prior to Field Trip

Don Hafer
Plant Manager
Hamilton Technology
101 North Queen Street
Lancaster, PA 17604
(717) 299-2581

M. Shawn Rosenberger
PA DER
1 Ararat Boulevard
Harrisburg, PA 17110
(717) 657-4588

### 5.2.2 At the Site

Don Hafer
Plant Manager
Hamilton Technology
101 North Queen Street
Lancaster, PA 17604
(717) 299-2581

### 5.2.3 Water Supply Well Information

No private well users have been identified in the immediate site vicinity.

## 5.3 Site Observations

- No HNU or mini-alert readings above background were recorded.
- The Hamilton Technology Building is located in downtown Lancaster, Pennsylvania.
- The facility is a large, four-story, former department store.
- Access was restricted to workers and guests with visitor badges.
- The third and fourth floors of the facility were assembly areas. A small number of degreasers, utilizing freon and methanol, were on each floor.
- Small three- to five-gallon metal containers were used on these floors to store waste solvents.
- Floor no. 2 comprised office, secretarial, and clerical areas.
- Floor no. 1 comprised the finishing and machining areas, the chemistry laboratory, the tool shop, the solvent storage area, the sludge tank, and the filter press.
- The wastewater treatment system was in a small basement area below the first floor.
- The system consisted of approximately 13 tanks, clearly labeled, representing various stages of the treatment process.
- The floor was concrete and diked.
- A large fan kept vapors toward vent areas.
- The solvent storage area was a well-contained, 55- by 43-foot room with a sunken concrete floor.

- The room contained numerous 55-gallon drums of solvent, in addition to a 5,000-gallon freon storage tank.

- The sludge tank and waste solvent area were in an adjoining room. Waste solvent drums were clearly marked and stored along one wall. The sludge tank was in a pit covered by a grating; additional storage of drums was maintained on the grating.

- The filter press was in the adjoining area; a still that was used to recover some solvents was in this area. This room was not completely contained for the possibility of a spill.

- All other areas on this floor were diked, and all drains were routed to the wastewater treatment system.

- Numerous "No Smoking" signs and other cautions were in evidence.

- Numerous workers were busy at all phases of the facility.

- No outside property or areas are owned by Hamilton Technology at this location.

- Empty steel drums were stored on a concrete pad surface just north of the salvage yard before removal by an outside contractor.

- All large machinery within the plant was either self-contained or situated over grated moats or sumps to collect any oil or material leaks.