PACIFICORP

June 21, 2018

Mr. Bryce Bird, Director
Division of Air Quality
Utah Department of Environmental Quality
P. O. Box 144820
Salt Lake City, Utah 84114-4820

Subject: PacifiCorp Huntington Plant – Title V Permit # 1501001004 – Submittal of 40 CFR §63 Subpart UUUUU Mercury Low Emitter EGU Demonstration for Unit 2

Attn: Mr. Norm Erikson

Dear Mr. Bird:

The Huntington Plant recently completed a 30-boiler operating day performance test using Method 30B in accordance with 40 CFR 63.10000(c)(1)(ii) to re-qualify Unit 2 for mercury low emitter electrical generating unit (LEE) status.

The 30-boiler operating day test demonstrated successful low emitter status as outlined in Huntington Title V permit conditions II.B.3.f.1(d)(2), II.B.3.g.1(c), and 40 CFR §63.10005(h)(1)(ii)(A) and 40 CFR§63.10005(h)(1)(ii)(B). Summary test results follow:

Unit 2	LEE Threshold	Actual Value	LEE Threshold	Actual Value
	29 lb/yr Hg	0.6 lb/yr	0.12 lb/tbtu	0.01 lb/tbtu

We would appreciate receiving a notice of your office's acceptance of the continued LEE demonstration status at your earliest convenience.

Should you have any questions, please contact me at (435) 687-4211.

Sincerely,

Darrell Cunningham
Plant Managing Director and Responsible Official

Enclosure: "Source Test Report, 2018 Low Emitter EGU Testing - PacifiCorp Huntington Power Plant Unit 2"

cc: Sara Loiacono, EPA Region VIII, w/enclosure
Richard Neilson – Huntington Plant, w/enclosure
Dave Barnhisel – 210 NTO, w/o enclosure
Steve Jensen – 210 NTO, w/o enclosure

SOURCE TEST REPORT
2018 Low Emitter EGU Testing
PacifiCorp
Huntington Power Plant Unit 2
Huntington, Utah

Prepared For:

PacifiCorp
Huntington Power Plant
Highway 31
Huntington, Utah 84528

For Submittal To:

Utah Division of Air Quality
195 N 1950 W
Salt Lake City, Utah 84114

Prepared By:

Montrose Air Quality Services, LLC
990 W. 43rd Avenue
Denver, Colorado 80211

Document Number: **043AS-361457-RT-145**
Test Dates: **April 24 – May 30, 2018**

STAC
STACK TESTING ACCREDITATION COUNCIL

ACCREDITED
TO ASTM D7036 ONLY
CERT #3925.01

MONTROSE
AIR QUALITY SERVICES

Introduction

Montrose Air Quality Services (Montrose) was contracted by PacifiCorp to conduct source testing services at the Huntington Power Plant near Huntington, Utah. The Huntington Plant comprises two pulverized coal-fired boilers. Huntington Unit #2 is equipped with low-NO_x burners and overfire air for NO_x control, an FGD scrubber for SO_2 control and pulse-jet fabric filters for PM control.

Testing was conducted to determine mercury (Hg) emission rates in accordance with 40 CFR Part 63, Subpart UUUUU. Contact information for the project is listed in the table below.

Contact	Affiliation	Telephone	E-mail
Regina Harris Environmental Analyst	PacifiCorp	(801) 220-4406	regina.harris@pacificorp.com
Tom Wiscomb Environmental Analyst		(801) 220-2373	tom.wiscomb@pacificorp.com
Richard Neilson Environmental Engineer		(435) 687-4334	richard.neilson@pacificorp.com
Norm Erikson Environmental Scientist	UDEQ	(801) 536-4063	nerikson@utah.gov
Matthew Parks District Manager	Montrose	(303) 495-3936	mparks@montrose-env.com

Scope of Work

Testing was performed to demonstrate that Huntington 2 qualifies as a Low Emitting EGU (LEE) unit in accordance with the requirements of 40 CFR Part 63, Subpart UUUUU. The details of the test are given in the table below.

Source	Regulation	Parameter
Huntington Unit 2	40 CFR Part 63, Subpart UUUUU	Hg (lbs/year)

Testing Methods

Montrose used the following EPA Reference Method for the testing program. No deviations from the Reference Methods were noted.

Source	Parameter	EPA Reference Method	Test Runs/Duration
Huntington Unit 2	Hg (lbs/year)	30B, ALT-091	5 @ 144 hrs

Testing Location

The sampling location consists of a vertical, circular stack with four orthogonal sampling ports located at least six diameters downstream and two diameters upstream of the nearest flow disturbances. Mercury sampling was performed at a single point in the stack, located within 10% of the centroid as required by Subpart UUUUU. See the schematic below.

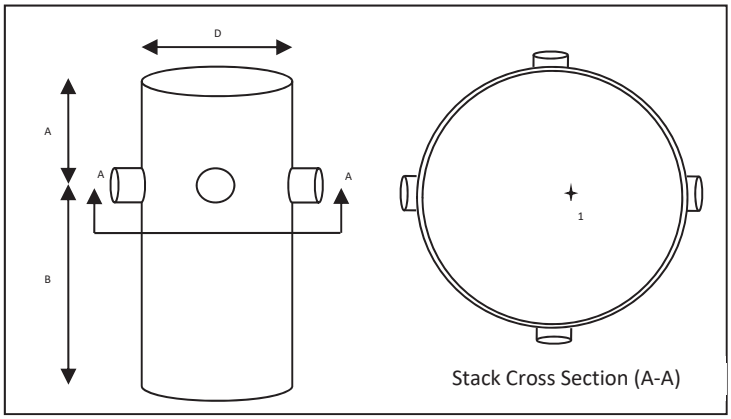

Huntington Test Diagram	
Unit #	**2**
Diameter (D)	322.7”
Upstream Distance (A)	>220’
Downstream Distance (B)	>266’
Sample Point Distances from Stack Wall	
Traverse Point 1	9.2’

Test Results

The results of the testing program are given in the table below. Detailed test results are located in Appendix A, along with sample calculations for all computed values.

PacifiCorp Huntington Unit 2 Test Results Summary (4/24 – 5/30/2018)		
Parameter	**Average***	**Emission Limit**
Hg Emission Rate (#/mmBtu)	**1.3E-8**	**6.5E-7**
Hg Emission Rate (#/TBtu)	**0.01**	**1.2****
Hg Emission Rate (#/GW-hr)	**0.0001**	**0.013****
Maximum Potential Electrical Output (GW-hrs/yr)	**4,468**	**—**
Hg Emission Rate (#/Year, Based on Electrical Output)	**0.5**	**29.0*****
Maximum Potential Heat Input (TBtu/yr)	**50.2**	**—**
Hg Emission Rate (#/Year, Based on Heat Input)	**0.6**	**29.0*****

*All values represent the average of 720 hours of data.
**40 CFR §63.10005(h)(1)(ii)(A): LEE status may be achieved by demonstrating emissions less than 10% of the applicable limit from Table 2 (i.e., 0.12 #/TBtu or 0.0013 #/GW-hr).
***40 CFR §63.10005(h)(1)(ii)(B): LEE status may also be achieved by demonstrating a potential to emit less than 29.0 #/year and compliance with either of the emission limits from Table 2 (i.e., 1.2 #/TBtu or 0.013 #/GW-hr).

Abbreviations:
#/mmBtu: pounds per million British thermal units
#/TBtu: pounds per trillion British thermal units
#/hr: pounds per hour
#/GW-hr: pounds per gigawatt hour
#/year: pounds per year, assuming maximum potential electrical output or heat input

Testing Equipment

All testing equipment was installed in the sampling shelter on the Huntington 2 stack. All required quality assurance tests were performed as required by the applicable Reference Method. Detailed equipment descriptions are given in the table below.

Parameter	Equipment	EPA Reference Method
Exhaust Gas Moisture Content (H_2O)	Gravimetric analysis Saturation calculations	ALT-091
Mercury (Hg)	Heated probe Sorbent traps Chilled glass impingers Dry gas meters Ohio Lumex 915+ Mercury Analyzer	30B

Method 30B Quality Assurance

All mercury analysis was performed by Montrose. In accordance with §8.2.6.1 of EPA Method 30B, plant CEMS data were used to determine mercury spiking levels prior to testing. Sorbent tubes spiked with 200 ng of elemental mercury were used on all five test runs to fulfill the requirement for Field Spike Recovery tests. As required by Method 30B, spike recovery was calculated as the average of the spiked runs. QA/QC results are summarized in the table below. Detailed analytical results are appended in Appendix A of this report.

Method 30B QA Test	Acceptance Criteria	Actual Value
Sorbent Trap Breakthrough	Breakthrough ≤20%	Maximum = 14%
Paired Trap Agreement	Relative Deviation ≤20% or ±0.2µg	Maximum RD = 0.01 µg
Field Spike Recovery	85% ≤ Average ≤ 115%	Average = 93%

Test Details

Mercury testing was performed using EPA Method 30B. Each test run was 144 hours in duration. Each test run consisted of withdrawing samples of stack gas through paired sorbent tubes, through heated stainless steel probes, through paired moisture removal systems, and through dual calibrated dry gas meters. Following each test run, the sorbent traps were removed from the sample probes, capped to avoid media loss or contamination, and shipped to Montrose for analysis. In accordance with EPA Method ALT-091, the knockout impingers and desiccant vessels in each moisture removal system were weighed before and after each test run. Measured moisture content was compared with the calculated saturation moisture content for each test run, and the lower of the two was used in subsequent emission calculations. Samples were analyzed in accordance with EPA Method 30B using an Ohio Lumex RA-915+ differential atomic absorption spectrometer. All Quality Assurance requirements of Method 30B were strictly followed. Following analysis, the Relative Deviation of the mercury masses from each paired sample was evaluated for acceptability. The mercury mass from each trap was combined with the corresponding volume

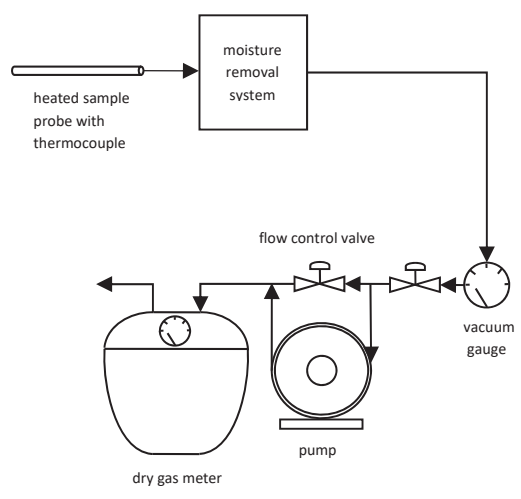

40 CFR Part 60, Appendix A-8: Method 30B, Figure 30B-1

of stack gas for the test run and reported as micrograms of mercury per dry standard cubic meter (µg/dscm). The average mercury concentration was combined with concurrent CO_2 and volumetric flow rate data from the Continuous Emissions Monitoring System (CEMS) to calculate mercury emission rates for comparison to the emission limits listed in 40 CFR Part 63, Subpart UUUUU.

Appended Information

Supporting data for this testing program are included as follows.

Appendix A: Test Summary

- Data Reduction Spreadsheets
- Sample Calculations

Appendix B: Field Data

- Mercury Sampler Data Logs

Appendix C: CEMS Data

- CEMS Data Logs

Appendix D: Laboratory Data

- Laboratory Analysis

Appendix E: Calibration Information

- Dry Gas Meter Pre-Test and Post-Test Calibrations
- Reference Meter Calibration Certificate
- STAC Certification

Appendix A: Test Summary

Data Reduction Spreadsheets
Sample Calculations

043AS-361457
PacifiCorp
Huntington Unit 2

EPA Method 30B Sample Analysis

Start Date	4/24/2018		4/30/2018		5/8/2018		5/15/2018		5/24/2018				
Start Time	8:38		14:23		10:22		8:01		6:58				
End Date	4/30/2018		5/6/2018		5/14/2018		5/21/2018		5/30/2018				
End Time	8:38		14:23		10:22		8:01		6:58				
Elapsed Time (hrs)	144		144		144		144		144				
Trap ID	451998	465597	450084	480741	451987	480732	450073	465536	451931	480728	**30-Day Average**		
Hg Concentration (µg/dscm)	0.02	0.02	0.01	0.01	0.01	0.01	0.00	0.01	0.01	0.01	**0.01**		
Hg Concentration (#/dscf)	1.2E-12	1.2E-12	8.5E-13	9.2E-13	3.9E-13	4.8E-13	2.5E-13	3.3E-13	9.3E-13	8.3E-13	**7.4E-13**		
Fuel Factor (dscf/mmBtu, F_c)	1800	1800	1800	1800	1800	1800	1800	1800	1800	1800	**1800**		
Volume of Water Condensed (mL)	211.6	210.1	223.2	220.7	232.1	247.7	230.9	227.1	227.5	223.9			
Condensed Water Volume (scf)	10.0	9.9	10.5	10.4	10.9	11.7	10.9	10.7	10.7	10.5			
Sample Gas Volume (dscf)	81.8	81.5	82.6	82.4	83.0	82.5	82.9	82.5	83.2	82.7			
Measured Stack Gas Moisture Content (%/100)	0.109	0.108	0.113	0.112	0.116	0.124	0.116	0.115	0.114	0.113			
Saturated Moisture Content (%/100)	0.131	0.131	0.120	0.120	0.128	0.128	0.129	0.129	0.123	0.123			
Moisture Content (%/100, default)	0.060	0.060	0.060	0.060	0.060	0.060	0.060	0.060	0.060	0.060			
Moisture Content Used	0.109	0.108	0.113	0.112	0.116	0.124	0.116	0.115	0.114	0.113	**0.114**		
Average CO_2 Concentration (%vw, from CEMS)	9.2	9.2	9.4	9.4	9.3	9.3	9.1	9.1	9.6	9.6	**9.3**		
Average Stack Flow Rate (wscfh, from CEMS)	31,769,740	31,769,740	40,800,606	40,800,606	43,147,550	43,147,550	34,499,004	34,499,004	42,606,354	42,606,354	**38,564,651**		
Average Gross Electrical Load (MWg, from CEMS)	163	163	228	228	242	242	180	180	241	241	**211**		
Maximum Potential Electrical Output (GWh)	4,468	4,468	4,468	4,468	4,468	4,468	4,468	4,468	4,468	4,468	**4,468**		
Maximum Potential Heat Input (TBtu/yr)	50.2	50.2	50.2	50.2	50.2	50.2	50.2	50.2	50.2	50.2	**50.2**		
												LEE Limit	
Hg Emission Rate (#/TBtu)	**0.02**	**0.02**	**0.01**	**0.02**	**0.01**	**0.01**	**0.00**	**0.01**	**0.02**	**0.01**	**0.01**	**0.12**	**#/Tbtu**
Hg Emission Rate (#/hr)	**0.00003**	**0.00003**	**0.00003**	**0.00003**	**0.00001**	**0.00002**	**0.00001**	**0.00001**	**0.00004**	**0.00003**	**0.00003**	**---**	**#/hr**
Hg Emission Rate (#/GWh)	**0.0002**	**0.0002**	**0.0001**	**0.0001**	**0.0001**	**0.0001**	**0.0000**	**0.0001**	**0.0001**	**0.0001**	**0.0001**	**0.0013**	**#/GWh**
Hg Emission Rate (#/yr, Based on Max Electrical Output)	**0.9**	**1.0**	**0.6**	**0.7**	**0.3**	**0.3**	**0.2**	**0.2**	**0.7**	**0.6**	**0.5**	**29**	**#/yr**
Hg Emission Rate (#/yr, based on Max Heat Input)	**1.0**	**1.1**	**0.7**	**0.8**	**0.3**	**0.4**	**0.2**	**0.3**	**0.8**	**0.7**	**0.6**	**29**	**#/yr**

043AS-361457
PacifiCorp
Huntington Unit 2
Run #1 Sample Calculations

EPA Method 30B: Determination of Total Vapor Phase Mercury Emissions from Coal-Fired Combustion Sources Using Carbon Sorbent Traps (40 CFR Part 60, Appendix A-8)

Variable	Value	Definition	Unit of Measurement
$V_{m(std)}$	2.316	Sample Gas Volume	dscm
m_1	67.9	Hg mass from Tube Section 1	nanograms
m_2	0.0	Hg mass from Tube Section 2	nanograms
B	0.0%	Breakthrough	percent
C_a	0.03	Hg Concentration, Sorbent Trap A	µg/dscm
C_b	0.02	Hg Concentration, Sorbent Trap B	µg/dscm
RD	19.5%	Relative Deviation between Traps A and B	percent
C_{avg}	0.012	Average Hg Concentration from all traps	µg/dscm
K	6.24E-11	Conversion Factor	lb-dscm / ug-dscf
C_d	7.37E-13	Average Hg Concentration from all traps	lb/dscf
F_c	1800	Fuel Factor	dscf/mmBtu
B_{ws}	0.114	Stack Gas Moisture Content (default)	%/100
$\%CO_{2vw}$	9.3	Average Stack Gas CO_2 Concentration	wet volume percent
E	0.013	Average Hg Emission Rate	lb/Tbtu
Q_h	38,564,651	Average Stack Gas Volumetric Flow Rate	wet standard cubic feet per hour
M_h	0.00003	Average Hg Emission Rate	lb/hr
MW_{avg}	211	Average Load	Gross Megawatts
E_{ho}	0.0001	Average Hg Emission Rate	lb/GW-hr
MEO	510	Maximum Electrical Output of the unit	MW
GW_h	4468	Maximum Annual Potential Electrical Output	GW-hr
E_{yr}	0.5	Average Hg Emission Rate	lb/yr
MHI	5733	Maximum Heat Input of the unit	mmBtu/hr
HI_{max}	50	Maximum Annual Potential Heat Input	TBtu/yr
E_{yr}	0.6	Average Hg Emission Rate	lb/yr

B = $100\ (m_2 / m_1)$
$= 100\ (0.0 / 67.9)$
= **0.0%**

$$\mathbf{C_a} = \frac{(m_1 + m_2 - \text{Spike})}{(1000\ \text{ng}/\mu\text{g})\ (\text{dscm})}$$

$$= \frac{(67.9 + 0.0 - 0)}{(1000)\ (2.316)}$$

= **0.03 ug/dscm** *(Eq. 30B-3)*

$$\mathbf{RD} = \frac{100\ |C_a - C_b|}{C_a + C_b}$$

$$= \frac{100\ |\ 0.03 - 0.02\ |}{0.03 + 0.02}$$

= **19.5%** *(Eq. 30B-5)*

$\mathbf{C_d} = C_{avg} * K$

$= 0.012 * 6.24E-11$

= **7.4E-13 #/dscf**

$$\mathbf{E} = \frac{C_d * F_c * (1 - B_{ws}) * 100 * 10^6}{\%CO_{2vw}}$$

$$= \frac{7.4E\text{-}13 * 1800 * (1 - 0.114) * 100 * 10^6}{9.3}$$

= **0.01 lb/TBtu** *(Eq. 19-9)*

$$\mathbf{M_h} = K * C_h * Q_h * (1 - B_{ws})$$

= 6.24E-11 * 0.01 * 38,564,651 * (1 - 0.114)

= **0.00003 lb/hr** *(Eq. A-3)*

$$\mathbf{E_{ho}} = \frac{Mh * 10^3}{MW_{avg}}$$

$$= \frac{0.0000 * 1000}{211}$$

= **0.0001 #/GW-hr** *(Eq. A-4)*

$$GW_h = \frac{MEO * 8{,}760}{1000\ MW/GW}$$

$$= \frac{510 * 8760}{1{,}000}$$

= **4468 GW-hr/yr**

$$\mathbf{E_{yr}} = E_{ho} * GW_h$$

= 0.0001 * 4468

= **0.5 lbs/yr**

$$HI_{max} = \frac{MHI * 8{,}760}{1{,}000{,}000\ mm/T}$$

$$= \frac{5733 * 8760}{1{,}000{,}000}$$

= **50.2 TBtu/yr**

$$\mathbf{E_{yr}} = E * HI_{max}$$

= 0.0126 * 50

= **0.6 lbs/yr**

Appendix B: Field Data

Mercury Sampler Data Logs

Hg-324K-1099

HgK_324 Data		HTG2LEE2018R1	4/24/2018	8:24:59					
DGM1 ID		DGM2 ID	Trap1 ID	Trap2 ID					
	3605445	3605446	451998	465597					
Time:		Leak 1	Status	Leak 2	Status	Vacuum1	Vacuum2	DGM 1	DGM 2
Day:hh:mm		ccpermin	P-F	ccpermin	P-F	in-Hg	in-Hg	liter	liter
04/24/2018:08:25:14		1210.611	Fail	1258.898	Fail	2.589	2.709	0.356	0.38
04/24/2018:08:25:29		1429.63	Fail	1484.962	Fail	6.237	6.493	0.715	0.742
04/24/2018:08:25:44		1096.296	Fail	1135.338	Fail	8.834	9.187	0.904	0.947
04/24/2018:08:25:59		774.074	Fail	864.662	Fail	10.822	11.272	1.102	1.175
04/24/2018:08:26:14		722.222	Fail	770.677	Fail	12.389	12.84	1.265	1.333
04/24/2018:08:26:29		588.889	Fail	563.91	Fail	13.592	14.061	1.396	1.457
04/24/2018:08:26:44		381.481	Fail	357.143	Fail	14.507	15.014	1.456	1.511
04/24/2018:08:26:59		248.148	Fail	244.361	Fail	15.239	15.739	1.52	1.579
04/24/2018:08:27:14		244.444	Fail	270.677	Fail	15.835	16.312	1.578	1.647
04/24/2018:08:27:29		218.519	Fail	248.12	Fail	16.277	16.828	1.63	1.703
04/24/2018:08:27:44		218.519	Fail	199.248	Fail	16.577	17.261	1.687	1.746
04/24/2018:08:27:59		185.185	Fail	214.286	Fail	16.801	17.611	1.722	1.81
04/24/2018:08:28:14		177.778	Fail	225.564	Fail	17.139	17.908	1.776	1.859
04/24/2018:08:28:29		203.704	Fail	176.692	Fail	17.532	18.162	1.824	1.898
04/24/2018:08:28:44		151.852	Fail	97.744	Fail	17.861	18.371	1.852	1.908
04/24/2018:08:28:59		81.481	Fail	63.91	Fail	18.124	18.542	1.865	1.93
04/24/2018:08:29:14		74.074	Fail	86.466	Fail	18.333	18.688	1.889	1.951
04/24/2018:08:29:29		88.889	Fail	82.707	Fail	18.488	18.821	1.909	1.972
04/24/2018:08:29:44		62.963	Fail	63.91	Fail	18.599	18.937	1.92	1.983
04/24/2018:08:29:59		37.037	Fail	41.353	Fail	18.677	19.038	1.928	1.992
04/24/2018:08:30:14		25.926	Fail	37.594	Fail	18.727	19.123	1.933	2.002
04/24/2018:08:30:29		14.815	Fail	33.835	Fail	18.743	19.189	1.935	2.009
04/24/2018:08:30:44		7.407	Pass	22.556	Fail	18.746	19.229	1.937	2.013
04/24/2018:08:30:59		3.704	Pass	15.038	Fail	18.752	19.262	1.937	2.017
04/24/2018:08:31:14		7.407	Pass	11.278	Fail	18.777	19.293	1.941	2.019
04/24/2018:08:31:29		11.111	Fail	11.278	Fail	18.806	19.32	1.943	2.023
04/24/2018:08:31:44		3.704	Pass	11.278	Fail	18.79	19.348	1.943	2.024
04/24/2018:08:31:59		0	Pass	11.278	Fail	18.783	19.37	1.943	2.028
04/24/2018:08:32:14		3.704	Pass	11.278	Fail	18.792	19.399	1.944	2.03
04/24/2018:08:32:29		11.111	Fail	7.519	Pass	18.824	19.428	1.948	2.032
04/24/2018:08:32:44		25.926	Fail	30.075	Fail	18.891	19.457	1.957	2.045
04/24/2018:08:32:59		37.037	Fail	30.075	Fail	18.979	19.483	1.967	2.047
04/24/2018:08:33:14		33.333	Fail	7.519	Pass	19.032	19.5	1.974	2.049
04/24/2018:08:33:29		18.519	Fail	3.759	Pass	19.071	19.508	1.976	2.049
04/24/2018:08:33:44		11.111	Fail	0	Pass	19.09	19.499	1.98	2.049
04/24/2018:08:33:59		7.407	Pass	0	Pass	19.08	19.497	1.98	2.049

Time:	Stack Pressure:	Sat% H2O:	Static:	Barometric:	Flowmeter1:	Vacuum1:	Flowmeter2:	Vacuum2:	Stack Temp:	Sorbent Temp:	Probe Temp:	DGM#1 Temp:	Condenser Temp:	DGM#2 Temp:	DGM1*:	DGM2*:	DGM1:	DGM2:
day:hh:mm:ss	in-Hg	Percent	in-H2O	in-Hg	l/min	in-Hg	l/min	in-Hg	degF	degF	degF	degF	degF	degF	liters STP	liters STP	liters nominal	liters nominal
20180424:08:43:57	23.5	10.8	-3.9	23.82	0.24	1.7	0.24	1.5	109.3	280.5	271.9	59.5	50.5	58.5	1.2	1.2	1.5	1.5
20180424:08:48:57	23.5	12.2	-3.9	23.82	0.25	2.1	0.25	1.8	113.5	282.1	280.5	60.3	50.4	59.3	2.4	2.4	3.0	3.0
20180424:08:53:57	23.5	13.1	-3.9	23.81	0.25	2.1	0.25	1.9	116.0	282.9	282.2	61.0	50.4	60.1	3.7	3.7	4.6	4.6
20180424:08:58:57	23.5	13.6	-3.8	23.81	0.25	2.1	0.25	1.9	117.5	283.6	283.2	61.6	50.3	60.8	5.0	5.0	6.1	6.2
20180424:09:03:57	23.5	13.9	-3.9	23.81	0.25	2.2	0.25	1.9	118.2	284.0	283.9	62.2	50.3	61.5	6.2	6.3	7.7	7.7
20180424:09:08:57	23.5	14.1	-3.9	23.81	0.25	2.2	0.25	1.9	118.6	284.4	284.5	62.8	50.2	62.2	7.5	7.6	9.3	9.4
20180424:09:13:57	23.5	14.3	-3.8	23.81	0.25	2.2	0.25	1.9	119.2	284.6	284.8	63.4	50.2	62.8	8.8	8.8	10.9	10.9
20180424:09:18:57	23.5	14.5	-3.9	23.81	0.25	2.2	0.25	1.9	119.6	284.8	285.1	64.0	50.2	63.5	10.1	10.1	12.5	12.5
20180424:09:23:57	23.5	14.6	-3.9	23.81	0.25	2.2	0.25	1.9	119.9	285.0	285.3	64.6	50.2	64.1	11.4	11.4	14.1	14.1
20180424:09:28:57	23.5	14.7	-3.9	23.81	0.25	2.2	0.25	2.0	120.2	285.1	285.6	65.1	50.2	64.7	12.6	12.6	15.7	15.7
20180424:09:33:57	23.5	14.8	-3.9	23.81	0.25	2.1	0.25	1.9	120.5	285.2	285.7	65.7	50.3	65.2	13.9	13.9	17.3	17.3
20180424:09:38:57	23.5	15.0	-3.9	23.81	0.25	2.1	0.25	1.9	120.9	285.3	285.8	66.2	50.3	65.8	15.2	15.2	18.9	18.9
20180424:09:43:57	23.5	14.9	-3.9	23.81	0.25	2.1	0.25	1.9	120.6	285.4	285.8	66.6	50.3	66.4	16.5	16.5	20.5	20.5
20180424:09:48:57	23.5	15.0	-3.9	23.81	0.25	2.1	0.25	1.8	121.0	285.4	285.9	67.1	50.3	66.9	17.8	17.8	22.1	22.2
20180424:09:53:57	23.5	15.1	-3.9	23.81	0.25	2.1	0.25	1.8	121.0	285.4	286.0	67.5	50.4	67.4	19.1	19.1	23.8	23.8
20180424:09:58:57	23.5	15.1	-3.9	23.81	0.25	2.1	0.25	1.8	121.1	285.5	286.1	68.0	50.4	68.0	20.4	20.4	25.4	25.4
20180424:10:03:57	23.5	15.2	-3.9	23.81	0.25	2.1	0.25	1.8	121.4	285.5	286.1	68.4	50.4	68.4	21.7	21.7	27.0	27.1
20180424:10:08:57	23.5	15.2	-3.9	23.81	0.25	2.1	0.25	1.8	121.4	285.5	286.2	68.9	50.4	68.9	23.0	23.0	28.7	28.6
20180424:10:13:57	23.5	15.2	-3.8	23.81	0.25	2.0	0.25	1.8	121.5	285.5	286.2	69.3	50.5	69.4	24.2	24.3	30.3	30.3
20180424:10:18:57	23.5	15.2	-3.8	23.81	0.25	2.0	0.25	1.8	121.4	285.5	286.2	69.7	50.5	69.8	25.6	25.6	32.0	31.9
20180424:10:23:57	23.5	15.3	-3.9	23.81	0.25	2.0	0.25	1.8	121.7	285.6	286.2	70.1	50.6	70.3	26.8	26.9	33.6	33.5
20180424:10:28:57	23.5	15.3	-3.8	23.81	0.25	2.0	0.25	1.8	121.6	285.6	286.2	70.4	50.5	70.7	28.2	28.2	35.2	35.2
20180424:10:33:57	23.5	15.4	-3.8	23.81	0.25	2.0	0.25	1.8	121.8	285.6	286.2	70.8	50.6	71.1	29.4	29.5	36.8	36.8
20180424:10:38:57	23.5	15.5	-3.8	23.80	0.25	2.0	0.25	1.8	122.0	285.6	286.2	71.2	50.6	71.5	30.8	30.8	38.5	38.5
20180424:10:43:57	23.5	15.4	-3.9	23.81	0.25	2.0	0.25	1.8	121.9	285.6	286.2	71.5	50.6	71.9	32.0	32.0	40.1	40.1
20180424:10:48:57	23.5	15.5	-3.8	23.80	0.25	2.0	0.25	1.8	122.1	285.5	286.2	71.9	50.6	72.2	33.3	33.4	41.8	41.8
20180424:10:53:57	23.5	15.4	-3.8	23.80	0.25	2.0	0.25	1.8	121.9	285.6	286.3	72.2	50.7	72.6	34.7	34.7	43.4	43.4
20180424:10:58:57	23.5	15.4	-3.8	23.80	0.25	2.0	0.25	1.8	121.8	285.6	286.3	72.5	50.6	72.9	35.9	35.9	45.1	45.0
20180424:11:03:57	23.5	15.5	-3.8	23.80	0.25	2.0	0.25	1.8	122.0	285.6	286.4	72.8	50.7	73.2	37.3	37.3	46.8	46.7
20180424:11:08:57	23.5	15.5	-3.8	23.80	0.25	2.0	0.25	1.8	122.0	285.6	286.3	73.1	50.7	73.6	38.5	38.5	48.4	48.4
20180424:11:13:57	23.5	15.5	-3.9	23.80	0.25	2.0	0.25	1.8	122.1	285.6	286.3	73.3	50.7	73.9	39.9	39.9	50.1	50.0
20180424:11:18:57	23.5	15.2	-3.8	23.80	0.25	2.0	0.25	1.8	121.3	285.6	286.3	73.6	50.7	74.1	41.1	41.1	51.7	51.7
20180424:11:23:57	23.5	14.5	-3.8	23.80	0.25	2.0	0.25	1.8	119.7	285.5	286.2	73.9	50.8	74.5	42.5	42.5	53.4	53.3
20180424:11:28:57	23.5	14.9	-3.9	23.80	0.25	2.0	0.25	1.8	120.7	285.7	286.3	74.1	50.7	74.7	43.7	43.7	55.0	55.0
20180424:11:33:57	23.5	15.2	-3.9	23.80	0.25	2.0	0.25	1.8	121.3	285.7	286.2	74.3	50.7	75.0	45.1	45.1	56.7	56.7
20180424:11:38:57	23.5	15.3	-3.9	23.80	0.25	2.0	0.25	1.8	121.7	285.8	286.3	74.5	50.7	75.2	46.4	46.4	58.3	58.3
20180424:11:43:57	23.5	15.4	-3.9	23.80	0.25	2.0	0.25	1.8	121.8	285.8	286.3	74.8	50.8	75.4	47.7	47.7	60.0	60.0
20180424:11:48:57	23.5	15.4	-3.8	23.79	0.25	2.0	0.25	1.8	121.9	285.7	286.3	75.0	50.7	75.6	49.0	49.0	61.6	61.7
20180424:11:53:57	23.5	15.5	-3.8	23.79	0.25	2.0	0.25	1.8	122.1	285.7	286.2	75.2	50.8	75.8	50.3	50.3	63.3	63.3
20180424:11:58:57	23.5	15.4	-3.8	23.79	0.25	2.0	0.25	1.8	121.9	285.7	286.3	75.4	50.8	76.1	51.6	51.6	65.0	65.0
20180424:12:03:57	23.5	15.5	-3.9	23.79	0.25	2.0	0.25	1.8	122.0	285.6	286.2	75.5	50.8	76.2	52.9	52.9	66.7	66.6
20180424:12:08:58	23.5	15.5	-3.8	23.79	0.25	2.0	0.25	1.8	122.2	285.5	286.1	75.7	50.8	76.5	54.2	54.2	68.3	68.3
20180424:12:13:58	23.5	15.5	-3.8	23.79	0.25	2.0	0.25	1.8	122.0	285.5	286.1	75.9	50.9	76.7	55.5	55.5	70.0	70.0
20180424:12:18:58	23.5	15.5	-3.7	23.78	0.25	2.0	0.25	1.8	122.0	285.5	286.1	76.1	50.8	76.8	56.8	56.8	71.6	71.7
20180424:12:23:58	23.5	15.6	-3.8	23.79	0.25	2.0	0.25	1.8	122.2	285.5	286.1	76.3	50.9	77.0	58.2	58.1	73.4	73.3
20180424:12:28:58	23.5	15.6	-3.8	23.79	0.25	2.0	0.25	1.8	122.4	285.6	286.1	76.4	50.9	77.2	59.4	59.4	75.0	75.0
20180424:12:33:58	23.5	15.7	-3.8	23.79	0.25	2.0	0.25	1.8	122.4	285.6	286.1	76.6	50.9	77.4	60.8	60.7	76.7	76.6
20180424:12:38:58	23.5	15.7	-3.8	23.79	0.25	2.0	0.25	1.8	122.4	285.5	286.1	76.7	50.9	77.5	62.0	62.0	78.3	78.3
20180424:12:43:58	23.5	15.6	-3.7	23.78	0.25	2.0	0.25	1.8	122.3	285.5	286.1	76.9	50.9	77.7	63.4	63.3	80.1	80.0
20180424:12:48:58	23.5	15.6	-3.8	23.79	0.25	2.0	0.25	1.8	122.2	285.6	286.2	77.0	50.9	77.8	64.7	64.6	81.7	81.7
20180424:12:53:58	23.5	15.8	-3.7	23.79	0.25	2.0	0.25	1.8	122.7	285.6	286.2	77.1	50.9	78.0	66.0	65.9	83.4	83.4
20180424:12:58:58	23.5	15.8	-3.7	23.79	0.25	2.0	0.25	1.9	122.8	285.6	286.2	77.3	50.9	78.1	67.3	67.2	85.0	85.0
20180424:13:03:58	23.5	15.7	-3.8	23.79	0.25	2.0	0.25	1.8	122.6	285.6	286.2	77.4	50.9	78.2	68.6	68.6	86.8	86.7
20180424:13:08:58	23.5	15.7	-3.8	23.79	0.25	2.0	0.25	1.8	122.5	285.6	286.2	77.5	50.9	78.3	69.9	69.9	88.4	88.4
20180424:13:13:58	23.5	15.7	-3.8	23.79	0.25	2.0	0.25	1.8	122.5	285.6	286.1	77.6	50.9	78.4	71.2	71.2	90.1	90.1
20180424:13:18:58	23.5	15.7	-3.8	23.79	0.25	2.0	0.25	1.8	122.4	285.7	286.2	77.7	50.9	78.5	72.5	72.5	91.7	91.7
20180424:13:23:58	23.5	15.7	-3.8	23.80	0.25	2.0	0.25	1.8	122.5	285.6	286.2	77.8	50.9	78.7	73.9	73.8	93.5	93.4
20180424:13:28:58	23.5	15.7	-3.8	23.80	0.25	2.0	0.25	1.8	122.4	285.7	286.3	78.0	50.9	78.8	75.2	75.1	95.1	95.1
20180424:13:33:58	23.5	15.7	-3.8	23.80	0.25	2.0	0.25	1.8	122.4	285.6	286.2	78.1	50.9	78.9	76.5	76.4	96.8	96.8
20180424:13:38:58	23.5	15.7	-3.8	23.80	0.25	2.0	0.25	1.8	122.6	285.7	286.2	78.1	51.0	79.0	77.8	77.7	98.5	98.4
20180424:13:43:58	23.5	15.7	-3.8	23.80	0.25	2.1	0.25	1.9	122.6	285.6	286.2	78.2	50.9	79.1	79.1	79.0	100.2	100.1
20180424:13:48:58	23.5	15.8	-3.8	23.80	0.25	2.0	0.25	1.8	122.8	285.6	286.1	78.3	51.0	79.2	80.4	80.3	101.9	101.8
20180424:13:53:58	23.5	15.8	-3.8	23.80	0.25	2.0	0.25	1.8	122.8	285.6	286.1	78.4	50.9	79.3	81.7	81.6	103.5	103.5
20180424:13:58:58	23.5	15.8	-3.8	23.80	0.25	2.0	0.25	1.8	122.7	285.6	286.1	78.5	51.0	79.4	83.0	82.9	105.2	105.1
20180424:14:03:58	23.5	15.7	-3.8	23.80	0.25	2.0	0.25	1.8	122.6	285.6	286.1	78.7	51.0	79.5	84.3	84.3	106.9	106.9
20180424:14:08:58	23.5	15.7	-3.8	23.80	0.25	2.0	0.25	1.8	122.6	285.5	286.1	78.8	51.0	79.6	85.7	85.5	108.6	108.5
20180424:14:13:58	23.5	15.7	-3.9	23.80	0.25	2.0	0.25	1.8	122.6	285.6	286.1	78.8	51.0	79.7	87.0	86.9	110.2	110.2
20180424:14:18:58	23.5	15.8	-3.9	23.81	0.25	2.0	0.25	1.8	122.7	285.5	286.1	79.0	51.1	79.8	88.3	88.2	112.0	111.9
20180424:14:23:58	23.5	15.7	-3.9	23.80	0.25	2.0	0.25	1.8	122.6	285.6	286.1	79.1	51.0	79.9	89.6	89.5	113.6	113.6
20180424:14:28:58	23.5	15.7	-4.0	23.81	0.25	2.0	0.25	1.8	122.4	285.5	286.1	79.1	51.1	80.0	90.9	90.8	115.3	115.2
20180424:14:33:58	23.5	15.7	-4.0	23.81	0.25	2.0	0.25	1.8	122.5	285.5	286.1	79.2	51.0	80.1	92.2	92.1	117.0	116.9
20180424:14:38:58	23.5	15.6	-3.9	23.80	0.25	2.0	0.25	1.8	122.4	285.6	286.2	79.3	51.1	80.1	93.6	93.4	118.7	118.6
20180424:14:43:58	23.5	15.6	-3.9	23.80	0.25	2.0	0.25	1.8	122.4	285.6	286.2	79.4	51.1	80.3	94.8	94.7	120.3	120.3
20180424:14:48:58	23.5	15.7	-3.9	23.80	0.25	2.0	0.25	1.8	122.5	285.6	286.2	79.5	51.1	80.3	96.2	96.0	122.1	122.0
20180424:14:53:58	23.5	15.7	-3.9	23.80	0.25	2.0	0.25	1.8	122.6	285.6	286.2	79.6	51.1	80.4	97.5	97.3	123.7	123.7
20180424:14:58:58	23.5	15.7	-4.0	23.80	0.25	2.0	0.25	1.9	122.6	285.6	286.2	79.7	51.1	80.5	98.8	98.6	125.4	125.3
20180424:15:03:58	23.5	15.8	-3.9	23.79	0.25	2.0	0.25	1.9	122.7	285.6	286.2	79.7	51.1	80.6	100.1	99.9	127.1	127.0
20180424:15:08:58	23.5	15.8	-3.8	23.79	0.25	2.0	0.25	1.8	122.7	285.6	286.2	79.8	51.1	80.7	101.4	101.2	128.8	128.7
20180424:15:13:58	23.5	15.7	-3.8	23.79	0.25	2.0	0.25	1.8	122.5	285.7	286.2	79.9	51.1	80.7	102.7	102.5	130.5	130.4
20180424:15:18:58	23.5	15.7	-3.8	23.79	0.25	2.0	0.25	1.8	122.5	285.7	286.2	80.0	51.1	80.8	104.0	103.9	132.2	132.1
20180424:15:23:58	23.5	15.7	-3.8	23.80	0.25	2.0	0.25	1.8	122.5	285.6	286.1	80.1	51.1	80.9	105.3	105.1	133.9	133.7
20180424:15:28:58	23.5	15.6	-3.8	23.80	0.25	2.0	0.25	1.8	122.4	285.7	286.3	80.1	51.1	81.0	106.6	106.5	135.5	135.4
20180424:15:33:58	23.5	15.7	-3.9	23.80	0.25	2.0	0.25	1.8	122.5	285.7	286.2	80.2	51.1	81.0	108.0	107.8	137.2	137.1
20180424:15:38:58	23.5	15.6	-3.9	23.80	0.25	2.0	0.25	1.8	122.3	285.7	286.2	80.3	51.1	81.1	109.2	109.1	138.9	138.8
20180424:15:43:58	23.5	15.6	-3.8	23.79	0.25	2.0	0.25	1.8	122.3	285.7	286.2	80.3	51.1	81.1	110.6	110.4	140.6	140.5
20180424:15:48:58	23.5	15.6	-3.8	23.79	0.25	2.0	0.25	1.8	122.3	285.7	286.2	80.3	51.1	81.2	111.9	111.7	142.3	142.2
20180424:15:53:58	23.5	15.3	-3.9	23.80	0.25	2.0	0.25	1.8	121.5	285.6	286.2	80.4	51.2	81.3	113.2	113.0	144.0	143.8
20180424:15:58:58	23.5	14.6	-3.8	23.80	0.25	2.0	0.25	1.8	119.9	285.5	286.2	80.4	51.1	81.3	114.5	114.4	145.7	145.6
20180424:16:03:58	23.5	15.1	-3.9	23.80	0.25	2.0	0.25	1.8	121.1	285.6	286.2	80.4	51.2	81.4	115.9	115.6	147.4	147.2

Time:	Stack Pressure:	Sat% H2O:	Static:	Barometric:	Flowmeter1:	Vacuum1:	Flowmeter2:	Vacuum2:	Stack Temp:	Sorbent Temp:	Probe Temp:	DGM#1 Temp:	Condenser Temp:	DGM#2 Temp:	DGM1*:	DGM2*:	DGM1:	DGM2:
day:hh:mm:ss	in-Hg	Percent	in-H2O	in-Hg	l/min	in-Hg	l/min	in-Hg	degF	degF	degF	degF	degF	degF	liters STP	liters STP	liters nominal	liters nominal
20180424:16:08:58	23.5	15.4	-3.9	23.80	0.25	2.0	0.25	1.8	121.9	285.7	286.2	80.5	51.1	81.4	117.1	117.0	149.1	149.0
20180424:16:13:58	23.5	15.6	-3.9	23.80	0.25	2.0	0.25	1.8	122.3	285.7	286.1	80.6	51.2	81.5	118.5	118.3	150.8	150.6
20180424:16:18:58	23.5	15.7	-3.9	23.80	0.25	2.0	0.25	1.8	122.6	285.7	286.2	80.6	51.1	81.5	119.8	119.6	152.4	152.3
20180424:16:23:58	23.5	15.8	-3.9	23.80	0.25	2.0	0.25	1.9	122.8	285.7	286.2	80.7	51.2	81.6	121.1	120.9	154.1	154.0
20180424:16:28:58	23.5	15.9	-3.8	23.80	0.25	2.0	0.25	1.8	123.0	285.7	286.2	80.7	51.1	81.7	122.4	122.2	155.8	155.7
20180424:16:33:58	23.5	16.0	-3.8	23.80	0.25	2.0	0.25	1.8	123.2	285.7	286.2	80.8	51.2	81.7	123.7	123.5	157.5	157.4
20180424:16:38:58	23.5	15.9	-3.9	23.80	0.25	2.0	0.25	1.8	123.0	285.6	286.2	80.8	51.1	81.7	125.0	124.8	159.2	159.1
20180424:16:43:58	23.5	15.9	-3.8	23.80	0.25	2.0	0.25	1.8	123.0	285.6	286.2	80.9	51.2	81.8	126.3	126.1	160.9	160.8
20180424:16:48:58	23.5	15.9	-3.8	23.80	0.25	2.0	0.25	1.8	123.0	285.7	286.2	80.9	51.1	81.9	127.7	127.5	162.6	162.5
20180424:16:53:58	23.5	15.9	-3.9	23.80	0.25	2.0	0.25	1.8	123.1	285.6	286.2	81.0	51.2	81.9	129.0	128.7	164.3	164.1
20180424:16:58:58	23.5	15.9	-3.9	23.80	0.25	2.0	0.25	1.8	123.0	285.6	286.1	81.0	51.2	82.0	130.3	130.1	166.0	165.9
20180424:17:03:58	23.5	14.9	-3.8	23.80	0.25	2.0	0.25	1.8	120.8	285.5	286.2	81.0	51.2	82.0	131.6	131.4	167.7	167.5
20180424:17:08:58	23.5	15.3	-3.9	23.80	0.25	2.0	0.25	1.8	121.7	285.5	286.1	81.1	51.2	82.0	133.0	132.7	169.4	169.3
20180424:17:13:58	23.5	15.6	-3.8	23.80	0.25	2.0	0.25	1.8	122.4	285.6	286.1	81.2	51.2	82.1	134.2	134.0	171.1	170.9
20180424:17:18:58	23.5	15.6	-3.8	23.80	0.25	2.1	0.25	1.9	122.4	285.6	286.2	81.3	51.2	82.2	135.6	135.3	172.8	172.6
20180424:17:23:58	23.5	15.7	-3.8	23.80	0.25	2.1	0.25	1.9	122.6	285.6	286.2	81.3	51.2	82.3	136.9	136.6	174.5	174.3
20180424:17:28:58	23.5	15.9	-3.9	23.80	0.25	2.1	0.25	1.9	122.9	285.6	286.2	81.4	51.2	82.3	138.2	137.9	176.2	176.0
20180424:17:33:58	23.5	16.0	-3.9	23.80	0.25	2.0	0.25	1.8	123.2	285.7	286.2	81.4	51.2	82.4	139.5	139.2	177.9	177.7
20180424:17:38:58	23.5	15.9	-3.9	23.80	0.25	2.0	0.25	1.8	122.9	285.7	286.2	81.5	51.3	82.4	140.8	140.6	179.6	179.4
20180424:17:43:58	23.5	15.9	-3.9	23.80	0.25	2.0	0.25	1.8	123.0	285.7	286.2	81.6	51.2	82.5	142.2	141.8	181.3	181.1
20180424:17:48:58	23.5	15.9	-3.9	23.80	0.25	2.0	0.25	1.8	122.9	285.7	286.3	81.7	51.3	82.6	143.5	143.2	183.0	182.8
20180424:17:53:58	23.5	15.8	-3.9	23.80	0.25	2.0	0.25	1.8	122.8	285.7	286.2	81.7	51.2	82.6	144.8	144.5	184.7	184.4
20180424:17:58:58	23.5	15.9	-3.8	23.80	0.25	2.0	0.25	1.8	122.9	285.6	286.2	81.7	51.3	82.7	146.1	145.8	186.4	186.2
20180424:18:03:58	23.5	16.0	-3.8	23.80	0.25	2.1	0.25	1.9	123.2	285.7	286.2	81.8	51.2	82.7	147.4	147.1	188.1	187.8
20180424:18:08:58	23.5	16.0	-3.9	23.80	0.25	2.1	0.25	1.8	123.3	285.7	286.2	81.9	51.3	82.8	148.7	148.4	189.8	189.6
20180424:18:13:58	23.5	15.9	-3.9	23.80	0.25	2.0	0.25	1.8	123.1	285.7	286.3	81.9	51.3	82.9	150.1	149.7	191.5	191.2
20180424:18:18:58	23.5	15.9	-3.9	23.80	0.25	2.0	0.25	1.8	122.9	285.7	286.2	82.0	51.4	82.9	151.4	151.1	193.2	193.0
20180424:18:23:58	23.5	15.8	-3.9	23.80	0.25	2.0	0.25	1.8	122.8	285.7	286.3	82.0	51.3	83.0	152.7	152.3	194.8	194.6
20180424:18:28:58	23.5	15.8	-3.9	23.80	0.25	2.0	0.25	1.8	122.7	285.6	286.2	82.1	51.4	83.0	154.0	153.7	196.6	196.3
20180424:18:33:58	23.5	15.8	-3.9	23.80	0.25	2.0	0.25	1.8	122.8	285.7	286.2	82.1	51.3	83.0	155.3	155.0	198.2	198.0
20180424:18:38:58	23.5	15.9	-3.9	23.81	0.25	2.0	0.25	1.8	122.9	285.7	286.3	82.2	51.4	83.1	156.7	156.3	200.0	199.7
20180424:18:43:58	23.5	15.9	-3.9	23.81	0.25	2.0	0.25	1.8	122.9	285.7	286.3	82.3	51.4	83.2	157.9	157.6	201.6	201.4
20180424:18:48:58	23.5	15.7	-3.9	23.81	0.25	2.1	0.25	1.9	122.6	285.7	286.3	82.3	51.4	83.2	159.3	158.9	203.4	203.1
20180424:18:53:58	23.5	15.6	-4.0	23.81	0.25	2.1	0.25	1.9	122.2	285.7	286.3	82.3	51.4	83.3	160.6	160.2	205.1	204.8
20180424:18:58:58	23.5	15.5	-4.0	23.82	0.25	2.1	0.25	1.9	122.2	285.7	286.2	82.4	51.4	83.3	161.9	161.5	206.8	206.5
20180424:19:03:58	23.5	15.5	-4.0	23.82	0.25	2.1	0.25	1.9	122.2	285.7	286.3	82.4	51.4	83.3	163.2	162.8	208.5	208.2
20180424:19:08:58	23.5	14.9	-4.0	23.82	0.25	2.1	0.25	1.9	120.7	285.7	286.3	82.4	51.4	83.3	164.5	164.2	210.2	209.9
20180424:19:13:58	23.5	14.6	-3.9	23.82	0.25	2.0	0.25	1.9	120.0	285.6	286.3	82.4	51.4	83.4	165.9	165.5	211.9	211.6
20180424:19:18:58	23.5	15.0	-3.9	23.82	0.25	2.1	0.25	1.9	120.9	285.7	286.3	82.4	51.4	83.4	167.2	166.8	213.6	213.3
20180424:19:23:58	23.5	15.1	-3.8	23.82	0.25	2.1	0.25	1.9	121.1	285.7	286.3	82.4	51.4	83.4	168.5	168.1	215.3	215.0
20180424:19:28:58	23.5	15.1	-3.8	23.83	0.25	2.1	0.25	1.9	121.2	285.7	286.2	82.4	51.4	83.4	169.8	169.4	217.0	216.7
20180424:19:33:58	23.6	15.0	-3.7	23.83	0.25	2.1	0.25	1.9	121.0	285.7	286.3	82.4	51.4	83.4	171.2	170.7	218.8	218.4
20180424:19:38:58	23.6	14.9	-3.7	23.83	0.25	2.1	0.25	1.9	120.7	285.7	286.3	82.4	51.4	83.4	172.5	172.0	220.4	220.1
20180424:19:43:58	23.6	14.8	-3.6	23.83	0.25	2.1	0.25	1.9	120.4	285.7	286.3	82.4	51.4	83.4	173.8	173.4	222.2	221.8
20180424:19:48:58	23.6	14.7	-3.7	23.84	0.25	2.1	0.25	1.9	120.2	285.7	286.2	82.4	51.4	83.4	175.2	174.7	223.9	223.5
20180424:19:53:58	23.6	14.7	-3.8	23.84	0.25	2.1	0.25	1.9	120.2	285.7	286.3	82.4	51.4	83.4	176.5	176.0	225.6	225.2
20180424:19:58:58	23.6	14.7	-3.8	23.84	0.25	2.1	0.25	1.9	120.2	285.6	286.2	82.4	51.4	83.4	177.8	177.3	227.3	226.9
20180424:20:03:58	23.6	14.7	-3.8	23.85	0.25	2.1	0.25	1.9	120.1	285.7	286.3	82.4	51.4	83.4	179.1	178.7	229.0	228.7
20180424:20:08:58	23.6	14.6	-3.8	23.85	0.25	2.1	0.25	1.9	120.0	285.6	286.2	82.4	51.4	83.4	180.5	180.0	230.7	230.3
20180424:20:13:58	23.6	14.7	-3.9	23.85	0.25	2.1	0.25	1.9	120.2	285.7	286.3	82.4	51.4	83.4	181.8	181.3	232.4	232.1
20180424:20:18:58	23.6	14.7	-3.9	23.85	0.25	2.1	0.25	1.9	120.3	285.8	286.3	82.4	51.4	83.4	183.2	182.6	234.2	233.8
20180424:20:23:58	23.6	14.7	-3.9	23.86	0.25	2.1	0.25	1.9	120.2	285.7	286.3	82.3	51.4	83.4	184.5	184.0	235.9	235.5
20180424:20:28:58	23.6	14.7	-3.9	23.86	0.25	2.1	0.25	1.9	120.3	285.7	286.3	82.3	51.4	83.4	185.8	185.3	237.6	237.2
20180424:20:33:58	23.6	14.8	-3.9	23.86	0.25	2.1	0.25	1.9	120.4	285.7	286.3	82.4	51.5	83.4	187.2	186.6	239.3	238.9
20180424:20:38:58	23.6	14.9	-3.9	23.87	0.25	2.1	0.25	1.8	120.7	285.7	286.3	82.4	51.4	83.4	188.5	187.9	241.0	240.6
20180424:20:43:58	23.6	15.0	-4.0	23.87	0.25	2.1	0.25	1.9	121.0	285.7	286.3	82.4	51.5	83.4	189.8	189.3	242.8	242.4
20180424:20:48:58	23.6	15.1	-4.0	23.87	0.25	2.1	0.25	1.9	121.3	285.8	286.3	82.4	51.4	83.4	191.1	190.6	244.4	244.0
20180424:20:53:58	23.6	15.2	-4.0	23.87	0.25	2.1	0.25	1.9	121.5	285.7	286.3	82.4	51.5	83.4	192.5	191.9	246.2	245.8
20180424:20:58:58	23.6	15.3	-4.0	23.88	0.25	2.1	0.25	1.9	121.6	285.7	286.3	82.4	51.4	83.4	193.8	193.2	247.9	247.4
20180424:21:03:58	23.6	15.2	-4.0	23.88	0.25	2.1	0.25	1.9	121.4	285.8	286.3	82.3	51.5	83.4	195.1	194.6	249.6	249.2
20180424:21:08:58	23.6	14.5	-4.0	23.88	0.25	2.1	0.25	1.9	119.7	285.7	286.3	82.3	51.5	83.4	196.5	195.9	251.3	250.9
20180424:21:13:58	23.6	14.3	-4.0	23.88	0.25	2.1	0.25	1.8	119.3	285.7	286.3	82.3	51.5	83.4	197.8	197.2	253.0	252.6
20180424:21:18:58	23.6	14.6	-4.0	23.88	0.25	2.1	0.25	1.9	120.1	285.7	286.3	82.3	51.5	83.3	199.1	198.5	254.7	254.3
20180424:21:23:58	23.6	14.8	-4.0	23.88	0.25	2.1	0.25	1.9	120.5	285.8	286.2	82.3	51.4	83.3	200.4	199.8	256.4	256.0
20180424:21:28:58	23.6	15.5	-4.0	23.88	0.25	2.1	0.25	1.9	122.1	285.8	286.2	82.3	51.4	83.3	201.8	201.2	258.1	257.7
20180424:21:33:58	23.6	15.7	-4.0	23.88	0.25	2.1	0.25	1.9	122.7	285.9	286.2	82.3	51.4	83.3	203.1	202.5	259.9	259.4
20180424:21:38:58	23.6	16.1	-4.0	23.88	0.25	2.1	0.25	1.9	123.5	285.8	286.2	82.3	51.5	83.3	204.4	203.8	261.5	261.1
20180424:21:43:58	23.6	15.7	-4.0	23.88	0.25	2.0	0.25	1.8	122.6	285.8	286.2	82.2	51.5	83.3	205.8	205.1	263.3	262.8
20180424:21:48:58	23.6	15.1	-4.0	23.88	0.25	2.0	0.25	1.8	121.3	285.7	286.2	82.1	51.4	83.2	207.1	206.5	265.0	264.5
20180424:21:53:58	23.6	15.0	-4.0	23.88	0.25	2.0	0.25	1.8	121.1	285.7	286.2	82.1	51.4	83.1	208.4	207.8	266.7	266.2
20180424:21:58:58	23.6	15.6	-4.0	23.88	0.25	2.1	0.25	1.8	122.5	285.9	286.3	82.1	51.4	83.1	209.8	209.1	268.4	267.9
20180424:22:03:58	23.6	15.8	-4.0	23.88	0.25	2.1	0.25	1.9	122.8	285.9	286.3	82.1	51.4	83.1	211.1	210.4	270.1	269.6
20180424:22:08:58	23.6	15.8	-4.0	23.89	0.25	2.1	0.25	1.8	122.9	285.8	286.2	82.0	51.4	83.0	212.4	211.8	271.8	271.4
20180424:22:13:58	23.6	15.8	-4.0	23.89	0.25	2.1	0.25	1.9	122.8	285.8	286.2	82.0	51.4	83.0	213.7	213.1	273.5	273.0
20180424:22:18:58	23.6	15.7	-4.1	23.89	0.25	2.1	0.25	1.9	122.6	285.7	286.2	81.9	51.4	83.0	215.1	214.4	275.2	274.8
20180424:22:23:58	23.6	15.7	-4.1	23.89	0.25	2.1	0.25	1.9	122.7	285.7	286.3	81.9	51.4	83.0	216.4	215.7	276.9	276.4
20180424:22:28:58	23.6	15.8	-4.1	23.89	0.25	2.1	0.25	1.9	122.9	285.7	286.2	81.9	51.4	82.9	217.7	217.1	278.7	278.2
20180424:22:33:58	23.6	15.9	-4.1	23.89	0.25	2.1	0.25	1.9	123.2	285.7	286.2	81.9	51.4	82.9	219.1	218.4	280.3	279.9
20180424:22:38:58	23.6	16.1	-4.1	23.89	0.25	2.1	0.25	1.9	123.5	285.7	286.2	81.8	51.4	82.8	220.4	219.7	282.1	281.6
20180424:22:43:58	23.6	16.1	-4.1	23.89	0.25	2.1	0.25	1.9	123.6	285.7	286.2	81.7	51.4	82.8	221.7	221.0	283.8	283.3
20180424:22:48:58	23.6	16.1	-4.1	23.89	0.25	2.1	0.25	1.9	123.7	285.7	286.2	81.7	51.4	82.7	223.1	222.4	285.5	285.0
20180424:22:53:58	23.6	16.2	-4.1	23.89	0.25	2.1	0.25	1.9	123.8	285.7	286.2	81.7	51.4	82.7	224.4	223.7	287.2	286.7
20180424:22:58:58	23.6	16.1	-4.0	23.89	0.25	2.1	0.25	1.9	123.7	285.7	286.2	81.6	51.4	82.7	225.7	225.0	288.9	288.4
20180424:23:03:58	23.6	16.1	-4.0	23.89	0.25	2.1	0.25	1.9	123.7	285.7	286.2	81.6	51.4	82.6	227.1	226.3	290.6	290.1
20180424:23:08:58	23.6	16.0	-4.0	23.89	0.25	2.1	0.25	1.9	123.4	285.7	286.2	81.5	51.4	82.6	228.4	227.7	292.3	291.8
20180424:23:13:58	23.6	16.1	-4.0	23.90	0.25	2.1	0.25	1.9	123.5	285.7	286.2	81.4	51.4	82.5	229.7	229.0	294.1	293.5
20180424:23:18:58	23.6	16.1	-4.1	23.90	0.25	2.1	0.25	1.9	123.5	285.7	286.2	81.4	51.4	82.4	231.0	230.3	295.7	295.2
20180424:23:23:58	23.6	16.1	-4.0	23.90	0.25	2.1	0.25	1.8	123.7	285.7	286.3	81.3	51.4	82.4	232.4	231.6	297.5	296.9
20180424:23:28:58	23.6	16.0	-4.1	23.90	0.25	2.0	0.25	1.8	123.4	285.7	286.2	81.3	51.4	82.3	233.7	232.9	299.2	298.6

Time:	Stack Pressure:	Sat% H2O:	Static:	Barometric:	Flowmeter1:	Vacuum1:	Flowmeter2:	Vacuum2:	Stack Temp:	Sorbent Temp:	Probe Temp:	DGM#1 Temp:	Condenser Temp:	DGM#2 Temp:	DGM1*:	DGM2*:	DGM1:	DGM2:
day:hh:mm:ss	in-Hg	Percent	in-H2O	in-Hg	l/min	in-Hg	l/min	in-Hg	degF	degF	degF	degF	degF	degF	liters STP	liters STP	liters nominal	liters nominal
20180424:23:33:58	23.6	15.9	-4.0	23.90	0.25	2.0	0.25	1.8	123.1	285.7	286.3	81.2	51.4	82.3	235.0	234.3	300.9	300.3
20180424:23:38:58	23.6	15.9	-4.0	23.90	0.25	2.0	0.25	1.8	123.2	285.7	286.2	81.1	51.4	82.2	236.4	235.6	302.6	302.0
20180424:23:43:58	23.6	15.9	-4.0	23.90	0.25	2.0	0.25	1.8	123.1	285.6	286.2	81.1	51.4	82.2	237.7	236.9	304.3	303.7
20180424:23:48:58	23.6	15.7	-4.0	23.89	0.25	2.0	0.25	1.8	122.7	285.6	286.2	81.0	51.4	82.1	239.0	238.2	306.0	305.4
20180424:23:53:58	23.6	15.7	-4.0	23.90	0.25	2.1	0.25	1.8	122.7	285.7	286.3	81.0	51.4	82.1	240.3	239.6	307.7	307.1
20180424:23:58:58	23.6	14.8	-3.9	23.90	0.25	2.0	0.25	1.8	120.6	285.5	286.2	81.0	51.4	82.0	241.7	240.9	309.4	308.8
20180425:00:03:58	23.6	14.4	-3.9	23.90	0.25	2.0	0.25	1.8	119.4	285.5	286.2	80.9	51.4	82.0	243.0	242.2	311.1	310.5
20180425:00:08:58	23.6	14.7	-4.0	23.90	0.25	2.1	0.25	1.9	120.3	285.5	286.2	80.8	51.3	81.9	244.3	243.5	312.8	312.2
20180425:00:13:58	23.6	15.0	-4.0	23.90	0.25	2.1	0.25	1.9	121.0	285.6	286.2	80.8	51.4	81.9	245.6	244.8	314.5	313.9
20180425:00:18:58	23.6	15.0	-4.0	23.90	0.25	2.1	0.25	1.9	121.0	285.6	286.2	80.8	51.4	81.8	247.0	246.1	316.2	315.6
20180425:00:23:58	23.6	15.1	-4.0	23.90	0.25	2.1	0.25	1.9	121.3	285.6	286.2	80.7	51.4	81.8	248.3	247.5	317.9	317.3
20180425:00:28:58	23.6	15.2	-4.0	23.91	0.25	2.1	0.25	1.9	121.6	285.7	286.2	80.7	51.3	81.7	249.6	248.8	319.6	318.9
20180425:00:33:58	23.6	15.4	-4.1	23.91	0.25	2.1	0.25	1.9	122.1	285.7	286.3	80.7	51.4	81.7	251.0	250.1	321.3	320.7
20180425:00:38:58	23.6	15.6	-4.1	23.91	0.25	2.1	0.25	1.9	122.6	285.7	286.2	80.6	51.3	81.6	252.3	251.4	323.0	322.4
20180425:00:43:58	23.6	15.8	-4.1	23.91	0.25	2.1	0.25	1.9	122.9	285.7	286.3	80.6	51.4	81.6	253.6	252.8	324.7	324.1
20180425:00:48:58	23.6	16.1	-4.1	23.91	0.25	2.1	0.25	1.9	123.5	285.8	286.3	80.5	51.3	81.5	254.9	254.1	326.4	325.8
20180425:00:53:58	23.6	16.1	-4.2	23.91	0.25	2.1	0.25	1.9	123.5	285.7	286.3	80.4	51.4	81.4	256.3	255.4	328.1	327.5
20180425:00:58:58	23.6	16.0	-4.2	23.91	0.25	2.1	0.25	1.9	123.3	285.7	286.2	80.4	51.3	81.4	257.6	256.7	329.8	329.2
20180425:01:03:58	23.6	15.9	-4.1	23.91	0.25	2.0	0.25	1.8	123.1	285.8	286.3	80.3	51.3	81.3	258.9	258.1	331.5	330.9
20180425:01:08:58	23.6	15.8	-4.1	23.91	0.25	2.0	0.25	1.8	123.0	285.7	286.2	80.2	51.3	81.3	260.3	259.4	333.2	332.6
20180425:01:13:58	23.6	15.7	-4.1	23.91	0.25	2.1	0.25	1.8	122.7	285.7	286.3	80.1	51.3	81.1	261.6	260.8	334.9	334.3
20180425:01:18:58	23.6	15.6	-4.0	23.90	0.25	2.0	0.25	1.8	122.5	285.7	286.2	80.0	51.3	81.1	262.9	262.1	336.6	336.0
20180425:01:23:58	23.6	15.6	-4.0	23.90	0.25	2.1	0.25	1.8	122.6	285.7	286.3	80.0	51.2	81.0	264.2	263.4	338.3	337.7
20180425:01:28:58	23.6	15.5	-4.0	23.89	0.25	2.1	0.25	1.9	122.3	285.7	286.2	79.9	51.3	81.0	265.6	264.7	340.1	339.4
20180425:01:33:58	23.6	15.5	-3.9	23.89	0.25	2.1	0.25	1.9	122.2	285.7	286.2	79.8	51.2	80.9	266.9	266.1	341.7	341.1
20180425:01:38:58	23.6	15.4	-3.9	23.89	0.25	2.1	0.25	1.9	122.0	285.7	286.2	79.7	51.3	80.8	268.3	267.4	343.5	342.8
20180425:01:43:58	23.6	15.4	-3.9	23.89	0.25	2.1	0.25	1.8	122.0	285.7	286.3	79.7	51.2	80.7	269.6	268.7	345.1	344.5
20180425:01:48:58	23.6	15.5	-3.9	23.89	0.25	2.1	0.25	1.9	122.3	285.6	286.2	79.6	51.2	80.7	270.9	270.0	346.8	346.2
20180425:01:53:58	23.6	15.6	-3.9	23.89	0.25	2.1	0.25	1.9	122.3	285.7	286.2	79.5	51.2	80.6	272.2	271.4	348.6	347.9
20180425:01:58:58	23.6	15.5	-3.9	23.88	0.25	2.1	0.25	1.8	122.2	285.7	286.2	79.4	51.2	80.5	273.5	272.6	350.2	349.6
20180425:02:03:58	23.6	15.5	-3.9	23.89	0.25	2.1	0.25	1.8	122.1	285.7	286.2	79.4	51.2	80.4	274.9	274.0	351.9	351.3
20180425:02:08:58	23.6	15.5	-3.9	23.89	0.25	2.1	0.25	1.8	122.3	285.7	286.2	79.3	51.2	80.4	276.2	275.3	353.6	352.9
20180425:02:13:58	23.6	15.5	-4.0	23.89	0.25	2.1	0.25	1.9	122.1	285.6	286.2	79.2	51.2	80.3	277.6	276.6	355.4	354.7
20180425:02:18:58	23.6	15.4	-4.0	23.89	0.25	2.1	0.25	1.8	122.0	285.6	286.2	79.2	51.2	80.3	278.9	277.9	357.0	356.3
20180425:02:23:58	23.6	15.5	-4.0	23.89	0.25	2.1	0.25	1.8	122.1	285.6	286.2	79.1	51.2	80.2	280.2	279.3	358.8	358.1
20180425:02:28:58	23.6	15.5	-4.0	23.89	0.25	2.1	0.25	1.9	122.1	285.6	286.2	79.0	51.2	80.1	281.5	280.6	360.4	359.8
20180425:02:33:58	23.6	15.5	-4.0	23.89	0.25	2.1	0.25	1.9	122.3	285.7	286.2	79.0	51.2	80.1	282.9	281.9	362.2	361.5
20180425:02:38:58	23.6	15.6	-4.0	23.89	0.25	2.1	0.25	1.9	122.3	285.6	286.2	78.9	51.2	80.0	284.2	283.2	363.9	363.2
20180425:02:43:58	23.6	15.5	-4.0	23.89	0.25	2.1	0.25	1.9	122.2	285.6	286.2	78.8	51.2	80.0	285.5	284.6	365.5	364.9
20180425:02:48:58	23.6	15.5	-4.0	23.89	0.25	2.1	0.25	1.8	122.2	285.6	286.2	78.8	51.2	79.9	286.9	285.9	367.2	366.6
20180425:02:53:58	23.6	15.4	-4.0	23.89	0.25	2.1	0.25	1.8	122.0	285.6	286.2	78.7	51.2	79.8	288.2	287.2	368.9	368.2
20180425:02:58:58	23.6	15.5	-4.0	23.89	0.25	2.1	0.25	1.8	122.1	285.6	286.2	78.7	51.2	79.8	289.5	288.5	370.7	369.9
20180425:03:03:58	23.6	15.5	-4.0	23.88	0.25	2.1	0.25	1.8	122.1	285.6	286.2	78.7	51.1	79.7	290.8	289.9	372.3	371.6
20180425:03:08:58	23.6	15.4	-4.0	23.89	0.25	2.1	0.25	1.9	122.0	285.7	286.2	78.6	51.2	79.7	292.2	291.2	374.1	373.3
20180425:03:13:58	23.6	15.5	-4.0	23.89	0.25	2.1	0.25	1.9	122.1	285.6	286.2	78.6	51.1	79.6	293.5	292.5	375.7	375.0
20180425:03:18:58	23.6	15.5	-4.0	23.89	0.249	2.1	0.25	1.9	122.3	285.6	286.1	78.5	51.2	79.5	294.8	293.8	377.5	376.7
20180425:03:23:58	23.6	15.5	-4.0	23.89	0.25	2.1	0.25	1.9	122.1	285.6	286.2	78.5	51.2	79.5	296.1	295.2	379.1	378.4
20180425:03:28:58	23.6	15.5	-4.0	23.89	0.25	2.0	0.25	1.9	122.2	285.7	286.2	78.5	51.1	79.5	297.5	296.5	380.8	380.1
20180425:03:33:58	23.6	15.4	-4.0	23.89	0.25	2.1	0.25	1.9	122.0	285.6	286.2	78.4	51.2	79.4	298.8	297.8	382.5	381.8
20180425:03:38:58	23.6	15.4	-4.0	23.89	0.25	2.1	0.25	1.8	121.9	285.6	286.2	78.4	51.1	79.4	300.1	299.1	384.2	383.5
20180425:03:43:58	23.6	15.4	-4.0	23.89	0.25	2.1	0.25	1.8	122.0	285.6	286.2	78.4	51.2	79.3	301.5	300.5	385.9	385.2
20180425:03:48:58	23.6	15.4	-4.0	23.89	0.25	2.1	0.25	1.8	121.9	285.7	286.2	78.3	51.1	79.3	302.8	301.8	387.6	386.9
20180425:03:53:58	23.6	14.4	-4.1	23.89	0.25	2.0	0.25	1.8	119.6	285.6	286.2	78.3	51.1	79.2	304.1	303.1	389.3	388.6
20180425:03:58:58	23.6	14.2	-4.0	23.88	0.25	2.0	0.25	1.8	118.9	285.5	286.2	78.2	51.2	79.1	305.4	304.4	391.0	390.3
20180425:04:03:58	23.6	14.4	-4.0	23.88	0.25	2.0	0.25	1.8	119.5	285.6	286.2	78.1	51.1	79.1	306.8	305.7	392.7	391.9
20180425:04:08:58	23.6	14.8	-4.0	23.89	0.25	2.1	0.25	1.9	120.4	285.7	286.3	78.1	51.1	79.1	308.1	307.1	394.4	393.6
20180425:04:13:58	23.6	14.9	-4.0	23.89	0.25	2.1	0.25	1.9	120.8	285.7	286.1	78.0	51.1	79.0	309.5	308.4	396.1	395.3
20180425:04:18:58	23.6	15.0	-4.1	23.89	0.25	2.1	0.25	1.9	121.0	285.7	286.3	78.0	51.1	79.0	310.7	309.7	397.8	397.0
20180425:04:23:58	23.6	15.1	-4.1	23.89	0.25	2.1	0.25	1.9	121.2	285.7	286.2	78.0	51.1	78.9	312.1	311.0	399.5	398.7
20180425:04:28:58	23.6	15.1	-4.1	23.89	0.25	2.1	0.25	1.9	121.3	285.7	286.2	77.8	51.1	78.8	313.4	312.4	401.2	400.4
20180425:04:33:58	23.6	15.3	-4.1	23.89	0.25	2.1	0.25	1.9	121.6	285.7	286.3	77.8	51.1	78.8	314.7	313.7	402.8	402.1
20180425:04:38:58	23.6	15.3	-4.1	23.89	0.25	2.1	0.25	1.9	121.7	285.7	286.2	77.8	51.1	78.7	316.1	315.0	404.6	403.8
20180425:04:43:58	23.6	15.2	-4.1	23.89	0.25	2.1	0.25	1.9	121.5	285.6	286.2	77.7	51.0	78.7	317.4	316.3	406.2	405.5
20180425:04:48:58	23.6	15.3	-4.1	23.89	0.25	2.1	0.25	1.9	121.7	285.7	286.2	77.7	51.1	78.6	318.7	317.7	407.9	407.2
20180425:04:53:58	23.6	15.3	-4.1	23.89	0.25	2.1	0.25	1.9	121.7	285.7	286.2	77.6	51.1	78.6	320.1	319.0	409.6	408.9
20180425:04:58:58	23.6	15.2	-4.1	23.89	0.25	2.1	0.25	1.9	121.5	285.7	286.3	77.5	51.0	78.5	321.4	320.3	411.4	410.6
20180425:05:03:58	23.6	14.8	-4.1	23.89	0.25	2.0	0.25	1.8	120.6	285.6	286.2	77.5	51.1	78.4	322.7	321.6	413.0	412.3
20180425:05:08:58	23.6	14.2	-4.1	23.89	0.25	2.0	0.25	1.8	118.9	285.6	286.2	77.4	51.1	78.4	324.1	323.0	414.8	414.0
20180425:05:13:58	23.6	14.0	-4.1	23.89	0.25	2.0	0.25	1.8	118.6	285.6	286.3	77.4	51.0	78.3	325.4	324.3	416.4	415.6
20180425:05:18:58	23.6	14.6	-4.0	23.89	0.25	2.1	0.25	1.9	120.0	285.7	286.2	77.3	51.1	78.3	326.7	325.6	418.1	417.4
20180425:05:23:58	23.6	14.9	-4.1	23.89	0.25	2.1	0.25	1.9	120.7	285.7	286.2	77.2	51.0	78.2	328.0	326.9	419.8	419.0
20180425:05:28:58	23.6	15.0	-4.0	23.88	0.25	2.1	0.25	1.9	121.0	285.7	286.2	77.1	51.0	78.1	329.4	328.3	421.5	420.8
20180425:05:33:58	23.6	15.1	-4.0	23.88	0.25	2.1	0.25	1.9	121.2	285.7	286.2	77.1	51.0	78.1	330.7	329.6	423.2	422.4
20180425:05:38:58	23.6	15.1	-4.0	23.88	0.25	2.1	0.25	1.9	121.1	285.6	286.2	77.0	51.0	78.0	332.0	331.0	424.9	424.2
20180425:05:43:58	23.6	15.1	-4.0	23.88	0.25	2.1	0.25	1.9	121.2	285.5	286.1	76.9	51.0	78.0	333.4	332.3	426.6	425.8
20180425:05:48:58	23.6	15.0	-4.0	23.89	0.25	2.1	0.25	1.9	120.9	285.6	286.2	76.9	51.0	77.9	334.7	333.6	428.3	427.5
20180425:05:53:58	23.6	14.9	-4.0	23.89	0.25	2.1	0.25	1.9	120.8	285.7	286.2	76.8	51.0	77.8	336.1	334.9	430.0	429.2
20180425:05:58:58	23.6	14.8	-4.0	23.89	0.25	2.1	0.25	1.9	120.5	285.6	286.2	76.8	51.0	77.8	337.4	336.3	431.7	430.9
20180425:06:03:58	23.6	14.8	-3.9	23.89	0.25	2.1	0.25	1.9	120.4	285.6	286.2	76.7	51.0	77.7	338.7	337.6	433.4	432.6
20180425:06:08:58	23.6	14.7	-3.9	23.89	0.25	2.1	0.25	1.9	120.3	285.6	286.2	76.6	51.0	77.6	340.0	338.9	435.1	434.3
20180425:06:13:58	23.6	14.3	-4.0	23.89	0.25	2.1	0.25	1.9	119.4	285.5	286.1	76.5	51.0	77.5	341.4	340.2	436.8	436.0
20180425:06:18:58	23.6	14.7	-4.1	23.89	0.25	2.1	0.25	1.9	120.2	285.6	286.2	76.4	51.0	77.5	342.7	341.6	438.5	437.7
20180425:06:23:58	23.6	14.8	-4.1	23.89	0.25	2.1	0.25	1.9	120.5	285.6	286.2	76.4	51.0	77.4	344.1	342.9	440.2	439.4
20180425:06:28:58	23.6	15.1	-4.2	23.89	0.25	2.1	0.25	1.9	121.1	285.6	286.1	76.3	50.9	77.4	345.4	344.3	441.9	441.1
20180425:06:33:58	23.6	15.1	-4.2	23.89	0.25	2.1	0.25	1.9	121.3	285.7	286.2	76.2	51.0	77.3	346.7	345.6	443.6	442.8
20180425:06:38:58	23.6	15.2	-4.2	23.89	0.25	2.0	0.25	1.9	121.4	285.7	286.2	76.2	51.0	77.2	348.1	346.9	445.4	444.6
20180425:06:43:58	23.6	15.2	-4.2	23.89	0.25	2.0	0.25	1.9	121.5	285.7	286.2	76.1	50.9	77.1	349.4	348.3	447.0	446.2
20180425:06:48:58	23.6	15.3	-4.3	23.90	0.25	2.0	0.25	1.9	121.6	285.8	286.2	76.0	50.9	77.1	350.8	349.6	448.8	448.0
20180425:06:53:58	23.6	15.2	-4.3	23.90	0.25	2.1	0.25	1.9	121.5	285.8	286.3	75.9	51.0	77.0	352.1	350.9	450.4	449.6

Time:	Stack Pressure:	Sat% H2O:	Static:	Barometric:	Flowmeter1:	Vacuum1:	Flowmeter2:	Vacuum2:	Stack Temp:	Sorbent Temp:	Probe Temp:	DGM#1 Temp:	Condenser Temp:	DGM#2 Temp:	DGM1*:	DGM2*:	DGM1:	DGM2:
day:hh:mm:ss	in-Hg	Percent	in-H2O	in-Hg	l/min	in-Hg	l/min	in-Hg	degF	degF	degF	degF	degF	degF	liters STP	liters STP	liters nominal	liters nominal
20180425:06:58:58	23.6	15.2	-4.3	23.90	0.25	2.1	0.25	1.9	121.6	285.8	286.3	75.9	50.9	76.9	353.4	352.3	452.1	451.3
20180425:07:03:58	23.6	15.1	-4.4	23.91	0.25	2.1	0.25	1.9	121.4	285.8	286.4	75.8	50.9	76.9	354.8	353.6	453.8	453.0
20180425:07:08:58	23.6	15.1	-4.3	23.91	0.25	2.1	0.25	1.9	121.3	285.8	286.5	75.8	50.9	76.8	356.1	354.9	455.5	454.7
20180425:07:13:58	23.6	15.1	-4.2	23.91	0.25	2.1	0.25	1.9	121.3	285.8	286.4	75.7	50.9	76.8	357.4	356.2	457.2	456.4
20180425:07:18:58	23.6	14.8	-4.2	23.91	0.25	2.1	0.25	1.9	120.5	285.7	286.4	75.6	50.9	76.7	358.8	357.6	458.9	458.1
20180425:07:23:58	23.6	14.9	-4.2	23.91	0.25	2.1	0.25	1.9	120.8	285.7	286.4	75.5	50.9	76.6	360.1	358.9	460.6	459.8
20180425:07:28:58	23.6	15.1	-4.2	23.92	0.25	2.1	0.25	1.9	121.3	285.8	286.4	75.5	50.9	76.6	361.4	360.3	462.3	461.5
20180425:07:33:58	23.6	15.2	-4.2	23.92	0.25	2.1	0.25	1.9	121.4	285.9	286.4	75.4	50.9	76.5	362.8	361.6	464.0	463.1
20180425:07:38:58	23.6	15.2	-4.2	23.92	0.25	2.1	0.25	1.9	121.5	285.9	286.4	75.4	50.9	76.5	364.1	362.9	465.6	464.9
20180425:07:43:58	23.6	15.2	-4.2	23.91	0.25	2.1	0.25	1.9	121.6	285.9	286.4	75.3	50.9	76.4	365.5	364.2	467.4	466.5
20180425:07:48:58	23.6	15.3	-4.2	23.91	0.25	2.1	0.25	1.9	121.7	285.8	286.4	75.3	50.9	76.3	366.8	365.6	469.0	468.3
20180425:07:53:58	23.6	15.3	-4.2	23.91	0.25	2.1	0.25	1.9	121.7	285.8	286.4	75.2	50.9	76.3	368.1	366.9	470.8	469.9
20180425:07:58:58	23.6	15.4	-4.2	23.91	0.25	2.1	0.25	1.9	121.9	285.8	286.4	75.2	50.8	76.2	369.4	368.2	472.4	471.6
20180425:08:03:58	23.6	15.3	-4.2	23.91	0.25	2.1	0.25	1.9	121.9	285.9	286.4	75.2	50.8	76.2	370.8	369.5	474.1	473.3
20180425:08:08:58	23.6	15.3	-4.2	23.91	0.25	2.1	0.25	1.9	121.8	285.8	286.4	75.1	50.9	76.2	372.1	370.9	475.8	475.0
20180425:08:13:58	23.6	15.3	-4.1	23.91	0.25	2.1	0.25	1.9	121.7	285.8	286.4	75.1	50.8	76.1	373.4	372.2	477.5	476.7
20180425:08:18:58	23.6	15.3	-4.1	23.91	0.25	2.1	0.25	1.9	121.7	285.9	286.4	75.1	50.8	76.1	374.8	373.6	479.2	478.4
20180425:08:23:58	23.6	14.9	-4.2	23.91	0.25	2.1	0.25	1.9	120.8	285.8	286.5	75.1	50.8	76.1	376.1	374.9	480.9	480.0
20180425:08:28:58	23.6	14.9	-4.1	23.90	0.25	2.1	0.25	1.9	120.9	285.9	286.4	75.1	50.8	76.0	377.4	376.2	482.6	481.8
20180425:08:33:58	23.6	15.2	-4.1	23.90	0.25	2.1	0.25	1.9	121.4	285.9	286.4	75.0	50.8	76.0	378.7	377.5	484.2	483.4
20180425:08:38:58	23.6	15.2	-4.1	23.90	0.25	2.1	0.25	1.9	121.4	286.0	286.5	75.0	50.8	76.0	380.1	378.9	485.9	485.1
20180425:08:43:58	23.6	15.3	-4.1	23.90	0.25	2.1	0.25	1.9	121.7	285.9	286.5	74.9	50.8	75.9	381.4	380.2	487.6	486.8
20180425:08:48:58	23.6	15.3	-4.1	23.90	0.25	2.1	0.25	1.9	121.8	285.9	286.5	75.0	50.8	75.9	382.8	381.5	489.3	488.5
20180425:08:53:58	23.6	15.3	-4.1	23.90	0.25	2.1	0.25	1.9	121.8	285.9	286.4	74.9	50.8	75.9	384.1	382.8	491.0	490.2
20180425:08:58:58	23.6	15.4	-4.1	23.90	0.25	2.1	0.25	1.9	122.0	285.8	286.4	74.9	50.8	75.9	385.4	384.2	492.7	491.9
20180425:09:03:58	23.6	15.5	-4.1	23.90	0.25	2.1	0.25	1.9	122.3	285.9	286.4	74.9	50.8	75.9	386.7	385.5	494.4	493.6
20180425:09:08:58	23.6	15.5	-4.0	23.90	0.25	2.1	0.25	1.9	122.2	285.8	286.4	74.9	50.8	75.9	388.1	386.8	496.1	495.3
20180425:09:13:58	23.6	15.5	-4.0	23.90	0.25	2.1	0.25	1.9	122.3	285.8	286.4	74.9	50.8	75.9	389.4	388.1	497.7	496.9
20180425:09:18:58	23.6	15.5	-4.1	23.90	0.25	2.1	0.25	1.9	122.3	285.8	286.4	74.9	50.8	75.9	390.7	389.5	499.5	498.6
20180425:09:23:58	23.6	15.5	-4.1	23.90	0.25	2.1	0.25	1.9	122.1	285.8	286.4	74.9	50.8	75.8	392.0	390.8	501.1	500.3
20180425:09:28:58	23.6	15.0	-4.1	23.90	0.25	2.1	0.25	1.9	121.0	285.8	286.4	74.9	50.8	75.8	393.4	392.2	502.8	502.0
20180425:09:33:58	23.6	15.1	-4.0	23.90	0.25	2.1	0.25	1.9	121.3	285.8	286.4	74.9	50.8	75.8	394.7	393.5	504.5	503.7
20180425:09:38:58	23.6	15.2	-4.0	23.90	0.25	2.1	0.25	1.9	121.6	285.9	286.4	74.9	50.8	75.9	396.0	394.8	506.2	505.4
20180425:09:43:58	23.6	15.3	-4.0	23.90	0.25	2.1	0.25	1.9	121.6	285.9	286.4	74.9	50.8	75.9	397.4	396.1	507.9	507.1
20180425:09:48:58	23.6	15.4	-4.0	23.90	0.25	2.1	0.25	1.9	122.0	285.9	286.5	74.9	50.8	75.9	398.7	397.5	509.5	508.8
20180425:09:53:58	23.6	15.4	-4.0	23.90	0.25	2.1	0.25	1.9	121.9	285.9	286.5	74.9	50.8	75.9	400.0	398.8	511.2	510.4
20180425:09:58:58	23.6	15.4	-4.0	23.90	0.25	2.1	0.25	1.9	121.9	285.9	286.5	74.9	50.8	75.9	401.4	400.1	512.9	512.1
20180425:10:03:58	23.6	15.3	-4.0	23.90	0.25	2.1	0.25	1.9	121.8	285.9	286.5	74.9	50.8	75.9	402.7	401.4	514.6	513.8
20180425:10:08:58	23.6	15.3	-4.2	23.91	0.25	2.1	0.25	1.9	121.8	285.9	286.5	75.0	50.8	75.9	404.0	402.8	516.3	515.5
20180425:10:13:58	23.6	15.4	-4.3	23.92	0.25	2.1	0.25	1.9	122.0	285.9	286.4	75.0	50.8	75.9	405.4	404.1	518.0	517.2
20180425:10:18:58	23.6	15.4	-4.4	23.92	0.25	2.1	0.25	1.9	121.9	285.8	286.4	75.0	50.8	75.9	406.7	405.4	519.7	518.9
20180425:10:23:58	23.6	15.3	-4.4	23.92	0.25	2.1	0.25	1.9	121.8	285.9	286.4	75.0	50.8	75.9	408.0	406.7	521.4	520.6
20180425:10:28:58	23.6	15.3	-4.3	23.92	0.25	2.1	0.25	1.9	121.7	285.8	286.4	75.0	50.8	75.9	409.3	408.1	523.0	522.3
20180425:10:33:58	23.6	15.4	-4.3	23.92	0.25	2.1	0.25	1.9	121.9	285.8	286.4	75.0	50.8	75.9	410.7	409.4	524.8	523.9
20180425:10:38:58	23.6	15.4	-4.3	23.91	0.25	2.1	0.25	1.9	121.9	285.8	286.4	75.1	50.7	75.9	412.0	410.8	526.4	525.7
20180425:10:43:58	23.6	15.4	-4.3	23.91	0.25	2.1	0.25	1.9	122.0	285.9	286.4	75.1	50.8	76.0	413.4	412.1	528.1	527.3
20180425:10:48:58	23.6	15.3	-4.4	23.91	0.25	2.1	0.25	1.9	121.8	285.9	286.4	75.1	50.8	76.0	414.7	413.4	529.8	529.0
20180425:10:53:58	23.6	15.3	-4.4	23.91	0.25	2.1	0.25	1.9	121.8	285.8	286.4	75.1	50.8	76.0	416.0	414.7	531.5	530.7
20180425:10:58:58	23.6	15.3	-4.4	23.91	0.25	2.1	0.25	1.9	121.7	285.8	286.4	75.1	50.8	76.1	417.3	416.1	533.2	532.4
20180425:11:03:58	23.6	15.2	-4.3	23.91	0.25	2.1	0.25	1.9	121.5	285.9	286.4	75.2	50.8	76.1	418.7	417.4	534.8	534.1
20180425:11:08:58	23.6	15.3	-4.3	23.91	0.25	2.1	0.25	1.9	121.7	285.8	286.4	75.2	50.8	76.1	420.0	418.7	536.6	535.7
20180425:11:13:58	23.6	15.3	-4.3	23.90	0.25	2.1	0.25	1.9	121.7	285.8	286.4	75.2	50.8	76.1	421.3	420.0	538.2	537.4
20180425:11:18:58	23.6	15.2	-4.3	23.90	0.25	2.1	0.25	1.9	121.5	285.8	286.5	75.3	50.8	76.2	422.6	421.3	539.9	539.1
20180425:11:23:58	23.6	15.3	-4.3	23.90	0.25	2.1	0.25	1.9	121.6	285.9	286.5	75.4	50.8	76.2	424.0	422.7	541.6	540.8
20180425:11:28:58	23.6	15.3	-4.3	23.90	0.25	2.1	0.25	1.9	121.7	285.8	286.4	75.4	50.8	76.2	425.3	424.0	543.3	542.5
20180425:11:33:58	23.6	15.2	-4.3	23.90	0.25	2.1	0.25	1.9	121.5	285.8	286.4	75.4	50.8	76.3	426.6	425.3	544.9	544.2
20180425:11:38:58	23.6	15.2	-4.3	23.90	0.25	2.1	0.25	1.9	121.6	285.8	286.4	75.5	50.8	76.3	428.0	426.6	546.7	545.8
20180425:11:43:58	23.6	15.3	-4.3	23.89	0.25	2.1	0.25	1.9	121.7	285.9	286.4	75.5	50.8	76.4	429.3	428.0	548.3	547.5
20180425:11:48:58	23.6	15.3	-4.3	23.89	0.25	2.1	0.25	1.9	121.7	285.8	286.4	75.6	50.8	76.4	430.6	429.3	550.0	549.2
20180425:11:53:58	23.6	15.3	-4.2	23.89	0.25	2.1	0.25	1.9	121.7	285.8	286.4	75.7	50.8	76.5	431.9	430.6	551.7	550.9
20180425:11:58:58	23.6	15.3	-4.2	23.88	0.25	2.1	0.25	1.9	121.6	285.8	286.4	75.8	50.9	76.6	433.3	431.9	553.4	552.6
20180425:12:03:58	23.6	15.3	-4.2	23.88	0.25	2.1	0.25	1.9	121.8	285.8	286.3	75.8	50.8	76.6	434.6	433.3	555.1	554.3
20180425:12:08:58	23.6	15.3	-4.2	23.88	0.25	2.1	0.25	1.9	121.6	285.8	286.3	75.9	50.9	76.7	435.9	434.6	556.8	555.9
20180425:12:13:58	23.6	15.3	-4.2	23.88	0.25	2.1	0.25	1.9	121.7	285.7	286.3	75.9	50.8	76.8	437.2	435.9	558.4	557.7
20180425:12:18:58	23.6	15.4	-4.2	23.88	0.25	2.1	0.25	1.9	121.9	285.6	286.2	76.1	50.9	76.8	438.6	437.2	560.1	559.3
20180425:12:23:58	23.6	15.4	-4.2	23.88	0.25	2.1	0.25	1.9	121.9	285.6	286.2	76.1	50.8	76.9	439.9	438.6	561.8	561.0
20180425:12:28:58	23.6	15.3	-4.1	23.87	0.25	2.1	0.25	1.9	121.8	285.7	286.3	76.2	50.9	76.9	441.2	439.9	563.5	562.7
20180425:12:33:58	23.6	15.3	-4.1	23.87	0.25	2.1	0.25	1.9	121.7	285.7	286.2	76.2	50.8	77.0	442.5	441.2	565.2	564.4
20180425:12:38:58	23.6	15.4	-4.1	23.87	0.25	2.1	0.25	1.9	121.8	285.7	286.2	76.3	50.9	77.1	443.8	442.5	566.9	566.0
20180425:12:43:58	23.6	15.3	-4.1	23.86	0.25	2.1	0.25	1.9	121.7	285.6	286.2	76.4	50.9	77.1	445.2	443.8	568.6	567.7
20180425:12:48:58	23.6	15.4	-4.1	23.86	0.25	2.1	0.25	1.9	121.8	285.6	286.2	76.4	50.9	77.2	446.5	445.1	570.2	569.4
20180425:12:53:58	23.6	15.4	-4.1	23.86	0.25	2.1	0.25	1.9	121.9	285.7	286.2	76.5	50.9	77.3	447.8	446.5	571.9	571.1
20180425:12:58:58	23.6	15.4	-4.1	23.86	0.25	2.1	0.25	1.9	121.8	285.6	286.2	76.6	50.9	77.4	449.1	447.8	573.6	572.8
20180425:13:03:58	23.6	15.4	-4.1	23.86	0.25	2.1	0.25	1.9	121.9	285.7	286.2	76.7	50.9	77.4	450.5	449.1	575.3	574.5
20180425:13:08:58	23.6	15.4	-4.0	23.85	0.25	2.1	0.25	1.9	121.8	285.7	286.2	76.7	50.9	77.5	451.8	450.4	577.0	576.1
20180425:13:13:58	23.6	15.4	-4.1	23.85	0.25	2.1	0.25	1.9	121.9	285.6	286.2	76.8	50.9	77.6	453.1	451.8	578.7	577.9
20180425:13:18:58	23.6	15.5	-4.0	23.85	0.25	2.1	0.25	1.9	122.0	285.7	286.3	76.9	50.9	77.7	454.4	453.1	580.4	579.5
20180425:13:23:58	23.6	15.4	-4.0	23.85	0.25	2.1	0.25	1.9	122.0	285.7	286.2	76.9	50.9	77.7	455.8	454.4	582.1	581.2
20180425:13:28:58	23.6	15.4	-4.0	23.85	0.25	2.1	0.25	1.9	121.9	285.7	286.2	77.0	50.9	77.8	457.1	455.7	583.8	582.9
20180425:13:33:58	23.6	15.3	-4.0	23.85	0.25	2.1	0.25	1.9	121.8	285.7	286.3	77.0	50.9	77.8	458.5	457.1	585.5	584.6
20180425:13:38:58	23.6	15.4	-4.0	23.85	0.25	2.1	0.25	1.9	121.9	285.7	286.2	77.1	50.9	77.9	459.8	458.4	587.2	586.3
20180425:13:43:58	23.6	15.5	-4.0	23.84	0.25	2.1	0.25	1.9	122.0	285.7	286.3	77.2	50.9	78.0	461.1	459.7	588.8	588.0
20180425:13:48:58	23.6	15.4	-3.9	23.84	0.25	2.1	0.25	1.9	122.0	285.7	286.3	77.3	50.9	78.1	462.4	461.0	590.6	589.7
20180425:13:53:58	23.5	15.5	-3.9	23.84	0.25	2.1	0.25	1.9	122.0	285.6	286.2	77.3	50.9	78.1	463.7	462.3	592.2	591.4
20180425:13:58:58	23.5	15.5	-3.9	23.83	0.25	2.1	0.25	1.9	122.0	285.7	286.3	77.4	50.9	78.2	465.1	463.6	593.9	593.0
20180425:14:03:58	23.5	15.5	-4.0	23.84	0.25	2.1	0.25	1.9	122.0	285.7	286.2	77.4	50.9	78.3	466.4	465.0	595.6	594.8
20180425:14:08:58	23.5	15.5	-3.9	23.83	0.25	2.1	0.25	1.9	122.1	285.7	286.3	77.5	50.9	78.3	467.7	466.3	597.3	596.4
20180425:14:13:58	23.5	15.5	-3.9	23.83	0.25	2.1	0.25	1.9	122.0	285.7	286.3	77.6	50.9	78.4	469.0	467.6	599.0	598.1
20180425:14:18:58	23.5	15.5	-3.9	23.83	0.25	2.1	0.25	1.9	122.1	285.7	286.2	77.7	50.9	78.5	470.4	468.9	600.7	599.8

Time:	Stack Pressure:	Sat% H2O:	Static:	Barometric:	Flowmeter1:	Vacuum1:	Flowmeter2:	Vacuum2:	Stack Temp:	Sorbent Temp:	Probe Temp:	DGM#1 Temp:	Condenser Temp:	DGM#2 Temp:	DGM1*:	DGM2*:	DGM1:	DGM2:
day:hh:mm:ss	in-Hg	Percent	in-H2O	in-Hg	l/min	in-Hg	l/min	in-Hg	degF	degF	degF	degF	degF	degF	liters STP	liters STP	liters nominal	liters nominal
20180425:14:23:58	23.5	15.4	-3.9	23.83	0.25	2.1	0.25	1.9	122.0	285.7	286.3	77.8	50.9	78.5	471.7	470.3	602.4	601.5
20180425:14:28:58	23.5	15.4	-3.9	23.82	0.25	2.1	0.25	1.9	122.0	285.7	286.2	77.8	50.9	78.7	473.0	471.6	604.1	603.2
20180425:14:33:58	23.5	15.4	-3.9	23.82	0.25	2.1	0.25	1.9	121.9	285.7	286.3	77.9	51.0	78.7	474.3	472.9	605.8	604.9
20180425:14:38:58	23.5	15.4	-3.9	23.82	0.25	2.1	0.25	1.9	121.9	285.7	286.3	78.0	50.9	78.8	475.7	474.2	607.5	606.6
20180425:14:43:58	23.5	15.5	-3.9	23.81	0.25	2.1	0.25	1.9	122.1	285.7	286.2	78.1	51.0	78.8	477.0	475.5	609.2	608.3
20180425:14:48:58	23.5	15.4	-3.9	23.81	0.25	2.1	0.25	1.9	122.0	285.7	286.3	78.1	50.9	78.9	478.3	476.8	610.9	610.0
20180425:14:53:58	23.5	15.4	-3.8	23.81	0.25	2.1	0.25	1.9	121.9	285.7	286.3	78.2	51.0	79.0	479.6	478.2	612.6	611.7
20180425:14:58:58	23.5	15.4	-3.8	23.81	0.25	2.1	0.25	1.9	121.9	285.7	286.2	78.3	50.9	79.1	480.9	479.5	614.3	613.3
20180425:15:03:58	23.5	15.4	-3.9	23.81	0.25	2.1	0.25	1.9	121.9	285.7	286.2	78.4	51.0	79.2	482.3	480.8	616.0	615.1
20180425:15:08:58	23.5	15.4	-3.8	23.81	0.25	2.1	0.25	1.9	121.9	285.7	286.2	78.5	50.9	79.3	483.6	482.1	617.7	616.7
20180425:15:13:59	23.5	15.4	-3.8	23.80	0.25	2.1	0.25	1.9	121.8	285.7	286.3	78.5	51.0	79.3	485.0	483.5	619.4	618.5
20180425:15:18:59	23.5	14.9	-3.9	23.80	0.25	2.1	0.25	1.9	120.8	285.6	286.2	78.6	51.0	79.4	486.3	484.8	621.1	620.1
20180425:15:23:59	23.5	14.2	-3.9	23.80	0.25	2.1	0.25	1.9	118.8	285.6	286.3	78.7	51.0	79.5	487.6	486.1	622.8	621.9
20180425:15:28:59	23.5	14.4	-3.8	23.80	0.25	2.1	0.25	1.9	119.5	285.6	286.2	78.8	51.0	79.6	488.9	487.4	624.5	623.5
20180425:15:33:59	23.5	15.0	-3.8	23.80	0.25	2.1	0.25	1.9	120.8	285.7	286.2	78.9	51.0	79.7	490.2	488.8	626.2	625.3
20180425:15:38:59	23.5	15.2	-3.8	23.79	0.25	2.1	0.25	1.9	121.3	285.7	286.2	79.0	51.0	79.8	491.6	490.1	627.9	626.9
20180425:15:43:59	23.5	15.3	-3.8	23.80	0.25	2.1	0.25	1.9	121.6	285.7	286.2	79.1	51.0	79.9	492.9	491.4	629.6	628.6
20180425:15:48:59	23.5	15.4	-3.8	23.79	0.25	2.1	0.25	1.9	121.9	285.7	286.2	79.1	51.0	80.0	494.2	492.7	631.3	630.3
20180425:15:53:59	23.5	15.5	-3.8	23.79	0.25	2.1	0.25	1.9	122.0	285.7	286.2	79.2	51.0	80.0	495.5	494.0	633.0	632.1
20180425:15:58:59	23.5	15.5	-3.8	23.79	0.25	2.1	0.25	1.9	122.2	285.7	286.3	79.3	51.0	80.1	496.9	495.3	634.7	633.7
20180425:16:03:59	23.5	15.6	-3.7	23.79	0.25	2.1	0.25	1.9	122.3	285.7	286.3	79.4	51.0	80.2	498.2	496.7	636.4	635.5
20180425:16:08:59	23.5	15.5	-3.7	23.78	0.25	2.1	0.25	1.9	122.1	285.7	286.2	79.5	51.0	80.3	499.6	498.0	638.1	637.1
20180425:16:13:59	23.5	15.5	-3.8	23.78	0.25	2.1	0.25	1.9	122.0	285.7	286.2	79.6	51.0	80.4	500.9	499.3	639.8	638.9
20180425:16:18:59	23.5	15.4	-3.8	23.78	0.25	2.1	0.25	1.9	121.8	285.7	286.2	79.7	51.0	80.5	502.2	500.6	641.5	640.5
20180425:16:23:59	23.5	15.4	-3.7	23.78	0.25	2.1	0.25	1.9	121.8	285.8	286.2	79.8	51.0	80.6	503.5	502.0	643.3	642.3
20180425:16:28:59	23.5	15.3	-3.7	23.78	0.25	2.1	0.25	1.9	121.7	285.7	286.2	79.9	51.0	80.7	504.8	503.3	644.9	643.9
20180425:16:33:59	23.5	14.5	-3.6	23.77	0.25	2.1	0.25	1.9	119.6	285.6	286.2	80.0	51.0	80.8	506.2	504.6	646.7	645.7
20180425:16:38:59	23.5	14.1	-3.6	23.77	0.25	2.1	0.25	1.8	118.7	285.5	286.2	80.1	51.1	80.9	507.5	505.9	648.3	647.4
20180425:16:43:59	23.5	14.8	-3.7	23.78	0.25	2.1	0.25	1.9	120.4	285.7	286.1	80.2	51.0	81.0	508.9	507.3	650.1	649.1
20180425:16:48:59	23.5	15.1	-3.7	23.78	0.25	2.1	0.25	1.9	121.1	285.7	286.1	80.3	51.1	81.1	510.1	508.6	651.8	650.8
20180425:16:53:59	23.5	15.2	-3.7	23.78	0.25	2.1	0.25	1.9	121.4	285.7	286.1	80.4	51.1	81.2	511.5	509.9	653.5	652.5
20180425:16:58:59	23.5	15.2	-3.6	23.77	0.25	2.1	0.25	1.9	121.5	285.7	286.1	80.5	51.1	81.3	512.8	511.2	655.2	654.2
20180425:17:03:59	23.5	15.2	-3.6	23.77	0.25	2.1	0.25	1.9	121.4	285.7	286.1	80.6	51.1	81.4	514.1	512.5	656.9	655.9
20180425:17:08:59	23.5	15.4	-3.7	23.77	0.25	2.1	0.25	1.9	121.7	285.7	286.1	80.7	51.2	81.5	515.4	513.8	658.6	657.6
20180425:17:13:59	23.5	15.5	-3.7	23.77	0.25	2.1	0.25	1.9	122.0	285.7	286.1	80.8	51.1	81.6	516.7	515.2	660.3	659.3
20180425:17:18:59	23.5	15.6	-3.7	23.77	0.25	2.1	0.25	1.9	122.3	285.7	286.1	81.0	51.2	81.7	518.1	516.5	662.0	661.0
20180425:17:23:59	23.5	15.6	-3.8	23.77	0.25	2.1	0.25	1.9	122.3	285.7	286.1	81.0	51.2	81.9	519.4	517.8	663.7	662.7
20180425:17:28:59	23.5	15.8	-3.9	23.77	0.25	2.1	0.25	1.9	122.6	285.7	286.2	81.1	51.2	82.0	520.7	519.1	665.4	664.4
20180425:17:33:59	23.5	15.8	-3.9	23.77	0.25	2.1	0.25	1.9	122.8	285.6	286.1	81.3	51.2	82.1	522.0	520.4	667.1	666.1
20180425:17:38:59	23.5	15.8	-3.8	23.77	0.25	2.1	0.25	1.9	122.7	285.6	286.1	81.3	51.3	82.2	523.4	521.8	668.8	667.8
20180425:17:43:59	23.5	15.8	-3.7	23.77	0.25	2.1	0.25	1.9	122.7	285.7	286.1	81.4	51.2	82.3	524.7	523.0	670.5	669.5
20180425:17:48:59	23.5	15.8	-3.6	23.76	0.25	2.1	0.25	1.9	122.7	285.7	286.1	81.5	51.2	82.3	526.0	524.4	672.2	671.2
20180425:17:53:59	23.5	15.9	-3.7	23.76	0.25	2.1	0.25	1.9	122.9	285.7	286.2	81.6	51.2	82.4	527.4	525.7	674.0	672.9
20180425:17:58:59	23.5	15.8	-3.6	23.76	0.25	2.1	0.25	1.9	122.8	285.7	286.1	81.7	51.3	82.6	528.7	527.0	675.7	674.6
20180425:18:03:59	23.5	15.9	-3.7	23.76	0.25	2.1	0.25	1.9	122.9	285.7	286.2	81.8	51.3	82.7	530.0	528.3	677.4	676.3
20180425:18:08:59	23.5	16.0	-3.9	23.76	0.25	2.1	0.25	1.9	123.1	285.7	286.1	81.9	51.3	82.7	531.3	529.7	679.1	678.1
20180425:18:13:59	23.5	16.0	-3.9	23.76	0.25	2.1	0.25	1.9	123.2	285.8	286.1	82.0	51.2	82.8	532.7	531.0	680.8	679.7
20180425:18:18:59	23.5	15.9	-3.9	23.76	0.25	2.1	0.25	1.9	123.0	285.7	286.1	82.0	51.3	82.9	534.0	532.3	682.6	681.5
20180425:18:23:59	23.5	15.9	-3.7	23.76	0.25	2.1	0.25	1.9	122.9	285.6	286.1	82.1	51.3	83.0	535.3	533.6	684.3	683.2
20180425:18:28:59	23.5	15.7	-3.6	23.76	0.25	2.1	0.25	1.9	122.5	285.7	286.2	82.2	51.4	83.0	536.7	535.0	686.0	684.9
20180425:18:33:59	23.5	15.6	-3.5	23.76	0.25	2.1	0.25	1.9	122.4	285.7	286.2	82.3	51.3	83.1	538.0	536.3	687.7	686.6
20180425:18:38:59	23.5	15.6	-3.5	23.76	0.25	2.1	0.25	1.9	122.2	285.7	286.1	82.4	51.4	83.2	539.3	537.6	689.5	688.3
20180425:18:43:59	23.5	15.5	-3.3	23.75	0.25	2.1	0.25	1.9	122.1	285.7	286.2	82.4	51.3	83.3	540.6	539.0	691.1	690.1
20180425:18:48:59	23.5	15.4	-3.3	23.76	0.25	2.1	0.25	1.9	121.8	285.7	286.2	82.5	51.4	83.4	542.0	540.3	692.9	691.8
20180425:18:53:59	23.5	15.3	-3.3	23.76	0.25	2.1	0.25	1.9	121.5	285.7	286.2	82.6	51.4	83.4	543.3	541.6	694.6	693.5
20180425:18:58:59	23.5	15.2	-3.2	23.76	0.25	2.1	0.25	1.9	121.4	285.7	286.2	82.6	51.4	83.5	544.6	542.9	696.3	695.2
20180425:19:03:59	23.5	15.3	-3.4	23.76	0.25	2.1	0.25	1.9	121.6	285.7	286.2	82.7	51.4	83.6	546.0	544.3	698.1	696.9
20180425:19:08:59	23.5	15.3	-3.4	23.76	0.25	2.1	0.25	1.9	121.5	285.7	286.1	82.7	51.4	83.6	547.3	545.6	699.8	698.6
20180425:19:13:59	23.5	15.2	-3.3	23.76	0.25	2.1	0.25	1.9	121.5	285.7	286.2	82.7	51.4	83.7	548.7	546.9	701.5	700.4
20180425:19:18:59	23.5	15.2	-3.8	23.76	0.25	2.1	0.25	1.9	121.3	285.7	286.2	82.8	51.4	83.7	550.0	548.2	703.2	702.1
20180425:19:23:59	23.5	15.2	-3.9	23.76	0.25	2.1	0.25	1.9	121.2	285.7	286.3	82.8	51.4	83.7	551.3	549.6	704.9	703.8
20180425:19:28:59	23.5	15.2	-3.8	23.76	0.25	2.1	0.25	1.9	121.3	285.7	286.2	82.9	51.4	83.8	552.7	550.9	706.7	705.5
20180425:19:33:59	23.5	15.2	-3.9	23.76	0.25	2.1	0.25	1.9	121.4	285.6	286.2	82.9	51.4	83.8	554.0	552.2	708.4	707.3
20180425:19:38:59	23.5	15.4	-4.0	23.76	0.25	2.1	0.25	1.9	121.8	285.6	286.1	82.9	51.4	83.9	555.3	553.5	710.1	709.0
20180425:19:43:59	23.4	15.4	-4.8	23.77	0.25	2.1	0.25	1.9	121.8	285.7	286.2	82.9	51.4	83.9	556.6	554.9	711.8	710.7
20180425:19:48:59	23.4	15.5	-4.8	23.77	0.25	2.1	0.25	1.9	121.9	285.7	286.3	83.0	51.4	83.9	558.0	556.2	713.6	712.4
20180425:19:53:59	23.4	15.5	-4.7	23.77	0.25	2.1	0.25	1.9	121.9	285.7	286.2	83.0	51.4	83.9	559.3	557.5	715.3	714.1
20180425:19:58:59	23.4	15.5	-4.6	23.77	0.25	2.1	0.25	1.9	121.9	285.7	286.2	83.0	51.4	84.0	560.6	558.9	717.0	715.9
20180425:20:03:59	23.5	15.4	-4.3	23.77	0.25	2.1	0.25	1.9	121.8	285.7	286.2	83.0	51.4	84.0	562.0	560.2	718.8	717.6
20180425:20:08:59	23.5	15.4	-4.1	23.77	0.25	2.1	0.25	1.9	121.8	285.6	286.2	83.0	51.4	84.0	563.3	561.5	720.5	719.3
20180425:20:13:59	23.5	15.3	-3.9	23.77	0.25	2.1	0.25	1.9	121.6	285.6	286.2	83.1	51.4	84.1	564.6	562.8	722.2	721.0
20180425:20:18:59	23.4	14.8	-4.6	23.77	0.25	2.1	0.25	1.9	120.2	285.6	286.2	83.1	51.4	84.1	566.0	564.2	724.0	722.8
20180425:20:23:59	23.4	15.4	-4.6	23.77	0.25	2.1	0.25	1.9	121.7	285.7	286.3	83.1	51.4	84.1	567.3	565.5	725.7	724.5
20180425:20:28:59	23.4	15.5	-4.8	23.78	0.25	2.1	0.25	1.9	121.9	285.7	286.2	83.1	51.4	84.1	568.7	566.8	727.4	726.2
20180425:20:33:59	23.4	15.6	-4.9	23.78	0.25	2.1	0.25	1.9	122.1	285.7	286.2	83.1	51.4	84.1	570.0	568.2	729.1	727.9
20180425:20:38:59	23.4	15.7	-4.8	23.78	0.25	2.1	0.25	1.9	122.4	285.7	286.3	83.1	51.5	84.2	571.3	569.5	730.9	729.6
20180425:20:43:59	23.4	15.8	-5.0	23.79	0.25	2.1	0.25	1.9	122.6	285.7	286.3	83.1	51.4	84.2	572.7	570.8	732.6	731.4
20180425:20:48:59	23.4	16.1	-5.1	23.78	0.25	2.1	0.25	1.9	123.3	285.7	286.3	83.1	51.5	84.2	574.0	572.1	734.3	733.1
20180425:20:53:59	23.4	16.3	-5.2	23.78	0.25	2.1	0.25	1.9	123.6	285.7	286.2	83.2	51.4	84.2	575.4	573.5	736.1	734.8
20180425:20:58:59	23.4	15.7	-5.3	23.78	0.25	2.1	0.25	1.9	122.3	285.7	286.3	83.2	51.5	84.2	576.7	574.8	737.8	736.5
20180425:21:03:59	23.4	15.1	-5.4	23.78	0.25	2.1	0.25	1.9	120.9	285.7	286.3	83.2	51.5	84.3	578.0	576.2	739.5	738.3
20180425:21:08:59	23.4	15.1	-5.4	23.79	0.25	2.1	0.25	1.9	120.9	285.7	286.3	83.2	51.5	84.2	579.4	577.5	741.3	740.0
20180425:21:13:59	23.4	15.5	-5.3	23.79	0.25	2.1	0.25	1.9	122.0	285.7	286.2	83.2	51.5	84.2	580.7	578.8	742.9	741.8
20180425:21:18:59	23.4	16.1	-5.3	23.79	0.25	2.1	0.25	1.9	123.2	285.8	286.2	83.1	51.5	84.2	582.0	580.1	744.7	743.4
20180425:21:23:59	23.4	16.2	-5.3	23.78	0.25	2.1	0.25	1.9	123.6	285.7	286.2	83.1	51.4	84.2	583.3	581.5	746.4	745.2
20180425:21:28:59	23.4	16.2	-5.3	23.78	0.25	2.1	0.25	1.9	123.6	285.7	286.2	83.1	51.5	84.2	584.7	582.8	748.2	746.9
20180425:21:33:59	23.4	16.3	-5.4	23.78	0.25	2.1	0.25	1.9	123.8	285.7	286.2	83.1	51.4	84.2	586.0	584.1	749.9	748.6
20180425:21:38:59	23.4	16.3	-5.4	23.78	0.25	2.1	0.25	1.9	123.8	285.7	286.2	83.1	51.5	84.2	587.3	585.5	751.6	750.3
20180425:21:43:59	23.4	16.4	-5.4	23.78	0.25	2.1	0.25	1.9	123.8	285.7	286.3	83.1	51.5	84.2	588.7	586.7	753.3	752.0

Time:	Stack Pressure:	Sat% H2O:	Static:	Barometric:	Flowmeter1:	Vacuum1:	Flowmeter2:	Vacuum2:	Stack Temp:	Sorbent Temp:	Probe Temp:	DGM#1 Temp:	Condenser Temp:	DGM#2 Temp:	DGM1*:	DGM2*:	DGM1:	DGM2:
day:hh:mm:ss	in-Hg	Percent	in-H2O	in-Hg	l/min	in-Hg	l/min	in-Hg	degF	degF	degF	degF	degF	degF	liters STP	liters STP	liters nominal	liters nominal
20180425:21:48:59	23.4	16.3	-5.4	23.78	0.25	2.1	0.25	1.9	123.7	285.8	286.3	83.1	51.5	84.1	590.0	588.1	755.0	753.8
20180425:21:53:59	23.4	16.3	-5.4	23.78	0.25	2.1	0.25	1.9	123.7	285.8	286.3	83.1	51.5	84.1	591.4	589.4	756.8	755.4
20180425:21:58:59	23.4	16.3	-5.4	23.78	0.25	2.1	0.25	1.9	123.7	285.8	286.3	83.1	51.5	84.1	592.6	590.7	758.4	757.2
20180425:22:03:59	23.4	16.3	-5.5	23.78	0.25	2.1	0.25	1.9	123.7	285.8	286.3	83.0	51.5	84.1	594.0	592.0	760.2	758.9
20180425:22:08:59	23.4	16.3	-5.4	23.78	0.25	2.1	0.25	1.9	123.7	285.7	286.2	83.0	51.4	84.0	595.3	593.4	761.9	760.6
20180425:22:13:59	23.4	16.0	-5.5	23.78	0.25	2.1	0.25	1.9	123.1	285.7	286.2	83.0	51.5	84.0	596.6	594.7	763.6	762.3
20180425:22:18:59	23.4	15.1	-5.5	23.78	0.25	2.1	0.25	1.9	120.8	285.7	286.3	83.0	51.5	84.0	598.0	596.0	765.3	764.0
20180425:22:23:59	23.4	14.9	-5.5	23.78	0.25	2.1	0.25	1.9	120.4	285.7	286.3	82.9	51.5	84.0	599.3	597.3	767.0	765.7
20180425:22:28:59	23.4	14.6	-5.5	23.78	0.25	2.1	0.25	1.9	119.6	285.6	286.2	82.9	51.4	83.9	600.6	598.7	768.8	767.5
20180425:22:33:59	23.4	15.4	-5.4	23.78	0.25	2.1	0.25	1.9	121.5	285.8	286.3	82.8	51.5	83.9	601.9	599.9	770.4	769.1
20180425:22:38:59	23.4	15.7	-5.4	23.78	0.25	2.1	0.25	1.9	122.4	285.8	286.3	82.8	51.4	83.8	603.3	601.3	772.2	770.9
20180425:22:43:59	23.4	15.8	-5.3	23.78	0.25	2.1	0.25	1.9	122.6	285.7	286.3	82.7	51.4	83.8	604.6	602.6	773.9	772.6
20180425:22:48:59	23.4	15.6	-5.3	23.78	0.25	2.1	0.25	1.9	122.2	285.7	286.3	82.7	51.4	83.8	605.9	603.9	775.6	774.3
20180425:22:53:59	23.4	15.9	-5.3	23.78	0.25	2.1	0.25	1.9	122.8	285.8	286.3	82.7	51.4	83.7	607.3	605.3	777.3	776.0
20180425:22:58:59	23.4	15.9	-5.3	23.78	0.25	2.1	0.25	1.9	122.8	285.8	286.3	82.7	51.4	83.7	608.6	606.6	779.0	777.7
20180425:23:03:59	23.4	15.9	-5.3	23.78	0.25	2.1	0.25	1.9	122.7	285.7	286.3	82.6	51.4	83.7	609.9	607.9	780.8	779.5
20180425:23:08:59	23.4	15.9	-5.4	23.78	0.25	2.1	0.25	1.9	122.7	285.7	286.2	82.6	51.4	83.6	611.2	609.2	782.5	781.1
20180425:23:13:59	23.4	15.9	-5.4	23.78	0.25	2.1	0.25	1.9	122.7	285.7	286.3	82.6	51.4	83.6	612.6	610.6	784.2	782.9
20180425:23:18:59	23.4	15.9	-5.4	23.78	0.25	2.1	0.25	1.9	122.8	285.7	286.3	82.5	51.4	83.6	613.9	611.9	785.9	784.6
20180425:23:23:59	23.4	16.1	-5.4	23.78	0.25	2.1	0.25	1.9	123.2	285.8	286.3	82.4	51.4	83.5	615.2	613.2	787.6	786.3
20180425:23:28:59	23.4	16.1	-5.4	23.78	0.25	2.1	0.25	1.9	123.2	285.7	286.3	82.4	51.4	83.5	616.6	614.5	789.4	788.0
20180425:23:33:59	23.4	15.0	-5.4	23.77	0.25	2.1	0.25	1.9	120.6	285.7	286.3	82.4	51.4	83.4	617.9	615.9	791.0	789.8
20180425:23:38:59	23.4	14.6	-5.3	23.77	0.25	2.1	0.25	1.9	119.6	285.6	286.2	82.3	51.4	83.4	619.2	617.2	792.8	791.4
20180425:23:43:59	23.4	14.4	-5.3	23.77	0.25	2.1	0.25	1.9	119.1	285.6	286.3	82.3	51.4	83.4	620.5	618.5	794.5	793.2
20180425:23:48:59	23.4	14.9	-5.2	23.76	0.25	2.1	0.25	1.9	120.4	285.7	286.3	82.3	51.4	83.3	621.8	619.8	796.2	794.9
20180425:23:53:59	23.4	15.4	-5.2	23.76	0.25	2.1	0.25	1.9	121.5	285.8	286.3	82.2	51.4	83.3	623.2	621.2	797.9	796.6
20180425:23:58:59	23.4	15.5	-5.2	23.76	0.25	2.1	0.25	1.9	121.9	285.8	286.2	82.2	51.4	83.3	624.5	622.5	799.6	798.3
20180426:00:03:59	23.4	15.7	-5.3	23.76	0.25	2.1	0.25	1.9	122.4	285.7	286.2	82.1	51.4	83.2	625.9	623.8	801.4	800.0
20180426:00:08:59	23.4	15.8	-5.2	23.76	0.25	2.1	0.25	1.9	122.6	285.7	286.2	82.1	51.4	83.2	627.2	625.1	803.1	801.8
20180426:00:13:59	23.4	15.9	-5.2	23.76	0.25	2.1	0.25	1.9	122.7	285.7	286.2	82.1	51.4	83.1	628.5	626.4	804.8	803.4
20180426:00:18:59	23.4	15.8	-5.2	23.76	0.25	2.1	0.25	1.9	122.6	285.7	286.3	82.0	51.4	83.1	629.8	627.8	806.5	805.2
20180426:00:23:59	23.4	16.0	-5.3	23.76	0.25	2.1	0.25	1.9	122.9	285.7	286.3	82.0	51.4	83.1	631.1	629.1	808.2	806.9
20180426:00:28:59	23.4	15.9	-5.3	23.76	0.25	2.1	0.25	1.9	122.9	285.7	286.3	82.0	51.4	83.1	632.5	630.4	810.0	808.6
20180426:00:33:59	23.4	15.9	-5.3	23.76	0.25	2.1	0.25	1.9	122.8	285.7	286.2	82.0	51.4	83.0	633.8	631.7	811.7	810.3
20180426:00:38:59	23.4	16.0	-5.3	23.76	0.25	2.1	0.25	1.9	123.0	285.7	286.2	82.0	51.4	83.0	635.2	633.1	813.4	812.1
20180426:00:43:59	23.4	15.9	-5.3	23.76	0.25	2.1	0.25	1.9	122.9	285.7	286.3	81.9	51.4	83.0	636.5	634.4	815.1	813.7
20180426:00:48:59	23.4	15.9	-5.3	23.76	0.25	2.1	0.25	1.9	122.8	285.7	286.2	81.9	51.4	83.0	637.8	635.7	816.9	815.5
20180426:00:53:59	23.4	15.9	-5.4	23.77	0.25	2.1	0.25	1.9	122.8	285.8	286.3	81.9	51.4	83.0	639.2	637.0	818.6	817.2
20180426:00:58:59	23.4	16.0	-5.4	23.77	0.25	2.1	0.25	1.9	122.9	285.8	286.3	81.9	51.3	82.9	640.5	638.4	820.3	818.9
20180426:01:03:59	23.4	16.0	-5.4	23.77	0.25	2.1	0.25	1.9	123.1	285.7	286.3	81.9	51.3	82.9	641.8	639.7	822.0	820.6
20180426:01:08:59	23.4	16.0	-5.4	23.77	0.25	2.1	0.25	1.9	122.9	285.7	286.3	81.9	51.4	82.9	643.1	641.0	823.7	822.3
20180426:01:13:59	23.4	16.0	-5.4	23.77	0.25	2.1	0.25	1.9	122.9	285.7	286.2	81.8	51.3	82.9	644.5	642.4	825.5	824.1
20180426:01:18:59	23.4	16.0	-5.5	23.78	0.25	2.1	0.25	1.9	123.0	285.7	286.2	81.8	51.4	82.9	645.8	643.7	827.1	825.8
20180426:01:23:59	23.4	16.1	-5.6	23.79	0.25	2.1	0.25	1.9	123.1	285.6	286.2	81.7	51.3	82.8	647.1	645.0	828.9	827.5
20180426:01:28:59	23.4	16.1	-5.6	23.79	0.25	2.1	0.25	1.9	123.1	285.7	286.3	81.7	51.4	82.8	648.5	646.3	830.6	829.2
20180426:01:33:59	23.4	16.2	-5.6	23.79	0.25	2.1	0.25	1.9	123.4	285.7	286.3	81.8	51.4	82.8	649.8	647.7	832.3	830.9
20180426:01:38:59	23.4	16.2	-5.6	23.79	0.25	2.1	0.25	1.9	123.5	285.7	286.3	81.8	51.4	82.8	651.1	649.0	834.0	832.6
20180426:01:43:59	23.4	16.4	-5.6	23.79	0.25	2.1	0.25	1.9	124.0	285.7	286.2	81.7	51.3	82.7	652.4	650.3	835.7	834.4
20180426:01:48:59	23.4	16.4	-5.7	23.80	0.25	2.1	0.25	1.9	124.0	285.7	286.3	81.7	51.4	82.7	653.8	651.6	837.5	836.0
20180426:01:53:59	23.4	16.4	-5.7	23.80	0.25	2.1	0.25	1.9	124.0	285.7	286.2	81.8	51.4	82.7	655.1	653.0	839.1	837.8
20180426:01:58:59	23.4	16.3	-5.7	23.80	0.25	2.1	0.25	1.9	123.6	285.7	286.3	81.8	51.4	82.7	656.4	654.3	840.9	839.5
20180426:02:03:59	23.4	16.2	-5.7	23.80	0.25	2.1	0.25	1.9	123.5	285.7	286.3	81.8	51.4	82.7	657.8	655.6	842.6	841.2
20180426:02:08:59	23.4	16.2	-5.7	23.80	0.25	2.1	0.25	1.9	123.4	285.7	286.3	81.8	51.4	82.7	659.1	656.9	844.3	842.9
20180426:02:13:59	23.4	16.1	-5.8	23.80	0.25	2.1	0.25	1.9	123.3	285.8	286.3	81.8	51.4	82.7	660.4	658.3	846.0	844.6
20180426:02:18:59	23.4	16.1	-5.8	23.80	0.25	2.1	0.25	1.9	123.2	285.8	286.3	81.7	51.5	82.7	661.7	659.6	847.7	846.3
20180426:02:23:59	23.4	16.1	-5.8	23.80	0.25	2.1	0.25	1.9	123.2	285.7	286.3	81.7	51.4	82.7	663.1	660.9	849.5	848.1
20180426:02:28:59	23.4	16.1	-5.8	23.80	0.25	2.1	0.25	1.9	123.3	285.7	286.3	81.6	51.4	82.6	664.4	662.2	851.2	849.8
20180426:02:33:59	23.4	16.1	-5.8	23.80	0.25	2.1	0.25	1.9	123.2	285.7	286.3	81.6	51.4	82.6	665.7	663.5	852.9	851.5
20180426:02:38:59	23.4	16.1	-5.9	23.80	0.25	2.1	0.25	1.9	123.3	285.7	286.2	81.6	51.4	82.6	667.1	664.9	854.6	853.2
20180426:02:43:59	23.4	16.1	-5.8	23.80	0.25	2.1	0.25	1.9	123.2	285.7	286.3	81.5	51.4	82.6	668.4	666.2	856.3	854.9
20180426:02:48:59	23.4	16.2	-5.8	23.80	0.25	2.1	0.25	1.9	123.4	285.7	286.3	81.4	51.4	82.5	669.7	667.5	858.0	856.6
20180426:02:53:59	23.4	16.1	-5.8	23.80	0.25	2.1	0.25	1.9	123.2	285.7	286.3	81.4	51.4	82.4	671.0	668.8	859.7	858.3
20180426:02:58:59	23.4	16.1	-5.9	23.81	0.25	2.1	0.25	1.9	123.3	285.7	286.2	81.4	51.4	82.4	672.4	670.2	861.5	860.0
20180426:03:03:59	23.4	16.1	-5.9	23.81	0.25	2.1	0.25	1.9	123.3	285.7	286.3	81.3	51.4	82.3	673.7	671.5	863.2	861.7
20180426:03:08:59	23.4	16.2	-5.9	23.81	0.25	2.1	0.25	1.9	123.4	285.7	286.3	81.2	51.4	82.3	675.0	672.8	864.9	863.5
20180426:03:13:59	23.4	16.1	-5.9	23.81	0.25	2.1	0.25	1.9	123.3	285.7	286.3	81.2	51.4	82.3	676.4	674.1	866.6	865.1
20180426:03:18:59	23.4	16.1	-5.9	23.81	0.25	2.1	0.25	1.9	123.2	285.6	286.2	81.1	51.4	82.2	677.7	675.5	868.3	866.9
20180426:03:23:59	23.4	16.0	-5.9	23.81	0.25	2.1	0.25	1.9	123.1	285.7	286.3	81.1	51.4	82.1	679.1	676.8	870.1	868.6
20180426:03:28:59	23.4	16.0	-5.9	23.81	0.25	2.1	0.25	1.9	123.1	285.7	286.3	81.0	51.4	82.1	680.4	678.1	871.7	870.3
20180426:03:33:59	23.4	16.1	-5.9	23.81	0.25	2.1	0.25	1.9	123.1	285.7	286.3	81.0	51.4	82.0	681.7	679.4	873.5	872.0
20180426:03:38:59	23.4	16.1	-5.9	23.81	0.25	2.1	0.25	1.9	123.2	285.7	286.2	81.0	51.4	82.0	683.0	680.8	875.2	873.7
20180426:03:43:59	23.4	16.1	-5.9	23.81	0.25	2.1	0.25	1.9	123.2	285.7	286.3	80.9	51.4	82.0	684.4	682.1	876.9	875.4
20180426:03:48:59	23.4	16.0	-5.9	23.81	0.25	2.1	0.25	1.9	123.0	285.8	286.3	80.8	51.3	81.9	685.7	683.4	878.6	877.1
20180426:03:53:59	23.4	16.0	-5.9	23.81	0.25	2.1	0.25	1.9	123.1	285.7	286.2	80.8	51.3	81.8	687.0	684.8	880.3	878.8
20180426:03:58:59	23.4	16.0	-5.9	23.81	0.25	2.1	0.25	1.9	123.1	285.7	286.3	80.7	51.3	81.7	688.4	686.1	882.1	880.6
20180426:04:03:59	23.4	16.0	-5.9	23.82	0.25	2.1	0.25	1.9	123.1	285.7	286.3	80.7	51.3	81.7	689.7	687.4	883.7	882.3
20180426:04:08:59	23.4	16.1	-6.0	23.82	0.25	2.1	0.25	1.9	123.2	285.7	286.3	80.6	51.3	81.7	691.1	688.7	885.5	884.0
20180426:04:13:59	23.4	16.1	-6.0	23.82	0.25	2.1	0.25	1.9	123.2	285.7	286.3	80.6	51.3	81.6	692.4	690.1	887.2	885.7
20180426:04:18:59	23.4	16.0	-6.0	23.81	0.25	2.1	0.25	1.9	123.1	285.7	286.3	80.6	51.3	81.6	693.7	691.4	888.9	887.4
20180426:04:23:59	23.4	16.0	-5.9	23.81	0.25	2.1	0.25	1.9	123.0	285.8	286.3	80.5	51.3	81.5	695.0	692.7	890.6	889.1
20180426:04:28:59	23.4	16.0	-5.9	23.81	0.25	2.1	0.25	1.9	123.0	285.7	286.2	80.4	51.3	81.5	696.3	694.0	892.3	890.8
20180426:04:33:59	23.4	16.0	-6.0	23.82	0.25	2.1	0.25	1.9	123.0	285.7	286.3	80.4	51.3	81.4	697.7	695.4	894.0	892.5
20180426:04:38:59	23.4	16.0	-6.0	23.82	0.25	2.1	0.25	1.9	123.1	285.8	286.3	80.4	51.3	81.4	699.0	696.7	895.7	894.2
20180426:04:43:59	23.4	16.0	-6.0	23.82	0.25	2.1	0.25	1.9	123.1	285.7	286.3	80.3	51.3	81.3	700.4	698.1	897.5	896.0
20180426:04:48:59	23.4	16.1	-6.0	23.82	0.25	2.1	0.25	1.9	123.2	285.7	286.3	80.3	51.3	81.3	701.7	699.4	899.1	897.7
20180426:04:53:59	23.4	16.0	-6.0	23.82	0.25	2.1	0.25	1.9	122.9	285.7	286.2	80.2	51.2	81.2	703.0	700.7	900.9	899.4
20180426:04:58:59	23.4	15.9	-5.9	23.82	0.25	2.1	0.25	1.9	122.9	285.7	286.3	80.1	51.2	81.1	704.4	702.0	902.6	901.1
20180426:05:03:59	23.4	16.0	-5.9	23.82	0.25	2.1	0.25	1.9	123.0	285.7	286.2	80.1	51.2	81.1	705.7	703.4	904.3	902.8
20180426:05:08:59	23.4	15.9	-5.9	23.82	0.25	2.1	0.25	1.9	122.8	285.7	286.3	80.0	51.2	81.1	707.0	704.7	906.0	904.5

Time:	Stack Pressure:	Sat% H2O:	Static:	Barometric:	Flowmeter1:	Vacuum1:	Flowmeter2:	Vacuum2:	Stack Temp:	Sorbent Temp:	Probe Temp:	DGM#1 Temp:	Condenser Temp:	DGM#2 Temp:	DGM1*:	DGM2*:	DGM1:	DGM2:
day:hh:mm:ss	in-Hg	Percent	in-H2O	in-Hg	l/min	in-Hg	l/min	in-Hg	degF	degF	degF	degF	degF	degF	liters STP	liters STP	liters nominal	liters nominal
20180426:05:13:59	23.4	15.8	-5.9	23.82	0.25	2.1	0.25	1.9	122.7	285.6	286.2	80.0	51.2	81.0	708.3	706.0	907.7	906.2
20180426:05:18:59	23.4	15.8	-5.9	23.82	0.25	2.1	0.25	1.9	122.5	285.6	286.3	80.0	51.2	81.0	709.7	707.3	909.5	907.9
20180426:05:23:59	23.4	15.7	-5.9	23.82	0.25	2.1	0.25	1.9	122.4	285.7	286.2	80.0	51.2	81.0	711.0	708.7	911.1	909.6
20180426:05:28:59	23.4	15.6	-5.9	23.82	0.25	2.1	0.25	1.9	122.2	285.8	286.3	80.0	51.3	81.0	712.3	710.0	912.9	911.4
20180426:05:33:59	23.4	15.7	-5.9	23.82	0.25	2.1	0.25	1.9	122.3	285.8	286.3	79.9	51.2	80.9	713.7	711.3	914.6	913.0
20180426:05:38:59	23.4	15.6	-5.9	23.82	0.25	2.1	0.25	1.9	122.2	285.8	286.3	79.8	51.2	80.8	715.0	712.7	916.2	914.8
20180426:05:43:59	23.4	15.5	-5.9	23.82	0.25	2.1	0.25	1.9	121.9	285.7	286.3	79.8	51.2	80.8	716.3	714.0	918.0	916.5
20180426:05:48:59	23.4	14.6	-5.9	23.82	0.25	2.1	0.25	1.9	119.8	285.6	286.2	79.7	51.2	80.8	717.7	715.3	919.7	918.2
20180426:05:53:59	23.4	14.9	-5.9	23.82	0.25	2.1	0.25	1.9	120.5	285.7	286.3	79.7	51.2	80.7	719.0	716.6	921.4	919.9
20180426:05:58:59	23.4	15.1	-5.7	23.82	0.25	2.1	0.25	1.9	121.1	285.8	286.3	79.7	51.2	80.7	720.3	718.0	923.1	921.6
20180426:06:03:59	23.4	15.2	-5.6	23.83	0.25	2.1	0.25	1.9	121.2	285.7	286.3	79.6	51.2	80.7	721.7	719.3	924.8	923.3
20180426:06:08:59	23.4	15.2	-5.6	23.83	0.25	2.1	0.25	1.9	121.3	285.7	286.3	79.6	51.2	80.6	723.0	720.7	926.5	925.1
20180426:06:13:59	23.4	15.3	-5.6	23.83	0.25	2.1	0.25	1.9	121.4	285.7	286.3	79.5	51.2	80.6	724.3	722.0	928.2	926.7
20180426:06:18:59	23.4	15.4	-5.5	23.83	0.25	2.1	0.25	1.9	121.8	285.7	286.3	79.5	51.2	80.5	725.7	723.3	930.0	928.5
20180426:06:23:59	23.4	15.4	-5.4	23.83	0.25	2.1	0.25	1.9	121.6	285.7	286.3	79.5	51.2	80.5	727.0	724.6	931.7	930.2
20180426:06:28:59	23.4	15.4	-5.3	23.83	0.25	2.1	0.25	1.9	121.7	285.6	286.3	79.4	51.2	80.4	728.4	726.0	933.4	931.9
20180426:06:33:59	23.5	15.4	-5.2	23.84	0.25	2.1	0.25	1.9	121.6	285.6	286.2	79.4	51.2	80.4	729.7	727.3	935.1	933.6
20180426:06:38:59	23.5	15.4	-5.2	23.84	0.25	2.1	0.25	1.9	121.7	285.6	286.2	79.4	51.2	80.4	731.0	728.7	936.9	935.3
20180426:06:43:59	23.5	15.3	-5.2	23.84	0.25	2.1	0.25	1.9	121.4	285.7	286.3	79.4	51.2	80.4	732.4	730.0	938.6	937.1
20180426:06:48:59	23.5	15.2	-5.2	23.84	0.25	2.1	0.25	1.9	121.4	285.6	286.2	79.4	51.2	80.3	733.7	731.3	940.3	938.8
20180426:06:53:59	23.5	15.2	-4.9	23.84	0.25	2.1	0.25	1.9	121.3	285.6	286.2	79.4	51.2	80.3	735.1	732.7	942.0	940.5
20180426:06:58:59	23.5	15.1	-4.8	23.84	0.25	2.1	0.25	1.9	121.0	285.6	286.2	79.3	51.2	80.3	736.4	734.0	943.7	942.2
20180426:07:03:59	23.5	15.1	-5.0	23.85	0.25	2.1	0.25	1.9	121.1	285.6	286.1	79.3	51.2	80.3	737.8	735.4	945.5	943.9
20180426:07:08:59	23.5	15.2	-5.2	23.85	0.25	2.1	0.25	1.9	121.2	285.7	286.3	79.3	51.2	80.2	739.1	736.7	947.1	945.6
20180426:07:13:59	23.5	15.2	-5.3	23.85	0.25	2.1	0.25	1.9	121.3	285.7	286.2	79.2	51.2	80.1	740.4	738.0	948.9	947.4
20180426:07:18:59	23.4	15.3	-5.5	23.85	0.25	2.1	0.25	1.9	121.5	285.7	286.3	79.2	51.2	80.1	741.8	739.4	950.6	949.1
20180426:07:23:59	23.4	15.4	-5.6	23.85	0.25	2.1	0.25	1.9	121.7	285.7	286.3	79.2	51.2	80.1	743.1	740.7	952.3	950.8
20180426:07:28:59	23.4	15.0	-5.8	23.85	0.25	2.1	0.25	1.9	120.8	285.7	286.3	79.1	51.2	80.1	744.5	742.0	954.1	952.5
20180426:07:33:59	23.4	14.6	-5.9	23.85	0.25	2.1	0.25	1.9	119.8	285.7	286.2	79.1	51.2	80.1	745.8	743.4	955.7	954.3
20180426:07:38:59	23.4	15.2	-5.9	23.85	0.25	2.1	0.25	1.9	121.2	285.7	286.2	79.1	51.1	80.0	747.2	744.7	957.5	955.9
20180426:07:43:59	23.4	15.5	-6.0	23.86	0.25	2.1	0.25	1.9	121.9	285.7	286.2	79.1	51.2	80.0	748.5	746.1	959.2	957.7
20180426:07:48:59	23.4	15.7	-6.1	23.86	0.25	2.1	0.25	1.9	122.3	285.7	286.2	79.1	51.1	80.0	749.8	747.4	960.9	959.4
20180426:07:53:59	23.4	15.7	-6.1	23.86	0.25	2.1	0.25	1.9	122.4	285.7	286.2	79.0	51.1	80.0	751.2	748.7	962.6	961.1
20180426:07:58:59	23.4	15.8	-6.1	23.86	0.25	2.1	0.25	1.9	122.5	285.8	286.3	79.0	51.1	80.0	752.5	750.1	964.3	962.8
20180426:08:03:59	23.4	15.8	-6.1	23.86	0.25	2.1	0.25	1.9	122.7	285.8	286.2	79.0	51.1	80.0	753.9	751.4	966.1	964.5
20180426:08:08:59	23.4	15.8	-6.1	23.86	0.25	2.1	0.25	1.9	122.5	285.7	286.2	79.0	51.0	79.9	755.2	752.7	967.8	966.3
20180426:08:13:59	23.4	15.7	-6.1	23.86	0.25	2.1	0.25	1.9	122.4	285.7	286.3	79.0	51.1	79.9	756.5	754.1	969.5	967.9
20180426:08:18:59	23.4	15.7	-6.1	23.86	0.25	2.1	0.25	1.9	122.5	285.7	286.2	79.0	51.0	79.9	757.8	755.4	971.2	969.7
20180426:08:23:59	23.4	15.8	-6.1	23.85	0.25	2.1	0.25	1.9	122.6	285.7	286.3	79.0	51.1	79.9	759.2	756.7	972.9	971.3
20180426:08:28:59	23.4	15.7	-6.1	23.85	0.25	2.1	0.25	1.9	122.4	285.7	286.2	79.0	51.0	79.9	760.5	758.1	974.6	973.1
20180426:08:33:59	23.4	15.7	-6.1	23.85	0.25	2.1	0.25	1.9	122.4	285.7	286.3	79.0	51.1	79.9	761.8	759.4	976.3	974.8
20180426:08:38:59	23.4	14.9	-6.1	23.85	0.25	2.1	0.25	1.9	120.5	285.6	286.3	79.0	51.1	79.9	763.2	760.7	978.0	976.5
20180426:08:43:59	23.4	14.9	-6.1	23.85	0.25	2.1	0.25	1.9	120.4	285.7	286.3	79.0	51.1	79.9	764.5	762.0	979.7	978.2
20180426:08:48:59	23.4	15.3	-6.1	23.85	0.25	2.1	0.25	1.9	121.5	285.8	286.3	79.0	51.1	80.0	765.9	763.4	981.4	979.9
20180426:08:53:59	23.4	15.4	-6.1	23.85	0.25	2.1	0.25	1.9	121.8	285.7	286.2	79.0	51.1	80.0	767.2	764.7	983.1	981.6
20180426:08:58:59	23.4	15.5	-6.0	23.85	0.25	2.1	0.25	1.9	121.9	285.7	286.2	79.0	51.1	79.9	768.5	766.1	984.9	983.3
20180426:09:03:59	23.4	15.5	-6.0	23.85	0.25	2.1	0.25	1.9	122.0	285.7	286.3	79.1	51.1	80.0	769.8	767.4	986.5	985.0
20180426:09:08:59	23.4	15.6	-6.0	23.85	0.25	2.1	0.25	1.9	122.2	285.7	286.2	79.1	51.1	80.0	771.1	768.7	988.2	986.7
20180426:09:13:59	23.4	15.6	-6.0	23.85	0.25	2.1	0.25	1.9	122.1	285.7	286.3	79.1	51.1	80.0	772.5	770.0	990.0	988.4
20180426:09:18:59	23.4	15.6	-6.0	23.85	0.25	2.1	0.25	1.9	122.1	285.7	286.3	79.1	51.1	80.0	773.8	771.4	991.6	990.1
20180426:09:23:59	23.4	15.6	-6.0	23.85	0.25	2.1	0.25	1.9	122.1	285.7	286.2	79.1	51.1	80.0	775.2	772.7	993.4	991.8
20180426:09:28:59	23.4	15.6	-6.0	23.86	0.25	2.1	0.25	1.9	122.2	285.6	286.2	79.2	51.1	80.1	776.5	774.0	995.0	993.5
20180426:09:33:59	23.4	15.7	-6.0	23.85	0.25	2.1	0.25	1.9	122.3	285.6	286.2	79.2	51.1	80.1	777.8	775.3	996.8	995.2
20180426:09:38:59	23.4	15.7	-6.0	23.85	0.25	2.1	0.25	1.9	122.4	285.7	286.2	79.3	51.1	80.1	779.1	776.7	998.5	996.9
20180426:09:43:59	23.4	15.8	-5.9	23.85	0.25	2.1	0.25	1.9	122.6	285.7	286.2	79.3	51.1	80.1	780.5	778.0	1000.2	998.6
20180426:09:48:59	23.4	15.8	-6.0	23.86	0.25	2.1	0.25	1.9	122.6	285.7	286.3	79.3	51.0	80.2	781.8	779.3	1001.9	1000.3
20180426:09:53:59	23.4	15.9	-6.0	23.86	0.25	2.1	0.25	1.9	122.8	285.7	286.2	79.4	51.1	80.3	783.1	780.7	1003.6	1002.1
20180426:09:58:59	23.4	15.9	-6.0	23.86	0.25	2.1	0.25	1.9	122.9	285.7	286.2	79.4	51.0	80.3	784.5	782.0	1005.3	1003.7
20180426:10:03:59	23.4	16.0	-6.0	23.86	0.25	2.1	0.25	1.9	123.2	285.8	286.3	79.4	51.1	80.3	785.8	783.3	1007.0	1005.5
20180426:10:08:59	23.4	16.0	-5.9	23.85	0.25	2.1	0.25	1.9	123.0	285.7	286.3	79.4	51.0	80.3	787.2	784.6	1008.7	1007.1
20180426:10:13:59	23.4	15.9	-5.9	23.85	0.25	2.1	0.25	1.9	122.9	285.7	286.3	79.4	51.1	80.4	788.5	786.0	1010.4	1008.9
20180426:10:18:59	23.4	15.9	-5.9	23.85	0.25	2.1	0.25	1.9	122.9	285.7	286.2	79.5	51.1	80.4	789.8	787.3	1012.2	1010.6
20180426:10:23:59	23.4	15.8	-5.9	23.85	0.25	2.1	0.25	1.9	122.7	285.6	286.2	79.5	51.1	80.4	791.1	788.6	1013.8	1012.3
20180426:10:28:59	23.4	15.9	-5.9	23.85	0.25	2.1	0.25	1.9	122.9	285.6	286.2	79.5	51.1	80.4	792.5	789.9	1015.6	1014.0
20180426:10:33:59	23.4	15.9	-5.9	23.85	0.25	2.1	0.25	1.9	122.8	285.6	286.2	79.6	51.1	80.5	793.8	791.3	1017.3	1015.7
20180426:10:38:59	23.4	15.8	-5.9	23.85	0.25	2.1	0.25	1.9	122.6	285.7	286.3	79.6	51.1	80.5	795.1	792.6	1019.0	1017.4
20180426:10:43:59	23.4	15.8	-6.0	23.85	0.25	2.1	0.25	1.9	122.7	285.7	286.2	79.7	51.2	80.6	796.5	794.0	1020.7	1019.1
20180426:10:48:59	23.4	15.8	-6.0	23.85	0.25	2.1	0.25	1.9	122.6	285.6	286.2	79.7	51.0	80.6	797.8	795.3	1022.4	1020.8
20180426:10:53:59	23.4	15.9	-5.9	23.85	0.25	2.1	0.25	1.9	122.7	285.7	286.2	79.8	51.1	80.7	799.2	796.6	1024.1	1022.5
20180426:10:58:59	23.4	15.8	-5.9	23.85	0.25	2.1	0.25	1.9	122.6	285.7	286.3	79.8	51.0	80.7	800.5	797.9	1025.8	1024.2
20180426:11:03:59	23.4	15.8	-6.0	23.85	0.25	2.1	0.25	1.9	122.6	285.7	286.2	79.9	51.1	80.7	801.8	799.3	1027.5	1026.0
20180426:11:08:59	23.4	15.7	-5.9	23.85	0.25	2.1	0.25	1.9	122.5	285.7	286.2	79.9	51.1	80.7	803.1	800.6	1029.2	1027.6
20180426:11:13:59	23.4	15.7	-5.9	23.85	0.25	2.1	0.25	1.9	122.4	285.7	286.3	79.9	51.1	80.8	804.5	801.9	1030.9	1029.4
20180426:11:18:59	23.4	15.7	-5.9	23.84	0.25	2.1	0.25	1.9	122.4	285.7	286.3	80.0	51.1	80.8	805.8	803.2	1032.6	1031.1
20180426:11:23:59	23.4	15.7	-5.8	23.84	0.25	2.1	0.25	1.9	122.5	285.7	286.2	80.0	51.1	80.9	807.1	804.6	1034.3	1032.8
20180426:11:28:59	23.4	15.8	-5.9	23.84	0.25	2.1	0.25	1.9	122.6	285.7	286.2	80.0	51.1	80.9	808.5	805.9	1036.1	1034.5
20180426:11:33:59	23.4	15.7	-5.9	23.85	0.25	2.1	0.25	1.9	122.4	285.6	286.2	80.0	51.1	81.0	809.8	807.2	1037.8	1036.2
20180426:11:38:59	23.4	15.7	-5.9	23.84	0.25	2.1	0.25	1.9	122.5	285.7	286.3	80.1	51.1	81.0	811.1	808.6	1039.5	1037.9
20180426:11:43:59	23.4	15.7	-5.8	23.84	0.25	2.1	0.25	1.9	122.5	285.6	286.2	80.1	51.1	81.0	812.4	809.9	1041.2	1039.6
20180426:11:48:59	23.4	15.8	-5.9	23.84	0.25	2.1	0.25	1.9	122.5	285.7	286.2	80.2	51.1	81.1	813.8	811.2	1042.9	1041.3
20180426:11:53:59	23.4	15.7	-5.9	23.84	0.25	2.1	0.25	1.9	122.5	285.6	286.2	80.3	51.1	81.1	815.1	812.5	1044.6	1043.0
20180426:11:58:59	23.4	15.7	-5.9	23.83	0.25	2.1	0.25	1.9	122.3	285.7	286.3	80.3	51.1	81.1	816.4	813.9	1046.3	1044.8
20180426:12:03:59	23.4	15.7	-5.9	23.84	0.25	2.1	0.25	1.9	122.3	285.7	286.3	80.3	51.1	81.2	817.8	815.2	1048.0	1046.4
20180426:12:08:59	23.4	15.7	-5.9	23.84	0.25	2.1	0.25	1.9	122.3	285.6	286.2	80.4	51.1	81.3	819.1	816.5	1049.7	1048.2
20180426:12:13:59	23.4	15.7	-5.8	23.83	0.25	2.1	0.25	1.9	122.4	285.6	286.2	80.4	51.1	81.3	820.5	817.9	1051.5	1049.9
20180426:12:18:59	23.4	15.7	-5.9	23.83	0.25	2.1	0.25	1.9	122.4	285.7	286.2	80.4	51.1	81.4	821.8	819.2	1053.1	1051.6
20180426:12:23:59	23.4	15.7	-6.0	23.83	0.25	2.1	0.25	1.9	122.4	285.6	286.2	80.5	51.1	81.4	823.1	820.5	1054.9	1053.3
20180426:12:28:59	23.4	15.7	-5.9	23.83	0.25	2.1	0.25	1.9	122.3	285.7	286.2	80.6	51.2	81.4	824.5	821.9	1056.6	1055.0
20180426:12:33:59	23.4	15.8	-6.0	23.83	0.25	2.1	0.25	1.9	122.5	285.6	286.2	80.6	51.1	81.5	825.8	823.2	1058.3	1056.7

Time:	Stack Pressure:	Sat% H2O:	Static:	Barometric:	Flowmeter1:	Vacuum1:	Flowmeter2:	Vacuum2:	Stack Temp:	Sorbent Temp:	Probe Temp:	DGM#1 Temp:	Condenser Temp:	DGM#2 Temp:	DGM1*:	DGM2*:	DGM1:	DGM2:
day:hh:mm:ss	in-Hg	Percent	in-H2O	in-Hg	l/min	in-Hg	l/min	in-Hg	degF	degF	degF	degF	degF	degF	liters STP	liters STP	liters nominal	liters nominal
20180426:12:38:59	23.4	15.8	-6.0	23.83	0.25	2.1	0.25	1.9	122.5	285.7	286.3	80.7	51.2	81.6	827.1	824.5	1060.0	1058.5
20180426:12:43:59	23.4	15.8	-5.9	23.83	0.25	2.1	0.25	1.9	122.5	285.6	286.2	80.7	51.1	81.6	828.4	825.8	1061.7	1060.1
20180426:12:48:59	23.4	15.8	-6.0	23.83	0.25	2.1	0.25	1.9	122.6	285.7	286.2	80.8	51.2	81.7	829.8	827.2	1063.5	1061.9
20180426:12:53:59	23.4	15.0	-6.0	23.82	0.25	2.1	0.25	1.9	120.7	285.6	286.2	80.8	51.1	81.7	831.1	828.5	1065.1	1063.6
20180426:12:58:59	23.4	14.9	-5.9	23.82	0.25	2.1	0.25	1.9	120.5	285.6	286.3	80.9	51.2	81.8	832.4	829.8	1066.9	1065.3
20180426:13:03:59	23.4	15.3	-5.9	23.82	0.25	2.1	0.25	1.9	121.4	285.6	286.2	80.9	51.2	81.8	833.8	831.2	1068.6	1067.0
20180426:13:08:59	23.4	15.5	-5.9	23.82	0.25	2.1	0.25	1.9	121.8	285.6	286.2	81.0	51.2	81.9	835.1	832.5	1070.3	1068.7
20180426:13:13:59	23.4	15.6	-6.0	23.83	0.25	2.1	0.25	1.9	122.0	285.6	286.3	81.0	51.2	81.9	836.4	833.8	1072.0	1070.4
20180426:13:18:59	23.4	15.6	-5.9	23.82	0.25	2.1	0.25	1.9	122.2	285.7	286.2	81.1	51.2	82.0	837.8	835.1	1073.7	1072.1
20180426:13:23:59	23.4	15.7	-5.9	23.82	0.25	2.1	0.25	1.9	122.4	285.7	286.3	81.2	51.2	82.0	839.1	836.5	1075.5	1073.9
20180426:13:28:59	23.4	15.7	-5.9	23.82	0.25	2.1	0.25	1.9	122.4	285.6	286.2	81.3	51.2	82.1	840.4	837.8	1077.1	1075.5
20180426:13:33:59	23.4	15.7	-5.9	23.82	0.25	2.1	0.25	1.9	122.4	285.7	286.3	81.3	51.2	82.2	841.8	839.1	1078.9	1077.3
20180426:13:38:59	23.4	15.8	-5.9	23.82	0.25	2.1	0.25	1.9	122.5	285.6	286.2	81.4	51.2	82.3	843.1	840.4	1080.6	1079.0
20180426:13:43:59	23.4	15.8	-5.9	23.82	0.25	2.1	0.25	1.9	122.5	285.6	286.2	81.5	51.2	82.3	844.4	841.8	1082.3	1080.7
20180426:13:48:59	23.4	15.8	-5.9	23.82	0.25	2.1	0.25	1.9	122.5	285.7	286.2	81.6	51.2	82.4	845.8	843.1	1084.0	1082.4
20180426:13:53:59	23.4	15.8	-5.8	23.82	0.25	2.1	0.25	1.9	122.5	285.7	286.3	81.6	51.2	82.4	847.1	844.5	1085.7	1084.1
20180426:13:58:59	23.4	15.8	-5.9	23.82	0.25	2.1	0.25	1.9	122.6	285.7	286.2	81.7	51.2	82.5	848.4	845.8	1087.5	1085.8
20180426:14:03:59	23.4	15.8	-5.9	23.82	0.25	2.1	0.25	1.9	122.6	285.7	286.2	81.8	51.2	82.6	849.7	847.1	1089.1	1087.6
20180426:14:08:59	23.4	15.9	-5.9	23.82	0.25	2.1	0.25	1.9	122.7	285.7	286.3	81.9	51.2	82.7	851.1	848.4	1090.9	1089.3
20180426:14:13:59	23.4	15.9	-5.9	23.81	0.25	2.1	0.25	1.9	122.8	285.7	286.2	81.9	51.3	82.7	852.4	849.8	1092.6	1091.0
20180426:14:18:59	23.4	15.8	-5.9	23.81	0.25	2.1	0.25	1.9	122.6	285.7	286.3	82.0	51.3	82.8	853.7	851.1	1094.3	1092.7
20180426:14:23:59	23.4	15.9	-5.9	23.81	0.25	2.1	0.25	1.9	122.8	285.7	286.3	82.1	51.3	82.9	855.1	852.4	1096.0	1094.4
20180426:14:28:59	23.4	16.0	-5.8	23.80	0.25	2.1	0.25	1.9	122.9	285.7	286.3	82.1	51.3	82.9	856.4	853.7	1097.7	1096.1
20180426:14:33:59	23.4	16.0	-5.8	23.80	0.25	2.1	0.25	1.9	123.0	285.7	286.2	82.2	51.3	83.0	857.8	855.1	1099.5	1097.8
20180426:14:38:59	23.4	15.9	-5.8	23.80	0.25	2.1	0.25	1.9	122.9	285.7	286.3	82.3	51.3	83.1	859.1	856.4	1101.2	1099.6
20180426:14:43:59	23.4	16.0	-5.8	23.80	0.25	2.1	0.25	1.9	122.9	285.6	286.3	82.4	51.3	83.2	860.4	857.7	1102.9	1101.3
20180426:14:48:59	23.4	16.0	-5.9	23.80	0.25	2.1	0.25	1.9	123.0	285.7	286.3	82.5	51.3	83.3	861.7	859.1	1104.6	1103.0
20180426:14:53:59	23.4	16.0	-6.0	23.80	0.25	2.1	0.25	1.9	122.9	285.7	286.3	82.6	51.3	83.3	863.0	860.4	1106.3	1104.7
20180426:14:58:59	23.4	15.9	-6.0	23.80	0.25	2.1	0.25	1.9	122.8	285.7	286.2	82.6	51.3	83.4	864.4	861.7	1108.1	1106.5
20180426:15:03:59	23.4	15.9	-6.0	23.80	0.25	2.1	0.25	1.9	122.8	285.7	286.2	82.7	51.3	83.4	865.7	863.0	1109.8	1108.1
20180426:15:08:59	23.4	15.9	-6.0	23.80	0.25	2.1	0.25	1.9	122.7	285.7	286.3	82.7	51.3	83.5	867.1	864.4	1111.5	1109.9
20180426:15:13:59	23.3	15.7	-6.0	23.79	0.25	2.1	0.25	1.9	122.2	285.7	286.2	82.8	51.3	83.6	868.4	865.7	1113.2	1111.6
20180426:15:18:59	23.3	14.9	-6.1	23.79	0.25	2.1	0.25	1.9	120.3	285.7	286.3	82.9	51.3	83.7	869.7	867.0	1114.9	1113.3
20180426:15:23:59	23.4	15.1	-6.0	23.79	0.25	2.1	0.25	1.9	121.0	285.7	286.2	83.0	51.3	83.7	871.1	868.3	1116.7	1115.0
20180426:15:28:59	23.4	15.5	-5.9	23.79	0.25	2.1	0.25	1.9	121.8	285.7	286.3	83.0	51.4	83.8	872.4	869.7	1118.4	1116.7
20180426:15:33:59	23.4	15.6	-5.9	23.79	0.25	2.1	0.25	1.9	122.1	285.7	286.3	83.1	51.4	83.9	873.7	871.0	1120.1	1118.5
20180426:15:38:59	23.4	15.6	-5.9	23.79	0.25	2.1	0.25	1.9	122.2	285.7	286.2	83.2	51.4	84.0	875.0	872.3	1121.8	1120.2
20180426:15:43:59	23.4	15.7	-5.9	23.79	0.25	2.1	0.25	1.9	122.3	285.7	286.2	83.3	51.4	84.0	876.4	873.7	1123.6	1121.9
20180426:15:48:59	23.3	15.0	-6.0	23.78	0.25	2.1	0.25	1.9	120.7	285.6	286.3	83.3	51.4	84.1	877.7	875.0	1125.3	1123.6
20180426:15:53:59	23.3	14.7	-5.9	23.79	0.25	2.1	0.25	1.9	119.9	285.6	286.2	83.4	51.4	84.2	879.0	876.3	1127.0	1125.3
20180426:15:58:59	23.4	15.3	-5.8	23.79	0.25	2.1	0.25	1.9	121.3	285.7	286.3	83.4	51.4	84.3	880.4	877.6	1128.7	1127.0
20180426:16:03:59	23.4	15.5	-5.9	23.79	0.25	2.1	0.25	1.9	121.9	285.7	286.2	83.5	51.4	84.3	881.7	879.0	1130.4	1128.8
20180426:16:08:59	23.4	15.7	-5.8	23.78	0.25	2.1	0.25	1.9	122.2	285.7	286.2	83.6	51.4	84.4	883.0	880.3	1132.2	1130.5
20180426:16:13:59	23.4	15.8	-5.8	23.78	0.25	2.1	0.25	1.9	122.5	285.7	286.2	83.7	51.4	84.5	884.4	881.6	1133.9	1132.2
20180426:16:18:59	23.4	15.9	-5.8	23.78	0.25	2.1	0.25	1.9	122.7	285.7	286.3	83.7	51.4	84.5	885.7	882.9	1135.6	1133.9
20180426:16:23:59	23.4	15.9	-5.8	23.78	0.25	2.1	0.25	1.9	122.7	285.7	286.2	83.8	51.4	84.6	887.0	884.3	1137.3	1135.7
20180426:16:28:59	23.4	15.9	-5.8	23.78	0.25	2.1	0.25	1.9	122.8	285.7	286.3	83.9	51.4	84.7	888.3	885.6	1139.0	1137.4
20180426:16:33:59	23.4	15.9	-5.7	23.78	0.25	2.1	0.25	1.9	122.8	285.7	286.2	83.9	51.4	84.7	889.7	886.9	1140.8	1139.1
20180426:16:38:59	23.4	16.0	-5.8	23.78	0.25	2.1	0.25	1.9	122.9	285.7	286.3	83.9	51.4	84.8	891.0	888.3	1142.5	1140.8
20180426:16:43:59	23.4	16.0	-5.7	23.78	0.25	2.1	0.25	1.9	122.9	285.7	286.3	84.0	51.4	84.8	892.3	889.6	1144.2	1142.5
20180426:16:48:59	23.4	15.9	-5.7	23.78	0.25	2.1	0.25	1.9	122.9	285.7	286.2	84.0	51.5	84.9	893.7	890.9	1146.0	1144.3
20180426:16:53:59	23.4	15.9	-5.7	23.78	0.25	2.1	0.25	1.9	122.8	285.7	286.3	84.1	51.4	85.0	895.0	892.2	1147.7	1146.0
20180426:16:58:59	23.4	15.8	-5.7	23.78	0.25	2.1	0.25	1.9	122.5	285.7	286.3	84.2	51.5	85.0	896.4	893.6	1149.5	1147.7
20180426:17:03:59	23.4	15.8	-5.7	23.78	0.25	2.1	0.25	1.9	122.6	285.7	286.2	84.2	51.4	85.1	897.7	894.9	1151.2	1149.4
20180426:17:08:59	23.4	15.8	-5.7	23.78	0.25	2.1	0.25	1.9	122.6	285.7	286.3	84.3	51.5	85.2	899.0	896.2	1152.9	1151.2
20180426:17:13:59	23.4	15.8	-5.7	23.78	0.25	2.1	0.25	1.9	122.6	285.7	286.3	84.3	51.5	85.2	900.4	897.5	1154.6	1152.9
20180426:17:18:59	23.4	15.9	-5.6	23.77	0.25	2.1	0.25	1.9	122.8	285.7	286.3	84.4	51.4	85.3	901.7	898.9	1156.3	1154.6
20180426:17:23:59	23.4	16.0	-5.6	23.77	0.25	2.1	0.25	1.9	122.9	285.8	286.2	84.5	51.5	85.3	903.0	900.2	1158.1	1156.4
20180426:17:28:59	23.4	15.9	-5.6	23.77	0.25	2.1	0.25	1.9	122.8	285.8	286.3	84.5	51.4	85.4	904.3	901.5	1159.8	1158.1
20180426:17:34:00	23.4	16.0	-5.6	23.77	0.25	2.1	0.25	1.9	123.0	285.7	286.3	84.5	51.5	85.4	905.7	902.9	1161.6	1159.8
20180426:17:38:59	23.4	15.9	-5.6	23.77	0.25	2.1	0.25	1.9	122.8	285.7	286.3	84.6	51.4	85.5	907.0	904.2	1163.3	1161.5
20180426:17:43:59	23.4	15.9	-5.6	23.77	0.25	2.1	0.25	1.9	122.8	285.7	286.2	84.6	51.5	85.5	908.3	905.5	1165.0	1163.3
20180426:17:48:59	23.4	16.0	-5.6	23.77	0.25	2.1	0.25	1.9	122.9	285.7	286.2	84.6	51.4	85.6	909.7	906.8	1166.8	1165.0
20180426:17:54:00	23.4	15.8	-5.4	23.77	0.25	2.1	0.25	1.9	122.6	285.7	286.3	84.7	51.5	85.6	911.0	908.2	1168.5	1166.8
20180426:17:59:00	23.4	15.8	-5.3	23.77	0.25	2.1	0.25	1.9	122.5	285.7	286.3	84.7	51.5	85.6	912.4	909.5	1170.2	1168.4
20180426:18:04:00	23.4	15.9	-5.3	23.77	0.25	2.2	0.25	1.9	122.7	285.7	286.2	84.7	51.5	85.7	913.7	910.8	1172.0	1170.2
20180426:18:09:00	23.4	15.9	-5.1	23.77	0.25	2.1	0.25	1.9	122.9	285.7	286.3	84.8	51.5	85.7	915.0	912.2	1173.7	1172.0
20180426:18:14:00	23.4	15.7	-4.9	23.77	0.25	2.2	0.25	1.9	122.5	285.7	286.3	84.8	51.5	85.7	916.4	913.5	1175.5	1173.7
20180426:18:19:00	23.4	15.8	-4.9	23.77	0.25	2.1	0.25	1.9	122.5	285.7	286.3	84.9	51.5	85.8	917.7	914.8	1177.2	1175.4
20180426:18:24:00	23.4	15.9	-4.8	23.77	0.25	2.2	0.25	1.9	122.8	285.7	286.2	84.9	51.5	85.8	919.1	916.2	1178.9	1177.1
20180426:18:29:00	23.4	15.9	-4.6	23.77	0.25	2.2	0.25	1.9	122.8	285.7	286.2	85.0	51.5	85.9	920.4	917.5	1180.7	1178.9
20180426:18:34:00	23.4	15.8	-4.6	23.77	0.25	2.2	0.25	1.9	122.7	285.6	286.2	85.0	51.5	85.9	921.7	918.8	1182.4	1180.6
20180426:18:39:00	23.5	15.8	-4.4	23.77	0.25	2.2	0.25	1.9	122.6	285.7	286.3	85.0	51.6	86.0	923.1	920.2	1184.2	1182.4
20180426:18:44:00	23.5	15.7	-4.3	23.77	0.25	2.2	0.25	1.9	122.4	285.7	286.2	85.0	51.5	86.0	924.4	921.5	1185.9	1184.1
20180426:18:49:00	23.5	15.6	-3.9	23.77	0.25	2.2	0.25	1.9	122.4	285.7	286.3	85.1	51.6	86.0	925.8	922.8	1187.6	1185.8
20180426:18:54:00	23.5	15.6	-3.8	23.77	0.25	2.2	0.25	1.9	122.2	285.7	286.3	85.1	51.5	86.1	927.1	924.2	1189.4	1187.6
20180426:18:59:00	23.5	15.6	-4.1	23.77	0.25	2.2	0.25	2.0	122.2	285.7	286.2	85.1	51.5	86.1	928.4	925.5	1191.1	1189.3
20180426:19:04:00	23.5	15.7	-4.3	23.77	0.25	2.2	0.25	2.0	122.4	285.7	286.2	85.1	51.5	86.1	929.8	926.9	1192.9	1191.1
20180426:19:09:00	23.5	15.7	-4.2	23.78	0.25	2.2	0.25	1.9	122.4	285.7	286.2	85.2	51.5	86.2	931.2	928.2	1194.6	1192.8
20180426:19:14:00	23.5	14.6	-4.1	23.78	0.25	2.1	0.25	1.9	119.8	285.6	286.3	85.2	51.6	86.2	932.5	929.6	1196.3	1194.6
20180426:19:19:00	23.5	14.0	-3.6	23.78	0.25	2.1	0.25	1.9	118.5	285.6	286.3	85.2	51.5	86.2	933.8	930.9	1198.1	1196.3
20180426:19:24:00	23.5	14.5	-3.9	23.78	0.25	2.1	0.25	1.9	119.6	285.7	286.3	85.2	51.6	86.2	935.2	932.2	1199.8	1198.0
20180426:19:29:00	23.5	15.1	-3.9	23.78	0.25	2.2	0.25	1.9	121.2	285.7	286.3	85.2	51.6	86.2	936.5	933.6	1201.6	1199.8
20180426:19:34:00	23.5	15.3	-3.8	23.78	0.25	2.2	0.25	1.9	121.6	285.7	286.3	85.2	51.6	86.2	937.9	934.9	1203.3	1201.5
20180426:19:39:00	23.5	15.6	-3.9	23.78	0.25	2.2	0.25	1.9	122.2	285.8	286.3	85.2	51.6	86.2	939.2	936.3	1205.1	1203.3
20180426:19:44:00	23.5	15.7	-4.1	23.78	0.25	2.2	0.25	1.9	122.5	285.8	286.3	85.2	51.6	86.2	940.6	937.6	1206.9	1205.0
20180426:19:49:00	23.5	15.7	-4.1	23.78	0.25	2.2	0.25	1.9	122.4	285.7	286.2	85.2	51.6	86.2	941.9	938.9	1208.6	1206.7
20180426:19:54:00	23.5	15.7	-4.1	23.78	0.25	2.2	0.25	1.9	122.4	285.7	286.2	85.2	51.5	86.2	943.2	940.3	1210.3	1208.5
20180426:19:59:00	23.5	15.8	-4.2	23.78	0.25	2.2	0.25	1.9	122.7	285.7	286.3	85.2	51.5	86.2	944.6	941.6	1212.1	1210.2

Time:	Stack Pressure:	Sat% H2O:	Static:	Barometric:	Flowmeter1:	Vacuum1:	Flowmeter2:	Vacuum2:	Stack Temp:	Sorbent Temp:	Probe Temp:	DGM#1 Temp:	Condenser Temp:	DGM#2 Temp:	DGM1*:	DGM2*:	DGM1:	DGM2:
day:hh:mm:ss	in-Hg	Percent	in-H2O	in-Hg	l/min	in-Hg	l/min	in-Hg	degF	degF	degF	degF	degF	degF	liters STP	liters STP	liters nominal	liters nominal
20180426:20:04:00	23.5	15.9	-4.2	23.78	0.25	2.2	0.25	1.9	122.9	285.7	286.2	85.2	51.5	86.3	945.9	942.9	1213.8	1212.0
20180426:20:09:00	23.4	16.0	-4.7	23.78	0.25	2.2	0.25	1.9	123.1	285.8	286.3	85.2	51.6	86.3	947.3	944.3	1215.6	1213.7
20180426:20:14:00	23.4	16.1	-4.7	23.79	0.25	2.2	0.25	1.9	123.3	285.8	286.3	85.3	51.6	86.3	948.6	945.6	1217.3	1215.5
20180426:20:19:00	23.4	16.2	-4.7	23.79	0.25	2.2	0.25	1.9	123.6	285.8	286.3	85.3	51.7	86.3	949.9	946.9	1219.0	1217.2
20180426:20:24:00	23.4	15.8	-4.8	23.79	0.25	2.1	0.25	1.9	122.7	285.7	286.3	85.3	51.6	86.3	951.3	948.3	1220.8	1218.9
20180426:20:29:00	23.4	15.4	-4.9	23.79	0.25	2.1	0.25	1.9	121.8	285.7	286.3	85.3	51.7	86.3	952.6	949.6	1222.5	1220.7
20180426:20:34:00	23.4	15.9	-4.9	23.79	0.25	2.2	0.25	1.9	122.9	285.7	286.2	85.3	51.6	86.3	954.0	950.9	1224.3	1222.4
20180426:20:39:00	23.4	16.1	-5.0	23.79	0.25	2.2	0.25	1.9	123.4	285.8	286.3	85.3	51.7	86.3	955.3	952.3	1226.0	1224.2
20180426:20:44:00	23.4	16.3	-5.2	23.79	0.25	2.2	0.25	1.9	123.8	285.8	286.3	85.2	51.6	86.3	956.7	953.6	1227.8	1225.9
20180426:20:49:00	23.4	16.5	-5.3	23.79	0.25	2.2	0.25	1.9	124.2	285.8	286.3	85.2	51.7	86.3	958.0	955.0	1229.5	1227.7
20180426:20:54:00	23.4	16.6	-5.3	23.80	0.25	2.2	0.25	1.9	124.4	285.8	286.3	85.2	51.6	86.3	959.4	956.3	1231.3	1229.4
20180426:20:59:00	23.4	16.7	-5.2	23.79	0.25	2.2	0.25	1.9	124.6	285.8	286.3	85.2	51.6	86.3	960.7	957.7	1233.0	1231.1
20180426:21:04:00	23.4	16.6	-5.2	23.80	0.25	2.2	0.25	1.9	124.4	285.8	286.4	85.2	51.7	86.3	962.1	959.0	1234.8	1232.9
20180426:21:09:00	23.4	16.7	-5.3	23.80	0.25	2.2	0.25	1.9	124.6	285.8	286.3	85.2	51.7	86.2	963.4	960.3	1236.5	1234.6
20180426:21:14:00	23.4	16.5	-5.2	23.80	0.25	2.2	0.25	1.9	124.2	285.7	286.3	85.1	51.6	86.2	964.7	961.7	1238.3	1236.4
20180426:21:19:00	23.4	16.5	-5.0	23.80	0.25	2.2	0.25	2.0	124.3	285.7	286.3	85.1	51.6	86.2	966.1	963.0	1240.0	1238.1
20180426:21:24:00	23.5	16.3	-4.7	23.80	0.25	2.2	0.25	2.0	123.9	285.7	286.2	85.1	51.6	86.2	967.4	964.4	1241.8	1239.9
20180426:21:29:00	23.5	15.8	-4.7	23.80	0.25	2.2	0.25	1.9	122.7	285.7	286.4	85.1	51.6	86.2	968.8	965.7	1243.5	1241.6
20180426:21:34:00	23.5	15.1	-4.6	23.80	0.25	2.2	0.25	1.9	121.1	285.6	286.3	85.1	51.7	86.2	970.2	967.1	1245.3	1243.4
20180426:21:39:00	23.5	14.9	-4.5	23.80	0.25	2.2	0.25	1.9	120.6	285.5	286.3	85.0	51.6	86.1	971.5	968.4	1247.0	1245.1
20180426:21:44:00	23.5	15.4	-4.5	23.81	0.25	2.2	0.25	2.0	121.9	285.7	286.4	85.0	51.6	86.1	972.9	969.7	1248.8	1246.9
20180426:21:49:00	23.5	15.8	-4.7	23.81	0.25	2.2	0.25	1.9	122.7	285.8	286.3	85.0	51.6	86.0	974.2	971.1	1250.5	1248.7
20180426:21:54:00	23.5	16.0	-4.8	23.81	0.25	2.2	0.25	1.9	123.1	285.8	286.3	85.0	51.7	86.0	975.5	972.4	1252.3	1250.4
20180426:21:59:00	23.5	16.0	-4.5	23.81	0.25	2.2	0.25	1.9	123.3	285.7	286.3	84.9	51.6	86.0	976.9	973.8	1254.0	1252.1
20180426:22:04:00	23.5	16.0	-4.3	23.81	0.25	2.2	0.25	1.9	123.1	285.8	286.3	84.9	51.7	86.0	978.2	975.1	1255.8	1253.9
20180426:22:09:00	23.5	15.8	-3.7	23.80	0.25	2.2	0.25	2.0	122.9	285.7	286.3	84.9	51.6	86.0	979.6	976.5	1257.5	1255.6
20180426:22:14:00	23.5	15.7	-3.5	23.80	0.25	2.2	0.25	2.0	122.6	285.8	286.4	84.8	51.6	85.9	980.9	977.9	1259.3	1257.4
20180426:22:19:00	23.5	15.5	-3.5	23.80	0.25	2.2	0.25	2.0	122.0	285.8	286.4	84.8	51.6	85.9	982.3	979.2	1261.0	1259.1
20180426:22:24:00	23.5	15.5	-4.4	23.80	0.25	2.2	0.25	1.9	121.9	285.8	286.3	84.8	51.7	85.9	983.7	980.5	1262.8	1260.9
20180426:22:29:00	23.5	15.6	-4.7	23.80	0.25	2.2	0.25	1.9	122.2	285.7	286.3	84.7	51.6	85.8	985.0	981.9	1264.5	1262.6
20180426:22:34:00	23.4	15.6	-4.9	23.80	0.25	2.2	0.25	2.0	122.2	285.8	286.4	84.7	51.7	85.7	986.3	983.2	1266.3	1264.3
20180426:22:39:00	23.5	15.0	-4.7	23.80	0.25	2.2	0.25	1.9	120.8	285.7	286.4	84.7	51.6	85.7	987.7	984.6	1268.0	1266.1
20180426:22:44:00	23.5	14.5	-4.5	23.80	0.25	2.2	0.25	1.9	119.6	285.7	286.3	84.6	51.6	85.7	989.0	985.9	1269.8	1267.8
20180426:22:49:00	23.5	14.3	-4.3	23.80	0.25	2.2	0.25	1.9	119.0	285.5	286.3	84.6	51.6	85.6	990.4	987.3	1271.5	1269.6
20180426:22:54:00	23.5	14.8	-3.5	23.80	0.25	2.2	0.25	2.0	120.3	285.6	286.3	84.6	51.6	85.6	991.8	988.6	1273.3	1271.3
20180426:22:59:00	23.5	14.9	-4.1	23.80	0.25	2.2	0.25	2.0	120.7	285.8	286.4	84.5	51.6	85.6	993.1	989.9	1275.0	1273.1
20180426:23:04:00	23.5	14.9	-4.1	23.80	0.25	2.2	0.25	2.0	120.7	285.8	286.3	84.5	51.6	85.6	994.5	991.3	1276.8	1274.9
20180426:23:09:00	23.5	15.0	-4.2	23.80	0.25	2.2	0.25	2.0	120.8	285.8	286.4	84.5	51.6	85.5	995.8	992.6	1278.5	1276.6
20180426:23:14:00	23.5	15.0	-4.2	23.80	0.25	2.2	0.25	2.0	120.8	285.7	286.3	84.4	51.6	85.5	997.1	994.0	1280.3	1278.4
20180426:23:19:00	23.5	15.0	-4.1	23.80	0.25	2.2	0.25	2.0	120.8	285.8	286.4	84.4	51.6	85.4	998.5	995.3	1282.0	1280.1
20180426:23:24:00	23.5	15.0	-4.1	23.80	0.25	2.2	0.25	2.0	120.9	285.8	286.3	84.4	51.6	85.4	999.8	996.7	1283.8	1281.9
20180426:23:29:00	23.5	15.1	-4.1	23.80	0.25	2.2	0.25	2.0	121.0	285.8	286.4	84.3	51.6	85.4	1001.2	998.0	1285.5	1283.6
20180426:23:34:00	23.5	15.1	-4.1	23.80	0.25	2.2	0.25	1.9	121.0	285.8	286.3	84.3	51.6	85.3	1002.5	999.3	1287.3	1285.3
20180426:23:39:00	23.5	15.1	-4.1	23.80	0.25	2.2	0.25	1.9	121.1	285.8	286.4	84.3	51.6	85.3	1003.9	1000.7	1289.0	1287.1
20180426:23:44:00	23.5	14.9	-4.1	23.80	0.25	2.2	0.25	1.9	120.5	285.9	286.4	84.3	51.6	85.3	1005.3	1002.0	1290.8	1288.8
20180426:23:49:00	23.5	14.2	-4.1	23.80	0.25	2.1	0.25	1.9	118.8	285.8	286.4	84.2	51.6	85.2	1006.6	1003.4	1292.5	1290.6
20180426:23:54:00	23.5	14.0	-4.1	23.80	0.25	2.1	0.25	1.9	118.4	285.8	286.4	84.2	51.6	85.2	1007.9	1004.7	1294.3	1292.3
20180426:23:59:00	23.5	14.5	-4.1	23.80	0.25	2.2	0.25	1.9	119.7	285.7	286.4	84.1	51.6	85.1	1009.3	1006.1	1296.0	1294.1
20180427:00:04:00	23.5	15.0	-4.1	23.80	0.25	2.2	0.25	1.9	120.8	285.8	286.3	84.1	51.6	85.1	1010.6	1007.4	1297.8	1295.8
20180427:00:09:00	23.5	15.2	-4.2	23.80	0.25	2.2	0.25	1.9	121.2	285.8	286.4	84.0	51.6	85.0	1012.0	1008.8	1299.5	1297.5
20180427:00:14:00	23.5	15.2	-4.1	23.80	0.25	2.2	0.25	2.0	121.4	285.8	286.4	84.0	51.6	85.0	1013.3	1010.1	1301.3	1299.3
20180427:00:19:00	23.5	15.2	-4.1	23.80	0.25	2.2	0.25	2.0	121.3	285.8	286.4	84.0	51.6	85.0	1014.7	1011.5	1303.0	1301.0
20180427:00:24:00	23.5	15.2	-4.1	23.80	0.25	2.2	0.25	2.0	121.2	285.8	286.4	84.0	51.6	85.0	1016.0	1012.8	1304.8	1302.8
20180427:00:29:00	23.5	15.1	-4.1	23.79	0.25	2.2	0.25	1.9	121.1	285.8	286.3	83.9	51.6	84.9	1017.4	1014.2	1306.5	1304.5
20180427:00:34:00	23.5	15.1	-4.1	23.79	0.25	2.2	0.25	1.9	121.1	285.9	286.4	83.9	51.6	84.9	1018.7	1015.5	1308.2	1306.3
20180427:00:39:00	23.5	15.2	-4.1	23.79	0.25	2.2	0.25	1.9	121.3	285.8	286.3	83.8	51.6	84.8	1020.1	1016.9	1310.0	1308.0
20180427:00:44:00	23.5	15.3	-4.1	23.79	0.25	2.2	0.25	1.9	121.5	285.8	286.3	83.8	51.5	84.8	1021.4	1018.2	1311.7	1309.8
20180427:00:49:00	23.5	15.4	-4.1	23.79	0.25	2.2	0.25	1.9	121.7	285.8	286.4	83.7	51.6	84.7	1022.8	1019.6	1313.5	1311.5
20180427:00:54:00	23.5	14.8	-4.2	23.79	0.25	2.2	0.25	1.9	120.3	285.8	286.4	83.7	51.5	84.7	1024.1	1020.9	1315.3	1313.2
20180427:00:59:00	23.5	14.9	-4.1	23.79	0.25	2.2	0.25	1.9	120.6	285.8	286.3	83.6	51.6	84.6	1025.5	1022.2	1317.0	1315.0
20180427:01:04:00	23.5	15.2	-4.1	23.79	0.25	2.2	0.25	1.9	121.4	285.8	286.3	83.5	51.5	84.6	1026.8	1023.6	1318.8	1316.8
20180427:01:09:00	23.5	15.3	-4.1	23.79	0.25	2.2	0.25	2.0	121.5	285.8	286.4	83.4	51.6	84.5	1028.2	1024.9	1320.5	1318.5
20180427:01:14:00	23.5	15.3	-4.1	23.79	0.25	2.2	0.25	2.0	121.4	285.8	286.3	83.4	51.5	84.4	1029.5	1026.3	1322.2	1320.3
20180427:01:19:00	23.5	15.5	-4.1	23.79	0.25	2.2	0.25	1.9	121.9	285.8	286.3	83.3	51.5	84.4	1030.9	1027.6	1324.0	1322.0
20180427:01:24:00	23.5	15.7	-4.2	23.78	0.25	2.2	0.25	2.0	122.4	285.9	286.4	83.3	51.5	84.3	1032.2	1029.0	1325.7	1323.8
20180427:01:29:00	23.5	15.8	-4.1	23.78	0.25	2.2	0.25	2.0	122.6	285.8	286.3	83.2	51.5	84.3	1033.6	1030.3	1327.5	1325.5
20180427:01:34:00	23.5	15.9	-4.2	23.78	0.25	2.2	0.25	1.9	122.8	285.8	286.4	83.2	51.5	84.2	1034.9	1031.7	1329.2	1327.2
20180427:01:39:00	23.5	16.0	-4.2	23.78	0.25	2.2	0.25	1.9	123.3	285.8	286.4	83.1	51.5	84.2	1036.3	1033.0	1331.0	1329.0
20180427:01:44:00	23.5	16.1	-4.1	23.78	0.25	2.2	0.25	1.9	123.5	285.8	286.3	83.0	51.5	84.1	1037.6	1034.3	1332.8	1330.7
20180427:01:49:00	23.5	16.3	-4.2	23.78	0.25	2.2	0.25	1.9	123.9	285.8	286.4	83.0	51.5	84.0	1039.0	1035.7	1334.5	1332.5
20180427:01:54:00	23.5	16.5	-4.1	23.77	0.25	2.2	0.25	1.9	124.2	285.8	286.4	83.0	51.5	84.0	1040.3	1037.0	1336.2	1334.2
20180427:01:59:00	23.5	15.6	-4.1	23.77	0.25	2.1	0.25	1.9	122.2	285.8	286.4	82.9	51.5	83.9	1041.7	1038.4	1338.0	1336.0
20180427:02:04:00	23.5	16.0	-4.2	23.77	0.25	2.1	0.25	1.9	123.0	285.8	286.3	82.9	51.5	83.9	1043.0	1039.8	1339.7	1337.7
20180427:02:09:00	23.5	16.4	-4.2	23.77	0.25	2.1	0.25	1.9	124.0	285.8	286.3	82.8	51.5	83.8	1044.4	1041.1	1341.5	1339.4
20180427:02:14:00	23.5	16.3	-4.2	23.77	0.25	2.1	0.25	1.9	123.8	285.9	286.4	82.7	51.5	83.7	1045.7	1042.4	1343.2	1341.2
20180427:02:19:00	23.5	16.1	-4.2	23.77	0.25	2.1	0.25	1.9	123.3	285.8	286.3	82.7	51.5	83.7	1047.1	1043.8	1344.9	1342.9
20180427:02:24:00	23.5	16.1	-4.2	23.77	0.25	2.1	0.25	1.9	123.4	285.8	286.4	82.6	51.5	83.6	1048.4	1045.1	1346.7	1344.7
20180427:02:29:00	23.5	16.1	-4.2	23.77	0.25	2.1	0.25	1.9	123.3	285.9	286.4	82.6	51.5	83.6	1049.7	1046.4	1348.4	1346.4
20180427:02:34:00	23.5	16.1	-4.2	23.77	0.25	2.1	0.25	1.9	123.3	285.8	286.3	82.4	51.5	83.5	1051.1	1047.8	1350.2	1348.2
20180427:02:39:00	23.5	16.1	-4.2	23.78	0.25	2.1	0.25	1.9	123.3	285.8	286.3	82.4	51.4	83.4	1052.4	1049.1	1351.9	1349.9
20180427:02:44:00	23.5	16.1	-4.2	23.78	0.25	2.1	0.25	1.9	123.4	285.9	286.4	82.3	51.5	83.4	1053.8	1050.4	1353.6	1351.6
20180427:02:49:00	23.5	16.1	-4.2	23.78	0.25	2.2	0.25	1.9	123.5	285.8	286.3	82.3	51.4	83.3	1055.1	1051.8	1355.4	1353.4
20180427:02:54:00	23.5	16.2	-4.2	23.78	0.25	2.2	0.25	1.9	123.7	285.7	286.3	82.2	51.5	83.2	1056.4	1053.1	1357.1	1355.1
20180427:02:59:00	23.5	16.2	-4.2	23.78	0.25	2.2	0.25	1.9	123.5	285.7	286.3	82.1	51.4	83.2	1057.8	1054.5	1358.8	1356.8
20180427:03:04:00	23.5	15.7	-4.3	23.78	0.25	2.1	0.25	1.9	122.5	285.7	286.4	82.1	51.5	83.1	1059.1	1055.8	1360.5	1358.5
20180427:03:09:00	23.5	15.1	-4.2	23.78	0.25	2.1	0.25	1.9	121.0	285.7	286.3	82.0	51.4	83.1	1060.5	1057.2	1362.3	1360.3
20180427:03:14:00	23.5	15.6	-4.3	23.78	0.25	2.1	0.25	1.9	122.2	285.7	286.4	82.0	51.5	83.0	1061.8	1058.5	1364.0	1362.0
20180427:03:19:00	23.5	15.7	-4.2	23.78	0.25	2.2	0.25	1.9	122.5	285.8	286.3	81.9	51.4	83.0	1063.1	1059.8	1365.7	1363.7
20180427:03:24:00	23.5	15.8	-4.3	23.78	0.25	2.1	0.25	1.9	122.7	285.7	286.3	81.9	51.4	82.9	1064.5	1061.2	1367.5	1365.5

Time:	Stack Pressure:	Sat% H2O:	Static:	Barometric:	Flowmeter1:	Vacuum1:	Flowmeter2:	Vacuum2:	Stack Temp:	Sorbent Temp:	Probe Temp:	DGM#1 Temp:	Condenser Temp:	DGM#2 Temp:	DGM1*:	DGM2*:	DGM1:	DGM2:
day:hh:mm:ss	in-Hg	Percent	in-H2O	in-Hg	l/min	in-Hg	l/min	in-Hg	degF	degF	degF	degF	degF	degF	liters STP	liters STP	liters nominal	liters nominal
20180427:03:29:00	23.5	15.8	-4.3	23.78	0.25	2.1	0.25	1.9	122.7	285.8	286.3	81.9	51.4	82.8	1065.8	1062.5	1369.2	1367.2
20180427:03:34:00	23.5	15.8	-4.3	23.78	0.25	2.1	0.25	1.9	122.7	285.8	286.4	81.8	51.4	82.8	1067.2	1063.8	1370.9	1368.9
20180427:03:39:00	23.5	15.9	-4.3	23.78	0.25	2.1	0.25	1.9	122.9	285.8	286.4	81.8	51.4	82.7	1068.5	1065.2	1372.7	1370.6
20180427:03:44:00	23.5	15.9	-4.3	23.79	0.25	2.1	0.25	1.9	122.9	285.8	286.3	81.7	51.4	82.7	1069.8	1066.5	1374.4	1372.4
20180427:03:49:00	23.5	15.9	-4.3	23.78	0.25	2.1	0.25	1.9	122.8	285.8	286.4	81.7	51.4	82.6	1071.2	1067.8	1376.1	1374.1
20180427:03:54:00	23.5	15.8	-4.3	23.78	0.25	2.1	0.25	1.9	122.8	285.7	286.3	81.6	51.4	82.6	1072.5	1069.2	1377.8	1375.9
20180427:03:59:00	23.5	15.8	-4.3	23.78	0.25	2.1	0.25	1.9	122.6	285.8	286.3	81.6	51.4	82.6	1073.9	1070.5	1379.6	1377.5
20180427:04:04:00	23.5	15.8	-4.2	23.78	0.25	2.1	0.25	1.9	122.7	285.8	286.3	81.5	51.4	82.5	1075.2	1071.9	1381.3	1379.3
20180427:04:09:00	23.5	15.8	-4.2	23.77	0.25	2.1	0.25	1.9	122.6	285.8	286.3	81.4	51.4	82.4	1076.6	1073.2	1383.0	1381.0
20180427:04:14:00	23.5	15.8	-4.3	23.78	0.25	2.1	0.25	1.9	122.7	285.7	286.3	81.4	51.4	82.4	1077.9	1074.5	1384.8	1382.7
20180427:04:19:00	23.5	15.7	-4.3	23.78	0.25	2.1	0.25	1.9	122.5	285.8	286.3	81.4	51.4	82.3	1079.2	1075.9	1386.5	1384.5
20180427:04:24:00	23.5	15.7	-4.3	23.78	0.25	2.1	0.25	1.9	122.6	285.7	286.3	81.3	51.4	82.3	1080.6	1077.2	1388.2	1386.2
20180427:04:29:00	23.5	15.7	-4.3	23.78	0.25	2.1	0.25	1.9	122.4	285.8	286.4	81.3	51.4	82.3	1081.9	1078.6	1390.0	1388.0
20180427:04:34:00	23.5	15.2	-4.3	23.78	0.25	2.1	0.25	1.9	121.4	285.7	286.3	81.3	51.4	82.2	1083.3	1079.9	1391.7	1389.7
20180427:04:39:00	23.5	15.2	-4.3	23.78	0.25	2.1	0.25	1.9	121.2	285.7	286.3	81.2	51.4	82.1	1084.6	1081.3	1393.5	1391.4
20180427:04:44:00	23.5	15.5	-4.3	23.78	0.25	2.1	0.25	1.9	122.0	285.7	286.3	81.1	51.4	82.1	1086.0	1082.6	1395.2	1393.1
20180427:04:49:00	23.5	14.8	-4.3	23.78	0.25	2.1	0.25	1.9	120.3	285.7	286.3	81.1	51.4	82.0	1087.3	1083.9	1396.9	1394.9
20180427:04:54:00	23.5	14.8	-4.3	23.78	0.25	2.1	0.25	1.9	120.3	285.6	286.3	81.1	51.4	82.0	1088.7	1085.3	1398.6	1396.6
20180427:04:59:00	23.5	15.1	-4.3	23.78	0.25	2.1	0.25	1.9	121.0	285.7	286.3	81.0	51.4	82.0	1090.0	1086.6	1400.3	1398.3
20180427:05:04:00	23.5	15.3	-4.3	23.78	0.25	2.1	0.25	1.9	121.5	285.8	286.3	81.0	51.4	81.9	1091.4	1087.9	1402.1	1400.1
20180427:05:09:00	23.5	15.4	-4.3	23.77	0.25	2.1	0.25	1.9	121.8	285.8	286.4	80.9	51.3	81.9	1092.7	1089.2	1403.8	1401.8
20180427:05:14:00	23.5	15.4	-4.3	23.78	0.25	2.1	0.25	1.9	121.8	285.7	286.3	80.9	51.4	81.8	1094.0	1090.6	1405.6	1403.5
20180427:05:19:00	23.5	15.5	-4.3	23.78	0.25	2.1	0.25	1.9	121.9	285.8	286.3	80.8	51.3	81.7	1095.4	1091.9	1407.3	1405.2
20180427:05:24:00	23.5	15.5	-4.3	23.78	0.25	2.1	0.25	1.9	121.9	285.8	286.3	80.8	51.3	81.7	1096.7	1093.3	1409.0	1407.0
20180427:05:29:00	23.5	15.5	-4.3	23.78	0.25	2.1	0.25	1.9	121.9	285.8	286.3	80.7	51.3	81.7	1098.1	1094.6	1410.8	1408.7
20180427:05:34:00	23.5	15.6	-4.3	23.78	0.25	2.1	0.25	1.9	122.3	285.7	286.3	80.6	51.3	81.6	1099.4	1096.0	1412.5	1410.4
20180427:05:39:00	23.5	15.6	-4.3	23.78	0.25	2.2	0.25	1.9	122.2	285.8	286.3	80.6	51.3	81.5	1100.7	1097.3	1414.2	1412.2
20180427:05:44:00	23.5	15.5	-4.3	23.78	0.25	2.2	0.25	1.9	122.1	285.8	286.4	80.5	51.3	81.5	1102.1	1098.6	1415.9	1413.9
20180427:05:49:00	23.5	15.5	-4.3	23.79	0.25	2.2	0.25	2.0	122.0	285.7	286.3	80.4	51.3	81.4	1103.4	1100.0	1417.6	1415.6
20180427:05:54:00	23.5	15.6	-4.4	23.79	0.25	2.2	0.25	1.9	122.2	285.8	286.3	80.4	51.3	81.4	1104.8	1101.3	1419.4	1417.3
20180427:05:59:00	23.5	15.6	-4.4	23.79	0.25	2.2	0.25	1.9	122.3	285.8	286.4	80.3	51.3	81.3	1106.1	1102.7	1421.1	1419.1
20180427:06:04:00	23.5	15.7	-4.4	23.79	0.25	2.2	0.25	1.9	122.5	285.7	286.3	80.3	51.3	81.3	1107.5	1104.0	1422.9	1420.8
20180427:06:09:00	23.5	15.7	-4.4	23.79	0.25	2.1	0.25	1.9	122.4	285.7	286.3	80.2	51.3	81.2	1108.8	1105.4	1424.6	1422.6
20180427:06:14:00	23.5	15.6	-4.4	23.79	0.25	2.1	0.25	1.9	122.2	285.8	286.3	80.1	51.3	81.1	1110.1	1106.7	1426.3	1424.3
20180427:06:19:00	23.5	15.6	-4.4	23.79	0.25	2.1	0.25	1.9	122.2	285.7	286.3	80.1	51.3	81.1	1111.5	1108.1	1428.1	1426.0
20180427:06:24:00	23.5	15.5	-4.4	23.79	0.25	2.1	0.25	1.9	122.0	285.7	286.3	80.0	51.2	81.0	1112.8	1109.4	1429.8	1427.8
20180427:06:29:00	23.5	15.4	-4.3	23.79	0.25	2.1	0.25	1.9	121.9	285.7	286.3	80.0	51.3	81.0	1114.2	1110.7	1431.5	1429.5
20180427:06:34:00	23.5	15.4	-4.4	23.79	0.25	2.1	0.25	1.9	121.9	285.7	286.3	80.0	51.2	80.9	1115.6	1112.1	1433.3	1431.2
20180427:06:39:00	23.5	15.5	-4.4	23.79	0.25	2.1	0.25	1.9	122.0	285.8	286.3	80.0	51.3	80.9	1116.9	1113.4	1435.0	1432.9
20180427:06:44:00	23.5	15.4	-4.4	23.79	0.25	2.1	0.25	1.9	121.8	285.8	286.3	79.9	51.2	80.8	1118.2	1114.8	1436.7	1434.7
20180427:06:49:00	23.5	15.5	-4.4	23.79	0.25	2.1	0.25	1.9	122.1	285.7	286.3	79.8	51.2	80.8	1119.6	1116.1	1438.4	1436.4
20180427:06:54:00	23.5	15.4	-4.4	23.79	0.25	2.2	0.25	1.9	121.8	285.8	286.3	79.8	51.2	80.7	1120.9	1117.5	1440.2	1438.1
20180427:06:59:00	23.5	15.4	-4.4	23.79	0.25	2.2	0.25	1.9	121.9	285.8	286.3	79.8	51.2	80.7	1122.3	1118.8	1441.9	1439.8
20180427:07:04:00	23.5	15.5	-4.5	23.80	0.25	2.2	0.25	1.9	121.9	285.7	286.3	79.7	51.2	80.7	1123.6	1120.1	1443.6	1441.6
20180427:07:09:00	23.5	15.6	-4.5	23.80	0.25	2.2	0.25	1.9	122.1	285.7	286.3	79.7	51.2	80.6	1124.9	1121.5	1445.3	1443.3
20180427:07:14:00	23.5	15.5	-4.5	23.80	0.25	2.2	0.25	1.9	122.1	285.7	286.2	79.7	51.2	80.6	1126.3	1122.8	1447.1	1445.0
20180427:07:19:00	23.5	15.6	-4.5	23.80	0.25	2.1	0.25	1.9	122.2	285.7	286.3	79.6	51.2	80.5	1127.7	1124.2	1448.8	1446.8
20180427:07:24:00	23.5	15.6	-4.5	23.80	0.25	2.1	0.25	1.9	122.3	285.7	286.3	79.6	51.2	80.5	1129.0	1125.5	1450.5	1448.4
20180427:07:29:00	23.5	15.5	-4.5	23.80	0.25	2.1	0.25	1.9	122.1	285.7	286.3	79.5	51.2	80.5	1130.3	1126.8	1452.2	1450.2
20180427:07:34:00	23.5	15.5	-4.5	23.80	0.25	2.1	0.25	1.9	122.0	285.8	286.3	79.5	51.2	80.4	1131.7	1128.2	1454.0	1451.9
20180427:07:39:00	23.5	15.5	-4.5	23.80	0.25	2.1	0.25	1.9	122.0	285.8	286.3	79.5	51.2	80.4	1133.0	1129.5	1455.7	1453.7
20180427:07:44:00	23.5	15.5	-4.5	23.80	0.25	2.1	0.25	1.9	122.1	285.7	286.3	79.5	51.2	80.4	1134.3	1130.8	1457.4	1455.4
20180427:07:49:00	23.5	15.5	-4.5	23.80	0.25	2.1	0.25	1.9	122.0	285.7	286.3	79.5	51.2	80.4	1135.7	1132.2	1459.1	1457.1
20180427:07:54:00	23.5	15.6	-4.5	23.80	0.25	2.1	0.25	1.9	122.2	285.7	286.3	79.4	51.2	80.3	1137.0	1133.5	1460.9	1458.8
20180427:07:59:00	23.5	15.5	-4.5	23.80	0.25	2.2	0.25	1.9	122.1	285.7	286.3	79.4	51.1	80.3	1138.4	1134.9	1462.6	1460.5
20180427:08:04:00	23.5	15.6	-4.4	23.80	0.25	2.2	0.25	1.9	122.2	285.7	286.3	79.4	51.1	80.3	1139.7	1136.2	1464.3	1462.3
20180427:08:09:00	23.5	15.6	-4.4	23.80	0.25	2.1	0.25	1.9	122.2	285.7	286.3	79.4	51.1	80.3	1141.1	1137.5	1466.0	1463.9
20180427:08:14:00	23.5	15.5	-4.5	23.80	0.25	2.2	0.25	1.9	122.1	285.7	286.2	79.4	51.1	80.3	1142.4	1138.9	1467.7	1465.7
20180427:08:19:00	23.5	15.5	-4.5	23.80	0.25	2.2	0.25	1.9	122.1	285.6	286.2	79.4	51.0	80.2	1143.7	1140.2	1469.5	1467.4
20180427:08:24:00	23.5	14.7	-4.5	23.80	0.25	2.1	0.25	1.9	120.1	285.6	286.2	79.4	51.1	80.2	1145.1	1141.6	1471.2	1469.2
20180427:08:29:00	23.5	14.8	-4.4	23.80	0.25	2.1	0.25	1.9	120.3	285.6	286.3	79.4	51.1	80.2	1146.4	1142.9	1472.9	1470.8
20180427:08:34:00	23.5	15.1	-4.4	23.80	0.25	2.1	0.25	1.9	121.2	285.6	286.1	79.3	51.0	80.2	1147.8	1144.3	1474.7	1472.6
20180427:08:39:00	23.5	15.3	-4.4	23.80	0.25	2.1	0.25	1.9	121.5	285.7	286.2	79.3	51.0	80.2	1149.1	1145.6	1476.3	1474.3
20180427:08:44:00	23.5	15.4	-4.3	23.79	0.25	2.1	0.25	1.9	121.8	285.7	286.2	79.3	51.0	80.2	1150.4	1146.9	1478.1	1476.0
20180427:08:49:00	23.5	15.4	-4.3	23.79	0.25	2.2	0.25	1.9	121.9	285.7	286.2	79.3	51.0	80.2	1151.8	1148.2	1479.8	1477.7
20180427:08:54:00	23.5	15.5	-4.3	23.79	0.25	2.1	0.25	1.9	121.9	285.7	286.2	79.3	51.0	80.2	1153.1	1149.6	1481.5	1479.5
20180427:08:59:00	23.5	15.6	-4.3	23.80	0.25	2.2	0.25	1.9	122.2	285.7	286.3	79.4	51.0	80.3	1154.5	1150.9	1483.3	1481.2
20180427:09:04:00	23.5	15.6	-4.3	23.79	0.25	2.1	0.25	1.9	122.2	285.7	286.3	79.4	51.1	80.3	1155.8	1152.2	1485.0	1482.9
20180427:09:09:00	23.5	15.5	-4.3	23.79	0.25	2.1	0.25	1.9	122.1	285.8	286.3	79.4	51.1	80.3	1157.2	1153.6	1486.7	1484.7
20180427:09:14:00	23.5	15.6	-4.3	23.79	0.25	2.1	0.25	1.9	122.3	285.7	286.3	79.4	51.1	80.3	1158.5	1154.9	1488.4	1486.3
20180427:09:19:00	23.5	15.6	-4.3	23.79	0.25	2.1	0.25	1.9	122.3	285.7	286.3	79.4	51.0	80.3	1159.8	1156.3	1490.2	1488.1
20180427:09:24:00	23.5	15.5	-4.3	23.79	0.25	2.2	0.25	1.9	122.1	285.7	286.3	79.5	51.1	80.3	1161.2	1157.6	1491.9	1489.8
20180427:09:29:00	23.5	15.6	-4.3	23.79	0.25	2.2	0.25	1.9	122.3	285.8	286.3	79.5	51.0	80.4	1162.5	1159.0	1493.6	1491.6
20180427:09:34:00	23.5	15.6	-4.2	23.79	0.25	2.2	0.25	1.9	122.4	285.7	286.2	79.5	51.0	80.4	1163.9	1160.3	1495.3	1493.3
20180427:09:39:00	23.5	15.7	-4.3	23.79	0.25	2.1	0.25	1.9	122.4	285.7	286.3	79.6	51.0	80.4	1165.2	1161.7	1497.0	1495.0
20180427:09:44:00	23.5	15.6	-4.3	23.79	0.25	2.1	0.25	1.9	122.2	285.7	286.3	79.7	51.1	80.5	1166.5	1163.0	1498.8	1496.7
20180427:09:49:00	23.5	15.5	-4.3	23.79	0.25	2.1	0.25	1.9	122.0	285.7	286.3	79.7	51.0	80.5	1167.9	1164.3	1500.5	1498.4
20180427:09:54:00	23.5	15.5	-4.3	23.79	0.25	2.1	0.25	1.9	122.1	285.7	286.3	79.7	51.1	80.6	1169.2	1165.7	1502.2	1500.2
20180427:09:59:00	23.5	15.6	-4.3	23.79	0.25	2.1	0.25	1.9	122.1	285.7	286.3	79.8	51.0	80.6	1170.6	1167.0	1504.0	1501.9
20180427:10:04:00	23.5	15.6	-4.3	23.78	0.25	2.1	0.25	1.9	122.3	285.7	286.3	79.9	51.1	80.7	1171.9	1168.3	1505.6	1503.6
20180427:10:09:00	23.5	15.6	-4.3	23.78	0.25	2.1	0.25	1.9	122.3	285.7	286.2	79.9	51.0	80.7	1173.2	1169.7	1507.4	1505.3
20180427:10:14:00	23.5	15.6	-4.3	23.78	0.25	2.1	0.25	1.9	122.3	285.7	286.3	80.0	51.1	80.8	1174.6	1171.0	1509.1	1507.1
20180427:10:19:00	23.5	15.7	-4.3	23.78	0.25	2.1	0.25	1.9	122.4	285.7	286.3	80.0	51.1	80.9	1175.9	1172.3	1510.9	1508.8
20180427:10:24:00	23.5	15.7	-4.3	23.78	0.25	2.2	0.25	1.9	122.5	285.7	286.2	80.1	51.1	80.9	1177.2	1173.7	1512.5	1510.5
20180427:10:29:00	23.5	15.8	-4.3	23.78	0.25	2.2	0.25	1.9	122.8	285.7	286.3	80.1	51.0	81.0	1178.6	1175.0	1514.3	1512.2
20180427:10:34:00	23.5	15.7	-4.3	23.78	0.25	2.2	0.25	1.9	122.4	285.7	286.2	80.2	51.1	81.0	1179.9	1176.4	1516.0	1514.0
20180427:10:39:00	23.5	15.7	-4.4	23.78	0.25	2.1	0.25	1.9	122.5	285.7	286.2	80.3	51.1	81.1	1181.3	1177.7	1517.7	1515.7
20180427:10:44:00	23.5	15.6	-4.3	23.77	0.25	2.1	0.25	1.9	122.2	285.7	286.3	80.3	51.1	81.1	1182.6	1179.0	1519.5	1517.4
20180427:10:49:00	23.5	15.7	-4.4	23.77	0.25	2.1	0.25	1.9	122.5	285.7	286.3	80.4	51.1	81.2	1183.9	1180.4	1521.2	1519.1

Time:	Stack Pressure:	Sat% H2O:	Static:	Barometric:	Flowmeter1:	Vacuum1:	Flowmeter2:	Vacuum2:	Stack Temp:	Sorbent Temp:	Probe Temp:	DGM#1 Temp:	Condenser Temp:	DGM#2 Temp:	DGM1*:	DGM2*:	DGM1:	DGM2:
day:hh:mm:ss	in-Hg	Percent	in-H2O	in-Hg	l/min	in-Hg	l/min	in-Hg	degF	degF	degF	degF	degF	degF	liters STP	liters STP	liters nominal	liters nominal
20180427:10:54:00	23.5	15.7	-4.4	23.77	0.25	2.1	0.25	1.9	122.4	285.7	286.2	80.4	51.1	81.3	1185.3	1181.7	1522.9	1520.8
20180427:10:59:00	23.5	15.7	-4.4	23.77	0.25	2.1	0.25	1.9	122.5	285.7	286.3	80.5	51.1	81.3	1186.6	1183.1	1524.7	1522.6
20180427:11:04:00	23.5	15.8	-4.3	23.77	0.25	2.2	0.25	1.9	122.7	285.7	286.3	80.6	51.1	81.4	1188.0	1184.4	1526.3	1524.3
20180427:11:09:00	23.5	16.0	-4.2	23.77	0.25	2.2	0.25	1.9	123.1	285.7	286.2	80.7	51.1	81.5	1189.3	1185.7	1528.1	1526.1
20180427:11:14:00	23.5	15.9	-4.2	23.77	0.25	2.2	0.25	1.9	123.0	285.7	286.3	80.7	51.1	81.5	1190.6	1187.0	1529.8	1527.7
20180427:11:19:00	23.5	15.9	-4.2	23.77	0.25	2.1	0.25	1.9	122.9	285.6	286.3	80.8	51.2	81.6	1192.0	1188.4	1531.6	1529.5
20180427:11:24:00	23.5	15.9	-4.1	23.76	0.25	2.1	0.25	1.9	122.9	285.6	286.2	80.9	51.2	81.7	1193.3	1189.7	1533.3	1531.2
20180427:11:29:00	23.5	15.9	-4.2	23.76	0.25	2.1	0.25	1.9	122.8	285.7	286.3	81.0	51.2	81.7	1194.7	1191.1	1535.0	1532.9
20180427:11:34:00	23.5	15.9	-4.1	23.76	0.25	2.1	0.25	1.9	122.8	285.7	286.3	81.0	51.2	81.8	1196.0	1192.4	1536.7	1534.7
20180427:11:39:00	23.5	15.8	-4.1	23.75	0.25	2.1	0.25	1.9	122.6	285.6	286.2	81.1	51.2	81.9	1197.3	1193.7	1538.4	1536.4
20180427:11:44:00	23.4	15.8	-4.1	23.75	0.25	2.1	0.25	1.9	122.7	285.6	286.3	81.2	51.2	82.0	1198.7	1195.1	1540.2	1538.1
20180427:11:49:00	23.5	15.7	-4.1	23.75	0.25	2.1	0.25	1.9	122.5	285.6	286.2	81.3	51.2	82.0	1200.0	1196.4	1541.9	1539.8
20180427:11:54:00	23.4	15.9	-4.1	23.75	0.25	2.1	0.25	1.9	122.8	285.7	286.3	81.3	51.2	82.1	1201.3	1197.8	1543.6	1541.6
20180427:11:59:00	23.4	15.9	-4.0	23.75	0.25	2.1	0.25	1.9	122.8	285.6	286.2	81.4	51.2	82.2	1202.7	1199.1	1545.4	1543.3
20180427:12:04:00	23.4	15.8	-4.1	23.74	0.25	2.1	0.25	1.9	122.8	285.7	286.3	81.5	51.2	82.3	1204.0	1200.4	1547.1	1545.0
20180427:12:09:00	23.4	15.9	-4.0	23.74	0.25	2.1	0.25	1.9	122.8	285.7	286.3	81.6	51.2	82.4	1205.4	1201.7	1548.9	1546.7
20180427:12:14:00	23.4	15.8	-4.0	23.74	0.25	2.1	0.25	1.9	122.8	285.8	286.3	81.7	51.2	82.4	1206.7	1203.1	1550.6	1548.5
20180427:12:19:00	23.4	15.9	-4.0	23.74	0.25	2.1	0.25	1.9	122.9	285.8	286.3	81.8	51.2	82.5	1208.0	1204.4	1552.3	1550.2
20180427:12:24:00	23.4	15.9	-4.0	23.74	0.25	2.1	0.25	1.9	122.9	285.8	286.3	81.9	51.2	82.6	1209.4	1205.7	1554.0	1551.9
20180427:12:29:00	23.4	16.0	-4.0	23.73	0.25	2.1	0.25	1.9	123.1	285.7	286.3	82.0	51.2	82.7	1210.7	1207.1	1555.7	1553.7
20180427:12:34:00	23.4	16.0	-3.9	23.73	0.25	2.2	0.25	1.9	123.1	285.7	286.3	82.0	51.2	82.7	1212.1	1208.4	1557.5	1555.4
20180427:12:39:00	23.4	16.0	-4.0	23.73	0.25	2.2	0.25	1.9	123.1	285.7	286.3	82.1	51.2	82.9	1213.4	1209.8	1559.2	1557.1
20180427:12:44:00	23.4	15.9	-4.0	23.73	0.25	2.2	0.25	1.9	123.0	285.7	286.3	82.2	51.2	82.9	1214.7	1211.1	1560.9	1558.8
20180427:12:49:00	23.4	16.0	-4.0	23.72	0.25	2.2	0.25	1.9	123.2	285.7	286.3	82.3	51.2	83.0	1216.1	1212.4	1562.7	1560.6
20180427:12:54:00	23.4	16.1	-4.1	23.73	0.25	2.2	0.25	2.0	123.3	285.7	286.3	82.3	51.2	83.1	1217.4	1213.7	1564.4	1562.3
20180427:12:59:00	23.4	16.1	-3.9	23.72	0.25	2.2	0.25	1.9	123.4	285.7	286.3	82.4	51.3	83.1	1218.8	1215.1	1566.2	1564.1
20180427:13:04:00	23.4	15.9	-4.1	23.72	0.25	2.1	0.25	1.9	122.8	285.6	286.3	82.5	51.3	83.3	1220.1	1216.4	1567.9	1565.8
20180427:13:09:00	23.4	15.0	-4.2	23.72	0.25	2.1	0.25	1.9	120.8	285.5	286.3	82.6	51.3	83.3	1221.4	1217.8	1569.6	1567.5
20180427:13:14:00	23.4	15.5	-4.2	23.72	0.25	2.1	0.25	1.9	121.9	285.7	286.3	82.7	51.3	83.4	1222.8	1219.1	1571.4	1569.3
20180427:13:19:00	23.4	15.6	-4.1	23.71	0.25	2.1	0.25	1.9	122.2	285.7	286.3	82.8	51.3	83.5	1224.1	1220.4	1573.1	1571.0
20180427:13:24:00	23.4	15.7	-4.1	23.72	0.25	2.1	0.25	1.9	122.5	285.8	286.3	82.9	51.3	83.6	1225.5	1221.8	1574.9	1572.8
20180427:13:29:00	23.4	15.8	-4.0	23.71	0.25	2.1	0.25	1.9	122.7	285.8	286.3	83.0	51.3	83.7	1226.8	1223.1	1576.6	1574.5
20180427:13:34:00	23.4	15.9	-4.0	23.71	0.25	2.1	0.25	1.9	122.8	285.8	286.3	83.0	51.3	83.8	1228.1	1224.5	1578.3	1576.2
20180427:13:39:00	23.4	15.9	-4.0	23.71	0.25	2.2	0.25	1.9	122.9	285.7	286.2	83.1	51.3	83.9	1229.5	1225.8	1580.1	1577.9
20180427:13:44:00	23.4	16.0	-4.0	23.71	0.25	2.2	0.25	1.9	123.0	285.8	286.3	83.2	51.4	84.0	1230.8	1227.1	1581.8	1579.7
20180427:13:49:00	23.4	16.0	-4.0	23.71	0.25	2.2	0.25	1.9	123.1	285.7	286.3	83.3	51.3	84.0	1232.2	1228.5	1583.6	1581.4
20180427:13:54:00	23.4	16.0	-4.0	23.71	0.25	2.2	0.25	1.9	123.1	285.7	286.3	83.4	51.4	84.1	1233.5	1229.8	1585.3	1583.1
20180427:13:59:00	23.4	16.0	-4.1	23.71	0.25	2.2	0.25	1.9	123.1	285.7	286.3	83.5	51.3	84.2	1234.8	1231.1	1587.0	1584.9
20180427:14:04:00	23.4	16.1	-4.0	23.70	0.25	2.2	0.25	1.9	123.3	285.7	286.3	83.6	51.4	84.3	1236.2	1232.4	1588.8	1586.6
20180427:14:09:00	23.4	16.1	-3.9	23.69	0.25	2.1	0.25	1.9	123.3	285.7	286.3	83.7	51.3	84.4	1237.5	1233.8	1590.5	1588.4
20180427:14:14:00	23.4	16.1	-4.0	23.70	0.25	2.1	0.25	1.9	123.2	285.7	286.3	83.8	51.4	84.5	1238.9	1235.1	1592.2	1590.1
20180427:14:19:00	23.4	16.1	-3.9	23.69	0.25	2.1	0.25	1.9	123.2	285.7	286.3	83.9	51.4	84.6	1240.2	1236.5	1594.0	1591.8
20180427:14:24:00	23.4	16.0	-3.9	23.69	0.25	2.2	0.25	1.9	123.2	285.8	286.3	84.0	51.4	84.7	1241.5	1237.8	1595.7	1593.6
20180427:14:29:00	23.4	16.0	-4.0	23.69	0.25	2.2	0.25	1.9	123.1	285.8	286.3	84.1	51.4	84.8	1242.9	1239.1	1597.5	1595.3
20180427:14:34:00	23.4	16.0	-4.0	23.70	0.25	2.2	0.25	1.9	123.2	285.8	286.4	84.2	51.4	84.9	1244.2	1240.5	1599.2	1597.1
20180427:14:39:00	23.4	16.1	-4.0	23.70	0.25	2.2	0.25	1.9	123.4	285.8	286.3	84.2	51.4	84.9	1245.5	1241.8	1600.9	1598.8
20180427:14:44:00	23.4	16.2	-4.0	23.69	0.25	2.2	0.25	1.9	123.4	285.8	286.3	84.3	51.4	85.0	1246.9	1243.2	1602.7	1600.6
20180427:14:49:00	23.4	16.2	-4.0	23.69	0.25	2.2	0.25	1.9	123.6	285.8	286.4	84.4	51.4	85.1	1248.2	1244.5	1604.4	1602.3
20180427:14:54:00	23.4	16.3	-4.0	23.69	0.25	2.2	0.25	1.9	123.6	285.7	286.3	84.5	51.4	85.2	1249.6	1245.8	1606.2	1604.0
20180427:14:59:00	23.4	16.1	-3.9	23.69	0.25	2.2	0.25	1.9	123.4	285.8	286.3	84.6	51.4	85.3	1250.9	1247.2	1608.0	1605.8
20180427:15:04:00	23.4	16.0	-3.9	23.68	0.25	2.1	0.25	1.9	123.1	285.7	286.2	84.6	51.4	85.4	1252.3	1248.5	1609.7	1607.5
20180427:15:09:00	23.4	16.0	-4.0	23.68	0.25	2.1	0.25	1.9	123.1	285.7	286.3	84.7	51.4	85.4	1253.6	1249.8	1611.5	1609.3
20180427:15:14:00	23.4	16.1	-3.9	23.68	0.25	2.1	0.25	1.9	123.2	285.7	286.3	84.8	51.4	85.5	1254.9	1251.1	1613.2	1611.0
20180427:15:19:00	23.4	16.0	-3.9	23.68	0.25	2.2	0.25	1.9	123.0	285.7	286.2	84.9	51.5	85.6	1256.3	1252.5	1614.9	1612.7
20180427:15:24:00	23.4	15.2	-4.1	23.68	0.25	2.1	0.25	1.9	121.2	285.6	286.2	85.0	51.5	85.7	1257.6	1253.8	1616.7	1614.5
20180427:15:29:00	23.4	15.2	-4.0	23.68	0.25	2.1	0.25	1.9	121.2	285.6	286.2	85.0	51.4	85.8	1258.9	1255.1	1618.4	1616.2
20180427:15:34:00	23.4	15.7	-3.9	23.67	0.25	2.2	0.25	1.9	122.4	285.8	286.3	85.1	51.5	85.8	1260.3	1256.5	1620.2	1618.0
20180427:15:39:00	23.4	16.0	-3.9	23.67	0.25	2.2	0.25	2.0	123.0	285.7	286.2	85.1	51.4	85.9	1261.7	1257.8	1621.9	1619.7
20180427:15:44:00	23.4	16.1	-3.9	23.67	0.25	2.2	0.25	2.0	123.3	285.7	286.2	85.2	51.4	86.0	1263.0	1259.2	1623.7	1621.5
20180427:15:49:00	23.4	16.1	-3.9	23.67	0.25	2.2	0.25	1.9	123.2	285.7	286.3	85.2	51.4	86.0	1264.3	1260.5	1625.5	1623.2
20180427:15:54:00	23.4	16.1	-4.0	23.67	0.25	2.2	0.25	1.9	123.2	285.7	286.3	85.3	51.4	86.1	1265.7	1261.8	1627.2	1624.9
20180427:15:59:00	23.4	16.1	-4.0	23.67	0.25	2.2	0.25	1.9	123.2	285.6	286.2	85.3	51.5	86.2	1267.0	1263.2	1628.9	1626.7
20180427:16:04:00	23.4	16.0	-4.0	23.67	0.25	2.2	0.25	1.9	123.1	285.7	286.2	85.4	51.4	86.2	1268.4	1264.5	1630.7	1628.4
20180427:16:09:00	23.4	16.0	-4.0	23.67	0.25	2.2	0.25	1.9	123.1	285.7	286.3	85.4	51.5	86.3	1269.7	1265.9	1632.4	1630.2
20180427:16:14:00	23.4	16.0	-4.0	23.67	0.25	2.2	0.25	1.9	123.1	285.7	286.2	85.5	51.5	86.3	1271.1	1267.2	1634.2	1631.9
20180427:16:19:00	23.4	16.0	-3.9	23.67	0.25	2.2	0.25	1.9	123.0	285.6	286.2	85.6	51.4	86.4	1272.4	1268.5	1636.0	1633.7
20180427:16:24:00	23.4	16.0	-3.9	23.67	0.25	2.2	0.25	1.9	123.1	285.7	286.2	85.6	51.5	86.5	1273.7	1269.8	1637.7	1635.4
20180427:16:29:00	23.4	15.9	-4.0	23.67	0.25	2.2	0.25	1.9	122.9	285.7	286.2	85.7	51.5	86.5	1275.1	1271.2	1639.5	1637.2
20180427:16:34:00	23.4	15.0	-4.1	23.67	0.25	2.2	0.25	1.9	120.7	285.5	286.2	85.7	51.5	86.6	1276.4	1272.5	1641.2	1638.9
20180427:16:39:00	23.4	15.3	-4.0	23.66	0.25	2.2	0.25	1.9	121.4	285.6	286.2	85.8	51.5	86.6	1277.7	1273.8	1642.9	1640.6
20180427:16:44:00	23.4	15.7	-3.9	23.66	0.25	2.2	0.25	1.9	122.2	285.7	286.2	85.8	51.5	86.7	1279.1	1275.2	1644.7	1642.4
20180427:16:49:00	23.4	15.8	-3.9	23.67	0.25	2.2	0.25	1.9	122.6	285.7	286.2	85.9	51.5	86.8	1280.4	1276.5	1646.5	1644.2
20180427:16:54:00	23.4	15.9	-4.0	23.67	0.25	2.2	0.25	1.9	122.7	285.7	286.2	85.9	51.5	86.8	1281.8	1277.9	1648.2	1645.9
20180427:16:59:00	23.4	15.9	-4.0	23.67	0.25	2.2	0.25	1.9	122.7	285.8	286.2	86.0	51.5	86.9	1283.1	1279.2	1650.0	1647.7
20180427:17:04:00	23.4	15.9	-4.0	23.67	0.25	2.2	0.25	1.9	122.8	285.7	286.2	86.0	51.5	86.9	1284.4	1280.5	1651.7	1649.4
20180427:17:09:00	23.4	15.9	-3.9	23.67	0.25	2.2	0.25	1.9	122.8	285.7	286.2	86.1	51.5	87.0	1285.8	1281.9	1653.5	1651.2
20180427:17:14:00	23.4	16.0	-3.8	23.66	0.25	2.2	0.25	1.9	122.9	285.8	286.2	86.2	51.5	87.0	1287.1	1283.2	1655.2	1652.9
20180427:17:19:00	23.4	16.0	-4.0	23.67	0.25	2.2	0.25	1.9	122.9	285.8	286.2	86.2	51.6	87.1	1288.5	1284.6	1657.0	1654.7
20180427:17:24:00	23.4	16.1	-3.8	23.67	0.25	2.2	0.25	2.0	123.2	285.7	286.2	86.3	51.5	87.2	1289.8	1285.9	1658.8	1656.4
20180427:17:29:00	23.4	16.1	-3.9	23.67	0.25	2.2	0.25	2.0	123.3	285.7	286.2	86.3	51.5	87.2	1291.2	1287.2	1660.5	1658.1
20180427:17:34:00	23.4	16.2	-3.9	23.67	0.25	2.2	0.25	2.0	123.5	285.8	286.3	86.4	51.6	87.3	1292.5	1288.6	1662.3	1659.9
20180427:17:39:00	23.4	16.2	-3.9	23.67	0.25	2.2	0.25	1.9	123.5	285.8	286.2	86.5	51.5	87.3	1293.9	1289.9	1664.0	1661.7
20180427:17:44:00	23.4	16.1	-4.0	23.68	0.25	2.1	0.25	1.9	123.3	285.7	286.3	86.6	51.6	87.4	1295.2	1291.3	1665.8	1663.4
20180427:17:49:00	23.4	16.1	-4.0	23.67	0.25	2.1	0.25	1.9	123.3	285.8	286.3	86.6	51.5	87.4	1296.6	1292.6	1667.6	1665.2
20180427:17:54:00	23.4	16.1	-3.9	23.67	0.25	2.2	0.25	1.9	123.2	285.7	286.3	86.6	51.5	87.5	1297.9	1293.9	1669.3	1666.9
20180427:17:59:00	23.4	16.1	-3.9	23.67	0.25	2.2	0.25	1.9	123.2	285.7	286.3	86.7	51.6	87.5	1299.2	1295.3	1671.0	1668.7
20180427:18:04:00	23.4	16.0	-4.0	23.68	0.25	2.2	0.25	1.9	123.1	285.8	286.3	86.7	51.6	87.6	1300.6	1296.6	1672.8	1670.4
20180427:18:09:00	23.4	16.0	-4.0	23.68	0.25	2.2	0.25	1.9	123.1	285.7	286.3	86.8	51.6	87.6	1301.9	1297.9	1674.6	1672.2
20180427:18:14:00	23.4	16.0	-4.0	23.68	0.25	2.2	0.25	1.9	123.0	285.7	286.3	86.8	51.6	87.7	1303.2	1299.2	1676.3	1673.9

Time:	Stack Pressure:	Sat% H2O:	Static:	Barometric:	Flowmeter1:	Vacuum1:	Flowmeter2:	Vacuum2:	Stack Temp:	Sorbent Temp:	Probe Temp:	DGM#1 Temp:	Condenser Temp:	DGM#2 Temp:	DGM1*:	DGM2*:	DGM1:	DGM2:
day:hh:mm:ss	in-Hg	Percent	in-H2O	in-Hg	l/min	in-Hg	l/min	in-Hg	degF	degF	degF	degF	degF	degF	liters STP	liters STP	liters nominal	liters nominal
20180427:18:19:00	23.4	16.0	-4.0	23.67	0.25	2.2	0.25	1.9	122.9	285.8	286.3	86.8	51.6	87.7	1304.6	1300.6	1678.1	1675.7
20180427:18:24:00	23.4	16.0	-4.0	23.67	0.25	2.2	0.25	1.9	123.0	285.7	286.3	86.9	51.6	87.8	1305.9	1301.9	1679.8	1677.4
20180427:18:29:00	23.4	16.0	-4.0	23.67	0.25	2.2	0.25	1.9	123.1	285.6	286.2	86.9	51.6	87.8	1307.3	1303.2	1681.6	1679.2
20180427:18:34:00	23.4	16.1	-4.0	23.67	0.25	2.2	0.25	1.9	123.3	285.6	286.2	86.9	51.7	87.9	1308.6	1304.6	1683.4	1681.0
20180427:18:39:00	23.4	16.1	-3.9	23.67	0.25	2.2	0.25	1.9	123.2	285.6	286.2	87.0	51.6	87.9	1309.9	1305.9	1685.1	1682.7
20180427:18:44:00	23.4	16.0	-3.9	23.67	0.25	2.2	0.25	2.0	123.1	285.6	286.2	87.0	51.7	87.9	1311.3	1307.3	1686.9	1684.5
20180427:18:49:00	23.4	16.0	-4.0	23.67	0.25	2.2	0.25	2.0	123.0	285.6	286.3	87.1	51.7	88.0	1312.7	1308.6	1688.6	1686.2
20180427:18:54:00	23.4	16.3	-4.1	23.67	0.25	2.2	0.25	2.0	123.6	285.7	286.2	87.1	51.7	88.0	1314.0	1309.9	1690.4	1687.9
20180427:18:59:00	23.4	16.2	-4.0	23.67	0.25	2.2	0.25	2.0	123.6	285.7	286.3	87.2	51.7	88.0	1315.4	1311.3	1692.2	1689.7
20180427:19:04:00	23.4	16.0	-4.0	23.67	0.25	2.2	0.25	2.0	123.1	285.8	286.3	87.2	51.7	88.1	1316.7	1312.6	1693.9	1691.4
20180427:19:09:00	23.4	16.1	-4.1	23.67	0.25	2.2	0.25	2.0	123.2	285.8	286.4	87.2	51.7	88.1	1318.0	1314.0	1695.6	1693.2
20180427:19:14:00	23.4	16.2	-4.0	23.67	0.25	2.2	0.25	2.0	123.5	285.7	286.3	87.3	51.7	88.2	1319.4	1315.3	1697.5	1695.0
20180427:19:19:00	23.4	16.2	-4.1	23.67	0.25	2.2	0.25	2.0	123.4	285.7	286.3	87.3	51.6	88.2	1320.7	1316.6	1699.2	1696.7
20180427:19:24:00	23.4	16.1	-4.0	23.67	0.25	2.2	0.25	2.0	123.3	285.7	286.3	87.3	51.7	88.2	1322.1	1318.0	1701.0	1698.5
20180427:19:29:00	23.4	16.1	-4.2	23.67	0.25	2.2	0.25	2.0	123.3	285.7	286.3	87.3	51.7	88.2	1323.4	1319.3	1702.8	1700.3
20180427:19:34:00	23.3	15.9	-4.4	23.67	0.25	2.2	0.25	2.0	122.6	285.7	286.4	87.3	51.7	88.2	1324.8	1320.7	1704.5	1702.1
20180427:19:39:00	23.4	15.1	-4.3	23.67	0.25	2.2	0.25	2.0	120.9	285.5	286.2	87.3	51.7	88.2	1326.1	1322.0	1706.3	1703.8
20180427:19:44:00	23.4	14.9	-4.1	23.67	0.25	2.2	0.25	2.0	120.3	285.5	286.1	87.3	51.7	88.2	1327.5	1323.4	1708.1	1705.6
20180427:19:49:00	23.4	15.2	-3.9	23.67	0.25	2.2	0.25	2.0	121.2	285.5	286.2	87.3	51.7	88.3	1328.8	1324.7	1709.8	1707.4
20180427:19:54:00	23.4	15.4	-4.0	23.67	0.25	2.2	0.25	2.0	121.7	285.6	286.2	87.3	51.7	88.2	1330.2	1326.1	1711.6	1709.1
20180427:19:59:00	23.4	15.5	-4.1	23.67	0.25	2.2	0.25	2.0	121.8	285.8	286.4	87.3	51.7	88.3	1331.6	1327.4	1713.4	1710.9
20180427:20:04:00	23.4	15.5	-4.0	23.67	0.25	2.2	0.25	2.0	121.8	285.8	286.3	87.3	51.7	88.3	1332.9	1328.8	1715.2	1712.7
20180427:20:09:00	23.4	15.4	-4.0	23.67	0.25	2.2	0.25	2.0	121.7	285.7	286.3	87.3	51.7	88.3	1334.3	1330.1	1716.9	1714.4
20180427:20:14:00	23.4	15.5	-4.1	23.67	0.25	2.2	0.25	2.0	121.9	285.7	286.2	87.3	51.7	88.3	1335.6	1331.5	1718.7	1716.2
20180427:20:19:00	23.4	15.6	-4.1	23.67	0.25	2.2	0.25	2.0	122.2	285.6	286.2	87.3	51.7	88.3	1337.0	1332.8	1720.5	1718.0
20180427:20:24:00	23.4	15.5	-4.1	23.68	0.25	2.2	0.25	2.0	121.9	285.6	286.2	87.3	51.7	88.3	1338.3	1334.1	1722.3	1719.7
20180427:20:29:00	23.4	15.7	-4.1	23.68	0.25	2.2	0.25	2.0	122.4	285.7	286.3	87.3	51.7	88.3	1339.7	1335.5	1724.1	1721.5
20180427:20:34:00	23.4	15.5	-4.0	23.68	0.25	2.2	0.25	2.0	122.0	285.8	286.3	87.3	51.7	88.3	1341.0	1336.8	1725.8	1723.3
20180427:20:39:00	23.4	15.6	-4.0	23.67	0.25	2.2	0.25	2.0	122.1	285.8	286.3	87.3	51.7	88.2	1342.4	1338.2	1727.6	1725.1
20180427:20:44:00	23.4	15.0	-4.0	23.67	0.25	2.2	0.25	2.0	120.7	285.7	286.3	87.3	51.6	88.2	1343.8	1339.6	1729.4	1726.8
20180427:20:49:00	23.4	15.4	-4.1	23.67	0.25	2.2	0.25	2.0	121.7	285.7	286.3	87.3	51.7	88.2	1345.1	1340.9	1731.1	1728.6
20180427:20:54:00	23.4	15.6	-4.0	23.67	0.25	2.2	0.25	2.0	122.2	285.7	286.2	87.3	51.7	88.2	1346.4	1342.3	1732.9	1730.4
20180427:20:59:00	23.4	15.8	-4.1	23.67	0.25	2.2	0.25	2.0	122.6	285.7	286.3	87.3	51.7	88.2	1347.8	1343.6	1734.7	1732.1
20180427:21:04:00	23.4	15.9	-4.0	23.67	0.25	2.2	0.25	2.0	122.7	285.7	286.3	87.3	51.7	88.2	1349.1	1345.0	1736.4	1733.9
20180427:21:09:00	23.4	15.9	-4.0	23.67	0.25	2.2	0.25	2.0	122.9	285.8	286.3	87.3	51.7	88.2	1350.5	1346.3	1738.2	1735.7
20180427:21:14:00	23.4	16.0	-4.0	23.67	0.25	2.2	0.25	2.0	122.9	285.8	286.3	87.3	51.7	88.2	1351.9	1347.6	1740.0	1737.4
20180427:21:19:00	23.4	16.0	-4.1	23.67	0.25	2.2	0.25	2.0	123.0	285.8	286.3	87.3	51.7	88.2	1353.2	1349.0	1741.8	1739.2
20180427:21:24:00	23.4	16.0	-4.3	23.67	0.25	2.2	0.25	2.0	123.0	285.8	286.3	87.3	51.7	88.2	1354.6	1350.3	1743.6	1741.0
20180427:21:29:00	23.4	16.1	-4.2	23.67	0.25	2.2	0.25	2.0	123.3	285.8	286.3	87.2	51.7	88.2	1355.9	1351.7	1745.3	1742.7
20180427:21:34:00	23.3	16.3	-4.4	23.67	0.25	2.2	0.25	2.0	123.6	285.8	286.3	87.2	51.7	88.2	1357.3	1353.1	1747.1	1744.5
20180427:21:39:00	23.3	16.4	-4.5	23.67	0.25	2.2	0.25	2.0	123.9	285.8	286.3	87.2	51.8	88.2	1358.6	1354.4	1748.9	1746.3
20180427:21:44:00	23.3	15.8	-4.5	23.67	0.25	2.2	0.25	2.0	122.4	285.7	286.2	87.1	51.7	88.1	1360.0	1355.8	1750.6	1748.1
20180427:21:49:00	23.3	15.6	-4.4	23.67	0.25	2.2	0.25	2.0	122.1	285.7	286.3	87.0	51.7	88.0	1361.3	1357.1	1752.4	1749.9
20180427:21:54:00	23.3	16.3	-4.4	23.67	0.25	2.2	0.25	2.0	123.6	285.8	286.3	87.0	51.8	88.0	1362.7	1358.4	1754.2	1751.6
20180427:21:59:00	23.3	16.5	-4.5	23.67	0.25	2.2	0.25	2.0	124.1	285.8	286.3	87.0	51.7	88.0	1364.1	1359.8	1756.0	1753.4
20180427:22:04:00	23.3	16.6	-4.4	23.67	0.25	2.2	0.25	2.0	124.2	285.8	286.3	87.0	51.7	88.0	1365.4	1361.1	1757.7	1755.1
20180427:22:09:00	23.3	16.6	-4.4	23.67	0.25	2.2	0.25	2.0	124.2	285.8	286.3	86.9	51.7	87.9	1366.8	1362.5	1759.5	1756.9
20180427:22:14:00	23.3	16.5	-4.4	23.67	0.25	2.2	0.25	2.0	124.1	285.7	286.3	86.9	51.7	87.9	1368.1	1363.9	1761.3	1758.7
20180427:22:19:00	23.3	16.6	-4.4	23.67	0.25	2.2	0.25	2.0	124.2	285.8	286.4	86.9	51.8	87.9	1369.5	1365.2	1763.0	1760.4
20180427:22:24:00	23.3	16.6	-4.5	23.67	0.25	2.2	0.25	2.0	124.4	285.7	286.2	86.8	51.7	87.8	1370.8	1366.6	1764.8	1762.3
20180427:22:29:00	23.3	16.7	-4.6	23.67	0.25	2.2	0.25	2.0	124.6	285.7	286.3	86.8	51.8	87.8	1372.2	1367.9	1766.6	1764.0
20180427:22:34:00	23.3	16.8	-4.6	23.67	0.25	2.2	0.25	2.0	124.7	285.7	286.2	86.7	51.7	87.8	1373.5	1369.2	1768.3	1765.8
20180427:22:39:00	23.3	16.8	-4.7	23.67	0.25	2.2	0.25	2.0	124.7	285.7	286.3	86.7	51.7	87.7	1374.9	1370.6	1770.2	1767.5
20180427:22:44:00	23.3	17.0	-4.8	23.67	0.25	2.2	0.25	2.0	125.1	285.8	286.3	86.7	51.7	87.7	1376.2	1371.9	1771.9	1769.3
20180427:22:49:00	23.3	16.7	-4.9	23.67	0.25	2.2	0.25	2.0	124.4	285.7	286.3	86.6	51.7	87.6	1377.6	1373.3	1773.7	1771.1
20180427:22:54:00	23.3	16.1	-4.9	23.67	0.25	2.2	0.25	1.9	123.2	285.7	286.3	86.6	51.7	87.6	1379.0	1374.6	1775.5	1772.8
20180427:22:59:00	23.3	16.7	-4.9	23.67	0.25	2.2	0.25	2.0	124.5	285.8	286.3	86.6	51.7	87.6	1380.3	1376.0	1777.2	1774.6
20180427:23:04:00	23.3	16.9	-4.9	23.67	0.25	2.2	0.25	1.9	125.0	285.9	286.4	86.6	51.7	87.5	1381.6	1377.3	1779.0	1776.4
20180427:23:09:00	23.3	17.1	-4.9	23.67	0.25	2.2	0.25	1.9	125.3	285.9	286.4	86.5	51.7	87.5	1383.0	1378.7	1780.8	1778.1
20180427:23:14:00	23.3	17.0	-4.9	23.67	0.25	2.2	0.25	1.9	125.1	285.8	286.3	86.5	51.7	87.4	1384.3	1380.0	1782.5	1779.9
20180427:23:19:00	23.3	17.1	-4.6	23.66	0.25	2.2	0.25	1.9	125.4	285.8	286.3	86.4	51.7	87.4	1385.7	1381.4	1784.3	1781.7
20180427:23:24:00	23.3	17.2	-4.4	23.66	0.25	2.2	0.25	2.0	125.6	285.8	286.3	86.3	51.7	87.3	1387.1	1382.7	1786.1	1783.4
20180427:23:29:00	23.3	17.2	-4.5	23.67	0.25	2.2	0.25	2.0	125.6	285.8	286.3	86.3	51.7	87.3	1388.4	1384.0	1787.8	1785.2
20180427:23:34:00	23.3	17.2	-4.5	23.67	0.25	2.2	0.25	2.0	125.7	285.8	286.3	86.2	51.7	87.3	1389.7	1385.4	1789.6	1786.9
20180427:23:39:00	23.3	17.1	-4.5	23.67	0.25	2.2	0.25	2.0	125.3	285.7	286.3	86.2	51.7	87.2	1391.1	1386.7	1791.4	1788.7
20180427:23:44:00	23.3	17.0	-4.5	23.67	0.25	2.2	0.25	1.9	125.1	285.7	286.3	86.2	51.7	87.2	1392.4	1388.1	1793.1	1790.5
20180427:23:49:00	23.3	16.9	-4.5	23.66	0.25	2.2	0.25	1.9	124.9	285.8	286.3	86.1	51.7	87.1	1393.8	1389.4	1794.9	1792.2
20180427:23:54:00	23.3	16.8	-4.5	23.66	0.25	2.2	0.25	1.9	124.8	285.7	286.3	86.0	51.7	87.0	1395.1	1390.8	1796.7	1794.0
20180427:23:59:00	23.3	16.3	-4.6	23.66	0.25	2.2	0.25	1.9	123.6	285.7	286.3	86.0	51.6	87.0	1396.5	1392.1	1798.4	1795.7
20180428:00:04:00	23.3	15.8	-4.6	23.66	0.25	2.2	0.25	1.9	122.5	285.7	286.3	86.0	51.7	87.0	1397.9	1393.5	1800.2	1797.5
20180428:00:09:00	23.3	16.2	-4.6	23.66	0.25	2.2	0.25	2.0	123.4	285.8	286.3	85.9	51.6	86.9	1399.2	1394.8	1801.9	1799.3
20180428:00:14:00	23.3	16.4	-4.5	23.66	0.25	2.2	0.25	2.0	123.7	285.8	286.3	85.9	51.7	86.9	1400.5	1396.1	1803.7	1801.0
20180428:00:19:00	23.3	16.5	-4.5	23.66	0.25	2.2	0.25	2.0	124.1	285.8	286.3	85.9	51.6	86.9	1401.9	1397.5	1805.5	1802.8
20180428:00:24:00	23.3	16.6	-4.6	23.66	0.25	2.2	0.25	2.0	124.4	285.7	286.3	85.8	51.6	86.8	1403.2	1398.8	1807.2	1804.5
20180428:00:29:00	23.3	16.7	-4.6	23.65	0.25	2.2	0.25	2.0	124.4	285.8	286.3	85.8	51.6	86.8	1404.5	1400.2	1808.9	1806.3
20180428:00:34:00	23.3	16.7	-4.6	23.65	0.25	2.2	0.25	2.0	124.4	285.7	286.3	85.7	51.6	86.8	1405.9	1401.5	1810.7	1808.0
20180428:00:39:00	23.3	16.6	-4.6	23.65	0.25	2.2	0.25	1.9	124.3	285.7	286.3	85.7	51.6	86.7	1407.2	1402.8	1812.5	1809.7
20180428:00:44:00	23.3	16.6	-4.6	23.65	0.25	2.2	0.25	1.9	124.2	285.8	286.3	85.7	51.7	86.7	1408.6	1404.2	1814.2	1811.5
20180428:00:49:00	23.3	16.6	-4.6	23.65	0.25	2.2	0.25	1.9	124.2	285.7	286.3	85.6	51.6	86.6	1410.0	1405.5	1816.0	1813.3
20180428:00:54:00	23.3	16.5	-4.6	23.65	0.25	2.2	0.25	1.9	124.1	285.7	286.3	85.7	51.7	86.6	1411.3	1406.9	1817.8	1815.1
20180428:00:59:00	23.3	16.4	-4.6	23.65	0.25	2.2	0.25	1.9	123.8	285.6	286.3	85.6	51.6	86.6	1412.7	1408.2	1819.5	1816.8
20180428:01:04:00	23.3	16.5	-4.6	23.65	0.25	2.2	0.25	1.9	124.1	285.7	286.2	85.6	51.7	86.6	1414.0	1409.5	1821.3	1818.5
20180428:01:09:00	23.3	15.4	-4.8	23.65	0.25	2.2	0.25	1.9	121.6	285.7	286.3	85.6	51.6	86.5	1415.3	1410.9	1823.0	1820.3
20180428:01:14:00	23.3	15.3	-4.6	23.65	0.25	2.2	0.25	1.9	121.3	285.7	286.3	85.6	51.7	86.5	1416.7	1412.2	1824.8	1822.0
20180428:01:19:00	23.3	16.0	-4.6	23.65	0.25	2.2	0.25	2.0	122.8	285.8	286.4	85.6	51.6	86.5	1418.0	1413.5	1826.6	1823.8
20180428:01:24:00	23.3	16.2	-4.6	23.65	0.25	2.2	0.25	2.0	123.3	285.8	286.3	85.5	51.6	86.5	1419.4	1414.8	1828.3	1825.5
20180428:01:29:00	23.3	16.2	-4.6	23.65	0.25	2.2	0.25	2.0	123.4	285.8	286.3	85.5	51.6	86.5	1420.7	1416.2	1830.1	1827.3
20180428:01:34:00	23.3	16.4	-4.6	23.65	0.25	2.2	0.25	2.0	123.8	285.7	286.3	85.5	51.6	86.4	1422.1	1417.6	1831.8	1829.1
20180428:01:39:00	23.3	16.5	-4.7	23.65	0.25	2.2	0.25	2.0	124.1	285.8	286.3	85.4	51.6	86.4	1423.4	1418.9	1833.6	1830.8

Time:	Stack Pressure:	Sat% H2O:	Static:	Barometric:	Flowmeter1:	Vacuum1:	Flowmeter2:	Vacuum2:	Stack Temp:	Sorbent Temp:	Probe Temp:	DGM#1 Temp:	Condenser Temp:	DGM#2 Temp:	DGM1*:	DGM2*:	DGM1:	DGM2:
day:hh:mm:ss	in-Hg	Percent	in-H2O	in-Hg	l/min	in-Hg	l/min	in-Hg	degF	degF	degF	degF	degF	degF	liters STP	liters STP	liters nominal	liters nominal
20180428:01:44:00	23.3	16.4	-4.7	23.65	0.25	2.2	0.25	1.9	123.9	285.8	286.3	85.4	51.6	86.4	1424.8	1420.2	1835.4	1832.6
20180428:01:49:00	23.3	16.3	-4.7	23.65	0.25	2.2	0.25	1.9	123.6	285.8	286.4	85.3	51.6	86.3	1426.1	1421.6	1837.1	1834.3
20180428:01:54:00	23.3	16.3	-4.7	23.64	0.25	2.2	0.25	1.9	123.6	285.8	286.3	85.3	51.6	86.3	1427.5	1422.9	1838.9	1836.1
20180428:01:59:00	23.3	16.3	-4.6	23.64	0.25	2.2	0.25	1.9	123.5	285.7	286.3	85.3	51.6	86.2	1428.8	1424.3	1840.7	1837.9
20180428:02:04:00	23.3	16.2	-4.7	23.64	0.25	2.2	0.25	1.9	123.4	285.8	286.3	85.2	51.6	86.2	1430.1	1425.6	1842.4	1839.6
20180428:02:09:00	23.3	16.2	-4.7	23.64	0.25	2.2	0.25	1.9	123.4	285.7	286.3	85.2	51.6	86.2	1431.5	1427.0	1844.2	1841.4
20180428:02:14:00	23.3	15.8	-4.8	23.64	0.25	2.2	0.25	1.9	122.5	285.7	286.3	85.2	51.5	86.1	1432.9	1428.3	1846.0	1843.1
20180428:02:19:00	23.3	14.8	-4.8	23.64	0.25	2.2	0.25	1.9	120.1	285.7	286.3	85.2	51.6	86.1	1434.2	1429.6	1847.7	1844.9
20180428:02:24:00	23.3	15.4	-4.7	23.64	0.25	2.2	0.25	1.9	121.6	285.7	286.2	85.1	51.6	86.0	1435.6	1431.0	1849.5	1846.7
20180428:02:29:00	23.3	15.9	-4.7	23.63	0.25	2.2	0.25	1.9	122.6	285.7	286.3	85.1	51.6	86.0	1436.9	1432.3	1851.2	1848.4
20180428:02:34:00	23.3	15.9	-4.7	23.63	0.25	2.2	0.25	2.0	122.6	285.8	286.3	85.0	51.6	86.0	1438.2	1433.7	1853.0	1850.2
20180428:02:39:00	23.3	16.0	-4.7	23.63	0.25	2.2	0.25	2.0	123.0	285.8	286.3	85.0	51.6	86.0	1439.6	1435.0	1854.8	1851.9
20180428:02:44:00	23.3	16.2	-4.7	23.63	0.25	2.2	0.25	2.0	123.4	285.8	286.3	84.9	51.5	85.9	1440.9	1436.3	1856.5	1853.7
20180428:02:49:00	23.3	16.3	-4.7	23.63	0.25	2.2	0.25	2.0	123.6	285.8	286.3	84.9	51.6	85.9	1442.3	1437.7	1858.2	1855.4
20180428:02:54:00	23.3	16.3	-4.7	23.63	0.25	2.2	0.25	2.0	123.6	285.7	286.3	84.9	51.5	85.8	1443.6	1439.0	1860.0	1857.2
20180428:02:59:00	23.3	16.3	-4.8	23.63	0.25	2.2	0.25	1.9	123.5	285.7	286.4	84.8	51.5	85.8	1445.0	1440.4	1861.8	1858.9
20180428:03:04:00	23.3	16.2	-4.8	23.63	0.25	2.2	0.25	1.9	123.4	285.7	286.3	84.7	51.5	85.7	1446.3	1441.7	1863.6	1860.7
20180428:03:09:00	23.3	16.1	-4.8	23.63	0.25	2.2	0.25	1.9	123.2	285.7	286.3	84.7	51.6	85.7	1447.7	1443.1	1865.3	1862.5
20180428:03:14:00	23.3	16.1	-4.8	23.63	0.25	2.2	0.25	1.9	123.2	285.7	286.3	84.7	51.5	85.7	1449.0	1444.4	1867.1	1864.2
20180428:03:19:00	23.3	16.2	-4.8	23.63	0.25	2.2	0.25	1.9	123.3	285.7	286.3	84.7	51.6	85.7	1450.4	1445.7	1868.9	1865.9
20180428:03:24:00	23.3	15.4	-5.0	23.63	0.25	2.2	0.25	1.9	121.5	285.7	286.3	84.7	51.5	85.6	1451.7	1447.1	1870.6	1867.7
20180428:03:29:00	23.3	15.3	-4.7	23.63	0.25	2.2	0.25	2.0	121.1	285.6	286.3	84.7	51.6	85.6	1453.0	1448.4	1872.3	1869.4
20180428:03:34:00	23.3	15.9	-4.6	23.63	0.25	2.2	0.25	2.0	122.7	285.7	286.3	84.6	51.5	85.6	1454.4	1449.8	1874.1	1871.2
20180428:03:39:00	23.3	16.2	-4.7	23.63	0.25	2.2	0.25	2.0	123.2	285.8	286.3	84.6	51.6	85.6	1455.7	1451.1	1875.9	1873.0
20180428:03:44:00	23.3	16.3	-4.7	23.63	0.25	2.2	0.25	2.0	123.6	285.7	286.3	84.6	51.5	85.5	1457.1	1452.4	1877.6	1874.7
20180428:03:49:00	23.3	16.4	-4.7	23.63	0.25	2.2	0.25	1.9	123.7	285.7	286.3	84.6	51.6	85.5	1458.5	1453.8	1879.4	1876.5
20180428:03:54:00	23.3	16.4	-4.8	23.63	0.25	2.2	0.25	1.9	123.7	285.8	286.3	84.6	51.5	85.5	1459.8	1455.1	1881.1	1878.2
20180428:03:59:00	23.3	16.2	-4.8	23.63	0.25	2.2	0.25	1.9	123.4	285.8	286.3	84.6	51.5	85.5	1461.1	1456.5	1882.9	1880.0
20180428:04:04:00	23.3	16.1	-4.8	23.63	0.25	2.2	0.25	1.9	123.2	285.8	286.3	84.6	51.6	85.5	1462.5	1457.8	1884.7	1881.7
20180428:04:09:00	23.3	16.2	-4.8	23.63	0.25	2.2	0.25	1.9	123.2	285.8	286.3	84.6	51.6	85.5	1463.8	1459.1	1886.4	1883.5
20180428:04:14:00	23.3	16.2	-4.8	23.63	0.25	2.2	0.25	2.0	123.3	285.8	286.3	84.6	51.6	85.4	1465.2	1460.5	1888.2	1885.3
20180428:04:19:00	23.3	16.2	-4.8	23.63	0.25	2.2	0.25	2.0	123.2	285.8	286.3	84.5	51.5	85.4	1466.5	1461.8	1889.9	1887.0
20180428:04:24:00	23.3	16.2	-4.7	23.63	0.25	2.2	0.25	2.0	123.3	285.8	286.3	84.4	51.6	85.4	1467.8	1463.2	1891.6	1888.8
20180428:04:29:00	23.3	16.0	-4.7	23.63	0.25	2.2	0.25	2.0	122.8	285.8	286.4	84.4	51.5	85.3	1469.2	1464.5	1893.5	1890.5
20180428:04:34:00	23.3	15.1	-4.8	23.63	0.25	2.2	0.25	2.0	120.8	285.6	286.3	84.4	51.5	85.3	1470.5	1465.8	1895.2	1892.3
20180428:04:39:00	23.3	15.5	-4.6	23.63	0.25	2.2	0.25	2.0	121.7	285.7	286.3	84.3	51.5	85.3	1471.9	1467.2	1896.9	1894.0
20180428:04:44:00	23.3	15.8	-4.6	23.63	0.25	2.2	0.25	2.0	122.3	285.7	286.4	84.3	51.6	85.3	1473.3	1468.5	1898.7	1895.8
20180428:04:49:00	23.3	15.7	-4.5	23.63	0.25	2.2	0.25	2.0	122.2	285.7	286.3	84.3	51.5	85.2	1474.6	1469.9	1900.5	1897.6
20180428:04:54:00	23.3	15.7	-4.5	23.63	0.25	2.2	0.25	2.0	122.3	285.7	286.3	84.3	51.6	85.2	1476.0	1471.2	1902.2	1899.3
20180428:04:59:00	23.3	15.8	-4.5	23.63	0.25	2.2	0.25	2.0	122.4	285.8	286.4	84.2	51.6	85.1	1477.3	1472.6	1904.0	1901.1
20180428:05:04:00	23.3	15.8	-4.5	23.63	0.25	2.2	0.25	2.0	122.5	285.8	286.4	84.2	51.6	85.1	1478.7	1473.9	1905.8	1902.9
20180428:05:09:00	23.3	15.9	-4.5	23.62	0.25	2.2	0.25	2.0	122.7	285.7	286.3	84.2	51.5	85.1	1480.0	1475.3	1907.6	1904.6
20180428:05:14:00	23.3	15.6	-4.5	23.62	0.25	2.2	0.25	2.0	121.9	285.8	286.3	84.1	51.5	85.0	1481.4	1476.7	1909.3	1906.4
20180428:05:19:00	23.3	16.0	-4.6	23.62	0.25	2.2	0.25	2.0	122.9	285.8	286.3	84.1	51.5	85.0	1482.7	1478.0	1911.1	1908.1
20180428:05:24:00	23.3	16.1	-4.5	23.62	0.25	2.2	0.25	2.0	123.1	285.8	286.4	84.0	51.6	85.0	1484.1	1479.3	1912.9	1909.9
20180428:05:29:00	23.3	16.1	-4.6	23.62	0.25	2.2	0.25	2.0	123.1	285.8	286.4	84.0	51.5	85.0	1485.5	1480.7	1914.6	1911.7
20180428:05:34:00	23.3	16.0	-4.7	23.62	0.25	2.2	0.25	2.0	122.8	285.9	286.4	84.0	51.6	84.9	1486.8	1482.0	1916.4	1913.4
20180428:05:39:00	23.3	15.2	-4.9	23.62	0.25	2.2	0.25	1.9	120.9	285.7	286.4	84.0	51.5	84.9	1488.2	1483.4	1918.2	1915.2
20180428:05:44:00	23.3	15.6	-4.7	23.63	0.25	2.2	0.25	2.0	121.9	285.8	286.4	83.9	51.6	84.9	1489.5	1484.7	1919.9	1917.0
20180428:05:49:00	23.3	16.0	-4.7	23.63	0.25	2.2	0.25	2.0	122.8	285.8	286.3	83.9	51.5	84.8	1490.8	1486.1	1921.7	1918.7
20180428:05:54:00	23.3	16.2	-4.8	23.63	0.25	2.2	0.25	2.0	123.3	285.8	286.3	83.8	51.6	84.8	1492.2	1487.4	1923.5	1920.5
20180428:05:59:00	23.3	16.3	-4.8	23.63	0.25	2.2	0.25	2.0	123.5	285.8	286.3	83.7	51.5	84.7	1493.6	1488.8	1925.2	1922.2
20180428:06:04:00	23.3	16.3	-4.8	23.63	0.25	2.2	0.25	2.0	123.6	285.8	286.3	83.7	51.5	84.7	1494.9	1490.2	1927.0	1924.0
20180428:06:09:00	23.3	16.2	-4.7	23.63	0.25	2.2	0.25	2.0	123.4	285.8	286.3	83.7	51.5	84.6	1496.3	1491.5	1928.8	1925.8
20180428:06:14:00	23.3	16.1	-4.7	23.64	0.25	2.2	0.25	2.0	123.2	285.7	286.3	83.6	51.5	84.6	1497.6	1492.8	1930.5	1927.5
20180428:06:19:00	23.3	16.2	-4.7	23.64	0.25	2.2	0.25	2.0	123.3	285.7	286.3	83.6	51.5	84.6	1499.0	1494.2	1932.3	1929.3
20180428:06:24:00	23.3	16.2	-4.7	23.64	0.25	2.2	0.25	2.0	123.2	285.7	286.3	83.5	51.5	84.5	1500.4	1495.5	1934.1	1931.1
20180428:06:29:00	23.3	16.3	-4.8	23.64	0.25	2.2	0.25	2.0	123.6	285.8	286.3	83.4	51.5	84.4	1501.7	1496.9	1935.8	1932.9
20180428:06:34:00	23.3	16.4	-4.9	23.64	0.25	2.2	0.25	2.0	123.9	285.8	286.3	83.4	51.5	84.4	1503.1	1498.3	1937.6	1934.6
20180428:06:39:00	23.3	16.6	-4.9	23.64	0.25	2.2	0.25	2.0	124.1	285.7	286.2	83.3	51.5	84.3	1504.4	1499.6	1939.4	1936.4
20180428:06:44:00	23.3	16.0	-5.0	23.64	0.25	2.2	0.25	2.0	122.9	285.7	286.3	83.3	51.5	84.3	1505.8	1501.0	1941.1	1938.2
20180428:06:49:00	23.3	15.4	-5.0	23.64	0.25	2.2	0.25	1.9	121.4	285.7	286.3	83.2	51.5	84.2	1507.1	1502.3	1942.9	1939.9
20180428:06:54:00	23.3	15.9	-4.9	23.64	0.25	2.2	0.25	2.0	122.6	285.7	286.3	83.2	51.5	84.2	1508.5	1503.7	1944.7	1941.7
20180428:06:59:00	23.3	16.1	-4.8	23.64	0.25	2.2	0.25	2.0	123.0	285.7	286.2	83.1	51.5	84.1	1509.8	1505.0	1946.4	1943.4
20180428:07:04:00	23.3	16.2	-4.8	23.64	0.25	2.2	0.25	2.0	123.4	285.8	286.3	83.1	51.5	84.1	1511.2	1506.3	1948.2	1945.2
20180428:07:09:00	23.3	16.5	-4.9	23.64	0.25	2.2	0.25	2.0	124.0	285.8	286.3	83.0	51.4	84.0	1512.5	1507.7	1949.9	1947.0
20180428:07:14:00	23.3	16.4	-4.9	23.65	0.25	2.2	0.25	2.0	123.8	285.7	286.2	83.0	51.4	84.0	1513.9	1509.0	1951.7	1948.7
20180428:07:19:00	23.3	16.5	-4.9	23.65	0.25	2.2	0.25	2.0	123.9	285.8	286.3	83.0	51.4	84.0	1515.3	1510.4	1953.5	1950.5
20180428:07:24:00	23.3	16.4	-4.8	23.64	0.25	2.2	0.25	2.0	123.9	285.8	286.3	82.9	51.4	83.9	1516.6	1511.8	1955.2	1952.2
20180428:07:29:01	23.3	16.4	-4.8	23.65	0.25	2.2	0.25	1.9	123.7	285.7	286.3	82.9	51.4	83.9	1517.9	1513.1	1956.9	1954.0
20180428:07:34:01	23.3	16.3	-4.8	23.65	0.25	2.2	0.25	2.0	123.6	285.7	286.2	82.8	51.4	83.8	1519.3	1514.5	1958.7	1955.7
20180428:07:39:01	23.3	16.2	-4.8	23.64	0.25	2.2	0.25	1.9	123.4	285.7	286.3	82.8	51.4	83.8	1520.6	1515.8	1960.5	1957.5
20180428:07:44:01	23.3	16.2	-4.7	23.64	0.25	2.2	0.25	1.9	123.4	285.6	286.3	82.7	51.4	83.7	1522.0	1517.1	1962.2	1959.2
20180428:07:49:01	23.3	16.2	-4.7	23.63	0.25	2.2	0.25	1.9	123.3	285.6	286.2	82.7	51.4	83.7	1523.3	1518.5	1964.0	1961.0
20180428:07:54:01	23.3	16.2	-4.7	23.64	0.25	2.2	0.25	2.0	123.4	285.7	286.2	82.7	51.4	83.7	1524.7	1519.8	1965.7	1962.7
20180428:07:59:01	23.3	16.1	-4.7	23.63	0.25	2.2	0.25	2.0	123.2	285.7	286.3	82.7	51.4	83.6	1526.0	1521.1	1967.5	1964.5
20180428:08:04:01	23.3	16.1	-4.7	23.64	0.25	2.2	0.25	2.0	123.2	285.7	286.3	82.7	51.4	83.6	1527.3	1522.5	1969.2	1966.2
20180428:08:09:01	23.3	16.2	-4.7	23.64	0.25	2.2	0.25	2.0	123.4	285.7	286.2	82.7	51.4	83.6	1528.7	1523.8	1970.9	1968.0
20180428:08:14:01	23.3	16.3	-4.7	23.64	0.25	2.2	0.25	2.0	123.5	285.6	286.2	82.6	51.3	83.6	1530.1	1525.1	1972.7	1969.7
20180428:08:19:01	23.3	16.3	-4.6	23.63	0.25	2.2	0.25	2.0	123.5	285.7	286.3	82.6	51.4	83.6	1531.4	1526.5	1974.4	1971.4
20180428:08:24:01	23.3	16.2	-4.4	23.62	0.25	2.2	0.25	1.9	123.3	285.7	286.3	82.6	51.3	83.5	1532.7	1527.9	1976.2	1973.2
20180428:08:29:01	23.3	16.3	-4.4	23.62	0.25	2.2	0.25	1.9	123.6	285.7	286.3	82.6	51.4	83.5	1534.1	1529.2	1978.0	1974.9
20180428:08:34:01	23.3	16.2	-4.4	23.62	0.25	2.2	0.25	1.9	123.4	285.7	286.3	82.6	51.3	83.5	1535.4	1530.5	1979.7	1976.7
20180428:08:39:01	23.3	16.2	-4.5	23.63	0.25	2.2	0.25	1.9	123.3	285.7	286.3	82.6	51.3	83.5	1536.8	1531.8	1981.5	1978.4
20180428:08:44:01	23.3	16.2	-4.5	23.63	0.25	2.2	0.25	1.9	123.4	285.7	286.2	82.6	51.3	83.5	1538.1	1533.2	1983.2	1980.2
20180428:08:49:01	23.3	16.3	-4.4	23.62	0.25	2.2	0.25	1.9	123.5	285.7	286.2	82.7	51.4	83.5	1539.4	1534.5	1984.9	1981.9
20180428:08:54:01	23.3	16.2	-4.4	23.62	0.25	2.2	0.25	1.9	123.4	285.7	286.3	82.7	51.3	83.6	1540.8	1535.9	1986.7	1983.6
20180428:08:59:01	23.3	16.2	-4.4	23.62	0.25	2.2	0.25	2.0	123.3	285.7	286.3	82.7	51.4	83.6	1542.1	1537.2	1988.4	1985.4
20180428:09:04:01	23.3	16.2	-4.4	23.62	0.25	2.2	0.25	1.9	123.3	285.7	286.2	82.7	51.3	83.6	1543.5	1538.5	1990.2	1987.2

Time:	Stack Pressure:	Sat% H2O:	Static:	Barometric:	Flowmeter1:	Vacuum1:	Flowmeter2:	Vacuum2:	Stack Temp:	Sorbent Temp:	Probe Temp:	DGM#1 Temp:	Condenser Temp:	DGM#2 Temp:	DGM1*:	DGM2*:	DGM1:	DGM2:
day:hh:mm:ss	in-Hg	Percent	in-H2O	in-Hg	l/min	in-Hg	l/min	in-Hg	degF	degF	degF	degF	degF	degF	liters STP	liters STP	liters nominal	liters nominal
20180428:09:09:01	23.3	16.2	-4.4	23.62	0.25	2.2	0.25	1.9	123.3	285.7	286.3	82.7	51.4	83.6	1544.8	1539.9	1992.0	1988.9
20180428:09:14:01	23.3	16.2	-4.4	23.62	0.25	2.2	0.25	1.9	123.4	285.8	286.3	82.7	51.3	83.6	1546.1	1541.2	1993.7	1990.6
20180428:09:19:01	23.3	16.2	-4.4	23.62	0.25	2.2	0.25	1.9	123.4	285.7	286.3	82.7	51.3	83.6	1547.5	1542.6	1995.5	1992.4
20180428:09:24:01	23.3	16.2	-4.3	23.62	0.25	2.2	0.25	1.9	123.4	285.7	286.2	82.7	51.3	83.6	1548.8	1543.9	1997.2	1994.2
20180428:09:29:01	23.3	16.1	-4.3	23.61	0.25	2.2	0.25	1.9	123.2	285.7	286.3	82.7	51.3	83.6	1550.2	1545.2	1998.9	1995.9
20180428:09:34:01	23.3	15.7	-4.4	23.61	0.25	2.2	0.25	1.9	122.3	285.7	286.3	82.7	51.3	83.6	1551.5	1546.6	2000.7	1997.7
20180428:09:39:01	23.3	14.9	-4.4	23.61	0.25	2.1	0.25	1.9	120.3	285.6	286.2	82.7	51.3	83.6	1552.9	1547.9	2002.4	1999.4
20180428:09:44:01	23.3	15.1	-4.4	23.61	0.25	2.2	0.25	1.9	120.7	285.7	286.3	82.8	51.3	83.7	1554.2	1549.3	2004.2	2001.2
20180428:09:49:01	23.3	14.5	-4.4	23.61	0.25	2.1	0.25	1.9	119.4	285.7	286.4	82.9	51.4	83.7	1555.6	1550.6	2006.0	2002.9
20180428:09:54:01	23.3	14.9	-4.3	23.61	0.25	2.2	0.25	1.9	120.3	285.7	286.3	82.9	51.3	83.7	1556.9	1551.9	2007.7	2004.6
20180428:09:59:01	23.3	15.4	-4.3	23.61	0.25	2.2	0.25	1.9	121.6	285.7	286.3	82.9	51.3	83.7	1558.3	1553.3	2009.5	2006.4
20180428:10:04:01	23.3	15.6	-4.3	23.61	0.25	2.2	0.25	1.9	122.0	285.8	286.3	83.0	51.4	83.8	1559.6	1554.6	2011.2	2008.1
20180428:10:09:01	23.3	15.7	-4.3	23.61	0.25	2.2	0.25	1.9	122.1	285.7	286.3	83.0	51.3	83.9	1560.9	1556.0	2012.9	2009.9
20180428:10:14:01	23.3	15.8	-4.4	23.60	0.25	2.2	0.25	1.9	122.4	285.8	286.3	83.0	51.3	83.9	1562.3	1557.3	2014.7	2011.6
20180428:10:19:01	23.3	15.8	-4.4	23.60	0.25	2.2	0.25	1.9	122.5	285.8	286.3	83.1	51.4	83.9	1563.6	1558.7	2016.4	2013.4
20180428:10:24:01	23.3	15.9	-4.3	23.60	0.25	2.2	0.25	1.9	122.6	285.7	286.2	83.1	51.3	84.0	1565.0	1560.0	2018.2	2015.2
20180428:10:29:01	23.3	15.9	-4.4	23.60	0.25	2.2	0.25	1.9	122.7	285.7	286.2	83.2	51.4	84.0	1566.3	1561.3	2020.0	2016.9
20180428:10:34:01	23.3	15.9	-4.3	23.60	0.25	2.2	0.25	1.9	122.5	285.7	286.3	83.2	51.3	84.0	1567.7	1562.7	2021.7	2018.7
20180428:10:39:01	23.3	16.0	-4.4	23.60	0.25	2.2	0.25	1.9	122.8	285.7	286.2	83.3	51.4	84.1	1569.0	1564.0	2023.5	2020.4
20180428:10:44:01	23.3	15.9	-4.3	23.59	0.25	2.2	0.25	1.9	122.7	285.7	286.2	83.3	51.3	84.1	1570.3	1565.4	2025.2	2022.2
20180428:10:49:01	23.3	16.0	-4.3	23.59	0.25	2.2	0.25	1.9	122.8	285.7	286.2	83.3	51.4	84.2	1571.7	1566.7	2027.0	2023.9
20180428:10:54:01	23.3	16.0	-4.2	23.58	0.25	2.2	0.25	1.9	122.8	285.7	286.2	83.3	51.3	84.2	1573.0	1568.0	2028.7	2025.6
20180428:10:59:01	23.3	16.0	-4.3	23.58	0.25	2.2	0.25	1.9	122.9	285.7	286.3	83.4	51.4	84.3	1574.4	1569.4	2030.5	2027.4
20180428:11:04:01	23.3	16.0	-4.2	23.58	0.25	2.2	0.25	1.9	122.9	285.7	286.2	83.4	51.3	84.3	1575.7	1570.7	2032.2	2029.1
20180428:11:09:01	23.3	15.9	-4.2	23.58	0.25	2.2	0.25	1.9	122.6	285.6	286.2	83.5	51.4	84.3	1577.1	1572.1	2034.0	2030.9
20180428:11:14:01	23.3	16.0	-4.2	23.58	0.25	2.2	0.25	1.9	122.7	285.7	286.3	83.6	51.3	84.4	1578.4	1573.4	2035.7	2032.7
20180428:11:19:01	23.3	16.0	-4.2	23.57	0.25	2.2	0.25	1.9	122.8	285.6	286.2	83.6	51.4	84.4	1579.8	1574.7	2037.5	2034.4
20180428:11:24:01	23.3	16.1	-4.1	23.57	0.25	2.2	0.25	1.9	123.0	285.6	286.2	83.7	51.4	84.5	1581.1	1576.1	2039.3	2036.2
20180428:11:29:01	23.3	16.1	-4.2	23.57	0.25	2.2	0.25	1.9	123.0	285.6	286.2	83.7	51.4	84.6	1582.4	1577.4	2041.0	2037.9
20180428:11:34:01	23.3	16.0	-4.2	23.57	0.25	2.2	0.25	1.9	122.9	285.7	286.2	83.8	51.4	84.6	1583.8	1578.8	2042.8	2039.7
20180428:11:39:01	23.3	16.1	-4.1	23.56	0.25	2.2	0.25	1.9	123.0	285.7	286.3	83.9	51.4	84.7	1585.1	1580.1	2044.5	2041.4
20180428:11:44:01	23.3	16.1	-3.9	23.55	0.25	2.2	0.25	1.9	123.0	285.7	286.3	84.0	51.4	84.8	1586.5	1581.4	2046.3	2043.2
20180428:11:49:01	23.3	16.2	-3.9	23.56	0.25	2.2	0.25	1.9	123.2	285.7	286.2	84.1	51.4	84.9	1587.8	1582.8	2048.1	2044.9
20180428:11:54:01	23.3	16.2	-4.0	23.56	0.25	2.2	0.25	1.9	123.4	285.7	286.3	84.2	51.4	84.9	1589.1	1584.1	2049.8	2046.7
20180428:11:59:01	23.3	16.4	-4.0	23.55	0.25	2.2	0.25	1.9	123.7	285.7	286.2	84.3	51.4	85.0	1590.5	1585.4	2051.6	2048.4
20180428:12:04:01	23.3	16.5	-3.9	23.55	0.25	2.2	0.25	1.9	124.0	285.7	286.3	84.4	51.5	85.1	1591.8	1586.8	2053.3	2050.2
20180428:12:09:01	23.3	16.5	-3.9	23.54	0.25	2.2	0.25	1.9	124.0	285.7	286.2	84.5	51.4	85.2	1593.2	1588.1	2055.1	2052.0
20180428:12:14:01	23.3	16.4	-3.9	23.55	0.25	2.2	0.25	1.9	123.8	285.7	286.3	84.6	51.5	85.3	1594.5	1589.5	2056.9	2053.7
20180428:12:19:01	23.3	16.4	-3.9	23.54	0.25	2.2	0.25	1.9	123.7	285.7	286.3	84.6	51.5	85.4	1595.9	1590.8	2058.6	2055.4
20180428:12:24:01	23.3	16.4	-3.9	23.54	0.25	2.2	0.25	1.9	123.7	285.7	286.3	84.7	51.4	85.4	1597.2	1592.1	2060.3	2057.2
20180428:12:29:01	23.3	16.4	-3.8	23.53	0.25	2.2	0.25	1.9	123.7	285.7	286.4	84.9	51.5	85.6	1598.6	1593.4	2062.1	2058.9
20180428:12:34:01	23.3	16.4	-3.8	23.53	0.25	2.2	0.25	1.9	123.6	285.7	286.2	84.9	51.5	85.6	1599.9	1594.8	2063.9	2060.7
20180428:12:39:01	23.3	16.3	-3.9	23.54	0.25	2.2	0.25	1.9	123.5	285.7	286.3	85.0	51.5	85.7	1601.2	1596.1	2065.6	2062.5
20180428:12:44:01	23.2	16.3	-3.9	23.53	0.25	2.2	0.25	1.9	123.4	285.7	286.2	85.1	51.5	85.8	1602.6	1597.4	2067.4	2064.2
20180428:12:49:01	23.2	16.3	-3.9	23.53	0.25	2.2	0.25	1.9	123.6	285.7	286.3	85.2	51.4	85.9	1603.9	1598.8	2069.2	2066.0
20180428:12:54:01	23.2	16.3	-3.8	23.53	0.25	2.2	0.25	1.9	123.4	285.7	286.3	85.2	51.5	86.0	1605.3	1600.1	2070.9	2067.7
20180428:12:59:01	23.2	16.2	-3.9	23.53	0.25	2.2	0.25	1.9	123.3	285.7	286.3	85.3	51.5	86.0	1606.6	1601.5	2072.7	2069.5
20180428:13:04:01	23.2	15.7	-4.0	23.53	0.25	2.2	0.25	1.9	122.2	285.7	286.2	85.4	51.5	86.1	1607.9	1602.8	2074.4	2071.2
20180428:13:09:01	23.2	15.1	-3.9	23.53	0.25	2.1	0.25	1.9	120.6	285.6	286.3	85.4	51.5	86.2	1609.3	1604.1	2076.2	2073.0
20180428:13:14:01	23.2	15.6	-3.9	23.53	0.25	2.2	0.25	1.9	122.0	285.7	286.3	85.5	51.4	86.3	1610.6	1605.5	2078.0	2074.8
20180428:13:19:01	23.2	15.8	-3.9	23.53	0.25	2.2	0.25	1.9	122.4	285.7	286.2	85.6	51.5	86.3	1612.0	1606.8	2079.7	2076.5
20180428:13:24:01	23.2	15.9	-3.9	23.53	0.25	2.2	0.25	1.9	122.7	285.8	286.3	85.6	51.5	86.4	1613.3	1608.2	2081.5	2078.3
20180428:13:29:01	23.2	16.0	-3.9	23.53	0.25	2.2	0.25	1.9	122.9	285.7	286.2	85.7	51.5	86.5	1614.7	1609.5	2083.3	2080.0
20180428:13:34:01	23.2	16.1	-3.9	23.53	0.25	2.2	0.25	2.0	123.0	285.7	286.3	85.7	51.5	86.5	1616.0	1610.8	2085.0	2081.8
20180428:13:39:01	23.2	16.1	-3.9	23.53	0.25	2.2	0.25	1.9	123.0	285.7	286.2	85.8	51.5	86.6	1617.4	1612.2	2086.8	2083.6
20180428:13:44:01	23.2	16.2	-3.9	23.53	0.25	2.2	0.25	1.9	123.2	285.7	286.3	85.8	51.5	86.6	1618.7	1613.5	2088.6	2085.3
20180428:13:49:01	23.3	16.2	-3.7	23.53	0.25	2.2	0.25	1.9	123.2	285.7	286.2	85.9	51.5	86.6	1620.0	1614.8	2090.3	2087.1
20180428:13:54:01	23.2	16.2	-3.8	23.53	0.25	2.2	0.25	1.9	123.3	285.7	286.2	85.9	51.5	86.7	1621.4	1616.2	2092.1	2088.8
20180428:13:59:01	23.3	16.3	-3.8	23.53	0.25	2.2	0.25	1.9	123.5	285.7	286.3	86.0	51.5	86.8	1622.7	1617.5	2093.9	2090.6
20180428:14:04:01	23.2	16.3	-3.9	23.53	0.25	2.2	0.25	2.0	123.5	285.7	286.3	86.0	51.5	86.8	1624.0	1618.8	2095.6	2092.4
20180428:14:09:01	23.2	16.3	-3.9	23.52	0.25	2.2	0.25	2.0	123.6	285.7	286.3	86.0	51.5	86.9	1625.4	1620.2	2097.4	2094.1
20180428:14:14:01	23.2	16.3	-3.9	23.52	0.25	2.2	0.25	2.0	123.6	285.7	286.3	86.0	51.6	86.9	1626.7	1621.5	2099.2	2095.9
20180428:14:19:01	23.2	16.4	-3.8	23.51	0.25	2.2	0.25	1.9	123.7	285.7	286.3	86.1	51.6	86.9	1628.1	1622.9	2100.9	2097.7
20180428:14:24:01	23.2	16.5	-3.9	23.51	0.25	2.2	0.25	1.9	124.0	285.7	286.2	86.2	51.5	87.0	1629.4	1624.2	2102.7	2099.4
20180428:14:29:01	23.2	16.6	-3.9	23.51	0.25	2.2	0.25	2.0	124.1	285.7	286.2	86.2	51.6	87.0	1630.8	1625.6	2104.5	2101.2
20180428:14:34:01	23.2	16.1	-3.9	23.50	0.25	2.2	0.25	1.9	122.9	285.7	286.3	86.2	51.6	87.0	1632.1	1626.9	2106.3	2102.9
20180428:14:39:01	23.2	15.2	-3.9	23.50	0.25	2.1	0.25	1.9	120.9	285.6	286.3	86.2	51.5	87.0	1633.5	1628.2	2108.0	2104.7
20180428:14:44:01	23.2	15.8	-3.7	23.49	0.25	2.2	0.25	1.9	122.2	285.7	286.4	86.3	51.6	87.1	1634.8	1629.6	2109.8	2106.5
20180428:14:49:01	23.2	16.1	-3.7	23.49	0.25	2.2	0.25	1.9	122.9	285.7	286.2	86.3	51.5	87.1	1636.2	1630.9	2111.6	2108.2
20180428:14:54:01	23.2	16.3	-3.8	23.49	0.25	2.2	0.25	1.9	123.4	285.7	286.3	86.3	51.5	87.2	1637.5	1632.2	2113.3	2110.0
20180428:14:59:01	23.2	16.3	-3.7	23.48	0.25	2.2	0.25	1.9	123.4	285.7	286.2	86.3	51.5	87.2	1638.8	1633.6	2115.1	2111.8
20180428:15:04:01	23.2	16.4	-3.7	23.48	0.25	2.2	0.25	2.0	123.6	285.7	286.3	86.4	51.5	87.3	1640.2	1634.9	2116.9	2113.6
20180428:15:09:01	23.2	16.5	-3.7	23.49	0.25	2.2	0.25	2.0	123.9	285.7	286.3	86.4	51.5	87.3	1641.5	1636.2	2118.7	2115.3
20180428:15:14:01	23.2	16.6	-3.8	23.48	0.25	2.2	0.25	2.0	124.2	285.7	286.3	86.5	51.6	87.3	1642.9	1637.6	2120.4	2117.1
20180428:15:19:01	23.2	16.7	-3.7	23.48	0.25	2.2	0.25	2.0	124.2	285.7	286.3	86.6	51.5	87.4	1644.2	1639.0	2122.2	2118.9
20180428:15:24:01	23.2	16.6	-3.7	23.47	0.25	2.2	0.25	1.9	124.1	285.7	286.2	86.6	51.5	87.4	1645.6	1640.3	2124.0	2120.6
20180428:15:29:01	23.2	16.5	-3.7	23.47	0.25	2.2	0.25	1.9	123.9	285.7	286.2	86.7	51.6	87.5	1646.9	1641.6	2125.8	2122.4
20180428:15:34:01	23.2	16.6	-3.7	23.47	0.25	2.2	0.25	1.9	124.0	285.6	286.2	86.7	51.5	87.5	1648.3	1643.0	2127.6	2124.2
20180428:15:39:01	23.2	16.4	-3.8	23.47	0.25	2.2	0.25	1.9	123.6	285.7	286.3	86.8	51.5	87.6	1649.6	1644.3	2129.3	2126.0
20180428:15:44:01	23.2	16.3	-3.7	23.46	0.25	2.2	0.25	1.9	123.4	285.7	286.2	86.9	51.6	87.7	1651.0	1645.6	2131.1	2127.7
20180428:15:49:01	23.2	16.2	-3.6	23.45	0.25	2.2	0.25	1.9	123.3	285.6	286.3	86.9	51.6	87.7	1652.3	1647.0	2132.9	2129.5
20180428:15:54:01	23.2	16.2	-3.7	23.46	0.25	2.2	0.25	1.9	123.2	285.7	286.2	87.0	51.6	87.8	1653.7	1648.3	2134.7	2131.3
20180428:15:59:01	23.2	16.2	-3.7	23.46	0.25	2.2	0.25	1.9	123.2	285.7	286.3	87.0	51.5	87.9	1655.0	1649.7	2136.4	2133.1
20180428:16:04:01	23.2	16.4	-3.7	23.46	0.25	2.2	0.25	1.9	123.5	285.7	286.3	87.1	51.5	87.9	1656.3	1651.0	2138.2	2134.8
20180428:16:09:01	23.2	15.6	-3.9	23.45	0.25	2.2	0.25	1.9	121.8	285.7	286.2	87.2	51.5	88.0	1657.7	1652.3	2140.0	2136.6
20180428:16:14:01	23.2	15.3	-3.8	23.45	0.25	2.2	0.25	1.9	121.1	285.6	286.2	87.2	51.5	88.0	1659.0	1653.7	2141.7	2138.4
20180428:16:19:01	23.2	15.8	-3.7	23.45	0.25	2.2	0.25	2.0	122.2	285.7	286.3	87.3	51.5	88.1	1660.4	1655.0	2143.5	2140.1
20180428:16:24:01	23.2	16.0	-3.7	23.45	0.25	2.2	0.25	2.0	122.7	285.7	286.2	87.3	51.5	88.1	1661.7	1656.3	2145.3	2141.9
20180428:16:29:01	23.2	16.2	-3.7	23.45	0.25	2.2	0.25	2.0	123.1	285.7	286.2	87.3	51.5	88.2	1663.0	1657.7	2147.1	2143.7

Time:	Stack Pressure:	Sat% H2O:	Static:	Barometric:	Flowmeter1:	Vacuum1:	Flowmeter2:	Vacuum2:	Stack Temp:	Sorbent Temp:	Probe Temp:	DGM#1 Temp:	Condenser Temp:	DGM#2 Temp:	DGM1*:	DGM2*:	DGM1:	DGM2:
day:hh:mm:ss	in-Hg	Percent	in-H2O	in-Hg	l/min	in-Hg	l/min	in-Hg	degF	degF	degF	degF	degF	degF	liters STP	liters STP	liters nominal	liters nominal
20180428:16:34:01	23.2	16.4	-3.7	23.45	0.25	2.2	0.25	2.0	123.6	285.7	286.3	87.4	51.5	88.2	1664.4	1659.0	2148.9	2145.4
20180428:16:39:01	23.2	16.5	-3.7	23.45	0.25	2.2	0.25	2.0	123.7	285.7	286.2	87.4	51.5	88.3	1665.7	1660.3	2150.6	2147.2
20180428:16:44:01	23.2	16.4	-3.7	23.45	0.25	2.2	0.25	2.0	123.7	285.7	286.3	87.5	51.5	88.3	1667.1	1661.7	2152.4	2149.0
20180428:16:49:01	23.2	16.6	-3.8	23.45	0.25	2.2	0.25	2.0	124.0	285.7	286.3	87.5	51.5	88.3	1668.4	1663.0	2154.2	2150.8
20180428:16:54:01	23.2	16.6	-3.7	23.45	0.25	2.2	0.25	2.0	124.0	285.7	286.2	87.6	51.5	88.4	1669.8	1664.4	2156.0	2152.5
20180428:16:59:01	23.2	16.5	-3.7	23.45	0.25	2.2	0.25	1.9	123.8	285.7	286.3	87.6	51.5	88.5	1671.1	1665.7	2157.7	2154.3
20180428:17:04:01	23.2	16.5	-3.7	23.45	0.25	2.2	0.25	1.9	123.8	285.6	286.2	87.7	51.5	88.5	1672.5	1667.1	2159.6	2156.1
20180428:17:09:01	23.2	16.4	-3.7	23.45	0.25	2.2	0.25	1.9	123.5	285.7	286.3	87.8	51.6	88.6	1673.8	1668.4	2161.3	2157.9
20180428:17:14:01	23.2	16.3	-3.8	23.45	0.25	2.2	0.25	1.9	123.4	285.7	286.3	87.9	51.6	88.6	1675.1	1669.7	2163.1	2159.6
20180428:17:19:01	23.2	15.6	-3.9	23.44	0.25	2.2	0.25	1.9	121.7	285.6	286.2	87.9	51.6	88.7	1676.5	1671.1	2164.9	2161.4
20180428:17:24:01	23.2	15.9	-3.6	23.44	0.25	2.2	0.25	1.9	122.4	285.6	286.2	87.9	51.6	88.7	1677.9	1672.4	2166.7	2163.2
20180428:17:29:01	23.2	16.0	-3.7	23.44	0.25	2.2	0.25	1.9	122.8	285.7	286.3	88.0	51.6	88.8	1679.2	1673.7	2168.4	2165.0
20180428:17:34:01	23.2	16.1	-3.7	23.44	0.25	2.2	0.25	1.9	122.9	285.7	286.3	88.0	51.6	88.9	1680.5	1675.1	2170.2	2166.8
20180428:17:39:01	23.2	16.2	-3.7	23.44	0.25	2.2	0.25	1.9	123.2	285.7	286.2	88.1	51.6	88.9	1681.9	1676.4	2172.0	2168.5
20180428:17:44:01	23.2	16.1	-3.7	23.45	0.25	2.2	0.25	2.0	122.9	285.7	286.2	88.1	51.6	88.9	1683.2	1677.8	2173.8	2170.3
20180428:17:49:01	23.2	16.1	-3.7	23.45	0.25	2.2	0.25	1.9	122.9	285.8	286.3	88.2	51.6	89.0	1684.6	1679.1	2175.6	2172.0
20180428:17:54:01	23.2	16.1	-3.7	23.45	0.25	2.2	0.25	1.9	122.9	285.8	286.2	88.2	51.7	89.0	1685.9	1680.4	2177.3	2173.8
20180428:17:59:01	23.2	16.1	-3.6	23.44	0.25	2.2	0.25	1.9	123.0	285.7	286.3	88.2	51.7	89.1	1687.2	1681.7	2179.1	2175.6
20180428:18:04:01	23.2	16.1	-3.7	23.45	0.25	2.2	0.25	1.9	123.0	285.7	286.3	88.3	51.7	89.1	1688.6	1683.1	2180.9	2177.4
20180428:18:09:01	23.2	16.2	-3.7	23.44	0.25	2.2	0.25	1.9	123.1	285.7	286.2	88.3	51.7	89.2	1689.9	1684.4	2182.7	2179.2
20180428:18:14:01	23.2	16.2	-3.7	23.45	0.25	2.2	0.25	1.9	123.2	285.8	286.3	88.3	51.7	89.2	1691.3	1685.8	2184.4	2180.9
20180428:18:19:01	23.2	16.2	-3.7	23.44	0.25	2.2	0.25	1.9	123.2	285.7	286.3	88.4	51.7	89.3	1692.6	1687.1	2186.2	2182.7
20180428:18:24:01	23.2	16.1	-3.7	23.45	0.25	2.2	0.25	1.9	123.0	285.7	286.2	88.4	51.7	89.3	1694.0	1688.4	2188.0	2184.5
20180428:18:29:01	23.2	16.2	-3.7	23.45	0.25	2.2	0.25	1.9	123.1	285.8	286.3	88.5	51.7	89.3	1695.3	1689.7	2189.8	2186.2
20180428:18:34:01	23.2	16.1	-3.7	23.45	0.25	2.2	0.25	1.9	122.9	285.8	286.3	88.5	51.7	89.3	1696.7	1691.1	2191.6	2188.0
20180428:18:39:01	23.2	16.2	-3.7	23.45	0.25	2.2	0.25	1.9	123.0	285.8	286.3	88.5	51.7	89.4	1698.0	1692.4	2193.4	2189.8
20180428:18:44:01	23.2	16.2	-3.7	23.45	0.25	2.2	0.25	1.9	123.2	285.7	286.3	88.6	51.8	89.4	1699.3	1693.8	2195.1	2191.5
20180428:18:49:01	23.2	16.2	-3.7	23.45	0.25	2.2	0.25	1.9	123.1	285.7	286.3	88.6	51.7	89.4	1700.7	1695.1	2196.9	2193.4
20180428:18:54:01	23.2	16.2	-3.7	23.46	0.25	2.2	0.25	2.0	123.2	285.7	286.3	88.6	51.8	89.5	1702.1	1696.5	2198.7	2195.1
20180428:18:59:01	23.2	16.2	-3.7	23.46	0.25	2.2	0.25	2.0	123.1	285.7	286.3	88.7	51.7	89.5	1703.4	1697.8	2200.5	2196.9
20180428:19:04:01	23.2	16.2	-3.8	23.46	0.25	2.2	0.25	2.0	123.1	285.7	286.3	88.7	51.8	89.6	1704.7	1699.1	2202.3	2198.7
20180428:19:09:01	23.2	15.3	-3.9	23.46	0.25	2.2	0.25	2.0	121.0	285.7	286.3	88.7	51.7	89.6	1706.1	1700.5	2204.1	2200.4
20180428:19:14:01	23.2	14.9	-3.8	23.46	0.25	2.2	0.25	1.9	120.1	285.7	286.4	88.8	51.8	89.6	1707.4	1701.8	2205.9	2202.2
20180428:19:19:01	23.2	15.0	-3.7	23.46	0.25	2.2	0.25	2.0	120.4	285.7	286.3	88.8	51.7	89.6	1708.8	1703.2	2207.7	2204.0
20180428:19:24:01	23.2	15.6	-3.7	23.46	0.25	2.2	0.25	2.0	121.9	285.8	286.4	88.9	51.7	89.7	1710.2	1704.5	2209.5	2205.8
20180428:19:29:01	23.2	15.9	-3.7	23.46	0.25	2.2	0.25	2.0	122.4	285.8	286.3	88.9	51.7	89.7	1711.5	1705.9	2211.3	2207.6
20180428:19:34:01	23.2	15.8	-3.7	23.46	0.25	2.2	0.25	2.0	122.2	285.8	286.4	88.9	51.7	89.8	1712.8	1707.2	2213.1	2209.4
20180428:19:39:01	23.2	15.7	-3.8	23.46	0.25	2.2	0.25	2.0	122.0	285.7	286.3	88.9	51.7	89.8	1714.2	1708.5	2214.9	2211.2
20180428:19:44:01	23.2	15.6	-3.7	23.46	0.25	2.2	0.25	2.0	121.8	285.7	286.3	88.9	51.7	89.8	1715.6	1709.9	2216.7	2213.0
20180428:19:49:01	23.2	15.5	-3.7	23.46	0.25	2.2	0.25	2.0	121.6	285.7	286.4	88.9	51.7	89.8	1716.9	1711.3	2218.4	2214.8
20180428:19:54:01	23.2	15.5	-3.8	23.47	0.25	2.2	0.25	2.0	121.6	285.7	286.3	88.9	51.7	89.8	1718.3	1712.6	2220.3	2216.5
20180428:19:59:01	23.2	15.4	-3.7	23.46	0.25	2.2	0.25	2.0	121.4	285.7	286.3	88.9	51.7	89.8	1719.7	1714.0	2222.1	2218.4
20180428:20:04:01	23.2	15.4	-3.6	23.46	0.25	2.2	0.25	2.0	121.4	285.7	286.4	88.9	51.7	89.8	1721.0	1715.3	2223.9	2220.2
20180428:20:09:01	23.2	15.0	-3.7	23.46	0.25	2.2	0.25	2.0	120.5	285.7	286.4	88.9	51.7	89.8	1722.3	1716.6	2225.6	2221.9
20180428:20:14:01	23.2	14.9	-3.7	23.46	0.25	2.2	0.25	2.0	120.0	285.7	286.4	88.9	51.7	89.8	1723.7	1718.0	2227.5	2223.8
20180428:20:19:01	23.2	15.4	-3.8	23.46	0.25	2.2	0.25	2.0	121.3	285.7	286.4	88.9	51.7	89.8	1725.1	1719.3	2229.3	2225.5
20180428:20:24:01	23.2	15.6	-3.8	23.47	0.25	2.2	0.25	2.0	121.8	285.8	286.4	89.0	51.8	89.9	1726.4	1720.7	2231.1	2227.3
20180428:20:29:01	23.2	15.6	-3.7	23.46	0.25	2.2	0.25	2.0	121.9	285.8	286.4	89.0	51.8	89.9	1727.8	1722.1	2232.9	2229.1
20180428:20:34:01	23.2	15.6	-3.7	23.47	0.25	2.2	0.25	2.0	121.9	285.8	286.4	89.0	51.7	89.9	1729.2	1723.4	2234.7	2230.9
20180428:20:39:01	23.2	15.6	-3.8	23.47	0.25	2.2	0.25	2.0	121.8	285.8	286.3	89.0	51.7	89.9	1730.5	1724.7	2236.5	2232.7
20180428:20:44:01	23.2	15.6	-3.8	23.47	0.25	2.2	0.25	2.0	121.8	285.8	286.3	89.0	51.7	89.9	1731.9	1726.1	2238.3	2234.5
20180428:20:49:01	23.2	15.8	-3.8	23.47	0.25	2.2	0.25	2.0	122.2	285.8	286.3	89.0	51.8	89.9	1733.3	1727.5	2240.1	2236.3
20180428:20:54:01	23.2	15.8	-3.8	23.47	0.25	2.2	0.25	2.0	122.2	285.8	286.4	89.1	51.8	89.9	1734.6	1728.8	2241.9	2238.1
20180428:20:59:01	23.2	15.7	-3.8	23.47	0.25	2.2	0.25	2.0	122.0	285.8	286.4	89.1	51.7	89.9	1735.9	1730.2	2243.7	2239.9
20180428:21:04:01	23.2	15.5	-3.8	23.47	0.25	2.2	0.25	2.0	121.6	285.8	286.4	89.1	51.7	89.9	1737.3	1731.5	2245.5	2241.6
20180428:21:09:01	23.2	15.0	-3.8	23.47	0.25	2.2	0.25	2.0	120.4	285.7	286.4	89.0	51.7	89.9	1738.7	1732.9	2247.3	2243.5
20180428:21:14:01	23.2	15.5	-3.7	23.47	0.25	2.2	0.25	2.0	121.5	285.7	286.4	89.0	51.7	89.9	1740.0	1734.2	2249.1	2245.3
20180428:21:19:01	23.2	15.6	-3.7	23.47	0.25	2.2	0.25	2.0	121.8	285.8	286.4	89.0	51.7	89.9	1741.4	1735.5	2250.9	2247.0
20180428:21:24:01	23.2	15.7	-3.7	23.47	0.25	2.2	0.25	2.0	122.0	285.9	286.4	89.0	51.7	89.9	1742.8	1736.9	2252.7	2248.9
20180428:21:29:01	23.2	15.7	-3.7	23.47	0.25	2.2	0.25	2.0	121.9	285.8	286.4	89.0	51.7	89.9	1744.1	1738.3	2254.5	2250.6
20180428:21:34:01	23.2	15.7	-3.7	23.48	0.25	2.2	0.25	2.0	122.1	285.9	286.4	89.0	51.8	89.9	1745.5	1739.6	2256.3	2252.4
20180428:21:39:01	23.2	15.7	-3.7	23.48	0.25	2.2	0.25	2.0	122.2	285.9	286.4	89.0	51.8	89.9	1746.8	1741.0	2258.1	2254.2
20180428:21:44:01	23.2	15.7	-3.8	23.47	0.25	2.2	0.25	2.0	122.1	285.9	286.4	89.0	51.8	89.9	1748.2	1742.3	2259.9	2256.0
20180428:21:49:01	23.2	15.8	-3.8	23.48	0.25	2.2	0.25	2.0	122.3	285.9	286.4	89.0	51.8	89.9	1749.5	1743.6	2261.7	2257.8
20180428:21:54:01	23.2	15.8	-3.8	23.48	0.25	2.2	0.25	2.0	122.2	285.8	286.4	89.0	51.8	89.9	1750.9	1745.0	2263.5	2259.6
20180428:21:59:01	23.2	15.9	-3.9	23.48	0.25	2.2	0.25	2.0	122.5	285.8	286.4	88.9	51.8	89.8	1752.3	1746.4	2265.3	2261.4
20180428:22:04:01	23.2	15.5	-3.8	23.48	0.25	2.2	0.25	2.0	121.5	285.8	286.4	88.9	51.8	89.8	1753.6	1747.7	2267.1	2263.2
20180428:22:09:01	23.2	15.2	-3.8	23.48	0.25	2.2	0.25	2.0	120.8	285.8	286.4	88.9	51.7	89.8	1755.0	1749.1	2268.9	2265.0
20180428:22:14:01	23.2	15.8	-3.9	23.49	0.25	2.2	0.25	2.0	122.2	285.8	286.4	88.9	51.8	89.8	1756.3	1750.4	2270.7	2266.7
20180428:22:19:01	23.2	15.9	-3.8	23.48	0.25	2.2	0.25	2.0	122.5	285.9	286.4	88.9	51.8	89.8	1757.7	1751.8	2272.5	2268.5
20180428:22:24:01	23.2	15.9	-3.8	23.48	0.25	2.2	0.25	2.0	122.5	285.9	286.4	88.9	51.8	89.8	1759.0	1753.1	2274.3	2270.4
20180428:22:29:01	23.2	16.0	-3.8	23.48	0.25	2.2	0.25	2.0	122.8	286.0	286.5	88.9	51.8	89.8	1760.4	1754.5	2276.1	2272.1
20180428:22:34:01	23.2	16.1	-3.8	23.48	0.25	2.2	0.25	2.0	122.9	285.9	286.4	88.8	51.8	89.7	1761.8	1755.8	2277.9	2273.9
20180428:22:39:01	23.2	16.1	-3.9	23.48	0.25	2.2	0.25	2.0	123.1	285.9	286.4	88.8	51.7	89.7	1763.1	1757.2	2279.7	2275.7
20180428:22:44:01	23.2	16.2	-3.9	23.48	0.25	2.2	0.25	2.0	123.3	285.9	286.4	88.8	51.8	89.7	1764.5	1758.5	2281.5	2277.5
20180428:22:49:01	23.2	16.2	-3.8	23.48	0.25	2.2	0.25	2.0	123.2	285.9	286.4	88.7	51.8	89.6	1765.9	1759.9	2283.3	2279.3
20180428:22:54:01	23.2	15.3	-3.8	23.48	0.25	2.2	0.25	2.0	121.1	285.8	286.4	88.7	51.7	89.6	1767.2	1761.2	2285.1	2281.1
20180428:22:59:01	23.2	15.1	-3.8	23.48	0.25	2.2	0.25	2.0	120.7	285.8	286.4	88.7	51.8	89.6	1768.6	1762.6	2286.9	2282.9
20180428:23:04:01	23.2	15.0	-3.8	23.48	0.25	2.2	0.25	2.0	120.4	285.8	286.4	88.6	51.8	89.6	1769.9	1764.0	2288.7	2284.7
20180428:23:09:01	23.2	15.7	-3.9	23.48	0.25	2.2	0.25	2.0	122.2	285.9	286.4	88.6	51.8	89.5	1771.3	1765.3	2290.5	2286.5
20180428:23:14:01	23.2	16.1	-3.8	23.48	0.25	2.2	0.25	2.0	123.0	285.9	286.4	88.6	51.8	89.5	1772.6	1766.6	2292.3	2288.3
20180428:23:19:01	23.2	16.4	-3.8	23.48	0.25	2.2	0.25	2.0	123.7	285.9	286.4	88.5	51.8	89.4	1774.0	1768.0	2294.1	2290.1
20180428:23:24:01	23.2	16.4	-3.8	23.48	0.25	2.2	0.25	2.0	123.7	285.9	286.4	88.5	51.8	89.4	1775.4	1769.4	2295.9	2291.9
20180428:23:29:01	23.2	16.3	-3.8	23.48	0.25	2.2	0.25	2.0	123.4	285.8	286.3	88.4	51.8	89.3	1776.7	1770.7	2297.7	2293.6
20180428:23:34:01	23.2	16.4	-3.9	23.49	0.25	2.2	0.25	2.0	123.6	285.8	286.3	88.4	51.8	89.3	1778.1	1772.1	2299.5	2295.5
20180428:23:39:01	23.2	16.3	-3.9	23.49	0.25	2.2	0.25	2.0	123.5	285.8	286.3	88.3	51.8	89.3	1779.4	1773.4	2301.3	2297.2
20180428:23:44:01	23.2	16.3	-4.0	23.49	0.25	2.2	0.25	2.0	123.4	285.8	286.4	88.3	51.8	89.3	1780.8	1774.7	2303.1	2299.0
20180428:23:49:01	23.2	16.3	-4.0	23.49	0.25	2.2	0.25	2.0	123.4	285.8	286.3	88.3	51.7	89.2	1782.2	1776.1	2304.9	2300.9
20180428:23:54:01	23.2	16.2	-4.0	23.49	0.25	2.2	0.25	2.0	123.3	285.8	286.3	88.3	51.8	89.2	1783.5	1777.5	2306.7	2302.6

Time:	Stack Pressure:	Sat% H2O:	Static:	Barometric:	Flowmeter1:	Vacuum1:	Flowmeter2:	Vacuum2:	Stack Temp:	Sorbent Temp:	Probe Temp:	DGM#1 Temp:	Condenser Temp:	DGM#2 Temp:	DGM1*:	DGM2*:	DGM1:	DGM2:
day:hh:mm:ss	in-Hg	Percent	in-H2O	in-Hg	l/min	in-Hg	l/min	in-Hg	degF	degF	degF	degF	degF	degF	liters STP	liters STP	liters nominal	liters nominal
20180428:23:59:01	23.2	16.3	-4.0	23.49	0.25	2.2	0.25	2.0	123.4	285.8	286.3	88.3	51.8	89.2	1784.9	1778.8	2308.5	2304.4
20180429:00:04:01	23.2	15.9	-4.0	23.50	0.25	2.2	0.25	2.0	122.6	285.8	286.3	88.3	51.8	89.2	1786.2	1780.2	2310.3	2306.2
20180429:00:09:01	23.2	15.3	-4.0	23.50	0.25	2.2	0.25	2.0	121.0	285.7	286.3	88.2	51.8	89.1	1787.6	1781.5	2312.1	2308.0
20180429:00:14:01	23.2	15.8	-4.0	23.50	0.25	2.2	0.25	2.0	122.2	285.8	286.4	88.2	51.8	89.1	1788.9	1782.9	2313.8	2309.8
20180429:00:19:01	23.2	15.9	-3.9	23.50	0.25	2.2	0.25	2.0	122.5	285.8	286.3	88.2	51.8	89.0	1790.3	1784.2	2315.6	2311.6
20180429:00:24:01	23.2	15.8	-3.9	23.50	0.25	2.2	0.25	2.0	122.3	285.8	286.4	88.1	51.8	89.0	1791.7	1785.6	2317.5	2313.4
20180429:00:29:01	23.2	15.7	-3.9	23.50	0.25	2.2	0.25	2.0	122.0	285.8	286.4	88.1	51.8	89.0	1793.0	1786.9	2319.3	2315.2
20180429:00:34:01	23.2	15.7	-3.9	23.49	0.25	2.2	0.25	2.0	122.0	285.7	286.3	88.0	51.8	88.9	1794.4	1788.3	2321.0	2317.0
20180429:00:39:01	23.2	15.6	-3.9	23.49	0.25	2.2	0.25	2.0	121.9	285.8	286.3	88.0	51.8	88.9	1795.8	1789.6	2322.9	2318.7
20180429:00:44:01	23.2	15.5	-3.9	23.49	0.25	2.2	0.25	2.0	121.5	285.7	286.4	87.9	51.8	88.9	1797.1	1791.0	2324.7	2320.6
20180429:00:49:01	23.2	15.4	-3.9	23.49	0.25	2.2	0.25	2.0	121.4	285.8	286.4	87.9	51.8	88.9	1798.5	1792.4	2326.4	2322.4
20180429:00:54:01	23.2	15.3	-3.9	23.49	0.25	2.2	0.25	2.0	121.2	285.7	286.3	87.9	51.8	88.8	1799.8	1793.7	2328.2	2324.1
20180429:00:59:01	23.2	15.2	-3.9	23.49	0.25	2.2	0.25	2.0	120.9	285.8	286.4	87.8	51.8	88.7	1801.2	1795.1	2330.1	2325.9
20180429:01:04:01	23.2	14.6	-3.9	23.49	0.25	2.2	0.25	2.0	119.3	285.7	286.4	87.7	51.8	88.7	1802.5	1796.4	2331.8	2327.7
20180429:01:09:01	23.2	14.9	-3.9	23.49	0.25	2.2	0.25	2.0	120.1	285.7	286.3	87.7	51.8	88.6	1803.9	1797.7	2333.6	2329.5
20180429:01:14:01	23.2	15.2	-3.9	23.49	0.25	2.2	0.25	2.0	120.8	285.8	286.4	87.6	51.8	88.6	1805.3	1799.1	2335.5	2331.3
20180429:01:19:01	23.2	15.3	-3.9	23.49	0.25	2.3	0.25	2.0	121.0	285.9	286.4	87.5	51.8	88.5	1806.6	1800.5	2337.2	2333.1
20180429:01:24:01	23.2	15.3	-3.9	23.49	0.25	2.2	0.25	2.0	121.1	285.8	286.4	87.4	51.8	88.4	1808.0	1801.8	2339.0	2334.9
20180429:01:29:01	23.2	15.3	-3.9	23.49	0.25	2.2	0.25	2.0	121.2	285.8	286.3	87.4	51.8	88.3	1809.4	1803.2	2340.9	2336.7
20180429:01:34:01	23.2	15.3	-3.9	23.49	0.25	2.2	0.25	2.0	121.2	285.8	286.4	87.3	51.8	88.3	1810.7	1804.5	2342.7	2338.5
20180429:01:39:01	23.2	15.3	-3.9	23.49	0.25	2.2	0.25	2.0	121.1	285.8	286.4	87.3	51.8	88.3	1812.1	1805.9	2344.4	2340.3
20180429:01:44:01	23.2	15.1	-3.9	23.49	0.25	2.2	0.25	2.0	120.7	285.7	286.3	87.3	51.8	88.2	1813.5	1807.3	2346.2	2342.1
20180429:01:49:01	23.2	15.3	-4.0	23.49	0.25	2.2	0.25	2.0	121.1	285.8	286.4	87.2	51.8	88.2	1814.8	1808.6	2348.0	2343.8
20180429:01:54:01	23.2	15.4	-4.0	23.49	0.25	2.2	0.25	2.0	121.3	285.8	286.4	87.2	51.8	88.1	1816.2	1810.0	2349.8	2345.7
20180429:01:59:01	23.2	14.7	-4.0	23.49	0.25	2.2	0.25	2.0	119.6	285.8	286.3	87.1	51.8	88.0	1817.5	1811.3	2351.6	2347.4
20180429:02:04:01	23.2	14.4	-4.0	23.49	0.25	2.2	0.25	2.0	119.0	285.8	286.4	87.0	51.8	88.0	1818.9	1812.7	2353.4	2349.2
20180429:02:09:01	23.2	14.3	-4.0	23.49	0.25	2.2	0.25	2.0	118.6	285.8	286.4	87.0	51.8	87.9	1820.2	1814.0	2355.2	2351.0
20180429:02:14:01	23.2	15.0	-4.0	23.49	0.25	2.2	0.25	2.0	120.4	285.8	286.3	86.9	51.8	87.8	1821.6	1815.4	2357.0	2352.8
20180429:02:19:01	23.2	15.3	-4.0	23.49	0.25	2.2	0.25	2.0	121.2	285.9	286.4	86.8	51.8	87.8	1823.0	1816.7	2358.8	2354.6
20180429:02:24:01	23.2	15.5	-4.0	23.49	0.25	2.2	0.25	2.0	121.6	285.8	286.4	86.7	51.7	87.7	1824.3	1818.1	2360.6	2356.4
20180429:02:29:01	23.2	15.7	-4.0	23.49	0.25	2.2	0.25	2.0	122.0	285.9	286.4	86.6	51.8	87.6	1825.7	1819.5	2362.4	2358.2
20180429:02:34:01	23.2	15.7	-4.0	23.49	0.25	2.2	0.25	2.0	122.2	285.9	286.4	86.5	51.7	87.5	1827.1	1820.8	2364.2	2360.0
20180429:02:39:01	23.2	15.8	-4.0	23.49	0.25	2.2	0.25	2.0	122.4	285.8	286.4	86.5	51.8	87.4	1828.4	1822.2	2366.0	2361.8
20180429:02:44:01	23.2	16.0	-4.1	23.50	0.25	2.2	0.25	2.0	122.7	285.9	286.4	86.3	51.7	87.3	1829.8	1823.5	2367.8	2363.5
20180429:02:49:01	23.2	16.1	-4.1	23.49	0.25	2.2	0.25	2.0	122.9	285.8	286.3	86.2	51.7	87.3	1831.2	1824.9	2369.6	2365.3
20180429:02:54:01	23.2	16.1	-4.0	23.49	0.25	2.2	0.25	2.0	123.0	285.8	286.3	86.2	51.7	87.2	1832.5	1826.3	2371.4	2367.2
20180429:02:59:01	23.2	16.3	-4.0	23.49	0.25	2.2	0.25	2.0	123.4	285.8	286.3	86.1	51.7	87.1	1833.9	1827.6	2373.2	2368.9
20180429:03:04:01	23.2	16.5	-4.1	23.49	0.25	2.2	0.25	2.0	123.9	285.8	286.3	86.0	51.7	87.0	1835.2	1828.9	2374.9	2370.7
20180429:03:09:01	23.2	16.7	-4.1	23.49	0.25	2.2	0.25	2.0	124.3	285.8	286.4	86.0	51.7	87.0	1836.6	1830.3	2376.8	2372.5
20180429:03:14:01	23.2	16.9	-4.1	23.49	0.25	2.2	0.25	2.0	124.8	285.7	286.3	85.9	51.7	86.9	1837.9	1831.6	2378.5	2374.3
20180429:03:19:01	23.2	15.7	-4.2	23.49	0.25	2.2	0.25	2.0	122.0	285.7	286.3	85.9	51.7	86.8	1839.3	1833.0	2380.3	2376.1
20180429:03:24:01	23.2	15.3	-4.2	23.49	0.25	2.2	0.25	1.9	121.1	285.7	286.4	85.8	51.7	86.8	1840.7	1834.4	2382.1	2377.9
20180429:03:29:01	23.2	15.5	-4.2	23.49	0.25	2.2	0.25	1.9	121.6	285.7	286.3	85.7	51.7	86.7	1842.0	1835.7	2383.9	2379.6
20180429:03:34:01	23.2	16.0	-4.1	23.49	0.25	2.2	0.25	1.9	122.7	285.8	286.3	85.7	51.7	86.6	1843.4	1837.1	2385.7	2381.4
20180429:03:39:01	23.2	16.2	-4.0	23.49	0.25	2.2	0.25	1.9	123.1	285.8	286.3	85.7	51.7	86.6	1844.8	1838.4	2387.5	2383.2
20180429:03:44:01	23.2	16.2	-4.0	23.49	0.25	2.2	0.25	1.9	123.2	285.8	286.3	85.6	51.7	86.5	1846.1	1839.7	2389.2	2385.0
20180429:03:49:01	23.2	16.2	-4.0	23.49	0.25	2.2	0.25	2.0	123.2	285.8	286.3	85.6	51.7	86.5	1847.4	1841.1	2391.0	2386.8
20180429:03:54:01	23.2	16.2	-4.0	23.49	0.25	2.2	0.25	2.0	123.2	285.8	286.4	85.5	51.7	86.4	1848.8	1842.4	2392.8	2388.5
20180429:03:59:01	23.2	16.2	-4.0	23.49	0.25	2.2	0.25	2.0	123.2	285.8	286.3	85.4	51.7	86.3	1850.1	1843.8	2394.5	2390.3
20180429:04:04:01	23.2	16.3	-4.1	23.49	0.25	2.2	0.25	2.0	123.4	285.8	286.3	85.4	51.6	86.3	1851.5	1845.1	2396.3	2392.1
20180429:04:09:01	23.2	16.3	-4.0	23.49	0.25	2.2	0.25	2.0	123.5	285.8	286.3	85.3	51.7	86.2	1852.8	1846.4	2398.1	2393.8
20180429:04:14:01	23.2	15.7	-4.1	23.49	0.25	2.2	0.25	2.0	122.0	285.8	286.4	85.3	51.6	86.2	1854.2	1847.8	2399.9	2395.6
20180429:04:19:01	23.2	15.9	-4.0	23.49	0.25	2.2	0.25	2.0	122.6	285.7	286.3	85.2	51.7	86.1	1855.5	1849.1	2401.6	2397.3
20180429:04:24:01	23.2	16.0	-4.0	23.49	0.25	2.2	0.25	2.0	122.7	285.7	286.3	85.2	51.6	86.1	1856.9	1850.5	2403.5	2399.1
20180429:04:29:01	23.2	16.1	-4.0	23.49	0.25	2.2	0.25	2.0	122.9	285.7	286.3	85.1	51.7	86.0	1858.2	1851.9	2405.2	2400.9
20180429:04:34:01	23.2	16.3	-4.0	23.49	0.25	2.2	0.25	2.0	123.3	285.8	286.3	85.0	51.6	85.9	1859.6	1853.2	2407.0	2402.7
20180429:04:39:01	23.2	16.3	-4.0	23.49	0.25	2.2	0.25	2.0	123.4	285.8	286.3	85.0	51.7	85.9	1861.0	1854.6	2408.8	2404.5
20180429:04:44:01	23.2	16.4	-4.1	23.49	0.25	2.2	0.25	2.0	123.6	285.8	286.4	85.0	51.6	85.9	1862.3	1855.9	2410.6	2406.2
20180429:04:49:01	23.2	16.5	-4.1	23.49	0.25	2.2	0.25	2.0	123.9	285.8	286.3	84.9	51.7	85.8	1863.6	1857.2	2412.3	2408.0
20180429:04:54:01	23.2	16.5	-4.1	23.49	0.25	2.2	0.25	2.0	123.9	285.8	286.3	84.8	51.6	85.7	1865.0	1858.6	2414.2	2409.8
20180429:04:59:01	23.2	16.4	-4.1	23.49	0.25	2.2	0.25	2.0	123.7	285.8	286.4	84.7	51.6	85.6	1866.4	1859.9	2415.9	2411.6
20180429:05:04:01	23.2	16.4	-4.2	23.49	0.25	2.2	0.25	2.0	123.6	285.8	286.3	84.6	51.6	85.6	1867.7	1861.3	2417.7	2413.4
20180429:05:09:01	23.2	16.3	-4.2	23.49	0.25	2.2	0.25	2.0	123.3	285.7	286.3	84.6	51.6	85.5	1869.1	1862.7	2419.5	2415.1
20180429:05:14:01	23.2	16.1	-4.3	23.49	0.25	2.2	0.25	2.0	122.9	285.8	286.4	84.5	51.6	85.4	1870.4	1864.0	2421.3	2416.9
20180429:05:19:01	23.2	15.3	-4.4	23.50	0.25	2.2	0.25	1.9	121.0	285.7	286.3	84.4	51.6	85.3	1871.8	1865.4	2423.0	2418.7
20180429:05:24:01	23.2	15.6	-4.2	23.50	0.25	2.2	0.25	1.9	121.8	285.7	286.4	84.3	51.6	85.3	1873.2	1866.7	2424.8	2420.5
20180429:05:29:01	23.2	15.7	-4.2	23.50	0.25	2.2	0.25	2.0	122.0	285.8	286.3	84.2	51.6	85.2	1874.5	1868.0	2426.6	2422.2
20180429:05:34:01	23.2	15.9	-4.2	23.51	0.25	2.2	0.25	2.0	122.4	285.7	286.3	84.1	51.5	85.1	1875.8	1869.4	2428.3	2424.0
20180429:05:39:01	23.2	15.9	-4.2	23.51	0.25	2.2	0.25	2.0	122.5	285.8	286.3	84.0	51.6	85.0	1877.2	1870.7	2430.2	2425.8
20180429:05:44:01	23.2	15.9	-4.2	23.51	0.25	2.2	0.25	2.0	122.6	285.7	286.3	84.0	51.5	85.0	1878.6	1872.1	2431.9	2427.5
20180429:05:49:01	23.2	15.9	-4.2	23.51	0.25	2.2	0.25	2.0	122.4	285.7	286.3	83.9	51.5	84.9	1879.9	1873.5	2433.7	2429.3
20180429:05:54:01	23.2	15.7	-4.2	23.51	0.25	2.2	0.25	2.0	122.1	285.7	286.3	83.8	51.5	84.9	1881.3	1874.8	2435.5	2431.1
20180429:05:59:01	23.2	15.5	-4.1	23.51	0.25	2.2	0.25	2.0	121.7	285.7	286.3	83.7	51.5	84.7	1882.6	1876.2	2437.2	2432.9
20180429:06:04:01	23.2	15.7	-4.2	23.51	0.25	2.2	0.25	2.0	122.0	285.7	286.3	83.7	51.6	84.7	1884.0	1877.5	2439.0	2434.6
20180429:06:09:01	23.2	15.9	-4.2	23.50	0.25	2.2	0.25	2.0	122.4	285.6	286.2	83.7	51.5	84.6	1885.4	1878.8	2440.8	2436.4
20180429:06:14:01	23.2	16.1	-4.2	23.50	0.25	2.2	0.25	2.0	122.9	285.7	286.3	83.6	51.6	84.6	1886.7	1880.2	2442.6	2438.2
20180429:06:19:01	23.2	16.1	-4.2	23.50	0.25	2.2	0.25	2.0	123.1	285.7	286.3	83.6	51.5	84.5	1888.0	1881.6	2444.3	2440.0
20180429:06:24:01	23.2	15.3	-4.4	23.51	0.25	2.2	0.25	1.9	121.1	285.6	286.2	83.6	51.6	84.5	1889.4	1882.9	2446.2	2441.8
20180429:06:29:01	23.2	15.5	-4.3	23.51	0.25	2.2	0.25	1.9	121.6	285.6	286.3	83.5	51.5	84.4	1890.8	1884.3	2447.9	2443.5
20180429:06:34:01	23.2	15.6	-4.4	23.51	0.25	2.2	0.25	1.9	121.9	285.7	286.2	83.4	51.6	84.3	1892.1	1885.6	2449.7	2445.3
20180429:06:39:01	23.2	15.7	-4.4	23.51	0.25	2.2	0.25	1.9	122.1	285.8	286.3	83.4	51.5	84.3	1893.5	1887.0	2451.5	2447.1
20180429:06:44:01	23.2	15.2	-4.6	23.51	0.25	2.2	0.25	1.9	120.8	285.8	286.2	83.3	51.5	84.2	1894.8	1888.3	2453.2	2448.8
20180429:06:49:01	23.2	15.0	-4.4	23.51	0.25	2.2	0.25	1.9	120.3	285.8	286.3	83.3	51.5	84.2	1896.1	1889.6	2455.0	2450.6
20180429:06:54:01	23.2	15.4	-4.3	23.51	0.25	2.2	0.25	2.0	121.3	285.8	286.3	83.2	51.5	84.1	1897.5	1891.0	2456.8	2452.4
20180429:06:59:01	23.2	15.5	-4.3	23.51	0.25	2.2	0.25	2.0	121.5	285.8	286.3	83.2	51.5	84.0	1898.9	1892.3	2458.5	2454.1
20180429:07:04:01	23.2	15.6	-4.3	23.51	0.25	2.2	0.25	2.0	121.8	285.8	286.4	83.1	51.5	84.0	1900.2	1893.7	2460.3	2455.9
20180429:07:09:01	23.2	15.6	-4.3	23.51	0.25	2.2	0.25	2.0	121.8	285.9	286.4	83.1	51.5	84.0	1901.6	1895.0	2462.0	2457.6
20180429:07:14:01	23.2	15.6	-4.3	23.51	0.25	2.2	0.25	2.0	121.9	285.9	286.4	83.0	51.5	83.9	1902.9	1896.4	2463.8	2459.4
20180429:07:19:01	23.2	15.8	-4.3	23.51	0.25	2.2	0.25	2.0	122.3	285.9	286.4	83.0	51.4	83.8	1904.3	1897.7	2465.6	2461.2

Time:	Stack Pressure:	Sat% H2O:	Static:	Barometric:	Flowmeter1:	Vacuum1:	Flowmeter2:	Vacuum2:	Stack Temp:	Sorbent Temp:	Probe Temp:	DGM#1 Temp:	Condenser Temp:	DGM#2 Temp:	DGM1*:	DGM2*:	DGM1:	DGM2:
day:hh:mm:ss	in-Hg	Percent	in-H2O	in-Hg	l/min	in-Hg	l/min	in-Hg	degF	degF	degF	degF	degF	degF	liters STP	liters STP	liters nominal	liters nominal
20180429:07:24:01	23.2	15.8	-4.2	23.50	0.25	2.2	0.25	2.0	122.4	285.9	286.4	82.9	51.5	83.8	1905.6	1899.1	2467.3	2462.9
20180429:07:29:01	23.2	15.8	-4.2	23.50	0.25	2.2	0.25	2.0	122.3	285.8	286.4	82.8	51.4	83.7	1906.9	1900.4	2469.1	2464.7
20180429:07:34:01	23.2	15.8	-4.2	23.50	0.25	2.2	0.25	2.0	122.3	285.9	286.4	82.7	51.4	83.7	1908.3	1901.8	2470.9	2466.5
20180429:07:39:01	23.2	15.9	-4.2	23.50	0.25	2.2	0.25	2.0	122.5	285.8	286.4	82.7	51.4	83.6	1909.7	1903.1	2472.7	2468.2
20180429:07:44:01	23.2	15.8	-4.2	23.50	0.25	2.2	0.25	2.0	122.2	285.8	286.3	82.7	51.4	83.6	1911.0	1904.5	2474.4	2470.0
20180429:07:49:01	23.2	15.7	-4.2	23.50	0.25	2.2	0.25	1.9	122.1	285.8	286.3	82.6	51.4	83.5	1912.4	1905.8	2476.2	2471.8
20180429:07:54:01	23.2	15.7	-4.2	23.50	0.25	2.2	0.25	1.9	122.1	285.8	286.4	82.6	51.4	83.5	1913.7	1907.2	2478.0	2473.6
20180429:07:59:01	23.2	15.7	-4.2	23.50	0.25	2.2	0.25	2.0	122.0	285.8	286.4	82.5	51.3	83.4	1915.1	1908.5	2479.7	2475.3
20180429:08:04:01	23.2	15.7	-4.2	23.50	0.25	2.2	0.25	2.0	122.0	285.8	286.4	82.5	51.4	83.4	1916.4	1909.8	2481.5	2477.0
20180429:08:09:01	23.2	15.7	-4.2	23.51	0.25	2.2	0.25	2.0	122.0	285.8	286.3	82.4	51.3	83.4	1917.8	1911.2	2483.3	2478.9
20180429:08:14:01	23.2	15.7	-4.2	23.50	0.25	2.2	0.25	2.0	122.0	285.7	286.3	82.4	51.4	83.4	1919.1	1912.5	2485.0	2480.6
20180429:08:19:01	23.2	15.7	-4.2	23.50	0.25	2.2	0.25	2.0	122.0	285.7	286.3	82.4	51.4	83.4	1920.5	1913.9	2486.8	2482.4
20180429:08:24:01	23.2	15.6	-4.2	23.50	0.25	2.2	0.25	2.0	121.9	285.7	286.3	82.4	51.4	83.3	1921.8	1915.2	2488.5	2484.1
20180429:08:29:01	23.2	15.7	-4.2	23.50	0.25	2.2	0.25	2.0	122.0	285.7	286.3	82.4	51.4	83.3	1923.1	1916.6	2490.3	2485.9
20180429:08:34:01	23.2	15.8	-4.1	23.50	0.25	2.2	0.25	2.0	122.2	285.7	286.3	82.4	51.4	83.3	1924.5	1917.9	2492.1	2487.7
20180429:08:39:01	23.2	15.8	-4.1	23.49	0.25	2.2	0.25	2.0	122.2	285.8	286.3	82.4	51.4	83.3	1925.9	1919.3	2493.8	2489.4
20180429:08:44:01	23.2	15.9	-4.1	23.49	0.25	2.2	0.25	1.9	122.4	285.7	286.3	82.4	51.3	83.3	1927.2	1920.6	2495.6	2491.2
20180429:08:49:01	23.2	15.7	-4.2	23.50	0.25	2.2	0.25	1.9	122.1	285.7	286.3	82.4	51.3	83.3	1928.6	1922.0	2497.4	2492.9
20180429:08:54:01	23.2	15.7	-4.2	23.50	0.25	2.2	0.25	1.9	122.0	285.7	286.3	82.4	51.4	83.3	1929.9	1923.3	2499.1	2494.7
20180429:08:59:01	23.2	15.7	-4.1	23.50	0.25	2.2	0.25	1.9	122.0	285.7	286.3	82.5	51.4	83.3	1931.3	1924.7	2500.9	2496.5
20180429:09:04:01	23.2	15.7	-4.1	23.50	0.25	2.2	0.25	2.0	122.1	285.8	286.4	82.5	51.4	83.3	1932.6	1926.0	2502.7	2498.2
20180429:09:09:01	23.2	15.7	-4.1	23.49	0.25	2.2	0.25	2.0	122.1	285.8	286.4	82.6	51.4	83.3	1933.9	1927.3	2504.4	2500.0
20180429:09:14:01	23.2	15.8	-4.1	23.49	0.25	2.2	0.25	2.0	122.2	285.8	286.3	82.6	51.4	83.4	1935.3	1928.7	2506.2	2501.7
20180429:09:19:01	23.2	15.9	-4.1	23.50	0.25	2.2	0.25	2.0	122.6	285.8	286.3	82.6	51.4	83.4	1936.7	1930.0	2508.0	2503.5
20180429:09:24:01	23.2	15.9	-4.2	23.50	0.25	2.2	0.25	1.9	122.4	285.8	286.3	82.6	51.4	83.4	1938.0	1931.4	2509.7	2505.3
20180429:09:29:01	23.2	15.0	-4.3	23.50	0.25	2.1	0.25	1.9	120.3	285.7	286.3	82.7	51.4	83.4	1939.4	1932.7	2511.5	2507.0
20180429:09:34:01	23.2	15.1	-4.3	23.50	0.25	2.2	0.25	1.9	120.7	285.7	286.3	82.7	51.4	83.4	1940.7	1934.1	2513.3	2508.8
20180429:09:39:01	23.2	15.4	-4.2	23.50	0.25	2.2	0.25	1.9	121.3	285.8	286.4	82.7	51.4	83.4	1942.0	1935.4	2515.0	2510.6
20180429:09:44:01	23.2	15.4	-4.2	23.50	0.25	2.2	0.25	1.9	121.4	285.8	286.4	82.7	51.4	83.5	1943.4	1936.7	2516.8	2512.3
20180429:09:49:01	23.2	15.5	-4.2	23.50	0.25	2.2	0.25	1.9	121.7	285.8	286.3	82.7	51.4	83.5	1944.7	1938.1	2518.5	2514.1
20180429:09:54:01	23.2	15.7	-4.2	23.50	0.25	2.2	0.25	2.0	121.9	285.7	286.3	82.8	51.4	83.5	1946.1	1939.4	2520.3	2515.8
20180429:09:59:01	23.2	15.8	-4.2	23.50	0.25	2.2	0.25	2.0	122.2	285.8	286.3	82.8	51.4	83.6	1947.4	1940.8	2522.1	2517.6
20180429:10:04:01	23.2	15.8	-4.1	23.50	0.25	2.2	0.25	2.0	122.3	285.8	286.3	82.9	51.4	83.6	1948.8	1942.1	2523.8	2519.3
20180429:10:09:01	23.2	15.8	-4.2	23.50	0.25	2.2	0.25	2.0	122.3	285.8	286.3	82.9	51.4	83.6	1950.1	1943.4	2525.6	2521.1
20180429:10:14:01	23.2	15.9	-4.1	23.50	0.25	2.2	0.25	2.0	122.6	285.8	286.4	82.9	51.4	83.7	1951.5	1944.8	2527.4	2522.9
20180429:10:19:01	23.2	16.0	-4.2	23.49	0.25	2.2	0.25	2.0	122.7	285.8	286.3	82.9	51.4	83.7	1952.8	1946.1	2529.1	2524.6
20180429:10:24:01	23.2	15.9	-4.1	23.49	0.25	2.2	0.25	1.9	122.6	285.8	286.4	83.0	51.4	83.7	1954.2	1947.5	2530.9	2526.4
20180429:10:29:01	23.2	15.9	-4.2	23.49	0.25	2.2	0.25	2.0	122.5	285.8	286.3	83.0	51.4	83.7	1955.5	1948.8	2532.7	2528.2
20180429:10:34:01	23.2	15.9	-4.2	23.49	0.25	2.2	0.25	1.9	122.6	285.7	286.3	83.1	51.4	83.8	1956.9	1950.2	2534.4	2529.9
20180429:10:39:01	23.2	15.8	-4.2	23.49	0.25	2.2	0.25	1.9	122.2	285.8	286.4	83.1	51.4	83.8	1958.2	1951.5	2536.2	2531.7
20180429:10:44:01	23.2	15.3	-4.3	23.49	0.25	2.2	0.25	1.9	121.2	285.8	286.4	83.1	51.4	83.9	1959.6	1952.9	2538.0	2533.4
20180429:10:49:01	23.2	14.8	-4.2	23.48	0.25	2.2	0.25	1.9	119.9	285.7	286.3	83.2	51.4	83.9	1960.9	1954.2	2539.7	2535.2
20180429:10:54:01	23.2	15.5	-4.1	23.49	0.25	2.2	0.25	2.0	121.4	285.8	286.3	83.2	51.4	83.9	1962.3	1955.6	2541.5	2537.0
20180429:10:59:01	23.2	15.6	-4.1	23.48	0.25	2.2	0.25	2.0	121.7	285.8	286.3	83.2	51.4	84.0	1963.6	1956.9	2543.3	2538.7
20180429:11:04:01	23.2	15.6	-4.0	23.48	0.25	2.2	0.25	2.0	121.9	285.8	286.4	83.3	51.4	84.0	1964.9	1958.3	2545.0	2540.5
20180429:11:09:01	23.2	15.6	-4.0	23.47	0.25	2.2	0.25	2.0	121.8	285.8	286.3	83.3	51.4	84.0	1966.3	1959.6	2546.8	2542.3
20180429:11:14:01	23.2	15.6	-4.1	23.47	0.25	2.2	0.25	2.0	121.9	285.8	286.3	83.3	51.4	84.0	1967.6	1960.9	2548.5	2544.0
20180429:11:19:01	23.2	15.6	-4.1	23.48	0.25	2.2	0.25	1.9	121.9	285.8	286.4	83.3	51.4	84.0	1969.0	1962.3	2550.3	2545.8
20180429:11:24:01	23.2	15.7	-4.0	23.47	0.25	2.2	0.25	1.9	121.9	285.8	286.4	83.3	51.3	84.0	1970.3	1963.6	2552.1	2547.5
20180429:11:29:01	23.2	15.7	-4.1	23.47	0.25	2.2	0.25	1.9	122.1	285.8	286.4	83.3	51.4	84.1	1971.7	1965.0	2553.8	2549.3
20180429:11:34:01	23.2	15.8	-4.0	23.47	0.25	2.2	0.25	2.0	122.2	285.8	286.4	83.3	51.4	84.1	1973.0	1966.3	2555.6	2551.1
20180429:11:39:01	23.2	15.8	-4.0	23.47	0.25	2.2	0.25	2.0	122.3	285.8	286.2	83.3	51.4	84.1	1974.4	1967.6	2557.4	2552.8
20180429:11:44:01	23.2	15.9	-4.0	23.46	0.25	2.2	0.25	2.0	122.5	285.8	286.3	83.3	51.4	84.2	1975.7	1969.0	2559.1	2554.6
20180429:11:49:01	23.2	15.9	-4.0	23.46	0.25	2.2	0.25	2.0	122.6	285.8	286.2	83.3	51.4	84.2	1977.1	1970.3	2560.9	2556.4
20180429:11:54:01	23.2	15.2	-4.1	23.46	0.25	2.2	0.25	1.9	120.7	285.7	286.2	83.3	51.4	84.2	1978.4	1971.7	2562.7	2558.2
20180429:11:59:01	23.2	15.4	-4.1	23.46	0.25	2.2	0.25	2.0	121.2	285.7	286.2	83.3	51.4	84.2	1979.8	1973.0	2564.5	2559.9
20180429:12:04:01	23.2	15.8	-4.1	23.46	0.25	2.2	0.25	2.0	122.2	285.8	286.3	83.4	51.4	84.2	1981.1	1974.4	2566.3	2561.7
20180429:12:09:01	23.2	15.9	-4.1	23.46	0.25	2.2	0.25	2.0	122.5	285.8	286.3	83.4	51.4	84.3	1982.5	1975.7	2568.0	2563.5
20180429:12:14:01	23.2	16.0	-4.1	23.46	0.25	2.2	0.25	2.0	122.7	285.8	286.3	83.4	51.4	84.3	1983.8	1977.1	2569.8	2565.2
20180429:12:19:01	23.2	16.1	-4.1	23.46	0.25	2.2	0.25	2.0	122.9	285.8	286.3	83.4	51.4	84.3	1985.2	1978.4	2571.6	2567.0
20180429:12:24:01	23.2	16.1	-4.1	23.46	0.25	2.2	0.25	2.0	123.0	285.8	286.3	83.4	51.4	84.3	1986.6	1979.8	2573.4	2568.8
20180429:12:29:01	23.2	16.1	-4.1	23.45	0.25	2.2	0.25	2.0	123.0	285.8	286.3	83.4	51.4	84.3	1987.9	1981.1	2575.1	2570.6
20180429:12:34:01	23.2	16.1	-4.1	23.45	0.25	2.2	0.25	2.0	122.8	285.8	286.2	83.4	51.4	84.3	1989.3	1982.5	2576.9	2572.4
20180429:12:39:01	23.2	16.1	-4.1	23.45	0.25	2.2	0.25	2.0	122.8	285.7	286.2	83.4	51.4	84.3	1990.6	1983.8	2578.7	2574.1
20180429:12:44:01	23.2	16.1	-4.0	23.45	0.25	2.2	0.25	2.0	123.0	285.7	286.2	83.5	51.4	84.4	1992.0	1985.2	2580.5	2575.9
20180429:12:49:01	23.2	16.0	-4.0	23.44	0.25	2.2	0.25	2.0	122.7	285.7	286.3	83.6	51.4	84.4	1993.3	1986.5	2582.2	2577.7
20180429:12:54:01	23.1	16.1	-4.0	23.44	0.25	2.2	0.25	2.0	122.8	285.7	286.3	83.6	51.4	84.4	1994.7	1987.9	2584.0	2579.4
20180429:12:59:01	23.1	15.9	-4.0	23.44	0.25	2.2	0.25	2.0	122.4	285.7	286.3	83.6	51.4	84.4	1996.0	1989.2	2585.8	2581.2
20180429:13:04:01	23.1	15.2	-3.9	23.43	0.25	2.2	0.25	2.0	120.9	285.6	286.2	83.7	51.4	84.5	1997.4	1990.6	2587.6	2583.0
20180429:13:09:01	23.1	15.7	-3.9	23.44	0.25	2.2	0.25	2.0	121.9	285.7	286.2	83.7	51.4	84.5	1998.7	1991.9	2589.3	2584.7
20180429:13:14:01	23.1	15.9	-3.9	23.43	0.25	2.2	0.25	1.9	122.3	285.7	286.2	83.7	51.4	84.5	2000.0	1993.3	2591.1	2586.5
20180429:13:19:01	23.1	15.9	-3.8	23.43	0.25	2.2	0.25	1.9	122.5	285.7	286.3	83.7	51.5	84.6	2001.4	1994.6	2592.9	2588.3
20180429:13:24:01	23.1	15.9	-3.9	23.43	0.25	2.2	0.25	2.0	122.5	285.7	286.2	83.8	51.4	84.6	2002.8	1995.9	2594.7	2590.0
20180429:13:29:01	23.1	16.0	-4.0	23.44	0.25	2.2	0.25	2.0	122.7	285.7	286.3	83.8	51.5	84.6	2004.1	1997.3	2596.4	2591.9
20180429:13:34:01	23.1	16.2	-3.9	23.42	0.25	2.2	0.25	2.0	123.1	285.7	286.2	83.9	51.4	84.7	2005.5	1998.6	2598.2	2593.6
20180429:13:39:01	23.1	16.2	-3.9	23.43	0.25	2.2	0.25	2.0	123.0	285.7	286.3	83.9	51.4	84.7	2006.8	2000.0	2600.0	2595.4
20180429:13:44:01	23.1	16.1	-4.0	23.43	0.25	2.2	0.25	2.0	122.9	285.7	286.3	84.0	51.4	84.7	2008.1	2001.3	2601.7	2597.2
20180429:13:49:01	23.1	16.0	-3.9	23.43	0.25	2.2	0.25	1.9	122.7	285.6	286.3	84.0	51.5	84.8	2009.5	2002.6	2603.6	2598.9
20180429:13:54:01	23.1	16.0	-3.9	23.43	0.25	2.2	0.25	1.9	122.6	285.7	286.3	84.1	51.4	84.9	2010.9	2004.0	2605.3	2600.7
20180429:13:59:01	23.1	16.0	-3.9	23.42	0.25	2.2	0.25	1.9	122.6	285.7	286.3	84.1	51.5	84.9	2012.2	2005.3	2607.1	2602.4
20180429:14:04:01	23.1	16.0	-3.9	23.42	0.25	2.2	0.25	1.9	122.5	285.7	286.3	84.2	51.5	84.9	2013.6	2006.7	2608.9	2604.2
20180429:14:09:01	23.1	15.3	-4.1	23.42	0.25	2.2	0.25	1.9	121.0	285.7	286.3	84.3	51.5	85.0	2014.9	2008.0	2610.6	2606.0
20180429:14:14:01	23.1	15.1	-4.0	23.42	0.25	2.2	0.25	1.9	120.5	285.6	286.3	84.3	51.4	85.0	2016.2	2009.3	2612.4	2607.7
20180429:14:19:01	23.1	15.6	-3.9	23.42	0.25	2.2	0.25	2.0	121.6	285.7	286.3	84.3	51.5	85.1	2017.6	2010.7	2614.2	2609.5
20180429:14:24:01	23.1	15.8	-3.9	23.41	0.25	2.2	0.25	2.0	122.1	285.8	286.3	84.4	51.5	85.1	2018.9	2012.0	2615.9	2611.3
20180429:14:29:01	23.1	15.8	-3.9	23.41	0.25	2.2	0.25	2.0	122.3	285.7	286.2	84.4	51.5	85.2	2020.2	2013.3	2617.7	2613.0
20180429:14:34:01	23.1	16.0	-3.7	23.40	0.25	2.2	0.25	2.0	122.6	285.8	286.3	84.5	51.5	85.2	2021.6	2014.7	2619.5	2614.8
20180429:14:39:01	23.1	16.1	-3.9	23.40	0.25	2.2	0.25	2.0	122.9	285.7	286.3	84.5	51.5	85.3	2022.9	2016.0	2621.2	2616.6
20180429:14:44:01	23.1	16.1	-3.9	23.40	0.25	2.2	0.25	2.0	122.9	285.7	286.3	84.6	51.5	85.3	2024.3	2017.4	2623.0	2618.4

Time:	Stack Pressure:	Sat% H2O:	Static:	Barometric:	Flowmeter1:	Vacuum1:	Flowmeter2:	Vacuum2:	Stack Temp:	Sorbent Temp:	Probe Temp:	DGM#1 Temp:	Condenser Temp:	DGM#2 Temp:	DGM1*:	DGM2*:	DGM1:	DGM2:
day:hh:mm:ss	in-Hg	Percent	in-H2O	in-Hg	l/min	in-Hg	l/min	in-Hg	degF	degF	degF	degF	degF	degF	liters STP	liters STP	liters nominal	liters nominal
20180429:14:49:01	23.1	16.1	-4.0	23.41	0.25	2.2	0.25	2.0	122.8	285.8	286.3	84.6	51.5	85.3	2025.7	2018.7	2624.8	2620.1
20180429:14:54:01	23.1	16.1	-4.0	23.40	0.25	2.2	0.25	2.0	122.7	285.8	286.3	84.7	51.5	85.4	2027.0	2020.0	2626.6	2621.9
20180429:14:59:01	23.1	15.9	-3.9	23.41	0.25	2.2	0.25	1.9	122.4	285.7	286.2	84.7	51.5	85.4	2028.3	2021.4	2628.3	2623.7
20180429:15:04:01	23.1	15.9	-3.9	23.41	0.25	2.2	0.25	2.0	122.4	285.7	286.3	84.7	51.6	85.5	2029.7	2022.7	2630.1	2625.4
20180429:15:09:01	23.1	16.1	-3.8	23.40	0.25	2.2	0.25	2.0	122.8	285.7	286.3	84.8	51.5	85.5	2031.0	2024.1	2631.9	2627.2
20180429:15:14:01	23.1	16.1	-3.7	23.39	0.25	2.2	0.25	2.0	122.8	285.7	286.3	84.8	51.5	85.6	2032.4	2025.4	2633.7	2629.0
20180429:15:19:01	23.1	15.1	-3.8	23.39	0.25	2.2	0.25	1.9	120.5	285.7	286.3	84.9	51.5	85.6	2033.7	2026.8	2635.5	2630.8
20180429:15:24:01	23.1	15.6	-3.7	23.39	0.25	2.2	0.25	1.9	121.6	285.6	286.3	84.9	51.6	85.6	2035.1	2028.1	2637.2	2632.6
20180429:15:29:01	23.1	15.8	-3.7	23.39	0.25	2.2	0.25	1.9	122.1	285.7	286.3	85.0	51.5	85.7	2036.4	2029.5	2639.0	2634.3
20180429:15:34:01	23.1	15.9	-3.7	23.39	0.25	2.2	0.25	1.9	122.3	285.7	286.3	85.0	51.6	85.7	2037.8	2030.8	2640.8	2636.1
20180429:15:39:01	23.1	15.9	-3.8	23.39	0.25	2.2	0.25	1.9	122.3	285.8	286.3	85.0	51.5	85.7	2039.1	2032.2	2642.6	2637.9
20180429:15:44:01	23.1	16.0	-3.8	23.39	0.25	2.2	0.25	1.9	122.6	285.8	286.3	85.0	51.6	85.8	2040.4	2033.5	2644.3	2639.6
20180429:15:49:01	23.1	16.1	-3.7	23.39	0.25	2.2	0.25	1.9	122.7	285.7	286.2	85.0	51.5	85.8	2041.8	2034.8	2646.2	2641.4
20180429:15:54:01	23.1	15.9	-3.7	23.39	0.25	2.2	0.25	2.0	122.4	285.7	286.3	85.1	51.6	85.9	2043.2	2036.2	2647.9	2643.2
20180429:15:59:01	23.1	15.9	-3.7	23.39	0.25	2.2	0.25	2.0	122.4	285.8	286.3	85.1	51.5	85.9	2044.5	2037.5	2649.7	2645.0
20180429:16:04:01	23.1	16.1	-3.8	23.39	0.25	2.2	0.25	2.0	122.8	285.8	286.3	85.1	51.5	85.9	2045.9	2038.9	2651.5	2646.8
20180429:16:09:01	23.1	16.1	-3.8	23.39	0.25	2.2	0.25	2.0	122.8	285.8	286.4	85.1	51.5	85.9	2047.2	2040.2	2653.3	2648.6
20180429:16:14:01	23.1	16.1	-3.8	23.39	0.25	2.2	0.25	1.9	122.9	285.8	286.3	85.2	51.6	86.0	2048.5	2041.6	2655.0	2650.3
20180429:16:19:01	23.1	16.1	-3.8	23.39	0.25	2.2	0.25	1.9	122.8	285.7	286.3	85.2	51.5	86.0	2049.9	2042.9	2656.9	2652.1
20180429:16:24:01	23.1	15.5	-4.0	23.39	0.25	2.2	0.25	1.9	121.5	285.7	286.3	85.2	51.6	86.0	2051.3	2044.3	2658.6	2653.9
20180429:16:29:01	23.1	15.2	-3.8	23.39	0.25	2.2	0.25	1.9	120.6	285.7	286.3	85.2	51.6	86.0	2052.6	2045.6	2660.4	2655.6
20180429:16:34:01	23.1	15.6	-3.7	23.39	0.25	2.2	0.25	1.9	121.8	285.7	286.3	85.2	51.5	86.0	2054.0	2047.0	2662.2	2657.4
20180429:16:39:01	23.1	15.9	-3.7	23.39	0.25	2.2	0.25	2.0	122.4	285.7	286.2	85.2	51.6	86.0	2055.3	2048.3	2664.0	2659.2
20180429:16:44:01	23.1	16.0	-3.7	23.39	0.25	2.2	0.25	2.0	122.6	285.7	286.3	85.2	51.5	86.0	2056.6	2049.6	2665.7	2661.0
20180429:16:49:01	23.1	16.1	-3.8	23.39	0.25	2.2	0.25	2.0	122.7	285.7	286.3	85.2	51.6	86.0	2058.0	2051.0	2667.5	2662.8
20180429:16:54:01	23.1	16.0	-3.8	23.39	0.25	2.2	0.25	2.0	122.5	285.7	286.2	85.2	51.5	86.0	2059.4	2052.3	2669.3	2664.5
20180429:16:59:01	23.1	16.0	-3.8	23.39	0.25	2.2	0.25	1.9	122.5	285.7	286.2	85.2	51.5	86.0	2060.7	2053.7	2671.1	2666.3
20180429:17:04:01	23.1	16.0	-3.8	23.39	0.25	2.2	0.25	1.9	122.7	285.7	286.3	85.2	51.5	86.0	2062.1	2055.0	2672.9	2668.1
20180429:17:09:01	23.1	15.9	-3.8	23.39	0.25	2.2	0.25	1.9	122.5	285.7	286.3	85.2	51.6	86.0	2063.4	2056.3	2674.7	2669.8
20180429:17:14:01	23.1	16.0	-3.8	23.39	0.25	2.2	0.25	2.0	122.6	285.7	286.3	85.2	51.5	86.0	2064.7	2057.7	2676.4	2671.6
20180429:17:19:01	23.1	16.0	-3.8	23.39	0.25	2.2	0.25	2.0	122.6	285.8	286.3	85.2	51.6	86.0	2066.1	2059.0	2678.2	2673.4
20180429:17:24:01	23.1	15.9	-3.8	23.39	0.25	2.2	0.25	2.0	122.4	285.8	286.4	85.2	51.6	86.0	2067.4	2060.4	2680.0	2675.2
20180429:17:29:01	23.1	16.0	-3.9	23.39	0.25	2.2	0.25	2.0	122.5	285.8	286.3	85.2	51.6	86.0	2068.8	2061.7	2681.7	2677.0
20180429:17:34:01	23.1	15.2	-4.0	23.40	0.25	2.2	0.25	1.9	120.8	285.7	286.3	85.2	51.6	86.0	2070.1	2063.0	2683.6	2678.7
20180429:17:39:01	23.1	15.6	-3.8	23.39	0.25	2.2	0.25	2.0	121.8	285.8	286.3	85.2	51.6	86.0	2071.5	2064.4	2685.3	2680.5
20180429:17:44:01	23.1	16.0	-3.9	23.39	0.25	2.2	0.25	2.0	122.5	285.8	286.3	85.2	51.5	86.0	2072.8	2065.7	2687.1	2682.3
20180429:17:49:01	23.1	16.1	-3.8	23.39	0.25	2.2	0.25	2.0	122.8	285.8	286.3	85.2	51.6	86.0	2074.2	2067.1	2688.9	2684.1
20180429:17:54:01	23.1	16.1	-3.8	23.39	0.25	2.2	0.25	2.0	122.8	285.7	286.3	85.2	51.6	86.0	2075.5	2068.4	2690.7	2685.9
20180429:17:59:01	23.1	16.1	-3.8	23.39	0.25	2.2	0.25	2.0	122.9	285.7	286.3	85.1	51.6	86.0	2076.9	2069.8	2692.4	2687.6
20180429:18:04:01	23.1	16.2	-3.8	23.39	0.25	2.2	0.25	2.0	123.1	285.7	286.3	85.1	51.5	86.0	2078.2	2071.1	2694.2	2689.4
20180429:18:09:01	23.1	16.1	-3.9	23.39	0.25	2.2	0.25	2.0	122.9	285.7	286.3	85.1	51.6	86.0	2079.6	2072.5	2696.0	2691.2
20180429:18:14:01	23.1	16.2	-3.9	23.39	0.25	2.2	0.25	1.9	123.0	285.7	286.3	85.2	51.6	86.0	2080.9	2073.8	2697.8	2693.0
20180429:18:19:01	23.1	16.2	-3.9	23.40	0.25	2.2	0.25	2.0	123.0	285.7	286.3	85.2	51.6	86.0	2082.3	2075.2	2699.6	2694.8
20180429:18:24:01	23.1	16.2	-3.9	23.39	0.25	2.2	0.25	2.0	123.0	285.7	286.3	85.2	51.6	86.0	2083.7	2076.5	2701.4	2696.6
20180429:18:29:01	23.1	16.1	-3.9	23.39	0.25	2.2	0.25	2.0	122.8	285.7	286.3	85.2	51.6	86.0	2085.0	2077.9	2703.2	2698.3
20180429:18:34:01	23.1	16.1	-3.9	23.39	0.25	2.2	0.25	2.0	122.8	285.7	286.3	85.2	51.5	86.0	2086.3	2079.2	2704.9	2700.1
20180429:18:39:01	23.1	15.5	-3.9	23.39	0.25	2.2	0.25	1.9	121.5	285.7	286.3	85.2	51.5	86.0	2087.7	2080.5	2706.8	2701.9
20180429:18:44:01	23.1	15.3	-3.9	23.40	0.25	2.2	0.25	2.0	121.1	285.7	286.3	85.2	51.6	86.0	2089.0	2081.9	2708.5	2703.7
20180429:18:49:01	23.1	15.8	-3.8	23.39	0.25	2.2	0.25	2.0	122.1	285.7	286.3	85.1	51.5	86.0	2090.4	2083.2	2710.3	2705.5
20180429:18:54:01	23.1	15.8	-3.7	23.39	0.25	2.2	0.25	2.0	122.2	285.7	286.3	85.1	51.6	86.0	2091.8	2084.6	2712.1	2707.2
20180429:18:59:01	23.1	15.8	-3.7	23.39	0.25	2.2	0.25	2.0	122.1	285.8	286.3	85.1	51.5	86.0	2093.1	2086.0	2713.9	2709.0
20180429:19:04:01	23.1	16.0	-3.8	23.39	0.25	2.2	0.25	2.0	122.6	285.8	286.3	85.1	51.6	86.0	2094.4	2087.3	2715.6	2710.8
20180429:19:09:01	23.1	16.1	-3.8	23.40	0.25	2.2	0.25	2.0	122.9	285.8	286.3	85.1	51.6	85.9	2095.8	2088.6	2717.5	2712.6
20180429:19:14:01	23.1	16.1	-3.8	23.40	0.25	2.2	0.25	2.0	122.8	285.7	286.3	85.0	51.6	85.9	2097.2	2090.0	2719.3	2714.4
20180429:19:19:01	23.1	16.1	-3.9	23.40	0.25	2.2	0.25	1.9	122.8	285.8	286.3	85.0	51.6	85.9	2098.5	2091.3	2721.0	2716.1
20180429:19:24:01	23.1	16.0	-3.9	23.40	0.25	2.2	0.25	1.9	122.6	285.7	286.3	85.0	51.6	85.9	2099.9	2092.7	2722.9	2717.9
20180429:19:29:01	23.1	16.0	-3.9	23.40	0.25	2.2	0.25	1.9	122.5	285.7	286.3	85.0	51.6	85.9	2101.2	2094.1	2724.6	2719.7
20180429:19:34:01	23.1	15.8	-3.9	23.40	0.25	2.2	0.25	1.9	122.2	285.7	286.2	85.0	51.6	85.9	2102.6	2095.4	2726.4	2721.5
20180429:19:39:02	23.1	15.9	-3.9	23.40	0.25	2.2	0.25	2.0	122.3	285.7	286.3	85.0	51.6	85.9	2104.0	2096.7	2728.2	2723.3
20180429:19:44:02	23.1	15.8	-3.9	23.40	0.25	2.2	0.25	2.0	122.2	285.7	286.2	85.0	51.6	85.9	2105.3	2098.1	2730.0	2725.1
20180429:19:49:02	23.1	15.8	-3.9	23.40	0.25	2.2	0.25	2.0	122.1	285.7	286.3	85.0	51.6	85.9	2106.6	2099.4	2731.7	2726.8
20180429:19:54:02	23.1	15.7	-3.9	23.40	0.25	2.2	0.25	2.0	121.8	285.7	286.3	85.0	51.6	85.9	2108.0	2100.8	2733.5	2728.6
20180429:19:59:02	23.1	15.7	-3.9	23.41	0.25	2.2	0.25	2.0	121.8	285.8	286.4	85.0	51.6	85.9	2109.4	2102.1	2735.3	2730.4
20180429:20:04:02	23.1	15.6	-3.9	23.41	0.25	2.2	0.25	2.0	121.7	285.7	286.4	85.0	51.6	85.8	2110.7	2103.4	2737.1	2732.2
20180429:20:09:02	23.1	15.5	-3.9	23.41	0.25	2.2	0.25	2.0	121.5	285.7	286.3	85.0	51.6	85.8	2112.1	2104.8	2738.9	2734.0
20180429:20:14:02	23.1	15.4	-3.8	23.41	0.25	2.2	0.25	2.0	121.3	285.7	286.3	85.0	51.6	85.8	2113.4	2106.1	2740.7	2735.7
20180429:20:19:02	23.1	15.4	-3.8	23.41	0.25	2.2	0.25	2.0	121.2	285.7	286.3	85.0	51.6	85.8	2114.8	2107.5	2742.5	2737.5
20180429:20:24:02	23.1	15.3	-3.8	23.41	0.25	2.2	0.25	2.0	121.0	285.7	286.3	85.0	51.6	85.8	2116.1	2108.9	2744.3	2739.3
20180429:20:29:02	23.1	15.3	-3.8	23.42	0.25	2.2	0.25	2.0	120.9	285.7	286.3	85.0	51.6	85.8	2117.5	2110.2	2746.1	2741.1
20180429:20:34:02	23.1	15.3	-3.8	23.42	0.25	2.2	0.25	2.0	120.9	285.7	286.3	85.0	51.6	85.8	2118.8	2111.6	2747.8	2742.9
20180429:20:39:02	23.1	15.2	-3.8	23.42	0.25	2.2	0.25	2.0	120.8	285.8	286.4	85.0	51.7	85.8	2120.2	2112.9	2749.6	2744.7
20180429:20:44:02	23.1	15.3	-3.8	23.42	0.25	2.2	0.25	2.0	121.0	285.8	286.4	85.0	51.6	85.8	2121.6	2114.3	2751.5	2746.5
20180429:20:49:02	23.1	15.3	-3.9	23.42	0.25	2.2	0.25	2.0	121.0	285.8	286.4	85.0	51.7	85.7	2122.9	2115.7	2753.2	2748.3
20180429:20:54:02	23.1	14.7	-3.9	23.42	0.25	2.2	0.25	2.0	119.5	285.7	286.4	84.9	51.6	85.7	2124.3	2117.0	2755.0	2750.1
20180429:20:59:02	23.1	15.0	-3.7	23.42	0.25	2.2	0.25	2.0	120.3	285.7	286.3	84.9	51.6	85.7	2125.7	2118.3	2756.8	2751.8
20180429:21:04:02	23.1	15.2	-3.7	23.41	0.25	2.2	0.25	2.0	120.7	285.7	286.3	84.9	51.6	85.7	2127.0	2119.7	2758.6	2753.7
20180429:21:09:02	23.1	15.3	-3.7	23.41	0.25	2.2	0.25	2.0	121.0	285.8	286.3	84.9	51.6	85.7	2128.4	2121.1	2760.4	2755.4
20180429:21:14:02	23.1	15.4	-3.7	23.41	0.25	2.2	0.25	2.0	121.3	285.8	286.3	84.9	51.6	85.7	2129.7	2122.4	2762.2	2757.2
20180429:21:19:02	23.1	15.5	-3.7	23.41	0.25	2.2	0.25	2.0	121.4	285.8	286.4	84.9	51.6	85.7	2131.1	2123.8	2764.0	2759.0
20180429:21:24:02	23.1	15.6	-3.7	23.41	0.25	2.3	0.25	2.0	121.7	285.9	286.4	84.8	51.6	85.6	2132.4	2125.1	2765.8	2760.8
20180429:21:29:02	23.1	15.7	-3.7	23.41	0.25	2.3	0.25	2.0	122.1	285.8	286.4	84.7	51.6	85.6	2133.8	2126.5	2767.6	2762.6
20180429:21:34:02	23.1	15.8	-3.8	23.42	0.25	2.3	0.25	2.0	122.2	285.8	286.3	84.7	51.5	85.6	2135.2	2127.8	2769.4	2764.4
20180429:21:39:02	23.1	15.9	-3.8	23.41	0.25	2.2	0.25	2.0	122.4	285.8	286.4	84.7	51.6	85.6	2136.5	2129.2	2771.2	2766.1
20180429:21:44:02	23.1	15.9	-3.8	23.42	0.25	2.2	0.25	2.0	122.3	285.8	286.3	84.6	51.5	85.5	2137.9	2130.5	2773.0	2767.9
20180429:21:49:02	23.1	15.9	-3.9	23.42	0.25	2.2	0.25	2.0	122.3	285.9	286.4	84.6	51.6	85.5	2139.3	2131.9	2774.8	2769.7
20180429:21:54:02	23.1	15.3	-4.0	23.42	0.25	2.2	0.25	2.0	120.9	285.8	286.4	84.6	51.5	85.4	2140.6	2133.3	2776.5	2771.5
20180429:21:59:02	23.1	15.6	-4.0	23.42	0.25	2.2	0.25	2.0	121.7	285.7	286.3	84.5	51.6	85.4	2142.0	2134.6	2778.3	2773.3
20180429:22:04:02	23.1	15.9	-4.0	23.42	0.25	2.2	0.25	2.0	122.5	285.7	286.3	84.5	51.5	85.4	2143.4	2136.0	2780.2	2775.1
20180429:22:09:02	23.1	16.0	-4.0	23.42	0.25	2.2	0.25	2.0	122.7	285.7	286.4	84.4	51.6	85.3	2144.7	2137.3	2781.9	2776.9

Time:	Stack Pressure:	Sat% H2O:	Static:	Barometric:	Flowmeter1:	Vacuum1:	Flowmeter2:	Vacuum2:	Stack Temp:	Sorbent Temp:	Probe Temp:	DGM#1 Temp:	Condenser Temp:	DGM#2 Temp:	DGM1*:	DGM2*:	DGM1:	DGM2:
day:hh:mm:ss	in-Hg	Percent	in-H2O	in-Hg	l/min	in-Hg	l/min	in-Hg	degF	degF	degF	degF	degF	degF	liters STP	liters STP	liters nominal	liters nominal
20180429:22:14:02	23.1	16.0	-3.9	23.42	0.25	2.2	0.25	2.0	122.6	285.8	286.3	84.5	51.5	85.3	2146.0	2138.7	2783.7	2778.7
20180429:22:19:02	23.1	16.0	-3.9	23.42	0.25	2.2	0.25	2.0	122.6	285.8	286.4	84.4	51.6	85.3	2147.4	2140.0	2785.5	2780.5
20180429:22:24:02	23.1	15.9	-3.9	23.42	0.25	2.2	0.25	2.0	122.5	285.8	286.4	84.4	51.6	85.2	2148.8	2141.4	2787.3	2782.2
20180429:22:29:02	23.1	15.9	-3.8	23.42	0.25	2.2	0.25	2.0	122.5	285.8	286.4	84.4	51.6	85.2	2150.1	2142.8	2789.1	2784.1
20180429:22:34:02	23.1	16.1	-3.7	23.41	0.25	2.2	0.25	2.0	122.8	285.8	286.3	84.3	51.5	85.2	2151.5	2144.1	2790.9	2785.8
20180429:22:39:02	23.1	16.1	-3.7	23.41	0.25	2.2	0.25	2.0	122.8	285.8	286.4	84.3	51.6	85.2	2152.9	2145.4	2792.7	2787.6
20180429:22:44:02	23.1	16.0	-3.8	23.42	0.25	2.2	0.25	2.0	122.7	285.8	286.3	84.3	51.5	85.1	2154.2	2146.8	2794.5	2789.4
20180429:22:49:02	23.1	16.0	-3.9	23.42	0.25	2.2	0.25	2.0	122.7	285.8	286.4	84.3	51.6	85.1	2155.6	2148.2	2796.3	2791.2
20180429:22:54:02	23.1	16.1	-3.9	23.42	0.25	2.2	0.25	2.0	122.9	285.8	286.4	84.3	51.6	85.1	2156.9	2149.5	2798.1	2793.0
20180429:22:59:02	23.1	15.2	-4.1	23.42	0.25	2.2	0.25	2.0	120.9	285.7	286.3	84.2	51.6	85.0	2158.3	2150.9	2799.8	2794.8
20180429:23:04:02	23.1	15.1	-4.0	23.43	0.25	2.2	0.25	2.0	120.5	285.7	286.3	84.2	51.6	85.0	2159.6	2152.2	2801.6	2796.5
20180429:23:09:02	23.1	15.6	-3.9	23.43	0.25	2.2	0.25	2.0	121.8	285.8	286.3	84.1	51.6	85.0	2161.0	2153.6	2803.4	2798.4
20180429:23:14:02	23.1	15.9	-3.9	23.43	0.25	2.2	0.25	2.0	122.4	285.8	286.4	84.1	51.6	84.9	2162.4	2155.0	2805.2	2800.1
20180429:23:19:02	23.1	16.1	-4.0	23.43	0.25	2.2	0.25	2.0	122.8	285.9	286.4	84.1	51.6	84.9	2163.7	2156.3	2807.0	2801.9
20180429:23:24:02	23.1	16.2	-4.0	23.43	0.25	2.2	0.25	2.0	123.1	285.8	286.3	84.0	51.6	84.9	2165.1	2157.7	2808.8	2803.7
20180429:23:29:02	23.1	16.4	-4.0	23.43	0.25	2.2	0.25	2.0	123.5	285.9	286.4	84.0	51.6	84.8	2166.4	2159.0	2810.6	2805.5
20180429:23:34:02	23.1	16.5	-4.0	23.43	0.25	2.2	0.25	2.0	123.7	285.8	286.3	83.9	51.6	84.7	2167.8	2160.3	2812.3	2807.3
20180429:23:39:02	23.1	16.3	-4.1	23.43	0.25	2.2	0.25	2.0	123.4	285.8	286.3	83.8	51.6	84.7	2169.2	2161.7	2814.2	2809.1
20180429:23:44:02	23.1	16.4	-4.1	23.43	0.25	2.2	0.25	1.9	123.5	285.8	286.4	83.8	51.6	84.7	2170.5	2163.1	2815.9	2810.8
20180429:23:49:02	23.1	16.3	-4.0	23.43	0.25	2.2	0.25	2.0	123.4	285.8	286.3	83.7	51.6	84.6	2171.9	2164.4	2817.7	2812.6
20180429:23:54:02	23.1	16.3	-4.0	23.43	0.25	2.2	0.25	2.0	123.2	285.7	286.3	83.7	51.6	84.6	2173.2	2165.8	2819.5	2814.4
20180429:23:59:02	23.1	16.3	-4.0	23.43	0.25	2.2	0.25	2.0	123.3	285.7	286.3	83.6	51.5	84.5	2174.6	2167.1	2821.3	2816.2
20180430:00:04:02	23.1	16.5	-4.1	23.43	0.25	2.2	0.25	2.0	123.7	285.8	286.4	83.6	51.5	84.5	2175.9	2168.5	2823.0	2818.0
20180430:00:09:02	23.1	15.4	-4.3	23.44	0.25	2.2	0.25	2.0	121.2	285.8	286.4	83.6	51.5	84.4	2177.3	2169.8	2824.9	2819.8
20180430:00:14:02	23.1	14.5	-4.2	23.44	0.25	2.2	0.25	1.9	119.1	285.6	286.3	83.5	51.5	84.3	2178.7	2171.2	2826.6	2821.5
20180430:00:19:02	23.1	15.4	-4.1	23.44	0.25	2.2	0.25	1.9	121.3	285.7	286.3	83.4	51.5	84.3	2180.0	2172.5	2828.4	2823.3
20180430:00:24:02	23.1	15.7	-4.1	23.44	0.25	2.2	0.25	1.9	122.0	285.8	286.3	83.4	51.5	84.3	2181.4	2173.9	2830.2	2825.1
20180430:00:29:02	23.1	15.8	-4.1	23.44	0.25	2.2	0.25	2.0	122.2	285.7	286.3	83.3	51.5	84.2	2182.7	2175.2	2832.0	2826.8
20180430:00:34:02	23.1	15.8	-4.2	23.44	0.25	2.2	0.25	2.0	122.3	285.7	286.3	83.3	51.5	84.2	2184.0	2176.6	2833.7	2828.6
20180430:00:39:02	23.1	15.8	-4.2	23.44	0.25	2.2	0.25	2.0	122.3	285.8	286.3	83.3	51.5	84.1	2185.4	2177.9	2835.5	2830.4
20180430:00:44:02	23.1	15.9	-4.2	23.45	0.25	2.2	0.25	2.0	122.4	285.8	286.3	83.3	51.5	84.1	2186.8	2179.3	2837.3	2832.2
20180430:00:49:02	23.1	16.0	-4.2	23.45	0.25	2.2	0.25	2.0	122.6	285.8	286.3	83.2	51.5	84.0	2188.1	2180.6	2839.0	2833.9
20180430:00:54:02	23.1	16.0	-4.2	23.44	0.25	2.2	0.25	2.0	122.7	285.7	286.3	83.2	51.5	84.0	2189.5	2181.9	2840.8	2835.7
20180430:00:59:02	23.1	16.0	-4.2	23.44	0.25	2.2	0.25	2.0	122.6	285.7	286.3	83.1	51.5	83.9	2190.8	2183.3	2842.6	2837.5
20180430:01:04:02	23.1	16.0	-4.2	23.44	0.25	2.2	0.25	2.0	122.6	285.8	286.3	83.1	51.5	83.9	2192.1	2184.6	2844.3	2839.2
20180430:01:09:02	23.1	16.0	-4.2	23.44	0.25	2.2	0.25	2.0	122.5	285.8	286.3	83.0	51.5	83.9	2193.5	2186.0	2846.1	2841.0
20180430:01:14:02	23.1	15.9	-4.2	23.44	0.25	2.2	0.25	2.0	122.4	285.8	286.4	83.0	51.5	83.8	2194.8	2187.3	2847.9	2842.8
20180430:01:19:02	23.1	15.4	-4.4	23.44	0.25	2.2	0.25	2.0	121.2	285.7	286.3	82.9	51.5	83.8	2196.2	2188.7	2849.6	2844.5
20180430:01:24:02	23.1	14.8	-4.3	23.44	0.25	2.2	0.25	1.9	119.7	285.6	286.3	82.9	51.5	83.7	2197.6	2190.0	2851.4	2846.3
20180430:01:29:02	23.1	15.3	-4.2	23.44	0.25	2.2	0.25	2.0	120.9	285.7	286.4	82.8	51.4	83.7	2198.9	2191.4	2853.2	2848.1
20180430:01:34:02	23.1	15.5	-4.1	23.44	0.25	2.2	0.25	2.0	121.5	285.7	286.3	82.8	51.5	83.6	2200.2	2192.7	2854.9	2849.8
20180430:01:39:02	23.1	15.7	-4.2	23.44	0.25	2.2	0.25	2.0	121.9	285.8	286.3	82.7	51.4	83.6	2201.6	2194.1	2856.7	2851.6
20180430:01:44:02	23.1	15.7	-4.2	23.44	0.25	2.2	0.25	2.0	122.0	285.8	286.3	82.7	51.5	83.5	2202.9	2195.4	2858.5	2853.4
20180430:01:49:02	23.1	15.9	-4.2	23.44	0.25	2.2	0.25	2.0	122.3	285.8	286.4	82.6	51.5	83.5	2204.3	2196.8	2860.3	2855.2
20180430:01:54:02	23.1	15.8	-4.1	23.44	0.25	2.2	0.25	2.0	122.2	285.8	286.3	82.6	51.5	83.4	2205.6	2198.1	2862.1	2856.9
20180430:01:59:02	23.1	15.8	-4.2	23.44	0.25	2.2	0.25	2.0	122.1	285.7	286.3	82.5	51.4	83.4	2207.0	2199.4	2863.8	2858.7
20180430:02:04:02	23.1	15.8	-4.2	23.44	0.25	2.2	0.25	2.0	122.2	285.8	286.4	82.5	51.5	83.3	2208.3	2200.8	2865.6	2860.5
20180430:02:09:02	23.1	15.9	-4.3	23.44	0.25	2.2	0.25	2.0	122.3	285.8	286.3	82.4	51.5	83.3	2209.7	2202.1	2867.4	2862.2
20180430:02:14:02	23.1	15.8	-4.3	23.44	0.25	2.2	0.25	2.0	122.3	285.7	286.3	82.3	51.5	83.2	2211.0	2203.5	2869.1	2864.0
20180430:02:19:02	23.1	15.8	-4.3	23.44	0.25	2.2	0.25	2.0	122.2	285.8	286.3	82.3	51.4	83.1	2212.4	2204.9	2870.9	2865.8
20180430:02:24:02	23.1	15.8	-4.3	23.44	0.25	2.2	0.25	2.0	122.1	285.8	286.3	82.2	51.4	83.1	2213.8	2206.2	2872.7	2867.5
20180430:02:29:02	23.1	15.5	-4.5	23.44	0.25	2.2	0.25	2.0	121.5	285.7	286.3	82.1	51.4	83.0	2215.1	2207.6	2874.4	2869.3
20180430:02:34:02	23.1	15.1	-4.4	23.44	0.25	2.2	0.25	2.0	120.5	285.7	286.3	82.1	51.4	83.0	2216.5	2208.9	2876.2	2871.1
20180430:02:39:02	23.1	15.5	-4.3	23.44	0.25	2.2	0.25	2.0	121.5	285.7	286.3	82.0	51.4	82.9	2217.8	2210.2	2878.0	2872.8
20180430:02:44:02	23.1	15.6	-4.3	23.44	0.25	2.2	0.25	2.0	121.7	285.8	286.3	82.0	51.4	82.8	2219.1	2211.6	2879.8	2874.6
20180430:02:49:02	23.1	15.7	-4.3	23.44	0.25	2.2	0.25	2.0	121.9	285.7	286.3	81.9	51.4	82.8	2220.5	2212.9	2881.6	2876.4
20180430:02:54:02	23.1	15.8	-4.4	23.44	0.25	2.2	0.25	2.0	122.1	285.7	286.3	81.8	51.4	82.7	2221.9	2214.3	2883.3	2878.2
20180430:02:59:02	23.1	15.8	-4.5	23.44	0.25	2.2	0.25	2.0	122.0	285.7	286.3	81.8	51.4	82.6	2223.2	2215.6	2885.1	2879.9
20180430:03:04:02	23.1	15.8	-4.5	23.44	0.25	2.2	0.25	2.0	122.1	285.8	286.3	81.7	51.4	82.6	2224.6	2217.0	2886.9	2881.7
20180430:03:09:02	23.1	15.8	-4.5	23.44	0.25	2.2	0.25	2.0	122.0	285.7	286.2	81.7	51.4	82.5	2225.9	2218.3	2888.6	2883.5
20180430:03:14:02	23.1	15.8	-4.5	23.44	0.25	2.2	0.25	2.0	122.1	285.7	286.3	81.6	51.4	82.4	2227.2	2219.7	2890.4	2885.2
20180430:03:19:02	23.1	15.8	-4.5	23.44	0.25	2.2	0.25	2.0	122.1	285.7	286.3	81.5	51.4	82.4	2228.6	2221.0	2892.2	2887.0
20180430:03:24:02	23.1	15.8	-4.4	23.44	0.25	2.2	0.25	2.0	122.2	285.7	286.3	81.4	51.4	82.3	2230.0	2222.4	2893.9	2888.8
20180430:03:29:02	23.1	15.7	-4.5	23.44	0.25	2.2	0.25	2.0	122.0	285.7	286.3	81.4	51.4	82.3	2231.3	2223.7	2895.7	2890.5
20180430:03:34:02	23.1	15.7	-4.5	23.44	0.25	2.2	0.25	2.0	122.0	285.7	286.3	81.3	51.4	82.2	2232.7	2225.1	2897.5	2892.3
20180430:03:39:02	23.1	15.3	-4.6	23.44	0.25	2.2	0.25	2.0	121.1	285.6	286.2	81.2	51.3	82.1	2234.0	2226.4	2899.2	2894.1
20180430:03:44:02	23.1	15.6	-4.5	23.44	0.25	2.2	0.25	2.0	121.6	285.7	286.3	81.1	51.4	82.1	2235.4	2227.8	2901.0	2895.8
20180430:03:49:02	23.1	15.7	-4.5	23.44	0.25	2.2	0.25	2.0	121.8	285.7	286.3	81.1	51.3	82.0	2236.7	2229.1	2902.8	2897.6
20180430:03:54:02	23.1	15.7	-4.6	23.44	0.25	2.2	0.25	2.0	121.9	285.7	286.2	81.0	51.4	81.9	2238.1	2230.4	2904.5	2899.4
20180430:03:59:02	23.1	15.7	-4.6	23.44	0.25	2.2	0.25	2.0	121.9	285.7	286.3	81.0	51.3	81.9	2239.4	2231.8	2906.3	2901.2
20180430:04:04:02	23.1	15.8	-4.6	23.44	0.25	2.2	0.25	2.0	122.1	285.7	286.2	80.9	51.3	81.8	2240.8	2233.1	2908.1	2902.9
20180430:04:09:02	23.1	15.8	-4.6	23.44	0.25	2.2	0.25	2.0	122.0	285.7	286.3	80.8	51.3	81.7	2242.1	2234.5	2909.8	2904.7
20180430:04:14:02	23.1	15.8	-4.6	23.44	0.25	2.2	0.25	2.0	122.1	285.7	286.3	80.7	51.3	81.7	2243.5	2235.9	2911.6	2906.5
20180430:04:19:02	23.1	15.7	-4.7	23.44	0.25	2.2	0.25	2.0	121.9	285.7	286.2	80.7	51.3	81.6	2244.8	2237.2	2913.4	2908.2
20180430:04:24:02	23.1	15.7	-4.7	23.44	0.25	2.2	0.25	2.0	121.9	285.6	286.2	80.6	51.3	81.5	2246.2	2238.6	2915.1	2910.0
20180430:04:29:02	23.1	15.7	-4.6	23.44	0.25	2.2	0.25	2.0	122.0	285.7	286.3	80.5	51.3	81.4	2247.5	2239.9	2916.9	2911.7
20180430:04:34:02	23.1	15.7	-4.5	23.44	0.25	2.2	0.25	2.0	121.8	285.7	286.2	80.4	51.3	81.4	2248.9	2241.3	2918.7	2913.5
20180430:04:39:02	23.1	15.5	-4.6	23.44	0.25	2.2	0.25	2.0	121.5	285.7	286.3	80.4	51.3	81.3	2250.2	2242.6	2920.4	2915.3
20180430:04:44:02	23.1	14.6	-4.8	23.44	0.25	2.2	0.25	2.0	119.2	285.6	286.2	80.3	51.2	81.3	2251.6	2244.0	2922.2	2917.0
20180430:04:49:02	23.1	14.9	-4.5	23.44	0.25	2.2	0.25	2.0	120.1	285.6	286.3	80.3	51.2	81.2	2253.0	2245.3	2924.0	2918.8
20180430:04:54:02	23.1	15.4	-4.5	23.44	0.25	2.2	0.25	2.0	121.1	285.7	286.3	80.2	51.2	81.1	2254.3	2246.7	2925.7	2920.6
20180430:04:59:02	23.1	15.5	-4.4	23.44	0.25	2.2	0.25	2.0	121.4	285.7	286.2	80.1	51.2	81.0	2255.7	2248.0	2927.5	2922.3
20180430:05:04:02	23.1	15.6	-4.4	23.43	0.25	2.2	0.25	2.0	121.8	285.7	286.2	80.0	51.2	81.0	2257.0	2249.4	2929.3	2924.1
20180430:05:09:02	23.1	15.6	-4.4	23.44	0.25	2.2	0.25	2.0	121.8	285.7	286.3	80.0	51.2	80.9	2258.3	2250.7	2931.0	2925.9
20180430:05:14:02	23.1	15.7	-4.5	23.44	0.25	2.2	0.25	2.0	122.0	285.7	286.2	79.9	51.2	80.8	2259.7	2252.1	2932.8	2927.7
20180430:05:19:02	23.1	15.8	-4.5	23.44	0.25	2.2	0.25	2.0	122.1	285.6	286.2	79.8	51.2	80.8	2261.1	2253.4	2934.6	2929.4
20180430:05:24:02	23.1	15.8	-4.5	23.44	0.25	2.2	0.25	2.0	122.2	285.7	286.3	79.8	51.2	80.7	2262.4	2254.8	2936.3	2931.2
20180430:05:29:02	23.1	15.8	-4.4	23.44	0.25	2.2	0.25	2.0	122.3	285.7	286.2	79.8	51.2	80.7	2263.8	2256.1	2938.1	2933.0
20180430:05:34:02	23.1	16.0	-4.3	23.44	0.25	2.3	0.25	2.0	122.6	285.7	286.2	79.7	51.2	80.7	2265.1	2257.5	2939.9	2934.7

Time:	Stack Pressure:	Sat% H2O:	Static:	Barometric:	Flowmeter1:	Vacuum1:	Flowmeter2:	Vacuum2:	Stack Temp:	Sorbent Temp:	Probe Temp:	DGM#1 Temp:	Condenser Temp:	DGM#2 Temp:	DGM1*:	DGM2*:	DGM1:	DGM2:
day:hh:mm:ss	in-Hg	Percent	in-H2O	in-Hg	l/min	in-Hg	l/min	in-Hg	degF	degF	degF	degF	degF	degF	liters STP	liters STP	liters nominal	liters nominal
20180430:05:39:02	23.1	16.0	-4.3	23.44	0.25	2.3	0.25	2.0	122.6	285.7	286.2	79.7	51.2	80.6	2266.5	2258.8	2941.6	2936.5
20180430:05:44:02	23.1	15.9	-4.3	23.44	0.25	2.3	0.25	2.0	122.5	285.7	286.3	79.7	51.2	80.6	2267.8	2260.2	2943.4	2938.3
20180430:05:49:02	23.1	15.5	-4.5	23.45	0.25	2.2	0.25	2.0	121.3	285.7	286.2	79.6	51.2	80.5	2269.2	2261.5	2945.2	2940.0
20180430:05:54:02	23.1	14.8	-4.5	23.45	0.25	2.2	0.25	2.0	119.9	285.6	286.3	79.6	51.2	80.5	2270.5	2262.9	2946.9	2941.8
20180430:05:59:02	23.1	15.3	-4.3	23.45	0.25	2.2	0.25	2.0	121.0	285.7	286.2	79.5	51.2	80.4	2271.9	2264.2	2948.7	2943.6
20180430:06:04:02	23.1	15.5	-4.3	23.45	0.25	2.2	0.25	2.0	121.5	285.7	286.3	79.5	51.2	80.4	2273.3	2265.6	2950.5	2945.3
20180430:06:09:02	23.1	15.7	-4.2	23.44	0.25	2.2	0.25	2.0	122.0	285.8	286.3	79.5	51.2	80.4	2274.6	2267.0	2952.3	2947.1
20180430:06:14:02	23.1	15.8	-4.2	23.44	0.25	2.2	0.25	2.0	122.2	285.8	286.3	79.4	51.2	80.3	2276.0	2268.3	2954.1	2948.9
20180430:06:19:02	23.1	15.8	-4.1	23.45	0.25	2.2	0.25	2.0	122.1	285.8	286.3	79.4	51.2	80.3	2277.3	2269.7	2955.8	2950.7
20180430:06:24:02	23.1	15.7	-4.1	23.45	0.25	2.2	0.25	2.0	122.0	285.7	286.2	79.3	51.2	80.3	2278.7	2271.1	2957.6	2952.5
20180430:06:29:02	23.1	15.5	-4.1	23.45	0.25	2.2	0.25	2.0	121.6	285.7	286.2	79.3	51.2	80.2	2280.1	2272.4	2959.4	2954.2
20180430:06:34:02	23.1	15.5	-4.1	23.45	0.25	2.2	0.25	2.0	121.5	285.7	286.3	79.2	51.2	80.1	2281.4	2273.8	2961.1	2956.0
20180430:06:39:02	23.1	15.4	-4.2	23.46	0.25	2.3	0.25	2.0	121.3	285.7	286.3	79.2	51.2	80.1	2282.8	2275.1	2962.9	2957.8
20180430:06:44:02	23.2	15.5	-4.2	23.46	0.25	2.2	0.25	2.0	121.5	285.6	286.3	79.1	51.2	80.1	2284.2	2276.5	2964.7	2959.5
20180430:06:49:02	23.2	15.4	-4.2	23.46	0.25	2.2	0.25	2.0	121.3	285.7	286.3	79.1	51.2	80.0	2285.5	2277.9	2966.4	2961.3
20180430:06:54:02	23.1	15.3	-4.3	23.46	0.25	2.3	0.25	2.0	121.0	285.6	286.3	79.1	51.1	80.0	2286.9	2279.2	2968.3	2963.1
20180430:06:59:02	23.1	15.3	-4.3	23.46	0.25	2.3	0.25	2.0	121.1	285.6	286.3	79.1	51.2	80.0	2288.3	2280.6	2970.0	2964.9
20180430:07:04:02	23.1	15.2	-4.2	23.46	0.25	2.2	0.25	2.0	120.8	285.7	286.3	79.1	51.2	79.9	2289.6	2281.9	2971.8	2966.6
20180430:07:09:02	23.2	15.1	-4.1	23.45	0.25	2.2	0.25	2.0	120.6	285.7	286.3	79.1	51.2	79.9	2291.0	2283.3	2973.6	2968.4
20180430:07:14:02	23.2	15.0	-3.9	23.45	0.25	2.3	0.25	2.0	120.4	285.7	286.3	79.0	51.2	79.9	2292.3	2284.7	2975.3	2970.2
20180430:07:19:02	23.2	15.1	-3.8	23.45	0.25	2.3	0.25	2.0	120.6	285.7	286.3	79.0	51.2	79.9	2293.7	2286.0	2977.1	2971.9
20180430:07:24:02	23.2	15.2	-3.8	23.46	0.25	2.3	0.25	2.0	120.8	285.7	286.3	79.0	51.1	79.8	2295.1	2287.3	2978.9	2973.7
20180430:07:29:02	23.2	15.2	-3.6	23.47	0.25	2.3	0.25	2.0	120.8	285.7	286.3	79.0	51.2	79.8	2296.4	2288.7	2980.7	2975.5
20180430:07:34:02	23.2	15.2	-4.1	23.47	0.25	2.3	0.25	2.0	120.8	285.7	286.3	78.9	51.2	79.7	2297.8	2290.1	2982.4	2977.2
20180430:07:39:02	23.2	15.1	-3.8	23.47	0.25	2.3	0.25	2.0	120.7	285.7	286.3	78.9	51.1	79.7	2299.2	2291.5	2984.2	2979.1
20180430:07:44:02	23.2	15.2	-3.9	23.46	0.25	2.3	0.25	2.0	120.8	285.7	286.3	78.8	51.2	79.7	2300.5	2292.8	2986.0	2980.8
20180430:07:49:02	23.2	15.1	-3.6	23.45	0.25	2.3	0.25	2.0	120.7	285.7	286.3	78.8	51.1	79.6	2301.9	2294.1	2987.7	2982.6
20180430:07:54:02	23.2	15.2	-3.7	23.46	0.25	2.3	0.25	2.0	120.8	285.7	286.3	78.8	51.2	79.6	2303.2	2295.5	2989.5	2984.4
20180430:07:59:02	23.2	14.6	-3.7	23.45	0.25	2.3	0.25	2.0	119.3	285.7	286.3	78.7	51.1	79.5	2304.6	2296.9	2991.3	2986.1
20180430:08:04:02	23.2	14.8	-3.9	23.46	0.25	2.3	0.25	2.0	119.9	285.7	286.4	78.7	51.1	79.5	2305.9	2298.2	2993.0	2987.9
20180430:08:09:02	23.2	15.0	-3.7	23.45	0.25	2.3	0.25	2.0	120.3	285.6	286.3	78.6	51.1	79.5	2307.3	2299.6	2994.9	2989.7
20180430:08:14:02	23.2	15.1	-3.7	23.45	0.25	2.3	0.25	2.0	120.6	285.7	286.3	78.6	51.1	79.5	2308.7	2300.9	2996.6	2991.4
20180430:08:19:02	23.2	15.1	-3.7	23.46	0.25	2.3	0.25	2.0	120.6	285.6	286.3	78.5	51.1	79.4	2310.0	2302.3	2998.4	2993.3
20180430:08:24:02	23.2	15.2	-3.7	23.46	0.25	2.3	0.25	2.0	120.8	285.7	286.3	78.6	51.1	79.4	2311.4	2303.7	3000.2	2995.0
20180430:08:29:02	23.2	15.2	-3.7	23.46	0.25	2.3	0.25	2.0	120.9	285.7	286.3	78.5	51.1	79.3	2312.8	2305.0	3001.9	2996.8
20180430:08:34:02	23.2	15.3	-3.9	23.47	0.25	2.3	0.25	2.0	121.1	285.7	286.3	78.5	51.1	79.4	2314.1	2306.4	3003.7	2998.6
20180430:08:39:02	23.2	15.4	-4.0	23.48	0.25	2.3	0.25	2.0	121.4	285.7	286.2	78.5	51.1	79.3	2315.5	2307.8	3005.5	3000.3
04/30/2018:08:39:02	**Sampling**	**complete**	**6 Days**	**0 Hrs**	**0 Minutes**	**sampled**												

Hg-324K-1099

HgK_324 Data		HTG2LEE2018R1	4/30/2018	13:49:08					
DGM1 ID		DGM2 ID	Trap1 ID	Trap2 ID					
	3605445	3605446	451998	465597					
Time:		Leak 1	Status	Leak 2	Status	Vacuum1	Vacuum2	DGM 1	DGM 2
Day:hh:mm		ccpermin	P-F	ccpermin	P-F	in-Hg	in-Hg	liter	liter
04/30/2018:13:49:22		1177.278	Fail	1345.365	Fail	2.83	2.74	0.339	0.423
04/30/2018:13:49:37		1374.074	Fail	1503.759	Fail	6.919	6.782	0.687	0.752
04/30/2018:13:49:52		1081.481	Fail	1210.526	Fail	9.723	9.623	0.88	1.028
04/30/2018:13:50:07		759.259	Fail	834.586	Fail	11.751	11.646	1.067	1.169
04/30/2018:13:50:22		677.778	Fail	582.707	Fail	13.223	13.13	1.219	1.32
04/30/2018:13:50:37		537.037	Fail	597.744	Fail	14.315	14.302	1.335	1.468
04/30/2018:13:50:52		366.667	Fail	484.962	Fail	15.154	15.205	1.402	1.562
04/30/2018:13:51:07		214.815	Fail	360.902	Fail	15.81	15.883	1.443	1.648
04/30/2018:13:51:22		185.185	Fail	315.789	Fail	16.329	16.48	1.494	1.72
04/30/2018:13:51:37		229.63	Fail	229.323	Fail	16.872	16.976	1.557	1.763
04/30/2018:13:51:52		218.519	Fail	142.857	Fail	17.3	17.38	1.604	1.791
04/30/2018:13:52:07		200	Fail	120.301	Fail	17.642	17.723	1.657	1.823
04/30/2018:13:52:22		148.148	Fail	139.098	Fail	17.923	17.988	1.678	1.861
04/30/2018:13:52:37		122.222	Fail	120.301	Fail	18.144	18.195	1.719	1.883
04/30/2018:13:52:52		151.852	Fail	105.263	Fail	18.325	18.368	1.754	1.914
04/30/2018:13:53:07		122.222	Fail	105.263	Fail	18.473	18.51	1.78	1.936
04/30/2018:13:53:22		103.704	Fail	82.707	Fail	18.603	18.647	1.806	1.955
04/30/2018:13:53:37		92.593	Fail	71.429	Fail	18.703	18.759	1.826	1.972
04/30/2018:13:53:52		48.148	Fail	67.669	Fail	18.775	18.864	1.83	1.989
04/30/2018:13:54:07		11.111	Fail	71.429	Fail	18.833	18.945	1.831	2.008
04/30/2018:13:54:22		29.63	Fail	78.947	Fail	18.882	19.022	1.844	2.028
04/30/2018:13:54:37		51.852	Fail	52.632	Fail	18.92	19.087	1.857	2.034
04/30/2018:13:54:52		44.444	Fail	18.797	Fail	18.949	19.137	1.867	2.038
04/30/2018:13:55:07		25.926	Fail	15.038	Fail	18.964	19.178	1.87	2.041
04/30/2018:13:55:22		14.815	Fail	33.835	Fail	18.979	19.216	1.874	2.055
04/30/2018:13:55:37		14.815	Fail	45.113	Fail	18.979	19.246	1.878	2.064
04/30/2018:13:55:52		11.111	Fail	33.835	Fail	18.985	19.268	1.88	2.071
04/30/2018:13:56:07		11.111	Fail	33.835	Fail	18.981	19.279	1.883	2.081
04/30/2018:13:56:22		11.111	Fail	30.075	Fail	18.993	19.294	1.885	2.086
04/30/2018:13:56:37		7.407	Pass	26.316	Fail	18.984	19.298	1.887	2.094
04/30/2018:13:56:52		7.407	Pass	26.316	Fail	18.978	19.303	1.889	2.1
04/30/2018:13:57:07		7.407	Pass	22.556	Fail	18.984	19.318	1.891	2.105
04/30/2018:13:57:22		11.111	Fail	22.556	Fail	18.993	19.325	1.894	2.111
04/30/2018:13:57:37		11.111	Fail	22.556	Fail	18.996	19.33	1.896	2.117
04/30/2018:13:57:52		11.111	Fail	22.556	Fail	19.009	19.335	1.9	2.122
04/30/2018:13:58:07		14.815	Fail	22.556	Fail	19.018	19.34	1.904	2.128
04/30/2018:13:58:22		11.111	Fail	22.556	Fail	18.996	19.343	1.906	2.133
04/30/2018:13:58:37		3.704	Pass	22.556	Fail	18.987	19.345	1.906	2.139
04/30/2018:13:58:52		3.704	Pass	18.797	Fail	18.989	19.354	1.907	2.143
04/30/2018:13:59:07		7.407	Pass	15.038	Fail	18.991	19.356	1.909	2.147
04/30/2018:13:59:22		14.815	Fail	18.797	Fail	19.011	19.357	1.915	2.152
04/30/2018:13:59:37		14.815	Fail	18.797	Fail	19.032	19.372	1.917	2.156
04/30/2018:13:59:52		11.111	Fail	15.038	Fail	19.023	19.372	1.92	2.16
04/30/2018:14:00:07		7.407	Pass	15.038	Fail	19.014	19.376	1.92	2.164
04/30/2018:14:00:22		7.407	Pass	18.797	Fail	19.007	19.38	1.924	2.169
04/30/2018:14:00:37		14.815	Fail	22.556	Fail	19.028	19.391	1.928	2.175
04/30/2018:14:00:52		14.815	Fail	18.797	Fail	19.032	19.393	1.931	2.179
04/30/2018:14:01:07		14.815	Fail	18.797	Fail	19.025	19.402	1.935	2.184
04/30/2018:14:01:22		14.815	Fail	18.797	Fail	19.033	19.418	1.939	2.188
04/30/2018:14:01:37		11.111	Fail	18.797	Fail	19.032	19.428	1.941	2.194
04/30/2018:14:01:52		11.111	Fail	18.797	Fail	19.031	19.438	1.944	2.197
04/30/2018:14:02:07		11.111	Fail	18.797	Fail	19.04	19.453	1.946	2.203
04/30/2018:14:02:22		7.407	Pass	11.278	Fail	19.028	19.465	1.948	2.203
04/30/2018:14:02:37		11.111	Fail	0	Pass	19.035	19.481	1.952	2.203
04/30/2018:14:02:52		11.111	Fail	0	Pass	19.031	19.492	1.954	2.203
04/30/2018:14:03:07		7.407	Pass	3.759	Pass	19.04	19.505	1.956	2.205

Hg-324K-1099								
HgK_324 Data	HTG2LEE2018R2	4/30/2018	14:13:01					
DGM1 ID	DGM2 ID	Trap1 ID	Trap2 ID					
3605445	3605446	450084	480741					
Time:	Leak 1	Status	Leak 2	Status	Vacuum1	Vacuum2	DGM 1	DGM 2
Day:hh:mm	ccpermin	P-F	ccpermin	P-F	in-Hg	in-Hg	liter	liter
04/30/2018:14:13:15	1247.648	Fail	1304.011	Fail	2.444	2.476	0.374	0.402
04/30/2018:14:13:30	1492.593	Fail	1567.669	Fail	6.164	6.264	0.746	0.784
04/30/2018:14:13:45	1181.481	Fail	1225.564	Fail	8.812	8.976	0.965	1.015
04/30/2018:14:14:00	918.519	Fail	887.218	Fail	10.645	10.911	1.206	1.227
04/30/2018:14:14:15	825.926	Fail	796.992	Fail	12.048	12.413	1.378	1.414
04/30/2018:14:14:30	537.037	Fail	669.173	Fail	13.443	13.649	1.474	1.562
04/30/2018:14:14:45	388.889	Fail	428.571	Fail	14.584	14.607	1.572	1.628
04/30/2018:14:15:00	366.667	Fail	293.233	Fail	15.434	15.356	1.657	1.709
04/30/2018:14:15:15	314.815	Fail	327.068	Fail	16.198	16.009	1.73	1.791
04/30/2018:14:15:30	318.519	Fail	300.752	Fail	16.813	16.587	1.817	1.859
04/30/2018:14:15:45	281.481	Fail	278.195	Fail	17.297	17.083	1.87	1.93
04/30/2018:14:16:00	188.889	Fail	278.195	Fail	17.677	17.502	1.911	1.998
04/30/2018:14:16:15	144.444	Fail	195.489	Fail	17.972	17.847	1.943	2.028
04/30/2018:14:16:30	122.222	Fail	124.06	Fail	18.207	18.106	1.972	2.06
04/30/2018:14:16:45	111.111	Fail	116.541	Fail	18.401	18.323	1.998	2.086
04/30/2018:14:17:00	100	Fail	105.263	Fail	18.566	18.504	2.022	2.113
04/30/2018:14:17:15	85.185	Fail	97.744	Fail	18.697	18.652	2.041	2.135
04/30/2018:14:17:30	44.444	Fail	78.947	Fail	18.794	18.783	2.044	2.152
04/30/2018:14:17:45	29.63	Fail	67.669	Fail	18.864	18.894	2.056	2.169
04/30/2018:14:18:00	40.741	Fail	75.188	Fail	18.915	18.989	2.065	2.19
04/30/2018:14:18:15	33.333	Fail	45.113	Fail	18.96	19.073	2.072	2.192
04/30/2018:14:18:30	25.926	Fail	33.835	Fail	19.002	19.148	2.078	2.207
04/30/2018:14:18:45	18.519	Fail	56.391	Fail	19.032	19.195	2.081	2.22
04/30/2018:14:19:00	11.111	Fail	45.113	Fail	19.035	19.245	2.083	2.229
04/30/2018:14:19:15	11.111	Fail	30.075	Fail	19.051	19.275	2.087	2.235
04/30/2018:14:19:30	7.407	Pass	18.797	Fail	19.044	19.292	2.087	2.239
04/30/2018:14:19:45	3.704	Pass	11.278	Fail	19.06	19.312	2.089	2.241
04/30/2018:14:20:00	7.407	Pass	7.519	Pass	19.07	19.328	2.091	2.242

Time:	Stack Pressure:	Sat% H2O:	Static:	Barometric:	Flowmeter1:	Vacuum1:	Flowmeter2:	Vacuum2:	Stack Temp:	Sorbent Temp:	Probe Temp:	DGM#1 Temp:	Condenser Temp:	DGM#2 Temp:	DGM1*:	DGM2*:	DGM1:	DGM2:
day:hh:mm:ss	in-Hg	Percent	in-H2O	in-Hg	l/min	in-Hg	l/min	in-Hg	degF	degF	degF	degF	degF	degF	liters STP	liters STP	liters nominal	liters nominal
20180430:14:28:07	23.3	12.2	-4.1	23.56	0.238	1.8	0.24	1.8	113.1	286.7	287.2	75.0	51.9	76.0	1.3	1.3	1.6	1.6
20180430:14:33:07	23.3	14.3	-4.0	23.55	0.25	2.1	0.25	2.1	118.8	286.6	287.7	75.0	51.6	75.9	2.6	2.6	3.4	3.4
20180430:14:38:07	23.3	15.5	-4.0	23.55	0.25	2.2	0.25	2.1	121.7	286.5	287.6	75.0	51.4	75.9	3.9	3.9	5.1	5.1
20180430:14:43:07	23.2	16.2	-4.0	23.55	0.25	2.2	0.25	2.2	123.3	286.3	287.5	75.1	51.3	76.0	5.3	5.3	6.8	6.8
20180430:14:48:07	23.2	16.7	-4.0	23.54	0.25	2.2	0.25	2.1	124.4	286.2	287.4	75.2	51.1	76.0	6.6	6.6	8.5	8.5
20180430:14:53:07	23.2	17.1	-4.0	23.55	0.25	2.2	0.25	2.1	125.2	286.1	287.1	75.2	51.0	76.1	7.9	7.9	10.2	10.2
20180430:14:58:07	23.2	17.3	-4.0	23.54	0.25	2.1	0.25	2.1	125.7	286.1	287.1	75.3	51.0	76.2	9.3	9.3	12.0	12.0
20180430:15:03:07	23.2	16.8	-4.1	23.54	0.25	2.1	0.25	2.1	124.5	286.0	287.0	75.3	50.9	76.2	10.6	10.6	13.7	13.7
20180430:15:08:07	23.2	16.6	-4.1	23.54	0.25	2.1	0.25	2.1	124.1	285.9	286.9	75.4	50.8	76.2	12.0	12.0	15.4	15.4
20180430:15:13:07	23.2	17.1	-4.0	23.54	0.25	2.1	0.25	2.1	125.1	285.9	286.8	75.5	50.9	76.3	13.3	13.3	17.2	17.2
20180430:15:18:07	23.2	17.3	-4.0	23.54	0.25	2.1	0.25	2.1	125.6	285.9	286.8	75.5	50.8	76.3	14.7	14.7	18.9	18.9
20180430:15:23:07	23.2	17.3	-4.1	23.54	0.25	2.1	0.25	2.1	125.8	286.0	286.8	75.6	50.8	76.4	16.0	16.0	20.7	20.6
20180430:15:28:07	23.2	17.4	-4.1	23.54	0.25	2.1	0.25	2.1	126.0	286.0	286.7	75.6	50.8	76.5	17.4	17.3	22.4	22.4
20180430:15:33:07	23.2	17.5	-4.0	23.54	0.25	2.1	0.25	2.1	126.1	286.0	286.6	75.7	50.7	76.5	18.7	18.7	24.1	24.1
20180430:15:38:07	23.2	17.5	-4.1	23.54	0.25	2.1	0.25	2.1	126.1	285.8	286.5	75.7	50.7	76.5	20.1	20.0	25.9	25.8
20180430:15:43:07	23.2	17.5	-4.1	23.54	0.25	2.1	0.25	2.1	126.1	285.9	286.5	75.8	50.6	76.6	21.4	21.4	27.6	27.6
20180430:15:48:07	23.2	17.5	-4.1	23.55	0.25	2.1	0.25	2.1	126.0	285.8	286.4	75.8	50.6	76.6	22.8	22.7	29.3	29.3
20180430:15:53:07	23.2	17.5	-4.1	23.54	0.25	2.1	0.25	2.1	126.1	285.9	286.5	75.9	50.7	76.7	24.1	24.1	31.1	31.1
20180430:15:58:07	23.2	17.5	-4.1	23.54	0.25	2.1	0.25	2.1	126.0	285.8	286.4	75.9	50.7	76.8	25.4	25.4	32.8	32.8
20180430:16:03:07	23.2	17.5	-4.1	23.54	0.25	2.1	0.25	2.1	126.0	285.8	286.4	76.0	50.7	76.8	26.8	26.7	34.5	34.5
20180430:16:08:07	23.2	17.2	-4.1	23.54	0.25	2.1	0.25	2.1	125.5	285.8	286.4	76.0	50.6	76.8	28.1	28.1	36.2	36.3
20180430:16:13:07	23.2	16.2	-4.2	23.54	0.25	2.1	0.25	2.1	123.3	285.6	286.4	76.1	50.7	76.9	29.5	29.4	38.0	38.0
20180430:16:18:07	23.2	16.6	-4.0	23.54	0.25	2.1	0.25	2.1	124.1	285.7	286.4	76.2	50.7	76.9	30.8	30.8	39.8	39.7
20180430:16:23:07	23.2	16.8	-3.9	23.53	0.25	2.1	0.25	2.1	124.6	285.7	286.3	76.2	50.7	76.9	32.2	32.1	41.5	41.4
20180430:16:28:07	23.2	16.8	-3.9	23.53	0.25	2.1	0.25	2.1	124.7	285.7	286.3	76.2	50.7	77.0	33.5	33.5	43.3	43.2
20180430:16:33:07	23.2	16.7	-3.9	23.53	0.25	2.2	0.25	2.1	124.4	285.7	286.3	76.3	50.6	77.1	34.9	34.8	45.0	44.9
20180430:16:38:07	23.2	16.7	-3.9	23.53	0.25	2.2	0.25	2.1	124.3	285.7	286.3	76.4	50.7	77.1	36.2	36.2	46.7	46.7
20180430:16:43:07	23.2	16.6	-3.9	23.53	0.25	2.2	0.25	2.1	124.2	285.7	286.3	76.4	50.6	77.1	37.6	37.5	48.5	48.5
20180430:16:48:07	23.2	16.5	-4.0	23.53	0.25	2.2	0.25	2.1	123.8	285.7	286.3	76.4	50.7	77.2	38.9	38.8	50.2	50.2
20180430:16:53:07	23.2	16.5	-4.0	23.53	0.25	2.2	0.25	2.1	123.8	285.7	286.2	76.4	50.6	77.2	40.3	40.2	52.0	52.0
20180430:16:58:07	23.2	16.6	-4.1	23.53	0.25	2.2	0.25	2.1	124.2	285.7	286.3	76.5	50.6	77.3	41.7	41.6	53.7	53.7
20180430:17:03:07	23.2	16.7	-4.0	23.52	0.25	2.1	0.25	2.1	124.4	285.8	286.3	76.5	50.7	77.3	43.0	42.9	55.4	55.5
20180430:17:08:07	23.2	16.7	-4.0	23.51	0.25	2.1	0.25	2.1	124.4	285.8	286.3	76.5	50.6	77.3	44.4	44.3	57.3	57.2
20180430:17:13:07	23.2	16.3	-4.0	23.51	0.25	2.1	0.25	2.1	123.5	285.7	286.2	76.5	50.7	77.4	45.7	45.6	59.0	58.9
20180430:17:18:07	23.2	16.6	-3.9	23.51	0.251	2.2	0.25	2.2	124.1	285.7	286.3	76.5	50.6	77.4	47.1	47.0	60.7	60.7
20180430:17:23:07	23.2	16.6	-3.6	23.50	0.25	2.2	0.25	2.2	124.1	285.7	286.2	76.6	50.6	77.4	48.5	48.3	62.5	62.5
20180430:17:28:07	23.2	16.5	-3.8	23.50	0.25	2.2	0.25	2.1	123.9	285.7	286.3	76.6	50.6	77.4	49.8	49.7	64.3	64.2
20180430:17:33:07	23.2	16.5	-3.7	23.48	0.25	2.2	0.25	2.1	124.0	285.7	286.2	76.6	50.6	77.5	51.2	51.0	66.0	66.0
20180430:17:38:07	23.2	16.5	-3.6	23.48	0.25	2.1	0.25	2.1	123.9	285.8	286.3	76.6	50.6	77.5	52.5	52.4	67.8	67.7
20180430:17:43:07	23.2	16.5	-3.9	23.48	0.25	2.1	0.25	2.1	123.8	285.8	286.3	76.6	50.6	77.5	53.9	53.8	69.5	69.5
20180430:17:48:07	23.2	16.4	-3.8	23.48	0.25	2.2	0.25	2.1	123.6	285.7	286.1	76.6	50.6	77.5	55.3	55.1	71.3	71.2
20180430:17:53:07	23.2	16.4	-3.8	23.47	0.25	2.2	0.25	2.1	123.6	285.7	286.3	76.7	50.6	77.6	56.6	56.5	73.1	73.0
20180430:17:58:07	23.2	16.4	-3.9	23.48	0.25	2.2	0.25	2.2	123.6	285.7	286.3	76.7	50.6	77.6	57.9	57.8	74.8	74.8
20180430:18:03:07	23.2	16.5	-4.1	23.49	0.25	2.2	0.25	2.1	123.9	285.7	286.2	76.7	50.6	77.6	59.3	59.2	76.6	76.5
20180430:18:08:07	23.2	16.6	-4.2	23.50	0.25	2.2	0.25	2.1	124.0	285.7	286.3	76.7	50.6	77.6	60.7	60.6	78.3	78.3
20180430:18:13:07	23.2	15.6	-4.2	23.50	0.25	2.2	0.25	2.1	121.9	285.6	286.2	76.8	50.7	77.6	62.0	61.9	80.1	80.0
20180430:18:18:07	23.2	16.2	-4.1	23.50	0.25	2.2	0.25	2.1	123.2	285.7	286.2	76.8	50.6	77.6	63.4	63.3	81.9	81.8
20180430:18:23:07	23.2	16.3	-4.2	23.51	0.25	2.2	0.25	2.2	123.4	285.7	286.3	76.8	50.6	77.7	64.7	64.6	83.6	83.6
20180430:18:28:07	23.2	16.6	-4.2	23.51	0.25	2.2	0.25	2.2	124.0	285.8	286.3	76.9	50.7	77.7	66.1	66.0	85.4	85.3
20180430:18:33:07	23.2	16.7	-4.2	23.51	0.25	2.2	0.25	2.2	124.4	285.8	286.3	76.9	50.6	77.7	67.5	67.3	87.1	87.1
20180430:18:38:07	23.2	16.8	-4.3	23.52	0.25	2.2	0.25	2.2	124.5	285.8	286.3	76.9	50.7	77.7	68.8	68.7	88.9	88.8
20180430:18:43:07	23.2	16.7	-4.2	23.52	0.25	2.2	0.25	2.2	124.3	285.8	286.4	76.9	50.7	77.8	70.2	70.1	90.7	90.6
20180430:18:48:07	23.2	16.6	-4.2	23.51	0.25	2.2	0.25	2.2	124.1	285.7	286.3	76.9	50.7	77.8	71.5	71.4	92.4	92.3
20180430:18:53:07	23.2	16.5	-4.2	23.51	0.25	2.2	0.25	2.2	124.0	285.8	286.3	77.0	50.7	77.8	72.9	72.7	94.1	94.1
20180430:18:58:07	23.2	16.5	-4.1	23.50	0.25	2.2	0.25	2.2	123.9	285.7	286.2	77.0	50.6	77.8	74.3	74.1	96.0	95.9
20180430:19:03:07	23.2	16.5	-4.2	23.50	0.25	2.2	0.25	2.2	123.8	285.7	286.2	77.0	50.7	77.8	75.6	75.4	97.7	97.6
20180430:19:08:07	23.2	16.5	-4.2	23.51	0.25	2.2	0.25	2.2	123.8	285.7	286.3	77.0	50.6	77.9	77.0	76.8	99.4	99.4
20180430:19:13:07	23.2	16.0	-4.2	23.51	0.25	2.2	0.25	2.2	122.7	285.7	286.2	77.0	50.7	77.8	78.4	78.2	101.2	101.1
20180430:19:18:07	23.2	15.8	-4.2	23.51	0.25	2.2	0.25	2.2	122.3	285.7	286.3	77.0	50.6	77.8	79.7	79.5	103.0	102.9
20180430:19:23:07	23.2	16.0	-4.1	23.52	0.25	2.2	0.25	2.2	122.7	285.7	286.3	77.0	50.6	77.8	81.0	80.9	104.7	104.7
20180430:19:28:07	23.2	16.0	-4.1	23.52	0.25	2.2	0.25	2.2	122.9	285.7	286.2	77.0	50.7	77.9	82.4	82.2	106.5	106.4
20180430:19:33:07	23.2	16.0	-4.1	23.52	0.25	2.2	0.25	2.2	122.8	285.6	286.3	77.1	50.7	77.9	83.8	83.6	108.2	108.2
20180430:19:38:07	23.2	16.0	-4.1	23.52	0.25	2.2	0.25	2.2	122.7	285.7	286.2	77.1	50.7	77.9	85.1	84.9	110.0	109.9
20180430:19:43:07	23.2	15.9	-4.0	23.51	0.25	2.2	0.25	2.2	122.5	285.6	286.3	77.1	50.6	77.9	86.5	86.3	111.8	111.7
20180430:19:48:08	23.2	16.0	-4.1	23.51	0.25	2.2	0.25	2.2	122.7	285.6	286.2	77.1	50.7	78.0	87.8	87.7	113.5	113.5
20180430:19:53:08	23.2	15.8	-4.1	23.52	0.25	2.2	0.25	2.2	122.2	285.7	286.3	77.2	50.7	78.0	89.2	89.0	115.3	115.2
20180430:19:58:08	23.2	15.7	-4.1	23.52	0.25	2.2	0.25	2.2	122.0	285.7	286.3	77.2	50.7	78.0	90.6	90.4	117.0	117.0
20180430:20:03:08	23.2	15.5	-4.1	23.52	0.25	2.2	0.25	2.2	121.7	285.7	286.3	77.2	50.7	78.0	91.9	91.7	118.8	118.7
20180430:20:08:08	23.2	15.0	-4.0	23.51	0.25	2.2	0.25	2.2	120.4	285.7	286.3	77.2	50.7	78.0	93.3	93.1	120.6	120.5
20180430:20:13:08	23.2	14.8	-4.1	23.51	0.25	2.2	0.25	2.2	119.8	285.7	286.3	77.2	50.7	78.0	94.6	94.5	122.3	122.3
20180430:20:18:08	23.2	14.8	-4.1	23.51	0.25	2.2	0.25	2.2	119.9	285.6	286.3	77.2	50.7	78.0	96.0	95.8	124.1	124.0
20180430:20:23:08	23.2	15.4	-4.1	23.51	0.25	2.2	0.25	2.2	121.3	285.7	286.3	77.2	50.7	78.0	97.4	97.2	125.9	125.8
20180430:20:28:08	23.2	15.6	-4.1	23.51	0.25	2.2	0.25	2.2	121.8	285.7	286.3	77.2	50.7	78.0	98.7	98.5	127.6	127.5
20180430:20:33:08	23.2	15.7	-4.1	23.51	0.25	2.2	0.25	2.2	122.0	285.9	286.4	77.2	50.7	78.1	100.1	99.9	129.4	129.3
20180430:20:38:08	23.2	15.2	-4.1	23.51	0.25	2.2	0.25	2.2	120.9	285.8	286.4	77.2	50.7	78.1	101.5	101.2	131.1	131.1
20180430:20:43:08	23.2	15.0	-4.1	23.51	0.25	2.2	0.25	2.2	120.4	285.7	286.3	77.2	50.7	78.1	102.8	102.6	132.9	132.8
20180430:20:48:08	23.2	15.1	-4.1	23.51	0.25	2.2	0.25	2.2	120.7	285.7	286.3	77.2	50.7	78.0	104.2	104.0	134.7	134.6
20180430:20:53:08	23.2	15.7	-4.1	23.51	0.25	2.2	0.25	2.2	122.0	285.7	286.3	77.1	50.7	78.0	105.6	105.3	136.4	136.3
20180430:20:58:08	23.2	15.9	-4.1	23.51	0.25	2.2	0.25	2.2	122.6	285.8	286.4	77.1	50.7	78.0	106.9	106.7	138.2	138.1
20180430:21:03:08	23.2	16.0	-4.1	23.51	0.25	2.2	0.25	2.2	122.9	285.8	286.4	77.1	50.7	78.0	108.3	108.0	140.0	139.9
20180430:21:08:08	23.2	16.1	-4.1	23.51	0.25	2.2	0.25	2.2	122.9	285.8	286.4	77.1	50.6	78.0	109.7	109.4	141.7	141.6
20180430:21:13:08	23.2	15.5	-4.1	23.51	0.25	2.2	0.25	2.2	121.7	285.8	286.3	77.1	50.7	78.0	111.0	110.8	143.5	143.4
20180430:21:18:08	23.2	15.4	-4.1	23.51	0.25	2.2	0.25	2.2	121.3	285.8	286.4	77.1	50.7	78.0	112.4	112.1	145.3	145.2
20180430:21:23:08	23.2	15.5	-4.1	23.51	0.25	2.2	0.25	2.2	121.7	285.8	286.4	77.1	50.7	78.0	113.7	113.5	147.0	146.9
20180430:21:28:08	23.2	15.9	-4.1	23.50	0.25	2.2	0.25	2.2	122.6	285.8	286.4	77.2	50.7	78.0	115.1	114.8	148.8	148.7
20180430:21:33:08	23.2	16.1	-4.1	23.50	0.25	2.2	0.25	2.2	122.9	285.9	286.4	77.2	50.7	78.0	116.5	116.2	150.6	150.4
20180430:21:38:08	23.2	16.2	-4.1	23.50	0.25	2.2	0.25	2.2	123.1	285.9	286.4	77.2	50.8	78.0	117.8	117.6	152.3	152.2
20180430:21:43:08	23.2	16.2	-4.1	23.51	0.25	2.2	0.25	2.2	123.2	285.9	286.4	77.1	50.7	78.0	119.2	118.9	154.1	154.0
20180430:21:48:08	23.2	16.3	-4.1	23.51	0.25	2.2	0.25	2.2	123.3	285.9	286.4	77.1	50.7	78.0	120.5	120.2	155.8	155.7

Time:	Stack Pressure:	Sat% H2O:	Static:	Barometric:	Flowmeter1:	Vacuum1:	Flowmeter2:	Vacuum2:	Stack Temp:	Sorbent Temp:	Probe Temp:	DGM#1 Temp:	Condenser Temp:	DGM#2 Temp:	DGM1*:	DGM2*:	DGM1:	DGM2:
day:hh:mm:ss	in-Hg	Percent	in-H2O	in-Hg	l/min	in-Hg	l/min	in-Hg	degF	degF	degF	degF	degF	degF	liters STP	liters STP	liters nominal	liters nominal
20180430:21:53:08	23.2	16.3	-4.2	23.52	0.25	2.2	0.25	2.2	123.4	285.8	286.3	77.1	50.7	78.0	121.9	121.6	157.6	157.5
20180430:21:58:08	23.2	16.3	-4.1	23.51	0.25	2.2	0.25	2.2	123.4	285.9	286.4	77.1	50.7	78.0	123.3	123.0	159.4	159.2
20180430:22:03:08	23.2	16.3	-4.1	23.51	0.25	2.2	0.25	2.2	123.5	285.8	286.3	77.1	50.7	78.0	124.6	124.4	161.1	161.0
20180430:22:08:08	23.2	15.9	-4.1	23.51	0.25	2.2	0.25	2.2	122.5	285.8	286.4	77.1	50.7	78.0	126.0	125.7	162.9	162.8
20180430:22:13:08	23.2	15.6	-4.1	23.51	0.25	2.2	0.25	2.2	121.9	285.8	286.4	77.1	50.7	78.0	127.4	127.0	164.7	164.5
20180430:22:18:08	23.2	15.5	-4.0	23.50	0.25	2.2	0.25	2.2	121.5	285.7	286.3	77.0	50.7	78.0	128.7	128.4	166.4	166.3
20180430:22:23:08	23.2	16.0	-4.1	23.51	0.25	2.2	0.25	2.2	122.7	285.7	286.4	77.0	50.6	77.9	130.1	129.8	168.2	168.0
20180430:22:28:08	23.2	16.2	-4.1	23.51	0.25	2.2	0.25	2.2	123.2	285.8	286.3	76.9	50.7	77.9	131.4	131.1	170.0	169.8
20180430:22:33:08	23.2	16.2	-4.1	23.51	0.25	2.2	0.25	2.2	123.3	285.8	286.3	76.9	50.6	77.9	132.8	132.5	171.7	171.6
20180430:22:38:08	23.2	16.3	-4.1	23.51	0.25	2.2	0.25	2.2	123.4	285.9	286.4	76.9	50.7	77.8	134.1	133.8	173.4	173.3
20180430:22:43:08	23.2	16.3	-4.1	23.51	0.25	2.2	0.25	2.2	123.4	285.9	286.4	76.9	50.7	77.8	135.5	135.2	175.3	175.1
20180430:22:48:08	23.2	16.2	-4.1	23.51	0.25	2.2	0.25	2.2	123.3	285.8	286.3	76.8	50.6	77.8	136.9	136.6	177.0	176.8
20180430:22:53:08	23.2	16.3	-4.1	23.51	0.25	2.2	0.25	2.2	123.4	285.8	286.3	76.8	50.7	77.8	138.2	137.9	178.7	178.6
20180430:22:58:08	23.2	16.3	-4.1	23.51	0.25	2.2	0.25	2.2	123.5	285.7	286.2	76.8	50.7	77.8	139.6	139.3	180.5	180.4
20180430:23:03:08	23.2	16.3	-4.1	23.51	0.25	2.2	0.25	2.2	123.3	285.8	286.4	76.8	50.7	77.7	141.0	140.6	182.3	182.1
20180430:23:08:08	23.2	15.7	-4.1	23.51	0.25	2.2	0.25	2.2	122.0	285.7	286.3	76.8	50.7	77.7	142.3	142.0	184.0	183.9
20180430:23:13:08	23.2	15.6	-4.1	23.50	0.25	2.2	0.25	2.2	121.7	285.7	286.3	76.8	50.7	77.7	143.7	143.4	185.8	185.7
20180430:23:18:08	23.2	15.3	-4.1	23.51	0.25	2.2	0.25	2.2	121.2	285.6	286.3	76.7	50.7	77.7	145.0	144.7	187.6	187.5
20180430:23:23:08	23.2	15.9	-4.1	23.50	0.25	2.2	0.25	2.2	122.5	285.8	286.4	76.7	50.6	77.7	146.4	146.1	189.4	189.2
20180430:23:28:08	23.2	16.2	-4.1	23.50	0.25	2.2	0.25	2.2	123.2	285.9	286.4	76.8	50.7	77.7	147.8	147.4	191.1	191.0
20180430:23:33:08	23.2	16.5	-4.1	23.49	0.25	2.2	0.25	2.2	123.8	285.9	286.4	76.8	50.7	77.7	149.1	148.8	192.9	192.7
20180430:23:38:08	23.2	16.6	-4.1	23.49	0.25	2.2	0.25	2.2	124.0	285.9	286.4	76.7	50.6	77.6	150.5	150.1	194.7	194.5
20180430:23:43:08	23.2	16.6	-4.1	23.49	0.25	2.2	0.25	2.2	124.0	285.8	286.3	76.7	50.7	77.6	151.9	151.5	196.4	196.3
20180430:23:48:08	23.2	16.5	-4.1	23.49	0.25	2.2	0.25	2.2	123.8	285.8	286.4	76.7	50.6	77.6	153.2	152.9	198.2	198.0
20180430:23:53:08	23.2	16.4	-4.1	23.49	0.25	2.2	0.25	2.2	123.7	285.8	286.3	76.7	50.7	77.6	154.6	154.2	200.0	199.7
20180430:23:58:08	23.2	16.2	-4.2	23.49	0.25	2.2	0.25	2.2	123.2	285.8	286.3	76.7	50.7	77.6	156.0	155.6	201.7	201.6
20180501:00:03:08	23.2	15.8	-4.1	23.50	0.25	2.2	0.25	2.2	122.2	285.8	286.4	76.7	50.7	77.5	157.3	156.9	203.4	203.3
20180501:00:08:08	23.2	15.6	-4.1	23.50	0.25	2.2	0.25	2.2	121.8	285.8	286.4	76.6	50.6	77.5	158.7	158.3	205.3	205.1
20180501:00:13:08	23.2	15.8	-4.1	23.50	0.25	2.2	0.25	2.2	122.4	285.8	286.4	76.6	50.6	77.5	160.0	159.7	207.0	206.8
20180501:00:18:08	23.2	16.3	-4.1	23.50	0.25	2.2	0.25	2.2	123.4	285.9	286.4	76.6	50.6	77.5	161.4	161.0	208.7	208.6
20180501:00:23:08	23.2	16.4	-4.1	23.50	0.25	2.2	0.25	2.2	123.7	286.0	286.4	76.5	50.7	77.5	162.8	162.4	210.5	210.4
20180501:00:28:08	23.2	16.5	-4.1	23.50	0.25	2.2	0.25	2.2	123.9	285.9	286.3	76.5	50.6	77.4	164.1	163.7	212.3	212.1
20180501:00:33:08	23.2	16.6	-4.1	23.50	0.25	2.2	0.25	2.2	124.1	285.9	286.3	76.5	50.6	77.4	165.5	165.1	214.0	213.9
20180501:00:38:08	23.2	16.6	-4.1	23.50	0.25	2.2	0.25	2.2	124.2	285.8	286.3	76.4	50.6	77.4	166.9	166.5	215.8	215.6
20180501:00:43:08	23.2	16.7	-4.0	23.50	0.25	2.2	0.25	2.2	124.4	285.9	286.4	76.4	50.6	77.3	168.2	167.8	217.6	217.4
20180501:00:48:08	23.2	16.9	-4.0	23.50	0.25	2.2	0.25	2.2	124.7	285.9	286.4	76.3	50.7	77.3	169.6	169.2	219.4	219.2
20180501:00:53:08	23.2	16.9	-4.1	23.50	0.25	2.2	0.25	2.2	124.8	286.0	286.4	76.3	50.7	77.3	171.0	170.5	221.1	220.9
20180501:00:58:08	23.2	17.0	-4.1	23.49	0.25	2.2	0.25	2.2	124.9	286.1	286.4	76.2	50.6	77.2	172.3	171.9	222.8	222.7
20180501:01:03:08	23.2	17.1	-4.1	23.49	0.25	2.2	0.25	2.2	125.1	285.8	286.3	76.2	50.7	77.2	173.7	173.3	224.7	224.4
20180501:01:08:08	23.2	17.1	-4.1	23.49	0.25	2.2	0.25	2.2	125.2	286.1	286.5	76.2	50.6	77.1	175.1	174.6	226.4	226.2
20180501:01:13:08	23.2	16.9	-4.1	23.48	0.25	2.2	0.25	2.2	124.7	285.9	286.4	76.2	50.6	77.1	176.4	176.0	228.1	228.0
20180501:01:18:08	23.2	17.5	-4.1	23.49	0.25	2.2	0.25	2.2	125.9	286.1	286.6	76.1	50.7	77.1	177.8	177.3	229.9	229.7
20180501:01:23:08	23.2	17.7	-4.1	23.48	0.25	2.2	0.25	2.2	126.5	286.1	286.5	76.1	50.6	77.1	179.1	178.7	231.7	231.5
20180501:01:28:08	23.2	18.0	-4.1	23.48	0.25	2.2	0.25	2.2	127.0	286.0	286.5	76.1	50.6	77.0	180.5	180.1	233.4	233.2
20180501:01:33:08	23.2	18.2	-4.1	23.48	0.25	2.2	0.25	2.2	127.4	286.0	286.5	76.1	50.7	77.0	181.9	181.4	235.2	235.0
20180501:01:38:08	23.2	18.3	-4.0	23.48	0.25	2.2	0.25	2.2	127.7	286.0	286.5	76.0	50.6	76.9	183.2	182.8	236.9	236.8
20180501:01:43:08	23.2	18.6	-4.0	23.48	0.25	2.2	0.25	2.2	128.2	286.1	286.6	75.9	50.6	76.9	184.6	184.1	238.7	238.5
20180501:01:48:08	23.2	18.7	-4.0	23.48	0.25	2.2	0.25	2.2	128.5	286.0	286.5	75.9	50.7	76.9	185.9	185.5	240.5	240.3
20180501:01:53:08	23.2	18.8	-4.0	23.48	0.25	2.2	0.25	2.2	128.7	286.0	286.5	75.9	50.6	76.9	187.3	186.8	242.2	242.0
20180501:01:58:08	23.2	19.0	-3.9	23.48	0.25	2.2	0.25	2.2	129.0	286.0	286.5	75.9	50.6	76.9	188.7	188.2	244.0	243.8
20180501:02:03:08	23.2	19.0	-3.9	23.48	0.25	2.2	0.25	2.2	129.0	285.9	286.5	75.9	50.6	76.8	190.0	189.6	245.7	245.6
20180501:02:08:08	23.2	19.2	-3.9	23.48	0.25	2.2	0.25	2.2	129.5	285.9	286.5	75.9	50.6	76.8	191.3	190.9	247.5	247.3
20180501:02:13:08	23.2	19.2	-4.1	23.48	0.25	2.2	0.25	2.2	129.3	285.9	286.4	75.8	50.6	76.8	192.7	192.3	249.3	249.1
20180501:02:18:08	23.2	18.6	-4.2	23.48	0.25	2.2	0.25	2.2	128.1	285.9	286.5	75.8	50.7	76.8	194.1	193.6	251.0	250.8
20180501:02:23:08	23.2	19.0	-4.2	23.48	0.25	2.2	0.25	2.2	129.0	286.0	286.5	75.8	50.6	76.7	195.4	194.9	252.7	252.5
20180501:02:28:08	23.2	19.0	-4.2	23.48	0.25	2.2	0.25	2.2	129.0	285.9	286.4	75.8	50.6	76.7	196.8	196.3	254.5	254.3
20180501:02:33:08	23.2	18.9	-4.2	23.48	0.25	2.2	0.25	2.2	128.9	286.0	286.5	75.8	50.6	76.7	198.1	197.6	256.2	256.0
20180501:02:38:08	23.2	18.8	-4.2	23.48	0.25	2.2	0.25	2.2	128.6	286.0	286.5	75.7	50.6	76.7	199.5	199.0	258.0	257.8
20180501:02:43:08	23.2	18.7	-4.2	23.48	0.25	2.2	0.25	2.2	128.4	286.0	286.5	75.7	50.6	76.6	200.8	200.3	259.8	259.5
20180501:02:48:08	23.2	18.7	-4.2	23.48	0.25	2.2	0.25	2.2	128.5	285.9	286.5	75.7	50.6	76.6	202.2	201.7	261.5	261.3
20180501:02:53:08	23.2	18.7	-4.2	23.48	0.25	2.2	0.25	2.2	128.4	285.9	286.4	75.6	50.6	76.5	203.6	203.0	263.2	263.0
20180501:02:58:08	23.2	18.5	-4.2	23.49	0.25	2.2	0.25	2.2	128.1	285.9	286.5	75.6	50.6	76.6	204.9	204.4	265.0	264.7
20180501:03:03:08	23.2	18.5	-4.2	23.49	0.25	2.2	0.25	2.2	128.0	286.0	286.5	75.6	50.6	76.5	206.2	205.7	266.7	266.5
20180501:03:08:08	23.2	18.5	-4.2	23.49	0.25	2.2	0.25	2.2	128.0	286.0	286.4	75.5	50.6	76.5	207.6	207.1	268.5	268.2
20180501:03:13:08	23.2	18.4	-4.2	23.49	0.25	2.2	0.25	2.2	127.8	286.0	286.5	75.5	50.6	76.5	208.9	208.4	270.2	270.0
20180501:03:18:08	23.2	18.3	-4.3	23.49	0.25	2.2	0.25	2.2	127.7	285.9	286.6	75.5	50.6	76.5	210.3	209.8	272.0	271.7
20180501:03:23:08	23.2	17.1	-4.5	23.49	0.25	2.1	0.25	2.1	125.2	285.9	286.5	75.5	50.6	76.4	211.6	211.1	273.7	273.4
20180501:03:28:08	23.1	17.0	-4.6	23.49	0.25	2.2	0.25	2.1	124.8	285.8	286.5	75.4	50.6	76.4	213.0	212.5	275.4	275.2
20180501:03:33:08	23.2	16.6	-4.4	23.49	0.25	2.2	0.25	2.1	124.1	285.9	286.5	75.4	50.6	76.4	214.3	213.8	277.2	276.9
20180501:03:38:08	23.2	17.2	-4.3	23.49	0.25	2.2	0.25	2.2	125.3	286.0	286.5	75.4	50.6	76.4	215.7	215.2	278.9	278.7
20180501:03:43:08	23.2	17.5	-4.3	23.49	0.25	2.2	0.25	2.1	126.0	286.1	286.5	75.3	50.6	76.3	217.0	216.5	280.7	280.4
20180501:03:48:08	23.2	17.7	-4.3	23.49	0.25	2.2	0.25	2.2	126.5	286.0	286.5	75.3	50.7	76.3	218.4	217.9	282.4	282.2
20180501:03:53:08	23.2	17.8	-4.3	23.49	0.25	2.2	0.25	2.1	126.7	286.0	286.5	75.3	50.7	76.2	219.7	219.2	284.1	283.9
20180501:03:58:08	23.2	17.9	-4.3	23.48	0.25	2.2	0.25	2.1	126.9	285.9	286.5	75.2	50.6	76.2	221.1	220.5	285.9	285.6
20180501:04:03:08	23.2	17.9	-4.3	23.48	0.25	2.2	0.25	2.2	126.8	286.0	286.6	75.2	50.6	76.2	222.4	221.9	287.6	287.4
20180501:04:08:08	23.2	17.9	-4.3	23.48	0.25	2.2	0.25	2.2	126.7	286.0	286.5	75.2	50.6	76.1	223.8	223.2	289.4	289.1
20180501:04:13:08	23.2	17.8	-4.3	23.48	0.25	2.2	0.25	2.1	126.7	286.0	286.6	75.2	50.6	76.1	225.1	224.6	291.1	290.9
20180501:04:18:08	23.2	17.9	-4.3	23.48	0.25	2.2	0.25	2.2	126.8	286.0	286.5	75.2	50.6	76.1	226.5	225.9	292.9	292.6
20180501:04:23:08	23.2	17.9	-4.3	23.48	0.25	2.2	0.25	2.2	126.8	286.0	286.5	75.2	50.7	76.1	227.9	227.3	294.6	294.4
20180501:04:28:08	23.2	17.9	-4.3	23.48	0.25	2.2	0.25	2.1	126.8	285.9	286.5	75.2	50.6	76.1	229.2	228.6	296.4	296.1
20180501:04:33:08	23.2	18.0	-4.3	23.48	0.25	2.2	0.25	2.1	127.0	285.9	286.4	75.1	50.6	76.0	230.5	229.9	298.1	297.8
20180501:04:38:08	23.2	17.9	-4.3	23.48	0.25	2.2	0.25	2.2	126.7	285.9	286.5	75.1	50.7	76.0	231.9	231.3	299.9	299.6
20180501:04:43:08	23.2	17.9	-4.3	23.48	0.25	2.2	0.25	2.2	126.7	286.0	286.5	75.1	50.7	76.0	233.2	232.6	301.6	301.3
20180501:04:48:08	23.2	17.9	-4.3	23.48	0.25	2.2	0.25	2.2	126.8	285.9	286.5	74.9	50.6	75.9	234.6	234.0	303.3	303.1
20180501:04:53:08	23.2	17.9	-4.4	23.48	0.25	2.2	0.25	2.1	126.7	285.9	286.4	74.9	50.6	75.9	235.9	235.3	305.1	304.8
20180501:04:58:08	23.2	17.9	-4.4	23.48	0.25	2.2	0.25	2.2	126.7	285.9	286.5	74.9	50.7	75.9	237.3	236.7	306.8	306.6
20180501:05:03:08	23.2	17.8	-4.4	23.48	0.25	2.2	0.25	2.2	126.6	285.9	286.5	74.9	50.6	75.8	238.7	238.1	308.6	308.3
20180501:05:08:08	23.2	17.9	-4.4	23.49	0.25	2.2	0.25	2.2	126.8	286.0	286.5	74.9	50.6	75.8	240.0	239.4	310.3	310.0
20180501:05:13:08	23.2	17.9	-4.4	23.49	0.25	2.2	0.25	2.2	126.8	285.9	286.4	74.8	50.7	75.8	241.3	240.8	312.0	311.8

Time:	Stack Pressure:	Sat% H2O:	Static:	Barometric:	Flowmeter1:	Vacuum1:	Flowmeter2:	Vacuum2:	Stack Temp:	Sorbent Temp:	Probe Temp:	DGM#1 Temp:	Condenser Temp:	DGM#2 Temp:	DGM1*:	DGM2*:	DGM1:	DGM2:
day:hh:mm:ss	in-Hg	Percent	in-H2O	in-Hg	l/min	in-Hg	l/min	in-Hg	degF	degF	degF	degF	degF	degF	liters STP	liters STP	liters nominal	liters nominal
20180501:05:18:08	23.2	17.7	-4.4	23.49	0.25	2.2	0.25	2.2	126.3	285.9	286.5	74.8	50.7	75.8	242.7	242.1	313.8	313.5
20180501:05:23:08	23.2	17.5	-4.3	23.49	0.25	2.2	0.25	2.2	125.9	285.8	286.4	74.8	50.6	75.7	244.0	243.5	315.5	315.3
20180501:05:28:08	23.2	17.2	-4.3	23.49	0.25	2.2	0.25	2.2	125.4	285.8	286.5	74.8	50.7	75.7	245.4	244.8	317.3	317.0
20180501:05:33:08	23.2	17.1	-4.2	23.49	0.25	2.2	0.25	2.2	125.0	285.9	286.4	74.8	50.7	75.6	246.8	246.1	319.0	318.8
20180501:05:38:08	23.2	16.9	-4.2	23.49	0.25	2.2	0.25	2.2	124.7	285.9	286.5	74.8	50.6	75.6	248.1	247.5	320.8	320.5
20180501:05:43:08	23.2	16.9	-4.2	23.49	0.25	2.2	0.25	2.2	124.6	285.9	286.5	74.8	50.7	75.6	249.5	248.8	322.6	322.3
20180501:05:48:08	23.2	16.7	-4.2	23.49	0.25	2.2	0.25	2.2	124.2	285.9	286.5	74.8	50.7	75.6	250.8	250.2	324.3	324.1
20180501:05:53:08	23.2	16.5	-4.2	23.49	0.25	2.2	0.25	2.2	124.0	285.9	286.5	74.7	50.7	75.6	252.2	251.6	326.0	325.8
20180501:05:58:08	23.2	16.6	-4.1	23.49	0.25	2.2	0.25	2.2	124.0	285.9	286.5	74.7	50.6	75.6	253.6	252.9	327.8	327.5
20180501:06:03:08	23.2	16.7	-4.1	23.49	0.25	2.2	0.25	2.2	124.2	285.9	286.5	74.7	50.7	75.6	254.9	254.3	329.5	329.3
20180501:06:08:08	23.2	16.8	-4.1	23.49	0.25	2.2	0.25	2.2	124.6	285.9	286.5	74.7	50.7	75.6	256.3	255.6	331.3	331.0
20180501:06:13:08	23.2	16.9	-4.1	23.49	0.25	2.2	0.25	2.2	124.7	285.9	286.4	74.6	50.7	75.5	257.6	257.0	333.1	332.8
20180501:06:18:08	23.2	16.8	-4.1	23.49	0.25	2.2	0.25	2.2	124.6	285.9	286.4	74.6	50.6	75.5	259.0	258.3	334.8	334.5
20180501:06:23:08	23.2	16.9	-4.1	23.49	0.25	2.2	0.25	2.2	124.8	285.9	286.4	74.6	50.6	75.5	260.4	259.7	336.6	336.3
20180501:06:28:08	23.2	17.0	-4.0	23.50	0.25	2.2	0.25	2.2	124.9	285.9	286.5	74.6	50.7	75.5	261.7	261.1	338.3	338.1
20180501:06:33:08	23.2	16.9	-4.1	23.50	0.25	2.2	0.25	2.2	124.7	285.9	286.4	74.5	50.7	75.4	263.1	262.4	340.1	339.8
20180501:06:38:08	23.2	16.8	-4.3	23.50	0.25	2.2	0.25	2.2	124.4	285.9	286.4	74.5	50.6	75.4	264.4	263.8	341.8	341.6
20180501:06:43:08	23.2	16.6	-4.2	23.50	0.25	2.2	0.25	2.2	124.1	286.0	286.6	74.5	50.7	75.4	265.8	265.1	343.6	343.3
20180501:06:48:08	23.2	16.6	-4.2	23.50	0.25	2.2	0.25	2.2	124.1	285.9	286.4	74.4	50.6	75.4	267.2	266.5	345.3	345.1
20180501:06:53:08	23.2	16.6	-4.2	23.50	0.25	2.2	0.25	2.2	124.2	285.9	286.4	74.4	50.7	75.3	268.5	267.8	347.1	346.8
20180501:06:58:08	23.2	16.5	-4.1	23.50	0.25	2.2	0.25	2.2	124.0	285.9	286.5	74.4	50.6	75.3	269.8	269.2	348.8	348.6
20180501:07:03:08	23.2	16.4	-4.1	23.51	0.25	2.2	0.25	2.2	123.6	285.9	286.4	74.3	50.6	75.2	271.2	270.6	350.6	350.3
20180501:07:08:08	23.2	16.4	-4.4	23.51	0.25	2.2	0.25	2.2	123.6	285.9	286.5	74.3	50.6	75.2	272.6	271.9	352.3	352.1
20180501:07:13:08	23.2	16.2	-4.3	23.51	0.25	2.2	0.25	2.2	123.3	285.9	286.5	74.3	50.6	75.2	273.9	273.3	354.1	353.9
20180501:07:18:08	23.2	16.2	-4.3	23.51	0.25	2.2	0.25	2.2	123.1	285.9	286.4	74.3	50.6	75.2	275.3	274.6	355.9	355.6
20180501:07:23:08	23.2	16.2	-4.2	23.51	0.25	2.2	0.25	2.2	123.2	285.9	286.5	74.2	50.6	75.2	276.7	276.0	357.6	357.3
20180501:07:28:08	23.2	16.1	-4.1	23.51	0.25	2.2	0.25	2.2	123.0	285.9	286.4	74.2	50.6	75.1	278.0	277.4	359.4	359.1
20180501:07:33:08	23.2	15.7	-4.1	23.51	0.25	2.2	0.25	2.2	122.0	285.9	286.5	74.2	50.6	75.1	279.4	278.7	361.1	360.8
20180501:07:38:08	23.2	15.9	-4.1	23.51	0.25	2.2	0.25	2.2	122.5	285.9	286.5	74.2	50.6	75.1	280.7	280.1	362.8	362.6
20180501:07:43:08	23.2	16.0	-4.2	23.51	0.25	2.2	0.25	2.2	122.6	285.8	286.4	74.2	50.6	75.1	282.1	281.4	364.6	364.3
20180501:07:48:08	23.2	15.9	-4.1	23.51	0.25	2.2	0.25	2.2	122.6	285.9	286.5	74.1	50.6	75.1	283.5	282.8	366.4	366.1
20180501:07:53:08	23.2	15.4	-4.3	23.51	0.25	2.2	0.25	2.2	121.4	285.8	286.5	74.0	50.6	75.0	284.8	284.2	368.1	367.9
20180501:07:58:08	23.2	15.7	-4.0	23.51	0.25	2.2	0.25	2.2	122.0	285.8	286.4	74.0	50.6	75.0	286.2	285.5	369.9	369.6
20180501:08:03:08	23.2	15.8	-4.2	23.51	0.25	2.2	0.25	2.2	122.2	285.8	286.4	74.0	50.6	74.9	287.6	286.9	371.6	371.4
20180501:08:08:08	23.2	15.8	-4.0	23.51	0.25	2.2	0.25	2.2	122.4	285.9	286.4	74.0	50.6	74.9	288.9	288.2	373.4	373.1
20180501:08:13:08	23.2	15.8	-4.1	23.51	0.25	2.2	0.25	2.2	122.3	285.9	286.5	74.1	50.6	75.0	290.3	289.6	375.1	374.9
20180501:08:18:08	23.2	15.8	-4.2	23.51	0.25	2.2	0.25	2.2	122.2	285.9	286.5	74.1	50.6	74.9	291.6	290.9	376.9	376.6
20180501:08:23:08	23.2	15.7	-4.2	23.51	0.25	2.2	0.25	2.2	122.2	285.9	286.4	74.0	50.6	74.9	293.0	292.3	378.7	378.3
20180501:08:28:08	23.2	15.8	-4.2	23.51	0.25	2.2	0.25	2.2	122.3	285.9	286.5	74.1	50.6	74.9	294.4	293.7	380.4	380.1
20180501:08:33:08	23.2	15.8	-4.2	23.51	0.25	2.2	0.25	2.2	122.3	286.0	286.5	74.1	50.6	74.9	295.7	295.0	382.1	381.9
20180501:08:38:08	23.2	15.9	-4.2	23.51	0.25	2.2	0.25	2.2	122.5	286.0	286.5	74.1	50.5	74.9	297.1	296.4	383.9	383.6
20180501:08:43:08	23.2	15.4	-4.2	23.51	0.25	2.2	0.25	2.2	121.4	285.9	286.5	74.1	50.6	74.9	298.4	297.7	385.6	385.4
20180501:08:48:08	23.2	15.1	-4.1	23.51	0.25	2.2	0.25	2.2	120.7	285.8	286.4	74.0	50.6	74.9	299.8	299.1	387.4	387.1
20180501:08:53:08	23.2	15.6	-4.2	23.51	0.25	2.2	0.25	2.2	121.8	285.9	286.5	74.0	50.6	74.9	301.2	300.5	389.2	388.9
20180501:08:58:08	23.2	15.8	-4.2	23.51	0.25	2.2	0.25	2.2	122.3	285.9	286.4	74.0	50.6	74.9	302.5	301.8	390.9	390.6
20180501:09:03:08	23.2	15.9	-4.2	23.51	0.25	2.2	0.25	2.2	122.6	285.9	286.5	74.0	50.6	74.9	303.9	303.2	392.7	392.4
20180501:09:08:08	23.2	16.0	-4.2	23.52	0.25	2.2	0.25	2.2	122.9	285.9	286.5	74.0	50.6	74.9	305.3	304.5	394.4	394.1
20180501:09:13:08	23.2	16.2	-4.2	23.52	0.25	2.2	0.25	2.2	123.2	286.0	286.4	74.0	50.6	74.9	306.6	305.9	396.2	395.9
20180501:09:18:08	23.2	16.2	-4.2	23.52	0.25	2.2	0.25	2.2	123.3	286.0	286.5	74.0	50.6	74.9	308.0	307.3	398.0	397.7
20180501:09:23:08	23.2	16.3	-4.2	23.51	0.25	2.2	0.25	2.2	123.4	286.0	286.4	74.0	50.6	74.9	309.4	308.6	399.7	399.4
20180501:09:28:08	23.2	16.2	-4.2	23.52	0.25	2.2	0.25	2.2	123.3	285.9	286.5	74.0	50.6	74.9	310.7	310.0	401.4	401.2
20180501:09:33:08	23.2	16.2	-4.2	23.52	0.25	2.2	0.25	2.2	123.2	285.9	286.4	74.0	50.5	74.9	312.1	311.3	403.2	402.9
20180501:09:38:08	23.2	15.8	-4.2	23.52	0.25	2.2	0.25	2.2	122.2	285.9	286.5	74.0	50.5	74.9	313.4	312.7	404.9	404.7
20180501:09:43:08	23.2	15.4	-4.2	23.52	0.25	2.2	0.25	2.2	121.4	285.9	286.5	74.0	50.5	74.9	314.8	314.1	406.7	406.4
20180501:09:48:08	23.2	15.3	-4.2	23.52	0.25	2.2	0.25	2.2	121.0	285.8	286.5	74.0	50.5	74.9	316.2	315.4	408.5	408.2
20180501:09:53:08	23.2	15.7	-4.1	23.52	0.25	2.2	0.25	2.2	122.1	286.0	286.5	74.0	50.5	74.9	317.5	316.8	410.2	409.9
20180501:09:58:08	23.2	16.1	-3.9	23.52	0.25	2.2	0.25	2.2	123.0	285.9	286.5	74.0	50.5	74.9	318.9	318.1	412.0	411.7
20180501:10:03:08	23.2	16.3	-4.2	23.52	0.25	2.2	0.25	2.2	123.5	285.9	286.4	74.0	50.5	74.9	320.3	319.5	413.7	413.5
20180501:10:08:08	23.2	16.4	-4.2	23.52	0.25	2.2	0.25	2.2	123.7	285.9	286.4	74.0	50.5	74.9	321.6	320.9	415.4	415.2
20180501:10:13:08	23.2	16.6	-4.3	23.52	0.25	2.2	0.25	2.2	124.0	285.9	286.5	74.0	50.5	74.9	323.0	322.2	417.2	416.9
20180501:10:18:08	23.2	16.7	-4.3	23.52	0.25	2.2	0.25	2.2	124.2	286.0	286.4	74.1	50.6	75.0	324.3	323.6	419.0	418.7
20180501:10:23:08	23.2	16.7	-4.3	23.52	0.25	2.2	0.25	2.2	124.3	286.0	286.5	74.2	50.6	75.0	325.7	324.9	420.7	420.4
20180501:10:28:08	23.2	16.8	-4.3	23.52	0.25	2.2	0.25	2.2	124.5	286.0	286.5	74.2	50.6	75.0	327.1	326.3	422.5	422.2
20180501:10:33:08	23.2	16.9	-4.2	23.52	0.25	2.2	0.25	2.2	124.7	286.0	286.4	74.2	50.6	75.0	328.4	327.7	424.2	423.9
20180501:10:38:08	23.2	17.0	-4.2	23.52	0.25	2.2	0.25	2.2	125.0	286.0	286.5	74.2	50.6	75.1	329.8	329.0	426.0	425.7
20180501:10:43:08	23.2	17.2	-4.1	23.52	0.25	2.2	0.25	2.2	125.3	285.9	286.4	74.2	50.5	75.1	331.1	330.4	427.7	427.5
20180501:10:48:08	23.2	16.9	-4.4	23.51	0.25	2.2	0.25	2.2	124.6	285.9	286.5	74.2	50.5	75.1	332.5	331.7	429.4	429.2
20180501:10:53:08	23.2	16.3	-4.2	23.51	0.25	2.2	0.25	2.2	123.4	285.8	286.5	74.2	50.6	75.1	333.9	333.1	431.2	430.9
20180501:10:58:08	23.2	16.0	-4.3	23.51	0.25	2.2	0.25	2.2	122.7	285.9	286.5	74.3	50.6	75.1	335.2	334.4	432.9	432.7
20180501:11:03:08	23.2	16.1	-4.0	23.51	0.25	2.2	0.25	2.2	123.0	285.8	286.4	74.3	50.6	75.1	336.6	335.8	434.7	434.4
20180501:11:08:08	23.2	16.7	-4.2	23.51	0.25	2.2	0.25	2.2	124.2	285.9	286.4	74.3	50.5	75.2	337.9	337.2	436.5	436.2
20180501:11:13:08	23.2	16.7	-4.0	23.51	0.25	2.2	0.25	2.2	124.4	285.9	286.5	74.4	50.5	75.2	339.3	338.5	438.2	437.9
20180501:11:18:08	23.2	16.9	-4.2	23.51	0.25	2.2	0.25	2.2	124.7	286.0	286.4	74.5	50.6	75.2	340.7	339.9	440.0	439.7
20180501:11:23:08	23.2	16.9	-4.3	23.50	0.25	2.2	0.25	2.2	124.7	286.0	286.4	74.5	50.6	75.3	342.0	341.2	441.7	441.4
20180501:11:28:08	23.2	16.8	-4.3	23.50	0.25	2.2	0.25	2.2	124.5	286.0	286.4	74.5	50.6	75.3	343.3	342.6	443.4	443.2
20180501:11:33:08	23.2	16.7	-4.3	23.50	0.25	2.2	0.25	2.2	124.3	285.9	286.4	74.6	50.6	75.3	344.7	343.9	445.2	444.9
20180501:11:38:08	23.2	16.7	-4.3	23.50	0.25	2.2	0.25	2.2	124.2	285.9	286.4	74.6	50.6	75.4	346.1	345.3	446.9	446.7
20180501:11:43:08	23.2	16.6	-4.2	23.49	0.25	2.2	0.25	2.2	124.0	285.9	286.4	74.6	50.6	75.4	347.4	346.7	448.7	448.4
20180501:11:48:08	23.2	16.7	-4.0	23.50	0.25	2.2	0.25	2.2	124.2	286.0	286.5	74.7	50.6	75.5	348.8	348.0	450.5	450.1
20180501:11:53:08	23.2	16.7	-4.0	23.50	0.25	2.2	0.25	2.2	124.3	285.9	286.5	74.7	50.6	75.5	350.1	349.4	452.2	451.9
20180501:11:58:08	23.2	16.0	-4.3	23.50	0.25	2.2	0.25	2.2	122.7	285.8	286.5	74.8	50.6	75.5	351.5	350.7	454.0	453.7
20180501:12:03:08	23.2	16.0	-4.3	23.50	0.25	2.2	0.25	2.2	122.7	285.8	286.5	74.8	50.6	75.5	352.9	352.1	455.7	455.4
20180501:12:08:08	23.2	16.2	-4.2	23.49	0.25	2.2	0.25	2.2	123.2	286.0	286.6	74.9	50.6	75.6	354.2	353.4	457.4	457.2
20180501:12:13:08	23.2	16.0	-4.3	23.50	0.25	2.2	0.25	2.2	122.8	285.9	286.5	74.9	50.5	75.6	355.6	354.7	459.2	458.9
20180501:12:18:08	23.2	16.1	-4.1	23.50	0.25	2.2	0.25	2.2	122.9	285.9	286.4	74.9	50.6	75.7	356.9	356.1	461.0	460.7
20180501:12:23:08	23.2	16.1	-3.8	23.50	0.25	2.2	0.25	2.2	122.9	285.9	286.5	75.0	50.6	75.8	358.3	357.5	462.7	462.4
20180501:12:28:08	23.2	16.1	-4.1	23.50	0.25	2.2	0.25	2.2	123.0	285.9	286.5	75.0	50.5	75.8	359.7	358.8	464.5	464.2
20180501:12:33:08	23.2	16.1	-4.0	23.49	0.25	2.2	0.25	2.2	122.9	285.9	286.5	75.1	50.6	75.8	361.0	360.2	466.2	465.9
20180501:12:38:08	23.2	16.0	-4.0	23.49	0.25	2.2	0.25	2.2	122.6	286.0	286.5	75.1	50.6	75.9	362.4	361.5	468.0	467.6

Time:	Stack Pressure:	Sat% H2O:	Static:	Barometric:	Flowmeter1:	Vacuum1:	Flowmeter2:	Vacuum2:	Stack Temp:	Sorbent Temp:	Probe Temp:	DGM#1 Temp:	Condenser Temp:	DGM#2 Temp:	DGM1*:	DGM2*:	DGM1:	DGM2:
day:hh:mm:ss	in-Hg	Percent	in-H2O	in-Hg	l/min	in-Hg	l/min	in-Hg	degF	degF	degF	degF	degF	degF	liters STP	liters STP	liters nominal	liters nominal
20180501:12:43:08	23.2	15.9	-4.0	23.49	0.25	2.2	0.25	2.2	122.5	286.0	286.5	75.2	50.6	75.9	363.7	362.9	469.7	469.4
20180501:12:48:08	23.2	15.8	-4.2	23.50	0.25	2.2	0.25	2.2	122.3	286.0	286.5	75.2	50.6	76.0	365.1	364.2	471.4	471.1
20180501:12:53:08	23.2	15.4	-4.2	23.49	0.25	2.2	0.25	2.2	121.3	285.9	286.5	75.2	50.6	76.0	366.5	365.6	473.2	472.9
20180501:12:58:08	23.2	15.2	-4.1	23.49	0.25	2.2	0.25	2.2	121.0	285.9	286.5	75.3	50.6	76.1	367.8	366.9	475.0	474.7
20180501:13:03:08	23.2	15.5	-4.1	23.49	0.25	2.2	0.25	2.2	121.6	286.0	286.6	75.3	50.6	76.1	369.1	368.3	476.7	476.4
20180501:13:08:08	23.2	15.6	-4.1	23.49	0.25	2.2	0.25	2.2	121.8	286.0	286.5	75.3	50.6	76.1	370.5	369.7	478.5	478.2
20180501:13:13:08	23.2	15.6	-4.1	23.49	0.25	2.2	0.25	2.2	121.9	286.0	286.5	75.4	50.6	76.2	371.8	371.0	480.2	479.9
20180501:13:18:08	23.2	15.7	-4.1	23.50	0.25	2.2	0.25	2.2	122.1	286.0	286.5	75.4	50.6	76.2	373.2	372.4	482.0	481.7
20180501:13:23:08	23.2	15.8	-4.2	23.50	0.25	2.2	0.25	2.2	122.3	286.0	286.5	75.4	50.6	76.2	374.6	373.7	483.7	483.4
20180501:13:28:08	23.2	15.9	-4.2	23.50	0.25	2.2	0.25	2.2	122.5	286.0	286.5	75.4	50.6	76.2	375.9	375.1	485.5	485.2
20180501:13:33:08	23.2	16.0	-4.0	23.50	0.25	2.2	0.25	2.2	122.8	286.1	286.5	75.4	50.6	76.3	377.3	376.4	487.2	486.9
20180501:13:38:08	23.2	16.1	-4.1	23.51	0.25	2.2	0.25	2.2	123.0	286.1	286.5	75.4	50.6	76.3	378.6	377.8	489.0	488.6
20180501:13:43:08	23.2	16.2	-4.0	23.50	0.25	2.2	0.25	2.2	123.3	286.1	286.6	75.5	50.6	76.3	380.0	379.1	490.7	490.4
20180501:13:48:08	23.2	16.1	-4.2	23.51	0.25	2.2	0.25	2.2	123.0	286.0	286.5	75.5	50.6	76.3	381.4	380.5	492.5	492.1
20180501:13:53:08	23.2	15.9	-4.3	23.51	0.25	2.2	0.25	2.2	122.5	286.0	286.5	75.5	50.6	76.3	382.7	381.9	494.2	493.9
20180501:13:58:08	23.2	16.3	-4.2	23.51	0.25	2.2	0.25	2.2	123.3	286.0	286.5	75.5	50.6	76.4	384.1	383.2	496.0	495.6
20180501:14:03:08	23.2	16.4	-4.1	23.51	0.25	2.2	0.25	2.2	123.6	286.0	286.5	75.5	50.6	76.4	385.4	384.5	497.7	497.4
20180501:14:08:08	23.2	16.3	-4.1	23.51	0.25	2.2	0.25	2.2	123.5	286.0	286.5	75.5	50.6	76.4	386.8	385.9	499.5	499.2
20180501:14:13:08	23.2	16.6	-4.2	23.51	0.25	2.2	0.25	2.2	124.1	286.0	286.5	75.5	50.7	76.4	388.2	387.2	501.3	500.9
20180501:14:18:08	23.2	16.7	-4.2	23.52	0.25	2.2	0.25	2.2	124.2	286.0	286.5	75.5	50.6	76.4	389.5	388.6	503.0	502.7
20180501:14:23:08	23.2	16.4	-4.2	23.52	0.25	2.2	0.25	2.2	123.6	286.0	286.5	75.5	50.6	76.4	390.8	390.0	504.7	504.4
20180501:14:28:08	23.2	16.6	-4.3	23.53	0.25	2.2	0.25	2.2	124.0	286.0	286.5	75.5	50.7	76.4	392.2	391.3	506.5	506.2
20180501:14:33:08	23.2	16.8	-4.3	23.53	0.25	2.2	0.25	2.2	124.5	286.0	286.5	75.5	50.7	76.4	393.5	392.7	508.2	507.9
20180501:14:38:08	23.2	16.9	-4.2	23.53	0.25	2.2	0.25	2.2	124.7	286.0	286.5	75.6	50.7	76.4	394.9	394.0	510.0	509.6
20180501:14:43:08	23.2	17.1	-4.2	23.54	0.25	2.2	0.25	2.2	125.3	286.0	286.6	75.6	50.8	76.4	396.3	395.4	511.7	511.4
20180501:14:48:08	23.2	17.0	-4.4	23.54	0.25	2.2	0.25	2.2	124.9	286.0	286.5	75.6	50.7	76.4	397.6	396.7	513.4	513.1
20180501:14:53:08	23.2	16.3	-4.3	23.54	0.25	2.2	0.25	2.2	123.4	285.9	286.6	75.5	50.8	76.4	399.0	398.1	515.2	514.9
20180501:14:58:08	23.3	16.9	-4.0	23.54	0.25	2.2	0.25	2.2	124.9	285.9	286.5	75.5	50.8	76.4	400.3	399.4	517.0	516.6
20180501:15:03:08	23.2	17.2	-4.4	23.55	0.25	2.2	0.25	2.2	125.4	286.0	286.5	75.5	50.8	76.4	401.7	400.8	518.7	518.4
20180501:15:08:08	23.2	17.3	-4.4	23.55	0.25	2.2	0.25	2.2	125.6	286.1	286.6	75.5	50.8	76.4	403.1	402.2	520.5	520.2
20180501:15:13:08	23.2	17.3	-4.4	23.55	0.25	2.2	0.25	2.2	125.6	286.0	286.5	75.5	50.8	76.4	404.4	403.5	522.2	521.9
20180501:15:18:08	23.2	16.9	-4.5	23.56	0.25	2.2	0.25	2.2	124.8	285.9	286.5	75.5	50.8	76.3	405.8	404.9	524.0	523.7
20180501:15:23:08	23.2	17.1	-4.5	23.56	0.25	2.2	0.25	2.2	125.1	286.0	286.5	75.4	50.8	76.3	407.1	406.2	525.7	525.4
20180501:15:28:08	23.2	17.1	-4.4	23.55	0.25	2.2	0.25	2.2	125.3	286.0	286.5	75.4	50.9	76.3	408.5	407.6	527.4	527.1
20180501:15:33:08	23.2	17.2	-4.3	23.55	0.25	2.2	0.25	2.2	125.5	286.0	286.6	75.4	50.9	76.3	409.9	408.9	529.2	528.9
20180501:15:38:08	23.2	17.2	-4.4	23.55	0.25	2.2	0.25	2.2	125.5	286.0	286.6	75.3	50.8	76.2	411.2	410.3	531.0	530.6
20180501:15:43:08	23.2	17.1	-4.3	23.55	0.25	2.2	0.25	2.2	125.3	286.0	286.5	75.2	50.8	76.2	412.6	411.6	532.7	532.4
20180501:15:48:08	23.2	17.2	-4.4	23.54	0.25	2.2	0.25	2.2	125.4	286.1	286.6	75.2	50.8	76.2	413.9	413.0	534.5	534.1
20180501:15:53:08	23.2	16.2	-4.5	23.54	0.25	2.2	0.25	2.2	123.2	286.0	286.5	75.1	50.8	76.1	415.3	414.4	536.2	535.9
20180501:15:58:08	23.2	15.7	-4.4	23.54	0.25	2.2	0.25	2.2	122.0	285.9	286.6	75.1	50.8	76.1	416.7	415.7	538.0	537.6
20180501:16:03:08	23.2	15.7	-4.3	23.55	0.25	2.2	0.25	2.2	122.0	285.9	286.5	75.0	50.8	76.0	418.0	417.1	539.7	539.4
20180501:16:08:08	23.2	16.3	-4.3	23.55	0.25	2.2	0.25	2.2	123.4	285.9	286.6	75.0	50.8	75.9	419.3	418.4	541.4	541.1
20180501:16:13:08	23.2	16.7	-4.5	23.54	0.25	2.2	0.25	2.2	124.3	286.0	286.5	74.9	50.8	75.9	420.7	419.8	543.2	542.9
20180501:16:18:08	23.2	16.9	-4.4	23.54	0.25	2.2	0.25	2.2	124.8	286.0	286.5	74.9	50.8	75.8	422.1	421.2	545.0	544.7
20180501:16:23:08	23.2	16.9	-4.4	23.54	0.25	2.2	0.25	2.2	124.8	286.0	286.5	74.8	50.8	75.8	423.4	422.5	546.7	546.4
20180501:16:28:08	23.2	16.9	-4.4	23.54	0.25	2.2	0.25	2.2	124.7	286.0	286.5	74.8	50.8	75.8	424.8	423.9	548.5	548.2
20180501:16:33:08	23.2	16.8	-4.3	23.54	0.25	2.2	0.25	2.2	124.5	285.9	286.5	74.7	50.8	75.7	426.2	425.2	550.2	549.9
20180501:16:38:08	23.2	16.7	-4.4	23.54	0.25	2.2	0.25	2.2	124.3	285.9	286.5	74.7	50.8	75.7	427.5	426.6	552.0	551.6
20180501:16:43:09	23.2	16.6	-4.3	23.53	0.25	2.2	0.25	2.2	124.1	285.9	286.5	74.6	50.8	75.6	428.9	427.9	553.7	553.4
20180501:16:48:09	23.2	16.5	-4.5	23.53	0.25	2.2	0.25	2.2	123.8	285.9	286.5	74.6	50.8	75.6	430.2	429.3	555.5	555.1
20180501:16:53:09	23.2	16.4	-4.4	23.53	0.25	2.2	0.25	2.2	123.7	285.9	286.5	74.6	50.8	75.5	431.6	430.7	557.3	556.9
20180501:16:58:09	23.2	16.2	-4.5	23.53	0.25	2.2	0.25	2.2	123.1	285.9	286.4	74.5	50.7	75.5	433.0	432.0	559.0	558.7
20180501:17:03:09	23.2	15.6	-4.4	23.53	0.25	2.2	0.25	2.2	121.7	285.8	286.4	74.5	50.7	75.5	434.3	433.3	560.7	560.4
20180501:17:08:09	23.2	15.9	-4.3	23.52	0.25	2.2	0.25	2.2	122.6	285.9	286.4	74.5	50.7	75.5	435.7	434.7	562.5	562.2
20180501:17:13:09	23.2	16.2	-4.4	23.52	0.25	2.2	0.25	2.2	123.3	286.0	286.4	74.5	50.7	75.5	437.0	436.1	564.2	563.9
20180501:17:18:09	23.2	16.5	-4.6	23.53	0.25	2.2	0.25	2.2	123.8	286.0	286.4	74.5	50.7	75.5	438.4	437.4	566.0	565.7
20180501:17:23:09	23.2	16.6	-4.5	23.53	0.25	2.2	0.25	2.2	124.1	286.0	286.4	74.5	50.6	75.4	439.8	438.8	567.7	567.4
20180501:17:28:09	23.2	16.8	-4.3	23.53	0.25	2.2	0.25	2.2	124.5	286.0	286.4	74.5	50.6	75.4	441.1	440.1	569.4	569.1
20180501:17:33:09	23.2	17.0	-4.3	23.53	0.25	2.2	0.25	2.2	125.0	286.1	286.5	74.5	50.7	75.4	442.5	441.5	571.2	570.9
20180501:17:38:09	23.2	17.2	-4.2	23.53	0.25	2.2	0.25	2.2	125.5	286.0	286.5	74.5	50.6	75.4	443.8	442.8	573.0	572.6
20180501:17:43:09	23.2	17.4	-4.2	23.52	0.25	2.2	0.25	2.2	125.9	286.0	286.5	74.5	50.6	75.4	445.2	444.2	574.7	574.4
20180501:17:48:09	23.2	17.4	-4.2	23.52	0.25	2.2	0.25	2.2	125.9	286.0	286.4	74.5	50.6	75.4	446.5	445.5	576.5	576.1
20180501:17:53:09	23.2	17.6	-4.3	23.52	0.25	2.2	0.25	2.2	126.2	286.0	286.4	74.5	50.6	75.4	447.9	446.9	578.2	577.9
20180501:17:58:09	23.2	17.7	-4.2	23.52	0.25	2.2	0.25	2.2	126.5	286.1	286.5	74.5	50.6	75.4	449.3	448.2	580.0	579.6
20180501:18:03:09	23.2	17.9	-4.2	23.52	0.25	2.2	0.25	2.2	126.9	286.1	286.5	74.5	50.6	75.4	450.6	449.6	581.7	581.3
20180501:18:08:09	23.2	17.6	-4.5	23.53	0.25	2.2	0.25	2.2	126.2	286.1	286.5	74.6	50.6	75.4	451.9	451.0	583.4	583.1
20180501:18:13:09	23.2	16.0	-4.6	23.53	0.25	2.2	0.25	2.1	122.7	286.0	286.5	74.6	50.6	75.5	453.3	452.3	585.2	584.8
20180501:18:18:09	23.2	16.2	-4.5	23.54	0.25	2.2	0.25	2.1	123.1	286.0	286.6	74.6	50.6	75.5	454.6	453.7	586.9	586.6
20180501:18:23:09	23.2	16.5	-4.4	23.54	0.25	2.2	0.25	2.1	123.9	286.0	286.5	74.6	50.6	75.5	456.0	455.0	588.7	588.3
20180501:18:28:09	23.2	15.9	-4.6	23.54	0.25	2.2	0.25	2.1	122.5	286.0	286.5	74.6	50.6	75.5	457.3	456.4	590.4	590.1
20180501:18:33:09	23.2	15.9	-4.4	23.54	0.25	2.2	0.25	2.2	122.5	285.9	286.5	74.6	50.6	75.5	458.7	457.7	592.1	591.8
20180501:18:38:09	23.2	15.5	-4.4	23.54	0.25	2.2	0.25	2.2	121.5	285.9	286.5	74.5	50.6	75.5	460.1	459.0	593.9	593.5
20180501:18:43:09	23.2	15.9	-4.1	23.54	0.25	2.2	0.25	2.2	122.6	285.9	286.6	74.5	50.6	75.5	461.4	460.4	595.6	595.3
20180501:18:48:09	23.2	16.3	-4.1	23.54	0.25	2.2	0.25	2.2	123.6	286.0	286.5	74.5	50.7	75.5	462.8	461.7	597.3	597.0
20180501:18:53:09	23.2	16.5	-4.1	23.54	0.25	2.2	0.25	2.2	123.9	286.0	286.5	74.5	50.7	75.5	464.1	463.1	599.1	598.8
20180501:18:58:09	23.2	16.7	-4.0	23.54	0.25	2.2	0.25	2.2	124.3	286.0	286.6	74.5	50.6	75.4	465.4	464.4	600.8	600.5
20180501:19:03:09	23.2	17.1	-4.2	23.55	0.25	2.2	0.25	2.2	125.2	286.0	286.6	74.5	50.7	75.4	466.8	465.8	602.6	602.2
20180501:19:08:09	23.2	16.9	-4.2	23.55	0.25	2.2	0.25	2.2	124.8	286.1	286.5	74.5	50.7	75.4	468.2	467.1	604.3	604.0
20180501:19:13:09	23.2	17.2	-4.2	23.55	0.25	2.2	0.25	2.2	125.5	286.0	286.5	74.5	50.7	75.4	469.5	468.5	606.0	605.7
20180501:19:18:09	23.2	17.3	-4.2	23.55	0.25	2.2	0.25	2.2	125.7	286.0	286.5	74.5	50.7	75.4	470.9	469.9	607.8	607.5
20180501:19:23:09	23.2	17.2	-4.2	23.55	0.25	2.2	0.25	2.2	125.4	285.9	286.4	74.5	50.7	75.4	472.2	471.2	609.5	609.2
20180501:19:28:09	23.2	17.2	-4.2	23.55	0.25	2.2	0.25	2.2	125.5	285.9	286.4	74.5	50.7	75.4	473.6	472.6	611.3	611.0
20180501:19:33:09	23.2	17.1	-4.2	23.55	0.25	2.2	0.25	2.2	125.3	285.8	286.4	74.4	50.7	75.4	475.0	473.9	613.0	612.7
20180501:19:38:09	23.2	17.1	-4.3	23.55	0.25	2.2	0.25	2.2	125.2	285.8	286.4	74.4	50.7	75.3	476.3	475.3	614.7	614.4
20180501:19:43:09	23.2	16.9	-4.4	23.55	0.25	2.2	0.25	2.2	124.9	285.9	286.5	74.4	50.7	75.3	477.7	476.6	616.5	616.2
20180501:19:48:09	23.2	16.8	-4.4	23.55	0.25	2.2	0.25	2.2	124.6	285.9	286.4	74.4	50.7	75.3	479.0	478.0	618.2	617.9
20180501:19:53:09	23.2	16.7	-4.4	23.55	0.25	2.2	0.25	2.2	124.3	285.9	286.5	74.4	50.7	75.3	480.4	479.3	620.0	619.7
20180501:19:58:09	23.2	16.4	-4.4	23.55	0.25	2.2	0.25	2.2	123.7	285.9	286.5	74.4	50.8	75.3	481.8	480.7	621.8	621.4
20180501:20:03:09	23.2	16.2	-4.2	23.55	0.25	2.2	0.25	2.2	123.3	286.0	286.5	74.4	50.7	75.3	483.1	482.1	623.5	623.2

Time:	Stack Pressure:	Sat% H2O:	Static:	Barometric:	Flowmeter1:	Vacuum1:	Flowmeter2:	Vacuum2:	Stack Temp:	Sorbent Temp:	Probe Temp:	DGM#1 Temp:	Condenser Temp:	DGM#2 Temp:	DGM1*:	DGM2*:	DGM1:	DGM2:
day:hh:mm:ss	in-Hg	Percent	in-H2O	in-Hg	l/min	in-Hg	l/min	in-Hg	degF	degF	degF	degF	degF	degF	liters STP	liters STP	liters nominal	liters nominal
20180501:20:08:09	23.2	16.1	-4.2	23.55	0.25	2.2	0.25	2.2	123.1	285.9	286.4	74.3	50.7	75.3	484.5	483.4	625.3	624.9
20180501:20:13:09	23.2	16.1	-4.3	23.54	0.25	2.2	0.25	2.2	123.0	285.9	286.4	74.3	50.7	75.2	485.8	484.7	627.0	626.6
20180501:20:18:09	23.2	15.9	-4.2	23.55	0.25	2.2	0.25	2.2	122.7	285.9	286.5	74.3	50.8	75.2	487.2	486.1	628.7	628.4
20180501:20:23:09	23.2	15.8	-4.1	23.55	0.25	2.2	0.25	2.2	122.5	285.9	286.5	74.3	50.7	75.2	488.5	487.4	630.5	630.1
20180501:20:28:09	23.3	15.8	-4.1	23.55	0.25	2.2	0.25	2.2	122.4	285.9	286.5	74.3	50.8	75.2	489.9	488.8	632.2	631.9
20180501:20:33:09	23.3	15.8	-4.1	23.55	0.25	2.2	0.25	2.2	122.3	286.0	286.5	74.3	50.7	75.2	491.3	490.2	634.0	633.6
20180501:20:38:09	23.3	15.7	-4.1	23.56	0.25	2.2	0.25	2.2	122.2	286.0	286.5	74.3	50.7	75.2	492.6	491.5	635.7	635.4
20180501:20:43:09	23.3	15.8	-4.1	23.57	0.25	2.2	0.25	2.2	122.3	285.9	286.5	74.3	50.7	75.2	493.9	492.9	637.4	637.1
20180501:20:48:09	23.3	15.8	-4.2	23.57	0.25	2.2	0.25	2.2	122.4	285.9	286.4	74.3	50.7	75.2	495.3	494.2	639.2	638.9
20180501:20:53:09	23.3	15.9	-4.2	23.57	0.25	2.2	0.25	2.2	122.6	285.9	286.4	74.2	50.7	75.2	496.7	495.6	640.9	640.6
20180501:20:58:09	23.3	16.0	-4.1	23.57	0.25	2.2	0.25	2.2	122.8	285.9	286.4	74.2	50.7	75.2	498.0	496.9	642.7	642.3
20180501:21:03:09	23.2	16.1	-4.4	23.57	0.25	2.2	0.25	2.2	123.0	286.0	286.5	74.2	50.8	75.2	499.4	498.3	644.5	644.1
20180501:21:08:09	23.3	16.2	-4.1	23.56	0.25	2.2	0.25	2.2	123.2	286.0	286.5	74.2	50.7	75.1	500.7	499.7	646.2	645.9
20180501:21:13:09	23.3	16.1	-3.9	23.55	0.25	2.2	0.25	2.2	123.0	285.9	286.4	74.1	50.7	75.1	502.1	501.0	648.0	647.6
20180501:21:18:09	23.3	16.1	-3.8	23.54	0.25	2.2	0.25	2.2	123.0	285.8	286.4	74.1	50.7	75.1	503.5	502.4	649.7	649.4
20180501:21:23:09	23.3	16.2	-3.9	23.55	0.25	2.2	0.25	2.2	123.2	285.9	286.4	74.0	50.7	75.0	504.8	503.7	651.4	651.1
20180501:21:28:09	23.3	16.3	-3.9	23.55	0.25	2.2	0.25	2.2	123.4	285.9	286.4	74.0	50.7	75.0	506.2	505.1	653.2	652.9
20180501:21:33:09	23.2	16.1	-4.2	23.55	0.25	2.2	0.25	2.2	123.0	285.9	286.5	74.0	50.8	75.0	507.5	506.4	654.9	654.6
20180501:21:38:09	23.2	15.5	-4.1	23.55	0.25	2.2	0.25	2.2	121.8	285.8	286.4	74.0	50.7	74.9	508.9	507.8	656.7	656.4
20180501:21:43:09	23.2	15.9	-4.2	23.55	0.25	2.2	0.25	2.2	122.5	285.8	286.4	74.0	50.7	74.9	510.3	509.1	658.4	658.1
20180501:21:48:09	23.3	16.1	-4.1	23.55	0.25	2.2	0.25	2.2	123.0	285.9	286.4	74.0	50.7	74.9	511.6	510.5	660.1	659.8
20180501:21:53:09	23.3	16.1	-4.1	23.56	0.25	2.2	0.25	2.2	123.2	286.0	286.6	74.0	50.7	74.9	513.0	511.9	661.9	661.6
20180501:21:58:09	23.2	16.2	-4.2	23.56	0.25	2.2	0.25	2.2	123.3	286.0	286.4	73.9	50.7	74.9	514.3	513.2	663.6	663.3
20180501:22:03:09	23.3	16.2	-4.2	23.56	0.25	2.2	0.25	2.2	123.2	285.9	286.5	74.0	50.7	74.9	515.7	514.6	665.4	665.1
20180501:22:08:09	23.3	16.3	-4.1	23.56	0.25	2.2	0.25	2.2	123.5	286.0	286.6	74.0	50.7	74.9	517.0	515.9	667.1	666.8
20180501:22:13:09	23.3	16.3	-4.1	23.55	0.25	2.2	0.25	2.2	123.6	285.9	286.5	74.0	50.8	74.9	518.4	517.3	668.8	668.6
20180501:22:18:09	23.3	16.2	-4.0	23.55	0.25	2.2	0.25	2.2	123.4	285.8	286.4	73.9	50.7	74.8	519.8	518.6	670.6	670.3
20180501:22:23:09	23.2	16.2	-4.2	23.55	0.25	2.2	0.25	2.2	123.3	285.9	286.4	73.9	50.7	74.8	521.1	520.0	672.3	672.0
20180501:22:28:09	23.2	16.4	-4.2	23.55	0.25	2.2	0.25	2.2	123.7	285.9	286.4	73.9	50.7	74.8	522.5	521.4	674.1	673.8
20180501:22:33:09	23.2	16.4	-4.4	23.55	0.25	2.2	0.25	2.2	123.6	286.0	286.5	73.9	50.8	74.8	523.8	522.7	675.8	675.5
20180501:22:38:09	23.2	15.7	-4.5	23.55	0.25	2.2	0.25	2.2	122.0	285.9	286.4	73.9	50.8	74.8	525.2	524.1	677.6	677.3
20180501:22:43:09	23.2	15.6	-4.3	23.56	0.25	2.2	0.25	2.2	121.8	285.9	286.4	73.9	50.8	74.8	526.6	525.4	679.3	679.0
20180501:22:48:09	23.2	16.0	-4.3	23.56	0.25	2.2	0.25	2.2	122.7	285.8	286.4	73.9	50.7	74.8	527.9	526.8	681.1	680.8
20180501:22:53:09	23.2	16.5	-4.2	23.56	0.25	2.2	0.25	2.2	123.9	285.9	286.4	73.9	50.8	74.8	529.2	528.1	682.8	682.5
20180501:22:58:09	23.2	16.8	-4.3	23.56	0.25	2.2	0.25	2.2	124.7	286.0	286.5	73.9	50.8	74.8	530.6	529.5	684.6	684.2
20180501:23:03:09	23.2	16.5	-4.4	23.56	0.25	2.2	0.25	2.2	123.9	286.0	286.4	73.9	50.8	74.8	532.0	530.8	686.3	686.0
20180501:23:08:09	23.3	17.0	-4.2	23.56	0.25	2.2	0.25	2.2	125.1	286.0	286.5	73.9	50.8	74.7	533.3	532.2	688.0	687.7
20180501:23:13:09	23.3	17.2	-4.0	23.55	0.25	2.2	0.25	2.2	125.6	286.1	286.5	73.8	50.8	74.7	534.7	533.5	689.8	689.5
20180501:23:18:09	23.3	17.4	-3.9	23.55	0.25	2.2	0.25	2.2	125.9	286.0	286.4	73.7	50.7	74.7	536.0	534.9	691.5	691.2
20180501:23:23:09	23.2	17.4	-4.2	23.55	0.25	2.2	0.25	2.2	125.9	286.0	286.5	73.7	50.7	74.6	537.4	536.3	693.3	692.9
20180501:23:28:09	23.2	17.4	-4.2	23.55	0.25	2.2	0.25	2.2	125.9	286.0	286.4	73.7	50.8	74.6	538.7	537.6	695.0	694.7
20180501:23:33:09	23.2	17.5	-4.2	23.55	0.25	2.2	0.25	2.2	126.1	285.9	286.5	73.6	50.7	74.6	540.1	538.9	696.7	696.4
20180501:23:38:09	23.2	17.5	-4.1	23.55	0.25	2.2	0.25	2.2	126.2	285.9	286.4	73.6	50.7	74.5	541.5	540.3	698.5	698.2
20180501:23:43:09	23.2	17.6	-4.1	23.55	0.25	2.2	0.25	2.2	126.4	286.0	286.5	73.6	50.7	74.5	542.8	541.6	700.2	699.9
20180501:23:48:09	23.2	17.8	-4.0	23.54	0.25	2.2	0.25	2.2	126.8	285.9	286.5	73.6	50.7	74.5	544.2	543.0	702.0	701.7
20180501:23:53:09	23.2	18.0	-4.0	23.54	0.25	2.2	0.25	2.2	127.1	285.9	286.5	73.6	50.7	74.5	545.5	544.4	703.7	703.4
20180501:23:58:09	23.2	18.0	-4.0	23.54	0.25	2.2	0.25	2.2	127.2	285.9	286.5	73.5	50.7	74.4	546.9	545.7	705.4	705.1
20180502:00:03:09	23.2	17.9	-4.2	23.55	0.25	2.2	0.25	2.2	126.8	285.9	286.5	73.5	50.7	74.4	548.3	547.1	707.2	706.9
20180502:00:08:09	23.2	17.6	-4.2	23.54	0.25	2.2	0.25	2.2	126.3	285.9	286.4	73.5	50.7	74.4	549.6	548.4	708.9	708.6
20180502:00:13:09	23.2	17.5	-4.1	23.54	0.25	2.2	0.25	2.2	126.0	285.9	286.5	73.5	50.7	74.4	551.0	549.8	710.7	710.4
20180502:00:18:09	23.2	16.9	-4.4	23.54	0.25	2.2	0.25	2.2	124.7	285.9	286.5	73.5	50.7	74.4	552.3	551.1	712.4	712.1
20180502:00:23:09	23.2	16.0	-4.1	23.55	0.25	2.2	0.25	2.2	122.8	285.8	286.4	73.5	50.7	74.4	553.7	552.5	714.1	713.9
20180502:00:28:09	23.2	16.1	-4.2	23.54	0.25	2.2	0.25	2.2	123.1	285.8	286.4	73.4	50.7	74.3	555.0	553.8	715.9	715.6
20180502:00:33:09	23.2	16.8	-4.3	23.55	0.25	2.2	0.25	2.2	124.6	285.9	286.5	73.4	50.7	74.3	556.4	555.2	717.6	717.3
20180502:00:38:09	23.2	17.0	-4.3	23.55	0.25	2.2	0.25	2.2	125.1	286.0	286.5	73.4	50.7	74.3	557.7	556.6	719.4	719.1
20180502:00:43:09	23.2	17.1	-4.4	23.55	0.25	2.2	0.25	2.2	125.3	286.0	286.5	73.4	50.7	74.3	559.1	557.9	721.1	720.8
20180502:00:48:09	23.2	17.3	-4.4	23.56	0.25	2.2	0.25	2.2	125.7	286.0	286.5	73.4	50.7	74.3	560.4	559.3	722.9	722.6
20180502:00:53:09	23.2	17.5	-4.4	23.56	0.25	2.2	0.25	2.2	126.0	286.0	286.4	73.4	50.7	74.3	561.8	560.6	724.6	724.3
20180502:00:58:09	23.2	17.3	-4.4	23.56	0.25	2.2	0.25	2.2	125.7	285.9	286.5	73.4	50.8	74.3	563.2	562.0	726.3	726.1
20180502:01:03:09	23.2	17.2	-4.3	23.56	0.25	2.2	0.25	2.2	125.5	285.9	286.4	73.3	50.7	74.2	564.5	563.3	728.1	727.8
20180502:01:08:09	23.2	16.6	-4.3	23.56	0.25	2.2	0.25	2.2	124.2	285.8	286.4	73.3	50.7	74.2	565.9	564.7	729.8	729.5
20180502:01:13:09	23.2	16.8	-4.3	23.56	0.25	2.2	0.25	2.2	124.6	286.0	286.5	73.3	50.7	74.2	567.2	566.1	731.5	731.3
20180502:01:18:09	23.2	17.0	-4.4	23.56	0.25	2.2	0.25	2.2	125.0	285.9	286.5	73.3	50.7	74.2	568.6	567.4	733.3	733.0
20180502:01:23:09	23.2	17.1	-4.4	23.56	0.25	2.2	0.25	2.2	125.2	285.9	286.5	73.2	50.7	74.2	570.0	568.8	735.1	734.8
20180502:01:28:09	23.2	17.0	-4.3	23.56	0.25	2.2	0.25	2.2	125.1	285.8	286.4	73.2	50.7	74.2	571.3	570.1	736.8	736.5
20180502:01:33:09	23.2	17.1	-4.4	23.55	0.25	2.2	0.25	2.2	125.1	285.8	286.4	73.2	50.7	74.2	572.7	571.5	738.6	738.3
20180502:01:38:09	23.2	17.1	-4.5	23.55	0.25	2.2	0.25	2.2	125.2	285.9	286.5	73.3	50.8	74.2	574.0	572.8	740.3	740.0
20180502:01:43:09	23.2	17.1	-4.3	23.54	0.25	2.2	0.25	2.2	125.2	285.9	286.5	73.2	50.7	74.1	575.4	574.2	742.0	741.7
20180502:01:48:09	23.2	17.1	-4.3	23.54	0.25	2.2	0.25	2.2	125.1	285.9	286.5	73.2	50.7	74.1	576.8	575.6	743.8	743.5
20180502:01:53:09	23.2	17.2	-4.4	23.54	0.25	2.2	0.25	2.2	125.3	285.9	286.5	73.2	50.7	74.1	578.1	576.9	745.5	745.2
20180502:01:58:09	23.2	17.3	-4.5	23.54	0.25	2.2	0.25	2.2	125.6	286.0	286.5	73.2	50.7	74.0	579.5	578.3	747.3	747.0
20180502:02:03:09	23.2	17.4	-4.6	23.54	0.25	2.2	0.25	2.2	125.9	286.0	286.5	73.2	50.7	74.0	580.8	579.6	749.0	748.7
20180502:02:08:09	23.2	17.6	-4.7	23.55	0.25	2.2	0.25	2.2	126.2	286.0	286.5	73.2	50.7	74.0	582.2	581.0	750.7	750.4
20180502:02:13:09	23.2	17.0	-4.8	23.54	0.25	2.2	0.25	2.2	124.9	285.9	286.5	73.2	50.7	74.0	583.5	582.3	752.5	752.2
20180502:02:18:09	23.2	17.3	-4.6	23.54	0.25	2.2	0.25	2.2	125.5	286.0	286.5	73.2	50.6	74.0	584.9	583.7	754.2	753.9
20180502:02:23:09	23.2	17.4	-4.6	23.54	0.25	2.2	0.25	2.2	125.8	285.9	286.4	73.1	50.6	74.0	586.2	585.0	756.0	755.7
20180502:02:28:09	23.2	17.5	-4.6	23.54	0.25	2.2	0.25	2.2	126.0	285.9	286.4	73.1	50.6	74.0	587.6	586.4	757.7	757.3
20180502:02:33:09	23.2	17.5	-4.6	23.54	0.25	2.2	0.25	2.2	126.0	285.9	286.5	73.1	50.6	74.0	588.9	587.7	759.4	759.1
20180502:02:38:09	23.2	17.5	-4.6	23.54	0.25	2.2	0.25	2.2	126.0	286.0	286.4	73.1	50.6	74.0	590.3	589.1	761.1	760.8
20180502:02:43:09	23.2	17.6	-4.6	23.54	0.25	2.2	0.25	2.2	126.1	286.0	286.5	73.0	50.6	74.0	591.6	590.4	762.8	762.6
20180502:02:48:09	23.2	17.5	-4.6	23.54	0.25	2.2	0.25	2.2	126.1	285.9	286.5	73.0	50.6	73.9	593.0	591.8	764.6	764.3
20180502:02:53:09	23.2	17.5	-4.5	23.54	0.25	2.2	0.25	2.2	126.1	285.8	286.4	73.0	50.6	73.9	594.3	593.1	766.3	766.0
20180502:02:58:09	23.2	17.6	-4.6	23.54	0.25	2.2	0.25	2.2	126.2	285.9	286.4	73.0	50.6	73.9	595.7	594.5	768.0	767.8
20180502:03:03:09	23.2	17.6	-4.6	23.54	0.25	2.2	0.25	2.2	126.2	285.8	286.5	73.0	50.6	73.9	597.0	595.8	769.8	769.5
20180502:03:08:09	23.2	17.5	-4.5	23.54	0.25	2.2	0.25	2.2	126.0	285.8	286.4	72.9	50.6	73.8	598.3	597.2	771.5	771.2
20180502:03:13:09	23.2	17.5	-4.5	23.54	0.25	2.2	0.25	2.2	126.1	285.8	286.4	73.0	50.6	73.8	599.7	598.5	773.3	772.9
20180502:03:18:09	23.2	17.6	-4.5	23.54	0.25	2.2	0.25	2.2	126.2	285.9	286.4	73.0	50.6	73.8	601.1	599.9	775.0	774.7
20180502:03:23:09	23.2	17.7	-4.5	23.54	0.25	2.2	0.25	2.2	126.4	286.0	286.5	73.0	50.6	73.8	602.4	601.2	776.7	776.4
20180502:03:28:09	23.2	17.7	-4.5	23.54	0.25	2.2	0.25	2.2	126.4	285.9	286.5	72.9	50.5	73.7	603.8	602.6	778.4	778.2

Time:	Stack Pressure:	Sat% H2O:	Static:	Barometric:	Flowmeter1:	Vacuum1:	Flowmeter2:	Vacuum2:	Stack Temp:	Sorbent Temp:	Probe Temp:	DGM#1 Temp:	Condenser Temp:	DGM#2 Temp:	DGM1*:	DGM2*:	DGM1:	DGM2:
day:hh:mm:ss	in-Hg	Percent	in-H2O	in-Hg	l/min	in-Hg	l/min	in-Hg	degF	degF	degF	degF	degF	degF	liters STP	liters STP	liters nominal	liters nominal
20180502:03:33:09	23.2	17.7	-4.5	23.54	0.25	2.2	0.25	2.2	126.4	285.9	286.4	72.9	50.5	73.7	605.1	603.9	780.1	779.9
20180502:03:38:09	23.2	17.6	-4.6	23.54	0.25	2.2	0.25	2.2	126.3	285.9	286.4	72.9	50.5	73.7	606.5	605.2	781.9	781.6
20180502:03:43:09	23.2	17.7	-4.6	23.54	0.25	2.2	0.25	2.2	126.5	285.9	286.5	72.9	50.5	73.7	607.8	606.6	783.6	783.4
20180502:03:48:09	23.2	17.7	-4.5	23.54	0.25	2.2	0.25	2.2	126.5	285.9	286.5	72.8	50.5	73.7	609.2	607.9	785.4	785.1
20180502:03:53:09	23.2	17.7	-4.6	23.54	0.25	2.2	0.25	2.2	126.5	285.8	286.4	72.8	50.4	73.6	610.5	609.3	787.1	786.8
20180502:03:58:09	23.2	17.6	-4.6	23.54	0.25	2.2	0.25	2.2	126.2	285.9	286.4	72.7	50.4	73.6	611.8	610.6	788.8	788.5
20180502:04:03:09	23.2	17.6	-4.6	23.54	0.25	2.2	0.25	2.2	126.3	285.9	286.5	72.7	50.4	73.6	613.2	612.0	790.6	790.3
20180502:04:08:09	23.2	17.6	-4.6	23.54	0.25	2.2	0.25	2.2	126.2	285.8	286.4	72.7	50.4	73.6	614.6	613.3	792.3	792.0
20180502:04:13:09	23.2	17.7	-4.6	23.54	0.25	2.2	0.25	2.2	126.4	285.9	286.4	72.7	50.4	73.6	615.9	614.7	794.0	793.8
20180502:04:18:09	23.2	17.5	-4.6	23.54	0.25	2.2	0.25	2.2	126.1	285.9	286.4	72.7	50.4	73.6	617.3	616.0	795.8	795.5
20180502:04:23:09	23.2	17.6	-4.5	23.54	0.25	2.2	0.25	2.2	126.2	285.8	286.3	72.6	50.3	73.5	618.6	617.4	797.5	797.2
20180502:04:28:09	23.2	17.5	-4.6	23.54	0.25	2.2	0.25	2.2	126.1	285.9	286.4	72.6	50.3	73.5	620.0	618.7	799.2	799.0
20180502:04:33:09	23.2	17.5	-4.6	23.54	0.25	2.2	0.25	2.2	126.1	285.9	286.4	72.6	50.3	73.5	621.3	620.1	800.9	800.7
20180502:04:38:09	23.2	17.7	-4.5	23.54	0.25	2.2	0.25	2.2	126.4	285.8	286.4	72.5	50.3	73.4	622.7	621.5	802.7	802.4
20180502:04:43:09	23.2	17.6	-4.6	23.54	0.25	2.2	0.25	2.2	126.3	285.9	286.5	72.5	50.3	73.4	624.0	622.8	804.4	804.1
20180502:04:48:09	23.2	17.5	-4.6	23.54	0.25	2.2	0.25	2.2	126.1	285.8	286.3	72.4	50.2	73.3	625.4	624.2	806.1	805.9
20180502:04:53:09	23.2	17.4	-4.6	23.55	0.25	2.2	0.25	2.2	125.8	285.8	286.4	72.4	50.3	73.3	626.7	625.5	807.9	807.6
20180502:04:58:09	23.2	17.4	-4.6	23.55	0.25	2.2	0.25	2.2	125.8	285.8	286.4	72.4	50.2	73.3	628.1	626.8	809.6	809.4
20180502:05:03:09	23.2	17.5	-4.6	23.55	0.25	2.2	0.25	2.2	126.1	285.8	286.4	72.4	50.2	73.3	629.4	628.2	811.4	811.1
20180502:05:08:09	23.2	17.5	-4.6	23.55	0.25	2.2	0.25	2.2	126.1	285.9	286.4	72.3	50.2	73.2	630.8	629.5	813.1	812.8
20180502:05:13:09	23.2	17.5	-4.6	23.55	0.25	2.2	0.25	2.2	125.9	285.9	286.4	72.3	50.2	73.2	632.1	630.9	814.8	814.6
20180502:05:18:09	23.2	17.5	-4.7	23.55	0.25	2.2	0.25	2.2	126.1	285.8	286.4	72.3	50.2	73.2	633.5	632.2	816.6	816.3
20180502:05:23:09	23.2	17.4	-4.7	23.55	0.25	2.2	0.25	2.2	125.8	285.8	286.4	72.2	50.2	73.1	634.8	633.6	818.3	818.1
20180502:05:28:09	23.2	17.4	-4.7	23.55	0.25	2.2	0.25	2.2	125.9	285.7	286.4	72.2	50.2	73.1	636.2	634.9	820.0	819.8
20180502:05:33:09	23.2	17.2	-4.6	23.55	0.25	2.2	0.25	2.2	125.3	285.8	286.4	72.1	50.1	73.0	637.6	636.3	821.8	821.5
20180502:05:38:09	23.2	17.0	-4.6	23.56	0.25	2.2	0.25	2.2	125.1	285.8	286.4	72.1	50.2	73.0	638.9	637.7	823.5	823.2
20180502:05:43:09	23.2	17.1	-4.6	23.56	0.25	2.2	0.25	2.2	125.2	285.8	286.4	72.0	50.2	73.0	640.3	639.0	825.2	824.9
20180502:05:48:09	23.2	17.0	-4.6	23.56	0.25	2.2	0.25	2.2	125.0	285.8	286.4	72.0	50.2	72.9	641.6	640.4	826.9	826.7
20180502:05:53:09	23.2	16.9	-4.5	23.56	0.25	2.2	0.25	2.2	124.7	285.8	286.4	72.0	50.2	72.9	643.0	641.7	828.7	828.4
20180502:05:58:09	23.2	16.8	-4.6	23.55	0.25	2.2	0.25	2.2	124.6	285.8	286.4	71.9	50.1	72.8	644.4	643.1	830.4	830.2
20180502:06:03:09	23.2	17.0	-4.7	23.56	0.25	2.2	0.25	2.2	124.9	285.8	286.4	71.8	50.1	72.7	645.7	644.4	832.1	831.9
20180502:06:08:09	23.2	16.8	-4.7	23.56	0.25	2.2	0.25	2.2	124.5	285.9	286.4	71.7	50.1	72.7	647.1	645.8	833.9	833.7
20180502:06:13:09	23.2	17.0	-4.7	23.55	0.25	2.2	0.25	2.2	124.9	285.8	286.4	71.7	50.1	72.6	648.4	647.1	835.6	835.4
20180502:06:18:09	23.2	17.1	-4.7	23.56	0.25	2.2	0.25	2.2	125.2	285.8	286.4	71.6	50.0	72.6	649.8	648.5	837.4	837.1
20180502:06:23:09	23.2	16.9	-4.6	23.56	0.25	2.2	0.25	2.2	124.8	285.9	286.4	71.6	50.0	72.5	651.1	649.9	839.1	838.9
20180502:06:28:09	23.2	16.8	-4.5	23.56	0.25	2.2	0.25	2.2	124.5	285.8	286.3	71.5	50.0	72.5	652.5	651.2	840.8	840.6
20180502:06:33:09	23.2	16.5	-4.4	23.56	0.25	2.2	0.25	2.2	124.0	285.9	286.4	71.5	50.0	72.4	653.8	652.6	842.6	842.3
20180502:06:38:09	23.2	16.5	-4.4	23.57	0.25	2.2	0.25	2.2	123.9	285.9	286.4	71.4	50.0	72.3	655.2	653.9	844.3	844.0
20180502:06:43:09	23.2	16.5	-4.3	23.56	0.25	2.2	0.25	2.2	123.9	285.8	286.4	71.3	50.0	72.3	656.5	655.3	846.0	845.8
20180502:06:48:09	23.2	16.3	-4.3	23.57	0.25	2.2	0.25	2.2	123.6	285.8	286.3	71.3	50.0	72.2	657.9	656.6	847.8	847.5
20180502:06:53:09	23.2	16.3	-4.6	23.57	0.25	2.2	0.25	2.2	123.4	285.8	286.4	71.2	50.0	72.2	659.2	658.0	849.5	849.3
20180502:06:58:09	23.2	16.2	-4.6	23.57	0.25	2.2	0.25	2.2	123.3	285.8	286.4	71.2	50.0	72.1	660.6	659.3	851.3	851.0
20180502:07:03:09	23.2	16.0	-4.6	23.57	0.25	2.2	0.25	2.2	122.9	285.8	286.4	71.1	50.0	72.1	662.0	660.7	853.0	852.7
20180502:07:08:09	23.2	15.9	-4.5	23.57	0.25	2.2	0.25	2.2	122.6	285.8	286.3	71.1	50.0	72.0	663.3	662.1	854.7	854.5
20180502:07:13:09	23.2	15.9	-4.3	23.57	0.25	2.2	0.25	2.2	122.6	285.7	286.3	71.1	50.0	72.0	664.7	663.4	856.5	856.2
20180502:07:18:09	23.2	15.9	-4.3	23.56	0.25	2.2	0.25	2.2	122.6	285.8	286.4	71.1	50.0	72.0	666.0	664.8	858.2	858.0
20180502:07:23:09	23.2	15.8	-4.4	23.57	0.25	2.2	0.25	2.2	122.5	285.8	286.4	71.0	50.0	71.9	667.4	666.1	859.9	859.7
20180502:07:28:09	23.2	15.9	-4.4	23.56	0.25	2.2	0.25	2.2	122.5	285.8	286.4	71.0	50.0	71.9	668.7	667.5	861.6	861.4
20180502:07:33:09	23.3	15.8	-4.3	23.57	0.25	2.2	0.25	2.2	122.4	285.8	286.4	71.0	50.0	71.9	670.1	668.8	863.4	863.1
20180502:07:38:09	23.3	15.9	-4.2	23.57	0.25	2.2	0.25	2.2	122.5	285.8	286.4	71.0	50.0	71.8	671.5	670.2	865.1	864.9
20180502:07:43:09	23.2	15.8	-4.5	23.57	0.25	2.2	0.25	2.2	122.4	285.8	286.3	71.0	50.0	71.8	672.8	671.6	866.8	866.6
20180502:07:48:09	23.2	15.9	-4.6	23.57	0.25	2.2	0.25	2.2	122.5	285.8	286.4	70.9	50.0	71.7	674.2	672.9	868.6	868.3
20180502:07:53:09	23.2	16.1	-4.8	23.57	0.25	2.2	0.25	2.2	122.9	285.8	286.3	70.8	50.0	71.7	675.5	674.3	870.3	870.1
20180502:07:58:09	23.2	16.2	-4.7	23.57	0.25	2.2	0.25	2.2	123.2	285.8	286.4	70.8	49.9	71.7	676.9	675.6	872.0	871.8
20180502:08:03:09	23.2	16.4	-4.7	23.57	0.25	2.2	0.25	2.2	123.7	285.9	286.4	70.8	50.0	71.7	678.3	677.0	873.8	873.6
20180502:08:08:09	23.2	16.7	-4.8	23.57	0.25	2.2	0.25	2.2	124.2	285.9	286.4	70.8	50.0	71.6	679.6	678.3	875.5	875.3
20180502:08:13:09	23.2	16.8	-4.8	23.57	0.25	2.2	0.25	2.2	124.4	285.9	286.4	70.7	50.0	71.6	681.0	679.7	877.3	877.0
20180502:08:18:09	23.2	16.7	-4.6	23.57	0.25	2.2	0.25	2.2	124.4	285.9	286.4	70.7	50.0	71.6	682.3	681.1	879.0	878.8
20180502:08:23:09	23.2	16.7	-4.6	23.57	0.25	2.2	0.25	2.2	124.4	285.9	286.4	70.7	50.0	71.5	683.7	682.4	880.7	880.5
20180502:08:28:09	23.2	16.7	-4.6	23.57	0.25	2.2	0.25	2.2	124.4	285.9	286.4	70.6	49.9	71.5	685.1	683.8	882.5	882.2
20180502:08:33:09	23.3	16.7	-4.4	23.58	0.25	2.2	0.25	2.2	124.5	285.8	286.4	70.5	49.9	71.4	686.4	685.1	884.2	883.9
20180502:08:38:09	23.2	16.8	-4.6	23.58	0.25	2.2	0.25	2.2	124.6	285.8	286.3	70.5	49.9	71.4	687.8	686.5	885.9	885.7
20180502:08:43:09	23.2	16.9	-4.7	23.58	0.25	2.2	0.25	2.2	124.7	285.8	286.3	70.4	49.9	71.3	689.1	687.8	887.6	887.4
20180502:08:48:09	23.2	16.9	-4.7	23.58	0.25	2.2	0.25	2.2	124.7	285.8	286.3	70.4	49.9	71.3	690.5	689.2	889.4	889.2
20180502:08:53:09	23.2	17.0	-4.8	23.58	0.25	2.2	0.25	2.2	124.9	285.8	286.4	70.3	49.9	71.2	691.9	690.6	891.1	890.9
20180502:08:58:09	23.2	17.0	-4.6	23.58	0.25	2.2	0.25	2.2	124.9	285.8	286.4	70.3	49.9	71.2	693.2	691.9	892.8	892.6
20180502:09:03:09	23.2	16.9	-4.5	23.58	0.25	2.2	0.25	2.2	124.8	285.8	286.3	70.2	49.9	71.1	694.6	693.3	894.6	894.4
20180502:09:08:09	23.2	17.1	-5.1	23.58	0.25	2.2	0.25	2.2	125.1	285.7	286.3	70.2	49.8	71.1	695.9	694.6	896.3	896.1
20180502:09:13:09	23.2	17.1	-5.3	23.58	0.25	2.2	0.25	2.2	125.2	285.8	286.3	70.2	49.8	71.1	697.3	696.0	898.0	897.9
20180502:09:18:09	23.2	17.4	-5.6	23.58	0.25	2.2	0.25	2.2	125.7	285.8	286.4	70.1	49.8	71.1	698.7	697.3	899.8	899.6
20180502:09:23:09	23.2	17.5	-5.2	23.58	0.25	2.2	0.25	2.2	125.9	285.8	286.3	70.1	49.8	71.0	700.0	698.7	901.5	901.3
20180502:09:28:09	23.2	17.5	-5.0	23.58	0.25	2.2	0.25	2.2	126.1	285.9	286.4	70.1	49.8	71.0	701.4	700.1	903.3	903.0
20180502:09:33:09	23.2	17.7	-5.0	23.58	0.25	2.2	0.25	2.2	126.5	285.8	286.3	70.0	49.8	71.0	702.7	701.4	905.0	904.8
20180502:09:38:09	23.2	17.7	-4.9	23.58	0.25	2.2	0.25	2.2	126.5	285.8	286.3	70.0	49.8	70.9	704.1	702.8	906.7	906.5
20180502:09:43:09	23.2	17.7	-4.9	23.58	0.25	2.2	0.25	2.2	126.6	285.8	286.3	70.0	49.8	70.9	705.5	704.1	908.5	908.2
20180502:09:48:09	23.2	17.9	-4.8	23.58	0.25	2.2	0.25	2.2	126.9	285.8	286.3	70.0	49.8	70.9	706.8	705.5	910.1	910.0
20180502:09:53:09	23.2	17.9	-4.9	23.58	0.25	2.2	0.25	2.2	126.9	285.7	286.3	70.0	49.8	70.8	708.2	706.8	911.9	911.7
20180502:09:58:09	23.2	17.9	-4.9	23.58	0.251	2.2	0.25	2.2	127.0	285.8	286.3	70.0	49.8	70.8	709.5	708.2	913.6	913.5
20180502:10:03:09	23.2	18.0	-4.9	23.58	0.25	2.2	0.25	2.2	127.2	285.8	286.3	70.0	49.7	70.8	710.9	709.6	915.4	915.2
20180502:10:08:09	23.2	18.1	-4.9	23.58	0.25	2.2	0.25	2.2	127.4	285.8	286.3	70.0	49.7	70.8	712.3	710.9	917.1	916.9
20180502:10:13:09	23.2	18.4	-4.9	23.58	0.25	2.2	0.25	2.2	127.9	285.8	286.4	70.0	49.8	70.8	713.6	712.3	918.8	918.6
20180502:10:18:09	23.2	18.3	-4.9	23.59	0.25	2.2	0.25	2.2	127.8	285.8	286.4	70.0	49.8	70.8	715.0	713.6	920.6	920.4
20180502:10:23:09	23.2	18.2	-4.9	23.58	0.25	2.2	0.25	2.2	127.5	285.8	286.3	70.0	49.7	70.8	716.3	715.0	922.3	922.1
20180502:10:28:09	23.2	18.1	-4.9	23.59	0.25	2.2	0.25	2.2	127.3	285.8	286.3	70.0	49.7	70.8	717.7	716.3	924.0	923.8
20180502:10:33:09	23.2	17.9	-4.9	23.59	0.25	2.2	0.25	2.2	126.9	285.8	286.4	70.0	49.7	70.8	719.0	717.7	925.7	925.6
20180502:10:38:09	23.2	17.8	-5.0	23.59	0.25	2.2	0.25	2.2	126.7	285.8	286.4	70.0	49.7	70.8	720.4	719.0	927.4	927.2
20180502:10:43:09	23.2	17.7	-5.0	23.59	0.25	2.2	0.25	2.2	126.5	285.8	286.4	70.0	49.7	70.8	721.7	720.4	929.1	929.0
20180502:10:48:09	23.2	17.7	-4.9	23.59	0.25	2.2	0.25	2.2	126.5	285.9	286.4	70.0	49.7	70.8	723.0	721.7	930.8	930.7
20180502:10:53:09	23.2	17.7	-4.9	23.59	0.25	2.2	0.25	2.2	126.5	285.9	286.4	70.0	49.8	70.8	724.4	723.1	932.6	932.4

Time:	Stack Pressure:	Sat% H2O:	Static:	Barometric:	Flowmeter1:	Vacuum1:	Flowmeter2:	Vacuum2:	Stack Temp:	Sorbent Temp:	Probe Temp:	DGM#1 Temp:	Condenser Temp:	DGM#2 Temp:	DGM1*:	DGM2*:	DGM1:	DGM2:
day:hh:mm:ss	in-Hg	Percent	in-H2O	in-Hg	l/min	in-Hg	l/min	in-Hg	degF	degF	degF	degF	degF	degF	liters STP	liters STP	liters nominal	liters nominal
20180502:10:58:09	23.2	17.6	-4.9	23.59	0.25	2.2	0.25	2.2	126.2	285.9	286.4	70.1	49.8	70.9	725.7	724.4	934.3	934.1
20180502:11:03:09	23.2	17.6	-4.9	23.58	0.25	2.2	0.25	2.2	126.3	285.9	286.4	70.1	49.8	70.8	727.1	725.8	936.0	935.9
20180502:11:08:09	23.2	17.6	-4.9	23.58	0.25	2.2	0.25	2.2	126.4	285.9	286.4	70.1	49.8	70.8	728.4	727.1	937.7	937.5
20180502:11:13:09	23.2	17.6	-4.9	23.58	0.25	2.2	0.25	2.2	126.3	285.9	286.4	70.1	49.8	70.8	729.8	728.5	939.4	939.3
20180502:11:18:09	23.2	17.6	-4.9	23.58	0.25	2.2	0.25	2.2	126.2	285.9	286.4	70.0	49.8	70.8	731.1	729.8	941.1	941.0
20180502:11:23:09	23.2	17.5	-4.9	23.58	0.25	2.2	0.25	2.2	126.1	285.8	286.4	70.0	49.8	70.8	732.5	731.1	942.8	942.7
20180502:11:28:09	23.2	17.5	-4.9	23.58	0.25	2.2	0.25	2.2	126.0	285.8	286.4	70.0	49.7	70.8	733.8	732.5	944.6	944.4
20180502:11:33:09	23.2	17.4	-4.9	23.58	0.25	2.2	0.25	2.2	125.9	285.8	286.3	69.9	49.7	70.8	735.2	733.8	946.3	946.1
20180502:11:38:09	23.2	17.4	-4.9	23.58	0.25	2.2	0.25	2.2	125.8	285.7	286.3	69.9	49.7	70.8	736.5	735.2	948.0	947.9
20180502:11:43:09	23.2	17.6	-4.9	23.58	0.25	2.2	0.25	2.2	126.2	285.8	286.3	69.9	49.7	70.8	737.9	736.5	949.7	949.6
20180502:11:48:09	23.2	17.4	-5.1	23.57	0.25	2.2	0.25	2.2	125.9	285.8	286.3	69.9	49.7	70.8	739.2	737.9	951.4	951.3
20180502:11:53:09	23.2	17.5	-5.3	23.58	0.25	2.2	0.25	2.2	126.1	285.8	286.4	69.9	49.7	70.8	740.6	739.2	953.2	953.0
20180502:11:58:09	23.2	17.6	-5.2	23.57	0.25	2.2	0.25	2.2	126.3	285.8	286.4	70.0	49.7	70.8	741.9	740.6	954.9	954.8
20180502:12:03:09	23.2	17.5	-5.3	23.58	0.25	2.2	0.25	2.2	126.0	285.8	286.4	69.9	49.7	70.8	743.3	741.9	956.6	956.4
20180502:12:08:09	23.2	17.3	-5.1	23.57	0.25	2.2	0.25	2.2	125.7	285.7	286.3	69.9	49.7	70.8	744.6	743.3	958.3	958.2
20180502:12:13:09	23.2	16.2	-5.1	23.57	0.25	2.2	0.25	2.2	123.2	285.7	286.3	70.0	49.7	70.8	746.0	744.6	960.0	959.9
20180502:12:18:09	23.2	16.0	-4.8	23.57	0.25	2.2	0.25	2.1	122.8	285.7	286.4	70.0	49.7	70.8	747.3	746.0	961.8	961.6
20180502:12:23:09	23.2	16.8	-4.7	23.57	0.25	2.2	0.25	2.2	124.6	285.8	286.4	70.1	49.7	70.9	748.6	747.3	963.4	963.3
20180502:12:28:09	23.2	16.9	-4.7	23.57	0.25	2.2	0.25	2.2	124.8	285.8	286.3	70.1	49.7	70.9	750.0	748.7	965.2	965.0
20180502:12:33:09	23.2	17.1	-4.7	23.57	0.25	2.2	0.25	2.2	125.2	285.8	286.3	70.1	49.7	70.9	751.3	750.0	966.9	966.8
20180502:12:38:09	23.2	17.2	-4.7	23.57	0.25	2.2	0.25	2.2	125.4	285.8	286.4	70.1	49.7	71.0	752.7	751.3	968.6	968.5
20180502:12:43:09	23.2	17.2	-4.7	23.57	0.25	2.2	0.25	2.2	125.5	285.8	286.4	70.2	49.7	71.0	754.0	752.7	970.3	970.2
20180502:12:48:09	23.2	17.2	-4.7	23.57	0.25	2.2	0.25	2.2	125.5	285.8	286.4	70.3	49.7	71.0	755.4	754.0	972.0	971.9
20180502:12:53:09	23.2	17.2	-4.7	23.57	0.25	2.2	0.25	2.2	125.4	285.8	286.3	70.3	49.7	71.1	756.8	755.4	973.8	973.6
20180502:12:58:09	23.2	17.2	-4.7	23.57	0.25	2.2	0.25	2.2	125.5	285.8	286.3	70.4	49.7	71.1	758.1	756.7	975.5	975.3
20180502:13:03:09	23.2	17.2	-4.7	23.57	0.25	2.2	0.25	2.2	125.4	285.8	286.4	70.4	49.7	71.1	759.4	758.1	977.2	977.1
20180502:13:08:09	23.2	17.2	-4.7	23.57	0.25	2.2	0.25	2.2	125.5	285.8	286.3	70.4	49.7	71.2	760.8	759.4	978.9	978.8
20180502:13:13:09	23.2	17.1	-4.7	23.57	0.25	2.2	0.25	2.2	125.3	285.8	286.3	70.4	49.7	71.2	762.1	760.8	980.7	980.5
20180502:13:18:09	23.2	17.1	-4.8	23.57	0.25	2.2	0.25	2.2	125.1	285.8	286.4	70.5	49.7	71.3	763.5	762.1	982.3	982.2
20180502:13:23:09	23.2	15.7	-4.9	23.57	0.25	2.2	0.25	2.2	122.1	285.8	286.4	70.5	49.7	71.3	764.8	763.5	984.1	983.9
20180502:13:28:09	23.2	16.4	-4.7	23.57	0.25	2.2	0.25	2.2	123.6	285.9	286.5	70.6	49.7	71.3	766.2	764.8	985.8	985.7
20180502:13:33:09	23.2	16.8	-4.6	23.57	0.25	2.2	0.25	2.2	124.5	285.8	286.4	70.6	49.7	71.3	767.5	766.1	987.5	987.3
20180502:13:38:09	23.2	16.9	-4.5	23.57	0.25	2.2	0.25	2.2	124.7	285.8	286.4	70.7	49.7	71.4	768.9	767.5	989.2	989.1
20180502:13:43:09	23.2	16.7	-4.5	23.57	0.25	2.2	0.25	2.2	124.4	285.8	286.4	70.7	49.7	71.4	770.2	768.8	990.9	990.8
20180502:13:48:09	23.2	16.8	-4.5	23.57	0.25	2.2	0.25	2.2	124.7	285.8	286.4	70.7	49.7	71.5	771.6	770.2	992.7	992.5
20180502:13:53:09	23.2	16.8	-4.4	23.57	0.25	2.2	0.25	2.2	124.7	285.8	286.4	70.8	49.7	71.5	772.9	771.5	994.4	994.2
20180502:13:58:09	23.2	16.9	-4.5	23.57	0.25	2.2	0.25	2.2	124.8	285.8	286.4	70.8	49.7	71.5	774.2	772.9	996.1	996.0
20180502:14:03:09	23.2	16.7	-4.4	23.57	0.25	2.2	0.25	2.2	124.3	285.9	286.4	70.8	49.7	71.6	775.6	774.2	997.9	997.7
20180502:14:08:09	23.3	16.7	-4.3	23.57	0.25	2.2	0.25	2.2	124.3	285.8	286.4	70.8	49.7	71.6	777.0	775.6	999.5	999.5
20180502:14:13:09	23.3	16.7	-4.3	23.57	0.25	2.2	0.25	2.2	124.3	285.8	286.4	70.8	49.7	71.6	778.3	776.9	1001.3	1001.1
20180502:14:18:09	23.3	16.6	-4.2	23.57	0.25	2.2	0.25	2.2	124.1	285.8	286.3	70.8	49.7	71.6	779.7	778.3	1003.0	1002.9
20180502:14:23:09	23.3	16.7	-4.2	23.57	0.25	2.2	0.25	2.2	124.4	285.9	286.4	70.8	49.7	71.7	781.0	779.6	1004.7	1004.6
20180502:14:28:09	23.3	16.7	-4.3	23.57	0.25	2.2	0.25	2.2	124.5	285.8	286.4	70.8	49.7	71.7	782.4	781.0	1006.5	1006.3
20180502:14:33:09	23.2	16.8	-4.3	23.56	0.25	2.2	0.25	2.2	124.7	285.9	286.4	70.8	49.7	71.7	783.7	782.3	1008.2	1008.1
20180502:14:38:09	23.2	17.1	-4.3	23.56	0.25	2.2	0.25	2.2	125.2	285.8	286.4	70.9	49.7	71.7	785.1	783.7	1010.0	1009.8
20180502:14:43:09	23.2	17.2	-4.4	23.56	0.25	2.2	0.25	2.2	125.4	285.8	286.4	70.9	49.7	71.7	786.4	785.1	1011.6	1011.5
20180502:14:48:09	23.2	17.2	-4.4	23.56	0.25	2.2	0.25	2.2	125.4	285.9	286.4	71.0	49.7	71.7	787.8	786.4	1013.4	1013.2
20180502:14:53:09	23.2	17.2	-4.4	23.56	0.25	2.2	0.25	2.2	125.4	285.8	286.3	71.0	49.7	71.8	789.2	787.8	1015.1	1015.0
20180502:14:58:09	23.2	17.2	-4.4	23.55	0.25	2.2	0.25	2.2	125.4	285.8	286.3	71.0	49.7	71.9	790.5	789.1	1016.8	1016.7
20180502:15:03:09	23.2	17.1	-4.4	23.56	0.25	2.2	0.25	2.2	125.3	285.8	286.3	71.0	49.7	71.9	791.9	790.5	1018.6	1018.4
20180502:15:08:09	23.2	17.1	-4.4	23.55	0.25	2.2	0.25	2.2	125.3	285.8	286.3	71.0	49.7	71.9	793.2	791.8	1020.3	1020.2
20180502:15:13:09	23.2	17.1	-4.4	23.55	0.25	2.2	0.25	2.2	125.2	285.8	286.3	71.1	49.7	71.9	794.5	793.1	1022.0	1021.9
20180502:15:18:09	23.2	17.0	-4.4	23.55	0.25	2.2	0.25	2.2	125.1	285.7	286.3	71.1	49.7	71.9	795.9	794.5	1023.7	1023.6
20180502:15:23:09	23.2	17.1	-4.4	23.55	0.25	2.2	0.25	2.2	125.2	285.7	286.2	71.1	49.7	72.0	797.2	795.8	1025.4	1025.3
20180502:15:28:09	23.2	17.1	-4.4	23.55	0.25	2.2	0.25	2.2	125.3	285.8	286.4	71.2	49.7	72.0	798.6	797.2	1027.2	1027.0
20180502:15:33:09	23.2	17.1	-4.4	23.55	0.25	2.2	0.25	2.2	125.2	285.9	286.4	71.2	49.7	72.0	799.9	798.5	1028.9	1028.7
20180502:15:38:09	23.2	17.2	-4.4	23.55	0.25	2.2	0.25	2.2	125.4	285.9	286.4	71.3	49.7	72.1	801.3	799.8	1030.6	1030.5
20180502:15:43:09	23.2	17.1	-4.4	23.55	0.25	2.2	0.25	2.2	125.3	285.7	286.3	71.4	49.7	72.2	802.6	801.2	1032.3	1032.2
20180502:15:48:09	23.2	17.1	-4.4	23.55	0.25	2.2	0.25	2.2	125.2	285.8	286.3	71.4	49.7	72.2	804.0	802.5	1034.0	1033.9
20180502:15:53:09	23.2	17.2	-4.4	23.55	0.25	2.2	0.25	2.2	125.5	285.8	286.4	71.5	49.7	72.3	805.3	803.9	1035.8	1035.6
20180502:15:58:09	23.2	17.2	-4.4	23.55	0.25	2.2	0.25	2.2	125.3	285.8	286.3	71.5	49.7	72.3	806.6	805.2	1037.5	1037.4
20180502:16:03:09	23.2	17.2	-4.4	23.55	0.25	2.2	0.25	2.2	125.4	285.8	286.3	71.6	49.7	72.4	808.0	806.5	1039.2	1039.0
20180502:16:08:09	23.2	16.3	-4.6	23.55	0.25	2.2	0.25	2.2	123.3	285.7	286.3	71.6	49.7	72.4	809.3	807.9	1040.9	1040.8
20180502:16:13:09	23.2	15.9	-4.5	23.55	0.25	2.2	0.25	2.1	122.6	285.8	286.3	71.6	49.7	72.4	810.7	809.3	1042.7	1042.5
20180502:16:18:09	23.2	15.7	-4.5	23.56	0.25	2.2	0.25	2.1	122.1	285.8	286.4	71.6	49.7	72.4	812.0	810.6	1044.3	1044.2
20180502:16:23:09	23.2	16.3	-4.3	23.56	0.25	2.2	0.25	2.2	123.5	285.8	286.3	71.7	49.7	72.5	813.4	811.9	1046.1	1046.0
20180502:16:28:09	23.2	16.7	-4.3	23.56	0.25	2.2	0.25	2.2	124.4	285.8	286.3	71.7	49.7	72.5	814.7	813.3	1047.8	1047.6
20180502:16:33:09	23.2	17.1	-4.3	23.56	0.25	2.2	0.25	2.2	125.2	285.8	286.3	71.7	49.7	72.6	816.0	814.6	1049.5	1049.4
20180502:16:38:09	23.2	17.1	-4.3	23.56	0.25	2.2	0.25	2.2	125.3	285.8	286.4	71.8	49.7	72.6	817.4	815.9	1051.3	1051.1
20180502:16:43:09	23.2	17.1	-4.3	23.56	0.25	2.2	0.25	2.2	125.3	285.8	286.3	71.9	49.7	72.6	818.7	817.3	1053.0	1052.9
20180502:16:48:09	23.2	17.2	-4.3	23.56	0.25	2.2	0.25	2.2	125.4	285.9	286.3	71.9	49.8	72.7	820.1	818.6	1054.7	1054.5
20180502:16:53:09	23.2	17.2	-4.3	23.56	0.25	2.2	0.25	2.2	125.4	285.9	286.3	71.9	49.8	72.7	821.5	820.0	1056.4	1056.3
20180502:16:58:09	23.2	17.3	-4.3	23.56	0.25	2.2	0.25	2.2	125.6	285.8	286.4	72.0	49.8	72.7	822.8	821.3	1058.1	1058.0
20180502:17:03:09	23.2	17.2	-4.4	23.57	0.25	2.2	0.25	2.2	125.5	285.9	286.3	72.0	49.8	72.8	824.1	822.7	1059.9	1059.7
20180502:17:08:09	23.2	17.2	-4.4	23.57	0.25	2.2	0.25	2.2	125.3	285.8	286.3	72.0	49.8	72.8	825.5	824.0	1061.6	1061.5
20180502:17:13:09	23.2	17.2	-4.4	23.57	0.25	2.2	0.25	2.2	125.4	285.9	286.4	72.0	49.8	72.8	826.8	825.4	1063.3	1063.2
20180502:17:18:09	23.2	17.1	-4.4	23.57	0.25	2.2	0.25	2.2	125.3	285.8	286.4	72.0	49.8	72.9	828.2	826.7	1065.0	1064.9
20180502:17:23:09	23.2	17.2	-4.4	23.57	0.25	2.2	0.25	2.2	125.5	285.8	286.3	72.0	49.8	72.9	829.5	828.1	1066.7	1066.6
20180502:17:28:09	23.3	17.2	-4.4	23.57	0.25	2.2	0.25	2.2	125.6	285.8	286.3	72.1	49.8	72.9	830.9	829.4	1068.5	1068.4
20180502:17:33:09	23.3	17.3	-4.4	23.58	0.25	2.2	0.25	2.2	125.6	285.8	286.4	72.1	49.8	72.9	832.2	830.7	1070.2	1070.1
20180502:17:38:09	23.3	17.3	-4.4	23.58	0.25	2.2	0.25	2.2	125.6	285.8	286.3	72.1	49.9	72.9	833.6	832.1	1071.9	1071.8
20180502:17:43:09	23.3	17.2	-4.5	23.58	0.25	2.2	0.25	2.2	125.4	285.8	286.4	72.1	49.9	73.0	834.9	833.5	1073.6	1073.5
20180502:17:48:09	23.3	17.4	-4.4	23.58	0.25	2.2	0.25	2.2	125.9	285.8	286.4	72.1	49.8	73.0	836.3	834.8	1075.4	1075.3
20180502:17:53:09	23.3	17.4	-4.4	23.58	0.25	2.2	0.25	2.2	125.8	285.8	286.4	72.2	49.9	73.0	837.6	836.1	1077.1	1077.0
20180502:17:58:09	23.3	17.2	-4.4	23.58	0.25	2.2	0.25	2.2	125.6	285.9	286.4	72.2	49.9	73.0	838.9	837.5	1078.8	1078.7
20180502:18:03:09	23.3	17.2	-4.5	23.59	0.25	2.2	0.25	2.2	125.5	285.9	286.4	72.2	49.8	73.0	840.3	838.9	1080.5	1080.4
20180502:18:08:09	23.3	17.2	-4.5	23.59	0.25	2.2	0.25	2.2	125.5	285.9	286.4	72.2	49.9	73.0	841.6	840.2	1082.2	1082.1
20180502:18:13:09	23.3	17.3	-4.5	23.59	0.25	2.2	0.25	2.2	125.6	285.9	286.5	72.3	49.9	73.0	843.0	841.5	1084.0	1083.9
20180502:18:18:09	23.3	17.2	-4.5	23.60	0.25	2.2	0.25	2.2	125.4	285.9	286.4	72.2	49.9	73.0	844.3	842.9	1085.7	1085.6

Time:	Stack Pressure:	Sat% H2O:	Static:	Barometric:	Flowmeter1:	Vacuum1:	Flowmeter2:	Vacuum2:	Stack Temp:	Sorbent Temp:	Probe Temp:	DGM#1 Temp:	Condenser Temp:	DGM#2 Temp:	DGM1*:	DGM2*:	DGM1:	DGM2:
day:hh:mm:ss	in-Hg	Percent	in-H2O	in-Hg	l/min	in-Hg	l/min	in-Hg	degF	degF	degF	degF	degF	degF	liters STP	liters STP	liters nominal	liters nominal
20180502:18:23:09	23.3	17.3	-4.5	23.60	0.25	2.2	0.25	2.2	125.7	285.9	286.4	72.2	49.9	73.0	845.7	844.2	1087.4	1087.3
20180502:18:28:09	23.3	17.2	-4.4	23.60	0.25	2.2	0.25	2.2	125.6	285.8	286.4	72.3	49.9	73.1	847.0	845.6	1089.1	1089.0
20180502:18:33:09	23.3	17.3	-4.4	23.59	0.25	2.2	0.25	2.2	125.6	285.9	286.5	72.3	49.9	73.1	848.4	846.9	1090.8	1090.8
20180502:18:38:09	23.3	17.3	-4.5	23.60	0.25	2.2	0.25	2.2	125.8	285.9	286.5	72.2	49.9	73.1	849.7	848.3	1092.6	1092.5
20180502:18:43:09	23.3	17.4	-4.5	23.60	0.25	2.2	0.25	2.2	126.0	285.9	286.4	72.2	49.9	73.1	851.1	849.6	1094.3	1094.2
20180502:18:48:09	23.3	17.5	-4.5	23.60	0.25	2.2	0.25	2.2	126.1	285.9	286.4	72.2	49.9	73.1	852.4	851.0	1096.0	1095.9
20180502:18:53:09	23.3	17.5	-4.5	23.60	0.25	2.2	0.25	2.2	126.1	285.8	286.4	72.2	49.9	73.0	853.8	852.3	1097.8	1097.6
20180502:18:58:09	23.3	17.4	-4.4	23.60	0.25	2.2	0.25	2.2	125.9	285.8	286.4	72.2	49.9	73.0	855.1	853.7	1099.4	1099.4
20180502:19:03:09	23.3	17.3	-4.5	23.60	0.25	2.2	0.25	2.2	125.8	285.8	286.4	72.2	49.9	73.0	856.5	855.0	1101.2	1101.1
20180502:19:08:09	23.3	17.3	-4.5	23.61	0.25	2.2	0.25	2.2	125.8	285.8	286.4	72.2	49.9	73.0	857.8	856.4	1102.9	1102.9
20180502:19:13:09	23.3	17.4	-4.5	23.61	0.25	2.2	0.25	2.2	125.9	285.9	286.4	72.2	49.9	73.0	859.2	857.7	1104.7	1104.5
20180502:19:18:09	23.3	17.2	-4.4	23.61	0.25	2.2	0.25	2.2	125.6	285.8	286.4	72.1	49.9	73.0	860.5	859.1	1106.4	1106.3
20180502:19:23:09	23.3	17.2	-4.4	23.61	0.25	2.2	0.25	2.2	125.4	285.8	286.4	72.1	49.9	73.0	861.9	860.4	1108.1	1108.0
20180502:19:28:09	23.3	17.0	-4.3	23.61	0.25	2.2	0.25	2.2	125.0	285.8	286.4	72.1	49.9	73.0	863.2	861.8	1109.8	1109.8
20180502:19:33:09	23.3	17.0	-4.2	23.61	0.25	2.2	0.25	2.2	125.1	285.9	286.4	72.1	49.9	73.0	864.6	863.1	1111.5	1111.5
20180502:19:38:09	23.3	16.8	-4.2	23.61	0.25	2.2	0.25	2.2	124.6	285.8	286.4	72.1	49.9	73.0	866.0	864.5	1113.3	1113.2
20180502:19:43:09	23.3	16.6	-4.2	23.61	0.25	2.2	0.25	2.2	124.3	285.8	286.4	72.1	49.9	73.0	867.3	865.8	1115.0	1114.9
20180502:19:48:09	23.3	16.5	-4.2	23.61	0.25	2.2	0.25	2.2	123.9	285.8	286.4	72.1	49.9	73.0	868.6	867.1	1116.7	1116.6
20180502:19:53:09	23.3	16.4	-4.4	23.61	0.25	2.2	0.25	2.2	123.7	285.8	286.4	72.1	49.9	73.0	870.0	868.5	1118.5	1118.4
20180502:19:58:09	23.3	16.2	-4.3	23.61	0.25	2.2	0.25	2.2	123.4	285.8	286.4	72.1	49.9	73.0	871.3	869.9	1120.2	1120.1
20180502:20:03:09	23.3	16.2	-4.3	23.61	0.25	2.2	0.25	2.2	123.4	285.8	286.4	72.1	49.8	72.9	872.7	871.2	1122.0	1121.9
20180502:20:08:09	23.3	16.2	-4.2	23.61	0.25	2.2	0.25	2.2	123.5	285.8	286.4	72.1	49.8	72.9	874.1	872.6	1123.6	1123.6
20180502:20:13:09	23.3	16.3	-4.2	23.61	0.25	2.2	0.25	2.2	123.6	285.9	286.4	72.1	49.8	72.9	875.4	873.9	1125.4	1125.3
20180502:20:18:09	23.3	16.4	-4.2	23.61	0.25	2.2	0.25	2.2	123.9	285.9	286.4	72.2	49.9	73.0	876.8	875.3	1127.1	1127.1
20180502:20:23:09	23.3	16.4	-4.2	23.61	0.25	2.2	0.25	2.2	123.9	285.9	286.4	72.2	49.9	73.0	878.1	876.6	1128.8	1128.8
20180502:20:28:09	23.3	16.5	-4.2	23.61	0.25	2.2	0.25	2.2	124.1	285.8	286.4	72.2	49.9	73.0	879.5	878.0	1130.6	1130.5
20180502:20:33:09	23.3	16.4	-4.3	23.61	0.25	2.2	0.25	2.2	123.9	285.8	286.4	72.2	49.9	73.0	880.8	879.3	1132.3	1132.2
20180502:20:38:09	23.3	15.5	-4.3	23.62	0.25	2.2	0.25	2.2	121.6	285.8	286.3	72.2	49.9	73.0	882.2	880.7	1134.0	1134.0
20180502:20:43:09	23.3	15.4	-4.4	23.62	0.25	2.2	0.25	2.2	121.6	285.8	286.4	72.2	49.9	73.0	883.6	882.0	1135.8	1135.7
20180502:20:48:09	23.3	16.1	-4.3	23.62	0.25	2.2	0.25	2.2	123.1	285.8	286.4	72.2	49.8	73.0	884.9	883.4	1137.5	1137.5
20180502:20:53:09	23.3	16.3	-4.3	23.62	0.25	2.2	0.25	2.2	123.7	285.9	286.4	72.2	49.9	73.0	886.3	884.8	1139.3	1139.2
20180502:20:58:09	23.3	16.6	-4.3	23.63	0.25	2.2	0.25	2.2	124.2	285.9	286.4	72.2	49.9	73.0	887.6	886.1	1141.0	1140.9
20180502:21:03:09	23.3	16.6	-4.3	23.63	0.25	2.2	0.25	2.2	124.4	285.9	286.4	72.2	49.8	73.0	889.0	887.5	1142.7	1142.6
20180502:21:08:09	23.3	16.7	-4.4	23.63	0.25	2.2	0.25	2.2	124.5	285.8	286.4	72.2	49.8	73.0	890.3	888.8	1144.4	1144.3
20180502:21:13:09	23.3	16.8	-4.4	23.63	0.25	2.2	0.25	2.2	124.7	285.9	286.3	72.2	49.8	73.0	891.7	890.2	1146.1	1146.1
20180502:21:18:09	23.3	16.9	-4.4	23.63	0.25	2.2	0.25	2.2	124.8	285.9	286.5	72.2	49.8	73.0	893.0	891.5	1147.9	1147.8
20180502:21:23:09	23.3	17.0	-4.2	23.63	0.25	2.2	0.25	2.2	125.1	285.9	286.4	72.2	49.8	73.0	894.4	892.9	1149.6	1149.6
20180502:21:28:09	23.3	17.1	-4.4	23.63	0.25	2.2	0.25	2.2	125.4	285.9	286.4	72.3	49.9	73.1	895.7	894.2	1151.3	1151.3
20180502:21:33:09	23.3	17.3	-4.4	23.63	0.25	2.2	0.25	2.2	125.8	286.0	286.5	72.3	49.9	73.1	897.1	895.6	1153.1	1153.0
20180502:21:38:09	23.3	17.4	-4.5	23.64	0.25	2.2	0.25	2.2	126.0	286.0	286.5	72.3	49.8	73.1	898.4	896.9	1154.8	1154.7
20180502:21:43:09	23.3	17.4	-4.4	23.64	0.25	2.2	0.25	2.2	126.0	286.0	286.4	72.3	49.8	73.1	899.8	898.3	1156.5	1156.5
20180502:21:48:09	23.3	17.5	-4.5	23.64	0.25	2.2	0.25	2.2	126.3	286.0	286.5	72.3	49.8	73.1	901.1	899.6	1158.2	1158.2
20180502:21:53:09	23.3	17.5	-4.5	23.64	0.25	2.2	0.25	2.2	126.3	286.0	286.5	72.3	49.8	73.1	902.5	901.0	1160.0	1159.9
20180502:21:58:09	23.3	17.6	-4.5	23.64	0.25	2.2	0.25	2.2	126.4	285.9	286.4	72.3	49.8	73.1	903.8	902.3	1161.6	1161.6
20180502:22:03:09	23.3	17.6	-4.4	23.63	0.25	2.2	0.25	2.2	126.3	285.9	286.5	72.3	49.9	73.2	905.2	903.7	1163.4	1163.3
20180502:22:08:09	23.3	17.5	-4.4	23.63	0.25	2.2	0.25	2.2	126.2	285.9	286.5	72.3	49.9	73.2	906.5	905.0	1165.1	1165.1
20180502:22:13:09	23.3	17.4	-4.3	23.64	0.25	2.2	0.25	2.2	126.0	285.9	286.4	72.3	49.9	73.2	907.9	906.4	1166.8	1166.8
20180502:22:18:09	23.3	17.2	-4.3	23.63	0.25	2.2	0.25	2.2	125.6	285.9	286.5	72.3	49.9	73.2	909.2	907.7	1168.6	1168.5
20180502:22:23:09	23.3	16.1	-4.6	23.64	0.25	2.2	0.25	2.2	123.0	285.9	286.5	72.3	49.8	73.2	910.6	909.0	1170.3	1170.2
20180502:22:28:09	23.3	15.3	-4.5	23.64	0.25	2.2	0.25	2.1	121.4	285.8	286.4	72.3	49.9	73.1	911.9	910.4	1172.0	1172.0
20180502:22:33:09	23.3	16.5	-4.3	23.64	0.25	2.2	0.25	2.2	124.1	285.9	286.5	72.3	49.9	73.1	913.3	911.8	1173.7	1173.7
20180502:22:38:09	23.3	17.1	-4.4	23.64	0.25	2.2	0.25	2.2	125.3	286.0	286.5	72.3	49.9	73.1	914.6	913.1	1175.4	1175.4
20180502:22:43:09	23.3	17.2	-4.4	23.64	0.25	2.2	0.25	2.2	125.6	286.0	286.5	72.2	49.9	73.1	916.0	914.5	1177.2	1177.1
20180502:22:48:09	23.3	17.4	-4.5	23.65	0.25	2.2	0.25	2.2	126.1	285.9	286.4	72.2	49.8	73.0	917.3	915.8	1178.9	1178.8
20180502:22:53:09	23.3	17.5	-4.5	23.65	0.25	2.2	0.25	2.2	126.2	285.8	286.4	72.2	49.8	73.0	918.7	917.2	1180.6	1180.6
20180502:22:58:09	23.3	17.5	-4.5	23.65	0.25	2.2	0.25	2.2	126.1	285.8	286.4	72.2	49.8	73.0	920.0	918.5	1182.3	1182.3
20180502:23:03:09	23.3	17.4	-4.4	23.65	0.25	2.2	0.25	2.2	126.1	285.8	286.4	72.2	49.8	73.0	921.4	919.9	1184.0	1184.0
20180502:23:08:09	23.3	17.4	-4.4	23.65	0.25	2.2	0.25	2.2	126.1	285.9	286.4	72.2	49.8	73.0	922.7	921.2	1185.8	1185.7
20180502:23:13:09	23.3	17.6	-4.4	23.65	0.25	2.2	0.25	2.2	126.5	285.9	286.5	72.2	49.8	73.0	924.0	922.6	1187.5	1187.5
20180502:23:18:09	23.3	17.6	-4.5	23.65	0.25	2.2	0.25	2.2	126.5	285.9	286.4	72.2	49.9	73.0	925.4	923.9	1189.2	1189.2
20180502:23:23:09	23.3	17.7	-4.4	23.65	0.25	2.2	0.25	2.2	126.6	285.9	286.4	72.2	49.9	73.0	926.8	925.3	1190.9	1190.9
20180502:23:28:09	23.3	17.6	-4.5	23.65	0.25	2.2	0.25	2.2	126.5	285.9	286.5	72.2	49.9	73.0	928.1	926.6	1192.7	1192.6
20180502:23:33:09	23.3	17.7	-4.5	23.65	0.25	2.2	0.25	2.2	126.7	285.9	286.4	72.3	49.9	73.0	929.5	928.0	1194.4	1194.4
20180502:23:38:09	23.3	17.7	-4.5	23.65	0.25	2.2	0.25	2.2	126.6	285.9	286.4	72.3	49.8	73.0	930.8	929.3	1196.1	1196.1
20180502:23:43:09	23.3	17.7	-4.5	23.66	0.25	2.2	0.25	2.2	126.7	285.9	286.5	72.3	49.9	73.0	932.2	930.6	1197.8	1197.8
20180502:23:48:09	23.3	17.7	-4.5	23.66	0.25	2.2	0.25	2.2	126.6	285.9	286.4	72.3	49.8	73.0	933.5	932.0	1199.5	1199.5
20180502:23:53:09	23.3	17.7	-4.5	23.66	0.25	2.2	0.25	2.2	126.6	285.9	286.5	72.3	49.9	73.0	934.9	933.3	1201.3	1201.2
20180502:23:58:09	23.3	17.6	-4.5	23.66	0.25	2.2	0.25	2.2	126.4	285.9	286.4	72.3	49.9	73.0	936.2	934.7	1203.0	1203.0
20180503:00:03:09	23.3	17.6	-4.5	23.65	0.25	2.2	0.25	2.2	126.4	285.9	286.5	72.3	49.9	73.0	937.6	936.0	1204.7	1204.7
20180503:00:08:09	23.3	17.5	-4.6	23.66	0.25	2.2	0.25	2.2	126.3	285.9	286.4	72.3	49.8	73.0	938.9	937.4	1206.4	1206.4
20180503:00:13:09	23.3	16.8	-4.7	23.66	0.25	2.2	0.25	2.2	124.8	285.9	286.4	72.2	49.8	73.0	940.3	938.7	1208.1	1208.1
20180503:00:18:09	23.3	17.2	-4.5	23.66	0.25	2.2	0.25	2.2	125.6	285.8	286.4	72.2	49.8	73.0	941.6	940.1	1209.9	1209.9
20180503:00:23:09	23.3	17.3	-4.5	23.66	0.25	2.2	0.25	2.2	125.9	285.8	286.4	72.2	49.9	73.0	942.9	941.4	1211.6	1211.6
20180503:00:28:09	23.3	17.5	-4.5	23.66	0.25	2.2	0.25	2.2	126.3	285.9	286.4	72.1	49.9	73.0	944.3	942.8	1213.3	1213.3
20180503:00:33:09	23.3	17.6	-4.5	23.66	0.25	2.2	0.25	2.2	126.5	286.0	286.5	72.1	49.9	73.0	945.7	944.1	1215.0	1215.0
20180503:00:38:09	23.3	17.7	-4.5	23.66	0.25	2.2	0.25	2.2	126.8	285.9	286.5	72.1	49.9	73.0	947.0	945.5	1216.7	1216.7
20180503:00:43:09	23.3	17.8	-4.5	23.66	0.25	2.2	0.25	2.2	126.8	285.9	286.4	72.0	49.8	72.9	948.4	946.8	1218.5	1218.5
20180503:00:48:09	23.3	17.9	-4.5	23.66	0.25	2.2	0.25	2.2	127.0	285.9	286.3	72.0	49.9	72.9	949.7	948.1	1220.1	1220.1
20180503:00:53:09	23.3	17.9	-4.5	23.66	0.25	2.2	0.25	2.2	127.1	285.9	286.4	72.0	49.9	72.9	951.1	949.5	1221.9	1221.9
20180503:00:58:09	23.3	17.9	-4.5	23.66	0.25	2.2	0.25	2.2	127.0	285.8	286.4	71.9	49.9	72.8	952.4	950.8	1223.6	1223.6
20180503:01:03:09	23.3	17.9	-4.5	23.67	0.25	2.2	0.25	2.2	127.1	285.9	286.5	71.9	49.9	72.8	953.8	952.2	1225.3	1225.3
20180503:01:08:09	23.3	18.0	-4.5	23.67	0.25	2.2	0.25	2.2	127.2	285.8	286.3	71.9	49.8	72.7	955.1	953.5	1227.1	1227.0
20180503:01:13:09	23.3	17.9	-4.5	23.67	0.25	2.2	0.25	2.2	127.0	285.9	286.3	71.8	49.9	72.7	956.4	954.9	1228.7	1228.8
20180503:01:18:09	23.3	17.9	-4.5	23.67	0.25	2.2	0.25	2.2	127.1	285.8	286.3	71.8	49.8	72.7	957.8	956.2	1230.5	1230.5
20180503:01:23:09	23.3	17.9	-4.5	23.67	0.25	2.2	0.25	2.2	127.0	285.8	286.4	71.7	49.9	72.7	959.1	957.6	1232.2	1232.2
20180503:01:28:09	23.3	17.7	-4.5	23.67	0.25	2.2	0.25	2.2	126.6	285.8	286.3	71.7	49.8	72.6	960.5	958.9	1234.0	1233.9
20180503:01:33:09	23.3	17.6	-4.5	23.67	0.25	2.2	0.25	2.2	126.5	285.8	286.3	71.7	49.8	72.6	961.8	960.3	1235.6	1235.7
20180503:01:38:09	23.3	17.7	-4.5	23.67	0.25	2.2	0.25	2.2	126.6	285.8	286.3	71.7	49.9	72.6	963.2	961.7	1237.4	1237.4
20180503:01:43:09	23.3	17.8	-4.5	23.67	0.25	2.2	0.25	2.2	126.9	285.8	286.3	71.7	49.8	72.6	964.6	963.0	1239.1	1239.1

Time:	Stack Pressure:	Sat% H2O:	Static:	Barometric:	Flowmeter1:	Vacuum1:	Flowmeter2:	Vacuum2:	Stack Temp:	Sorbent Temp:	Probe Temp:	DGM#1 Temp:	Condenser Temp:	DGM#2 Temp:	DGM1*:	DGM2*:	DGM1:	DGM2:
day:hh:mm:ss	in-Hg	Percent	in-H2O	in-Hg	l/min	in-Hg	l/min	in-Hg	degF	degF	degF	degF	degF	degF	liters STP	liters STP	liters nominal	liters nominal
20180503:01:48:09	23.3	17.7	-4.5	23.67	0.25	2.2	0.25	2.2	126.7	285.9	286.3	71.7	49.8	72.6	965.9	964.4	1240.8	1240.8
20180503:01:53:09	23.3	17.7	-4.5	23.67	0.25	2.2	0.25	2.2	126.6	285.9	286.3	71.7	49.9	72.6	967.3	965.7	1242.5	1242.5
20180503:01:58:09	23.3	17.7	-4.5	23.67	0.25	2.2	0.25	2.2	126.6	285.9	286.4	71.7	49.9	72.6	968.6	967.0	1244.2	1244.2
20180503:02:03:09	23.3	17.7	-4.5	23.67	0.25	2.2	0.25	2.2	126.6	285.9	286.4	71.8	49.9	72.6	970.0	968.4	1246.0	1245.9
20180503:02:08:09	23.3	17.6	-4.5	23.67	0.25	2.2	0.25	2.2	126.4	285.9	286.4	71.8	49.9	72.6	971.3	969.7	1247.6	1247.7
20180503:02:13:09	23.3	17.6	-4.5	23.66	0.25	2.2	0.25	2.2	126.4	285.8	286.3	71.7	49.8	72.6	972.6	971.1	1249.4	1249.4
20180503:02:18:09	23.3	17.3	-4.6	23.66	0.25	2.2	0.25	2.2	125.9	285.8	286.3	71.7	49.8	72.6	974.0	972.4	1251.1	1251.1
20180503:02:23:09	23.3	16.4	-4.8	23.67	0.25	2.2	0.25	2.1	123.7	285.8	286.3	71.7	49.8	72.6	975.3	973.8	1252.8	1252.8
20180503:02:28:09	23.3	16.4	-4.7	23.67	0.25	2.2	0.25	2.2	123.8	285.8	286.4	71.7	49.9	72.6	976.7	975.1	1254.5	1254.6
20180503:02:33:09	23.3	17.0	-4.5	23.67	0.25	2.2	0.25	2.2	125.1	285.8	286.3	71.7	49.9	72.6	978.0	976.4	1256.2	1256.2
20180503:02:38:09	23.3	17.2	-4.5	23.67	0.25	2.2	0.25	2.2	125.6	285.8	286.4	71.7	49.8	72.6	979.4	977.8	1258.0	1258.0
20180503:02:43:09	23.3	17.4	-4.6	23.67	0.25	2.2	0.25	2.2	126.0	285.9	286.3	71.7	49.9	72.6	980.7	979.2	1259.6	1259.7
20180503:02:48:09	23.3	17.5	-4.5	23.67	0.25	2.2	0.25	2.2	126.2	285.9	286.3	71.7	49.8	72.5	982.1	980.5	1261.4	1261.4
20180503:02:53:09	23.3	17.5	-4.5	23.67	0.25	2.2	0.25	2.2	126.2	285.9	286.3	71.7	49.9	72.5	983.4	981.9	1263.1	1263.1
20180503:02:58:09	23.3	17.5	-4.5	23.67	0.25	2.2	0.25	2.2	126.3	285.9	286.4	71.7	49.8	72.5	984.7	983.2	1264.8	1264.8
20180503:03:03:09	23.3	17.6	-4.5	23.67	0.25	2.2	0.25	2.2	126.4	285.9	286.3	71.7	49.9	72.5	986.1	984.6	1266.5	1266.6
20180503:03:08:09	23.3	17.6	-4.5	23.68	0.25	2.2	0.25	2.2	126.5	285.8	286.4	71.7	49.9	72.5	987.4	985.9	1268.2	1268.3
20180503:03:13:09	23.3	17.6	-4.5	23.68	0.25	2.2	0.25	2.2	126.4	285.8	286.4	71.7	49.9	72.5	988.8	987.3	1270.0	1270.0
20180503:03:18:09	23.3	17.6	-4.5	23.68	0.25	2.2	0.25	2.2	126.5	285.8	286.3	71.6	49.9	72.4	990.2	988.6	1271.7	1271.7
20180503:03:23:09	23.3	17.7	-4.6	23.68	0.25	2.2	0.25	2.2	126.6	285.8	286.4	71.6	49.9	72.4	991.5	990.0	1273.4	1273.5
20180503:03:28:09	23.3	17.8	-4.5	23.68	0.25	2.2	0.25	2.2	126.9	285.8	286.3	71.6	49.8	72.4	992.9	991.3	1275.1	1275.2
20180503:03:33:09	23.3	17.8	-4.5	23.68	0.25	2.2	0.25	2.2	126.9	285.8	286.4	71.6	49.9	72.4	994.2	992.7	1276.8	1276.9
20180503:03:38:09	23.3	17.8	-4.5	23.68	0.25	2.2	0.25	2.2	126.9	285.8	286.4	71.6	49.9	72.4	995.6	994.0	1278.6	1278.6
20180503:03:43:09	23.3	17.8	-4.5	23.68	0.25	2.2	0.25	2.2	126.9	285.8	286.4	71.6	49.9	72.4	996.9	995.3	1280.3	1280.3
20180503:03:48:09	23.3	17.7	-4.5	23.68	0.25	2.2	0.25	2.2	126.7	285.8	286.3	71.6	49.8	72.4	998.3	996.7	1282.0	1282.1
20180503:03:53:09	23.3	17.7	-4.5	23.68	0.25	2.2	0.25	2.2	126.8	285.8	286.3	71.5	49.8	72.3	999.6	998.0	1283.7	1283.7
20180503:03:58:09	23.3	17.7	-4.5	23.68	0.25	2.2	0.25	2.2	126.7	285.9	286.4	71.5	49.8	72.3	1001.0	999.4	1285.4	1285.5
20180503:04:03:09	23.3	17.7	-4.5	23.68	0.25	2.2	0.25	2.2	126.6	285.9	286.4	71.5	49.8	72.3	1002.3	1000.7	1287.1	1287.2
20180503:04:08:09	23.4	17.7	-4.5	23.68	0.25	2.2	0.25	2.2	126.7	285.9	286.4	71.5	49.9	72.3	1003.6	1002.1	1288.8	1288.9
20180503:04:13:09	23.4	17.8	-4.5	23.68	0.25	2.2	0.25	2.2	126.8	285.8	286.4	71.4	49.8	72.3	1005.0	1003.4	1290.6	1290.6
20180503:04:18:09	23.4	17.7	-4.6	23.69	0.25	2.2	0.25	2.2	126.8	285.8	286.3	71.4	49.8	72.3	1006.3	1004.8	1292.3	1292.4
20180503:04:23:09	23.4	17.7	-4.6	23.69	0.25	2.2	0.25	2.2	126.7	285.7	286.3	71.4	49.8	72.3	1007.7	1006.1	1294.0	1294.0
20180503:04:28:09	23.4	17.5	-4.6	23.69	0.25	2.2	0.25	2.2	126.3	285.8	286.4	71.4	49.8	72.3	1009.0	1007.5	1295.7	1295.8
20180503:04:33:09	23.4	17.5	-4.5	23.69	0.25	2.2	0.25	2.2	126.4	285.9	286.4	71.3	49.8	72.2	1010.4	1008.8	1297.4	1297.5
20180503:04:38:09	23.4	17.4	-4.6	23.69	0.25	2.2	0.25	2.2	126.1	285.9	286.5	71.3	49.8	72.2	1011.8	1010.2	1299.1	1299.2
20180503:04:43:09	23.4	17.5	-4.6	23.69	0.25	2.2	0.25	2.2	126.4	285.9	286.5	71.3	49.8	72.2	1013.1	1011.5	1300.8	1300.9
20180503:04:48:09	23.4	17.6	-4.6	23.69	0.25	2.2	0.25	2.2	126.4	285.9	286.5	71.2	49.8	72.2	1014.5	1012.9	1302.6	1302.6
20180503:04:53:09	23.4	17.6	-4.6	23.69	0.25	2.2	0.25	2.2	126.4	285.8	286.3	71.2	49.8	72.2	1015.8	1014.2	1304.3	1304.4
20180503:04:58:09	23.4	17.6	-4.6	23.69	0.25	2.2	0.25	2.2	126.5	285.7	286.4	71.2	49.8	72.1	1017.2	1015.6	1306.0	1306.1
20180503:05:03:09	23.4	17.6	-4.6	23.69	0.25	2.2	0.25	2.2	126.5	285.7	286.3	71.2	49.8	72.1	1018.5	1016.9	1307.7	1307.8
20180503:05:08:09	23.4	17.4	-4.6	23.69	0.25	2.2	0.25	2.2	126.2	285.8	286.3	71.2	49.9	72.1	1019.8	1018.2	1309.4	1309.5
20180503:05:13:09	23.4	17.6	-4.6	23.69	0.25	2.2	0.25	2.2	126.4	285.8	286.4	71.1	49.8	72.0	1021.2	1019.6	1311.1	1311.2
20180503:05:18:09	23.4	17.5	-4.6	23.70	0.25	2.2	0.25	2.2	126.2	285.8	286.3	71.1	49.8	72.0	1022.5	1020.9	1312.8	1312.9
20180503:05:23:09	23.4	17.6	-4.6	23.70	0.25	2.2	0.25	2.2	126.5	285.8	286.4	71.1	49.9	72.0	1023.9	1022.3	1314.6	1314.7
20180503:05:28:09	23.4	17.5	-4.6	23.71	0.25	2.2	0.25	2.2	126.4	285.8	286.4	71.1	49.8	72.0	1025.2	1023.6	1316.2	1316.3
20180503:05:33:09	23.4	17.3	-4.5	23.71	0.25	2.2	0.25	2.2	126.0	285.8	286.3	71.1	49.8	72.0	1026.6	1025.0	1318.0	1318.1
20180503:05:38:09	23.4	17.1	-4.5	23.71	0.25	2.2	0.25	2.2	125.5	285.7	286.3	71.0	49.8	71.9	1027.9	1026.3	1319.7	1319.8
20180503:05:43:09	23.4	17.0	-4.3	23.71	0.25	2.2	0.25	2.2	125.2	285.7	286.3	71.0	49.8	71.9	1029.3	1027.7	1321.4	1321.5
20180503:05:48:09	23.4	16.8	-4.3	23.71	0.25	2.2	0.25	2.2	124.9	285.7	286.3	71.0	49.8	71.9	1030.6	1029.0	1323.1	1323.2
20180503:05:53:09	23.4	16.8	-4.4	23.71	0.25	2.2	0.25	2.2	124.9	285.7	286.3	71.0	49.8	71.9	1032.0	1030.4	1324.8	1325.0
20180503:05:58:09	23.4	16.8	-4.3	23.72	0.25	2.2	0.25	2.2	124.7	285.7	286.3	71.0	49.8	71.9	1033.4	1031.8	1326.6	1326.7
20180503:06:03:09	23.4	16.6	-4.4	23.72	0.25	2.2	0.25	2.2	124.4	285.7	286.3	70.9	49.8	71.9	1034.7	1033.1	1328.3	1328.4
20180503:06:08:09	23.4	16.5	-4.4	23.72	0.25	2.2	0.25	2.2	124.1	285.8	286.4	70.9	49.8	71.9	1036.1	1034.5	1330.0	1330.1
20180503:06:13:09	23.4	16.5	-4.4	23.73	0.25	2.2	0.25	2.2	124.1	285.8	286.3	70.9	49.8	71.8	1037.4	1035.8	1331.7	1331.8
20180503:06:18:09	23.4	16.3	-4.4	23.73	0.25	2.2	0.25	2.2	123.8	285.7	286.4	70.8	49.8	71.7	1038.8	1037.2	1333.4	1333.6
20180503:06:23:09	23.4	16.3	-4.4	23.73	0.25	2.2	0.25	2.2	123.7	285.7	286.3	70.8	49.8	71.7	1040.1	1038.5	1335.2	1335.3
20180503:06:28:09	23.4	16.2	-4.4	23.73	0.25	2.2	0.25	2.2	123.5	285.8	286.4	70.8	49.8	71.7	1041.5	1039.9	1336.9	1337.0
20180503:06:33:09	23.4	16.2	-4.3	23.73	0.25	2.2	0.25	2.2	123.4	285.8	286.4	70.8	49.8	71.7	1042.9	1041.2	1338.6	1338.7
20180503:06:38:09	23.4	16.2	-4.3	23.74	0.25	2.2	0.25	2.2	123.5	285.8	286.4	70.8	49.8	71.7	1044.2	1042.6	1340.3	1340.5
20180503:06:43:09	23.4	16.2	-4.4	23.74	0.25	2.2	0.25	2.2	123.6	285.8	286.4	70.8	49.8	71.7	1045.6	1044.0	1342.0	1342.2
20180503:06:48:09	23.4	16.2	-4.4	23.74	0.25	2.2	0.25	2.2	123.5	285.8	286.4	70.8	49.8	71.7	1046.9	1045.3	1343.8	1343.9
20180503:06:53:10	23.4	16.3	-4.4	23.74	0.25	2.2	0.25	2.2	123.7	285.9	286.4	70.9	49.8	71.7	1048.3	1046.7	1345.4	1345.6
20180503:06:58:10	23.4	16.3	-4.3	23.74	0.25	2.2	0.25	2.2	123.7	285.8	286.4	70.8	49.8	71.7	1049.6	1048.0	1347.2	1347.3
20180503:07:03:10	23.4	16.1	-4.3	23.74	0.25	2.2	0.25	2.2	123.4	285.8	286.4	70.8	49.7	71.7	1051.0	1049.4	1348.9	1349.1
20180503:07:08:10	23.4	16.2	-4.3	23.74	0.25	2.2	0.25	2.2	123.6	285.8	286.4	70.9	49.8	71.7	1052.4	1050.7	1350.6	1350.7
20180503:07:13:10	23.4	16.2	-4.5	23.75	0.25	2.2	0.25	2.2	123.5	285.8	286.3	70.9	49.7	71.7	1053.7	1052.1	1352.3	1352.5
20180503:07:18:10	23.4	15.6	-4.7	23.75	0.25	2.2	0.25	2.2	122.2	285.7	286.3	70.9	49.8	71.7	1055.0	1053.4	1354.1	1354.2
20180503:07:23:10	23.4	15.4	-4.7	23.74	0.25	2.2	0.25	2.2	121.6	285.8	286.4	71.0	49.8	71.7	1056.4	1054.8	1355.8	1355.9
20180503:07:28:10	23.4	15.6	-4.6	23.74	0.25	2.2	0.25	2.2	122.1	285.8	286.3	71.0	49.8	71.7	1057.7	1056.1	1357.5	1357.6
20180503:07:33:10	23.4	16.4	-4.8	23.74	0.25	2.2	0.25	2.2	124.0	285.9	286.4	71.0	49.8	71.7	1059.1	1057.5	1359.2	1359.4
20180503:07:38:10	23.4	16.9	-4.8	23.74	0.25	2.2	0.25	2.2	125.0	285.8	286.3	71.0	49.8	71.7	1060.5	1058.9	1360.9	1361.1
20180503:07:43:10	23.4	17.1	-4.6	23.74	0.25	2.2	0.25	2.2	125.6	285.9	286.4	71.0	49.8	71.7	1061.8	1060.2	1362.7	1362.8
20180503:07:48:10	23.4	17.4	-4.3	23.74	0.25	2.2	0.25	2.2	126.1	285.9	286.3	71.0	49.7	71.7	1063.2	1061.6	1364.4	1364.5
20180503:07:53:10	23.4	17.6	-4.4	23.74	0.25	2.2	0.25	2.2	126.6	285.9	286.3	71.0	49.7	71.7	1064.5	1062.9	1366.1	1366.2
20180503:07:58:10	23.4	17.9	-4.4	23.73	0.25	2.2	0.25	2.2	127.3	285.8	286.3	71.0	49.7	71.7	1065.9	1064.3	1367.8	1367.9
20180503:08:03:10	23.4	18.0	-4.5	23.74	0.25	2.2	0.25	2.2	127.5	285.8	286.3	71.0	49.7	71.7	1067.2	1065.6	1369.5	1369.7
20180503:08:08:10	23.4	18.0	-4.5	23.74	0.25	2.2	0.25	2.1	127.5	285.8	286.3	71.1	49.7	71.8	1068.6	1067.0	1371.3	1371.4
20180503:08:13:10	23.4	17.9	-4.5	23.74	0.25	2.2	0.25	2.1	127.2	285.8	286.3	71.1	49.7	71.9	1069.9	1068.3	1372.9	1373.1
20180503:08:18:10	23.4	17.8	-4.5	23.74	0.25	2.2	0.25	2.1	127.1	285.8	286.4	71.1	49.7	71.9	1071.3	1069.7	1374.7	1374.8
20180503:08:23:10	23.4	17.8	-4.5	23.74	0.25	2.2	0.25	2.1	126.9	285.9	286.4	71.1	49.7	71.9	1072.6	1071.0	1376.4	1376.5
20180503:08:28:10	23.4	17.7	-4.5	23.74	0.25	2.2	0.25	2.1	126.8	286.0	286.5	71.1	49.7	71.9	1074.0	1072.4	1378.1	1378.2
20180503:08:33:10	23.4	17.7	-4.5	23.75	0.25	2.2	0.25	2.2	126.8	286.0	286.4	71.1	49.7	71.9	1075.3	1073.7	1379.8	1379.9
20180503:08:38:10	23.4	17.7	-4.4	23.75	0.25	2.2	0.25	2.2	126.8	285.9	286.4	71.2	49.7	71.9	1076.7	1075.1	1381.4	1381.6
20180503:08:43:10	23.4	17.6	-4.4	23.75	0.25	2.2	0.25	2.1	126.7	285.9	286.3	71.2	49.7	72.0	1078.0	1076.4	1383.2	1383.3
20180503:08:48:10	23.4	17.5	-4.5	23.75	0.25	2.2	0.25	2.1	126.4	285.8	286.3	71.2	49.7	72.0	1079.3	1077.7	1384.8	1385.0
20180503:08:53:10	23.4	17.6	-4.5	23.75	0.25	2.2	0.25	2.2	126.6	285.7	286.3	71.2	49.7	72.0	1080.7	1079.1	1386.6	1386.7
20180503:08:58:10	23.4	17.7	-4.5	23.75	0.25	2.2	0.25	2.2	126.7	285.8	286.3	71.3	49.7	72.0	1082.0	1080.4	1388.3	1388.4
20180503:09:03:10	23.4	17.8	-4.4	23.75	0.25	2.2	0.25	2.1	127.0	285.8	286.4	71.3	49.7	72.1	1083.4	1081.7	1390.0	1390.1
20180503:09:08:10	23.4	17.9	-4.4	23.75	0.25	2.2	0.25	2.2	127.3	285.8	286.3	71.3	49.7	72.1	1084.7	1083.1	1391.7	1391.9

Time:	Stack Pressure:	Sat% H2O:	Static:	Barometric:	Flowmeter1:	Vacuum1:	Flowmeter2:	Vacuum2:	Stack Temp:	Sorbent Temp:	Probe Temp:	DGM#1 Temp:	Condenser Temp:	DGM#2 Temp:	DGM1*:	DGM2*:	DGM1:	DGM2:
day:hh:mm:ss	in-Hg	Percent	in-H2O	in-Hg	l/min	in-Hg	l/min	in-Hg	degF	degF	degF	degF	degF	degF	liters STP	liters STP	liters nominal	liters nominal
20180503:09:13:10	23.4	18.0	-4.3	23.75	0.25	2.2	0.25	2.2	127.4	285.9	286.4	71.3	49.7	72.1	1086.1	1084.4	1393.4	1393.5
20180503:09:18:10	23.4	17.9	-4.4	23.75	0.25	2.2	0.25	2.1	127.3	285.8	286.4	71.3	49.7	72.2	1087.4	1085.8	1395.1	1395.3
20180503:09:23:10	23.4	17.9	-4.4	23.75	0.25	2.2	0.25	2.1	127.3	285.8	286.3	71.4	49.7	72.2	1088.7	1087.1	1396.8	1396.9
20180503:09:28:10	23.4	17.7	-4.4	23.75	0.25	2.2	0.25	2.1	126.9	285.7	286.3	71.4	49.7	72.2	1090.1	1088.5	1398.5	1398.7
20180503:09:33:10	23.4	17.8	-4.4	23.76	0.25	2.2	0.25	2.1	127.0	285.8	286.3	71.4	49.7	72.2	1091.4	1089.8	1400.2	1400.4
20180503:09:38:10	23.4	17.7	-4.5	23.76	0.25	2.2	0.25	2.2	126.8	285.8	286.4	71.5	49.7	72.3	1092.8	1091.2	1401.9	1402.1
20180503:09:43:10	23.4	17.7	-4.5	23.76	0.25	2.2	0.25	2.1	126.8	285.8	286.4	71.5	49.7	72.3	1094.1	1092.5	1403.6	1403.8
20180503:09:48:10	23.4	17.7	-4.6	23.77	0.25	2.2	0.25	2.2	126.9	285.8	286.3	71.6	49.7	72.3	1095.5	1093.9	1405.3	1405.5
20180503:09:53:10	23.4	17.7	-4.6	23.77	0.25	2.2	0.25	2.1	126.7	285.8	286.3	71.6	49.7	72.4	1096.8	1095.2	1407.0	1407.2
20180503:09:58:10	23.4	17.6	-4.6	23.78	0.25	2.2	0.25	2.1	126.6	285.8	286.4	71.7	49.7	72.4	1098.2	1096.5	1408.7	1408.9
20180503:10:03:10	23.4	17.6	-4.6	23.78	0.25	2.2	0.25	2.2	126.6	285.9	286.4	71.7	49.7	72.5	1099.5	1097.9	1410.4	1410.6
20180503:10:08:10	23.4	17.6	-4.6	23.78	0.25	2.2	0.25	2.2	126.6	285.8	286.3	71.8	49.7	72.5	1100.8	1099.2	1412.1	1412.3
20180503:10:13:10	23.4	17.6	-4.6	23.78	0.25	2.2	0.25	2.1	126.6	285.9	286.4	71.9	49.7	72.6	1102.2	1100.6	1413.8	1414.0
20180503:10:18:10	23.4	17.6	-4.6	23.78	0.25	2.2	0.25	2.1	126.6	285.9	286.4	71.9	49.7	72.6	1103.5	1101.9	1415.5	1415.7
20180503:10:23:10	23.4	17.5	-4.6	23.78	0.25	2.2	0.25	2.1	126.5	285.9	286.4	71.9	49.7	72.6	1104.9	1103.3	1417.3	1417.4
20180503:10:28:10	23.4	17.5	-4.6	23.78	0.25	2.2	0.25	2.1	126.3	285.9	286.4	72.0	49.7	72.7	1106.2	1104.6	1418.9	1419.1
20180503:10:33:10	23.4	17.4	-4.6	23.78	0.25	2.2	0.25	2.2	126.3	285.8	286.4	72.0	49.8	72.7	1107.6	1105.9	1420.7	1420.8
20180503:10:38:10	23.4	17.6	-4.6	23.78	0.25	2.2	0.25	2.2	126.5	285.9	286.4	72.0	49.8	72.7	1108.9	1107.3	1422.3	1422.5
20180503:10:43:10	23.4	17.6	-4.6	23.78	0.25	2.2	0.25	2.2	126.5	285.8	286.4	72.1	49.8	72.8	1110.3	1108.6	1424.0	1424.3
20180503:10:48:10	23.4	17.6	-4.6	23.78	0.25	2.2	0.25	2.1	126.7	285.8	286.3	72.1	49.9	72.9	1111.6	1110.0	1425.8	1425.9
20180503:10:53:10	23.4	17.6	-4.6	23.79	0.25	2.2	0.25	2.1	126.6	285.9	286.4	72.2	49.9	72.9	1113.0	1111.3	1427.5	1427.7
20180503:10:58:10	23.5	17.5	-4.6	23.79	0.25	2.2	0.25	2.1	126.5	285.9	286.5	72.2	49.9	73.0	1114.3	1112.6	1429.2	1429.3
20180503:11:03:10	23.5	17.3	-4.5	23.79	0.25	2.2	0.25	2.1	126.1	285.8	286.4	72.2	49.9	73.0	1115.6	1114.0	1430.9	1431.1
20180503:11:08:10	23.5	17.5	-4.7	23.80	0.25	2.2	0.25	2.1	126.3	285.9	286.5	72.3	49.9	73.0	1117.0	1115.3	1432.6	1432.8
20180503:11:13:10	23.5	17.4	-4.6	23.79	0.25	2.2	0.25	2.1	126.3	285.8	286.3	72.3	49.9	73.1	1118.3	1116.7	1434.3	1434.5
20180503:11:18:10	23.5	17.5	-4.5	23.79	0.25	2.2	0.25	2.1	126.3	285.8	286.4	72.4	50.0	73.2	1119.7	1118.0	1436.0	1436.2
20180503:11:23:10	23.5	17.4	-4.5	23.79	0.25	2.2	0.25	2.2	126.3	285.8	286.4	72.4	50.0	73.2	1121.0	1119.4	1437.7	1437.9
20180503:11:28:10	23.5	17.4	-4.5	23.79	0.25	2.2	0.25	2.2	126.2	285.8	286.4	72.4	50.0	73.2	1122.4	1120.7	1439.4	1439.6
20180503:11:33:10	23.5	17.5	-4.5	23.80	0.25	2.2	0.25	2.1	126.4	285.8	286.4	72.5	50.1	73.3	1123.7	1122.1	1441.1	1441.3
20180503:11:38:10	23.5	17.4	-4.5	23.79	0.25	2.2	0.25	2.1	126.3	285.9	286.4	72.6	50.1	73.3	1125.0	1123.4	1442.8	1443.0
20180503:11:43:10	23.5	17.4	-4.4	23.79	0.25	2.2	0.25	2.1	126.2	285.9	286.4	72.6	50.1	73.4	1126.4	1124.8	1444.5	1444.7
20180503:11:48:10	23.5	17.4	-4.5	23.80	0.25	2.2	0.25	2.1	126.2	285.9	286.5	72.7	50.2	73.5	1127.7	1126.1	1446.2	1446.4
20180503:11:53:10	23.5	17.4	-4.5	23.79	0.25	2.2	0.25	2.1	126.2	285.9	286.4	72.7	50.2	73.5	1129.1	1127.4	1448.0	1448.1
20180503:11:58:10	23.4	16.7	-4.8	23.79	0.25	2.1	0.25	2.1	124.6	285.8	286.5	72.8	50.2	73.5	1130.4	1128.8	1449.6	1449.8
20180503:12:03:10	23.4	16.2	-4.7	23.79	0.25	2.1	0.25	2.1	123.6	285.8	286.4	72.9	50.2	73.6	1131.8	1130.1	1451.4	1451.5
20180503:12:08:10	23.5	16.4	-4.5	23.79	0.25	2.1	0.25	2.1	124.1	285.8	286.5	72.9	50.3	73.6	1133.1	1131.5	1453.1	1453.3
20180503:12:13:10	23.5	16.7	-4.4	23.79	0.25	2.1	0.25	2.1	124.8	285.8	286.4	72.9	50.3	73.7	1134.5	1132.8	1454.7	1454.9
20180503:12:18:10	23.5	16.9	-4.4	23.79	0.25	2.1	0.25	2.1	125.2	285.9	286.4	73.0	50.3	73.7	1135.8	1134.2	1456.5	1456.7
20180503:12:23:10	23.5	17.0	-4.5	23.79	0.25	2.2	0.25	2.1	125.4	285.8	286.4	73.0	50.3	73.8	1137.1	1135.5	1458.1	1458.4
20180503:12:28:10	23.5	17.1	-4.5	23.80	0.25	2.2	0.25	2.1	125.5	285.9	286.4	73.1	50.3	73.9	1138.5	1136.9	1459.9	1460.1
20180503:12:33:10	23.5	17.1	-4.4	23.79	0.25	2.2	0.25	2.1	125.6	285.9	286.4	73.2	50.3	73.9	1139.8	1138.2	1461.6	1461.8
20180503:12:38:10	23.5	17.1	-4.4	23.79	0.25	2.2	0.25	2.1	125.6	285.8	286.4	73.2	50.3	74.0	1141.2	1139.5	1463.3	1463.5
20180503:12:43:10	23.5	17.2	-4.5	23.80	0.25	2.2	0.25	2.1	125.9	285.9	286.5	73.3	50.3	74.0	1142.5	1140.9	1465.0	1465.2
20180503:12:48:10	23.5	17.3	-4.5	23.80	0.25	2.2	0.25	2.2	126.0	285.8	286.4	73.3	50.3	74.1	1143.9	1142.2	1466.7	1466.9
20180503:12:53:10	23.5	17.3	-4.6	23.80	0.25	2.2	0.25	2.1	126.0	285.9	286.4	73.4	50.3	74.2	1145.3	1143.5	1468.4	1468.6
20180503:12:58:10	23.5	17.3	-4.5	23.79	0.25	2.2	0.25	2.1	126.0	285.9	286.4	73.5	50.3	74.2	1146.6	1144.9	1470.1	1470.4
20180503:13:03:10	23.5	17.2	-4.5	23.80	0.25	2.2	0.25	2.1	125.8	285.8	286.4	73.6	50.3	74.3	1147.9	1146.2	1471.8	1472.0
20180503:13:08:10	23.5	17.1	-4.4	23.80	0.25	2.2	0.25	2.1	125.7	285.8	286.4	73.7	50.3	74.3	1149.3	1147.6	1473.5	1473.8
20180503:13:13:10	23.5	17.2	-4.5	23.80	0.25	2.2	0.25	2.1	125.9	285.8	286.4	73.8	50.4	74.4	1150.6	1148.9	1475.3	1475.4
20180503:13:18:10	23.5	17.2	-4.4	23.80	0.25	2.2	0.25	2.1	125.9	285.9	286.5	73.9	50.3	74.5	1151.9	1150.3	1476.9	1477.2
20180503:13:23:10	23.5	17.3	-4.5	23.80	0.25	2.2	0.25	2.1	126.1	285.8	286.4	74.0	50.4	74.6	1153.3	1151.6	1478.7	1478.9
20180503:13:28:10	23.5	17.3	-4.5	23.80	0.25	2.2	0.25	2.1	126.1	285.9	286.4	74.0	50.4	74.7	1154.6	1153.0	1480.4	1480.6
20180503:13:33:10	23.5	17.3	-4.4	23.80	0.25	2.2	0.25	2.1	126.1	285.8	286.4	74.1	50.3	74.8	1156.0	1154.3	1482.1	1482.3
20180503:13:38:10	23.5	17.4	-4.4	23.80	0.25	2.2	0.25	2.1	126.2	285.8	286.4	74.2	50.4	74.8	1157.3	1155.6	1483.8	1484.0
20180503:13:43:10	23.5	17.3	-4.3	23.80	0.25	2.2	0.25	2.1	126.1	285.9	286.5	74.3	50.4	74.9	1158.7	1157.0	1485.5	1485.7
20180503:13:48:10	23.5	17.3	-4.3	23.80	0.25	2.2	0.25	2.1	126.0	285.9	286.5	74.3	50.3	75.0	1160.0	1158.3	1487.2	1487.4
20180503:13:53:10	23.5	17.3	-4.3	23.80	0.25	2.1	0.25	2.1	126.0	285.9	286.4	74.4	50.4	75.1	1161.3	1159.6	1488.9	1489.1
20180503:13:58:10	23.5	17.4	-4.4	23.81	0.25	2.2	0.25	2.1	126.2	285.8	286.4	74.5	50.4	75.1	1162.7	1161.0	1490.7	1490.8
20180503:14:03:10	23.5	17.4	-4.4	23.81	0.25	2.2	0.25	2.1	126.2	285.9	286.5	74.5	50.3	75.2	1164.0	1162.3	1492.3	1492.5
20180503:14:08:10	23.5	17.4	-4.4	23.80	0.25	2.1	0.25	2.1	126.3	285.8	286.4	74.6	50.4	75.2	1165.4	1163.7	1494.0	1494.2
20180503:14:13:10	23.5	17.3	-4.4	23.81	0.25	2.2	0.25	2.1	126.1	285.8	286.4	74.7	50.4	75.3	1166.8	1165.0	1495.8	1495.9
20180503:14:18:10	23.5	17.4	-4.4	23.80	0.25	2.2	0.25	2.1	126.2	285.9	286.5	74.7	50.3	75.4	1168.1	1166.3	1497.4	1497.6
20180503:14:23:10	23.5	17.3	-4.4	23.80	0.25	2.2	0.25	2.1	126.1	285.9	286.3	74.8	50.4	75.4	1169.4	1167.7	1499.2	1499.4
20180503:14:28:10	23.5	17.3	-4.4	23.80	0.25	2.2	0.25	2.1	126.1	285.8	286.4	74.8	50.3	75.5	1170.8	1169.0	1500.9	1501.0
20180503:14:33:10	23.5	17.4	-4.3	23.80	0.25	2.2	0.25	2.1	126.2	285.9	286.4	74.8	50.3	75.5	1172.1	1170.4	1502.6	1502.8
20180503:14:38:10	23.5	17.4	-4.3	23.80	0.25	2.2	0.25	2.1	126.3	285.9	286.5	74.9	50.4	75.6	1173.4	1171.7	1504.3	1504.5
20180503:14:43:10	23.5	17.4	-4.4	23.81	0.25	2.2	0.25	2.1	126.3	285.9	286.4	74.9	50.4	75.7	1174.8	1173.1	1506.0	1506.2
20180503:14:48:10	23.5	17.4	-4.4	23.80	0.25	2.2	0.25	2.1	126.3	285.9	286.5	75.0	50.4	75.7	1176.2	1174.4	1507.7	1507.9
20180503:14:53:10	23.5	16.6	-4.6	23.80	0.25	2.1	0.25	2.1	124.4	285.9	286.4	75.0	50.4	75.8	1177.5	1175.8	1509.4	1509.6
20180503:14:58:10	23.5	16.2	-4.6	23.81	0.25	2.1	0.25	2.1	123.5	285.8	286.4	75.1	50.4	75.8	1178.8	1177.1	1511.2	1511.3
20180503:15:03:10	23.5	16.6	-4.5	23.81	0.25	2.2	0.25	2.1	124.5	285.9	286.5	75.1	50.5	75.9	1180.2	1178.5	1512.9	1513.1
20180503:15:08:10	23.5	16.9	-4.4	23.81	0.25	2.1	0.25	2.1	125.1	285.9	286.4	75.1	50.4	75.9	1181.5	1179.8	1514.6	1514.7
20180503:15:13:10	23.5	17.1	-4.3	23.81	0.25	2.2	0.25	2.1	125.6	286.0	286.5	75.2	50.4	75.9	1182.9	1181.1	1516.3	1516.5
20180503:15:18:10	23.5	17.2	-4.3	23.80	0.25	2.2	0.25	2.1	125.9	285.9	286.4	75.2	50.5	76.0	1184.2	1182.5	1518.0	1518.2
20180503:15:23:10	23.5	17.3	-4.3	23.81	0.25	2.2	0.25	2.1	126.0	285.9	286.5	75.2	50.4	76.0	1185.6	1183.8	1519.7	1519.9
20180503:15:28:10	23.5	17.2	-4.3	23.81	0.25	2.2	0.25	2.1	125.9	285.8	286.4	75.3	50.5	76.1	1186.9	1185.2	1521.4	1521.6
20180503:15:33:10	23.5	17.2	-4.2	23.80	0.25	2.1	0.25	2.1	125.8	285.9	286.5	75.4	50.4	76.1	1188.3	1186.5	1523.2	1523.3
20180503:15:38:10	23.5	17.2	-4.2	23.80	0.25	2.1	0.25	2.1	125.8	285.9	286.5	75.4	50.5	76.2	1189.6	1187.8	1524.9	1525.0
20180503:15:43:10	23.5	17.3	-4.3	23.81	0.25	2.1	0.25	2.1	126.0	285.8	286.4	75.5	50.5	76.2	1191.0	1189.2	1526.6	1526.7
20180503:15:48:10	23.5	17.2	-4.3	23.81	0.25	2.1	0.25	2.1	125.9	285.8	286.5	75.5	50.5	76.3	1192.3	1190.5	1528.3	1528.5
20180503:15:53:10	23.5	17.3	-4.3	23.81	0.25	2.1	0.25	2.1	126.1	285.9	286.4	75.6	50.5	76.3	1193.6	1191.8	1530.0	1530.1
20180503:15:58:10	23.5	17.3	-4.3	23.81	0.25	2.2	0.25	2.1	126.1	285.9	286.5	75.7	50.4	76.4	1195.0	1193.2	1531.7	1531.9
20180503:16:03:10	23.5	17.3	-4.3	23.81	0.25	2.2	0.25	2.1	126.0	285.9	286.4	75.8	50.5	76.5	1196.3	1194.5	1533.4	1533.6
20180503:16:08:10	23.5	17.4	-4.3	23.81	0.25	2.1	0.25	2.1	126.2	285.9	286.5	75.9	50.5	76.5	1197.7	1195.9	1535.1	1535.3
20180503:16:13:10	23.5	17.4	-4.3	23.81	0.25	2.1	0.25	2.1	126.3	285.9	286.4	75.9	50.5	76.6	1199.0	1197.2	1536.8	1537.0
20180503:16:18:10	23.5	17.3	-4.3	23.81	0.25	2.2	0.25	2.1	126.1	285.9	286.3	76.0	50.5	76.7	1200.4	1198.6	1538.6	1538.8
20180503:16:23:10	23.5	17.3	-4.3	23.81	0.25	2.2	0.25	2.1	126.0	285.8	286.4	76.1	50.4	76.7	1201.7	1199.9	1540.3	1540.4
20180503:16:28:10	23.5	17.3	-4.3	23.81	0.25	2.2	0.25	2.1	126.1	285.8	286.3	76.1	50.5	76.8	1203.0	1201.3	1542.0	1542.2
20180503:16:33:10	23.5	17.3	-4.3	23.81	0.25	2.2	0.25	2.1	126.2	285.7	286.3	76.2	50.4	76.8	1204.4	1202.6	1543.7	1543.9

Time:	Stack Pressure:	Sat% H2O:	Static:	Barometric:	Flowmeter1:	Vacuum1:	Flowmeter2:	Vacuum2:	Stack Temp:	Sorbent Temp:	Probe Temp:	DGM#1 Temp:	Condenser Temp:	DGM#2 Temp:	DGM1*:	DGM2*:	DGM1:	DGM2:
day:hh:mm:ss	in-Hg	Percent	in-H2O	in-Hg	l/min	in-Hg	l/min	in-Hg	degF	degF	degF	degF	degF	degF	liters STP	liters STP	liters nominal	liters nominal
20180503:16:38:10	23.5	17.4	-4.3	23.81	0.25	2.2	0.25	2.1	126.3	285.7	286.3	76.2	50.5	76.9	1205.7	1203.9	1545.4	1545.6
20180503:16:43:10	23.5	17.5	-4.3	23.81	0.25	2.2	0.25	2.1	126.4	285.7	286.2	76.3	50.5	77.0	1207.1	1205.3	1547.1	1547.3
20180503:16:48:10	23.5	17.5	-4.2	23.81	0.25	2.2	0.25	2.1	126.4	285.7	286.3	76.4	50.4	77.1	1208.4	1206.6	1548.8	1549.0
20180503:16:53:10	23.5	17.4	-4.3	23.81	0.25	2.2	0.25	2.1	126.2	285.7	286.2	76.4	50.5	77.1	1209.8	1208.0	1550.6	1550.7
20180503:16:58:10	23.5	17.3	-4.2	23.81	0.25	2.1	0.25	2.1	126.1	285.7	286.3	76.5	50.5	77.2	1211.1	1209.3	1552.3	1552.4
20180503:17:03:10	23.5	17.3	-4.1	23.80	0.25	2.1	0.25	2.1	126.1	285.7	286.3	76.6	50.5	77.3	1212.4	1210.6	1554.0	1554.2
20180503:17:08:10	23.5	17.4	-4.1	23.81	0.25	2.2	0.25	2.1	126.2	285.7	286.3	76.7	50.5	77.4	1213.8	1211.9	1555.7	1555.8
20180503:17:13:10	23.5	17.5	-4.2	23.81	0.25	2.2	0.25	2.1	126.4	285.7	286.3	76.8	50.5	77.4	1215.1	1213.3	1557.4	1557.6
20180503:17:18:10	23.5	17.5	-4.1	23.81	0.25	2.2	0.25	2.1	126.5	285.7	286.2	76.9	50.5	77.5	1216.5	1214.6	1559.2	1559.3
20180503:17:23:10	23.5	17.6	-4.1	23.80	0.25	2.2	0.25	2.1	126.8	285.7	286.3	76.9	50.5	77.6	1217.8	1216.0	1560.9	1561.0
20180503:17:28:10	23.5	17.7	-4.1	23.81	0.25	2.2	0.25	2.1	127.0	285.7	286.2	77.0	50.6	77.6	1219.2	1217.3	1562.6	1562.7
20180503:17:33:10	23.5	17.6	-4.2	23.81	0.25	2.2	0.25	2.1	126.8	285.7	286.3	77.1	50.5	77.7	1220.5	1218.7	1564.3	1564.5
20180503:17:38:10	23.5	17.7	-4.2	23.81	0.25	2.2	0.25	2.1	126.9	285.7	286.3	77.1	50.6	77.8	1221.8	1220.0	1566.0	1566.2
20180503:17:43:10	23.5	17.5	-4.2	23.81	0.25	2.2	0.25	2.1	126.5	285.8	286.3	77.2	50.5	77.8	1223.2	1221.4	1567.8	1567.9
20180503:17:48:10	23.5	16.4	-4.5	23.81	0.25	2.1	0.25	2.1	124.0	285.6	286.3	77.3	50.6	77.9	1224.5	1222.7	1569.4	1569.6
20180503:17:53:10	23.5	16.8	-4.2	23.81	0.25	2.1	0.25	2.1	125.1	285.7	286.3	77.3	50.5	78.0	1225.9	1224.0	1571.2	1571.3
20180503:17:58:10	23.5	17.1	-4.2	23.81	0.25	2.1	0.25	2.1	125.6	285.7	286.3	77.4	50.6	78.0	1227.2	1225.4	1572.9	1573.0
20180503:18:03:10	23.5	17.2	-4.1	23.81	0.25	2.1	0.25	2.1	125.9	285.8	286.3	77.4	50.6	78.1	1228.6	1226.7	1574.6	1574.7
20180503:18:08:10	23.5	17.4	-4.1	23.81	0.25	2.1	0.25	2.1	126.2	285.8	286.4	77.5	50.6	78.1	1229.9	1228.1	1576.3	1576.5
20180503:18:13:10	23.5	17.4	-4.2	23.82	0.25	2.2	0.25	2.1	126.3	285.8	286.4	77.5	50.6	78.2	1231.2	1229.4	1578.0	1578.1
20180503:18:18:10	23.5	17.5	-4.1	23.82	0.25	2.1	0.25	2.1	126.4	285.8	286.2	77.5	50.5	78.2	1232.6	1230.7	1579.8	1579.9
20180503:18:23:10	23.5	17.5	-4.2	23.82	0.25	2.2	0.25	2.1	126.6	285.8	286.3	77.6	50.6	78.3	1233.9	1232.0	1581.5	1581.6
20180503:18:28:10	23.5	17.5	-4.1	23.82	0.25	2.2	0.25	2.1	126.5	285.8	286.3	77.6	50.5	78.4	1235.3	1233.4	1583.2	1583.3
20180503:18:33:10	23.5	17.5	-4.1	23.82	0.25	2.2	0.25	2.1	126.6	285.8	286.4	77.6	50.6	78.4	1236.6	1234.7	1584.9	1585.0
20180503:18:38:10	23.5	17.4	-4.1	23.82	0.25	2.2	0.25	2.2	126.3	285.7	286.2	77.7	50.5	78.4	1238.0	1236.1	1586.7	1586.8
20180503:18:43:10	23.5	17.2	-4.1	23.82	0.25	2.2	0.25	2.2	125.9	285.7	286.3	77.7	50.6	78.4	1239.3	1237.4	1588.4	1588.5
20180503:18:48:10	23.5	17.1	-4.1	23.82	0.25	2.2	0.25	2.1	125.7	285.7	286.3	77.7	50.6	78.5	1240.6	1238.8	1590.1	1590.2
20180503:18:53:10	23.5	17.1	-4.0	23.82	0.25	2.2	0.25	2.1	125.7	285.7	286.3	77.7	50.6	78.5	1242.0	1240.1	1591.8	1591.9
20180503:18:58:10	23.5	16.7	-3.9	23.82	0.25	2.2	0.25	2.1	124.8	285.7	286.4	77.8	50.6	78.5	1243.3	1241.5	1593.5	1593.7
20180503:19:03:10	23.5	15.9	-3.9	23.83	0.25	2.1	0.25	2.1	123.0	285.7	286.3	77.8	50.6	78.6	1244.7	1242.8	1595.3	1595.4
20180503:19:08:10	23.5	16.2	-3.9	23.83	0.25	2.2	0.25	2.1	123.7	285.7	286.3	77.8	50.6	78.6	1246.1	1244.2	1597.0	1597.1
20180503:19:13:10	23.5	16.3	-4.1	23.83	0.25	2.2	0.25	2.2	124.0	285.7	286.3	77.8	50.6	78.7	1247.4	1245.5	1598.7	1598.9
20180503:19:18:10	23.5	16.4	-4.1	23.84	0.25	2.2	0.25	2.2	124.2	285.7	286.3	77.8	50.6	78.7	1248.8	1246.9	1600.5	1600.6
20180503:19:23:10	23.5	16.4	-4.0	23.84	0.25	2.2	0.25	2.2	124.1	285.7	286.2	77.9	50.6	78.7	1250.1	1248.3	1602.2	1602.4
20180503:19:28:10	23.5	16.4	-4.1	23.84	0.25	2.2	0.25	2.2	124.1	285.8	286.4	77.9	50.6	78.8	1251.5	1249.6	1604.0	1604.0
20180503:19:33:10	23.6	16.4	-3.9	23.84	0.25	2.2	0.25	2.2	124.2	285.7	286.3	77.9	50.6	78.8	1252.8	1251.0	1605.7	1605.8
20180503:19:38:10	23.6	16.4	-3.9	23.84	0.25	2.2	0.25	2.2	124.2	285.7	286.3	77.9	50.6	78.8	1254.2	1252.3	1607.4	1607.5
20180503:19:43:10	23.5	16.0	-4.1	23.85	0.25	2.2	0.25	2.1	123.3	285.7	286.3	78.0	50.6	78.8	1255.6	1253.6	1609.1	1609.2
20180503:19:48:10	23.6	15.4	-4.0	23.85	0.25	2.2	0.25	2.1	122.0	285.6	286.4	78.0	50.6	78.8	1256.9	1255.0	1610.9	1611.0
20180503:19:53:10	23.6	15.9	-4.0	23.85	0.25	2.2	0.25	2.2	123.0	285.7	286.3	78.0	50.6	78.9	1258.3	1256.4	1612.6	1612.7
20180503:19:58:10	23.6	15.9	-4.1	23.85	0.25	2.2	0.25	2.2	123.1	285.7	286.3	78.1	50.6	78.9	1259.6	1257.7	1614.3	1614.5
20180503:20:03:10	23.6	15.9	-4.1	23.85	0.25	2.2	0.25	2.2	123.0	285.6	286.2	78.0	50.6	78.9	1261.0	1259.1	1616.1	1616.2
20180503:20:08:10	23.6	15.9	-4.1	23.86	0.25	2.2	0.25	2.2	123.1	285.7	286.3	78.1	50.6	78.9	1262.3	1260.5	1617.8	1618.0
20180503:20:13:10	23.6	16.0	-4.1	23.86	0.25	2.2	0.25	2.2	123.2	285.7	286.4	78.1	50.7	79.0	1263.7	1261.8	1619.5	1619.7
20180503:20:18:10	23.6	15.9	-4.0	23.86	0.25	2.2	0.25	2.2	123.0	285.7	286.3	78.1	50.6	79.0	1265.1	1263.1	1621.3	1621.4
20180503:20:23:10	23.6	15.8	-4.1	23.86	0.25	2.2	0.25	2.2	123.0	285.7	286.3	78.2	50.7	79.0	1266.4	1264.5	1623.0	1623.2
20180503:20:28:10	23.6	15.2	-4.0	23.86	0.25	2.2	0.25	2.2	121.4	285.6	286.3	78.2	50.7	79.0	1267.7	1265.8	1624.7	1624.8
20180503:20:33:10	23.6	15.1	-4.0	23.87	0.25	2.2	0.25	2.2	121.3	285.6	286.2	78.2	50.7	79.0	1269.1	1267.2	1626.5	1626.6
20180503:20:38:10	23.6	15.4	-4.0	23.87	0.25	2.2	0.25	2.2	122.0	285.7	286.4	78.2	50.7	79.1	1270.4	1268.5	1628.2	1628.3
20180503:20:43:10	23.6	15.5	-4.0	23.87	0.25	2.2	0.25	2.2	122.3	285.7	286.2	78.3	50.7	79.1	1271.8	1269.9	1630.0	1630.1
20180503:20:48:10	23.6	15.6	-4.0	23.87	0.25	2.2	0.25	2.2	122.4	285.7	286.4	78.3	50.7	79.1	1273.2	1271.3	1631.6	1631.8
20180503:20:53:10	23.6	15.6	-4.0	23.87	0.25	2.2	0.25	2.2	122.5	285.7	286.3	78.3	50.7	79.1	1274.5	1272.6	1633.4	1633.5
20180503:20:58:10	23.6	15.7	-4.0	23.88	0.25	2.2	0.25	2.2	122.6	285.7	286.2	78.3	50.8	79.1	1275.9	1274.0	1635.1	1635.3
20180503:21:03:10	23.6	15.7	-4.0	23.88	0.25	2.2	0.25	2.2	122.7	285.7	286.3	78.3	50.6	79.1	1277.2	1275.3	1636.8	1637.0
20180503:21:08:10	23.6	15.7	-4.0	23.88	0.25	2.2	0.25	2.2	122.6	285.7	286.3	78.3	50.7	79.1	1278.6	1276.7	1638.6	1638.7
20180503:21:13:10	23.6	15.1	-4.0	23.88	0.251	2.2	0.25	2.2	121.3	285.7	286.3	78.3	50.7	79.1	1280.0	1278.0	1640.3	1640.4
20180503:21:18:10	23.6	15.0	-4.0	23.88	0.25	2.2	0.25	2.2	121.1	285.6	286.3	78.3	50.7	79.1	1281.3	1279.4	1642.1	1642.2
20180503:21:23:10	23.6	15.2	-4.0	23.88	0.25	2.2	0.25	2.2	121.4	285.7	286.3	78.3	50.7	79.1	1282.7	1280.7	1643.8	1643.9
20180503:21:28:10	23.6	15.6	-4.0	23.88	0.25	2.2	0.25	2.2	122.5	285.7	286.3	78.2	50.6	79.1	1284.0	1282.1	1645.5	1645.7
20180503:21:33:10	23.6	15.8	-4.0	23.88	0.25	2.2	0.25	2.2	122.9	285.8	286.3	78.2	50.7	79.1	1285.4	1283.5	1647.3	1647.4
20180503:21:38:10	23.6	15.8	-4.0	23.88	0.25	2.2	0.25	2.2	123.0	285.8	286.4	78.2	50.6	79.0	1286.7	1284.8	1649.0	1649.1
20180503:21:43:10	23.6	15.9	-4.0	23.88	0.25	2.2	0.25	2.2	123.1	285.8	286.3	78.1	50.7	79.0	1288.1	1286.2	1650.7	1650.9
20180503:21:48:10	23.6	16.0	-4.0	23.89	0.25	2.2	0.25	2.2	123.3	285.7	286.4	78.1	50.7	79.0	1289.5	1287.5	1652.5	1652.6
20180503:21:53:10	23.6	16.1	-4.0	23.89	0.25	2.2	0.25	2.2	123.6	285.8	286.3	78.1	50.7	79.0	1290.8	1288.9	1654.2	1654.4
20180503:21:58:10	23.6	16.1	-4.0	23.89	0.25	2.2	0.25	2.2	123.6	285.8	286.4	78.1	50.7	79.0	1292.2	1290.2	1656.0	1656.1
20180503:22:03:10	23.6	16.1	-4.0	23.89	0.25	2.2	0.25	2.2	123.5	285.8	286.4	78.1	50.7	79.0	1293.5	1291.6	1657.7	1657.8
20180503:22:08:10	23.6	16.0	-4.0	23.89	0.25	2.2	0.25	2.2	123.4	285.7	286.3	78.1	50.8	79.0	1294.9	1292.9	1659.4	1659.5
20180503:22:13:10	23.6	15.7	-4.0	23.89	0.25	2.2	0.25	2.2	122.7	285.7	286.3	78.1	50.6	79.0	1296.3	1294.3	1661.2	1661.3
20180503:22:18:10	23.6	15.2	-4.0	23.89	0.25	2.2	0.25	2.2	121.5	285.6	286.3	78.1	50.7	79.0	1297.6	1295.7	1662.9	1663.0
20180503:22:23:10	23.6	15.0	-4.0	23.89	0.25	2.2	0.25	2.2	121.1	285.5	286.3	78.1	50.7	79.0	1299.0	1297.0	1664.6	1664.7
20180503:22:28:10	23.6	15.5	-4.0	23.89	0.25	2.2	0.25	2.2	122.2	285.7	286.3	78.1	50.7	79.0	1300.3	1298.4	1666.4	1666.5
20180503:22:33:10	23.6	15.8	-4.0	23.89	0.25	2.2	0.25	2.2	122.8	285.8	286.4	78.1	50.7	79.0	1301.7	1299.7	1668.1	1668.2
20180503:22:38:10	23.6	15.9	-4.0	23.89	0.25	2.2	0.25	2.2	123.1	285.8	286.3	78.1	50.6	79.0	1303.1	1301.1	1669.8	1670.0
20180503:22:43:10	23.6	15.9	-4.0	23.89	0.25	2.2	0.25	2.2	123.1	285.9	286.4	78.1	50.7	79.0	1304.4	1302.4	1671.5	1671.7
20180503:22:48:10	23.6	16.0	-4.1	23.89	0.25	2.2	0.25	2.2	123.3	285.9	286.4	78.1	50.7	79.0	1305.8	1303.8	1673.3	1673.4
20180503:22:53:10	23.6	15.5	-4.0	23.89	0.25	2.2	0.25	2.2	122.3	285.9	286.4	78.1	50.7	79.0	1307.1	1305.1	1675.0	1675.1
20180503:22:58:10	23.6	15.2	-4.0	23.89	0.25	2.2	0.25	2.2	121.6	285.9	286.4	78.1	50.7	79.0	1308.5	1306.5	1676.7	1676.9
20180503:23:03:10	23.6	15.3	-4.0	23.89	0.25	2.2	0.25	2.2	121.8	285.8	286.3	78.1	50.6	78.9	1309.9	1307.9	1678.5	1678.6
20180503:23:08:10	23.6	15.9	-4.0	23.89	0.25	2.2	0.25	2.2	123.1	285.8	286.3	78.0	50.7	78.9	1311.2	1309.2	1680.2	1680.3
20180503:23:13:10	23.6	16.1	-4.0	23.89	0.25	2.2	0.25	2.2	123.6	285.9	286.3	78.0	50.6	78.8	1312.6	1310.6	1682.0	1682.1
20180503:23:18:10	23.6	16.3	-4.1	23.89	0.25	2.2	0.25	2.2	124.0	285.9	286.4	78.0	50.6	78.8	1313.9	1311.9	1683.7	1683.8
20180503:23:23:10	23.6	16.3	-4.1	23.89	0.25	2.2	0.25	2.2	124.1	285.9	286.4	78.0	50.6	78.8	1315.3	1313.3	1685.4	1685.6
20180503:23:28:10	23.6	16.4	-4.1	23.89	0.25	2.2	0.25	2.2	124.2	285.9	286.4	78.0	50.6	78.8	1316.7	1314.7	1687.2	1687.3
20180503:23:33:10	23.6	16.4	-4.1	23.89	0.25	2.2	0.25	2.2	124.3	285.9	286.4	78.0	50.7	78.8	1318.0	1316.0	1688.9	1689.0
20180503:23:38:10	23.6	16.5	-4.1	23.90	0.25	2.2	0.25	2.2	124.5	285.8	286.3	77.9	50.6	78.8	1319.4	1317.4	1690.6	1690.8
20180503:23:43:10	23.6	16.5	-4.1	23.90	0.25	2.2	0.25	2.2	124.5	285.8	286.4	77.8	50.7	78.8	1320.7	1318.7	1692.3	1692.5
20180503:23:48:10	23.6	16.5	-4.1	23.90	0.25	2.2	0.25	2.2	124.6	285.9	286.3	77.8	50.7	78.8	1322.1	1320.1	1694.1	1694.2
20180503:23:53:10	23.6	16.6	-4.0	23.90	0.25	2.2	0.25	2.2	124.6	285.9	286.4	77.8	50.6	78.8	1323.4	1321.4	1695.8	1695.9
20180503:23:58:10	23.6	16.1	-4.2	23.90	0.25	2.2	0.25	2.2	123.6	285.8	286.3	77.8	50.7	78.7	1324.8	1322.8	1697.5	1697.7

Time:	Stack Pressure:	Sat% H2O:	Static:	Barometric:	Flowmeter1:	Vacuum1:	Flowmeter2:	Vacuum2:	Stack Temp:	Sorbent Temp:	Probe Temp:	DGM#1 Temp:	Condenser Temp:	DGM#2 Temp:	DGM1*:	DGM2*:	DGM1:	DGM2:
day:hh:mm:ss	in-Hg	Percent	in-H2O	in-Hg	l/min	in-Hg	l/min	in-Hg	degF	degF	degF	degF	degF	degF	liters STP	liters STP	liters nominal	liters nominal
20180504:00:03:10	23.6	15.8	-4.2	23.91	0.25	2.2	0.25	2.2	122.8	285.8	286.4	77.8	50.6	78.7	1326.2	1324.1	1699.3	1699.4
20180504:00:08:10	23.6	15.8	-4.2	23.91	0.25	2.2	0.25	2.2	122.9	285.8	286.3	77.8	50.7	78.7	1327.5	1325.5	1701.0	1701.2
20180504:00:13:10	23.6	16.3	-4.3	23.91	0.25	2.2	0.25	2.2	124.1	285.8	286.3	77.7	50.6	78.6	1328.8	1326.8	1702.7	1702.9
20180504:00:18:10	23.6	16.7	-4.4	23.91	0.25	2.2	0.25	2.2	124.8	285.8	286.3	77.7	50.6	78.6	1330.2	1328.2	1704.5	1704.6
20180504:00:23:10	23.6	16.9	-4.4	23.91	0.25	2.2	0.25	2.2	125.4	285.9	286.3	77.7	50.7	78.6	1331.6	1329.6	1706.2	1706.4
20180504:00:28:10	23.6	17.0	-4.5	23.91	0.25	2.2	0.25	2.2	125.6	285.9	286.4	77.6	50.6	78.5	1332.9	1330.9	1707.9	1708.0
20180504:00:33:10	23.6	17.2	-4.7	23.92	0.25	2.2	0.25	2.2	125.9	285.9	286.4	77.6	50.7	78.5	1334.3	1332.3	1709.6	1709.8
20180504:00:38:10	23.6	17.3	-4.8	23.91	0.25	2.2	0.25	2.2	126.3	285.8	286.3	77.6	50.7	78.5	1335.6	1333.6	1711.4	1711.5
20180504:00:43:10	23.6	17.4	-4.6	23.92	0.25	2.2	0.25	2.2	126.5	285.8	286.3	77.5	50.6	78.4	1337.0	1335.0	1713.1	1713.3
20180504:00:48:10	23.6	17.6	-4.6	23.92	0.25	2.2	0.25	2.2	126.8	285.9	286.4	77.5	50.8	78.4	1338.3	1336.4	1714.8	1715.0
20180504:00:53:10	23.6	17.7	-4.7	23.92	0.25	2.2	0.25	2.2	127.1	285.8	286.4	77.4	50.7	78.4	1339.7	1337.7	1716.6	1716.8
20180504:00:58:10	23.6	17.8	-4.9	23.92	0.25	2.2	0.25	2.2	127.1	285.9	286.5	77.4	50.7	78.4	1341.1	1339.1	1718.3	1718.4
20180504:01:03:10	23.5	17.9	-5.0	23.92	0.25	2.2	0.25	2.2	127.4	285.9	286.4	77.3	50.7	78.3	1342.4	1340.4	1720.0	1720.2
20180504:01:08:10	23.5	17.6	-5.3	23.92	0.25	2.2	0.25	2.2	126.7	285.9	286.5	77.3	50.7	78.3	1343.8	1341.8	1721.8	1721.9
20180504:01:13:10	23.5	17.7	-5.1	23.92	0.25	2.2	0.25	2.2	127.0	285.9	286.4	77.3	50.7	78.2	1345.1	1343.1	1723.5	1723.6
20180504:01:18:10	23.5	18.2	-5.2	23.92	0.25	2.2	0.25	2.2	127.9	285.9	286.4	77.2	50.7	78.1	1346.5	1344.5	1725.2	1725.4
20180504:01:23:10	23.5	18.2	-5.2	23.92	0.25	2.2	0.25	2.2	128.1	286.0	286.4	77.2	50.7	78.1	1347.8	1345.8	1726.9	1727.1
20180504:01:28:10	23.5	18.3	-5.2	23.92	0.25	2.2	0.25	2.2	128.2	285.9	286.4	77.1	50.7	78.1	1349.2	1347.2	1728.7	1728.9
20180504:01:33:10	23.5	18.4	-5.2	23.91	0.25	2.2	0.25	2.1	128.4	285.8	286.3	77.1	50.7	78.0	1350.6	1348.6	1730.4	1730.5
20180504:01:38:10	23.5	18.3	-5.2	23.91	0.25	2.2	0.25	2.1	128.3	285.9	286.4	77.0	50.6	78.0	1351.9	1349.9	1732.1	1732.3
20180504:01:43:10	23.5	18.3	-5.2	23.91	0.25	2.2	0.25	2.1	128.2	285.9	286.4	76.9	50.7	77.9	1353.3	1351.3	1733.8	1734.0
20180504:01:48:10	23.5	18.2	-5.2	23.91	0.25	2.2	0.25	2.1	128.1	285.7	286.2	76.9	50.6	77.8	1354.6	1352.6	1735.5	1735.7
20180504:01:53:10	23.5	18.3	-5.2	23.91	0.25	2.2	0.25	2.1	128.1	285.7	286.3	76.8	50.6	77.8	1356.0	1354.0	1737.3	1737.4
20180504:01:58:10	23.5	18.3	-5.3	23.91	0.25	2.2	0.25	2.1	128.1	285.8	286.3	76.8	50.7	77.7	1357.3	1355.3	1739.0	1739.1
20180504:02:03:10	23.5	18.1	-5.3	23.91	0.25	2.2	0.25	2.1	127.9	285.8	286.3	76.8	50.6	77.7	1358.7	1356.7	1740.7	1740.9
20180504:02:08:10	23.5	18.1	-5.3	23.91	0.25	2.2	0.25	2.1	127.7	285.8	286.3	76.7	50.6	77.7	1360.0	1358.0	1742.4	1742.6
20180504:02:13:10	23.5	18.1	-5.3	23.92	0.25	2.2	0.25	2.1	127.7	285.8	286.3	76.7	50.7	77.7	1361.3	1359.3	1744.1	1744.3
20180504:02:18:10	23.5	18.0	-5.3	23.92	0.25	2.2	0.25	2.1	127.6	285.7	286.2	76.6	50.6	77.6	1362.7	1360.7	1745.8	1746.0
20180504:02:23:10	23.5	18.0	-5.5	23.92	0.25	2.2	0.25	2.1	127.5	285.8	286.4	76.6	50.6	77.6	1364.0	1362.0	1747.5	1747.7
20180504:02:28:10	23.5	18.1	-5.6	23.92	0.25	2.2	0.25	2.1	127.7	285.7	286.3	76.6	50.7	77.5	1365.4	1363.4	1749.3	1749.4
20180504:02:33:10	23.5	18.0	-5.3	23.92	0.25	2.2	0.25	2.1	127.6	285.7	286.3	76.6	50.7	77.5	1366.7	1364.7	1750.9	1751.2
20180504:02:38:10	23.5	17.9	-5.3	23.92	0.25	2.2	0.25	2.1	127.5	285.8	286.3	76.6	50.6	77.5	1368.1	1366.1	1752.7	1752.8
20180504:02:43:10	23.5	17.9	-5.3	23.92	0.25	2.2	0.25	2.1	127.4	285.8	286.4	76.6	50.7	77.4	1369.4	1367.4	1754.4	1754.6
20180504:02:48:10	23.5	17.7	-5.3	23.92	0.25	2.2	0.25	2.1	127.0	285.7	286.3	76.5	50.7	77.4	1370.8	1368.8	1756.1	1756.3
20180504:02:53:10	23.5	17.7	-5.4	23.93	0.25	2.2	0.25	2.1	126.9	285.7	286.3	76.5	50.6	77.4	1372.1	1370.1	1757.8	1758.0
20180504:02:58:10	23.5	17.8	-5.3	23.92	0.25	2.2	0.25	2.1	127.1	285.7	286.3	76.5	50.7	77.4	1373.5	1371.4	1759.5	1759.7
20180504:03:03:10	23.5	17.8	-5.3	23.92	0.25	2.2	0.25	2.1	127.2	285.7	286.3	76.5	50.7	77.3	1374.8	1372.8	1761.2	1761.4
20180504:03:08:10	23.5	17.8	-5.3	23.92	0.25	2.2	0.25	2.1	127.2	285.8	286.4	76.5	50.7	77.3	1376.2	1374.1	1762.9	1763.1
20180504:03:13:10	23.5	17.7	-5.3	23.92	0.25	2.2	0.25	2.1	127.0	285.8	286.3	76.4	50.7	77.3	1377.5	1375.5	1764.7	1764.8
20180504:03:18:10	23.5	17.6	-5.4	23.93	0.25	2.1	0.25	2.1	126.7	285.8	286.4	76.4	50.7	77.3	1378.8	1376.8	1766.3	1766.6
20180504:03:23:10	23.5	17.5	-5.3	23.92	0.25	2.2	0.25	2.1	126.5	285.7	286.3	76.4	50.7	77.2	1380.2	1378.2	1768.0	1768.3
20180504:03:28:10	23.5	17.5	-5.3	23.92	0.25	2.2	0.25	2.1	126.5	285.7	286.2	76.3	50.6	77.2	1381.6	1379.5	1769.8	1770.0
20180504:03:33:10	23.5	17.5	-5.3	23.92	0.25	2.2	0.25	2.1	126.6	285.8	286.4	76.3	50.7	77.2	1382.9	1380.9	1771.5	1771.7
20180504:03:38:10	23.5	17.6	-5.3	23.93	0.25	2.2	0.25	2.1	126.7	285.8	286.3	76.2	50.7	77.1	1384.3	1382.2	1773.2	1773.4
20180504:03:43:10	23.5	17.6	-5.3	23.93	0.25	2.2	0.25	2.1	126.7	285.8	286.4	76.2	50.6	77.1	1385.6	1383.5	1774.9	1775.1
20180504:03:48:10	23.5	17.5	-5.3	23.93	0.25	2.2	0.25	2.1	126.6	285.8	286.4	76.2	50.7	77.1	1387.0	1384.9	1776.6	1776.8
20180504:03:53:10	23.5	17.5	-5.4	23.93	0.25	2.2	0.25	2.1	126.6	285.8	286.4	76.2	50.7	77.0	1388.3	1386.2	1778.3	1778.5
20180504:03:58:10	23.5	16.7	-5.8	23.93	0.25	2.1	0.25	2.1	124.7	285.7	286.3	76.2	50.7	77.0	1389.6	1387.6	1780.0	1780.3
20180504:04:03:10	23.5	16.9	-5.4	23.93	0.25	2.2	0.25	2.1	125.2	285.7	286.4	76.1	50.6	76.9	1391.0	1388.9	1781.8	1782.0
20180504:04:08:10	23.5	17.0	-5.3	23.93	0.25	2.1	0.25	2.1	125.5	285.8	286.4	76.1	50.7	76.9	1392.3	1390.3	1783.4	1783.7
20180504:04:13:10	23.5	17.2	-5.3	23.93	0.25	2.2	0.25	2.1	126.0	285.9	286.4	76.0	50.7	76.8	1393.7	1391.6	1785.2	1785.4
20180504:04:18:10	23.5	16.7	-5.3	23.93	0.25	2.1	0.25	2.1	124.9	285.8	286.4	76.0	50.7	76.8	1395.0	1393.0	1786.9	1787.1
20180504:04:23:10	23.5	16.9	-5.3	23.93	0.25	2.1	0.25	2.1	125.3	285.8	286.4	75.9	50.7	76.8	1396.4	1394.3	1788.6	1788.8
20180504:04:28:10	23.5	17.2	-5.4	23.93	0.25	2.1	0.25	2.1	125.9	285.9	286.5	75.9	50.7	76.8	1397.7	1395.7	1790.3	1790.5
20180504:04:33:10	23.5	16.3	-5.6	23.93	0.25	2.1	0.25	2.1	123.9	285.9	286.5	75.9	50.7	76.7	1399.1	1397.0	1792.0	1792.2
20180504:04:38:10	23.5	16.8	-5.3	23.93	0.25	2.1	0.25	2.1	125.0	286.0	286.5	75.8	50.6	76.7	1400.4	1398.4	1793.7	1793.9
20180504:04:43:10	23.5	16.8	-5.3	23.93	0.25	2.1	0.25	2.1	125.1	286.0	286.6	75.8	50.7	76.7	1401.7	1399.7	1795.4	1795.7
20180504:04:48:10	23.5	17.0	-5.2	23.93	0.25	2.2	0.25	2.1	125.6	286.0	286.5	75.8	50.7	76.6	1403.1	1401.1	1797.1	1797.4
20180504:04:53:10	23.5	17.1	-5.2	23.93	0.25	2.1	0.25	2.1	125.7	286.0	286.5	75.8	50.7	76.6	1404.4	1402.4	1798.8	1799.1
20180504:04:58:10	23.5	17.1	-5.3	23.93	0.25	2.2	0.25	2.1	125.8	286.0	286.5	75.8	50.6	76.5	1405.8	1403.8	1800.6	1800.8
20180504:05:03:10	23.5	17.1	-5.3	23.94	0.25	2.2	0.25	2.1	125.8	286.0	286.5	75.7	50.7	76.5	1407.1	1405.1	1802.2	1802.5
20180504:05:08:10	23.5	17.1	-5.3	23.93	0.25	2.2	0.25	2.1	125.8	286.0	286.6	75.7	50.7	76.5	1408.5	1406.4	1804.0	1804.2
20180504:05:13:10	23.5	17.0	-5.3	23.94	0.25	2.1	0.25	2.1	125.6	286.0	286.5	75.6	50.7	76.5	1409.8	1407.8	1805.7	1805.9
20180504:05:18:10	23.5	17.1	-5.2	23.94	0.25	2.2	0.25	2.1	125.6	286.0	286.5	75.6	50.7	76.5	1411.2	1409.1	1807.4	1807.6
20180504:05:23:10	23.6	16.7	-5.3	23.94	0.25	2.2	0.25	2.1	124.8	285.9	286.5	75.6	50.6	76.4	1412.6	1410.5	1809.1	1809.4
20180504:05:28:10	23.6	15.7	-5.3	23.94	0.25	2.1	0.25	2.1	122.6	285.9	286.5	75.5	50.7	76.4	1413.9	1411.8	1810.8	1811.0
20180504:05:33:10	23.6	16.0	-4.9	23.94	0.25	2.2	0.25	2.1	123.3	286.0	286.5	75.5	50.6	76.3	1415.3	1413.2	1812.5	1812.8
20180504:05:38:10	23.6	16.1	-4.7	23.94	0.25	2.2	0.25	2.1	123.5	286.0	286.5	75.4	50.6	76.3	1416.6	1414.5	1814.2	1814.5
20180504:05:43:10	23.6	16.1	-4.7	23.94	0.25	2.2	0.25	2.1	123.5	285.9	286.5	75.4	50.6	76.2	1418.0	1415.9	1816.0	1816.2
20180504:05:48:10	23.6	16.0	-4.3	23.94	0.25	2.2	0.25	2.1	123.4	285.9	286.5	75.3	50.6	76.2	1419.3	1417.3	1817.7	1817.9
20180504:05:53:10	23.6	16.0	-4.1	23.94	0.25	2.2	0.25	2.1	123.4	285.9	286.5	75.3	50.6	76.2	1420.7	1418.6	1819.4	1819.7
20180504:05:58:10	23.6	16.0	-4.2	23.94	0.25	2.2	0.25	2.1	123.5	285.9	286.5	75.2	50.6	76.1	1422.0	1420.0	1821.1	1821.4
20180504:06:03:10	23.6	16.2	-4.4	23.95	0.25	2.2	0.25	2.1	123.8	285.9	286.5	75.2	50.6	76.1	1423.4	1421.3	1822.8	1823.1
20180504:06:08:10	23.6	16.4	-4.4	23.95	0.25	2.2	0.25	2.1	124.3	286.0	286.6	75.2	50.6	76.1	1424.8	1422.7	1824.6	1824.8
20180504:06:13:10	23.6	16.4	-4.4	23.95	0.25	2.2	0.25	2.1	124.4	286.0	286.5	75.2	50.6	76.1	1426.1	1424.0	1826.3	1826.5
20180504:06:18:10	23.6	16.5	-4.3	23.95	0.25	2.2	0.25	2.1	124.5	286.0	286.5	75.2	50.6	76.1	1427.5	1425.4	1828.0	1828.3
20180504:06:23:10	23.6	16.5	-4.3	23.95	0.25	2.2	0.25	2.2	124.5	286.0	286.6	75.2	50.6	76.1	1428.8	1426.7	1829.7	1830.0
20180504:06:28:10	23.6	16.1	-4.6	23.95	0.25	2.2	0.25	2.1	123.6	285.9	286.5	75.2	50.6	76.0	1430.2	1428.1	1831.4	1831.7
20180504:06:33:10	23.6	15.8	-4.5	23.95	0.25	2.2	0.25	2.1	123.0	285.9	286.5	75.2	50.7	76.0	1431.5	1429.5	1833.2	1833.4
20180504:06:38:10	23.6	16.3	-4.4	23.95	0.25	2.2	0.25	2.1	124.2	286.0	286.5	75.2	50.6	76.0	1432.9	1430.8	1834.9	1835.2
20180504:06:43:10	23.6	16.7	-4.4	23.95	0.25	2.2	0.25	2.1	125.0	286.0	286.5	75.1	50.6	76.0	1434.3	1432.2	1836.6	1836.8
20180504:06:48:10	23.6	16.7	-4.5	23.96	0.25	2.2	0.25	2.1	124.9	286.0	286.5	75.1	50.6	75.9	1435.6	1433.5	1838.3	1838.6
20180504:06:53:10	23.6	17.0	-4.6	23.96	0.25	2.2	0.25	2.1	125.7	286.1	286.5	75.1	50.6	75.9	1437.0	1434.9	1840.0	1840.3
20180504:06:58:10	23.6	17.3	-4.6	23.96	0.25	2.2	0.25	2.2	126.3	286.0	286.5	75.0	50.6	75.9	1438.3	1436.2	1841.8	1842.0
20180504:07:03:10	23.6	17.5	-4.8	23.96	0.25	2.2	0.25	2.1	126.6	286.0	286.5	75.0	50.6	75.8	1439.7	1437.6	1843.4	1843.7
20180504:07:08:10	23.6	17.6	-5.0	23.96	0.25	2.2	0.25	2.1	126.8	286.0	286.5	75.0	50.6	75.8	1441.1	1438.9	1845.2	1845.4
20180504:07:13:10	23.6	17.6	-4.7	23.97	0.25	2.2	0.25	2.1	127.0	286.0	286.5	74.9	50.6	75.8	1442.4	1440.3	1846.9	1847.2
20180504:07:18:10	23.6	17.7	-4.8	23.97	0.25	2.2	0.25	2.2	127.1	286.0	286.6	74.9	50.6	75.8	1443.8	1441.6	1848.6	1848.8
20180504:07:23:10	23.6	17.9	-4.8	23.97	0.25	2.2	0.25	2.2	127.4	286.0	286.5	74.9	50.6	75.8	1445.1	1443.0	1850.3	1850.6

Time:	Stack Pressure:	Sat% H2O:	Static:	Barometric:	Flowmeter1:	Vacuum1:	Flowmeter2:	Vacuum2:	Stack Temp:	Sorbent Temp:	Probe Temp:	DGM#1 Temp:	Condenser Temp:	DGM#2 Temp:	DGM1*:	DGM2*:	DGM1:	DGM2:
day:hh:mm:ss	in-Hg	Percent	in-H2O	in-Hg	l/min	in-Hg	l/min	in-Hg	degF	degF	degF	degF	degF	degF	liters STP	liters STP	liters nominal	liters nominal
20180504:07:28:10	23.6	17.9	-4.8	23.97	0.25	2.1	0.25	2.1	127.4	285.9	286.4	74.8	50.6	75.7	1446.5	1444.4	1852.0	1852.3
20180504:07:33:10	23.6	17.7	-5.0	23.97	0.25	2.2	0.25	2.1	127.0	286.0	286.5	74.8	50.6	75.7	1447.8	1445.7	1853.8	1854.0
20180504:07:38:10	23.6	16.4	-5.1	23.97	0.25	2.1	0.25	2.1	124.2	285.9	286.5	74.8	50.6	75.6	1449.1	1447.1	1855.4	1855.7
20180504:07:43:10	23.6	16.4	-5.0	23.98	0.25	2.2	0.25	2.1	124.3	285.9	286.5	74.8	50.6	75.6	1450.5	1448.4	1857.2	1857.4
20180504:07:48:10	23.6	17.2	-5.0	23.98	0.25	2.2	0.25	2.1	126.0	285.9	286.5	74.7	50.6	75.6	1451.8	1449.8	1858.8	1859.1
20180504:07:53:10	23.6	17.5	-4.9	23.97	0.25	2.2	0.25	2.1	126.7	286.0	286.4	74.7	50.6	75.5	1453.2	1451.1	1860.6	1860.9
20180504:07:58:10	23.6	17.8	-4.9	23.98	0.25	2.2	0.25	2.2	127.3	286.0	286.5	74.6	50.6	75.5	1454.5	1452.4	1862.3	1862.5
20180504:08:03:10	23.6	17.8	-5.0	23.98	0.25	2.2	0.25	2.2	127.3	285.9	286.5	74.6	50.5	75.5	1455.9	1453.8	1864.0	1864.3
20180504:08:08:10	23.6	17.7	-5.0	23.98	0.25	2.2	0.25	2.2	127.2	285.9	286.4	74.5	50.5	75.4	1457.2	1455.1	1865.7	1865.9
20180504:08:13:10	23.6	17.7	-5.0	23.98	0.25	2.2	0.25	2.2	127.2	286.0	286.5	74.5	50.6	75.4	1458.6	1456.5	1867.4	1867.7
20180504:08:18:10	23.6	17.7	-5.0	23.99	0.25	2.2	0.25	2.2	127.0	285.9	286.4	74.5	50.5	75.4	1460.0	1457.8	1869.1	1869.4
20180504:08:23:10	23.6	17.6	-5.0	23.99	0.25	2.2	0.25	2.2	126.9	285.9	286.5	74.5	50.5	75.4	1461.3	1459.2	1870.8	1871.1
20180504:08:28:10	23.6	17.6	-5.0	23.99	0.25	2.2	0.25	2.1	126.9	285.9	286.5	74.5	50.5	75.4	1462.6	1460.5	1872.5	1872.8
20180504:08:33:10	23.6	17.6	-5.0	23.99	0.25	2.2	0.25	2.1	126.8	285.9	286.4	74.5	50.5	75.4	1464.0	1461.9	1874.2	1874.5
20180504:08:38:10	23.6	17.6	-5.0	23.99	0.25	2.2	0.25	2.2	126.9	285.9	286.4	74.6	50.5	75.4	1465.3	1463.2	1875.9	1876.2
20180504:08:43:10	23.6	16.8	-5.2	23.99	0.25	2.2	0.25	2.1	125.1	285.9	286.5	74.6	50.5	75.4	1466.7	1464.6	1877.6	1877.9
20180504:08:48:10	23.6	17.0	-5.0	23.99	0.25	2.2	0.25	2.1	125.6	285.9	286.5	74.7	50.5	75.4	1468.0	1465.9	1879.3	1879.6
20180504:08:53:10	23.6	17.3	-5.0	23.99	0.25	2.2	0.25	2.1	126.3	286.0	286.5	74.7	50.5	75.5	1469.4	1467.3	1881.0	1881.3
20180504:08:58:10	23.6	17.3	-4.9	23.99	0.25	2.2	0.25	2.1	126.2	286.0	286.5	74.7	50.5	75.5	1470.7	1468.6	1882.7	1883.0
20180504:09:03:10	23.6	17.4	-4.9	23.99	0.25	2.2	0.25	2.1	126.5	286.0	286.5	74.7	50.5	75.5	1472.1	1469.9	1884.4	1884.7
20180504:09:08:10	23.6	17.5	-4.9	23.99	0.25	2.2	0.25	2.2	126.8	286.0	286.5	74.7	50.5	75.5	1473.4	1471.3	1886.1	1886.4
20180504:09:13:10	23.6	17.5	-4.9	23.99	0.25	2.2	0.25	2.1	126.6	285.9	286.5	74.8	50.4	75.5	1474.8	1472.6	1887.8	1888.1
20180504:09:18:10	23.6	17.5	-4.9	23.99	0.25	2.2	0.25	2.1	126.7	285.9	286.5	74.8	50.4	75.5	1476.1	1474.0	1889.5	1889.8
20180504:09:23:10	23.6	17.4	-4.9	23.99	0.25	2.2	0.25	2.1	126.4	285.8	286.4	74.8	50.4	75.5	1477.5	1475.3	1891.2	1891.5
20180504:09:28:10	23.6	17.4	-4.9	23.99	0.251	2.2	0.25	2.1	126.5	285.8	286.5	74.8	50.4	75.6	1478.8	1476.7	1892.9	1893.2
20180504:09:33:10	23.6	17.4	-4.9	23.99	0.25	2.2	0.25	2.1	126.4	285.9	286.5	74.9	50.5	75.6	1480.2	1478.0	1894.6	1894.9
20180504:09:38:10	23.6	17.4	-4.9	23.99	0.25	2.2	0.25	2.2	126.5	285.9	286.4	74.9	50.4	75.7	1481.5	1479.4	1896.3	1896.6
20180504:09:43:10	23.6	17.4	-4.9	23.99	0.25	2.2	0.25	2.1	126.5	285.9	286.5	75.0	50.4	75.7	1482.8	1480.7	1898.0	1898.3
20180504:09:48:10	23.6	17.0	-5.1	23.99	0.25	2.2	0.25	2.1	125.7	285.9	286.5	75.1	50.5	75.8	1484.2	1482.1	1899.7	1900.0
20180504:09:53:10	23.6	16.8	-4.9	23.99	0.25	2.2	0.25	2.1	125.1	285.9	286.5	75.1	50.4	75.8	1485.5	1483.4	1901.4	1901.7
20180504:09:58:10	23.6	17.2	-4.8	23.99	0.25	2.2	0.25	2.1	126.1	286.0	286.5	75.2	50.5	75.8	1486.9	1484.8	1903.1	1903.4
20180504:10:03:10	23.6	17.4	-4.7	23.99	0.25	2.2	0.25	2.1	126.5	285.9	286.5	75.2	50.5	75.9	1488.2	1486.1	1904.8	1905.1
20180504:10:08:10	23.6	17.6	-4.8	23.99	0.25	2.2	0.25	2.1	127.0	286.0	286.5	75.3	50.4	75.9	1489.6	1487.4	1906.5	1906.8
20180504:10:13:10	23.6	17.7	-4.7	23.99	0.25	2.2	0.25	2.2	127.1	286.0	286.5	75.4	50.5	76.0	1490.9	1488.8	1908.2	1908.5
20180504:10:18:10	23.6	17.7	-4.7	23.99	0.25	2.2	0.25	2.1	127.2	285.9	286.5	75.4	50.4	76.1	1492.3	1490.1	1909.9	1910.2
20180504:10:23:10	23.6	17.7	-4.7	23.99	0.25	2.2	0.25	2.1	127.1	286.0	286.6	75.4	50.4	76.1	1493.6	1491.4	1911.6	1911.9
20180504:10:28:10	23.6	17.6	-4.7	23.99	0.25	2.2	0.25	2.1	127.0	285.9	286.4	75.5	50.5	76.2	1495.0	1492.8	1913.3	1913.6
20180504:10:33:10	23.6	17.7	-4.9	23.99	0.25	2.2	0.25	2.1	127.0	285.9	286.5	75.5	50.4	76.2	1496.3	1494.1	1915.0	1915.3
20180504:10:38:10	23.6	17.6	-4.9	23.99	0.25	2.2	0.25	2.1	126.8	285.9	286.5	75.6	50.4	76.2	1497.6	1495.5	1916.7	1917.0
20180504:10:43:10	23.6	17.6	-4.9	23.99	0.25	2.2	0.25	2.1	126.9	285.9	286.5	75.6	50.4	76.3	1499.0	1496.8	1918.4	1918.7
20180504:10:48:10	23.6	17.5	-4.9	23.99	0.25	2.2	0.25	2.1	126.8	285.9	286.5	75.7	50.4	76.4	1500.3	1498.2	1920.1	1920.4
20180504:10:53:10	23.6	17.4	-5.0	23.99	0.25	2.2	0.25	2.1	126.5	285.9	286.5	75.8	50.5	76.4	1501.7	1499.5	1921.8	1922.1
20180504:10:58:10	23.6	16.9	-5.1	23.99	0.25	2.1	0.25	2.1	125.4	285.9	286.6	75.8	50.4	76.5	1503.0	1500.9	1923.5	1923.8
20180504:11:03:10	23.6	17.2	-4.9	23.99	0.25	2.2	0.25	2.1	126.1	285.9	286.4	75.9	50.5	76.5	1504.4	1502.2	1925.2	1925.5
20180504:11:08:10	23.6	17.3	-4.9	23.99	0.25	2.2	0.25	2.1	126.4	285.9	286.4	75.9	50.4	76.6	1505.7	1503.6	1926.9	1927.2
20180504:11:13:10	23.6	17.4	-4.8	23.99	0.25	2.2	0.25	2.1	126.5	285.9	286.4	75.9	50.4	76.6	1507.1	1504.9	1928.6	1928.9
20180504:11:18:10	23.6	17.4	-4.9	23.99	0.25	2.2	0.25	2.1	126.6	285.8	286.4	76.0	50.5	76.7	1508.4	1506.2	1930.3	1930.6
20180504:11:23:10	23.6	17.4	-4.8	23.98	0.25	2.2	0.25	2.1	126.5	285.8	286.3	76.1	50.4	76.8	1509.7	1507.6	1932.0	1932.3
20180504:11:28:10	23.6	17.5	-4.8	23.98	0.25	2.2	0.25	2.1	126.6	285.8	286.3	76.1	50.5	76.8	1511.1	1508.9	1933.7	1934.0
20180504:11:33:10	23.6	17.4	-4.8	23.98	0.25	2.2	0.25	2.1	126.4	285.8	286.4	76.2	50.4	76.9	1512.4	1510.2	1935.4	1935.7
20180504:11:38:10	23.6	17.4	-4.7	23.98	0.25	2.2	0.25	2.1	126.6	285.8	286.3	76.2	50.5	76.9	1513.8	1511.6	1937.1	1937.4
20180504:11:43:10	23.6	17.5	-4.7	23.98	0.25	2.2	0.25	2.1	126.7	285.8	286.3	76.2	50.4	77.0	1515.1	1512.9	1938.8	1939.1
20180504:11:48:10	23.6	17.4	-4.7	23.98	0.25	2.2	0.25	2.1	126.4	285.8	286.3	76.3	50.4	77.0	1516.5	1514.3	1940.5	1940.8
20180504:11:53:10	23.6	17.3	-4.7	23.98	0.25	2.2	0.25	2.1	126.4	285.8	286.3	76.3	50.5	77.1	1517.8	1515.6	1942.2	1942.5
20180504:11:58:10	23.6	17.5	-4.7	23.98	0.25	2.2	0.25	2.1	126.6	285.8	286.3	76.4	50.4	77.1	1519.2	1516.9	1944.0	1944.2
20180504:12:03:10	23.6	16.7	-5.0	23.98	0.25	2.1	0.25	2.1	125.0	285.6	286.2	76.4	50.5	77.2	1520.5	1518.3	1945.6	1945.9
20180504:12:08:10	23.6	17.0	-4.8	23.97	0.25	2.1	0.25	2.1	125.6	285.7	286.3	76.5	50.4	77.3	1521.8	1519.6	1947.4	1947.6
20180504:12:13:10	23.6	17.2	-4.7	23.97	0.25	2.2	0.25	2.1	126.0	285.7	286.3	76.5	50.5	77.3	1523.2	1521.0	1949.1	1949.3
20180504:12:18:10	23.6	17.2	-4.7	23.97	0.25	2.2	0.25	2.1	126.1	285.7	286.3	76.6	50.4	77.3	1524.5	1522.3	1950.7	1951.0
20180504:12:23:10	23.6	17.4	-4.7	23.97	0.25	2.2	0.25	2.1	126.5	285.7	286.3	76.6	50.4	77.4	1525.9	1523.7	1952.5	1952.8
20180504:12:28:10	23.6	17.3	-4.7	23.97	0.25	2.2	0.25	2.1	126.3	285.8	286.3	76.7	50.4	77.4	1527.2	1525.0	1954.1	1954.4
20180504:12:33:10	23.6	17.3	-4.7	23.97	0.25	2.2	0.25	2.1	126.2	285.7	286.3	76.8	50.4	77.5	1528.6	1526.4	1955.9	1956.2
20180504:12:38:10	23.6	17.4	-4.7	23.97	0.25	2.2	0.25	2.1	126.5	285.7	286.3	76.8	50.4	77.5	1529.9	1527.7	1957.6	1957.8
20180504:12:43:10	23.6	17.3	-4.7	23.97	0.25	2.2	0.25	2.1	126.4	285.7	286.4	76.8	50.4	77.6	1531.3	1529.1	1959.3	1959.6
20180504:12:48:10	23.6	17.5	-4.7	23.97	0.25	2.2	0.25	2.1	126.6	285.7	286.2	76.9	50.5	77.7	1532.6	1530.4	1961.0	1961.3
20180504:12:53:10	23.6	17.5	-4.6	23.97	0.25	2.2	0.25	2.1	126.6	285.7	286.3	76.9	50.4	77.7	1533.9	1531.7	1962.7	1963.0
20180504:12:58:10	23.6	17.5	-4.6	23.96	0.25	2.2	0.25	2.1	126.7	285.7	286.4	77.0	50.5	77.8	1535.3	1533.1	1964.4	1964.7
20180504:13:03:10	23.6	17.6	-4.6	23.96	0.25	2.2	0.25	2.1	126.8	285.8	286.3	77.1	50.4	77.8	1536.6	1534.4	1966.1	1966.4
20180504:13:08:10	23.6	16.8	-4.8	23.96	0.25	2.1	0.25	2.1	125.3	285.7	286.3	77.1	50.5	77.9	1538.0	1535.7	1967.8	1968.1
20180504:13:13:10	23.6	16.6	-4.7	23.96	0.25	2.1	0.25	2.1	124.8	285.8	286.4	77.2	50.4	78.0	1539.3	1537.1	1969.5	1969.8
20180504:13:18:10	23.6	17.1	-4.6	23.96	0.25	2.2	0.25	2.1	125.8	285.7	286.3	77.2	50.5	78.0	1540.7	1538.4	1971.3	1971.5
20180504:13:23:10	23.6	17.2	-4.6	23.96	0.25	2.2	0.25	2.1	126.1	285.8	286.3	77.3	50.4	78.1	1542.0	1539.8	1972.9	1973.2
20180504:13:28:10	23.6	17.4	-4.5	23.96	0.25	2.2	0.25	2.1	126.4	285.8	286.3	77.4	50.5	78.1	1543.3	1541.1	1974.7	1974.9
20180504:13:33:10	23.6	17.4	-4.5	23.95	0.25	2.2	0.25	2.1	126.4	285.8	286.3	77.5	50.4	78.2	1544.7	1542.5	1976.4	1976.6
20180504:13:38:10	23.6	17.4	-4.5	23.95	0.25	2.2	0.25	2.1	126.5	285.8	286.3	77.5	50.5	78.3	1546.0	1543.8	1978.1	1978.4
20180504:13:43:10	23.6	17.5	-4.5	23.95	0.25	2.2	0.25	2.1	126.6	285.8	286.3	77.6	50.4	78.3	1547.4	1545.1	1979.8	1980.0
20180504:13:48:10	23.6	17.5	-4.5	23.95	0.25	2.2	0.25	2.1	126.6	285.7	286.4	77.7	50.5	78.4	1548.7	1546.5	1981.5	1981.8
20180504:13:53:10	23.6	17.4	-4.5	23.95	0.25	2.2	0.25	2.2	126.5	285.7	286.3	77.8	50.5	78.4	1550.1	1547.8	1983.2	1983.5
20180504:13:58:10	23.6	17.5	-4.4	23.95	0.25	2.2	0.25	2.2	126.7	285.7	286.4	77.9	50.6	78.5	1551.4	1549.2	1984.9	1985.2
20180504:14:03:10	23.6	17.5	-4.4	23.95	0.25	2.2	0.25	2.1	126.7	285.8	286.3	78.0	50.5	78.6	1552.8	1550.5	1986.6	1986.9
20180504:14:08:10	23.6	17.6	-4.4	23.95	0.25	2.2	0.25	2.1	127.0	285.8	286.3	78.0	50.6	78.7	1554.1	1551.9	1988.3	1988.6
20180504:14:13:10	23.6	17.3	-4.5	23.94	0.25	2.2	0.25	2.1	126.3	285.8	286.3	78.1	50.5	78.8	1555.4	1553.2	1990.1	1990.3
20180504:14:18:10	23.6	16.9	-4.6	23.94	0.25	2.1	0.25	2.1	125.5	285.7	286.3	78.2	50.6	78.8	1556.8	1554.6	1991.8	1992.1
20180504:14:23:10	23.6	17.3	-4.5	23.94	0.25	2.1	0.25	2.1	126.2	285.8	286.4	78.3	50.5	78.9	1558.1	1555.9	1993.5	1993.8
20180504:14:28:10	23.6	17.4	-4.4	23.94	0.25	2.1	0.25	2.1	126.5	285.7	286.2	78.4	50.6	79.0	1559.5	1557.3	1995.2	1995.5
20180504:14:33:10	23.6	17.4	-4.5	23.94	0.25	2.2	0.25	2.1	126.5	285.7	286.4	78.5	50.5	79.1	1560.8	1558.6	1996.9	1997.2
20180504:14:38:10	23.6	17.5	-4.4	23.94	0.25	2.2	0.25	2.1	126.8	285.8	286.3	78.5	50.6	79.1	1562.2	1559.9	1998.7	1998.9
20180504:14:43:10	23.6	17.7	-4.3	23.93	0.25	2.2	0.25	2.1	127.0	285.8	286.3	78.7	50.5	79.2	1563.5	1561.3	2000.3	2000.6
20180504:14:48:10	23.6	17.6	-4.4	23.93	0.25	2.2	0.25	2.1	126.8	285.8	286.3	78.7	50.6	79.3	1564.8	1562.6	2002.1	2002.3

Time:	Stack Pressure:	Sat% H2O:	Static:	Barometric:	Flowmeter1:	Vacuum1:	Flowmeter2:	Vacuum2:	Stack Temp:	Sorbent Temp:	Probe Temp:	DGM#1 Temp:	Condenser Temp:	DGM#2 Temp:	DGM1*:	DGM2*:	DGM1:	DGM2:
day:hh:mm:ss	in-Hg	Percent	in-H2O	in-Hg	l/min	in-Hg	l/min	in-Hg	degF	degF	degF	degF	degF	degF	liters STP	liters STP	liters nominal	liters nominal
20180504:14:53:10	23.6	17.7	-4.4	23.93	0.25	2.2	0.25	2.1	127.0	285.8	286.4	78.8	50.5	79.4	1566.2	1563.9	2003.8	2004.0
20180504:14:58:10	23.6	17.7	-4.4	23.93	0.25	2.2	0.25	2.1	127.0	285.7	286.3	78.9	50.6	79.4	1567.5	1565.3	2005.5	2005.7
20180504:15:03:10	23.6	17.6	-4.3	23.92	0.25	2.2	0.25	2.1	126.8	285.8	286.4	79.0	50.5	79.5	1568.9	1566.6	2007.2	2007.5
20180504:15:08:10	23.6	17.4	-4.2	23.92	0.25	2.2	0.25	2.2	126.5	285.7	286.3	79.1	50.6	79.6	1570.2	1567.9	2008.9	2009.2
20180504:15:13:10	23.6	17.3	-4.2	23.92	0.25	2.2	0.25	2.2	126.2	285.8	286.3	79.2	50.5	79.7	1571.6	1569.3	2010.7	2010.9
20180504:15:18:10	23.6	17.5	-4.2	23.92	0.25	2.2	0.25	2.2	126.6	285.7	286.3	79.2	50.6	79.8	1572.9	1570.6	2012.4	2012.6
20180504:15:23:10	23.6	16.8	-4.6	23.92	0.25	2.2	0.25	2.1	125.2	285.7	286.3	79.3	50.6	79.9	1574.3	1572.0	2014.1	2014.3
20180504:15:28:10	23.6	17.1	-4.3	23.92	0.25	2.2	0.25	2.1	125.8	285.7	286.3	79.4	50.6	80.0	1575.6	1573.3	2015.8	2016.0
20180504:15:33:10	23.6	17.4	-4.2	23.92	0.25	2.2	0.25	2.1	126.4	285.7	286.3	79.4	50.5	80.0	1577.0	1574.7	2017.5	2017.8
20180504:15:38:10	23.6	17.5	-4.1	23.91	0.25	2.2	0.25	2.1	126.6	285.8	286.3	79.5	50.6	80.1	1578.4	1576.0	2019.3	2019.5
20180504:15:43:10	23.6	17.4	-4.2	23.92	0.25	2.2	0.25	2.2	126.4	285.8	286.3	79.5	50.5	80.2	1579.7	1577.4	2021.0	2021.2
20180504:15:48:10	23.6	17.4	-4.2	23.91	0.25	2.2	0.25	2.1	126.5	285.8	286.3	79.6	50.6	80.3	1581.0	1578.7	2022.7	2022.9
20180504:15:53:10	23.6	17.5	-4.2	23.92	0.25	2.2	0.25	2.2	126.8	285.7	286.3	79.7	50.6	80.3	1582.4	1580.1	2024.5	2024.7
20180504:15:58:10	23.6	17.8	-4.2	23.92	0.25	2.2	0.25	2.2	127.3	285.8	286.3	79.8	50.6	80.4	1583.7	1581.4	2026.2	2026.4
20180504:16:03:10	23.6	17.9	-4.1	23.91	0.25	2.2	0.25	2.2	127.4	285.8	286.3	79.9	50.6	80.4	1585.1	1582.8	2027.9	2028.1
20180504:16:08:10	23.6	17.9	-4.2	23.91	0.25	2.2	0.25	2.1	127.5	285.8	286.3	80.0	50.6	80.5	1586.4	1584.1	2029.6	2029.9
20180504:16:13:10	23.6	18.0	-4.2	23.91	0.25	2.2	0.25	2.1	127.7	285.8	286.4	80.1	50.6	80.6	1587.8	1585.4	2031.4	2031.6
20180504:16:18:10	23.6	17.9	-4.2	23.91	0.25	2.2	0.25	2.1	127.5	285.8	286.4	80.1	50.6	80.7	1589.2	1586.8	2033.1	2033.3
20180504:16:23:10	23.6	17.8	-4.2	23.91	0.25	2.2	0.25	2.1	127.3	285.8	286.3	80.3	50.6	80.7	1590.5	1588.1	2034.8	2035.0
20180504:16:28:10	23.6	17.6	-4.3	23.91	0.25	2.2	0.25	2.1	126.9	285.7	286.4	80.3	50.7	80.8	1591.8	1589.5	2036.6	2036.8
20180504:16:33:10	23.6	17.0	-4.3	23.91	0.25	2.2	0.25	2.1	125.5	285.7	286.3	80.4	50.6	80.9	1593.2	1590.8	2038.3	2038.4
20180504:16:38:10	23.6	17.4	-4.1	23.91	0.249	2.2	0.25	2.2	126.4	285.8	286.3	80.5	50.6	81.0	1594.5	1592.2	2040.0	2040.2
20180504:16:43:10	23.6	17.6	-4.1	23.91	0.25	2.2	0.25	2.2	126.8	285.8	286.3	80.5	50.6	81.0	1595.9	1593.5	2041.7	2041.9
20180504:16:48:10	23.6	17.5	-4.0	23.90	0.25	2.2	0.25	2.1	126.7	285.8	286.3	80.6	50.7	81.1	1597.2	1594.9	2043.4	2043.6
20180504:16:53:10	23.6	17.4	-4.0	23.90	0.25	2.2	0.25	2.1	126.5	285.7	286.3	80.7	50.6	81.2	1598.6	1596.2	2045.2	2045.4
20180504:16:58:10	23.6	17.2	-4.0	23.91	0.25	2.2	0.25	2.2	126.1	285.7	286.3	80.7	50.7	81.3	1599.9	1597.5	2046.9	2047.1
20180504:17:03:10	23.6	17.2	-4.0	23.91	0.25	2.2	0.25	2.2	125.9	285.8	286.3	80.7	50.6	81.3	1601.3	1598.9	2048.7	2048.8
20180504:17:08:10	23.6	17.0	-4.0	23.90	0.25	2.2	0.25	2.2	125.5	285.7	286.2	80.8	50.7	81.4	1602.6	1600.2	2050.4	2050.5
20180504:17:13:10	23.6	16.7	-4.2	23.91	0.25	2.2	0.25	2.2	125.0	285.7	286.3	80.8	50.6	81.5	1604.0	1601.6	2052.1	2052.3
20180504:17:18:10	23.6	16.5	-4.2	23.91	0.25	2.2	0.25	2.1	124.5	285.7	286.3	80.9	50.6	81.5	1605.3	1602.9	2053.9	2054.0
20180504:17:23:10	23.6	16.4	-4.1	23.91	0.25	2.2	0.25	2.2	124.4	285.6	286.2	80.9	50.6	81.6	1606.7	1604.3	2055.6	2055.8
20180504:17:28:10	23.6	15.9	-4.1	23.91	0.25	2.2	0.25	2.1	123.1	285.5	286.2	81.0	50.6	81.7	1608.1	1605.6	2057.3	2057.4
20180504:17:33:10	23.6	15.6	-4.1	23.90	0.25	2.2	0.25	2.1	122.3	285.6	286.3	81.0	50.6	81.7	1609.4	1607.0	2059.1	2059.2
20180504:17:38:10	23.6	15.8	-4.1	23.90	0.25	2.2	0.25	2.2	123.0	285.7	286.3	81.0	50.6	81.8	1610.7	1608.4	2060.8	2060.9
20180504:17:43:10	23.6	15.9	-4.1	23.90	0.25	2.2	0.25	2.2	123.2	285.6	286.3	81.1	50.6	81.8	1612.1	1609.7	2062.5	2062.6
20180504:17:48:10	23.6	16.0	-4.1	23.91	0.25	2.2	0.25	2.2	123.3	285.7	286.2	81.1	50.6	81.9	1613.4	1611.1	2064.2	2064.4
20180504:17:53:10	23.6	15.9	-4.1	23.91	0.25	2.2	0.25	2.2	123.2	285.7	286.3	81.1	50.6	81.9	1614.8	1612.4	2066.0	2066.1
20180504:17:58:10	23.6	15.9	-4.1	23.91	0.25	2.2	0.25	2.2	123.2	285.7	286.2	81.2	50.6	82.0	1616.2	1613.8	2067.7	2067.9
20180504:18:03:10	23.6	15.9	-4.1	23.91	0.25	2.2	0.25	2.2	123.2	285.7	286.3	81.3	50.6	82.0	1617.5	1615.1	2069.4	2069.6
20180504:18:08:10	23.6	16.0	-4.1	23.91	0.25	2.2	0.25	2.2	123.3	285.7	286.3	81.3	50.6	82.1	1618.9	1616.5	2071.2	2071.4
20180504:18:13:10	23.6	16.0	-4.1	23.91	0.25	2.2	0.25	2.2	123.5	285.8	286.3	81.3	50.7	82.1	1620.2	1617.8	2072.9	2073.1
20180504:18:18:10	23.6	16.2	-4.1	23.91	0.25	2.2	0.25	2.2	123.8	285.8	286.4	81.4	50.7	82.2	1621.6	1619.1	2074.7	2074.8
20180504:18:23:10	23.6	16.3	-4.1	23.91	0.25	2.2	0.25	2.2	124.2	285.7	286.2	81.4	50.7	82.3	1623.0	1620.5	2076.4	2076.6
20180504:18:28:10	23.6	16.4	-4.1	23.92	0.25	2.2	0.25	2.2	124.3	285.8	286.3	81.5	50.6	82.3	1624.3	1621.8	2078.1	2078.3
20180504:18:33:10	23.6	16.4	-4.1	23.92	0.25	2.2	0.25	2.2	124.2	285.7	286.3	81.5	50.7	82.4	1625.7	1623.2	2079.9	2080.0
20180504:18:38:10	23.6	16.3	-4.0	23.92	0.25	2.2	0.25	2.2	124.1	285.7	286.4	81.6	50.7	82.4	1627.0	1624.6	2081.6	2081.7
20180504:18:43:10	23.6	16.2	-4.0	23.92	0.25	2.2	0.25	2.2	123.8	285.8	286.3	81.7	50.7	82.5	1628.4	1625.9	2083.4	2083.5
20180504:18:48:10	23.6	16.1	-4.1	23.92	0.251	2.2	0.25	2.2	123.7	285.7	286.3	81.7	50.6	82.5	1629.7	1627.3	2085.1	2085.2
20180504:18:53:10	23.6	16.1	-4.1	23.92	0.25	2.2	0.25	2.2	123.7	285.7	286.3	81.7	50.7	82.6	1631.1	1628.6	2086.9	2087.0
20180504:18:58:10	23.6	16.1	-4.0	23.92	0.25	2.2	0.25	2.2	123.7	285.8	286.3	81.8	50.7	82.7	1632.5	1630.0	2088.6	2088.7
20180504:19:03:10	23.6	16.2	-4.0	23.92	0.25	2.2	0.25	2.2	123.9	285.8	286.4	81.8	50.7	82.7	1633.8	1631.3	2090.4	2090.4
20180504:19:08:10	23.6	16.2	-4.1	23.92	0.25	2.2	0.25	2.2	123.9	285.7	286.3	81.9	50.7	82.7	1635.1	1632.7	2092.1	2092.2
20180504:19:13:10	23.6	16.2	-4.1	23.92	0.25	2.2	0.25	2.2	123.9	285.7	286.3	81.9	50.8	82.8	1636.5	1634.0	2093.9	2093.9
20180504:19:18:10	23.6	16.2	-4.1	23.93	0.25	2.2	0.25	2.2	123.9	285.8	286.4	82.0	50.7	82.8	1637.8	1635.4	2095.6	2095.7
20180504:19:23:10	23.6	16.3	-4.0	23.93	0.25	2.2	0.25	2.2	124.1	285.8	286.4	82.0	50.8	82.9	1639.2	1636.7	2097.3	2097.4
20180504:19:28:10	23.6	16.3	-4.0	23.92	0.25	2.2	0.25	2.2	124.1	285.7	286.3	82.1	50.7	82.9	1640.6	1638.1	2099.1	2099.1
20180504:19:33:10	23.6	16.4	-4.1	23.93	0.25	2.2	0.25	2.2	124.2	285.7	286.4	82.2	50.8	83.0	1641.9	1639.5	2100.8	2100.9
20180504:19:38:10	23.6	16.4	-4.1	23.93	0.25	2.2	0.25	2.2	124.2	285.8	286.3	82.3	50.8	83.0	1643.3	1640.8	2102.6	2102.6
20180504:19:43:10	23.6	15.9	-4.0	23.92	0.25	2.2	0.25	2.2	123.2	285.8	286.4	82.3	50.8	83.0	1644.6	1642.2	2104.3	2104.4
20180504:19:48:10	23.6	15.7	-4.0	23.93	0.25	2.2	0.25	2.2	122.7	285.7	286.4	82.4	50.8	83.1	1646.0	1643.5	2106.0	2106.1
20180504:19:53:10	23.6	16.0	-4.0	23.93	0.25	2.2	0.25	2.2	123.4	285.7	286.4	82.4	50.9	83.2	1647.4	1644.9	2107.8	2107.9
20180504:19:58:10	23.6	16.3	-4.0	23.93	0.25	2.2	0.25	2.2	124.2	285.8	286.4	82.5	50.8	83.2	1648.7	1646.2	2109.5	2109.6
20180504:20:03:10	23.6	16.4	-4.0	23.93	0.25	2.2	0.25	2.2	124.4	285.8	286.3	82.6	50.9	83.3	1650.1	1647.6	2111.3	2111.3
20180504:20:08:10	23.6	16.4	-4.0	23.93	0.25	2.2	0.25	2.2	124.4	285.9	286.4	82.6	50.8	83.3	1651.5	1648.9	2113.0	2113.1
20180504:20:13:10	23.6	16.3	-4.0	23.93	0.25	2.2	0.25	2.2	124.1	285.8	286.4	82.7	50.9	83.3	1652.8	1650.3	2114.8	2114.8
20180504:20:18:10	23.6	15.8	-4.0	23.93	0.25	2.2	0.25	2.2	122.9	285.7	286.3	82.7	50.8	83.4	1654.2	1651.7	2116.6	2116.6
20180504:20:23:10	23.6	15.5	-4.0	23.93	0.25	2.2	0.25	2.2	122.3	285.6	286.4	82.7	50.8	83.4	1655.5	1653.0	2118.3	2118.3
20180504:20:28:10	23.6	15.8	-4.0	23.93	0.25	2.2	0.25	2.2	122.9	285.6	286.4	82.7	50.8	83.4	1656.9	1654.4	2120.0	2120.1
20180504:20:33:10	23.6	16.1	-4.0	23.93	0.25	2.2	0.25	2.2	123.7	285.7	286.4	82.7	50.9	83.5	1658.3	1655.7	2121.8	2121.8
20180504:20:38:10	23.6	16.2	-4.0	23.93	0.25	2.2	0.25	2.2	123.9	285.8	286.4	82.8	50.8	83.5	1659.6	1657.0	2123.5	2123.5
20180504:20:43:10	23.6	15.7	-4.0	23.93	0.25	2.2	0.25	2.2	122.8	285.7	286.4	82.8	50.8	83.5	1661.0	1658.4	2125.3	2125.3
20180504:20:48:10	23.6	15.5	-4.0	23.93	0.25	2.2	0.25	2.2	122.3	285.6	286.4	82.9	50.8	83.6	1662.3	1659.8	2127.0	2127.0
20180504:20:53:10	23.6	15.5	-3.9	23.93	0.25	2.2	0.25	2.2	122.3	285.6	286.4	82.9	50.9	83.6	1663.7	1661.1	2128.7	2128.8
20180504:20:58:10	23.6	16.0	-4.0	23.93	0.25	2.2	0.25	2.2	123.4	285.8	286.4	83.0	50.8	83.6	1665.1	1662.5	2130.5	2130.5
20180504:21:03:10	23.6	16.1	-4.0	23.93	0.25	2.2	0.25	2.2	123.7	285.8	286.4	83.0	50.9	83.7	1666.4	1663.8	2132.2	2132.3
20180504:21:08:10	23.6	16.2	-4.0	23.93	0.25	2.2	0.25	2.2	123.8	285.8	286.4	83.0	50.8	83.7	1667.8	1665.2	2134.0	2134.0
20180504:21:13:10	23.6	16.2	-4.0	23.94	0.25	2.2	0.25	2.2	124.0	285.8	286.4	83.0	50.8	83.7	1669.1	1666.5	2135.8	2135.7
20180504:21:18:10	23.6	16.3	-4.1	23.94	0.25	2.2	0.25	2.2	124.0	285.8	286.4	82.9	50.8	83.7	1670.5	1667.9	2137.5	2137.5
20180504:21:23:10	23.6	16.3	-4.0	23.94	0.25	2.2	0.25	2.2	124.1	285.8	286.3	82.9	50.8	83.7	1671.9	1669.2	2139.3	2139.2
20180504:21:28:10	23.6	16.3	-4.0	23.94	0.25	2.2	0.25	2.2	124.1	285.8	286.3	83.0	50.9	83.8	1673.2	1670.6	2141.0	2141.0
20180504:21:33:10	23.6	16.3	-4.0	23.94	0.25	2.2	0.25	2.2	124.2	285.8	286.3	82.9	50.8	83.7	1674.6	1671.9	2142.7	2142.7
20180504:21:38:10	23.6	16.2	-4.0	23.94	0.25	2.2	0.25	2.2	123.9	285.8	286.3	82.9	50.8	83.7	1675.9	1673.3	2144.5	2144.5
20180504:21:43:10	23.6	15.7	-4.0	23.94	0.25	2.2	0.25	2.2	122.7	285.7	286.4	82.9	50.8	83.7	1677.3	1674.7	2146.2	2146.2
20180504:21:48:10	23.6	15.5	-4.0	23.94	0.25	2.2	0.25	2.2	122.2	285.7	286.2	82.9	50.8	83.7	1678.7	1676.0	2148.0	2147.9
20180504:21:53:10	23.6	15.9	-4.1	23.95	0.25	2.2	0.25	2.2	123.1	285.7	286.4	82.9	50.8	83.8	1680.0	1677.4	2149.7	2149.7
20180504:21:58:10	23.6	16.2	-4.1	23.94	0.25	2.2	0.25	2.2	123.9	285.8	286.3	82.9	50.9	83.8	1681.3	1678.7	2151.5	2151.4
20180504:22:03:10	23.6	16.3	-4.1	23.94	0.25	2.2	0.25	2.2	124.0	285.8	286.3	82.9	50.9	83.8	1682.7	1680.1	2153.2	2153.2
20180504:22:08:10	23.6	16.2	-4.1	23.94	0.25	2.2	0.25	2.2	124.0	285.7	286.3	82.9	50.9	83.8	1684.1	1681.4	2155.0	2154.9
20180504:22:13:10	23.6	15.6	-4.0	23.94	0.25	2.2	0.25	2.2	122.6	285.7	286.3	82.9	50.9	83.8	1685.4	1682.8	2156.7	2156.7

Time:	Stack Pressure:	Sat% H2O:	Static:	Barometric:	Flowmeter1:	Vacuum1:	Flowmeter2:	Vacuum2:	Stack Temp:	Sorbent Temp:	Probe Temp:	DGM#1 Temp:	Condenser Temp:	DGM#2 Temp:	DGM1*:	DGM2*:	DGM1:	DGM2:
day:hh:mm:ss	in-Hg	Percent	in-H2O	in-Hg	l/min	in-Hg	l/min	in-Hg	degF	degF	degF	degF	degF	degF	liters STP	liters STP	liters nominal	liters nominal
20180504:22:18:10	23.6	15.4	-4.0	23.94	0.25	2.2	0.25	2.2	122.1	285.7	286.3	82.9	50.9	83.8	1686.8	1684.2	2158.5	2158.4
20180504:22:23:10	23.6	15.5	-4.0	23.93	0.25	2.2	0.25	2.2	122.3	285.6	286.3	82.9	50.9	83.8	1688.1	1685.5	2160.2	2160.2
20180504:22:28:10	23.6	16.0	-4.0	23.93	0.25	2.2	0.25	2.2	123.5	285.8	286.3	82.9	50.9	83.7	1689.5	1686.9	2162.0	2161.9
20180504:22:33:10	23.6	16.2	-4.0	23.93	0.25	2.2	0.25	2.2	123.8	285.8	286.3	82.9	50.8	83.7	1690.9	1688.2	2163.7	2163.7
20180504:22:38:10	23.6	16.3	-4.1	23.93	0.25	2.2	0.25	2.2	124.1	285.8	286.2	82.9	50.9	83.7	1692.2	1689.6	2165.4	2165.4
20180504:22:43:10	23.6	16.0	-4.1	23.93	0.25	2.2	0.25	2.2	123.5	285.7	286.3	82.9	50.8	83.7	1693.6	1690.9	2167.2	2167.2
20180504:22:48:10	23.6	15.6	-4.1	23.93	0.25	2.2	0.25	2.2	122.4	285.7	286.3	82.9	50.9	83.7	1695.0	1692.3	2169.0	2168.9
20180504:22:53:10	23.6	15.4	-4.0	23.93	0.25	2.2	0.25	2.2	122.1	285.7	286.3	82.9	50.8	83.7	1696.3	1693.6	2170.7	2170.7
20180504:22:58:10	23.6	16.0	-4.0	23.93	0.25	2.2	0.25	2.2	123.4	285.8	286.4	82.9	50.9	83.7	1697.7	1695.0	2172.5	2172.4
20180504:23:03:10	23.6	16.2	-4.0	23.93	0.25	2.2	0.25	2.2	123.8	285.8	286.3	82.9	50.8	83.7	1699.0	1696.4	2174.2	2174.2
20180504:23:08:10	23.6	16.1	-4.0	23.92	0.25	2.2	0.25	2.2	123.7	285.8	286.3	82.9	50.9	83.7	1700.4	1697.7	2176.0	2175.9
20180504:23:13:10	23.6	16.2	-4.0	23.92	0.25	2.2	0.25	2.2	123.9	285.8	286.3	82.9	50.8	83.7	1701.8	1699.1	2177.7	2177.6
20180504:23:18:10	23.6	16.4	-4.1	23.92	0.25	2.2	0.25	2.2	124.2	285.8	286.3	82.9	50.9	83.6	1703.1	1700.4	2179.4	2179.4
20180504:23:23:10	23.6	15.8	-4.1	23.93	0.25	2.2	0.25	2.2	122.9	285.7	286.3	82.8	50.8	83.6	1704.5	1701.8	2181.2	2181.1
20180504:23:28:10	23.6	15.6	-4.1	23.93	0.25	2.2	0.25	2.2	122.4	285.7	286.2	82.8	50.9	83.6	1705.8	1703.1	2182.9	2182.9
20180504:23:33:10	23.6	15.6	-4.1	23.93	0.25	2.2	0.25	2.2	122.5	285.8	286.4	82.8	50.8	83.6	1707.2	1704.5	2184.7	2184.6
20180504:23:38:10	23.6	16.1	-4.1	23.93	0.25	2.2	0.25	2.2	123.6	285.8	286.3	82.8	50.9	83.6	1708.6	1705.9	2186.5	2186.4
20180504:23:43:10	23.6	16.2	-4.1	23.93	0.25	2.2	0.25	2.2	123.9	285.8	286.3	82.8	50.9	83.6	1709.9	1707.2	2188.2	2188.1
20180504:23:48:10	23.6	16.3	-4.1	23.93	0.25	2.2	0.25	2.2	124.0	285.9	286.4	82.8	50.9	83.6	1711.3	1708.5	2190.0	2189.8
20180504:23:53:10	23.6	16.4	-4.1	23.93	0.25	2.2	0.25	2.2	124.3	285.9	286.4	82.8	50.9	83.6	1712.6	1709.9	2191.7	2191.6
20180504:23:58:10	23.6	16.5	-4.0	23.93	0.25	2.2	0.25	2.2	124.4	285.8	286.3	82.7	50.9	83.5	1714.0	1711.3	2193.4	2193.3
20180505:00:03:10	23.6	16.5	-4.0	23.93	0.25	2.2	0.25	2.2	124.5	285.8	286.3	82.7	50.8	83.5	1715.4	1712.6	2195.2	2195.1
20180505:00:08:10	23.6	16.5	-4.0	23.93	0.25	2.2	0.25	2.2	124.5	285.8	286.3	82.7	50.9	83.5	1716.7	1714.0	2196.9	2196.8
20180505:00:13:10	23.6	16.5	-4.0	23.93	0.25	2.2	0.25	2.2	124.5	285.8	286.3	82.6	50.9	83.5	1718.1	1715.3	2198.7	2198.6
20180505:00:18:10	23.6	16.5	-4.1	23.93	0.25	2.2	0.25	2.2	124.6	285.8	286.3	82.6	50.9	83.4	1719.5	1716.7	2200.5	2200.3
20180505:00:23:10	23.6	16.0	-4.1	23.93	0.25	2.2	0.25	2.2	123.5	285.8	286.4	82.5	50.9	83.4	1720.8	1718.0	2202.2	2202.1
20180505:00:28:10	23.6	15.6	-4.0	23.93	0.25	2.2	0.25	2.2	122.5	285.8	286.4	82.5	50.9	83.4	1722.2	1719.4	2204.0	2203.8
20180505:00:33:10	23.6	15.4	-4.1	23.93	0.25	2.2	0.25	2.2	122.0	285.8	286.4	82.4	50.8	83.3	1723.5	1720.8	2205.7	2205.6
20180505:00:38:10	23.6	16.1	-4.1	23.93	0.25	2.2	0.25	2.2	123.7	285.9	286.4	82.4	50.9	83.3	1724.9	1722.2	2207.4	2207.3
20180505:00:43:10	23.6	16.4	-3.9	23.93	0.25	2.2	0.25	2.2	124.4	285.9	286.3	82.3	50.8	83.2	1726.3	1723.5	2209.2	2209.0
20180505:00:48:10	23.7	16.6	-3.7	23.93	0.25	2.2	0.25	2.2	124.9	285.9	286.4	82.3	50.9	83.2	1727.6	1724.8	2210.9	2210.8
20180505:00:53:10	23.6	16.8	-3.8	23.93	0.25	2.2	0.25	2.2	125.3	285.8	286.3	82.2	50.8	83.1	1729.0	1726.2	2212.7	2212.6
20180505:00:58:10	23.7	17.0	-3.7	23.93	0.25	2.2	0.25	2.2	125.6	285.9	286.3	82.2	50.9	83.1	1730.3	1727.5	2214.4	2214.3
20180505:01:03:10	23.7	17.1	-3.7	23.93	0.25	2.2	0.25	2.2	125.8	285.8	286.3	82.2	50.8	83.1	1731.7	1728.9	2216.1	2216.1
20180505:01:08:10	23.6	17.3	-4.0	23.93	0.25	2.2	0.25	2.2	126.2	285.9	286.4	82.2	50.9	83.0	1733.1	1730.3	2217.9	2217.8
20180505:01:13:10	23.6	17.4	-4.1	23.93	0.25	2.2	0.25	2.2	126.4	285.9	286.4	82.1	50.8	83.0	1734.4	1731.6	2219.6	2219.6
20180505:01:18:10	23.6	17.5	-4.1	23.93	0.25	2.2	0.25	2.2	126.7	285.8	286.3	82.1	50.9	83.0	1735.8	1733.0	2221.4	2221.3
20180505:01:23:11	23.6	17.6	-4.1	23.93	0.25	2.2	0.25	2.2	126.9	285.9	286.4	82.0	50.8	83.0	1737.1	1734.3	2223.1	2223.0
20180505:01:28:11	23.6	17.9	-4.2	23.93	0.25	2.2	0.25	2.2	127.6	285.9	286.4	82.0	50.9	82.9	1738.5	1735.7	2224.9	2224.8
20180505:01:33:11	23.6	17.7	-4.2	23.93	0.25	2.2	0.25	2.1	127.2	285.9	286.4	82.0	50.8	82.9	1739.8	1737.0	2226.6	2226.5
20180505:01:38:11	23.6	17.1	-4.3	23.92	0.25	2.2	0.25	2.1	125.8	285.9	286.4	82.0	50.9	82.8	1741.2	1738.4	2228.4	2228.3
20180505:01:43:11	23.6	17.6	-4.2	23.92	0.25	2.2	0.25	2.1	126.9	285.8	286.4	81.9	50.8	82.8	1742.5	1739.7	2230.1	2230.0
20180505:01:48:11	23.6	18.1	-4.2	23.93	0.25	2.2	0.25	2.2	127.9	285.9	286.4	81.9	50.9	82.7	1743.9	1741.1	2231.9	2231.7
20180505:01:53:11	23.6	18.4	-4.2	23.92	0.25	2.2	0.25	2.2	128.6	286.0	286.4	81.9	50.8	82.7	1745.2	1742.5	2233.6	2233.5
20180505:01:58:11	23.6	18.7	-4.2	23.92	0.25	2.2	0.25	2.1	129.1	285.9	286.4	81.8	50.9	82.7	1746.6	1743.8	2235.3	2235.2
20180505:02:03:11	23.6	18.7	-4.2	23.92	0.25	2.2	0.25	2.2	129.1	285.9	286.4	81.7	50.8	82.6	1748.0	1745.2	2237.1	2236.9
20180505:02:08:11	23.6	18.7	-4.2	23.92	0.25	2.2	0.25	2.2	129.1	285.8	286.3	81.7	50.9	82.6	1749.3	1746.5	2238.8	2238.6
20180505:02:13:11	23.6	18.8	-4.2	23.92	0.25	2.2	0.25	2.2	129.3	285.9	286.3	81.7	50.8	82.6	1750.7	1747.9	2240.6	2240.4
20180505:02:18:11	23.6	18.7	-4.3	23.92	0.25	2.2	0.25	2.2	129.1	285.8	286.3	81.6	50.9	82.4	1752.0	1749.2	2242.3	2242.1
20180505:02:23:11	23.6	18.8	-4.3	23.92	0.25	2.2	0.25	2.1	129.3	285.9	286.3	81.5	50.8	82.4	1753.4	1750.6	2244.0	2243.9
20180505:02:28:11	23.6	18.7	-4.3	23.92	0.25	2.2	0.25	2.1	129.1	285.8	286.4	81.4	50.9	82.4	1754.8	1751.9	2245.8	2245.6
20180505:02:33:11	23.6	18.6	-4.3	23.92	0.25	2.2	0.25	2.1	128.9	285.8	286.3	81.4	50.8	82.3	1756.1	1753.3	2247.5	2247.3
20180505:02:38:11	23.6	18.6	-4.3	23.92	0.25	2.2	0.25	2.1	128.9	285.8	286.4	81.3	50.9	82.3	1757.5	1754.6	2249.2	2249.1
20180505:02:43:11	23.6	18.6	-4.3	23.92	0.25	2.2	0.25	2.2	129.0	285.8	286.3	81.2	50.8	82.2	1758.8	1756.0	2250.9	2250.8
20180505:02:48:11	23.6	18.5	-4.3	23.92	0.25	2.2	0.25	2.1	128.8	285.8	286.3	81.1	50.9	82.1	1760.2	1757.3	2252.7	2252.6
20180505:02:53:11	23.6	18.5	-4.3	23.92	0.25	2.2	0.25	2.1	128.7	285.8	286.4	81.1	50.8	82.0	1761.5	1758.6	2254.4	2254.3
20180505:02:58:11	23.6	18.5	-4.3	23.92	0.25	2.2	0.25	2.1	128.7	285.8	286.3	81.0	50.9	82.0	1762.8	1760.0	2256.1	2256.0
20180505:03:03:11	23.6	18.5	-4.3	23.92	0.25	2.2	0.25	2.1	128.7	285.7	286.3	81.0	50.8	81.9	1764.2	1761.3	2257.9	2257.7
20180505:03:08:11	23.6	18.3	-4.3	23.92	0.25	2.2	0.25	2.1	128.2	285.8	286.3	80.9	50.8	81.9	1765.5	1762.7	2259.6	2259.5
20180505:03:13:11	23.6	18.2	-4.3	23.92	0.25	2.2	0.25	2.1	128.2	285.7	286.3	80.8	50.8	81.8	1766.9	1764.0	2261.3	2261.2
20180505:03:18:11	23.6	18.3	-4.3	23.92	0.25	2.2	0.25	2.1	128.3	285.7	286.3	80.7	50.8	81.7	1768.2	1765.4	2263.1	2262.9
20180505:03:23:11	23.6	18.1	-4.3	23.92	0.25	2.2	0.25	2.1	128.0	285.7	286.3	80.7	50.8	81.7	1769.6	1766.7	2264.8	2264.7
20180505:03:28:11	23.6	18.0	-4.3	23.92	0.25	2.2	0.25	2.1	127.8	285.7	286.3	80.6	50.8	81.6	1770.9	1768.1	2266.5	2266.4
20180505:03:33:11	23.6	18.0	-4.3	23.92	0.25	2.2	0.25	2.1	127.8	285.7	286.3	80.6	50.8	81.5	1772.3	1769.4	2268.2	2268.1
20180505:03:38:11	23.6	18.1	-4.3	23.92	0.25	2.2	0.25	2.1	128.0	285.7	286.3	80.5	50.8	81.5	1773.7	1770.8	2270.0	2269.8
20180505:03:43:11	23.6	18.1	-4.3	23.92	0.25	2.2	0.25	2.1	127.9	285.7	286.3	80.5	50.8	81.4	1775.0	1772.1	2271.7	2271.6
20180505:03:48:11	23.6	18.1	-4.3	23.92	0.25	2.2	0.25	2.1	127.8	285.7	286.3	80.5	50.8	81.4	1776.3	1773.5	2273.4	2273.3
20180505:03:53:11	23.6	17.9	-4.3	23.92	0.25	2.2	0.25	2.1	127.6	285.7	286.3	80.4	50.8	81.4	1777.7	1774.8	2275.1	2275.0
20180505:03:58:11	23.6	17.9	-4.3	23.92	0.25	2.2	0.25	2.1	127.4	285.7	286.3	80.4	50.8	81.3	1779.0	1776.2	2276.8	2276.7
20180505:04:03:11	23.6	17.5	-4.5	23.92	0.25	2.2	0.25	2.1	126.7	285.7	286.2	80.4	50.8	81.3	1780.4	1777.5	2278.6	2278.5
20180505:04:08:11	23.6	16.7	-4.5	23.92	0.25	2.2	0.25	2.1	124.9	285.7	286.4	80.3	50.8	81.2	1781.7	1778.9	2280.3	2280.2
20180505:04:13:11	23.6	17.0	-4.3	23.92	0.25	2.2	0.25	2.2	125.5	285.7	286.3	80.3	50.9	81.1	1783.1	1780.2	2282.0	2281.9
20180505:04:18:11	23.6	17.0	-4.2	23.92	0.25	2.2	0.25	2.2	125.7	285.7	286.3	80.2	50.8	81.1	1784.4	1781.6	2283.8	2283.7
20180505:04:23:11	23.6	17.1	-4.2	23.92	0.25	2.2	0.25	2.1	125.9	285.8	286.3	80.2	50.8	81.1	1785.8	1782.9	2285.5	2285.4
20180505:04:28:11	23.6	17.2	-4.2	23.92	0.25	2.2	0.25	2.1	126.0	285.8	286.3	80.1	50.8	81.0	1787.2	1784.3	2287.3	2287.2
20180505:04:33:11	23.6	17.2	-4.2	23.91	0.25	2.2	0.25	2.1	126.0	285.8	286.3	80.0	50.8	81.0	1788.5	1785.6	2289.0	2288.9
20180505:04:38:11	23.6	17.1	-4.2	23.91	0.25	2.2	0.25	2.2	125.8	285.7	286.2	80.0	50.8	80.9	1789.9	1787.0	2290.7	2290.6
20180505:04:43:11	23.6	16.9	-4.2	23.91	0.25	2.2	0.25	2.1	125.4	285.7	286.4	79.9	50.8	80.8	1791.2	1788.4	2292.5	2292.4
20180505:04:48:11	23.6	17.0	-4.2	23.92	0.25	2.2	0.25	2.1	125.5	285.7	286.2	79.8	50.8	80.8	1792.6	1789.7	2294.2	2294.1
20180505:04:53:11	23.6	17.0	-4.2	23.92	0.25	2.2	0.25	2.1	125.5	285.8	286.3	79.8	50.7	80.7	1794.0	1791.1	2296.0	2295.8
20180505:04:58:11	23.6	16.9	-4.2	23.92	0.25	2.2	0.25	2.2	125.4	285.7	286.3	79.7	50.8	80.7	1795.3	1792.4	2297.7	2297.6
20180505:05:03:11	23.6	17.0	-4.2	23.92	0.25	2.2	0.25	2.1	125.5	285.7	286.2	79.7	50.7	80.6	1796.7	1793.8	2299.4	2299.3
20180505:05:08:11	23.6	17.0	-4.2	23.92	0.25	2.2	0.25	2.1	125.6	285.7	286.2	79.6	50.8	80.6	1798.0	1795.1	2301.2	2301.0
20180505:05:13:11	23.6	17.1	-4.3	23.92	0.25	2.2	0.25	2.1	125.7	285.8	286.3	79.5	50.7	80.5	1799.4	1796.5	2302.9	2302.8
20180505:05:18:11	23.6	17.2	-4.3	23.92	0.25	2.2	0.25	2.1	126.1	285.8	286.3	79.5	50.7	80.5	1800.8	1797.9	2304.7	2304.5
20180505:05:23:11	23.6	17.2	-4.3	23.92	0.25	2.2	0.25	2.1	126.0	285.7	286.3	79.5	50.7	80.4	1802.1	1799.2	2306.4	2306.2
20180505:05:28:11	23.6	17.2	-4.3	23.92	0.25	2.2	0.25	2.2	126.0	285.8	286.2	79.4	50.7	80.4	1803.5	1800.6	2308.1	2308.0
20180505:05:33:11	23.6	17.2	-4.3	23.92	0.25	2.2	0.25	2.2	126.0	285.7	286.3	79.4	50.8	80.3	1804.8	1801.9	2309.9	2309.7
20180505:05:38:11	23.6	17.1	-4.3	23.92	0.25	2.2	0.25	2.1	125.9	285.7	286.2	79.3	50.7	80.3	1806.2	1803.3	2311.6	2311.5

Time:	Stack Pressure:	Sat% H2O:	Static:	Barometric:	Flowmeter1:	Vacuum1:	Flowmeter2:	Vacuum2:	Stack Temp:	Sorbent Temp:	Probe Temp:	DGM#1 Temp:	Condenser Temp:	DGM#2 Temp:	DGM1*:	DGM2*:	DGM1:	DGM2:
day:hh:mm:ss	in-Hg	Percent	in-H2O	in-Hg	l/min	in-Hg	l/min	in-Hg	degF	degF	degF	degF	degF	degF	liters STP	liters STP	liters nominal	liters nominal
20180505:05:43:11	23.6	17.0	-4.3	23.92	0.25	2.2	0.25	2.2	125.6	285.7	286.2	79.3	50.8	80.2	1807.6	1804.6	2313.4	2313.2
20180505:05:48:11	23.6	17.0	-4.3	23.92	0.25	2.2	0.25	2.1	125.6	285.7	286.3	79.2	50.7	80.2	1808.9	1806.0	2315.1	2315.0
20180505:05:53:11	23.6	17.1	-4.3	23.92	0.25	2.2	0.25	2.1	125.9	285.7	286.2	79.2	50.8	80.1	1810.3	1807.4	2316.8	2316.7
20180505:05:58:11	23.6	17.1	-4.3	23.92	0.25	2.2	0.25	2.1	125.9	285.7	286.2	79.1	50.7	80.1	1811.7	1808.7	2318.6	2318.4
20180505:06:03:11	23.6	17.2	-4.3	23.92	0.25	2.2	0.25	2.1	125.9	285.6	286.2	79.1	50.7	80.0	1813.0	1810.1	2320.3	2320.2
20180505:06:08:11	23.6	17.4	-4.3	23.92	0.25	2.2	0.25	2.2	126.5	285.7	286.2	79.1	50.7	80.0	1814.4	1811.4	2322.0	2321.9
20180505:06:13:11	23.6	17.6	-4.4	23.92	0.25	2.2	0.25	2.1	126.8	285.7	286.2	79.1	50.7	80.0	1815.7	1812.8	2323.8	2323.7
20180505:06:18:11	23.6	17.7	-4.4	23.92	0.25	2.2	0.25	2.1	127.1	285.8	286.3	79.1	50.8	80.0	1817.1	1814.1	2325.5	2325.4
20180505:06:23:11	23.6	17.7	-4.4	23.93	0.25	2.2	0.25	2.1	127.1	285.8	286.3	79.0	50.7	79.9	1818.4	1815.5	2327.3	2327.1
20180505:06:28:11	23.6	17.7	-4.4	23.93	0.25	2.1	0.25	2.1	127.0	285.8	286.3	79.0	50.8	79.9	1819.8	1816.8	2329.0	2328.8
20180505:06:33:11	23.6	17.5	-4.5	23.93	0.25	2.1	0.25	2.1	126.6	285.7	286.2	79.0	50.7	79.8	1821.1	1818.2	2330.7	2330.6
20180505:06:38:11	23.6	17.4	-4.5	23.93	0.25	2.1	0.25	2.1	126.4	285.7	286.3	79.0	50.8	79.8	1822.5	1819.6	2332.4	2332.3
20180505:06:43:11	23.6	17.4	-4.5	23.93	0.25	2.2	0.25	2.1	126.5	285.7	286.2	78.9	50.7	79.7	1823.8	1820.9	2334.1	2334.0
20180505:06:48:11	23.6	17.4	-4.5	23.93	0.25	2.2	0.25	2.1	126.5	285.8	286.3	78.9	50.7	79.7	1825.2	1822.2	2335.9	2335.7
20180505:06:53:11	23.6	17.3	-4.5	23.93	0.25	2.2	0.25	2.1	126.3	285.8	286.3	78.8	50.7	79.7	1826.5	1823.6	2337.5	2337.4
20180505:06:58:11	23.6	17.2	-4.5	23.93	0.25	2.2	0.25	2.1	126.1	285.7	286.3	78.8	50.6	79.7	1827.9	1824.9	2339.3	2339.2
20180505:07:03:11	23.6	17.3	-4.5	23.93	0.25	2.2	0.25	2.1	126.3	285.7	286.3	78.8	50.7	79.6	1829.2	1826.3	2341.0	2340.9
20180505:07:08:11	23.6	17.4	-4.5	23.94	0.25	2.2	0.25	2.1	126.5	285.8	286.3	78.7	50.6	79.6	1830.5	1827.6	2342.7	2342.6
20180505:07:13:11	23.6	17.4	-4.5	23.93	0.25	2.2	0.25	2.2	126.6	285.7	286.2	78.7	50.7	79.5	1831.9	1828.9	2344.4	2344.3
20180505:07:18:11	23.6	17.5	-4.5	23.94	0.25	2.2	0.25	2.1	126.7	285.7	286.2	78.6	50.7	79.5	1833.2	1830.3	2346.1	2346.0
20180505:07:23:11	23.6	17.6	-4.5	23.94	0.25	2.2	0.25	2.1	126.8	285.7	286.2	78.5	50.6	79.4	1834.6	1831.6	2347.9	2347.7
20180505:07:28:11	23.6	17.5	-4.5	23.94	0.25	2.2	0.25	2.1	126.6	285.7	286.3	78.5	50.7	79.4	1835.9	1833.0	2349.6	2349.5
20180505:07:33:11	23.6	17.5	-4.6	23.94	0.25	2.2	0.25	2.1	126.7	285.8	286.3	78.5	50.6	79.4	1837.3	1834.3	2351.3	2351.2
20180505:07:38:11	23.6	17.5	-4.5	23.94	0.25	2.2	0.25	2.1	126.7	285.7	286.1	78.4	50.6	79.3	1838.6	1835.7	2353.0	2352.9
20180505:07:43:11	23.6	17.4	-4.6	23.94	0.25	2.2	0.25	2.1	126.5	285.6	286.2	78.4	50.6	79.3	1840.0	1837.1	2354.7	2354.6
20180505:07:48:11	23.6	17.5	-4.6	23.94	0.25	2.2	0.25	2.1	126.6	285.6	286.2	78.3	50.6	79.2	1841.3	1838.4	2356.5	2356.3
20180505:07:53:11	23.6	17.0	-4.8	23.94	0.25	2.2	0.25	2.1	125.6	285.6	286.2	78.3	50.6	79.2	1842.7	1839.7	2358.2	2358.1
20180505:07:58:11	23.6	16.5	-4.6	23.94	0.25	2.2	0.25	2.1	124.4	285.6	286.3	78.2	50.6	79.1	1844.1	1841.1	2359.9	2359.8
20180505:08:03:11	23.6	17.0	-4.5	23.94	0.25	2.2	0.25	2.1	125.5	285.6	286.1	78.2	50.6	79.1	1845.4	1842.4	2361.6	2361.5
20180505:08:08:11	23.6	17.1	-4.5	23.94	0.25	2.2	0.25	2.2	125.9	285.6	286.2	78.2	50.6	79.1	1846.7	1843.8	2363.3	2363.2
20180505:08:13:11	23.6	17.2	-4.5	23.94	0.25	2.2	0.25	2.2	126.0	285.6	286.2	78.2	50.6	79.1	1848.1	1845.2	2365.1	2365.0
20180505:08:18:11	23.6	17.2	-4.5	23.94	0.25	2.2	0.25	2.2	125.9	285.6	286.2	78.2	50.6	79.0	1849.4	1846.5	2366.7	2366.7
20180505:08:23:11	23.6	17.3	-4.5	23.94	0.25	2.2	0.25	2.1	126.2	285.6	286.2	78.2	50.6	79.1	1850.8	1847.8	2368.5	2368.4
20180505:08:28:11	23.6	17.3	-4.5	23.94	0.25	2.2	0.25	2.1	126.2	285.6	286.2	78.2	50.6	79.0	1852.1	1849.2	2370.2	2370.1
20180505:08:33:11	23.6	17.3	-4.5	23.94	0.25	2.2	0.25	2.1	126.4	285.7	286.2	78.3	50.6	79.0	1853.5	1850.5	2371.9	2371.8
20180505:08:38:11	23.6	17.3	-4.5	23.95	0.25	2.2	0.25	2.1	126.3	285.7	286.3	78.3	50.6	79.1	1854.8	1851.9	2373.6	2373.5
20180505:08:43:11	23.6	17.4	-4.6	23.95	0.25	2.2	0.25	2.1	126.5	285.8	286.3	78.3	50.5	79.1	1856.2	1853.2	2375.4	2375.2
20180505:08:48:11	23.6	17.3	-4.5	23.95	0.25	2.2	0.25	2.1	126.3	285.7	286.3	78.4	50.6	79.1	1857.5	1854.6	2377.1	2377.0
20180505:08:53:11	23.6	17.3	-4.5	23.95	0.25	2.2	0.25	2.1	126.2	285.7	286.3	78.4	50.5	79.1	1858.8	1855.9	2378.8	2378.7
20180505:08:58:11	23.6	17.3	-4.5	23.94	0.25	2.2	0.25	2.1	126.3	285.7	286.2	78.4	50.5	79.1	1860.2	1857.2	2380.5	2380.4
20180505:09:03:11	23.6	17.4	-4.5	23.94	0.25	2.2	0.25	2.1	126.4	285.7	286.2	78.5	50.5	79.1	1861.5	1858.6	2382.2	2382.1
20180505:09:08:11	23.6	17.3	-4.5	23.94	0.25	2.2	0.25	2.2	126.3	285.7	286.2	78.5	50.5	79.2	1862.9	1859.9	2383.9	2383.8
20180505:09:13:11	23.6	17.3	-4.5	23.94	0.25	2.2	0.25	2.1	126.3	285.7	286.2	78.6	50.6	79.3	1864.2	1861.2	2385.6	2385.5
20180505:09:18:11	23.6	17.5	-4.4	23.94	0.25	2.2	0.25	2.1	126.7	285.7	286.3	78.6	50.5	79.3	1865.6	1862.6	2387.4	2387.3
20180505:09:23:11	23.6	17.5	-4.4	23.94	0.25	2.2	0.25	2.1	126.6	285.7	286.2	78.7	50.6	79.4	1866.9	1863.9	2389.1	2388.9
20180505:09:28:11	23.6	17.5	-4.4	23.94	0.25	2.2	0.25	2.1	126.6	285.7	286.2	78.7	50.5	79.4	1868.3	1865.3	2390.8	2390.7
20180505:09:33:11	23.6	17.6	-4.4	23.94	0.25	2.2	0.25	2.1	126.8	285.7	286.2	78.8	50.6	79.5	1869.6	1866.6	2392.5	2392.4
20180505:09:38:11	23.6	17.6	-4.4	23.94	0.25	2.2	0.25	2.1	126.8	285.7	286.3	78.8	50.5	79.5	1871.0	1868.0	2394.2	2394.1
20180505:09:43:11	23.6	17.6	-4.4	23.94	0.25	2.2	0.25	2.1	127.0	285.7	286.2	78.9	50.6	79.5	1872.3	1869.3	2396.0	2395.8
20180505:09:48:11	23.6	17.7	-4.4	23.94	0.25	2.2	0.25	2.1	127.1	285.7	286.3	79.0	50.5	79.6	1873.7	1870.7	2397.6	2397.5
20180505:09:53:11	23.6	17.6	-4.4	23.94	0.25	2.2	0.25	2.1	127.0	285.7	286.2	79.1	50.6	79.7	1875.0	1872.0	2399.4	2399.3
20180505:09:58:11	23.6	17.6	-4.4	23.94	0.25	2.2	0.25	2.1	126.9	285.7	286.3	79.1	50.5	79.7	1876.4	1873.3	2401.1	2401.0
20180505:10:03:11	23.6	17.7	-4.4	23.94	0.25	2.2	0.25	2.1	127.1	285.7	286.2	79.1	50.6	79.8	1877.7	1874.7	2402.8	2402.7
20180505:10:08:11	23.6	17.6	-4.4	23.94	0.25	2.2	0.25	2.1	126.9	285.7	286.2	79.2	50.5	79.9	1879.1	1876.0	2404.5	2404.4
20180505:10:13:11	23.6	17.5	-4.4	23.94	0.25	2.2	0.25	2.1	126.8	285.7	286.3	79.3	50.6	80.0	1880.4	1877.4	2406.2	2406.1
20180505:10:18:11	23.6	17.2	-4.5	23.94	0.25	2.2	0.25	2.1	125.9	285.7	286.2	79.3	50.5	80.0	1881.8	1878.7	2408.0	2407.8
20180505:10:23:11	23.6	16.5	-4.4	23.94	0.25	2.2	0.25	2.1	124.6	285.7	286.3	79.4	50.6	80.0	1883.1	1880.1	2409.7	2409.6
20180505:10:28:11	23.6	17.1	-4.3	23.93	0.25	2.2	0.25	2.1	125.8	285.7	286.2	79.4	50.5	80.1	1884.4	1881.4	2411.4	2411.3
20180505:10:33:11	23.6	17.2	-3.9	23.90	0.25	2.1	0.25	2.1	126.1	285.8	286.3	79.5	50.5	80.1	1885.8	1882.8	2413.1	2413.0
20180505:10:38:11	23.6	17.4	-4.0	23.91	0.25	2.2	0.25	2.1	126.5	285.8	286.3	79.5	50.5	80.2	1887.1	1884.1	2414.8	2414.7
20180505:10:43:11	23.6	17.6	-4.0	23.91	0.25	2.2	0.25	2.1	126.8	285.7	286.3	79.5	50.5	80.3	1888.5	1885.5	2416.6	2416.5
20180505:10:48:11	23.6	17.5	-4.0	23.91	0.25	2.1	0.25	2.1	126.7	285.7	286.3	79.6	50.5	80.3	1889.8	1886.8	2418.3	2418.1
20180505:10:53:11	23.6	17.6	-4.0	23.91	0.25	2.2	0.25	2.1	126.9	285.7	286.2	79.7	50.5	80.4	1891.2	1888.1	2420.0	2419.9
20180505:10:58:11	23.6	17.6	-4.0	23.91	0.25	2.2	0.25	2.1	126.9	285.8	286.4	79.8	50.5	80.4	1892.5	1889.5	2421.7	2421.6
20180505:11:03:11	23.6	17.8	-4.0	23.91	0.25	2.2	0.25	2.1	127.3	285.7	286.3	79.9	50.5	80.5	1893.8	1890.8	2423.4	2423.3
20180505:11:08:11	23.6	17.9	-4.0	23.91	0.25	2.2	0.25	2.1	127.5	285.8	286.3	79.9	50.5	80.6	1895.2	1892.2	2425.2	2425.0
20180505:11:13:11	23.6	17.9	-4.0	23.91	0.25	2.2	0.25	2.1	127.4	285.8	286.4	80.0	50.5	80.7	1896.5	1893.5	2426.9	2426.7
20180505:11:18:11	23.6	17.9	-4.0	23.90	0.25	2.2	0.25	2.1	127.5	285.7	286.2	80.0	50.5	80.7	1897.9	1894.8	2428.6	2428.5
20180505:11:23:11	23.6	17.9	-4.0	23.91	0.25	2.2	0.25	2.1	127.5	285.7	286.3	80.1	50.5	80.8	1899.2	1896.2	2430.3	2430.2
20180505:11:28:11	23.6	17.8	-4.0	23.90	0.25	2.2	0.25	2.1	127.3	285.7	286.3	80.1	50.5	80.8	1900.6	1897.5	2432.1	2431.9
20180505:11:33:11	23.6	17.8	-4.0	23.90	0.25	2.2	0.25	2.1	127.3	285.7	286.2	80.2	50.5	80.9	1901.9	1898.8	2433.8	2433.6
20180505:11:38:11	23.6	17.7	-4.0	23.90	0.25	2.2	0.25	2.1	127.1	285.7	286.3	80.3	50.5	81.0	1903.2	1900.2	2435.5	2435.4
20180505:11:43:11	23.6	17.7	-3.9	23.90	0.25	2.2	0.25	2.1	127.2	285.8	286.3	80.3	50.5	81.0	1904.6	1901.5	2437.2	2437.1
20180505:11:48:11	23.6	17.8	-3.9	23.90	0.25	2.2	0.25	2.1	127.3	285.7	286.3	80.4	50.5	81.1	1905.9	1902.9	2438.9	2438.8
20180505:11:53:11	23.6	17.8	-4.0	23.89	0.25	2.2	0.25	2.1	127.3	285.7	286.2	80.5	50.5	81.1	1907.3	1904.2	2440.7	2440.5
20180505:11:58:11	23.6	17.8	-3.9	23.89	0.25	2.2	0.25	2.1	127.2	285.7	286.3	80.5	50.5	81.2	1908.6	1905.6	2442.4	2442.2
20180505:12:03:11	23.6	17.8	-3.9	23.88	0.25	2.1	0.25	2.1	127.2	285.7	286.3	80.6	50.5	81.3	1910.0	1906.9	2444.1	2444.0
20180505:12:08:11	23.6	17.7	-3.9	23.89	0.25	2.1	0.25	2.1	127.1	285.7	286.3	80.7	50.5	81.4	1911.3	1908.2	2445.9	2445.7
20180505:12:13:11	23.6	17.8	-4.0	23.89	0.25	2.2	0.25	2.1	127.3	285.7	286.2	80.7	50.5	81.4	1912.7	1909.6	2447.5	2447.4
20180505:12:18:11	23.6	17.7	-3.9	23.88	0.25	2.2	0.25	2.1	127.1	285.7	286.3	80.8	50.6	81.5	1914.0	1910.9	2449.3	2449.1
20180505:12:23:11	23.6	17.8	-3.9	23.88	0.25	2.2	0.25	2.1	127.4	285.7	286.2	80.9	50.5	81.6	1915.3	1912.3	2451.0	2450.9
20180505:12:28:11	23.6	17.7	-3.9	23.88	0.25	2.2	0.25	2.1	127.2	285.7	286.3	81.0	50.5	81.6	1916.7	1913.6	2452.7	2452.6
20180505:12:33:11	23.6	17.7	-3.6	23.88	0.25	2.2	0.25	2.1	127.0	285.7	286.3	81.0	50.5	81.7	1918.0	1915.0	2454.5	2454.3
20180505:12:38:11	23.6	17.5	-3.5	23.88	0.25	2.2	0.25	2.1	126.7	285.7	286.3	81.1	50.6	81.7	1919.4	1916.3	2456.2	2456.0
20180505:12:43:11	23.6	17.4	-3.7	23.88	0.25	2.2	0.25	2.1	126.5	285.7	286.2	81.1	50.5	81.8	1920.8	1917.7	2457.9	2457.8
20180505:12:48:11	23.6	17.1	-3.6	23.88	0.25	2.2	0.25	2.1	125.7	285.7	286.3	81.2	50.6	81.9	1922.1	1919.0	2459.6	2459.5
20180505:12:53:11	23.6	17.1	-3.8	23.88	0.25	2.2	0.25	2.1	125.8	285.7	286.3	81.3	50.5	82.0	1923.4	1920.3	2461.4	2461.2
20180505:12:58:11	23.6	17.0	-3.7	23.87	0.25	2.2	0.25	2.1	125.6	285.6	286.2	81.3	50.6	82.0	1924.8	1921.7	2463.1	2463.0
20180505:13:03:11	23.6	16.9	-3.6	23.87	0.25	2.2	0.25	2.1	125.4	285.7	286.3	81.4	50.5	82.1	1926.1	1923.0	2464.8	2464.7

Time:	Stack Pressure:	Sat% H2O:	Static:	Barometric:	Flowmeter1:	Vacuum1:	Flowmeter2:	Vacuum2:	Stack Temp:	Sorbent Temp:	Probe Temp:	DGM#1 Temp:	Condenser Temp:	DGM#2 Temp:	DGM1*:	DGM2*:	DGM1:	DGM2:
day:hh:mm:ss	in-Hg	Percent	in-H2O	in-Hg	l/min	in-Hg	l/min	in-Hg	degF	degF	degF	degF	degF	degF	liters STP	liters STP	liters nominal	liters nominal
20180505:13:08:11	23.6	16.8	-3.7	23.88	0.25	2.2	0.25	2.1	125.1	285.7	286.3	81.4	50.6	82.1	1927.5	1924.4	2466.6	2466.5
20180505:13:13:11	23.6	16.7	-3.8	23.87	0.25	2.2	0.25	2.1	125.0	285.7	286.3	81.5	50.5	82.2	1928.8	1925.7	2468.3	2468.2
20180505:13:18:11	23.6	16.6	-3.7	23.87	0.25	2.2	0.25	2.1	124.8	285.6	286.2	81.6	50.6	82.3	1930.2	1927.1	2470.1	2469.9
20180505:13:23:11	23.6	16.6	-3.8	23.87	0.25	2.2	0.25	2.1	124.7	285.7	286.3	81.6	50.6	82.3	1931.6	1928.4	2471.8	2471.7
20180505:13:28:11	23.6	16.6	-3.6	23.87	0.25	2.2	0.25	2.1	124.6	285.7	286.3	81.7	50.6	82.4	1932.9	1929.8	2473.5	2473.4
20180505:13:33:11	23.6	16.6	-3.6	23.86	0.25	2.2	0.25	2.1	124.7	285.7	286.3	81.7	50.6	82.4	1934.3	1931.1	2475.3	2475.1
20180505:13:38:11	23.6	15.9	-3.9	23.86	0.25	2.2	0.25	2.1	123.0	285.6	286.2	81.8	50.6	82.5	1935.6	1932.5	2477.0	2476.9
20180505:13:43:11	23.6	15.5	-3.8	23.87	0.25	2.2	0.25	2.1	122.3	285.6	286.3	81.9	50.6	82.6	1937.0	1933.9	2478.8	2478.6
20180505:13:48:11	23.6	15.3	-3.7	23.86	0.25	2.2	0.25	2.1	121.6	285.6	286.3	82.0	50.6	82.7	1938.3	1935.2	2480.5	2480.3
20180505:13:53:11	23.6	15.7	-3.7	23.86	0.25	2.2	0.25	2.1	122.7	285.6	286.3	82.1	50.6	82.8	1939.7	1936.6	2482.3	2482.1
20180505:13:58:11	23.6	16.0	-3.8	23.86	0.25	2.2	0.25	2.2	123.2	285.7	286.4	82.2	50.6	82.9	1941.0	1937.9	2484.0	2483.8
20180505:14:03:11	23.6	16.0	-3.6	23.86	0.25	2.2	0.25	2.2	123.3	285.7	286.2	82.3	50.6	82.9	1942.4	1939.2	2485.8	2485.5
20180505:14:08:11	23.6	16.0	-3.7	23.86	0.25	2.2	0.25	2.2	123.3	285.7	286.3	82.4	50.7	83.0	1943.7	1940.6	2487.5	2487.3
20180505:14:13:11	23.6	15.9	-3.8	23.86	0.25	2.2	0.25	2.1	123.2	285.8	286.3	82.5	50.6	83.1	1945.1	1941.9	2489.3	2489.0
20180505:14:18:11	23.6	15.9	-4.0	23.86	0.25	2.2	0.25	2.2	123.2	285.7	286.3	82.6	50.7	83.2	1946.4	1943.3	2491.0	2490.8
20180505:14:23:11	23.6	16.0	-3.9	23.85	0.25	2.2	0.25	2.2	123.2	285.8	286.3	82.7	50.6	83.3	1947.8	1944.6	2492.7	2492.5
20180505:14:28:11	23.6	16.0	-3.8	23.85	0.25	2.2	0.25	2.1	123.3	285.7	286.3	82.7	50.7	83.3	1949.2	1946.0	2494.5	2494.3
20180505:14:33:11	23.6	16.1	-3.9	23.85	0.25	2.2	0.25	2.1	123.4	285.7	286.3	82.8	50.6	83.4	1950.5	1947.3	2496.2	2496.0
20180505:14:38:11	23.6	16.1	-3.8	23.85	0.25	2.2	0.25	2.2	123.5	285.8	286.3	82.9	50.7	83.5	1951.9	1948.7	2498.0	2497.7
20180505:14:43:11	23.6	15.6	-3.9	23.85	0.25	2.2	0.25	2.1	122.3	285.7	286.3	83.0	50.6	83.6	1953.2	1950.0	2499.7	2499.5
20180505:14:48:11	23.6	15.8	-3.9	23.85	0.25	2.2	0.25	2.1	122.7	285.8	286.3	83.1	50.7	83.7	1954.6	1951.4	2501.4	2501.2
20180505:14:53:11	23.6	16.0	-3.9	23.85	0.25	2.2	0.25	2.2	123.4	285.7	286.3	83.2	50.6	83.7	1955.9	1952.7	2503.2	2503.0
20180505:14:58:11	23.6	16.2	-3.9	23.85	0.25	2.2	0.25	2.2	123.7	285.7	286.3	83.3	50.7	83.8	1957.3	1954.1	2505.0	2504.7
20180505:15:03:11	23.6	16.2	-3.6	23.84	0.25	2.2	0.25	2.2	123.8	285.8	286.3	83.3	50.6	83.9	1958.6	1955.4	2506.7	2506.5
20180505:15:08:11	23.6	16.2	-3.5	23.84	0.25	2.2	0.25	2.2	123.9	285.7	286.3	83.4	50.8	84.0	1960.0	1956.8	2508.5	2508.2
20180505:15:13:11	23.6	16.2	-3.6	23.84	0.25	2.2	0.25	2.2	123.8	285.8	286.4	83.6	50.6	84.1	1961.3	1958.1	2510.2	2509.9
20180505:15:18:11	23.6	16.3	-3.7	23.84	0.25	2.2	0.25	2.2	124.0	285.7	286.2	83.6	50.7	84.2	1962.7	1959.5	2512.0	2511.7
20180505:15:23:11	23.6	16.2	-3.8	23.84	0.25	2.2	0.25	2.2	123.9	285.8	286.3	83.7	50.7	84.2	1964.1	1960.8	2513.7	2513.4
20180505:15:28:11	23.6	16.2	-3.8	23.84	0.25	2.2	0.25	2.2	123.8	285.7	286.2	83.7	50.7	84.3	1965.4	1962.2	2515.5	2515.2
20180505:15:33:11	23.6	16.3	-3.8	23.84	0.25	2.2	0.25	2.2	123.9	285.7	286.3	83.8	50.6	84.3	1966.8	1963.5	2517.2	2516.9
20180505:15:38:11	23.6	16.3	-3.8	23.84	0.25	2.2	0.25	2.2	123.9	285.7	286.3	83.8	50.7	84.4	1968.1	1964.9	2519.0	2518.7
20180505:15:43:11	23.6	16.3	-3.8	23.84	0.25	2.2	0.25	2.2	124.0	285.7	286.2	83.9	50.7	84.5	1969.5	1966.2	2520.7	2520.4
20180505:15:48:11	23.6	16.3	-3.8	23.84	0.25	2.2	0.25	2.2	123.9	285.7	286.3	84.0	50.7	84.6	1970.9	1967.6	2522.5	2522.2
20180505:15:53:11	23.6	16.2	-3.8	23.84	0.25	2.2	0.25	2.2	123.9	285.7	286.3	84.0	50.7	84.6	1972.2	1968.9	2524.2	2523.9
20180505:15:58:11	23.6	16.3	-3.8	23.84	0.25	2.2	0.25	2.2	124.1	285.7	286.3	84.1	50.7	84.7	1973.6	1970.3	2526.0	2525.7
20180505:16:03:11	23.6	16.2	-3.8	23.84	0.25	2.2	0.25	2.2	123.8	285.7	286.3	84.2	50.7	84.8	1974.9	1971.6	2527.8	2527.4
20180505:16:08:11	23.6	16.2	-3.7	23.83	0.25	2.2	0.25	2.2	123.8	285.7	286.3	84.3	50.7	84.9	1976.3	1973.0	2529.5	2529.2
20180505:16:13:11	23.6	16.1	-3.7	23.83	0.25	2.2	0.25	2.2	123.5	285.8	286.3	84.3	50.7	84.9	1977.6	1974.3	2531.3	2530.9
20180505:16:18:11	23.6	15.6	-3.7	23.83	0.25	2.2	0.25	2.2	122.3	285.7	286.3	84.3	50.7	85.0	1979.0	1975.7	2533.0	2532.7
20180505:16:23:11	23.6	15.3	-3.7	23.84	0.25	2.2	0.25	2.2	121.7	285.7	286.3	84.4	50.8	85.0	1980.3	1977.0	2534.8	2534.4
20180505:16:28:11	23.6	15.3	-3.7	23.84	0.25	2.2	0.25	2.2	121.8	285.7	286.3	84.4	50.7	85.1	1981.7	1978.4	2536.5	2536.2
20180505:16:33:11	23.6	15.9	-3.7	23.84	0.25	2.2	0.25	2.2	123.1	285.8	286.4	84.5	50.7	85.1	1983.0	1979.7	2538.3	2537.9
20180505:16:38:11	23.6	16.0	-3.7	23.84	0.25	2.2	0.25	2.2	123.3	285.8	286.3	84.5	50.7	85.2	1984.4	1981.1	2540.0	2539.7
20180505:16:43:11	23.6	15.7	-3.7	23.84	0.25	2.2	0.25	2.2	122.6	285.7	286.4	84.6	50.8	85.3	1985.8	1982.4	2541.8	2541.4
20180505:16:48:11	23.6	15.4	-3.7	23.84	0.25	2.2	0.25	2.2	122.0	285.8	286.3	84.6	50.7	85.3	1987.1	1983.8	2543.5	2543.2
20180505:16:53:11	23.6	15.4	-3.7	23.84	0.25	2.2	0.25	2.2	121.8	285.7	286.4	84.7	50.8	85.4	1988.5	1985.1	2545.3	2545.0
20180505:16:58:11	23.6	15.8	-3.8	23.84	0.25	2.2	0.25	2.2	123.0	285.7	286.2	84.7	50.7	85.4	1989.8	1986.5	2547.1	2546.7
20180505:17:03:11	23.6	16.2	-3.7	23.84	0.25	2.2	0.25	2.2	123.7	285.8	286.4	84.8	50.8	85.5	1991.2	1987.8	2548.8	2548.4
20180505:17:08:11	23.6	16.3	-3.8	23.84	0.25	2.2	0.25	2.2	123.9	285.8	286.3	84.9	50.8	85.6	1992.6	1989.2	2550.6	2550.2
20180505:17:13:11	23.6	16.4	-3.8	23.84	0.25	2.2	0.25	2.2	124.3	285.8	286.3	84.9	50.8	85.6	1993.9	1990.5	2552.3	2551.9
20180505:17:18:11	23.6	16.5	-3.8	23.84	0.25	2.2	0.25	2.2	124.4	285.8	286.3	85.0	50.8	85.7	1995.3	1991.9	2554.1	2553.7
20180505:17:23:11	23.6	16.5	-3.8	23.84	0.25	2.2	0.25	2.2	124.3	285.8	286.4	85.1	50.8	85.7	1996.6	1993.2	2555.9	2555.4
20180505:17:28:11	23.6	16.5	-3.8	23.84	0.25	2.2	0.25	2.2	124.4	285.7	286.3	85.1	50.8	85.8	1998.0	1994.6	2557.6	2557.2
20180505:17:33:11	23.6	16.2	-3.8	23.84	0.25	2.2	0.25	2.2	123.7	285.7	286.2	85.2	50.8	85.8	1999.3	1996.0	2559.4	2559.0
20180505:17:38:11	23.6	15.8	-3.7	23.83	0.25	2.2	0.25	2.2	122.8	285.7	286.3	85.3	50.8	85.9	2000.7	1997.3	2561.2	2560.7
20180505:17:43:11	23.6	15.7	-3.7	23.84	0.25	2.2	0.25	2.2	122.6	285.6	286.3	85.3	50.8	86.0	2002.0	1998.7	2562.9	2562.5
20180505:17:48:11	23.6	16.2	-3.7	23.83	0.25	2.2	0.25	2.2	123.8	285.7	286.3	85.4	50.9	86.0	2003.4	2000.0	2564.7	2564.2
20180505:17:53:11	23.6	16.5	-3.7	23.83	0.25	2.2	0.25	2.2	124.3	285.7	286.3	85.6	50.8	86.1	2004.8	2001.4	2566.5	2566.0
20180505:17:58:11	23.6	16.5	-3.8	23.83	0.25	2.2	0.25	2.2	124.5	285.8	286.4	85.6	50.9	86.1	2006.1	2002.7	2568.2	2567.8
20180505:18:03:11	23.6	16.2	-3.7	23.83	0.25	2.2	0.25	2.2	123.8	285.8	286.3	85.7	50.8	86.2	2007.5	2004.1	2570.0	2569.5
20180505:18:08:11	23.6	15.8	-3.7	23.83	0.25	2.2	0.25	2.2	122.9	285.7	286.3	85.8	50.9	86.3	2008.9	2005.4	2571.8	2571.3
20180505:18:13:11	23.6	15.7	-3.8	23.83	0.25	2.2	0.25	2.2	122.7	285.7	286.4	85.9	50.9	86.3	2010.2	2006.8	2573.5	2573.0
20180505:18:18:11	23.6	16.3	-3.7	23.83	0.25	2.2	0.25	2.2	123.9	285.8	286.4	86.0	50.9	86.4	2011.6	2008.2	2575.3	2574.8
20180505:18:23:11	23.6	16.5	-3.8	23.83	0.25	2.2	0.25	2.2	124.4	285.8	286.3	86.0	50.9	86.4	2013.0	2009.5	2577.1	2576.6
20180505:18:28:11	23.6	16.7	-3.7	23.83	0.25	2.2	0.25	2.2	124.8	285.8	286.4	86.1	50.8	86.5	2014.3	2010.8	2578.8	2578.3
20180505:18:33:11	23.6	16.7	-3.7	23.83	0.25	2.2	0.25	2.2	124.9	285.9	286.4	86.2	50.9	86.6	2015.7	2012.2	2580.6	2580.1
20180505:18:38:11	23.6	16.8	-3.7	23.83	0.25	2.2	0.25	2.2	125.0	285.8	286.3	86.2	50.8	86.6	2017.0	2013.5	2582.4	2581.8
20180505:18:43:11	23.6	16.7	-3.7	23.83	0.25	2.2	0.25	2.2	124.9	285.8	286.4	86.3	50.9	86.6	2018.4	2014.9	2584.1	2583.6
20180505:18:48:11	23.6	16.7	-3.7	23.83	0.25	2.2	0.25	2.2	124.9	285.9	286.4	86.3	50.8	86.7	2019.8	2016.3	2585.9	2585.4
20180505:18:53:11	23.6	16.7	-3.7	23.83	0.25	2.2	0.25	2.2	124.9	285.8	286.4	86.3	50.9	86.8	2021.1	2017.6	2587.7	2587.1
20180505:18:58:11	23.6	16.5	-3.7	23.83	0.25	2.2	0.25	2.2	124.3	285.8	286.3	86.3	50.8	86.8	2022.5	2019.0	2589.4	2588.9
20180505:19:03:11	23.6	16.1	-3.7	23.83	0.25	2.2	0.25	2.2	123.6	285.8	286.4	86.4	50.8	86.9	2023.9	2020.3	2591.2	2590.6
20180505:19:08:11	23.6	16.0	-3.7	23.83	0.25	2.2	0.25	2.2	123.2	285.7	286.4	86.4	50.9	86.9	2025.2	2021.7	2593.0	2592.4
20180505:19:13:11	23.6	16.5	-3.7	23.83	0.25	2.2	0.25	2.2	124.5	285.8	286.4	86.4	50.8	87.0	2026.6	2023.0	2594.7	2594.2
20180505:19:18:11	23.6	16.8	-3.7	23.84	0.25	2.2	0.25	2.2	125.2	285.8	286.3	86.4	50.9	87.0	2028.0	2024.4	2596.5	2595.9
20180505:19:23:11	23.6	16.9	-3.7	23.84	0.25	2.2	0.25	2.2	125.4	285.8	286.4	86.4	50.8	87.0	2029.3	2025.8	2598.3	2597.7
20180505:19:28:11	23.6	16.9	-3.7	23.84	0.25	2.2	0.25	2.2	125.4	285.9	286.4	86.5	50.9	87.0	2030.7	2027.1	2600.1	2599.4
20180505:19:33:11	23.6	16.9	-3.7	23.84	0.25	2.2	0.25	2.2	125.2	285.9	286.4	86.4	50.9	87.1	2032.0	2028.5	2601.8	2601.2
20180505:19:38:11	23.6	16.8	-3.7	23.84	0.25	2.2	0.25	2.2	125.2	285.8	286.3	86.5	50.9	87.1	2033.4	2029.8	2603.6	2603.0
20180505:19:43:11	23.6	16.8	-3.5	23.85	0.25	2.2	0.25	2.2	125.1	285.8	286.4	86.5	50.9	87.2	2034.8	2031.2	2605.4	2604.7
20180505:19:48:11	23.6	16.4	-3.4	23.85	0.25	2.2	0.25	2.2	124.2	285.7	286.3	86.5	50.9	87.2	2036.1	2032.5	2607.1	2606.5
20180505:19:53:11	23.6	16.0	-3.2	23.85	0.25	2.2	0.25	2.2	123.4	285.7	286.3	86.5	50.9	87.2	2037.5	2033.9	2608.9	2608.2
20180505:19:58:11	23.6	15.8	-2.9	23.85	0.25	2.2	0.25	2.2	123.1	285.7	286.4	86.5	50.9	87.2	2038.8	2035.2	2610.7	2610.0
20180505:20:03:11	23.6	16.4	-3.2	23.85	0.25	2.2	0.25	2.2	124.2	285.7	286.3	86.5	50.9	87.2	2040.2	2036.6	2612.4	2611.8
20180505:20:08:11	23.7	16.5	-2.5	23.85	0.25	2.2	0.25	2.2	124.6	285.8	286.4	86.5	50.9	87.2	2041.5	2037.9	2614.2	2613.5
20180505:20:13:11	23.7	16.5	-2.3	23.85	0.25	2.2	0.25	2.2	124.7	285.8	286.4	86.5	50.9	87.2	2042.9	2039.3	2616.0	2615.3
20180505:20:18:11	23.7	16.0	-2.1	23.85	0.25	2.2	0.25	2.2	123.6	285.8	286.4	86.5	50.9	87.2	2044.3	2040.6	2617.7	2617.1
20180505:20:23:11	23.7	15.8	-2.2	23.85	0.25	2.2	0.25	2.2	123.1	285.7	286.4	86.5	50.9	87.2	2045.6	2042.0	2619.5	2618.8
20180505:20:28:11	23.5	16.2	-4.3	23.85	0.25	2.2	0.25	2.2	123.8	285.8	286.4	86.5	50.9	87.3	2047.0	2043.4	2621.3	2620.6

Time:	Stack Pressure:	Sat% H2O:	Static:	Barometric:	Flowmeter1:	Vacuum1:	Flowmeter2:	Vacuum2:	Stack Temp:	Sorbent Temp:	Probe Temp:	DGM#1 Temp:	Condenser Temp:	DGM#2 Temp:	DGM1*:	DGM2*:	DGM1:	DGM2:
day:hh:mm:ss	in-Hg	Percent	in-H2O	in-Hg	l/min	in-Hg	l/min	in-Hg	degF	degF	degF	degF	degF	degF	liters STP	liters STP	liters nominal	liters nominal
20180505:20:33:11	23.7	16.5	-2.5	23.85	0.25	2.2	0.25	2.2	124.6	285.8	286.4	86.5	50.9	87.3	2048.4	2044.7	2623.0	2622.3
20180505:20:38:11	23.7	16.6	-2.5	23.85	0.25	2.2	0.25	2.2	124.8	285.9	286.4	86.5	50.9	87.3	2049.7	2046.1	2624.8	2624.1
20180505:20:43:11	23.7	16.6	-2.0	23.86	0.25	2.2	0.25	2.2	124.8	285.9	286.4	86.5	50.9	87.3	2051.1	2047.4	2626.6	2625.9
20180505:20:48:11	23.6	16.3	-3.2	23.85	0.25	2.2	0.25	2.2	124.2	285.8	286.4	86.5	50.9	87.3	2052.4	2048.8	2628.3	2627.6
20180505:20:53:11	23.7	15.9	-2.2	23.85	0.25	2.2	0.25	2.2	123.3	285.8	286.4	86.5	50.9	87.3	2053.8	2050.2	2630.1	2629.4
20180505:20:58:11	23.7	16.3	-1.8	23.86	0.25	2.2	0.25	2.2	124.2	285.8	286.4	86.5	50.9	87.3	2055.2	2051.5	2631.9	2631.2
20180505:21:03:11	23.7	16.5	-2.6	23.86	0.25	2.2	0.25	2.2	124.6	285.9	286.4	86.5	50.9	87.3	2056.5	2052.9	2633.6	2633.0
20180505:21:08:11	23.6	16.6	-3.7	23.86	0.25	2.2	0.25	2.2	124.7	285.9	286.4	86.5	50.9	87.3	2057.9	2054.2	2635.4	2634.7
20180505:21:13:11	23.6	16.6	-2.9	23.86	0.25	2.2	0.25	2.2	124.7	285.8	286.4	86.5	50.9	87.3	2059.3	2055.6	2637.2	2636.4
20180505:21:18:11	23.7	16.6	-2.7	23.86	0.25	2.2	0.25	2.2	124.7	285.8	286.4	86.5	51.0	87.3	2060.6	2056.9	2638.9	2638.2
20180505:21:23:11	23.6	16.6	-3.0	23.86	0.25	2.2	0.25	2.2	124.8	285.8	286.4	86.4	50.9	87.3	2062.0	2058.3	2640.7	2640.0
20180505:21:28:11	23.7	16.6	-2.6	23.86	0.25	2.2	0.25	2.2	124.9	285.8	286.4	86.4	50.9	87.2	2063.3	2059.7	2642.5	2641.8
20180505:21:33:11	23.5	16.7	-4.4	23.86	0.25	2.2	0.25	2.2	124.9	285.8	286.3	86.3	50.9	87.2	2064.7	2061.0	2644.2	2643.5
20180505:21:38:11	23.7	16.5	-2.0	23.86	0.25	2.2	0.25	2.2	124.8	285.8	286.4	86.3	50.9	87.2	2066.1	2062.3	2646.0	2645.3
20180505:21:43:11	23.7	16.0	-2.8	23.86	0.25	2.2	0.25	2.2	123.4	285.8	286.4	86.4	50.9	87.2	2067.4	2063.7	2647.8	2647.0
20180505:21:48:11	23.6	15.8	-3.1	23.86	0.25	2.2	0.25	2.2	122.9	285.8	286.4	86.4	51.0	87.2	2068.8	2065.1	2649.5	2648.8
20180505:21:53:11	23.7	15.9	-2.4	23.86	0.25	2.2	0.25	2.2	123.2	285.8	286.4	86.5	50.9	87.2	2070.2	2066.4	2651.3	2650.6
20180505:21:58:11	23.7	16.3	-2.0	23.86	0.25	2.2	0.25	2.2	124.1	285.8	286.4	86.5	51.0	87.2	2071.5	2067.8	2653.1	2652.3
20180505:22:03:11	23.7	16.4	-1.9	23.86	0.25	2.2	0.25	2.2	124.5	285.9	286.4	86.5	50.9	87.2	2072.9	2069.1	2654.8	2654.1
20180505:22:08:11	23.7	16.4	-1.7	23.86	0.25	2.2	0.25	2.2	124.6	285.9	286.4	86.5	51.0	87.2	2074.3	2070.5	2656.7	2655.9
20180505:22:13:11	23.7	16.3	-2.0	23.86	0.25	2.2	0.25	2.2	124.2	285.9	286.4	86.5	50.9	87.2	2075.6	2071.8	2658.4	2657.6
20180505:22:18:11	23.7	15.8	-1.8	23.85	0.25	2.2	0.25	2.2	123.1	285.9	286.4	86.5	51.0	87.2	2077.0	2073.2	2660.1	2659.4
20180505:22:23:11	23.7	15.6	-1.7	23.85	0.25	2.2	0.25	2.2	122.6	285.8	286.5	86.4	50.9	87.2	2078.4	2074.6	2662.0	2661.1
20180505:22:28:11	23.7	15.9	-2.1	23.85	0.25	2.2	0.25	2.2	123.3	285.8	286.4	86.4	50.9	87.2	2079.7	2075.9	2663.7	2662.9
20180505:22:33:11	23.6	16.3	-2.9	23.85	0.25	2.2	0.25	2.2	124.1	285.9	286.4	86.3	50.9	87.1	2081.0	2077.3	2665.5	2664.7
20180505:22:38:11	23.7	16.4	-2.4	23.85	0.25	2.2	0.25	2.2	124.3	285.8	286.4	86.3	50.9	87.0	2082.4	2078.6	2667.3	2666.4
20180505:22:43:11	23.6	16.5	-2.8	23.85	0.25	2.2	0.25	2.2	124.7	285.8	286.4	86.3	50.9	87.0	2083.8	2080.0	2669.0	2668.2
20180505:22:48:11	23.6	16.7	-2.8	23.85	0.25	2.2	0.25	2.2	124.9	285.9	286.4	86.3	50.9	87.0	2085.1	2081.4	2670.8	2670.0
20180505:22:53:11	23.7	16.7	-2.4	23.85	0.25	2.2	0.25	2.2	125.0	285.9	286.4	86.2	50.9	87.0	2086.5	2082.7	2672.6	2671.7
20180505:22:58:11	23.6	16.5	-3.9	23.85	0.25	2.2	0.25	2.2	124.4	285.9	286.4	86.2	50.9	87.0	2087.9	2084.1	2674.3	2673.5
20180505:23:03:11	23.6	16.0	-3.8	23.85	0.25	2.2	0.25	2.2	123.3	286.0	286.5	86.2	50.9	87.0	2089.2	2085.4	2676.1	2675.2
20180505:23:08:11	23.6	15.9	-3.8	23.85	0.25	2.2	0.25	2.2	123.0	285.9	286.4	86.1	50.9	87.0	2090.6	2086.8	2677.9	2677.0
20180505:23:13:11	23.6	16.3	-3.8	23.85	0.25	2.2	0.25	2.2	124.1	285.9	286.4	86.1	50.9	87.0	2092.0	2088.1	2679.6	2678.8
20180505:23:18:11	23.6	16.7	-3.8	23.85	0.25	2.2	0.25	2.2	124.8	285.9	286.4	86.1	50.9	86.9	2093.3	2089.5	2681.4	2680.5
20180505:23:23:11	23.6	16.8	-3.8	23.85	0.25	2.2	0.25	2.2	125.1	285.9	286.3	86.0	50.9	86.9	2094.7	2090.8	2683.2	2682.3
20180505:23:28:11	23.6	16.8	-3.8	23.85	0.25	2.2	0.25	2.2	125.2	285.9	286.4	86.0	50.9	86.9	2096.0	2092.2	2684.9	2684.0
20180505:23:33:11	23.6	16.8	-3.8	23.85	0.25	2.2	0.25	2.2	125.1	285.9	286.5	86.0	50.9	86.9	2097.4	2093.5	2686.7	2685.8
20180505:23:38:11	23.6	16.2	-3.8	23.85	0.25	2.2	0.25	2.2	123.7	285.9	286.4	86.0	50.9	86.9	2098.8	2094.9	2688.5	2687.6
20180505:23:43:11	23.6	15.9	-3.8	23.85	0.25	2.2	0.25	2.2	123.0	285.8	286.4	86.0	50.9	86.8	2100.1	2096.2	2690.2	2689.3
20180505:23:48:11	23.6	15.9	-3.8	23.85	0.25	2.2	0.25	2.2	123.0	285.8	286.4	86.0	50.9	86.8	2101.5	2097.6	2692.0	2691.1
20180505:23:53:11	23.6	16.4	-3.8	23.85	0.25	2.2	0.25	2.2	124.3	285.9	286.4	86.0	50.9	86.8	2102.9	2099.0	2693.8	2692.9
20180505:23:58:11	23.6	16.6	-3.8	23.85	0.25	2.2	0.25	2.2	124.6	285.9	286.4	86.0	50.9	86.8	2104.2	2100.3	2695.5	2694.6
20180506:00:03:11	23.6	16.7	-3.8	23.85	0.25	2.2	0.25	2.2	124.8	286.0	286.4	86.0	50.9	86.8	2105.6	2101.7	2697.3	2696.4
20180506:00:08:11	23.6	16.7	-3.9	23.85	0.25	2.2	0.25	2.2	125.0	286.0	286.5	85.9	50.9	86.8	2106.9	2103.0	2699.1	2698.1
20180506:00:13:11	23.6	16.8	-3.9	23.85	0.25	2.2	0.25	2.2	125.1	286.0	286.4	85.9	50.9	86.8	2108.3	2104.4	2700.8	2699.9
20180506:00:18:11	23.6	16.9	-3.9	23.85	0.25	2.2	0.25	2.2	125.3	285.9	286.4	85.9	50.9	86.7	2109.7	2105.7	2702.6	2701.7
20180506:00:23:11	23.6	16.9	-3.9	23.85	0.25	2.2	0.25	2.2	125.2	285.9	286.4	85.9	50.9	86.7	2111.0	2107.1	2704.4	2703.4
20180506:00:28:11	23.6	16.9	-3.9	23.85	0.25	2.2	0.25	2.2	125.3	285.8	286.3	85.9	50.8	86.7	2112.4	2108.5	2706.1	2705.2
20180506:00:33:11	23.6	16.3	-3.7	23.85	0.25	2.2	0.25	2.2	124.0	285.8	286.4	85.8	50.9	86.7	2113.8	2109.8	2707.9	2706.9
20180506:00:38:11	23.6	16.0	-3.8	23.85	0.25	2.2	0.25	2.2	123.4	285.9	286.5	85.9	50.9	86.6	2115.1	2111.2	2709.6	2708.7
20180506:00:43:11	23.6	15.9	-3.7	23.84	0.25	2.2	0.25	2.2	123.2	285.9	286.5	85.8	50.9	86.6	2116.5	2112.5	2711.4	2710.5
20180506:00:48:11	23.6	16.6	-3.7	23.84	0.25	2.2	0.25	2.2	124.6	285.9	286.4	85.8	50.9	86.6	2117.8	2113.9	2713.2	2712.2
20180506:00:53:11	23.6	16.8	-3.7	23.85	0.25	2.2	0.25	2.2	125.1	285.9	286.4	85.7	50.9	86.6	2119.2	2115.2	2714.9	2714.0
20180506:00:58:11	23.6	17.0	-3.8	23.85	0.25	2.2	0.25	2.2	125.6	286.1	286.6	85.7	50.9	86.6	2120.6	2116.6	2716.7	2715.7
20180506:01:03:11	23.6	17.3	-3.9	23.84	0.25	2.2	0.25	2.2	126.2	286.1	286.5	85.7	51.0	86.6	2121.9	2118.0	2718.5	2717.5
20180506:01:08:11	23.5	17.4	-4.0	23.84	0.25	2.2	0.25	2.2	126.4	286.0	286.4	85.7	50.9	86.5	2123.3	2119.3	2720.2	2719.3
20180506:01:13:11	23.6	17.7	-4.0	23.85	0.25	2.2	0.25	2.2	127.0	285.9	286.4	85.6	50.9	86.5	2124.6	2120.7	2722.0	2721.0
20180506:01:18:11	23.6	18.0	-3.9	23.85	0.25	2.2	0.25	2.2	127.7	286.0	286.4	85.6	50.9	86.5	2126.0	2122.0	2723.8	2722.8
20180506:01:23:11	23.6	18.3	-3.9	23.85	0.25	2.2	0.25	2.2	128.2	286.0	286.5	85.5	50.9	86.4	2127.3	2123.4	2725.5	2724.5
20180506:01:28:11	23.6	18.3	-3.9	23.85	0.25	2.2	0.25	2.2	128.2	285.9	286.3	85.5	50.9	86.4	2128.7	2124.7	2727.3	2726.3
20180506:01:33:11	23.6	18.3	-3.8	23.85	0.25	2.2	0.25	2.2	128.3	285.9	286.4	85.4	50.9	86.3	2130.1	2126.1	2729.1	2728.1
20180506:01:38:11	23.6	18.3	-3.7	23.84	0.25	2.2	0.25	2.2	128.3	285.9	286.4	85.3	50.8	86.3	2131.4	2127.4	2730.8	2729.8
20180506:01:43:11	23.6	18.0	-3.8	23.84	0.25	2.2	0.25	2.2	127.6	285.9	286.5	85.3	50.9	86.2	2132.8	2128.8	2732.6	2731.6
20180506:01:48:11	23.6	18.2	-3.7	23.84	0.25	2.2	0.25	2.2	128.1	285.8	286.3	85.3	50.8	86.2	2134.2	2130.1	2734.3	2733.3
20180506:01:53:11	23.6	18.3	-3.7	23.84	0.25	2.2	0.25	2.2	128.3	285.8	286.4	85.2	50.9	86.2	2135.5	2131.5	2736.1	2735.1
20180506:01:58:11	23.6	18.1	-3.7	23.84	0.25	2.2	0.25	2.2	127.9	285.8	286.4	85.2	50.8	86.1	2136.9	2132.8	2737.9	2736.9
20180506:02:03:11	23.6	17.7	-3.7	23.85	0.25	2.2	0.25	2.2	127.1	285.8	286.4	85.2	50.9	86.1	2138.2	2134.2	2739.6	2738.6
20180506:02:08:11	23.6	17.7	-3.8	23.85	0.25	2.2	0.25	2.2	127.0	285.9	286.5	85.2	50.9	86.0	2139.6	2135.6	2741.4	2740.4
20180506:02:13:11	23.6	17.8	-3.7	23.85	0.25	2.2	0.25	2.2	127.3	285.8	286.4	85.1	50.9	86.0	2141.0	2136.9	2743.2	2742.1
20180506:02:18:11	23.6	17.8	-3.7	23.84	0.25	2.2	0.25	2.2	127.2	285.8	286.5	85.1	50.8	86.0	2142.3	2138.3	2744.9	2743.9
20180506:02:23:11	23.6	17.8	-3.7	23.84	0.25	2.2	0.25	2.2	127.3	285.8	286.3	85.1	50.9	86.0	2143.7	2139.6	2746.7	2745.7
20180506:02:28:11	23.6	17.8	-3.7	23.84	0.25	2.2	0.25	2.2	127.3	285.8	286.4	85.1	50.8	86.0	2145.1	2141.0	2748.5	2747.4
20180506:02:33:12	23.6	17.1	-3.8	23.84	0.25	2.2	0.25	2.2	125.7	285.7	286.3	85.0	50.9	85.9	2146.4	2142.4	2750.2	2749.2
20180506:02:38:12	23.6	16.7	-3.8	23.84	0.25	2.2	0.25	2.2	124.9	285.7	286.4	85.1	50.8	85.9	2147.8	2143.7	2752.0	2750.9
20180506:02:43:12	23.6	17.2	-3.8	23.84	0.25	2.2	0.25	2.2	125.9	285.8	286.4	85.1	50.9	85.9	2149.2	2145.1	2753.8	2752.7
20180506:02:48:12	23.6	17.4	-3.7	23.84	0.25	2.2	0.25	2.2	126.3	285.9	286.4	85.0	50.8	85.9	2150.5	2146.4	2755.5	2754.5
20180506:02:53:12	23.6	17.6	-3.7	23.84	0.25	2.2	0.25	2.2	126.7	285.9	286.4	85.1	50.9	85.9	2151.9	2147.8	2757.3	2756.2
20180506:02:58:12	23.6	17.8	-3.8	23.84	0.25	2.2	0.25	2.2	127.2	286.0	286.4	85.1	50.9	85.9	2153.2	2149.1	2759.0	2758.0
20180506:03:03:12	23.6	18.1	-3.8	23.84	0.25	2.2	0.25	2.2	127.9	286.0	286.5	85.0	50.9	85.9	2154.6	2150.5	2760.8	2759.7
20180506:03:08:12	23.6	18.0	-3.9	23.84	0.25	2.2	0.25	2.2	127.7	286.0	286.5	85.0	50.8	85.8	2156.0	2151.9	2762.6	2761.5
20180506:03:13:12	23.6	17.8	-3.8	23.83	0.25	2.2	0.25	2.2	127.3	285.9	286.4	84.9	50.9	85.8	2157.3	2153.2	2764.3	2763.3
20180506:03:18:12	23.6	18.6	-3.9	23.84	0.25	2.2	0.25	2.2	128.8	286.0	286.4	84.9	50.9	85.7	2158.6	2154.5	2766.1	2765.0
20180506:03:23:12	23.5	18.9	-4.0	23.84	0.25	2.2	0.25	2.2	129.4	286.0	286.4	84.9	50.9	85.7	2160.0	2155.9	2767.9	2766.8
20180506:03:28:12	23.5	19.0	-3.9	23.84	0.25	2.2	0.25	2.2	129.6	286.0	286.4	84.8	50.9	85.7	2161.4	2157.3	2769.6	2768.5
20180506:03:33:12	23.6	19.0	-3.9	23.84	0.25	2.2	0.25	2.1	129.7	285.9	286.4	84.7	50.9	85.7	2162.7	2158.6	2771.4	2770.3
20180506:03:38:12	23.5	19.1	-3.9	23.83	0.25	2.2	0.25	2.1	129.8	285.8	286.3	84.7	50.8	85.6	2164.1	2160.0	2773.1	2772.0
20180506:03:43:12	23.5	18.5	-4.0	23.84	0.25	2.2	0.25	2.1	128.5	285.8	286.4	84.7	50.9	85.6	2165.4	2161.3	2774.9	2773.8
20180506:03:48:12	23.5	17.2	-4.1	23.84	0.25	2.2	0.25	2.1	125.9	285.8	286.4	84.6	50.8	85.5	2166.8	2162.7	2776.6	2775.6
20180506:03:53:12	23.5	17.8	-4.2	23.84	0.25	2.2	0.25	2.1	127.3	285.8	286.4	84.6	50.9	85.5	2168.1	2164.0	2778.3	2777.3

Time:	Stack Pressure:	Sat% H2O:	Static:	Barometric:	Flowmeter1:	Vacuum1:	Flowmeter2:	Vacuum2:	Stack Temp:	Sorbent Temp:	Probe Temp:	DGM#1 Temp:	Condenser Temp:	DGM#2 Temp:	DGM1*:	DGM2*:	DGM1:	DGM2:
day:hh:mm:ss	in-Hg	Percent	in-H2O	in-Hg	l/min	in-Hg	l/min	in-Hg	degF	degF	degF	degF	degF	degF	liters STP	liters STP	liters nominal	liters nominal
20180506:03:58:12	23.5	18.3	-4.2	23.84	0.25	2.2	0.25	2.2	128.1	285.8	286.3	84.5	50.8	85.4	2169.5	2165.4	2780.1	2779.0
20180506:04:03:12	23.5	18.5	-4.2	23.84	0.25	2.2	0.25	2.2	128.5	285.8	286.4	84.5	50.9	85.4	2170.8	2166.7	2781.9	2780.7
20180506:04:08:12	23.5	18.6	-4.2	23.84	0.25	2.2	0.25	2.2	128.8	285.8	286.3	84.5	50.9	85.4	2172.2	2168.0	2783.6	2782.5
20180506:04:13:12	23.5	18.4	-4.2	23.84	0.25	2.2	0.25	2.1	128.5	285.8	286.4	84.5	50.9	85.3	2173.5	2169.4	2785.4	2784.2
20180506:04:18:12	23.5	18.5	-4.2	23.84	0.25	2.2	0.25	2.1	128.6	285.8	286.3	84.5	50.8	85.3	2174.9	2170.7	2787.1	2786.0
20180506:04:23:12	23.5	18.6	-4.2	23.84	0.25	2.2	0.25	2.1	128.9	285.9	286.5	84.5	50.9	85.3	2176.2	2172.1	2788.8	2787.8
20180506:04:28:12	23.5	18.6	-4.1	23.84	0.25	2.2	0.25	2.1	128.7	285.9	286.4	84.4	50.9	85.3	2177.6	2173.4	2790.6	2789.4
20180506:04:33:12	23.5	18.6	-4.1	23.84	0.25	2.2	0.25	2.1	128.9	285.9	286.4	84.4	50.9	85.3	2178.9	2174.8	2792.3	2791.2
20180506:04:38:12	23.5	18.5	-4.2	23.84	0.25	2.2	0.25	2.1	128.6	285.8	286.3	84.3	50.8	85.2	2180.3	2176.1	2794.1	2792.9
20180506:04:43:12	23.5	18.4	-4.2	23.84	0.25	2.2	0.25	2.1	128.5	285.9	286.4	84.3	50.9	85.2	2181.6	2177.5	2795.8	2794.7
20180506:04:48:12	23.5	18.5	-4.2	23.84	0.25	2.2	0.25	2.1	128.6	285.9	286.4	84.3	50.9	85.2	2182.9	2178.8	2797.5	2796.4
20180506:04:53:12	23.5	18.4	-4.3	23.84	0.25	2.2	0.25	2.1	128.3	285.9	286.4	84.3	50.8	85.1	2184.3	2180.1	2799.3	2798.2
20180506:04:58:12	23.5	18.4	-4.2	23.84	0.25	2.2	0.25	2.1	128.4	286.0	286.5	84.3	50.9	85.1	2185.7	2181.5	2801.0	2799.9
20180506:05:03:12	23.5	18.3	-4.2	23.84	0.25	2.2	0.25	2.1	128.3	285.9	286.5	84.3	50.9	85.1	2187.0	2182.8	2802.8	2801.6
20180506:05:08:12	23.5	18.3	-4.2	23.84	0.25	2.2	0.25	2.1	128.2	285.9	286.4	84.3	50.9	85.0	2188.4	2184.2	2804.5	2803.4
20180506:05:13:12	23.5	18.3	-4.2	23.84	0.25	2.2	0.25	2.1	128.2	285.8	286.4	84.3	50.9	85.0	2189.7	2185.5	2806.3	2805.1
20180506:05:18:12	23.5	18.3	-4.3	23.84	0.25	2.2	0.25	2.1	128.2	285.8	286.4	84.3	50.9	85.0	2191.1	2186.9	2808.0	2806.9
20180506:05:23:12	23.5	18.2	-4.3	23.84	0.25	2.2	0.25	2.1	128.0	285.8	286.3	84.2	50.9	85.0	2192.4	2188.2	2809.8	2808.6
20180506:05:28:12	23.5	18.2	-4.3	23.84	0.25	2.2	0.25	2.1	128.1	285.9	286.5	84.2	50.9	85.0	2193.7	2189.5	2811.5	2810.4
20180506:05:33:12	23.5	18.3	-4.3	23.85	0.25	2.2	0.25	2.1	128.2	285.9	286.4	84.2	50.9	85.0	2195.1	2190.9	2813.3	2812.1
20180506:05:38:12	23.5	18.3	-4.3	23.85	0.25	2.2	0.25	2.1	128.2	285.9	286.5	84.2	50.9	84.9	2196.4	2192.2	2815.0	2813.8
20180506:05:43:12	23.5	18.2	-4.3	23.85	0.25	2.2	0.25	2.1	127.9	285.9	286.5	84.1	50.9	84.9	2197.8	2193.6	2816.7	2815.6
20180506:05:48:12	23.5	18.2	-4.4	23.85	0.25	2.2	0.25	2.1	127.9	285.9	286.4	84.1	50.9	84.9	2199.2	2194.9	2818.5	2817.3
20180506:05:53:12	23.5	18.2	-4.4	23.85	0.25	2.2	0.25	2.1	128.0	285.9	286.4	84.0	50.8	84.8	2200.5	2196.3	2820.2	2819.1
20180506:05:58:12	23.5	18.1	-4.4	23.85	0.25	2.2	0.25	2.2	127.7	285.9	286.4	84.0	50.9	84.8	2201.9	2197.6	2822.0	2820.8
20180506:06:03:12	23.5	18.0	-4.4	23.86	0.25	2.2	0.25	2.1	127.6	285.8	286.4	83.9	50.8	84.8	2203.2	2198.9	2823.7	2822.5
20180506:06:08:12	23.5	18.0	-4.4	23.86	0.25	2.2	0.25	2.1	127.7	285.8	286.3	83.9	50.9	84.7	2204.5	2200.3	2825.5	2824.3
20180506:06:13:12	23.5	18.1	-4.5	23.86	0.25	2.2	0.25	2.1	127.7	285.8	286.3	83.8	50.8	84.7	2205.9	2201.6	2827.2	2826.0
20180506:06:18:12	23.5	18.1	-4.5	23.86	0.25	2.2	0.25	2.1	127.8	285.8	286.4	83.8	50.9	84.6	2207.2	2203.0	2828.9	2827.8
20180506:06:23:12	23.5	18.1	-4.5	23.86	0.25	2.2	0.25	2.1	127.7	285.8	286.4	83.7	50.8	84.6	2208.6	2204.3	2830.7	2829.5
20180506:06:28:12	23.5	18.1	-4.5	23.87	0.25	2.2	0.25	2.1	127.8	285.8	286.3	83.7	50.9	84.6	2210.0	2205.7	2832.5	2831.3
20180506:06:33:12	23.5	18.1	-4.5	23.87	0.25	2.2	0.25	2.1	127.8	285.8	286.3	83.6	50.8	84.5	2211.3	2207.0	2834.2	2833.0
20180506:06:38:12	23.5	18.0	-4.4	23.87	0.25	2.2	0.25	2.2	127.7	285.8	286.4	83.6	50.9	84.5	2212.7	2208.4	2836.0	2834.7
20180506:06:43:12	23.5	18.1	-4.4	23.87	0.25	2.2	0.25	2.2	127.9	285.9	286.4	83.6	50.8	84.4	2214.0	2209.7	2837.7	2836.5
20180506:06:48:12	23.5	18.2	-4.3	23.86	0.25	2.2	0.25	2.2	128.0	285.8	286.3	83.5	50.9	84.3	2215.4	2211.1	2839.4	2838.2
20180506:06:53:12	23.5	18.1	-4.3	23.87	0.25	2.2	0.25	2.2	127.8	285.8	286.4	83.4	50.8	84.3	2216.7	2212.4	2841.2	2840.0
20180506:06:58:12	23.5	18.1	-4.4	23.87	0.25	2.2	0.25	2.2	127.8	285.9	286.4	83.4	50.9	84.3	2218.1	2213.8	2842.9	2841.7
20180506:07:03:12	23.5	17.7	-4.4	23.87	0.25	2.2	0.25	2.1	127.0	285.8	286.3	83.3	50.8	84.2	2219.4	2215.1	2844.7	2843.5
20180506:07:08:12	23.5	16.8	-4.4	23.87	0.25	2.2	0.25	2.1	125.1	285.7	286.4	83.3	50.9	84.2	2220.8	2216.5	2846.4	2845.3
20180506:07:13:12	23.5	16.4	-4.4	23.87	0.25	2.2	0.25	2.1	124.3	285.6	286.3	83.3	50.8	84.2	2222.1	2217.8	2848.2	2847.0
20180506:07:18:12	23.6	17.0	-4.3	23.87	0.25	2.2	0.25	2.1	125.6	285.7	286.4	83.2	50.9	84.1	2223.5	2219.2	2850.0	2848.8
20180506:07:23:12	23.6	17.2	-4.2	23.87	0.25	2.2	0.25	2.2	126.0	285.8	286.3	83.2	50.8	84.1	2224.9	2220.5	2851.7	2850.5
20180506:07:28:12	23.6	17.4	-4.1	23.87	0.25	2.2	0.25	2.2	126.5	285.8	286.4	83.1	50.9	84.0	2226.2	2221.9	2853.4	2852.3
20180506:07:33:12	23.6	17.4	-4.1	23.87	0.25	2.2	0.25	2.2	126.4	285.8	286.4	83.1	50.7	84.0	2227.6	2223.3	2855.2	2854.0
20180506:07:38:12	23.6	17.3	-4.2	23.87	0.25	2.2	0.25	2.2	126.2	285.8	286.3	83.1	50.8	84.0	2228.9	2224.6	2856.9	2855.7
20180506:07:43:12	23.6	16.8	-4.2	23.87	0.25	2.2	0.25	2.1	125.1	285.7	286.4	83.1	50.8	84.0	2230.3	2226.0	2858.7	2857.5
20180506:07:48:12	23.6	17.2	-4.2	23.87	0.25	2.2	0.25	2.2	126.0	285.8	286.3	83.0	50.8	83.9	2231.7	2227.3	2860.5	2859.2
20180506:07:53:12	23.6	17.5	-4.1	23.87	0.25	2.2	0.25	2.2	126.6	285.9	286.4	83.0	50.8	83.9	2233.0	2228.7	2862.2	2861.0
20180506:07:58:12	23.6	17.7	-4.0	23.87	0.25	2.2	0.25	2.2	126.9	285.8	286.3	82.9	50.8	83.8	2234.4	2230.0	2864.0	2862.7
20180506:08:03:12	23.6	17.5	-4.0	23.87	0.25	2.2	0.25	2.2	126.6	285.8	286.3	82.9	50.8	83.8	2235.7	2231.4	2865.7	2864.5
20180506:08:08:12	23.6	17.7	-3.8	23.87	0.25	2.2	0.25	2.2	127.0	285.8	286.3	82.9	50.8	83.8	2237.1	2232.8	2867.4	2866.3
20180506:08:13:12	23.6	17.7	-3.9	23.87	0.25	2.2	0.25	2.2	127.0	285.8	286.3	82.9	50.8	83.8	2238.5	2234.1	2869.2	2868.0
20180506:08:18:12	23.6	17.5	-3.8	23.88	0.25	2.2	0.25	2.2	126.7	285.7	286.3	82.9	50.7	83.7	2239.8	2235.5	2870.9	2869.8
20180506:08:23:12	23.6	17.5	-3.7	23.88	0.25	2.2	0.25	2.2	126.7	285.7	286.3	82.9	50.7	83.7	2241.2	2236.8	2872.7	2871.5
20180506:08:28:12	23.6	17.6	-3.7	23.88	0.25	2.2	0.25	2.2	126.9	285.7	286.3	82.9	50.7	83.7	2242.5	2238.2	2874.5	2873.3
20180506:08:33:12	23.6	17.7	-3.7	23.88	0.25	2.2	0.25	2.2	127.0	285.8	286.3	82.9	50.7	83.7	2243.9	2239.5	2876.2	2875.0
20180506:08:38:12	23.6	17.8	-3.6	23.88	0.25	2.2	0.25	2.2	127.3	285.8	286.4	82.9	50.7	83.7	2245.3	2240.9	2878.0	2876.7
20180506:08:43:12	23.6	17.8	-3.7	23.88	0.25	2.2	0.25	2.2	127.4	285.8	286.4	82.9	50.7	83.7	2246.6	2242.3	2879.7	2878.5
20180506:08:48:12	23.6	17.9	-3.7	23.88	0.25	2.2	0.25	2.2	127.4	285.9	286.4	83.0	50.7	83.7	2248.0	2243.6	2881.4	2880.2
20180506:08:53:12	23.6	17.9	-3.7	23.88	0.25	2.2	0.25	2.2	127.6	285.8	286.4	83.0	50.7	83.8	2249.3	2245.0	2883.2	2882.0
20180506:08:58:12	23.6	18.0	-3.6	23.88	0.25	2.2	0.25	2.2	127.7	285.9	286.4	83.0	50.7	83.8	2250.7	2246.3	2885.0	2883.7
20180506:09:03:12	23.6	18.2	-3.6	23.88	0.25	2.2	0.25	2.2	128.2	285.8	286.3	83.0	50.7	83.8	2252.1	2247.7	2886.7	2885.5
20180506:09:08:12	23.6	18.4	-3.6	23.88	0.25	2.2	0.25	2.2	128.6	285.8	286.3	83.1	50.7	83.8	2253.4	2249.0	2888.5	2887.2
20180506:09:13:12	23.6	18.7	-3.6	23.88	0.25	2.2	0.25	2.2	129.1	285.8	286.4	83.1	50.7	83.9	2254.7	2250.4	2890.2	2889.0
20180506:09:18:12	23.6	18.7	-3.7	23.88	0.25	2.2	0.25	2.2	129.1	285.9	286.4	83.1	50.6	83.9	2256.1	2251.7	2892.0	2890.7
20180506:09:23:12	23.6	18.7	-3.7	23.88	0.25	2.2	0.25	2.1	129.0	285.9	286.4	83.1	50.7	83.9	2257.5	2253.1	2893.7	2892.5
20180506:09:28:12	23.6	18.6	-3.9	23.88	0.25	2.2	0.25	2.1	128.8	285.8	286.4	83.1	50.6	84.0	2258.8	2254.4	2895.4	2894.2
20180506:09:33:12	23.6	17.5	-4.3	23.88	0.25	2.2	0.25	2.1	126.5	285.8	286.3	83.1	50.7	84.0	2260.2	2255.8	2897.2	2895.9
20180506:09:38:12	23.6	17.1	-4.2	23.88	0.25	2.2	0.25	2.1	125.7	285.6	286.3	83.2	50.6	84.0	2261.5	2257.1	2898.9	2897.7
20180506:09:43:12	23.6	17.1	-4.0	23.88	0.25	2.2	0.25	2.1	125.7	285.7	286.3	83.3	50.7	84.0	2262.9	2258.5	2900.7	2899.4
20180506:09:48:12	23.6	17.7	-3.8	23.88	0.25	2.2	0.25	2.1	127.2	285.8	286.4	83.3	50.6	84.1	2264.2	2259.8	2902.4	2901.1
20180506:09:53:12	23.6	18.0	-3.8	23.88	0.25	2.2	0.25	2.1	127.8	285.8	286.3	83.3	50.7	84.1	2265.5	2261.1	2904.1	2902.9
20180506:09:58:12	23.6	18.1	-3.7	23.88	0.25	2.2	0.25	2.1	128.0	285.8	286.4	83.3	50.7	84.1	2266.9	2262.4	2905.8	2904.6
20180506:10:03:12	23.6	18.1	-3.5	23.87	0.25	2.2	0.25	2.1	127.9	285.8	286.3	83.4	50.7	84.2	2268.2	2263.8	2907.5	2906.3
20180506:10:08:12	23.6	18.2	-3.5	23.87	0.25	2.2	0.25	2.1	128.0	285.8	286.4	83.4	50.6	84.2	2269.6	2265.1	2909.3	2908.0
20180506:10:13:12	23.6	18.3	-3.5	23.87	0.25	2.2	0.25	2.1	128.3	285.9	286.4	83.5	50.7	84.2	2270.9	2266.5	2911.0	2909.8
20180506:10:18:12	23.6	18.1	-3.5	23.87	0.25	2.2	0.25	2.2	128.0	285.9	286.4	83.5	50.7	84.3	2272.2	2267.8	2912.7	2911.5
20180506:10:23:12	23.6	18.3	-3.5	23.87	0.25	2.2	0.25	2.1	128.3	285.8	286.3	83.6	50.7	84.3	2273.6	2269.2	2914.5	2913.2
20180506:10:28:12	23.6	18.2	-3.4	23.87	0.25	2.2	0.25	2.1	128.1	285.8	286.4	83.6	50.7	84.4	2274.9	2270.5	2916.2	2915.0
20180506:10:33:12	23.6	18.1	-3.5	23.87	0.25	2.2	0.25	2.1	128.0	285.8	286.3	83.7	50.7	84.4	2276.3	2271.8	2918.0	2916.7
20180506:10:38:12	23.6	18.1	-3.4	23.87	0.25	2.2	0.25	2.1	128.0	285.8	286.3	83.7	50.7	84.5	2277.6	2273.2	2919.7	2918.5
20180506:10:43:12	23.6	18.1	-3.4	23.87	0.25	2.2	0.25	2.1	127.9	285.8	286.3	83.8	50.7	84.5	2279.0	2274.5	2921.4	2920.2
20180506:10:48:12	23.6	18.2	-3.4	23.87	0.25	2.2	0.25	2.1	128.1	285.7	286.3	83.8	50.7	84.6	2280.3	2275.9	2923.2	2921.9
20180506:10:53:12	23.6	18.2	-3.4	23.87	0.25	2.2	0.25	2.1	128.1	285.8	286.4	83.9	50.7	84.6	2281.7	2277.2	2924.9	2923.6
20180506:10:58:12	23.6	18.2	-3.4	23.87	0.25	2.2	0.25	2.1	128.1	285.8	286.3	84.0	50.8	84.7	2283.0	2278.6	2926.7	2925.4
20180506:11:03:12	23.6	18.2	-3.4	23.87	0.25	2.2	0.25	2.1	128.1	285.8	286.4	84.0	50.7	84.7	2284.4	2279.9	2928.4	2927.1
20180506:11:08:12	23.6	18.2	-3.5	23.87	0.25	2.2	0.25	2.1	128.1	285.8	286.4	84.0	50.8	84.7	2285.7	2281.2	2930.1	2928.8
20180506:11:13:12	23.6	18.2	-3.4	23.86	0.25	2.2	0.25	2.1	128.1	285.8	286.4	84.1	50.7	84.8	2287.1	2282.6	2931.9	2930.6
20180506:11:18:12	23.6	18.2	-3.4	23.86	0.25	2.2	0.25	2.1	128.2	285.8	286.3	84.1	50.7	84.9	2288.4	2283.9	2933.6	2932.3

Time:	Stack Pressure:	Sat% H2O:	Static:	Barometric:	Flowmeter1:	Vacuum1:	Flowmeter2:	Vacuum2:	Stack Temp:	Sorbent Temp:	Probe Temp:	DGM#1 Temp:	Condenser Temp:	DGM#2 Temp:	DGM1*:	DGM2*:	DGM1:	DGM2:
day:hh:mm:ss	in-Hg	Percent	in-H2O	in-Hg	l/min	in-Hg	l/min	in-Hg	degF	degF	degF	degF	degF	degF	liters STP	liters STP	liters nominal	liters nominal
20180506:11:23:12	23.6	18.1	-3.4	23.86	0.25	2.2	0.25	2.1	128.0	285.8	286.3	84.2	50.7	84.9	2289.8	2285.3	2935.4	2934.1
20180506:11:28:12	23.6	18.1	-3.4	23.86	0.25	2.2	0.25	2.1	127.8	285.8	286.4	84.2	50.8	84.9	2291.1	2286.6	2937.1	2935.8
20180506:11:33:12	23.6	18.0	-3.3	23.86	0.25	2.2	0.25	2.1	127.8	285.8	286.3	84.2	50.7	85.0	2292.4	2288.0	2938.8	2937.5
20180506:11:38:12	23.6	18.1	-3.3	23.86	0.25	2.2	0.25	2.1	127.9	285.8	286.4	84.3	50.8	85.0	2293.8	2289.3	2940.6	2939.3
20180506:11:43:12	23.6	18.2	-3.4	23.86	0.25	2.2	0.25	2.1	128.0	285.8	286.4	84.3	50.7	85.0	2295.1	2290.6	2942.3	2941.0
20180506:11:48:12	23.6	18.2	-3.4	23.86	0.25	2.2	0.25	2.1	128.1	285.8	286.4	84.3	50.8	85.1	2296.5	2292.0	2944.1	2942.8
20180506:11:53:12	23.6	18.2	-3.4	23.86	0.25	2.2	0.25	2.1	128.1	285.9	286.3	84.3	50.7	85.1	2297.8	2293.3	2945.8	2944.5
20180506:11:58:12	23.6	18.1	-3.4	23.86	0.25	2.2	0.25	2.1	128.0	285.8	286.4	84.4	50.8	85.2	2299.2	2294.7	2947.5	2946.2
20180506:12:03:12	23.6	18.2	-3.4	23.86	0.25	2.2	0.25	2.1	128.1	285.8	286.4	84.4	50.7	85.2	2300.5	2296.0	2949.3	2948.0
20180506:12:08:12	23.6	18.3	-3.4	23.86	0.25	2.2	0.25	2.1	128.3	285.8	286.4	84.4	50.7	85.2	2301.9	2297.4	2951.0	2949.7
20180506:12:13:12	23.6	18.2	-3.5	23.86	0.25	2.2	0.25	2.1	128.2	285.8	286.3	84.5	50.7	85.3	2303.2	2298.7	2952.8	2951.4
20180506:12:18:12	23.6	18.2	-3.4	23.86	0.25	2.2	0.25	2.1	128.0	285.8	286.4	84.5	50.7	85.3	2304.6	2300.0	2954.5	2953.1
20180506:12:23:12	23.6	18.2	-3.5	23.86	0.25	2.2	0.25	2.1	128.1	285.9	286.4	84.6	50.7	85.4	2305.9	2301.4	2956.2	2954.9
20180506:12:28:12	23.6	18.1	-3.4	23.85	0.25	2.2	0.25	2.1	127.8	285.8	286.4	84.6	50.7	85.4	2307.3	2302.7	2958.0	2956.6
20180506:12:33:12	23.6	18.1	-3.5	23.85	0.25	2.2	0.25	2.1	127.9	285.8	286.4	84.7	50.7	85.5	2308.6	2304.1	2959.7	2958.4
20180506:12:38:12	23.6	18.2	-3.4	23.84	0.25	2.2	0.25	2.1	128.0	285.8	286.3	84.7	50.7	85.5	2309.9	2305.4	2961.5	2960.1
20180506:12:43:12	23.6	18.1	-3.4	23.84	0.25	2.2	0.25	2.1	127.8	285.8	286.4	84.7	50.7	85.6	2311.3	2306.7	2963.2	2961.9
20180506:12:48:12	23.6	18.1	-3.3	23.84	0.25	2.2	0.25	2.1	127.8	285.8	286.4	84.8	50.7	85.6	2312.6	2308.1	2965.0	2963.6
20180506:12:53:12	23.6	18.1	-3.5	23.84	0.25	2.2	0.25	2.1	127.9	285.7	286.3	84.9	50.8	85.6	2314.0	2309.4	2966.7	2965.3
20180506:12:58:12	23.6	18.2	-3.5	23.84	0.25	2.2	0.25	2.1	128.1	285.8	286.4	84.9	50.7	85.7	2315.3	2310.8	2968.5	2967.1
20180506:13:03:12	23.6	18.2	-3.5	23.84	0.25	2.2	0.25	2.1	128.0	285.8	286.4	85.0	50.8	85.7	2316.7	2312.1	2970.2	2968.8
20180506:13:08:12	23.6	18.1	-3.6	23.84	0.25	2.2	0.25	2.1	127.8	285.8	286.4	85.1	50.7	85.8	2318.0	2313.4	2972.0	2970.6
20180506:13:13:12	23.6	18.1	-3.6	23.84	0.25	2.2	0.25	2.1	127.9	285.8	286.4	85.2	50.8	85.9	2319.3	2314.8	2973.7	2972.3
20180506:13:18:12	23.6	18.2	-3.6	23.84	0.25	2.2	0.25	2.1	128.1	285.8	286.4	85.2	50.8	85.9	2320.7	2316.1	2975.4	2974.1
20180506:13:23:12	23.6	18.2	-3.6	23.84	0.25	2.2	0.25	2.1	128.2	285.8	286.4	85.3	50.7	86.0	2322.1	2317.4	2977.2	2975.8
20180506:13:28:12	23.6	18.2	-3.6	23.84	0.25	2.2	0.25	2.1	128.0	285.8	286.4	85.4	50.8	86.1	2323.4	2318.8	2978.9	2977.5
20180506:13:33:12	23.6	18.3	-3.6	23.84	0.25	2.2	0.25	2.1	128.3	285.8	286.4	85.4	50.7	86.2	2324.8	2320.1	2980.7	2979.3
20180506:13:38:12	23.6	18.3	-3.7	23.83	0.25	2.2	0.25	2.1	128.2	285.8	286.4	85.5	50.8	86.2	2326.1	2321.4	2982.4	2981.0
20180506:13:43:12	23.6	18.2	-3.7	23.83	0.25	2.2	0.25	2.1	128.1	285.8	286.4	85.6	50.7	86.3	2327.4	2322.8	2984.1	2982.7
20180506:13:48:12	23.6	18.2	-3.7	23.83	0.25	2.2	0.25	2.1	128.0	285.8	286.4	85.6	50.7	86.3	2328.8	2324.1	2985.9	2984.4
20180506:13:53:12	23.6	18.1	-3.7	23.83	0.25	2.2	0.25	2.1	127.9	285.8	286.3	85.7	50.8	86.4	2330.1	2325.5	2987.6	2986.2
20180506:13:58:12	23.6	18.2	-3.7	23.83	0.25	2.2	0.25	2.1	128.1	285.8	286.4	85.7	50.7	86.5	2331.5	2326.8	2989.4	2987.9
20180506:14:03:12	23.6	18.2	-3.6	23.83	0.25	2.2	0.25	2.1	128.1	285.8	286.2	85.8	50.8	86.5	2332.8	2328.2	2991.1	2989.7
20180506:14:08:12	23.6	18.2	-3.5	23.83	0.25	2.2	0.25	2.2	128.1	285.8	286.4	85.9	50.7	86.6	2334.2	2329.5	2992.9	2991.4
20180506:14:13:12	23.6	18.2	-3.5	23.82	0.25	2.2	0.25	2.2	128.1	285.8	286.3	85.9	50.8	86.6	2335.5	2330.8	2994.7	2993.1
20180506:14:18:12	23.6	18.2	-3.5	23.83	0.25	2.2	0.25	2.2	128.1	285.8	286.4	86.0	50.8	86.7	2336.9	2332.2	2996.4	2994.9
20180506:14:23:12	23.6	18.1	-3.3	23.82	0.25	2.2	0.25	2.1	127.8	285.8	286.3	86.0	50.7	86.8	2338.2	2333.5	2998.1	2996.7
05/06/2018:14:23:12	**Sampling**	**complete**	**6 Days**	**0 Hrs**	**0 Minutes**	**sampled**												

Hg-324K-1099

HgK_324 Data		HTG2LEE2018R2	5/8/2018	9:26:36					
DGM1 ID		DGM2 ID	Trap1 ID	Trap2 ID					
	3605445	3605446	450084	480741					
Time:		Leak 1	Status	Leak 2	Status	Vacuum1	Vacuum2	DGM 1	DGM 2
Day:hh:mm		ccpermin	P-F	ccpermin	P-F	in-Hg	in-Hg	liter	liter
05/08/2018:09:26:51		1373.574	Fail	1364.162	Fail	2.882	2.912	0.437	0.432
05/08/2018:09:27:06		1425.926	Fail	1473.684	Fail	7.105	7.245	0.713	0.737
05/08/2018:09:27:21		1059.259	Fail	1139.098	Fail	9.954	10.211	0.967	1.002
05/08/2018:09:27:36		870.37	Fail	812.03	Fail	12.011	12.289	1.148	1.143
05/08/2018:09:27:51		588.889	Fail	556.391	Fail	13.569	13.865	1.261	1.28
05/08/2018:09:28:06		388.889	Fail	481.203	Fail	14.753	15.028	1.343	1.383
05/08/2018:09:28:21		333.333	Fail	432.331	Fail	15.647	15.884	1.428	1.496
05/08/2018:09:28:36		333.333	Fail	360.902	Fail	16.433	16.613	1.509	1.564
05/08/2018:09:28:51		288.889	Fail	266.917	Fail	17.08	17.201	1.572	1.63
05/08/2018:09:29:06		259.259	Fail	236.842	Fail	17.572	17.68	1.639	1.682
05/08/2018:09:29:21		211.111	Fail	187.97	Fail	17.96	18.061	1.678	1.724
05/08/2018:09:29:36		129.63	Fail	154.135	Fail	18.261	18.351	1.704	1.759
05/08/2018:09:29:51		122.222	Fail	101.504	Fail	18.503	18.571	1.739	1.774
05/08/2018:09:30:06		111.111	Fail	56.391	Fail	18.696	18.753	1.759	1.788
05/08/2018:09:30:21		85.185	Fail	45.113	Fail	18.853	18.915	1.781	1.797
05/08/2018:09:30:36		81.481	Fail	37.594	Fail	18.975	19.05	1.8	1.806
05/08/2018:09:30:51		55.556	Fail	37.594	Fail	19.081	19.171	1.809	1.816
05/08/2018:09:31:06		40.741	Fail	37.594	Fail	19.142	19.267	1.82	1.825
05/08/2018:09:31:21		33.333	Fail	33.835	Fail	19.194	19.357	1.826	1.833
05/08/2018:09:31:36		22.222	Fail	30.075	Fail	19.212	19.426	1.831	1.84
05/08/2018:09:31:51		22.222	Fail	30.075	Fail	19.253	19.486	1.837	1.848
05/08/2018:09:32:06		22.222	Fail	26.316	Fail	19.27	19.528	1.843	1.853
05/08/2018:09:32:21		14.815	Fail	22.556	Fail	19.279	19.568	1.844	1.859
05/08/2018:09:32:36		7.407	Pass	26.316	Fail	19.285	19.604	1.846	1.867
05/08/2018:09:32:51		3.704	Pass	18.797	Fail	19.291	19.621	1.846	1.868
05/08/2018:09:33:06		3.704	Pass	11.278	Fail	19.299	19.641	1.848	1.872
05/08/2018:09:33:21		3.704	Pass	11.278	Fail	19.306	19.656	1.848	1.874
05/08/2018:09:33:36		0	Pass	11.278	Fail	19.31	19.668	1.848	1.878
05/08/2018:09:33:51		0	Pass	7.519	Pass	19.316	19.671	1.848	1.878

Hg-324K-1099								
HgK_324 Data	HTG2LEE2018R3	5/8/2018	10:08:54					
DGM1 ID	DGM2 ID	Trap1 ID	Trap2 ID					
3605445	3605446	451987	480732					
Time:	Leak 1	Status	Leak 2	Status	Vacuum1	Vacuum2	DGM 1	DGM 2
Day:hh:mm	ccpermin	P-F	ccpermin	P-F	in-Hg	in-Hg	liter	liter
05/08/2018:10:09:09	1362.463	Fail	1405.515	Fail	2.696	2.562	0.431	0.453
05/08/2018:10:09:24	1429.63	Fail	1537.594	Fail	6.49	6.203	0.715	0.769
05/08/2018:10:09:39	1114.815	Fail	1240.602	Fail	9.257	8.909	0.989	1.073
05/08/2018:10:09:54	937.037	Fail	947.368	Fail	11.325	10.953	1.183	1.242
05/08/2018:10:10:09	629.63	Fail	687.97	Fail	12.948	12.563	1.304	1.417
05/08/2018:10:10:24	511.111	Fail	684.211	Fail	14.223	13.877	1.439	1.585
05/08/2018:10:10:39	477.778	Fail	545.113	Fail	15.171	14.872	1.543	1.69
05/08/2018:10:10:54	366.667	Fail	406.015	Fail	15.979	15.651	1.622	1.788
05/08/2018:10:11:09	318.519	Fail	334.586	Fail	16.689	16.337	1.702	1.857
05/08/2018:10:11:24	292.593	Fail	210.526	Fail	17.25	16.918	1.769	1.893
05/08/2018:10:11:39	218.519	Fail	150.376	Fail	17.695	17.411	1.811	1.932
05/08/2018:10:11:54	140.741	Fail	165.414	Fail	18.042	17.822	1.839	1.976
05/08/2018:10:12:09	92.593	Fail	172.932	Fail	18.322	18.148	1.857	2.019
05/08/2018:10:12:24	62.963	Fail	146.617	Fail	18.564	18.424	1.87	2.049
05/08/2018:10:12:39	48.148	Fail	109.023	Fail	18.745	18.635	1.881	2.073
05/08/2018:10:12:54	44.444	Fail	86.466	Fail	18.894	18.804	1.893	2.092
05/08/2018:10:13:09	44.444	Fail	78.947	Fail	19.037	18.961	1.904	2.113
05/08/2018:10:13:24	40.741	Fail	78.947	Fail	19.129	19.07	1.913	2.132
05/08/2018:10:13:39	33.333	Fail	60.15	Fail	19.197	19.21	1.92	2.143
05/08/2018:10:13:54	25.926	Fail	30.075	Fail	19.254	19.313	1.926	2.147
05/08/2018:10:14:09	22.222	Fail	18.797	Fail	19.269	19.394	1.931	2.152
05/08/2018:10:14:24	14.815	Fail	33.835	Fail	19.292	19.475	1.933	2.164
05/08/2018:10:14:39	7.407	Pass	41.353	Fail	19.29	19.49	1.935	2.173
05/08/2018:10:14:54	3.704	Pass	33.835	Fail	19.303	19.529	1.935	2.18
05/08/2018:10:15:09	3.704	Pass	26.316	Fail	19.3	19.577	1.937	2.186
05/08/2018:10:15:24	7.407	Pass	18.797	Fail	19.316	19.607	1.939	2.19
05/08/2018:10:15:39	3.704	Pass	15.038	Fail	19.359	19.626	1.939	2.194
05/08/2018:10:15:54	3.704	Pass	15.038	Fail	19.343	19.651	1.941	2.197
05/08/2018:10:16:09	3.704	Pass	11.278	Fail	19.337	19.66	1.941	2.199
05/08/2018:10:16:24	3.704	Pass	7.519	Pass	19.343	19.665	1.943	2.201

Time:	Stack Pressure:	Sat% H2O:	Static:	Barometric:	Flowmeter1:	Vacuum1:	Flowmeter2:	Vacuum2:	Stack Temp:	Sorbent Temp:	Probe Temp:	DGM#1 Temp:	Condenser Temp:	DGM#2 Temp:	DGM1*:	DGM2*:	DGM1:	DGM2:
day:hh:mm:ss	in-Hg	Percent	in-H2O	in-Hg	l/min	in-Hg	l/min	in-Hg	degF	degF	degF	degF	degF	degF	liters STP	liters STP	liters nominal	liters nominal
20180508:10:27:24	23.6	13.4	-3.7	23.8	0.238	1.8	0.239	1.7	116.9	283.9	284.2	84.6	53.6	85.1	1.285	1.289	1.665	1.671
20180508:10:32:24	23.6	13.9	-3.7	23.8	0.25	2.2	0.25	2.1	118.2	284.3	284.9	84.6	53.1	85.1	2.562	2.564	3.319	3.323
20180508:10:37:24	23.6	14.6	-3.7	23.8	0.25	2.3	0.25	2.1	119.9	284.7	285.3	84.7	52.6	85.2	3.908	3.904	5.061	5.06
20180508:10:42:24	23.6	14.9	-3.7	23.8	0.25	2.3	0.25	2.1	120.8	285.0	285.6	84.9	52.8	85.3	5.209	5.186	6.746	6.722
20180508:10:47:24	23.6	15.1	-3.7	23.8	0.25	2.3	0.25	2.2	121.1	285.2	285.8	84.9	52.9	85.4	6.568	6.529	8.507	8.464
20180508:10:52:24	23.6	15.1	-3.5	23.8	0.25	2.3	0.25	2.1	121.2	285.3	285.8	85.1	52.9	85.6	7.862	7.84	10.185	10.165
20180508:10:57:24	23.6	15.2	-3.6	23.8	0.25	2.3	0.25	2.2	121.4	285.4	286.0	85.2	52.9	85.7	9.201	9.156	11.922	11.874
20180508:11:02:24	23.6	15.2	-3.7	23.8	0.25	2.3	0.25	2.1	121.5	285.5	286.1	85.4	52.8	85.9	10.542	10.5	13.661	13.618
20180508:11:07:24	23.6	15.3	-3.7	23.8	0.25	2.2	0.25	2.1	121.7	285.5	286.2	85.6	52.7	86.1	11.837	11.795	15.343	15.301
20180508:11:12:24	23.6	15.4	-3.7	23.8	0.25	2.2	0.25	2.0	121.8	285.7	286.2	85.8	52.6	86.2	13.214	13.153	17.13	17.066
20180508:11:17:24	23.5	15.4	-3.7	23.8	0.25	2.2	0.25	2.0	121.8	285.7	286.3	85.9	52.4	86.4	14.533	14.471	18.843	18.778
20180508:11:22:24	23.5	14.8	-3.7	23.8	0.25	2.2	0.25	2.0	120.5	285.8	286.4	86.1	52.4	86.5	15.884	15.847	20.598	20.568
20180508:11:27:24	23.5	14.5	-3.7	23.8	0.25	2.2	0.25	2.0	119.8	285.7	286.4	86.2	52.3	86.7	17.241	17.162	22.361	22.278
20180508:11:32:24	23.5	14.6	-3.7	23.8	0.25	2.2	0.25	2.0	120.0	285.7	286.4	86.3	52.3	86.8	18.575	18.52	24.094	24.045
20180508:11:37:25	23.5	15.1	-3.7	23.8	0.25	2.2	0.25	2.0	121.3	285.8	286.4	86.4	52.1	86.9	19.956	19.881	25.891	25.816
20180508:11:42:25	23.5	15.4	-3.7	23.8	0.25	2.2	0.25	2.0	121.8	285.8	286.4	86.5	52.1	87.0	21.302	21.19	27.641	27.519
20180508:11:47:25	23.5	15.5	-3.7	23.8	0.25	2.2	0.25	2.1	122.2	285.9	286.4	86.5	52.0	87.1	22.628	22.572	29.365	29.318
20180508:11:52:25	23.5	15.7	-3.9	23.8	0.25	2.2	0.25	2.0	122.5	285.9	286.4	86.6	51.9	87.2	24.019	23.894	31.174	31.039
20180508:11:57:25	23.5	15.7	-3.9	23.8	0.25	2.2	0.25	2.0	122.6	285.8	286.4	86.7	51.8	87.3	25.343	25.263	32.896	32.821
20180508:12:02:25	23.5	15.8	-3.9	23.8	0.25	2.2	0.25	2.0	122.7	285.8	286.4	86.8	51.7	87.4	26.685	26.614	34.643	34.581
20180508:12:07:25	23.5	15.8	-4.0	23.8	0.25	2.2	0.25	2.0	122.7	285.8	286.4	86.9	51.6	87.4	28.07	27.935	36.444	36.303
20180508:12:12:25	23.5	15.8	-3.9	23.8	0.25	2.2	0.25	2.1	122.7	285.9	286.4	86.9	51.5	87.6	29.4	29.31	38.176	38.094
20180508:12:17:25	23.5	15.8	-3.9	23.8	0.25	2.2	0.25	2.1	122.8	285.8	286.4	87.0	51.4	87.6	30.756	30.636	39.941	39.821
20180508:12:22:25	23.5	15.7	-3.6	23.8	0.25	2.2	0.25	2.1	122.7	285.8	286.4	87.1	51.4	87.7	32.13	32.01	41.73	41.613
20180508:12:27:25	23.5	15.1	-3.7	23.8	0.25	2.2	0.25	2.1	121.2	285.7	286.4	87.2	51.4	87.8	33.462	33.355	43.465	43.367
20180508:12:32:25	23.5	14.8	-3.7	23.8	0.25	2.2	0.25	2.1	120.4	285.7	286.4	87.2	51.3	87.9	34.833	34.678	45.25	45.092
20180508:12:37:25	23.6	15.2	-3.4	23.8	0.25	2.2	0.25	2.1	121.4	285.7	286.4	87.3	51.3	88.0	36.188	36.054	47.015	46.885
20180508:12:42:25	23.6	15.5	-3.2	23.8	0.25	2.2	0.25	2.1	122.2	285.8	286.4	87.4	51.2	88.0	37.529	37.379	48.761	48.615
20180508:12:47:25	23.6	15.6	-3.4	23.8	0.25	2.2	0.25	2.1	122.3	285.8	286.4	87.4	51.2	88.1	38.912	38.756	50.563	50.41
20180508:12:52:25	23.5	15.6	-3.7	23.8	0.25	2.2	0.25	2.0	122.4	285.8	286.4	87.6	51.2	88.2	40.267	40.104	52.33	52.169
20180508:12:57:25	23.5	15.6	-3.7	23.8	0.25	2.2	0.25	2.1	122.4	285.7	286.4	87.7	51.2	88.3	41.594	41.427	54.059	53.897
20180508:13:02:25	23.5	15.7	-3.7	23.8	0.25	2.2	0.25	2.1	122.5	285.8	286.4	87.8	51.2	88.4	42.983	42.805	55.87	55.695
20180508:13:07:25	23.5	15.7	-3.7	23.8	0.25	2.2	0.25	2.1	122.5	285.8	286.4	87.9	51.2	88.5	44.331	44.135	57.63	57.432
20180508:13:12:25	23.5	15.6	-3.7	23.8	0.25	2.2	0.25	2.1	122.4	285.8	286.4	88.0	51.2	88.6	45.666	45.503	59.37	59.218
20180508:13:17:25	23.5	15.6	-3.7	23.8	0.25	2.2	0.25	2.1	122.3	285.7	286.3	88.0	51.1	88.6	47.057	46.862	61.185	60.992
20180508:13:22:25	23.5	15.6	-3.6	23.8	0.25	2.2	0.25	2.1	122.2	285.7	286.4	88.1	51.1	88.7	48.402	48.175	62.941	62.709
20180508:13:27:25	23.5	15.5	-3.7	23.8	0.25	2.2	0.25	2.1	122.1	285.7	286.3	88.2	51.2	88.8	49.733	49.562	64.678	64.521
20180508:13:32:25	23.5	15.5	-3.7	23.8	0.25	2.2	0.25	2.1	122.1	285.7	286.3	88.3	51.2	88.9	51.135	50.891	66.507	66.258
20180508:13:37:25	23.5	15.5	-3.7	23.8	0.25	2.2	0.25	2.1	122.2	285.8	286.3	88.3	51.2	89.0	52.466	52.248	68.246	68.032
20180508:13:42:25	23.5	15.6	-3.6	23.8	0.25	2.2	0.25	2.1	122.2	285.8	286.3	88.4	51.1	89.0	53.81	53.609	70.002	69.812
20180508:13:47:25	23.5	15.5	-3.6	23.8	0.25	2.2	0.25	2.1	122.1	285.7	286.3	88.5	51.1	89.1	55.207	54.94	71.826	71.553
20180508:13:52:25	23.5	15.0	-3.6	23.8	0.25	2.2	0.25	2.1	120.9	285.7	286.4	88.6	51.1	89.2	56.542	56.322	73.57	73.361
20180508:13:57:25	23.5	14.8	-3.5	23.8	0.25	2.2	0.25	2.0	120.4	285.7	286.3	88.7	51.1	89.3	57.891	57.653	75.333	75.102
20180508:14:02:25	23.6	15.1	-2.8	23.8	0.25	2.2	0.25	2.1	121.3	285.7	286.3	88.7	51.1	89.3	59.285	58.998	77.156	76.861
20180508:14:07:25	23.6	15.4	-3.0	23.8	0.25	2.2	0.25	2.1	121.9	285.8	286.3	88.8	51.1	89.4	60.621	60.372	78.902	78.66
20180508:14:12:25	23.5	15.6	-3.6	23.8	0.25	2.2	0.25	2.1	122.3	285.8	286.3	88.9	51.1	89.5	61.969	61.703	80.665	80.402
20180508:14:17:25	23.5	15.6	-3.6	23.8	0.25	2.2	0.25	2.1	122.4	285.8	286.3	89.0	51.1	89.6	63.364	63.084	82.489	82.211
20180508:14:22:25	23.5	15.6	-3.6	23.8	0.25	2.2	0.25	2.1	122.4	285.9	286.3	89.2	51.1	89.7	64.704	64.43	84.243	83.974
20180508:14:27:25	23.5	15.7	-3.6	23.8	0.25	2.2	0.25	2.1	122.5	285.9	286.5	89.3	51.0	89.8	66.048	65.759	86.002	85.714
20180508:14:32:25	23.5	15.7	-3.6	23.8	0.25	2.2	0.25	2.1	122.5	285.8	286.4	89.3	51.1	89.9	67.45	67.137	87.837	87.521
20180508:14:37:25	23.5	15.7	-3.6	23.8	0.25	2.2	0.25	2.1	122.6	285.9	286.4	89.5	51.1	90.0	68.794	68.467	89.596	89.263
20180508:14:42:25	23.5	15.5	-3.6	23.8	0.25	2.2	0.25	2.1	122.1	285.8	286.5	89.6	51.1	90.1	70.134	69.823	91.352	91.041
20180508:14:47:25	23.5	15.0	-3.6	23.8	0.25	2.2	0.25	2.1	121.0	285.8	286.4	89.8	51.1	90.2	71.53	71.185	93.181	92.827
20180508:14:52:25	23.5	14.9	-3.6	23.8	0.25	2.2	0.25	2.1	120.6	285.8	286.5	89.9	51.1	90.3	72.879	72.519	94.95	94.577
20180508:14:57:25	23.5	15.5	-3.6	23.8	0.25	2.2	0.25	2.1	122.0	285.8	286.4	89.9	51.1	90.4	74.223	73.905	96.711	96.395
20180508:15:02:25	23.5	15.8	-3.6	23.8	0.25	2.2	0.25	2.1	122.8	285.9	286.5	90.1	51.2	90.5	75.615	75.241	98.537	98.148
20180508:15:07:25	23.5	15.9	-3.5	23.8	0.25	2.2	0.25	2.1	123.0	285.8	286.3	90.2	51.1	90.6	76.968	76.574	100.311	99.898
20180508:15:12:25	23.5	15.9	-3.6	23.8	0.25	2.2	0.25	2.1	123.0	285.8	286.3	90.3	51.2	90.6	78.306	77.955	102.067	101.711
20180508:15:17:25	23.5	15.9	-3.6	23.8	0.25	2.2	0.25	2.1	123.0	285.8	286.3	90.3	51.1	90.7	79.696	79.286	103.891	103.459
20180508:15:22:25	23.5	15.9	-3.6	23.8	0.25	2.2	0.25	2.1	123.0	285.8	286.3	90.4	51.1	90.8	81.056	80.646	105.674	105.244
20180508:15:27:25	23.5	16.0	-3.6	23.8	0.25	2.2	0.25	2.1	123.1	285.8	286.4	90.4	51.1	90.9	82.388	82.006	107.422	107.03
20180508:15:32:25	23.5	16.1	-3.6	23.8	0.25	2.2	0.25	2.1	123.3	285.8	286.3	90.5	51.1	90.9	83.774	83.334	109.241	108.774
20180508:15:37:25	23.5	15.5	-3.8	23.8	0.25	2.2	0.25	2.0	122.1	285.8	286.3	90.6	51.1	91.0	85.122	84.712	111.011	110.585
20180508:15:42:25	23.5	15.1	-3.7	23.8	0.25	2.2	0.25	2.0	121.0	285.7	286.3	90.6	51.1	91.1	86.468	86.047	112.778	112.338
20180508:15:47:25	23.5	15.2	-3.6	23.8	0.25	2.2	0.25	2.0	121.2	285.7	286.3	90.6	51.1	91.2	87.847	87.381	114.587	114.092
20180508:15:52:25	23.5	15.6	-3.6	23.8	0.25	2.2	0.25	2.1	122.4	285.8	286.3	90.7	51.1	91.2	89.209	88.765	116.376	115.91
20180508:15:57:25	23.5	15.7	-3.6	23.8	0.25	2.2	0.25	2.1	122.6	285.8	286.3	90.7	51.1	91.3	90.55	90.094	118.137	117.658
20180508:16:02:25	23.5	15.2	-3.6	23.8	0.25	2.2	0.25	2.0	121.4	285.8	286.3	90.8	51.1	91.4	91.918	91.461	119.933	119.455
20180508:16:07:25	23.5	15.0	-3.6	23.8	0.25	2.2	0.25	2.1	120.9	285.7	286.2	90.8	51.1	91.5	93.293	92.82	121.739	121.242
20180508:16:12:25	23.5	15.3	-3.6	23.8	0.25	2.2	0.25	2.1	121.6	285.8	286.3	90.9	51.1	91.5	94.638	94.154	123.506	122.996
20180508:16:17:25	23.5	15.7	-3.6	23.8	0.25	2.2	0.25	2.1	122.5	285.8	286.4	90.9	51.2	91.6	95.991	95.545	125.283	124.825
20180508:16:22:25	23.5	15.8	-3.6	23.8	0.25	2.2	0.25	2.1	122.7	285.7	286.3	91.0	51.2	91.6	97.378	96.882	127.106	126.585
20180508:16:27:25	23.5	15.7	-3.5	23.8	0.25	2.2	0.25	2.0	122.6	285.8	286.3	91.1	51.2	91.7	98.715	98.216	128.863	128.34
20180508:16:32:25	23.5	15.6	-3.5	23.8	0.25	2.2	0.25	2.0	122.4	285.7	286.4	91.2	51.2	91.8	100.074	99.597	130.65	130.158
20180508:16:37:25	23.5	15.6	-3.5	23.8	0.25	2.2	0.25	2.1	122.3	285.8	286.4	91.3	51.2	91.9	101.47	100.925	132.485	131.906
20180508:16:42:25	23.5	15.6	-3.5	23.8	0.25	2.2	0.25	2.1	122.4	285.7	286.4	91.4	51.2	92.0	102.816	102.28	134.256	133.69
20180508:16:47:25	23.5	15.3	-3.5	23.8	0.25	2.2	0.25	2.0	121.7	285.8	286.4	91.5	51.2	92.0	104.163	103.65	136.028	135.492
20180508:16:52:25	23.5	14.9	-3.5	23.8	0.25	2.2	0.25	2.0	120.6	285.8	286.4	91.6	51.2	92.1	105.562	104.982	137.869	137.246
20180508:16:57:25	23.5	14.7	-3.4	23.8	0.25	2.1	0.25	2.0	120.1	285.7	286.3	91.6	51.2	92.2	106.918	106.357	139.652	139.058
20180508:17:02:25	23.5	15.2	-3.6	23.8	0.25	2.2	0.25	2.0	121.3	285.7	286.4	91.6	51.2	92.2	108.252	107.71	141.407	140.84
20180508:17:07:25	23.5	15.4	-3.5	23.8	0.25	2.2	0.25	2.1	121.8	285.8	286.4	91.6	51.2	92.3	109.64	109.034	143.233	142.583
20180508:17:12:25	23.5	15.2	-3.6	23.8	0.25	2.2	0.25	2.1	121.4	285.8	286.4	91.7	51.2	92.3	110.99	110.424	145.009	144.414
20180508:17:17:25	23.5	14.9	-3.5	23.8	0.25	2.1	0.25	2.0	120.6	285.8	286.4	91.8	51.3	92.4	112.333	111.745	146.776	146.154
20180508:17:22:25	23.5	14.8	-3.5	23.8	0.25	2.1	0.25	2.0	120.3	285.8	286.4	91.8	51.3	92.4	113.711	113.091	148.589	147.927
20180508:17:27:25	23.5	15.3	-3.5	23.8	0.25	2.2	0.25	2.1	121.5	285.8	286.4	91.9	51.3	92.5	115.08	114.472	150.391	149.746
20180508:17:32:25	23.5	15.5	-3.5	23.8	0.25	2.2	0.25	2.1	122.0	285.8	286.3	91.9	51.3	92.5	116.42	115.802	152.156	151.5
20180508:17:37:25	23.5	15.5	-3.5	23.8	0.25	2.2	0.25	2.1	122.1	285.8	286.4	91.9	51.3	92.6	117.781	117.166	153.946	153.297
20180508:17:42:25	23.5	15.5	-3.5	23.8	0.25	2.2	0.25	2.1	122.2	285.8	286.3	92.0	51.3	92.7	119.162	118.522	155.765	155.085
20180508:17:47:25	23.5	15.6	-3.5	23.8	0.25	2.2	0.25	2.1	122.3	285.8	286.4	92.0	51.4	92.7	120.499	119.857	157.524	156.844

Time:	Stack Pressure:	Sat% H2O:	Static:	Barometric:	Flowmeter1:	Vacuum1:	Flowmeter2:	Vacuum2:	Stack Temp:	Sorbent Temp:	Probe Temp:	DGM#1 Temp:	Condenser Temp:	DGM#2 Temp:	DGM1*:	DGM2*:	DGM1:	DGM2:
day:hh:mm:ss	in-Hg	Percent	in-H2O	in-Hg	l/min	in-Hg	l/min	in-Hg	degF	degF	degF	degF	degF	degF	liters STP	liters STP	liters nominal	liters nominal
20180508:17:52:25	23.5	15.6	-3.5	23.8	0.25	2.2	0.25	2.1	122.3	285.8	286.3	92.1	51.4	92.8	121.855	121.243	159.309	158.671
20180508:17:57:25	23.5	15.6	-3.5	23.8	0.25	2.2	0.25	2.1	122.3	285.8	286.4	92.1	51.4	92.8	123.25	122.582	161.146	160.436
20180508:18:02:25	23.5	15.6	-3.5	23.8	0.25	2.2	0.25	2.1	122.3	285.8	286.4	92.2	51.4	92.9	124.591	123.909	162.913	162.186
20180508:18:07:25	23.5	15.6	-3.5	23.8	0.25	2.2	0.25	2.1	122.2	285.8	286.4	92.3	51.4	92.9	125.934	125.293	164.681	164.011
20180508:18:12:25	23.5	15.0	-3.5	23.8	0.25	2.2	0.25	2.0	121.0	285.8	286.4	92.3	51.5	93.0	127.333	126.619	166.524	165.759
20180508:18:17:25	23.5	14.8	-3.5	23.8	0.25	2.2	0.25	2.1	120.5	285.7	286.4	92.3	51.5	93.1	128.687	127.97	168.307	167.541
20180508:18:22:25	23.5	15.0	-3.5	23.8	0.25	2.2	0.25	2.1	120.8	285.8	286.4	92.4	51.5	93.1	130.025	129.346	170.07	169.357
20180508:18:27:25	23.5	15.5	-3.5	23.8	0.25	2.2	0.25	2.1	122.0	285.8	286.3	92.5	51.5	93.1	131.413	130.679	171.9	171.115
20180508:18:32:25	23.5	15.6	-3.5	23.8	0.25	2.2	0.25	2.1	122.4	285.8	286.4	92.5	51.5	93.2	132.765	132.046	173.681	172.919
20180508:18:37:25	23.5	15.7	-3.6	23.8	0.25	2.2	0.25	2.1	122.5	285.9	286.4	92.6	51.6	93.2	134.113	133.403	175.457	174.709
20180508:18:42:25	23.5	15.7	-3.5	23.8	0.25	2.2	0.25	2.1	122.6	285.9	286.5	92.6	51.6	93.2	135.486	134.739	177.267	176.472
20180508:18:47:25	23.5	15.7	-3.5	23.8	0.25	2.2	0.25	2.1	122.6	285.8	286.4	92.7	51.6	93.3	136.86	136.125	179.078	178.301
20180508:18:52:25	23.5	15.7	-3.5	23.8	0.25	2.2	0.25	2.1	122.6	285.8	286.4	92.7	51.6	93.3	138.203	137.47	180.848	180.075
20180508:18:57:25	23.5	15.7	-3.5	23.8	0.25	2.2	0.25	2.1	122.6	285.9	286.3	92.7	51.6	93.4	139.56	138.792	182.637	181.82
20180508:19:02:25	23.5	15.7	-3.5	23.8	0.25	2.2	0.25	2.1	122.6	285.8	286.4	92.7	51.6	93.4	140.955	140.188	184.476	183.662
20180508:19:07:25	23.5	15.5	-3.5	23.8	0.25	2.2	0.25	2.1	122.0	285.9	286.4	92.8	51.6	93.5	142.301	141.511	186.25	185.408
20180508:19:12:25	23.5	15.1	-3.5	23.8	0.25	2.2	0.25	2.1	121.0	285.8	286.4	92.8	51.6	93.5	143.646	142.857	188.022	187.184
20180508:19:17:25	23.5	14.9	-3.5	23.8	0.25	2.2	0.25	2.0	120.6	285.7	286.4	92.8	51.6	93.5	145.045	144.242	189.867	189.013
20180508:19:22:25	23.5	15.4	-3.5	23.8	0.25	2.2	0.25	2.1	121.8	285.7	286.4	92.8	51.6	93.5	146.402	145.578	191.656	190.776
20180508:19:27:25	23.5	15.6	-3.5	23.8	0.25	2.2	0.25	2.1	122.3	285.8	286.4	92.8	51.6	93.5	147.738	146.931	193.417	192.562
20180508:19:32:25	23.5	15.7	-3.5	23.8	0.25	2.2	0.25	2.1	122.5	285.8	286.4	92.8	51.6	93.5	149.125	148.3	195.244	194.368
20180508:19:37:25	23.5	15.8	-3.5	23.8	0.25	2.2	0.25	2.1	122.8	285.8	286.4	92.9	51.7	93.6	150.483	149.635	197.035	196.13
20180508:19:42:25	23.5	15.8	-3.6	23.8	0.25	2.2	0.25	2.1	122.8	285.8	286.4	92.9	51.6	93.6	151.831	151.013	198.811	197.949
20180508:19:47:25	23.5	15.9	-3.6	23.8	0.25	2.2	0.25	2.1	122.9	285.8	286.4	93.0	51.7	93.6	153.195	152.374	200.609	199.744
20180508:19:52:25	23.5	15.9	-3.6	23.8	0.25	2.2	0.25	2.1	122.9	285.8	286.5	93.1	51.7	93.7	154.578	153.701	202.433	201.496
20180508:19:57:25	23.5	15.9	-3.6	23.8	0.25	2.2	0.25	2.1	122.9	285.8	286.4	93.1	51.7	93.7	155.923	155.09	204.206	203.329
20180508:20:02:25	23.5	15.8	-3.6	23.8	0.25	2.2	0.25	2.1	122.8	285.8	286.4	93.2	51.7	93.7	157.282	156.432	205.998	205.1
20180508:20:07:25	23.5	15.3	-3.6	23.8	0.25	2.2	0.25	2.1	121.5	285.8	286.4	93.3	51.7	93.8	158.685	157.759	207.848	206.852
20180508:20:12:25	23.5	15.1	-3.6	23.8	0.25	2.2	0.25	2.1	121.0	285.8	286.4	93.3	51.7	93.8	160.04	159.153	209.635	208.692
20180508:20:17:25	23.5	15.0	-3.6	23.8	0.25	2.2	0.25	2.0	120.8	285.7	286.4	93.4	51.7	93.8	161.385	160.484	211.409	210.449
20180508:20:22:25	23.5	15.5	-3.6	23.8	0.25	2.2	0.25	2.1	122.2	285.8	286.5	93.5	51.7	93.8	162.776	161.83	213.244	212.226
20180508:20:27:25	23.5	15.7	-3.6	23.8	0.25	2.2	0.25	2.1	122.5	285.8	286.4	93.5	51.7	93.9	164.136	163.213	215.039	214.053
20180508:20:32:25	23.5	15.2	-3.5	23.8	0.25	2.2	0.25	2.0	121.4	285.8	286.5	93.6	51.6	93.9	165.488	164.55	216.824	215.818
20180508:20:37:25	23.5	15.1	-3.5	23.8	0.25	2.2	0.25	2.1	121.1	285.8	286.4	93.6	51.6	93.9	166.847	165.906	218.619	217.609
20180508:20:42:25	23.5	15.0	-3.5	23.8	0.25	2.2	0.25	2.0	121.0	285.9	286.6	93.6	51.6	93.9	168.245	167.28	220.463	219.423
20180508:20:47:25	23.5	15.5	-3.5	23.8	0.25	2.2	0.25	2.1	122.1	285.9	286.5	93.6	51.5	93.9	169.59	168.617	222.239	221.19
20180508:20:52:25	23.5	15.7	-3.6	23.8	0.25	2.2	0.25	2.1	122.5	285.9	286.4	93.5	51.5	93.9	170.946	169.985	224.028	222.996
20180508:20:57:25	23.5	15.7	-3.6	23.8	0.25	2.2	0.25	2.1	122.6	285.9	286.4	93.5	51.5	93.9	172.346	171.343	225.876	224.789
20180508:21:02:25	23.5	15.8	-3.6	23.8	0.25	2.2	0.25	2.1	122.8	285.9	286.4	93.4	51.5	93.9	173.706	172.684	227.67	226.56
20180508:21:07:25	23.5	15.4	-3.6	23.8	0.25	2.2	0.25	2.1	121.9	285.9	286.5	93.3	51.5	93.9	175.045	174.066	229.437	228.385
20180508:21:12:25	23.5	15.1	-3.6	23.8	0.25	2.2	0.25	2.1	121.1	285.8	286.4	93.3	51.5	93.9	176.427	175.423	231.259	230.177
20180508:21:17:25	23.5	14.9	-3.6	23.8	0.25	2.2	0.25	2.0	120.5	285.7	286.4	93.2	51.5	93.9	177.8	176.751	233.07	231.93
20180508:21:22:25	23.5	15.2	-3.6	23.8	0.25	2.2	0.25	2.1	121.4	285.8	286.4	93.2	51.5	93.8	179.149	178.14	234.848	233.763
20180508:21:27:25	23.5	15.5	-3.6	23.8	0.25	2.2	0.25	2.1	122.1	285.8	286.4	93.1	51.4	93.8	180.506	179.483	236.637	235.536
20180508:21:32:25	23.5	15.7	-3.6	23.8	0.25	2.2	0.25	2.1	122.4	285.9	286.5	93.1	51.4	93.8	181.905	180.823	238.481	237.305
20180508:21:37:25	23.5	15.8	-3.7	23.8	0.25	2.2	0.25	2.1	122.7	285.9	286.4	93.0	51.5	93.8	183.255	182.209	240.261	239.133
20180508:21:42:25	23.5	15.8	-3.7	23.8	0.25	2.2	0.25	2.1	122.8	285.9	286.4	93.0	51.5	93.8	184.601	183.545	242.035	240.897
20180508:21:47:25	23.5	15.8	-3.7	23.8	0.25	2.2	0.25	2.1	122.9	285.9	286.4	93.0	51.5	93.7	186.004	184.894	243.883	242.677
20180508:21:52:25	23.5	15.9	-3.7	23.8	0.25	2.2	0.25	2.1	122.9	285.9	286.5	92.9	51.4	93.6	187.366	186.28	245.678	244.506
20180508:21:57:25	23.5	15.8	-3.7	23.8	0.25	2.2	0.25	2.1	122.9	285.9	286.4	92.9	51.5	93.6	188.704	187.618	247.441	246.271
20180508:22:02:25	23.5	15.9	-3.8	23.8	0.25	2.2	0.25	2.1	122.9	285.9	286.4	92.9	51.5	93.6	190.087	188.976	249.263	248.062
20180508:22:07:25	23.5	15.8	-3.8	23.8	0.25	2.2	0.25	2.1	122.8	285.9	286.5	92.8	51.5	93.5	191.461	190.354	251.074	249.88
20180508:22:12:25	23.5	15.3	-3.7	23.8	0.25	2.2	0.25	2.1	121.5	285.9	286.5	92.8	51.5	93.5	192.808	191.692	252.848	251.645
20180508:22:17:25	23.5	15.1	-3.7	23.8	0.25	2.2	0.25	2.1	121.0	285.8	286.5	92.7	51.5	93.4	194.165	193.061	254.637	253.451
20180508:22:22:25	23.5	15.2	-3.7	23.8	0.25	2.2	0.25	2.1	121.2	285.8	286.4	92.7	51.5	93.4	195.563	194.42	256.478	255.244
20180508:22:27:25	23.5	15.7	-3.7	23.8	0.25	2.2	0.25	2.1	122.4	285.8	286.5	92.6	51.4	93.3	196.907	195.76	258.248	257.011
20180508:22:32:25	23.5	15.7	-3.7	23.8	0.25	2.2	0.25	2.1	122.6	286.0	286.5	92.5	51.4	93.3	198.253	197.148	260.022	258.842
20180508:22:37:25	23.5	15.7	-3.7	23.8	0.25	2.2	0.25	2.1	122.6	286.0	286.5	92.4	51.4	93.3	199.657	198.503	261.87	260.63
20180508:22:42:25	23.5	15.7	-3.7	23.8	0.25	2.2	0.25	2.1	122.5	285.9	286.4	92.4	51.4	93.2	201.015	199.828	263.659	262.378
20180508:22:47:25	23.5	15.7	-3.7	23.8	0.25	2.2	0.25	2.1	122.4	285.9	286.4	92.3	51.4	93.2	202.355	201.216	265.424	264.209
20180508:22:52:25	23.5	15.6	-3.7	23.8	0.25	2.2	0.25	2.1	122.4	286.0	286.5	92.3	51.3	93.1	203.742	202.556	267.25	265.976
20180508:22:57:25	23.5	15.7	-3.7	23.8	0.25	2.2	0.25	2.1	122.4	285.9	286.5	92.2	51.3	93.1	205.109	203.899	269.05	267.746
20180508:23:02:25	23.5	15.3	-3.7	23.8	0.25	2.2	0.25	2.1	121.6	285.8	286.4	92.1	51.3	93.0	206.458	205.284	270.826	269.573
20180508:23:07:25	23.5	14.8	-3.7	23.8	0.25	2.2	0.25	2.1	120.4	285.8	286.5	92.1	51.3	93.0	207.821	206.616	272.62	271.329
20180508:23:12:25	23.5	14.6	-3.6	23.8	0.25	2.2	0.25	2.0	119.8	285.7	286.5	92.0	51.3	92.9	209.212	207.974	274.452	273.12
20180508:23:17:25	23.5	14.8	-3.7	23.8	0.25	2.2	0.25	2.1	120.4	285.7	286.4	92.0	51.3	92.9	210.552	209.359	276.215	274.945
20180508:23:22:25	23.5	15.2	-3.6	23.8	0.25	2.2	0.25	2.1	121.2	285.8	286.5	92.0	51.2	92.8	211.911	210.696	278.004	276.709
20180508:23:27:25	23.5	15.2	-3.6	23.8	0.25	2.2	0.25	2.1	121.3	285.8	286.5	92.0	51.3	92.8	213.314	212.058	279.852	278.504
20180508:23:32:25	23.5	14.9	-3.7	23.8	0.25	2.2	0.25	2.1	120.6	285.8	286.5	92.0	51.2	92.8	214.669	213.427	281.635	280.308
20180508:23:37:25	23.5	14.8	-3.7	23.8	0.25	2.2	0.25	2.0	120.3	285.8	286.4	92.0	51.2	92.7	216.014	214.765	283.406	282.073
20180508:23:42:25	23.5	15.1	-3.6	23.8	0.25	2.2	0.25	2.1	121.0	285.9	286.5	92.0	51.2	92.7	217.406	216.144	285.239	283.891
20180508:23:47:25	23.5	15.4	-3.7	23.8	0.25	2.2	0.25	2.1	121.7	285.9	286.5	92.0	51.2	92.7	218.758	217.509	287.019	285.69
20180508:23:52:25	23.5	15.5	-3.6	23.8	0.25	2.2	0.25	2.1	121.9	285.9	286.4	92.0	51.2	92.7	220.108	218.839	288.796	287.444
20180508:23:57:25	23.5	15.5	-3.7	23.8	0.25	2.2	0.25	2.1	122.1	285.9	286.5	91.9	51.1	92.6	221.483	220.228	290.606	289.274
20180509:00:02:25	23.5	15.6	-3.7	23.8	0.25	2.2	0.25	2.1	122.3	286.0	286.4	91.9	51.1	92.6	222.865	221.574	292.426	291.049
20180509:00:07:25	23.5	15.7	-3.7	23.8	0.25	2.2	0.25	2.1	122.5	286.0	286.5	91.9	51.0	92.5	224.207	222.905	294.193	292.803
20180509:00:12:25	23.5	15.7	-3.7	23.8	0.25	2.2	0.25	2.1	122.6	286.0	286.5	91.9	51.0	92.5	225.566	224.301	295.981	294.643
20180509:00:17:25	23.5	15.7	-3.7	23.8	0.25	2.2	0.25	2.1	122.6	286.0	286.5	91.8	51.0	92.5	226.968	225.632	297.828	296.397
20180509:00:22:25	23.5	15.7	-3.7	23.8	0.25	2.2	0.25	2.1	122.5	285.9	286.4	91.8	50.9	92.4	228.321	226.979	299.609	298.173
20180509:00:27:25	23.5	15.6	-3.7	23.8	0.25	2.2	0.25	2.1	122.3	285.9	286.5	91.8	50.9	92.4	229.672	228.364	301.387	299.998
20180509:00:32:25	23.5	15.0	-3.7	23.8	0.25	2.2	0.25	2.0	120.8	285.9	286.4	91.7	50.9	92.3	231.069	229.705	303.226	301.765
20180509:00:37:25	23.5	14.8	-3.7	23.8	0.25	2.2	0.25	2.1	120.2	285.8	286.4	91.7	50.9	92.3	232.427	231.062	305.013	303.553
20180509:00:42:25	23.5	15.0	-3.7	23.8	0.25	2.2	0.25	2.0	120.9	285.9	286.5	91.7	50.9	92.3	233.772	232.436	306.783	305.363
20180509:00:47:25	23.5	15.5	-3.7	23.8	0.25	2.2	0.25	2.0	122.0	286.0	286.4	91.6	50.9	92.2	235.151	233.773	308.598	307.124
20180509:00:52:25	23.5	15.6	-3.7	23.8	0.25	2.2	0.25	2.0	122.4	286.0	286.4	91.6	50.9	92.2	236.527	235.148	310.409	308.936
20180509:00:57:25	23.5	15.8	-3.8	23.8	0.25	2.2	0.25	2.1	122.6	285.9	286.4	91.6	50.9	92.2	237.873	236.512	312.181	310.733
20180509:01:02:25	23.5	15.9	-3.8	23.8	0.25	2.2	0.25	2.1	122.8	286.0	286.5	91.6	50.9	92.2	239.233	237.844	313.97	312.489
20180509:01:07:25	23.5	15.8	-3.7	23.8	0.25	2.2	0.25	2.1	122.7	286.0	286.5	91.5	50.9	92.1	240.629	239.233	315.807	314.318
20180509:01:12:25	23.5	15.8	-3.7	23.8	0.25	2.2	0.25	2.1	122.8	286.0	286.4	91.5	50.9	92.1	241.976	240.577	317.58	316.088

Time:	Stack Pressure:	Sat% H2O:	Static:	Barometric:	Flowmeter1:	Vacuum1:	Flowmeter2:	Vacuum2:	Stack Temp:	Sorbent Temp:	Probe Temp:	DGM#1 Temp:	Condenser Temp:	DGM#2 Temp:	DGM1*:	DGM2*:	DGM1:	DGM2:
day:hh:mm:ss	in-Hg	Percent	in-H2O	in-Hg	l/min	in-Hg	l/min	in-Hg	degF	degF	degF	degF	degF	degF	liters STP	liters STP	liters nominal	liters nominal
20180509:01:17:25	23.5	15.9	-3.7	23.8	0.25	2.2	0.25	2.1	122.9	285.9	286.5	91.5	50.9	92.0	243.328	241.907	319.359	317.84
20180509:01:22:25	23.5	15.9	-3.7	23.8	0.25	2.2	0.25	2.1	122.9	285.9	286.4	91.5	50.9	92.0	244.735	243.304	321.211	319.68
20180509:01:27:25	23.5	15.9	-3.8	23.8	0.25	2.2	0.25	2.1	122.9	286.0	286.5	91.4	50.9	92.0	246.097	244.633	323.002	321.43
20180509:01:32:25	23.5	15.9	-3.8	23.8	0.25	2.2	0.25	2.1	123.0	286.0	286.5	91.3	50.9	91.9	247.437	245.982	324.765	323.207
20180509:01:37:25	23.5	15.3	-3.8	23.7	0.25	2.2	0.25	2.0	121.6	286.0	286.5	91.3	51.0	91.9	248.82	247.365	326.585	325.028
20180509:01:42:25	23.5	15.0	-3.9	23.7	0.25	2.1	0.25	2.0	120.8	285.9	286.5	91.2	50.9	91.9	250.179	248.705	328.372	326.793
20180509:01:47:25	23.5	15.0	-3.7	23.7	0.25	2.1	0.25	2.0	120.7	285.8	286.4	91.2	50.9	91.8	251.525	250.063	330.143	328.581
20180509:01:52:25	23.5	15.5	-3.6	23.7	0.25	2.2	0.25	2.0	122.0	285.9	286.5	91.1	51.0	91.8	252.893	251.429	331.943	330.38
20180509:01:57:25	23.5	15.8	-3.7	23.7	0.25	2.2	0.25	2.1	122.8	286.0	286.5	91.1	50.9	91.7	254.275	252.766	333.759	332.141
20180509:02:02:25	23.5	16.0	-3.7	23.7	0.25	2.2	0.25	2.0	123.1	286.0	286.5	91.0	50.9	91.7	255.615	254.149	335.522	333.962
20180509:02:07:25	23.5	16.1	-3.7	23.7	0.25	2.2	0.25	2.1	123.3	286.0	286.4	90.9	51.0	91.6	256.975	255.507	337.309	335.75
20180509:02:12:25	23.5	16.3	-3.7	23.7	0.25	2.2	0.25	2.1	123.8	286.0	286.6	90.8	50.9	91.6	258.37	256.839	339.144	337.504
20180509:02:17:25	23.5	16.5	-3.7	23.7	0.25	2.2	0.25	2.1	124.2	286.0	286.4	90.7	50.9	91.5	259.714	258.226	340.911	339.329
20180509:02:22:25	23.5	16.5	-3.7	23.7	0.25	2.2	0.25	2.0	124.3	286.0	286.5	90.6	50.9	91.5	261.064	259.565	342.685	341.092
20180509:02:27:25	23.5	16.6	-3.8	23.7	0.25	2.2	0.25	2.0	124.6	286.0	286.5	90.6	50.9	91.4	262.464	260.908	344.526	342.861
20180509:02:32:25	23.5	16.7	-3.8	23.7	0.25	2.2	0.25	2.0	124.8	286.0	286.5	90.5	50.9	91.3	263.818	262.294	346.306	344.684
20180509:02:37:25	23.5	16.8	-3.8	23.7	0.25	2.2	0.25	2.0	124.9	285.9	286.5	90.4	50.9	91.3	265.161	263.623	348.07	346.434
20180509:02:42:25	23.5	16.7	-3.8	23.7	0.25	2.2	0.25	2.0	124.8	286.0	286.5	90.3	50.9	91.2	266.553	264.981	349.9	348.222
20180509:02:47:25	23.4	16.4	-4.0	23.7	0.25	2.2	0.25	2.0	124.1	285.9	286.5	90.3	50.9	91.2	267.909	266.355	351.681	350.03
20180509:02:52:25	23.4	15.6	-4.3	23.7	0.25	2.1	0.25	2.0	122.2	285.8	286.5	90.2	50.9	91.1	269.251	267.693	353.444	351.791
20180509:02:57:25	23.4	15.3	-4.3	23.7	0.25	2.1	0.25	2.0	121.4	285.8	286.4	90.2	50.9	91.0	270.632	269.072	355.259	353.605
20180509:03:02:25	23.5	15.5	-3.7	23.7	0.25	2.2	0.25	2.0	122.1	285.8	286.5	90.1	50.9	91.0	272.004	270.433	357.061	355.397
20180509:03:07:25	23.5	15.8	-3.6	23.7	0.25	2.2	0.25	2.0	122.8	285.9	286.4	90.0	50.8	90.9	273.347	271.763	358.826	357.147
20180509:03:12:25	23.5	15.9	-3.7	23.7	0.25	2.2	0.25	2.1	123.0	285.9	286.4	89.9	50.9	90.8	274.71	273.154	360.615	358.976
20180509:03:17:25	23.5	15.8	-3.6	23.7	0.25	2.2	0.25	2.0	122.7	285.9	286.4	89.9	50.9	90.7	276.094	274.493	362.433	360.737
20180509:03:22:25	23.5	15.7	-3.7	23.7	0.25	2.2	0.25	2.1	122.4	285.9	286.5	89.8	50.9	90.7	277.436	275.831	364.194	362.496
20180509:03:27:25	23.5	15.5	-3.6	23.7	0.25	2.2	0.25	2.1	122.0	285.8	286.4	89.7	50.9	90.6	278.797	277.219	365.981	364.321
20180509:03:32:25	23.5	15.4	-3.6	23.7	0.25	2.2	0.25	2.1	121.8	285.8	286.4	89.6	50.8	90.6	280.195	278.547	367.817	366.068
20180509:03:37:25	23.5	15.3	-3.7	23.7	0.25	2.2	0.25	2.1	121.5	285.8	286.5	89.6	50.9	90.5	281.537	279.908	369.578	367.857
20180509:03:42:25	23.5	15.2	-3.7	23.7	0.25	2.2	0.25	2.1	121.3	285.8	286.5	89.6	50.9	90.5	282.884	281.29	371.346	369.675
20180509:03:47:25	23.5	15.2	-3.7	23.7	0.25	2.2	0.25	2.1	121.3	285.8	286.3	89.5	50.8	90.4	284.285	282.623	373.185	371.427
20180509:03:52:25	23.5	14.8	-3.6	23.7	0.25	2.1	0.25	2.0	120.2	285.7	286.4	89.5	50.9	90.3	285.636	283.997	374.957	373.233
20180509:03:57:25	23.5	14.4	-3.6	23.7	0.25	2.1	0.25	2.0	119.2	285.7	286.4	89.4	50.8	90.3	286.978	285.363	376.719	375.028
20180509:04:02:25	23.5	14.2	-3.6	23.7	0.25	2.1	0.25	2.0	118.8	285.7	286.4	89.4	50.9	90.3	288.378	286.7	378.556	376.786
20180509:04:07:25	23.5	14.7	-3.6	23.7	0.25	2.1	0.25	2.0	120.0	285.7	286.4	89.4	50.9	90.2	289.739	288.092	380.343	378.615
20180509:04:12:25	23.5	14.8	-3.6	23.7	0.25	2.2	0.25	2.0	120.3	285.8	286.4	89.4	50.8	90.2	291.074	289.437	382.094	380.383
20180509:04:17:25	23.5	14.9	-3.6	23.7	0.25	2.2	0.25	2.0	120.5	285.9	286.5	89.3	50.9	90.2	292.46	290.769	383.913	382.133
20180509:04:22:25	23.5	14.9	-3.6	23.7	0.25	2.2	0.25	2.1	120.6	285.9	286.5	89.3	50.8	90.2	293.817	292.156	385.694	383.957
20180509:04:27:25	23.5	15.0	-3.4	23.7	0.25	2.1	0.25	2.0	120.8	285.9	286.4	89.3	50.8	90.1	295.163	293.485	387.461	385.705
20180509:04:32:25	23.5	15.0	-3.6	23.7	0.25	2.2	0.25	2.1	120.8	285.9	286.4	89.3	50.8	90.1	296.54	294.843	389.269	387.491
20180509:04:37:25	23.5	15.0	-3.5	23.7	0.25	2.2	0.25	2.0	120.8	285.8	286.4	89.3	50.8	90.1	297.911	296.222	391.069	389.303
20180509:04:42:25	23.5	15.0	-3.5	23.7	0.25	2.2	0.25	2.0	120.8	285.8	286.4	89.3	50.9	90.0	299.255	297.555	392.833	391.055
20180509:04:47:25	23.5	15.0	-3.5	23.7	0.25	2.2	0.25	2.0	120.8	285.8	286.4	89.3	50.8	90.0	300.616	298.928	394.62	392.861
20180509:04:52:25	23.5	15.0	-3.5	23.7	0.25	2.1	0.25	2.0	120.7	285.8	286.4	89.3	50.9	90.0	301.997	300.291	396.433	394.652
20180509:04:57:25	23.5	14.9	-3.5	23.7	0.25	2.2	0.25	2.0	120.6	285.8	286.5	89.2	50.8	90.0	303.337	301.622	398.193	396.402
20180509:05:02:25	23.5	15.0	-3.5	23.7	0.25	2.2	0.25	2.0	120.7	285.9	286.4	89.3	50.8	90.0	304.696	303.009	399.976	398.226
20180509:05:07:25	23.5	15.0	-3.5	23.7	0.25	2.1	0.25	2.0	120.7	285.9	286.5	89.2	50.9	89.9	306.089	304.346	401.806	399.983
20180509:05:12:25	23.5	14.9	-3.5	23.7	0.25	2.2	0.25	2.0	120.6	285.8	286.4	89.2	50.8	89.9	307.429	305.681	403.565	401.737
20180509:05:17:25	23.5	14.4	-3.5	23.7	0.25	2.1	0.25	2.0	119.3	285.8	286.4	89.2	50.9	89.9	308.785	307.066	405.344	403.558
20180509:05:22:25	23.5	14.1	-3.5	23.7	0.25	2.1	0.25	2.0	118.5	285.8	286.5	89.2	50.9	89.9	310.186	308.401	407.183	405.312
20180509:05:27:25	23.5	13.9	-3.5	23.7	0.25	2.1	0.25	2.0	118.0	285.8	286.4	89.2	50.9	89.8	311.526	309.757	408.943	407.094
20180509:05:32:25	23.5	14.4	-3.5	23.7	0.25	2.1	0.25	2.0	119.3	285.9	286.5	89.2	50.9	89.8	312.872	311.121	410.709	408.887
20180509:05:37:25	23.5	14.6	-3.5	23.7	0.25	2.1	0.25	2.0	119.9	285.9	286.5	89.2	50.8	89.8	314.268	312.458	412.543	410.645
20180509:05:42:25	23.5	14.7	-3.5	23.7	0.25	2.2	0.25	2.0	120.1	285.9	286.5	89.2	50.9	89.8	315.623	313.842	414.32	412.462
20180509:05:47:25	23.5	14.8	-3.5	23.7	0.25	2.1	0.25	2.0	120.3	285.9	286.4	89.2	50.8	89.8	316.961	315.187	416.076	414.229
20180509:05:52:25	23.5	14.8	-3.5	23.7	0.25	2.2	0.25	2.0	120.4	285.9	286.4	89.1	50.9	89.8	318.35	316.513	417.898	415.972
20180509:05:57:25	23.5	14.8	-3.5	23.7	0.25	2.1	0.25	2.0	120.4	285.8	286.4	89.1	50.9	89.7	319.71	317.904	419.683	417.799
20180509:06:02:25	23.5	14.8	-3.5	23.7	0.25	2.2	0.25	2.0	120.4	285.9	286.4	89.0	50.8	89.7	321.047	319.227	421.437	419.536
20180509:06:07:25	23.5	14.8	-3.5	23.7	0.25	2.1	0.25	2.0	120.4	285.9	286.4	89.0	50.9	89.7	322.431	320.587	423.252	421.321
20180509:06:12:25	23.5	14.9	-3.5	23.7	0.25	2.2	0.25	2.0	120.5	285.9	286.4	89.0	50.8	89.6	323.789	321.959	425.033	423.124
20180509:06:17:25	23.5	14.6	-3.5	23.7	0.25	2.2	0.25	2.0	119.8	285.9	286.4	89.0	50.9	89.6	325.132	323.293	426.794	424.876
20180509:06:22:25	23.5	14.2	-3.5	23.7	0.25	2.1	0.25	2.0	118.8	285.9	286.4	89.0	50.8	89.6	326.51	324.672	428.602	426.686
20180509:06:27:25	23.5	14.0	-3.5	23.7	0.25	2.1	0.25	2.0	118.2	285.8	286.4	88.9	50.9	89.6	327.88	326.027	430.4	428.466
20180509:06:32:25	23.5	14.3	-3.5	23.7	0.25	2.1	0.25	2.0	119.0	285.8	286.3	88.9	50.8	89.5	329.225	327.353	432.163	430.207
20180509:06:37:25	23.5	14.7	-3.5	23.7	0.25	2.1	0.25	2.0	120.1	285.9	286.4	88.9	50.8	89.5	330.586	328.746	433.948	432.036
20180509:06:42:25	23.5	14.9	-3.3	23.7	0.25	2.1	0.25	2.0	120.5	286.0	286.4	88.9	50.9	89.5	331.969	330.07	435.763	433.774
20180509:06:47:25	23.5	14.9	-3.5	23.7	0.25	2.2	0.25	2.0	120.6	285.9	286.4	88.9	50.7	89.4	333.309	331.417	437.52	435.543
20180509:06:52:25	23.5	14.9	-3.4	23.7	0.25	2.2	0.25	2.0	120.6	286.0	286.4	88.9	50.9	89.4	334.669	332.792	439.304	437.348
20180509:06:57:25	23.5	14.9	-3.5	23.7	0.25	2.2	0.25	2.0	120.5	285.9	286.4	88.8	50.8	89.4	336.066	334.127	441.135	439.1
20180509:07:02:25	23.5	14.8	-3.5	23.7	0.25	2.2	0.25	2.0	120.2	285.9	286.4	88.8	50.8	89.3	337.399	335.503	442.883	440.906
20180509:07:07:25	23.5	14.7	-3.5	23.7	0.25	2.2	0.25	2.0	120.1	285.9	286.4	88.8	50.8	89.3	338.753	336.863	444.657	442.69
20180509:07:12:25	23.5	14.7	-3.5	23.7	0.25	2.2	0.25	2.0	120.0	285.8	286.3	88.8	50.8	89.3	340.152	338.187	446.491	444.427
20180509:07:17:25	23.5	14.3	-3.5	23.7	0.25	2.1	0.25	2.0	119.1	285.8	286.4	88.7	50.9	89.3	341.493	339.581	448.248	446.256
20180509:07:22:25	23.5	14.0	-3.5	23.7	0.25	2.1	0.25	2.0	118.5	285.8	286.3	88.7	50.8	89.3	342.84	340.904	450.013	447.991
20180509:07:27:25	23.5	14.0	-3.5	23.7	0.25	2.1	0.25	2.0	118.3	285.7	286.3	88.7	50.9	89.3	344.242	342.253	451.85	449.759
20180509:07:32:25	23.5	14.5	-3.5	23.7	0.25	2.2	0.25	2.0	119.5	285.7	286.3	88.6	50.8	89.2	345.585	343.633	453.609	451.57
20180509:07:37:25	23.5	14.8	-3.4	23.7	0.25	2.2	0.25	2.0	120.2	285.8	286.3	88.6	50.8	89.2	346.927	344.963	455.369	453.314
20180509:07:42:25	23.5	14.9	-3.4	23.7	0.25	2.2	0.25	2.1	120.7	285.9	286.4	88.5	50.8	89.2	348.325	346.341	457.2	455.122
20180509:07:47:25	23.5	15.0	-3.4	23.7	0.25	2.2	0.25	2.1	120.8	285.8	286.3	88.4	50.7	89.1	349.676	347.704	458.969	456.91
20180509:07:52:25	23.5	15.1	-3.4	23.7	0.25	2.2	0.25	2.1	121.0	285.8	286.3	88.4	50.8	89.1	351.018	349.033	460.726	458.652
20180509:07:57:25	23.5	15.1	-3.5	23.7	0.25	2.2	0.25	2.1	121.1	285.8	286.3	88.3	50.7	89.0	352.412	350.421	462.552	460.472
20180509:08:02:25	23.5	15.2	-3.5	23.7	0.25	2.2	0.25	2.1	121.3	285.8	286.2	88.3	50.8	89.0	353.769	351.755	464.328	462.22
20180509:08:07:25	23.5	15.3	-3.5	23.7	0.25	2.2	0.25	2.1	121.5	285.8	286.4	88.3	50.7	89.0	355.107	353.102	466.08	463.985
20180509:08:12:25	23.5	15.3	-3.4	23.7	0.25	2.2	0.25	2.1	121.5	285.8	286.3	88.2	50.8	88.9	356.498	354.489	467.9	465.803
20180509:08:17:25	23.5	14.8	-3.4	23.7	0.25	2.2	0.25	2.0	120.3	285.8	286.4	88.2	50.8	88.9	357.86	355.821	469.683	467.549
20180509:08:22:25	23.5	14.9	-3.4	23.7	0.25	2.2	0.25	2.0	120.5	285.8	286.3	88.2	50.7	88.9	359.196	357.194	471.431	469.348
20180509:08:27:25	23.5	15.2	-3.4	23.7	0.25	2.2	0.25	2.1	121.3	285.8	286.4	88.2	50.8	88.9	360.584	358.559	473.248	471.137
20180509:08:32:25	23.5	15.3	-3.4	23.7	0.25	2.2	0.25	2.1	121.5	285.8	286.3	88.1	50.7	88.8	361.937	359.896	475.019	472.889
20180509:08:37:25	23.5	15.4	-3.4	23.7	0.25	2.2	0.25	2.1	121.7	285.9	286.5	88.1	50.8	88.8	363.284	361.287	476.781	474.712

Time:	Stack Pressure:	Sat% H2O:	Static:	Barometric:	Flowmeter1:	Vacuum1:	Flowmeter2:	Vacuum2:	Stack Temp:	Sorbent Temp:	Probe Temp:	DGM#1 Temp:	Condenser Temp:	DGM#2 Temp:	DGM1*:	DGM2*:	DGM1:	DGM2:
day:hh:mm:ss	in-Hg	Percent	in-H2O	in-Hg	l/min	in-Hg	l/min	in-Hg	degF	degF	degF	degF	degF	degF	liters STP	liters STP	liters nominal	liters nominal
20180509:08:42:25	23.5	15.4	-3.3	23.7	0.25	2.2	0.25	2.1	121.9	285.9	286.3	88.0	50.7	88.8	364.668	362.628	478.593	476.468
20180509:08:47:25	23.5	15.5	-3.3	23.7	0.25	2.2	0.25	2.0	122.0	285.9	286.4	88.0	50.7	88.7	366.031	363.966	480.376	478.222
20180509:08:52:25	23.5	15.5	-3.4	23.7	0.25	2.2	0.25	2.1	122.0	285.9	286.4	88.0	50.7	88.7	367.379	365.352	482.139	480.038
20180509:08:57:25	23.5	15.5	-3.4	23.7	0.25	2.2	0.25	2.1	122.0	285.8	286.3	88.0	50.6	88.7	368.754	366.694	483.937	481.795
20180509:09:02:25	23.5	15.5	-3.4	23.7	0.25	2.2	0.25	2.1	122.0	285.8	286.4	88.0	50.7	88.7	370.128	368.052	485.735	483.573
20180509:09:07:25	23.5	15.1	-3.4	23.7	0.25	2.2	0.25	2.0	121.0	285.7	286.3	88.0	50.6	88.7	371.472	369.413	487.493	485.355
20180509:09:12:25	23.5	14.9	-3.4	23.7	0.25	2.2	0.25	2.0	120.6	285.7	286.4	88.0	50.7	88.7	372.839	370.757	489.28	487.115
20180509:09:17:25	23.5	15.3	-3.5	23.8	0.25	2.2	0.25	2.1	121.5	285.7	286.3	88.0	50.7	88.6	374.221	372.15	491.087	488.938
20180509:09:22:25	23.5	15.4	-3.5	23.8	0.25	2.2	0.25	2.1	121.9	285.8	286.4	88.0	50.6	88.6	375.57	373.49	492.85	490.692
20180509:09:27:25	23.5	15.5	-3.5	23.8	0.25	2.2	0.25	2.1	122.0	285.9	286.5	88.0	50.7	88.7	376.928	374.825	494.626	492.44
20180509:09:32:25	23.5	15.5	-3.5	23.8	0.25	2.2	0.25	2.1	122.0	285.8	286.3	88.0	50.6	88.6	378.313	376.214	496.437	494.258
20180509:09:37:25	23.5	15.5	-3.5	23.8	0.25	2.2	0.25	2.1	122.0	285.8	286.4	88.0	50.6	88.6	379.656	377.551	498.193	496.008
20180509:09:42:25	23.5	15.5	-3.5	23.8	0.25	2.2	0.25	2.1	122.1	285.8	286.3	88.0	50.7	88.6	381.016	378.908	499.97	497.784
20180509:09:47:25	23.5	15.5	-3.6	23.8	0.25	2.2	0.25	2.1	122.1	285.8	286.4	88.0	50.6	88.6	382.405	380.271	501.785	499.568
20180509:09:52:25	23.5	15.5	-3.6	23.8	0.25	2.2	0.25	2.1	122.1	285.9	286.4	88.0	50.7	88.6	383.744	381.607	503.535	501.316
20180509:09:57:25	23.5	15.4	-3.7	23.8	0.25	2.2	0.25	2.1	121.7	285.8	286.4	88.0	50.6	88.6	385.104	382.998	505.313	503.135
20180509:10:02:25	23.5	14.9	-3.7	23.8	0.25	2.2	0.25	2.1	120.7	285.8	286.4	88.0	50.6	88.7	386.495	384.332	507.131	504.882
20180509:10:07:25	23.5	14.8	-3.8	23.8	0.25	2.2	0.25	2.1	120.2	285.7	286.4	88.0	50.7	88.7	387.829	385.671	508.874	506.633
20180509:10:12:25	23.5	14.9	-3.7	23.8	0.25	2.2	0.25	2.1	120.7	285.7	286.4	87.9	50.6	88.6	389.187	387.058	510.648	508.447
20180509:10:17:25	23.5	15.3	-3.7	23.8	0.25	2.2	0.25	2.1	121.6	285.8	286.3	87.9	50.6	88.6	390.581	388.391	512.47	510.192
20180509:10:22:25	23.5	15.4	-3.8	23.8	0.25	2.2	0.25	2.1	121.9	285.8	286.3	87.9	50.6	88.6	391.916	389.763	514.215	511.987
20180509:10:27:25	23.5	15.5	-3.7	23.8	0.25	2.2	0.25	2.1	122.1	285.8	286.3	88.0	50.6	88.6	393.272	391.131	515.987	513.776
20180509:10:32:25	23.5	15.6	-3.8	23.8	0.25	2.2	0.25	2.1	122.2	285.9	286.4	88.0	50.6	88.6	394.667	392.455	517.811	515.509
20180509:10:37:25	23.5	15.6	-3.8	23.8	0.25	2.2	0.25	2.1	122.4	285.7	286.3	88.0	50.6	88.6	396.006	393.844	519.561	517.327
20180509:10:42:25	23.5	15.6	-3.7	23.8	0.25	2.2	0.25	2.1	122.4	285.7	286.3	88.0	50.6	88.6	397.359	395.168	521.33	519.06
20180509:10:47:25	23.5	15.6	-3.7	23.7	0.25	2.2	0.25	2.1	122.4	285.7	286.3	88.0	50.6	88.7	398.756	396.518	523.156	520.827
20180509:10:52:25	23.5	15.7	-3.8	23.8	0.25	2.2	0.25	2.1	122.4	285.7	286.3	88.1	50.6	88.7	400.096	397.897	524.909	522.632
20180509:10:57:25	23.5	15.3	-3.8	23.7	0.25	2.2	0.25	2.1	121.6	285.7	286.3	88.2	50.5	88.7	401.454	399.234	526.685	524.383
20180509:11:02:25	23.5	15.0	-3.7	23.7	0.25	2.2	0.25	2.1	120.8	285.7	286.3	88.3	50.6	88.8	402.851	400.614	528.513	526.19
20180509:11:07:25	23.5	14.8	-3.6	23.7	0.25	2.2	0.25	2.1	120.3	285.7	286.4	88.4	50.6	88.9	404.196	401.968	530.274	527.964
20180509:11:12:25	23.5	15.2	-3.7	23.7	0.25	2.2	0.25	2.1	121.3	285.8	286.4	88.4	50.6	88.9	405.537	403.29	532.03	529.695
20180509:11:17:25	23.5	15.6	-3.7	23.7	0.25	2.2	0.25	2.1	122.2	285.8	286.3	88.4	50.5	88.9	406.939	404.68	533.865	531.517
20180509:11:22:25	23.5	15.7	-2.7	23.7	0.25	2.1	0.25	2.0	122.4	285.9	286.4	88.5	50.6	89.0	408.294	406.006	535.644	533.261
20180509:11:27:25	23.5	15.7	-3.7	23.7	0.25	2.2	0.25	2.1	122.4	285.9	286.4	88.5	50.6	89.0	409.633	407.36	537.398	535.036
20180509:11:32:25	23.5	15.7	-3.7	23.7	0.25	2.2	0.25	2.1	122.4	285.8	286.3	88.5	50.5	89.0	411.027	408.732	539.224	536.835
20180509:11:37:25	23.5	15.7	-3.7	23.7	0.25	2.2	0.25	2.1	122.4	285.9	286.4	88.6	50.5	89.1	412.387	410.068	541.006	538.586
20180509:11:42:25	23.5	15.7	-3.7	23.7	0.25	2.2	0.25	2.1	122.5	285.8	286.4	88.7	50.5	89.2	413.724	411.45	542.757	540.398
20180509:11:47:25	23.5	15.8	-3.7	23.7	0.25	2.2	0.25	2.1	122.8	285.8	286.3	88.8	50.5	89.2	415.113	412.801	544.578	542.171
20180509:11:52:25	23.5	15.9	-3.7	23.7	0.25	2.2	0.25	2.1	122.9	285.9	286.4	88.9	50.5	89.3	416.469	414.121	546.356	543.902
20180509:11:57:25	23.5	15.4	-3.7	23.7	0.25	2.2	0.25	2.1	121.7	285.9	286.3	88.9	50.5	89.3	417.811	415.512	548.115	545.727
20180509:12:02:25	23.4	15.1	-3.7	23.7	0.25	2.2	0.25	2.1	121.1	285.8	286.3	88.9	50.5	89.3	419.193	416.833	549.928	547.461
20180509:12:07:25	23.4	15.0	-3.7	23.7	0.25	2.2	0.25	2.1	120.7	285.8	286.4	88.9	50.5	89.4	420.553	418.193	551.711	549.246
20180509:12:12:25	23.4	15.4	-3.7	23.7	0.25	2.2	0.25	2.1	121.6	285.8	286.4	88.9	50.4	89.4	421.901	419.568	553.48	551.051
20180509:12:17:25	23.4	15.6	-3.7	23.7	0.25	2.2	0.25	2.1	122.3	285.8	286.4	89.0	50.4	89.5	423.275	420.901	555.281	552.801
20180509:12:22:25	23.4	15.8	-3.6	23.7	0.25	2.2	0.25	2.1	122.6	285.9	286.4	89.0	50.5	89.5	424.651	422.281	557.087	554.615
20180509:12:27:25	23.4	15.9	-3.6	23.7	0.25	2.2	0.25	2.1	122.8	285.9	286.4	89.0	50.4	89.6	425.997	423.642	558.854	556.402
20180509:12:32:25	23.4	15.9	-3.7	23.7	0.25	2.2	0.25	2.1	122.9	285.9	286.4	89.1	50.5	89.6	427.351	424.967	560.631	558.143
20180509:12:37:25	23.4	15.9	-3.7	23.7	0.25	2.2	0.25	2.1	122.9	285.9	286.4	89.2	50.5	89.7	428.741	426.359	562.456	559.972
20180509:12:42:25	23.4	15.9	-3.3	23.7	0.249	2.2	0.249	2.0	122.8	285.9	286.4	89.2	50.5	89.7	430.075	427.689	564.209	561.722
20180509:12:47:25	23.4	15.9	-3.3	23.7	0.251	2.2	0.251	2.1	122.8	285.9	286.4	89.2	50.5	89.8	431.439	429.038	566.002	563.496
20180509:12:52:25	23.4	15.8	-3.6	23.7	0.25	2.2	0.25	2.1	122.7	285.8	286.4	89.3	50.6	89.8	432.838	430.423	567.839	565.318
20180509:12:57:25	23.4	15.3	-1.2	23.5	0.249	2.0	0.249	1.9	121.4	285.8	286.5	89.3	50.5	89.9	434.181	431.759	569.617	567.086
20180509:13:02:25	23.4	15.0	-3.7	23.7	0.251	2.2	0.251	2.1	120.8	285.8	286.6	89.4	50.6	89.9	435.529	433.117	571.387	568.872
20180509:13:07:25	23.4	15.1	-2.7	23.6	0.25	2.1	0.25	2.0	120.9	285.7	286.5	89.4	50.6	90.0	436.925	434.488	573.226	570.68
20180509:13:12:25	23.4	15.5	-3.7	23.7	0.25	2.2	0.25	2.1	122.0	285.8	286.4	89.5	50.7	90.1	438.282	435.822	575.009	572.436
20180509:13:17:25	23.4	15.7	-3.6	23.7	0.25	2.2	0.25	2.1	122.3	285.8	286.4	89.6	50.7	90.2	439.617	437.202	576.765	574.252
20180509:13:22:25	23.4	15.8	-3.6	23.7	0.25	2.2	0.25	2.1	122.5	285.9	286.4	89.8	50.8	90.3	441.006	438.565	578.591	576.045
20180509:13:27:25	23.4	15.8	-3.7	23.7	0.25	2.2	0.25	2.1	122.7	285.8	286.4	89.9	50.9	90.3	442.367	439.888	580.381	577.788
20180509:13:32:25	23.4	15.9	-3.7	23.7	0.25	2.2	0.25	2.1	122.8	285.9	286.4	90.0	50.9	90.4	443.718	441.272	582.159	579.609
20180509:13:37:25	23.4	15.9	-3.8	23.7	0.25	2.2	0.25	2.1	122.9	285.9	286.4	90.1	50.9	90.5	445.082	442.604	583.954	581.363
20180509:13:42:25	23.4	16.0	-3.7	23.7	0.25	2.2	0.25	2.1	123.1	285.9	286.4	90.2	50.9	90.6	446.464	443.942	585.772	583.126
20180509:13:47:25	23.4	16.1	-3.7	23.7	0.25	2.2	0.25	2.1	123.2	285.9	286.5	90.3	51.0	90.6	447.802	445.328	587.533	584.951
20180509:13:52:25	23.4	16.0	-3.7	23.7	0.25	2.2	0.25	2.1	123.2	285.9	286.5	90.3	50.9	90.7	449.162	446.662	589.324	586.709
20180509:13:57:25	23.4	15.5	-3.7	23.7	0.25	2.2	0.25	2.1	121.8	285.8	286.4	90.4	51.0	90.7	450.562	448.02	591.169	588.498
20180509:14:02:25	23.4	15.1	-3.7	23.7	0.25	2.2	0.25	2.1	120.9	285.8	286.4	90.5	51.0	90.8	451.906	449.385	592.939	590.297
20180509:14:07:25	23.4	15.1	-3.7	23.7	0.25	2.2	0.25	2.1	121.0	285.8	286.5	90.6	51.0	90.9	453.254	450.718	594.715	592.055
20180509:14:12:25	23.4	15.7	-3.8	23.7	0.25	2.2	0.25	2.1	122.3	285.8	286.4	90.7	51.0	91.0	454.651	452.099	596.556	593.876
20180509:14:17:25	23.4	16.0	-3.7	23.7	0.25	2.2	0.25	2.1	122.9	285.9	286.5	90.8	51.0	91.1	456.012	453.45	598.35	595.658
20180509:14:22:25	23.4	16.1	-3.8	23.7	0.25	2.2	0.25	2.1	123.3	286.0	286.5	90.9	51.0	91.2	457.345	454.772	600.107	597.402
20180509:14:27:25	23.4	16.3	-3.7	23.7	0.25	2.2	0.25	2.1	123.6	286.0	286.4	91.0	51.0	91.2	458.727	456.164	601.93	599.239
20180509:14:32:25	23.4	16.4	-3.7	23.7	0.25	2.2	0.25	2.1	123.9	286.0	286.5	91.1	51.1	91.3	460.088	457.484	603.726	600.981
20180509:14:37:25	23.4	16.5	-3.7	23.7	0.25	2.2	0.25	2.1	124.1	286.0	286.4	91.2	51.0	91.4	461.434	458.83	605.502	602.758
20180509:14:42:25	23.4	16.6	-3.6	23.7	0.25	2.2	0.25	2.1	124.4	286.0	286.5	91.2	51.0	91.5	462.793	460.21	607.294	604.579
20180509:14:47:25	23.4	16.8	-3.3	23.7	0.25	2.2	0.25	2.1	124.8	286.0	286.5	91.2	51.0	91.5	464.184	461.542	609.131	606.338
20180509:14:52:25	23.4	16.9	-3.4	23.7	0.25	2.2	0.25	2.1	125.1	286.0	286.4	91.2	51.0	91.6	465.523	462.898	610.898	608.13
20180509:14:57:25	23.4	17.1	-3.4	23.7	0.25	2.2	0.25	2.1	125.4	285.9	286.5	91.2	51.0	91.6	466.877	464.255	612.687	609.923
20180509:15:02:25	23.4	17.1	-3.5	23.7	0.25	2.2	0.25	2.1	125.5	285.9	286.5	91.3	51.0	91.7	468.273	465.589	614.53	611.686
20180509:15:07:25	23.4	16.3	-3.8	23.7	0.25	2.2	0.25	2.0	123.6	285.8	286.4	91.3	51.0	91.8	469.624	466.97	616.315	613.511
20180509:15:12:25	23.4	15.8	-3.8	23.7	0.25	2.2	0.25	2.0	122.6	285.8	286.4	91.4	51.0	91.8	470.962	468.318	618.081	615.293
20180509:15:17:25	23.4	15.9	-3.6	23.7	0.25	2.2	0.25	2.0	122.8	285.8	286.5	91.5	51.0	91.9	472.348	469.64	619.913	617.041
20180509:15:22:25	23.4	16.7	-3.3	23.6	0.25	2.2	0.25	2.1	124.6	285.9	286.4	91.5	51.1	91.9	473.696	471.028	621.694	618.878
20180509:15:27:25	23.4	17.1	-3.5	23.6	0.25	2.2	0.25	2.1	125.5	285.9	286.5	91.6	51.1	92.0	475.043	472.357	623.476	620.635
20180509:15:32:25	23.4	17.4	-3.8	23.6	0.25	2.2	0.25	2.1	126.0	285.9	286.4	91.6	51.2	92.1	476.41	473.695	625.283	622.406
20180509:15:37:25	23.4	17.6	-3.7	23.6	0.25	2.2	0.25	2.1	126.4	286.0	286.4	91.7	51.2	92.2	477.788	475.077	627.106	624.235
20180509:15:42:25	23.4	17.6	-3.7	23.6	0.25	2.2	0.25	2.1	126.6	286.0	286.5	91.8	51.2	92.2	479.121	476.402	628.869	625.989
20180509:15:47:25	23.4	17.6	-3.6	23.6	0.25	2.2	0.25	2.0	126.5	285.9	286.4	91.8	51.2	92.3	480.473	477.753	630.657	627.778
20180509:15:52:25	23.4	17.5	-3.6	23.6	0.25	2.2	0.25	2.0	126.3	285.9	286.5	91.9	51.2	92.4	481.869	479.12	632.504	629.588
20180509:15:57:25	23.4	17.5	-3.6	23.6	0.25	2.2	0.25	2.1	126.3	285.8	286.4	91.9	51.3	92.4	483.211	480.45	634.28	631.35
20180509:16:02:25	23.4	17.3	-3.7	23.6	0.25	2.2	0.25	2.1	125.8	285.8	286.4	92.0	51.3	92.5	484.554	481.82	636.057	633.165

Time:	Stack Pressure:	Sat% H2O:	Static:	Barometric:	Flowmeter1:	Vacuum1:	Flowmeter2:	Vacuum2:	Stack Temp:	Sorbent Temp:	Probe Temp:	DGM#1 Temp:	Condenser Temp:	DGM#2 Temp:	DGM1*:	DGM2*:	DGM1:	DGM2:
day:hh:mm:ss	in-Hg	Percent	in-H2O	in-Hg	l/min	in-Hg	l/min	in-Hg	degF	degF	degF	degF	degF	degF	liters STP	liters STP	liters nominal	liters nominal
20180509:16:07:25	23.4	16.3	-3.7	23.6	0.25	2.2	0.25	2.0	123.6	285.8	286.4	92.1	51.4	92.6	485.946	483.172	637.9	634.957
20180509:16:12:25	23.4	16.0	-3.8	23.6	0.25	2.2	0.25	2.0	123.0	285.7	286.4	92.2	51.4	92.7	487.299	484.503	639.691	636.72
20180509:16:17:25	23.4	16.1	-3.7	23.6	0.25	2.2	0.25	2.0	123.3	285.8	286.5	92.3	51.5	92.8	488.632	485.885	641.456	638.551
20180509:16:22:25	23.4	16.8	-3.6	23.6	0.25	2.2	0.25	2.0	124.8	285.9	286.4	92.4	51.5	92.9	490.006	487.224	643.276	640.325
20180509:16:27:25	23.4	17.1	-3.5	23.6	0.25	2.2	0.25	2.1	125.4	286.0	286.5	92.5	51.5	92.9	491.371	488.541	645.083	642.071
20180509:16:32:25	23.4	17.3	-3.8	23.6	0.25	2.2	0.25	2.1	125.8	285.9	286.4	92.6	51.5	93.0	492.711	489.923	646.859	643.904
20180509:16:37:25	23.4	17.4	-3.8	23.6	0.25	2.2	0.25	2.1	126.0	285.9	286.5	92.7	51.6	93.1	494.064	491.245	648.652	645.656
20180509:16:42:25	23.4	17.4	-3.8	23.6	0.25	2.2	0.25	2.0	126.0	285.9	286.5	92.8	51.6	93.2	495.459	492.585	650.5	647.434
20180509:16:47:25	23.4	17.4	-3.8	23.6	0.25	2.1	0.25	2.0	126.0	285.9	286.5	92.8	51.6	93.2	496.797	493.963	652.274	649.261
20180509:16:52:25	23.3	17.3	-4.0	23.6	0.25	2.1	0.25	2.0	125.7	285.9	286.4	92.8	51.6	93.3	498.14	495.285	654.054	651.015
20180509:16:57:25	23.3	17.1	-4.1	23.6	0.25	2.1	0.25	2.0	125.5	285.9	286.4	92.9	51.7	93.3	499.526	496.635	655.891	652.806
20180509:17:02:25	23.3	16.9	-4.0	23.6	0.25	2.1	0.25	2.0	125.0	285.9	286.5	92.9	51.7	93.4	500.875	497.984	657.68	654.596
20180509:17:07:25	23.4	16.0	-3.9	23.6	0.25	2.1	0.25	2.0	123.0	285.8	286.4	93.0	51.7	93.4	502.2	499.312	659.435	656.357
20180509:17:12:25	23.4	16.2	-3.9	23.6	0.25	2.2	0.25	2.0	123.4	285.7	286.4	93.0	51.7	93.5	503.574	500.689	661.257	658.184
20180509:17:17:25	23.4	16.6	-3.6	23.6	0.25	2.2	0.25	2.0	124.2	285.9	286.4	93.0	51.7	93.5	504.919	502.017	663.041	659.947
20180509:17:22:25	23.4	16.7	-3.7	23.6	0.25	2.2	0.25	2.1	124.6	285.9	286.4	93.1	51.7	93.6	506.255	503.341	664.813	661.705
20180509:17:27:25	23.4	16.8	-3.7	23.6	0.25	2.2	0.25	2.1	124.7	285.8	286.4	93.1	51.6	93.6	507.615	504.713	666.617	663.526
20180509:17:32:25	23.4	16.9	-3.8	23.6	0.25	2.2	0.25	2.1	124.9	285.8	286.4	93.1	51.7	93.6	508.983	506.027	668.431	665.271
20180509:17:37:25	23.4	16.9	-3.7	23.6	0.25	2.2	0.25	2.0	125.0	285.8	286.4	93.1	51.7	93.7	510.313	507.37	670.196	667.055
20180509:17:42:25	23.4	16.9	-3.8	23.6	0.25	2.2	0.25	2.0	125.0	285.8	286.5	93.2	51.7	93.7	511.662	508.736	671.985	668.868
20180509:17:47:25	23.4	16.9	-3.7	23.6	0.25	2.2	0.25	2.0	124.9	285.8	286.4	93.2	51.7	93.8	513.046	510.058	673.822	670.624
20180509:17:52:25	23.4	16.8	-3.5	23.6	0.25	2.2	0.25	2.1	124.7	285.8	286.4	93.3	51.7	93.8	514.381	511.421	675.593	672.434
20180509:17:57:25	23.4	16.7	-3.5	23.6	0.25	2.2	0.25	2.1	124.6	285.8	286.4	93.4	51.8	93.9	515.724	512.769	677.376	674.226
20180509:18:02:25	23.4	16.5	-3.5	23.6	0.25	2.2	0.25	2.1	124.2	285.8	286.4	93.5	51.8	93.9	517.121	514.098	679.23	675.991
20180509:18:07:25	23.4	16.4	-3.4	23.6	0.25	2.2	0.25	2.1	124.0	285.8	286.3	93.6	51.8	94.0	518.474	515.476	681.026	677.821
20180509:18:12:25	23.4	16.4	-3.5	23.6	0.25	2.2	0.25	2.1	123.8	285.8	286.5	93.6	51.8	94.1	519.803	516.814	682.791	679.6
20180509:18:17:25	23.4	16.3	-3.5	23.6	0.25	2.2	0.25	2.1	123.7	285.9	286.4	93.7	51.8	94.1	521.176	518.135	684.615	681.355
20180509:18:22:25	23.4	16.2	-3.5	23.6	0.25	2.2	0.25	2.1	123.4	285.8	286.4	93.8	51.8	94.2	522.545	519.515	686.433	683.19
20180509:18:27:25	23.4	16.1	-3.6	23.6	0.25	2.2	0.25	2.1	123.2	285.8	286.4	93.8	51.8	94.2	523.879	520.85	688.206	684.964
20180509:18:32:25	23.4	15.9	-3.6	23.6	0.25	2.2	0.25	2.1	122.8	285.8	286.4	93.9	51.8	94.3	525.237	522.186	690.009	686.741
20180509:18:37:25	23.4	15.8	-3.5	23.6	0.25	2.2	0.25	2.1	122.6	285.8	286.4	93.9	51.8	94.3	526.637	523.565	691.869	688.573
20180509:18:42:25	23.4	15.7	-3.7	23.6	0.25	2.2	0.25	2.1	122.3	285.8	286.4	94.0	51.8	94.4	527.993	524.895	693.67	690.342
20180509:18:47:25	23.4	15.5	-3.6	23.6	0.25	2.2	0.25	2.1	121.8	285.8	286.5	94.1	51.6	94.5	529.33	526.239	695.448	692.13
20180509:18:52:25	23.4	15.4	-3.6	23.6	0.25	2.2	0.25	2.1	121.6	285.8	286.5	94.1	51.1	94.5	530.706	527.62	697.276	693.966
20180509:18:57:25	23.4	15.3	-3.6	23.6	0.25	2.2	0.25	2.1	121.4	285.8	286.5	94.2	51.4	94.5	532.074	528.944	699.094	695.727
20180509:19:02:25	23.4	15.3	-3.6	23.6	0.25	2.2	0.25	2.1	121.3	285.8	286.4	94.2	51.6	94.5	533.413	530.296	700.874	697.526
20180509:19:07:25	23.4	15.2	-3.6	23.6	0.25	2.2	0.25	2.1	121.2	285.8	286.4	94.2	51.6	94.6	534.774	531.677	702.683	699.363
20180509:19:12:25	23.4	15.2	-3.6	23.6	0.25	2.2	0.25	2.0	121.2	285.8	286.5	94.2	51.7	94.6	536.171	533.012	704.541	701.139
20180509:19:17:25	23.4	15.3	-3.6	23.6	0.25	2.2	0.25	2.1	121.3	285.8	286.4	94.2	51.8	94.6	537.531	534.361	706.348	702.932
20180509:19:22:25	23.4	15.3	-3.6	23.6	0.25	2.2	0.25	2.1	121.4	285.8	286.4	94.2	51.8	94.6	538.867	535.737	708.124	704.763
20180509:19:27:25	23.4	15.3	-3.6	23.6	0.25	2.2	0.25	2.1	121.3	285.8	286.4	94.2	51.7	94.7	540.241	537.069	709.95	706.536
20180509:19:32:25	23.4	15.2	-3.6	23.6	0.25	2.2	0.25	2.1	121.2	285.8	286.4	94.2	51.8	94.7	541.613	538.423	711.774	708.336
20180509:19:37:25	23.4	15.0	-3.5	23.6	0.25	2.2	0.25	2.1	120.6	285.8	286.4	94.3	51.8	94.8	542.959	539.789	713.563	710.154
20180509:19:42:25	23.4	14.6	-3.6	23.6	0.25	2.2	0.25	2.1	119.7	285.7	286.4	94.3	51.8	94.8	544.312	541.124	715.361	711.93
20180509:19:47:25	23.4	15.0	-3.6	23.6	0.25	2.2	0.25	2.1	120.7	285.8	286.5	94.3	51.8	94.8	545.717	542.488	717.23	713.744
20180509:19:52:25	23.4	15.1	-3.6	23.6	0.25	2.2	0.25	2.1	121.0	285.8	286.4	94.3	51.8	94.8	547.071	543.847	719.03	715.553
20180509:19:57:25	23.4	15.2	-3.6	23.6	0.25	2.2	0.25	2.1	121.2	285.8	286.4	94.3	51.9	94.8	548.41	545.183	720.809	717.331
20180509:20:02:25	23.4	15.3	-3.7	23.6	0.25	2.2	0.25	2.1	121.3	285.8	286.4	94.3	51.9	94.8	549.778	546.553	722.628	719.154
20180509:20:07:25	23.4	15.3	-3.6	23.6	0.25	2.2	0.25	2.1	121.4	285.9	286.4	94.3	51.9	94.9	551.16	547.908	724.465	720.957
20180509:20:12:25	23.4	15.3	-3.6	23.6	0.25	2.2	0.25	2.1	121.3	285.8	286.4	94.2	51.9	94.9	552.508	549.249	726.256	722.741
20180509:20:17:25	23.4	15.3	-3.6	23.6	0.25	2.2	0.25	2.1	121.4	285.9	286.4	94.2	51.9	94.9	553.861	550.623	728.054	724.57
20180509:20:22:25	23.4	15.3	-3.6	23.6	0.25	2.2	0.25	2.1	121.5	285.9	286.5	94.2	52.0	94.9	555.26	551.981	729.913	726.376
20180509:20:27:25	23.4	15.3	-3.6	23.6	0.25	2.2	0.25	2.1	121.3	285.8	286.5	94.2	52.0	94.8	556.614	553.322	731.713	728.16
20180509:20:32:25	23.4	14.8	-3.6	23.6	0.25	2.2	0.25	2.1	120.1	285.8	286.5	94.2	52.0	94.8	557.966	554.695	733.509	729.987
20180509:20:37:25	23.4	15.0	-3.7	23.6	0.25	2.2	0.25	2.1	120.7	285.8	286.5	94.1	52.0	94.8	559.325	556.058	735.315	731.799
20180509:20:42:25	23.4	15.2	-3.7	23.6	0.25	2.2	0.25	2.1	121.2	285.8	286.5	94.1	52.0	94.8	560.727	557.397	737.178	733.581
20180509:20:47:25	23.4	15.3	-3.7	23.6	0.25	2.2	0.25	2.1	121.5	285.9	286.4	94.1	51.9	94.8	562.079	558.771	738.974	735.408
20180509:20:52:25	23.4	15.4	-3.7	23.6	0.25	2.2	0.25	2.1	121.7	285.9	286.4	94.1	51.9	94.8	563.426	560.13	740.763	737.216
20180509:20:57:25	23.4	15.5	-3.7	23.6	0.25	2.2	0.25	2.1	121.8	286.0	286.5	94.0	51.9	94.7	564.812	561.47	742.604	738.998
20180509:21:02:25	23.4	15.5	-3.6	23.6	0.25	2.2	0.25	2.1	121.8	285.9	286.4	94.0	51.8	94.7	566.182	562.844	744.424	740.825
20180509:21:07:25	23.4	15.5	-3.6	23.6	0.25	2.2	0.25	2.1	121.8	285.9	286.4	93.9	51.8	94.6	567.525	564.201	746.207	742.63
20180509:21:12:25	23.4	15.5	-3.7	23.6	0.25	2.2	0.25	2.1	121.9	285.9	286.5	93.9	51.8	94.6	568.891	565.544	748.022	744.415
20180509:21:17:25	23.4	15.6	-3.7	23.6	0.25	2.2	0.25	2.1	122.0	285.9	286.5	93.9	51.9	94.6	570.29	566.916	749.88	746.241
20180509:21:22:25	23.4	15.4	-3.7	23.6	0.25	2.2	0.25	2.1	121.6	285.8	286.4	93.9	51.8	94.6	571.653	568.278	751.691	748.053
20180509:21:27:25	23.4	14.9	-3.7	23.6	0.25	2.2	0.25	2.1	120.3	285.8	286.4	93.8	51.8	94.6	572.99	569.618	753.467	749.835
20180509:21:32:25	23.4	15.2	-3.7	23.6	0.25	2.2	0.25	2.1	121.2	285.9	286.5	93.8	51.8	94.6	574.365	570.993	755.293	751.664
20180509:21:37:25	23.4	15.5	-3.7	23.6	0.25	2.2	0.25	2.1	121.8	285.9	286.4	93.8	51.8	94.5	575.751	572.356	757.133	753.476
20180509:21:42:25	23.4	15.7	-3.7	23.6	0.25	2.2	0.25	2.1	122.2	286.0	286.5	93.8	51.7	94.5	577.101	573.692	758.926	755.252
20180509:21:47:25	23.4	15.7	-3.7	23.6	0.25	2.2	0.25	2.1	122.4	285.9	286.4	93.7	51.7	94.5	578.456	575.065	760.726	757.079
20180509:21:52:25	23.3	15.4	-3.8	23.6	0.25	2.2	0.25	2.1	121.6	285.9	286.4	93.7	51.7	94.4	579.853	576.424	762.581	758.885
20180509:21:57:25	23.4	14.9	-3.6	23.6	0.25	2.2	0.25	2.1	120.4	285.8	286.4	93.6	51.7	94.4	581.208	577.764	764.381	760.667
20180509:22:02:25	23.4	14.7	-3.7	23.6	0.25	2.2	0.25	2.1	119.8	285.8	286.5	93.6	51.6	94.3	582.564	579.137	766.181	762.492
20180509:22:07:25	23.4	15.0	-3.6	23.6	0.25	2.2	0.25	2.1	120.6	285.8	286.5	93.7	51.6	94.3	583.923	580.496	767.985	764.299
20180509:22:12:25	23.4	15.4	-3.7	23.6	0.25	2.2	0.25	2.1	121.5	285.8	286.5	93.7	51.5	94.3	585.324	581.836	769.846	766.081
20180509:22:17:25	23.4	15.6	-3.7	23.6	0.25	2.2	0.25	2.1	122.0	285.9	286.4	93.8	51.5	94.3	586.68	583.21	771.646	767.906
20180509:22:22:25	23.4	15.7	-3.7	23.6	0.25	2.2	0.25	2.1	122.2	285.9	286.4	93.8	51.5	94.2	588.026	584.566	773.433	769.709
20180509:22:27:25	23.4	15.7	-3.8	23.6	0.25	2.2	0.25	2.1	122.4	285.9	286.5	93.8	51.5	94.2	589.41	585.906	775.272	771.489
20180509:22:32:25	23.4	15.8	-3.8	23.6	0.25	2.2	0.25	2.1	122.5	286.0	286.5	93.8	51.5	94.2	590.783	587.284	777.094	773.32
20180509:22:37:25	23.4	15.5	-3.9	23.6	0.25	2.2	0.25	2.1	121.7	285.9	286.4	93.7	51.5	94.2	592.126	588.635	778.878	775.115
20180509:22:42:25	23.4	15.0	-3.7	23.6	0.25	2.2	0.25	2.1	120.6	285.9	286.5	93.7	51.5	94.2	593.489	589.974	780.687	776.895
20180509:22:47:25	23.4	14.8	-3.8	23.6	0.25	2.2	0.25	2.1	120.0	285.9	286.5	93.7	51.5	94.2	594.889	591.355	782.546	778.729
20180509:22:52:25	23.4	15.2	-3.6	23.6	0.25	2.2	0.25	2.1	121.1	285.9	286.5	93.6	51.5	94.2	596.254	592.713	784.357	780.534
20180509:22:57:25	23.4	15.8	-3.6	23.6	0.25	2.2	0.25	2.1	122.5	286.0	286.4	93.5	51.4	94.1	597.589	594.042	786.13	782.301
20180509:23:02:25	23.4	16.1	-3.7	23.6	0.25	2.2	0.25	2.1	123.3	286.0	286.5	93.5	51.4	94.1	598.963	595.427	787.954	784.141
20180509:23:07:25	23.4	16.4	-3.7	23.6	0.25	2.2	0.25	2.1	124.0	286.0	286.4	93.5	51.4	94.1	600.348	596.784	789.793	785.944
20180509:23:12:25	23.4	16.7	-3.8	23.6	0.25	2.2	0.25	2.1	124.5	286.1	286.5	93.4	51.4	94.1	601.698	598.112	791.583	787.709
20180509:23:17:25	23.4	16.8	-3.8	23.6	0.25	2.2	0.25	2.1	124.8	286.1	286.5	93.3	51.4	94.0	603.05	599.501	793.378	789.555
20180509:23:22:25	23.4	17.0	-3.7	23.6	0.25	2.2	0.25	2.1	125.1	286.0	286.5	93.2	51.4	93.9	604.45	600.857	795.235	791.355
20180509:23:27:25	23.3	16.4	-4.3	23.6	0.25	2.2	0.25	2.1	123.7	285.9	286.5	93.2	51.4	93.9	605.801	602.183	797.028	793.117

Time:	Stack Pressure:	Sat% H2O:	Static:	Barometric:	Flowmeter1:	Vacuum1:	Flowmeter2:	Vacuum2:	Stack Temp:	Sorbent Temp:	Probe Temp:	DGM#1 Temp:	Condenser Temp:	DGM#2 Temp:	DGM1*:	DGM2*:	DGM1:	DGM2:
day:hh:mm:ss	in-Hg	Percent	in-H2O	in-Hg	l/min	in-Hg	l/min	in-Hg	degF	degF	degF	degF	degF	degF	liters STP	liters STP	liters nominal	liters nominal
20180509:23:32:25	23.3	16.0	-4.5	23.6	0.25	2.2	0.25	2.0	122.9	285.8	286.5	93.1	51.4	93.9	607.149	603.572	798.817	794.962
20180509:23:37:25	23.3	15.8	-4.4	23.6	0.25	2.2	0.25	2.0	122.5	285.8	286.5	93.1	51.4	93.8	608.517	604.919	800.631	796.752
20180509:23:42:25	23.3	16.5	-4.2	23.6	0.25	2.2	0.25	2.1	123.9	285.9	286.5	93.0	51.4	93.8	609.909	606.249	802.478	798.519
20180509:23:47:25	23.3	16.9	-4.2	23.6	0.25	2.2	0.25	2.1	125.0	285.9	286.4	92.9	51.4	93.7	611.253	607.638	804.261	800.365
20180509:23:52:25	23.3	17.1	-4.2	23.6	0.25	2.2	0.25	2.1	125.4	286.0	286.5	92.9	51.4	93.6	612.601	608.984	806.05	802.152
20180509:23:57:25	23.3	17.3	-4.2	23.6	0.25	2.2	0.25	2.1	125.7	286.0	286.5	92.9	51.4	93.6	613.998	610.311	807.904	803.915
20180510:00:02:25	23.3	17.3	-4.1	23.6	0.25	2.2	0.25	2.1	125.8	285.9	286.5	92.8	51.3	93.5	615.349	611.696	809.696	805.756
20180510:00:07:25	23.3	17.2	-4.0	23.6	0.25	2.2	0.25	2.1	125.6	285.9	286.4	92.8	51.4	93.5	616.695	613.039	811.481	807.539
20180510:00:12:25	23.3	17.0	-4.0	23.6	0.25	2.2	0.25	2.1	125.2	285.8	286.5	92.8	51.4	93.5	618.061	614.372	813.294	809.31
20180510:00:17:25	23.3	16.9	-4.0	23.6	0.25	2.2	0.25	2.1	124.8	285.8	286.4	92.7	51.3	93.4	619.442	615.756	815.126	811.148
20180510:00:22:25	23.3	16.7	-4.1	23.6	0.25	2.2	0.25	2.1	124.5	285.9	286.5	92.7	51.4	93.4	620.782	617.086	816.904	812.915
20180510:00:27:25	23.3	16.7	-4.0	23.6	0.25	2.2	0.25	2.1	124.4	285.8	286.4	92.7	51.4	93.3	622.133	618.431	818.696	814.701
20180510:00:32:25	23.3	16.7	-4.0	23.6	0.25	2.2	0.25	2.1	124.4	285.8	286.5	92.6	51.4	93.3	623.53	619.815	820.55	816.539
20180510:00:37:25	23.3	16.8	-4.1	23.6	0.25	2.2	0.25	2.1	124.6	285.9	286.5	92.7	51.4	93.3	624.89	621.137	822.354	818.295
20180510:00:42:25	23.3	15.9	-4.4	23.6	0.25	2.2	0.25	2.0	122.7	285.8	286.5	92.7	51.4	93.2	626.224	622.491	824.124	820.094
20180510:00:47:25	23.3	15.6	-4.6	23.6	0.25	2.2	0.25	2.0	121.9	285.8	286.5	92.7	51.4	93.2	627.602	623.871	825.954	821.927
20180510:00:52:25	23.3	15.4	-4.7	23.6	0.25	2.2	0.25	2.0	121.4	285.8	286.5	92.8	51.4	93.2	628.974	625.205	827.774	823.699
20180510:00:57:25	23.3	16.0	-4.5	23.6	0.25	2.2	0.25	2.0	122.8	285.8	286.4	92.7	51.4	93.1	630.313	626.554	829.552	825.491
20180510:01:02:25	23.3	16.3	-4.4	23.6	0.25	2.2	0.25	2.0	123.4	285.9	286.4	92.7	51.4	93.1	631.674	627.922	831.357	827.308
20180510:01:07:25	23.3	16.3	-4.5	23.6	0.25	2.1	0.25	2.0	123.6	286.0	286.5	92.7	51.3	93.1	633.065	629.254	833.204	829.077
20180510:01:12:25	23.3	16.4	-4.4	23.6	0.25	2.1	0.25	2.0	123.7	286.0	286.5	92.6	51.4	93.1	634.41	630.614	834.989	830.883
20180510:01:17:25	23.3	16.4	-4.4	23.6	0.25	2.1	0.25	2.0	123.8	286.0	286.5	92.5	51.3	93.1	635.742	631.961	836.757	832.673
20180510:01:22:25	23.3	16.5	-4.3	23.6	0.25	2.1	0.25	2.0	124.0	285.9	286.4	92.4	51.3	93.0	637.123	633.291	838.589	834.44
20180510:01:27:25	23.3	16.5	-4.3	23.6	0.25	2.1	0.25	2.0	124.0	286.0	286.5	92.4	51.3	93.0	638.464	634.665	840.369	836.265
20180510:01:32:25	23.3	16.5	-4.4	23.6	0.25	2.2	0.25	2.0	123.9	285.9	286.5	92.4	51.3	93.0	639.802	636.005	842.144	838.045
20180510:01:37:25	23.3	16.5	-4.4	23.6	0.25	2.2	0.25	2.1	123.9	285.9	286.5	92.3	51.3	92.9	641.169	637.323	843.957	839.795
20180510:01:42:25	23.3	16.5	-4.4	23.6	0.25	2.2	0.25	2.1	124.0	285.9	286.5	92.3	51.3	92.9	642.537	638.708	845.772	841.635
20180510:01:47:25	23.3	16.5	-4.4	23.6	0.25	2.2	0.25	2.1	123.9	285.9	286.4	92.3	51.3	92.9	643.868	640.023	847.539	843.382
20180510:01:52:25	23.3	16.5	-4.4	23.6	0.25	2.2	0.25	2.1	124.0	285.9	286.5	92.2	51.3	92.9	645.217	641.356	849.328	845.152
20180510:01:57:25	23.2	16.1	-4.8	23.6	0.25	2.2	0.25	2.0	123.0	285.8	286.4	92.2	51.3	92.8	646.603	642.727	851.167	846.974
20180510:02:02:25	23.2	15.3	-5.0	23.6	0.25	2.1	0.25	2.0	121.3	285.8	286.5	92.2	51.3	92.8	647.936	644.052	852.935	848.733
20180510:02:07:25	23.2	15.1	-5.1	23.6	0.25	2.2	0.25	2.0	120.6	285.8	286.4	92.2	51.3	92.8	649.273	645.401	854.709	850.524
20180510:02:12:25	23.2	15.3	-4.9	23.6	0.25	2.2	0.25	2.0	121.2	285.9	286.5	92.1	51.3	92.8	650.666	646.751	856.556	852.318
20180510:02:17:25	23.2	15.8	-4.8	23.6	0.25	2.2	0.25	2.1	122.4	285.9	286.5	92.0	51.3	92.8	652.01	648.086	858.339	854.09
20180510:02:22:25	23.2	16.1	-4.8	23.6	0.25	2.2	0.25	2.0	122.9	286.0	286.5	92.0	51.3	92.7	653.341	649.458	860.104	855.912
20180510:02:27:25	23.2	16.1	-4.6	23.6	0.25	2.2	0.25	2.0	123.1	285.9	286.5	91.9	51.3	92.7	654.721	650.808	861.933	857.705
20180510:02:32:25	23.2	16.2	-4.6	23.6	0.25	2.2	0.25	2.1	123.3	285.9	286.5	91.9	51.3	92.7	656.071	652.128	863.724	859.457
20180510:02:37:25	23.3	16.3	-4.6	23.6	0.25	2.2	0.25	2.1	123.6	285.9	286.5	91.9	51.3	92.6	657.411	653.512	865.5	861.295
20180510:02:42:25	23.2	16.4	-4.6	23.6	0.25	2.2	0.25	2.1	123.8	285.9	286.4	91.9	51.3	92.6	658.771	654.849	867.304	863.07
20180510:02:47:25	23.2	16.4	-4.6	23.6	0.25	2.2	0.25	2.0	123.7	285.8	286.4	91.9	51.4	92.5	660.152	656.173	869.135	864.827
20180510:02:52:25	23.2	16.4	-4.7	23.6	0.25	2.2	0.25	2.0	123.7	285.9	286.4	91.9	51.4	92.5	661.492	657.555	870.911	866.662
20180510:02:57:25	23.2	16.4	-4.7	23.6	0.25	2.1	0.25	2.0	123.6	285.9	286.4	91.9	51.3	92.4	662.841	658.879	872.7	868.419
20180510:03:02:25	23.2	16.3	-4.8	23.6	0.25	2.1	0.25	2.0	123.6	286.0	286.5	91.9	51.3	92.4	664.23	660.219	874.543	870.197
20180510:03:07:25	23.2	16.3	-4.7	23.6	0.25	2.1	0.25	2.0	123.6	286.0	286.5	91.9	51.3	92.4	665.578	661.594	876.33	872.023
20180510:03:12:25	23.2	16.3	-4.7	23.6	0.25	2.2	0.25	2.0	123.5	285.9	286.4	91.8	51.3	92.4	666.91	662.923	878.096	873.786
20180510:03:17:25	23.2	16.4	-4.6	23.6	0.25	2.2	0.25	2.1	123.7	285.9	286.5	91.8	51.3	92.4	668.29	664.271	879.926	875.575
20180510:03:22:25	23.2	16.4	-4.5	23.6	0.25	2.2	0.25	2.1	123.7	285.8	286.4	91.8	51.2	92.3	669.636	665.628	881.711	877.376
20180510:03:27:25	23.3	16.4	-4.5	23.6	0.25	2.2	0.25	2.1	123.7	285.9	286.5	91.8	51.3	92.3	670.977	666.958	883.489	879.141
20180510:03:32:25	23.3	16.2	-4.5	23.6	0.25	2.2	0.25	2.1	123.3	285.9	286.5	91.8	51.2	92.2	672.34	668.33	885.296	880.962
20180510:03:37:25	23.3	16.1	-4.4	23.6	0.25	2.2	0.25	2.1	123.0	285.9	286.5	91.9	51.2	92.2	673.714	669.682	887.119	882.756
20180510:03:42:25	23.3	16.0	-4.4	23.6	0.25	2.2	0.25	2.1	122.9	285.9	286.5	91.9	51.2	92.2	675.051	671.002	888.891	884.508
20180510:03:47:25	23.3	16.1	-4.3	23.6	0.25	2.2	0.25	2.1	123.0	285.9	286.5	91.8	51.2	92.2	676.404	672.386	890.685	886.344
20180510:03:52:25	23.3	16.3	-4.4	23.6	0.25	2.2	0.25	2.1	123.4	285.9	286.4	91.7	51.2	92.2	677.799	673.715	892.535	888.107
20180510:03:57:25	23.3	16.3	-4.4	23.6	0.25	2.2	0.25	2.0	123.6	285.9	286.4	91.6	51.1	92.1	679.141	675.048	894.313	889.876
20180510:04:02:25	23.3	16.4	-4.4	23.6	0.25	2.2	0.25	2.0	123.6	285.9	286.4	91.6	51.1	92.1	680.479	676.428	896.087	891.707
20180510:04:07:25	23.3	16.3	-4.4	23.6	0.25	2.2	0.25	2.0	123.6	285.9	286.5	91.5	51.1	92.1	681.865	677.75	897.924	893.461
20180510:04:12:25	23.3	16.3	-4.5	23.6	0.25	2.1	0.25	2.0	123.5	285.9	286.4	91.5	51.1	92.0	683.21	679.095	899.706	895.244
20180510:04:17:25	23.3	16.3	-4.5	23.6	0.25	2.1	0.25	2.0	123.4	285.9	286.5	91.5	51.1	92.0	684.551	680.475	901.483	897.075
20180510:04:22:25	23.3	16.3	-4.5	23.6	0.25	2.1	0.25	2.0	123.4	285.8	286.5	91.4	51.1	92.0	685.918	681.804	903.294	898.838
20180510:04:27:25	23.3	16.4	-4.3	23.6	0.25	2.2	0.25	2.0	123.7	285.8	286.4	91.5	51.1	91.9	687.29	683.152	905.113	900.626
20180510:04:32:25	23.3	16.3	-4.4	23.6	0.25	2.2	0.25	2.1	123.5	285.9	286.5	91.5	51.1	91.9	688.621	684.515	906.878	902.434
20180510:04:37:25	23.3	16.3	-4.3	23.6	0.25	2.2	0.25	2.1	123.5	285.9	286.5	91.6	51.0	91.9	689.976	685.847	908.674	904.201
20180510:04:42:25	23.3	16.3	-4.3	23.6	0.25	2.2	0.25	2.1	123.4	285.9	286.5	91.6	51.0	91.9	691.375	687.22	910.528	906.023
20180510:04:47:25	23.3	16.2	-4.4	23.6	0.25	2.2	0.25	2.1	123.2	285.9	286.5	91.6	51.0	91.9	692.72	688.574	912.311	907.818
20180510:04:52:25	23.3	16.2	-4.5	23.6	0.25	2.2	0.25	2.1	123.3	285.9	286.4	91.6	51.0	91.9	694.061	689.892	914.089	909.566
20180510:04:57:26	23.3	16.3	-4.5	23.6	0.25	2.2	0.25	2.1	123.5	285.9	286.4	91.6	51.0	91.8	695.446	691.279	915.924	911.404
20180510:05:02:26	23.3	16.4	-4.4	23.6	0.25	2.2	0.25	2.0	123.7	285.9	286.4	91.6	51.0	91.8	696.794	692.613	917.711	913.173
20180510:05:07:26	23.3	16.3	-4.5	23.6	0.25	2.2	0.25	2.0	123.5	285.9	286.5	91.7	51.0	91.8	698.139	693.938	919.494	914.93
20180510:05:12:26	23.3	16.1	-4.5	23.6	0.25	2.2	0.25	2.1	123.0	285.9	286.4	91.7	51.0	91.8	699.502	695.322	921.302	916.765
20180510:05:17:26	23.3	16.0	-4.5	23.6	0.25	2.2	0.25	2.1	122.9	285.9	286.5	91.7	50.9	91.8	700.881	696.652	923.13	918.528
20180510:05:22:26	23.3	16.0	-4.5	23.6	0.25	2.2	0.25	2.1	122.8	285.9	286.5	91.8	50.9	91.8	702.224	697.994	924.909	920.308
20180510:05:27:26	23.3	15.9	-4.4	23.6	0.25	2.2	0.25	2.1	122.6	285.9	286.5	91.7	50.9	91.8	703.576	699.375	926.702	922.139
20180510:05:32:26	23.3	15.8	-4.5	23.6	0.25	2.2	0.25	2.1	122.4	285.9	286.5	91.6	50.9	91.7	704.975	700.709	928.556	923.906
20180510:05:37:26	23.3	15.8	-4.4	23.6	0.25	2.2	0.25	2.1	122.4	285.9	286.4	91.6	50.9	91.6	706.332	702.056	930.354	925.692
20180510:05:42:26	23.3	15.7	-4.5	23.6	0.25	2.2	0.25	2.1	122.2	285.8	286.4	91.6	50.9	91.6	707.671	703.422	932.128	927.502
20180510:05:47:26	23.3	15.6	-4.4	23.6	0.25	2.2	0.25	2.1	121.9	285.8	286.4	91.6	50.9	91.6	709.049	704.757	933.954	929.271
20180510:05:52:26	23.3	15.5	-4.3	23.6	0.25	2.2	0.25	2.1	121.8	285.9	286.4	91.5	50.8	91.6	710.42	706.131	935.77	931.09
20180510:05:57:26	23.3	15.5	-4.4	23.6	0.25	2.2	0.25	2.1	121.7	285.9	286.4	91.5	50.8	91.6	711.76	707.484	937.544	932.883
20180510:06:02:26	23.3	15.5	-4.3	23.6	0.25	2.2	0.25	2.1	121.7	285.9	286.4	91.4	50.8	91.5	713.12	708.822	939.346	934.656
20180510:06:07:26	23.3	15.6	-4.3	23.6	0.25	2.2	0.25	2.1	122.0	285.9	286.5	91.3	50.8	91.5	714.526	710.205	941.207	936.487
20180510:06:12:26	23.3	15.7	-4.4	23.6	0.25	2.2	0.25	2.1	122.1	285.9	286.4	91.3	50.8	91.4	715.88	711.56	943	938.282
20180510:06:17:26	23.3	15.7	-4.3	23.6	0.25	2.2	0.25	2.1	122.2	285.8	286.3	91.2	50.8	91.4	717.224	712.886	944.78	940.038
20180510:06:22:26	23.3	15.8	-4.3	23.6	0.25	2.2	0.25	2.1	122.4	285.9	286.4	91.2	50.8	91.4	718.607	714.276	946.609	941.878
20180510:06:27:26	23.3	16.0	-4.3	23.6	0.25	2.2	0.25	2.1	122.8	285.9	286.4	91.0	50.8	91.3	719.975	715.616	948.42	943.652
20180510:06:32:26	23.3	16.1	-4.3	23.6	0.25	2.2	0.25	2.1	123.1	285.9	286.4	91.0	50.9	91.3	721.323	716.942	950.204	945.408
20180510:06:37:26	23.3	16.3	-4.3	23.6	0.25	2.2	0.25	2.1	123.5	285.8	286.4	91.0	50.9	91.2	722.681	718.337	952	947.254
20180510:06:42:26	23.3	16.5	-4.3	23.6	0.25	2.2	0.25	2.1	124.0	285.9	286.4	91.0	50.8	91.2	724.08	719.665	953.852	949.011
20180510:06:47:26	23.3	16.5	-4.3	23.6	0.25	2.2	0.25	2.1	124.1	285.8	286.4	90.9	50.8	91.2	725.431	721.005	955.639	950.786
20180510:06:52:26	23.3	16.5	-4.2	23.6	0.25	2.2	0.25	2.1	124.0	285.8	286.4	90.8	50.9	91.2	726.778	722.389	957.42	952.617

Time: day:hh:mm:ss	Stack Pressure: in-Hg	Sat% H2O: Percent	Static: in-H2O	Barometric: in-Hg	Flowmeter1: l/min	Vacuum1: in-Hg	Flowmeter2: l/min	Vacuum2: in-Hg	Stack Temp: degF	Sorbent Temp: degF	Probe Temp: degF	DGM#1 Temp: degF	Condenser Temp: degF	DGM#2 Temp: degF	DGM1*: liters STP	DGM2*: liters STP	DGM1: liters nominal	DGM2: liters nominal
20180510:06:57:26	23.3	16.4	-4.2	23.6	0.25	2.2	0.25	2.1	123.7	285.8	286.4	90.7	50.8	91.1	728.165	723.712	959.256	954.368
20180510:07:02:26	23.3	16.3	-4.1	23.6	0.25	2.2	0.25	2.1	123.6	285.8	286.3	90.7	50.9	91.0	729.519	725.069	961.046	956.164
20180510:07:07:26	23.3	15.5	-4.4	23.6	0.25	2.2	0.25	2.0	121.7	285.8	286.4	90.7	50.9	91.0	730.868	726.443	962.83	957.981
20180510:07:12:26	23.3	15.0	-4.6	23.6	0.25	2.2	0.25	2.0	120.4	285.7	286.4	90.7	50.8	91.0	732.235	727.775	964.637	959.744
20180510:07:17:26	23.3	15.4	-4.3	23.6	0.25	2.2	0.25	2.1	121.5	285.8	286.4	90.7	50.8	90.9	733.619	729.141	966.469	961.551
20180510:07:22:26	23.3	15.8	-4.2	23.6	0.25	2.2	0.25	2.1	122.3	285.8	286.4	90.6	50.8	90.9	734.963	730.501	968.244	963.35
20180510:07:27:26	23.3	16.1	-4.1	23.6	0.25	2.2	0.25	2.1	123.1	285.9	286.4	90.6	50.8	90.9	736.317	731.835	970.035	965.115
20180510:07:32:26	23.3	16.3	-4.0	23.6	0.25	2.2	0.25	2.1	123.7	285.9	286.3	90.5	50.7	90.8	737.715	733.215	971.883	966.94
20180510:07:37:26	23.3	16.6	-3.9	23.6	0.25	2.2	0.25	2.1	124.3	285.8	286.3	90.4	50.8	90.8	739.073	734.564	973.678	968.724
20180510:07:42:26	23.3	16.7	-4.0	23.6	0.25	2.2	0.25	2.1	124.4	285.8	286.3	90.3	50.7	90.8	740.409	735.887	975.443	970.474
20180510:07:47:26	23.3	16.6	-3.9	23.6	0.25	2.2	0.25	2.1	124.4	285.8	286.3	90.3	50.7	90.7	741.794	737.27	977.272	972.303
20180510:07:52:26	23.3	16.6	-4.0	23.6	0.25	2.2	0.25	2.0	124.2	285.8	286.4	90.2	50.8	90.7	743.145	738.602	979.057	974.064
20180510:07:57:26	23.3	16.5	-4.0	23.6	0.25	2.1	0.25	2.0	124.1	285.8	286.3	90.2	50.7	90.7	744.484	739.936	980.826	975.827
20180510:08:02:26	23.3	16.5	-4.0	23.6	0.25	2.2	0.25	2.0	124.0	285.8	286.4	90.2	50.7	90.7	745.849	741.317	982.63	977.654
20180510:08:07:26	23.3	16.5	-4.0	23.6	0.25	2.2	0.25	2.0	124.0	285.8	286.3	90.2	50.7	90.6	747.221	742.645	984.443	979.41
20180510:08:12:26	23.3	16.5	-4.0	23.6	0.25	2.2	0.25	2.0	123.9	285.8	286.4	90.3	50.7	90.7	748.559	743.992	986.211	981.192
20180510:08:17:26	23.3	16.4	-4.0	23.6	0.25	2.2	0.25	2.1	123.8	285.7	286.4	90.3	50.6	90.6	749.914	745.353	988.002	982.991
20180510:08:22:26	23.3	16.4	-4.0	23.6	0.25	2.2	0.25	2.1	123.8	285.8	286.4	90.4	50.6	90.7	751.304	746.683	989.839	984.75
20180510:08:27:26	23.3	16.4	-4.0	23.6	0.25	2.2	0.25	2.1	123.8	285.8	286.4	90.5	50.7	90.7	752.641	748.057	991.607	986.568
20180510:08:32:26	23.3	16.4	-4.1	23.6	0.25	2.2	0.25	2.1	123.7	285.8	286.4	90.5	50.6	90.7	753.979	749.399	993.376	988.342
20180510:08:37:26	23.3	15.5	-4.5	23.6	0.25	2.2	0.25	2.0	121.6	285.7	286.4	90.6	50.6	90.7	755.373	750.713	995.219	990.079
20180510:08:42:26	23.3	15.1	-4.4	23.6	0.25	2.2	0.25	2.0	120.9	285.7	286.3	90.6	50.6	90.7	756.714	752.094	996.993	991.906
20180510:08:47:26	23.3	15.7	-4.2	23.6	0.25	2.2	0.25	2.0	122.2	285.8	286.5	90.5	50.6	90.7	758.051	753.409	998.759	993.645
20180510:08:52:26	23.3	16.0	-4.1	23.6	0.25	2.2	0.25	2.1	122.8	285.8	286.4	90.6	50.6	90.7	759.434	754.756	1000.589	995.427
20180510:08:57:26	23.3	16.1	-4.0	23.6	0.25	2.2	0.25	2.1	123.1	285.8	286.4	90.6	50.6	90.8	760.786	756.124	1002.376	997.237
20180510:09:02:26	23.3	16.2	-4.0	23.6	0.25	2.2	0.25	2.1	123.3	285.8	286.4	90.7	50.6	90.8	762.115	757.447	1004.135	998.987
20180510:09:07:26	23.3	16.2	-3.9	23.6	0.25	2.2	0.25	2.0	123.4	285.8	286.4	90.8	50.6	90.9	763.49	758.813	1005.954	1000.795
20180510:09:12:26	23.3	16.3	-3.8	23.6	0.25	2.2	0.25	2.1	123.5	285.8	286.4	90.9	50.6	91.0	764.853	760.167	1007.757	1002.586
20180510:09:17:26	23.3	16.3	-3.7	23.6	0.25	2.2	0.25	2.1	123.6	285.9	286.5	91.0	50.6	91.0	766.189	761.481	1009.526	1004.327
20180510:09:22:26	23.3	16.3	-3.7	23.6	0.25	2.2	0.25	2.1	123.6	285.8	286.4	91.0	50.6	91.0	767.541	762.854	1011.317	1006.145
20180510:09:27:26	23.3	16.3	-3.7	23.6	0.25	2.2	0.25	2.1	123.6	285.9	286.5	91.1	50.7	91.1	768.923	764.183	1013.146	1007.904
20180510:09:32:26	23.3	16.4	-3.7	23.6	0.25	2.2	0.25	2.1	123.7	285.9	286.4	91.1	50.7	91.2	770.257	765.513	1014.913	1009.665
20180510:09:37:26	23.3	16.4	-3.7	23.6	0.25	2.2	0.25	2.1	123.7	285.8	286.4	91.1	50.7	91.2	771.608	766.888	1016.702	1011.487
20180510:09:42:26	23.3	16.3	-3.7	23.6	0.25	2.2	0.25	2.0	123.7	285.9	286.4	91.1	50.7	91.2	773.002	768.218	1018.548	1013.248
20180510:09:47:26	23.3	15.5	-4.2	23.6	0.25	2.1	0.25	2.0	121.8	285.8	286.4	91.1	50.8	91.2	774.345	769.561	1020.328	1015.028
20180510:09:52:26	23.3	15.0	-4.2	23.6	0.25	2.1	0.25	2.0	120.5	285.8	286.4	91.0	50.8	91.2	775.682	770.916	1022.098	1016.823
20180510:09:57:26	23.3	15.5	-4.0	23.6	0.25	2.1	0.25	2.0	121.7	285.8	286.4	91.0	50.8	91.3	777.064	772.244	1023.928	1018.583
20180510:10:02:26	23.3	15.8	-3.8	23.6	0.25	2.2	0.25	2.0	122.5	285.8	286.4	91.0	50.8	91.3	778.412	773.622	1025.713	1020.408
20180510:10:07:26	23.3	16.0	-3.8	23.6	0.25	2.2	0.25	2.1	122.8	285.8	286.3	91.1	50.9	91.4	779.747	774.965	1027.481	1022.188
20180510:10:12:26	23.3	16.1	-3.7	23.6	0.25	2.2	0.25	2.1	123.2	285.8	286.4	91.2	50.9	91.4	781.118	776.282	1029.296	1023.932
20180510:10:17:26	23.3	16.2	-3.6	23.6	0.25	2.2	0.25	2.1	123.5	285.9	286.4	91.3	51.0	91.5	782.485	777.663	1031.107	1025.763
20180510:10:22:26	23.3	16.2	-3.6	23.6	0.25	2.2	0.25	2.1	123.5	285.9	286.4	91.3	51.0	91.5	783.824	778.982	1032.881	1027.511
20180510:10:27:26	23.3	16.3	-3.5	23.6	0.25	2.2	0.25	2.1	123.5	285.9	286.4	91.3	51.0	91.5	785.173	780.319	1034.669	1029.284
20180510:10:32:26	23.3	16.2	-3.6	23.6	0.25	2.2	0.25	2.1	123.4	285.9	286.3	91.2	51.0	91.6	786.559	781.695	1036.506	1031.107
20180510:10:37:26	23.3	16.3	-3.5	23.6	0.25	2.2	0.25	2.0	123.5	285.9	286.4	91.3	51.0	91.6	787.895	783.019	1038.276	1032.863
20180510:10:42:26	23.3	16.3	-3.5	23.6	0.25	2.2	0.25	2.0	123.5	285.9	286.5	91.4	51.1	91.7	789.237	784.37	1040.054	1034.654
20180510:10:47:26	23.3	16.3	-3.5	23.6	0.25	2.2	0.25	2.0	123.5	285.9	286.4	91.5	51.1	91.7	790.631	785.721	1041.902	1036.445
20180510:10:52:26	23.3	16.3	-3.4	23.6	0.25	2.2	0.25	2.0	123.6	285.9	286.5	91.6	51.0	91.8	791.979	787.047	1043.689	1038.205
20180510:10:57:26	23.3	16.3	-3.4	23.6	0.25	2.2	0.25	2.0	123.6	285.9	286.6	91.7	51.1	91.9	793.312	788.427	1045.457	1040.036
20180510:11:02:26	23.3	16.3	-3.4	23.6	0.25	2.2	0.25	2.1	123.6	285.9	286.5	91.8	51.1	91.9	794.689	789.762	1047.283	1041.806
20180510:11:07:26	23.3	16.3	-3.3	23.6	0.25	2.2	0.25	2.1	123.7	285.9	286.4	91.9	51.1	92.0	796.043	791.077	1049.08	1043.551
20180510:11:12:26	23.3	16.3	-3.4	23.6	0.25	2.2	0.25	2.1	123.7	285.9	286.6	91.9	51.1	92.0	797.381	792.455	1050.856	1045.38
20180510:11:17:26	23.3	16.3	-3.4	23.6	0.25	2.2	0.25	2.1	123.7	285.9	286.5	92.0	51.2	92.1	798.736	793.777	1052.654	1047.133
20180510:11:22:26	23.3	16.3	-3.3	23.6	0.25	2.2	0.25	2.1	123.7	285.9	286.5	92.1	51.2	92.1	800.112	795.115	1054.48	1048.91
20180510:11:27:26	23.3	16.3	-3.3	23.6	0.25	2.2	0.25	2.1	123.7	285.9	286.5	92.2	51.2	92.2	801.442	796.486	1056.244	1050.729
20180510:11:32:26	23.3	16.4	-3.4	23.6	0.25	2.2	0.25	2.0	123.7	285.9	286.5	92.3	51.2	92.3	802.789	797.808	1058.033	1052.485
20180510:11:37:26	23.3	16.4	-3.4	23.6	0.25	2.2	0.25	2.0	123.7	286.0	286.5	92.3	51.1	92.3	804.183	799.162	1059.885	1054.284
20180510:11:42:26	23.3	16.4	-3.5	23.6	0.25	2.2	0.25	2.1	123.8	285.9	286.5	92.3	51.2	92.3	805.526	800.511	1061.669	1056.075
20180510:11:47:26	23.3	16.3	-3.5	23.6	0.25	2.2	0.25	2.1	123.7	285.9	286.5	92.3	51.2	92.4	806.865	801.842	1063.446	1057.842
20180510:11:52:26	23.3	16.3	-3.4	23.6	0.25	2.2	0.25	2.0	123.5	286.0	286.5	92.3	51.2	92.4	808.244	803.216	1065.278	1059.667
20180510:11:57:26	23.3	16.3	-3.4	23.6	0.25	2.2	0.25	2.1	123.5	286.0	286.5	92.2	51.1	92.4	809.589	804.553	1067.063	1061.444
20180510:12:02:26	23.3	16.2	-3.4	23.6	0.25	2.2	0.25	2.0	123.5	285.9	286.5	92.1	51.1	92.4	810.926	805.867	1068.839	1063.19
20180510:12:07:26	23.3	16.3	-3.3	23.6	0.25	2.2	0.25	2.0	123.6	285.8	286.4	92.1	51.1	92.5	812.286	807.253	1070.644	1065.032
20180510:12:12:26	23.3	16.3	-3.3	23.6	0.25	2.2	0.25	2.1	123.6	285.9	286.4	92.1	51.1	92.5	813.655	808.576	1072.463	1066.789
20180510:12:17:26	23.3	16.3	-3.3	23.6	0.25	2.2	0.25	2.1	123.6	285.9	286.5	92.0	51.1	92.5	814.986	809.904	1074.23	1068.555
20180510:12:22:26	23.3	16.3	-3.2	23.6	0.25	2.2	0.25	2.1	123.6	285.9	286.5	92.1	51.2	92.6	816.335	811.284	1076.022	1070.389
20180510:12:27:26	23.3	16.3	-3.3	23.6	0.25	2.2	0.25	2.1	123.6	285.9	286.5	92.1	51.1	92.6	817.729	812.606	1077.874	1072.147
20180510:12:32:26	23.3	16.4	-3.5	23.5	0.25	2.2	0.25	2.1	123.7	285.9	286.6	92.2	51.2	92.6	819.067	813.953	1079.652	1073.938
20180510:12:37:26	23.3	16.4	-3.5	23.5	0.25	2.2	0.25	2.1	123.7	285.9	286.5	92.3	51.2	92.6	820.403	815.316	1081.428	1075.752
20180510:12:42:26	23.3	16.4	-3.3	23.5	0.25	2.2	0.25	2.0	123.8	285.9	286.5	92.4	51.2	92.7	821.789	816.64	1083.27	1077.513
20180510:12:47:26	23.3	16.5	-3.2	23.5	0.25	2.2	0.25	2.0	124.0	285.9	286.5	92.5	51.2	92.8	823.127	818.001	1085.05	1079.323
20180510:12:52:26	23.3	16.5	-3.2	23.5	0.25	2.2	0.25	2.0	124.0	285.9	286.5	92.7	51.3	92.8	824.469	819.345	1086.835	1081.113
20180510:12:57:26	23.3	16.5	-3.3	23.5	0.25	2.2	0.25	2.1	124.0	286.0	286.5	92.7	51.2	92.9	825.828	820.672	1088.644	1082.878
20180510:13:02:26	23.3	16.4	-3.2	23.5	0.25	2.2	0.25	2.0	123.9	286.0	286.5	92.7	51.2	92.9	827.203	822.047	1090.474	1084.709
20180510:13:07:26	23.3	16.4	-3.2	23.5	0.25	2.2	0.25	2.1	123.9	285.9	286.5	92.7	51.2	92.9	828.533	823.388	1092.244	1086.494
20180510:13:12:26	23.3	16.4	-3.3	23.5	0.25	2.2	0.25	2.1	123.9	286.0	286.5	92.7	51.2	92.9	829.885	824.704	1094.043	1088.246
20180510:13:17:26	23.3	16.5	-3.2	23.5	0.25	2.2	0.25	2.1	124.0	285.8	286.5	92.8	51.2	93.0	831.272	826.084	1095.889	1090.083
20180510:13:22:26	23.3	16.5	-3.5	23.5	0.25	2.2	0.25	2.1	123.9	285.8	286.4	92.7	51.2	93.0	832.619	827.418	1097.681	1091.859
20180510:13:27:26	23.3	16.2	-3.8	23.5	0.25	2.2	0.25	2.0	123.2	285.8	286.5	92.8	51.2	93.0	833.951	828.749	1099.456	1093.632
20180510:13:32:26	23.3	16.4	-3.6	23.5	0.25	2.2	0.25	2.1	123.7	285.8	286.5	92.8	51.2	93.1	835.328	830.122	1101.289	1095.461
20180510:13:37:26	23.3	16.4	-3.5	23.5	0.25	2.2	0.25	2.0	123.8	285.8	286.5	92.8	51.2	93.1	836.688	831.438	1103.1	1097.214
20180510:13:42:26	23.3	16.5	-3.5	23.5	0.25	2.2	0.25	2.1	124.0	285.8	286.5	92.8	51.3	93.1	838.03	832.779	1104.887	1099.002
20180510:13:47:26	23.3	16.5	-3.6	23.5	0.25	2.2	0.25	2.1	124.0	285.8	286.4	92.8	51.3	93.1	839.376	834.155	1106.68	1100.835
20180510:13:52:26	23.3	16.5	-3.6	23.5	0.25	2.2	0.25	2.1	123.9	285.8	286.5	92.9	51.3	93.2	840.768	835.482	1108.533	1102.603
20180510:13:57:26	23.3	16.6	-3.4	23.5	0.25	2.2	0.25	2.1	124.1	285.8	286.5	92.9	51.3	93.2	842.112	836.825	1110.324	1104.393
20180510:14:02:26	23.3	16.6	-3.3	23.5	0.25	2.2	0.25	2.1	124.2	285.8	286.5	93.0	51.4	93.3	843.451	838.187	1112.107	1106.209
20180510:14:07:26	23.3	16.6	-3.3	23.5	0.25	2.2	0.25	2.1	124.2	285.8	286.6	93.1	51.4	93.3	844.832	839.514	1113.948	1107.977
20180510:14:12:26	23.3	16.6	-3.2	23.5	0.25	2.2	0.25	2.1	124.2	285.9	286.5	93.2	51.4	93.3	846.186	840.87	1115.754	1109.786
20180510:14:17:26	23.3	16.6	-3.2	23.5	0.25	2.2	0.25	2.1	124.2	285.8	286.5	93.3	51.4	93.4	847.531	842.216	1117.546	1111.581

Time:	Stack Pressure:	Sat% H2O:	Static:	Barometric:	Flowmeter1:	Vacuum1:	Flowmeter2:	Vacuum2:	Stack Temp:	Sorbent Temp:	Probe Temp:	DGM#1 Temp:	Condenser Temp:	DGM#2 Temp:	DGM1*:	DGM2*:	DGM1:	DGM2:
day:hh:mm:ss	in-Hg	Percent	in-H2O	in-Hg	l/min	in-Hg	l/min	in-Hg	degF	degF	degF	degF	degF	degF	liters STP	liters STP	liters nominal	liters nominal
20180510:14:22:26	23.3	16.6	-3.4	23.5	0.25	2.2	0.25	2.1	124.2	285.8	286.4	93.4	51.4	93.5	848.877	843.546	1119.343	1113.355
20180510:14:27:26	23.3	16.6	-3.3	23.5	0.25	2.2	0.25	2.0	124.1	285.8	286.4	93.5	51.4	93.5	850.265	844.916	1121.194	1115.184
20180510:14:32:26	23.3	16.6	-3.3	23.5	0.25	2.2	0.25	2.0	124.2	285.8	286.4	93.5	51.5	93.6	851.611	846.267	1122.991	1116.987
20180510:14:37:26	23.3	16.6	-3.3	23.5	0.25	2.2	0.25	2.0	124.1	285.9	286.5	93.6	51.5	93.6	852.949	847.581	1124.776	1118.741
20180510:14:42:26	23.3	16.5	-3.4	23.5	0.25	2.2	0.25	2.0	124.0	285.8	286.4	93.7	51.5	93.7	854.328	848.959	1126.617	1120.581
20180510:14:47:26	23.3	16.5	-3.4	23.5	0.25	2.2	0.25	2.0	124.0	285.8	286.4	93.8	51.6	93.7	855.684	850.293	1128.428	1122.361
20180510:14:52:26	23.3	16.5	-3.3	23.5	0.25	2.2	0.25	2.0	123.9	285.9	286.4	93.8	51.6	93.8	857.023	851.613	1130.217	1124.124
20180510:14:57:26	23.2	16.5	-3.3	23.5	0.25	2.2	0.25	2.0	123.8	285.9	286.5	93.8	51.5	93.8	858.365	852.987	1132.009	1125.961
20180510:15:02:26	23.2	16.4	-3.3	23.5	0.25	2.2	0.25	2.0	123.8	285.9	286.4	93.7	51.5	93.9	859.755	854.314	1133.865	1127.733
20180510:15:07:26	23.3	16.4	-3.2	23.5	0.25	2.2	0.25	2.1	123.7	285.8	286.4	93.6	51.5	93.8	861.097	855.641	1135.657	1129.506
20180510:15:12:26	23.2	16.4	-3.4	23.5	0.25	2.2	0.25	2.1	123.7	285.8	286.4	93.6	51.5	93.9	862.433	857.019	1137.441	1131.346
20180510:15:17:26	23.2	16.4	-3.5	23.5	0.25	2.2	0.25	2.1	123.7	285.8	286.4	93.5	51.5	93.9	863.812	858.339	1139.281	1133.109
20180510:15:22:26	23.2	16.3	-3.4	23.5	0.25	2.2	0.25	2.1	123.5	285.8	286.4	93.5	51.6	93.9	865.166	859.677	1141.089	1134.897
20180510:15:27:26	23.2	16.4	-3.5	23.5	0.25	2.2	0.25	2.1	123.6	285.8	286.5	93.5	51.6	93.9	866.51	861.058	1142.883	1136.742
20180510:15:32:26	23.2	16.4	-3.4	23.5	0.25	2.2	0.25	2.1	123.7	285.8	286.5	93.5	51.6	93.9	867.857	862.38	1144.683	1138.509
20180510:15:37:26	23.2	16.4	-3.6	23.5	0.25	2.2	0.25	2.0	123.6	285.8	286.4	93.5	51.6	93.9	869.254	863.727	1146.548	1140.308
20180510:15:42:26	23.2	15.5	-4.2	23.5	0.25	2.1	0.25	2.0	121.6	285.7	286.5	93.5	51.5	93.9	870.597	865.1	1148.341	1142.143
20180510:15:47:26	23.2	15.2	-4.3	23.5	0.25	2.1	0.25	2.0	120.8	285.6	286.4	93.5	51.7	94.0	871.934	866.422	1150.126	1143.91
20180510:15:52:26	23.2	15.6	-4.0	23.5	0.25	2.1	0.25	2.0	121.8	285.7	286.4	93.5	51.6	94.0	873.309	867.767	1151.961	1145.707
20180510:15:57:26	23.2	15.9	-3.9	23.5	0.25	2.2	0.25	2.0	122.5	285.8	286.4	93.6	51.7	94.0	874.673	869.139	1153.781	1147.539
20180510:16:02:26	23.2	16.1	-3.8	23.5	0.25	2.2	0.25	2.0	123.0	285.8	286.5	93.6	51.7	94.1	876.006	870.47	1155.561	1149.318
20180510:16:07:26	23.2	16.2	-3.8	23.5	0.25	2.2	0.25	2.0	123.2	285.8	286.5	93.7	51.7	94.1	877.359	871.812	1157.369	1151.111
20180510:16:12:26	23.2	16.3	-3.8	23.5	0.25	2.2	0.25	2.1	123.4	285.8	286.5	93.8	51.7	94.1	878.749	873.176	1159.224	1152.934
20180510:16:17:26	23.2	16.4	-3.6	23.5	0.25	2.2	0.25	2.0	123.7	285.8	286.5	93.9	51.7	94.2	880.1	874.504	1161.03	1154.709
20180510:16:22:26	23.2	16.5	-3.7	23.5	0.25	2.2	0.25	2.1	123.9	285.8	286.5	94.0	51.7	94.2	881.432	875.854	1162.809	1156.513
20180510:16:27:26	23.2	16.6	-3.7	23.5	0.25	2.2	0.25	2.1	124.0	285.8	286.5	94.1	51.7	94.2	882.801	877.208	1164.639	1158.323
20180510:16:32:26	23.2	16.6	-3.6	23.5	0.25	2.2	0.25	2.1	124.0	285.8	286.5	94.2	51.8	94.3	884.171	878.535	1166.47	1160.098
20180510:16:37:26	23.2	16.5	-3.6	23.5	0.25	2.2	0.25	2.0	123.9	285.8	286.5	94.2	51.7	94.3	885.505	879.895	1168.254	1161.915
20180510:16:42:26	23.2	16.5	-3.6	23.5	0.25	2.2	0.25	2.0	124.0	285.9	286.5	94.2	51.7	94.3	886.85	881.241	1170.052	1163.716
20180510:16:47:26	23.2	16.2	-3.9	23.5	0.25	2.1	0.25	2.0	123.2	285.9	286.5	94.2	51.7	94.3	888.245	882.572	1171.917	1165.496
20180510:16:52:26	23.2	16.0	-3.8	23.5	0.25	2.2	0.25	2.0	122.8	285.8	286.4	94.2	51.7	94.3	889.592	883.937	1173.719	1167.321
20180510:16:57:26	23.2	16.3	-3.5	23.5	0.25	2.2	0.25	2.0	123.5	285.8	286.4	94.2	51.7	94.3	890.929	885.285	1175.506	1169.124
20180510:17:02:26	23.2	16.4	-3.4	23.5	0.25	2.2	0.25	2.1	123.7	285.8	286.4	94.2	51.7	94.3	892.288	886.609	1177.322	1170.895
20180510:17:07:26	23.2	16.4	-3.4	23.5	0.25	2.2	0.25	2.1	123.7	285.8	286.5	94.2	51.7	94.3	893.675	887.982	1179.178	1172.731
20180510:17:12:26	23.2	16.3	-3.3	23.5	0.25	2.2	0.25	2.1	123.5	285.8	286.4	94.1	51.7	94.3	895.023	889.333	1180.98	1174.538
20180510:17:17:26	23.2	16.3	-3.3	23.5	0.25	2.2	0.25	2.1	123.5	285.8	286.4	94.1	51.7	94.3	896.37	890.655	1182.781	1176.306
20180510:17:22:26	23.2	16.5	-3.3	23.5	0.25	2.2	0.25	2.1	123.8	285.9	286.4	94.2	51.7	94.4	897.751	892.03	1184.628	1178.147
20180510:17:27:26	23.2	16.5	-3.3	23.5	0.25	2.2	0.25	2.1	123.8	285.9	286.5	94.2	51.7	94.4	899.119	893.379	1186.457	1179.951
20180510:17:32:26	23.2	16.4	-3.4	23.5	0.25	2.2	0.25	2.1	123.7	285.8	286.5	94.1	51.7	94.4	900.461	894.709	1188.252	1181.729
20180510:17:37:26	23.2	16.4	-3.3	23.5	0.25	2.2	0.25	2.1	123.7	285.8	286.4	94.1	51.7	94.3	901.822	896.085	1190.07	1183.57
20180510:17:42:26	23.3	16.5	-3.3	23.5	0.25	2.2	0.25	2.1	123.8	285.8	286.5	94.1	51.7	94.3	903.22	897.432	1191.939	1185.37
20180510:17:47:26	23.2	16.4	-3.3	23.5	0.25	2.2	0.25	2.1	123.8	285.8	286.5	94.1	51.7	94.3	904.573	898.772	1193.748	1187.162
20180510:17:52:26	23.2	16.4	-3.3	23.5	0.25	2.2	0.25	2.1	123.7	285.8	286.4	94.2	51.7	94.3	905.925	900.142	1195.556	1188.994
20180510:17:57:26	23.2	16.3	-3.4	23.5	0.25	2.2	0.25	2.1	123.4	285.8	286.4	94.2	51.7	94.3	907.281	901.499	1197.367	1190.808
20180510:18:02:26	23.2	16.2	-3.4	23.5	0.25	2.2	0.25	2.1	123.2	285.8	286.4	94.2	51.7	94.4	908.685	902.835	1199.243	1192.594
20180510:18:07:26	23.2	16.0	-3.5	23.5	0.25	2.2	0.25	2.1	122.9	285.7	286.4	94.2	51.7	94.4	910.04	904.202	1201.054	1194.421
20180510:18:12:26	23.2	16.0	-3.6	23.5	0.25	2.2	0.25	2.1	122.9	285.8	286.4	94.3	51.7	94.4	911.394	905.565	1202.863	1196.242
20180510:18:17:26	23.2	16.2	-3.6	23.5	0.25	2.2	0.25	2.1	123.2	285.8	286.4	94.3	51.7	94.4	912.754	906.904	1204.68	1198.032
20180510:18:22:26	23.2	16.2	-3.7	23.5	0.25	2.2	0.25	2.1	123.2	285.8	286.4	94.3	51.7	94.4	914.159	908.26	1206.557	1199.844
20180510:18:27:26	23.2	16.3	-3.7	23.5	0.25	2.2	0.25	2.1	123.4	285.8	286.4	94.4	51.7	94.4	915.516	909.637	1208.37	1201.684
20180510:18:32:26	23.2	16.4	-3.7	23.5	0.25	2.2	0.25	2.1	123.7	285.8	286.4	94.4	51.7	94.4	916.861	910.975	1210.167	1203.472
20180510:18:37:26	23.2	16.5	-3.8	23.5	0.25	2.2	0.25	2.1	123.8	285.9	286.4	94.4	51.6	94.4	918.229	912.321	1211.994	1205.271
20180510:18:42:26	23.2	16.5	-3.8	23.5	0.25	2.2	0.25	2.1	123.9	285.9	286.5	94.4	51.6	94.4	919.626	913.699	1213.861	1207.111
20180510:18:47:26	23.2	16.6	-3.8	23.5	0.25	2.2	0.25	2.1	124.0	285.9	286.4	94.3	51.6	94.4	920.985	915.029	1215.678	1208.889
20180510:18:52:26	23.2	16.6	-3.8	23.5	0.25	2.2	0.25	2.1	124.0	285.9	286.4	94.3	51.5	94.4	922.332	916.379	1217.476	1210.692
20180510:18:57:26	23.2	16.5	-3.9	23.5	0.25	2.2	0.25	2.1	123.9	285.8	286.4	94.2	51.5	94.3	923.705	917.755	1219.309	1212.53
20180510:19:02:26	23.2	16.4	-3.9	23.5	0.25	2.2	0.25	2.1	123.7	285.9	286.4	94.2	51.5	94.3	925.087	919.086	1221.156	1214.308
20180510:19:07:26	23.2	16.3	-3.9	23.5	0.25	2.2	0.25	2.1	123.5	285.8	286.3	94.1	51.5	94.3	926.444	920.439	1222.967	1216.115
20180510:19:12:26	23.2	16.2	-3.9	23.5	0.25	2.2	0.25	2.1	123.3	285.8	286.4	94.0	51.4	94.3	927.799	921.824	1224.776	1217.964
20180510:19:17:26	23.2	16.2	-3.8	23.5	0.25	2.2	0.25	2.1	123.2	285.8	286.4	93.9	51.4	94.3	929.183	923.151	1226.624	1219.737
20180510:19:22:26	23.2	16.1	-3.8	23.5	0.25	2.2	0.25	2.1	123.1	285.8	286.4	93.9	51.4	94.3	930.552	924.502	1228.45	1221.541
20180510:19:27:26	23.2	16.1	-3.8	23.5	0.25	2.2	0.25	2.1	123.1	285.8	286.3	93.8	51.4	94.3	931.894	925.887	1230.241	1223.391
20180510:19:32:26	23.2	15.7	-4.2	23.5	0.25	2.2	0.25	2.1	122.1	285.8	286.3	93.8	51.4	94.3	933.25	927.223	1232.05	1225.175
20180510:19:37:26	23.2	15.1	-4.3	23.5	0.25	2.2	0.25	2.1	120.6	285.7	286.4	93.8	51.4	94.2	934.656	928.573	1233.926	1226.977
20180510:19:42:26	23.2	14.8	-4.3	23.5	0.25	2.2	0.25	2.1	119.9	285.7	286.4	93.8	51.5	94.2	936.009	929.958	1235.731	1228.827
20180510:19:47:26	23.2	15.1	-3.7	23.5	0.25	2.2	0.25	2.1	120.7	285.7	286.4	93.8	51.5	94.2	937.366	931.293	1237.543	1230.609
20180510:19:52:26	23.2	15.4	-3.7	23.5	0.25	2.2	0.25	2.1	121.4	285.8	286.4	93.8	51.4	94.2	938.724	932.641	1239.354	1232.41
20180510:19:57:26	23.3	15.5	-3.6	23.5	0.25	2.2	0.25	2.1	121.6	285.8	286.5	93.9	51.5	94.2	940.128	934.032	1241.228	1234.267
20180510:20:02:26	23.2	15.5	-3.7	23.5	0.25	2.2	0.25	2.1	121.6	285.9	286.4	93.9	51.5	94.2	941.492	935.367	1243.048	1236.049
20180510:20:07:26	23.2	15.5	-3.7	23.5	0.25	2.2	0.25	2.1	121.6	285.8	286.4	93.9	51.4	94.1	942.831	936.701	1244.835	1237.831
20180510:20:12:26	23.3	15.4	-3.6	23.5	0.25	2.2	0.25	2.1	121.5	285.8	286.4	94.0	51.5	94.1	944.2	938.092	1246.663	1239.688
20180510:20:17:26	23.3	15.4	-3.7	23.5	0.25	2.2	0.25	2.1	121.4	285.9	286.5	94.0	51.5	94.1	945.597	939.437	1248.528	1241.483
20180510:20:22:26	23.2	15.3	-3.7	23.5	0.25	2.2	0.25	2.1	121.3	285.9	286.5	94.0	51.5	94.2	946.954	940.77	1250.339	1243.263
20180510:20:27:26	23.2	15.3	-3.7	23.5	0.25	2.2	0.25	2.1	121.1	285.8	286.4	93.9	51.4	94.1	948.302	942.161	1252.137	1245.12
20180510:20:32:26	23.2	15.3	-3.7	23.5	0.25	2.2	0.25	2.1	121.2	285.8	286.4	93.9	51.4	94.1	949.681	943.507	1253.978	1246.917
20180510:20:37:26	23.2	14.9	-3.8	23.5	0.25	2.2	0.25	2.1	120.2	285.8	286.4	93.8	51.4	94.1	951.062	944.838	1255.82	1248.694
20180510:20:42:26	23.3	14.5	-3.7	23.5	0.25	2.2	0.25	2.1	119.3	285.8	286.4	93.8	51.4	94.1	952.413	946.229	1257.622	1250.551
20180510:20:47:26	23.2	14.3	-3.7	23.5	0.25	2.2	0.25	2.1	118.9	285.8	286.5	93.8	51.5	94.0	953.774	947.577	1259.439	1252.35
20180510:20:52:26	23.3	14.7	-3.6	23.5	0.25	2.2	0.25	2.1	119.8	285.8	286.5	93.8	51.5	94.0	955.165	948.91	1261.294	1254.128
20180510:20:57:26	23.3	15.1	-3.7	23.5	0.25	2.2	0.25	2.1	120.7	285.9	286.4	93.6	51.4	93.9	956.533	950.3	1263.119	1255.983
20180510:21:02:26	23.2	15.2	-3.7	23.5	0.25	2.2	0.25	2.1	121.0	285.9	286.4	93.6	51.4	93.9	957.877	951.651	1264.911	1257.786
20180510:21:07:26	23.2	15.3	-3.8	23.5	0.25	2.2	0.25	2.1	121.3	285.9	286.4	93.5	51.4	93.9	959.237	952.979	1266.724	1259.558
20180510:21:12:26	23.2	15.4	-3.8	23.5	0.25	2.2	0.25	2.1	121.4	285.9	286.4	93.4	51.4	93.9	960.644	954.361	1268.6	1261.402
20180510:21:17:26	23.3	15.5	-3.6	23.5	0.25	2.2	0.25	2.1	121.7	285.9	286.4	93.3	51.4	93.8	961.994	955.718	1270.4	1263.212
20180510:21:22:26	23.2	15.7	-3.7	23.5	0.25	2.2	0.25	2.1	122.1	285.9	286.5	93.2	51.4	93.8	963.351	957.049	1272.207	1264.989
20180510:21:27:26	23.2	15.7	-3.8	23.5	0.25	2.2	0.25	2.1	122.1	285.8	286.4	93.2	51.4	93.7	964.709	958.433	1274.019	1266.835
20180510:21:32:26	23.2	15.7	-3.8	23.5	0.25	2.2	0.25	2.1	122.1	285.9	286.5	93.2	51.5	93.7	966.118	959.783	1275.896	1268.635
20180510:21:37:26	23.2	15.6	-3.8	23.5	0.25	2.2	0.25	2.1	122.0	285.9	286.4	93.2	51.4	93.6	967.478	961.125	1277.707	1270.425
20180510:21:42:26	23.2	15.5	-3.8	23.5	0.25	2.2	0.25	2.1	121.7	285.9	286.5	93.1	51.4	93.6	968.816	962.497	1279.491	1272.256

Time:	Stack Pressure:	Sat% H2O:	Static:	Barometric:	Flowmeter1:	Vacuum1:	Flowmeter2:	Vacuum2:	Stack Temp:	Sorbent Temp:	Probe Temp:	DGM#1 Temp:	Condenser Temp:	DGM#2 Temp:	DGM1*:	DGM2*:	DGM1:	DGM2:
day:hh:mm:ss	in-Hg	Percent	in-H2O	in-Hg	l/min	in-Hg	l/min	in-Hg	degF	degF	degF	degF	degF	degF	liters STP	liters STP	liters nominal	liters nominal
20180510:21:47:26	23.2	14.8	-3.8	23.5	0.25	2.2	0.25	2.1	119.9	285.8	286.4	93.0	51.4	93.5	970.19	963.855	1281.322	1274.066
20180510:21:52:26	23.2	14.5	-3.7	23.5	0.25	2.2	0.25	2.1	119.3	285.7	286.4	92.9	51.4	93.5	971.576	965.194	1283.169	1275.852
20180510:21:57:26	23.2	14.4	-3.7	23.5	0.25	2.2	0.25	2.1	119.0	285.7	286.4	92.9	51.4	93.5	972.926	966.565	1284.967	1277.68
20180510:22:02:26	23.2	14.9	-3.8	23.5	0.25	2.2	0.25	2.1	120.3	285.8	286.5	92.9	51.4	93.4	974.284	967.928	1286.776	1279.498
20180510:22:07:26	23.2	15.1	-3.8	23.5	0.25	2.2	0.25	2.1	120.7	285.8	286.4	92.8	51.4	93.3	975.673	969.266	1288.626	1281.282
20180510:22:12:26	23.2	15.2	-3.8	23.5	0.25	2.2	0.25	2.1	120.9	285.9	286.4	92.8	51.4	93.3	977.04	970.631	1290.446	1283.102
20180510:22:17:26	23.2	15.3	-3.8	23.5	0.25	2.2	0.25	2.1	121.1	285.9	286.4	92.7	51.4	93.3	978.382	971.998	1292.233	1284.925
20180510:22:22:26	23.2	15.4	-3.8	23.5	0.25	2.2	0.25	2.1	121.3	285.9	286.5	92.6	51.4	93.2	979.743	973.338	1294.046	1286.711
20180510:22:27:26	23.2	15.5	-3.9	23.5	0.25	2.2	0.25	2.1	121.5	285.9	286.4	92.5	51.3	93.2	981.141	974.695	1295.907	1288.521
20180510:22:32:26	23.2	15.6	-3.7	23.5	0.25	2.2	0.25	2.1	121.8	285.9	286.4	92.4	51.3	93.1	982.504	976.066	1297.722	1290.348
20180510:22:37:26	23.2	15.7	-3.6	23.5	0.25	2.2	0.25	2.1	122.1	286.0	286.4	92.4	51.3	93.1	983.839	977.404	1299.5	1292.132
20180510:22:42:26	23.2	15.7	-3.7	23.5	0.25	2.2	0.25	2.1	122.2	285.8	286.5	92.4	51.2	93.1	985.212	978.759	1301.328	1293.938
20180510:22:47:26	23.2	15.8	-3.7	23.5	0.25	2.2	0.25	2.1	122.4	285.9	286.4	92.3	51.2	93.0	986.602	980.13	1303.178	1295.765
20180510:22:52:26	23.2	15.9	-3.8	23.5	0.25	2.2	0.25	2.1	122.6	286.0	286.5	92.3	51.2	92.9	987.954	981.467	1304.978	1297.547
20180510:22:57:26	23.2	15.3	-4.3	23.5	0.25	2.2	0.25	2.1	121.1	285.9	286.4	92.2	51.2	92.9	989.306	982.823	1306.778	1299.353
20180510:23:02:26	23.2	15.4	-4.0	23.5	0.25	2.2	0.25	2.1	121.3	285.8	286.4	92.1	51.1	92.8	990.694	984.196	1308.624	1301.184
20180510:23:07:26	23.2	15.6	-3.8	23.5	0.25	2.2	0.25	2.1	121.9	285.9	286.4	92.0	51.0	92.8	992.057	985.536	1310.439	1302.97
20180510:23:12:26	23.2	15.7	-3.8	23.5	0.25	2.2	0.25	2.1	122.1	285.9	286.4	91.9	51.0	92.7	993.402	986.889	1312.228	1304.773
20180510:23:17:26	23.2	15.8	-3.8	23.5	0.25	2.2	0.25	2.1	122.3	285.9	286.4	91.9	51.0	92.7	994.755	988.262	1314.028	1306.602
20180510:23:22:26	23.2	15.9	-3.7	23.5	0.25	2.2	0.25	2.1	122.5	285.9	286.4	91.8	50.9	92.6	996.159	989.605	1315.896	1308.391
20180510:23:27:26	23.2	15.9	-3.8	23.5	0.25	2.2	0.25	2.1	122.6	285.9	286.4	91.7	50.9	92.5	997.512	990.954	1317.696	1310.188
20180510:23:32:26	23.2	16.1	-3.8	23.5	0.25	2.2	0.25	2.1	123.0	285.9	286.4	91.6	50.9	92.4	998.853	992.332	1319.48	1312.023
20180510:23:37:26	23.2	16.2	-3.8	23.5	0.25	2.2	0.25	2.1	123.2	285.9	286.4	91.6	50.9	92.4	1000.23	993.67	1321.311	1313.805
20180510:23:42:26	23.2	16.3	-3.8	23.5	0.25	2.2	0.25	2.1	123.4	285.9	286.4	91.5	50.9	92.3	1001.601	995.023	1323.133	1315.607
20180510:23:47:26	23.2	16.4	-3.8	23.5	0.25	2.2	0.25	2.1	123.7	285.9	286.4	91.5	50.9	92.3	1002.939	996.396	1324.913	1317.436
20180510:23:52:26	23.2	16.5	-3.9	23.5	0.25	2.2	0.25	2.1	123.9	286.0	286.4	91.4	50.9	92.2	1004.301	997.736	1326.724	1319.22
20180510:23:57:26	23.2	16.6	-3.8	23.5	0.25	2.2	0.25	2.1	124.2	285.9	286.5	91.3	50.9	92.1	1005.7	999.087	1328.583	1321.019
20180511:00:02:26	23.2	16.5	-4.0	23.5	0.25	2.2	0.25	2.1	123.9	285.9	286.4	91.2	50.9	92.1	1007.061	1000.458	1330.393	1322.844
20180511:00:07:26	23.2	15.7	-4.5	23.5	0.25	2.2	0.25	2.0	122.1	285.7	286.4	91.2	50.9	92.0	1008.393	1001.796	1332.163	1324.624
20180511:00:12:26	23.2	16.1	-4.2	23.5	0.25	2.2	0.25	2.0	122.9	285.8	286.4	91.2	50.9	91.9	1009.764	1003.151	1333.985	1326.429
20180511:00:17:26	23.2	16.2	-4.2	23.5	0.25	2.1	0.25	2.0	123.2	285.9	286.4	91.1	50.9	91.9	1011.138	1004.516	1335.811	1328.244
20180511:00:22:26	23.2	16.3	-4.3	23.5	0.25	2.2	0.25	2.0	123.3	285.9	286.4	91.0	50.9	91.9	1012.476	1005.852	1337.589	1330.023
20180511:00:27:26	23.2	16.4	-4.2	23.5	0.25	2.2	0.25	2.0	123.7	285.8	286.4	91.0	50.9	91.8	1013.829	1007.212	1339.387	1331.833
20180511:00:32:26	23.2	16.5	-4.2	23.5	0.25	2.2	0.25	2.1	123.8	285.8	286.4	91.0	50.9	91.8	1015.219	1008.569	1341.235	1333.639
20180511:00:37:26	23.2	16.5	-4.2	23.5	0.25	2.2	0.25	2.1	123.8	285.9	286.5	91.0	50.9	91.7	1016.571	1009.9	1343.031	1335.41
20180511:00:42:26	23.2	16.5	-4.2	23.5	0.25	2.2	0.25	2.1	123.8	285.8	286.4	91.0	51.0	91.6	1017.903	1011.27	1344.802	1337.233
20180511:00:47:26	23.2	16.5	-4.2	23.5	0.25	2.2	0.25	2.1	123.9	285.8	286.4	91.0	50.9	91.6	1019.282	1012.62	1346.635	1339.03
20180511:00:52:26	23.2	16.6	-4.2	23.5	0.25	2.2	0.25	2.1	124.0	285.8	286.5	91.1	50.9	91.6	1020.644	1013.945	1348.446	1340.793
20180511:00:57:26	23.2	16.6	-4.2	23.5	0.25	2.2	0.25	2.1	124.0	285.9	286.4	91.1	50.9	91.5	1021.982	1015.322	1350.226	1342.626
20180511:01:02:26	23.2	16.6	-4.2	23.5	0.25	2.2	0.25	2.1	124.0	285.8	286.4	91.1	50.9	91.5	1023.327	1016.661	1352.015	1344.408
20180511:01:07:26	23.2	16.6	-4.2	23.5	0.25	2.2	0.25	2.1	124.0	285.9	286.4	91.2	51.0	91.5	1024.718	1017.98	1353.865	1346.164
20180511:01:12:26	23.2	16.1	-4.6	23.5	0.25	2.2	0.25	2.1	122.9	285.8	286.4	91.2	50.9	91.4	1026.063	1019.355	1355.652	1347.992
20180511:01:17:26	23.2	15.8	-4.5	23.5	0.25	2.2	0.25	2.1	122.1	285.7	286.4	91.1	50.9	91.4	1027.404	1020.688	1357.435	1349.765
20180511:01:22:26	23.2	16.2	-4.4	23.5	0.25	2.2	0.25	2.1	123.1	285.9	286.4	91.1	51.0	91.3	1028.79	1022.018	1359.278	1351.534
20180511:01:27:26	23.2	16.3	-4.4	23.5	0.25	2.2	0.25	2.1	123.4	285.9	286.5	91.0	50.9	91.3	1030.134	1023.391	1361.065	1353.361
20180511:01:32:26	23.2	16.5	-4.4	23.5	0.25	2.2	0.25	2.1	123.7	285.8	286.4	91.1	51.0	91.3	1031.474	1024.714	1362.846	1355.12
20180511:01:37:26	23.2	16.5	-4.3	23.5	0.25	2.2	0.25	2.1	123.9	285.9	286.5	91.0	51.0	91.2	1032.838	1026.061	1364.659	1356.912
20180511:01:42:26	23.2	16.7	-4.2	23.5	0.25	2.2	0.25	2.1	124.2	285.9	286.4	91.0	50.9	91.2	1034.218	1027.435	1366.494	1358.739
20180511:01:47:26	23.2	16.7	-4.3	23.5	0.25	2.2	0.25	2.1	124.1	285.9	286.5	90.9	50.9	91.2	1035.559	1028.763	1368.278	1360.506
20180511:01:52:26	23.2	16.6	-4.2	23.5	0.25	2.2	0.25	2.1	124.1	285.9	286.4	90.9	50.9	91.2	1036.902	1030.11	1370.063	1362.297
20180511:01:57:26	23.2	16.7	-4.2	23.5	0.25	2.2	0.25	2.1	124.2	285.8	286.4	90.8	50.9	91.1	1038.299	1031.471	1371.92	1364.107
20180511:02:02:26	23.2	16.7	-4.2	23.5	0.25	2.2	0.25	2.1	124.2	285.8	286.3	90.7	50.9	91.0	1039.656	1032.798	1373.724	1365.872
20180511:02:07:26	23.2	16.7	-4.1	23.5	0.25	2.2	0.25	2.1	124.3	285.8	286.4	90.6	50.8	91.0	1040.983	1034.164	1375.487	1367.69
20180511:02:12:26	23.2	16.8	-4.0	23.5	0.25	2.2	0.25	2.1	124.5	285.9	286.4	90.5	50.9	90.9	1042.355	1035.512	1377.311	1369.483
20180511:02:17:26	23.2	16.8	-4.1	23.5	0.25	2.2	0.25	2.1	124.4	285.8	286.4	90.4	50.9	90.9	1043.724	1036.838	1379.13	1371.246
20180511:02:22:26	23.1	16.0	-4.4	23.5	0.25	2.2	0.25	2.1	122.7	285.7	286.4	90.3	50.8	90.9	1045.059	1038.217	1380.904	1373.081
20180511:02:27:26	23.2	16.3	-4.3	23.5	0.25	2.2	0.25	2.1	123.4	285.8	286.4	90.3	50.9	90.8	1046.414	1039.563	1382.704	1374.87
20180511:02:32:26	23.2	16.4	-4.3	23.5	0.25	2.2	0.25	2.1	123.7	285.9	286.4	90.2	50.8	90.7	1047.809	1040.885	1384.557	1376.628
20180511:02:37:26	23.2	16.5	-4.1	23.5	0.25	2.2	0.25	2.1	123.8	285.8	286.4	90.1	50.9	90.7	1049.151	1042.267	1386.339	1378.466
20180511:02:42:26	23.2	16.5	-4.1	23.5	0.25	2.2	0.25	2.1	123.8	285.8	286.4	90.0	50.9	90.7	1050.489	1043.603	1388.117	1380.242
20180511:02:47:26	23.2	16.5	-4.2	23.5	0.25	2.2	0.25	2.1	123.7	285.8	286.4	89.9	50.8	90.6	1051.87	1044.929	1389.95	1382.006
20180511:02:52:26	23.2	16.5	-4.2	23.5	0.25	2.2	0.25	2.1	123.7	285.9	286.5	89.9	50.9	90.6	1053.214	1046.315	1391.735	1383.848
20180511:02:57:26	23.2	16.4	-4.2	23.5	0.25	2.2	0.25	2.1	123.7	285.8	286.4	89.8	50.8	90.5	1054.557	1047.641	1393.519	1385.611
20180511:03:02:26	23.2	16.4	-4.2	23.5	0.25	2.2	0.25	2.1	123.7	285.8	286.3	89.7	50.8	90.4	1055.922	1048.976	1395.33	1387.385
20180511:03:07:26	23.2	16.4	-4.2	23.5	0.25	2.2	0.25	2.1	123.6	285.8	286.4	89.7	50.8	90.4	1057.296	1050.359	1397.154	1389.224
20180511:03:12:26	23.1	16.5	-4.3	23.5	0.25	2.2	0.25	2.1	123.7	285.8	286.4	89.7	50.8	90.3	1058.632	1051.68	1398.928	1390.979
20180511:03:17:26	23.1	16.4	-4.2	23.5	0.25	2.2	0.25	2.1	123.6	285.7	286.4	89.7	50.9	90.3	1059.986	1053.03	1400.726	1392.774
20180511:03:22:26	23.1	16.4	-4.2	23.5	0.25	2.2	0.25	2.1	123.6	285.8	286.3	89.7	50.8	90.3	1061.374	1054.404	1402.569	1394.602
20180511:03:27:26	23.1	16.4	-4.3	23.5	0.25	2.2	0.25	2.1	123.6	285.8	286.4	89.7	50.9	90.2	1062.723	1055.735	1404.361	1396.37
20180511:03:32:26	23.1	16.4	-4.3	23.5	0.25	2.2	0.25	2.1	123.5	285.8	286.4	89.7	50.9	90.2	1064.059	1057.085	1406.135	1398.165
20180511:03:37:26	23.1	16.3	-4.4	23.5	0.25	2.2	0.25	2.1	123.4	285.8	286.4	89.7	50.8	90.2	1065.44	1058.444	1407.969	1399.972
20180511:03:42:26	23.1	15.4	-4.6	23.5	0.25	2.2	0.25	2.1	121.3	285.7	286.4	89.7	50.9	90.1	1066.798	1059.769	1409.772	1401.733
20180511:03:47:26	23.1	15.7	-4.4	23.5	0.25	2.2	0.25	2.1	121.8	285.8	286.4	89.6	50.8	90.1	1068.139	1061.14	1411.554	1403.555
20180511:03:52:26	23.1	15.9	-4.4	23.4	0.25	2.2	0.25	2.1	122.5	285.8	286.3	89.6	50.8	90.0	1069.486	1062.49	1413.343	1405.35
20180511:03:57:26	23.1	16.1	-4.3	23.4	0.25	2.2	0.25	2.1	122.8	285.8	286.3	89.5	50.8	90.0	1070.871	1063.814	1415.181	1407.109
20180511:04:02:26	23.1	16.2	-4.3	23.4	0.25	2.2	0.25	2.1	123.0	285.8	286.4	89.4	50.8	90.0	1072.201	1065.195	1416.948	1408.945
20180511:04:07:26	23.1	16.3	-4.3	23.4	0.25	2.2	0.25	2.1	123.2	285.8	286.3	89.3	50.8	90.0	1073.543	1066.535	1418.73	1410.726
20180511:04:12:26	23.1	16.3	-4.3	23.4	0.25	2.2	0.25	2.1	123.4	285.8	286.4	89.3	50.8	89.9	1074.936	1067.857	1420.58	1412.483
20180511:04:17:26	23.1	16.4	-4.2	23.4	0.25	2.2	0.25	2.1	123.5	285.8	286.4	89.3	50.9	89.9	1076.288	1069.238	1422.374	1414.32
20180511:04:22:26	23.1	16.4	-4.3	23.4	0.25	2.2	0.25	2.1	123.5	285.7	286.3	89.4	50.9	89.9	1077.622	1070.566	1424.146	1416.085
20180511:04:27:26	23.1	16.4	-4.3	23.4	0.25	2.2	0.25	2.1	123.4	285.8	286.4	89.4	50.8	89.8	1079	1071.902	1425.976	1417.859
20180511:04:32:26	23.1	16.4	-4.3	23.4	0.25	2.2	0.25	2.1	123.5	285.8	286.4	89.4	50.9	89.8	1080.361	1073.278	1427.783	1419.688
20180511:04:37:26	23.1	16.4	-4.3	23.4	0.25	2.2	0.25	2.1	123.5	285.9	286.4	89.5	50.8	89.8	1081.701	1074.596	1429.563	1421.44
20180511:04:42:26	23.1	16.4	-4.2	23.4	0.25	2.2	0.25	2.1	123.4	285.8	286.4	89.5	50.9	89.8	1083.049	1075.945	1431.354	1423.233
20180511:04:47:26	23.1	16.4	-4.2	23.4	0.25	2.2	0.25	2.1	123.6	285.8	286.3	89.5	50.8	89.8	1084.437	1077.318	1433.198	1425.058
20180511:04:52:26	23.1	16.4	-4.2	23.4	0.25	2.2	0.25	2.1	123.6	285.8	286.4	89.6	50.9	89.8	1085.775	1078.648	1434.976	1426.825
20180511:04:57:26	23.1	16.5	-4.2	23.4	0.25	2.2	0.25	2.1	123.7	285.9	286.3	89.6	50.9	89.7	1087.119	1079.997	1436.761	1428.618
20180511:05:02:26	23.1	16.5	-4.2	23.4	0.25	2.2	0.25	2.1	123.6	285.8	286.4	89.6	50.9	89.7	1088.509	1081.357	1438.607	1430.425
20180511:05:07:26	23.1	16.4	-4.2	23.4	0.25	2.2	0.25	2.1	123.6	285.8	286.4	89.6	50.9	89.7	1089.86	1082.688	1440.402	1432.194

Time:	Stack Pressure:	Sat% H2O:	Static:	Barometric:	Flowmeter1:	Vacuum1:	Flowmeter2:	Vacuum2:	Stack Temp:	Sorbent Temp:	Probe Temp:	DGM#1 Temp:	Condenser Temp:	DGM#2 Temp:	DGM1*:	DGM2*:	DGM1:	DGM2:
day:hh:mm:ss	in-Hg	Percent	in-H2O	in-Hg	l/min	in-Hg	l/min	in-Hg	degF	degF	degF	degF	degF	degF	liters STP	liters STP	liters nominal	liters nominal
20180511:05:12:26	23.1	16.4	-4.3	23.4	0.25	2.2	0.25	2.1	123.5	285.8	286.4	89.6	50.8	89.7	1091.193	1084.058	1442.174	1434.015
20180511:05:17:26	23.1	16.3	-4.3	23.4	0.25	2.2	0.25	2.1	123.4	285.8	286.4	89.6	50.9	89.7	1092.561	1085.411	1443.991	1435.812
20180511:05:22:26	23.1	16.3	-4.3	23.4	0.25	2.2	0.25	2.1	123.4	285.8	286.4	89.6	50.9	89.7	1093.931	1086.733	1445.811	1437.57
20180511:05:27:26	23.1	16.3	-4.3	23.4	0.25	2.2	0.25	2.1	123.4	285.8	286.4	89.6	50.9	89.7	1095.265	1088.113	1447.583	1439.402
20180511:05:32:26	23.1	16.3	-4.3	23.4	0.25	2.2	0.25	2.1	123.3	285.8	286.3	89.5	50.9	89.6	1096.625	1089.448	1449.391	1441.177
20180511:05:37:26	23.1	16.3	-4.3	23.4	0.25	2.2	0.25	2.1	123.3	285.8	286.4	89.4	50.8	89.6	1098.018	1090.767	1451.241	1442.929
20180511:05:42:26	23.1	16.2	-4.3	23.4	0.25	2.2	0.25	2.1	123.2	285.8	286.3	89.3	50.9	89.6	1099.36	1092.158	1453.022	1444.776
20180511:05:47:26	23.1	15.3	-4.6	23.4	0.25	2.2	0.25	2.1	121.0	285.7	286.4	89.2	50.8	89.5	1100.695	1093.48	1454.794	1446.532
20180511:05:52:26	23.1	14.9	-4.6	23.4	0.25	2.2	0.25	2.1	120.0	285.6	286.3	89.1	50.9	89.5	1102.075	1094.814	1456.626	1448.305
20180511:05:57:26	23.1	14.7	-4.6	23.4	0.25	2.2	0.25	2.1	119.6	285.7	286.4	89.0	50.8	89.4	1103.423	1096.196	1458.415	1450.139
20180511:06:02:26	23.1	15.3	-4.4	23.4	0.25	2.2	0.25	2.1	121.0	285.7	286.4	88.9	50.9	89.4	1104.769	1097.517	1460.2	1451.893
20180511:06:07:26	23.1	15.7	-4.4	23.4	0.25	2.2	0.25	2.1	121.8	285.8	286.4	88.8	50.8	89.3	1106.13	1098.867	1462.006	1453.686
20180511:06:12:26	23.1	15.9	-4.3	23.4	0.25	2.2	0.25	2.1	122.4	285.9	286.4	88.7	50.8	89.3	1107.51	1100.246	1463.837	1455.517
20180511:06:17:26	23.1	16.0	-4.2	23.4	0.25	2.2	0.25	2.1	122.6	285.8	286.3	88.6	50.8	89.2	1108.848	1101.582	1465.611	1457.291
20180511:06:22:26	23.1	16.0	-4.2	23.4	0.25	2.2	0.25	2.1	122.6	285.8	286.4	88.6	50.8	89.2	1110.197	1102.934	1467.402	1459.086
20180511:06:27:26	23.1	15.8	-4.1	23.4	0.25	2.2	0.25	2.1	122.3	285.7	286.3	88.5	50.8	89.2	1111.591	1104.305	1469.25	1460.908
20180511:06:32:26	23.1	15.7	-4.1	23.4	0.25	2.2	0.25	2.1	122.0	285.8	286.4	88.5	50.7	89.1	1112.946	1105.642	1471.048	1462.682
20180511:06:37:26	23.1	15.7	-4.1	23.4	0.25	2.2	0.25	2.1	121.9	285.7	286.3	88.5	50.8	89.0	1114.283	1107.003	1472.82	1464.491
20180511:06:42:26	23.1	15.7	-3.9	23.4	0.25	2.2	0.25	2.1	121.9	285.7	286.4	88.5	50.7	89.0	1115.663	1108.368	1474.652	1466.303
20180511:06:47:26	23.1	15.6	-4.0	23.4	0.25	2.2	0.25	2.1	121.8	285.7	286.3	88.5	50.8	89.0	1117.037	1109.703	1476.474	1468.075
20180511:06:52:26	23.1	15.5	-4.1	23.4	0.25	2.2	0.25	2.1	121.4	285.8	286.4	88.5	50.7	88.9	1118.38	1111.075	1478.256	1469.897
20180511:06:57:26	23.1	15.2	-4.2	23.4	0.25	2.2	0.25	2.1	120.7	285.8	286.3	88.5	50.8	88.9	1119.744	1112.431	1480.065	1471.697
20180511:07:02:26	23.1	14.5	-4.2	23.4	0.25	2.2	0.25	2.1	119.1	285.6	286.4	88.4	50.8	88.9	1121.141	1113.771	1481.919	1473.476
20180511:07:07:26	23.2	14.9	-3.8	23.4	0.25	2.2	0.25	2.1	120.2	285.7	286.3	88.5	50.8	88.9	1122.503	1115.149	1483.724	1475.305
20180511:07:12:26	23.2	15.2	-3.8	23.4	0.25	2.2	0.25	2.1	120.9	285.7	286.4	88.5	50.9	88.9	1123.839	1116.503	1485.496	1477.102
20180511:07:17:27	23.1	15.4	-3.9	23.4	0.25	2.2	0.25	2.1	121.2	285.8	286.4	88.6	50.8	88.9	1125.218	1117.841	1487.326	1478.878
20180511:07:22:27	23.1	15.5	-4.0	23.4	0.25	2.2	0.25	2.1	121.4	285.8	286.4	88.6	50.9	88.8	1126.597	1119.221	1489.156	1480.709
20180511:07:27:27	23.1	15.6	-3.9	23.4	0.25	2.2	0.25	2.1	121.6	285.8	286.4	88.6	50.8	88.9	1127.941	1120.579	1490.939	1482.511
20180511:07:32:27	23.1	15.6	-3.8	23.4	0.25	2.2	0.25	2.1	121.8	285.9	286.4	88.6	50.9	88.8	1129.297	1121.905	1492.737	1484.273
20180511:07:37:27	23.2	15.7	-3.8	23.4	0.25	2.2	0.25	2.1	122.0	285.9	286.4	88.6	50.8	88.8	1130.699	1123.292	1494.598	1486.113
20180511:07:42:27	23.2	15.8	-3.7	23.4	0.25	2.2	0.25	2.1	122.3	285.8	286.3	88.5	50.8	88.7	1132.06	1124.65	1496.404	1487.915
20180511:07:47:27	23.2	16.0	-3.7	23.4	0.25	2.2	0.25	2.1	122.7	285.8	286.4	88.5	50.8	88.7	1133.395	1125.977	1498.176	1489.677
20180511:07:52:27	23.1	16.2	-3.8	23.4	0.25	2.2	0.25	2.1	123.1	285.9	286.4	88.5	50.8	88.7	1134.771	1127.367	1500.002	1491.523
20180511:07:57:27	23.1	16.3	-3.9	23.4	0.25	2.2	0.25	2.1	123.3	285.9	286.5	88.5	50.8	88.7	1136.157	1128.717	1501.841	1493.314
20180511:08:02:27	23.1	16.3	-3.9	23.4	0.25	2.2	0.25	2.1	123.3	285.9	286.4	88.3	50.7	88.6	1137.503	1130.042	1503.626	1495.073
20180511:08:07:27	23.1	16.3	-3.9	23.4	0.25	2.2	0.25	2.1	123.4	285.9	286.3	88.3	50.8	88.6	1138.85	1131.435	1505.413	1496.921
20180511:08:12:27	23.1	16.3	-3.9	23.4	0.25	2.2	0.25	2.1	123.2	285.9	286.4	88.2	50.7	88.6	1140.248	1132.774	1507.267	1498.699
20180511:08:17:27	23.1	16.2	-4.1	23.4	0.25	2.2	0.25	2.1	123.1	285.8	286.4	88.1	50.8	88.6	1141.602	1134.097	1509.063	1500.455
20180511:08:22:27	23.1	16.2	-4.1	23.4	0.25	2.2	0.25	2.0	123.0	285.8	286.4	88.0	50.6	88.5	1142.932	1135.488	1510.826	1502.301
20180511:08:27:27	23.1	16.2	-4.1	23.4	0.25	2.2	0.25	2.1	123.1	285.8	286.3	87.9	50.8	88.5	1144.307	1136.808	1512.648	1504.053
20180511:08:32:27	23.1	16.2	-4.0	23.4	0.25	2.2	0.25	2.1	123.1	285.8	286.3	87.9	50.7	88.5	1145.668	1138.143	1514.454	1505.825
20180511:08:37:27	23.1	16.2	-4.1	23.4	0.25	2.2	0.25	2.1	123.0	285.8	286.3	87.8	50.7	88.4	1147.008	1139.523	1516.23	1507.656
20180511:08:42:27	23.1	16.1	-4.1	23.4	0.25	2.2	0.25	2.1	122.9	285.8	286.4	87.8	50.7	88.4	1148.357	1140.847	1518.019	1509.414
20180511:08:47:27	23.1	16.1	-4.0	23.4	0.25	2.2	0.25	2.1	122.9	285.8	286.3	87.8	50.6	88.3	1149.738	1142.196	1519.848	1511.203
20180511:08:52:27	23.1	16.1	-4.0	23.4	0.25	2.2	0.25	2.1	122.9	285.8	286.4	87.7	50.7	88.3	1151.066	1143.557	1521.609	1513.009
20180511:08:57:27	23.1	16.1	-4.0	23.4	0.25	2.2	0.25	2.1	122.9	285.8	286.3	87.7	50.6	88.3	1152.413	1144.881	1523.394	1514.767
20180511:09:02:27	23.1	16.1	-4.1	23.4	0.25	2.2	0.25	2.1	122.9	285.8	286.4	87.6	50.7	88.3	1153.803	1146.248	1525.237	1516.581
20180511:09:07:27	23.1	16.2	-4.0	23.4	0.25	2.2	0.25	2.1	122.9	285.7	286.3	87.6	50.6	88.3	1155.137	1147.601	1527.006	1518.376
20180511:09:12:27	23.1	16.1	-4.0	23.4	0.25	2.2	0.25	2.1	122.9	285.7	286.3	87.6	50.7	88.3	1156.478	1148.918	1528.783	1520.124
20180511:09:17:27	23.1	16.2	-4.0	23.4	0.25	2.2	0.25	2.1	123.0	285.7	286.3	87.7	50.6	88.3	1157.863	1150.298	1530.619	1521.955
20180511:09:22:27	23.1	16.1	-4.0	23.4	0.25	2.2	0.25	2.1	122.9	285.7	286.3	87.7	50.6	88.2	1159.212	1151.628	1532.407	1523.72
20180511:09:27:27	23.1	16.1	-4.0	23.4	0.25	2.2	0.25	2.1	122.9	285.7	286.3	87.8	50.6	88.3	1160.54	1152.955	1534.169	1525.481
20180511:09:32:27	23.1	16.1	-4.0	23.4	0.25	2.2	0.25	2.1	122.9	285.8	286.3	87.8	50.6	88.3	1161.912	1154.33	1535.987	1527.306
20180511:09:37:27	23.1	16.1	-3.9	23.4	0.25	2.2	0.25	2.1	122.8	285.8	286.3	87.8	50.7	88.2	1163.271	1155.645	1537.791	1529.053
20180511:09:42:27	23.1	16.1	-3.8	23.4	0.25	2.2	0.25	2.1	122.9	285.7	286.3	87.7	50.6	88.2	1164.609	1156.992	1539.565	1530.84
20180511:09:47:27	23.1	16.1	-3.7	23.4	0.25	2.2	0.25	2.1	122.9	285.8	286.3	87.7	50.7	88.2	1165.956	1158.363	1541.352	1532.662
20180511:09:52:27	23.1	16.1	-3.8	23.4	0.25	2.2	0.25	2.1	122.9	285.7	286.3	87.8	50.6	88.3	1167.341	1159.694	1543.189	1534.429
20180511:09:57:27	23.1	16.1	-3.8	23.4	0.25	2.2	0.25	2.1	122.9	285.7	286.3	87.8	50.6	88.3	1168.675	1161.05	1544.959	1536.229
20180511:10:02:27	23.1	16.1	-3.7	23.4	0.25	2.2	0.25	2.1	122.8	285.7	286.3	87.9	50.7	88.3	1170.016	1162.406	1546.739	1538.03
20180511:10:07:27	23.1	16.1	-3.7	23.4	0.25	2.2	0.25	2.1	122.8	285.7	286.3	87.9	50.6	88.3	1171.408	1163.732	1548.587	1539.791
20180511:10:12:27	23.1	16.1	-3.7	23.4	0.25	2.2	0.25	2.1	122.8	285.7	286.3	88.0	50.8	88.3	1172.756	1165.104	1550.376	1541.615
20180511:10:17:27	23.1	16.1	-3.7	23.4	0.25	2.2	0.25	2.1	122.8	285.8	286.4	88.1	50.6	88.4	1174.089	1166.449	1552.146	1543.4
20180511:10:22:27	23.1	16.1	-3.7	23.4	0.25	2.2	0.25	2.1	122.9	285.7	286.3	88.1	50.7	88.4	1175.464	1167.767	1553.972	1545.152
20180511:10:27:27	23.1	16.1	-3.7	23.4	0.25	2.2	0.25	2.1	122.9	285.8	286.3	88.2	50.7	88.4	1176.816	1169.145	1555.769	1546.983
20180511:10:32:27	23.1	16.2	-3.6	23.4	0.25	2.2	0.25	2.1	123.0	285.7	286.3	88.2	50.6	88.5	1178.154	1170.474	1557.544	1548.748
20180511:10:37:27	23.1	16.3	-3.6	23.4	0.25	2.2	0.25	2.1	123.2	285.8	286.3	88.3	50.7	88.5	1179.506	1171.801	1559.341	1550.511
20180511:10:42:27	23.1	16.3	-3.6	23.4	0.25	2.2	0.25	2.1	123.4	285.8	286.4	88.4	50.7	88.5	1180.883	1173.177	1561.17	1552.34
20180511:10:47:27	23.1	16.3	-3.7	23.4	0.25	2.2	0.25	2.1	123.2	285.8	286.3	88.5	50.7	88.6	1182.213	1174.495	1562.937	1554.092
20180511:10:52:27	23.1	16.3	-3.7	23.4	0.25	2.2	0.25	2.1	123.2	285.7	286.4	88.5	50.8	88.6	1183.564	1175.843	1564.731	1555.883
20180511:10:57:27	23.1	16.2	-3.8	23.4	0.25	2.2	0.25	2.1	123.1	285.7	286.3	88.5	50.6	88.6	1184.953	1177.21	1566.578	1557.699
20180511:11:02:27	23.1	16.2	-3.8	23.4	0.25	2.2	0.25	2.1	123.0	285.7	286.4	88.6	50.8	88.6	1186.294	1178.535	1568.359	1559.461
20180511:11:07:27	23.1	16.1	-3.8	23.4	0.25	2.2	0.25	2.1	122.9	285.7	286.2	88.6	50.7	88.6	1187.63	1179.893	1570.135	1561.265
20180511:11:12:27	23.1	16.1	-3.8	23.4	0.25	2.2	0.25	2.1	122.9	285.7	286.3	88.7	50.7	88.7	1189.01	1181.242	1571.969	1563.058
20180511:11:17:27	23.1	16.1	-3.9	23.4	0.25	2.2	0.25	2.1	122.9	285.7	286.3	88.7	50.8	88.7	1190.354	1182.57	1573.756	1564.823
20180511:11:22:27	23.1	16.1	-3.8	23.4	0.25	2.2	0.25	2.1	122.9	285.7	286.3	88.7	50.7	88.7	1191.69	1183.945	1575.531	1566.65
20180511:11:27:27	23.1	16.1	-3.8	23.4	0.25	2.2	0.25	2.1	122.9	285.7	286.3	88.8	50.8	88.8	1193.05	1185.289	1577.341	1568.438
20180511:11:32:27	23.1	16.1	-3.8	23.4	0.25	2.2	0.25	2.1	122.8	285.8	286.3	88.8	50.7	88.8	1194.422	1186.602	1579.165	1570.184
20180511:11:37:27	23.1	16.1	-3.7	23.4	0.25	2.2	0.25	2.1	122.8	285.7	286.3	88.8	50.7	88.8	1195.754	1187.978	1580.937	1572.015
20180511:11:42:27	23.1	16.1	-3.7	23.4	0.25	2.2	0.25	2.1	122.8	285.7	286.3	88.9	50.8	88.8	1197.104	1189.312	1582.733	1573.789
20180511:11:47:27	23.1	16.1	-3.7	23.4	0.25	2.2	0.25	2.1	122.8	285.7	286.3	88.9	50.7	88.8	1198.495	1190.64	1584.583	1575.556
20180511:11:52:27	23.1	16.1	-3.7	23.4	0.25	2.2	0.25	2.1	122.9	285.7	286.3	88.9	50.7	88.9	1199.839	1192.015	1586.372	1577.385
20180511:11:57:27	23.1	16.2	-3.6	23.4	0.25	2.2	0.25	2.1	123.0	285.7	286.3	89.0	50.8	88.9	1201.172	1193.331	1588.146	1579.137
20180511:12:02:27	23.1	16.2	-3.6	23.4	0.25	2.2	0.25	2.1	123.0	285.7	286.3	89.0	50.7	88.9	1202.549	1194.677	1589.98	1580.929
20180511:12:07:27	23.1	16.2	-3.8	23.4	0.25	2.2	0.25	2.1	123.0	285.9	286.4	89.0	50.7	89.0	1203.901	1196.05	1591.78	1582.756
20180511:12:12:27	23.1	16.2	-3.7	23.4	0.25	2.2	0.25	2.1	123.0	285.9	286.4	89.0	50.7	89.0	1205.243	1197.376	1593.567	1584.521
20180511:12:17:27	23.1	16.2	-3.6	23.4	0.25	2.2	0.25	2.1	123.0	285.8	286.4	88.9	50.6	88.9	1206.59	1198.721	1595.359	1586.312
20180511:12:22:27	23.1	16.2	-3.5	23.4	0.25	2.2	0.25	2.1	123.1	285.8	286.3	88.9	50.8	89.0	1207.98	1200.08	1597.211	1588.122
20180511:12:27:27	23.1	16.2	-3.5	23.4	0.25	2.2	0.25	2.1	123.1	285.8	286.4	88.9	50.7	89.0	1209.322	1201.407	1598.998	1589.889
20180511:12:32:27	23.1	16.3	-3.5	23.4	0.25	2.2	0.25	2.1	123.2	285.7	286.3	88.9	50.7	89.0	1210.663	1202.772	1600.783	1591.707

Time:	Stack Pressure:	Sat% H2O:	Static:	Barometric:	Flowmeter1:	Vacuum1:	Flowmeter2:	Vacuum2:	Stack Temp:	Sorbent Temp:	Probe Temp:	DGM#1 Temp:	Condenser Temp:	DGM#2 Temp:	DGM1*:	DGM2*:	DGM1:	DGM2:
day:hh:mm:ss	in-Hg	Percent	in-H2O	in-Hg	l/min	in-Hg	l/min	in-Hg	degF	degF	degF	degF	degF	degF	liters STP	liters STP	liters nominal	liters nominal
20180511:12:37:27	23.1	16.3	-3.6	23.4	0.25	2.2	0.25	2.1	123.3	285.7	286.4	89.0	50.8	89.0	1212.047	1204.121	1602.628	1593.504
20180511:12:42:27	23.1	16.3	-3.6	23.3	0.25	2.2	0.25	2.1	123.3	285.8	286.3	89.1	50.7	89.1	1213.391	1205.448	1604.419	1595.273
20180511:12:47:27	23.1	16.3	-3.5	23.3	0.25	2.2	0.25	2.1	123.3	285.7	286.4	89.2	50.7	89.1	1214.736	1206.822	1606.211	1597.103
20180511:12:52:27	23.1	16.4	-3.5	23.3	0.25	2.2	0.25	2.1	123.4	285.7	286.4	89.2	50.8	89.2	1216.09	1208.173	1608.017	1598.904
20180511:12:57:27	23.1	16.4	-3.5	23.4	0.25	2.2	0.25	2.1	123.5	285.7	286.3	89.3	50.7	89.2	1217.474	1209.49	1609.861	1600.66
20180511:13:02:27	23.1	16.4	-3.5	23.4	0.25	2.2	0.25	2.1	123.5	285.8	286.3	89.3	50.8	89.2	1218.81	1210.871	1611.643	1602.5
20180511:13:07:27	23.1	16.5	-3.6	23.4	0.25	2.2	0.25	2.1	123.6	285.8	286.3	89.3	50.8	89.3	1220.154	1212.203	1613.433	1604.276
20180511:13:12:27	23.1	16.5	-3.5	23.4	0.25	2.2	0.25	2.1	123.7	285.8	286.3	89.3	50.7	89.3	1221.543	1213.523	1615.285	1606.036
20180511:13:17:27	23.1	16.5	-3.7	23.4	0.25	2.2	0.25	2.1	123.7	285.8	286.4	89.3	50.8	89.3	1222.887	1214.905	1617.076	1607.878
20180511:13:22:27	23.1	16.5	-3.7	23.4	0.25	2.2	0.25	2.1	123.6	285.8	286.4	89.3	50.8	89.3	1224.225	1216.238	1618.859	1609.654
20180511:13:27:27	23.1	16.5	-3.6	23.4	0.25	2.2	0.25	2.1	123.7	285.8	286.3	89.3	50.7	89.3	1225.586	1217.571	1620.674	1611.43
20180511:13:32:27	23.1	16.5	-3.6	23.4	0.25	2.2	0.25	2.1	123.7	285.8	286.4	89.3	50.8	89.3	1226.964	1218.947	1622.511	1613.265
20180511:13:37:27	23.1	16.4	-3.6	23.4	0.25	2.2	0.25	2.1	123.6	285.8	286.3	89.2	50.7	89.3	1228.302	1220.271	1624.294	1615.03
20180511:13:42:27	23.1	16.5	-3.5	23.3	0.25	2.2	0.25	2.1	123.6	285.8	286.3	89.1	50.7	89.3	1229.649	1221.608	1626.089	1616.812
20180511:13:47:27	23.1	16.5	-3.6	23.3	0.25	2.2	0.25	2.1	123.7	285.9	286.3	89.1	50.8	89.3	1231.048	1222.989	1627.954	1618.654
20180511:13:52:27	23.1	16.4	-3.9	23.3	0.25	2.2	0.25	2.1	123.5	285.8	286.3	89.0	50.7	89.3	1232.391	1224.308	1629.744	1620.414
20180511:13:57:27	23.0	15.4	-4.5	23.3	0.25	2.2	0.25	2.1	121.2	285.7	286.3	88.9	50.7	89.3	1233.731	1225.656	1631.53	1622.211
20180511:14:02:27	23.0	15.2	-4.5	23.3	0.25	2.2	0.25	2.1	120.6	285.6	286.3	88.9	50.7	89.3	1235.092	1227.032	1633.344	1624.045
20180511:14:07:27	23.0	15.1	-4.4	23.3	0.25	2.2	0.25	2.1	120.4	285.7	286.3	88.9	50.6	89.3	1236.476	1228.358	1635.189	1625.814
20180511:14:12:27	23.0	15.7	-4.1	23.3	0.25	2.2	0.25	2.1	121.9	285.8	286.3	88.9	50.8	89.3	1237.817	1229.702	1636.976	1627.607
20180511:14:17:27	23.0	16.0	-4.0	23.3	0.25	2.2	0.25	2.1	122.6	285.9	286.4	88.9	50.7	89.3	1239.162	1231.072	1638.769	1629.434
20180511:14:22:27	23.0	16.2	-3.9	23.3	0.25	2.2	0.25	2.1	123.0	285.9	286.4	88.8	50.7	89.3	1240.553	1232.405	1640.622	1631.212
20180511:14:27:27	23.0	16.3	-4.0	23.3	0.25	2.2	0.25	2.1	123.3	285.9	286.4	88.7	50.8	89.3	1241.897	1233.752	1642.413	1633.009
20180511:14:32:27	23.1	16.4	-3.9	23.3	0.25	2.2	0.25	2.1	123.4	285.8	286.3	88.7	50.7	89.3	1243.235	1235.114	1644.196	1634.825
20180511:14:37:27	23.1	16.4	-3.8	23.3	0.25	2.2	0.25	2.1	123.5	285.8	286.3	88.7	50.7	89.3	1244.598	1236.444	1646.011	1636.6
20180511:14:42:27	23.1	16.5	-3.8	23.3	0.25	2.2	0.25	2.1	123.6	285.8	286.3	88.7	50.7	89.3	1245.976	1237.804	1647.848	1638.414
20180511:14:47:27	23.1	16.5	-3.7	23.3	0.25	2.2	0.25	2.1	123.6	285.8	286.3	88.8	50.7	89.3	1247.315	1239.161	1649.633	1640.224
20180511:14:52:27	23.1	16.5	-3.7	23.3	0.25	2.2	0.25	2.1	123.7	285.8	286.3	88.8	50.8	89.3	1248.659	1240.488	1651.424	1641.994
20180511:14:57:27	23.1	16.5	-3.6	23.3	0.25	2.2	0.25	2.1	123.7	285.8	286.3	88.9	50.7	89.2	1250.053	1241.854	1653.283	1643.818
20180511:15:02:27	23.1	16.5	-3.6	23.3	0.25	2.2	0.25	2.1	123.7	285.9	286.4	88.9	50.7	89.2	1251.399	1243.205	1655.08	1645.62
20180511:15:07:27	23.1	16.5	-3.6	23.3	0.25	2.2	0.25	2.1	123.7	285.8	286.2	88.9	50.7	89.2	1252.733	1244.536	1656.857	1647.397
20180511:15:12:27	23.1	16.5	-3.6	23.3	0.25	2.2	0.25	2.1	123.6	285.8	286.2	88.8	50.6	89.2	1254.096	1245.908	1658.676	1649.227
20180511:15:17:27	23.1	16.5	-3.6	23.3	0.25	2.2	0.25	2.1	123.7	285.8	286.3	88.8	50.7	89.2	1255.47	1247.257	1660.507	1651.028
20180511:15:22:27	23.1	16.5	-3.6	23.3	0.25	2.2	0.25	2.1	123.7	285.9	286.3	88.8	50.7	89.2	1256.804	1248.587	1662.287	1652.803
20180511:15:27:27	23.1	16.5	-3.6	23.3	0.25	2.2	0.25	2.1	123.6	285.8	286.3	88.7	50.6	89.2	1258.15	1249.962	1664.081	1654.637
20180511:15:32:27	23.1	16.5	-3.5	23.3	0.25	2.2	0.25	2.1	123.6	285.8	286.3	88.7	50.7	89.2	1259.545	1251.312	1665.941	1656.44
20180511:15:37:27	23.1	16.5	-3.6	23.3	0.25	2.2	0.25	2.1	123.7	285.8	286.3	88.7	50.6	89.2	1260.9	1252.634	1667.748	1658.203
20180511:15:42:27	23.1	16.5	-3.7	23.3	0.25	2.2	0.25	2.1	123.7	285.7	286.3	88.8	50.7	89.2	1262.226	1254.01	1669.517	1660.039
20180511:15:47:27	23.1	16.6	-3.7	23.3	0.25	2.2	0.25	2.1	123.7	285.7	286.3	88.9	50.8	89.2	1263.594	1255.356	1671.341	1661.836
20180511:15:52:27	23.1	16.6	-3.8	23.3	0.25	2.2	0.25	2.1	123.9	285.8	286.3	89.0	50.7	89.3	1264.967	1256.68	1673.17	1663.602
20180511:15:57:27	23.1	16.6	-3.8	23.3	0.25	2.2	0.25	2.1	123.8	285.8	286.3	89.0	50.8	89.3	1266.303	1258.061	1674.952	1665.444
20180511:16:02:27	23.1	16.6	-3.9	23.3	0.25	2.2	0.25	2.1	123.8	285.8	286.4	89.1	50.8	89.3	1267.653	1259.399	1676.752	1667.229
20180511:16:07:27	23.1	16.5	-3.9	23.3	0.25	2.2	0.25	2.1	123.7	285.8	286.3	89.0	50.7	89.3	1269.045	1260.72	1678.607	1668.991
20180511:16:12:27	23.1	16.6	-3.9	23.3	0.25	2.2	0.25	2.1	123.9	285.8	286.3	88.9	50.8	89.3	1270.394	1262.1	1680.406	1670.831
20180511:16:17:27	23.1	16.6	-3.9	23.3	0.25	2.2	0.25	2.1	123.9	285.8	286.4	88.9	50.7	89.3	1271.722	1263.438	1682.174	1672.615
20180511:16:22:27	23.1	16.6	-3.9	23.3	0.25	2.2	0.25	2.1	123.9	285.8	286.3	88.8	50.8	89.3	1273.092	1264.759	1684	1674.376
20180511:16:27:27	23.1	16.6	-3.9	23.3	0.25	2.2	0.25	2.1	123.8	285.8	286.3	88.8	50.8	89.3	1274.457	1266.145	1685.819	1676.224
20180511:16:32:27	23.0	16.2	-4.3	23.3	0.25	2.2	0.25	2.1	122.9	285.8	286.3	88.8	50.7	89.3	1275.792	1267.465	1687.596	1677.983
20180511:16:37:27	23.0	15.4	-4.5	23.3	0.25	2.2	0.25	2.1	121.1	285.7	286.4	88.9	50.9	89.3	1277.144	1268.801	1689.398	1679.765
20180511:16:42:27	23.0	15.1	-4.6	23.3	0.25	2.2	0.25	2.1	120.3	285.7	286.2	88.9	50.7	89.2	1278.54	1270.183	1691.257	1681.607
20180511:16:47:27	23.0	15.4	-4.3	23.3	0.25	2.2	0.25	2.1	121.1	285.7	286.3	88.9	50.8	89.2	1279.884	1271.505	1693.048	1683.37
20180511:16:52:27	23.0	15.9	-4.2	23.3	0.25	2.2	0.25	2.1	122.3	285.8	286.4	88.9	50.8	89.2	1281.218	1272.846	1694.826	1685.158
20180511:16:57:27	23.0	16.1	-4.2	23.4	0.25	2.2	0.25	2.1	122.8	285.8	286.4	88.9	50.8	89.2	1282.596	1274.223	1696.661	1686.992
20180511:17:02:27	23.0	16.3	-4.2	23.4	0.25	2.2	0.25	2.1	123.1	285.8	286.4	88.9	50.9	89.2	1283.959	1275.548	1698.476	1688.758
20180511:17:07:27	23.1	16.3	-4.2	23.4	0.25	2.2	0.25	2.1	123.3	285.9	286.3	88.9	50.8	89.2	1285.298	1276.895	1700.259	1690.553
20180511:17:12:27	23.1	16.4	-4.2	23.4	0.25	2.2	0.25	2.1	123.4	285.9	286.4	88.9	50.9	89.2	1286.646	1278.27	1702.054	1692.383
20180511:17:17:27	23.0	16.4	-4.2	23.4	0.25	2.2	0.25	2.1	123.4	285.8	286.3	88.8	50.8	89.1	1288.041	1279.602	1703.911	1694.158
20180511:17:22:27	23.1	16.4	-4.1	23.4	0.25	2.2	0.25	2.1	123.4	285.8	286.3	88.7	50.8	89.1	1289.388	1280.949	1705.704	1695.953
20180511:17:27:27	23.1	16.4	-4.1	23.4	0.25	2.2	0.25	2.1	123.5	285.8	286.3	88.6	50.8	89.0	1290.724	1282.313	1707.481	1697.769
20180511:17:32:27	23.1	16.4	-4.2	23.4	0.25	2.2	0.25	2.1	123.5	285.7	286.2	88.6	50.8	89.0	1292.104	1283.646	1709.319	1699.545
20180511:17:37:27	23.1	16.4	-4.2	23.4	0.25	2.2	0.25	2.1	123.5	285.8	286.3	88.5	50.8	89.0	1293.455	1285.004	1711.117	1701.353
20180511:17:42:27	23.1	16.4	-4.1	23.4	0.25	2.2	0.25	2.1	123.4	285.7	286.3	88.4	50.8	88.9	1294.8	1286.359	1712.906	1703.158
20180511:17:47:27	23.0	16.3	-4.2	23.4	0.25	2.2	0.25	2.1	123.1	285.8	286.3	88.3	50.9	88.9	1296.15	1287.692	1714.702	1704.934
20180511:17:52:27	23.0	15.4	-4.7	23.4	0.25	2.2	0.25	2.1	121.0	285.6	286.2	88.3	50.8	88.9	1297.535	1289.06	1716.544	1706.756
20180511:17:57:27	23.0	15.5	-4.3	23.4	0.25	2.2	0.25	2.1	121.4	285.7	286.3	88.2	50.9	88.8	1298.877	1290.409	1718.33	1708.553
20180511:18:02:27	23.0	15.9	-4.2	23.4	0.25	2.2	0.25	2.1	122.4	285.7	286.3	88.1	50.8	88.8	1300.22	1291.739	1720.115	1710.323
20180511:18:07:27	23.0	16.1	-4.2	23.4	0.25	2.2	0.25	2.1	122.8	285.7	286.3	88.0	50.9	88.7	1301.61	1293.117	1721.963	1712.158
20180511:18:12:27	23.0	16.2	-4.2	23.4	0.25	2.2	0.25	2.1	123.0	285.7	286.3	88.0	50.8	88.7	1302.958	1294.473	1723.756	1713.962
20180511:18:17:27	23.0	16.3	-4.3	23.4	0.25	2.2	0.25	2.1	123.2	285.8	286.4	88.0	50.9	88.6	1304.297	1295.794	1725.535	1715.72
20180511:18:22:27	23.1	16.4	-4.2	23.4	0.25	2.2	0.25	2.1	123.3	285.7	286.3	88.0	50.8	88.6	1305.663	1297.176	1727.352	1717.56
20180511:18:27:27	23.1	16.4	-4.2	23.4	0.25	2.2	0.25	2.1	123.4	285.7	286.3	88.0	50.9	88.5	1307.041	1298.522	1729.183	1719.35
20180511:18:32:27	23.1	16.4	-4.3	23.4	0.25	2.2	0.25	2.1	123.4	285.7	286.3	88.0	50.8	88.5	1308.379	1299.844	1730.961	1721.109
20180511:18:37:27	23.1	16.4	-4.3	23.4	0.25	2.2	0.25	2.1	123.4	285.8	286.4	88.0	50.9	88.4	1309.727	1301.227	1732.752	1722.947
20180511:18:42:27	23.1	16.3	-4.2	23.4	0.25	2.2	0.25	2.1	123.3	285.8	286.4	88.0	50.9	88.4	1311.121	1302.566	1734.604	1724.727
20180511:18:47:27	23.1	16.2	-4.1	23.4	0.25	2.2	0.25	2.1	123.1	285.7	286.3	88.0	50.9	88.3	1312.475	1303.889	1736.404	1726.487
20180511:18:52:27	23.1	16.2	-4.0	23.4	0.25	2.2	0.25	2.1	123.1	285.8	286.4	88.0	50.9	88.3	1313.812	1305.281	1738.18	1728.338
20180511:18:57:27	23.1	16.2	-4.0	23.4	0.25	2.2	0.25	2.1	123.0	285.7	286.3	88.0	50.9	88.3	1315.185	1306.609	1740.004	1730.103
20180511:19:02:27	23.1	16.2	-4.0	23.4	0.25	2.2	0.25	2.1	123.1	285.7	286.3	87.9	50.9	88.2	1316.549	1307.949	1741.815	1731.883
20180511:19:07:27	23.1	16.1	-4.0	23.4	0.25	2.2	0.25	2.1	122.7	285.7	286.3	87.8	50.9	88.2	1317.887	1309.331	1743.593	1733.72
20180511:19:12:27	23.1	15.9	-4.0	23.4	0.25	2.2	0.25	2.1	122.4	285.7	286.3	87.7	50.9	88.1	1319.24	1310.659	1745.389	1735.485
20180511:19:17:27	23.1	15.8	-4.0	23.4	0.25	2.2	0.25	2.1	122.2	285.7	286.3	87.6	50.9	88.1	1320.634	1312.002	1747.239	1737.269
20180511:19:22:27	23.1	15.7	-4.0	23.4	0.25	2.2	0.25	2.1	121.9	285.7	286.3	87.4	50.9	88.0	1321.981	1313.385	1749.026	1739.105
20180511:19:27:27	23.1	15.7	-4.0	23.4	0.25	2.2	0.25	2.1	121.8	285.6	286.2	87.4	50.9	88.0	1323.33	1314.712	1750.815	1740.868
20180511:19:32:27	23.1	15.6	-4.1	23.4	0.25	2.2	0.25	2.1	121.7	285.7	286.3	87.3	50.9	87.9	1324.719	1316.069	1752.657	1742.669
20180511:19:37:27	23.1	15.5	-3.9	23.4	0.25	2.2	0.25	2.1	121.5	285.7	286.3	87.2	50.9	87.9	1326.082	1317.452	1754.465	1744.506
20180511:19:42:27	23.1	15.4	-3.8	23.4	0.25	2.2	0.25	2.1	121.3	285.6	286.2	87.1	50.8	87.8	1327.43	1318.79	1756.252	1746.282
20180511:19:47:27	23.1	15.3	-3.6	23.4	0.25	2.2	0.25	2.1	121.0	285.7	286.3	87.0	50.9	87.7	1328.783	1320.143	1758.044	1748.077
20180511:19:52:27	23.1	15.2	-3.5	23.4	0.25	2.2	0.25	2.1	120.8	285.7	286.3	86.9	50.8	87.7	1330.179	1321.527	1759.894	1749.914
20180511:19:57:27	23.1	15.1	-3.6	23.4	0.25	2.2	0.25	2.1	120.6	285.6	286.3	86.8	50.8	87.6	1331.53	1322.867	1761.683	1751.692

Time:	Stack Pressure:	Sat% H2O:	Static:	Barometric:	Flowmeter1:	Vacuum1:	Flowmeter2:	Vacuum2:	Stack Temp:	Sorbent Temp:	Probe Temp:	DGM#1 Temp:	Condenser Temp:	DGM#2 Temp:	DGM1*:	DGM2*:	DGM1:	DGM2:
day:hh:mm:ss	in-Hg	Percent	in-H2O	in-Hg	l/min	in-Hg	l/min	in-Hg	degF	degF	degF	degF	degF	degF	liters STP	liters STP	liters nominal	liters nominal
20180511:20:02:27	23.1	15.0	-3.5	23.4	0.25	2.2	0.25	2.1	120.4	285.7	286.3	86.7	50.8	87.5	1332.879	1324.221	1763.47	1753.487
20180511:20:07:27	23.1	15.0	-3.5	23.4	0.25	2.2	0.25	2.1	120.3	285.6	286.3	86.7	50.9	87.4	1334.27	1325.599	1765.313	1755.314
20180511:20:12:27	23.1	15.0	-3.5	23.4	0.25	2.2	0.25	2.1	120.3	285.6	286.2	86.6	50.8	87.4	1335.626	1326.946	1767.107	1757.1
20180511:20:17:27	23.1	15.0	-3.5	23.4	0.25	2.2	0.25	2.1	120.4	285.6	286.3	86.5	50.9	87.3	1336.975	1328.301	1768.893	1758.895
20180511:20:22:27	23.1	15.0	-3.5	23.4	0.25	2.2	0.25	2.1	120.3	285.7	286.3	86.5	50.8	87.3	1338.339	1329.677	1770.696	1760.718
20180511:20:27:27	23.2	15.0	-3.5	23.4	0.25	2.2	0.25	2.1	120.3	285.7	286.2	86.4	50.9	87.2	1339.725	1331.018	1772.53	1762.494
20180511:20:32:27	23.2	15.0	-3.5	23.4	0.25	2.2	0.25	2.1	120.2	285.7	286.3	86.3	50.8	87.2	1341.071	1332.38	1774.309	1764.299
20180511:20:37:27	23.2	14.9	-3.5	23.4	0.25	2.2	0.25	2.1	120.1	285.7	286.2	86.3	50.9	87.1	1342.42	1333.746	1776.093	1766.107
20180511:20:42:27	23.2	14.9	-3.6	23.4	0.25	2.2	0.25	2.1	120.2	285.7	286.2	86.2	50.8	87.0	1343.825	1335.083	1777.95	1767.876
20180511:20:47:27	23.2	14.9	-3.5	23.4	0.25	2.2	0.25	2.1	120.2	285.7	286.2	86.2	50.9	87.0	1345.184	1336.459	1779.746	1769.697
20180511:20:52:27	23.2	14.9	-3.5	23.4	0.25	2.2	0.25	2.1	120.2	285.7	286.2	86.1	50.8	86.9	1346.519	1337.815	1781.511	1771.492
20180511:20:57:27	23.2	15.0	-3.6	23.4	0.25	2.2	0.25	2.1	120.2	285.6	286.3	86.1	50.9	86.9	1347.9	1339.159	1783.335	1773.271
20180511:21:02:27	23.2	14.9	-3.5	23.4	0.25	2.2	0.25	2.1	120.2	285.6	286.2	86.0	50.8	86.8	1349.271	1340.543	1785.146	1775.102
20180511:21:07:27	23.2	14.9	-3.6	23.4	0.25	2.2	0.25	2.1	120.1	285.6	286.2	86.0	50.8	86.8	1350.619	1341.907	1786.926	1776.904
20180511:21:12:27	23.2	14.9	-3.6	23.4	0.25	2.2	0.25	2.1	120.1	285.6	286.3	85.9	50.8	86.7	1351.977	1343.239	1788.719	1778.665
20180511:21:17:27	23.2	14.9	-3.6	23.4	0.25	2.2	0.25	2.1	120.2	285.7	286.3	85.9	50.9	86.6	1353.383	1344.629	1790.574	1780.502
20180511:21:22:27	23.2	15.0	-3.5	23.4	0.25	2.2	0.25	2.1	120.4	285.7	286.3	85.9	50.8	86.6	1354.737	1345.99	1792.361	1782.301
20180511:21:27:27	23.2	15.0	-3.6	23.4	0.25	2.2	0.25	2.1	120.2	285.6	286.3	85.9	50.9	86.5	1356.085	1347.321	1794.141	1784.06
20180511:21:32:27	23.2	14.9	-3.6	23.4	0.25	2.2	0.25	2.1	120.1	285.7	286.3	85.9	50.8	86.5	1357.48	1348.715	1795.981	1785.902
20180511:21:37:27	23.2	14.5	-3.6	23.4	0.25	2.2	0.25	2.1	119.1	285.6	286.2	85.9	50.9	86.5	1358.841	1350.061	1797.778	1787.68
20180511:21:42:27	23.2	14.4	-3.6	23.4	0.25	2.2	0.25	2.1	118.8	285.7	286.3	85.9	50.8	86.4	1360.196	1351.393	1799.567	1789.44
20180511:21:47:27	23.2	14.4	-3.6	23.4	0.25	2.2	0.25	2.1	119.0	285.6	286.3	85.8	50.9	86.3	1361.56	1352.786	1801.367	1791.28
20180511:21:52:27	23.2	15.0	-3.5	23.4	0.25	2.2	0.25	2.1	120.3	285.8	286.4	85.7	50.8	86.3	1362.956	1354.136	1803.209	1793.064
20180511:21:57:27	23.2	15.1	-3.6	23.4	0.25	2.2	0.25	2.1	120.6	285.8	286.3	85.6	50.9	86.2	1364.304	1355.479	1804.987	1794.836
20180511:22:02:27	23.2	15.2	-3.7	23.4	0.25	2.2	0.25	2.1	120.8	285.8	286.3	85.5	50.7	86.2	1365.658	1356.869	1806.772	1796.673
20180511:22:07:27	23.2	15.2	-3.6	23.4	0.25	2.2	0.25	2.1	120.9	285.8	286.3	85.4	50.9	86.1	1367.06	1358.207	1808.622	1798.44
20180511:22:12:27	23.2	15.3	-3.7	23.4	0.25	2.3	0.25	2.1	121.1	285.8	286.4	85.4	50.8	86.1	1368.426	1359.56	1810.422	1800.226
20180511:22:17:27	23.2	15.3	-3.7	23.4	0.25	2.3	0.25	2.1	121.2	285.7	286.3	85.3	50.9	86.0	1369.763	1360.953	1812.185	1802.064
20180511:22:22:27	23.2	15.3	-3.6	23.4	0.25	2.2	0.25	2.1	121.1	285.8	286.4	85.3	50.8	85.9	1371.146	1362.287	1814.009	1803.825
20180511:22:27:27	23.2	15.3	-3.7	23.4	0.25	2.3	0.25	2.1	121.1	285.8	286.4	85.3	50.9	85.9	1372.527	1363.646	1815.83	1805.618
20180511:22:32:27	23.2	15.1	-3.6	23.4	0.25	2.2	0.25	2.1	120.6	285.7	286.3	85.3	50.8	85.8	1373.874	1365.033	1817.606	1807.449
20180511:22:37:27	23.2	14.6	-3.7	23.4	0.25	2.2	0.25	2.1	119.5	285.8	286.4	85.4	50.9	85.8	1375.238	1366.374	1819.404	1809.218
20180511:22:42:27	23.2	14.5	-3.7	23.5	0.25	2.2	0.25	2.1	119.1	285.7	286.4	85.3	50.8	85.7	1376.649	1367.735	1821.263	1811.013
20180511:22:47:27	23.2	14.8	-3.7	23.5	0.25	2.2	0.25	2.1	120.0	285.6	286.4	85.3	50.9	85.7	1378.004	1369.115	1823.048	1812.833
20180511:22:52:27	23.2	15.3	-3.8	23.5	0.25	2.3	0.25	2.1	121.0	285.8	286.4	85.3	50.8	85.7	1379.35	1370.461	1824.82	1814.607
20180511:22:57:27	23.2	15.3	-3.7	23.5	0.25	2.3	0.25	2.1	121.2	285.8	286.3	85.2	50.8	85.6	1380.744	1371.829	1826.657	1816.41
20180511:23:02:27	23.2	15.4	-3.7	23.4	0.25	2.3	0.25	2.1	121.3	285.9	286.4	85.2	50.8	85.6	1382.11	1373.2	1828.457	1818.218
20180511:23:07:27	23.2	15.4	-3.7	23.4	0.25	2.3	0.25	2.1	121.4	285.9	286.4	85.2	50.8	85.6	1383.469	1374.54	1830.248	1819.985
20180511:23:12:27	23.2	15.4	-3.7	23.5	0.25	2.3	0.25	2.1	121.2	285.9	286.4	85.1	50.7	85.5	1384.832	1375.921	1832.043	1821.805
20180511:23:17:27	23.2	15.3	-3.7	23.5	0.25	2.2	0.25	2.1	121.2	285.9	286.4	85.0	50.8	85.5	1386.231	1377.282	1833.885	1823.6
20180511:23:22:27	23.2	15.3	-3.7	23.5	0.25	2.2	0.25	2.1	121.1	285.8	286.3	85.0	50.7	85.4	1387.581	1378.623	1835.663	1825.367
20180511:23:27:27	23.2	15.4	-3.7	23.4	0.25	2.2	0.25	2.1	121.2	285.8	286.3	84.9	50.8	85.4	1388.935	1380.012	1837.446	1827.197
20180511:23:32:27	23.2	15.0	-3.7	23.4	0.25	2.2	0.25	2.1	120.3	285.8	286.3	84.8	50.8	85.3	1390.339	1381.373	1839.294	1828.991
20180511:23:37:27	23.2	14.6	-3.7	23.4	0.25	2.2	0.25	2.1	119.4	285.8	286.4	84.7	50.8	85.3	1391.706	1382.705	1841.094	1830.746
20180511:23:42:27	23.2	14.4	-3.6	23.4	0.25	2.2	0.25	2.1	118.9	285.6	286.4	84.6	50.8	85.3	1393.041	1384.102	1842.852	1832.586
20180511:23:47:27	23.2	14.7	-3.7	23.4	0.25	2.2	0.25	2.1	119.7	285.7	286.3	84.6	50.8	85.2	1394.427	1385.454	1844.676	1834.368
20180511:23:52:27	23.2	15.1	-3.7	23.4	0.25	2.2	0.25	2.1	120.5	285.8	286.4	84.5	50.8	85.2	1395.802	1386.789	1846.485	1836.128
20180511:23:57:27	23.2	15.2	-3.7	23.4	0.25	2.2	0.25	2.1	120.7	285.8	286.3	84.4	50.8	85.1	1397.153	1388.19	1848.263	1837.974
20180512:00:02:27	23.2	15.2	-3.8	23.4	0.25	2.3	0.25	2.1	120.9	285.8	286.4	84.3	50.8	85.0	1398.513	1389.529	1850.052	1839.737
20180512:00:07:27	23.2	15.3	-3.8	23.4	0.25	2.3	0.25	2.1	121.0	285.8	286.4	84.3	50.8	85.0	1399.914	1390.877	1851.894	1841.513
20180512:00:12:27	23.2	15.3	-3.7	23.4	0.25	2.3	0.25	2.1	121.0	285.8	286.3	84.2	50.8	84.9	1401.265	1392.267	1853.672	1843.344
20180512:00:17:27	23.2	15.3	-3.8	23.4	0.25	2.3	0.25	2.1	121.1	285.7	286.3	84.1	50.8	84.9	1402.613	1393.604	1855.444	1845.105
20180512:00:22:27	23.2	15.4	-3.7	23.4	0.25	2.3	0.25	2.1	121.3	285.7	286.3	84.1	50.8	84.8	1404.019	1394.963	1857.294	1846.895
20180512:00:27:27	23.2	15.4	-3.8	23.4	0.25	2.3	0.25	2.1	121.3	285.7	286.3	84.1	50.8	84.7	1405.389	1396.356	1859.096	1848.729
20180512:00:32:27	23.2	15.0	-3.8	23.4	0.25	2.3	0.25	2.1	120.2	285.7	286.4	84.1	50.8	84.7	1406.729	1397.7	1860.859	1850.498
20180512:00:37:27	23.2	14.7	-3.8	23.4	0.25	2.3	0.25	2.1	119.7	285.7	286.4	84.1	50.8	84.6	1408.115	1399.059	1862.681	1852.288
20180512:00:42:27	23.2	14.6	-3.8	23.4	0.25	2.2	0.25	2.1	119.4	285.7	286.3	84.0	50.8	84.6	1409.494	1400.438	1864.494	1854.103
20180512:00:47:27	23.2	15.1	-3.7	23.4	0.25	2.3	0.25	2.1	120.6	285.7	286.3	83.9	50.8	84.6	1410.841	1401.779	1866.267	1855.868
20180512:00:52:27	23.2	15.4	-3.7	23.4	0.25	2.3	0.25	2.1	121.2	285.8	286.2	83.9	50.8	84.5	1412.202	1403.155	1868.056	1857.68
20180512:00:57:27	23.2	15.5	-3.7	23.4	0.25	2.3	0.25	2.1	121.5	285.9	286.4	83.8	50.8	84.4	1413.606	1404.522	1869.902	1859.479
20180512:01:02:27	23.2	15.5	-3.8	23.4	0.25	2.3	0.25	2.1	121.6	285.8	286.3	83.7	50.8	84.4	1414.96	1405.866	1871.681	1861.248
20180512:01:07:27	23.2	15.5	-3.8	23.4	0.25	2.3	0.25	2.1	121.5	285.8	286.3	83.6	50.8	84.3	1416.313	1407.254	1873.459	1863.075
20180512:01:12:27	23.2	15.5	-3.8	23.4	0.25	2.3	0.25	2.1	121.5	285.8	286.3	83.6	50.8	84.3	1417.713	1408.621	1875.3	1864.874
20180512:01:17:27	23.1	15.3	-3.9	23.4	0.25	2.3	0.25	2.1	121.1	285.8	286.3	83.5	50.7	84.2	1419.081	1409.955	1877.098	1866.63
20180512:01:22:27	23.2	14.8	-3.8	23.4	0.25	2.2	0.25	2.1	119.8	285.7	286.2	83.4	50.8	84.2	1420.419	1411.354	1878.856	1868.47
20180512:01:27:27	23.2	14.5	-3.8	23.4	0.25	2.2	0.25	2.1	119.2	285.7	286.4	83.3	50.8	84.1	1421.805	1412.704	1880.676	1870.246
20180512:01:32:27	23.2	14.7	-3.8	23.4	0.25	2.2	0.25	2.1	119.6	285.7	286.3	83.3	50.8	84.0	1423.181	1414.039	1882.483	1872.002
20180512:01:37:27	23.2	15.2	-3.9	23.4	0.25	2.3	0.25	2.1	120.7	285.8	286.3	83.3	50.8	84.0	1424.536	1415.438	1884.263	1873.842
20180512:01:42:27	23.2	15.3	-3.9	23.4	0.25	2.3	0.25	2.1	121.0	285.8	286.3	83.2	50.8	83.9	1425.895	1416.786	1886.048	1875.615
20180512:01:47:27	23.2	15.4	-3.9	23.4	0.25	2.3	0.25	2.1	121.3	285.8	286.3	83.1	50.7	83.9	1427.294	1418.13	1887.885	1877.382
20180512:01:52:27	23.1	15.5	-3.8	23.4	0.25	2.3	0.25	2.1	121.6	285.8	286.3	83.1	50.7	83.8	1428.639	1419.523	1889.652	1879.214
20180512:01:57:27	23.1	15.6	-3.9	23.4	0.25	2.3	0.25	2.1	121.8	285.8	286.3	83.0	50.7	83.8	1429.994	1420.857	1891.431	1880.968
20180512:02:02:27	23.1	15.6	-3.9	23.4	0.25	2.3	0.25	2.1	121.8	285.7	286.3	83.0	50.7	83.7	1431.396	1422.219	1893.272	1882.759
20180512:02:07:27	23.1	15.7	-3.9	23.4	0.25	2.3	0.25	2.1	121.8	285.8	286.3	83.0	50.7	83.7	1432.754	1423.607	1895.056	1884.585
20180512:02:12:27	23.1	15.7	-3.9	23.4	0.25	2.3	0.25	2.1	121.9	285.8	286.3	82.9	50.7	83.6	1434.1	1424.95	1896.822	1886.35
20180512:02:17:27	23.1	15.7	-4.0	23.4	0.25	2.3	0.25	2.1	121.8	285.8	286.3	82.9	50.7	83.6	1435.496	1426.314	1898.656	1888.143
20180512:02:22:27	23.1	15.5	-4.1	23.4	0.25	2.3	0.25	2.1	121.4	285.8	286.3	82.8	50.7	83.6	1436.852	1427.687	1900.435	1889.947
20180512:02:27:27	23.1	14.8	-4.1	23.4	0.25	2.2	0.25	2.1	119.8	285.7	286.3	82.8	50.7	83.5	1438.199	1429.028	1902.204	1891.711
20180512:02:32:27	23.1	14.5	-3.9	23.4	0.25	2.2	0.25	2.1	119.2	285.7	286.4	82.7	50.7	83.5	1439.581	1430.414	1904.017	1893.532
20180512:02:37:27	23.2	14.7	-3.6	23.4	0.25	2.2	0.25	2.1	119.6	285.8	286.3	82.7	50.7	83.4	1440.954	1431.781	1905.819	1895.329
20180512:02:42:27	23.2	15.3	-3.6	23.4	0.25	2.2	0.25	2.1	121.0	285.7	286.3	82.6	50.7	83.4	1442.3	1433.113	1907.585	1897.079
20180512:02:47:27	23.2	15.5	-3.7	23.4	0.25	2.3	0.25	2.1	121.6	285.7	286.2	82.6	50.7	83.4	1443.665	1434.509	1909.376	1898.914
20180512:02:52:27	23.2	15.7	-3.7	23.4	0.25	2.2	0.25	2.1	122.0	285.7	286.3	82.6	50.7	83.3	1445.054	1435.859	1911.198	1900.686
20180512:02:57:27	23.2	15.8	-3.7	23.4	0.25	2.2	0.25	2.1	122.2	285.8	286.3	82.5	50.7	83.3	1446.393	1437.194	1912.956	1902.44
20180512:03:02:27	23.2	15.9	-3.7	23.4	0.25	2.2	0.25	2.1	122.5	285.8	286.3	82.5	50.7	83.3	1447.753	1438.586	1914.739	1904.269
20180512:03:07:27	23.2	16.0	-3.8	23.4	0.25	2.2	0.25	2.1	122.7	285.8	286.2	82.4	50.7	83.2	1449.152	1439.92	1916.574	1906.021
20180512:03:12:27	23.2	16.1	-3.8	23.4	0.25	2.2	0.25	2.1	123.0	285.8	286.3	82.4	50.7	83.2	1450.492	1441.274	1918.331	1907.799
20180512:03:17:27	23.2	16.3	-3.6	23.4	0.25	2.2	0.25	2.1	123.5	285.8	286.3	82.4	50.7	83.1	1451.842	1442.662	1920.102	1909.622
20180512:03:22:27	23.2	16.5	-3.6	23.4	0.25	2.3	0.25	2.1	123.9	285.8	286.2	82.3	50.7	83.1	1453.246	1443.998	1921.943	1911.376

Time:	Stack Pressure:	Sat% H2O:	Static:	Barometric:	Flowmeter1:	Vacuum1:	Flowmeter2:	Vacuum2:	Stack Temp:	Sorbent Temp:	Probe Temp:	DGM#1 Temp:	Condenser Temp:	DGM#2 Temp:	DGM1*:	DGM2*:	DGM1:	DGM2:
day:hh:mm:ss	in-Hg	Percent	in-H2O	in-Hg	l/min	in-Hg	l/min	in-Hg	degF	degF	degF	degF	degF	degF	liters STP	liters STP	liters nominal	liters nominal
20180512:03:27:27	23.2	16.6	-3.6	23.4	0.25	2.3	0.25	2.1	124.1	285.8	286.3	82.3	50.7	83.1	1454.592	1445.365	1923.707	1913.171
20180512:03:32:27	23.2	16.7	-3.6	23.4	0.25	2.3	0.25	2.1	124.2	285.8	286.3	82.3	50.6	83.0	1455.934	1446.731	1925.467	1914.964
20180512:03:37:27	23.1	16.2	-4.3	23.4	0.25	2.2	0.25	2.1	123.1	285.8	286.3	82.3	50.7	83.0	1457.331	1448.071	1927.298	1916.724
20180512:03:42:27	23.1	15.4	-4.9	23.4	0.25	2.2	0.25	2.1	121.1	285.6	286.3	82.2	50.7	83.0	1458.686	1449.462	1929.074	1918.549
20180512:03:47:27	23.1	15.0	-4.7	23.4	0.25	2.2	0.25	2.1	120.3	285.6	286.3	82.2	50.7	82.9	1460.022	1450.807	1930.826	1920.314
20180512:03:52:27	23.1	15.3	-4.4	23.4	0.25	2.2	0.25	2.1	120.9	285.6	286.2	82.1	50.6	82.9	1461.416	1452.14	1932.652	1922.064
20180512:03:57:27	23.1	15.7	-4.1	23.4	0.25	2.2	0.25	2.1	121.9	285.7	286.3	82.1	50.7	82.9	1462.778	1453.525	1934.437	1923.882
20180512:04:02:27	23.1	15.9	-4.1	23.4	0.25	2.2	0.25	2.1	122.3	285.8	286.3	82.0	50.6	82.8	1464.109	1454.853	1936.181	1925.624
20180512:04:07:27	23.1	16.0	-4.1	23.4	0.25	2.2	0.25	2.1	122.7	285.8	286.4	82.0	50.7	82.8	1465.497	1456.214	1938	1927.41
20180512:04:12:27	23.1	16.1	-4.1	23.4	0.25	2.2	0.25	2.1	123.0	285.7	286.3	82.0	50.6	82.7	1466.852	1457.595	1939.776	1929.222
20180512:04:17:27	23.1	16.2	-4.1	23.4	0.25	2.2	0.25	2.1	123.1	285.7	286.2	82.0	50.7	82.7	1468.194	1458.933	1941.533	1930.977
20180512:04:22:27	23.1	16.1	-4.1	23.4	0.25	2.2	0.25	2.1	122.9	285.7	286.3	82.0	50.6	82.7	1469.579	1460.31	1943.348	1932.784
20180512:04:27:27	23.1	16.0	-4.2	23.4	0.25	2.2	0.25	2.1	122.7	285.7	286.2	82.0	50.7	82.7	1470.941	1461.677	1945.133	1934.577
20180512:04:32:27	23.1	16.0	-4.3	23.4	0.25	2.2	0.25	2.1	122.6	285.7	286.3	82.0	50.6	82.7	1472.287	1463.007	1946.896	1936.321
20180512:04:37:27	23.1	16.1	-4.2	23.4	0.25	2.3	0.25	2.1	122.8	285.7	286.3	82.1	50.8	82.7	1473.663	1464.397	1948.7	1938.145
20180512:04:42:27	23.1	16.1	-4.1	23.4	0.25	2.3	0.25	2.1	122.8	285.7	286.3	82.1	50.6	82.6	1475.041	1465.741	1950.506	1939.908
20180512:04:47:27	23.1	16.1	-4.2	23.4	0.25	2.2	0.25	2.1	122.8	285.7	286.4	82.3	50.8	82.7	1476.39	1467.08	1952.274	1941.665
20180512:04:52:27	23.1	15.4	-4.5	23.4	0.25	2.2	0.25	2.1	121.2	285.7	286.3	82.3	50.6	82.6	1477.744	1468.469	1954.05	1943.487
20180512:04:57:27	23.1	14.7	-4.2	23.4	0.25	2.2	0.25	2.1	119.6	285.6	286.3	82.3	50.8	82.6	1479.137	1469.804	1955.876	1945.239
20180512:05:02:27	23.1	14.3	-4.0	23.4	0.25	2.2	0.25	2.1	118.6	285.6	286.3	82.2	50.6	82.6	1480.475	1471.161	1957.631	1947.019
20180512:05:07:27	23.2	14.8	-3.7	23.4	0.25	2.2	0.25	2.1	119.8	285.7	286.4	82.2	50.8	82.6	1481.836	1472.532	1959.415	1948.818
20180512:05:12:27	23.2	15.1	-3.8	23.4	0.25	2.2	0.25	2.1	120.6	285.7	286.2	82.1	50.6	82.5	1483.237	1473.868	1961.252	1950.571
20180512:05:17:27	23.2	15.3	-3.9	23.4	0.25	2.2	0.25	2.1	120.9	285.7	286.3	82.2	50.8	82.6	1484.584	1475.254	1963.017	1952.389
20180512:05:22:27	23.1	15.3	-4.0	23.4	0.25	2.2	0.25	2.1	121.1	285.7	286.3	82.2	50.6	82.6	1485.929	1476.609	1964.78	1954.165
20180512:05:27:27	23.1	15.3	-4.1	23.4	0.25	2.2	0.25	2.1	121.0	285.7	286.3	82.2	50.8	82.6	1487.332	1477.932	1966.619	1955.9
20180512:05:32:27	23.1	15.2	-4.2	23.4	0.25	2.2	0.25	2.1	120.8	285.7	286.3	82.2	50.7	82.5	1488.684	1479.325	1968.391	1957.727
20180512:05:37:27	23.1	15.1	-4.2	23.4	0.25	2.2	0.25	2.1	120.7	285.6	286.2	82.3	50.7	82.5	1490.028	1480.651	1970.152	1959.466
20180512:05:42:27	23.2	15.1	-4.0	23.5	0.25	2.2	0.25	2.1	120.7	285.7	286.3	82.3	50.7	82.5	1491.424	1482.012	1971.981	1961.25
20180512:05:47:27	23.2	15.1	-4.0	23.4	0.25	2.2	0.25	2.1	120.7	285.7	286.3	82.3	50.8	82.5	1492.785	1483.39	1973.765	1963.056
20180512:05:52:27	23.2	15.1	-3.9	23.4	0.25	2.2	0.25	2.1	120.6	285.7	286.3	82.3	50.7	82.5	1494.122	1484.726	1975.517	1964.808
20180512:05:57:27	23.2	15.1	-3.9	23.4	0.25	2.2	0.25	2.1	120.5	285.8	286.4	82.3	50.8	82.5	1495.511	1486.105	1977.337	1966.617
20180512:06:02:27	23.2	15.0	-3.9	23.4	0.25	2.2	0.25	2.1	120.4	285.7	286.2	82.3	50.7	82.5	1496.866	1487.472	1979.113	1968.408
20180512:06:07:27	23.2	15.1	-3.9	23.5	0.25	2.2	0.25	2.1	120.5	285.7	286.3	82.3	50.7	82.4	1498.214	1488.801	1980.88	1970.15
20180512:06:12:27	23.2	15.1	-3.9	23.5	0.25	2.2	0.25	2.1	120.5	285.8	286.3	82.3	50.7	82.4	1499.598	1490.188	1982.693	1971.968
20180512:06:17:27	23.2	15.0	-3.9	23.5	0.25	2.2	0.25	2.1	120.4	285.8	286.3	82.3	50.7	82.4	1500.97	1491.525	1984.491	1973.72
20180512:06:22:27	23.2	15.0	-3.9	23.5	0.25	2.2	0.25	2.1	120.4	285.7	286.3	82.2	50.7	82.4	1502.313	1492.87	1986.25	1975.483
20180512:06:27:27	23.2	15.0	-3.9	23.5	0.25	2.2	0.25	2.1	120.4	285.8	286.4	82.2	50.7	82.4	1503.683	1494.255	1988.044	1977.299
20180512:06:32:27	23.2	15.0	-3.9	23.5	0.25	2.2	0.25	2.1	120.4	285.8	286.4	82.2	50.7	82.4	1505.068	1495.596	1989.859	1979.056
20180512:06:37:27	23.2	15.0	-3.9	23.5	0.25	2.2	0.25	2.1	120.3	285.8	286.3	82.2	50.6	82.4	1506.411	1496.961	1991.619	1980.844
20180512:06:42:27	23.2	14.9	-3.9	23.5	0.25	2.2	0.25	2.1	120.2	285.7	286.3	82.2	50.7	82.4	1507.77	1498.325	1993.398	1982.632
20180512:06:47:27	23.2	14.8	-3.9	23.5	0.25	2.2	0.25	2.1	120.0	285.6	286.3	82.2	50.6	82.4	1509.167	1499.666	1995.228	1984.389
20180512:06:52:27	23.2	14.3	-3.9	23.5	0.25	2.2	0.25	2.1	118.6	285.7	286.3	82.2	50.7	82.4	1510.506	1501.059	1996.981	1986.214
20180512:06:57:27	23.2	14.1	-3.9	23.5	0.25	2.2	0.25	2.1	118.1	285.7	286.3	82.1	50.6	82.4	1511.863	1502.405	1998.759	1987.977
20180512:07:02:27	23.2	14.0	-3.9	23.5	0.25	2.2	0.25	2.1	117.9	285.6	286.3	82.1	50.7	82.4	1513.266	1503.744	2000.596	1989.731
20180512:07:07:27	23.2	14.6	-3.9	23.5	0.25	2.2	0.25	2.1	119.4	285.7	286.4	82.1	50.6	82.4	1514.611	1505.13	2002.357	1991.547
20180512:07:12:27	23.2	14.9	-4.0	23.5	0.25	2.2	0.25	2.1	120.0	285.7	286.2	82.2	50.7	82.4	1515.958	1506.46	2004.122	1993.289
20180512:07:17:27	23.2	15.0	-4.0	23.5	0.25	2.2	0.25	2.1	120.4	285.8	286.3	82.2	50.6	82.4	1517.362	1507.823	2005.961	1995.075
20180512:07:22:27	23.2	15.1	-3.6	23.4	0.25	2.2	0.25	2.1	120.5	285.8	286.3	82.2	50.7	82.4	1518.723	1509.196	2007.744	1996.876
20180512:07:27:27	23.2	15.2	-4.2	23.5	0.25	2.3	0.25	2.2	120.7	285.9	286.3	82.2	50.6	82.4	1520.065	1510.533	2009.502	1998.626
20180512:07:32:27	23.2	15.3	-4.2	23.5	0.25	2.3	0.25	2.2	121.1	285.9	286.4	82.3	50.7	82.4	1521.461	1511.918	2011.328	2000.44
20180512:07:37:27	23.2	15.4	-4.1	23.5	0.25	2.3	0.25	2.2	121.4	285.9	286.3	82.3	50.6	82.4	1522.826	1513.277	2013.115	2002.218
20180512:07:42:27	23.2	15.6	-4.1	23.5	0.25	2.3	0.25	2.2	121.7	285.9	286.3	82.3	50.8	82.4	1524.163	1514.603	2014.865	2003.955
20180512:07:47:27	23.2	15.7	-4.1	23.5	0.25	2.3	0.25	2.1	122.0	285.9	286.3	82.3	50.6	82.4	1525.552	1515.999	2016.683	2005.782
20180512:07:52:27	23.2	15.8	-4.1	23.5	0.25	2.3	0.25	2.2	122.2	285.9	286.3	82.2	50.7	82.4	1526.909	1517.329	2018.459	2007.523
20180512:07:57:27	23.2	15.6	-4.4	23.5	0.25	2.3	0.25	2.2	121.7	285.9	286.3	82.1	50.6	82.4	1528.257	1518.683	2020.222	2009.295
20180512:08:02:27	23.1	14.9	-4.6	23.5	0.25	2.2	0.25	2.1	120.1	285.8	286.3	82.0	50.7	82.3	1529.637	1520.063	2022.028	2011.102
20180512:08:07:27	23.2	15.1	-4.2	23.5	0.25	2.2	0.25	2.1	120.5	285.7	286.3	82.0	50.6	82.3	1530.999	1521.397	2023.809	2012.848
20180512:08:12:27	23.2	15.6	-4.1	23.5	0.25	2.3	0.25	2.1	121.7	285.7	286.2	81.9	50.6	82.3	1532.344	1522.78	2025.569	2014.658
20180512:08:17:27	23.2	15.8	-4.0	23.5	0.25	2.3	0.25	2.1	122.2	285.8	286.3	81.8	50.5	82.2	1533.72	1524.138	2027.369	2016.436
20180512:08:22:27	23.2	16.0	-4.1	23.5	0.25	2.3	0.25	2.1	122.7	285.8	286.3	81.8	50.6	82.2	1535.09	1525.464	2029.159	2018.171
20180512:08:27:27	23.2	16.2	-4.2	23.5	0.25	2.3	0.25	2.1	123.2	285.8	286.2	81.8	50.6	82.2	1536.43	1526.857	2030.911	2019.994
20180512:08:32:27	23.2	16.3	-4.0	23.5	0.25	2.3	0.25	2.1	123.4	285.7	286.3	81.7	50.6	82.2	1537.804	1528.188	2032.707	2021.735
20180512:08:37:27	23.2	16.4	-4.0	23.5	0.25	2.3	0.25	2.1	123.6	285.7	286.2	81.7	50.5	82.1	1539.18	1529.541	2034.507	2023.506
20180512:08:42:27	23.2	16.5	-4.1	23.5	0.25	2.3	0.25	2.1	123.8	285.7	286.2	81.7	50.6	82.1	1540.526	1530.919	2036.267	2025.308
20180512:08:47:27	23.2	16.6	-4.1	23.5	0.25	2.2	0.25	2.1	124.1	285.8	286.3	81.7	50.5	82.1	1541.887	1532.253	2038.046	2027.055
20180512:08:52:27	23.2	16.7	-4.1	23.5	0.25	2.2	0.25	2.1	124.3	285.7	286.2	81.7	50.6	82.1	1543.265	1533.636	2039.846	2028.863
20180512:08:57:27	23.2	16.8	-4.1	23.5	0.25	2.2	0.25	2.1	124.4	285.7	286.3	81.7	50.6	82.1	1544.606	1534.986	2041.6	2030.63
20180512:09:02:27	23.2	16.8	-4.1	23.5	0.25	2.2	0.25	2.1	124.5	285.7	286.3	81.8	50.6	82.1	1545.968	1536.314	2043.381	2032.367
20180512:09:07:27	23.2	16.6	-4.2	23.5	0.25	2.2	0.25	2.1	124.1	285.7	286.3	81.9	50.6	82.1	1547.343	1537.693	2045.18	2034.171
20180512:09:12:27	23.1	15.8	-4.7	23.5	0.25	2.2	0.25	2.1	122.1	285.6	286.2	81.9	50.6	82.1	1548.677	1539.026	2046.924	2035.915
20180512:09:17:27	23.1	16.2	-4.6	23.5	0.25	2.2	0.25	2.1	123.0	285.6	286.3	82.0	50.6	82.2	1550.04	1540.378	2048.707	2037.684
20180512:09:22:27	23.1	16.4	-4.5	23.5	0.25	2.2	0.25	2.1	123.6	285.7	286.3	82.0	50.6	82.2	1551.409	1541.742	2050.498	2039.47
20180512:09:27:27	23.2	16.6	-4.4	23.5	0.25	2.2	0.25	2.1	124.0	285.8	286.3	82.0	50.6	82.2	1552.74	1543.061	2052.241	2041.195
20180512:09:32:27	23.2	16.7	-4.3	23.5	0.25	2.2	0.25	2.1	124.1	285.8	286.3	82.0	50.6	82.2	1554.11	1544.446	2054.033	2043.009
20180512:09:37:27	23.2	16.7	-4.3	23.5	0.25	2.2	0.25	2.1	124.2	285.8	286.3	81.9	50.6	82.2	1555.465	1545.759	2055.806	2044.727
20180512:09:42:27	23.2	16.7	-4.1	23.5	0.25	2.2	0.25	2.1	124.3	285.7	286.3	81.9	50.6	82.2	1556.8	1547.113	2057.552	2046.5
20180512:09:47:27	23.2	16.7	-4.2	23.5	0.25	2.2	0.25	2.1	124.3	285.7	286.3	81.9	50.6	82.2	1558.179	1548.474	2059.356	2048.282
20180512:09:52:27	23.2	16.7	-4.2	23.5	0.25	2.2	0.25	2.1	124.3	285.7	286.3	81.8	50.5	82.1	1559.526	1549.804	2061.119	2050.023
20180512:09:57:27	23.2	16.7	-4.1	23.5	0.25	2.2	0.25	2.1	124.3	285.7	286.3	81.8	50.5	82.1	1560.866	1551.186	2062.87	2051.831
20180512:10:02:27	23.2	16.8	-4.1	23.5	0.25	2.3	0.25	2.1	124.5	285.7	286.3	81.9	50.5	82.1	1562.246	1552.515	2064.676	2053.57
20180512:10:07:27	23.2	16.9	-3.9	23.5	0.25	2.2	0.25	2.1	124.6	285.7	286.3	81.9	50.5	82.1	1563.603	1553.852	2066.452	2055.32
20180512:10:12:27	23.2	16.8	-3.9	23.5	0.25	2.2	0.25	2.1	124.5	285.7	286.3	81.9	50.5	82.1	1564.938	1555.222	2068.198	2057.113
20180512:10:17:27	23.2	16.7	-3.8	23.5	0.25	2.2	0.25	2.1	124.4	285.7	286.3	81.9	50.5	82.2	1566.32	1556.55	2070.007	2058.852
20180512:10:22:27	23.2	16.7	-3.9	23.5	0.25	2.2	0.25	2.1	124.3	285.7	286.2	81.9	50.5	82.1	1567.679	1557.934	2071.785	2060.664
20180512:10:27:27	23.2	16.6	-4.1	23.5	0.25	2.2	0.25	2.1	124.1	285.7	286.2	81.8	50.5	82.2	1569.007	1559.274	2073.522	2062.417
20180512:10:32:27	23.2	16.6	-4.0	23.5	0.25	2.2	0.25	2.1	124.0	285.7	286.3	81.8	50.5	82.2	1570.39	1560.599	2075.331	2064.152
20180512:10:37:27	23.2	16.6	-4.0	23.5	0.25	2.2	0.25	2.1	124.0	285.7	286.3	81.8	50.5	82.2	1571.744	1561.977	2077.104	2065.957
20180512:10:42:27	23.2	16.7	-4.0	23.5	0.25	2.2	0.25	2.1	124.2	285.7	286.3	81.8	50.5	82.2	1573.073	1563.304	2078.843	2067.695
20180512:10:47:27	23.2	16.6	-4.0	23.5	0.25	2.2	0.25	2.1	124.0	285.7	286.3	81.8	50.5	82.2	1574.461	1564.671	2080.657	2069.485

Time:	Stack Pressure:	Sat% H2O:	Static:	Barometric:	Flowmeter1:	Vacuum1:	Flowmeter2:	Vacuum2:	Stack Temp:	Sorbent Temp:	Probe Temp:	DGM#1 Temp:	Condenser Temp:	DGM#2 Temp:	DGM1*:	DGM2*:	DGM1:	DGM2:
day:hh:mm:ss	in-Hg	Percent	in-H2O	in-Hg	l/min	in-Hg	l/min	in-Hg	degF	degF	degF	degF	degF	degF	liters STP	liters STP	liters nominal	liters nominal
20180512:10:52:27	23.2	16.5	-4.1	23.5	0.25	2.2	0.25	2.1	123.9	285.7	286.2	81.8	50.5	82.2	1575.807	1566.03	2082.419	2071.263
20180512:10:57:27	23.2	16.5	-3.9	23.5	0.25	2.2	0.25	2.1	123.8	285.7	286.2	81.7	50.5	82.2	1577.138	1567.343	2084.159	2072.983
20180512:11:02:27	23.2	16.5	-4.0	23.5	0.25	2.2	0.25	2.1	123.8	285.7	286.2	81.7	50.5	82.2	1578.524	1568.732	2085.972	2074.801
20180512:11:07:27	23.2	16.5	-4.0	23.5	0.25	2.2	0.25	2.1	123.7	285.6	286.2	81.7	50.5	82.2	1579.866	1570.051	2087.728	2076.528
20180512:11:12:27	23.2	16.4	-4.0	23.5	0.25	2.2	0.25	2.1	123.6	285.6	286.2	81.7	50.5	82.2	1581.203	1571.404	2089.478	2078.301
20180512:11:17:27	23.2	16.4	-4.0	23.5	0.25	2.2	0.25	2.1	123.7	285.6	286.3	81.8	50.5	82.3	1582.593	1572.766	2091.296	2080.085
20180512:11:22:27	23.2	16.5	-4.1	23.5	0.25	2.2	0.25	2.1	123.9	285.7	286.3	81.9	50.6	82.3	1583.935	1574.1	2093.052	2081.831
20180512:11:27:27	23.2	16.6	-4.0	23.5	0.25	2.2	0.25	2.1	124.0	285.6	286.3	82.0	50.5	82.3	1585.265	1575.482	2094.793	2083.641
20180512:11:32:27	23.2	16.7	-3.9	23.5	0.25	2.2	0.25	2.1	124.2	285.7	286.2	82.1	50.6	82.3	1586.663	1576.805	2096.622	2085.374
20180512:11:37:27	23.2	16.7	-4.0	23.5	0.25	2.2	0.25	2.1	124.4	285.7	286.3	82.2	50.5	82.4	1587.997	1578.144	2098.369	2087.126
20180512:11:42:27	23.2	16.8	-4.0	23.5	0.25	2.2	0.25	2.1	124.4	285.7	286.3	82.3	50.6	82.4	1589.331	1579.516	2100.115	2088.923
20180512:11:47:27	23.2	16.7	-4.1	23.5	0.25	2.2	0.25	2.1	124.2	285.8	286.3	82.4	50.5	82.5	1590.721	1580.846	2101.933	2090.664
20180512:11:52:27	23.2	16.6	-4.3	23.5	0.25	2.2	0.25	2.1	124.1	285.8	286.3	82.4	50.6	82.5	1592.049	1582.225	2103.672	2092.468
20180512:11:57:27	23.2	16.6	-4.2	23.5	0.25	2.2	0.25	2.1	124.0	285.7	286.3	82.5	50.5	82.5	1593.391	1583.562	2105.428	2094.218
20180512:12:02:27	23.2	16.5	-4.2	23.5	0.25	2.2	0.25	2.1	123.9	285.7	286.3	82.6	50.6	82.6	1594.783	1584.883	2107.25	2095.947
20180512:12:07:27	23.2	16.5	-4.2	23.5	0.25	2.2	0.25	2.1	123.8	285.7	286.2	82.6	50.5	82.6	1596.109	1586.263	2108.985	2097.754
20180512:12:12:27	23.2	16.4	-4.2	23.5	0.25	2.2	0.25	2.1	123.7	285.7	286.3	82.6	50.6	82.7	1597.458	1587.586	2110.75	2099.485
20180512:12:17:27	23.2	16.4	-4.4	23.5	0.25	2.2	0.25	2.1	123.5	285.7	286.2	82.5	50.5	82.6	1598.848	1588.958	2112.569	2101.28
20180512:12:22:27	23.2	16.4	-4.4	23.5	0.25	2.2	0.25	2.1	123.6	285.8	286.4	82.6	50.6	82.7	1600.173	1590.308	2114.302	2103.047
20180512:12:27:27	23.2	16.4	-4.3	23.5	0.25	2.2	0.25	2.1	123.5	285.8	286.3	82.6	50.5	82.7	1601.526	1591.631	2116.072	2104.778
20180512:12:32:27	23.2	16.4	-4.3	23.5	0.25	2.2	0.25	2.1	123.5	285.7	286.3	82.5	50.6	82.7	1602.907	1593.003	2117.88	2106.573
20180512:12:37:27	23.2	16.3	-4.3	23.5	0.25	2.2	0.25	2.1	123.4	285.7	286.3	82.5	50.5	82.7	1604.241	1594.328	2119.624	2108.308
20180512:12:42:27	23.2	16.3	-4.2	23.5	0.25	2.2	0.25	2.1	123.4	285.7	286.2	82.5	50.6	82.8	1605.594	1595.689	2121.394	2110.09
20180512:12:47:27	23.2	16.3	-4.3	23.5	0.25	2.2	0.25	2.1	123.4	285.7	286.3	82.4	50.5	82.8	1606.969	1597.052	2123.194	2111.874
20180512:12:52:27	23.2	16.3	-4.2	23.5	0.25	2.2	0.25	2.1	123.3	285.7	286.2	82.4	50.6	82.8	1608.309	1598.368	2124.948	2113.598
20180512:12:57:27	23.2	16.3	-4.2	23.5	0.25	2.2	0.25	2.1	123.5	285.7	286.3	82.4	50.5	82.8	1609.661	1599.751	2126.719	2115.41
20180512:13:02:27	23.2	16.3	-4.3	23.5	0.25	2.2	0.25	2.1	123.5	285.7	286.3	82.4	50.6	82.8	1611.032	1601.066	2128.511	2117.132
20180512:13:07:27	23.2	16.3	-4.2	23.5	0.25	2.2	0.25	2.1	123.4	285.7	286.3	82.4	50.5	82.9	1612.364	1602.422	2130.254	2118.906
20180512:13:12:27	23.2	16.3	-4.3	23.5	0.25	2.2	0.25	2.1	123.4	285.7	286.3	82.4	50.6	82.9	1613.728	1603.784	2132.037	2120.69
20180512:13:17:27	23.2	16.3	-4.4	23.5	0.25	2.2	0.25	2.1	123.3	285.6	286.2	82.4	50.5	82.9	1615.09	1605.115	2133.819	2122.432
20180512:13:22:27	23.2	16.3	-4.6	23.5	0.25	2.2	0.25	2.1	123.3	285.7	286.3	82.4	50.6	82.9	1616.423	1606.497	2135.561	2124.241
20180512:13:27:27	23.2	16.2	-4.5	23.5	0.25	2.2	0.25	2.1	123.3	285.7	286.3	82.4	50.5	82.9	1617.797	1607.821	2137.357	2125.972
20180512:13:32:27	23.2	16.3	-4.4	23.5	0.25	2.2	0.25	2.1	123.3	285.7	286.3	82.4	50.5	82.9	1619.146	1609.162	2139.12	2127.727
20180512:13:37:27	23.2	16.3	-4.5	23.5	0.25	2.2	0.25	2.1	123.4	285.7	286.2	82.4	50.5	82.9	1620.482	1610.534	2140.867	2129.523
20180512:13:42:27	23.2	16.3	-4.4	23.5	0.25	2.2	0.25	2.1	123.4	285.7	286.3	82.4	50.6	83.0	1621.86	1611.863	2142.669	2131.261
20180512:13:47:27	23.2	16.3	-4.4	23.5	0.25	2.2	0.25	2.1	123.3	285.7	286.3	82.4	50.5	83.0	1623.215	1613.245	2144.439	2133.07
20180512:13:52:27	23.2	16.3	-4.5	23.5	0.25	2.2	0.25	2.1	123.3	285.7	286.3	82.4	50.5	83.0	1624.541	1614.58	2146.172	2134.816
20180512:13:57:27	23.2	16.3	-4.5	23.5	0.25	2.2	0.25	2.1	123.3	285.7	286.3	82.4	50.5	83.0	1625.924	1615.904	2147.98	2136.549
20180512:14:02:27	23.2	15.9	-4.7	23.5	0.25	2.2	0.25	2.1	122.5	285.7	286.3	82.5	50.6	83.1	1627.259	1617.283	2149.724	2138.353
20180512:14:07:27	23.2	15.4	-4.8	23.5	0.25	2.2	0.25	2.1	121.2	285.6	286.2	82.4	50.5	83.1	1628.589	1618.607	2151.463	2140.085
20180512:14:12:27	23.2	15.7	-4.7	23.5	0.25	2.2	0.25	2.1	122.1	285.6	286.2	82.4	50.5	83.1	1629.987	1619.98	2153.289	2141.882
20180512:14:17:27	23.2	15.9	-4.7	23.5	0.25	2.2	0.25	2.1	122.5	285.7	286.2	82.4	50.5	83.1	1631.312	1621.329	2155.02	2143.647
20180512:14:22:27	23.2	16.1	-4.6	23.5	0.25	2.2	0.25	2.1	122.9	285.7	286.3	82.5	50.5	83.1	1632.651	1622.651	2156.77	2145.376
20180512:14:27:27	23.2	16.1	-4.6	23.5	0.25	2.2	0.25	2.1	123.0	285.7	286.3	82.5	50.6	83.1	1634.038	1624.026	2158.583	2147.175
20180512:14:32:27	23.2	16.1	-4.6	23.5	0.25	2.2	0.25	2.1	123.0	285.8	286.3	82.5	50.5	83.1	1635.362	1625.353	2160.313	2148.91
20180512:14:37:27	23.2	16.2	-4.5	23.5	0.25	2.2	0.25	2.1	123.1	285.6	286.1	82.5	50.5	83.1	1636.712	1626.714	2162.078	2150.692
20180512:14:42:27	23.2	16.2	-4.4	23.5	0.25	2.2	0.25	2.1	123.1	285.7	286.3	82.6	50.5	83.2	1638.098	1628.075	2163.891	2152.472
20180512:14:47:27	23.2	16.1	-4.2	23.5	0.25	2.2	0.25	2.1	122.9	285.7	286.3	82.6	50.6	83.2	1639.427	1629.388	2165.628	2154.192
20180512:14:52:27	23.2	16.0	-4.2	23.5	0.25	2.2	0.25	2.1	122.7	285.7	286.3	82.6	50.5	83.2	1640.778	1630.771	2167.394	2156.002
20180512:14:57:27	23.2	16.1	-4.3	23.5	0.25	2.2	0.25	2.1	122.9	285.7	286.3	82.6	50.5	83.2	1642.155	1632.094	2169.194	2157.733
20180512:15:02:27	23.2	16.1	-4.3	23.5	0.25	2.2	0.25	2.1	123.0	285.7	286.3	82.7	50.5	83.3	1643.489	1633.451	2170.939	2159.509
20180512:15:07:27	23.2	16.1	-4.3	23.5	0.25	2.2	0.25	2.1	122.9	285.7	286.3	82.7	50.6	83.3	1644.848	1634.814	2172.715	2161.293
20180512:15:12:27	23.2	16.1	-4.3	23.5	0.25	2.2	0.25	2.1	122.9	285.6	286.3	82.7	50.5	83.3	1646.217	1636.146	2174.506	2163.038
20180512:15:17:27	23.2	16.1	-4.3	23.5	0.25	2.2	0.25	2.1	122.9	285.7	286.3	82.9	50.6	83.4	1647.549	1637.526	2176.248	2164.844
20180512:15:22:27	23.2	16.1	-4.3	23.5	0.25	2.2	0.25	2.1	122.9	285.7	286.3	83.0	50.6	83.4	1648.918	1638.852	2178.039	2166.581
20180512:15:27:27	23.2	16.1	-4.3	23.5	0.25	2.2	0.25	2.1	122.9	285.7	286.2	83.0	50.6	83.5	1650.273	1640.188	2179.813	2168.331
20180512:15:32:27	23.2	16.2	-4.3	23.5	0.25	2.2	0.25	2.1	123.1	285.7	286.3	83.1	50.5	83.5	1651.608	1641.556	2181.559	2170.122
20180512:15:37:27	23.2	16.2	-4.2	23.5	0.25	2.2	0.25	2.1	123.2	285.8	286.3	83.2	50.6	83.6	1652.985	1642.884	2183.361	2171.861
20180512:15:42:27	23.2	16.2	-4.3	23.5	0.25	2.2	0.25	2.1	123.2	285.7	286.3	83.2	50.5	83.6	1654.335	1644.263	2185.128	2173.667
20180512:15:47:27	23.2	16.2	-4.2	23.5	0.25	2.2	0.25	2.1	123.3	285.7	286.3	83.3	50.6	83.6	1655.669	1645.59	2186.874	2175.406
20180512:15:52:27	23.2	16.2	-4.2	23.5	0.25	2.2	0.25	2.1	123.2	285.7	286.2	83.3	50.5	83.6	1657.047	1646.918	2188.678	2177.145
20180512:15:57:27	23.2	16.3	-4.3	23.5	0.25	2.2	0.25	2.1	123.3	285.7	286.3	83.4	50.7	83.7	1658.402	1648.296	2190.452	2178.949
20180512:16:02:27	23.2	16.3	-4.3	23.5	0.25	2.2	0.25	2.1	123.4	285.7	286.3	83.4	50.6	83.7	1659.726	1649.619	2192.185	2180.682
20180512:16:07:27	23.2	16.3	-4.3	23.5	0.25	2.2	0.25	2.1	123.5	285.7	286.3	83.6	50.7	83.8	1661.11	1650.992	2193.996	2182.481
20180512:16:12:27	23.2	16.3	-4.2	23.5	0.25	2.2	0.25	2.1	123.5	285.7	286.3	83.6	50.6	83.8	1662.458	1652.339	2195.761	2184.244
20180512:16:17:27	23.2	16.4	-4.2	23.5	0.25	2.2	0.25	2.1	123.6	285.7	286.4	83.7	50.7	83.9	1663.786	1653.662	2197.5	2185.977
20180512:16:22:27	23.2	16.3	-4.3	23.5	0.25	2.2	0.25	2.1	123.5	285.8	286.3	83.8	50.6	83.9	1665.171	1655.036	2199.313	2187.776
20180512:16:27:27	23.2	16.4	-4.3	23.5	0.25	2.2	0.25	2.1	123.6	285.7	286.3	83.9	50.7	84.0	1666.511	1656.36	2201.069	2189.511
20180512:16:32:27	23.2	16.4	-4.3	23.5	0.25	2.2	0.25	2.1	123.6	285.7	286.3	84.0	50.6	84.0	1667.843	1657.722	2202.813	2191.295
20180512:16:37:27	23.2	16.3	-4.3	23.5	0.25	2.2	0.25	2.1	123.5	285.7	286.3	84.0	50.7	84.1	1669.233	1659.081	2204.633	2193.075
20180512:16:42:27	23.2	16.3	-4.3	23.5	0.25	2.2	0.25	2.1	123.4	285.7	286.3	84.0	50.6	84.1	1670.576	1660.393	2206.393	2194.793
20180512:16:47:27	23.2	16.3	-4.3	23.5	0.25	2.2	0.25	2.1	123.3	285.7	286.3	84.0	50.7	84.1	1671.903	1661.772	2208.13	2196.6
20180512:16:52:27	23.2	16.3	-4.2	23.5	0.25	2.2	0.25	2.1	123.6	285.7	286.3	84.0	50.6	84.2	1673.298	1663.092	2209.957	2198.329
20180512:16:57:27	23.2	16.3	-4.2	23.5	0.25	2.2	0.25	2.1	123.5	285.6	286.2	84.0	50.7	84.2	1674.632	1664.448	2211.704	2200.105
20180512:17:02:27	23.2	16.3	-4.3	23.5	0.25	2.2	0.25	2.1	123.5	285.8	286.4	84.0	50.6	84.2	1675.968	1665.805	2213.454	2201.883
20180512:17:07:27	23.2	16.3	-4.3	23.5	0.25	2.2	0.25	2.1	123.5	285.7	286.3	84.0	50.7	84.2	1677.364	1667.131	2215.281	2203.62
20180512:17:12:27	23.2	16.3	-4.2	23.5	0.25	2.2	0.25	2.1	123.4	285.7	286.3	84.0	50.6	84.2	1678.697	1668.512	2217.028	2205.43
20180512:17:17:27	23.2	15.7	-4.6	23.5	0.25	2.2	0.25	2.1	122.2	285.7	286.3	84.0	50.7	84.2	1680.041	1669.833	2218.787	2207.16
20180512:17:22:27	23.2	15.1	-4.9	23.5	0.25	2.2	0.25	2.1	120.6	285.6	286.3	84.0	50.6	84.2	1681.427	1671.179	2220.602	2208.923
20180512:17:27:27	23.2	15.6	-4.5	23.5	0.25	2.2	0.25	2.1	121.9	285.7	286.3	84.0	50.7	84.3	1682.759	1672.547	2222.346	2210.716
20180512:17:32:27	23.2	15.9	-4.5	23.5	0.25	2.2	0.25	2.1	122.5	285.8	286.4	84.0	50.6	84.3	1684.106	1673.878	2224.109	2212.459
20180512:17:37:27	23.2	16.0	-4.4	23.5	0.25	2.2	0.25	2.1	122.8	285.8	286.3	84.0	50.6	84.3	1685.496	1675.259	2225.93	2214.269
20180512:17:42:27	23.2	16.1	-4.5	23.6	0.25	2.2	0.25	2.1	123.0	285.8	286.3	84.0	50.6	84.3	1686.829	1676.587	2227.674	2216.008
20180512:17:47:27	23.2	16.1	-4.5	23.6	0.25	2.2	0.25	2.1	123.1	285.8	286.3	84.0	50.6	84.3	1688.171	1677.916	2229.431	2217.748
20180512:17:52:27	23.2	16.1	-4.5	23.6	0.25	2.2	0.25	2.1	123.1	285.7	286.2	84.0	50.6	84.3	1689.565	1679.292	2231.256	2219.551
20180512:17:57:27	23.2	16.1	-4.5	23.6	0.25	2.2	0.25	2.1	123.0	285.7	286.3	84.0	50.6	84.3	1690.894	1680.617	2232.994	2221.286
20180512:18:02:27	23.2	16.1	-4.4	23.6	0.25	2.2	0.25	2.1	123.1	285.7	286.3	84.0	50.6	84.4	1692.24	1681.993	2234.756	2223.086
20180512:18:07:27	23.2	16.1	-4.5	23.6	0.25	2.2	0.25	2.1	123.1	285.7	286.3	83.9	50.6	84.3	1693.626	1683.337	2236.569	2224.846
20180512:18:12:27	23.2	16.1	-4.5	23.6	0.25	2.2	0.25	2.1	123.0	285.7	286.3	83.9	50.6	84.3	1694.948	1684.661	2238.298	2226.579

Time:	Stack Pressure:	Sat% H2O:	Static:	Barometric:	Flowmeter1:	Vacuum1:	Flowmeter2:	Vacuum2:	Stack Temp:	Sorbent Temp:	Probe Temp:	DGM#1 Temp:	Condenser Temp:	DGM#2 Temp:	DGM1*:	DGM2*:	DGM1:	DGM2:
day:hh:mm:ss	in-Hg	Percent	in-H2O	in-Hg	l/min	in-Hg	l/min	in-Hg	degF	degF	degF	degF	degF	degF	liters STP	liters STP	liters nominal	liters nominal
20180512:18:17:27	23.2	16.1	-4.5	23.6	0.25	2.2	0.25	2.1	122.9	285.7	286.3	83.9	50.6	84.3	1696.302	1686.036	2240.069	2228.38
20180512:18:22:27	23.2	16.1	-4.5	23.6	0.25	2.2	0.25	2.1	123.0	285.7	286.3	83.9	50.6	84.4	1697.677	1687.364	2241.867	2230.118
20180512:18:27:27	23.2	15.8	-4.7	23.6	0.25	2.2	0.25	2.1	122.2	285.7	286.3	83.9	50.6	84.4	1699.017	1688.727	2243.62	2231.902
20180512:18:32:27	23.2	15.2	-4.8	23.6	0.25	2.2	0.25	2.1	120.9	285.6	286.3	84.0	50.7	84.4	1700.368	1690.089	2245.387	2233.684
20180512:18:37:27	23.2	15.7	-4.7	23.6	0.25	2.2	0.25	2.1	122.0	285.7	286.3	84.0	50.6	84.4	1701.743	1691.406	2247.185	2235.408
20180512:18:42:27	23.2	15.7	-4.6	23.6	0.25	2.2	0.25	2.1	122.2	285.8	286.3	84.0	50.6	84.4	1703.077	1692.787	2248.93	2237.216
20180512:18:47:27	23.2	15.7	-4.5	23.6	0.25	2.2	0.25	2.1	122.1	285.8	286.3	84.0	50.6	84.4	1704.442	1694.107	2250.715	2238.944
20180512:18:52:27	23.2	15.5	-4.4	23.6	0.25	2.2	0.25	2.1	121.8	285.8	286.3	84.0	50.6	84.4	1705.812	1695.463	2252.506	2240.718
20180512:18:57:27	23.3	15.4	-4.4	23.6	0.25	2.2	0.25	2.1	121.5	285.8	286.3	83.9	50.6	84.4	1707.142	1696.827	2254.244	2242.502
20180512:19:02:27	23.3	15.3	-4.4	23.6	0.25	2.2	0.25	2.1	121.2	285.7	286.3	83.9	50.7	84.4	1708.515	1698.158	2256.039	2244.244
20180512:19:07:27	23.3	15.3	-4.4	23.6	0.25	2.2	0.25	2.1	121.2	285.7	286.3	83.8	50.6	84.4	1709.872	1699.54	2257.813	2246.053
20180512:19:12:27	23.3	15.2	-4.4	23.6	0.25	2.2	0.25	2.1	121.0	285.7	286.3	83.8	50.6	84.4	1711.213	1700.868	2259.565	2247.789
20180512:19:17:27	23.3	15.2	-4.5	23.6	0.25	2.2	0.25	2.1	120.9	285.8	286.4	83.8	50.6	84.4	1712.593	1702.21	2261.369	2249.545
20180512:19:22:27	23.3	15.1	-4.5	23.6	0.25	2.2	0.25	2.1	120.8	285.8	286.4	83.8	50.7	84.4	1713.944	1703.587	2263.133	2251.346
20180512:19:27:27	23.3	15.1	-4.5	23.6	0.25	2.2	0.25	2.1	120.7	285.7	286.3	83.7	50.6	84.4	1715.284	1704.919	2264.883	2253.088
20180512:19:32:27	23.2	14.7	-4.6	23.6	0.25	2.2	0.25	2.1	119.8	285.7	286.3	83.7	50.7	84.4	1716.666	1706.298	2266.689	2254.893
20180512:19:37:27	23.2	14.3	-4.6	23.6	0.25	2.2	0.25	2.1	118.7	285.6	286.3	83.7	50.6	84.4	1718.021	1707.652	2268.459	2256.664
20180512:19:42:27	23.3	14.7	-4.5	23.6	0.25	2.2	0.25	2.1	119.7	285.6	286.2	83.6	50.7	84.3	1719.358	1708.975	2270.206	2258.393
20180512:19:47:27	23.3	14.8	-4.3	23.6	0.25	2.2	0.25	2.1	120.1	285.6	286.3	83.6	50.6	84.3	1720.744	1710.367	2272.015	2260.212
20180512:19:52:27	23.3	15.0	-4.1	23.6	0.25	2.2	0.25	2.1	120.5	285.6	286.2	83.6	50.7	84.3	1722.106	1711.695	2273.793	2261.949
20180512:19:57:27	23.3	15.1	-3.9	23.6	0.25	2.2	0.25	2.1	120.7	285.6	286.3	83.6	50.6	84.3	1723.436	1713.056	2275.53	2263.727
20180512:20:02:27	23.3	15.1	-3.9	23.6	0.25	2.2	0.25	2.1	120.7	285.7	286.2	83.6	50.7	84.3	1724.822	1714.422	2277.339	2265.513
20180512:20:07:27	23.3	14.9	-3.8	23.6	0.25	2.2	0.25	2.1	120.4	285.6	286.3	83.6	50.6	84.3	1726.18	1715.761	2279.111	2267.263
20180512:20:12:27	23.3	14.8	-3.9	23.6	0.25	2.2	0.25	2.1	120.1	285.6	286.2	83.6	50.7	84.3	1727.512	1717.15	2280.85	2269.079
20180512:20:17:27	23.3	14.7	-3.9	23.6	0.25	2.2	0.25	2.1	119.9	285.6	286.2	83.6	50.6	84.3	1728.905	1718.486	2282.667	2270.823
20180512:20:22:27	23.3	14.7	-3.9	23.6	0.25	2.2	0.25	2.1	119.9	285.6	286.3	83.6	50.7	84.3	1730.256	1719.821	2284.43	2272.568
20180512:20:27:27	23.3	14.5	-4.0	23.6	0.25	2.2	0.25	2.1	119.3	285.6	286.2	83.6	50.6	84.3	1731.589	1721.209	2286.169	2274.38
20180512:20:32:27	23.3	13.9	-3.9	23.6	0.25	2.2	0.25	2.1	117.9	285.6	286.3	83.6	50.7	84.3	1732.985	1722.543	2287.989	2276.122
20180512:20:37:27	23.3	14.3	-4.0	23.6	0.25	2.2	0.25	2.1	118.8	285.6	286.3	83.6	50.6	84.3	1734.334	1723.918	2289.748	2277.917
20180512:20:42:27	23.3	14.3	-4.0	23.6	0.25	2.2	0.25	2.1	118.9	285.6	286.3	83.6	50.7	84.3	1735.671	1725.284	2291.491	2279.701
20180512:20:47:27	23.3	14.3	-4.0	23.6	0.25	2.2	0.25	2.1	119.0	285.6	286.3	83.6	50.6	84.3	1737.061	1726.606	2293.304	2281.427
20180512:20:52:27	23.3	14.3	-4.0	23.6	0.25	2.2	0.25	2.1	119.0	285.6	286.3	83.6	50.7	84.2	1738.412	1727.996	2295.065	2283.241
20180512:20:57:27	23.3	14.4	-4.0	23.6	0.25	2.2	0.25	2.1	119.2	285.7	286.3	83.6	50.6	84.2	1739.754	1729.321	2296.815	2284.97
20180512:21:02:27	23.3	14.5	-4.0	23.6	0.25	2.2	0.25	2.1	119.4	285.7	286.3	83.7	50.7	84.3	1741.149	1730.68	2298.633	2286.744
20180512:21:07:27	23.3	14.5	-3.9	23.6	0.25	2.2	0.25	2.1	119.5	285.7	286.3	83.7	50.7	84.3	1742.5	1732.053	2300.394	2288.536
20180512:21:12:27	23.3	14.6	-4.0	23.6	0.25	2.2	0.25	2.1	119.6	285.7	286.3	83.8	50.7	84.3	1743.841	1733.39	2302.143	2290.28
20180512:21:17:27	23.3	14.5	-4.0	23.6	0.25	2.2	0.25	2.1	119.4	285.8	286.3	83.8	50.7	84.3	1745.242	1734.781	2303.969	2292.096
20180512:21:22:27	23.3	14.2	-4.0	23.6	0.25	2.2	0.25	2.1	118.7	285.7	286.3	83.8	50.7	84.3	1746.596	1736.125	2305.733	2293.85
20180512:21:27:27	23.3	14.6	-4.0	23.6	0.25	2.2	0.25	2.1	119.6	285.8	286.3	83.8	50.7	84.3	1747.935	1737.461	2307.48	2295.592
20180512:21:32:27	23.3	14.7	-4.0	23.6	0.25	2.2	0.25	2.1	119.9	285.8	286.3	83.7	50.7	84.3	1749.334	1738.849	2309.304	2297.404
20180512:21:37:27	23.3	14.8	-4.0	23.6	0.25	2.2	0.25	2.1	120.2	285.8	286.4	83.7	50.7	84.2	1750.685	1740.192	2311.065	2299.156
20180512:21:42:27	23.3	14.9	-3.9	23.6	0.25	2.2	0.25	2.1	120.3	285.8	286.3	83.7	50.7	84.2	1752.021	1741.555	2312.807	2300.936
20180512:21:47:27	23.3	14.9	-3.9	23.6	0.25	2.2	0.25	2.1	120.4	285.8	286.3	83.6	50.7	84.2	1753.422	1742.924	2314.633	2302.722
20180512:21:52:27	23.3	14.9	-3.9	23.6	0.25	2.2	0.25	2.1	120.4	285.8	286.3	83.6	50.7	84.2	1754.764	1744.259	2316.383	2304.464
20180512:21:57:27	23.3	14.9	-3.9	23.6	0.25	2.2	0.25	2.1	120.4	285.8	286.3	83.5	50.7	84.1	1756.104	1745.649	2318.13	2306.278
20180512:22:02:27	23.3	14.9	-3.9	23.6	0.249	2.2	0.25	2.1	120.5	285.8	286.3	83.4	50.7	84.1	1757.511	1746.986	2319.963	2308.023
20180512:22:07:27	23.3	15.0	-3.9	23.6	0.25	2.2	0.25	2.1	120.5	285.8	286.4	83.4	50.7	84.0	1758.849	1748.331	2321.707	2309.778
20180512:22:12:27	23.3	15.0	-4.0	23.6	0.25	2.2	0.25	2.1	120.6	285.7	286.3	83.4	50.7	84.0	1760.197	1749.717	2323.463	2311.586
20180512:22:17:27	23.3	15.1	-3.9	23.6	0.25	2.2	0.25	2.1	120.8	285.6	286.3	83.4	50.7	84.0	1761.602	1751.051	2325.294	2313.327
20180512:22:22:27	23.3	14.5	-3.9	23.6	0.25	2.2	0.25	2.1	119.4	285.7	286.3	83.4	50.7	84.0	1762.949	1752.432	2327.05	2315.13
20180512:22:27:27	23.4	14.7	-3.7	23.6	0.25	2.2	0.25	2.1	119.8	285.7	286.3	83.4	50.7	84.0	1764.288	1753.798	2328.796	2316.912
20180512:22:32:27	23.4	15.0	-3.7	23.6	0.25	2.2	0.25	2.1	120.7	285.7	286.3	83.4	50.7	83.9	1765.697	1755.124	2330.631	2318.641
20180512:22:37:27	23.4	15.2	-3.7	23.6	0.25	2.2	0.25	2.1	121.2	285.8	286.4	83.4	50.7	83.9	1767.037	1756.519	2332.378	2320.461
20180512:22:42:27	23.4	15.3	-3.8	23.6	0.25	2.2	0.25	2.1	121.4	285.8	286.3	83.4	50.7	83.9	1768.384	1757.843	2334.133	2322.188
20180512:22:47:27	23.3	15.4	-3.9	23.6	0.25	2.2	0.25	2.1	121.5	285.8	286.3	83.4	50.7	83.9	1769.789	1759.206	2335.965	2323.966
20180512:22:52:27	23.3	15.4	-3.9	23.6	0.25	2.2	0.25	2.1	121.5	285.8	286.3	83.4	50.7	83.9	1771.132	1760.581	2337.715	2325.759
20180512:22:57:27	23.3	15.3	-3.9	23.6	0.25	2.2	0.25	2.1	121.4	285.8	286.4	83.4	50.8	83.8	1772.475	1761.919	2339.465	2327.504
20180512:23:02:27	23.3	15.2	-4.1	23.6	0.25	2.2	0.25	2.1	121.2	285.7	286.3	83.3	50.7	83.8	1773.881	1763.311	2341.298	2329.32
20180512:23:07:27	23.3	15.2	-4.0	23.6	0.25	2.2	0.25	2.1	121.1	285.8	286.3	83.3	50.8	83.8	1775.222	1764.653	2343.044	2331.07
20180512:23:12:27	23.3	15.2	-3.9	23.6	0.25	2.2	0.25	2.1	121.1	285.8	286.4	83.3	50.7	83.7	1776.566	1765.988	2344.796	2332.81
20180512:23:17:27	23.3	15.2	-4.0	23.6	0.25	2.2	0.25	2.1	121.0	285.8	286.2	83.2	50.7	83.7	1777.976	1767.372	2346.631	2334.615
20180512:23:22:28	23.3	14.5	-4.5	23.6	0.25	2.2	0.25	2.1	119.4	285.7	286.3	83.1	50.7	83.7	1779.316	1768.712	2348.376	2336.361
20180512:23:27:28	23.3	14.9	-4.1	23.6	0.25	2.2	0.25	2.1	120.3	285.7	286.3	83.1	50.7	83.7	1780.661	1770.084	2350.128	2338.148
20180512:23:32:28	23.3	15.2	-4.1	23.6	0.25	2.2	0.25	2.1	121.0	285.8	286.4	83.0	50.7	83.6	1782.064	1771.456	2351.954	2339.936
20180512:23:37:28	23.3	15.3	-4.1	23.6	0.25	2.2	0.25	2.1	121.4	285.8	286.3	83.0	50.8	83.6	1783.405	1772.783	2353.7	2341.665
20180512:23:42:28	23.3	15.4	-4.1	23.6	0.25	2.2	0.25	2.1	121.6	285.8	286.3	82.9	50.7	83.5	1784.76	1774.175	2355.463	2343.479
20180512:23:47:28	23.3	15.5	-4.1	23.6	0.25	2.2	0.25	2.1	121.8	285.8	286.3	82.9	50.7	83.5	1786.159	1775.505	2357.283	2345.212
20180512:23:52:28	23.3	15.6	-4.2	23.6	0.25	2.2	0.25	2.1	122.1	285.8	286.3	82.8	50.7	83.4	1787.498	1776.865	2359.026	2346.983
20180512:23:57:28	23.3	15.7	-4.1	23.6	0.25	2.2	0.25	2.1	122.4	285.9	286.4	82.7	50.7	83.4	1788.849	1778.242	2360.783	2348.776
20180513:00:02:28	23.3	15.9	-4.1	23.6	0.25	2.2	0.25	2.1	122.7	285.8	286.3	82.7	50.7	83.3	1790.246	1779.581	2362.6	2350.521
20180513:00:07:28	23.3	16.0	-4.1	23.6	0.25	2.2	0.25	2.1	123.0	285.8	286.3	82.6	50.7	83.3	1791.583	1780.972	2364.339	2352.331
20180513:00:12:28	23.3	16.0	-4.1	23.6	0.25	2.2	0.25	2.1	123.0	285.8	286.4	82.5	50.7	83.2	1792.938	1782.321	2366.1	2354.088
20180513:00:17:28	23.3	16.1	-4.2	23.6	0.25	2.2	0.25	2.1	123.3	285.8	286.3	82.4	50.7	83.2	1794.333	1783.657	2367.913	2355.827
20180513:00:22:28	23.3	16.3	-4.2	23.6	0.25	2.2	0.25	2.1	123.6	285.8	286.4	82.3	50.7	83.1	1795.665	1785.048	2369.644	2357.637
20180513:00:27:28	23.3	16.0	-4.6	23.6	0.25	2.2	0.25	2.1	122.8	285.8	286.3	82.3	50.7	83.0	1797.026	1786.385	2371.413	2359.378
20180513:00:32:28	23.3	15.3	-4.8	23.6	0.25	2.2	0.25	2.1	121.3	285.7	286.3	82.2	50.7	83.0	1798.411	1787.752	2373.213	2361.156
20180513:00:37:28	23.3	15.7	-4.6	23.6	0.25	2.2	0.25	2.1	122.3	285.7	286.3	82.1	50.7	82.9	1799.752	1789.121	2374.956	2362.938
20180513:00:42:28	23.3	15.9	-4.6	23.6	0.25	2.2	0.25	2.1	122.7	285.8	286.3	82.0	50.7	82.9	1801.113	1790.442	2376.724	2364.656
20180513:00:47:28	23.3	16.0	-4.7	23.6	0.25	2.2	0.25	2.1	122.9	285.7	286.3	82.0	50.7	82.8	1802.478	1791.829	2378.496	2366.461
20180513:00:52:28	23.3	16.1	-4.6	23.6	0.25	2.2	0.25	2.1	123.1	285.7	286.2	81.9	50.7	82.7	1803.815	1793.16	2380.233	2368.192
20180513:00:57:28	23.3	16.2	-4.5	23.6	0.25	2.2	0.25	2.1	123.5	285.7	286.3	81.9	50.7	82.7	1805.196	1794.518	2382.028	2369.959
20180513:01:02:28	23.3	16.1	-4.5	23.6	0.25	2.3	0.25	2.1	123.3	285.7	286.3	81.8	50.8	82.6	1806.558	1795.886	2383.796	2371.737
20180513:01:07:28	23.3	16.0	-4.6	23.6	0.25	2.3	0.25	2.1	123.0	285.7	286.3	81.8	50.7	82.6	1807.883	1797.201	2385.517	2373.447
20180513:01:12:28	23.3	16.1	-4.4	23.6	0.25	2.3	0.25	2.1	123.0	285.7	286.3	81.7	50.8	82.5	1809.273	1798.589	2387.32	2375.252
20180513:01:17:28	23.3	16.1	-4.6	23.7	0.25	2.2	0.25	2.1	123.1	285.7	286.3	81.7	50.7	82.5	1810.608	1799.922	2389.054	2376.985
20180513:01:22:28	23.3	16.2	-4.6	23.7	0.25	2.2	0.25	2.1	123.3	285.7	286.3	81.7	50.8	82.4	1811.95	1801.283	2390.794	2378.754
20180513:01:27:28	23.3	16.2	-4.7	23.7	0.25	2.2	0.25	2.1	123.3	285.7	286.2	81.6	50.7	82.4	1813.34	1802.65	2392.598	2380.53
20180513:01:32:28	23.3	16.0	-4.7	23.7	0.25	2.2	0.25	2.1	122.8	285.7	286.3	81.5	50.8	82.3	1814.668	1803.971	2394.322	2382.246
20180513:01:37:28	23.3	15.1	-5.0	23.7	0.25	2.2	0.25	2.1	120.9	285.6	286.3	81.5	50.7	82.3	1816.026	1805.36	2396.083	2384.051

Time:	Stack Pressure:	Sat% H2O:	Static:	Barometric:	Flowmeter1:	Vacuum1:	Flowmeter2:	Vacuum2:	Stack Temp:	Sorbent Temp:	Probe Temp:	DGM#1 Temp:	Condenser Temp:	DGM#2 Temp:	DGM1*:	DGM2*:	DGM1:	DGM2:
day:hh:mm:ss	in-Hg	Percent	in-H2O	in-Hg	l/min	in-Hg	l/min	in-Hg	degF	degF	degF	degF	degF	degF	liters STP	liters STP	liters nominal	liters nominal
20180513:01:42:28	23.3	15.2	-4.9	23.7	0.25	2.2	0.25	2.1	121.0	285.6	286.2	81.4	50.8	82.2	1817.41	1806.695	2397.88	2385.786
20180513:01:47:28	23.3	15.5	-4.8	23.7	0.25	2.2	0.25	2.1	121.7	285.6	286.3	81.4	50.7	82.2	1818.75	1808.056	2399.617	2387.553
20180513:01:52:28	23.3	15.7	-4.9	23.7	0.25	2.2	0.25	2.1	122.2	285.7	286.2	81.3	50.7	82.1	1820.117	1809.428	2401.391	2389.335
20180513:01:57:28	23.3	15.8	-4.9	23.7	0.25	2.2	0.25	2.1	122.5	285.7	286.3	81.3	50.8	82.1	1821.484	1810.747	2403.163	2391.049
20180513:02:02:28	23.3	15.9	-4.9	23.6	0.25	2.2	0.25	2.1	122.6	285.7	286.2	81.3	50.7	82.0	1822.823	1812.134	2404.9	2392.85
20180513:02:07:28	23.3	15.9	-4.9	23.7	0.25	2.2	0.25	2.1	122.6	285.7	286.2	81.2	50.8	82.0	1824.205	1813.464	2406.693	2394.577
20180513:02:12:28	23.3	15.8	-4.9	23.7	0.25	2.2	0.25	2.1	122.5	285.7	286.3	81.1	50.6	81.9	1825.562	1814.826	2408.452	2396.346
20180513:02:17:28	23.3	15.7	-4.9	23.6	0.25	2.2	0.25	2.1	122.2	285.8	286.2	81.1	50.8	81.9	1826.892	1816.193	2410.176	2398.12
20180513:02:22:28	23.3	15.8	-4.9	23.6	0.25	2.2	0.25	2.1	122.4	285.7	286.2	81.0	50.7	81.8	1828.282	1817.508	2411.978	2399.827
20180513:02:27:28	23.3	15.8	-4.9	23.6	0.25	2.2	0.25	2.1	122.5	285.7	286.3	81.0	50.7	81.7	1829.611	1818.894	2413.7	2401.626
20180513:02:32:28	23.3	15.8	-4.9	23.6	0.25	2.2	0.25	2.1	122.5	285.7	286.2	80.9	50.7	81.7	1830.954	1820.217	2415.441	2403.344
20180513:02:37:28	23.3	15.8	-4.9	23.6	0.25	2.2	0.25	2.1	122.4	285.7	286.2	80.8	50.7	81.7	1832.344	1821.592	2417.243	2405.128
20180513:02:42:28	23.3	15.7	-5.0	23.6	0.25	2.2	0.25	2.1	122.1	285.7	286.3	80.8	50.7	81.6	1833.677	1822.943	2418.97	2406.882
20180513:02:47:28	23.3	15.0	-5.2	23.6	0.25	2.2	0.25	2.1	120.4	285.6	286.2	80.7	50.6	81.5	1835.034	1824.268	2420.728	2408.602
20180513:02:52:28	23.3	15.3	-4.9	23.6	0.25	2.2	0.25	2.1	121.3	285.6	286.2	80.7	50.8	81.5	1836.401	1825.65	2422.5	2410.395
20180513:02:57:28	23.3	15.5	-4.9	23.6	0.25	2.2	0.25	2.1	121.7	285.7	286.3	80.6	50.6	81.4	1837.735	1826.973	2424.228	2412.111
20180513:03:02:28	23.3	15.6	-4.9	23.6	0.25	2.2	0.25	2.1	122.0	285.7	286.3	80.5	50.7	81.4	1839.119	1828.36	2426.02	2413.91
20180513:03:07:28	23.3	15.7	-4.9	23.6	0.25	2.2	0.25	2.1	122.2	285.8	286.2	80.4	50.7	81.3	1840.473	1829.697	2427.774	2415.645
20180513:03:12:28	23.3	15.7	-4.9	23.6	0.25	2.2	0.25	2.1	122.3	285.7	286.3	80.4	50.7	81.2	1841.803	1831.032	2429.496	2417.376
20180513:03:17:28	23.3	15.8	-4.9	23.6	0.25	2.2	0.25	2.1	122.3	285.7	286.3	80.3	50.7	81.2	1843.202	1832.41	2431.307	2419.164
20180513:03:22:28	23.3	15.8	-4.9	23.6	0.25	2.2	0.25	2.1	122.3	285.7	286.2	80.3	50.6	81.1	1844.532	1833.746	2433.03	2420.895
20180513:03:27:28	23.3	15.8	-4.9	23.6	0.25	2.2	0.25	2.1	122.4	285.7	286.2	80.2	50.7	81.0	1845.877	1835.137	2434.77	2422.699
20180513:03:32:28	23.3	15.7	-4.9	23.6	0.25	2.2	0.25	2.1	122.3	285.7	286.3	80.1	50.6	81.0	1847.264	1836.471	2436.567	2424.429
20180513:03:37:28	23.3	15.7	-4.8	23.6	0.25	2.2	0.25	2.1	122.3	285.6	286.2	80.1	50.7	80.9	1848.609	1837.812	2438.307	2426.167
20180513:03:42:28	23.3	15.7	-4.9	23.6	0.25	2.2	0.25	2.1	122.2	285.7	286.3	80.0	50.6	80.9	1849.969	1839.19	2440.067	2427.953
20180513:03:47:28	23.3	15.7	-4.8	23.6	0.25	2.2	0.25	2.1	122.2	285.7	286.3	79.9	50.6	80.8	1851.337	1840.527	2441.837	2429.686
20180513:03:52:28	23.3	15.2	-5.1	23.6	0.25	2.2	0.25	2.1	121.0	285.6	286.2	79.9	50.7	80.7	1852.678	1841.918	2443.572	2431.489
20180513:03:57:28	23.3	15.0	-5.0	23.6	0.25	2.2	0.25	2.1	120.6	285.5	286.3	79.8	50.6	80.7	1854.063	1843.252	2445.365	2433.218
20180513:04:02:28	23.3	15.4	-5.0	23.6	0.25	2.2	0.25	2.1	121.4	285.6	286.2	79.7	50.7	80.6	1855.423	1844.594	2447.124	2434.957
20180513:04:07:28	23.3	15.6	-4.9	23.6	0.25	2.2	0.25	2.1	121.9	285.6	286.2	79.7	50.6	80.6	1856.755	1845.973	2448.846	2436.742
20180513:04:12:28	23.3	15.8	-4.8	23.6	0.25	2.2	0.25	2.1	122.3	285.6	286.2	79.7	50.7	80.5	1858.146	1847.309	2450.646	2438.474
20180513:04:17:28	23.3	15.8	-4.8	23.6	0.25	2.2	0.25	2.1	122.5	285.6	286.2	79.7	50.7	80.4	1859.478	1848.697	2452.369	2440.271
20180513:04:22:28	23.3	15.8	-4.8	23.6	0.25	2.2	0.25	2.1	122.4	285.6	286.2	79.7	50.6	80.4	1860.824	1850.022	2454.109	2441.987
20180513:04:27:28	23.3	15.7	-4.9	23.6	0.25	2.2	0.25	2.1	122.3	285.7	286.2	79.7	50.7	80.4	1862.207	1851.376	2455.898	2443.741
20180513:04:32:28	23.3	15.7	-4.8	23.6	0.25	2.2	0.25	2.1	122.3	285.6	286.2	79.7	50.6	80.3	1863.544	1852.749	2457.628	2445.519
20180513:04:37:28	23.3	15.7	-4.9	23.6	0.25	2.2	0.25	2.1	122.2	285.6	286.2	79.6	50.7	80.3	1864.909	1854.086	2459.393	2447.25
20180513:04:42:28	23.3	15.7	-4.8	23.6	0.25	2.2	0.25	2.1	122.2	285.6	286.2	79.6	50.7	80.3	1866.269	1855.468	2461.152	2449.039
20180513:04:47:28	23.3	15.7	-4.9	23.6	0.25	2.2	0.25	2.1	122.3	285.7	286.3	79.6	50.6	80.2	1867.609	1856.789	2462.883	2450.75
20180513:04:52:28	23.3	15.7	-4.9	23.7	0.25	2.2	0.25	2.1	122.2	285.7	286.1	79.5	50.8	80.2	1868.994	1858.153	2464.674	2452.515
20180513:04:57:28	23.3	15.7	-5.0	23.7	0.25	2.2	0.25	2.1	122.1	285.7	286.2	79.4	50.6	80.1	1870.334	1859.522	2466.406	2454.286
20180513:05:02:28	23.3	14.8	-5.3	23.7	0.25	2.2	0.25	2.1	120.1	285.7	286.2	79.4	50.7	80.1	1871.667	1860.842	2468.128	2455.994
20180513:05:07:28	23.3	15.1	-5.0	23.7	0.25	2.2	0.25	2.1	120.7	285.6	286.2	79.3	50.7	80.0	1873.051	1862.228	2469.917	2457.788
20180513:05:12:28	23.3	15.3	-5.0	23.7	0.25	2.2	0.25	2.1	121.2	285.7	286.3	79.2	50.6	80.0	1874.389	1863.56	2471.644	2459.511
20180513:05:17:28	23.3	15.4	-5.0	23.7	0.25	2.2	0.25	2.1	121.5	285.7	286.2	79.1	50.7	79.9	1875.749	1864.938	2473.402	2461.293
20180513:05:22:28	23.3	15.5	-5.0	23.7	0.25	2.2	0.25	2.1	121.7	285.6	286.2	79.1	50.7	79.9	1877.11	1866.289	2475.159	2463.041
20180513:05:27:28	23.3	15.5	-5.0	23.7	0.25	2.2	0.25	2.1	121.8	285.6	286.2	79.0	50.6	79.8	1878.451	1867.615	2476.891	2464.756
20180513:05:32:28	23.3	15.5	-5.0	23.7	0.25	2.2	0.25	2.1	121.8	285.6	286.2	79.0	50.7	79.7	1879.837	1868.998	2478.68	2466.543
20180513:05:37:28	23.3	15.5	-5.0	23.7	0.25	2.2	0.25	2.1	121.8	285.6	286.2	78.9	50.6	79.7	1881.184	1870.328	2480.419	2468.263
20180513:05:42:28	23.3	15.6	-5.0	23.7	0.25	2.2	0.25	2.1	121.9	285.6	286.2	78.9	50.6	79.7	1882.518	1871.715	2482.141	2470.056
20180513:05:47:28	23.3	15.6	-5.0	23.7	0.25	2.2	0.25	2.1	121.9	285.5	286.1	78.9	50.7	79.6	1883.908	1873.042	2483.935	2471.771
20180513:05:52:28	23.3	15.6	-5.0	23.7	0.25	2.2	0.25	2.1	121.9	285.6	286.2	78.9	50.6	79.5	1885.238	1874.39	2485.652	2473.513
20180513:05:57:28	23.3	15.6	-5.0	23.7	0.25	2.2	0.25	2.1	121.9	285.6	286.2	78.9	50.7	79.5	1886.6	1875.756	2487.409	2475.278
20180513:06:02:28	23.3	15.5	-5.0	23.7	0.25	2.2	0.25	2.1	121.8	285.6	286.2	78.8	50.7	79.5	1887.969	1877.09	2489.176	2477.002
20180513:06:07:28	23.3	15.2	-5.3	23.7	0.25	2.2	0.25	2.1	121.0	285.7	286.3	78.8	50.6	79.5	1889.305	1878.474	2490.9	2478.789
20180513:06:12:28	23.3	14.7	-5.3	23.7	0.25	2.2	0.25	2.1	119.7	285.6	286.2	78.8	50.7	79.4	1890.693	1879.805	2492.691	2480.509
20180513:06:17:28	23.3	15.1	-5.1	23.7	0.25	2.2	0.25	2.1	120.8	285.7	286.2	78.7	50.7	79.4	1892.038	1881.173	2494.426	2482.276
20180513:06:22:28	23.3	15.3	-5.1	23.7	0.25	2.2	0.25	2.1	121.1	285.7	286.2	78.6	50.6	79.3	1893.371	1882.53	2496.146	2484.03
20180513:06:27:28	23.3	15.4	-5.1	23.7	0.25	2.2	0.25	2.1	121.4	285.7	286.2	78.6	50.7	79.3	1894.758	1883.858	2497.935	2485.744
20180513:06:32:28	23.3	15.4	-5.1	23.7	0.25	2.2	0.25	2.1	121.5	285.7	286.2	78.5	50.6	79.2	1896.088	1885.238	2499.65	2487.526
20180513:06:37:28	23.3	15.4	-5.1	23.7	0.25	2.2	0.25	2.1	121.6	285.7	286.2	78.4	50.6	79.2	1897.45	1886.568	2501.406	2489.242
20180513:06:42:28	23.3	15.4	-5.1	23.7	0.25	2.2	0.25	2.1	121.6	285.7	286.3	78.4	50.7	79.1	1898.815	1887.96	2503.165	2491.039
20180513:06:47:28	23.3	15.5	-5.1	23.7	0.25	2.2	0.25	2.1	121.6	285.6	286.1	78.3	50.6	79.1	1900.154	1889.284	2504.891	2492.748
20180513:06:52:28	23.3	15.5	-5.1	23.7	0.25	2.2	0.25	2.1	121.6	285.7	286.3	78.2	50.6	79.0	1901.547	1890.637	2506.685	2494.494
20180513:06:57:28	23.3	15.5	-5.1	23.7	0.25	2.2	0.25	2.1	121.7	285.7	286.2	78.2	50.7	79.0	1902.889	1892.006	2508.415	2496.261
20180513:07:02:28	23.3	15.5	-5.1	23.7	0.25	2.2	0.25	2.1	121.6	285.6	286.2	78.1	50.6	78.9	1904.229	1893.341	2510.141	2497.983
20180513:07:07:28	23.3	15.5	-5.2	23.7	0.25	2.2	0.25	2.1	121.6	285.6	286.1	78.0	50.6	78.8	1905.618	1894.724	2511.93	2499.767
20180513:07:12:28	23.3	15.5	-5.2	23.7	0.25	2.2	0.25	2.1	121.6	285.6	286.2	78.0	50.6	78.8	1906.956	1896.056	2513.652	2501.485
20180513:07:17:28	23.3	14.8	-5.6	23.7	0.25	2.2	0.25	2.1	120.0	285.5	286.1	77.9	50.5	78.7	1908.319	1897.43	2515.407	2503.256
20180513:07:22:28	23.3	14.8	-5.4	23.7	0.25	2.2	0.25	2.1	120.0	285.6	286.2	77.8	50.6	78.7	1909.679	1898.786	2517.157	2505.004
20180513:07:27:28	23.3	15.1	-5.3	23.7	0.25	2.2	0.25	2.1	120.8	285.6	286.2	77.8	50.6	78.6	1911.019	1900.11	2518.881	2506.711
20180513:07:32:28	23.3	15.3	-5.2	23.7	0.25	2.2	0.25	2.1	121.2	285.7	286.2	77.7	50.5	78.6	1912.404	1901.491	2520.665	2508.491
20180513:07:37:28	23.3	15.3	-5.2	23.7	0.25	2.2	0.25	2.1	121.4	285.6	286.2	77.7	50.6	78.5	1913.737	1902.826	2522.38	2510.211
20180513:07:42:28	23.3	15.4	-5.2	23.7	0.25	2.2	0.25	2.1	121.5	285.6	286.2	77.7	50.6	78.5	1915.083	1904.209	2524.111	2511.992
20180513:07:47:28	23.3	15.5	-5.2	23.7	0.25	2.2	0.25	2.1	121.6	285.6	286.2	77.6	50.5	78.4	1916.466	1905.533	2525.891	2513.699
20180513:07:52:28	23.3	15.5	-5.2	23.7	0.25	2.2	0.25	2.1	121.7	285.6	286.3	77.6	50.6	78.4	1917.802	1906.897	2527.609	2515.457
20180513:07:57:28	23.3	15.5	-5.1	23.7	0.25	2.2	0.25	2.1	121.7	285.7	286.3	77.5	50.6	78.4	1919.18	1908.27	2529.381	2517.226
20180513:08:02:28	23.3	15.5	-5.1	23.7	0.25	2.2	0.25	2.1	121.7	285.7	286.3	77.5	50.5	78.3	1920.533	1909.591	2531.122	2518.927
20180513:08:07:28	23.3	15.5	-5.0	23.7	0.25	2.2	0.25	2.1	121.8	285.7	286.2	77.5	50.6	78.3	1921.857	1910.976	2532.824	2520.711
20180513:08:12:28	23.3	15.5	-5.0	23.7	0.25	2.2	0.25	2.1	121.8	285.7	286.3	77.4	50.5	78.2	1923.252	1912.304	2534.619	2522.421
20180513:08:17:28	23.3	15.5	-5.0	23.7	0.25	2.2	0.25	2.1	121.8	285.7	286.2	77.4	50.5	78.2	1924.583	1913.69	2536.33	2524.207
20180513:08:22:28	23.3	15.4	-5.1	23.7	0.25	2.2	0.25	2.1	121.4	285.7	286.3	77.4	50.5	78.2	1925.943	1915.013	2538.08	2525.91
20180513:08:27:28	23.3	14.7	-5.3	23.7	0.25	2.2	0.25	2.1	119.9	285.7	286.3	77.4	50.4	78.2	1927.305	1916.364	2539.831	2527.65
20180513:08:32:28	23.3	15.0	-5.0	23.7	0.25	2.2	0.25	2.1	120.6	285.7	286.3	77.3	50.5	78.1	1928.645	1917.736	2541.554	2529.417
20180513:08:37:28	23.3	15.2	-5.0	23.7	0.25	2.2	0.25	2.1	121.1	285.7	286.3	77.3	50.5	78.1	1930.029	1919.067	2543.333	2531.132
20180513:08:42:28	23.3	15.4	-4.9	23.7	0.25	2.2	0.25	2.1	121.5	285.7	286.3	77.3	50.4	78.1	1931.359	1920.454	2545.044	2532.917
20180513:08:47:28	23.3	15.4	-4.9	23.7	0.25	2.2	0.25	2.1	121.6	285.7	286.3	77.3	50.5	78.1	1932.705	1921.782	2546.776	2534.628
20180513:08:52:28	23.3	15.5	-4.8	23.7	0.25	2.2	0.25	2.1	121.7	285.6	286.2	77.4	50.4	78.1	1934.089	1923.16	2548.556	2536.402
20180513:08:57:28	23.3	15.5	-4.8	23.7	0.25	2.2	0.25	2.1	121.7	285.7	286.4	77.5	50.4	78.1	1935.415	1924.501	2550.261	2538.13
20180513:09:02:28	23.3	15.5	-4.8	23.7	0.25	2.2	0.25	2.1	121.8	285.7	286.2	77.5	50.5	78.1	1936.801	1925.832	2552.044	2539.844

Time:	Stack Pressure:	Sat% H2O:	Static:	Barometric:	Flowmeter1:	Vacuum1:	Flowmeter2:	Vacuum2:	Stack Temp:	Sorbent Temp:	Probe Temp:	DGM#1 Temp:	Condenser Temp:	DGM#2 Temp:	DGM1*:	DGM2*:	DGM1:	DGM2:
day:hh:mm:ss	in-Hg	Percent	in-H2O	in-Hg	l/min	in-Hg	l/min	in-Hg	degF	degF	degF	degF	degF	degF	liters STP	liters STP	liters nominal	liters nominal
20180513:09:07:28	23.3	15.5	-4.8	23.7	0.25	2.2	0.25	2.1	121.8	285.7	286.3	77.6	50.3	78.1	1938.151	1927.202	2553.781	2541.609
20180513:09:12:28	23.3	15.5	-4.8	23.7	0.25	2.2	0.25	2.1	121.8	285.8	286.3	77.6	50.4	78.2	1939.478	1928.529	2555.489	2543.318
20180513:09:17:28	23.3	15.5	-4.7	23.7	0.25	2.2	0.25	2.1	121.8	285.7	286.2	77.7	50.4	78.2	1940.869	1929.907	2557.28	2545.094
20180513:09:22:28	23.3	15.5	-4.8	23.7	0.25	2.2	0.25	2.1	121.7	285.7	286.3	77.7	50.4	78.2	1942.197	1931.234	2558.989	2546.803
20180513:09:27:28	23.3	15.5	-4.8	23.7	0.25	2.2	0.25	2.1	121.8	285.7	286.2	77.7	50.4	78.3	1943.558	1932.611	2560.741	2548.577
20180513:09:32:28	23.3	15.1	-5.0	23.7	0.25	2.2	0.25	2.1	120.7	285.7	286.3	77.7	50.3	78.3	1944.92	1933.942	2562.493	2550.291
20180513:09:37:28	23.3	14.8	-4.9	23.7	0.25	2.2	0.25	2.1	120.2	285.6	286.2	77.7	50.5	78.3	1946.245	1935.281	2564.198	2552.017
20180513:09:42:28	23.3	15.2	-4.8	23.7	0.25	2.2	0.25	2.1	121.0	285.8	286.3	77.8	50.3	78.4	1947.634	1936.649	2565.987	2553.78
20180513:09:47:28	23.3	15.3	-4.7	23.7	0.25	2.2	0.25	2.1	121.3	285.8	286.3	77.8	50.4	78.4	1948.949	1937.98	2567.68	2555.496
20180513:09:52:28	23.3	15.4	-4.7	23.7	0.25	2.2	0.25	2.1	121.5	285.8	286.3	77.8	50.4	78.4	1950.305	1939.363	2569.426	2557.278
20180513:09:57:28	23.3	15.5	-4.7	23.7	0.25	2.2	0.25	2.1	121.7	285.7	286.3	77.8	50.4	78.4	1951.673	1940.69	2571.187	2558.989
20180513:10:02:28	23.3	15.5	-4.6	23.7	0.25	2.2	0.25	2.1	121.8	285.6	286.2	77.8	50.4	78.4	1953.005	1942.066	2572.902	2560.763
20180513:10:07:28	23.3	15.5	-4.7	23.7	0.25	2.2	0.25	2.1	121.8	285.7	286.2	77.8	50.4	78.5	1954.391	1943.404	2574.687	2562.489
20180513:10:12:28	23.3	15.5	-4.6	23.7	0.25	2.2	0.25	2.1	121.9	285.6	286.2	77.8	50.4	78.5	1955.728	1944.735	2576.409	2564.205
20180513:10:17:28	23.3	15.6	-4.6	23.7	0.25	2.2	0.25	2.1	121.9	285.7	286.3	77.9	50.3	78.6	1957.06	1946.109	2578.124	2565.976
20180513:10:22:28	23.3	15.6	-4.5	23.7	0.25	2.2	0.25	2.1	122.0	285.6	286.2	78.0	50.4	78.6	1958.444	1947.438	2579.907	2567.69
20180513:10:27:28	23.3	15.5	-4.6	23.7	0.25	2.2	0.25	2.1	121.9	285.6	286.3	78.1	50.3	78.7	1959.777	1948.817	2581.624	2569.468
20180513:10:32:28	23.3	15.6	-4.5	23.7	0.25	2.2	0.25	2.1	121.9	285.7	286.3	78.2	50.5	78.7	1961.154	1950.141	2583.398	2571.177
20180513:10:37:28	23.3	15.6	-4.5	23.7	0.25	2.2	0.25	2.1	122.0	285.7	286.2	78.3	50.3	78.8	1962.516	1951.513	2585.154	2572.947
20180513:10:42:28	23.3	15.6	-4.5	23.7	0.25	2.2	0.25	2.1	122.0	285.7	286.3	78.4	50.4	78.8	1963.839	1952.858	2586.859	2574.682
20180513:10:47:28	23.3	15.6	-4.5	23.7	0.25	2.2	0.25	2.1	122.0	285.7	286.2	78.4	50.4	78.8	1965.23	1954.185	2588.654	2576.395
20180513:10:52:28	23.3	15.6	-4.5	23.7	0.25	2.2	0.25	2.1	122.0	285.7	286.3	78.4	50.4	78.9	1966.549	1955.557	2590.354	2578.165
20180513:10:57:28	23.3	15.6	-4.4	23.7	0.25	2.2	0.25	2.1	122.1	285.8	286.3	78.4	50.4	78.9	1967.902	1956.884	2592.098	2579.878
20180513:11:02:28	23.3	15.6	-4.4	23.7	0.25	2.2	0.25	2.1	122.1	285.7	286.2	78.4	50.3	79.0	1969.271	1958.262	2593.863	2581.656
20180513:11:07:28	23.3	15.7	-4.5	23.7	0.25	2.2	0.25	2.1	122.2	285.7	286.3	78.4	50.4	79.0	1970.602	1959.585	2595.58	2583.365
20180513:11:12:28	23.3	15.6	-4.4	23.7	0.25	2.2	0.25	2.1	122.1	285.7	286.2	78.4	50.3	79.1	1971.986	1960.956	2597.365	2585.133
20180513:11:17:28	23.3	15.7	-4.4	23.7	0.25	2.2	0.25	2.1	122.2	285.7	286.3	78.5	50.4	79.1	1973.323	1962.301	2599.089	2586.87
20180513:11:22:28	23.3	15.7	-4.4	23.7	0.25	2.2	0.25	2.1	122.2	285.7	286.2	78.5	50.3	79.1	1974.66	1963.626	2600.813	2588.581
20180513:11:27:28	23.3	15.7	-4.3	23.7	0.25	2.2	0.25	2.1	122.2	285.7	286.3	78.5	50.4	79.2	1976.038	1964.997	2602.591	2590.352
20180513:11:32:28	23.3	15.7	-4.4	23.7	0.25	2.2	0.25	2.1	122.2	285.6	286.3	78.6	50.3	79.2	1977.365	1966.329	2604.302	2592.071
20180513:11:37:28	23.3	15.7	-4.3	23.7	0.25	2.2	0.25	2.1	122.2	285.7	286.2	78.6	50.5	79.3	1978.736	1967.715	2606.07	2593.863
20180513:11:42:28	23.3	15.6	-4.2	23.7	0.25	2.2	0.25	2.1	122.1	285.6	286.3	78.7	50.3	79.3	1980.1	1969.034	2607.831	2595.566
20180513:11:47:28	23.3	15.7	-4.4	23.7	0.25	2.2	0.25	2.1	122.2	285.6	286.2	78.8	50.5	79.4	1981.425	1970.396	2609.541	2597.325
20180513:11:52:28	23.3	15.7	-4.3	23.7	0.25	2.2	0.25	2.1	122.3	285.6	286.3	79.0	50.3	79.5	1982.815	1971.748	2611.335	2599.073
20180513:11:57:28	23.3	15.7	-4.3	23.7	0.25	2.2	0.25	2.1	122.3	285.6	286.3	79.0	50.5	79.5	1984.14	1973.067	2613.046	2600.778
20180513:12:02:28	23.3	15.7	-4.3	23.7	0.25	2.2	0.25	2.1	122.3	285.7	286.3	79.1	50.4	79.6	1985.484	1974.443	2614.781	2602.556
20180513:12:07:28	23.3	15.7	-4.3	23.7	0.25	2.2	0.25	2.1	122.3	285.7	286.3	79.2	50.5	79.7	1986.862	1975.769	2616.561	2604.271
20180513:12:12:28	23.3	15.7	-4.3	23.7	0.25	2.2	0.25	2.1	122.3	285.7	286.3	79.2	50.4	79.7	1988.188	1977.146	2618.274	2606.051
20180513:12:17:28	23.3	15.8	-4.3	23.7	0.25	2.2	0.25	2.1	122.4	285.7	286.2	79.2	50.5	79.7	1989.566	1978.464	2620.054	2607.754
20180513:12:22:28	23.4	15.8	-4.2	23.7	0.25	2.2	0.25	2.1	122.6	285.7	286.3	79.3	50.4	79.8	1990.918	1979.826	2621.8	2609.515
20180513:12:27:28	23.4	15.9	-4.1	23.7	0.25	2.2	0.25	2.1	122.9	285.7	286.2	79.3	50.5	79.8	1992.236	1981.191	2623.502	2611.28
20180513:12:32:28	23.4	16.0	-4.0	23.7	0.25	2.2	0.25	2.1	123.0	285.7	286.3	79.3	50.4	79.9	1993.629	1982.51	2625.302	2612.985
20180513:12:37:28	23.4	16.1	-3.9	23.7	0.25	2.2	0.25	2.1	123.1	285.7	286.2	79.4	50.5	79.9	1994.952	1983.885	2627.011	2614.763
20180513:12:42:28	23.4	16.0	-4.0	23.7	0.25	2.2	0.25	2.1	123.1	285.6	286.1	79.4	50.4	80.0	1996.311	1985.207	2628.767	2616.474
20180513:12:47:28	23.4	16.0	-4.1	23.7	0.25	2.2	0.25	2.1	123.0	285.6	286.2	79.4	50.5	80.0	1997.68	1986.589	2630.535	2618.261
20180513:12:52:28	23.4	16.0	-4.0	23.7	0.25	2.2	0.25	2.1	122.9	285.7	286.3	79.5	50.5	80.1	1999.014	1987.909	2632.259	2619.968
20180513:12:57:28	23.4	16.0	-4.2	23.7	0.25	2.2	0.25	2.1	122.9	285.7	286.3	79.6	50.5	80.1	2000.397	1989.257	2634.046	2621.712
20180513:13:02:28	23.4	16.0	-4.2	23.7	0.25	2.2	0.25	2.1	122.9	285.7	286.3	79.6	50.5	80.1	2001.74	1990.624	2635.781	2623.479
20180513:13:07:28	23.4	15.9	-4.2	23.7	0.25	2.2	0.25	2.1	122.8	285.7	286.3	79.7	50.5	80.2	2003.068	1991.946	2637.498	2625.19
20180513:13:12:28	23.4	15.9	-4.1	23.7	0.251	2.2	0.25	2.1	122.7	285.7	286.4	79.7	50.4	80.2	2004.454	1993.328	2639.289	2626.977
20180513:13:17:28	23.4	15.9	-4.1	23.7	0.25	2.2	0.25	2.1	122.7	285.7	286.3	79.7	50.5	80.3	2005.783	1994.652	2641.006	2628.69
20180513:13:22:28	23.4	15.8	-4.1	23.7	0.25	2.2	0.25	2.1	122.6	285.7	286.3	79.8	50.5	80.3	2007.14	1996.024	2642.759	2630.464
20180513:13:27:28	23.4	15.9	-4.1	23.7	0.25	2.2	0.25	2.1	122.7	285.7	286.3	79.8	50.4	80.4	2008.498	1997.359	2644.515	2632.192
20180513:13:32:28	23.4	15.8	-4.2	23.7	0.25	2.2	0.25	2.1	122.6	285.7	286.3	79.9	50.5	80.4	2009.837	1998.69	2646.244	2633.914
20180513:13:37:28	23.4	15.9	-4.1	23.7	0.25	2.2	0.25	2.1	122.7	285.7	286.3	79.9	50.5	80.4	2011.222	2000.062	2648.035	2635.688
20180513:13:42:28	23.4	15.8	-4.2	23.7	0.25	2.2	0.25	2.1	122.6	285.7	286.3	79.9	50.5	80.5	2012.556	2001.39	2649.759	2637.406
20180513:13:47:28	23.4	15.9	-4.3	23.7	0.25	2.2	0.25	2.1	122.7	285.8	286.3	80.0	50.4	80.5	2013.885	2002.77	2651.476	2639.192
20180513:13:52:28	23.4	15.9	-4.2	23.7	0.25	2.2	0.25	2.1	122.8	285.8	286.4	80.0	50.6	80.6	2015.265	2004.092	2653.261	2640.902
20180513:13:57:28	23.4	15.9	-4.2	23.7	0.25	2.2	0.25	2.1	122.8	285.8	286.4	80.0	50.5	80.6	2016.596	2005.455	2654.981	2642.667
20180513:14:02:28	23.4	16.0	-4.1	23.7	0.25	2.2	0.25	2.1	122.9	285.7	286.4	80.0	50.6	80.6	2017.962	2006.816	2656.748	2644.429
20180513:14:07:28	23.4	16.0	-4.3	23.7	0.25	2.2	0.25	2.1	122.9	285.7	286.3	80.0	50.5	80.6	2019.321	2008.134	2658.506	2646.135
20180513:14:12:28	23.4	15.9	-4.1	23.7	0.25	2.2	0.25	2.1	122.8	285.7	286.3	80.0	50.6	80.6	2020.653	2009.512	2660.228	2647.919
20180513:14:17:28	23.4	15.9	-4.1	23.7	0.25	2.2	0.25	2.1	122.8	285.7	286.3	80.0	50.5	80.7	2022.04	2010.835	2662.02	2649.632
20180513:14:22:28	23.4	15.9	-4.0	23.7	0.25	2.2	0.25	2.1	122.8	285.7	286.3	79.9	50.6	80.6	2023.374	2012.219	2663.746	2651.425
20180513:14:27:28	23.4	15.9	-4.1	23.7	0.25	2.2	0.25	2.1	122.9	285.7	286.3	80.0	50.5	80.7	2024.71	2013.545	2665.474	2653.141
20180513:14:32:28	23.4	16.0	-4.1	23.7	0.25	2.2	0.25	2.1	122.9	285.7	286.3	80.0	50.6	80.7	2026.093	2014.89	2667.263	2654.883
20180513:14:37:28	23.4	15.9	-4.0	23.7	0.25	2.2	0.25	2.1	122.8	285.7	286.4	79.9	50.5	80.7	2027.426	2016.259	2668.987	2656.656
20180513:14:42:28	23.4	15.9	-4.0	23.7	0.25	2.2	0.25	2.1	122.8	285.7	286.3	79.9	50.6	80.6	2028.797	2017.591	2670.759	2658.382
20180513:14:47:28	23.4	16.0	-4.0	23.7	0.25	2.2	0.25	2.1	122.9	285.7	286.4	79.9	50.5	80.7	2030.154	2018.974	2672.515	2660.173
20180513:14:52:28	23.4	16.0	-4.0	23.7	0.25	2.2	0.25	2.1	123.0	285.7	286.4	80.0	50.6	80.7	2031.491	2020.294	2674.244	2661.883
20180513:14:57:28	23.4	16.0	-3.9	23.7	0.249	2.2	0.25	2.1	123.0	285.7	286.3	80.0	50.5	80.7	2032.874	2021.657	2676.033	2663.648
20180513:15:02:28	23.4	16.0	-3.9	23.6	0.25	2.2	0.25	2.1	122.9	285.7	286.4	80.0	50.6	80.7	2034.21	2023.027	2677.763	2665.423
20180513:15:07:28	23.4	15.9	-4.0	23.7	0.25	2.2	0.25	2.1	122.8	285.7	286.3	80.0	50.5	80.7	2035.547	2024.341	2679.493	2667.126
20180513:15:12:28	23.4	15.9	-3.9	23.6	0.25	2.2	0.25	2.1	122.9	285.6	286.3	80.1	50.6	80.7	2036.935	2025.719	2681.289	2668.912
20180513:15:17:28	23.4	16.0	-3.8	23.6	0.25	2.2	0.25	2.1	122.9	285.7	286.3	80.1	50.5	80.8	2038.266	2027.043	2683.011	2670.628
20180513:15:22:28	23.4	16.0	-3.7	23.6	0.25	2.2	0.25	2.1	122.9	285.7	286.3	80.2	50.6	80.8	2039.623	2028.424	2684.769	2672.417
20180513:15:27:28	23.4	16.0	-3.7	23.6	0.25	2.2	0.25	2.1	122.9	285.8	286.3	80.3	50.5	80.8	2040.994	2029.761	2686.544	2674.15
20180513:15:32:28	23.4	15.9	-3.7	23.6	0.25	2.2	0.25	2.1	122.8	285.7	286.3	80.3	50.5	80.9	2042.329	2031.09	2688.274	2675.874
20180513:15:37:28	23.4	15.9	-3.7	23.6	0.25	2.2	0.25	2.1	122.8	285.8	286.4	80.4	50.5	81.0	2043.711	2032.464	2690.065	2677.656
20180513:15:42:28	23.4	15.9	-3.6	23.6	0.25	2.2	0.25	2.1	122.8	285.7	286.3	80.5	50.5	81.0	2045.066	2033.793	2691.82	2679.38
20180513:15:47:28	23.4	15.9	-3.6	23.6	0.25	2.2	0.25	2.1	122.7	285.7	286.3	80.6	50.5	81.0	2046.392	2035.17	2693.539	2681.165
20180513:15:52:28	23.4	15.8	-3.7	23.6	0.25	2.2	0.25	2.1	122.5	285.7	286.3	80.6	50.5	81.1	2047.785	2036.494	2695.344	2682.883
20180513:15:57:28	23.4	15.7	-3.7	23.6	0.25	2.2	0.25	2.1	122.2	285.8	286.4	80.6	50.5	81.1	2049.115	2037.849	2697.069	2684.641
20180513:16:02:28	23.3	15.6	-3.9	23.6	0.25	2.2	0.25	2.1	122.1	285.8	286.3	80.7	50.5	81.1	2050.458	2039.216	2698.809	2686.414
20180513:16:07:28	23.3	15.1	-4.6	23.6	0.25	2.2	0.25	2.1	120.7	285.7	286.3	80.7	50.5	81.1	2051.843	2040.546	2700.604	2688.139
20180513:16:12:28	23.3	15.4	-4.3	23.6	0.25	2.2	0.25	2.1	121.4	285.8	286.3	80.7	50.5	81.2	2053.18	2041.932	2702.337	2689.938
20180513:16:17:28	23.3	15.6	-4.2	23.6	0.25	2.2	0.25	2.1	122.0	285.7	286.3	80.7	50.5	81.2	2054.537	2043.256	2704.096	2691.656
20180513:16:22:28	23.3	15.7	-4.2	23.6	0.25	2.2	0.25	2.1	122.1	285.7	286.2	80.7	50.5	81.3	2055.9	2044.614	2705.863	2693.419
20180513:16:27:28	23.3	15.7	-4.2	23.6	0.25	2.2	0.25	2.1	122.2	285.7	286.3	80.7	50.5	81.3	2057.232	2045.978	2707.591	2695.19

Time:	Stack Pressure:	Sat% H2O:	Static:	Barometric:	Flowmeter1:	Vacuum1:	Flowmeter2:	Vacuum2:	Stack Temp:	Sorbent Temp:	Probe Temp:	DGM#1 Temp:	Condenser Temp:	DGM#2 Temp:	DGM1*:	DGM2*:	DGM1:	DGM2:
day:hh:mm:ss	in-Hg	Percent	in-H2O	in-Hg	l/min	in-Hg	l/min	in-Hg	degF	degF	degF	degF	degF	degF	liters STP	liters STP	liters nominal	liters nominal
20180513:16:32:28	23.3	15.7	-4.2	23.6	0.25	2.2	0.25	2.1	122.3	285.7	286.2	80.7	50.5	81.3	2058.617	2047.296	2709.385	2696.9
20180513:16:37:28	23.3	15.1	-4.7	23.6	0.25	2.2	0.25	2.1	120.8	285.7	286.3	80.7	50.5	81.4	2059.961	2048.672	2711.128	2698.686
20180513:16:42:28	23.3	15.1	-4.4	23.6	0.25	2.2	0.25	2.1	120.9	285.7	286.3	80.7	50.5	81.4	2061.287	2049.995	2712.846	2700.402
20180513:16:47:28	23.3	15.4	-4.3	23.6	0.25	2.2	0.25	2.1	121.6	285.7	286.3	80.8	50.5	81.4	2062.677	2051.374	2714.648	2702.192
20180513:16:52:28	23.3	15.5	-4.2	23.6	0.25	2.2	0.25	2.1	121.9	285.7	286.3	80.8	50.5	81.4	2063.997	2052.716	2716.359	2703.934
20180513:16:57:28	23.3	15.7	-4.0	23.6	0.25	2.2	0.25	2.1	122.2	285.8	286.2	80.8	50.5	81.5	2065.351	2054.041	2718.115	2705.654
20180513:17:02:28	23.3	15.8	-4.0	23.6	0.25	2.2	0.25	2.1	122.4	285.7	286.3	80.8	50.5	81.5	2066.726	2055.414	2719.898	2707.436
20180513:17:07:28	23.3	15.8	-4.0	23.6	0.25	2.2	0.25	2.1	122.5	285.7	286.3	80.9	50.5	81.5	2068.059	2056.743	2721.626	2709.162
20180513:17:12:28	23.4	15.8	-4.0	23.6	0.25	2.2	0.25	2.1	122.5	285.7	286.3	80.9	50.5	81.5	2069.435	2058.126	2723.409	2710.957
20180513:17:17:28	23.3	15.5	-4.4	23.6	0.25	2.2	0.25	2.1	121.8	285.6	286.3	80.9	50.5	81.6	2070.795	2059.446	2725.172	2712.669
20180513:17:22:28	23.3	15.0	-4.5	23.7	0.25	2.2	0.25	2.1	120.7	285.6	286.2	81.0	50.5	81.6	2072.118	2060.794	2726.887	2714.419
20180513:17:27:28	23.3	15.4	-4.3	23.7	0.25	2.2	0.25	2.1	121.6	285.7	286.3	81.0	50.5	81.7	2073.504	2062.159	2728.683	2716.19
20180513:17:32:28	23.3	15.6	-4.2	23.7	0.25	2.2	0.25	2.1	122.0	285.7	286.3	81.1	50.5	81.7	2074.837	2063.484	2730.411	2717.91
20180513:17:37:28	23.4	15.7	-4.1	23.7	0.25	2.2	0.25	2.1	122.4	285.7	286.3	81.2	50.5	81.8	2076.177	2064.863	2732.148	2719.699
20180513:17:42:28	23.4	15.8	-4.0	23.7	0.25	2.2	0.25	2.1	122.6	285.8	286.4	81.4	50.6	81.9	2077.562	2066.187	2733.944	2721.417
20180513:17:47:28	23.4	16.0	-3.9	23.7	0.25	2.2	0.25	2.1	122.9	285.7	286.3	81.4	50.5	81.9	2078.9	2067.552	2735.678	2723.188
20180513:17:52:28	23.4	16.1	-3.9	23.7	0.25	2.2	0.25	2.1	123.2	285.7	286.3	81.4	50.6	81.9	2080.258	2068.911	2737.439	2724.951
20180513:17:57:28	23.4	16.1	-4.0	23.7	0.25	2.2	0.25	2.1	123.3	285.8	286.3	81.5	50.6	82.0	2081.628	2070.23	2739.215	2726.662
20180513:18:02:28	23.4	16.1	-3.9	23.7	0.25	2.2	0.25	2.1	123.2	285.7	286.3	81.5	50.6	82.0	2082.961	2071.607	2740.943	2728.449
20180513:18:07:28	23.4	16.2	-3.8	23.7	0.25	2.2	0.25	2.1	123.6	285.7	286.3	81.7	50.6	82.1	2084.346	2072.929	2742.737	2730.164
20180513:18:12:28	23.4	16.2	-4.0	23.7	0.25	2.2	0.25	2.1	123.6	285.7	286.3	81.7	50.6	82.1	2085.696	2074.313	2744.487	2731.959
20180513:18:17:28	23.4	16.2	-4.1	23.7	0.25	2.2	0.25	2.1	123.5	285.7	286.3	81.8	50.6	82.2	2087.021	2075.638	2746.204	2733.677
20180513:18:22:28	23.4	16.2	-4.1	23.7	0.25	2.2	0.25	2.1	123.5	285.7	286.3	81.8	50.6	82.2	2088.42	2076.976	2748.017	2735.412
20180513:18:27:28	23.4	15.6	-4.5	23.7	0.25	2.2	0.25	2.1	122.2	285.7	286.4	81.9	50.6	82.2	2089.743	2078.346	2749.73	2737.188
20180513:18:32:28	23.4	15.6	-4.3	23.7	0.25	2.2	0.25	2.1	122.1	285.7	286.3	81.9	50.7	82.3	2091.089	2079.677	2751.474	2738.914
20180513:18:37:28	23.4	15.9	-4.2	23.7	0.25	2.2	0.25	2.1	122.7	285.8	286.4	81.9	50.6	82.3	2092.474	2081.062	2753.269	2740.709
20180513:18:42:28	23.4	16.0	-4.2	23.7	0.25	2.2	0.25	2.1	123.0	285.8	286.4	81.9	50.7	82.3	2093.813	2082.376	2755.004	2742.414
20180513:18:47:28	23.4	16.1	-4.0	23.7	0.25	2.2	0.25	2.1	123.4	285.8	286.3	81.9	50.6	82.3	2095.175	2083.739	2756.77	2744.18
20180513:18:52:28	23.4	16.3	-4.0	23.7	0.25	2.2	0.25	2.1	123.6	285.7	286.2	81.9	50.7	82.3	2096.539	2085.107	2758.537	2745.955
20180513:18:57:28	23.4	16.3	-3.9	23.7	0.25	2.2	0.25	2.1	123.7	285.7	286.3	82.0	50.6	82.3	2097.882	2086.421	2760.278	2747.66
20180513:19:02:28	23.4	16.1	-3.9	23.7	0.25	2.2	0.25	2.1	123.2	285.7	286.3	82.0	50.7	82.3	2099.267	2087.808	2762.074	2749.459
20180513:19:07:28	23.4	16.0	-3.8	23.7	0.25	2.2	0.25	2.1	123.0	285.8	286.4	82.0	50.7	82.4	2100.632	2089.138	2763.844	2751.186
20180513:19:12:28	23.4	15.9	-3.9	23.7	0.25	2.2	0.25	2.1	122.9	285.8	286.4	82.0	50.7	82.3	2101.961	2090.507	2765.569	2752.962
20180513:19:17:28	23.4	15.8	-4.0	23.7	0.25	2.2	0.25	2.1	122.6	285.7	286.3	82.0	50.7	82.3	2103.35	2091.87	2767.37	2754.731
20180513:19:22:28	23.4	15.7	-4.0	23.7	0.25	2.2	0.25	2.1	122.2	285.7	286.3	82.0	50.7	82.4	2104.691	2093.195	2769.109	2756.451
20180513:19:27:28	23.4	15.5	-4.0	23.7	0.25	2.2	0.25	2.1	121.9	285.7	286.3	82.0	50.7	82.4	2106.031	2094.583	2770.848	2758.252
20180513:19:32:28	23.3	14.8	-4.5	23.7	0.25	2.2	0.25	2.1	120.1	285.7	286.3	82.0	50.6	82.3	2107.426	2095.915	2772.657	2759.981
20180513:19:37:28	23.4	14.8	-4.2	23.7	0.25	2.2	0.25	2.1	120.1	285.7	286.3	81.9	50.7	82.3	2108.76	2097.288	2774.387	2761.763
20180513:19:42:28	23.4	14.9	-4.1	23.7	0.25	2.2	0.25	2.1	120.5	285.7	286.3	81.8	50.6	82.3	2110.113	2098.653	2776.143	2763.536
20180513:19:47:28	23.4	15.0	-4.0	23.7	0.25	2.2	0.25	2.1	120.7	285.7	286.3	81.7	50.7	82.3	2111.5	2099.975	2777.941	2765.252
20180513:19:52:28	23.4	15.0	-3.9	23.7	0.25	2.2	0.25	2.1	120.7	285.7	286.3	81.7	50.6	82.3	2112.843	2101.364	2779.681	2767.055
20180513:19:57:28	23.4	15.0	-3.9	23.7	0.25	2.2	0.25	2.1	120.7	285.7	286.3	81.6	50.7	82.3	2114.204	2102.698	2781.446	2768.786
20180513:20:02:28	23.4	15.0	-3.9	23.7	0.25	2.2	0.25	2.1	120.6	285.7	286.3	81.5	50.6	82.2	2115.583	2104.068	2783.233	2770.564
20180513:20:07:28	23.4	14.9	-3.9	23.7	0.25	2.2	0.25	2.1	120.6	285.7	286.3	81.5	50.7	82.2	2116.92	2105.437	2784.967	2772.34
20180513:20:12:28	23.4	14.9	-3.9	23.7	0.25	2.2	0.25	2.1	120.4	285.7	286.3	81.5	50.6	82.2	2118.3	2106.761	2786.756	2774.058
20180513:20:17:28	23.4	14.8	-3.9	23.7	0.25	2.2	0.25	2.1	120.2	285.7	286.3	81.4	50.7	82.2	2119.661	2108.155	2788.519	2775.868
20180513:20:22:28	23.4	14.8	-3.9	23.7	0.25	2.2	0.25	2.1	120.1	285.6	286.3	81.4	50.6	82.1	2121.002	2109.489	2790.257	2777.6
20180513:20:27:28	23.4	14.4	-3.8	23.7	0.25	2.2	0.25	2.1	119.2	285.6	286.3	81.4	50.7	82.1	2122.396	2110.854	2792.063	2779.37
20180513:20:32:28	23.4	14.3	-3.8	23.7	0.25	2.2	0.25	2.1	119.1	285.7	286.3	81.5	50.6	82.1	2123.757	2112.226	2793.828	2781.15
20180513:20:37:28	23.4	14.7	-3.9	23.7	0.25	2.2	0.25	2.1	119.9	285.7	286.4	81.5	50.7	82.1	2125.095	2113.556	2795.561	2782.876
20180513:20:42:28	23.4	14.8	-3.8	23.7	0.25	2.2	0.25	2.1	120.1	285.7	286.4	81.5	50.6	82.0	2126.492	2114.944	2797.372	2784.677
20180513:20:47:28	23.4	14.9	-3.8	23.7	0.25	2.2	0.25	2.1	120.4	285.8	286.4	81.6	50.7	82.0	2127.842	2116.272	2799.122	2786.398
20180513:20:52:28	23.4	14.9	-3.9	23.7	0.25	2.3	0.25	2.1	120.5	285.8	286.4	81.6	50.6	82.0	2129.183	2117.64	2800.859	2788.173
20180513:20:57:28	23.4	14.9	-3.9	23.7	0.25	2.2	0.25	2.1	120.4	285.7	286.4	81.5	50.7	82.0	2130.588	2119.01	2802.68	2789.949
20180513:21:02:28	23.4	14.9	-3.9	23.7	0.25	2.3	0.25	2.1	120.4	285.7	286.3	81.5	50.6	82.0	2131.927	2120.352	2804.415	2791.69
20180513:21:07:28	23.4	14.9	-3.8	23.7	0.25	2.2	0.25	2.1	120.4	285.7	286.3	81.4	50.7	82.0	2133.276	2121.743	2806.163	2793.494
20180513:21:12:28	23.4	14.9	-3.8	23.7	0.25	2.3	0.25	2.1	120.4	285.8	286.3	81.4	50.7	82.0	2134.674	2123.072	2807.974	2795.218
20180513:21:17:28	23.4	14.5	-3.8	23.7	0.25	2.2	0.25	2.1	119.5	285.7	286.3	81.4	50.6	82.0	2136.008	2124.433	2809.702	2796.983
20180513:21:22:28	23.4	14.4	-3.8	23.7	0.25	2.2	0.25	2.1	119.3	285.7	286.4	81.3	50.7	81.9	2137.371	2125.808	2811.467	2798.765
20180513:21:27:28	23.4	14.8	-3.8	23.7	0.25	2.2	0.25	2.1	120.1	285.7	286.3	81.3	50.6	81.9	2138.759	2127.15	2813.265	2800.506
20180513:21:32:28	23.4	14.9	-3.9	23.7	0.25	2.2	0.25	2.1	120.4	285.8	286.4	81.4	50.7	81.9	2140.11	2128.54	2815.015	2802.308
20180513:21:37:28	23.4	15.0	-3.8	23.7	0.25	2.2	0.25	2.1	120.6	285.8	286.4	81.4	50.6	81.9	2141.474	2129.875	2816.781	2804.039
20180513:21:42:28	23.4	15.0	-3.8	23.7	0.25	2.2	0.25	2.1	120.8	285.8	286.3	81.3	50.7	81.8	2142.855	2131.228	2818.57	2805.793
20180513:21:47:28	23.4	15.1	-3.8	23.7	0.25	2.2	0.25	2.1	120.8	285.8	286.3	81.3	50.6	81.8	2144.196	2132.61	2820.307	2807.585
20180513:21:52:28	23.4	15.1	-3.8	23.7	0.25	2.3	0.25	2.1	120.9	285.8	286.4	81.3	50.7	81.8	2145.579	2133.951	2822.098	2809.323
20180513:21:57:28	23.4	15.0	-3.8	23.7	0.25	2.2	0.25	2.1	120.8	285.8	286.3	81.3	50.6	81.8	2146.94	2135.349	2823.861	2811.135
20180513:22:02:28	23.4	15.0	-3.9	23.7	0.25	2.3	0.25	2.1	120.8	285.7	286.3	81.2	50.7	81.8	2148.29	2136.69	2825.609	2812.874
20180513:22:07:28	23.4	14.7	-3.8	23.7	0.25	2.2	0.25	2.1	119.9	285.8	286.4	81.2	50.6	81.7	2149.682	2138.031	2827.413	2814.613
20180513:22:12:28	23.4	14.6	-3.8	23.7	0.25	2.3	0.25	2.1	119.8	285.7	286.3	81.2	50.7	81.7	2151.052	2139.418	2829.187	2816.412
20180513:22:17:28	23.4	15.0	-3.9	23.7	0.25	2.3	0.25	2.1	120.7	285.8	286.4	81.2	50.7	81.7	2152.389	2140.755	2830.919	2818.145
20180513:22:22:28	23.4	15.1	-3.9	23.7	0.25	2.3	0.25	2.1	120.9	285.8	286.4	81.2	50.6	81.7	2153.787	2142.143	2832.73	2819.944
20180513:22:27:28	23.4	15.1	-4.0	23.7	0.25	2.3	0.25	2.1	121.0	285.9	286.4	81.1	50.7	81.7	2155.148	2143.499	2834.491	2821.701
20180513:22:32:28	23.4	15.1	-4.0	23.7	0.25	2.3	0.25	2.1	120.9	285.8	286.4	81.1	50.6	81.7	2156.489	2144.835	2836.228	2823.432
20180513:22:37:28	23.4	15.2	-4.0	23.7	0.25	2.3	0.25	2.1	121.1	285.9	286.4	81.1	50.7	81.7	2157.89	2146.225	2838.041	2825.233
20180513:22:42:28	23.4	15.2	-4.0	23.7	0.25	2.3	0.25	2.1	121.1	285.8	286.3	81.0	50.6	81.6	2159.241	2147.564	2839.789	2826.968
20180513:22:47:28	23.4	15.2	-4.0	23.7	0.25	2.2	0.25	2.1	121.1	285.8	286.4	80.9	50.8	81.6	2160.578	2148.945	2841.52	2828.758
20180513:22:52:28	23.4	15.2	-3.9	23.7	0.25	2.2	0.25	2.1	121.2	285.9	286.4	80.9	50.6	81.5	2161.985	2150.313	2843.341	2830.53
20180513:22:57:28	23.4	15.3	-4.0	23.7	0.25	2.2	0.25	2.1	121.3	285.8	286.4	80.8	50.8	81.5	2163.324	2151.64	2845.074	2832.25
20180513:23:02:28	23.4	14.7	-3.9	23.7	0.25	2.2	0.25	2.1	120.0	285.7	286.3	80.7	50.7	81.4	2164.679	2153.039	2846.828	2834.064
20180513:23:07:28	23.4	15.0	-3.9	23.7	0.25	2.2	0.25	2.1	120.7	285.8	286.4	80.7	50.6	81.4	2166.08	2154.377	2848.641	2835.797
20180513:23:12:28	23.4	15.2	-4.0	23.7	0.25	2.2	0.25	2.1	121.1	285.8	286.3	80.6	50.6	81.3	2167.414	2155.746	2850.367	2837.571
20180513:23:17:28	23.4	15.2	-4.0	23.7	0.25	2.3	0.25	2.1	121.2	285.8	286.4	80.6	50.6	81.3	2168.78	2157.12	2852.135	2839.352
20180513:23:22:28	23.4	15.2	-3.9	23.7	0.25	2.3	0.25	2.1	121.3	285.7	286.3	80.6	50.7	81.3	2170.168	2158.458	2853.931	2841.085
20180513:23:27:28	23.4	15.3	-4.0	23.7	0.25	2.3	0.25	2.1	121.4	285.7	286.3	80.6	50.6	81.2	2171.512	2159.852	2855.67	2842.891
20180513:23:32:28	23.4	15.4	-3.9	23.7	0.25	2.3	0.25	2.1	121.6	285.8	286.3	80.6	50.7	81.2	2172.887	2161.177	2857.45	2844.607
20180513:23:37:28	23.4	15.4	-3.9	23.7	0.25	2.2	0.25	2.1	121.7	285.8	286.4	80.5	50.6	81.1	2174.264	2162.545	2859.231	2846.38
20180513:23:42:28	23.4	15.5	-3.9	23.7	0.25	2.2	0.25	2.1	121.8	285.9	286.4	80.5	50.6	81.1	2175.606	2163.917	2860.969	2848.158
20180513:23:47:28	23.4	15.5	-3.5	23.7	0.25	2.2	0.25	2.1	122.0	285.9	286.4	80.4	50.6	81.1	2176.991	2165.258	2862.761	2849.895
20180513:23:52:28	23.4	15.5	-3.9	23.7	0.25	2.2	0.25	2.1	121.9	285.8	286.4	80.4	50.6	81.1	2178.355	2166.648	2864.526	2851.695

Time:	Stack Pressure:	Sat% H2O:	Static:	Barometric:	Flowmeter1:	Vacuum1:	Flowmeter2:	Vacuum2:	Stack Temp:	Sorbent Temp:	Probe Temp:	DGM#1 Temp:	Condenser Temp:	DGM#2 Temp:	DGM1*:	DGM2*:	DGM1:	DGM2:
day:hh:mm:ss	in-Hg	Percent	in-H2O	in-Hg	l/min	in-Hg	l/min	in-Hg	degF	degF	degF	degF	degF	degF	liters STP	liters STP	liters nominal	liters nominal
20180513:23:57:28	23.3	14.8	-4.4	23.7	0.25	2.2	0.25	2.1	120.1	285.8	286.4	80.4	50.7	81.0	2179.696	2167.981	2866.261	2853.423
20180514:00:02:28	23.3	14.6	-4.5	23.7	0.25	2.2	0.25	2.1	119.5	285.8	286.4	80.4	50.6	81.0	2181.089	2169.338	2868.063	2855.18
20180514:00:07:28	23.3	14.5	-4.4	23.7	0.25	2.2	0.25	2.1	119.4	285.8	286.4	80.3	50.7	81.0	2182.443	2170.712	2869.815	2856.961
20180514:00:12:28	23.4	15.1	-3.9	23.7	0.25	2.2	0.25	2.1	121.0	285.9	286.4	80.2	50.6	80.9	2183.78	2172.055	2871.544	2858.701
20180514:00:17:28	23.4	15.4	-3.9	23.7	0.25	2.2	0.25	2.1	121.6	285.8	286.4	80.1	50.6	80.9	2185.18	2173.446	2873.356	2860.502
20180514:00:22:28	23.4	15.5	-4.0	23.7	0.25	2.2	0.25	2.1	122.0	285.9	286.4	80.1	50.6	80.8	2186.516	2174.782	2875.083	2862.233
20180514:00:27:28	23.4	15.6	-4.0	23.7	0.25	2.2	0.25	2.1	122.1	285.9	286.4	80.0	50.6	80.8	2187.865	2176.137	2876.828	2863.987
20180514:00:32:28	23.4	15.8	-3.9	23.7	0.25	2.2	0.25	2.1	122.4	285.9	286.4	80.0	50.7	80.7	2189.257	2177.517	2878.628	2865.774
20180514:00:37:28	23.4	15.9	-3.9	23.7	0.25	2.2	0.25	2.1	122.8	285.8	286.3	79.9	50.6	80.7	2190.598	2178.857	2880.361	2867.509
20180514:00:42:28	23.4	16.0	-3.8	23.7	0.25	2.2	0.25	2.1	123.0	285.8	286.3	79.9	50.6	80.6	2191.96	2180.254	2882.122	2869.318
20180514:00:47:28	23.4	16.1	-3.7	23.7	0.25	2.2	0.25	2.1	123.3	285.8	286.3	79.8	50.6	80.6	2193.342	2181.591	2883.909	2871.049
20180514:00:52:28	23.4	16.1	-3.7	23.7	0.25	2.2	0.25	2.1	123.2	285.8	286.4	79.8	50.6	80.6	2194.683	2182.941	2885.643	2872.797
20180514:00:57:28	23.4	16.0	-3.9	23.7	0.25	2.2	0.25	2.1	123.1	285.8	286.4	79.8	50.6	80.5	2196.065	2184.322	2887.43	2874.585
20180514:01:02:28	23.3	15.1	-4.5	23.7	0.25	2.2	0.25	2.1	120.9	285.7	286.4	79.7	50.5	80.5	2197.429	2185.665	2889.193	2876.323
20180514:01:07:28	23.3	15.0	-4.6	23.7	0.25	2.2	0.25	2.1	120.5	285.7	286.4	79.8	50.7	80.5	2198.769	2187.059	2890.926	2878.128
20180514:01:12:28	23.3	15.0	-4.5	23.7	0.25	2.2	0.25	2.1	120.5	285.7	286.3	79.8	50.6	80.4	2200.163	2188.395	2892.728	2879.857
20180514:01:17:28	23.3	15.7	-4.3	23.7	0.25	2.2	0.25	2.1	122.4	285.8	286.4	79.9	50.6	80.4	2201.515	2189.738	2894.476	2881.596
20180514:01:22:28	23.4	16.1	-4.2	23.7	0.25	2.2	0.25	2.1	123.2	285.9	286.3	79.9	50.6	80.4	2202.853	2191.121	2896.206	2883.385
20180514:01:27:28	23.4	16.2	-4.2	23.7	0.25	2.2	0.25	2.1	123.4	285.9	286.3	79.8	50.5	80.4	2204.256	2192.457	2898.02	2885.115
20180514:01:32:28	23.3	16.2	-4.2	23.7	0.25	2.2	0.25	2.1	123.5	285.8	286.3	79.8	50.6	80.4	2205.587	2193.848	2899.741	2886.915
20180514:01:37:28	23.3	16.3	-4.3	23.7	0.25	2.2	0.25	2.1	123.6	285.8	286.3	79.7	50.5	80.3	2206.936	2195.177	2901.485	2888.635
20180514:01:42:28	23.3	16.3	-4.4	23.7	0.25	2.2	0.25	2.1	123.6	285.8	286.4	79.7	50.6	80.3	2208.319	2196.524	2903.272	2890.378
20180514:01:47:28	23.3	16.2	-4.3	23.7	0.25	2.2	0.25	2.1	123.5	285.9	286.4	79.6	50.6	80.3	2209.656	2197.895	2905	2892.152
20180514:01:52:28	23.3	16.2	-4.4	23.7	0.25	2.2	0.25	2.1	123.4	285.9	286.4	79.6	50.6	80.3	2211.024	2199.228	2906.769	2893.876
20180514:01:57:28	23.3	16.2	-4.4	23.7	0.25	2.2	0.25	2.1	123.4	285.8	286.3	79.5	50.6	80.2	2212.385	2200.611	2908.526	2895.665
20180514:02:02:28	23.3	16.2	-4.4	23.7	0.25	2.2	0.25	2.1	123.4	285.8	286.3	79.5	50.6	80.2	2213.715	2201.936	2910.244	2897.38
20180514:02:07:28	23.3	16.2	-4.4	23.7	0.25	2.2	0.25	2.1	123.5	285.8	286.3	79.4	50.6	80.1	2215.101	2203.301	2912.035	2899.145
20180514:02:12:28	23.3	16.3	-4.4	23.7	0.25	2.2	0.25	2.1	123.6	285.8	286.3	79.4	50.6	80.1	2216.432	2204.666	2913.754	2900.91
20180514:02:17:28	23.3	15.7	-4.7	23.7	0.25	2.2	0.25	2.1	122.2	285.8	286.4	79.3	50.6	80.1	2217.775	2205.99	2915.487	2902.622
20180514:02:22:28	23.3	15.4	-4.6	23.7	0.25	2.2	0.25	2.1	121.5	285.7	286.3	79.3	50.7	80.0	2219.156	2207.368	2917.27	2904.404
20180514:02:27:28	23.3	15.8	-4.5	23.7	0.25	2.2	0.25	2.1	122.5	285.7	286.3	79.2	50.5	80.0	2220.491	2208.695	2918.993	2906.118
20180514:02:32:28	23.3	15.9	-4.5	23.7	0.25	2.2	0.25	2.1	122.8	285.7	286.3	79.2	50.6	80.0	2221.864	2210.082	2920.765	2907.912
20180514:02:37:28	23.3	16.0	-4.5	23.7	0.25	2.2	0.25	2.1	123.0	285.8	286.3	79.1	50.6	79.9	2223.227	2211.417	2922.524	2909.637
20180514:02:42:28	23.3	16.1	-4.5	23.7	0.25	2.2	0.25	2.1	123.2	285.8	286.3	79.1	50.6	79.9	2224.556	2212.756	2924.239	2911.367
20180514:02:47:28	23.3	16.1	-4.5	23.7	0.25	2.2	0.25	2.1	123.3	285.8	286.3	79.0	50.6	79.8	2225.947	2214.135	2926.033	2913.148
20180514:02:52:28	23.3	16.2	-4.5	23.7	0.25	2.2	0.25	2.1	123.4	285.8	286.3	79.0	50.6	79.8	2227.281	2215.466	2927.754	2914.868
20180514:02:57:28	23.3	16.2	-4.5	23.7	0.25	2.2	0.25	2.1	123.5	285.7	286.3	79.0	50.6	79.7	2228.622	2216.853	2929.483	2916.66
20180514:03:02:28	23.3	16.2	-4.5	23.7	0.25	2.2	0.25	2.1	123.3	285.7	286.4	78.9	50.7	79.7	2230.006	2218.175	2931.269	2918.367
20180514:03:07:28	23.3	16.1	-4.5	23.7	0.25	2.2	0.25	2.1	123.3	285.7	286.3	78.8	50.6	79.7	2231.342	2219.542	2932.991	2920.132
20180514:03:12:28	23.3	16.1	-4.5	23.7	0.25	2.2	0.25	2.1	123.2	285.8	286.4	78.8	50.7	79.6	2232.716	2220.917	2934.763	2921.908
20180514:03:17:28	23.3	16.1	-4.5	23.7	0.25	2.2	0.25	2.1	123.1	285.7	286.2	78.8	50.6	79.6	2234.082	2222.237	2936.524	2923.613
20180514:03:22:28	23.3	16.0	-4.5	23.7	0.25	2.2	0.25	2.1	122.9	285.7	286.3	78.8	50.6	79.5	2235.405	2223.623	2938.23	2925.402
20180514:03:27:28	23.3	15.1	-4.8	23.7	0.25	2.2	0.25	2.1	120.7	285.6	286.2	78.8	50.6	79.5	2236.792	2224.956	2940.019	2927.124
20180514:03:32:28	23.3	15.4	-4.5	23.7	0.25	2.2	0.25	2.1	121.5	285.6	286.3	78.7	50.5	79.5	2238.116	2226.331	2941.726	2928.9
20180514:03:37:28	23.3	15.8	-4.4	23.7	0.25	2.2	0.25	2.1	122.4	285.8	286.3	78.8	50.6	79.5	2239.466	2227.676	2943.469	2930.637
20180514:03:42:28	23.3	15.8	-4.4	23.7	0.25	2.2	0.25	2.1	122.5	285.8	286.3	78.7	50.6	79.4	2240.846	2229.005	2945.248	2932.353
20180514:03:47:28	23.4	15.9	-4.4	23.7	0.25	2.2	0.25	2.1	122.7	285.8	286.4	78.7	50.6	79.4	2242.18	2230.385	2946.969	2934.135
20180514:03:52:28	23.3	15.9	-4.4	23.7	0.25	2.2	0.25	2.1	122.8	285.7	286.3	78.7	50.6	79.4	2243.566	2231.72	2948.756	2935.859
20180514:03:57:28	23.3	15.9	-4.4	23.7	0.25	2.2	0.25	2.1	122.6	285.7	286.3	78.7	50.6	79.4	2244.925	2233.108	2950.509	2937.652
20180514:04:02:28	23.3	15.8	-4.4	23.7	0.25	2.2	0.25	2.1	122.6	285.7	286.3	78.6	50.6	79.3	2246.249	2234.44	2952.217	2939.372
20180514:04:07:28	23.3	15.8	-4.5	23.7	0.25	2.2	0.25	2.1	122.5	285.8	286.4	78.6	50.6	79.3	2247.649	2235.798	2954.022	2941.126
20180514:04:12:28	23.3	15.7	-4.5	23.7	0.25	2.2	0.25	2.1	122.3	285.8	286.3	78.6	50.6	79.3	2248.973	2237.169	2955.73	2942.897
20180514:04:17:28	23.3	15.7	-4.5	23.7	0.25	2.2	0.25	2.1	122.2	285.8	286.4	78.5	50.6	79.2	2250.326	2238.506	2957.474	2944.622
20180514:04:22:28	23.3	15.7	-4.5	23.7	0.25	2.2	0.25	2.1	122.2	285.8	286.3	78.5	50.6	79.2	2251.713	2239.896	2959.263	2946.417
20180514:04:27:28	23.3	15.6	-4.4	23.7	0.25	2.2	0.25	2.1	122.0	285.6	286.3	78.4	50.5	79.2	2253.049	2241.227	2960.985	2948.135
20180514:04:32:28	23.3	15.1	-4.6	23.7	0.25	2.2	0.25	2.1	120.8	285.6	286.2	78.4	50.6	79.1	2254.429	2242.594	2962.765	2949.9
20180514:04:37:28	23.3	14.6	-4.7	23.7	0.25	2.2	0.25	2.1	119.5	285.6	286.3	78.4	50.5	79.1	2255.796	2243.967	2964.528	2951.673
20180514:04:42:28	23.3	15.0	-4.4	23.7	0.25	2.2	0.25	2.1	120.7	285.7	286.3	78.4	50.5	79.1	2257.129	2245.29	2966.246	2953.382
20180514:04:47:28	23.3	15.3	-4.4	23.7	0.25	2.2	0.25	2.1	121.3	285.7	286.3	78.5	50.6	79.1	2258.523	2246.683	2968.044	2955.18
20180514:04:52:28	23.3	15.3	-4.3	23.7	0.25	2.2	0.25	2.1	121.4	285.8	286.4	78.5	50.5	79.1	2259.865	2248.017	2969.774	2956.902
20180514:04:57:28	23.3	15.4	-4.4	23.7	0.25	2.2	0.25	2.1	121.7	285.8	286.3	78.5	50.6	79.1	2261.21	2249.396	2971.509	2958.682
20180514:05:02:28	23.3	15.6	-4.5	23.7	0.25	2.2	0.25	2.1	122.0	285.8	286.3	78.5	50.6	79.0	2262.606	2250.758	2973.309	2960.44
20180514:05:07:28	23.3	15.7	-4.5	23.7	0.25	2.2	0.25	2.1	122.3	285.8	286.3	78.5	50.5	79.0	2263.942	2252.087	2975.031	2962.156
20180514:05:12:28	23.3	15.8	-4.4	23.7	0.25	2.2	0.25	2.1	122.6	285.8	286.3	78.5	50.6	79.0	2265.305	2253.476	2976.789	2963.947
20180514:05:17:28	23.3	15.9	-4.4	23.7	0.25	2.2	0.25	2.1	122.8	285.8	286.3	78.4	50.6	79.0	2266.676	2254.806	2978.556	2965.664
20180514:05:22:28	23.3	16.0	-4.4	23.7	0.25	2.2	0.25	2.1	122.9	285.7	286.3	78.4	50.5	79.0	2268.015	2256.2	2980.281	2967.462
20180514:05:27:28	23.3	16.0	-4.4	23.7	0.25	2.2	0.25	2.1	122.9	285.7	286.3	78.4	50.6	79.0	2269.404	2257.539	2982.072	2969.19
20180514:05:32:28	23.3	16.0	-4.5	23.7	0.25	2.2	0.25	2.1	123.0	285.8	286.3	78.3	50.6	78.9	2270.755	2258.879	2983.813	2970.919
20180514:05:37:28	23.3	16.0	-4.5	23.7	0.25	2.2	0.25	2.1	122.9	285.8	286.3	78.3	50.5	78.8	2272.086	2260.263	2985.528	2972.705
20180514:05:42:28	23.3	15.2	-4.8	23.7	0.25	2.2	0.25	2.1	121.0	285.7	286.3	78.2	50.6	78.8	2273.482	2261.598	2987.326	2974.427
20180514:05:47:28	23.3	15.2	-4.6	23.7	0.25	2.2	0.25	2.1	121.1	285.7	286.4	78.2	50.5	78.8	2274.808	2262.983	2989.035	2976.212
20180514:05:52:28	23.3	15.4	-4.5	23.7	0.25	2.2	0.25	2.1	121.6	285.7	286.3	78.1	50.5	78.8	2276.172	2264.302	2990.793	2977.914
20180514:05:57:28	23.3	15.4	-4.5	23.7	0.25	2.2	0.25	2.1	121.7	285.7	286.2	78.1	50.6	78.8	2277.548	2265.672	2992.565	2979.68
20180514:06:02:28	23.3	15.5	-4.6	23.7	0.25	2.2	0.25	2.1	121.9	285.7	286.3	78.1	50.5	78.8	2278.887	2267.043	2994.289	2981.449
20180514:06:07:28	23.3	15.7	-4.6	23.7	0.25	2.2	0.25	2.1	122.2	285.8	286.3	78.1	50.5	78.7	2280.276	2268.367	2996.078	2983.156
20180514:06:12:28	23.3	15.7	-4.6	23.7	0.25	2.2	0.25	2.1	122.3	285.8	286.3	78.0	50.6	78.7	2281.625	2269.751	2997.815	2984.94
20180514:06:17:28	23.3	15.7	-4.7	23.7	0.25	2.2	0.25	2.1	122.3	285.8	286.3	78.0	50.5	78.7	2282.954	2271.078	2999.526	2986.65
20180514:06:22:28	23.3	15.8	-4.6	23.7	0.25	2.2	0.25	2.1	122.4	285.8	286.3	78.0	50.6	78.7	2284.348	2272.465	3001.32	2988.438
20180514:06:27:28	23.4	15.6	-4.6	23.7	0.25	2.2	0.25	2.1	122.1	285.7	286.4	77.9	50.6	78.6	2285.679	2273.798	3003.033	2990.156
20180514:06:32:28	23.4	15.5	-4.6	23.7	0.25	2.2	0.25	2.1	121.9	285.7	286.3	77.9	50.5	78.6	2287.042	2275.142	3004.787	2991.887
20180514:06:37:28	23.4	15.5	-4.6	23.7	0.25	2.2	0.25	2.1	121.7	285.7	286.3	77.9	50.5	78.6	2288.413	2276.519	3006.55	2993.662
20180514:06:42:28	23.4	15.5	-4.6	23.7	0.25	2.2	0.25	2.1	121.9	285.7	286.3	77.8	50.6	78.5	2289.752	2277.854	3008.272	2995.382
20180514:06:47:28	23.3	15.3	-4.7	23.7	0.25	2.2	0.25	2.1	121.3	285.7	286.3	77.8	50.5	78.5	2291.145	2279.238	3010.065	2997.164
20180514:06:52:28	23.3	14.8	-4.9	23.7	0.25	2.2	0.25	2.1	120.1	285.7	286.3	77.8	50.5	78.5	2292.493	2280.574	3011.798	2998.883
20180514:06:57:29	23.3	15.2	-4.8	23.7	0.25	2.2	0.25	2.1	121.2	285.8	286.3	77.7	50.6	78.5	2293.829	2281.943	3013.517	3000.647
20180514:07:02:29	23.3	15.4	-4.7	23.7	0.25	2.2	0.25	2.1	121.7	285.8	286.3	77.7	50.5	78.5	2295.221	2283.314	3015.306	3002.412
20180514:07:07:29	23.4	15.6	-4.7	23.7	0.25	2.2	0.25	2.1	122.1	285.7	286.2	77.7	50.5	78.4	2296.562	2284.645	3017.03	3004.126
20180514:07:12:29	23.4	15.7	-4.8	23.7	0.25	2.2	0.25	2.1	122.3	285.7	286.3	77.7	50.5	78.4	2297.926	2286.03	3018.783	3005.908
20180514:07:17:29	23.4	15.8	-4.8	23.7	0.25	2.2	0.25	2.1	122.5	285.7	286.2	77.7	50.5	78.4	2299.287	2287.363	3020.533	3007.624

Time:	Stack Pressure:	Sat% H2O:	Static:	Barometric:	Flowmeter1:	Vacuum1:	Flowmeter2:	Vacuum2:	Stack Temp:	Sorbent Temp:	Probe Temp:	DGM#1 Temp:	Condenser Temp:	DGM#2 Temp:	DGM1*:	DGM2*:	DGM1:	DGM2:
day:hh:mm:ss	in-Hg	Percent	in-H2O	in-Hg	l/min	in-Hg	l/min	in-Hg	degF	degF	degF	degF	degF	degF	liters STP	liters STP	liters nominal	liters nominal
20180514:07:22:29	23.4	15.8	-4.8	23.7	0.25	2.2	0.25	2.1	122.4	285.7	286.2	77.6	50.6	78.3	2300.63	2288.755	3022.259	3009.415
20180514:07:27:29	23.4	15.8	-4.8	23.7	0.25	2.2	0.25	2.1	122.4	285.7	286.3	77.7	50.5	78.4	2302.019	2290.085	3024.044	3011.128
20180514:07:32:29	23.4	15.8	-4.8	23.7	0.25	2.2	0.25	2.1	122.4	285.7	286.3	77.7	50.5	78.3	2303.354	2291.43	3025.761	3012.859
20180514:07:37:29	23.4	15.8	-4.8	23.7	0.25	2.2	0.25	2.1	122.5	285.7	286.3	77.7	50.6	78.3	2304.698	2292.799	3027.489	3014.62
20180514:07:42:29	23.4	15.8	-4.7	23.7	0.25	2.2	0.25	2.1	122.5	285.8	286.3	77.7	50.5	78.3	2306.083	2294.126	3029.269	3016.329
20180514:07:47:29	23.4	15.8	-4.7	23.7	0.25	2.2	0.25	2.1	122.5	285.8	286.3	77.7	50.5	78.3	2307.415	2295.511	3030.981	3018.111
20180514:07:52:29	23.4	15.8	-4.7	23.7	0.25	2.2	0.25	2.1	122.5	285.8	286.4	77.7	50.6	78.3	2308.792	2296.831	3032.752	3019.81
20180514:07:57:29	23.3	15.3	-5.0	23.7	0.25	2.2	0.25	2.1	121.4	285.7	286.3	77.8	50.4	78.3	2310.143	2298.216	3034.489	3021.592
20180514:08:02:29	23.4	15.7	-4.8	23.7	0.25	2.2	0.25	2.1	122.2	285.7	286.3	77.8	50.5	78.3	2311.47	2299.536	3036.194	3023.291
20180514:08:07:29	23.4	15.8	-4.7	23.7	0.25	2.2	0.25	2.1	122.5	285.8	286.4	77.8	50.5	78.3	2312.863	2300.888	3037.985	3025.03
20180514:08:12:29	23.4	15.8	-4.7	23.7	0.25	2.2	0.25	2.1	122.6	285.8	286.3	77.8	50.4	78.3	2314.195	2302.262	3039.698	3026.799
20180514:08:17:29	23.4	15.9	-4.6	23.7	0.25	2.2	0.25	2.1	122.7	285.8	286.3	77.9	50.5	78.3	2315.558	2303.578	3041.45	3028.492
20180514:08:22:29	23.4	15.9	-4.6	23.7	0.25	2.2	0.25	2.1	122.8	285.8	286.3	78.0	50.4	78.4	2316.917	2304.958	3043.198	3030.269
20180514:08:27:29	23.4	15.9	-4.6	23.7	0.25	2.2	0.25	2.1	122.8	285.8	286.3	78.0	50.5	78.4	2318.256	2306.282	3044.92	3031.972
20180514:08:32:29	23.4	15.9	-4.5	23.7	0.25	2.2	0.25	2.1	122.8	285.8	286.4	78.0	50.5	78.4	2319.643	2307.668	3046.704	3033.756
20180514:08:37:29	23.4	15.9	-4.5	23.7	0.25	2.2	0.25	2.1	122.7	285.8	286.3	78.0	50.4	78.4	2320.976	2308.986	3048.419	3035.453
20180514:08:42:29	23.4	15.9	-4.5	23.7	0.25	2.2	0.25	2.1	122.7	285.8	286.3	78.0	50.5	78.4	2322.321	2310.346	3050.148	3037.203
20180514:08:47:29	23.4	15.9	-4.5	23.7	0.25	2.2	0.25	2.1	122.7	285.8	286.3	78.0	50.3	78.4	2323.699	2311.717	3051.92	3038.968
20180514:08:52:29	23.4	15.9	-4.4	23.7	0.25	2.2	0.25	2.1	122.8	285.8	286.3	78.0	50.4	78.4	2325.026	2313.038	3053.628	3040.669
20180514:08:57:29	23.4	15.9	-4.4	23.7	0.25	2.2	0.25	2.1	122.9	285.8	286.4	78.0	50.4	78.5	2326.41	2314.413	3055.407	3042.44
20180514:09:02:29	23.4	15.4	-4.6	23.7	0.25	2.2	0.25	2.1	121.6	285.7	286.3	78.0	50.3	78.5	2327.756	2315.74	3057.139	3044.148
20180514:09:07:29	23.4	15.8	-4.4	23.7	0.25	2.2	0.25	2.1	122.5	285.7	286.3	78.0	50.4	78.5	2329.089	2317.126	3058.854	3045.932
20180514:09:12:29	23.4	15.9	-4.3	23.7	0.25	2.2	0.25	2.1	122.8	285.8	286.4	78.0	50.3	78.5	2330.471	2318.448	3060.631	3047.635
20180514:09:17:29	23.4	15.9	-4.2	23.7	0.25	2.2	0.25	2.1	122.8	285.8	286.4	78.0	50.4	78.5	2331.806	2319.807	3062.35	3049.385
20180514:09:22:29	23.4	15.9	-4.2	23.7	0.25	2.2	0.25	2.1	122.7	285.7	286.3	78.0	50.3	78.6	2333.174	2321.183	3064.109	3051.158
20180514:09:27:29	23.4	15.9	-4.1	23.7	0.25	2.2	0.25	2.1	122.9	285.7	286.3	78.0	50.4	78.7	2334.536	2322.5	3065.863	3052.855
20180514:09:32:29	23.4	15.9	-4.0	23.7	0.25	2.2	0.25	2.1	122.9	285.7	286.3	78.0	50.3	78.7	2335.86	2323.881	3067.567	3054.633
20180514:09:37:29	23.4	16.0	-4.0	23.7	0.25	2.2	0.25	2.1	123.0	285.7	286.3	78.1	50.3	78.7	2337.255	2325.208	3069.361	3056.344
20180514:09:42:29	23.4	16.1	-3.8	23.7	0.25	2.2	0.25	2.1	123.2	285.7	286.3	78.2	50.4	78.8	2338.576	2326.599	3071.061	3058.135
20180514:09:47:29	23.4	16.0	-3.9	23.7	0.25	2.2	0.25	2.1	123.2	285.7	286.3	78.3	50.3	78.8	2339.929	2327.923	3072.804	3059.842
20180514:09:52:29	23.4	16.0	-3.9	23.7	0.25	2.2	0.25	2.1	123.1	285.6	286.2	78.4	50.4	78.9	2341.309	2329.269	3074.58	3061.577
20180514:09:57:29	23.4	16.0	-3.8	23.7	0.25	2.2	0.25	2.1	123.1	285.7	286.3	78.5	50.3	79.0	2342.639	2330.638	3076.293	3063.342
20180514:10:02:29	23.4	16.0	-3.9	23.7	0.25	2.2	0.25	2.1	123.1	285.7	286.3	78.6	50.5	79.1	2344.022	2331.964	3078.074	3065.051
20180514:10:07:29	23.4	15.8	-4.0	23.7	0.25	2.2	0.25	2.1	122.5	285.7	286.3	78.7	50.3	79.1	2345.37	2333.346	3079.811	3066.833
20180514:10:12:29	23.4	16.0	-3.8	23.7	0.25	2.2	0.25	2.1	123.1	285.7	286.3	78.7	50.4	79.2	2346.701	2334.669	3081.526	3068.539
20180514:10:17:29	23.4	16.1	-3.8	23.7	0.25	2.2	0.25	2.1	123.2	285.8	286.3	78.8	50.3	79.3	2348.088	2336.05	3083.313	3070.32
20180514:10:22:29	23.4	16.1	-3.7	23.7	0.25	2.2	0.25	2.1	123.2	285.7	286.3	78.8	50.4	79.3	2349.421	2337.379	3085.031	3072.034
05/14/2018:10:22:29	**Sampling**	**complete**	**6 Days**	**0 Hrs**	**0 Minutes**	**sampled**												

Hg-324K-1099								
HgK_324 Data	HTG2LEE2018R3	5/15/2018	7:34:12					
DGM1 ID	DGM2 ID	Trap1 ID	Trap2 ID					
3605445	3605446	451987	480732					
Time:	Leak 1	Status	Leak 2	Status	Vacuum1	Vacuum2	DGM 1	DGM 2
Day:hh:mm	ccpermin	P-F	ccpermin	P-F	in-Hg	in-Hg	liter	liter
05/15/2018:07:34:27	1329.13	Fail	1277.695	Fail	2.712	2.853	0.415	0.389
05/15/2018:07:34:42	1448.148	Fail	1515.038	Fail	6.695	6.998	0.724	0.758
05/15/2018:07:34:57	1174.074	Fail	1218.045	Fail	9.429	9.86	1.002	0.998
05/15/2018:07:35:12	814.815	Fail	766.917	Fail	11.426	11.887	1.131	1.141
05/15/2018:07:35:27	566.667	Fail	571.429	Fail	12.948	13.404	1.285	1.284
05/15/2018:07:35:42	581.481	Fail	605.263	Fail	14.128	14.592	1.422	1.444
05/15/2018:07:35:57	466.667	Fail	488.722	Fail	15.026	15.475	1.519	1.528
05/15/2018:07:36:12	366.667	Fail	338.346	Fail	15.727	16.15	1.606	1.613
05/15/2018:07:36:27	322.222	Fail	281.955	Fail	16.354	16.769	1.68	1.669
05/15/2018:07:36:42	244.444	Fail	176.692	Fail	16.899	17.273	1.728	1.701
05/15/2018:07:36:57	159.259	Fail	124.06	Fail	17.351	17.676	1.759	1.731
05/15/2018:07:37:12	125.926	Fail	139.098	Fail	17.717	18	1.791	1.771
05/15/2018:07:37:27	137.037	Fail	124.06	Fail	18.011	18.25	1.828	1.793
05/15/2018:07:37:42	140.741	Fail	116.541	Fail	18.254	18.452	1.861	1.829
05/15/2018:07:37:57	122.222	Fail	120.301	Fail	18.442	18.612	1.889	1.853
05/15/2018:07:38:12	100	Fail	86.466	Fail	18.604	18.76	1.911	1.872
05/15/2018:07:38:27	81.481	Fail	71.429	Fail	18.739	18.886	1.93	1.889
05/15/2018:07:38:42	70.37	Fail	67.669	Fail	18.856	19.002	1.946	1.906
05/15/2018:07:38:57	70.37	Fail	67.669	Fail	18.946	19.096	1.965	1.923
05/15/2018:07:39:12	70.37	Fail	67.669	Fail	19.022	19.182	1.981	1.94
05/15/2018:07:39:27	55.556	Fail	60.15	Fail	19.081	19.252	1.993	1.953
05/15/2018:07:39:42	33.333	Fail	33.835	Fail	19.126	19.312	1.998	1.957
05/15/2018:07:39:57	18.519	Fail	15.038	Fail	19.155	19.364	2.002	1.961
05/15/2018:07:40:12	11.111	Fail	15.038	Fail	19.168	19.399	2.004	1.964
05/15/2018:07:40:27	7.407	Pass	18.797	Fail	19.171	19.43	2.006	1.97
05/15/2018:07:40:42	7.407	Pass	30.075	Fail	19.179	19.454	2.007	1.979
05/15/2018:07:40:57	7.407	Pass	30.075	Fail	19.186	19.477	2.009	1.985
05/15/2018:07:41:12	7.407	Pass	22.556	Fail	19.19	19.499	2.011	1.991
05/15/2018:07:41:27	14.815	Fail	22.556	Fail	19.204	19.512	2.017	1.996
05/15/2018:07:41:42	14.815	Fail	18.797	Fail	19.209	19.531	2.019	2
05/15/2018:07:41:57	11.111	Fail	18.797	Fail	19.213	19.535	2.022	2.006
05/15/2018:07:42:12	14.815	Fail	18.797	Fail	19.201	19.533	2.026	2.009
05/15/2018:07:42:27	7.407	Pass	11.278	Fail	19.198	19.54	2.026	2.011
05/15/2018:07:42:42	3.704	Pass	7.519	Pass	19.181	19.537	2.028	2.013
05/15/2018:07:42:57	3.704	Pass	7.519	Pass	19.18	19.538	2.028	2.015

Hg-324K-1099								
HgK_324 Data	HTG2LEE2018R4	5/15/2018	7:51:43					
DGM1 ID	DGM2 ID	Trap1 ID	Trap2 ID					
3605445	3605446	450073	465536					
Time:	Leak 1	Status	Leak 2	Status	Vacuum1	Vacuum2	DGM 1	DGM 2
Day:hh:mm	ccpermin	P-F	ccpermin	P-F	in-Hg	in-Hg	liter	liter
05/15/2018:07:51:57	1236.537	Fail	1266.417	Fail	2.526	2.445	0.369	0.383
05/15/2018:07:52:12	1462.963	Fail	1556.391	Fail	6.272	5.983	0.731	0.778
05/15/2018:07:52:27	1148.148	Fail	1270.677	Fail	8.962	8.606	0.943	1.019
05/15/2018:07:52:42	829.63	Fail	932.331	Fail	10.984	10.587	1.146	1.244
05/15/2018:07:52:57	807.407	Fail	857.143	Fail	12.583	12.129	1.346	1.447
05/15/2018:07:53:12	674.074	Fail	703.008	Fail	13.85	13.366	1.483	1.596
05/15/2018:07:53:27	418.519	Fail	447.368	Fail	14.79	14.372	1.556	1.671
05/15/2018:07:53:42	288.889	Fail	345.865	Fail	15.551	15.195	1.628	1.769
05/15/2018:07:53:57	303.704	Fail	368.421	Fail	16.24	15.887	1.707	1.855
05/15/2018:07:54:12	300	Fail	323.308	Fail	16.799	16.504	1.778	1.93
05/15/2018:07:54:27	240.741	Fail	323.308	Fail	17.254	17.021	1.828	2.017
05/15/2018:07:54:42	229.63	Fail	259.398	Fail	17.621	17.45	1.893	2.06
05/15/2018:07:54:57	233.333	Fail	180.451	Fail	17.924	17.808	1.944	2.107
05/15/2018:07:55:12	144.444	Fail	176.692	Fail	18.165	18.095	1.965	2.148
05/15/2018:07:55:27	114.815	Fail	146.617	Fail	18.37	18.328	2.002	2.18
05/15/2018:07:55:42	114.815	Fail	127.82	Fail	18.539	18.515	2.022	2.212
05/15/2018:07:55:57	81.481	Fail	90.226	Fail	18.678	18.671	2.043	2.226
05/15/2018:07:56:12	81.481	Fail	78.947	Fail	18.806	18.814	2.063	2.252
05/15/2018:07:56:27	77.778	Fail	86.466	Fail	18.908	18.938	2.081	2.269
05/15/2018:07:56:42	66.667	Fail	48.872	Fail	18.991	19.05	2.096	2.276
05/15/2018:07:56:57	55.556	Fail	30.075	Fail	19.06	19.142	2.109	2.284
05/15/2018:07:57:12	48.148	Fail	30.075	Fail	19.115	19.222	2.12	2.291
05/15/2018:07:57:27	44.444	Fail	22.556	Fail	19.161	19.292	2.131	2.295
05/15/2018:07:57:42	25.926	Fail	18.797	Fail	19.188	19.348	2.133	2.301
05/15/2018:07:57:57	7.407	Pass	18.797	Fail	19.209	19.398	2.135	2.305
05/15/2018:07:58:12	3.704	Pass	15.038	Fail	19.22	19.437	2.135	2.308
05/15/2018:07:58:27	7.407	Pass	15.038	Fail	19.234	19.469	2.139	2.312
05/15/2018:07:58:42	14.815	Fail	11.278	Fail	19.239	19.493	2.143	2.314
05/15/2018:07:58:57	7.407	Pass	7.519	Pass	19.235	19.512	2.143	2.316

Time:	Stack Pressure:	Sat% H2O:	Static:	Barometric:	Flowmeter1:	Vacuum1:	Flowmeter2:	Vacuum2:	Stack Temp:	Sorbent Temp:	Probe Temp:	DGM#1 Temp:	Condenser Temp:	DGM#2 Temp:	DGM1*:	DGM2*:	DGM1:	DGM2:
day:hh:mm:ss	in-Hg	Percent	in-H2O	in-Hg	l/min	in-Hg	l/min	in-Hg	degF	degF	degF	degF	degF	degF	liters STP	liters STP	liters nominal	liters nominal
20180515:08:06:46	23.4	13.0	-3.4	23.7	0.239	1.7	0.24	1.7	115.6	286.7	286.9	77.9	51.8	78.4	1.284	1.33	1.652	1.712
20180515:08:11:46	23.4	14.7	-3.8	23.7	0.25	2.1	0.25	2.1	120.1	286.6	287.1	77.8	51.4	78.2	2.644	2.642	3.398	3.398
20180515:08:16:46	23.4	15.8	-3.9	23.7	0.25	2.2	0.25	2.2	122.6	286.3	286.9	77.8	51.3	78.2	3.996	4.006	5.135	5.152
20180515:08:21:46	23.4	16.4	-3.8	23.7	0.25	2.2	0.25	2.2	123.9	286.1	286.7	77.9	51.1	78.3	5.308	5.317	6.82	6.838
20180515:08:26:46	23.4	16.7	-3.8	23.7	0.25	2.2	0.25	2.2	124.7	286.0	286.7	78.0	51.0	78.4	6.691	6.674	8.598	8.583
20180515:08:31:46	23.4	17.0	-3.8	23.7	0.25	2.2	0.25	2.2	125.3	286.0	286.7	78.1	51.0	78.6	8.007	7.984	10.289	10.269
20180515:08:36:46	23.4	17.2	-3.8	23.7	0.25	2.2	0.25	2.2	125.8	285.9	286.6	78.3	50.9	78.7	9.374	9.347	12.046	12.023
20180515:08:41:46	23.4	17.5	-3.9	23.7	0.25	2.2	0.25	2.1	126.4	285.9	286.6	78.4	50.9	78.8	10.713	10.659	13.769	13.711
20180515:08:46:46	23.4	17.7	-3.9	23.7	0.25	2.1	0.25	2.1	126.8	285.8	286.6	78.5	50.9	79.0	12.035	12.039	15.469	15.487
20180515:08:51:46	23.4	17.8	-4.0	23.7	0.25	2.1	0.25	2.1	126.9	285.7	286.5	78.6	50.8	79.1	13.415	13.353	17.244	17.179
20180515:08:56:46	23.4	17.4	-4.4	23.7	0.25	2.1	0.25	2.1	126.2	285.6	286.5	78.7	50.8	79.2	14.742	14.714	18.952	18.932
20180515:09:01:46	23.4	16.8	-4.6	23.7	0.25	2.1	0.25	2.1	124.7	285.6	286.5	78.9	50.8	79.4	16.117	16.078	20.722	20.69
20180515:09:06:46	23.4	17.2	-4.2	23.7	0.25	2.1	0.25	2.1	125.7	285.6	286.4	79.0	50.8	79.5	17.471	17.391	22.465	22.382
20180515:09:11:46	23.4	17.4	-4.1	23.7	0.25	2.1	0.25	2.1	126.1	285.7	286.5	79.2	50.8	79.6	18.788	18.76	24.161	24.147
20180515:09:16:46	23.4	17.5	-4.0	23.7	0.25	2.1	0.25	2.1	126.4	285.7	286.4	79.3	50.8	79.7	20.173	20.083	25.946	25.852
20180515:09:21:46	23.4	17.6	-4.0	23.7	0.25	2.1	0.25	2.1	126.6	285.7	286.4	79.5	50.7	79.9	21.5	21.458	27.656	27.626
20180515:09:26:46	23.4	17.7	-3.9	23.7	0.25	2.1	0.25	2.1	126.8	285.8	286.5	79.6	50.8	80.0	22.857	22.774	29.406	29.323
20180515:09:31:46	23.4	17.7	-3.9	23.7	0.25	2.1	0.25	2.1	126.9	285.8	286.4	79.8	50.7	80.1	24.216	24.141	31.157	31.086
20180515:09:36:46	23.4	17.9	-3.8	23.7	0.25	2.1	0.25	2.1	127.2	285.7	286.5	80.0	50.8	80.3	25.538	25.467	32.863	32.799
20180515:09:41:46	23.4	17.9	-3.7	23.7	0.25	2.1	0.25	2.1	127.2	285.7	286.5	80.1	50.7	80.4	26.927	26.798	34.656	34.517
20180515:09:46:46	23.4	17.9	-3.7	23.7	0.25	2.1	0.25	2.1	127.2	285.7	286.4	80.2	50.8	80.5	28.239	28.165	36.348	36.282
20180515:09:51:46	23.4	17.9	-3.7	23.7	0.25	2.1	0.25	2.1	127.3	285.7	286.4	80.3	50.8	80.6	29.592	29.475	38.094	37.974
20180515:09:56:46	23.4	17.9	-3.7	23.7	0.25	2.1	0.25	2.1	127.2	285.6	286.4	80.4	50.8	80.7	30.96	30.853	39.861	39.754
20180515:10:01:46	23.4	17.8	-3.7	23.7	0.25	2.1	0.25	2.1	127.1	285.7	286.5	80.6	50.8	80.9	32.288	32.169	41.576	41.455
20180515:10:06:46	23.4	17.1	-4.5	23.7	0.25	2.1	0.25	2.1	125.5	285.6	286.4	80.7	50.8	81.0	33.671	33.552	43.363	43.242
20180515:10:11:46	23.4	16.9	-4.1	23.7	0.25	2.1	0.25	2.1	125.1	285.7	286.5	80.9	50.8	81.1	35.011	34.865	45.094	44.94
20180515:10:16:46	23.4	17.3	-3.8	23.7	0.25	2.1	0.25	2.1	126.0	285.7	286.4	81.0	50.8	81.2	36.34	36.215	46.813	46.686
20180515:10:21:46	23.4	17.4	-3.7	23.7	0.25	2.1	0.25	2.1	126.2	285.8	286.5	81.2	50.8	81.3	37.725	37.581	48.604	48.453
20180515:10:26:46	23.4	17.5	-3.7	23.7	0.25	2.1	0.25	2.1	126.4	285.8	286.5	81.3	50.8	81.4	39.052	38.893	50.32	50.15
20180515:10:31:46	23.4	17.5	-3.7	23.7	0.25	2.1	0.25	2.1	126.5	285.8	286.4	81.4	50.8	81.5	40.409	40.265	52.076	51.925
20180515:10:36:46	23.4	17.6	-3.6	23.7	0.25	2.1	0.25	2.1	126.7	285.8	286.5	81.5	50.8	81.7	41.766	41.586	53.831	53.635
20180515:10:41:46	23.5	17.6	-3.5	23.7	0.25	2.1	0.25	2.1	126.7	285.7	286.4	81.5	50.8	81.8	43.1	42.967	55.557	55.423
20180515:10:46:46	23.5	17.6	-3.5	23.7	0.25	2.1	0.25	2.1	126.7	285.7	286.4	81.5	50.8	81.9	44.481	44.284	57.344	57.128
20180515:10:51:46	23.5	17.7	-3.5	23.7	0.25	2.1	0.25	2.1	126.8	285.7	286.4	81.6	50.8	81.9	45.816	45.631	59.072	58.872
20180515:10:56:46	23.5	17.6	-3.6	23.7	0.25	2.1	0.25	2.1	126.6	285.7	286.4	81.6	50.8	82.0	47.153	46.997	60.802	60.641
20180515:11:01:46	23.4	17.5	-3.7	23.7	0.25	2.1	0.25	2.1	126.4	285.7	286.4	81.7	50.8	82.1	48.539	48.318	62.596	62.352
20180515:11:06:46	23.4	17.4	-3.7	23.7	0.25	2.1	0.25	2.1	126.3	285.7	286.5	81.7	50.8	82.2	49.874	49.699	64.324	64.141
20180515:11:11:46	23.4	17.4	-3.8	23.7	0.25	2.1	0.25	2.1	126.1	285.7	286.4	81.7	50.8	82.3	51.231	51.022	66.08	65.855
20180515:11:16:46	23.4	17.3	-3.8	23.7	0.25	2.1	0.25	2.1	126.0	285.7	286.3	81.8	50.8	82.3	52.59	52.393	67.839	67.632
20180515:11:21:46	23.4	17.3	-3.7	23.7	0.25	2.1	0.25	2.1	126.0	285.7	286.3	81.9	50.8	82.4	53.927	53.739	69.57	69.376
20180515:11:26:46	23.4	17.3	-3.7	23.7	0.25	2.1	0.25	2.1	126.0	285.7	286.4	81.9	50.7	82.5	55.311	55.058	71.363	71.086
20180515:11:31:46	23.4	17.3	-3.7	23.7	0.25	2.1	0.25	2.1	126.0	285.7	286.3	82.0	50.8	82.6	56.653	56.43	73.102	72.865
20180515:11:36:46	23.4	17.3	-3.8	23.7	0.25	2.1	0.25	2.1	126.0	285.7	286.4	82.1	50.8	82.7	57.98	57.757	74.82	74.585
20180515:11:41:46	23.4	17.4	-3.8	23.7	0.25	2.1	0.25	2.1	126.1	285.8	286.4	82.3	50.8	82.7	59.367	59.134	76.617	76.37
20180515:11:46:46	23.4	17.4	-3.7	23.7	0.25	2.1	0.25	2.1	126.2	285.7	286.3	82.4	50.8	82.8	60.692	60.447	78.333	78.073
20180515:11:51:46	23.4	17.4	-3.7	23.7	0.25	2.1	0.25	2.1	126.2	285.8	286.4	82.5	50.9	82.9	62.049	61.809	80.093	79.84
20180515:11:56:46	23.4	17.4	-3.7	23.7	0.25	2.1	0.25	2.1	126.3	285.8	286.3	82.6	50.8	83.0	63.422	63.175	81.872	81.613
20180515:12:01:46	23.4	17.4	-3.7	23.7	0.25	2.1	0.25	2.1	126.3	285.7	286.3	82.7	50.9	83.1	64.75	64.484	83.594	83.312
20180515:12:06:46	23.4	17.4	-3.7	23.7	0.25	2.1	0.25	2.1	126.1	285.8	286.4	82.9	50.8	83.2	66.129	65.863	85.383	85.102
20180515:12:11:46	23.4	17.4	-3.7	23.7	0.25	2.1	0.25	2.1	126.1	285.8	286.3	83.0	50.9	83.3	67.483	67.183	87.141	86.816
20180515:12:16:46	23.4	17.3	-3.7	23.7	0.25	2.1	0.25	2.1	126.1	285.8	286.4	83.0	50.8	83.4	68.809	68.557	88.861	88.6
20180515:12:21:46	23.4	17.3	-3.7	23.7	0.25	2.1	0.25	2.1	126.0	285.8	286.4	83.1	50.9	83.5	70.2	69.888	90.667	90.329
20180515:12:26:46	23.4	17.3	-3.7	23.7	0.25	2.1	0.25	2.1	125.9	285.8	286.4	83.2	50.8	83.6	71.527	71.215	92.389	92.053
20180515:12:31:46	23.4	17.3	-3.7	23.7	0.25	2.1	0.25	2.1	126.1	285.8	286.4	83.2	50.9	83.7	72.866	72.582	94.128	93.829
20180515:12:36:46	23.4	17.4	-3.7	23.7	0.25	2.1	0.25	2.1	126.1	285.8	286.3	83.3	50.8	83.7	74.244	73.908	95.917	95.551
20180515:12:41:46	23.4	17.4	-3.6	23.7	0.25	2.1	0.25	2.1	126.1	285.8	286.4	83.4	50.9	83.8	75.577	75.287	97.648	97.344
20180515:12:46:46	23.4	17.3	-3.7	23.7	0.25	2.1	0.25	2.1	126.0	285.8	286.4	83.4	50.8	83.9	76.938	76.596	99.415	99.045
20180515:12:51:46	23.4	17.3	-3.8	23.7	0.25	2.1	0.25	2.1	126.0	285.8	286.4	83.5	50.9	84.0	78.293	77.954	101.174	100.81
20180515:12:56:46	23.4	17.3	-3.8	23.7	0.25	2.1	0.25	2.1	126.0	285.8	286.4	83.6	50.9	84.0	79.629	79.317	102.909	102.581
20180515:13:01:46	23.4	17.3	-3.7	23.7	0.25	2.1	0.25	2.1	126.1	285.8	286.3	83.7	50.9	84.1	81.011	80.628	104.706	104.286
20180515:13:06:46	23.4	17.3	-3.7	23.7	0.25	2.1	0.25	2.1	126.1	285.8	286.4	83.7	50.9	84.2	82.355	82.003	106.452	106.073
20180515:13:11:46	23.4	17.4	-3.8	23.7	0.25	2.1	0.25	2.1	126.2	285.9	286.4	83.8	50.9	84.3	83.679	83.325	108.172	107.793
20180515:13:16:46	23.4	17.4	-3.6	23.7	0.25	2.1	0.25	2.1	126.3	285.8	286.4	83.9	50.9	84.3	85.07	84.698	109.98	109.579
20180515:13:21:46	23.4	17.3	-4.0	23.7	0.25	2.1	0.25	2.1	125.9	285.7	286.4	84.0	50.9	84.4	86.394	86.038	111.7	111.321
20180515:13:26:46	23.4	16.5	-4.4	23.7	0.25	2.1	0.25	2.1	124.1	285.7	286.4	84.1	50.9	84.5	87.741	87.358	113.452	113.039
20180515:13:31:46	23.4	16.8	-3.9	23.7	0.25	2.1	0.25	2.1	125.0	285.8	286.5	84.3	51.0	84.6	89.123	88.729	115.25	114.823
20180515:13:36:46	23.4	17.1	-3.7	23.7	0.25	2.1	0.25	2.1	125.5	285.8	286.4	84.3	50.9	84.6	90.46	90.055	116.989	116.549
20180515:13:41:46	23.4	17.2	-3.7	23.7	0.25	2.1	0.25	2.1	125.8	285.9	286.4	84.4	50.9	84.7	91.818	91.434	118.756	118.344
20180515:13:46:46	23.4	17.3	-3.7	23.7	0.25	2.1	0.25	2.1	126.0	285.9	286.4	84.5	50.9	84.8	93.186	92.756	120.535	120.066
20180515:13:51:46	23.4	17.5	-3.7	23.7	0.25	2.1	0.25	2.1	126.3	285.8	286.4	84.6	51.0	84.9	94.514	94.099	122.263	121.814
20180515:13:56:46	23.4	17.5	-3.5	23.7	0.25	2.1	0.25	2.1	126.4	285.8	286.4	84.7	50.9	85.0	95.895	95.461	124.061	123.588
20180515:14:01:46	23.4	17.4	-3.5	23.7	0.25	2.1	0.25	2.1	126.3	285.8	286.4	84.8	51.0	85.0	97.253	96.787	125.83	125.316
20180515:14:06:46	23.4	17.4	-3.6	23.7	0.25	2.1	0.25	2.1	126.3	285.8	286.4	84.9	50.9	85.1	98.58	98.164	127.557	127.111
20180515:14:11:46	23.4	17.3	-3.6	23.7	0.25	2.1	0.25	2.1	126.1	285.8	286.4	84.9	51.0	85.2	99.964	99.477	129.361	128.821
20180515:14:16:46	23.4	17.3	-3.6	23.7	0.25	2.1	0.25	2.1	126.1	285.8	286.4	84.9	50.9	85.3	101.305	100.833	131.107	130.588
20180515:14:21:46	23.4	17.3	-3.6	23.7	0.25	2.1	0.25	2.1	126.1	285.8	286.4	84.9	50.9	85.3	102.629	102.194	132.831	132.363
20180515:14:26:46	23.4	17.4	-3.6	23.7	0.25	2.1	0.25	2.1	126.2	285.8	286.4	84.9	50.9	85.3	104.022	103.501	134.646	134.066
20180515:14:31:46	23.4	17.0	-4.3	23.7	0.25	2.1	0.25	2.1	125.3	285.8	286.4	85.0	50.9	85.4	105.348	104.881	136.374	135.865
20180515:14:36:46	23.4	16.6	-4.1	23.7	0.25	2.1	0.25	2.1	124.3	285.8	286.4	85.0	50.9	85.5	106.693	106.201	138.126	137.586
20180515:14:41:46	23.4	16.9	-3.7	23.7	0.25	2.1	0.25	2.1	125.2	285.9	286.4	85.1	51.0	85.5	108.074	107.566	139.926	139.367
20180515:14:46:46	23.4	17.3	-3.7	23.7	0.25	2.1	0.25	2.1	125.9	285.9	286.4	85.1	50.9	85.6	109.409	108.915	141.665	141.126
20180515:14:51:46	23.4	17.4	-3.6	23.7	0.25	2.1	0.25	2.1	126.3	285.8	286.4	85.1	50.9	85.6	110.762	110.233	143.428	142.846
20180515:14:56:46	23.4	17.4	-3.6	23.7	0.25	2.1	0.25	2.1	126.3	285.8	286.4	85.1	50.9	85.7	112.131	111.608	145.213	144.639
20180515:15:01:46	23.4	17.4	-3.6	23.7	0.25	2.1	0.25	2.1	126.2	285.8	286.4	85.2	50.9	85.7	113.463	112.932	146.948	146.367
20180515:15:06:46	23.4	17.4	-3.5	23.7	0.25	2.1	0.25	2.1	126.1	285.8	286.4	85.2	50.9	85.7	114.838	114.304	148.741	148.156
20180515:15:11:46	23.4	17.4	-3.6	23.7	0.25	2.1	0.25	2.1	126.1	285.8	286.4	85.2	50.9	85.8	116.188	115.649	150.5	149.912
20180515:15:16:46	23.4	17.3	-3.7	23.7	0.25	2.1	0.25	2.1	126.0	285.8	286.4	85.2	50.9	85.9	117.525	116.97	152.243	151.635
20180515:15:21:46	23.4	17.3	-3.7	23.7	0.25	2.1	0.25	2.1	126.0	285.8	286.4	85.3	50.9	85.9	118.907	118.345	154.044	153.43
20180515:15:26:46	23.4	17.3	-3.7	23.7	0.25	2.1	0.25	2.1	126.0	285.9	286.4	85.3	50.9	86.0	120.252	119.667	155.798	155.156

Time: day:hh:mm:ss	Stack Pressure: in-Hg	Sat% H2O: Percent	Static: in-H2O	Barometric: in-Hg	Flowmeter1: l/min	Vacuum1: in-Hg	Flowmeter2: l/min	Vacuum2: in-Hg	Stack Temp: degF	Sorbent Temp: degF	Probe Temp: degF	DGM#1 Temp: degF	Condenser Temp: degF	DGM#2 Temp: degF	DGM1*: liters STP	DGM2*: liters STP	DGM1: liters nominal	DGM2: liters nominal
20180515:15:31:46	23.4	17.4	-3.7	23.7	0.25	2.1	0.25	2.1	126.1	285.8	286.4	85.3	50.9	86.0	121.578	121.042	157.528	156.951
20180515:15:36:46	23.4	17.3	-3.8	23.7	0.25	2.1	0.25	2.1	126.0	285.8	286.4	85.4	50.9	86.0	122.966	122.384	159.337	158.703
20180515:15:41:46	23.4	16.5	-4.6	23.7	0.25	2.1	0.25	2.1	124.1	285.7	286.4	85.4	50.9	86.1	124.299	123.705	161.076	160.427
20180515:15:46:46	23.4	16.7	-3.9	23.7	0.25	2.1	0.25	2.1	124.6	285.8	286.4	85.5	50.9	86.2	125.637	125.083	162.82	162.227
20180515:15:51:46	23.4	17.0	-3.8	23.7	0.25	2.1	0.25	2.1	125.4	285.9	286.5	85.6	51.0	86.2	127.026	126.405	164.633	163.953
20180515:15:56:46	23.4	17.1	-3.8	23.7	0.25	2.1	0.25	2.1	125.5	285.8	286.4	85.7	50.9	86.2	128.353	127.779	166.365	165.748
20180515:16:01:46	23.4	17.2	-3.8	23.7	0.25	2.1	0.25	2.1	125.8	285.9	286.5	85.9	51.0	86.3	129.704	129.12	168.128	167.5
20180515:16:06:46	23.4	17.3	-3.8	23.7	0.25	2.1	0.25	2.1	125.9	285.9	286.5	85.9	50.9	86.4	131.09	130.44	169.937	169.224
20180515:16:11:46	23.4	17.3	-3.8	23.7	0.25	2.1	0.25	2.1	126.0	285.9	286.4	86.0	51.0	86.5	132.421	131.812	171.674	171.017
20180515:16:16:46	23.4	17.4	-3.7	23.7	0.25	2.1	0.25	2.1	126.1	285.9	286.4	86.0	51.0	86.5	133.772	133.131	173.439	172.741
20180515:16:21:46	23.4	17.4	-3.5	23.7	0.25	2.1	0.25	2.1	126.2	285.8	286.3	86.0	51.0	86.5	135.143	134.506	175.228	174.538
20180515:16:26:46	23.4	17.5	-3.5	23.7	0.25	2.1	0.25	2.1	126.5	285.8	286.4	86.0	50.9	86.6	136.476	135.839	176.969	176.28
20180515:16:31:46	23.4	17.5	-3.5	23.7	0.25	2.1	0.25	2.1	126.4	285.8	286.4	86.0	51.0	86.6	137.84	137.162	178.75	178.009
20180515:16:36:46	23.4	17.5	-3.6	23.7	0.25	2.1	0.25	2.1	126.3	285.7	286.3	86.0	51.0	86.6	139.196	138.541	180.52	179.812
20180515:16:41:46	23.4	17.4	-3.6	23.7	0.25	2.1	0.25	2.1	126.3	285.8	286.3	86.1	51.0	86.7	140.531	139.864	182.263	181.541
20180515:16:46:46	23.4	17.1	-4.1	23.7	0.25	2.1	0.25	2.1	125.5	285.7	286.4	86.1	51.0	86.7	141.912	141.242	184.067	183.342
20180515:16:51:46	23.4	16.5	-4.3	23.7	0.25	2.1	0.25	2.1	124.1	285.7	286.4	86.2	51.0	86.8	143.267	142.586	185.837	185.1
20180515:16:56:46	23.4	17.0	-3.7	23.7	0.25	2.1	0.25	2.1	125.4	285.8	286.5	86.4	51.0	86.8	144.603	143.91	187.581	186.831
20180515:17:01:46	23.4	17.4	-3.6	23.7	0.25	2.1	0.25	2.1	126.2	285.9	286.4	86.5	51.0	86.9	145.987	145.289	189.391	188.633
20180515:17:06:46	23.4	17.5	-3.7	23.7	0.25	2.1	0.25	2.1	126.4	285.8	286.5	86.6	51.1	87.0	147.347	146.621	191.169	190.376
20180515:17:11:46	23.4	17.5	-3.7	23.7	0.25	2.1	0.25	2.1	126.4	285.8	286.5	86.7	51.0	87.0	148.679	147.983	192.909	192.158
20180515:17:16:46	23.4	17.5	-3.7	23.7	0.25	2.1	0.25	2.1	126.3	285.8	286.4	86.8	51.1	87.1	150.063	149.345	194.719	193.94
20180515:17:21:46	23.4	17.4	-3.7	23.7	0.25	2.1	0.25	2.1	126.2	285.8	286.4	86.7	51.0	87.1	151.418	150.656	196.491	195.654
20180515:17:26:46	23.4	17.4	-3.7	23.7	0.25	2.1	0.25	2.1	126.1	285.8	286.4	86.8	51.0	87.2	152.745	152.036	198.226	197.461
20180515:17:31:46	23.4	17.4	-3.6	23.7	0.25	2.1	0.25	2.1	126.2	285.9	286.4	86.8	51.0	87.2	154.129	153.361	200.035	199.194
20180515:17:36:46	23.4	17.4	-3.7	23.7	0.25	2.1	0.25	2.1	126.2	285.9	286.4	86.7	51.0	87.2	155.476	154.714	201.796	200.964
20180515:17:41:46	23.4	17.4	-3.7	23.7	0.25	2.1	0.25	2.2	126.1	285.8	286.4	86.7	51.0	87.2	156.81	156.074	203.541	202.744
20180515:17:46:46	23.4	17.3	-3.7	23.7	0.25	2.1	0.25	2.2	126.0	285.8	286.4	86.7	51.0	87.3	158.198	157.393	205.356	204.472
20180515:17:51:46	23.4	17.4	-3.7	23.7	0.25	2.1	0.25	2.2	126.1	285.8	286.4	86.7	51.0	87.3	159.539	158.778	207.109	206.284
20180515:17:56:46	23.4	16.8	-4.6	23.7	0.25	2.1	0.25	2.1	124.7	285.8	286.4	86.7	51.0	87.3	160.875	160.094	208.856	208.008
20180515:18:01:46	23.4	16.7	-4.2	23.7	0.25	2.1	0.25	2.1	124.7	285.8	286.4	86.8	51.0	87.4	162.27	161.448	210.68	209.78
20180515:18:06:46	23.4	17.2	-3.9	23.7	0.25	2.1	0.25	2.1	125.7	285.8	286.3	86.8	51.0	87.4	163.618	162.818	212.443	211.573
20180515:18:11:46	23.4	17.6	-3.7	23.7	0.25	2.1	0.25	2.1	126.5	285.8	286.4	86.8	51.0	87.4	164.95	164.149	214.185	213.316
20180515:18:16:46	23.4	17.6	-3.8	23.7	0.25	2.1	0.25	2.1	126.7	285.8	286.4	86.8	51.0	87.4	166.345	165.537	216.009	215.133
20180515:18:21:46	23.4	17.6	-3.7	23.7	0.25	2.1	0.25	2.1	126.6	285.8	286.4	86.8	51.0	87.5	167.691	166.874	217.77	216.883
20180515:18:26:46	23.4	17.4	-3.7	23.7	0.25	2.1	0.25	2.1	126.3	285.7	286.3	86.9	51.0	87.5	169.026	168.204	219.517	218.626
20180515:18:31:46	23.4	17.3	-3.7	23.7	0.25	2.1	0.25	2.1	126.0	285.7	286.4	86.9	51.1	87.6	170.423	169.582	221.344	220.43
20180515:18:36:46	23.4	17.2	-3.8	23.7	0.25	2.1	0.25	2.1	125.7	285.8	286.4	87.0	51.0	87.6	171.771	170.913	223.107	222.175
20180515:18:41:46	23.4	17.1	-3.8	23.7	0.25	2.1	0.25	2.1	125.6	285.7	286.4	87.1	51.1	87.6	173.109	172.278	224.859	223.962
20180515:18:46:46	23.4	17.1	-3.7	23.7	0.25	2.1	0.25	2.1	125.5	285.8	286.4	87.2	51.1	87.7	174.504	173.644	226.685	225.752
20180515:18:51:46	23.4	17.0	-3.7	23.7	0.25	2.1	0.25	2.1	125.3	285.8	286.4	87.3	51.1	87.7	175.855	174.966	228.454	227.485
20180515:18:56:46	23.4	16.9	-3.8	23.7	0.25	2.1	0.25	2.1	125.1	285.8	286.4	87.4	51.1	87.8	177.195	176.352	230.209	229.301
20180515:19:01:46	23.4	16.3	-4.5	23.7	0.25	2.1	0.25	2.1	123.7	285.8	286.5	87.5	51.1	87.8	178.588	177.676	232.033	231.036
20180515:19:06:46	23.4	16.2	-4.1	23.7	0.25	2.1	0.25	2.1	123.5	285.8	286.4	87.6	51.1	87.9	179.939	179.022	233.804	232.801
20180515:19:11:46	23.4	16.4	-4.0	23.7	0.25	2.1	0.25	2.1	123.9	285.8	286.4	87.7	51.1	87.9	181.276	180.397	235.556	234.603
20180515:19:16:46	23.4	16.4	-4.0	23.7	0.25	2.1	0.25	2.1	123.9	286.0	286.5	87.8	51.2	88.0	182.668	181.73	237.38	236.35
20180515:19:21:46	23.4	16.4	-4.0	23.7	0.25	2.1	0.25	2.1	124.0	285.9	286.4	87.8	51.1	88.0	184.031	183.108	239.165	238.156
20180515:19:26:46	23.4	16.5	-4.0	23.7	0.25	2.1	0.25	2.1	124.1	285.9	286.4	87.9	51.2	88.0	185.363	184.464	240.911	239.934
20180515:19:31:46	23.4	16.4	-4.1	23.7	0.25	2.1	0.25	2.1	123.9	285.8	286.4	87.9	51.1	88.1	186.751	185.782	242.73	241.662
20180515:19:36:46	23.4	16.4	-4.1	23.7	0.25	2.1	0.25	2.1	123.9	285.8	286.4	88.0	51.2	88.2	188.106	187.17	244.506	243.481
20180515:19:41:46	23.4	16.3	-4.2	23.7	0.25	2.1	0.25	2.1	123.8	285.9	286.4	88.0	51.2	88.2	189.447	188.492	246.263	245.214
20180515:19:46:46	23.4	16.3	-4.2	23.7	0.25	2.1	0.25	2.1	123.7	285.8	286.5	88.1	51.2	88.2	190.833	189.85	248.08	246.994
20180515:19:51:46	23.4	16.2	-4.2	23.7	0.25	2.1	0.25	2.1	123.5	285.9	286.5	88.2	51.2	88.3	192.199	191.219	249.87	248.789
20180515:19:56:46	23.4	15.8	-4.2	23.7	0.25	2.1	0.25	2.1	122.5	285.8	286.4	88.2	51.2	88.3	193.54	192.552	251.628	250.538
20180515:20:01:46	23.4	15.6	-3.9	23.7	0.25	2.1	0.25	2.1	122.1	285.8	286.5	88.3	51.2	88.3	194.914	193.94	253.43	252.357
20180515:20:06:46	23.4	15.9	-4.0	23.7	0.25	2.1	0.25	2.1	122.8	285.8	286.4	88.3	51.2	88.4	196.292	195.285	255.235	254.12
20180515:20:11:46	23.4	15.9	-4.0	23.7	0.25	2.1	0.25	2.1	122.9	285.8	286.4	88.3	51.2	88.4	197.639	196.615	257.002	255.865
20180515:20:16:46	23.4	15.9	-4.0	23.7	0.25	2.1	0.25	2.1	122.9	285.8	286.4	88.4	51.2	88.5	198.998	197.997	258.783	257.677
20180515:20:21:46	23.4	15.9	-3.9	23.7	0.25	2.1	0.25	2.1	122.9	285.8	286.5	88.4	51.2	88.5	200.387	199.327	260.606	259.421
20180515:20:26:46	23.4	15.9	-3.9	23.7	0.25	2.1	0.25	2.1	122.9	285.8	286.5	88.5	51.2	88.5	201.729	200.682	262.365	261.199
20180515:20:31:46	23.4	15.9	-3.9	23.7	0.25	2.1	0.25	2.1	122.9	285.9	286.5	88.4	51.2	88.5	203.089	202.053	264.148	262.996
20180515:20:36:46	23.4	15.9	-3.9	23.7	0.25	2.1	0.25	2.1	122.9	285.8	286.5	88.3	51.1	88.5	204.49	203.387	265.985	264.746
20180515:20:41:46	23.4	16.0	-3.9	23.7	0.25	2.1	0.25	2.1	123.0	285.8	286.4	88.3	51.2	88.5	205.836	204.776	267.75	266.568
20180515:20:46:46	23.4	15.6	-3.9	23.7	0.25	2.1	0.25	2.1	122.2	285.8	286.4	88.2	51.0	88.5	207.182	206.123	269.515	268.335
20180515:20:51:46	23.4	15.5	-3.9	23.7	0.25	2.1	0.25	2.1	121.9	285.8	286.5	88.2	51.1	88.5	208.584	207.452	271.352	270.077
20180515:20:56:46	23.4	15.8	-3.9	23.7	0.25	2.1	0.25	2.1	122.5	285.8	286.4	88.1	51.0	88.5	209.941	208.841	273.13	271.898
20180515:21:01:46	23.4	15.8	-3.9	23.7	0.25	2.1	0.25	2.1	122.7	285.8	286.4	88.0	51.1	88.5	211.285	210.166	274.891	273.637
20180515:21:06:46	23.4	15.9	-3.9	23.7	0.25	2.1	0.25	2.1	122.9	285.8	286.4	88.0	51.1	88.5	212.678	211.527	276.717	275.421
20180515:21:11:46	23.4	15.9	-3.9	23.7	0.25	2.1	0.25	2.1	122.9	285.8	286.4	88.0	51.1	88.5	214.042	212.903	278.504	277.226
20180515:21:16:46	23.4	16.0	-3.9	23.7	0.25	2.1	0.25	2.1	123.0	285.8	286.4	88.0	51.1	88.5	215.375	214.237	280.25	278.976
20180515:21:21:46	23.4	16.0	-3.9	23.7	0.25	2.1	0.25	2.1	123.1	285.8	286.4	87.9	51.1	88.5	216.767	215.618	282.072	280.786
20180515:21:26:46	23.4	16.0	-3.9	23.7	0.25	2.1	0.25	2.1	123.1	285.8	286.4	87.9	51.1	88.5	218.125	216.974	283.852	282.564
20180515:21:31:46	23.4	16.0	-3.9	23.7	0.25	2.1	0.25	2.1	123.2	285.7	286.3	87.9	51.1	88.5	219.473	218.299	285.617	284.301
20180515:21:36:46	23.4	15.7	-3.9	23.7	0.25	2.1	0.25	2.1	122.4	285.8	286.4	87.9	51.1	88.4	220.851	219.692	287.422	286.128
20180515:21:41:46	23.4	15.4	-3.9	23.7	0.25	2.1	0.25	2.1	121.7	285.8	286.5	87.8	51.0	88.4	222.226	221.016	289.222	287.863
20180515:21:46:46	23.4	15.2	-3.8	23.7	0.25	2.1	0.25	2.1	121.2	285.7	286.5	87.8	51.2	88.4	223.568	222.372	290.98	289.641
20180515:21:51:46	23.4	15.6	-3.9	23.7	0.25	2.1	0.25	2.1	122.1	285.8	286.4	87.8	51.1	88.4	224.934	223.753	292.769	291.451
20180515:21:56:46	23.4	16.0	-3.9	23.7	0.25	2.1	0.25	2.2	123.0	285.8	286.5	87.8	51.1	88.4	226.318	225.088	294.581	293.201
20180515:22:01:46	23.4	16.1	-3.9	23.7	0.25	2.1	0.25	2.2	123.3	285.9	286.5	87.8	51.0	88.4	227.663	226.468	296.343	295.009
20180515:22:06:46	23.4	16.1	-3.9	23.7	0.25	2.1	0.25	2.2	123.4	286.0	286.6	87.8	51.1	88.4	229.024	227.833	298.124	296.799
20180515:22:11:46	23.4	16.2	-3.9	23.7	0.25	2.1	0.25	2.2	123.4	286.0	286.5	87.8	51.1	88.4	230.423	229.156	299.956	298.534
20180515:22:16:46	23.4	15.9	-3.9	23.7	0.25	2.1	0.25	2.1	122.9	285.9	286.5	87.8	51.1	88.4	231.766	230.546	301.715	300.355
20180515:22:21:46	23.4	15.5	-3.9	23.7	0.25	2.1	0.25	2.1	121.9	285.9	286.4	87.7	51.0	88.3	233.124	231.883	303.493	302.107
20180515:22:26:46	23.4	15.3	-3.8	23.7	0.25	2.1	0.25	2.1	121.5	285.7	286.5	87.6	51.1	88.3	234.529	233.226	305.331	303.868
20180515:22:31:46	23.4	15.5	-3.9	23.7	0.25	2.1	0.25	2.1	122.0	285.7	286.4	87.6	51.0	88.3	235.876	234.612	307.094	305.684
20180515:22:36:46	23.4	16.0	-3.9	23.7	0.25	2.1	0.25	2.2	123.0	285.7	286.4	87.6	51.1	88.3	237.223	235.949	308.857	307.436
20180515:22:41:46	23.4	16.2	-3.9	23.7	0.25	2.1	0.25	2.2	123.4	285.7	286.4	87.7	51.1	88.3	238.625	237.317	310.693	309.229
20180515:22:46:46	23.4	16.3	-3.9	23.7	0.25	2.2	0.25	2.2	123.7	285.8	286.3	87.6	51.1	88.3	239.987	238.681	312.476	311.017
20180515:22:51:46	23.4	16.4	-3.9	23.7	0.25	2.1	0.25	2.2	123.9	285.8	286.5	87.6	51.1	88.3	241.328	240.021	314.231	312.773

Time: day:hh:mm:ss	Stack Pressure: in-Hg	Sat% H2O: Percent	Static: in-H2O	Barometric: in-Hg	Flowmeter1: l/min	Vacuum1: in-Hg	Flowmeter2: l/min	Vacuum2: in-Hg	Stack Temp: degF	Sorbent Temp: degF	Probe Temp: degF	DGM#1 Temp: degF	Condenser Temp: degF	DGM#2 Temp: degF	DGM1*: liters STP	DGM2*: liters STP	DGM1: liters nominal	DGM2: liters nominal
20180515:22:56:46	23.4	16.5	-3.9	23.7	0.25	2.1	0.25	2.2	124.1	285.9	286.5	87.6	51.1	88.3	242.722	241.415	316.056	314.6
20180515:23:01:46	23.4	16.5	-3.9	23.7	0.25	2.2	0.25	2.2	124.1	285.8	286.4	87.5	51.1	88.2	244.085	242.758	317.839	316.359
20180515:23:06:46	23.4	16.5	-3.9	23.7	0.25	2.1	0.25	2.2	124.2	285.8	286.4	87.5	51.1	88.2	245.427	244.098	319.594	318.115
20180515:23:11:46	23.4	16.4	-3.9	23.7	0.25	2.1	0.25	2.2	124.1	285.8	286.5	87.4	51.1	88.2	246.814	245.485	321.409	319.932
20180515:23:16:46	23.4	16.1	-3.9	23.7	0.25	2.1	0.25	2.1	123.3	285.8	286.4	87.4	51.1	88.2	248.174	246.819	323.189	321.68
20180515:23:21:46	23.4	15.7	-3.9	23.7	0.25	2.1	0.25	2.1	122.5	285.7	286.5	87.4	51.1	88.1	249.523	248.181	324.954	323.464
20180515:23:26:46	23.4	15.5	-3.9	23.7	0.25	2.1	0.25	2.1	122.0	285.7	286.4	87.3	51.1	88.0	250.904	249.558	326.759	325.267
20180515:23:31:46	23.4	15.9	-3.9	23.7	0.25	2.1	0.25	2.1	122.9	285.8	286.5	87.3	51.1	88.0	252.283	250.898	328.563	327.023
20180515:23:36:46	23.4	16.3	-3.9	23.7	0.25	2.1	0.25	2.1	123.7	285.8	286.5	87.3	51.1	88.0	253.636	252.283	330.333	328.836
20180515:23:41:46	23.4	16.5	-3.9	23.7	0.25	2.1	0.25	2.2	124.2	285.9	286.4	87.3	51.1	88.0	254.998	253.648	332.115	330.624
20180515:23:46:46	23.4	16.6	-3.9	23.7	0.25	2.1	0.25	2.1	124.4	285.8	286.5	87.2	51.1	88.0	256.39	254.976	333.935	332.363
20180515:23:51:46	23.4	16.7	-3.9	23.7	0.25	2.1	0.25	2.1	124.6	285.8	286.4	87.2	51.1	87.9	257.728	256.37	335.685	334.188
20180515:23:56:46	23.4	16.7	-3.9	23.7	0.25	2.1	0.25	2.2	124.7	285.9	286.5	87.2	51.1	87.9	259.091	257.708	337.467	335.94
20180516:00:01:46	23.4	16.8	-3.9	23.7	0.25	2.1	0.25	2.2	124.9	285.9	286.4	87.1	51.1	87.9	260.493	259.057	339.3	337.707
20180516:00:06:46	23.4	16.8	-3.9	23.7	0.25	2.1	0.25	2.2	125.0	285.8	286.5	87.0	51.1	87.8	261.838	260.446	341.057	339.524
20180516:00:11:46	23.4	16.9	-3.8	23.7	0.25	2.1	0.25	2.1	125.2	285.9	286.5	87.0	51.1	87.8	263.195	261.785	342.831	341.278
20180516:00:16:46	23.4	17.0	-3.9	23.7	0.25	2.1	0.25	2.1	125.2	285.8	286.3	87.0	51.0	87.8	264.6	263.152	344.669	343.068
20180516:00:21:46	23.4	16.6	-4.1	23.7	0.25	2.1	0.25	2.1	124.4	285.8	286.4	87.0	51.1	87.8	265.95	264.516	346.433	344.853
20180516:00:26:46	23.4	16.2	-3.9	23.7	0.25	2.1	0.25	2.1	123.7	285.8	286.5	87.0	51.1	87.7	267.298	265.861	348.194	346.613
20180516:00:31:46	23.4	16.1	-4.1	23.7	0.25	2.1	0.25	2.1	123.4	285.8	286.3	86.9	51.1	87.7	268.699	267.257	350.026	348.44
20180516:00:36:46	23.4	16.5	-3.8	23.7	0.25	2.1	0.25	2.1	124.2	285.8	286.4	86.9	51.1	87.7	270.055	268.606	351.798	350.205
20180516:00:41:46	23.4	16.8	-4.0	23.7	0.25	2.1	0.25	2.1	124.9	285.9	286.4	86.9	51.1	87.6	271.4	269.943	353.556	351.955
20180516:00:46:46	23.4	17.0	-4.1	23.7	0.25	2.1	0.25	2.1	125.2	285.9	286.4	86.9	51.1	87.6	272.799	271.33	355.383	353.769
20180516:00:51:46	23.4	17.0	-4.0	23.7	0.25	2.1	0.25	2.1	125.4	285.9	286.4	86.8	51.1	87.6	274.161	272.66	357.163	355.509
20180516:00:56:46	23.4	17.1	-4.1	23.7	0.25	2.1	0.25	2.1	125.5	285.9	286.4	86.7	51.1	87.5	275.501	274.021	358.913	357.289
20180516:01:01:46	23.4	17.1	-4.2	23.7	0.25	2.1	0.25	2.1	125.5	285.9	286.5	86.7	51.1	87.5	276.892	275.396	360.73	359.088
20180516:01:06:46	23.4	17.1	-4.3	23.7	0.25	2.1	0.25	2.1	125.4	285.9	286.4	86.6	51.1	87.4	278.255	276.739	362.509	360.844
20180516:01:11:46	23.4	17.1	-4.3	23.7	0.25	2.1	0.25	2.1	125.4	285.8	286.4	86.5	51.1	87.4	279.593	278.129	364.256	362.662
20180516:01:16:46	23.4	17.0	-4.3	23.7	0.25	2.1	0.25	2.1	125.4	285.9	286.4	86.5	51.1	87.3	280.981	279.485	366.067	364.434
20180516:01:21:47	23.4	17.0	-4.3	23.7	0.25	2.1	0.25	2.1	125.3	285.8	286.3	86.4	51.1	87.3	282.34	280.811	367.841	366.167
20180516:01:26:47	23.4	17.0	-4.5	23.7	0.25	2.1	0.25	2.1	125.2	285.8	286.4	86.3	51.1	87.2	283.686	282.207	369.598	367.992
20180516:01:31:47	23.4	16.2	-4.4	23.7	0.25	2.1	0.25	2.1	123.6	285.8	286.4	86.3	51.1	87.2	285.074	283.534	371.409	369.727
20180516:01:36:47	23.4	15.9	-4.2	23.7	0.25	2.1	0.25	2.1	122.9	285.6	286.4	86.3	51.1	87.1	286.431	284.896	373.18	371.508
20180516:01:41:47	23.4	15.7	-4.1	23.7	0.25	2.1	0.25	2.1	122.5	285.6	286.3	86.3	51.1	87.0	287.778	286.271	374.939	373.305
20180516:01:46:47	23.5	16.3	-3.6	23.7	0.25	2.1	0.25	2.1	123.8	285.8	286.4	86.3	51.1	87.0	289.166	287.608	376.75	375.053
20180516:01:51:47	23.5	16.7	-3.6	23.7	0.25	2.1	0.25	2.1	124.7	285.9	286.4	86.3	51.1	87.0	290.528	288.998	378.528	376.868
20180516:01:56:47	23.5	16.9	-3.6	23.7	0.25	2.1	0.25	2.1	125.1	285.9	286.4	86.4	51.1	86.9	291.876	290.346	380.287	378.63
20180516:02:01:47	23.5	17.0	-3.3	23.7	0.25	2.1	0.25	2.1	125.5	285.9	286.4	86.3	51.1	86.9	293.256	291.674	382.089	380.365
20180516:02:06:47	23.5	17.2	-3.4	23.7	0.25	2.1	0.25	2.1	125.9	285.9	286.4	86.3	51.1	86.8	294.623	293.061	383.872	382.177
20180516:02:11:47	23.5	17.5	-3.5	23.7	0.25	2.1	0.25	2.1	126.4	285.9	286.4	86.2	51.0	86.8	295.965	294.396	385.624	383.921
20180516:02:16:47	23.4	17.7	-3.8	23.7	0.25	2.1	0.25	2.1	126.7	285.9	286.4	86.2	51.1	86.7	297.343	295.758	387.422	385.699
20180516:02:21:47	23.4	17.6	-3.8	23.7	0.25	2.1	0.25	2.1	126.7	285.8	286.4	86.1	51.0	86.7	298.71	297.124	389.206	387.483
20180516:02:26:47	23.4	17.7	-3.9	23.7	0.25	2.1	0.25	2.1	126.8	285.9	286.4	86.1	51.1	86.6	300.052	298.455	390.957	389.222
20180516:02:31:47	23.4	17.6	-3.9	23.7	0.25	2.1	0.25	2.1	126.6	285.9	286.4	86.0	51.0	86.6	301.432	299.841	392.757	391.032
20180516:02:36:47	23.4	17.6	-3.9	23.7	0.25	2.1	0.25	2.1	126.7	285.8	286.4	86.0	51.1	86.5	302.809	301.172	394.554	392.771
20180516:02:41:47	23.4	17.4	-4.2	23.7	0.25	2.1	0.25	2.1	126.2	285.8	286.5	86.0	51.0	86.5	304.149	302.521	396.302	394.532
20180516:02:46:47	23.4	16.5	-4.3	23.7	0.25	2.1	0.25	2.1	124.2	285.7	286.3	85.9	51.1	86.5	305.522	303.897	398.093	396.329
20180516:02:51:47	23.4	16.4	-4.4	23.7	0.25	2.1	0.25	2.1	123.9	285.6	286.4	85.8	51.0	86.4	306.888	305.234	399.874	398.075
20180516:02:56:47	23.4	16.1	-4.3	23.7	0.25	2.1	0.25	2.1	123.2	285.7	286.4	85.7	51.1	86.4	308.226	306.615	401.619	399.878
20180516:03:01:47	23.4	16.5	-4.2	23.7	0.25	2.1	0.25	2.1	124.1	285.8	286.4	85.6	51.0	86.3	309.604	307.965	403.415	401.639
20180516:03:06:47	23.4	17.0	-4.2	23.7	0.25	2.1	0.25	2.1	125.4	285.8	286.3	85.5	51.1	86.3	310.959	309.296	405.181	403.376
20180516:03:11:47	23.4	17.2	-4.3	23.7	0.25	2.1	0.25	2.1	125.8	285.9	286.5	85.4	51.0	86.2	312.301	310.679	406.93	405.18
20180516:03:16:47	23.4	17.4	-4.3	23.7	0.25	2.1	0.25	2.1	126.1	285.9	286.4	85.3	51.0	86.1	313.684	312.006	408.731	406.912
20180516:03:21:47	23.4	17.4	-4.3	23.7	0.25	2.1	0.25	2.1	126.2	285.9	286.4	85.3	51.0	86.1	315.046	313.372	410.506	408.694
20180516:03:26:47	23.4	17.5	-4.3	23.7	0.25	2.1	0.25	2.1	126.4	285.9	286.4	85.2	51.0	86.0	316.373	314.728	412.233	410.462
20180516:03:31:47	23.4	17.6	-4.3	23.7	0.25	2.1	0.25	2.1	126.5	285.8	286.4	85.1	51.0	85.9	317.76	316.045	414.039	412.18
20180516:03:36:47	23.4	17.6	-4.4	23.7	0.25	2.1	0.25	2.1	126.5	285.8	286.4	85.0	51.0	85.9	319.103	317.426	415.787	413.981
20180516:03:41:47	23.4	17.6	-4.4	23.7	0.25	2.1	0.25	2.1	126.5	285.8	286.4	84.9	51.0	85.8	320.432	318.756	417.517	415.714
20180516:03:46:47	23.4	17.6	-4.4	23.7	0.25	2.1	0.25	2.1	126.5	285.8	286.3	84.9	51.1	85.7	321.83	320.121	419.337	417.494
20180516:03:51:47	23.4	17.6	-4.4	23.7	0.25	2.1	0.25	2.1	126.5	285.8	286.4	84.8	51.0	85.6	323.156	321.485	421.063	419.273
20180516:03:56:47	23.4	17.6	-4.4	23.7	0.25	2.1	0.25	2.1	126.5	285.8	286.3	84.7	51.1	85.6	324.5	322.802	422.811	420.989
20180516:04:01:47	23.4	16.9	-4.4	23.7	0.25	2.1	0.25	2.1	125.1	285.7	286.4	84.6	51.0	85.5	325.89	324.188	424.62	422.795
20180516:04:06:47	23.4	16.9	-4.4	23.7	0.25	2.1	0.25	2.1	125.0	285.7	286.3	84.6	51.1	85.4	327.221	325.519	426.352	424.53
20180516:04:11:47	23.4	17.2	-4.3	23.7	0.25	2.1	0.25	2.1	125.8	285.8	286.4	84.5	51.0	85.4	328.578	326.878	428.117	426.301
20180516:04:16:47	23.4	17.4	-4.3	23.7	0.25	2.1	0.25	2.1	126.0	285.8	286.3	84.4	51.1	85.3	329.962	328.248	429.917	428.085
20180516:04:21:47	23.4	17.4	-4.4	23.7	0.25	2.1	0.25	2.1	126.2	285.8	286.3	84.4	51.0	85.3	331.296	329.572	431.652	429.81
20180516:04:26:47	23.4	17.4	-4.4	23.7	0.25	2.1	0.25	2.1	126.2	285.8	286.3	84.3	51.0	85.2	332.665	330.958	433.431	431.615
20180516:04:31:47	23.4	17.4	-4.3	23.7	0.25	2.1	0.25	2.1	126.2	285.7	286.3	84.3	51.0	85.1	334.028	332.277	435.204	433.333
20180516:04:36:47	23.4	17.3	-4.3	23.7	0.25	2.1	0.25	2.1	126.0	285.7	286.4	84.3	51.0	85.1	335.365	333.64	436.943	435.107
20180516:04:41:47	23.4	17.2	-4.3	23.7	0.25	2.1	0.25	2.1	125.8	285.7	286.3	84.3	51.0	85.0	336.749	335.003	438.743	436.882
20180516:04:46:47	23.4	17.1	-4.3	23.7	0.25	2.1	0.25	2.1	125.4	285.8	286.3	84.3	51.0	85.0	338.111	336.335	440.513	438.617
20180516:04:51:47	23.4	17.0	-4.3	23.7	0.25	2.1	0.25	2.1	125.3	285.8	286.4	84.2	51.0	84.9	339.444	337.726	442.246	440.427
20180516:04:56:47	23.4	17.1	-4.3	23.7	0.25	2.1	0.25	2.1	125.5	285.8	286.3	84.1	51.1	84.9	340.833	339.042	444.052	442.141
20180516:05:01:47	23.4	17.2	-4.3	23.7	0.25	2.1	0.25	2.1	125.6	285.8	286.3	84.0	51.0	84.8	342.185	340.404	445.809	443.914
20180516:05:06:47	23.4	17.0	-4.4	23.7	0.25	2.1	0.25	2.1	125.4	285.7	286.4	84.0	51.1	84.8	343.525	341.775	447.55	445.697
20180516:05:11:47	23.4	16.3	-4.4	23.7	0.25	2.1	0.25	2.1	123.8	285.6	286.3	83.9	51.0	84.7	344.919	343.116	449.361	447.442
20180516:05:16:47	23.4	16.6	-4.3	23.7	0.25	2.1	0.25	2.1	124.4	285.6	286.3	83.9	51.0	84.6	346.264	344.502	451.109	449.244
20180516:05:21:47	23.4	16.7	-4.2	23.7	0.25	2.1	0.25	2.1	124.6	285.7	286.3	83.8	51.0	84.6	347.602	345.841	452.846	450.987
20180516:05:26:47	23.4	16.6	-4.2	23.7	0.25	2.1	0.25	2.1	124.5	285.8	286.3	83.7	51.0	84.6	348.998	347.181	454.659	452.729
20180516:05:31:47	23.4	16.6	-4.2	23.7	0.25	2.1	0.25	2.1	124.4	285.7	286.3	83.6	51.0	84.5	350.333	348.561	456.393	454.524
20180516:05:36:47	23.4	16.4	-4.4	23.7	0.25	2.1	0.25	2.1	124.1	285.7	286.3	83.6	51.0	84.4	351.682	349.897	458.144	456.261
20180516:05:41:47	23.4	16.3	-4.2	23.7	0.25	2.1	0.25	2.1	123.7	285.7	286.3	83.6	50.9	84.3	353.071	351.285	459.948	458.066
20180516:05:46:47	23.4	16.2	-4.2	23.7	0.25	2.1	0.25	2.1	123.5	285.7	286.4	83.6	51.0	84.3	354.409	352.627	461.685	459.81
20180516:05:51:47	23.4	16.1	-4.2	23.7	0.25	2.1	0.25	2.1	123.2	285.7	286.3	83.5	51.0	84.3	355.772	353.96	463.454	461.543
20180516:05:56:47	23.4	16.1	-4.4	23.7	0.25	2.1	0.25	2.1	123.2	285.6	286.3	83.5	51.0	84.2	357.154	355.341	465.248	463.338
20180516:06:01:47	23.4	16.0	-4.4	23.7	0.25	2.1	0.25	2.1	123.0	285.7	286.3	83.6	51.0	84.2	358.495	356.673	466.989	465.07
20180516:06:06:47	23.4	15.9	-4.3	23.7	0.25	2.1	0.25	2.1	122.8	285.7	286.3	83.6	51.0	84.2	359.869	358.059	468.772	466.87
20180516:06:11:47	23.4	15.3	-4.3	23.7	0.25	2.1	0.25	2.1	121.5	285.7	286.4	83.6	51.0	84.1	361.241	359.406	470.554	468.62
20180516:06:16:47	23.5	15.4	-3.7	23.7	0.25	2.1	0.25	2.1	121.6	285.7	286.4	83.6	51.0	84.0	362.581	360.735	472.293	470.348

Time: day:hh:mm:ss	Stack Pressure: in-Hg	Sat% H2O: Percent	Static: in-H2O	Barometric: in-Hg	Flowmeter1: l/min	Vacuum1: in-Hg	Flowmeter2: l/min	Vacuum2: in-Hg	Stack Temp: degF	Sorbent Temp: degF	Probe Temp: degF	DGM#1 Temp: degF	Condenser Temp: degF	DGM#2 Temp: degF	DGM1*: liters STP	DGM2*: liters STP	DGM1: liters nominal	DGM2: liters nominal
20180516:06:21:47	23.5	15.5	-3.6	23.7	0.25	2.1	0.25	2.1	122.1	285.7	286.3	83.6	51.0	84.0	363.966	362.12	474.091	472.147
20180516:06:26:47	23.5	15.6	-3.8	23.7	0.25	2.1	0.25	2.1	122.2	285.8	286.3	83.5	51.0	84.0	365.325	363.45	475.854	473.874
20180516:06:31:47	23.4	15.7	-4.1	23.7	0.25	2.1	0.25	2.1	122.3	285.8	286.3	83.5	51.0	84.0	366.674	364.837	477.604	475.675
20180516:06:36:47	23.4	15.7	-4.0	23.7	0.25	2.1	0.25	2.1	122.5	285.8	286.3	83.4	50.9	83.9	368.061	366.187	479.404	477.429
20180516:06:41:47	23.4	15.8	-3.9	23.7	0.25	2.1	0.25	2.1	122.8	285.8	286.4	83.4	51.0	83.9	369.429	367.518	481.178	479.156
20180516:06:46:47	23.4	15.9	-3.9	23.7	0.25	2.1	0.25	2.1	123.0	285.8	286.3	83.3	50.9	83.8	370.761	368.902	482.906	480.953
20180516:06:51:47	23.5	15.9	-3.8	23.7	0.25	2.1	0.25	2.1	122.9	285.8	286.3	83.2	51.0	83.8	372.153	370.235	484.711	482.684
20180516:06:56:47	23.4	15.9	-4.0	23.7	0.25	2.1	0.25	2.1	123.0	285.8	286.3	83.1	50.9	83.7	373.506	371.616	486.465	484.476
20180516:07:01:47	23.4	16.0	-4.0	23.7	0.25	2.1	0.25	2.1	123.2	285.8	286.4	83.0	51.0	83.7	374.845	372.974	488.2	486.239
20180516:07:06:47	23.5	16.1	-3.9	23.7	0.25	2.1	0.25	2.1	123.4	285.8	286.3	82.9	50.9	83.7	376.248	374.305	490.019	487.966
20180516:07:11:47	23.4	16.0	-4.1	23.7	0.25	2.1	0.25	2.1	123.2	285.7	286.3	82.9	51.0	83.6	377.582	375.69	491.746	489.763
20180516:07:16:47	23.4	15.7	-4.2	23.7	0.25	2.1	0.25	2.1	122.3	285.7	286.3	82.8	50.9	83.6	378.93	377.027	493.493	491.498
20180516:07:21:47	23.4	16.0	-4.1	23.7	0.25	2.1	0.25	2.1	123.2	285.7	286.3	82.8	51.0	83.5	380.326	378.4	495.302	493.278
20180516:07:26:47	23.4	16.2	-4.2	23.7	0.25	2.1	0.25	2.1	123.5	285.8	286.4	82.8	50.9	83.5	381.66	379.766	497.03	495.051
20180516:07:31:47	23.4	16.3	-4.2	23.7	0.25	2.1	0.25	2.1	123.9	285.8	286.3	82.8	50.9	83.4	383.021	381.091	498.793	496.769
20180516:07:36:47	23.4	16.6	-4.2	23.7	0.25	2.1	0.25	2.1	124.4	285.8	286.3	82.8	50.9	83.4	384.408	382.471	500.589	498.558
20180516:07:41:47	23.4	16.7	-4.2	23.7	0.25	2.1	0.25	2.1	124.8	285.8	286.3	82.9	51.0	83.4	385.747	383.804	502.324	500.288
20180516:07:46:47	23.4	16.9	-4.2	23.7	0.25	2.1	0.25	2.1	125.1	285.8	286.3	82.9	50.9	83.4	387.121	385.18	504.104	502.071
20180516:07:51:47	23.4	17.0	-4.2	23.7	0.25	2.1	0.25	2.1	125.4	285.7	286.3	82.9	51.0	83.4	388.486	386.533	505.872	503.825
20180516:07:56:47	23.4	17.1	-4.2	23.7	0.25	2.1	0.25	2.1	125.6	285.7	286.4	83.0	50.9	83.4	389.831	387.859	507.615	505.545
20180516:08:01:47	23.4	17.0	-4.3	23.7	0.25	2.1	0.25	2.1	125.4	285.7	286.3	82.9	50.9	83.3	391.214	389.241	509.407	507.336
20180516:08:06:47	23.4	17.0	-4.2	23.7	0.25	2.1	0.25	2.1	125.3	285.8	286.4	82.9	50.9	83.3	392.566	390.563	511.159	509.051
20180516:08:11:47	23.4	16.9	-4.2	23.7	0.25	2.1	0.25	2.1	125.2	285.7	286.3	82.8	50.9	83.3	393.893	391.946	512.878	510.844
20180516:08:16:47	23.4	16.9	-4.2	23.7	0.25	2.1	0.25	2.1	125.1	285.7	286.3	82.8	50.9	83.3	395.285	393.267	514.681	512.556
20180516:08:21:47	23.4	16.9	-4.1	23.7	0.25	2.1	0.25	2.1	125.1	285.8	286.4	82.8	50.9	83.3	396.606	394.606	516.393	514.293
20180516:08:26:47	23.4	17.0	-4.1	23.7	0.25	2.1	0.25	2.1	125.3	285.8	286.3	82.8	50.8	83.3	397.954	395.968	518.139	516.06
20180516:08:31:47	23.4	17.0	-4.1	23.7	0.25	2.1	0.25	2.1	125.4	285.8	286.4	82.7	50.8	83.3	399.33	397.296	519.92	517.782
20180516:08:36:47	23.4	17.0	-4.0	23.7	0.25	2.1	0.25	2.1	125.4	285.7	286.2	82.7	50.7	83.3	400.659	398.672	521.643	519.566
20180516:08:41:47	23.4	17.1	-4.0	23.7	0.25	2.1	0.25	2.1	125.5	285.8	286.4	82.7	50.8	83.3	402.034	399.996	523.424	521.284
20180516:08:46:47	23.5	17.1	-3.9	23.7	0.25	2.1	0.25	2.1	125.6	285.7	286.2	82.7	50.7	83.3	403.389	401.36	525.18	523.053
20180516:08:51:47	23.5	17.2	-3.9	23.7	0.25	2.1	0.25	2.1	125.7	285.7	286.3	82.7	50.8	83.3	404.71	402.708	526.891	524.801
20180516:08:56:47	23.5	17.2	-3.8	23.7	0.25	2.1	0.25	2.1	125.8	285.7	286.3	82.7	50.7	83.3	406.1	404.031	528.693	526.517
20180516:09:01:47	23.5	17.2	-3.8	23.7	0.25	2.1	0.25	2.1	125.9	285.7	286.3	82.8	50.8	83.4	407.421	405.404	530.404	528.299
20180516:09:06:47	23.5	17.3	-3.8	23.7	0.25	2.1	0.25	2.1	126.0	285.7	286.4	82.8	50.7	83.4	408.764	406.73	532.144	530.019
20180516:09:11:47	23.5	17.2	-3.8	23.7	0.25	2.1	0.25	2.1	125.8	285.6	286.2	82.8	50.8	83.4	410.144	408.112	533.933	531.812
20180516:09:16:47	23.5	17.2	-3.8	23.7	0.25	2.1	0.25	2.1	125.7	285.7	286.3	82.9	50.8	83.5	411.476	409.432	535.659	533.524
20180516:09:21:47	23.5	17.1	-3.8	23.7	0.25	2.1	0.25	2.1	125.6	285.7	286.3	82.9	50.8	83.5	412.845	410.775	537.433	535.267
20180516:09:26:47	23.5	17.1	-3.7	23.7	0.25	2.1	0.25	2.1	125.5	285.7	286.3	82.9	50.8	83.5	414.202	412.141	539.193	537.039
20180516:09:31:47	23.5	17.0	-3.7	23.7	0.25	2.1	0.25	2.1	125.5	285.7	286.3	82.9	50.8	83.6	415.53	413.471	540.915	538.767
20180516:09:36:47	23.5	17.1	-3.6	23.7	0.25	2.1	0.25	2.1	125.6	285.7	286.3	82.9	50.8	83.6	416.914	414.848	542.709	540.555
20180516:09:41:47	23.5	17.2	-3.6	23.7	0.25	2.1	0.25	2.1	125.8	285.6	286.3	83.0	50.8	83.6	418.251	416.175	544.443	542.276
20180516:09:46:47	23.5	17.2	-3.6	23.7	0.25	2.1	0.25	2.1	125.8	285.7	286.3	83.1	50.8	83.7	419.585	417.533	546.172	544.039
20180516:09:51:47	23.5	17.2	-3.6	23.7	0.25	2.1	0.25	2.1	125.9	285.7	286.4	83.2	50.9	83.7	420.971	418.893	547.97	545.806
20180516:09:56:47	23.5	17.3	-3.6	23.7	0.25	2.1	0.25	2.1	126.0	285.7	286.4	83.3	50.8	83.8	422.302	420.213	549.698	547.521
20180516:10:01:47	23.5	17.3	-3.5	23.7	0.25	2.1	0.25	2.1	126.0	285.7	286.3	83.4	50.9	83.9	423.658	421.584	551.457	549.303
20180516:10:06:47	23.5	17.3	-3.6	23.7	0.25	2.1	0.25	2.1	126.1	285.7	286.3	83.5	50.8	84.0	425.029	422.907	553.237	551.021
20180516:10:11:47	23.5	17.4	-3.5	23.7	0.25	2.1	0.25	2.1	126.2	285.7	286.3	83.6	50.9	84.0	426.355	424.285	554.959	552.812
20180516:10:16:47	23.5	17.4	-3.5	23.7	0.25	2.1	0.25	2.1	126.1	285.8	286.4	83.8	50.9	84.2	427.739	425.623	556.757	554.551
20180516:10:21:47	23.5	17.3	-3.5	23.7	0.25	2.1	0.25	2.1	126.1	285.8	286.4	83.9	50.9	84.2	429.094	426.949	558.519	556.274
20180516:10:26:47	23.5	17.3	-3.5	23.7	0.25	2.1	0.25	2.1	126.1	285.7	286.3	83.9	50.8	84.3	430.415	428.319	560.235	558.056
20180516:10:31:47	23.5	17.3	-3.5	23.7	0.25	2.1	0.25	2.1	126.0	285.8	286.3	84.0	50.9	84.3	431.801	429.644	562.035	559.78
20180516:10:36:47	23.5	17.3	-3.4	23.7	0.25	2.1	0.25	2.1	125.9	285.7	286.3	84.0	50.8	84.4	433.131	431.022	563.765	561.571
20180516:10:41:47	23.5	17.3	-3.5	23.7	0.25	2.1	0.25	2.1	126.0	285.8	286.4	84.0	50.9	84.4	434.468	432.34	565.502	563.286
20180516:10:46:47	23.5	17.3	-3.4	23.7	0.25	2.1	0.25	2.1	126.1	285.7	286.3	84.1	50.8	84.5	435.854	433.688	567.304	565.039
20180516:10:51:47	23.5	17.3	-3.5	23.7	0.25	2.1	0.25	2.1	126.1	285.7	286.3	84.2	50.9	84.6	437.185	435.049	569.033	566.81
20180516:10:56:47	23.5	17.3	-3.4	23.7	0.25	2.1	0.25	2.1	126.1	285.8	286.4	84.2	50.9	84.7	438.539	436.379	570.794	568.541
20180516:11:01:47	23.5	17.3	-3.5	23.7	0.25	2.1	0.25	2.1	126.1	285.8	286.3	84.3	50.9	84.7	439.91	437.756	572.578	570.333
20180516:11:06:47	23.5	17.3	-3.4	23.7	0.25	2.1	0.25	2.1	126.0	285.7	286.3	84.3	50.8	84.7	441.24	439.077	574.307	572.053
20180516:11:11:47	23.5	17.1	-3.3	23.7	0.25	2.1	0.25	2.1	125.6	285.8	286.3	84.3	50.9	84.8	442.616	440.433	576.096	573.818
20180516:11:16:47	23.5	17.1	-3.4	23.7	0.25	2.1	0.25	2.1	125.5	285.8	286.4	84.3	50.8	84.9	443.974	441.794	577.863	575.59
20180516:11:21:47	23.5	17.1	-3.4	23.7	0.25	2.1	0.25	2.1	125.5	285.7	286.3	84.4	50.9	84.9	445.298	443.104	579.585	577.295
20180516:11:26:47	23.5	17.1	-3.3	23.7	0.25	2.1	0.25	2.1	125.7	285.7	286.3	84.4	50.8	85.0	446.682	444.485	581.385	579.094
20180516:11:31:47	23.5	17.2	-3.5	23.7	0.25	2.1	0.25	2.1	125.7	285.7	286.4	84.6	50.9	85.1	448.023	445.808	583.131	580.818
20180516:11:36:47	23.4	17.1	-3.7	23.7	0.25	2.1	0.25	2.1	125.6	285.7	286.4	84.7	50.9	85.2	449.353	447.174	584.863	582.598
20180516:11:41:47	23.4	17.1	-3.6	23.7	0.25	2.1	0.25	2.1	125.5	285.7	286.4	84.8	50.9	85.2	450.747	448.522	586.678	584.355
20180516:11:46:47	23.4	17.0	-3.7	23.7	0.25	2.1	0.25	2.1	125.4	285.8	286.4	84.9	50.9	85.3	452.079	449.843	588.413	586.077
20180516:11:51:47	23.4	17.0	-3.6	23.7	0.25	2.1	0.25	2.1	125.4	285.8	286.4	85.0	50.9	85.4	453.422	451.217	590.163	587.868
20180516:11:56:47	23.4	17.0	-3.6	23.7	0.25	2.1	0.25	2.1	125.3	285.7	286.4	85.0	50.9	85.4	454.813	452.541	591.974	589.594
20180516:12:01:47	23.4	16.9	-3.5	23.7	0.25	2.1	0.25	2.1	125.1	285.7	286.3	85.1	50.9	85.5	456.141	453.918	593.706	591.389
20180516:12:06:47	23.4	16.8	-3.6	23.7	0.25	2.1	0.25	2.1	124.9	285.8	286.3	85.1	50.9	85.6	457.498	455.266	595.474	593.148
20180516:12:11:47	23.4	16.8	-3.5	23.7	0.25	2.1	0.25	2.1	124.8	285.8	286.4	85.2	50.9	85.6	458.879	456.59	597.274	594.876
20180516:12:16:47	23.4	16.7	-3.6	23.7	0.25	2.1	0.25	2.1	124.7	285.7	286.4	85.2	50.9	85.7	460.217	457.968	599.019	596.673
20180516:12:21:47	23.4	16.7	-3.4	23.7	0.25	2.1	0.25	2.1	124.8	285.8	286.3	85.2	50.9	85.7	461.578	459.296	600.793	598.406
20180516:12:26:47	23.4	16.8	-3.3	23.7	0.25	2.1	0.25	2.1	124.8	285.8	286.3	85.3	50.9	85.8	462.949	460.666	602.581	600.195
20180516:12:31:47	23.4	16.7	-3.2	23.7	0.25	2.1	0.25	2.1	124.7	285.7	286.3	85.3	50.9	85.8	464.28	462.019	604.319	601.962
20180516:12:36:47	23.4	16.6	-3.3	23.7	0.25	2.1	0.25	2.1	124.6	285.7	286.3	85.3	50.9	85.9	465.653	463.34	606.109	603.688
20180516:12:41:47	23.4	16.6	-3.2	23.7	0.25	2.1	0.25	2.1	124.6	285.8	286.4	85.3	50.9	85.9	467.008	464.719	607.878	605.489
20180516:12:46:47	23.4	16.1	-3.8	23.7	0.25	2.1	0.25	2.1	123.4	285.7	286.3	85.4	50.9	86.0	468.348	466.047	609.626	607.224
20180516:12:51:47	23.4	16.1	-3.3	23.7	0.25	2.1	0.25	2.1	123.3	285.7	286.3	85.4	50.9	86.0	469.73	467.407	611.43	609
20180516:12:56:47	23.4	16.3	-3.4	23.7	0.25	2.1	0.25	2.1	123.8	285.8	286.4	85.5	50.9	86.1	471.087	468.77	613.2	610.782
20180516:13:01:47	23.4	16.4	-3.6	23.7	0.25	2.1	0.25	2.1	124.0	285.8	286.3	85.5	50.9	86.2	472.413	470.083	614.931	612.498
20180516:13:06:47	23.4	16.5	-3.6	23.7	0.25	2.1	0.25	2.1	124.2	285.8	286.3	85.6	50.9	86.2	473.798	471.465	616.741	614.305
20180516:13:11:47	23.4	16.5	-3.4	23.7	0.25	2.1	0.25	2.1	124.2	285.8	286.3	85.6	50.8	86.3	475.144	472.789	618.498	616.036
20180516:13:16:47	23.4	16.5	-3.5	23.7	0.25	2.1	0.25	2.1	124.3	285.8	286.3	85.7	50.9	86.3	476.472	474.146	620.233	617.81
20180516:13:21:47	23.4	16.5	-3.5	23.7	0.25	2.1	0.25	2.1	124.3	285.8	286.4	85.8	50.9	86.4	477.86	475.506	622.046	619.588
20180516:13:26:47	23.4	16.6	-3.5	23.7	0.25	2.1	0.25	2.1	124.3	285.8	286.3	85.9	50.9	86.5	479.199	476.835	623.796	621.327
20180516:13:31:47	23.4	16.6	-3.5	23.7	0.25	2.1	0.25	2.1	124.4	285.8	286.4	86.0	50.9	86.6	480.534	478.218	625.541	623.137
20180516:13:36:47	23.4	16.6	-3.4	23.7	0.25	2.1	0.25	2.1	124.4	285.8	286.3	86.1	50.9	86.6	481.932	479.533	627.37	624.859
20180516:13:41:47	23.4	16.6	-3.2	23.7	0.25	2.1	0.25	2.1	124.4	285.7	286.4	86.2	50.9	86.7	483.265	480.882	629.113	626.624

Time:	Stack Pressure:	Sat% H2O:	Static:	Barometric:	Flowmeter1:	Vacuum1:	Flowmeter2:	Vacuum2:	Stack Temp:	Sorbent Temp:	Probe Temp:	DGM#1 Temp:	Condenser Temp:	DGM#2 Temp:	DGM1*:	DGM2*:	DGM1:	DGM2:
day:hh:mm:ss	in-Hg	Percent	in-H2O	in-Hg	l/min	in-Hg	l/min	in-Hg	degF	degF	degF	degF	degF	degF	liters STP	liters STP	liters nominal	liters nominal
20180516:13:46:47	23.4	16.5	-3.4	23.7	0.25	2.1	0.25	2.1	124.2	285.7	286.3	86.4	51.0	86.8	484.606	482.248	630.867	628.412
20180516:13:51:47	23.4	15.9	-3.8	23.7	0.25	2.1	0.25	2.1	122.7	285.6	286.4	86.5	50.9	86.9	485.997	483.58	632.687	630.156
20180516:13:56:47	23.4	15.5	-3.1	23.7	0.25	2.1	0.25	2.1	122.1	285.7	286.4	86.6	51.0	87.0	487.332	484.96	634.435	631.964
20180516:14:01:47	23.4	15.9	-3.4	23.7	0.25	2.1	0.25	2.1	122.9	285.7	286.4	86.8	51.0	87.0	488.677	486.286	636.196	633.701
20180516:14:06:47	23.4	16.0	-3.5	23.7	0.25	2.1	0.25	2.1	123.1	285.8	286.4	86.9	51.0	87.1	490.069	487.621	638.019	635.449
20180516:14:11:47	23.4	16.0	-3.4	23.7	0.25	2.1	0.25	2.1	123.1	285.8	286.4	87.0	51.0	87.2	491.403	489	639.767	637.258
20180516:14:16:47	23.4	16.0	-3.7	23.7	0.25	2.1	0.25	2.1	123.0	285.8	286.4	87.1	51.0	87.3	492.749	490.324	641.53	638.992
20180516:14:21:47	23.4	15.9	-3.6	23.7	0.25	2.1	0.25	2.1	122.9	285.8	286.4	87.2	51.0	87.3	494.147	491.697	643.363	640.793
20180516:14:26:47	23.4	15.9	-3.4	23.6	0.25	2.1	0.25	2.1	122.8	285.8	286.4	87.3	51.0	87.4	495.492	493.052	645.128	642.571
20180516:14:31:47	23.4	15.9	-3.7	23.7	0.25	2.1	0.25	2.1	122.9	285.8	286.4	87.3	51.0	87.5	496.833	494.368	646.885	644.297
20180516:14:36:47	23.4	16.0	-3.8	23.7	0.25	2.1	0.25	2.1	123.0	285.8	286.4	87.4	51.0	87.6	498.231	495.754	648.719	646.115
20180516:14:41:47	23.4	16.0	-3.8	23.7	0.25	2.1	0.25	2.1	123.0	285.8	286.3	87.4	51.0	87.7	499.582	497.073	650.491	647.846
20180516:14:46:47	23.4	16.0	-4.0	23.7	0.25	2.1	0.25	2.1	122.9	285.8	286.4	87.4	51.0	87.7	500.918	498.43	652.243	649.626
20180516:14:51:47	23.4	15.4	-3.8	23.6	0.25	2.1	0.25	2.1	121.5	285.7	286.3	87.4	50.9	87.8	502.314	499.797	654.074	651.421
20180516:14:56:47	23.4	15.4	-3.7	23.6	0.25	2.1	0.25	2.1	121.7	285.7	286.3	87.4	51.0	87.8	503.665	501.13	655.846	653.171
20180516:15:01:47	23.4	15.8	-3.6	23.6	0.25	2.1	0.25	2.1	122.6	285.8	286.4	87.4	50.9	87.9	504.998	502.513	657.596	654.987
20180516:15:06:47	23.4	16.0	-3.7	23.6	0.25	2.1	0.25	2.1	123.1	285.8	286.3	87.5	50.9	87.9	506.387	503.854	659.419	656.748
20180516:15:11:47	23.4	16.2	-3.7	23.6	0.25	2.1	0.25	2.1	123.5	285.8	286.3	87.5	50.9	88.0	507.746	505.183	661.202	658.494
20180516:15:16:47	23.4	16.4	-3.6	23.6	0.25	2.1	0.25	2.1	124.0	285.8	286.3	87.5	50.9	88.0	509.075	506.563	662.946	660.306
20180516:15:21:47	23.4	16.6	-3.6	23.6	0.25	2.1	0.25	2.1	124.4	285.8	286.3	87.6	51.0	88.1	510.459	507.892	664.763	662.053
20180516:15:26:47	23.4	16.9	-3.6	23.6	0.25	2.1	0.25	2.1	125.0	285.8	286.3	87.7	50.9	88.2	511.811	509.243	666.539	663.829
20180516:15:31:47	23.4	17.2	-3.7	23.6	0.25	2.1	0.25	2.2	125.6	285.8	286.3	87.8	51.0	88.2	513.151	510.607	668.298	665.622
20180516:15:36:47	23.4	17.3	-3.6	23.6	0.25	2.1	0.25	2.1	125.9	285.8	286.4	87.8	50.9	88.3	514.531	511.939	670.111	667.372
20180516:15:41:47	23.4	17.4	-3.7	23.6	0.25	2.1	0.25	2.1	126.2	285.7	286.3	87.9	50.9	88.3	515.885	513.324	671.891	669.194
20180516:15:46:47	23.4	17.5	-3.5	23.6	0.25	2.1	0.25	2.1	126.3	285.7	286.3	88.0	51.0	88.4	517.227	514.663	673.654	670.955
20180516:15:51:47	23.4	17.6	-3.5	23.6	0.25	2.1	0.25	2.1	126.6	285.7	286.3	88.1	50.9	88.5	518.601	515.988	675.461	672.699
20180516:15:56:47	23.3	17.6	-3.7	23.6	0.25	2.1	0.25	2.1	126.5	285.7	286.3	88.2	51.0	88.6	519.967	517.366	677.257	674.513
20180516:16:01:47	23.3	16.6	-3.9	23.6	0.25	2.1	0.25	2.1	124.2	285.7	286.4	88.3	51.0	88.6	521.308	518.694	679.022	676.261
20180516:16:06:47	23.4	16.8	-3.1	23.6	0.25	2.1	0.25	2.1	124.7	285.7	286.4	88.5	51.0	88.7	522.665	520.043	680.807	678.038
20180516:16:11:47	23.4	17.1	-3.0	23.6	0.25	2.1	0.25	2.1	125.4	285.8	286.5	88.6	51.0	88.8	524.036	521.398	682.613	679.821
20180516:16:16:47	23.4	17.2	-3.0	23.6	0.25	2.1	0.25	2.1	125.6	285.8	286.4	88.6	50.9	88.9	525.374	522.725	684.374	681.57
20180516:16:21:47	23.4	17.3	-3.1	23.6	0.25	2.1	0.25	2.1	125.8	285.9	286.4	88.7	50.9	89.0	526.72	524.099	686.146	683.38
20180516:16:26:47	23.4	17.4	-3.1	23.6	0.25	2.1	0.25	2.1	126.1	285.8	286.4	88.7	51.0	89.0	528.091	525.413	687.952	685.111
20180516:16:31:47	23.4	17.4	-3.2	23.6	0.25	2.1	0.25	2.1	126.2	285.9	286.4	88.8	50.9	89.1	529.427	526.746	689.711	686.867
20180516:16:36:47	23.3	17.4	-3.8	23.6	0.25	2.1	0.25	2.2	125.9	285.8	286.3	88.9	51.0	89.2	530.774	528.114	691.485	688.669
20180516:16:41:47	23.3	17.3	-3.6	23.6	0.25	2.1	0.25	2.1	125.9	285.8	286.3	88.9	51.0	89.2	532.16	529.434	693.311	690.41
20180516:16:46:47	23.3	17.4	-3.6	23.6	0.25	2.1	0.25	2.1	126.0	285.8	286.4	89.0	51.0	89.3	533.488	530.804	695.061	692.216
20180516:16:51:47	23.3	17.4	-3.7	23.6	0.25	2.1	0.25	2.1	126.1	285.8	286.4	89.1	51.1	89.4	534.839	532.148	696.843	693.989
20180516:16:56:47	23.3	17.4	-3.5	23.6	0.25	2.1	0.25	2.1	126.1	285.8	286.4	89.2	51.1	89.4	536.226	533.465	698.67	695.726
20180516:17:01:47	23.3	17.5	-3.5	23.6	0.25	2.1	0.25	2.1	126.4	285.9	286.4	89.3	51.0	89.5	537.557	534.843	700.426	697.543
20180516:17:06:47	23.4	17.6	-3.4	23.6	0.25	2.1	0.25	2.1	126.4	285.9	286.4	89.4	51.1	89.6	538.902	536.158	702.2	699.278
20180516:17:11:47	23.3	17.6	-3.5	23.6	0.25	2.1	0.25	2.1	126.4	285.9	286.4	89.6	51.1	89.7	540.291	537.508	704.033	701.06
20180516:17:16:47	23.3	17.6	-3.5	23.6	0.25	2.1	0.25	2.1	126.4	285.9	286.4	89.6	51.1	89.8	541.628	538.868	705.798	702.855
20180516:17:21:47	23.4	17.5	-3.4	23.6	0.25	2.1	0.25	2.1	126.3	286.0	286.4	89.8	51.1	89.8	542.962	540.193	707.559	704.605
20180516:17:26:47	23.3	17.6	-3.6	23.6	0.25	2.1	0.25	2.1	126.4	285.9	286.4	89.8	51.1	89.9	544.354	541.567	709.396	706.419
20180516:17:31:47	23.4	17.4	-3.2	23.6	0.25	2.1	0.25	2.1	126.2	285.9	286.4	89.9	51.0	90.0	545.703	542.903	711.176	708.182
20180516:17:36:47	23.4	17.4	-3.4	23.6	0.25	2.1	0.25	2.2	126.2	285.9	286.4	90.0	51.1	90.0	547.038	544.224	712.939	709.927
20180516:17:41:47	23.3	16.9	-3.8	23.6	0.25	2.1	0.25	2.1	125.0	285.8	286.4	90.0	51.1	90.1	548.422	545.598	714.767	711.741
20180516:17:46:47	23.3	16.9	-3.8	23.6	0.25	2.1	0.25	2.2	124.9	285.8	286.5	90.1	51.1	90.2	549.774	546.918	716.552	713.485
20180516:17:51:47	23.3	17.0	-3.8	23.6	0.25	2.1	0.25	2.1	125.2	285.8	286.4	90.1	51.1	90.2	551.112	548.268	718.319	715.267
20180516:17:56:47	23.3	17.4	-3.4	23.6	0.25	2.1	0.25	2.1	126.0	285.8	286.4	90.1	51.1	90.2	552.487	549.632	720.135	717.07
20180516:18:01:47	23.3	17.5	-3.8	23.6	0.25	2.1	0.25	2.1	126.2	285.8	286.5	90.2	51.1	90.3	553.857	550.962	721.944	718.827
20180516:18:06:47	23.3	17.6	-3.8	23.6	0.25	2.1	0.25	2.1	126.4	285.8	286.4	90.3	51.1	90.4	555.201	552.336	723.72	720.643
20180516:18:11:47	23.3	17.7	-3.8	23.6	0.25	2.1	0.25	2.1	126.6	285.9	286.5	90.4	51.1	90.5	556.551	553.692	725.506	722.436
20180516:18:16:47	23.3	17.6	-3.7	23.6	0.25	2.1	0.25	2.1	126.5	285.9	286.4	90.5	51.1	90.5	557.94	555.012	727.341	724.18
20180516:18:21:47	23.3	17.6	-3.6	23.6	0.25	2.1	0.25	2.1	126.5	285.8	286.4	90.6	51.1	90.6	559.276	556.388	729.107	726
20180516:18:26:47	23.3	17.6	-3.6	23.6	0.25	2.1	0.25	2.1	126.4	285.8	286.3	90.6	51.1	90.6	560.62	557.714	730.885	727.754
20180516:18:31:47	23.4	17.4	-3.3	23.6	0.25	2.1	0.25	2.2	126.0	285.7	286.4	90.7	51.1	90.7	562.012	559.049	732.726	729.519
20180516:18:36:47	23.4	17.2	-3.3	23.6	0.25	2.1	0.25	2.2	125.6	285.7	286.4	90.7	51.1	90.8	563.359	560.422	734.507	731.335
20180516:18:41:47	23.3	16.8	-3.8	23.6	0.25	2.1	0.25	2.1	124.8	285.7	286.3	90.8	51.1	90.9	564.695	561.752	736.274	733.094
20180516:18:46:47	23.4	16.7	-3.4	23.6	0.25	2.1	0.25	2.1	124.5	285.7	286.4	90.9	51.1	90.9	566.081	563.102	738.107	734.88
20180516:18:51:47	23.3	16.8	-3.4	23.6	0.25	2.1	0.25	2.1	124.7	285.7	286.3	90.9	51.1	91.0	567.429	564.452	739.891	736.665
20180516:18:56:47	23.3	16.7	-3.6	23.6	0.25	2.1	0.25	2.1	124.4	285.8	286.4	91.0	51.1	91.1	568.77	565.785	741.665	738.43
20180516:19:01:47	23.3	16.6	-3.6	23.6	0.25	2.1	0.25	2.1	124.3	285.8	286.4	91.1	51.1	91.1	570.139	567.166	743.478	740.258
20180516:19:06:47	23.3	16.6	-3.4	23.6	0.25	2.1	0.25	2.1	124.4	285.8	286.4	91.2	51.1	91.2	571.514	568.507	745.298	742.034
20180516:19:11:47	23.3	16.5	-3.5	23.6	0.25	2.1	0.25	2.2	124.2	285.8	286.4	91.2	51.1	91.2	572.849	569.828	747.065	743.782
20180516:19:16:47	23.3	16.4	-3.7	23.6	0.25	2.1	0.25	2.1	123.9	285.8	286.4	91.3	51.1	91.3	574.207	571.217	748.863	745.62
20180516:19:21:47	23.3	16.3	-3.8	23.6	0.25	2.1	0.25	2.1	123.7	285.8	286.3	91.3	51.1	91.3	575.609	572.542	750.719	747.374
20180516:19:26:47	23.3	16.2	-3.8	23.6	0.25	2.1	0.25	2.1	123.5	285.8	286.3	91.2	51.0	91.3	576.958	573.881	752.504	749.147
20180516:19:31:47	23.3	16.2	-3.9	23.6	0.25	2.1	0.25	2.2	123.4	285.8	286.3	91.2	51.0	91.3	578.302	575.262	754.281	750.976
20180516:19:36:47	23.3	16.0	-4.0	23.6	0.25	2.1	0.25	2.1	123.0	285.7	286.3	91.2	51.0	91.3	579.69	576.593	756.119	752.737
20180516:19:41:47	23.3	15.4	-3.8	23.6	0.25	2.1	0.25	2.1	121.6	285.8	286.4	91.1	51.0	91.4	581.047	577.946	757.915	754.528
20180516:19:46:47	23.3	15.1	-3.8	23.6	0.25	2.1	0.25	2.1	120.8	285.6	286.3	91.1	51.0	91.4	582.396	579.317	759.7	756.344
20180516:19:51:47	23.3	15.1	-3.8	23.6	0.25	2.1	0.25	2.1	120.7	285.6	286.3	91.0	51.0	91.5	583.755	580.651	761.498	758.111
20180516:19:56:47	23.3	15.5	-3.9	23.6	0.25	2.1	0.25	2.2	121.7	285.7	286.4	91.1	51.0	91.5	585.148	582.015	763.341	759.917
20180516:20:01:47	23.3	15.6	-3.9	23.6	0.25	2.1	0.25	2.2	122.1	285.7	286.3	91.0	51.0	91.5	586.491	583.374	765.119	761.716
20180516:20:06:47	23.3	15.8	-3.9	23.6	0.25	2.1	0.25	2.2	122.5	285.8	286.3	91.2	51.1	91.6	587.843	584.709	766.907	763.485
20180516:20:11:47	23.3	15.9	-3.9	23.6	0.25	2.1	0.25	2.2	122.7	285.8	286.3	91.2	51.1	91.6	589.245	586.088	768.763	765.31
20180516:20:16:47	23.3	15.9	-3.9	23.6	0.25	2.1	0.25	2.2	122.6	285.8	286.4	91.3	51.2	91.6	590.6	587.45	770.557	767.115
20180516:20:21:47	23.3	15.9	-3.9	23.6	0.25	2.1	0.25	2.2	122.6	285.8	286.4	91.4	51.2	91.6	591.945	588.779	772.337	768.874
20180516:20:26:47	23.3	15.8	-3.9	23.6	0.25	2.2	0.25	2.2	122.6	285.9	286.4	91.5	51.1	91.6	593.317	590.164	774.154	770.709
20180516:20:31:47	23.3	15.8	-3.8	23.6	0.25	2.1	0.25	2.2	122.5	285.9	286.3	91.4	51.1	91.7	594.703	591.509	775.987	772.489
20180516:20:36:47	23.3	15.6	-3.8	23.6	0.25	2.1	0.25	2.2	122.0	285.9	286.4	91.3	51.1	91.6	596.049	592.838	777.769	774.248
20180516:20:41:47	23.3	15.2	-3.8	23.6	0.25	2.1	0.25	2.2	121.2	285.8	286.4	91.2	51.0	91.6	597.401	594.223	779.557	776.083
20180516:20:46:47	23.3	15.1	-3.8	23.6	0.25	2.1	0.25	2.1	120.9	285.8	286.4	91.2	51.1	91.7	598.804	595.567	781.413	777.861
20180516:20:51:47	23.3	15.3	-3.8	23.6	0.25	2.1	0.25	2.2	121.3	285.8	286.4	91.2	51.1	91.6	600.168	596.907	783.217	779.635
20180516:20:56:47	23.3	15.7	-3.8	23.6	0.25	2.2	0.25	2.2	122.2	285.8	286.4	91.1	51.1	91.6	601.505	598.293	784.985	781.47
20180516:21:01:47	23.3	15.8	-3.8	23.6	0.25	2.1	0.25	2.2	122.5	285.9	286.5	91.1	51.1	91.6	602.883	599.625	786.807	783.233
20180516:21:06:47	23.3	15.9	-3.9	23.6	0.25	2.2	0.25	2.2	122.7	285.9	286.4	91.1	51.1	91.6	604.261	600.971	788.63	785.013

Time:	Stack Pressure:	Sat% H2O:	Static:	Barometric:	Flowmeter1:	Vacuum1:	Flowmeter2:	Vacuum2:	Stack Temp:	Sorbent Temp:	Probe Temp:	DGM#1 Temp:	Condenser Temp:	DGM#2 Temp:	DGM1*:	DGM2*:	DGM1:	DGM2:
day:hh:mm:ss	in-Hg	Percent	in-H2O	in-Hg	l/min	in-Hg	l/min	in-Hg	degF	degF	degF	degF	degF	degF	liters STP	liters STP	liters nominal	liters nominal
20180516:21:11:47	23.3	16.0	-3.9	23.6	0.25	2.2	0.25	2.2	122.9	285.9	286.4	91.1	51.1	91.6	605.603	602.36	790.404	786.852
20180516:21:16:47	23.3	16.1	-3.9	23.6	0.25	2.2	0.25	2.2	123.1	285.9	286.4	91.1	51.2	91.6	606.972	603.688	792.213	788.609
20180516:21:21:47	23.3	16.1	-3.9	23.6	0.25	2.2	0.25	2.2	123.3	285.9	286.4	91.1	51.2	91.6	608.374	605.046	794.067	790.406
20180516:21:26:47	23.3	16.1	-3.9	23.6	0.25	2.2	0.25	2.2	123.2	285.9	286.3	91.1	51.1	91.6	609.737	606.429	795.869	792.235
20180516:21:31:47	23.3	16.2	-3.9	23.6	0.25	2.2	0.25	2.2	123.3	285.9	286.3	91.1	51.2	91.5	611.081	607.769	797.644	794.008
20180516:21:36:47	23.3	15.9	-3.9	23.6	0.25	2.1	0.25	2.2	122.7	285.8	286.4	91.1	51.2	91.5	612.462	609.124	799.47	795.801
20180516:21:41:47	23.3	15.6	-3.9	23.6	0.25	2.1	0.25	2.2	122.0	285.9	286.5	91.2	51.2	91.5	613.842	610.493	801.294	797.611
20180516:21:46:47	23.3	15.4	-3.8	23.6	0.25	2.1	0.25	2.2	121.6	285.9	286.4	91.2	51.2	91.5	615.186	611.834	803.072	799.385
20180516:21:51:47	23.3	15.8	-3.9	23.6	0.25	2.1	0.25	2.2	122.5	285.9	286.4	91.3	51.2	91.5	616.556	613.205	804.883	801.199
20180516:21:56:47	23.3	16.2	-3.9	23.6	0.25	2.2	0.25	2.2	123.5	285.9	286.4	91.3	51.2	91.6	617.961	614.563	806.741	802.996
20180516:22:01:47	23.3	16.4	-3.9	23.6	0.25	2.1	0.25	2.2	123.9	285.9	286.4	91.3	51.2	91.5	619.323	615.903	808.543	804.769
20180516:22:06:47	23.3	16.5	-3.9	23.6	0.25	2.2	0.25	2.2	124.1	286.0	286.4	91.3	51.2	91.5	620.666	617.286	810.319	806.598
20180516:22:11:47	23.3	16.6	-4.0	23.6	0.25	2.2	0.25	2.2	124.3	286.0	286.5	91.4	51.2	91.5	622.047	618.647	812.144	808.398
20180516:22:16:47	23.3	16.7	-4.1	23.6	0.25	2.2	0.25	2.2	124.4	285.9	286.4	91.5	51.3	91.6	623.426	619.976	813.969	810.156
20180516:22:21:47	23.3	16.7	-4.0	23.6	0.25	2.1	0.25	2.2	124.6	286.0	286.4	91.5	51.2	91.6	624.769	621.365	815.744	811.994
20180516:22:26:47	23.3	16.8	-3.9	23.6	0.25	2.2	0.25	2.2	124.7	286.0	286.4	91.5	51.3	91.5	626.138	622.712	817.556	813.776
20180516:22:31:47	23.3	16.9	-4.0	23.6	0.25	2.1	0.25	2.2	125.0	285.9	286.4	91.3	51.2	91.5	627.541	624.038	819.411	815.53
20180516:22:36:47	23.4	17.1	-3.7	23.6	0.25	2.2	0.25	2.2	125.5	286.0	286.4	91.2	51.2	91.4	628.904	625.425	821.213	817.365
20180516:22:41:47	23.3	17.3	-3.9	23.6	0.25	2.2	0.25	2.2	125.8	286.0	286.4	91.2	51.2	91.4	630.245	626.763	822.985	819.133
20180516:22:46:47	23.3	16.6	-4.1	23.6	0.25	2.1	0.25	2.1	124.4	285.9	286.5	91.2	51.2	91.3	631.626	628.104	824.811	820.906
20180516:22:51:47	23.3	16.4	-4.4	23.6	0.25	2.1	0.25	2.1	123.8	285.9	286.4	91.1	51.2	91.3	633.004	629.492	826.633	822.742
20180516:22:56:47	23.3	16.2	-4.3	23.6	0.25	2.1	0.25	2.1	123.3	285.8	286.4	91.0	51.2	91.3	634.348	630.821	828.409	824.5
20180516:23:01:47	23.3	16.8	-3.8	23.6	0.25	2.1	0.25	2.1	124.7	285.8	286.4	90.9	51.2	91.2	635.708	632.176	830.207	826.291
20180516:23:06:47	23.3	17.1	-3.8	23.6	0.25	2.1	0.25	2.1	125.5	285.9	286.4	90.9	51.3	91.2	637.114	633.557	832.065	828.118
20180516:23:11:47	23.3	17.4	-3.8	23.6	0.25	2.1	0.25	2.1	126.0	286.0	286.5	90.9	51.2	91.2	638.47	634.896	833.857	829.889
20180516:23:16:47	23.3	17.6	-4.0	23.6	0.25	2.1	0.25	2.2	126.4	285.9	286.4	90.9	51.2	91.2	639.818	636.249	835.639	831.679
20180516:23:21:47	23.3	17.1	-4.7	23.6	0.25	2.1	0.25	2.1	125.2	285.9	286.5	90.9	51.2	91.1	641.202	637.621	837.469	833.492
20180516:23:26:47	23.3	16.3	-4.7	23.6	0.25	2.1	0.25	2.1	123.6	285.8	286.4	90.9	51.2	91.1	642.573	638.958	839.28	835.259
20180516:23:31:47	23.3	16.1	-4.9	23.6	0.25	2.1	0.25	2.1	123.0	285.8	286.4	90.8	51.2	91.1	643.924	640.326	841.065	837.068
20180516:23:36:47	23.3	16.7	-4.3	23.6	0.25	2.1	0.25	2.1	124.4	285.8	286.4	90.6	51.1	91.0	645.278	641.682	842.854	838.861
20180516:23:41:47	23.3	17.5	-3.9	23.6	0.25	2.1	0.25	2.1	126.2	286.0	286.4	90.6	51.2	91.0	646.677	643.019	844.702	840.628
20180516:23:46:47	23.3	18.0	-3.8	23.6	0.25	2.1	0.25	2.1	127.2	286.0	286.4	90.5	51.1	90.9	648.02	644.403	846.476	842.457
20180516:23:51:47	23.3	18.3	-3.9	23.6	0.25	2.1	0.25	2.1	127.9	285.9	286.4	90.4	51.1	90.9	649.372	645.754	848.261	844.242
20180516:23:56:47	23.3	18.4	-4.0	23.6	0.25	2.1	0.25	2.1	128.0	285.9	286.4	90.3	51.2	90.9	650.766	647.076	850.102	845.991
20180517:00:01:47	23.3	18.3	-4.1	23.6	0.25	2.1	0.25	2.1	127.9	285.9	286.4	90.2	51.1	90.8	652.125	648.461	851.896	847.821
20180517:00:06:47	23.3	18.2	-4.2	23.6	0.25	2.1	0.25	2.1	127.7	285.8	286.4	90.1	51.2	90.7	653.458	649.791	853.656	849.579
20180517:00:11:47	23.3	18.2	-4.3	23.6	0.25	2.1	0.25	2.1	127.6	285.8	286.4	90.0	51.1	90.7	654.835	651.129	855.472	851.346
20180517:00:16:47	23.3	18.2	-4.4	23.6	0.25	2.1	0.25	2.1	127.6	285.8	286.4	89.9	51.2	90.6	656.192	652.506	857.263	853.165
20180517:00:21:47	23.3	18.1	-4.4	23.6	0.25	2.1	0.25	2.1	127.5	285.8	286.4	89.9	51.1	90.6	657.53	653.84	859.028	854.927
20180517:00:26:47	23.3	18.2	-4.3	23.6	0.25	2.1	0.25	2.1	127.5	285.7	286.4	89.8	51.1	90.6	658.892	655.187	860.824	856.707
20180517:00:31:47	23.3	18.2	-4.3	23.6	0.25	2.1	0.25	2.1	127.6	285.8	286.4	89.7	51.1	90.5	660.263	656.54	862.633	858.494
20180517:00:36:47	23.3	18.0	-4.5	23.6	0.25	2.1	0.25	2.2	127.2	285.8	286.4	89.7	51.1	90.4	661.603	657.871	864.4	860.252
20180517:00:41:47	23.3	17.1	-4.8	23.6	0.25	2.1	0.25	2.1	125.3	285.7	286.3	89.6	51.1	90.3	662.951	659.252	866.178	862.075
20180517:00:46:47	23.3	17.7	-4.5	23.6	0.25	2.1	0.25	2.1	126.5	285.8	286.4	89.6	51.1	90.3	664.334	660.591	868.002	863.844
20180517:00:51:47	23.3	17.8	-4.5	23.6	0.25	2.1	0.25	2.1	126.8	285.8	286.4	89.6	51.2	90.2	665.669	661.912	869.763	865.588
20180517:00:56:47	23.3	17.9	-4.5	23.6	0.25	2.1	0.25	2.1	127.1	285.8	286.4	89.6	51.1	90.2	667.02	663.297	871.544	867.417
20180517:01:01:47	23.3	18.0	-4.6	23.6	0.25	2.1	0.25	2.1	127.2	285.8	286.4	89.6	51.2	90.1	668.416	664.622	873.385	869.165
20180517:01:06:47	23.3	18.1	-4.6	23.6	0.25	2.1	0.25	2.1	127.3	285.8	286.4	89.6	51.1	90.1	669.757	665.969	875.154	870.944
20180517:01:11:47	23.3	18.0	-4.6	23.6	0.25	2.1	0.25	2.1	127.2	285.9	286.4	89.5	51.2	90.0	671.101	667.343	876.926	872.758
20180517:01:16:47	23.3	18.0	-4.7	23.6	0.25	2.1	0.25	2.1	127.3	286.0	286.5	89.4	51.1	90.0	672.493	668.67	878.761	874.509
20180517:01:21:47	23.3	18.0	-4.7	23.6	0.25	2.1	0.25	2.1	127.2	285.9	286.4	89.3	51.2	89.9	673.843	670.036	880.541	876.312
20180517:01:26:47	23.3	18.0	-4.7	23.6	0.25	2.1	0.25	2.1	127.2	285.9	286.4	89.2	51.1	89.9	675.173	671.395	882.294	878.105
20180517:01:31:47	23.3	18.0	-4.7	23.6	0.25	2.1	0.25	2.1	127.1	285.8	286.4	89.1	51.2	89.8	676.558	672.72	884.119	879.853
20180517:01:36:47	23.3	18.0	-4.6	23.6	0.25	2.1	0.25	2.1	127.2	285.8	286.4	89.0	51.1	89.8	677.91	674.1	885.9	881.675
20180517:01:41:47	23.3	18.0	-4.6	23.6	0.25	2.1	0.25	2.1	127.3	285.8	286.4	88.9	51.2	89.7	679.245	675.435	887.659	883.436
20180517:01:46:47	23.3	18.0	-4.6	23.6	0.25	2.1	0.25	2.1	127.1	285.8	286.4	88.9	51.1	89.6	680.622	676.767	889.474	885.194
20180517:01:51:47	23.3	18.0	-4.7	23.6	0.25	2.1	0.25	2.1	127.1	285.8	286.4	88.8	51.1	89.6	681.986	678.149	891.27	887.017
20180517:01:56:47	23.3	17.9	-4.8	23.6	0.25	2.1	0.25	2.1	127.0	285.9	286.4	88.8	51.1	89.5	683.326	679.476	893.035	888.767
20180517:02:01:47	23.3	17.9	-4.7	23.6	0.25	2.1	0.25	2.1	127.0	285.8	286.4	88.7	51.1	89.5	684.69	680.83	894.831	890.553
20180517:02:06:47	23.3	17.9	-4.7	23.6	0.25	2.1	0.25	2.1	126.9	285.7	286.3	88.7	51.1	89.4	686.068	682.195	896.646	892.353
20180517:02:11:47	23.3	17.8	-4.7	23.6	0.25	2.1	0.25	2.1	126.7	285.7	286.3	88.6	51.1	89.3	687.405	683.527	898.407	894.109
20180517:02:16:47	23.3	17.9	-4.8	23.6	0.25	2.1	0.25	2.1	126.9	285.8	286.4	88.6	51.1	89.3	688.759	684.904	900.191	895.925
20180517:02:21:47	23.3	17.8	-4.8	23.6	0.25	2.1	0.25	2.1	126.8	285.8	286.4	88.6	51.1	89.2	690.157	686.257	902.031	897.709
20180517:02:26:47	23.3	17.8	-4.8	23.6	0.25	2.1	0.25	2.1	126.7	285.8	286.4	88.6	51.1	89.2	691.499	687.578	903.798	899.449
20180517:02:31:47	23.3	17.8	-4.8	23.6	0.25	2.1	0.25	2.1	126.7	285.8	286.4	88.5	51.1	89.1	692.841	688.965	905.565	901.278
20180517:02:36:47	23.3	17.7	-4.7	23.6	0.25	2.1	0.25	2.1	126.6	285.9	286.4	88.5	51.1	89.1	694.237	690.285	907.404	903.017
20180517:02:41:47	23.3	17.7	-4.7	23.6	0.25	2.1	0.25	2.1	126.6	285.8	286.4	88.4	51.1	89.0	695.582	691.627	909.174	904.786
20180517:02:46:47	23.3	17.7	-4.8	23.6	0.25	2.1	0.25	2.1	126.5	285.8	286.3	88.3	51.1	89.0	696.918	693.005	910.931	906.602
20180517:02:51:47	23.3	17.7	-4.8	23.6	0.25	2.1	0.25	2.1	126.5	285.8	286.4	88.2	51.1	88.9	698.307	694.329	912.759	908.346
20180517:02:56:47	23.3	17.7	-4.8	23.6	0.25	2.1	0.25	2.1	126.5	285.8	286.4	88.1	51.1	88.9	699.66	695.697	914.539	910.148
20180517:03:01:47	23.3	17.6	-4.8	23.6	0.25	2.1	0.25	2.1	126.4	285.8	286.4	88.0	51.1	88.8	700.991	697.06	916.291	911.944
20180517:03:06:47	23.3	17.7	-4.7	23.6	0.25	2.1	0.25	2.1	126.5	285.8	286.4	87.9	51.1	88.7	702.377	698.384	918.113	913.688
20180517:03:11:47	23.3	17.7	-4.8	23.6	0.25	2.1	0.25	2.1	126.4	285.8	286.4	87.9	51.0	88.7	703.734	699.77	919.898	915.513
20180517:03:16:47	23.3	17.6	-4.8	23.6	0.25	2.1	0.25	2.1	126.3	285.8	286.4	87.8	51.1	88.6	705.063	701.105	921.646	917.273
20180517:03:21:47	23.3	17.6	-4.8	23.6	0.25	2.1	0.25	2.1	126.3	285.8	286.4	87.8	51.0	88.6	706.445	702.431	923.463	919.019
20180517:03:26:47	23.3	17.6	-4.8	23.6	0.25	2.1	0.25	2.1	126.3	285.8	286.4	87.7	51.1	88.5	707.794	703.815	925.237	920.84
20180517:03:31:47	23.3	17.7	-4.8	23.6	0.25	2.1	0.25	2.1	126.5	285.8	286.4	87.6	51.0	88.5	709.134	705.15	926.998	922.598
20180517:03:36:47	23.3	17.7	-4.8	23.6	0.25	2.1	0.25	2.1	126.5	285.8	286.4	87.5	51.1	88.4	710.511	706.502	928.807	924.378
20180517:03:41:47	23.3	17.7	-4.8	23.6	0.25	2.1	0.25	2.1	126.5	285.7	286.3	87.5	51.0	88.3	711.872	707.86	930.596	926.165
20180517:03:46:47	23.3	17.6	-4.9	23.6	0.25	2.1	0.25	2.1	126.4	285.8	286.5	87.4	51.1	88.3	713.208	709.192	932.352	927.917
20180517:03:51:47	23.2	17.5	-5.0	23.6	0.25	2.1	0.25	2.1	126.1	285.7	286.3	87.4	51.0	88.2	714.579	710.578	934.152	929.741
20180517:03:56:47	23.2	17.0	-5.1	23.6	0.25	2.1	0.25	2.1	125.0	285.7	286.3	87.3	51.0	88.2	715.948	711.912	935.95	931.496
20180517:04:01:47	23.3	17.2	-4.9	23.6	0.25	2.1	0.25	2.1	125.5	285.8	286.4	87.3	51.0	88.1	717.283	713.239	937.704	933.242
20180517:04:06:47	23.3	17.4	-4.9	23.6	0.25	2.1	0.25	2.1	125.9	285.8	286.3	87.2	51.1	88.1	718.645	714.623	939.493	935.062
20180517:04:11:47	23.3	17.5	-4.9	23.6	0.25	2.1	0.25	2.1	126.2	285.8	286.4	87.2	51.0	88.0	720.014	715.955	941.291	936.814
20180517:04:16:47	23.3	17.6	-4.9	23.6	0.25	2.1	0.25	2.1	126.3	285.8	286.3	87.1	51.1	88.0	721.357	717.307	943.054	938.592
20180517:04:21:47	23.3	17.6	-4.9	23.6	0.25	2.1	0.25	2.1	126.2	285.8	286.4	87.1	51.0	87.9	722.713	718.668	944.833	940.382
20180517:04:26:47	23.2	17.6	-5.0	23.6	0.25	2.1	0.25	2.1	126.3	285.8	286.4	87.0	51.1	87.9	724.091	720.005	946.643	942.139
20180517:04:31:47	23.2	17.6	-5.0	23.6	0.25	2.1	0.25	2.1	126.3	285.8	286.3	86.9	51.0	87.8	725.43	721.389	948.4	943.959

Time: day:hh:mm:ss	Stack Pressure: in-Hg	Sat% H2O: Percent	Static: in-H2O	Barometric: in-Hg	Flowmeter1: l/min	Vacuum1: in-Hg	Flowmeter2: l/min	Vacuum2: in-Hg	Stack Temp: degF	Sorbent Temp: degF	Probe Temp: degF	DGM#1 Temp: degF	Condenser Temp: degF	DGM#2 Temp: degF	DGM1*: liters STP	DGM2*: liters STP	DGM1: liters nominal	DGM2: liters nominal
20180517:04:36:47	23.2	17.5	-5.0	23.6	0.25	2.1	0.25	2.1	126.1	285.8	286.4	86.9	51.0	87.8	726.783	722.731	950.176	945.724
20180517:04:41:47	23.3	17.6	-4.9	23.6	0.25	2.1	0.25	2.1	126.2	285.8	286.3	86.8	51.0	87.7	728.165	724.059	951.989	947.468
20180517:04:46:47	23.3	17.6	-5.0	23.6	0.25	2.1	0.25	2.1	126.2	285.8	286.4	86.8	51.1	87.6	729.498	725.437	953.739	949.28
20180517:04:51:47	23.2	17.5	-5.0	23.6	0.25	2.1	0.25	2.1	126.2	285.8	286.4	86.7	51.0	87.6	730.852	726.766	955.515	951.026
20180517:04:56:47	23.2	17.5	-5.1	23.6	0.25	2.1	0.25	2.1	126.1	285.8	286.3	86.6	51.1	87.5	732.238	728.118	957.333	952.803
20180517:05:01:47	23.2	16.6	-5.4	23.6	0.25	2.1	0.25	2.1	124.1	285.7	286.4	86.6	51.0	87.4	733.57	729.48	959.08	954.592
20180517:05:06:47	23.2	16.5	-5.2	23.6	0.25	2.1	0.25	2.1	123.9	285.6	286.4	86.5	51.0	87.4	734.925	730.817	960.857	956.348
20180517:05:11:47	23.2	16.9	-5.1	23.6	0.25	2.1	0.25	2.1	124.9	285.8	286.4	86.5	51.0	87.3	736.312	732.204	962.676	958.169
20180517:05:16:47	23.2	17.2	-5.0	23.6	0.25	2.1	0.25	2.1	125.4	285.8	286.3	86.5	51.0	87.3	737.644	733.535	964.422	959.917
20180517:05:21:47	23.2	17.3	-5.0	23.6	0.25	2.1	0.25	2.1	125.8	285.8	286.4	86.4	51.0	87.2	738.999	734.869	966.198	961.669
20180517:05:26:47	23.2	17.4	-5.1	23.6	0.25	2.1	0.25	2.1	125.8	285.7	286.3	86.4	51.0	87.2	740.391	736.247	968.024	963.477
20180517:05:31:47	23.3	17.4	-5.0	23.6	0.25	2.1	0.25	2.1	125.8	285.8	286.4	86.5	51.0	87.1	741.726	737.584	969.774	965.233
20180517:05:36:47	23.3	17.2	-5.0	23.6	0.25	2.2	0.25	2.2	125.5	285.7	286.3	86.5	51.1	87.1	743.075	738.938	971.543	967.009
20180517:05:41:47	23.3	17.1	-5.0	23.6	0.25	2.1	0.25	2.2	125.2	285.7	286.3	86.5	51.1	87.0	744.469	740.297	973.37	968.793
20180517:05:46:47	23.3	16.9	-5.0	23.6	0.25	2.1	0.25	2.2	124.9	285.7	286.4	86.5	51.1	87.0	745.805	741.636	975.122	970.551
20180517:05:51:47	23.3	16.8	-5.0	23.6	0.25	2.1	0.25	2.1	124.6	285.8	286.4	86.4	51.1	86.9	747.157	743.02	976.894	972.367
20180517:05:56:47	23.3	16.7	-4.9	23.6	0.25	2.1	0.25	2.1	124.5	285.8	286.4	86.4	51.0	86.9	748.559	744.355	978.731	974.118
20180517:06:01:47	23.3	16.6	-5.0	23.6	0.25	2.1	0.25	2.1	124.2	285.7	286.3	86.3	51.0	86.9	749.902	745.691	980.493	975.87
20180517:06:06:47	23.2	15.8	-5.2	23.6	0.25	2.1	0.25	2.1	122.4	285.6	286.3	86.3	51.0	86.9	751.248	747.073	982.256	977.684
20180517:06:11:47	23.3	16.0	-5.0	23.6	0.25	2.1	0.25	2.1	122.8	285.7	286.4	86.3	51.0	86.8	752.647	748.41	984.089	979.438
20180517:06:16:47	23.3	16.3	-5.0	23.6	0.25	2.1	0.25	2.1	123.4	285.8	286.4	86.3	51.0	86.8	754.005	749.772	985.869	981.224
20180517:06:21:47	23.3	16.4	-5.0	23.6	0.25	2.1	0.25	2.1	123.7	285.8	286.3	86.2	51.0	86.7	755.342	751.136	987.62	983.013
20180517:06:26:47	23.3	16.5	-4.9	23.6	0.25	2.1	0.25	2.1	123.9	285.8	286.4	86.2	51.0	86.7	756.734	752.475	989.444	984.769
20180517:06:31:47	23.3	16.5	-4.9	23.6	0.25	2.1	0.25	2.1	124.0	285.8	286.4	86.2	51.0	86.6	758.097	753.867	991.23	986.594
20180517:06:36:47	23.3	16.5	-5.0	23.6	0.25	2.1	0.25	2.2	124.0	285.7	286.4	86.1	51.0	86.6	759.433	755.205	992.98	988.348
20180517:06:41:47	23.3	16.4	-5.1	23.6	0.25	2.1	0.25	2.2	123.8	285.8	286.3	86.0	51.0	86.6	760.822	756.539	994.798	990.096
20180517:06:46:47	23.3	16.5	-5.1	23.6	0.25	2.1	0.25	2.2	123.9	285.8	286.3	86.0	51.0	86.6	762.18	757.924	996.576	991.912
20180517:06:51:47	23.3	16.6	-4.9	23.6	0.25	2.1	0.25	2.1	124.1	285.9	286.4	85.9	51.0	86.5	763.526	759.26	998.339	993.664
20180517:06:56:47	23.3	16.7	-5.0	23.6	0.25	2.1	0.25	2.1	124.5	285.8	286.3	85.8	51.0	86.5	764.907	760.619	1000.146	995.444
20180517:07:01:47	23.3	16.8	-4.9	23.6	0.25	2.1	0.25	2.1	124.7	285.9	286.4	85.7	51.0	86.4	766.267	761.983	1001.926	997.231
20180517:07:06:47	23.3	17.0	-4.8	23.6	0.25	2.1	0.25	2.1	125.0	285.9	286.4	85.6	50.9	86.4	767.607	763.321	1003.68	998.985
20180517:07:11:47	23.3	16.8	-5.0	23.6	0.25	2.1	0.25	2.1	124.6	285.8	286.4	85.6	51.0	86.3	768.984	764.709	1005.481	1000.805
20180517:07:16:47	23.3	16.2	-5.1	23.6	0.25	2.1	0.25	2.1	123.3	285.7	286.3	85.6	50.9	86.3	770.351	766.051	1007.27	1002.562
20180517:07:21:47	23.3	16.7	-4.9	23.6	0.25	2.1	0.25	2.1	124.3	285.7	286.4	85.6	51.0	86.2	771.689	767.384	1009.022	1004.308
20180517:07:26:47	23.3	16.9	-4.8	23.6	0.25	2.1	0.25	2.1	124.9	285.8	286.4	85.6	51.0	86.2	773.063	768.765	1010.82	1006.118
20180517:07:31:47	23.3	17.1	-4.8	23.6	0.25	2.1	0.25	2.1	125.2	285.8	286.4	85.7	51.0	86.2	774.434	770.1	1012.615	1007.867
20180517:07:36:47	23.3	17.2	-4.8	23.6	0.25	2.1	0.25	2.1	125.5	285.8	286.3	85.7	51.0	86.2	775.767	771.457	1014.359	1009.645
20180517:07:41:47	23.3	17.2	-4.7	23.6	0.25	2.1	0.25	2.1	125.6	285.8	286.4	85.8	51.0	86.2	777.138	772.821	1016.154	1011.432
20180517:07:46:47	23.3	17.3	-4.7	23.6	0.25	2.1	0.25	2.1	125.8	285.8	286.3	85.8	50.9	86.1	778.502	774.145	1017.941	1013.167
20180517:07:51:47	23.3	17.4	-4.7	23.6	0.25	2.1	0.25	2.1	126.0	285.9	286.4	85.9	51.0	86.2	779.836	775.527	1019.687	1014.977
20180517:07:56:47	23.3	17.5	-4.6	23.6	0.25	2.1	0.25	2.1	126.2	285.8	286.4	85.9	50.9	86.1	781.208	776.843	1021.483	1016.701
20180517:08:01:47	23.3	17.6	-4.5	23.6	0.25	2.1	0.25	2.2	126.4	285.8	286.4	85.9	51.0	86.2	782.564	778.191	1023.259	1018.468
20180517:08:06:47	23.3	17.7	-4.4	23.6	0.25	2.1	0.25	2.2	126.5	285.9	286.4	85.9	50.9	86.2	783.898	779.558	1025.007	1020.259
20180517:08:11:47	23.3	17.8	-4.2	23.6	0.25	2.1	0.25	2.1	126.7	285.8	286.4	85.9	51.0	86.2	785.276	780.885	1026.811	1021.998
20180517:08:16:47	23.3	17.7	-4.2	23.6	0.25	2.1	0.25	2.1	126.7	285.8	286.4	86.0	50.9	86.2	786.63	782.268	1028.585	1023.81
20180517:08:21:47	23.3	17.7	-4.1	23.6	0.25	2.1	0.25	2.1	126.6	285.9	286.5	86.0	51.0	86.2	787.968	783.596	1030.339	1025.551
20180517:08:26:47	23.3	17.7	-4.0	23.6	0.25	2.1	0.25	2.1	126.7	285.8	286.4	86.1	50.9	86.2	789.346	784.925	1032.144	1027.293
20180517:08:31:47	23.3	17.8	-4.0	23.6	0.25	2.1	0.25	2.1	126.8	285.8	286.5	86.1	51.0	86.3	790.699	786.306	1033.917	1029.103
20180517:08:36:47	23.3	17.7	-4.0	23.6	0.25	2.1	0.25	2.1	126.6	285.8	286.4	86.1	50.9	86.3	792.036	787.629	1035.669	1030.836
20180517:08:41:47	23.3	17.6	-4.0	23.6	0.25	2.1	0.25	2.1	126.5	285.8	286.4	86.2	51.0	86.3	793.418	789.001	1037.48	1032.635
20180517:08:46:47	23.3	17.6	-4.0	23.6	0.25	2.1	0.25	2.1	126.5	285.8	286.4	86.2	50.9	86.3	794.77	790.352	1039.252	1034.406
20180517:08:51:47	23.3	17.6	-3.9	23.6	0.25	2.1	0.25	2.1	126.4	285.8	286.4	86.3	51.0	86.4	796.107	791.666	1041.006	1036.13
20180517:08:56:47	23.3	17.6	-4.0	23.6	0.25	2.1	0.25	2.1	126.4	285.8	286.5	86.4	51.0	86.4	797.487	793.047	1042.815	1037.94
20180517:09:01:47	23.3	17.6	-3.8	23.6	0.25	2.1	0.25	2.1	126.5	285.8	286.5	86.5	51.0	86.5	798.84	794.374	1044.589	1039.68
20180517:09:06:47	23.3	17.7	-3.8	23.6	0.25	2.1	0.25	2.1	126.6	285.8	286.4	86.5	50.9	86.5	800.178	795.726	1046.343	1041.453
20180517:09:11:47	23.3	17.6	-3.7	23.6	0.25	2.1	0.25	2.1	126.5	285.8	286.4	86.5	51.0	86.5	801.554	797.087	1048.148	1043.239
20180517:09:16:47	23.3	17.7	-3.7	23.6	0.25	2.1	0.25	2.1	126.6	285.8	286.4	86.4	50.9	86.5	802.908	798.411	1049.924	1044.976
20180517:09:21:47	23.3	17.6	-3.7	23.6	0.25	2.1	0.25	2.1	126.6	285.8	286.3	86.4	51.0	86.6	804.247	799.791	1051.68	1046.786
20180517:09:26:47	23.3	17.6	-3.7	23.6	0.25	2.1	0.25	2.1	126.5	285.9	286.5	86.4	50.9	86.6	805.622	801.111	1053.483	1048.519
20180517:09:31:47	23.3	17.6	-3.7	23.6	0.25	2.1	0.25	2.1	126.5	285.7	286.3	86.3	50.9	86.6	806.983	802.457	1055.269	1050.284
20180517:09:36:47	23.3	17.6	-3.6	23.6	0.25	2.1	0.25	2.1	126.5	285.8	286.4	86.3	50.9	86.6	808.316	803.828	1057.017	1052.083
20180517:09:41:47	23.3	17.6	-3.7	23.6	0.25	2.1	0.25	2.1	126.4	285.8	286.4	86.2	50.9	86.6	809.69	805.156	1058.819	1053.825
20180517:09:46:47	23.3	17.5	-3.7	23.6	0.25	2.1	0.25	2.1	126.3	285.8	286.3	86.3	50.9	86.6	811.056	806.534	1060.609	1055.633
20180517:09:51:47	23.3	17.5	-3.7	23.6	0.25	2.1	0.25	2.1	126.3	285.7	286.4	86.2	50.9	86.6	812.39	807.878	1062.357	1057.397
20180517:09:56:47	23.3	17.5	-3.7	23.6	0.25	2.1	0.25	2.1	126.2	285.8	286.3	86.2	50.9	86.7	813.763	809.203	1064.157	1059.135
20180517:10:01:47	23.3	17.5	-3.7	23.6	0.25	2.1	0.25	2.1	126.2	285.7	286.4	86.2	50.9	86.7	815.126	810.584	1065.944	1060.947
20180517:10:06:47	23.3	17.5	-3.6	23.6	0.25	2.1	0.25	2.1	126.3	285.7	286.4	86.2	50.9	86.7	816.458	811.913	1067.691	1062.692
20180517:10:11:47	23.3	17.6	-3.6	23.6	0.25	2.1	0.25	2.1	126.4	285.8	286.4	86.3	51.0	86.8	817.831	813.267	1069.491	1064.468
20180517:10:16:47	23.3	17.6	-3.6	23.6	0.25	2.1	0.25	2.1	126.4	285.7	286.4	86.4	50.9	86.8	819.196	814.626	1071.281	1066.252
20180517:10:21:47	23.3	17.5	-3.5	23.6	0.25	2.1	0.25	2.1	126.3	285.8	286.4	86.5	51.0	86.9	820.527	815.956	1073.028	1067.998
20180517:10:26:47	23.3	17.6	-3.6	23.6	0.25	2.1	0.25	2.1	126.4	285.8	286.4	86.6	51.0	86.9	821.899	817.332	1074.828	1069.805
20180517:10:31:47	23.3	17.5	-3.6	23.6	0.25	2.1	0.25	2.1	126.3	285.8	286.3	86.7	51.0	87.0	823.268	818.663	1076.624	1071.553
20180517:10:36:47	23.3	17.4	-3.6	23.6	0.25	2.1	0.25	2.1	125.9	285.8	286.4	86.8	51.0	87.0	824.605	819.997	1078.38	1073.305
20180517:10:41:47	23.3	17.3	-3.5	23.6	0.25	2.1	0.25	2.1	125.8	285.8	286.4	86.9	51.0	87.0	825.966	821.368	1080.167	1075.105
20180517:10:46:47	23.3	17.5	-3.5	23.6	0.25	2.1	0.25	2.1	126.2	285.9	286.5	86.9	51.0	87.2	827.339	822.693	1081.969	1076.846
20180517:10:51:47	23.3	17.5	-3.6	23.6	0.25	2.1	0.25	2.1	126.2	285.8	286.3	86.9	51.0	87.2	828.677	824.067	1083.726	1078.65
20180517:10:56:47	23.3	17.5	-3.5	23.6	0.25	2.1	0.25	2.1	126.2	285.8	286.4	86.9	51.0	87.2	830.033	825.414	1085.506	1080.419
20180517:11:01:47	23.3	17.4	-3.5	23.6	0.25	2.1	0.25	2.1	126.1	285.7	286.3	86.8	50.9	87.2	831.404	826.733	1087.306	1082.152
20180517:11:06:47	23.3	17.4	-3.4	23.6	0.25	2.1	0.25	2.1	126.0	285.8	286.4	86.8	51.0	87.2	832.737	828.107	1089.057	1083.959
20180517:11:11:47	23.3	17.3	-3.5	23.6	0.25	2.1	0.25	2.1	125.9	285.7	286.3	86.8	50.9	87.3	834.093	829.436	1090.837	1085.705
20180517:11:16:47	23.3	17.3	-3.5	23.6	0.25	2.1	0.25	2.1	125.9	285.7	286.3	86.8	51.0	87.3	835.464	830.785	1092.637	1087.477
20180517:11:21:47	23.3	17.4	-3.5	23.6	0.25	2.1	0.25	2.1	126.1	285.8	286.4	86.9	51.0	87.3	836.801	832.142	1094.393	1089.259
20180517:11:26:47	23.3	17.4	-3.4	23.6	0.25	2.1	0.25	2.1	126.1	285.8	286.3	86.9	51.0	87.3	838.159	833.47	1096.176	1091.006
20180517:11:31:47	23.3	17.5	-3.5	23.6	0.25	2.1	0.25	2.1	126.2	285.9	286.4	87.0	50.9	87.4	839.536	834.846	1097.985	1092.814
20180517:11:36:47	23.3	17.5	-3.5	23.6	0.25	2.1	0.25	2.1	126.2	285.8	286.4	87.0	51.0	87.4	840.873	836.173	1099.741	1094.558
20180517:11:41:47	23.3	17.4	-3.4	23.6	0.25	2.1	0.25	2.1	126.1	285.7	286.3	87.0	50.9	87.4	842.225	837.51	1101.517	1096.316
20180517:11:46:47	23.3	17.4	-3.3	23.6	0.25	2.1	0.25	2.1	126.1	285.7	286.4	87.0	51.0	87.5	843.603	838.881	1103.328	1098.12
20180517:11:51:47	23.3	17.4	-3.3	23.6	0.25	2.1	0.25	2.1	126.1	285.8	286.4	87.1	51.0	87.5	844.937	840.206	1105.081	1099.863
20180517:11:56:47	23.3	17.4	-3.4	23.6	0.25	2.1	0.25	2.1	126.1	285.8	286.4	87.2	51.0	87.6	846.286	841.578	1106.856	1101.667

Time:	Stack Pressure:	Sat% H2O:	Static:	Barometric:	Flowmeter1:	Vacuum1:	Flowmeter2:	Vacuum2:	Stack Temp:	Sorbent Temp:	Probe Temp:	DGM#1 Temp:	Condenser Temp:	DGM#2 Temp:	DGM1*:	DGM2*:	DGM1:	DGM2:
day:hh:mm:ss	in-Hg	Percent	in-H2O	in-Hg	l/min	in-Hg	l/min	in-Hg	degF	degF	degF	degF	degF	degF	liters STP	liters STP	liters nominal	liters nominal
20180517:12:01:47	23.3	17.5	-3.4	23.6	0.25	2.1	0.25	2.1	126.2	285.7	286.4	87.2	51.0	87.6	847.668	842.93	1108.672	1103.447
20180517:12:06:47	23.3	17.5	-3.5	23.6	0.25	2.1	0.25	2.1	126.3	285.8	286.4	87.4	51.0	87.8	849.002	844.246	1110.426	1105.179
20180517:12:11:47	23.3	17.5	-3.6	23.6	0.25	2.1	0.25	2.1	126.3	285.8	286.4	87.5	51.1	87.8	850.354	845.626	1112.204	1106.994
20180517:12:16:47	23.3	17.5	-3.5	23.6	0.25	2.1	0.25	2.1	126.3	285.8	286.4	87.6	51.0	87.9	851.746	846.941	1114.035	1108.726
20180517:12:21:47	23.3	17.5	-3.4	23.6	0.25	2.1	0.25	2.1	126.3	285.8	286.4	87.7	51.1	87.9	853.077	848.292	1115.787	1110.504
20180517:12:26:47	23.3	17.5	-3.5	23.6	0.25	2.1	0.25	2.1	126.2	285.8	286.3	87.8	51.0	88.0	854.427	849.656	1117.563	1112.299
20180517:12:31:47	23.3	17.5	-3.3	23.6	0.25	2.1	0.25	2.1	126.3	285.8	286.4	87.8	51.1	88.0	855.818	850.983	1119.394	1114.047
20180517:12:36:47	23.3	17.5	-3.7	23.6	0.25	2.1	0.25	2.1	126.3	285.8	286.4	87.9	51.1	88.1	857.154	852.362	1121.154	1115.863
20180517:12:41:47	23.3	17.5	-3.6	23.6	0.25	2.1	0.25	2.1	126.1	285.8	286.4	87.9	51.0	88.1	858.493	853.702	1122.917	1117.628
20180517:12:46:47	23.3	17.5	-3.6	23.6	0.25	2.1	0.25	2.1	126.1	285.8	286.4	88.0	51.1	88.2	859.889	855.022	1124.756	1119.368
20180517:12:51:47	23.3	17.4	-3.9	23.6	0.25	2.1	0.25	2.1	125.9	285.8	286.4	88.1	51.0	88.2	861.241	856.404	1126.537	1121.19
20180517:12:56:47	23.2	16.6	-4.5	23.6	0.25	2.1	0.25	2.1	124.1	285.7	286.4	88.2	51.1	88.3	862.583	857.726	1128.306	1122.932
20180517:13:01:47	23.3	16.8	-3.9	23.6	0.25	2.1	0.25	2.1	124.6	285.8	286.4	88.2	51.0	88.3	863.966	859.08	1130.128	1124.716
20180517:13:06:47	23.3	17.0	-3.8	23.6	0.25	2.1	0.25	2.1	125.1	285.8	286.4	88.2	51.0	88.3	865.322	860.443	1131.915	1126.513
20180517:13:11:47	23.3	17.2	-3.7	23.6	0.25	2.1	0.25	2.1	125.4	285.8	286.3	88.2	51.0	88.4	866.649	861.77	1133.665	1128.263
20180517:13:16:47	23.3	17.2	-3.8	23.6	0.25	2.1	0.25	2.1	125.6	285.9	286.4	88.2	51.0	88.5	868.028	863.146	1135.481	1130.077
20180517:13:21:47	23.3	17.3	-3.8	23.6	0.25	2.1	0.25	2.1	125.8	285.9	286.4	88.2	51.1	88.5	869.375	864.486	1137.257	1131.844
20180517:13:26:47	23.3	17.4	-3.8	23.6	0.25	2.1	0.25	2.1	125.9	285.8	286.4	88.2	51.0	88.5	870.714	865.807	1139.022	1133.586
20180517:13:31:47	23.3	17.4	-3.8	23.6	0.25	2.1	0.25	2.2	126.0	285.9	286.3	88.2	51.0	88.6	872.085	867.181	1140.83	1135.398
20180517:13:36:47	23.3	17.4	-3.7	23.6	0.25	2.1	0.25	2.1	126.0	285.8	286.4	88.2	51.0	88.6	873.451	868.503	1142.63	1137.143
20180517:13:41:47	23.3	17.4	-3.8	23.6	0.25	2.1	0.25	2.1	126.0	285.8	286.3	88.2	51.0	88.6	874.783	869.852	1144.385	1138.921
20180517:13:46:47	23.3	17.4	-3.8	23.6	0.25	2.1	0.25	2.1	126.0	285.8	286.4	88.2	51.0	88.6	876.142	871.212	1146.176	1140.714
20180517:13:51:47	23.3	17.4	-3.8	23.6	0.25	2.1	0.25	2.1	126.0	285.8	286.4	88.2	51.0	88.7	877.513	872.541	1147.981	1142.468
20180517:13:56:47	23.3	17.4	-3.7	23.6	0.25	2.1	0.25	2.1	126.1	285.8	286.3	88.2	51.0	88.7	878.853	873.922	1149.748	1144.289
20180517:14:01:47	23.3	17.0	-4.3	23.6	0.25	2.1	0.25	2.1	125.1	285.7	286.4	88.2	51.0	88.7	880.202	875.262	1151.526	1146.056
20180517:14:06:47	23.3	16.4	-4.2	23.6	0.25	2.1	0.25	2.1	123.7	285.7	286.4	88.2	51.0	88.7	881.582	876.583	1153.344	1147.799
20180517:14:11:47	23.3	16.8	-3.7	23.6	0.25	2.1	0.25	2.1	124.7	285.7	286.3	88.2	51.0	88.8	882.912	877.962	1155.096	1149.618
20180517:14:16:47	23.3	17.2	-3.8	23.6	0.25	2.1	0.25	2.1	125.4	285.8	286.4	88.2	51.0	88.8	884.266	879.283	1156.881	1151.361
20180517:14:21:47	23.3	17.3	-3.8	23.6	0.25	2.1	0.25	2.2	125.8	285.8	286.3	88.2	51.0	88.9	885.659	880.635	1158.717	1153.145
20180517:14:26:47	23.3	17.4	-3.7	23.6	0.25	2.1	0.25	2.1	126.0	285.8	286.4	88.2	51.0	88.9	886.995	882.002	1160.478	1154.949
20180517:14:31:47	23.3	17.4	-3.6	23.6	0.25	2.1	0.25	2.1	126.1	285.8	286.3	88.2	51.0	88.9	888.338	883.332	1162.248	1156.705
20180517:14:36:47	23.3	17.6	-3.5	23.6	0.25	2.1	0.25	2.1	126.4	285.8	286.4	88.3	51.1	88.9	889.733	884.704	1164.087	1158.515
20180517:14:41:47	23.3	17.6	-3.5	23.6	0.25	2.1	0.25	2.1	126.4	285.7	286.3	88.3	50.9	88.9	891.071	886.059	1165.852	1160.305
20180517:14:46:47	23.3	17.6	-3.5	23.6	0.25	2.1	0.25	2.1	126.4	285.8	286.4	88.3	51.0	89.0	892.408	887.379	1167.615	1162.047
20180517:14:51:47	23.3	17.5	-3.5	23.6	0.25	2.1	0.25	2.1	126.3	285.8	286.4	88.3	51.0	89.0	893.798	888.755	1169.448	1163.865
20180517:14:56:47	23.3	17.5	-3.5	23.6	0.25	2.1	0.25	2.1	126.1	285.8	286.4	88.4	51.0	89.0	895.148	890.085	1171.23	1165.62
20180517:15:01:47	23.3	17.5	-3.5	23.6	0.25	2.1	0.25	2.1	126.1	285.8	286.4	88.4	51.0	89.0	896.476	891.422	1172.981	1167.387
20180517:15:06:47	23.3	17.5	-3.5	23.6	0.25	2.1	0.25	2.1	126.2	285.7	286.3	88.4	51.0	89.1	897.859	892.801	1174.806	1169.209
20180517:15:11:47	23.2	16.8	-4.4	23.6	0.25	2.1	0.25	2.1	124.5	285.7	286.3	88.5	51.0	89.2	899.208	894.133	1176.585	1170.968
20180517:15:16:47	23.3	16.9	-3.7	23.6	0.25	2.1	0.25	2.1	124.8	285.8	286.4	88.5	51.0	89.2	900.541	895.48	1178.344	1172.748
20180517:15:21:47	23.3	17.2	-3.6	23.6	0.25	2.1	0.25	2.2	125.5	285.8	286.4	88.6	51.0	89.2	901.916	896.833	1180.159	1174.536
20180517:15:26:47	23.3	17.4	-3.6	23.6	0.25	2.1	0.25	2.1	125.9	285.8	286.3	88.6	51.0	89.2	903.272	898.165	1181.948	1176.295
20180517:15:31:47	23.3	17.4	-3.5	23.6	0.25	2.1	0.25	2.1	126.0	285.8	286.4	88.6	51.0	89.3	904.604	899.547	1183.706	1178.12
20180517:15:36:47	23.3	17.5	-3.5	23.6	0.25	2.1	0.25	2.1	126.1	285.8	286.4	88.6	51.0	89.3	905.968	900.885	1185.506	1179.889
20180517:15:41:47	23.3	17.5	-3.6	23.6	0.25	2.1	0.25	2.1	126.2	285.8	286.3	88.6	51.1	89.3	907.333	902.204	1187.307	1181.632
20180517:15:46:47	23.3	17.5	-3.5	23.6	0.25	2.1	0.25	2.1	126.2	285.8	286.3	88.6	51.0	89.3	908.675	903.581	1189.078	1183.451
20180517:15:51:47	23.3	17.6	-3.5	23.6	0.25	2.1	0.25	2.1	126.4	285.9	286.4	88.7	51.1	89.4	910.022	904.899	1190.856	1185.192
20180517:15:56:47	23.3	17.6	-3.6	23.6	0.25	2.1	0.25	2.1	126.3	285.8	286.4	88.7	51.0	89.4	911.399	906.249	1192.672	1186.976
20180517:16:01:47	23.3	17.6	-3.6	23.6	0.25	2.1	0.25	2.1	126.4	285.9	286.4	88.7	51.0	89.5	912.728	907.618	1194.426	1188.784
20180517:16:06:47	23.3	17.5	-3.6	23.6	0.25	2.1	0.25	2.1	126.3	285.7	286.3	88.7	51.1	89.5	914.081	908.946	1196.211	1190.539
20180517:16:11:47	23.3	17.6	-3.5	23.6	0.25	2.1	0.25	2.1	126.3	285.8	286.4	88.7	51.0	89.5	915.467	910.317	1198.041	1192.352
20180517:16:16:47	23.3	17.4	-4.0	23.6	0.25	2.1	0.25	2.1	125.9	285.8	286.3	88.8	51.1	89.5	916.803	911.668	1199.804	1194.137
20180517:16:21:47	23.3	16.8	-4.1	23.6	0.25	2.1	0.25	2.1	124.5	285.7	286.4	88.8	51.1	89.5	918.148	912.984	1201.58	1195.878
20180517:16:26:47	23.3	17.3	-3.5	23.6	0.25	2.1	0.25	2.2	125.8	285.7	286.3	88.9	51.0	89.6	919.542	914.366	1203.42	1197.705
20180517:16:31:47	23.3	17.6	-3.5	23.6	0.25	2.1	0.25	2.2	126.3	285.8	286.3	88.9	51.1	89.6	920.884	915.695	1205.193	1199.462
20180517:16:36:47	23.3	17.7	-3.6	23.6	0.25	2.1	0.25	2.2	126.7	285.8	286.4	88.9	51.1	89.6	922.222	917.031	1206.959	1201.227
20180517:16:41:47	23.3	17.7	-3.6	23.6	0.25	2.1	0.25	2.2	126.6	285.8	286.4	89.0	51.0	89.6	923.61	918.407	1208.793	1203.047
20180517:16:46:47	23.3	17.7	-3.5	23.6	0.25	2.1	0.25	2.1	126.6	285.8	286.4	89.0	51.2	89.6	924.965	919.74	1210.583	1204.81
20180517:16:51:47	23.3	17.7	-3.5	23.5	0.25	2.1	0.25	2.1	126.6	285.8	286.4	89.2	51.1	89.7	926.292	921.087	1212.337	1206.592
20180517:16:56:47	23.3	17.7	-3.5	23.5	0.25	2.1	0.25	2.1	126.6	285.8	286.4	89.3	51.1	89.8	927.668	922.447	1214.156	1208.391
20180517:17:01:47	23.3	17.8	-3.5	23.6	0.25	2.1	0.25	2.1	126.8	285.8	286.3	89.3	51.2	89.8	929.027	923.777	1215.952	1210.15
20180517:17:06:47	23.3	17.8	-3.5	23.6	0.25	2.1	0.25	2.1	126.9	285.8	286.4	89.4	51.2	89.8	930.364	925.152	1217.719	1211.97
20180517:17:11:47	23.3	17.7	-3.5	23.6	0.25	2.1	0.25	2.2	126.7	285.8	286.4	89.5	51.2	89.9	931.725	926.498	1219.519	1213.75
20180517:17:16:47	23.3	17.7	-3.6	23.6	0.25	2.1	0.25	2.1	126.7	285.8	286.5	89.5	51.2	89.9	933.101	927.812	1221.337	1215.489
20180517:17:21:47	23.3	17.8	-3.6	23.6	0.25	2.1	0.25	2.1	126.7	285.8	286.5	89.6	51.1	89.9	934.437	929.193	1223.104	1217.316
20180517:17:26:47	23.3	17.5	-3.8	23.6	0.25	2.1	0.25	2.1	126.1	285.8	286.5	89.7	51.2	90.0	935.788	930.515	1224.891	1219.066
20180517:17:31:47	23.3	17.6	-3.5	23.6	0.25	2.2	0.25	2.2	126.4	285.9	286.5	89.8	51.2	90.0	937.182	931.855	1226.735	1220.838
20180517:17:36:47	23.3	17.7	-3.7	23.5	0.25	2.2	0.25	2.2	126.6	285.9	286.5	89.8	51.2	90.1	938.527	933.232	1228.515	1222.662
20180517:17:41:47	23.3	17.9	-3.9	23.6	0.25	2.2	0.25	2.2	126.9	285.9	286.4	89.9	51.2	90.1	939.871	934.559	1230.293	1224.417
20180517:17:46:47	23.3	17.8	-3.8	23.6	0.25	2.1	0.25	2.2	126.8	285.8	286.4	89.9	51.1	90.2	941.261	935.916	1232.131	1226.214
20180517:17:51:47	23.3	17.8	-3.8	23.5	0.25	2.1	0.25	2.1	126.7	285.9	286.4	90.0	51.2	90.2	942.614	937.275	1233.922	1228.013
20180517:17:56:47	23.3	17.8	-3.8	23.5	0.25	2.1	0.25	2.1	126.7	285.8	286.5	90.0	51.2	90.2	943.954	938.607	1235.696	1229.778
20180517:18:01:47	23.3	17.7	-3.9	23.5	0.25	2.1	0.25	2.1	126.6	285.8	286.4	90.1	51.2	90.2	945.325	939.983	1237.511	1231.6
20180517:18:06:47	23.3	17.7	-3.8	23.5	0.25	2.1	0.25	2.1	126.6	285.8	286.5	90.1	51.2	90.3	946.696	941.334	1239.328	1233.389
20180517:18:11:47	23.3	17.8	-3.8	23.5	0.25	2.1	0.25	2.2	126.8	285.9	286.4	90.2	51.2	90.3	948.029	942.653	1241.093	1235.137
20180517:18:16:47	23.3	17.9	-3.8	23.5	0.25	2.2	0.25	2.2	127.0	285.9	286.5	90.2	51.2	90.3	949.384	944.03	1242.887	1236.961
20180517:18:21:47	23.3	17.8	-3.8	23.5	0.25	2.2	0.25	2.2	126.9	285.8	286.4	90.2	51.2	90.3	950.785	945.364	1244.743	1238.727
20180517:18:26:47	23.3	17.7	-3.9	23.5	0.25	2.1	0.25	2.1	126.5	285.9	286.5	90.3	51.2	90.3	952.131	946.696	1246.526	1240.492
20180517:18:31:47	23.3	17.5	-3.9	23.5	0.25	2.1	0.25	2.1	126.0	285.9	286.4	90.2	51.2	90.3	953.473	948.078	1248.304	1242.323
20180517:18:36:47	23.3	17.6	-3.7	23.5	0.25	2.1	0.25	2.1	126.3	285.8	286.4	90.2	51.2	90.3	954.857	949.4	1250.137	1244.075
20180517:18:41:47	23.3	17.6	-3.7	23.5	0.25	2.1	0.25	2.2	126.4	285.8	286.4	90.2	51.2	90.3	956.207	950.752	1251.926	1245.867
20180517:18:46:47	23.3	17.5	-3.7	23.5	0.25	2.2	0.25	2.2	126.1	285.8	286.4	90.1	51.2	90.3	957.555	952.127	1253.711	1247.69
20180517:18:51:47	23.3	17.4	-3.7	23.5	0.25	2.2	0.25	2.2	125.9	285.8	286.3	90.0	51.1	90.3	958.92	953.461	1255.519	1249.457
20180517:18:56:48	23.3	17.2	-3.7	23.5	0.25	2.2	0.25	2.2	125.6	285.8	286.4	90.0	51.1	90.3	960.304	954.822	1257.35	1251.259
20180517:19:01:48	23.3	17.0	-3.7	23.5	0.25	2.2	0.25	2.2	125.1	285.8	286.4	89.9	51.2	90.3	961.643	956.182	1259.122	1253.062
20180517:19:06:48	23.2	16.6	-4.2	23.5	0.25	2.1	0.25	2.2	124.2	285.7	286.4	89.8	51.1	90.3	962.999	957.519	1260.917	1254.833
20180517:19:11:48	23.2	15.9	-4.4	23.5	0.25	2.1	0.25	2.1	122.4	285.6	286.4	89.8	51.1	90.3	964.392	958.894	1262.761	1256.654
20180517:19:16:48	23.3	16.1	-3.9	23.5	0.25	2.1	0.25	2.2	123.1	285.7	286.4	89.7	51.1	90.3	965.747	960.253	1264.554	1258.453
20180517:19:21:48	23.2	16.3	-4.2	23.5	0.25	2.1	0.25	2.2	123.5	285.7	286.4	89.7	51.1	90.3	967.087	961.585	1266.326	1260.218

Time:	Stack Pressure:	Sat% H2O:	Static:	Barometric:	Flowmeter1:	Vacuum1:	Flowmeter2:	Vacuum2:	Stack Temp:	Sorbent Temp:	Probe Temp:	DGM#1 Temp:	Condenser Temp:	DGM#2 Temp:	DGM1*:	DGM2*:	DGM1:	DGM2:
day:hh:mm:ss	in-Hg	Percent	in-H2O	in-Hg	l/min	in-Hg	l/min	in-Hg	degF	degF	degF	degF	degF	degF	liters STP	liters STP	liters nominal	liters nominal
20180517:19:26:48	23.3	16.0	-3.9	23.5	0.25	2.1	0.25	2.2	122.7	285.7	286.4	89.7	51.2	90.3	968.47	962.969	1268.156	1262.051
20180517:19:31:48	23.3	15.8	-3.8	23.5	0.25	2.1	0.25	2.2	122.4	285.7	286.4	89.6	51.1	90.3	969.836	964.325	1269.963	1263.846
20180517:19:36:48	23.3	15.9	-4.0	23.5	0.25	2.2	0.25	2.2	122.6	285.7	286.4	89.6	51.0	90.3	971.186	965.652	1271.748	1265.603
20180517:19:41:48	23.3	15.9	-4.0	23.6	0.25	2.2	0.25	2.2	122.5	285.7	286.4	89.6	51.1	90.2	972.541	967.04	1273.539	1267.442
20180517:19:46:48	23.3	15.8	-4.0	23.5	0.25	2.2	0.25	2.2	122.4	285.7	286.4	89.6	51.0	90.2	973.937	968.382	1275.385	1269.218
20180517:19:51:48	23.3	15.7	-3.9	23.5	0.25	2.1	0.25	2.2	122.2	285.8	286.4	89.6	51.1	90.2	975.283	969.709	1277.165	1270.976
20180517:19:56:48	23.3	15.7	-3.7	23.5	0.25	2.1	0.25	2.2	122.0	285.7	286.4	89.6	51.1	90.2	976.632	971.106	1278.95	1272.825
20180517:20:01:48	23.3	15.6	-3.7	23.5	0.25	2.1	0.25	2.2	121.8	285.7	286.4	89.6	51.0	90.2	978.026	972.444	1280.794	1274.598
20180517:20:06:48	23.3	15.5	-3.8	23.5	0.25	2.1	0.25	2.2	121.8	285.7	286.4	89.6	51.1	90.2	979.382	973.786	1282.587	1276.374
20180517:20:11:48	23.3	15.6	-3.8	23.6	0.25	2.2	0.25	2.2	121.9	285.7	286.3	89.6	51.2	90.2	980.726	975.17	1284.365	1278.207
20180517:20:16:48	23.3	15.2	-3.9	23.6	0.25	2.1	0.25	2.2	121.0	285.6	286.3	89.6	51.2	90.2	982.1	976.502	1286.181	1279.97
20180517:20:21:48	23.3	14.9	-3.9	23.6	0.25	2.1	0.25	2.2	120.4	285.5	286.3	89.6	51.2	90.2	983.481	977.851	1288.007	1281.756
20180517:20:26:48	23.3	14.8	-3.8	23.6	0.25	2.1	0.25	2.2	120.1	285.6	286.4	89.5	51.2	90.2	984.823	979.235	1289.781	1283.588
20180517:20:31:48	23.3	15.3	-3.9	23.6	0.25	2.2	0.25	2.2	121.1	285.6	286.3	89.5	51.2	90.2	986.185	980.569	1291.581	1285.353
20180517:20:36:48	23.3	15.5	-4.0	23.6	0.25	2.2	0.25	2.2	121.7	285.8	286.4	89.5	51.2	90.1	987.586	981.924	1293.433	1287.147
20180517:20:41:48	23.3	15.7	-4.0	23.6	0.25	2.2	0.25	2.2	122.2	285.8	286.4	89.5	51.2	90.1	988.948	983.309	1295.233	1288.979
20180517:20:46:48	23.3	16.0	-4.1	23.6	0.25	2.2	0.25	2.2	122.8	285.8	286.4	89.5	51.3	90.1	990.289	984.642	1297.006	1290.742
20180517:20:51:48	23.3	16.2	-4.1	23.6	0.25	2.2	0.25	2.2	123.2	285.9	286.4	89.4	51.2	90.1	991.671	986.001	1298.831	1292.541
20180517:20:56:48	23.3	16.2	-4.0	23.6	0.25	2.2	0.25	2.2	123.4	285.8	286.2	89.3	51.2	90.0	993.046	987.371	1300.648	1294.353
20180517:21:01:48	23.3	16.3	-4.1	23.6	0.25	2.2	0.25	2.2	123.5	285.9	286.4	89.3	51.2	90.0	994.392	988.713	1302.426	1296.128
20180517:21:06:48	23.3	16.2	-4.1	23.6	0.25	2.2	0.25	2.2	123.3	285.8	286.4	89.3	51.3	90.0	995.752	990.088	1304.222	1297.945
20180517:21:11:48	23.3	15.8	-4.0	23.6	0.25	2.2	0.25	2.2	122.3	285.9	286.5	89.2	51.3	89.9	997.156	991.454	1306.076	1299.752
20180517:21:16:48	23.3	15.6	-4.0	23.6	0.25	2.2	0.25	2.2	121.8	285.7	286.3	89.2	51.2	89.9	998.508	992.799	1307.861	1301.53
20180517:21:21:48	23.3	15.5	-4.0	23.6	0.25	2.2	0.25	2.2	121.6	285.8	286.4	89.2	51.2	89.9	999.859	994.177	1309.644	1303.352
20180517:21:26:48	23.3	15.7	-4.0	23.6	0.25	2.2	0.25	2.2	122.3	285.8	286.4	89.1	51.2	89.9	1001.251	995.542	1311.481	1305.156
20180517:21:31:48	23.3	16.4	-4.0	23.6	0.25	2.2	0.25	2.2	123.7	285.8	286.4	89.0	51.2	89.8	1002.615	996.888	1313.281	1306.934
20180517:21:36:48	23.3	16.6	-4.0	23.6	0.25	2.2	0.25	2.2	124.3	285.9	286.5	89.2	51.2	89.8	1003.973	998.272	1315.074	1308.763
20180517:21:41:48	23.3	16.7	-4.0	23.6	0.25	2.2	0.25	2.2	124.4	286.0	286.4	89.2	51.3	89.7	1005.336	999.634	1316.874	1310.564
20180517:21:46:48	23.3	16.8	-3.9	23.6	0.25	2.2	0.25	2.2	124.6	285.9	286.3	89.2	51.2	89.7	1006.741	1000.975	1318.73	1312.336
20180517:21:51:48	23.3	16.8	-4.0	23.6	0.25	2.2	0.25	2.2	124.6	285.9	286.5	89.1	51.2	89.7	1008.099	1002.363	1320.522	1314.171
20180517:21:56:48	23.3	16.9	-4.1	23.6	0.25	2.2	0.25	2.2	124.8	285.9	286.5	89.2	51.2	89.7	1009.452	1003.729	1322.309	1315.976
20180517:22:01:48	23.3	16.8	-4.1	23.6	0.25	2.2	0.25	2.2	124.7	285.9	286.4	89.2	51.3	89.6	1010.846	1005.066	1324.15	1317.742
20180517:22:06:48	23.3	16.8	-4.2	23.6	0.25	2.2	0.25	2.2	124.7	285.9	286.5	89.3	51.3	89.6	1012.219	1006.454	1325.963	1319.577
20180517:22:11:48	23.3	16.3	-4.1	23.6	0.25	2.2	0.25	2.2	123.5	285.8	286.4	89.3	51.2	89.6	1013.573	1007.812	1327.752	1321.372
20180517:22:16:48	23.3	16.2	-3.8	23.6	0.25	2.2	0.25	2.2	123.2	285.8	286.5	89.3	51.3	89.6	1014.931	1009.144	1329.546	1323.133
20180517:22:21:48	23.3	16.5	-3.6	23.6	0.25	2.2	0.25	2.2	124.1	286.0	286.5	89.3	51.3	89.6	1016.337	1010.54	1331.404	1324.977
20180517:22:26:48	23.3	16.7	-3.8	23.6	0.25	2.2	0.25	2.2	124.4	286.0	286.5	89.3	51.3	89.5	1017.694	1011.889	1333.196	1326.761
20180517:22:31:48	23.3	16.8	-3.6	23.6	0.25	2.2	0.25	2.2	124.7	285.9	286.5	89.3	51.3	89.5	1019.043	1013.223	1334.98	1328.524
20180517:22:36:48	23.3	16.9	-3.3	23.6	0.25	2.2	0.25	2.2	124.9	285.9	286.4	89.3	51.3	89.5	1020.436	1014.618	1336.82	1330.368
20180517:22:41:48	23.3	17.0	-3.2	23.6	0.25	2.2	0.25	2.2	125.2	285.9	286.5	89.3	51.3	89.5	1021.808	1015.967	1338.633	1332.152
20180517:22:46:48	23.3	17.1	-3.1	23.6	0.25	2.2	0.25	2.2	125.4	286.0	286.4	89.3	51.3	89.4	1023.161	1017.303	1340.42	1333.917
20180517:22:51:48	23.3	17.2	-3.1	23.6	0.25	2.2	0.25	2.2	125.5	286.0	286.5	89.3	51.2	89.4	1024.519	1018.703	1342.215	1335.767
20180517:22:56:48	23.3	17.2	-2.9	23.6	0.25	2.2	0.25	2.2	125.6	286.0	286.5	89.3	51.3	89.4	1025.923	1020.038	1344.07	1337.532
20180517:23:01:48	23.3	17.3	-3.0	23.6	0.25	2.2	0.25	2.2	125.8	286.0	286.5	89.2	51.2	89.3	1027.279	1021.388	1345.861	1339.316
20180517:23:06:48	23.3	17.4	-3.0	23.6	0.25	2.2	0.25	2.2	126.1	286.0	286.4	89.2	51.3	89.3	1028.627	1022.772	1347.643	1341.145
20180517:23:11:48	23.3	17.4	-3.7	23.6	0.25	2.1	0.25	2.2	126.0	286.0	286.5	89.2	51.2	89.3	1030.022	1024.107	1349.485	1342.908
20180517:23:16:48	23.2	16.6	-4.4	23.6	0.25	2.1	0.25	2.1	124.1	285.9	286.4	89.2	51.3	89.2	1031.386	1025.46	1351.287	1344.695
20180517:23:21:48	23.2	16.4	-4.6	23.6	0.25	2.1	0.25	2.1	123.7	285.9	286.5	89.1	51.2	89.2	1032.737	1026.844	1353.072	1346.524
20180517:23:26:48	23.2	16.6	-4.4	23.6	0.25	2.1	0.25	2.1	124.1	285.8	286.4	88.9	51.2	89.2	1034.098	1028.187	1354.869	1348.299
20180517:23:31:48	23.2	17.1	-4.3	23.6	0.25	2.1	0.25	2.2	125.3	285.9	286.5	88.8	51.1	89.1	1035.492	1029.54	1356.709	1350.086
20180517:23:36:48	23.2	17.4	-4.2	23.6	0.25	2.1	0.25	2.2	125.9	286.0	286.4	88.7	51.2	89.1	1036.84	1030.911	1358.489	1351.897
20180517:23:41:48	23.2	17.6	-4.2	23.6	0.25	2.1	0.25	2.2	126.4	286.0	286.5	88.6	51.1	89.0	1038.188	1032.244	1360.269	1353.658
20180517:23:46:48	23.2	17.8	-4.2	23.6	0.25	2.1	0.25	2.2	126.8	286.0	286.5	88.6	51.2	89.0	1039.589	1033.618	1362.117	1355.472
20180517:23:51:48	23.2	18.0	-4.1	23.6	0.25	2.1	0.25	2.2	127.2	286.0	286.5	88.5	51.1	88.9	1040.954	1034.975	1363.919	1357.265
20180517:23:56:48	23.2	18.2	-4.1	23.5	0.25	2.1	0.25	2.2	127.6	286.0	286.5	88.5	51.2	88.9	1042.29	1036.309	1365.681	1359.026
20180518:00:01:48	23.2	18.2	-4.2	23.5	0.25	2.1	0.25	2.2	127.6	286.0	286.6	88.4	51.1	88.8	1043.672	1037.694	1367.506	1360.855
20180518:00:06:48	23.2	18.2	-4.2	23.5	0.25	2.1	0.25	2.1	127.5	286.0	286.5	88.4	51.2	88.8	1045.041	1039.04	1369.313	1362.633
20180518:00:11:48	23.2	18.1	-4.2	23.5	0.25	2.1	0.25	2.1	127.4	285.9	286.5	88.3	51.2	88.7	1046.387	1040.362	1371.089	1364.38
20180518:00:16:48	23.2	18.1	-4.3	23.5	0.25	2.1	0.25	2.2	127.3	285.9	286.5	88.3	51.2	88.7	1047.737	1041.752	1372.87	1366.214
20180518:00:21:48	23.2	18.1	-4.3	23.5	0.25	2.1	0.25	2.1	127.2	285.9	286.5	88.3	51.2	88.7	1049.127	1043.074	1374.704	1367.961
20180518:00:26:48	23.2	18.0	-4.3	23.5	0.25	2.1	0.25	2.1	127.1	285.9	286.5	88.2	51.2	88.6	1050.461	1044.418	1376.465	1369.735
20180518:00:31:48	23.2	18.0	-4.3	23.5	0.25	2.1	0.25	2.1	127.0	285.8	286.4	88.2	51.1	88.6	1051.812	1045.796	1378.246	1371.555
20180518:00:36:48	23.2	18.0	-4.3	23.5	0.25	2.1	0.25	2.2	127.0	285.9	286.4	88.1	51.2	88.5	1053.202	1047.123	1380.08	1373.306
20180518:00:41:48	23.2	18.0	-4.3	23.5	0.25	2.1	0.25	2.2	127.1	285.9	286.5	88.0	51.1	88.5	1054.538	1048.481	1381.843	1375.1
20180518:00:46:48	23.2	18.1	-4.3	23.5	0.25	2.1	0.25	2.2	127.2	285.9	286.5	87.9	51.2	88.4	1055.869	1049.837	1383.598	1376.889
20180518:00:51:48	23.2	18.1	-4.2	23.5	0.25	2.1	0.25	2.2	127.3	285.9	286.4	87.8	51.1	88.3	1057.261	1051.164	1385.433	1378.641
20180518:00:56:48	23.2	18.1	-4.2	23.5	0.25	2.1	0.25	2.2	127.2	285.9	286.4	87.7	51.1	88.3	1058.602	1052.546	1387.202	1380.466
20180518:01:01:48	23.2	18.1	-4.2	23.5	0.25	2.1	0.25	2.2	127.3	285.9	286.4	87.6	51.1	88.3	1059.935	1053.879	1388.959	1382.226
20180518:01:06:48	23.2	18.1	-4.3	23.5	0.25	2.1	0.25	2.2	127.2	285.8	286.4	87.5	51.1	88.2	1061.323	1055.205	1390.789	1383.976
20180518:01:11:48	23.2	18.0	-4.2	23.5	0.25	2.1	0.25	2.2	127.1	285.9	286.5	87.4	51.1	88.1	1062.672	1056.587	1392.567	1385.799
20180518:01:16:48	23.2	17.9	-4.3	23.5	0.25	2.1	0.25	2.2	127.0	285.8	286.4	87.3	51.1	88.1	1064.002	1057.913	1394.319	1387.549
20180518:01:21:48	23.2	17.9	-4.4	23.5	0.25	2.1	0.25	2.2	127.0	285.8	286.4	87.3	51.1	88.0	1065.387	1059.267	1396.143	1389.335
20180518:01:26:48	23.2	17.9	-4.5	23.5	0.25	2.2	0.25	2.2	127.0	285.8	286.4	87.2	51.1	88.0	1066.738	1060.636	1397.922	1391.139
20180518:01:31:48	23.2	17.9	-4.4	23.5	0.25	2.2	0.25	2.2	126.9	285.8	286.4	87.2	51.1	87.9	1068.074	1061.968	1399.681	1392.897
20180518:01:36:48	23.2	17.9	-4.4	23.5	0.25	2.2	0.25	2.2	126.9	285.8	286.4	87.1	51.2	87.9	1069.454	1063.344	1401.498	1394.711
20180518:01:41:48	23.2	17.9	-4.4	23.5	0.25	2.1	0.25	2.2	126.9	285.8	286.4	87.0	51.1	87.8	1070.817	1064.703	1403.293	1396.502
20180518:01:46:48	23.2	17.9	-4.4	23.6	0.25	2.1	0.25	2.2	126.9	285.9	286.4	86.9	51.1	87.7	1072.155	1066.03	1405.054	1398.25
20180518:01:51:48	23.2	17.9	-4.5	23.6	0.25	2.1	0.25	2.1	126.8	285.8	286.4	86.9	51.0	87.7	1073.521	1067.415	1406.85	1400.075
20180518:01:56:48	23.2	17.8	-4.5	23.6	0.25	2.1	0.25	2.1	126.7	285.8	286.4	86.8	51.1	87.6	1074.896	1068.751	1408.659	1401.836
20180518:02:01:48	23.2	17.8	-4.5	23.6	0.25	2.1	0.25	2.1	126.7	285.9	286.5	86.7	51.0	87.5	1076.238	1070.089	1410.424	1403.598
20180518:02:06:48	23.2	17.8	-4.6	23.6	0.25	2.1	0.25	2.2	126.6	285.8	286.4	86.6	51.1	87.5	1077.59	1071.47	1412.202	1405.417
20180518:02:11:48	23.2	17.7	-4.6	23.6	0.25	2.1	0.25	2.2	126.5	285.8	286.4	86.6	51.0	87.4	1078.973	1072.803	1414.02	1407.173
20180518:02:16:48	23.2	17.7	-4.6	23.6	0.25	2.1	0.25	2.2	126.4	285.8	286.5	86.5	51.1	87.3	1080.305	1074.155	1415.772	1408.953
20180518:02:21:48	23.2	17.7	-4.7	23.6	0.25	2.1	0.25	2.2	126.5	285.8	286.4	86.5	51.1	87.3	1081.659	1075.523	1417.552	1410.754
20180518:02:26:48	23.2	17.7	-4.7	23.6	0.25	2.1	0.25	2.2	126.5	285.8	286.4	86.4	51.2	87.2	1083.048	1076.858	1419.378	1412.511
20180518:02:31:48	23.2	17.6	-4.7	23.6	0.25	2.1	0.25	2.2	126.3	285.8	286.4	86.3	51.1	87.2	1084.381	1078.238	1421.13	1414.327
20180518:02:36:48	23.2	17.6	-4.7	23.6	0.25	2.1	0.25	2.2	126.3	285.8	286.4	86.3	51.1	87.1	1085.732	1079.59	1422.904	1416.105
20180518:02:41:48	23.2	17.6	-4.7	23.6	0.25	2.1	0.25	2.2	126.3	285.8	286.4	86.3	51.1	87.1	1087.124	1080.908	1424.733	1417.84
20180518:02:46:48	23.2	17.6	-4.8	23.6	0.25	2.1	0.25	2.1	126.3	285.8	286.4	86.3	51.1	87.0	1088.461	1082.294	1426.489	1419.664

Time:	Stack Pressure:	Sat% H2O:	Static:	Barometric:	Flowmeter1:	Vacuum1:	Flowmeter2:	Vacuum2:	Stack Temp:	Sorbent Temp:	Probe Temp:	DGM#1 Temp:	Condenser Temp:	DGM#2 Temp:	DGM1*:	DGM2*:	DGM1:	DGM2:
day:hh:mm:ss	in-Hg	Percent	in-H2O	in-Hg	l/min	in-Hg	l/min	in-Hg	degF	degF	degF	degF	degF	degF	liters STP	liters STP	liters nominal	liters nominal
20180518:02:51:48	23.2	17.6	-4.8	23.6	0.25	2.1	0.25	2.2	126.3	285.8	286.4	86.3	51.1	87.0	1089.804	1083.615	1428.254	1421.4
20180518:02:56:48	23.2	17.7	-4.7	23.6	0.25	2.2	0.25	2.2	126.4	285.8	286.4	86.2	51.1	86.9	1091.203	1084.97	1430.091	1423.182
20180518:03:01:48	23.2	17.6	-4.8	23.6	0.25	2.2	0.25	2.2	126.4	285.8	286.4	86.1	51.1	86.9	1092.538	1086.342	1431.844	1424.987
20180518:03:06:48	23.2	17.6	-4.8	23.6	0.25	2.1	0.25	2.2	126.3	285.8	286.4	86.0	51.2	86.8	1093.876	1087.672	1433.602	1426.737
20180518:03:11:48	23.2	17.6	-4.7	23.6	0.25	2.1	0.25	2.2	126.3	285.9	286.4	86.0	51.1	86.7	1095.268	1089.048	1435.43	1428.545
20180518:03:16:48	23.2	17.7	-4.7	23.6	0.25	2.1	0.25	2.2	126.4	285.8	286.4	85.9	51.1	86.7	1096.614	1090.4	1437.196	1430.323
20180518:03:21:48	23.2	17.7	-4.7	23.6	0.25	2.1	0.25	2.2	126.4	285.8	286.5	85.8	51.1	86.6	1097.953	1091.718	1438.954	1432.056
20180518:03:26:48	23.2	17.6	-4.7	23.6	0.25	2.1	0.25	2.2	126.3	285.8	286.4	85.7	51.1	86.6	1099.345	1093.108	1440.781	1433.883
20180518:03:31:48	23.2	17.7	-4.6	23.6	0.25	2.1	0.25	2.2	126.4	285.8	286.4	85.7	51.0	86.5	1100.696	1094.434	1442.554	1435.626
20180518:03:36:48	23.2	17.7	-4.7	23.6	0.25	2.1	0.25	2.2	126.5	285.8	286.4	85.6	51.1	86.5	1102.031	1095.784	1444.306	1437.4
20180518:03:41:48	23.2	17.7	-4.8	23.6	0.25	2.1	0.25	2.2	126.4	285.9	286.5	85.6	51.1	86.4	1103.42	1097.163	1446.128	1439.212
20180518:03:46:48	23.2	17.7	-4.8	23.6	0.25	2.1	0.25	2.2	126.4	285.8	286.4	85.5	51.1	86.3	1104.774	1098.498	1447.904	1440.966
20180518:03:51:48	23.2	17.6	-4.7	23.6	0.25	2.1	0.25	2.2	126.3	285.8	286.4	85.4	51.0	86.3	1106.106	1099.871	1449.65	1442.769
20180518:03:56:48	23.2	17.6	-4.7	23.6	0.25	2.1	0.25	2.2	126.3	285.9	286.5	85.3	51.1	86.2	1107.492	1101.233	1451.469	1444.558
20180518:04:01:48	23.2	17.6	-4.8	23.6	0.25	2.1	0.25	2.2	126.2	285.8	286.4	85.3	51.0	86.2	1108.847	1102.559	1453.244	1446.299
20180518:04:06:48	23.2	17.6	-4.7	23.6	0.25	2.1	0.25	2.2	126.3	285.8	286.4	85.2	51.1	86.1	1110.179	1103.945	1454.991	1448.12
20180518:04:11:48	23.2	17.7	-4.6	23.6	0.25	2.1	0.25	2.2	126.4	285.9	286.4	85.2	51.0	86.0	1111.566	1105.277	1456.809	1449.868
20180518:04:16:48	23.2	17.7	-4.7	23.6	0.25	2.2	0.25	2.2	126.4	285.8	286.4	85.1	51.0	86.0	1112.925	1106.618	1458.591	1451.63
20180518:04:21:48	23.2	17.6	-4.7	23.6	0.25	2.1	0.25	2.2	126.2	285.8	286.3	85.0	51.0	85.9	1114.257	1108.001	1460.337	1453.445
20180518:04:26:48	23.2	17.5	-4.7	23.6	0.25	2.1	0.25	2.2	126.1	285.8	286.4	85.0	51.0	85.8	1115.643	1109.333	1462.154	1455.194
20180518:04:31:48	23.2	17.5	-4.7	23.6	0.25	2.1	0.25	2.2	126.1	285.8	286.4	84.9	51.0	85.8	1116.996	1110.702	1463.926	1456.991
20180518:04:36:48	23.2	17.5	-4.7	23.6	0.25	2.1	0.25	2.2	126.1	285.8	286.4	84.9	51.0	85.7	1118.337	1112.067	1465.683	1458.782
20180518:04:41:48	23.2	17.6	-4.7	23.6	0.25	2.1	0.25	2.2	126.2	285.8	286.4	84.8	51.0	85.6	1119.719	1113.392	1467.494	1460.521
20180518:04:46:48	23.2	17.6	-4.7	23.6	0.25	2.1	0.25	2.2	126.3	285.8	286.4	84.7	51.0	85.6	1121.072	1114.778	1469.267	1462.338
20180518:04:51:48	23.2	17.5	-4.7	23.6	0.25	2.1	0.25	2.2	126.1	285.8	286.4	84.7	51.0	85.6	1122.414	1116.113	1471.024	1464.09
20180518:04:56:48	23.2	17.4	-4.7	23.6	0.25	2.2	0.25	2.2	125.9	285.8	286.4	84.6	51.0	85.5	1123.797	1117.453	1472.835	1465.848
20180518:05:01:48	23.2	17.4	-4.8	23.6	0.25	2.1	0.25	2.2	125.7	285.8	286.4	84.6	51.0	85.4	1125.154	1118.837	1474.613	1467.664
20180518:05:06:48	23.2	17.3	-4.7	23.6	0.25	2.1	0.25	2.2	125.6	285.8	286.4	84.5	51.0	85.4	1126.496	1120.173	1476.37	1469.415
20180518:05:11:48	23.2	17.2	-4.8	23.6	0.25	2.1	0.25	2.2	125.4	285.7	286.3	84.5	51.0	85.3	1127.873	1121.543	1478.174	1471.212
20180518:05:16:48	23.2	17.2	-4.8	23.6	0.25	2.1	0.25	2.2	125.4	285.8	286.4	84.4	51.0	85.3	1129.241	1122.904	1479.965	1472.998
20180518:05:21:48	23.2	17.2	-4.8	23.6	0.25	2.1	0.25	2.2	125.4	285.7	286.3	84.4	51.0	85.2	1130.579	1124.245	1481.717	1474.756
20180518:05:26:48	23.2	17.1	-4.8	23.6	0.25	2.1	0.25	2.2	125.2	285.8	286.5	84.3	51.0	85.2	1131.951	1125.632	1483.513	1476.575
20180518:05:31:48	23.2	17.1	-4.8	23.6	0.25	2.1	0.25	2.2	125.1	285.8	286.4	84.4	51.0	85.2	1133.324	1126.976	1485.311	1478.336
20180518:05:36:48	23.2	17.0	-4.8	23.6	0.25	2.1	0.25	2.2	125.0	285.7	286.3	84.4	51.0	85.1	1134.668	1128.311	1487.07	1480.086
20180518:05:41:48	23.2	16.9	-4.8	23.6	0.25	2.1	0.25	2.2	124.7	285.8	286.4	84.4	51.0	85.0	1136.033	1129.699	1488.857	1481.906
20180518:05:46:48	23.2	16.8	-4.8	23.6	0.25	2.1	0.25	2.2	124.6	285.7	286.4	84.5	51.1	85.0	1137.415	1131.034	1490.667	1483.656
20180518:05:51:48	23.2	16.6	-4.7	23.6	0.25	2.1	0.25	2.2	124.0	285.8	286.4	84.5	51.1	85.0	1138.758	1132.392	1492.426	1485.436
20180518:05:56:48	23.2	16.5	-4.5	23.6	0.25	2.1	0.25	2.2	124.0	285.8	286.4	84.6	51.1	85.0	1140.115	1133.764	1494.202	1487.233
20180518:06:01:48	23.3	16.4	-3.5	23.6	0.25	2.2	0.25	2.2	123.9	285.8	286.4	84.6	51.1	85.0	1141.506	1135.105	1496.024	1488.991
20180518:06:06:48	23.3	16.3	-3.6	23.6	0.25	2.2	0.25	2.2	123.7	285.8	286.4	84.6	51.1	84.9	1142.849	1136.492	1497.781	1490.808
20180518:06:11:48	23.3	16.4	-4.2	23.6	0.25	2.1	0.25	2.1	123.7	285.8	286.5	84.6	51.1	84.9	1144.206	1137.848	1499.559	1492.585
20180518:06:16:48	23.2	16.4	-4.4	23.6	0.25	2.2	0.25	2.2	123.8	285.8	286.4	84.5	51.0	84.9	1145.608	1139.171	1501.394	1494.318
20180518:06:21:48	23.2	16.5	-4.4	23.6	0.25	2.1	0.25	2.2	123.9	285.8	286.4	84.4	51.0	84.9	1146.949	1140.561	1503.15	1496.139
20180518:06:26:48	23.2	16.6	-4.4	23.6	0.25	2.2	0.25	2.2	124.1	285.9	286.3	84.3	51.0	84.8	1148.304	1141.889	1504.922	1497.878
20180518:06:31:48	23.2	16.6	-4.4	23.6	0.25	2.1	0.25	2.2	124.1	285.8	286.4	84.3	51.0	84.7	1149.702	1143.247	1506.752	1499.656
20180518:06:36:48	23.2	16.6	-4.4	23.6	0.25	2.1	0.25	2.2	124.1	285.8	286.3	84.2	51.0	84.7	1151.042	1144.626	1508.506	1501.462
20180518:06:41:48	23.2	16.6	-4.5	23.6	0.25	2.1	0.25	2.2	124.1	285.9	286.3	84.1	51.0	84.7	1152.383	1145.964	1510.259	1503.214
20180518:06:46:48	23.2	16.1	-4.7	23.6	0.25	2.1	0.25	2.1	122.9	285.8	286.4	84.0	51.0	84.6	1153.788	1147.347	1512.096	1505.024
20180518:06:51:48	23.2	16.3	-4.5	23.6	0.25	2.1	0.25	2.2	123.5	285.8	286.4	84.0	51.0	84.6	1155.135	1148.709	1513.857	1506.808
20180518:06:56:48	23.2	16.4	-4.6	23.6	0.25	2.1	0.25	2.2	123.7	285.7	286.3	83.9	51.0	84.6	1156.476	1150.038	1515.611	1508.547
20180518:07:01:48	23.2	16.4	-4.5	23.6	0.25	2.1	0.25	2.2	123.7	285.8	286.4	83.8	51.0	84.6	1157.875	1151.436	1517.439	1510.378
20180518:07:06:48	23.2	16.5	-4.5	23.6	0.25	2.1	0.25	2.2	123.9	285.8	286.4	83.7	51.0	84.5	1159.225	1152.763	1519.204	1512.115
20180518:07:11:48	23.2	16.4	-4.6	23.6	0.25	2.1	0.25	2.2	123.8	285.8	286.4	83.7	51.0	84.5	1160.567	1154.114	1520.957	1513.882
20180518:07:16:48	23.2	16.7	-4.5	23.6	0.25	2.1	0.25	2.2	124.4	285.8	286.3	83.6	51.0	84.4	1161.964	1155.497	1522.783	1515.692
20180518:07:21:48	23.3	16.9	-4.4	23.6	0.25	2.1	0.25	2.2	124.9	285.8	286.4	83.6	51.0	84.3	1163.317	1156.836	1524.55	1517.444
20180518:07:26:48	23.3	17.1	-4.3	23.6	0.25	2.2	0.25	2.2	125.3	285.9	286.3	83.5	51.0	84.3	1164.656	1158.216	1526.3	1519.248
20180518:07:31:48	23.3	17.2	-4.3	23.6	0.25	2.2	0.25	2.2	125.5	285.9	286.4	83.4	50.9	84.3	1166.054	1159.583	1528.126	1521.038
20180518:07:36:48	23.3	17.3	-4.3	23.6	0.25	2.1	0.25	2.2	125.6	285.8	286.3	83.4	51.0	84.2	1167.404	1160.914	1529.889	1522.778
20180518:07:41:48	23.3	17.3	-4.3	23.6	0.25	2.1	0.25	2.1	125.7	285.7	286.3	83.4	50.9	84.2	1168.745	1162.299	1531.641	1524.59
20180518:07:46:48	23.3	17.3	-4.3	23.6	0.25	2.1	0.25	2.1	125.7	285.7	286.3	83.3	50.9	84.1	1170.135	1163.63	1533.456	1526.331
20180518:07:51:48	23.2	16.9	-4.5	23.6	0.25	2.1	0.25	2.1	124.8	285.7	286.4	83.3	50.9	84.1	1171.485	1164.975	1535.219	1528.09
20180518:07:56:48	23.2	16.6	-4.5	23.6	0.25	2.1	0.25	2.1	124.1	285.7	286.3	83.4	50.9	84.1	1172.817	1166.349	1536.959	1529.887
20180518:08:01:48	23.3	16.9	-4.3	23.6	0.25	2.1	0.25	2.2	124.8	285.8	286.4	83.3	50.9	84.0	1174.207	1167.682	1538.774	1531.63
20180518:08:06:48	23.3	17.1	-4.3	23.6	0.25	2.1	0.25	2.2	125.3	285.9	286.4	83.4	50.9	84.1	1175.548	1169.063	1540.526	1533.436
20180518:08:11:48	23.3	17.2	-4.3	23.6	0.25	2.1	0.25	2.2	125.5	285.7	286.3	83.3	50.9	84.0	1176.881	1170.401	1542.267	1535.186
20180518:08:16:48	23.3	17.3	-4.3	23.6	0.25	2.1	0.25	2.2	125.6	285.8	286.4	83.4	50.9	84.0	1178.279	1171.724	1544.093	1536.915
20180518:08:21:48	23.3	17.3	-4.3	23.6	0.25	2.1	0.25	2.2	125.7	285.8	286.3	83.3	50.8	84.0	1179.606	1173.102	1545.826	1538.718
20180518:08:26:48	23.3	17.3	-4.2	23.6	0.25	2.1	0.25	2.2	125.8	285.9	286.4	83.3	50.9	84.0	1180.946	1174.428	1547.576	1540.451
20180518:08:31:48	23.3	17.4	-4.2	23.6	0.25	2.1	0.25	2.2	126.0	285.8	286.3	83.3	50.9	84.0	1182.33	1175.802	1549.383	1542.248
20180518:08:36:48	23.3	17.5	-4.2	23.6	0.25	2.1	0.25	2.2	126.0	285.8	286.4	83.3	50.9	84.0	1183.654	1177.153	1551.113	1544.015
20180518:08:41:48	23.3	17.4	-4.2	23.6	0.25	2.1	0.25	2.2	125.9	285.7	286.4	83.3	50.8	84.0	1185.007	1178.474	1552.88	1545.742
20180518:08:46:48	23.3	17.4	-4.2	23.6	0.25	2.1	0.25	2.2	125.9	285.8	286.3	83.3	50.8	84.0	1186.39	1179.857	1554.685	1547.551
20180518:08:51:48	23.3	17.4	-4.2	23.6	0.25	2.1	0.25	2.2	125.9	285.7	286.4	83.3	50.8	84.0	1187.724	1181.189	1556.428	1549.293
20180518:08:56:48	23.3	17.3	-4.2	23.6	0.25	2.1	0.25	2.2	125.8	285.7	286.3	83.3	50.8	84.0	1189.078	1182.545	1558.196	1551.066
20180518:09:01:48	23.3	17.0	-4.2	23.6	0.25	2.1	0.25	2.2	125.0	285.6	286.3	83.3	50.8	84.1	1190.457	1183.906	1559.998	1552.846
20180518:09:06:48	23.3	17.2	-4.2	23.6	0.25	2.1	0.25	2.2	125.6	285.7	286.3	83.4	50.8	84.1	1191.797	1185.235	1561.748	1554.585
20180518:09:11:48	23.3	17.3	-4.1	23.6	0.25	2.1	0.25	2.2	125.7	285.8	286.4	83.4	50.8	84.1	1193.154	1186.619	1563.52	1556.395
20180518:09:16:48	23.3	17.3	-4.1	23.6	0.25	2.1	0.25	2.2	125.8	285.7	286.3	83.4	50.8	84.1	1194.526	1187.945	1565.313	1558.13
20180518:09:21:48	23.3	17.4	-4.0	23.6	0.25	2.1	0.25	2.2	125.9	285.7	286.3	83.5	50.8	84.2	1195.859	1189.291	1567.056	1559.891
20180518:09:26:48	23.3	17.4	-4.0	23.6	0.25	2.1	0.25	2.2	125.9	285.7	286.4	83.6	50.8	84.2	1197.226	1190.66	1568.843	1561.682
20180518:09:31:48	23.3	17.4	-4.0	23.6	0.25	2.1	0.25	2.2	125.9	285.7	286.3	83.8	50.9	84.3	1198.598	1191.992	1570.635	1563.425
20180518:09:36:48	23.3	17.5	-3.9	23.6	0.25	2.1	0.25	2.2	126.1	285.8	286.4	83.9	50.9	84.4	1199.93	1193.378	1572.378	1565.239
20180518:09:41:48	23.3	17.5	-3.8	23.6	0.25	2.1	0.25	2.2	126.2	285.7	286.3	84.0	50.9	84.4	1201.303	1194.712	1574.174	1566.985
20180518:09:46:48	23.3	17.6	-3.8	23.6	0.25	2.1	0.25	2.2	126.3	285.8	286.4	84.1	50.9	84.5	1202.667	1196.043	1575.957	1568.727
20180518:09:51:48	23.3	17.6	-3.8	23.6	0.25	2.1	0.25	2.2	126.4	285.7	286.3	84.2	50.9	84.5	1204.002	1197.421	1577.706	1570.532
20180518:09:56:48	23.3	17.6	-3.9	23.6	0.25	2.1	0.25	2.2	126.4	285.8	286.3	84.3	50.9	84.6	1205.376	1198.747	1579.504	1572.269
20180518:10:01:48	23.3	17.5	-4.0	23.6	0.25	2.1	0.25	2.2	126.2	285.8	286.4	84.3	51.0	84.6	1206.737	1200.115	1581.285	1574.06
20180518:10:06:48	23.3	17.0	-4.2	23.6	0.25	2.1	0.25	2.1	125.1	285.8	286.4	84.4	51.0	84.7	1208.074	1201.474	1583.035	1575.84
20180518:10:11:48	23.3	17.4	-4.0	23.6	0.25	2.1	0.25	2.2	125.9	285.7	286.4	84.5	51.0	84.7	1209.449	1202.79	1584.835	1577.564

Time:	Stack Pressure:	Sat% H2O:	Static:	Barometric:	Flowmeter1:	Vacuum1:	Flowmeter2:	Vacuum2:	Stack Temp:	Sorbent Temp:	Probe Temp:	DGM#1 Temp:	Condenser Temp:	DGM#2 Temp:	DGM1*:	DGM2*:	DGM1:	DGM2:
day:hh:mm:ss	in-Hg	Percent	in-H2O	in-Hg	l/min	in-Hg	l/min	in-Hg	degF	degF	degF	degF	degF	degF	liters STP	liters STP	liters nominal	liters nominal
20180518:10:16:48	23.3	17.5	-4.0	23.6	0.25	2.1	0.25	2.2	126.1	285.8	286.4	84.6	51.0	84.8	1210.807	1204.171	1586.613	1579.372
20180518:10:21:48	23.3	17.5	-4.0	23.6	0.25	2.1	0.25	2.2	126.1	285.8	286.4	84.6	51.0	84.9	1212.144	1205.493	1588.363	1581.103
20180518:10:26:48	23.3	17.5	-4.0	23.6	0.25	2.1	0.25	2.2	126.2	285.8	286.4	84.7	51.0	84.9	1213.521	1206.847	1590.167	1582.878
20180518:10:31:48	23.3	17.5	-3.9	23.6	0.25	2.1	0.25	2.2	126.2	285.8	286.4	84.8	51.0	84.9	1214.877	1208.207	1591.943	1584.66
20180518:10:36:48	23.3	17.5	-3.9	23.6	0.25	2.1	0.25	2.2	126.2	285.8	286.4	84.8	51.0	85.0	1216.215	1209.54	1593.694	1586.406
20180518:10:41:48	23.3	17.5	-3.8	23.6	0.25	2.1	0.25	2.2	126.1	285.8	286.4	84.9	51.0	85.0	1217.593	1210.92	1595.5	1588.214
20180518:10:46:48	23.3	17.5	-3.8	23.6	0.25	2.1	0.25	2.2	126.2	285.8	286.3	84.9	51.0	85.1	1218.947	1212.248	1597.274	1589.955
20180518:10:51:48	23.3	17.5	-3.9	23.6	0.25	2.1	0.25	2.2	126.3	285.8	286.4	84.9	51.0	85.1	1220.283	1213.585	1599.024	1591.707
20180518:10:56:48	23.3	17.6	-3.8	23.6	0.25	2.2	0.25	2.2	126.4	285.8	286.4	85.0	51.0	85.2	1221.661	1214.962	1600.83	1593.511
20180518:11:01:48	23.3	17.6	-3.8	23.6	0.25	2.1	0.25	2.2	126.4	285.9	286.4	85.0	51.0	85.2	1223.015	1216.289	1602.604	1595.25
20180518:11:06:48	23.3	17.5	-3.9	23.6	0.25	2.1	0.25	2.2	126.2	285.8	286.4	85.0	51.0	85.3	1224.352	1217.665	1604.356	1597.055
20180518:11:11:48	23.3	17.3	-4.0	23.6	0.25	2.1	0.25	2.2	125.7	285.8	286.4	85.0	51.0	85.2	1225.731	1219.012	1606.161	1598.82
20180518:11:16:48	23.3	17.4	-3.9	23.6	0.25	2.1	0.25	2.2	125.9	285.8	286.4	85.0	50.9	85.3	1227.082	1220.337	1607.931	1600.556
20180518:11:21:48	23.3	17.3	-3.9	23.6	0.25	2.1	0.25	2.2	125.8	285.8	286.3	84.9	51.0	85.3	1228.42	1221.713	1609.685	1602.361
20180518:11:26:48	23.3	17.4	-3.7	23.6	0.25	2.1	0.25	2.2	126.0	285.8	286.4	85.0	50.9	85.3	1229.8	1223.047	1611.493	1604.109
20180518:11:31:48	23.3	17.5	-3.6	23.6	0.25	2.2	0.25	2.2	126.2	285.8	286.4	85.0	51.0	85.4	1231.151	1224.398	1613.263	1605.882
20180518:11:36:48	23.3	17.5	-3.7	23.6	0.25	2.1	0.25	2.2	126.2	285.8	286.4	85.0	50.9	85.4	1232.491	1225.757	1615.019	1607.664
20180518:11:41:48	23.3	17.5	-3.7	23.6	0.25	2.1	0.25	2.2	126.1	285.8	286.4	84.9	50.9	85.4	1233.87	1227.083	1616.826	1609.402
20180518:11:46:48	23.3	17.5	-3.7	23.6	0.25	2.1	0.25	2.2	126.1	285.7	286.3	84.9	50.9	85.4	1235.22	1228.462	1618.594	1611.211
20180518:11:51:48	23.3	17.5	-3.6	23.6	0.25	2.1	0.25	2.2	126.2	285.7	286.3	85.0	51.0	85.5	1236.56	1229.789	1620.35	1612.951
20180518:11:56:48	23.3	17.5	-3.7	23.6	0.25	2.1	0.25	2.2	126.2	285.8	286.3	85.0	50.9	85.5	1237.94	1231.13	1622.159	1614.711
20180518:12:01:48	23.3	17.5	-3.6	23.6	0.25	2.1	0.25	2.2	126.1	285.8	286.3	85.0	50.9	85.6	1239.29	1232.503	1623.928	1616.511
20180518:12:06:48	23.3	17.5	-3.7	23.6	0.25	2.1	0.25	2.2	126.2	285.8	286.4	85.0	50.9	85.6	1240.629	1233.829	1625.683	1618.252
20180518:12:11:48	23.3	17.5	-3.9	23.6	0.25	2.1	0.25	2.2	126.1	285.7	286.3	85.0	51.0	85.6	1242.008	1235.209	1627.491	1620.062
20180518:12:16:48	23.3	17.4	-3.8	23.6	0.25	2.1	0.25	2.2	125.9	285.7	286.3	85.0	50.9	85.6	1243.36	1236.555	1629.263	1621.827
20180518:12:21:48	23.3	17.4	-3.6	23.6	0.25	2.1	0.25	2.2	126.0	285.8	286.4	85.0	51.0	85.6	1244.695	1237.879	1631.013	1623.566
20180518:12:26:48	23.3	17.4	-3.6	23.6	0.25	2.1	0.25	2.2	126.1	285.8	286.3	85.0	50.9	85.6	1246.077	1239.258	1632.824	1625.376
20180518:12:31:48	23.3	17.5	-3.7	23.6	0.25	2.1	0.25	2.2	126.1	285.8	286.3	85.1	51.0	85.7	1247.429	1240.588	1634.596	1627.12
20180518:12:36:48	23.3	17.5	-3.7	23.6	0.25	2.1	0.25	2.2	126.1	285.7	286.3	85.0	50.9	85.7	1248.758	1241.938	1636.339	1628.893
20180518:12:41:48	23.3	17.5	-3.8	23.6	0.25	2.1	0.25	2.2	126.2	285.8	286.4	85.0	50.9	85.7	1250.14	1243.296	1638.15	1630.675
20180518:12:46:48	23.3	17.5	-3.7	23.6	0.25	2.1	0.25	2.2	126.3	285.8	286.4	85.1	50.9	85.7	1251.496	1244.631	1639.928	1632.427
20180518:12:51:48	23.3	17.5	-3.7	23.6	0.25	2.1	0.25	2.2	126.2	285.8	286.4	85.0	50.9	85.7	1252.824	1246.012	1641.669	1634.239
20180518:12:56:48	23.3	17.6	-3.7	23.6	0.25	2.2	0.25	2.2	126.3	285.8	286.4	85.1	50.9	85.8	1254.209	1247.342	1643.483	1635.985
20180518:13:01:48	23.3	17.5	-3.7	23.6	0.25	2.1	0.25	2.2	126.2	285.8	286.4	85.1	50.9	85.8	1255.566	1248.678	1645.263	1637.739
20180518:13:06:48	23.3	17.5	-3.6	23.6	0.25	2.1	0.25	2.2	126.2	285.7	286.3	85.1	50.9	85.8	1256.894	1250.057	1647.004	1639.549
20180518:13:11:48	23.3	17.5	-3.6	23.6	0.25	2.1	0.25	2.2	126.2	285.8	286.4	85.2	51.0	85.9	1258.275	1251.384	1648.815	1641.291
20180518:13:16:48	23.3	17.4	-3.8	23.6	0.25	2.1	0.25	2.2	126.0	285.7	286.3	85.2	50.9	85.9	1259.635	1252.751	1650.598	1643.086
20180518:13:21:48	23.3	17.5	-3.5	23.6	0.25	2.1	0.25	2.2	126.1	285.7	286.3	85.2	50.9	85.9	1260.958	1254.113	1652.333	1644.874
20180518:13:26:48	23.3	17.6	-3.6	23.6	0.25	2.1	0.25	2.2	126.3	285.7	286.3	85.2	50.9	85.9	1262.341	1255.431	1654.146	1646.605
20180518:13:31:48	23.3	17.7	-3.5	23.6	0.25	2.1	0.25	2.2	126.5	285.8	286.4	85.3	50.9	86.0	1263.699	1256.814	1655.928	1648.421
20180518:13:36:48	23.3	17.8	-3.6	23.6	0.25	2.1	0.25	2.2	126.8	285.8	286.4	85.4	50.9	86.0	1265.026	1258.133	1657.669	1650.154
20180518:13:41:48	23.3	17.8	-3.5	23.6	0.25	2.1	0.25	2.2	126.9	285.8	286.4	85.5	50.9	86.0	1266.409	1259.481	1659.483	1651.925
20180518:13:46:48	23.3	17.8	-3.6	23.6	0.25	2.2	0.25	2.2	126.9	285.8	286.4	85.6	50.9	86.1	1267.766	1260.852	1661.265	1653.726
20180518:13:51:48	23.3	17.8	-3.6	23.6	0.25	2.2	0.25	2.2	126.8	285.8	286.5	85.8	51.0	86.2	1269.095	1262.181	1663.009	1655.472
20180518:13:56:48	23.3	17.8	-3.6	23.6	0.25	2.1	0.25	2.2	126.7	285.8	286.4	85.9	50.9	86.3	1270.474	1263.559	1664.82	1657.282
20180518:14:01:48	23.3	17.7	-3.4	23.6	0.25	2.1	0.25	2.2	126.7	285.8	286.4	86.0	50.9	86.3	1271.827	1264.905	1666.598	1659.051
20180518:14:06:48	23.3	17.8	-3.5	23.5	0.25	2.1	0.25	2.2	126.7	285.8	286.4	86.0	50.9	86.4	1273.16	1266.226	1668.348	1660.788
20180518:14:11:48	23.3	17.7	-3.6	23.6	0.25	2.1	0.25	2.2	126.6	285.8	286.4	86.0	50.9	86.4	1274.538	1267.6	1670.159	1662.594
20180518:14:16:48	23.3	17.7	-3.7	23.6	0.25	2.1	0.25	2.2	126.5	285.8	286.4	86.0	50.9	86.5	1275.887	1268.928	1671.931	1664.34
20180518:14:21:48	23.3	17.5	-3.7	23.6	0.25	2.1	0.25	2.2	126.2	285.8	286.3	86.1	50.9	86.5	1277.222	1270.279	1673.685	1666.117
20180518:14:26:48	23.3	17.5	-3.6	23.6	0.25	2.1	0.25	2.2	126.2	285.8	286.4	86.1	50.9	86.6	1278.602	1271.634	1675.498	1667.898
20180518:14:31:48	23.3	17.6	-3.5	23.6	0.25	2.1	0.25	2.2	126.4	285.7	286.3	86.1	50.9	86.6	1279.948	1272.965	1677.267	1669.648
20180518:14:36:48	23.3	17.6	-3.5	23.6	0.25	2.1	0.25	2.1	126.5	285.8	286.4	86.2	50.9	86.7	1281.281	1274.348	1679.019	1671.468
20180518:14:41:48	23.3	17.7	-3.5	23.6	0.25	2.1	0.25	2.2	126.6	285.8	286.4	86.2	50.9	86.7	1282.658	1275.677	1680.828	1673.216
20180518:14:46:48	23.3	17.7	-3.5	23.6	0.25	2.1	0.25	2.2	126.7	285.8	286.4	86.2	50.9	86.8	1284.006	1277.006	1682.598	1674.964
20180518:14:51:48	23.3	17.8	-3.6	23.6	0.25	2.1	0.25	2.2	126.7	285.8	286.3	86.2	50.9	86.9	1285.343	1278.381	1684.356	1676.773
20180518:14:56:48	23.3	17.7	-3.6	23.6	0.25	2.1	0.25	2.2	126.7	285.7	286.4	86.3	51.0	86.9	1286.72	1279.711	1686.165	1678.523
20180518:15:01:48	23.3	17.7	-3.6	23.6	0.25	2.1	0.25	2.2	126.6	285.7	286.3	86.3	50.9	86.9	1288.069	1281.073	1687.937	1680.314
20180518:15:06:48	23.3	17.8	-3.6	23.6	0.25	2.1	0.25	2.2	126.8	285.7	286.4	86.5	51.0	87.0	1289.406	1282.435	1689.694	1682.105
20180518:15:11:48	23.3	17.7	-3.8	23.6	0.25	2.1	0.25	2.2	126.5	285.8	286.4	86.6	51.0	87.1	1290.783	1283.758	1691.506	1683.846
20180518:15:16:48	23.3	17.5	-3.7	23.6	0.25	2.1	0.25	2.2	126.2	285.8	286.4	86.7	51.0	87.1	1292.138	1285.133	1693.287	1685.656
20180518:15:21:48	23.3	17.7	-3.7	23.6	0.25	2.1	0.25	2.2	126.5	285.8	286.4	86.8	51.0	87.2	1293.473	1286.459	1695.043	1687.4
20180518:15:26:48	23.3	17.7	-3.6	23.6	0.25	2.1	0.25	2.2	126.6	285.8	286.4	86.9	51.1	87.3	1294.845	1287.796	1696.846	1689.16
20180518:15:31:48	23.3	17.7	-3.7	23.6	0.25	2.1	0.25	2.2	126.6	285.8	286.4	87.0	51.0	87.3	1296.21	1289.168	1698.643	1690.966
20180518:15:36:48	23.2	17.1	-4.3	23.6	0.25	2.1	0.25	2.1	125.3	285.8	286.4	87.1	51.1	87.3	1297.542	1290.498	1700.394	1692.716
20180518:15:41:48	23.3	17.2	-3.8	23.6	0.25	2.1	0.25	2.1	125.6	285.8	286.4	87.2	51.1	87.4	1298.906	1291.866	1702.189	1694.517
20180518:15:46:48	23.3	17.4	-3.6	23.6	0.25	2.1	0.25	2.2	126.0	285.8	286.3	87.1	51.0	87.4	1300.275	1293.222	1703.991	1696.303
20180518:15:51:48	23.3	17.6	-3.6	23.6	0.25	2.1	0.25	2.2	126.4	285.8	286.3	87.1	51.0	87.4	1301.612	1294.539	1705.75	1698.036
20180518:15:56:48	23.3	17.7	-3.7	23.6	0.25	2.2	0.25	2.2	126.6	285.8	286.3	87.0	51.0	87.4	1302.965	1295.921	1707.53	1699.855
20180518:16:01:48	23.3	17.8	-3.6	23.6	0.25	2.1	0.25	2.2	126.7	285.9	286.3	87.0	51.0	87.5	1304.341	1297.239	1709.339	1701.59
20180518:16:06:48	23.3	17.8	-3.5	23.6	0.25	2.1	0.25	2.2	126.8	285.8	286.4	87.1	51.0	87.6	1305.678	1298.588	1711.098	1703.367
20180518:16:11:48	23.3	17.7	-3.4	23.6	0.25	2.1	0.25	2.2	126.7	285.6	286.3	87.0	51.0	87.6	1307.026	1299.962	1712.87	1705.175
20180518:16:16:48	23.3	17.8	-3.4	23.6	0.25	2.1	0.25	2.2	126.8	285.7	286.4	87.2	51.0	87.6	1308.402	1301.288	1714.681	1706.921
20180518:16:21:48	23.3	17.8	-3.4	23.6	0.25	2.1	0.25	2.2	126.8	285.6	286.4	87.3	51.1	87.7	1309.737	1302.66	1716.437	1708.727
20180518:16:26:48	23.3	17.3	-4.3	23.6	0.25	2.1	0.25	2.1	125.6	285.7	286.3	87.4	51.0	87.8	1311.086	1304.014	1718.213	1710.511
20180518:16:31:48	23.3	17.3	-3.7	23.6	0.25	2.1	0.25	2.1	125.8	285.7	286.4	87.6	51.1	87.8	1312.474	1305.327	1720.041	1712.241
20180518:16:36:48	23.3	17.5	-3.6	23.6	0.25	2.1	0.25	2.2	126.2	285.8	286.4	87.7	51.1	87.9	1313.804	1306.705	1721.793	1714.056
20180518:16:41:48	23.3	17.6	-3.6	23.6	0.25	2.1	0.25	2.2	126.4	285.8	286.4	87.8	51.1	87.9	1315.15	1308.025	1723.565	1715.795
20180518:16:46:48	23.3	17.7	-3.6	23.6	0.25	2.1	0.25	2.2	126.5	285.8	286.4	87.9	51.1	88.0	1316.541	1309.372	1725.398	1717.57
20180518:16:51:48	23.3	17.7	-3.7	23.6	0.25	2.1	0.25	2.2	126.7	285.8	286.4	88.0	51.1	88.0	1317.874	1310.737	1727.154	1719.368
20180518:16:56:48	23.3	17.7	-3.8	23.6	0.25	2.1	0.25	2.2	126.7	285.8	286.4	88.0	51.1	88.1	1319.218	1312.065	1728.924	1721.118
20180518:17:01:48	23.3	17.7	-3.6	23.6	0.25	2.1	0.25	2.2	126.7	285.8	286.4	88.0	51.0	88.1	1320.607	1313.44	1730.754	1722.93
20180518:17:06:48	23.3	17.8	-3.5	23.6	0.25	2.1	0.25	2.2	126.8	285.8	286.4	88.0	51.1	88.2	1321.945	1314.785	1732.517	1724.703
20180518:17:11:48	23.3	17.8	-3.5	23.6	0.25	2.2	0.25	2.2	126.7	285.8	286.4	88.0	51.0	88.2	1323.282	1316.099	1734.278	1726.434
20180518:17:16:48	23.3	17.8	-3.6	23.6	0.25	2.2	0.25	2.2	126.8	285.8	286.4	88.0	51.1	88.2	1324.674	1317.482	1736.111	1728.258
20180518:17:21:48	23.3	17.7	-3.6	23.6	0.25	2.2	0.25	2.2	126.6	285.8	286.3	88.0	51.0	88.3	1326.02	1318.802	1737.885	1729.996
20180518:17:26:48	23.3	17.7	-3.6	23.6	0.25	2.1	0.25	2.2	126.6	285.8	286.4	88.0	51.1	88.3	1327.354	1320.154	1739.643	1731.778
20180518:17:31:48	23.3	17.3	-4.0	23.6	0.25	2.1	0.25	2.1	125.8	285.8	286.3	88.0	51.0	88.3	1328.742	1321.518	1741.47	1733.577
20180518:17:36:48	23.3	16.6	-4.0	23.6	0.25	2.1	0.25	2.2	124.3	285.8	286.3	88.0	51.1	88.3	1330.093	1322.846	1743.25	1735.327

Time:	Stack Pressure:	Sat% H2O:	Static:	Barometric:	Flowmeter1:	Vacuum1:	Flowmeter2:	Vacuum2:	Stack Temp:	Sorbent Temp:	Probe Temp:	DGM#1 Temp:	Condenser Temp:	DGM#2 Temp:	DGM1*:	DGM2*:	DGM1:	DGM2:
day:hh:mm:ss	in-Hg	Percent	in-H2O	in-Hg	l/min	in-Hg	l/min	in-Hg	degF	degF	degF	degF	degF	degF	liters STP	liters STP	liters nominal	liters nominal
20180518:17:41:48	23.3	17.1	-3.5	23.6	0.25	2.2	0.25	2.2	125.4	285.8	286.4	87.9	51.1	88.3	1331.422	1324.221	1745	1737.139
20180518:17:46:48	23.3	17.4	-3.6	23.6	0.25	2.2	0.25	2.2	126.1	285.8	286.3	87.9	51.1	88.4	1332.806	1325.566	1746.822	1738.912
20180518:17:51:48	23.3	17.5	-3.6	23.6	0.25	2.2	0.25	2.2	126.2	285.8	286.4	87.9	51.1	88.4	1334.155	1326.889	1748.598	1740.654
20180518:17:56:48	23.3	17.4	-3.6	23.6	0.25	2.2	0.25	2.2	126.1	285.8	286.4	87.9	51.0	88.4	1335.496	1328.277	1750.363	1742.483
20180518:18:01:48	23.3	17.3	-3.6	23.6	0.25	2.2	0.25	2.2	125.8	285.8	286.4	87.9	51.1	88.4	1336.874	1329.604	1752.178	1744.231
20180518:18:06:48	23.3	17.2	-3.7	23.6	0.25	2.2	0.25	2.2	125.5	285.8	286.4	87.9	51.0	88.5	1338.245	1330.952	1753.981	1746.008
20180518:18:11:48	23.3	17.1	-3.7	23.6	0.25	2.2	0.25	2.2	125.3	285.8	286.4	87.8	51.1	88.4	1339.591	1332.336	1755.754	1747.831
20180518:18:16:48	23.3	17.1	-3.7	23.6	0.25	2.2	0.25	2.2	125.3	285.8	286.4	87.8	51.0	88.4	1340.948	1333.67	1757.539	1749.588
20180518:18:21:48	23.3	17.0	-3.8	23.6	0.25	2.2	0.25	2.2	125.1	285.6	286.3	87.8	51.1	88.4	1342.337	1335.031	1759.367	1751.382
20180518:18:26:48	23.3	16.8	-3.8	23.6	0.25	2.2	0.25	2.2	124.8	285.6	286.3	87.8	51.0	88.4	1343.679	1336.391	1761.133	1753.173
20180518:18:31:48	23.3	16.6	-3.9	23.6	0.25	2.2	0.25	2.2	124.1	285.6	286.3	87.8	51.0	88.4	1345.038	1337.729	1762.922	1754.936
20180518:18:36:48	23.3	15.9	-3.4	23.6	0.25	2.1	0.25	2.2	122.7	285.7	286.4	87.9	51.1	88.5	1346.439	1339.114	1764.765	1756.761
20180518:18:41:48	23.4	15.6	-3.1	23.6	0.25	2.1	0.25	2.2	122.0	285.7	286.4	87.9	51.1	88.5	1347.785	1340.465	1766.537	1758.541
20180518:18:46:48	23.4	15.7	-2.5	23.6	0.25	2.2	0.25	2.2	122.3	285.7	286.3	87.9	51.1	88.5	1349.13	1341.791	1768.307	1760.288
20180518:18:51:48	23.4	16.0	-2.4	23.6	0.25	2.2	0.25	2.2	123.0	285.7	286.3	88.0	51.1	88.5	1350.527	1343.186	1770.146	1762.126
20180518:18:56:48	23.4	16.1	-2.6	23.6	0.25	2.2	0.25	2.2	123.4	285.7	286.3	88.0	51.1	88.5	1351.884	1344.523	1771.931	1763.887
20180518:19:01:48	23.4	16.2	-2.8	23.6	0.25	2.2	0.25	2.2	123.5	285.8	286.3	88.0	51.1	88.5	1353.229	1345.864	1773.702	1765.654
20180518:19:06:48	23.4	16.3	-2.8	23.6	0.25	2.2	0.25	2.2	123.7	285.8	286.3	88.1	51.1	88.6	1354.608	1347.253	1775.517	1767.483
20180518:19:11:48	23.4	16.3	-2.9	23.6	0.25	2.2	0.25	2.2	123.8	285.8	286.4	88.2	51.1	88.6	1355.985	1348.589	1777.33	1769.242
20180518:19:16:48	23.4	16.4	-2.8	23.6	0.25	2.2	0.25	2.2	124.0	285.8	286.4	88.2	51.1	88.6	1357.332	1349.945	1779.102	1771.028
20180518:19:21:48	23.4	16.4	-2.7	23.6	0.25	2.2	0.25	2.2	124.0	285.8	286.4	88.3	51.1	88.6	1358.69	1351.318	1780.889	1772.836
20180518:19:26:48	23.4	16.4	-2.7	23.6	0.25	2.2	0.25	2.2	123.9	285.8	286.4	88.3	51.2	88.6	1360.092	1352.657	1782.733	1774.6
20180518:19:31:48	23.4	16.3	-2.8	23.6	0.25	2.2	0.25	2.2	123.8	285.8	286.4	88.3	51.1	88.6	1361.44	1354.033	1784.507	1776.412
20180518:19:36:48	23.4	16.3	-2.8	23.6	0.25	2.2	0.25	2.2	123.8	285.8	286.4	88.3	51.2	88.6	1362.791	1355.397	1786.285	1778.207
20180518:19:41:48	23.4	15.8	-3.1	23.6	0.25	2.2	0.25	2.2	122.5	285.7	286.4	88.3	51.1	88.6	1364.193	1356.726	1788.13	1779.957
20180518:19:46:48	23.4	15.4	-2.7	23.6	0.25	2.2	0.25	2.2	121.7	285.7	286.3	88.4	51.1	88.7	1365.558	1358.117	1789.926	1781.788
20180518:19:51:48	23.4	15.4	-2.5	23.6	0.25	2.2	0.25	2.2	121.8	285.8	286.4	88.4	51.1	88.7	1366.896	1359.461	1791.685	1783.556
20180518:19:56:48	23.4	15.8	-2.4	23.6	0.25	2.2	0.25	2.2	122.6	285.8	286.4	88.3	51.1	88.7	1368.281	1360.793	1793.507	1785.31
20180518:20:01:48	23.4	15.9	-2.5	23.6	0.25	2.2	0.25	2.2	123.0	285.8	286.4	88.3	51.1	88.7	1369.65	1362.182	1795.307	1787.137
20180518:20:06:48	23.4	16.1	-2.5	23.6	0.25	2.2	0.25	2.2	123.2	285.8	286.4	88.2	51.1	88.7	1370.994	1363.515	1797.074	1788.891
20180518:20:11:48	23.4	16.2	-2.6	23.6	0.25	2.2	0.25	2.2	123.6	285.9	286.4	88.2	51.1	88.7	1372.357	1364.867	1798.867	1790.671
20180518:20:16:48	23.4	16.2	-2.6	23.6	0.25	2.2	0.25	2.2	123.6	285.8	286.4	88.2	51.1	88.7	1373.742	1366.253	1800.687	1792.494
20180518:20:21:48	23.5	16.2	-2.4	23.6	0.25	2.2	0.25	2.2	123.6	285.8	286.4	88.1	51.1	88.7	1375.082	1367.591	1802.448	1794.254
20180518:20:26:48	23.5	16.2	-2.4	23.6	0.25	2.2	0.25	2.2	123.5	285.8	286.4	88.0	51.1	88.7	1376.442	1368.958	1804.235	1796.053
20180518:20:31:48	23.5	16.1	-2.4	23.6	0.25	2.2	0.25	2.2	123.4	285.8	286.4	88.0	51.1	88.7	1377.844	1370.327	1806.076	1797.853
20180518:20:36:48	23.5	16.1	-2.4	23.6	0.25	2.2	0.25	2.2	123.4	285.8	286.4	88.0	51.1	88.7	1379.191	1371.669	1807.846	1799.618
20180518:20:41:48	23.5	15.9	-2.5	23.6	0.25	2.2	0.25	2.2	122.8	285.8	286.4	88.0	51.1	88.6	1380.536	1373.054	1809.613	1801.44
20180518:20:46:48	23.5	15.4	-2.4	23.6	0.25	2.1	0.25	2.2	121.7	285.8	286.4	87.9	51.1	88.6	1381.938	1374.416	1811.454	1803.231
20180518:20:51:48	23.5	15.5	-2.1	23.6	0.25	2.2	0.25	2.2	122.0	285.8	286.4	87.9	51.1	88.6	1383.297	1375.747	1813.239	1804.981
20180518:20:56:48	23.5	15.8	-2.0	23.6	0.25	2.2	0.25	2.2	122.8	285.7	286.4	87.9	51.1	88.6	1384.638	1377.134	1815	1806.805
20180518:21:01:48	23.5	15.9	-2.0	23.6	0.25	2.2	0.25	2.2	123.0	285.8	286.4	87.9	51.2	88.6	1386.026	1378.475	1816.822	1808.568
20180518:21:06:48	23.5	16.0	-2.1	23.6	0.25	2.2	0.25	2.2	123.1	285.8	286.4	87.8	51.1	88.6	1387.383	1379.819	1818.604	1810.335
20180518:21:11:48	23.5	16.0	-2.1	23.6	0.25	2.2	0.25	2.2	123.2	285.8	286.3	87.8	51.1	88.5	1388.729	1381.208	1820.37	1812.16
20180518:21:16:48	23.5	16.1	-2.1	23.6	0.25	2.2	0.25	2.2	123.4	285.9	286.5	87.8	51.1	88.5	1390.109	1382.542	1822.181	1813.914
20180518:21:21:48	23.5	16.1	-2.2	23.7	0.25	2.2	0.25	2.2	123.5	285.9	286.4	87.8	51.1	88.5	1391.482	1383.903	1823.983	1815.701
20180518:21:26:48	23.5	16.2	-2.2	23.7	0.25	2.2	0.25	2.2	123.6	285.8	286.4	87.7	51.1	88.5	1392.829	1385.28	1825.75	1817.511
20180518:21:31:49	23.5	16.2	-2.1	23.7	0.25	2.2	0.25	2.2	123.6	285.8	286.4	87.6	51.1	88.4	1394.192	1386.624	1827.539	1819.276
20180518:21:36:49	23.5	16.2	-1.9	23.7	0.25	2.2	0.25	2.2	123.7	285.8	286.4	87.6	51.0	88.4	1395.583	1387.999	1829.363	1821.083
20180518:21:41:49	23.5	16.0	-2.1	23.7	0.25	2.2	0.25	2.2	123.2	285.8	286.4	87.6	51.1	88.4	1396.923	1389.362	1831.122	1822.874
20180518:21:46:49	23.5	15.5	-1.8	23.7	0.25	2.2	0.25	2.2	122.0	285.7	286.4	87.6	51.0	88.3	1398.283	1390.696	1832.906	1824.626
20180518:21:51:49	23.6	15.6	-1.3	23.7	0.25	2.2	0.25	2.2	122.4	285.8	286.5	87.7	51.2	88.3	1399.685	1392.088	1834.746	1826.455
20180518:21:56:49	23.6	16.0	-1.3	23.6	0.25	2.2	0.25	2.2	123.2	285.8	286.4	87.7	51.1	88.3	1401.034	1393.431	1836.517	1828.22
20180518:22:01:49	23.5	16.1	-1.5	23.6	0.25	2.2	0.25	2.2	123.4	285.8	286.4	87.8	51.2	88.3	1402.384	1394.769	1838.289	1829.977
20180518:22:06:49	23.5	16.1	-1.5	23.6	0.25	2.2	0.25	2.2	123.4	285.8	286.4	87.8	51.1	88.3	1403.785	1396.158	1840.128	1831.803
20180518:22:11:49	23.5	16.1	-1.5	23.6	0.25	2.2	0.25	2.2	123.4	285.8	286.4	87.8	51.2	88.3	1405.148	1397.488	1841.917	1833.549
20180518:22:16:49	23.5	16.1	-1.6	23.6	0.25	2.2	0.25	2.2	123.4	285.9	286.4	87.9	51.1	88.3	1406.489	1398.85	1843.678	1835.338
20180518:22:21:49	23.5	16.0	-1.5	23.6	0.25	2.2	0.25	2.2	123.4	285.9	286.5	87.9	51.2	88.2	1407.877	1400.23	1845.5	1837.152
20180518:22:26:49	23.5	16.0	-1.4	23.6	0.25	2.2	0.25	2.2	123.4	285.9	286.4	87.9	51.1	88.2	1409.244	1401.57	1847.294	1838.912
20180518:22:31:49	23.5	16.0	-1.5	23.6	0.25	2.2	0.25	2.2	123.4	285.9	286.5	87.9	51.2	88.2	1410.592	1402.943	1849.065	1840.716
20180518:22:36:49	23.5	16.0	-1.4	23.6	0.25	2.2	0.25	2.2	123.3	285.9	286.4	87.8	51.1	88.2	1411.96	1404.305	1850.861	1842.506
20180518:22:41:49	23.5	15.8	-1.6	23.6	0.25	2.2	0.25	2.2	122.7	285.8	286.4	87.7	51.1	88.1	1413.345	1405.643	1852.68	1844.263
20180518:22:46:49	23.5	15.2	-1.5	23.6	0.25	2.1	0.25	2.2	121.5	285.8	286.4	87.6	51.1	88.1	1414.685	1407.035	1854.439	1846.092
20180518:22:51:49	23.6	15.4	-1.0	23.6	0.25	2.2	0.25	2.2	121.9	285.7	286.3	87.6	51.2	88.0	1416.047	1408.381	1856.226	1847.861
20180518:22:56:49	23.6	15.7	-1.1	23.6	0.25	2.2	0.25	2.2	122.5	285.8	286.4	87.5	51.1	88.0	1417.445	1409.713	1858.061	1849.611
20180518:23:01:49	23.5	15.7	-1.2	23.6	0.25	2.2	0.25	2.2	122.7	285.8	286.4	87.3	51.1	88.0	1418.789	1411.1	1859.824	1851.432
20180518:23:06:49	23.6	15.8	-1.1	23.6	0.25	2.2	0.25	2.2	122.8	285.8	286.4	87.3	51.1	87.9	1420.139	1412.429	1861.596	1853.179
20180518:23:11:49	23.6	15.9	-1.1	23.6	0.25	2.2	0.25	2.2	123.0	285.8	286.4	87.3	51.1	87.9	1421.541	1413.79	1863.435	1854.966
20180518:23:16:49	23.5	15.9	-1.3	23.6	0.25	2.2	0.25	2.2	123.0	285.8	286.4	87.3	51.0	87.9	1422.893	1415.168	1865.209	1856.776
20180518:23:21:49	23.5	15.9	-1.3	23.6	0.25	2.2	0.25	2.2	123.1	285.8	286.4	87.3	51.1	87.9	1424.241	1416.506	1866.978	1858.534
20180518:23:26:49	23.6	15.9	-1.2	23.6	0.25	2.2	0.25	2.2	123.1	285.8	286.4	87.3	51.0	87.8	1425.636	1417.882	1868.807	1860.34
20180518:23:31:49	23.5	15.9	-1.3	23.6	0.25	2.2	0.25	2.2	123.1	285.8	286.4	87.3	51.1	87.8	1427.001	1419.246	1870.598	1862.132
20180518:23:36:49	23.5	16.0	-1.4	23.6	0.25	2.2	0.25	2.2	123.2	285.9	286.4	87.3	51.0	87.8	1428.339	1420.579	1872.354	1863.882
20180518:23:41:49	23.5	15.7	-1.8	23.6	0.25	2.2	0.25	2.2	122.5	285.9	286.4	87.3	51.1	87.7	1429.724	1421.968	1874.17	1865.705
20180518:23:46:49	23.6	15.3	-1.2	23.6	0.25	2.1	0.25	2.2	121.7	285.8	286.4	87.2	51.0	87.7	1431.09	1423.309	1875.961	1867.464
20180518:23:51:49	23.6	15.8	-0.9	23.6	0.25	2.2	0.25	2.2	122.8	285.9	286.4	87.2	51.1	87.6	1432.433	1424.648	1877.722	1869.222
20180518:23:56:49	23.5	16.0	-2.0	23.7	0.25	2.2	0.25	2.2	123.3	286.0	286.5	87.2	51.0	87.6	1433.807	1426.033	1879.524	1871.039
20180519:00:01:49	23.5	16.2	-2.1	23.7	0.25	2.2	0.25	2.2	123.6	286.0	286.5	87.1	51.1	87.6	1435.186	1427.37	1881.331	1872.793
20180519:00:06:49	23.5	16.3	-2.2	23.7	0.25	2.2	0.25	2.2	124.0	286.0	286.4	87.0	51.0	87.5	1436.534	1428.726	1883.098	1874.571
20180519:00:11:49	23.5	16.5	-2.2	23.7	0.25	2.2	0.25	2.2	124.2	285.9	286.4	86.9	51.1	87.5	1437.891	1430.099	1884.876	1876.372
20180519:00:16:49	23.5	16.6	-2.6	23.7	0.25	2.2	0.25	2.2	124.4	285.9	286.4	86.9	51.0	87.4	1439.28	1431.437	1886.696	1878.128
20180519:00:21:49	23.4	16.6	-2.9	23.6	0.25	2.2	0.25	2.2	124.5	285.9	286.4	86.9	51.1	87.4	1440.619	1432.823	1888.45	1879.945
20180519:00:26:49	23.2	17.0	-6.4	23.6	0.25	2.2	0.25	2.2	124.9	286.0	286.5	86.8	51.0	87.4	1441.979	1434.174	1890.233	1881.718
20180519:00:31:49	23.3	17.1	-5.1	23.6	0.25	2.2	0.25	2.2	125.4	285.9	286.4	86.8	51.0	87.4	1443.377	1435.497	1892.065	1883.453
20180519:00:36:49	23.3	17.3	-5.1	23.6	0.25	2.2	0.25	2.2	125.7	285.9	286.3	86.7	51.0	87.3	1444.721	1436.888	1893.826	1885.278
20180519:00:41:49	23.3	17.5	-5.2	23.6	0.25	2.2	0.25	2.2	126.0	285.9	286.5	86.7	51.0	87.3	1446.07	1438.213	1895.594	1887.017
20180519:00:46:49	23.2	17.3	-5.3	23.6	0.25	2.2	0.25	2.2	125.8	285.9	286.4	86.7	51.0	87.3	1447.472	1439.572	1897.431	1888.799
20180519:00:51:49	23.2	16.3	-5.9	23.6	0.25	2.1	0.25	2.2	123.5	285.9	286.4	86.6	51.0	87.2	1448.814	1440.944	1899.191	1890.6
20180519:00:56:49	23.2	16.7	-5.7	23.6	0.25	2.1	0.25	2.2	124.4	285.8	286.4	86.6	51.0	87.2	1450.155	1442.281	1900.948	1892.353
20180519:01:01:49	23.2	17.2	-5.8	23.6	0.25	2.2	0.25	2.2	125.5	285.8	286.4	86.6	51.0	87.2	1451.556	1443.661	1902.783	1894.164

Time:	Stack Pressure:	Sat% H2O:	Static:	Barometric:	Flowmeter1:	Vacuum1:	Flowmeter2:	Vacuum2:	Stack Temp:	Sorbent Temp:	Probe Temp:	DGM#1 Temp:	Condenser Temp:	DGM#2 Temp:	DGM1*:	DGM2*:	DGM1:	DGM2:
day:hh:mm:ss	in-Hg	Percent	in-H2O	in-Hg	l/min	in-Hg	l/min	in-Hg	degF	degF	degF	degF	degF	degF	liters STP	liters STP	liters nominal	liters nominal
20180519:01:06:49	23.2	17.8	-5.7	23.6	0.25	2.2	0.25	2.2	126.7	285.9	286.4	86.5	51.0	87.1	1452.906	1445.015	1904.552	1895.94
20180519:01:11:49	23.2	18.1	-5.8	23.6	0.25	2.1	0.25	2.2	127.2	285.9	286.4	86.5	51.0	87.1	1454.243	1446.336	1906.304	1897.673
20180519:01:16:49	23.2	18.1	-5.8	23.6	0.25	2.1	0.25	2.2	127.3	285.9	286.4	86.4	51.0	87.0	1455.631	1447.728	1908.122	1899.498
20180519:01:21:49	23.2	18.2	-5.9	23.6	0.25	2.1	0.25	2.2	127.4	285.9	286.4	86.3	51.0	87.0	1456.978	1449.047	1909.885	1901.227
20180519:01:26:49	23.2	18.2	-6.0	23.6	0.25	2.1	0.25	2.2	127.4	285.8	286.4	86.2	51.0	86.9	1458.313	1450.402	1911.633	1903.004
20180519:01:31:49	23.2	18.2	-6.1	23.6	0.25	2.2	0.25	2.2	127.5	285.8	286.4	86.2	51.0	86.9	1459.704	1451.768	1913.454	1904.793
20180519:01:36:49	23.2	18.2	-6.1	23.7	0.25	2.2	0.25	2.2	127.5	285.8	286.4	86.1	51.0	86.9	1461.048	1453.099	1915.213	1906.538
20180519:01:41:49	23.2	18.3	-6.1	23.7	0.25	2.2	0.25	2.2	127.7	285.8	286.4	86.1	51.0	86.8	1462.38	1454.484	1916.956	1908.352
20180519:01:46:49	23.2	18.3	-6.1	23.7	0.25	2.2	0.25	2.2	127.8	285.7	286.4	86.0	51.0	86.8	1463.772	1455.814	1918.776	1910.094
20180519:01:51:49	23.2	18.4	-6.1	23.7	0.25	2.2	0.25	2.2	127.8	285.8	286.4	85.9	51.0	86.7	1465.114	1457.146	1920.531	1911.838
20180519:01:56:49	23.2	18.0	-6.3	23.7	0.25	2.2	0.25	2.2	127.1	285.8	286.4	85.9	51.0	86.7	1466.447	1458.528	1922.274	1913.648
20180519:02:01:49	23.2	17.2	-6.5	23.7	0.25	2.1	0.25	2.2	125.4	285.7	286.4	85.8	50.9	86.6	1467.846	1459.86	1924.104	1915.393
20180519:02:06:49	23.2	17.6	-6.4	23.7	0.25	2.2	0.25	2.2	126.2	285.7	286.3	85.8	51.0	86.6	1469.178	1461.23	1925.844	1917.186
20180519:02:11:49	23.2	17.9	-6.3	23.7	0.25	2.2	0.25	2.2	126.9	285.8	286.4	85.7	50.9	86.6	1470.521	1462.593	1927.6	1918.97
20180519:02:16:49	23.2	18.0	-6.5	23.7	0.25	2.2	0.25	2.2	127.1	285.7	286.3	85.7	51.0	86.5	1471.917	1463.916	1929.424	1920.701
20180519:02:21:49	23.2	18.0	-6.4	23.7	0.25	2.2	0.25	2.2	127.2	285.9	286.5	85.7	50.9	86.5	1473.251	1465.304	1931.167	1922.519
20180519:02:26:49	23.2	18.2	-6.2	23.7	0.25	2.2	0.25	2.2	127.5	285.8	286.4	85.6	51.0	86.5	1474.601	1466.628	1932.931	1924.252
20180519:02:31:49	23.2	18.3	-6.2	23.7	0.25	2.2	0.25	2.2	127.6	285.8	286.4	85.6	50.9	86.4	1475.994	1467.98	1934.752	1926.021
20180519:02:36:49	23.2	18.3	-6.3	23.7	0.25	2.2	0.25	2.2	127.6	285.8	286.4	85.7	51.0	86.4	1477.33	1469.351	1936.498	1927.816
20180519:02:41:49	23.2	18.2	-6.3	23.7	0.25	2.2	0.25	2.2	127.5	285.7	286.4	85.7	50.9	86.3	1478.678	1470.687	1938.261	1929.564
20180519:02:46:49	23.2	18.2	-6.4	23.7	0.25	2.2	0.25	2.2	127.5	285.8	286.4	85.7	51.0	86.3	1480.072	1472.071	1940.083	1931.374
20180519:02:51:49	23.2	18.1	-6.4	23.7	0.25	2.2	0.25	2.2	127.3	285.8	286.4	85.7	50.9	86.3	1481.408	1473.415	1941.83	1933.133
20180519:02:56:49	23.2	18.1	-6.4	23.7	0.25	2.2	0.25	2.2	127.3	285.8	286.5	85.7	51.0	86.3	1482.757	1474.744	1943.593	1934.872
20180519:03:01:49	23.2	18.1	-6.4	23.7	0.25	2.2	0.25	2.2	127.3	285.8	286.4	85.7	51.0	86.3	1484.148	1476.121	1945.411	1936.675
20180519:03:06:49	23.2	18.2	-6.3	23.7	0.25	2.2	0.25	2.2	127.5	285.8	286.5	85.7	51.0	86.2	1485.484	1477.45	1947.157	1938.414
20180519:03:11:49	23.2	18.2	-6.3	23.7	0.25	2.2	0.25	2.2	127.5	285.8	286.4	85.7	51.0	86.2	1486.829	1478.814	1948.917	1940.199
20180519:03:16:49	23.2	18.2	-6.4	23.7	0.25	2.2	0.25	2.2	127.4	285.8	286.4	85.7	51.0	86.2	1488.219	1480.177	1950.733	1941.983
20180519:03:21:49	23.2	18.2	-6.5	23.7	0.25	2.2	0.25	2.2	127.4	285.8	286.4	85.6	51.0	86.2	1489.553	1481.495	1952.478	1943.707
20180519:03:26:49	23.2	18.2	-6.6	23.7	0.25	2.2	0.25	2.2	127.4	285.8	286.4	85.6	51.0	86.2	1490.902	1482.883	1954.241	1945.523
20180519:03:31:49	23.2	18.2	-6.5	23.7	0.25	2.2	0.25	2.2	127.3	285.8	286.4	85.5	50.9	86.0	1492.295	1484.205	1956.061	1947.252
20180519:03:36:49	23.2	18.1	-6.6	23.7	0.25	2.2	0.25	2.2	127.2	285.8	286.4	85.5	51.0	86.0	1493.629	1485.56	1957.804	1949.024
20180519:03:41:49	23.2	18.2	-6.6	23.7	0.25	2.2	0.25	2.2	127.5	285.8	286.4	85.5	51.0	86.0	1494.978	1486.931	1959.567	1950.818
20180519:03:46:49	23.2	18.2	-6.7	23.7	0.25	2.2	0.25	2.2	127.4	285.7	286.3	85.4	51.0	86.0	1496.37	1488.265	1961.385	1952.562
20180519:03:51:49	23.2	18.2	-6.7	23.7	0.25	2.2	0.25	2.2	127.4	285.8	286.5	85.4	51.0	86.0	1497.696	1489.651	1963.117	1954.374
20180519:03:56:49	23.2	18.1	-6.7	23.7	0.25	2.2	0.25	2.2	127.2	285.8	286.4	85.3	51.0	85.9	1499.054	1490.985	1964.891	1956.118
20180519:04:01:49	23.2	18.1	-6.7	23.7	0.25	2.2	0.25	2.2	127.2	285.9	286.4	85.3	51.0	85.9	1500.446	1492.315	1966.709	1957.857
20180519:04:06:49	23.2	18.1	-6.6	23.7	0.25	2.2	0.25	2.2	127.1	285.8	286.3	85.2	51.0	85.8	1501.774	1493.697	1968.443	1959.664
20180519:04:11:49	23.2	18.1	-6.8	23.7	0.25	2.2	0.25	2.2	127.2	285.8	286.4	85.1	51.0	85.8	1503.133	1495.026	1970.217	1961.4
20180519:04:16:49	23.2	18.1	-6.7	23.7	0.25	2.2	0.25	2.2	127.3	285.8	286.4	85.0	51.0	85.7	1504.516	1496.401	1972.022	1963.197
20180519:04:21:49	23.2	18.1	-6.6	23.7	0.25	2.2	0.25	2.2	127.2	285.9	286.4	85.0	51.0	85.7	1505.856	1497.756	1973.77	1964.968
20180519:04:26:49	23.2	18.0	-6.7	23.7	0.25	2.2	0.25	2.2	127.0	285.8	286.4	84.9	51.0	85.6	1507.211	1499.079	1975.539	1966.697
20180519:04:31:49	23.2	18.0	-6.7	23.7	0.25	2.2	0.25	2.2	127.1	285.8	286.4	84.9	51.0	85.6	1508.592	1500.469	1977.341	1968.513
20180519:04:36:49	23.2	18.0	-6.7	23.7	0.25	2.2	0.25	2.2	126.9	285.8	286.4	84.8	51.0	85.5	1509.936	1501.798	1979.094	1970.25
20180519:04:41:49	23.2	17.9	-6.8	23.7	0.25	2.2	0.25	2.2	126.7	285.8	286.4	84.8	51.0	85.5	1511.293	1503.155	1980.865	1972.023
20180519:04:46:49	23.2	17.7	-6.6	23.7	0.25	2.2	0.25	2.2	126.3	285.8	286.3	84.7	51.0	85.4	1512.672	1504.521	1982.665	1973.806
20180519:04:51:49	23.2	17.5	-6.0	23.7	0.25	2.2	0.25	2.2	126.1	285.8	286.4	84.7	50.9	85.4	1514.016	1505.862	1984.417	1975.558
20180519:04:56:49	23.3	17.4	-5.5	23.7	0.25	2.2	0.25	2.2	126.0	285.8	286.4	84.6	51.0	85.3	1515.378	1507.251	1986.194	1977.372
20180519:05:01:49	23.3	17.5	-5.5	23.7	0.25	2.1	0.25	2.2	126.1	285.8	286.4	84.6	51.0	85.3	1516.758	1508.588	1987.994	1979.118
20180519:05:06:49	23.3	17.6	-5.4	23.7	0.25	2.1	0.25	2.2	126.3	285.8	286.4	84.5	51.0	85.3	1518.1	1509.928	1989.744	1980.868
20180519:05:11:49	23.3	17.6	-5.5	23.7	0.25	2.1	0.25	2.2	126.4	285.9	286.4	84.5	51.0	85.2	1519.467	1511.318	1991.528	1982.684
20180519:05:16:49	23.2	17.6	-5.5	23.7	0.25	2.2	0.25	2.2	126.4	285.8	286.4	84.4	51.0	85.2	1520.847	1512.656	1993.328	1984.432
20180519:05:21:49	23.2	17.2	-5.7	23.7	0.25	2.1	0.25	2.1	125.5	285.8	286.4	84.4	50.9	85.1	1522.191	1514.026	1995.08	1986.222
20180519:05:26:49	23.2	16.9	-5.7	23.7	0.25	2.1	0.25	2.1	124.8	285.8	286.4	84.4	51.0	85.1	1523.557	1515.395	1996.861	1988.009
20180519:05:31:49	23.2	17.2	-5.7	23.7	0.25	2.1	0.25	2.1	125.4	285.8	286.4	84.3	50.9	85.0	1524.927	1516.719	1998.648	1989.737
20180519:05:36:49	23.2	17.3	-5.8	23.7	0.25	2.1	0.25	2.1	125.7	285.9	286.4	84.3	51.0	85.0	1526.261	1518.102	2000.387	1991.543
20180519:05:41:49	23.2	17.4	-5.8	23.7	0.25	2.1	0.25	2.2	125.8	285.9	286.4	84.2	51.0	85.0	1527.633	1519.42	2002.176	1993.263
20180519:05:46:49	23.2	17.4	-5.8	23.7	0.25	2.1	0.25	2.2	125.8	285.8	286.4	84.1	51.0	84.9	1528.988	1520.776	2003.943	1995.034
20180519:05:51:49	23.2	17.4	-5.7	23.7	0.25	2.1	0.25	2.2	125.8	285.8	286.4	84.1	51.0	84.9	1530.327	1522.135	2005.687	1996.808
20180519:05:56:49	23.2	17.4	-5.7	23.7	0.25	2.1	0.25	2.2	125.9	285.8	286.4	84.0	51.0	84.8	1531.709	1523.469	2007.489	1998.549
20180519:06:01:49	23.2	17.5	-5.7	23.7	0.25	2.2	0.25	2.2	126.1	285.8	286.3	83.9	50.9	84.7	1533.066	1524.852	2009.257	2000.353
20180519:06:06:49	23.2	17.7	-5.7	23.7	0.25	2.2	0.25	2.2	126.4	285.8	286.4	83.9	51.0	84.7	1534.395	1526.176	2010.989	2002.081
20180519:06:11:49	23.2	17.8	-5.6	23.7	0.25	2.2	0.25	2.2	126.7	285.8	286.3	83.8	51.0	84.6	1535.784	1527.529	2012.798	2003.846
20180519:06:16:49	23.2	17.9	-5.6	23.7	0.25	2.2	0.25	2.2	126.9	285.8	286.4	83.7	51.0	84.6	1537.134	1528.902	2014.556	2005.637
20180519:06:21:49	23.3	17.9	-5.5	23.7	0.25	2.2	0.25	2.2	127.0	285.8	286.4	83.7	50.9	84.5	1538.466	1530.24	2016.291	2007.382
20180519:06:26:49	23.2	17.6	-5.7	23.7	0.25	2.1	0.25	2.2	126.4	285.8	286.4	83.6	51.0	84.4	1539.86	1531.631	2018.106	2009.195
20180519:06:31:49	23.2	17.0	-5.9	23.7	0.25	2.1	0.25	2.1	125.1	285.7	286.4	83.5	50.9	84.3	1541.206	1532.975	2019.857	2010.947
20180519:06:36:49	23.2	17.3	-5.6	23.7	0.25	2.1	0.25	2.2	125.7	285.8	286.3	83.5	50.9	84.3	1542.544	1534.307	2021.6	2012.684
20180519:06:41:49	23.2	17.4	-5.6	23.7	0.25	2.1	0.25	2.2	126.0	285.8	286.4	83.4	50.9	84.3	1543.946	1535.689	2023.424	2014.487
20180519:06:46:49	23.2	17.5	-5.6	23.7	0.25	2.1	0.25	2.2	126.2	285.7	286.3	83.4	50.9	84.2	1545.28	1537.023	2025.161	2016.226
20180519:06:51:49	23.3	17.5	-5.5	23.7	0.25	2.1	0.25	2.2	126.1	285.8	286.4	83.4	50.9	84.2	1546.625	1538.397	2026.911	2018.017
20180519:06:56:49	23.2	17.6	-5.5	23.7	0.25	2.1	0.25	2.2	126.2	285.8	286.3	83.3	50.9	84.1	1548.02	1539.752	2028.728	2019.782
20180519:07:01:49	23.3	17.5	-5.3	23.6	0.25	2.1	0.25	2.2	126.2	285.8	286.4	83.3	50.9	84.1	1549.347	1541.074	2030.456	2021.506
20180519:07:06:49	23.3	17.5	-5.6	23.7	0.25	2.2	0.25	2.2	126.1	285.8	286.4	83.3	50.9	84.0	1550.701	1542.455	2032.217	2023.305
20180519:07:11:49	23.2	17.5	-5.8	23.7	0.25	2.2	0.25	2.2	126.2	285.8	286.3	83.3	50.9	84.0	1552.084	1543.786	2034.015	2025.038
20180519:07:16:49	23.2	17.5	-5.9	23.7	0.25	2.2	0.25	2.2	126.2	285.8	286.3	83.3	50.9	84.0	1553.421	1545.154	2035.754	2026.82
20180519:07:21:49	23.2	17.6	-5.9	23.7	0.25	2.2	0.25	2.2	126.2	285.7	286.2	83.3	50.9	84.0	1554.784	1546.517	2037.526	2028.594
20180519:07:26:49	23.2	17.7	-6.0	23.7	0.25	2.2	0.25	2.2	126.4	285.7	286.3	83.4	50.9	83.9	1556.155	1547.832	2039.309	2030.306
20180519:07:31:49	23.2	17.6	-6.0	23.7	0.25	2.2	0.25	2.2	126.2	285.7	286.2	83.4	50.9	83.9	1557.492	1549.22	2041.048	2032.113
20180519:07:36:49	23.2	16.9	-6.1	23.7	0.25	2.1	0.25	2.2	124.7	285.6	286.3	83.4	50.9	83.9	1558.872	1550.55	2042.843	2033.844
20180519:07:41:49	23.2	17.1	-5.9	23.7	0.25	2.2	0.25	2.2	125.3	285.7	286.2	83.4	50.9	83.9	1560.228	1551.914	2044.606	2035.618
20180519:07:46:49	23.3	17.3	-5.9	23.7	0.25	2.2	0.25	2.2	125.7	285.8	286.4	83.4	50.9	83.9	1561.568	1553.281	2046.348	2037.398
20180519:07:51:49	23.2	17.4	-5.9	23.7	0.25	2.2	0.25	2.2	125.9	285.8	286.3	83.4	50.9	83.8	1562.955	1554.597	2048.152	2039.111
20180519:07:56:49	23.2	17.5	-5.9	23.7	0.25	2.2	0.25	2.2	126.1	285.8	286.3	83.5	50.9	83.9	1564.312	1555.984	2049.917	2040.915
20180519:08:01:49	23.3	17.6	-5.8	23.7	0.25	2.2	0.25	2.2	126.3	285.7	286.3	83.6	50.9	83.8	1565.642	1557.316	2051.646	2042.648
20180519:08:06:49	23.3	17.6	-5.7	23.7	0.25	2.2	0.25	2.2	126.3	285.8	286.3	83.6	50.9	83.8	1567.032	1558.676	2053.454	2044.419
20180519:08:11:49	23.3	17.6	-5.6	23.7	0.25	2.2	0.25	2.2	126.4	285.8	286.4	83.6	50.9	83.9	1568.377	1560.039	2055.204	2046.192
20180519:08:16:49	23.3	17.6	-5.7	23.7	0.25	2.2	0.25	2.2	126.4	285.8	286.3	83.6	50.9	83.9	1569.708	1561.353	2056.935	2047.902
20180519:08:21:49	23.3	17.6	-5.7	23.7	0.25	2.2	0.25	2.2	126.4	285.8	286.4	83.6	50.9	83.9	1571.108	1562.738	2058.756	2049.705
20180519:08:26:49	23.3	17.6	-5.7	23.7	0.25	2.2	0.25	2.2	126.3	285.9	286.4	83.6	50.9	83.9	1572.442	1564.065	2060.491	2051.432

Time:	Stack Pressure:	Sat% H2O:	Static:	Barometric:	Flowmeter1:	Vacuum1:	Flowmeter2:	Vacuum2:	Stack Temp:	Sorbent Temp:	Probe Temp:	DGM#1 Temp:	Condenser Temp:	DGM#2 Temp:	DGM1*:	DGM2*:	DGM1:	DGM2:
day:hh:mm:ss	in-Hg	Percent	in-H2O	in-Hg	l/min	in-Hg	l/min	in-Hg	degF	degF	degF	degF	degF	degF	liters STP	liters STP	liters nominal	liters nominal
20180519:08:31:49	23.3	17.6	-5.7	23.7	0.25	2.2	0.25	2.2	126.3	285.9	286.4	83.6	50.9	83.9	1573.788	1565.433	2062.243	2053.212
20180519:08:36:49	23.3	17.6	-5.6	23.7	0.25	2.2	0.25	2.2	126.4	285.8	286.4	83.6	50.9	83.9	1575.182	1566.792	2064.056	2054.981
20180519:08:41:49	23.2	17.1	-6.0	23.7	0.25	2.1	0.25	2.2	125.2	285.8	286.4	83.6	50.9	83.9	1576.511	1568.113	2065.783	2056.699
20180519:08:46:49	23.3	17.3	-5.8	23.7	0.251	2.2	0.25	2.2	125.7	285.8	286.4	83.6	50.9	83.9	1577.868	1569.493	2067.548	2058.496
20180519:08:51:49	23.3	17.5	-5.7	23.7	0.25	2.2	0.25	2.2	126.1	285.8	286.4	83.6	50.9	83.9	1579.25	1570.821	2069.346	2060.224
20180519:08:56:49	23.3	17.5	-5.8	23.7	0.25	2.2	0.25	2.2	126.1	285.8	286.4	83.6	50.9	83.9	1580.59	1572.189	2071.089	2062.004
20180519:09:01:49	23.3	17.5	-5.7	23.7	0.25	2.2	0.25	2.2	126.2	285.8	286.4	83.6	50.9	83.9	1581.953	1573.546	2072.861	2063.771
20180519:09:06:49	23.3	17.5	-5.7	23.7	0.25	2.2	0.25	2.2	126.2	285.7	286.3	83.6	50.9	83.9	1583.325	1574.866	2074.646	2065.489
20180519:09:11:49	23.3	17.6	-5.6	23.7	0.25	2.2	0.25	2.2	126.3	285.8	286.3	83.6	50.9	83.9	1584.655	1576.241	2076.376	2067.278
20180519:09:16:49	23.3	17.5	-5.5	23.7	0.25	2.2	0.25	2.2	126.1	285.8	286.3	83.5	50.8	83.9	1586.036	1577.567	2078.172	2069.004
20180519:09:21:49	23.3	17.5	-5.6	23.7	0.25	2.2	0.25	2.2	126.2	285.8	286.4	83.5	50.8	83.9	1587.393	1578.939	2079.937	2070.789
20180519:09:26:49	23.3	17.6	-5.9	23.7	0.25	2.2	0.25	2.2	126.2	285.8	286.4	83.4	50.8	83.9	1588.726	1580.284	2081.67	2072.539
20180519:09:31:49	23.3	17.6	-5.8	23.7	0.25	2.2	0.25	2.2	126.3	285.8	286.4	83.4	50.8	84.0	1590.115	1581.607	2083.476	2074.261
20180519:09:36:49	23.3	17.6	-5.7	23.7	0.25	2.2	0.25	2.2	126.2	285.8	286.4	83.4	50.8	84.0	1591.462	1582.989	2085.228	2076.06
20180519:09:41:49	23.3	17.5	-5.7	23.7	0.25	2.2	0.25	2.2	126.2	285.8	286.4	83.4	50.8	84.0	1592.795	1584.315	2086.961	2077.786
20180519:09:46:49	23.3	17.1	-5.7	23.7	0.25	2.1	0.25	2.2	125.2	285.7	286.3	83.4	50.8	84.0	1594.188	1585.695	2088.772	2079.583
20180519:09:51:49	23.3	17.2	-5.6	23.7	0.25	2.2	0.25	2.2	125.6	285.8	286.4	83.4	50.8	84.0	1595.515	1587.036	2090.498	2081.329
20180519:09:56:49	23.3	17.4	-5.6	23.7	0.25	2.2	0.25	2.2	126.0	285.7	286.3	83.4	50.8	84.0	1596.859	1588.36	2092.246	2083.053
20180519:10:01:49	23.3	17.4	-5.5	23.7	0.25	2.1	0.25	2.2	126.0	285.7	286.3	83.4	50.8	84.0	1598.248	1589.74	2094.052	2084.85
20180519:10:06:49	23.3	17.5	-5.4	23.7	0.25	2.2	0.25	2.2	126.1	285.7	286.3	83.4	50.8	84.1	1599.575	1591.07	2095.778	2086.581
20180519:10:11:49	23.3	17.5	-5.4	23.7	0.25	2.1	0.25	2.2	126.1	285.7	286.3	83.4	50.8	84.1	1600.932	1592.452	2097.543	2088.38
20180519:10:16:49	23.3	17.5	-5.4	23.7	0.25	2.2	0.25	2.2	126.2	285.7	286.4	83.4	50.8	84.1	1602.31	1593.797	2099.335	2090.132
20180519:10:21:49	23.3	17.6	-5.4	23.7	0.25	2.2	0.25	2.2	126.3	285.7	286.4	83.4	50.8	84.1	1603.643	1595.122	2101.069	2091.857
20180519:10:26:49	23.3	17.6	-5.4	23.7	0.25	2.2	0.25	2.2	126.4	285.7	286.3	83.5	50.8	84.1	1605.014	1596.505	2102.852	2093.658
20180519:10:31:49	23.3	17.6	-5.4	23.7	0.25	2.2	0.25	2.2	126.4	285.7	286.4	83.6	50.8	84.2	1606.373	1597.829	2104.62	2095.382
20180519:10:36:49	23.3	17.6	-5.4	23.7	0.25	2.2	0.25	2.2	126.3	285.7	286.3	83.6	50.8	84.2	1607.713	1599.207	2106.363	2097.177
20180519:10:41:49	23.3	17.5	-5.3	23.7	0.25	2.2	0.25	2.2	126.2	285.7	286.3	83.6	50.8	84.2	1609.095	1600.547	2108.161	2098.923
20180519:10:46:49	23.3	17.5	-5.4	23.7	0.25	2.2	0.25	2.2	126.2	285.7	286.4	83.7	50.8	84.3	1610.454	1601.871	2109.93	2100.647
20180519:10:51:49	23.3	17.1	-5.7	23.7	0.25	2.1	0.25	2.2	125.2	285.7	286.3	83.7	50.8	84.3	1611.782	1603.25	2111.657	2102.444
20180519:10:56:49	23.3	17.2	-5.5	23.7	0.25	2.2	0.25	2.2	125.6	285.7	286.4	83.8	50.8	84.3	1613.169	1604.576	2113.463	2104.171
20180519:11:01:49	23.3	17.4	-5.6	23.7	0.25	2.2	0.25	2.2	126.0	285.8	286.4	84.0	50.9	84.5	1614.512	1605.957	2115.211	2105.97
20180519:11:06:49	23.3	17.5	-5.3	23.7	0.25	2.2	0.25	2.2	126.2	285.8	286.5	84.1	50.9	84.5	1615.839	1607.295	2116.939	2107.714
20180519:11:11:49	23.3	17.5	-5.5	23.7	0.25	2.2	0.25	2.2	126.2	285.8	286.3	84.2	50.9	84.6	1617.233	1608.618	2118.756	2109.438
20180519:11:16:49	23.3	17.5	-5.4	23.7	0.25	2.2	0.25	2.2	126.2	285.8	286.4	84.2	50.8	84.6	1618.56	1609.993	2120.483	2111.231
20180519:11:21:49	23.3	17.6	-5.3	23.7	0.25	2.2	0.25	2.2	126.3	285.8	286.4	84.3	50.8	84.6	1619.904	1611.32	2122.235	2112.961
20180519:11:26:49	23.3	17.5	-5.3	23.7	0.25	2.2	0.25	2.2	126.2	285.8	286.4	84.3	50.8	84.6	1621.289	1612.704	2124.039	2114.765
20180519:11:31:49	23.3	17.6	-5.2	23.7	0.25	2.2	0.25	2.2	126.3	285.8	286.3	84.3	50.8	84.7	1622.622	1614.033	2125.776	2116.498
20180519:11:36:49	23.3	17.6	-5.1	23.7	0.25	2.2	0.25	2.2	126.4	285.8	286.4	84.4	50.9	84.8	1623.976	1615.364	2127.541	2118.233
20180519:11:41:49	23.3	17.6	-5.0	23.7	0.25	2.2	0.25	2.2	126.5	285.8	286.3	84.4	50.8	84.8	1625.353	1616.735	2129.335	2120.023
20180519:11:46:49	23.3	17.6	-5.1	23.7	0.25	2.2	0.25	2.2	126.3	285.8	286.4	84.5	50.9	84.8	1626.69	1618.065	2131.078	2121.758
20180519:11:51:49	23.3	17.6	-5.3	23.7	0.25	2.2	0.25	2.2	126.3	285.8	286.3	84.4	50.8	84.9	1628.054	1619.449	2132.856	2123.562
20180519:11:56:49	23.3	17.2	-5.5	23.7	0.25	2.1	0.25	2.2	125.4	285.8	286.3	84.4	50.8	84.9	1629.419	1620.778	2134.635	2125.297
20180519:12:01:49	23.3	17.3	-5.5	23.7	0.25	2.2	0.25	2.2	125.6	285.7	286.4	84.5	50.8	84.9	1630.751	1622.108	2136.372	2127.032
20180519:12:06:49	23.3	17.4	-5.4	23.7	0.25	2.2	0.25	2.2	125.8	285.8	286.4	84.5	50.8	85.0	1632.129	1623.482	2138.169	2128.825
20180519:12:11:49	23.3	17.4	-5.4	23.7	0.25	2.2	0.25	2.2	126.0	285.8	286.4	84.5	50.8	85.0	1633.487	1624.813	2139.939	2130.562
20180519:12:16:49	23.3	17.5	-5.3	23.7	0.25	2.2	0.25	2.2	126.1	285.8	286.3	84.5	50.9	85.0	1634.814	1626.192	2141.669	2132.361
20180519:12:21:49	23.3	17.6	-5.2	23.7	0.25	2.2	0.25	2.2	126.3	285.7	286.4	84.6	50.8	85.1	1636.198	1627.525	2143.474	2134.102
20180519:12:26:49	23.3	17.6	-5.2	23.7	0.25	2.2	0.25	2.2	126.3	285.7	286.3	84.6	50.8	85.1	1637.545	1628.856	2145.23	2135.838
20180519:12:31:49	23.3	17.6	-5.1	23.7	0.25	2.2	0.25	2.2	126.3	285.8	286.4	84.7	50.8	85.2	1638.874	1630.227	2146.963	2137.628
20180519:12:36:49	23.3	17.6	-5.0	23.7	0.25	2.2	0.25	2.2	126.3	285.8	286.4	84.7	50.9	85.2	1640.263	1631.557	2148.776	2139.365
20180519:12:41:49	23.3	17.6	-5.0	23.7	0.25	2.2	0.25	2.2	126.3	285.8	286.5	84.8	50.9	85.3	1641.602	1632.935	2150.522	2141.164
20180519:12:46:49	23.3	17.5	-4.9	23.7	0.25	2.2	0.25	2.2	126.3	285.8	286.4	84.9	50.9	85.3	1642.939	1634.273	2152.267	2142.912
20180519:12:51:49	23.3	17.6	-4.9	23.7	0.25	2.2	0.25	2.2	126.4	285.8	286.4	85.0	50.9	85.4	1644.328	1635.596	2154.08	2144.639
20180519:12:56:49	23.3	17.6	-4.9	23.7	0.25	2.2	0.25	2.2	126.4	285.8	286.4	85.1	50.9	85.5	1645.654	1636.976	2155.811	2146.442
20180519:13:01:49	23.3	17.3	-5.1	23.7	0.25	2.2	0.25	2.2	125.7	285.7	286.4	85.2	50.9	85.5	1647	1638.296	2157.569	2148.167
20180519:13:06:49	23.3	17.4	-5.1	23.7	0.25	2.2	0.25	2.2	126.0	285.8	286.4	85.3	50.9	85.6	1648.389	1639.672	2159.383	2149.966
20180519:13:11:49	23.3	17.5	-4.9	23.7	0.25	2.2	0.25	2.2	126.2	285.8	286.4	85.3	50.9	85.6	1649.716	1641.018	2161.117	2151.726
20180519:13:16:49	23.3	17.5	-4.9	23.7	0.25	2.2	0.25	2.2	126.3	285.8	286.4	85.4	50.9	85.7	1651.07	1642.341	2162.887	2153.455
20180519:13:21:49	23.3	17.6	-4.8	23.6	0.25	2.2	0.25	2.2	126.4	285.8	286.4	85.5	50.9	85.7	1652.452	1643.718	2164.693	2155.256
20180519:13:26:49	23.3	17.6	-4.8	23.7	0.25	2.2	0.25	2.2	126.4	285.9	286.4	85.5	50.9	85.8	1653.788	1645.044	2166.439	2156.989
20180519:13:31:49	23.3	17.7	-5.0	23.7	0.25	2.2	0.25	2.2	126.5	285.8	286.4	85.6	50.9	85.9	1655.141	1646.41	2168.207	2158.776
20180519:13:36:49	23.3	17.7	-4.9	23.6	0.25	2.2	0.25	2.2	126.6	285.8	286.3	85.6	50.9	85.9	1656.519	1647.764	2170.009	2160.547
20180519:13:41:49	23.3	17.7	-4.9	23.7	0.25	2.2	0.25	2.2	126.5	285.8	286.4	85.7	50.9	86.0	1657.86	1649.08	2171.763	2162.269
20180519:13:46:49	23.3	17.6	-4.9	23.7	0.25	2.2	0.25	2.2	126.4	285.8	286.3	85.7	50.9	86.0	1659.214	1650.46	2173.533	2164.073
20180519:13:51:49	23.3	17.6	-4.9	23.7	0.25	2.2	0.25	2.2	126.4	285.8	286.4	85.7	50.9	86.0	1660.588	1651.79	2175.33	2165.814
20180519:13:56:49	23.3	17.6	-4.9	23.7	0.25	2.2	0.25	2.2	126.4	285.8	286.3	85.8	50.9	86.1	1661.922	1653.143	2177.074	2167.585
20180519:14:01:49	23.3	17.6	-4.7	23.6	0.25	2.2	0.25	2.2	126.3	285.9	286.5	85.9	50.9	86.2	1663.287	1654.508	2178.859	2169.37
20180519:14:06:49	23.3	17.1	-4.8	23.6	0.25	2.1	0.25	2.2	125.3	285.8	286.4	85.9	50.9	86.2	1664.654	1655.823	2180.648	2171.092
20180519:14:11:49	23.3	17.4	-4.6	23.6	0.25	2.2	0.25	2.2	125.9	285.8	286.4	85.9	50.9	86.2	1665.982	1657.2	2182.385	2172.895
20180519:14:16:49	23.3	17.6	-4.6	23.6	0.25	2.2	0.25	2.2	126.4	285.8	286.4	85.9	50.9	86.3	1667.355	1658.519	2184.181	2174.622
20180519:14:21:49	23.3	17.7	-4.6	23.6	0.25	2.2	0.25	2.2	126.5	285.8	286.3	86.0	50.9	86.3	1668.712	1659.876	2185.957	2176.398
20180519:14:26:49	23.3	17.7	-4.6	23.6	0.25	2.2	0.25	2.2	126.7	285.8	286.4	86.0	50.9	86.3	1670.049	1661.237	2187.707	2178.18
20180519:14:31:49	23.3	17.7	-4.4	23.6	0.25	2.2	0.25	2.2	126.7	285.8	286.3	86.0	50.9	86.4	1671.428	1662.57	2189.511	2179.927
20180519:14:36:49	23.3	17.7	-4.8	23.6	0.25	2.2	0.25	2.2	126.5	285.8	286.3	86.0	50.8	86.5	1672.782	1663.952	2191.283	2181.737
20180519:14:41:49	23.3	17.6	-4.8	23.6	0.25	2.2	0.25	2.2	126.4	285.8	286.4	86.1	50.9	86.5	1674.117	1665.278	2193.031	2183.474
20180519:14:46:49	23.3	17.6	-4.7	23.6	0.25	2.2	0.25	2.2	126.3	285.8	286.4	86.1	50.8	86.6	1675.499	1666.615	2194.841	2185.226
20180519:14:51:49	23.3	17.6	-4.7	23.6	0.25	2.2	0.25	2.2	126.3	285.8	286.4	86.2	50.9	86.6	1676.848	1667.986	2196.607	2187.023
20180519:14:56:49	23.3	17.5	-4.7	23.6	0.25	2.2	0.25	2.2	126.2	285.7	286.3	86.2	50.8	86.6	1678.187	1669.314	2198.361	2188.763
20180519:15:01:49	23.3	17.6	-4.7	23.6	0.25	2.2	0.25	2.2	126.3	285.7	286.4	86.3	50.9	86.7	1679.566	1670.691	2200.167	2190.568
20180519:15:06:49	23.3	17.6	-4.5	23.6	0.25	2.2	0.25	2.2	126.3	285.7	286.4	86.4	50.9	86.7	1680.918	1672.024	2201.939	2192.316
20180519:15:11:49	23.3	17.2	-4.9	23.6	0.25	2.2	0.25	2.2	125.5	285.7	286.4	86.5	50.9	86.8	1682.247	1673.349	2203.68	2194.053
20180519:15:16:49	23.3	17.4	-4.8	23.6	0.25	2.2	0.25	2.2	125.8	285.8	286.4	86.6	50.9	86.9	1683.627	1674.722	2205.489	2195.853
20180519:15:21:49	23.3	17.4	-4.7	23.6	0.25	2.2	0.25	2.2	126.0	285.8	286.4	86.7	50.9	86.9	1684.982	1676.043	2207.267	2197.586
20180519:15:26:49	23.3	17.5	-4.7	23.6	0.25	2.2	0.25	2.2	126.1	285.8	286.5	86.8	50.9	87.0	1686.308	1677.412	2209.006	2199.383
20180519:15:31:49	23.3	17.6	-4.7	23.6	0.25	2.2	0.25	2.2	126.3	285.8	286.4	86.9	50.9	87.1	1687.69	1678.765	2210.819	2201.158
20180519:15:36:49	23.3	17.6	-4.7	23.6	0.25	2.2	0.25	2.2	126.3	285.8	286.4	87.0	50.9	87.1	1689.045	1680.077	2212.596	2202.88
20180519:15:41:49	23.3	17.7	-4.7	23.6	0.25	2.2	0.25	2.2	126.5	285.8	286.4	87.1	50.9	87.2	1690.374	1681.46	2214.341	2204.695
20180519:15:46:49	23.3	17.6	-4.6	23.6	0.25	2.2	0.25	2.2	126.5	285.9	286.4	87.2	50.9	87.3	1691.757	1682.785	2216.156	2206.434
20180519:15:51:49	23.3	17.6	-4.5	23.6	0.25	2.2	0.25	2.2	126.5	285.8	286.4	87.2	50.9	87.3	1693.116	1684.136	2217.939	2208.209

Time:	Stack Pressure:	Sat% H2O:	Static:	Barometric:	Flowmeter1:	Vacuum1:	Flowmeter2:	Vacuum2:	Stack Temp:	Sorbent Temp:	Probe Temp:	DGM#1 Temp:	Condenser Temp:	DGM#2 Temp:	DGM1*:	DGM2*:	DGM1:	DGM2:
day:hh:mm:ss	in-Hg	Percent	in-H2O	in-Hg	l/min	in-Hg	l/min	in-Hg	degF	degF	degF	degF	degF	degF	liters STP	liters STP	liters nominal	liters nominal
20180519:15:56:49	23.3	17.7	-4.6	23.6	0.25	2.2	0.25	2.2	126.5	285.8	286.4	87.3	51.0	87.3	1694.441	1685.493	2219.68	2209.991
20180519:16:01:49	23.3	17.7	-4.6	23.6	0.25	2.2	0.25	2.2	126.5	285.8	286.4	87.3	50.9	87.4	1695.823	1686.825	2221.494	2211.741
20180519:16:06:49	23.3	17.6	-4.5	23.6	0.25	2.2	0.25	2.2	126.5	285.8	286.4	87.3	50.9	87.4	1697.177	1688.204	2223.272	2213.551
20180519:16:11:49	23.3	17.4	-4.6	23.6	0.25	2.2	0.25	2.2	126.0	285.8	286.4	87.3	50.9	87.5	1698.508	1689.529	2225.02	2215.291
20180519:16:16:49	23.3	17.4	-4.8	23.6	0.25	2.2	0.25	2.2	125.8	285.8	286.3	87.3	50.9	87.5	1699.889	1690.862	2226.833	2217.043
20180519:16:21:49	23.3	17.4	-4.6	23.6	0.25	2.2	0.25	2.2	126.0	285.8	286.4	87.4	50.9	87.6	1701.239	1692.235	2228.607	2218.848
20180519:16:26:49	23.3	17.5	-4.5	23.6	0.25	2.2	0.25	2.2	126.2	285.8	286.4	87.5	50.9	87.7	1702.577	1693.561	2230.365	2220.59
20180519:16:31:49	23.3	17.6	-4.4	23.6	0.25	2.2	0.25	2.2	126.4	285.8	286.4	87.6	50.9	87.8	1703.953	1694.931	2232.174	2222.391
20180519:16:36:49	23.3	17.6	-4.4	23.6	0.25	2.2	0.25	2.2	126.4	285.8	286.4	87.6	50.9	87.8	1705.305	1696.284	2233.95	2224.171
20180519:16:41:49	23.3	17.7	-4.4	23.6	0.25	2.2	0.25	2.2	126.5	285.8	286.4	87.6	50.9	87.9	1706.642	1697.599	2235.707	2225.9
20180519:16:46:49	23.3	17.6	-4.4	23.6	0.25	2.2	0.25	2.2	126.5	285.8	286.4	87.6	50.9	87.9	1708.019	1698.981	2237.517	2227.716
20180519:16:51:49	23.3	17.7	-4.4	23.6	0.25	2.2	0.25	2.2	126.5	285.7	286.3	87.7	51.0	87.9	1709.375	1700.299	2239.3	2229.449
20180519:16:56:49	23.3	17.7	-4.4	23.6	0.25	2.2	0.25	2.2	126.5	285.8	286.4	87.8	50.9	88.0	1710.714	1701.655	2241.059	2231.233
20180519:17:01:49	23.3	17.7	-4.4	23.6	0.25	2.2	0.25	2.2	126.5	285.8	286.4	87.9	51.0	88.1	1712.084	1703.02	2242.861	2233.028
20180519:17:06:49	23.3	17.7	-4.4	23.6	0.25	2.2	0.25	2.2	126.5	285.8	286.4	87.9	51.0	88.1	1713.451	1704.348	2244.657	2234.774
20180519:17:11:49	23.3	17.7	-4.4	23.6	0.25	2.2	0.25	2.2	126.5	285.8	286.4	88.0	51.0	88.2	1714.79	1705.724	2246.419	2236.585
20180519:17:16:49	23.3	17.4	-4.4	23.6	0.25	2.2	0.25	2.2	126.1	285.7	286.3	88.1	51.0	88.2	1716.15	1707.062	2248.207	2238.344
20180519:17:21:49	23.3	17.4	-4.3	23.6	0.25	2.2	0.25	2.2	125.9	285.8	286.4	88.2	50.9	88.3	1717.523	1708.383	2250.013	2240.083
20180519:17:26:49	23.3	17.5	-4.3	23.6	0.25	2.2	0.25	2.2	126.2	285.8	286.4	88.3	51.0	88.3	1718.864	1709.762	2251.778	2241.897
20180519:17:31:49	23.3	17.6	-4.5	23.6	0.25	2.2	0.25	2.2	126.3	285.8	286.4	88.3	51.0	88.4	1720.214	1711.094	2253.554	2243.648
20180519:17:36:49	23.3	17.6	-4.5	23.6	0.25	2.2	0.25	2.2	126.4	285.8	286.4	88.3	51.0	88.5	1721.594	1712.443	2255.369	2245.425
20180519:17:41:49	23.3	17.7	-4.4	23.6	0.25	2.2	0.25	2.2	126.6	285.8	286.4	88.3	51.0	88.5	1722.928	1713.797	2257.124	2247.207
20180519:17:46:49	23.3	17.7	-4.3	23.6	0.25	2.2	0.25	2.2	126.5	285.8	286.4	88.4	51.0	88.5	1724.285	1715.131	2258.909	2248.962
20180519:17:51:49	23.3	17.6	-4.2	23.6	0.25	2.2	0.25	2.2	126.4	285.8	286.4	88.3	51.0	88.6	1725.68	1716.515	2260.744	2250.784
20180519:17:56:49	23.3	17.7	-4.3	23.6	0.25	2.2	0.25	2.2	126.6	285.8	286.4	88.4	50.9	88.6	1727.014	1717.849	2262.5	2252.539
20180519:18:01:49	23.3	17.6	-4.3	23.6	0.25	2.2	0.25	2.2	126.5	285.8	286.4	88.4	51.0	88.6	1728.362	1719.175	2264.274	2254.286
20180519:18:06:49	23.3	17.6	-4.4	23.6	0.25	2.2	0.25	2.2	126.3	285.8	286.3	88.4	50.9	88.7	1729.757	1720.555	2266.109	2256.102
20180519:18:11:49	23.3	17.5	-4.4	23.6	0.25	2.2	0.25	2.2	126.3	285.8	286.4	88.5	51.0	88.7	1731.093	1721.885	2267.867	2257.852
20180519:18:16:49	23.3	17.5	-4.4	23.6	0.25	2.2	0.25	2.2	126.2	285.8	286.4	88.4	51.0	88.7	1732.429	1723.237	2269.624	2259.632
20180519:18:21:49	23.3	17.2	-4.5	23.6	0.25	2.2	0.25	2.2	125.6	285.8	286.3	88.4	50.9	88.7	1733.816	1724.593	2271.448	2261.415
20180519:18:26:49	23.3	16.8	-4.6	23.6	0.25	2.2	0.25	2.2	124.8	285.7	286.4	88.5	51.0	88.8	1735.155	1725.922	2273.209	2263.164
20180519:18:31:49	23.3	17.3	-4.6	23.6	0.25	2.2	0.25	2.2	125.7	285.8	286.4	88.5	50.9	88.8	1736.489	1727.294	2274.963	2264.97
20180519:18:36:49	23.3	17.3	-4.6	23.6	0.25	2.2	0.25	2.2	125.8	285.8	286.4	88.5	51.0	88.9	1737.881	1728.623	2276.794	2266.718
20180519:18:41:49	23.3	17.3	-4.5	23.6	0.25	2.2	0.25	2.2	125.8	285.7	286.3	88.5	50.9	88.9	1739.231	1729.961	2278.569	2268.479
20180519:18:46:49	23.3	17.3	-4.3	23.6	0.25	2.2	0.25	2.2	125.7	285.8	286.4	88.5	51.0	88.9	1740.568	1731.339	2280.328	2270.293
20180519:18:51:49	23.3	17.1	-4.2	23.6	0.25	2.2	0.25	2.2	125.4	285.7	286.4	88.5	51.0	88.9	1741.956	1732.665	2282.152	2272.038
20180519:18:56:49	23.3	17.0	-4.2	23.6	0.25	2.2	0.25	2.2	125.1	285.7	286.4	88.5	50.9	89.0	1743.314	1734.031	2283.937	2273.835
20180519:19:01:49	23.3	17.0	-4.2	23.6	0.25	2.2	0.25	2.2	125.2	285.8	286.4	88.5	51.0	89.0	1744.642	1735.392	2285.683	2275.626
20180519:19:06:49	23.3	17.1	-4.1	23.6	0.25	2.2	0.25	2.2	125.4	285.8	286.4	88.5	50.9	89.0	1746.027	1736.717	2287.504	2277.368
20180519:19:11:49	23.3	17.1	-4.2	23.7	0.25	2.2	0.25	2.2	125.5	285.8	286.3	88.5	51.0	89.0	1747.378	1738.099	2289.28	2279.186
20180519:19:16:49	23.3	17.2	-4.2	23.7	0.25	2.2	0.25	2.2	125.5	285.8	286.4	88.5	50.9	89.0	1748.718	1739.435	2291.041	2280.944
20180519:19:21:49	23.3	17.2	-4.3	23.7	0.25	2.2	0.25	2.2	125.5	285.8	286.3	88.5	51.0	89.1	1750.099	1740.768	2292.856	2282.697
20180519:19:26:49	23.3	16.8	-4.2	23.7	0.25	2.2	0.25	2.2	124.7	285.7	286.3	88.5	51.0	89.1	1751.461	1742.147	2294.644	2284.511
20180519:19:31:49	23.4	16.7	-3.7	23.7	0.25	2.2	0.25	2.2	124.6	285.7	286.3	88.5	51.0	89.1	1752.798	1743.481	2296.402	2286.265
20180519:19:36:49	23.4	16.8	-3.5	23.7	0.25	2.2	0.25	2.2	124.9	285.7	286.4	88.5	51.0	89.2	1754.167	1744.843	2298.2	2288.056
20180519:19:41:49	23.4	17.0	-3.5	23.7	0.25	2.2	0.25	2.2	125.3	285.7	286.4	88.5	51.0	89.2	1755.539	1746.2	2300.002	2289.842
20180519:19:46:49	23.4	16.1	-3.7	23.7	0.25	2.2	0.25	2.2	123.2	285.7	286.3	88.5	51.0	89.2	1756.878	1747.535	2301.761	2291.598
20180519:19:51:49	23.4	15.8	-3.1	23.7	0.25	2.2	0.25	2.2	122.7	285.6	286.4	88.5	51.0	89.2	1758.236	1748.921	2303.544	2293.419
20180519:19:56:49	23.4	16.2	-3.3	23.7	0.25	2.2	0.25	2.2	123.5	285.7	286.3	88.5	51.0	89.2	1759.615	1750.25	2305.356	2295.167
20180519:20:01:49	23.4	16.3	-3.2	23.7	0.25	2.2	0.25	2.2	123.8	285.7	286.4	88.5	51.0	89.2	1760.955	1751.583	2307.115	2296.919
20180519:20:06:49	23.4	16.4	-3.2	23.7	0.25	2.2	0.25	2.2	124.0	285.8	286.3	88.6	51.0	89.2	1762.312	1752.966	2308.896	2298.737
20180519:20:11:49	23.4	16.4	-3.2	23.7	0.25	2.2	0.25	2.2	124.1	285.8	286.4	88.6	51.1	89.2	1763.701	1754.304	2310.719	2300.494
20180519:20:16:49	23.5	16.4	-3.2	23.7	0.25	2.2	0.25	2.2	124.1	285.8	286.4	88.6	51.0	89.2	1765.036	1755.659	2312.47	2302.274
20180519:20:21:49	23.5	16.4	-3.3	23.7	0.25	2.2	0.25	2.2	124.1	285.7	286.4	88.5	51.1	89.2	1766.389	1757.024	2314.246	2304.068
20180519:20:26:49	23.4	16.4	-3.3	23.7	0.25	2.2	0.25	2.2	124.1	285.7	286.4	88.6	51.0	89.2	1767.788	1758.365	2316.081	2305.829
20180519:20:31:49	23.5	16.4	-3.3	23.7	0.25	2.2	0.25	2.2	124.1	285.7	286.3	88.6	51.1	89.2	1769.133	1759.75	2317.846	2307.648
20180519:20:36:49	23.5	16.5	-3.3	23.7	0.25	2.2	0.25	2.2	124.2	285.8	286.4	88.7	51.1	89.2	1770.481	1761.098	2319.615	2309.419
20180519:20:41:49	23.5	16.5	-3.3	23.7	0.25	2.2	0.25	2.2	124.2	285.8	286.4	88.7	51.1	89.3	1771.882	1762.423	2321.454	2311.16
20180519:20:46:49	23.5	15.9	-3.3	23.7	0.25	2.2	0.25	2.2	123.0	285.8	286.5	88.8	51.2	89.3	1773.236	1763.814	2323.23	2312.987
20180519:20:51:49	23.5	15.6	-3.0	23.7	0.25	2.2	0.25	2.2	122.3	285.7	286.4	88.8	51.1	89.3	1774.579	1765.14	2324.993	2314.727
20180519:20:56:49	23.5	15.7	-2.5	23.7	0.25	2.2	0.25	2.2	122.6	285.8	286.5	88.9	51.2	89.3	1775.973	1766.496	2326.822	2316.509
20180519:21:01:49	23.5	16.3	-3.2	23.7	0.25	2.2	0.25	2.2	123.8	285.8	286.4	88.9	51.1	89.3	1777.336	1767.873	2328.611	2318.318
20180519:21:06:49	23.5	16.5	-3.0	23.7	0.25	2.2	0.25	2.2	124.3	285.8	286.4	88.9	51.2	89.3	1778.67	1769.21	2330.363	2320.073
20180519:21:11:49	23.5	16.6	-2.9	23.7	0.25	2.2	0.25	2.2	124.6	285.9	286.4	88.9	51.1	89.3	1780.056	1770.587	2332.181	2321.882
20180519:21:16:49	23.5	16.6	-2.8	23.7	0.25	2.2	0.25	2.2	124.7	285.8	286.4	88.9	51.1	89.3	1781.417	1771.949	2333.967	2323.671
20180519:21:21:49	23.5	16.6	-2.7	23.7	0.25	2.2	0.25	2.2	124.6	285.8	286.4	88.9	51.1	89.3	1782.765	1773.272	2335.735	2325.408
20180519:21:26:49	23.5	16.7	-3.0	23.7	0.25	2.2	0.25	2.2	124.8	285.9	286.4	88.9	51.1	89.3	1784.139	1774.657	2337.539	2327.226
20180519:21:31:49	23.5	16.9	-2.9	23.7	0.25	2.2	0.25	2.2	125.2	285.9	286.4	88.9	51.1	89.3	1785.521	1775.996	2339.352	2328.985
20180519:21:36:49	23.5	16.9	-3.0	23.7	0.25	2.2	0.25	2.2	125.1	285.9	286.4	88.8	51.1	89.2	1786.866	1777.338	2341.117	2330.746
20180519:21:41:49	23.5	16.3	-2.8	23.7	0.25	2.2	0.25	2.2	123.9	285.8	286.4	88.8	51.1	89.2	1788.224	1778.721	2342.898	2332.562
20180519:21:46:49	23.5	16.6	-2.7	23.7	0.25	2.2	0.25	2.2	124.6	285.8	286.4	88.7	51.0	89.2	1789.62	1780.058	2344.73	2334.318
20180519:21:51:49	23.5	16.7	-2.6	23.7	0.25	2.2	0.25	2.2	124.8	285.8	286.4	88.7	51.1	89.2	1790.962	1781.423	2346.489	2336.109
20180519:21:56:49	23.5	16.7	-2.9	23.7	0.25	2.2	0.25	2.2	124.8	285.8	286.4	88.7	51.1	89.2	1792.319	1782.784	2348.269	2337.897
20180519:22:01:49	23.5	16.7	-3.0	23.7	0.25	2.2	0.25	2.2	124.7	285.7	286.4	88.7	51.2	89.2	1793.725	1784.126	2350.113	2339.658
20180519:22:06:49	23.5	16.5	-2.7	23.7	0.25	2.2	0.25	2.2	124.4	285.7	286.3	88.7	51.1	89.2	1795.076	1785.516	2351.885	2341.483
20180519:22:11:49	23.5	16.4	-3.0	23.7	0.25	2.2	0.25	2.2	124.0	285.8	286.4	88.7	51.2	89.2	1796.422	1786.864	2353.65	2343.252
20180519:22:16:49	23.5	16.4	-3.2	23.7	0.25	2.2	0.25	2.2	124.0	285.8	286.4	88.7	51.1	89.2	1797.819	1788.195	2355.481	2344.998
20180519:22:21:49	23.5	16.5	-3.0	23.7	0.25	2.2	0.25	2.2	124.3	285.8	286.5	88.7	51.2	89.2	1799.182	1789.585	2357.269	2346.823
20180519:22:26:49	23.5	16.5	-2.8	23.7	0.25	2.2	0.25	2.2	124.4	285.9	286.4	88.7	51.1	89.2	1800.52	1790.913	2359.022	2348.566
20180519:22:31:49	23.5	16.6	-2.7	23.7	0.25	2.2	0.25	2.2	124.5	285.9	286.4	88.6	51.1	89.1	1801.907	1792.27	2360.841	2350.346
20180519:22:36:49	23.5	16.6	-2.7	23.7	0.25	2.2	0.25	2.2	124.6	285.9	286.5	88.6	51.1	89.1	1803.264	1793.648	2362.62	2352.154
20180519:22:41:49	23.5	16.7	-2.8	23.7	0.25	2.2	0.25	2.2	124.8	285.8	286.4	88.6	51.2	89.1	1804.613	1794.982	2364.389	2353.904
20180519:22:46:49	23.5	16.8	-3.2	23.7	0.25	2.2	0.25	2.2	125.0	285.9	286.5	88.6	51.2	89.1	1805.992	1796.363	2366.196	2355.716
20180519:22:51:49	23.5	16.8	-3.3	23.7	0.25	2.2	0.25	2.2	124.8	285.9	286.4	88.6	51.2	89.1	1807.369	1797.727	2368.002	2357.506
20180519:22:56:49	23.4	16.2	-3.8	23.7	0.25	2.2	0.25	2.2	123.6	285.7	286.3	88.6	51.1	89.0	1808.716	1799.052	2369.769	2359.244
20180519:23:01:49	23.5	16.0	-3.5	23.7	0.25	2.2	0.25	2.2	123.1	285.7	286.3	88.6	51.1	89.0	1810.075	1800.443	2371.55	2361.07
20180519:23:06:49	23.4	16.4	-4.0	23.7	0.25	2.2	0.25	2.2	124.0	285.9	286.4	88.6	51.2	89.0	1811.458	1801.773	2373.363	2362.814
20180519:23:11:49	23.4	17.0	-4.7	23.7	0.25	2.2	0.25	2.2	125.2	285.9	286.3	88.6	51.1	89.0	1812.799	1803.117	2375.12	2364.577
20180519:23:16:49	23.4	17.2	-4.5	23.7	0.25	2.2	0.25	2.2	125.8	286.0	286.4	88.5	51.1	88.9	1814.157	1804.495	2376.9	2366.385

Time:	Stack Pressure:	Sat% H2O:	Static:	Barometric:	Flowmeter1:	Vacuum1:	Flowmeter2:	Vacuum2:	Stack Temp:	Sorbent Temp:	Probe Temp:	DGM#1 Temp:	Condenser Temp:	DGM#2 Temp:	DGM1*:	DGM2*:	DGM1:	DGM2:
day:hh:mm:ss	in-Hg	Percent	in-H2O	in-Hg	l/min	in-Hg	l/min	in-Hg	degF	degF	degF	degF	degF	degF	liters STP	liters STP	liters nominal	liters nominal
20180519:23:21:49	23.4	17.4	-4.5	23.7	0.25	2.2	0.25	2.2	126.2	286.0	286.3	88.5	51.1	88.9	1815.554	1805.828	2378.731	2368.133
20180519:23:26:49	23.4	17.6	-4.6	23.7	0.25	2.2	0.25	2.2	126.5	286.0	286.3	88.5	51.1	88.9	1816.891	1807.201	2380.483	2369.934
20180519:23:31:49	23.4	17.8	-4.6	23.7	0.25	2.2	0.25	2.2	127.0	285.9	286.3	88.4	51.1	88.9	1818.242	1808.564	2382.254	2371.722
20180519:23:36:49	23.4	17.9	-4.7	23.7	0.25	2.2	0.25	2.2	127.2	285.9	286.2	88.4	51.1	88.8	1819.641	1809.886	2384.087	2373.455
20180519:23:41:49	23.4	18.2	-4.6	23.7	0.25	2.2	0.25	2.2	127.7	285.9	286.3	88.3	51.1	88.8	1820.98	1811.273	2385.841	2375.274
20180519:23:46:49	23.4	18.3	-4.6	23.7	0.25	2.2	0.25	2.2	128.0	286.0	286.3	88.3	51.2	88.8	1822.329	1812.596	2387.609	2377.009
20180519:23:51:49	23.4	18.4	-4.6	23.7	0.25	2.2	0.25	2.2	128.1	285.9	286.3	88.3	51.1	88.7	1823.725	1813.944	2389.437	2378.776
20180519:23:56:49	23.4	18.4	-4.7	23.7	0.25	2.2	0.25	2.2	128.2	286.0	286.4	88.3	51.2	88.7	1825.064	1815.316	2391.193	2380.575
20180520:00:01:49	23.4	18.4	-4.7	23.7	0.25	2.2	0.25	2.2	128.1	285.9	286.3	88.3	51.0	88.7	1826.402	1816.645	2392.944	2382.318
20180520:00:06:49	23.4	18.2	-4.7	23.7	0.25	2.2	0.25	2.2	127.8	285.8	286.3	88.2	51.1	88.7	1827.804	1818.027	2394.781	2384.13
20180520:00:11:49	23.3	17.3	-5.0	23.7	0.25	2.2	0.25	2.2	125.8	285.8	286.4	88.2	51.1	88.7	1829.145	1819.369	2396.539	2385.889
20180520:00:16:49	23.3	17.0	-5.0	23.7	0.25	2.2	0.25	2.2	125.3	285.7	286.4	88.2	51.1	88.6	1830.48	1820.694	2398.287	2387.626
20180520:00:21:49	23.4	17.2	-4.9	23.7	0.25	2.2	0.25	2.2	125.7	285.8	286.4	88.2	51.1	88.6	1831.876	1822.07	2400.117	2389.43
20180520:00:26:49	23.4	17.8	-4.7	23.7	0.25	2.2	0.25	2.2	126.8	285.8	286.4	88.2	51.1	88.6	1833.216	1823.399	2401.872	2391.173
20180520:00:31:49	23.4	18.1	-4.7	23.7	0.25	2.2	0.25	2.2	127.4	285.9	286.4	88.1	51.1	88.5	1834.552	1824.759	2403.622	2392.955
20180520:00:36:49	23.4	18.2	-4.7	23.7	0.25	2.2	0.25	2.2	127.8	285.9	286.3	88.0	51.2	88.5	1835.948	1826.122	2405.45	2394.742
20180520:00:41:49	23.4	18.3	-4.7	23.7	0.25	2.2	0.25	2.2	127.9	285.8	286.3	88.0	51.0	88.5	1837.292	1827.444	2407.211	2396.476
20180520:00:46:49	23.4	18.4	-4.7	23.7	0.25	2.2	0.25	2.2	128.1	285.9	286.3	87.9	51.1	88.4	1838.626	1828.829	2408.957	2398.291
20180520:00:51:49	23.4	18.5	-4.7	23.7	0.25	2.2	0.25	2.2	128.3	285.9	286.3	87.9	51.0	88.4	1840.021	1830.153	2410.785	2400.026
20180520:00:56:49	23.4	18.4	-4.7	23.7	0.25	2.2	0.25	2.2	128.2	285.9	286.3	87.9	51.1	88.3	1841.367	1831.498	2412.548	2401.789
20180520:01:01:49	23.4	18.3	-4.8	23.7	0.25	2.2	0.25	2.2	128.0	285.9	286.4	87.8	51.0	88.3	1842.702	1832.873	2414.296	2403.592
20180520:01:06:49	23.4	18.3	-4.7	23.7	0.25	2.2	0.25	2.2	127.9	285.9	286.3	87.8	51.1	88.3	1844.1	1834.204	2416.126	2405.336
20180520:01:11:49	23.4	18.3	-4.7	23.7	0.25	2.2	0.25	2.2	127.9	285.9	286.4	87.7	51.0	88.3	1845.446	1835.583	2417.889	2407.145
20180520:01:16:49	23.3	18.2	-4.8	23.7	0.25	2.2	0.25	2.2	127.8	285.8	286.3	87.6	51.1	88.2	1846.779	1836.931	2419.635	2408.912
20180520:01:21:49	23.4	18.3	-4.7	23.7	0.25	2.2	0.25	2.2	127.9	285.9	286.4	87.6	51.0	88.2	1848.171	1838.257	2421.457	2410.648
20180520:01:26:49	23.3	18.4	-4.8	23.7	0.25	2.2	0.25	2.2	128.1	285.8	286.4	87.5	51.1	88.2	1849.517	1839.638	2423.219	2412.459
20180520:01:31:49	23.3	18.4	-4.9	23.7	0.25	2.2	0.25	2.2	128.1	285.8	286.3	87.4	51.1	88.1	1850.851	1840.969	2424.965	2414.203
20180520:01:36:49	23.4	18.3	-4.7	23.7	0.25	2.2	0.25	2.2	128.0	285.8	286.4	87.4	51.1	88.1	1852.242	1842.324	2426.785	2415.979
20180520:01:41:49	23.4	18.3	-4.8	23.7	0.25	2.2	0.25	2.2	127.9	285.8	286.4	87.3	51.1	88.0	1853.582	1843.684	2428.539	2417.761
20180520:01:46:49	23.4	18.3	-4.8	23.7	0.25	2.2	0.25	2.2	127.9	285.8	286.4	87.3	51.1	88.0	1854.917	1845.023	2430.285	2419.515
20180520:01:51:49	23.4	18.2	-4.8	23.7	0.25	2.2	0.25	2.2	127.7	285.8	286.3	87.2	51.0	87.9	1856.317	1846.41	2432.117	2421.331
20180520:01:56:49	23.3	18.2	-4.9	23.7	0.25	2.2	0.25	2.2	127.7	285.8	286.4	87.2	51.1	87.9	1857.654	1847.746	2433.865	2423.081
20180520:02:01:49	23.3	18.3	-4.8	23.7	0.25	2.2	0.25	2.2	127.8	285.8	286.3	87.1	51.0	87.9	1858.99	1849.076	2435.613	2424.823
20180520:02:06:49	23.3	18.2	-4.8	23.7	0.25	2.2	0.25	2.2	127.8	285.8	286.4	87.0	51.1	87.8	1860.392	1850.458	2437.446	2426.633
20180520:02:11:49	23.3	18.2	-4.8	23.7	0.25	2.2	0.25	2.2	127.8	285.7	286.3	87.0	51.0	87.8	1861.727	1851.79	2439.193	2428.378
20180520:02:16:49	23.4	18.2	-4.8	23.7	0.25	2.2	0.25	2.2	127.7	285.8	286.3	87.1	51.1	87.7	1863.068	1853.161	2440.946	2430.173
20180520:02:21:49	23.4	18.2	-4.8	23.7	0.25	2.2	0.25	2.2	127.7	285.8	286.3	87.1	51.0	87.7	1864.468	1854.523	2442.778	2431.957
20180520:02:26:49	23.3	18.2	-4.9	23.7	0.25	2.2	0.25	2.2	127.7	285.8	286.4	87.1	51.1	87.6	1865.805	1855.844	2444.526	2433.686
20180520:02:31:49	23.3	18.2	-4.9	23.7	0.25	2.2	0.25	2.2	127.6	285.8	286.4	87.1	51.1	87.6	1867.144	1857.233	2446.278	2435.504
20180520:02:36:49	23.3	18.2	-4.9	23.7	0.25	2.2	0.25	2.2	127.7	285.8	286.3	87.2	51.1	87.6	1868.548	1858.552	2448.115	2437.231
20180520:02:41:49	23.3	18.2	-4.8	23.7	0.25	2.2	0.25	2.2	127.7	285.9	286.4	87.2	51.1	87.6	1869.883	1859.905	2449.861	2439.002
20180520:02:46:49	23.3	18.2	-4.8	23.7	0.25	2.2	0.25	2.2	127.8	285.8	286.4	87.2	51.2	87.5	1871.224	1861.276	2451.615	2440.797
20180520:02:51:49	23.3	18.2	-4.9	23.7	0.25	2.2	0.25	2.2	127.7	285.9	286.3	87.2	51.1	87.5	1872.626	1862.609	2453.45	2442.541
20180520:02:56:49	23.3	18.2	-4.9	23.7	0.25	2.2	0.25	2.2	127.6	285.9	286.4	87.2	51.2	87.5	1873.963	1863.993	2455.198	2444.353
20180520:03:01:49	23.3	18.1	-5.0	23.7	0.25	2.2	0.25	2.2	127.5	285.9	286.4	87.2	51.1	87.4	1875.3	1865.33	2456.948	2446.103
20180520:03:06:49	23.3	18.1	-5.1	23.7	0.25	2.2	0.25	2.2	127.4	285.8	286.3	87.2	51.2	87.4	1876.705	1866.658	2458.785	2447.84
20180520:03:11:49	23.3	18.1	-5.0	23.7	0.25	2.2	0.25	2.2	127.4	285.9	286.3	87.2	51.1	87.4	1878.041	1868.04	2460.533	2449.648
20180520:03:16:49	23.3	18.0	-5.0	23.7	0.25	2.2	0.25	2.2	127.3	285.9	286.3	87.0	51.1	87.3	1879.382	1869.369	2462.287	2451.387
20180520:03:21:49	23.3	18.1	-5.1	23.7	0.25	2.2	0.25	2.2	127.4	285.8	286.4	86.9	51.1	87.3	1880.782	1870.737	2464.117	2453.177
20180520:03:26:49	23.3	18.0	-5.0	23.7	0.25	2.2	0.25	2.2	127.3	285.9	286.4	86.9	51.1	87.3	1882.118	1872.096	2465.863	2454.955
20180520:03:31:49	23.3	18.0	-4.9	23.7	0.25	2.2	0.25	2.2	127.3	285.8	286.3	86.7	51.0	87.2	1883.457	1873.415	2467.613	2456.68
20180520:03:36:49	23.3	18.0	-4.9	23.7	0.25	2.2	0.25	2.2	127.2	285.8	286.3	86.7	51.1	87.2	1884.856	1874.799	2469.441	2458.491
20180520:03:41:49	23.3	17.9	-4.9	23.7	0.25	2.2	0.25	2.2	127.2	285.8	286.4	86.6	51.0	87.1	1886.19	1876.126	2471.183	2460.226
20180520:03:46:49	23.3	17.9	-5.0	23.7	0.25	2.2	0.25	2.2	127.1	285.8	286.3	86.6	51.1	87.1	1887.537	1877.484	2472.944	2462.002
20180520:03:51:49	23.3	17.9	-5.0	23.7	0.25	2.2	0.25	2.2	127.2	285.8	286.4	86.6	51.0	87.0	1888.931	1878.847	2474.765	2463.784
20180520:03:56:49	23.3	18.0	-4.9	23.7	0.25	2.2	0.25	2.2	127.2	285.8	286.3	86.6	51.1	87.0	1890.266	1880.182	2476.509	2465.53
20180520:04:01:49	23.3	17.8	-5.1	23.7	0.25	2.2	0.25	2.2	126.8	285.8	286.4	86.6	51.1	87.0	1891.614	1881.565	2478.27	2467.338
20180520:04:06:49	23.3	17.0	-5.2	23.7	0.25	2.1	0.25	2.2	125.2	285.8	286.3	86.5	51.1	86.9	1893.01	1882.892	2480.094	2469.073
20180520:04:11:49	23.3	17.4	-5.0	23.7	0.25	2.2	0.25	2.2	126.0	285.9	286.3	86.5	51.0	86.9	1894.346	1884.234	2481.841	2470.827
20180520:04:16:49	23.3	17.5	-5.1	23.7	0.25	2.2	0.25	2.2	126.3	285.8	286.3	86.4	51.1	86.9	1895.699	1885.604	2483.607	2472.618
20180520:04:21:49	23.3	17.6	-5.1	23.7	0.25	2.2	0.25	2.2	126.4	285.8	286.3	86.3	51.0	86.8	1897.093	1886.936	2485.428	2474.359
20180520:04:26:49	23.3	17.7	-5.2	23.7	0.25	2.2	0.25	2.2	126.6	285.9	286.4	86.3	51.1	86.8	1898.428	1888.32	2487.17	2476.167
20180520:04:31:49	23.3	17.8	-5.2	23.7	0.25	2.2	0.25	2.2	126.8	285.9	286.3	86.2	51.1	86.7	1899.773	1889.658	2488.926	2477.915
20180520:04:36:49	23.3	17.9	-5.3	23.7	0.25	2.2	0.25	2.2	127.0	285.9	286.3	86.1	51.1	86.6	1901.166	1890.985	2490.744	2479.648
20180520:04:41:49	23.3	17.7	-5.3	23.7	0.25	2.2	0.25	2.2	126.5	285.8	286.3	86.0	51.0	86.6	1902.496	1892.368	2492.48	2481.455
20180520:04:46:49	23.3	16.9	-5.4	23.7	0.25	2.2	0.25	2.2	125.0	285.8	286.3	85.9	51.1	86.6	1903.847	1893.699	2494.243	2483.194
20180520:04:51:49	23.3	17.3	-5.3	23.7	0.25	2.2	0.25	2.2	125.8	285.9	286.4	85.9	51.0	86.5	1905.236	1895.072	2496.054	2484.987
20180520:04:56:49	23.3	17.5	-5.3	23.7	0.25	2.2	0.25	2.2	126.2	285.8	286.3	85.7	51.0	86.4	1906.569	1896.429	2497.791	2486.758
20180520:05:01:49	23.3	17.6	-5.2	23.7	0.25	2.2	0.25	2.2	126.4	285.9	286.4	85.7	51.0	86.4	1907.927	1897.748	2499.561	2488.479
20180520:05:06:49	23.3	17.7	-5.3	23.7	0.25	2.2	0.25	2.2	126.6	285.9	286.3	85.6	51.1	86.3	1909.309	1899.135	2501.363	2490.289
20180520:05:11:49	23.3	17.8	-5.3	23.7	0.25	2.2	0.25	2.2	126.8	285.8	286.3	85.6	51.0	86.3	1910.65	1900.469	2503.111	2492.03
20180520:05:16:49	23.3	17.7	-5.3	23.7	0.25	2.2	0.25	2.2	126.7	285.8	286.3	85.5	51.0	86.2	1912.006	1901.827	2504.878	2493.803
20180520:05:21:49	23.3	17.7	-5.3	23.7	0.25	2.2	0.25	2.2	126.7	285.8	286.3	85.4	51.0	86.2	1913.379	1903.195	2506.667	2495.586
20180520:05:26:49	23.3	17.8	-5.4	23.7	0.25	2.2	0.25	2.2	126.8	285.9	286.3	85.4	51.0	86.1	1914.713	1904.521	2508.404	2497.316
20180520:05:31:49	23.3	17.7	-5.4	23.7	0.25	2.2	0.25	2.2	126.7	285.8	286.3	85.3	51.0	86.1	1916.086	1905.909	2510.193	2499.126
20180520:05:36:49	23.3	17.7	-5.5	23.7	0.25	2.2	0.25	2.2	126.7	285.8	286.3	85.3	51.0	86.0	1917.447	1907.228	2511.965	2500.846
20180520:05:41:49	23.3	17.7	-5.5	23.7	0.25	2.2	0.25	2.2	126.6	285.9	286.3	85.3	51.0	86.0	1918.784	1908.586	2513.706	2502.617
20180520:05:46:49	23.3	17.6	-5.4	23.7	0.25	2.2	0.25	2.2	126.5	285.8	286.4	85.3	51.0	85.9	1920.169	1909.951	2515.509	2504.397
20180520:05:51:49	23.3	17.7	-5.4	23.7	0.25	2.2	0.25	2.2	126.6	285.8	286.3	85.4	51.0	85.9	1921.529	1911.284	2517.281	2506.135
20180520:05:56:49	23.3	17.7	-5.4	23.7	0.25	2.2	0.25	2.2	126.6	285.8	286.4	85.4	51.0	85.8	1922.86	1912.664	2519.015	2507.934
20180520:06:01:49	23.3	17.6	-5.3	23.7	0.25	2.2	0.25	2.2	126.5	285.8	286.3	85.4	51.0	85.7	1924.248	1913.996	2520.824	2509.671
20180520:06:06:49	23.3	17.6	-5.3	23.7	0.25	2.2	0.25	2.2	126.5	285.8	286.3	85.4	51.0	85.7	1925.599	1915.341	2522.585	2511.425
20180520:06:11:49	23.3	17.6	-5.2	23.7	0.25	2.2	0.25	2.2	126.5	285.8	286.3	85.4	51.0	85.7	1926.931	1916.712	2524.32	2513.212
20180520:06:16:49	23.3	17.6	-5.2	23.7	0.25	2.2	0.25	2.2	126.4	285.8	286.4	85.4	51.0	85.6	1928.322	1918.042	2526.133	2514.947
20180520:06:21:49	23.3	17.6	-5.1	23.7	0.25	2.2	0.25	2.2	126.4	285.8	286.3	85.3	51.0	85.6	1929.665	1919.428	2527.883	2516.754
20180520:06:26:49	23.3	17.6	-5.2	23.7	0.25	2.2	0.25	2.2	126.5	285.9	286.4	85.2	51.0	85.6	1930.996	1920.752	2529.617	2518.479
20180520:06:31:49	23.3	17.6	-5.3	23.7	0.25	2.2	0.25	2.2	126.4	285.8	286.3	85.1	50.9	85.5	1932.392	1922.095	2531.435	2520.229
20180520:06:36:49	23.3	17.6	-5.4	23.7	0.25	2.2	0.25	2.2	126.4	285.8	286.3	85.0	50.9	85.5	1933.726	1923.465	2533.172	2522.015
20180520:06:41:49	23.3	17.6	-5.2	23.7	0.25	2.2	0.25	2.2	126.4	285.8	286.3	85.0	50.9	85.4	1935.073	1924.798	2534.926	2523.752

Time:	Stack Pressure:	Sat% H2O:	Static:	Barometric:	Flowmeter1:	Vacuum1:	Flowmeter2:	Vacuum2:	Stack Temp:	Sorbent Temp:	Probe Temp:	DGM#1 Temp:	Condenser Temp:	DGM#2 Temp:	DGM1*:	DGM2*:	DGM1:	DGM2:
day:hh:mm:ss	in-Hg	Percent	in-H2O	in-Hg	l/min	in-Hg	l/min	in-Hg	degF	degF	degF	degF	degF	degF	liters STP	liters STP	liters nominal	liters nominal
20180520:06:46:49	23.3	17.5	-5.1	23.7	0.25	2.2	0.25	2.2	126.3	285.8	286.3	85.0	50.9	85.4	1936.467	1926.184	2536.741	2525.558
20180520:06:51:49	23.3	17.5	-5.0	23.7	0.25	2.2	0.25	2.2	126.3	285.8	286.3	84.9	50.9	85.4	1937.796	1927.512	2538.472	2527.289
20180520:06:56:49	23.3	17.5	-5.1	23.7	0.25	2.2	0.25	2.2	126.3	285.8	286.3	84.8	50.9	85.3	1939.149	1928.849	2540.233	2529.032
20180520:07:01:49	23.3	17.5	-5.1	23.7	0.25	2.2	0.25	2.2	126.3	285.8	286.3	84.8	50.9	85.3	1940.534	1930.225	2542.037	2530.825
20180520:07:06:49	23.3	17.5	-5.1	23.7	0.25	2.2	0.25	2.2	126.2	285.8	286.3	84.7	50.9	85.3	1941.874	1931.553	2543.781	2532.556
20180520:07:11:49	23.3	17.6	-5.2	23.7	0.25	2.2	0.25	2.2	126.4	285.8	286.3	84.7	50.9	85.3	1943.23	1932.938	2545.546	2534.361
20180520:07:16:49	23.3	17.5	-5.2	23.7	0.25	2.2	0.25	2.2	126.3	285.7	286.2	84.7	50.9	85.2	1944.603	1934.267	2547.333	2536.092
20180520:07:21:49	23.3	17.6	-5.2	23.7	0.25	2.2	0.25	2.2	126.4	285.9	286.3	84.6	50.9	85.2	1945.935	1935.601	2549.067	2537.831
20180520:07:26:49	23.3	17.6	-5.2	23.7	0.25	2.2	0.25	2.2	126.4	285.8	286.3	84.6	50.9	85.2	1947.31	1936.977	2550.856	2539.622
20180520:07:31:49	23.3	17.6	-5.2	23.7	0.25	2.2	0.25	2.2	126.5	285.8	286.3	84.7	50.9	85.2	1948.663	1938.31	2552.617	2541.359
20180520:07:36:49	23.3	17.5	-5.1	23.7	0.25	2.2	0.25	2.2	126.3	285.9	286.4	84.7	50.9	85.2	1950.003	1939.695	2554.361	2543.164
20180520:07:41:49	23.3	17.6	-5.2	23.7	0.25	2.2	0.25	2.2	126.4	285.9	286.3	84.7	50.9	85.1	1951.389	1941.026	2556.165	2544.897
20180520:07:46:49	23.3	17.6	-5.1	23.7	0.25	2.2	0.25	2.2	126.4	285.8	286.4	84.7	50.9	85.1	1952.746	1942.358	2557.931	2546.632
20180520:07:51:49	23.3	17.6	-5.1	23.7	0.25	2.2	0.25	2.2	126.5	285.8	286.3	84.7	50.9	85.1	1954.075	1943.736	2559.661	2548.427
20180520:07:56:49	23.3	17.7	-5.0	23.7	0.25	2.2	0.25	2.2	126.6	285.8	286.4	84.9	50.9	85.1	1955.462	1945.065	2561.467	2550.158
20180520:08:01:49	23.3	17.7	-5.0	23.7	0.25	2.2	0.25	2.2	126.7	285.8	286.3	84.9	50.9	85.1	1956.805	1946.452	2563.215	2551.964
20180520:08:06:49	23.3	17.5	-5.2	23.7	0.25	2.2	0.25	2.2	126.3	285.8	286.4	85.0	50.9	85.1	1958.136	1947.78	2564.948	2553.694
20180520:08:11:49	23.3	17.0	-5.3	23.7	0.25	2.2	0.25	2.2	125.2	285.9	286.4	85.0	50.9	85.1	1959.532	1949.111	2566.767	2555.429
20180520:08:16:49	23.3	17.4	-5.1	23.7	0.25	2.2	0.25	2.2	126.1	285.9	286.4	85.1	50.9	85.2	1960.86	1950.482	2568.496	2557.214
20180520:08:21:49	23.3	17.5	-5.0	23.7	0.25	2.2	0.25	2.2	126.3	285.9	286.4	85.2	51.0	85.2	1962.203	1951.811	2570.246	2558.945
20180520:08:26:49	23.3	17.5	-5.0	23.7	0.25	2.2	0.25	2.2	126.3	285.9	286.4	85.2	50.9	85.2	1963.586	1953.194	2572.048	2560.748
20180520:08:31:49	23.3	17.6	-5.0	23.7	0.25	2.2	0.25	2.2	126.5	285.9	286.4	85.2	50.9	85.2	1964.919	1954.514	2573.785	2562.468
20180520:08:36:49	23.3	17.6	-5.0	23.7	0.25	2.2	0.25	2.2	126.5	285.8	286.3	85.3	50.9	85.2	1966.272	1955.854	2575.548	2564.214
20180520:08:41:49	23.4	17.6	-4.9	23.7	0.25	2.2	0.25	2.2	126.4	285.9	286.4	85.3	50.9	85.2	1967.645	1957.218	2577.337	2565.991
20180520:08:46:49	23.4	17.6	-4.9	23.7	0.25	2.2	0.25	2.2	126.5	285.9	286.4	85.4	50.9	85.3	1968.976	1958.549	2579.072	2567.726
20180520:08:51:49	23.4	17.7	-4.9	23.7	0.25	2.2	0.25	2.2	126.6	285.9	286.3	85.5	51.0	85.3	1970.347	1959.927	2580.859	2569.521
20180520:08:56:49	23.4	17.7	-4.9	23.7	0.25	2.2	0.25	2.2	126.6	285.8	286.4	85.5	50.9	85.3	1971.703	1961.241	2582.626	2571.233
20180520:09:01:49	23.4	17.6	-4.8	23.7	0.25	2.2	0.25	2.2	126.5	285.9	286.4	85.5	50.9	85.4	1973.041	1962.597	2584.37	2573
20180520:09:06:49	23.4	17.6	-4.8	23.7	0.25	2.2	0.25	2.2	126.6	285.9	286.4	85.5	50.9	85.4	1974.421	1963.957	2586.169	2574.773
20180520:09:11:49	23.4	17.5	-4.9	23.7	0.25	2.2	0.25	2.2	126.2	286.0	286.4	85.4	50.9	85.4	1975.778	1965.286	2587.937	2576.504
20180520:09:16:49	23.3	16.9	-5.1	23.7	0.25	2.1	0.25	2.2	124.9	285.9	286.4	85.3	50.9	85.4	1977.105	1966.665	2589.667	2578.301
20180520:09:21:49	23.4	17.2	-5.0	23.7	0.25	2.2	0.25	2.2	125.7	285.8	286.3	85.3	50.9	85.4	1978.491	1967.984	2591.472	2580.019
20180520:09:26:49	23.4	17.4	-4.9	23.7	0.25	2.2	0.25	2.2	126.0	285.9	286.3	85.2	50.8	85.4	1979.832	1969.341	2593.219	2581.788
20180520:09:31:49	23.4	17.5	-4.8	23.7	0.25	2.2	0.25	2.2	126.2	285.9	286.3	85.2	50.9	85.4	1981.16	1970.708	2594.948	2583.57
20180520:09:36:49	23.4	17.5	-4.8	23.7	0.25	2.2	0.25	2.2	126.4	285.9	286.4	85.2	50.9	85.5	1982.557	1972.024	2596.769	2585.284
20180520:09:41:49	23.4	17.5	-4.8	23.7	0.25	2.2	0.25	2.2	126.3	285.8	286.3	85.2	50.9	85.5	1983.889	1973.404	2598.504	2587.083
20180520:09:46:49	23.4	17.6	-4.8	23.7	0.25	2.2	0.25	2.2	126.5	285.8	286.3	85.2	50.8	85.5	1985.233	1974.732	2600.254	2588.814
20180520:09:51:49	23.4	17.6	-4.8	23.7	0.25	2.2	0.25	2.2	126.6	285.8	286.3	85.3	50.9	85.6	1986.623	1976.088	2602.065	2590.581
20180520:09:56:49	23.4	17.7	-4.8	23.7	0.25	2.2	0.25	2.2	126.6	285.9	286.4	85.4	50.9	85.6	1987.952	1977.449	2603.796	2592.355
20180520:10:01:49	23.4	17.7	-4.7	23.7	0.25	2.2	0.25	2.2	126.8	285.9	286.4	85.4	50.9	85.6	1989.307	1978.758	2605.563	2594.062
20180520:10:06:49	23.4	17.7	-4.7	23.7	0.25	2.2	0.25	2.2	126.7	285.8	286.4	85.5	50.9	85.7	1990.688	1980.138	2607.363	2595.861
20180520:10:11:49	23.4	17.7	-4.7	23.7	0.25	2.2	0.25	2.2	126.7	285.9	286.4	85.6	50.9	85.7	1992.026	1981.464	2609.107	2597.59
20180520:10:16:49	23.4	17.7	-4.6	23.7	0.25	2.2	0.25	2.2	126.7	285.8	286.4	85.6	50.9	85.7	1993.381	1982.829	2610.874	2599.37
20180520:10:21:49	23.4	17.1	-4.7	23.7	0.25	2.2	0.25	2.2	125.5	285.8	286.3	85.7	50.9	85.8	1994.753	1984.179	2612.663	2601.132
20180520:10:26:49	23.4	17.4	-4.6	23.7	0.25	2.2	0.25	2.2	126.1	285.8	286.3	85.8	50.9	85.9	1996.083	1985.499	2614.398	2602.853
20180520:10:31:49	23.4	17.5	-4.6	23.7	0.25	2.2	0.25	2.2	126.3	285.8	286.3	85.8	50.9	85.9	1997.457	1986.867	2616.191	2604.639
20180520:10:36:49	23.4	17.6	-4.3	23.7	0.25	2.2	0.25	2.2	126.6	285.9	286.4	85.9	50.9	85.9	1998.81	1988.189	2617.957	2606.365
20180520:10:41:49	23.4	17.6	-4.3	23.7	0.25	2.2	0.25	2.2	126.6	285.8	286.4	86.0	50.9	85.9	2000.147	1989.559	2619.702	2608.152
20180520:10:46:49	23.4	17.6	-4.2	23.7	0.25	2.2	0.25	2.2	126.6	285.8	286.3	86.0	50.8	86.0	2001.525	1990.904	2621.502	2609.91
20180520:10:51:49	23.4	17.6	-4.4	23.7	0.25	2.2	0.25	2.2	126.5	285.8	286.3	86.1	50.9	86.1	2002.883	1992.221	2623.276	2611.63
20180520:10:56:49	23.4	17.6	-4.4	23.7	0.25	2.2	0.25	2.2	126.4	285.9	286.4	86.1	50.8	86.1	2004.21	1993.597	2625.009	2613.427
20180520:11:01:49	23.4	17.6	-4.4	23.7	0.25	2.2	0.25	2.2	126.5	285.8	286.4	86.2	50.9	86.2	2005.596	1994.918	2626.82	2615.152
20180520:11:06:49	23.4	17.6	-4.4	23.7	0.25	2.2	0.25	2.2	126.5	285.8	286.4	86.2	50.8	86.2	2006.943	1996.292	2628.58	2616.947
20180520:11:11:49	23.4	17.6	-4.4	23.7	0.25	2.2	0.25	2.2	126.6	285.8	286.3	86.3	50.9	86.3	2008.277	1997.629	2630.322	2618.694
20180520:11:16:49	23.4	17.6	-4.3	23.7	0.25	2.2	0.25	2.2	126.6	285.8	286.4	86.3	50.9	86.3	2009.663	1998.948	2632.133	2620.417
20180520:11:21:49	23.4	17.6	-4.4	23.7	0.25	2.2	0.25	2.2	126.6	285.9	286.4	86.4	50.9	86.3	2011.002	2000.323	2633.883	2622.214
20180520:11:26:49	23.4	17.2	-4.5	23.7	0.25	2.2	0.25	2.2	125.6	285.8	286.4	86.5	50.9	86.4	2012.331	2001.645	2635.62	2623.942
20180520:11:31:49	23.4	17.4	-4.5	23.7	0.25	2.2	0.25	2.2	126.1	285.8	286.3	86.5	50.9	86.5	2013.73	2003.023	2637.448	2625.742
20180520:11:36:49	23.4	17.5	-4.3	23.7	0.25	2.2	0.25	2.2	126.3	285.8	286.3	86.6	50.9	86.5	2015.061	2004.353	2639.189	2627.481
20180520:11:41:49	23.4	17.6	-4.3	23.7	0.25	2.2	0.25	2.2	126.4	285.9	286.4	86.6	50.9	86.6	2016.401	2005.677	2640.941	2629.212
20180520:11:46:49	23.4	17.6	-4.1	23.7	0.25	2.2	0.25	2.2	126.6	285.8	286.3	86.7	50.9	86.6	2017.788	2007.048	2642.756	2631.006
20180520:11:51:49	23.4	17.6	-4.2	23.7	0.25	2.2	0.25	2.2	126.6	285.9	286.4	86.7	50.9	86.6	2019.116	2008.374	2644.493	2632.741
20180520:11:56:49	23.4	17.7	-4.3	23.7	0.25	2.2	0.25	2.2	126.7	285.8	286.3	86.8	50.9	86.7	2020.459	2009.751	2646.25	2634.541
20180520:12:01:49	23.4	17.7	-4.2	23.7	0.25	2.2	0.25	2.2	126.7	285.8	286.4	86.8	50.9	86.7	2021.848	2011.088	2648.069	2636.291
20180520:12:06:49	23.4	17.7	-4.1	23.7	0.25	2.2	0.25	2.2	126.7	285.9	286.3	86.9	50.9	86.8	2023.172	2012.408	2649.802	2638.019
20180520:12:11:49	23.4	17.7	-4.0	23.7	0.25	2.2	0.25	2.2	126.6	285.8	286.4	87.0	50.9	86.9	2024.524	2013.781	2651.572	2639.816
20180520:12:16:49	23.4	17.7	-3.9	23.7	0.25	2.2	0.25	2.2	126.7	285.8	286.3	87.0	50.9	86.9	2025.91	2015.104	2653.387	2641.549
20180520:12:21:49	23.4	17.7	-4.0	23.7	0.25	2.2	0.25	2.2	126.7	285.9	286.4	87.1	50.9	86.9	2027.236	2016.475	2655.124	2643.344
20180520:12:26:49	23.4	17.7	-4.2	23.7	0.25	2.2	0.25	2.2	126.7	285.9	286.3	87.2	50.9	87.0	2028.587	2017.819	2656.894	2645.103
20180520:12:31:49	23.4	17.2	-4.2	23.7	0.25	2.2	0.25	2.2	125.6	285.8	286.4	87.2	50.9	87.0	2029.964	2019.139	2658.698	2646.833
20180520:12:36:49	23.4	17.5	-4.2	23.7	0.25	2.2	0.25	2.2	126.2	285.8	286.4	87.3	50.9	87.1	2031.301	2020.511	2660.45	2648.63
20180520:12:41:49	23.4	17.6	-4.1	23.7	0.25	2.2	0.25	2.2	126.5	285.8	286.4	87.3	50.9	87.2	2032.649	2021.835	2662.217	2650.365
20180520:12:46:49	23.4	17.7	-4.1	23.7	0.25	2.2	0.25	2.2	126.6	285.8	286.4	87.3	50.9	87.2	2034.024	2023.201	2664.019	2652.154
20180520:12:51:49	23.4	17.7	-4.0	23.7	0.25	2.2	0.25	2.2	126.7	285.8	286.4	87.4	50.9	87.3	2035.359	2024.553	2665.769	2653.927
20180520:12:56:49	23.4	17.8	-4.1	23.7	0.25	2.2	0.25	2.2	126.9	285.9	286.4	87.5	51.0	87.3	2036.715	2025.864	2667.546	2655.645
20180520:13:01:49	23.4	17.8	-4.0	23.7	0.25	2.2	0.25	2.2	126.9	285.9	286.3	87.5	50.9	87.3	2038.086	2027.244	2669.344	2657.453
20180520:13:06:49	23.4	17.8	-4.0	23.7	0.25	2.2	0.25	2.2	126.8	285.8	286.3	87.6	51.0	87.4	2039.42	2028.57	2671.093	2659.192
20180520:13:11:49	23.4	17.8	-4.1	23.7	0.25	2.2	0.25	2.2	126.9	285.8	286.4	87.6	50.9	87.4	2040.78	2029.921	2672.876	2660.962
20180520:13:16:49	23.4	17.9	-4.3	23.7	0.25	2.2	0.25	2.2	127.0	285.9	286.4	87.7	51.0	87.5	2042.145	2031.282	2674.667	2662.746
20180520:13:21:49	23.4	17.9	-4.4	23.7	0.25	2.2	0.25	2.2	127.1	285.8	286.3	87.8	51.0	87.6	2043.48	2032.595	2676.415	2664.466
20180520:13:26:49	23.4	17.9	-4.5	23.7	0.25	2.2	0.25	2.2	127.2	285.8	286.3	87.8	51.1	87.6	2044.844	2033.969	2678.202	2666.265
20180520:13:31:49	23.4	17.9	-4.6	23.7	0.25	2.2	0.25	2.2	127.1	285.7	286.4	87.8	51.0	87.6	2046.209	2035.293	2679.989	2667.998
20180520:13:36:49	23.4	17.1	-4.7	23.7	0.25	2.2	0.25	2.2	125.5	285.7	286.4	87.8	51.1	87.7	2047.54	2036.647	2681.731	2669.771
20180520:13:41:49	23.4	17.4	-4.5	23.7	0.25	2.2	0.25	2.2	126.0	285.8	286.3	87.7	51.0	87.7	2048.912	2038.001	2683.53	2671.545
20180520:13:46:49	23.4	17.5	-4.4	23.7	0.25	2.2	0.25	2.2	126.3	285.8	286.4	87.6	51.1	87.7	2050.271	2039.331	2685.311	2673.288
20180520:13:51:49	23.4	17.6	-4.3	23.7	0.25	2.2	0.25	2.2	126.6	285.9	286.3	87.6	51.0	87.7	2051.605	2040.709	2687.059	2675.094
20180520:13:56:49	23.4	17.7	-4.2	23.7	0.25	2.2	0.25	2.2	126.7	285.8	286.3	87.4	51.0	87.6	2052.98	2042.023	2688.861	2676.818
20180520:14:01:49	23.4	17.8	-4.3	23.7	0.25	2.2	0.25	2.2	126.8	285.9	286.4	87.4	51.1	87.7	2054.335	2043.371	2690.637	2678.585
20180520:14:06:49	23.3	17.8	-4.2	23.7	0.25	2.2	0.25	2.2	126.8	285.8	286.3	87.3	51.0	87.6	2055.668	2044.742	2692.385	2680.383

Time:	Stack Pressure:	Sat% H2O:	Static:	Barometric:	Flowmeter1:	Vacuum1:	Flowmeter2:	Vacuum2:	Stack Temp:	Sorbent Temp:	Probe Temp:	DGM#1 Temp:	Condenser Temp:	DGM#2 Temp:	DGM1*:	DGM2*:	DGM1:	DGM2:
day:hh:mm:ss	in-Hg	Percent	in-H2O	in-Hg	l/min	in-Hg	l/min	in-Hg	degF	degF	degF	degF	degF	degF	liters STP	liters STP	liters nominal	liters nominal
20180520:14:11:49	23.3	17.8	-4.2	23.7	0.25	2.2	0.25	2.2	127.0	285.8	286.4	87.3	51.0	87.6	2057.046	2046.072	2694.191	2682.128
20180520:14:16:49	23.3	17.8	-4.2	23.7	0.25	2.2	0.25	2.2	127.0	285.8	286.3	87.2	51.1	87.7	2058.398	2047.454	2695.963	2683.942
20180520:14:21:49	23.4	17.8	-4.1	23.7	0.25	2.2	0.25	2.2	127.0	285.8	286.4	87.2	51.0	87.6	2059.734	2048.79	2697.715	2685.694
20180520:14:26:49	23.4	17.9	-4.2	23.7	0.25	2.2	0.25	2.2	127.1	285.8	286.3	87.1	51.0	87.6	2061.114	2050.116	2699.522	2687.432
20180520:14:31:49	23.4	17.9	-4.2	23.7	0.25	2.2	0.25	2.2	127.1	285.8	286.3	87.1	51.0	87.6	2062.465	2051.496	2701.293	2689.242
20180520:14:36:49	23.3	17.9	-4.3	23.7	0.25	2.2	0.25	2.2	127.0	285.8	286.4	87.2	51.0	87.6	2063.806	2052.827	2703.05	2690.989
20180520:14:41:49	23.3	17.3	-4.4	23.7	0.25	2.2	0.25	2.2	125.9	285.7	286.3	87.2	51.0	87.6	2065.186	2054.186	2704.859	2692.771
20180520:14:46:49	23.3	17.6	-4.3	23.7	0.25	2.2	0.25	2.2	126.4	285.8	286.4	87.3	51.0	87.6	2066.542	2055.55	2706.637	2694.56
20180520:14:51:49	23.3	17.7	-4.3	23.7	0.25	2.2	0.25	2.2	126.7	285.9	286.4	87.4	51.1	87.6	2067.877	2056.872	2708.387	2696.293
20180520:14:56:49	23.3	17.8	-4.3	23.7	0.25	2.2	0.25	2.2	126.9	285.9	286.3	87.4	51.1	87.6	2069.255	2058.253	2710.194	2698.105
20180520:15:01:49	23.3	17.8	-4.2	23.6	0.25	2.2	0.25	2.2	126.9	285.9	286.4	87.4	51.0	87.6	2070.609	2059.577	2711.97	2699.842
20180520:15:06:49	23.3	17.8	-4.2	23.7	0.25	2.2	0.25	2.2	126.9	285.9	286.3	87.3	51.0	87.5	2071.945	2060.919	2713.722	2701.603
20180520:15:11:49	23.3	17.8	-4.2	23.7	0.25	2.2	0.25	2.2	126.8	285.8	286.3	87.2	51.0	87.5	2073.319	2062.292	2715.524	2703.404
20180520:15:16:49	23.3	17.8	-4.2	23.6	0.25	2.2	0.25	2.2	126.9	285.8	286.3	87.2	51.0	87.5	2074.674	2063.62	2717.3	2705.147
20180520:15:21:49	23.3	17.8	-4.1	23.6	0.25	2.2	0.25	2.2	126.8	285.8	286.3	87.2	51.0	87.5	2076.011	2064.998	2719.054	2706.955
20180520:15:26:49	23.3	17.9	-4.1	23.6	0.25	2.2	0.25	2.2	127.0	285.8	286.4	87.1	50.9	87.5	2077.386	2066.341	2720.857	2708.718
20180520:15:31:49	23.3	17.8	-4.0	23.6	0.25	2.2	0.25	2.2	127.0	285.9	286.4	87.1	51.0	87.5	2078.739	2067.666	2722.631	2710.457
20180520:15:36:49	23.3	17.9	-3.9	23.6	0.25	2.2	0.25	2.2	127.0	285.9	286.5	87.1	51.0	87.5	2080.076	2069.044	2724.385	2712.265
20180520:15:41:49	23.4	17.8	-3.9	23.6	0.25	2.2	0.25	2.2	126.9	285.7	286.2	87.0	50.9	87.4	2081.454	2070.374	2726.193	2714.011
20180520:15:46:50	23.3	17.1	-4.2	23.6	0.25	2.2	0.25	2.2	125.4	285.7	286.3	87.0	50.9	87.4	2082.807	2071.728	2727.967	2715.788
20180520:15:51:50	23.3	17.1	-4.1	23.6	0.25	2.2	0.25	2.2	125.4	285.7	286.3	87.0	50.9	87.4	2084.145	2073.086	2729.72	2717.57
20180520:15:56:50	23.3	17.4	-4.0	23.6	0.25	2.2	0.25	2.2	126.0	285.8	286.3	87.0	50.9	87.5	2085.523	2074.418	2731.528	2719.318
20180520:16:01:50	23.3	17.5	-3.9	23.6	0.25	2.2	0.25	2.2	126.3	285.8	286.3	87.0	50.9	87.5	2086.874	2075.795	2733.3	2721.126
20180520:16:06:50	23.4	17.6	-3.9	23.6	0.25	2.2	0.25	2.2	126.5	285.8	286.3	87.0	50.9	87.5	2088.212	2077.127	2735.054	2722.874
20180520:16:11:50	23.3	17.6	-4.1	23.6	0.25	2.2	0.25	2.2	126.5	285.8	286.3	87.0	50.9	87.5	2089.587	2078.462	2736.857	2724.626
20180520:16:16:50	23.3	17.7	-4.1	23.6	0.25	2.2	0.25	2.2	126.6	285.9	286.3	87.0	50.9	87.5	2090.937	2079.832	2738.628	2726.425
20180520:16:21:50	23.3	17.7	-4.1	23.6	0.25	2.2	0.25	2.2	126.6	285.9	286.4	87.0	50.9	87.5	2092.275	2081.158	2740.381	2728.165
20180520:16:26:50	23.4	17.7	-3.9	23.6	0.25	2.2	0.25	2.2	126.6	285.9	286.4	87.0	50.8	87.6	2093.652	2082.535	2742.187	2729.972
20180520:16:31:50	23.4	17.7	-4.0	23.6	0.25	2.2	0.25	2.2	126.7	285.9	286.4	87.0	50.9	87.6	2094.998	2083.884	2743.952	2731.742
20180520:16:36:50	23.4	17.7	-4.0	23.6	0.25	2.2	0.25	2.2	126.7	285.8	286.3	87.0	50.8	87.6	2096.336	2085.204	2745.706	2733.474
20180520:16:41:50	23.4	17.8	-4.0	23.7	0.25	2.2	0.25	2.2	126.8	285.8	286.2	87.0	50.9	87.6	2097.718	2086.588	2747.517	2735.289
20180520:16:46:50	23.4	17.8	-4.0	23.7	0.25	2.2	0.25	2.2	126.9	285.8	286.4	87.0	50.8	87.6	2099.071	2087.914	2749.289	2737.03
20180520:16:51:50	23.4	17.6	-4.0	23.6	0.25	2.2	0.25	2.2	126.5	285.7	286.4	87.1	50.9	87.6	2100.411	2089.268	2751.046	2738.806
20180520:16:56:50	23.4	17.0	-4.0	23.7	0.25	2.2	0.25	2.2	125.3	285.7	286.3	87.1	50.9	87.7	2101.79	2090.628	2752.854	2740.59
20180520:17:01:50	23.4	17.5	-3.9	23.7	0.25	2.2	0.25	2.2	126.3	285.8	286.3	87.2	50.9	87.7	2103.142	2091.963	2754.626	2742.342
20180520:17:06:50	23.4	17.8	-3.9	23.7	0.25	2.2	0.25	2.2	126.8	285.8	286.3	87.2	50.9	87.7	2104.485	2093.351	2756.387	2744.164
20180520:17:11:50	23.4	18.0	-3.9	23.7	0.25	2.2	0.25	2.2	127.3	285.8	286.4	87.2	50.9	87.7	2105.866	2094.687	2758.198	2745.917
20180520:17:16:50	23.4	18.1	-3.9	23.7	0.25	2.2	0.25	2.2	127.5	285.9	286.4	87.2	50.9	87.7	2107.225	2096.018	2759.98	2747.664
20180520:17:21:50	23.4	18.1	-3.9	23.7	0.25	2.2	0.25	2.2	127.5	285.8	286.4	87.2	50.9	87.8	2108.564	2097.4	2761.735	2749.477
20180520:17:26:50	23.4	18.0	-3.9	23.6	0.25	2.2	0.25	2.2	127.3	285.8	286.3	87.2	50.9	87.8	2109.94	2098.73	2763.539	2751.224
20180520:17:31:50	23.4	18.0	-4.0	23.7	0.25	2.2	0.25	2.2	127.3	285.8	286.3	87.2	50.9	87.8	2111.308	2100.087	2765.331	2753.004
20180520:17:36:50	23.4	18.0	-4.0	23.7	0.25	2.2	0.25	2.2	127.3	285.8	286.3	87.3	50.9	87.8	2112.639	2101.449	2767.078	2754.791
20180520:17:41:50	23.4	18.0	-3.9	23.7	0.25	2.2	0.25	2.2	127.3	285.8	286.3	87.3	50.9	87.8	2114.008	2102.766	2768.872	2756.521
20180520:17:46:50	23.4	18.0	-3.9	23.7	0.25	2.2	0.25	2.2	127.3	285.8	286.2	87.3	50.9	87.8	2115.372	2104.15	2770.661	2758.336
20180520:17:51:50	23.4	18.0	-4.0	23.7	0.25	2.2	0.25	2.2	127.4	285.7	286.3	87.3	50.9	87.8	2116.704	2105.461	2772.407	2760.056
20180520:17:56:50	23.4	18.0	-3.9	23.7	0.25	2.2	0.25	2.2	127.3	285.8	286.4	87.3	51.0	87.9	2118.076	2106.81	2774.206	2761.827
20180520:18:01:50	23.4	17.5	-4.0	23.7	0.25	2.2	0.25	2.2	126.2	285.8	286.4	87.3	50.9	87.9	2119.437	2108.175	2775.989	2763.618
20180520:18:06:50	23.4	17.3	-4.0	23.7	0.25	2.2	0.25	2.2	125.8	285.8	286.3	87.3	51.0	87.9	2120.769	2109.506	2777.735	2765.365
20180520:18:11:50	23.4	17.7	-4.0	23.7	0.25	2.2	0.25	2.2	126.7	285.8	286.3	87.3	50.9	87.9	2122.142	2110.89	2779.535	2767.18
20180520:18:16:50	23.4	17.9	-4.0	23.7	0.25	2.2	0.25	2.2	127.0	285.8	286.3	87.3	51.0	87.9	2123.507	2112.228	2781.324	2768.936
20180520:18:21:50	23.4	17.9	-4.0	23.7	0.25	2.2	0.25	2.2	127.1	285.9	286.4	87.4	51.0	87.9	2124.846	2113.554	2783.078	2770.675
20180520:18:26:50	23.4	17.8	-4.0	23.7	0.25	2.2	0.25	2.2	126.9	285.8	286.4	87.4	51.0	87.9	2126.218	2114.934	2784.876	2772.485
20180520:18:31:50	23.4	17.8	-4.1	23.7	0.25	2.2	0.25	2.2	126.8	285.8	286.4	87.4	51.0	87.9	2127.588	2116.267	2786.67	2774.233
20180520:18:36:50	23.4	17.7	-4.0	23.7	0.25	2.2	0.25	2.2	126.7	285.7	286.3	87.5	51.0	87.9	2128.927	2117.626	2788.426	2776.015
20180520:18:41:50	23.4	17.6	-3.9	23.7	0.25	2.2	0.25	2.2	126.6	285.8	286.3	87.6	51.0	87.9	2130.295	2118.987	2790.219	2777.801
20180520:18:46:50	23.4	17.6	-3.9	23.7	0.25	2.2	0.25	2.2	126.6	285.8	286.3	87.6	51.0	88.0	2131.673	2120.318	2792.026	2779.547
20180520:18:51:50	23.4	17.6	-3.9	23.7	0.25	2.2	0.25	2.2	126.5	285.7	286.2	87.7	51.0	88.0	2133.017	2121.699	2793.787	2781.359
20180520:18:56:50	23.4	17.4	-3.5	23.7	0.25	2.2	0.25	2.2	126.2	285.8	286.3	87.7	51.0	88.0	2134.371	2123.039	2795.563	2783.117
20180520:19:01:50	23.4	17.4	-3.6	23.7	0.25	2.2	0.25	2.2	126.2	285.9	286.3	87.8	51.0	88.0	2135.757	2124.378	2797.38	2784.872
20180520:19:06:50	23.4	17.4	-3.8	23.7	0.25	2.2	0.25	2.2	126.1	285.9	286.4	87.7	51.0	88.0	2137.093	2125.762	2799.131	2786.688
20180520:19:11:50	23.4	17.4	-3.8	23.7	0.25	2.2	0.25	2.2	126.1	285.9	286.3	87.7	51.0	88.0	2138.453	2127.1	2800.915	2788.444
20180520:19:16:50	23.4	16.9	-4.0	23.7	0.25	2.2	0.25	2.2	125.0	285.8	286.3	87.7	51.0	88.0	2139.848	2128.462	2802.744	2790.231
20180520:19:21:50	23.4	16.0	-4.0	23.7	0.25	2.2	0.25	2.2	123.0	285.8	286.3	87.7	51.0	88.0	2141.186	2129.823	2804.498	2792.017
20180520:19:26:50	23.4	15.7	-4.1	23.7	0.25	2.2	0.25	2.2	122.2	285.7	286.3	87.7	51.0	88.0	2142.539	2131.156	2806.272	2793.765
20180520:19:31:50	23.4	16.3	-4.0	23.7	0.25	2.2	0.25	2.2	123.7	285.9	286.4	87.8	51.1	88.1	2143.938	2132.542	2808.107	2795.585
20180520:19:36:50	23.4	16.9	-3.9	23.7	0.25	2.2	0.25	2.2	125.1	285.9	286.4	87.9	51.1	88.1	2145.279	2133.877	2809.867	2797.336
20180520:19:41:50	23.4	17.1	-3.9	23.7	0.25	2.2	0.25	2.2	125.4	285.9	286.4	87.9	51.1	88.1	2146.619	2135.214	2811.624	2799.09
20180520:19:46:50	23.4	17.1	-3.8	23.7	0.25	2.2	0.25	2.2	125.6	285.9	286.4	87.9	51.1	88.1	2148.02	2136.597	2813.461	2800.904
20180520:19:51:50	23.4	17.2	-3.5	23.7	0.25	2.2	0.25	2.2	125.7	285.9	286.4	87.9	51.2	88.1	2149.369	2137.929	2815.231	2802.652
20180520:19:56:50	23.4	17.2	-3.4	23.7	0.25	2.2	0.25	2.2	125.7	285.8	286.3	88.0	51.1	88.1	2150.714	2139.291	2816.994	2804.44
20180520:20:01:50	23.4	17.2	-3.4	23.7	0.25	2.2	0.25	2.2	125.6	285.9	286.4	88.0	51.1	88.1	2152.109	2140.653	2818.824	2806.226
20180520:20:06:50	23.4	17.1	-3.4	23.7	0.25	2.2	0.25	2.2	125.6	285.8	286.3	88.0	51.1	88.1	2153.469	2141.989	2820.607	2807.977
20180520:20:11:50	23.4	17.1	-3.4	23.7	0.25	2.2	0.25	2.2	125.5	285.8	286.4	88.0	51.1	88.2	2154.806	2143.374	2822.361	2809.795
20180520:20:16:50	23.4	17.1	-3.2	23.7	0.25	2.2	0.25	2.2	125.6	285.8	286.4	88.1	51.1	88.2	2156.195	2144.708	2824.183	2811.545
20180520:20:21:50	23.4	17.1	-3.4	23.7	0.25	2.2	0.25	2.2	125.6	285.9	286.4	88.2	51.2	88.2	2157.549	2146.045	2825.959	2813.299
20180520:20:26:50	23.4	17.2	-3.4	23.7	0.25	2.2	0.25	2.2	125.7	286.0	286.4	88.2	51.1	88.2	2158.896	2147.432	2827.726	2815.118
20180520:20:31:50	23.4	17.1	-3.4	23.7	0.25	2.2	0.25	2.2	125.6	285.9	286.4	88.1	51.2	88.2	2160.274	2148.769	2829.533	2816.872
20180520:20:36:50	23.4	17.1	-3.3	23.7	0.25	2.2	0.25	2.2	125.5	285.9	286.4	88.1	51.1	88.2	2161.645	2150.128	2831.331	2818.654
20180520:20:41:50	23.4	17.1	-3.4	23.7	0.25	2.2	0.25	2.2	125.6	286.0	286.4	88.1	51.1	88.1	2162.988	2151.491	2833.093	2820.442
20180520:20:46:50	23.4	17.2	-3.6	23.7	0.25	2.2	0.25	2.2	125.8	286.0	286.4	88.0	51.0	88.1	2164.355	2152.831	2834.885	2822.199
20180520:20:51:50	23.4	17.4	-3.8	23.7	0.25	2.2	0.25	2.2	126.1	286.0	286.4	87.9	51.1	88.0	2165.737	2154.219	2836.696	2824.019
20180520:20:56:50	23.4	17.5	-3.8	23.7	0.25	2.2	0.25	2.2	126.3	286.0	286.4	87.9	51.0	88.0	2167.081	2155.554	2838.457	2825.769
20180520:21:01:50	23.4	17.6	-3.9	23.7	0.25	2.2	0.25	2.2	126.6	286.0	286.4	87.8	51.1	88.0	2168.44	2156.888	2840.239	2827.517
20180520:21:06:50	23.4	17.6	-4.0	23.7	0.25	2.2	0.25	2.2	126.6	286.0	286.4	87.8	51.0	88.0	2169.834	2158.274	2842.065	2829.335
20180520:21:11:50	23.4	16.5	-4.2	23.7	0.25	2.2	0.25	2.2	124.2	285.8	286.4	87.6	51.0	87.9	2171.174	2159.614	2843.82	2831.09
20180520:21:16:50	23.4	16.7	-4.1	23.7	0.25	2.2	0.25	2.2	124.6	285.8	286.4	87.6	51.0	87.9	2172.527	2160.972	2845.593	2832.87
20180520:21:21:50	23.4	17.6	-4.0	23.7	0.25	2.2	0.25	2.2	126.5	285.9	286.3	87.5	51.0	87.9	2173.926	2162.339	2847.424	2834.662
20180520:21:26:50	23.4	18.0	-4.0	23.7	0.25	2.2	0.25	2.2	127.3	285.9	286.3	87.5	51.0	87.9	2175.267	2163.678	2849.181	2836.417
20180520:21:31:50	23.4	18.1	-3.9	23.7	0.25	2.2	0.25	2.2	127.6	285.9	286.4	87.4	51.0	87.9	2176.619	2165.067	2850.952	2838.239

Time:	Stack Pressure:	Sat% H2O:	Static:	Barometric:	Flowmeter1:	Vacuum1:	Flowmeter2:	Vacuum2:	Stack Temp:	Sorbent Temp:	Probe Temp:	DGM#1 Temp:	Condenser Temp:	DGM#2 Temp:	DGM1*:	DGM2*:	DGM1:	DGM2:
day:hh:mm:ss	in-Hg	Percent	in-H2O	in-Hg	l/min	in-Hg	l/min	in-Hg	degF	degF	degF	degF	degF	degF	liters STP	liters STP	liters nominal	liters nominal
20180520:21:36:50	23.4	18.2	-3.9	23.7	0.25	2.2	0.25	2.2	127.7	285.9	286.3	87.4	51.0	87.9	2178.023	2166.405	2852.791	2839.992
20180520:21:41:50	23.4	18.1	-3.9	23.7	0.25	2.2	0.25	2.2	127.7	285.9	286.5	87.4	51.0	87.9	2179.361	2167.735	2854.543	2841.735
20180520:21:46:50	23.4	18.1	-3.8	23.7	0.25	2.2	0.25	2.2	127.6	285.9	286.3	87.4	51.0	87.8	2180.698	2169.111	2856.294	2843.539
20180520:21:51:50	23.4	18.1	-3.8	23.7	0.25	2.2	0.25	2.2	127.7	285.9	286.4	87.4	51.0	87.8	2182.096	2170.44	2858.126	2845.282
20180520:21:56:50	23.4	18.3	-3.8	23.7	0.25	2.2	0.25	2.2	128.0	285.9	286.3	87.4	51.0	87.8	2183.43	2171.802	2859.874	2847.068
20180520:22:01:50	23.4	18.2	-3.7	23.7	0.25	2.2	0.25	2.2	127.9	285.8	286.3	87.4	51.0	87.8	2184.762	2173.163	2861.619	2848.852
20180520:22:06:50	23.4	18.2	-3.8	23.7	0.25	2.2	0.25	2.2	127.9	285.8	286.2	87.5	51.0	87.8	2186.159	2174.48	2863.45	2850.579
20180520:22:11:50	23.4	18.2	-3.9	23.7	0.25	2.2	0.25	2.2	127.9	285.9	286.4	87.5	51.1	87.8	2187.492	2175.858	2865.196	2852.385
20180520:22:16:50	23.4	18.2	-3.8	23.7	0.25	2.2	0.25	2.2	127.8	285.9	286.4	87.6	51.0	87.7	2188.831	2177.177	2866.952	2854.115
20180520:22:21:50	23.4	18.2	-3.8	23.7	0.25	2.2	0.25	2.2	127.8	285.9	286.4	87.6	51.1	87.8	2190.231	2178.531	2868.787	2855.889
20180520:22:26:50	23.4	18.2	-3.9	23.7	0.25	2.2	0.25	2.2	127.8	285.9	286.4	87.6	51.0	87.8	2191.562	2179.895	2870.531	2857.679
20180520:22:31:50	23.4	18.3	-3.9	23.7	0.25	2.2	0.25	2.2	128.0	285.9	286.4	87.6	51.1	87.7	2192.902	2181.223	2872.287	2859.419
20180520:22:36:50	23.4	18.3	-3.8	23.7	0.25	2.2	0.25	2.2	127.9	285.8	286.4	87.5	51.0	87.6	2194.296	2182.607	2874.115	2861.233
20180520:22:41:50	23.4	18.3	-3.8	23.7	0.25	2.2	0.25	2.2	128.0	285.9	286.4	87.5	51.1	87.6	2195.63	2183.935	2875.863	2862.974
20180520:22:46:50	23.4	18.3	-3.8	23.7	0.25	2.2	0.25	2.2	127.9	285.8	286.4	87.4	51.0	87.6	2196.971	2185.267	2877.62	2864.72
20180520:22:51:50	23.4	18.3	-3.8	23.7	0.25	2.2	0.25	2.2	127.9	285.8	286.3	87.4	51.1	87.6	2198.37	2186.645	2879.454	2866.526
20180520:22:56:50	23.4	18.2	-3.9	23.7	0.25	2.2	0.25	2.2	127.8	285.8	286.4	87.4	51.0	87.6	2199.706	2187.97	2881.204	2868.263
20180520:23:01:50	23.4	18.2	-3.9	23.7	0.25	2.2	0.25	2.2	127.8	285.8	286.3	87.4	51.1	87.5	2201.047	2189.345	2882.961	2870.066
20180520:23:06:50	23.4	18.3	-3.9	23.7	0.25	2.2	0.25	2.2	128.0	285.8	286.3	87.3	51.0	87.5	2202.446	2190.699	2884.794	2871.84
20180520:23:11:50	23.4	18.3	-3.9	23.7	0.25	2.2	0.25	2.2	127.9	285.9	286.4	87.3	51.1	87.5	2203.79	2192.01	2886.556	2873.56
20180520:23:16:50	23.4	18.3	-3.8	23.7	0.25	2.2	0.25	2.2	127.9	285.9	286.4	87.3	51.0	87.5	2205.129	2193.4	2888.311	2875.382
20180520:23:21:50	23.4	18.2	-3.8	23.7	0.25	2.2	0.25	2.2	127.8	285.8	286.3	87.2	51.1	87.5	2206.524	2194.723	2890.139	2877.117
20180520:23:26:50	23.4	18.1	-3.7	23.7	0.25	2.2	0.25	2.2	127.6	285.9	286.4	87.2	51.0	87.4	2207.875	2196.077	2891.909	2878.893
20180520:23:31:50	23.4	18.1	-3.8	23.7	0.25	2.2	0.25	2.2	127.5	285.9	286.4	87.1	51.0	87.4	2209.213	2197.438	2893.663	2880.677
20180520:23:36:50	23.4	18.1	-3.9	23.7	0.25	2.2	0.25	2.2	127.6	285.9	286.4	87.0	51.0	87.4	2210.603	2198.771	2895.485	2882.425
20180520:23:41:50	23.4	17.8	-4.0	23.7	0.25	2.2	0.25	2.2	126.8	285.8	286.3	86.9	51.0	87.3	2211.958	2200.153	2897.259	2884.237
20180520:23:46:50	23.4	16.5	-4.1	23.7	0.25	2.2	0.25	2.2	124.1	285.7	286.4	86.9	51.0	87.3	2213.292	2201.482	2899.007	2885.979
20180520:23:51:50	23.4	16.5	-4.1	23.7	0.25	2.2	0.25	2.2	124.1	285.9	286.4	86.8	51.1	87.3	2214.68	2202.815	2900.826	2887.727
20180520:23:56:50	23.4	17.0	-3.9	23.7	0.25	2.2	0.25	2.2	125.2	285.8	286.3	86.7	51.0	87.2	2216.033	2204.196	2902.598	2889.538
20180521:00:01:50	23.4	17.5	-3.9	23.7	0.25	2.2	0.25	2.2	126.3	285.9	286.4	86.6	51.0	87.2	2217.368	2205.524	2904.346	2891.278
20180521:00:06:50	23.4	17.8	-4.0	23.7	0.25	2.2	0.25	2.2	126.8	285.9	286.4	86.6	51.0	87.2	2218.756	2206.896	2906.165	2893.077
20180521:00:11:50	23.4	17.8	-4.0	23.7	0.25	2.2	0.25	2.2	127.0	286.0	286.3	86.5	51.0	87.1	2220.11	2208.255	2907.937	2894.859
20180521:00:16:50	23.4	17.9	-4.0	23.7	0.25	2.2	0.25	2.2	127.2	285.9	286.4	86.4	51.0	87.1	2221.441	2209.576	2909.68	2896.59
20180521:00:21:50	23.4	18.0	-4.0	23.6	0.25	2.2	0.25	2.2	127.3	285.9	286.4	86.3	51.0	87.0	2222.826	2210.96	2911.493	2898.404
20180521:00:26:50	23.4	18.0	-4.0	23.6	0.25	2.2	0.25	2.2	127.3	285.8	286.3	86.3	51.0	87.0	2224.175	2212.28	2913.259	2900.135
20180521:00:31:50	23.4	17.9	-3.9	23.6	0.25	2.2	0.25	2.2	127.2	285.9	286.3	86.2	51.0	86.9	2225.511	2213.637	2915.007	2901.914
20180521:00:36:50	23.4	17.9	-3.9	23.6	0.25	2.2	0.25	2.2	127.1	285.9	286.4	86.1	51.0	86.9	2226.901	2215.009	2916.826	2903.711
20180521:00:41:50	23.4	17.8	-3.9	23.7	0.25	2.2	0.25	2.2	127.0	285.8	286.3	86.1	51.0	86.8	2228.259	2216.343	2918.604	2905.459
20180521:00:46:50	23.4	17.8	-4.0	23.7	0.25	2.2	0.25	2.2	126.8	285.9	286.3	86.0	51.0	86.8	2229.592	2217.723	2920.346	2907.267
20180521:00:51:50	23.4	17.8	-3.9	23.7	0.25	2.2	0.25	2.2	127.0	285.8	286.3	85.9	51.0	86.7	2230.981	2219.068	2922.163	2909.028
20180521:00:56:50	23.4	17.8	-4.0	23.7	0.25	2.2	0.25	2.2	127.0	285.8	286.3	85.9	51.0	86.7	2232.326	2220.395	2923.922	2910.767
20180521:01:01:50	23.4	17.9	-4.0	23.7	0.25	2.2	0.25	2.2	127.1	285.8	286.4	85.8	51.0	86.6	2233.656	2221.778	2925.661	2912.577
20180521:01:06:50	23.4	17.9	-3.9	23.7	0.25	2.2	0.25	2.2	127.2	285.8	286.3	85.7	51.0	86.6	2235.045	2223.113	2927.478	2914.325
20180521:01:11:50	23.4	17.9	-3.9	23.7	0.25	2.2	0.25	2.2	127.2	285.9	286.4	85.7	50.9	86.5	2236.392	2224.466	2929.239	2916.098
20180521:01:16:50	23.4	18.0	-3.9	23.7	0.25	2.2	0.25	2.2	127.3	285.8	286.3	85.7	51.0	86.5	2237.723	2225.83	2930.98	2917.883
20180521:01:21:50	23.3	17.1	-4.2	23.6	0.25	2.2	0.25	2.2	125.3	285.8	286.3	85.6	50.9	86.4	2239.114	2227.161	2932.798	2919.626
20180521:01:26:50	23.3	16.8	-4.3	23.7	0.25	2.2	0.25	2.2	124.8	285.8	286.4	85.6	51.0	86.4	2240.457	2228.542	2934.554	2921.434
20180521:01:31:50	23.3	17.3	-4.2	23.7	0.25	2.2	0.25	2.2	125.9	285.8	286.3	85.6	51.0	86.3	2241.791	2229.875	2936.296	2923.179
20180521:01:36:50	23.4	17.7	-4.1	23.7	0.25	2.2	0.25	2.2	126.6	285.8	286.3	85.5	51.0	86.3	2243.191	2231.219	2938.126	2924.938
20180521:01:41:50	23.4	17.9	-4.1	23.7	0.25	2.2	0.25	2.2	127.0	285.8	286.3	85.5	50.9	86.3	2244.521	2232.595	2939.865	2926.739
20180521:01:46:50	23.4	17.9	-4.1	23.7	0.25	2.2	0.25	2.2	127.1	285.7	286.2	85.5	51.0	86.2	2245.864	2233.928	2941.62	2928.483
20180521:01:51:50	23.4	17.9	-4.1	23.7	0.25	2.2	0.25	2.2	127.0	285.8	286.3	85.5	50.9	86.2	2247.26	2235.306	2943.444	2930.286
20180521:01:56:50	23.4	17.9	-4.0	23.7	0.25	2.2	0.25	2.2	127.1	285.8	286.3	85.5	51.0	86.1	2248.593	2236.655	2945.187	2932.051
20180521:02:01:50	23.4	17.9	-4.0	23.6	0.25	2.2	0.25	2.2	127.1	285.9	286.4	85.6	50.9	86.1	2249.938	2237.981	2946.944	2933.786
20180521:02:06:50	23.4	17.8	-4.1	23.7	0.25	2.2	0.25	2.2	127.0	285.9	286.4	85.6	51.0	86.1	2251.332	2239.36	2948.767	2935.59
20180521:02:11:50	23.4	17.8	-4.0	23.7	0.25	2.2	0.25	2.2	126.9	285.9	286.3	85.5	50.9	86.0	2252.666	2240.692	2950.511	2937.333
20180521:02:16:50	23.3	17.9	-4.1	23.7	0.25	2.2	0.25	2.2	127.1	285.8	286.3	85.5	51.0	86.0	2254.012	2242.048	2952.27	2939.107
20180521:02:21:50	23.3	17.9	-4.2	23.7	0.25	2.2	0.25	2.2	127.1	285.8	286.3	85.5	50.9	86.0	2255.408	2243.412	2954.094	2940.891
20180521:02:26:50	23.3	17.9	-4.1	23.7	0.25	2.2	0.25	2.2	127.0	285.8	286.4	85.6	51.0	86.0	2256.738	2244.738	2955.833	2942.626
20180521:02:31:50	23.3	17.8	-4.1	23.6	0.25	2.2	0.25	2.2	126.9	285.9	286.4	85.6	51.0	85.9	2258.087	2246.123	2957.596	2944.438
20180521:02:36:50	23.4	17.8	-4.1	23.6	0.25	2.2	0.25	2.2	126.9	285.9	286.4	85.6	51.0	85.9	2259.479	2247.444	2959.417	2946.165
20180521:02:41:50	23.3	17.8	-4.1	23.6	0.25	2.2	0.25	2.2	126.9	285.9	286.3	85.5	50.9	85.9	2260.809	2248.794	2961.156	2947.932
20180521:02:46:50	23.3	17.8	-4.1	23.6	0.25	2.2	0.25	2.2	126.8	285.8	286.3	85.5	51.0	85.9	2262.159	2250.162	2962.92	2949.722
20180521:02:51:50	23.3	17.9	-4.1	23.6	0.25	2.2	0.25	2.2	127.0	285.8	286.3	85.4	51.0	85.8	2263.548	2251.495	2964.735	2951.464
20180521:02:56:50	23.3	17.8	-4.2	23.7	0.25	2.2	0.25	2.2	126.9	285.8	286.3	85.3	51.0	85.7	2264.875	2252.882	2966.469	2953.278
20180521:03:01:50	23.3	17.8	-4.1	23.6	0.25	2.2	0.25	2.2	126.9	285.9	286.4	85.2	50.9	85.7	2266.23	2254.216	2968.239	2955.023
20180521:03:06:50	23.3	17.8	-4.1	23.6	0.25	2.2	0.25	2.2	126.9	285.8	286.3	85.1	51.0	85.7	2267.608	2255.545	2970.039	2956.761
20180521:03:11:50	23.3	17.7	-4.2	23.6	0.25	2.2	0.25	2.2	126.8	285.8	286.3	85.0	50.9	85.6	2268.949	2256.928	2971.791	2958.57
20180521:03:16:50	23.3	17.8	-4.0	23.6	0.25	2.2	0.25	2.2	126.8	285.8	286.3	85.0	51.0	85.6	2270.303	2258.256	2973.559	2960.306
20180521:03:21:50	23.3	17.7	-4.0	23.6	0.25	2.2	0.25	2.2	126.7	285.8	286.3	84.9	50.9	85.6	2271.678	2259.628	2975.356	2962.1
20180521:03:26:50	23.3	17.7	-4.1	23.6	0.25	2.2	0.25	2.2	126.7	285.8	286.4	84.9	51.0	85.5	2273.017	2260.988	2977.104	2963.878
20180521:03:31:50	23.3	17.7	-4.1	23.6	0.25	2.2	0.25	2.2	126.7	285.8	286.3	84.9	50.9	85.5	2274.381	2262.306	2978.885	2965.602
20180521:03:36:50	23.3	16.8	-4.4	23.6	0.25	2.2	0.25	2.2	124.7	285.7	286.3	84.9	51.0	85.4	2275.753	2263.691	2980.678	2967.412
20180521:03:41:50	23.3	16.1	-4.4	23.6	0.25	2.1	0.25	2.2	123.2	285.7	286.4	84.9	51.0	85.4	2277.087	2265.019	2982.42	2969.148
20180521:03:46:50	23.3	16.6	-4.2	23.6	0.25	2.2	0.25	2.2	124.3	285.8	286.3	84.9	51.0	85.3	2278.461	2266.378	2984.215	2970.925
20180521:03:51:50	23.3	17.0	-4.2	23.6	0.25	2.2	0.25	2.2	125.2	285.9	286.3	84.9	50.9	85.3	2279.831	2267.737	2986.006	2972.701
20180521:03:56:50	23.3	17.2	-4.2	23.6	0.25	2.2	0.25	2.2	125.7	285.8	286.3	85.0	51.0	85.3	2281.165	2269.073	2987.748	2974.447
20180521:04:01:50	23.3	17.4	-4.2	23.6	0.25	2.2	0.25	2.2	126.0	285.9	286.3	84.9	50.9	85.3	2282.539	2270.455	2989.543	2976.254
20180521:04:06:50	23.3	17.5	-4.2	23.6	0.25	2.2	0.25	2.2	126.2	285.9	286.3	84.9	51.0	85.2	2283.902	2271.781	2991.322	2977.987
20180521:04:11:50	23.3	17.5	-4.2	23.6	0.25	2.2	0.25	2.2	126.2	285.8	286.3	84.8	50.9	85.2	2285.239	2273.127	2993.069	2979.746
20180521:04:16:50	23.3	17.5	-4.1	23.6	0.25	2.2	0.25	2.2	126.3	286.0	286.3	84.7	51.0	85.2	2286.618	2274.499	2994.869	2981.539
20180521:04:21:50	23.3	17.5	-4.2	23.6	0.25	2.2	0.25	2.2	126.3	285.8	286.3	84.7	50.9	85.1	2287.971	2275.831	2996.635	2983.28
20180521:04:26:50	23.3	17.6	-4.1	23.6	0.25	2.2	0.25	2.2	126.4	285.8	286.3	84.6	51.0	85.1	2289.313	2277.217	2998.387	2985.09
20180521:04:31:50	23.3	17.6	-4.2	23.6	0.25	2.2	0.25	2.2	126.4	285.8	286.3	84.6	50.9	85.0	2290.694	2278.549	3000.191	2986.831
20180521:04:36:50	23.3	17.6	-4.2	23.6	0.25	2.2	0.25	2.2	126.4	285.9	286.3	84.5	51.0	85.0	2292.051	2279.882	3001.961	2988.571
20180521:04:41:50	23.3	17.6	-4.3	23.6	0.25	2.2	0.25	2.2	126.4	285.9	286.3	84.5	50.9	85.0	2293.382	2281.263	3003.698	2990.376
20180521:04:46:50	23.3	17.6	-4.2	23.6	0.25	2.2	0.25	2.2	126.4	285.9	286.4	84.4	51.0	84.9	2294.768	2282.59	3005.507	2992.109
20180521:04:51:50	23.3	17.6	-4.2	23.6	0.25	2.2	0.25	2.2	126.5	285.8	286.3	84.3	50.9	84.9	2296.125	2283.966	3007.278	2993.906
20180521:04:56:50	23.3	17.7	-4.3	23.7	0.25	2.2	0.25	2.2	126.6	285.8	286.4	84.3	51.0	84.9	2297.456	2285.319	3009.013	2995.673

Time:	Stack Pressure:	Sat% H2O:	Static:	Barometric:	Flowmeter1:	Vacuum1:	Flowmeter2:	Vacuum2:	Stack Temp:	Sorbent Temp:	Probe Temp:	DGM#1 Temp:	Condenser Temp:	DGM#2 Temp:	DGM1*:	DGM2*:	DGM1:	DGM2:
day:hh:mm:ss	in-Hg	Percent	in-H2O	in-Hg	l/min	in-Hg	l/min	in-Hg	degF	degF	degF	degF	degF	degF	liters STP	liters STP	liters nominal	liters nominal
20180521:05:01:50	23.3	17.7	-4.3	23.7	0.25	2.2	0.25	2.2	126.6	285.8	286.3	84.3	50.9	84.8	2298.847	2286.644	3010.828	2997.402
20180521:05:06:50	23.3	17.7	-4.4	23.7	0.25	2.2	0.25	2.2	126.6	285.8	286.3	84.3	51.0	84.8	2300.199	2288.031	3012.591	2999.212
20180521:05:11:50	23.3	17.6	-4.4	23.7	0.25	2.2	0.25	2.2	126.5	285.8	286.3	84.2	50.9	84.7	2301.537	2289.366	3014.335	3000.955
20180521:05:16:50	23.3	17.7	-4.3	23.7	0.25	2.2	0.25	2.2	126.6	285.8	286.3	84.2	51.0	84.7	2302.931	2290.723	3016.152	3002.726
20180521:05:21:50	23.3	17.7	-4.3	23.7	0.25	2.2	0.25	2.2	126.6	285.8	286.3	84.0	50.9	84.6	2304.279	2292.091	3017.909	3004.509
20180521:05:26:50	23.3	17.6	-4.4	23.7	0.25	2.2	0.25	2.2	126.4	285.8	286.2	84.0	50.9	84.6	2305.609	2293.425	3019.643	3006.25
20180521:05:31:50	23.3	17.6	-4.4	23.7	0.25	2.2	0.25	2.2	126.4	285.8	286.3	83.9	50.9	84.6	2307.006	2294.809	3021.463	3008.056
20180521:05:36:50	23.3	17.4	-4.3	23.7	0.25	2.2	0.25	2.2	126.0	285.8	286.3	83.8	50.9	84.5	2308.335	2296.136	3023.194	3009.788
20180521:05:41:50	23.3	17.4	-4.3	23.7	0.25	2.2	0.25	2.2	126.1	285.8	286.3	83.8	50.9	84.5	2309.68	2297.482	3024.946	3011.543
20180521:05:46:50	23.3	17.5	-4.3	23.7	0.25	2.2	0.25	2.2	126.2	285.8	286.3	83.8	50.9	84.4	2311.067	2298.853	3026.754	3013.331
20180521:05:51:50	23.3	17.5	-4.3	23.7	0.25	2.2	0.25	2.2	126.3	285.7	286.2	83.7	50.9	84.3	2312.397	2300.187	3028.485	3015.071
20180521:05:56:50	23.3	17.6	-4.3	23.7	0.25	2.2	0.25	2.2	126.4	285.8	286.3	83.7	50.9	84.3	2313.753	2301.574	3030.252	3016.88
20180521:06:01:50	23.3	17.7	-4.3	23.7	0.25	2.2	0.25	2.2	126.6	285.8	286.3	83.7	50.9	84.3	2315.142	2302.903	3032.061	3018.613
20180521:06:06:50	23.3	17.7	-4.2	23.6	0.25	2.2	0.25	2.2	126.6	285.8	286.2	83.7	50.9	84.2	2316.475	2304.242	3033.798	3020.359
20180521:06:11:50	23.3	17.7	-4.2	23.6	0.25	2.2	0.25	2.2	126.7	285.8	286.3	83.7	50.9	84.2	2317.83	2305.616	3035.563	3022.15
20180521:06:16:50	23.3	17.7	-4.2	23.6	0.25	2.2	0.25	2.2	126.6	285.7	286.2	83.6	50.9	84.2	2319.21	2306.95	3037.361	3023.891
20180521:06:21:50	23.3	17.6	-4.2	23.6	0.25	2.2	0.25	2.2	126.5	285.7	286.3	83.6	50.9	84.1	2320.549	2308.336	3039.106	3025.697
20180521:06:26:50	23.3	17.5	-4.2	23.7	0.25	2.2	0.25	2.2	126.2	285.8	286.3	83.6	50.9	84.1	2321.915	2309.677	3040.885	3027.445
20180521:06:31:50	23.3	17.4	-4.2	23.7	0.25	2.2	0.25	2.2	126.0	285.8	286.3	83.6	50.9	84.0	2323.293	2311.009	3042.68	3029.182
20180521:06:36:50	23.3	17.3	-4.2	23.7	0.25	2.2	0.25	2.2	125.7	285.7	286.3	83.6	50.9	84.0	2324.631	2312.395	3044.422	3030.989
20180521:06:41:50	23.3	17.0	-4.2	23.7	0.25	2.2	0.25	2.2	125.3	285.8	286.3	83.6	50.9	84.0	2326.005	2313.731	3046.211	3032.729
20180521:06:46:50	23.3	16.9	-4.2	23.7	0.25	2.2	0.25	2.2	125.0	285.7	286.2	83.5	50.9	84.0	2327.372	2315.104	3047.991	3034.519
20180521:06:51:50	23.4	16.9	-4.1	23.7	0.25	2.2	0.25	2.2	124.9	285.7	286.3	83.5	50.9	84.0	2328.715	2316.473	3049.739	3036.303
20180521:06:56:50	23.4	16.7	-3.9	23.7	0.25	2.2	0.25	2.2	124.7	285.8	286.3	83.4	50.9	83.9	2330.098	2317.796	3051.539	3038.026
20180521:07:01:50	23.4	16.8	-3.9	23.7	0.25	2.2	0.25	2.2	124.7	285.7	286.2	83.4	50.9	83.9	2331.461	2319.189	3053.313	3039.84
20180521:07:06:50	23.4	16.8	-4.0	23.7	0.25	2.2	0.25	2.2	124.8	285.8	286.3	83.4	50.9	83.9	2332.806	2320.515	3055.063	3041.568
20180521:07:11:50	23.4	16.9	-4.0	23.7	0.25	2.2	0.25	2.2	124.9	285.8	286.3	83.3	50.9	83.8	2334.192	2321.879	3056.867	3043.344
20180521:07:16:50	23.4	16.9	-4.0	23.7	0.25	2.2	0.25	2.2	124.9	285.8	286.3	83.3	50.8	83.8	2335.551	2323.255	3058.635	3045.135
20180521:07:21:50	23.4	16.6	-4.0	23.7	0.25	2.2	0.25	2.2	124.4	285.8	286.3	83.3	50.9	83.8	2336.898	2324.595	3060.387	3046.88
20180521:07:26:50	23.4	16.6	-3.9	23.7	0.25	2.2	0.25	2.2	124.4	285.8	286.2	83.2	50.8	83.7	2338.285	2325.987	3062.191	3048.692
20180521:07:31:50	23.4	16.8	-3.9	23.7	0.25	2.2	0.25	2.2	124.8	285.8	286.2	83.2	50.9	83.7	2339.648	2327.326	3063.963	3050.436
20180521:07:36:50	23.4	16.8	-3.8	23.7	0.25	2.2	0.25	2.2	124.8	285.7	286.2	83.1	50.8	83.7	2340.983	2328.664	3065.7	3052.177
20180521:07:41:50	23.4	16.8	-3.7	23.7	0.25	2.2	0.25	2.2	124.9	285.7	286.2	83.1	50.9	83.7	2342.374	2330.051	3067.507	3053.983
20180521:07:46:50	23.4	16.9	-3.6	23.7	0.25	2.2	0.25	2.2	125.0	285.8	286.3	83.1	50.8	83.7	2343.731	2331.387	3069.272	3055.722
20180521:07:51:50	23.4	16.8	-3.7	23.7	0.25	2.2	0.25	2.2	124.8	285.8	286.3	83.0	50.8	83.6	2345.064	2332.768	3071.006	3057.519
20180521:07:56:50	23.4	16.2	-3.8	23.7	0.25	2.2	0.25	2.2	123.4	285.8	286.3	83.0	50.7	83.6	2346.456	2334.131	3072.815	3059.293
20180521:08:01:50	23.4	16.6	-3.8	23.7	0.25	2.2	0.25	2.2	124.3	285.8	286.3	83.0	50.8	83.6	2347.805	2335.454	3074.569	3061.015
05/21/2018:08:01:50	**Sampling**	**complete**	**6 Days**	**0 Hrs**	**0 Minutes**	**sampled**												

Hg-324K-1099								
HgK_324 Data	HTG2LEE2018R4	5/22/2018	6:55:11					
DGM1 ID	DGM2 ID	Trap1 ID	Trap2 ID					
3605445	3605446	450073	465536					
Time:	Leak 1	Status	Leak 2	Status	Vacuum1	Vacuum2	DGM 1	DGM 2
Day:hh:mm	ccpermin	P-F	ccpermin	P-F	in-Hg	in-Hg	liter	liter
05/22/2018:06:55:26	1240.241	Fail	1394.237	Fail	2.794	3.006	0.37	0.447
05/22/2018:06:55:41	1451.852	Fail	1462.406	Fail	6.901	7.424	0.726	0.731
05/22/2018:06:55:56	1166.667	Fail	1105.263	Fail	9.732	10.356	0.954	1
05/22/2018:06:56:11	755.556	Fail	883.459	Fail	11.801	12.392	1.104	1.173
05/22/2018:06:56:26	577.778	Fail	537.594	Fail	13.362	13.928	1.243	1.269
05/22/2018:06:56:41	574.074	Fail	364.662	Fail	14.531	15.059	1.391	1.355
05/22/2018:06:56:56	451.852	Fail	345.865	Fail	15.39	15.886	1.469	1.442
05/22/2018:06:57:11	340.741	Fail	323.308	Fail	16.156	16.594	1.561	1.517
05/22/2018:06:57:26	292.593	Fail	293.233	Fail	16.78	17.16	1.615	1.588
05/22/2018:06:57:41	174.074	Fail	274.436	Fail	17.274	17.613	1.648	1.654
05/22/2018:06:57:56	118.519	Fail	184.211	Fail	17.674	17.977	1.674	1.68
05/22/2018:06:58:11	122.222	Fail	120.301	Fail	17.983	18.25	1.709	1.714
05/22/2018:06:58:26	122.222	Fail	131.579	Fail	18.221	18.456	1.735	1.746
05/22/2018:06:58:41	118.519	Fail	105.263	Fail	18.422	18.634	1.769	1.767
05/22/2018:06:58:56	107.407	Fail	86.466	Fail	18.587	18.788	1.789	1.789
05/22/2018:06:59:11	77.778	Fail	82.707	Fail	18.719	18.929	1.807	1.808
05/22/2018:06:59:26	62.963	Fail	71.429	Fail	18.833	19.045	1.82	1.825
05/22/2018:06:59:41	55.556	Fail	75.188	Fail	18.931	19.15	1.835	1.846
05/22/2018:06:59:56	55.556	Fail	45.113	Fail	19.002	19.233	1.848	1.848
05/22/2018:07:00:11	48.148	Fail	26.316	Fail	19.052	19.3	1.859	1.859
05/22/2018:07:00:26	37.037	Fail	48.872	Fail	19.082	19.357	1.867	1.872
05/22/2018:07:00:41	33.333	Fail	41.353	Fail	19.109	19.397	1.876	1.88
05/22/2018:07:00:56	25.926	Fail	26.316	Fail	19.101	19.432	1.88	1.885
05/22/2018:07:01:11	7.407	Pass	22.556	Fail	19.08	19.461	1.88	1.891
05/22/2018:07:01:26	0	Pass	15.038	Fail	19.072	19.477	1.88	1.893
05/22/2018:07:01:41	3.704	Pass	7.519	Pass	19.064	19.493	1.881	1.895

Hg-324K-1099								
HgK_324 Data	HTG2LEE2018R5	5/22/2018	7:13:40					
DGM1 ID	DGM2 ID	Trap1 ID	Trap2 ID					
3605445	3605446	451931	480728					
Time:	Leak 1	Status	Leak 2	Status	Vacuum1	Vacuum2	DGM 1	DGM 2
Day:hh:mm	ccpermin	P-F	ccpermin	P-F	in-Hg	in-Hg	liter	liter
05/22/2018:07:13:54	1332.833	Fail	1379.199	Fail	2.511	2.368	0.417	0.44
05/22/2018:07:14:09	1500	Fail	1541.353	Fail	6.255	5.931	0.75	0.771
05/22/2018:07:14:24	1225.926	Fail	1304.511	Fail	9.04	8.612	1.03	1.092
05/22/2018:07:14:39	855.556	Fail	1071.429	Fail	11.138	10.657	1.178	1.306
05/22/2018:07:14:54	622.222	Fail	684.211	Fail	12.787	12.266	1.341	1.434
05/22/2018:07:15:09	648.148	Fail	578.947	Fail	14.085	13.575	1.502	1.596
05/22/2018:07:15:24	500	Fail	586.466	Fail	15.058	14.617	1.591	1.727
05/22/2018:07:15:39	362.963	Fail	424.812	Fail	15.892	15.437	1.683	1.808
05/22/2018:07:15:54	296.296	Fail	334.586	Fail	16.584	16.126	1.739	1.895
05/22/2018:07:16:09	174.074	Fail	323.308	Fail	17.143	16.738	1.77	1.97
05/22/2018:07:16:24	129.63	Fail	214.286	Fail	17.589	17.249	1.804	2.002
05/22/2018:07:16:39	129.63	Fail	116.541	Fail	17.942	17.677	1.835	2.028
05/22/2018:07:16:54	140.741	Fail	105.263	Fail	18.226	18.025	1.874	2.055
05/22/2018:07:17:09	129.63	Fail	112.782	Fail	18.448	18.304	1.9	2.085
05/22/2018:07:17:24	88.889	Fail	97.744	Fail	18.627	18.531	1.919	2.103
05/22/2018:07:17:39	66.667	Fail	86.466	Fail	18.781	18.709	1.933	2.128
05/22/2018:07:17:54	59.259	Fail	93.985	Fail	18.903	18.863	1.948	2.15
05/22/2018:07:18:09	55.556	Fail	75.188	Fail	18.996	19.002	1.961	2.165
05/22/2018:07:18:24	40.741	Fail	52.632	Fail	19.051	19.118	1.969	2.177
05/22/2018:07:18:39	25.926	Fail	45.113	Fail	19.086	19.214	1.974	2.188
05/22/2018:07:18:54	14.815	Fail	37.594	Fail	19.075	19.284	1.976	2.195
05/22/2018:07:19:09	3.704	Pass	30.075	Fail	19.08	19.341	1.976	2.203
05/22/2018:07:19:24	7.407	Pass	22.556	Fail	19.092	19.381	1.98	2.207
05/22/2018:07:19:39	11.111	Fail	15.038	Fail	19.101	19.412	1.981	2.211
05/22/2018:07:19:54	7.407	Pass	15.038	Fail	19.11	19.433	1.983	2.214
05/22/2018:07:20:09	14.815	Fail	15.038	Fail	19.126	19.452	1.989	2.218
05/22/2018:07:20:24	18.519	Fail	11.278	Fail	19.164	19.469	1.993	2.22
05/22/2018:07:20:39	11.111	Fail	3.759	Pass	19.173	19.48	1.994	2.22
05/22/2018:07:20:54	3.704	Pass	3.759	Pass	19.166	19.491	1.994	2.222

Time:	Stack Pressure:	Sat% H2O:	Static:	Barometric:	Flowmeter1:	Vacuum1:	Flowmeter2:	Vacuum2:	Stack Temp:	Sorbent Temp:	Probe Temp:	DGM#1 Temp:	Condenser Temp:	DGM#2 Temp:	DGM1*:	DGM2*:	DGM1:	DGM2:
day:hh:mm:ss	in-Hg	Percent	in-H2O	in-Hg	l/min	in-Hg	l/min	in-Hg	degF	degF	degF	degF	degF	degF	liters STP	liters STP	liters nominal	liters nominal
20180524:07:03:57	23.6	15.0	-3.2	23.8	0.239	1.8	0.24	1.6	121.1	285.7	286.4	76.5	50.2	76.6	1.177	1.242	1.502	1.585
20180524:07:08:57	23.6	15.0	-3.0	23.8	0.25	2.2	0.25	2.0	121.1	285.8	286.5	76.5	50.2	76.5	2.463	2.523	3.143	3.22
20180524:07:13:57	23.6	15.1	-3.1	23.8	0.25	2.3	0.25	2.0	121.1	285.8	286.6	76.5	50.3	76.5	3.813	3.868	4.865	4.936
20180524:07:18:57	23.6	15.1	-3.1	23.8	0.25	2.3	0.25	2.0	121.2	285.8	286.5	76.6	50.4	76.6	5.109	5.162	6.519	6.586
20180524:07:23:57	23.6	15.1	-3.0	23.8	0.25	2.3	0.25	2.1	121.4	285.8	286.6	76.8	50.6	76.6	6.464	6.52	8.248	8.32
20180524:07:28:57	23.6	15.2	-3.0	23.8	0.25	2.3	0.25	2.1	121.5	285.8	286.5	76.8	50.7	76.7	7.769	7.81	9.915	9.966
20180524:07:33:57	23.6	15.2	-2.9	23.8	0.25	2.2	0.25	2.0	121.5	285.8	286.5	76.9	50.6	76.7	9.14	9.173	11.665	11.705
20180524:07:38:57	23.6	15.0	-3.3	23.8	0.25	2.2	0.25	2.0	120.9	285.8	286.4	77.0	50.8	76.8	10.449	10.472	13.335	13.363
20180524:07:43:57	23.6	15.0	-3.2	23.8	0.25	2.2	0.25	1.9	121.0	285.7	286.4	77.1	50.7	76.9	11.815	11.844	15.08	15.115
20180524:07:48:57	23.6	15.4	-3.1	23.8	0.25	2.2	0.25	1.9	121.9	285.8	286.5	77.2	50.8	77.0	13.184	13.171	16.828	16.808
20180524:07:53:57	23.6	15.5	-3.0	23.8	0.25	2.2	0.25	1.9	122.2	285.8	286.4	77.3	50.7	77.1	14.506	14.555	18.517	18.575
20180524:07:58:57	23.6	15.6	-2.9	23.8	0.25	2.2	0.25	1.9	122.5	285.7	286.3	77.3	50.7	77.2	15.903	15.884	20.3	20.273
20180524:08:03:57	23.6	15.7	-2.7	23.8	0.25	2.2	0.25	1.9	122.7	285.7	286.3	77.4	50.7	77.3	17.233	17.272	22	22.045
20180524:08:08:57	23.6	15.7	-2.9	23.8	0.25	2.2	0.25	1.9	122.7	285.6	286.2	77.5	50.7	77.4	18.603	18.593	23.75	23.733
20180524:08:13:57	23.6	15.7	-2.9	23.8	0.25	2.2	0.25	1.9	122.7	285.6	286.3	77.6	50.7	77.5	19.97	19.963	25.496	25.483
20180524:08:18:57	23.6	15.7	-2.7	23.8	0.25	2.2	0.25	1.9	122.6	285.6	286.3	77.7	50.7	77.6	21.311	21.334	27.211	27.235
20180524:08:23:57	23.6	15.8	-2.7	23.8	0.25	2.2	0.25	1.9	123.0	285.6	286.3	77.7	50.8	77.7	22.709	22.657	28.998	28.927
20180524:08:28:57	23.6	16.0	-2.9	23.8	0.25	2.2	0.25	1.9	123.4	285.6	286.3	77.8	50.7	77.8	24.036	24.04	30.694	30.695
20180524:08:33:57	23.6	16.1	-2.9	23.8	0.25	2.2	0.25	1.9	123.7	285.6	286.2	77.9	50.8	77.9	25.394	25.373	32.431	32.4
20180524:08:38:57	23.6	16.2	-2.8	23.8	0.25	2.2	0.25	1.9	124.0	285.6	286.3	78.0	50.7	78.0	26.776	26.758	34.2	34.171
20180524:08:43:57	23.6	15.6	-3.5	23.8	0.25	2.2	0.25	1.9	122.4	285.5	286.3	78.1	50.8	78.1	28.113	28.087	35.909	35.872
20180524:08:48:57	23.6	16.0	-3.0	23.8	0.25	2.2	0.25	2.0	123.3	285.6	286.4	78.3	50.7	78.3	29.506	29.467	37.693	37.637
20180524:08:53:57	23.6	16.2	-2.9	23.8	0.25	2.2	0.25	2.0	123.9	285.6	286.3	78.4	50.8	78.4	30.849	30.807	39.411	39.353
20180524:08:58:57	23.6	16.4	-2.8	23.8	0.25	2.2	0.25	2.0	124.2	285.6	286.3	78.4	50.7	78.5	32.191	32.15	41.13	41.073
20180524:09:03:57	23.6	16.4	-3.0	23.8	0.25	2.2	0.25	2.0	124.3	285.6	286.3	78.5	50.8	78.7	33.581	33.525	42.909	42.835
20180524:09:08:57	23.6	16.5	-3.0	23.8	0.25	2.2	0.25	2.0	124.4	285.5	286.3	78.7	50.7	78.8	34.918	34.847	44.622	44.528
20180524:09:13:57	23.6	16.5	-2.9	23.8	0.25	2.2	0.25	2.0	124.5	285.6	286.4	78.8	50.8	78.9	36.3	36.234	46.393	46.305
20180524:09:18:57	23.6	16.5	-2.8	23.8	0.25	2.2	0.25	2.0	124.5	285.6	286.3	78.9	50.8	79.0	37.657	37.564	48.131	48.009
20180524:09:23:57	23.6	16.5	-2.8	23.8	0.25	2.2	0.25	2.0	124.6	285.6	286.3	79.1	50.8	79.1	38.982	38.951	49.83	49.788
20180524:09:28:57	23.6	16.6	-2.7	23.8	0.25	2.2	0.25	2.0	124.7	285.6	286.3	79.2	50.7	79.3	40.38	40.272	51.622	51.481
20180524:09:33:57	23.6	16.7	-2.7	23.8	0.25	2.2	0.25	2.0	124.9	285.5	286.4	79.4	50.8	79.4	41.714	41.636	53.333	53.231
20180524:09:38:57	23.6	16.5	-2.7	23.8	0.25	2.2	0.25	1.9	124.6	285.6	286.3	79.5	50.8	79.5	43.077	43.003	55.081	54.985
20180524:09:43:57	23.6	16.5	-2.7	23.8	0.25	2.2	0.25	1.9	124.6	285.6	286.3	79.7	50.8	79.6	44.439	44.322	56.83	56.677
20180524:09:48:57	23.6	16.2	-3.0	23.8	0.25	2.2	0.25	1.9	123.8	285.6	286.3	79.9	50.8	79.8	45.772	45.696	58.541	58.44
20180524:09:53:57	23.6	16.3	-2.9	23.8	0.25	2.2	0.25	1.9	124.0	285.6	286.4	80.1	50.8	79.9	47.161	47.021	60.324	60.141
20180524:09:58:57	23.6	16.4	-2.8	23.8	0.25	2.2	0.25	2.0	124.3	285.6	286.4	80.3	50.8	80.1	48.472	48.397	62.009	61.908
20180524:10:03:57	23.6	16.5	-2.7	23.8	0.25	2.2	0.25	2.0	124.6	285.6	286.3	80.4	50.9	80.2	49.83	49.718	63.754	63.605
20180524:10:08:57	23.6	16.6	-2.6	23.8	0.25	2.2	0.25	2.0	124.7	285.6	286.3	80.6	50.8	80.4	51.19	51.096	65.502	65.376
20180524:10:13:57	23.6	16.6	-2.6	23.8	0.25	2.2	0.25	2.0	124.7	285.6	286.3	80.7	50.9	80.5	52.525	52.416	67.219	67.073
20180524:10:18:57	23.6	16.6	-2.6	23.8	0.25	2.2	0.25	2.0	124.9	285.6	286.4	80.9	50.8	80.7	53.91	53.763	69	68.805
20180524:10:23:57	23.6	16.6	-2.5	23.8	0.25	2.2	0.25	2.0	124.8	285.7	286.4	81.1	50.9	80.8	55.228	55.13	70.696	70.562
20180524:10:28:57	23.6	16.6	-2.5	23.8	0.25	2.2	0.25	2.0	124.7	285.6	286.4	81.2	50.8	81.0	56.577	56.445	72.433	72.254
20180524:10:33:57	23.6	16.6	-2.4	23.8	0.25	2.2	0.25	2.0	124.8	285.6	286.3	81.4	50.9	81.1	57.955	57.813	74.207	74.015
20180524:10:38:57	23.7	16.7	-2.3	23.8	0.25	2.2	0.25	2.0	124.9	285.7	286.4	81.6	50.9	81.2	59.284	59.141	75.919	75.724
20180524:10:43:57	23.7	16.6	-2.4	23.8	0.25	2.2	0.25	2.0	124.8	285.7	286.3	81.7	50.9	81.4	60.67	60.523	77.704	77.504
20180524:10:48:57	23.6	16.7	-2.7	23.8	0.25	2.2	0.25	2.0	125.0	285.6	286.4	81.9	50.9	81.5	62.008	61.843	79.428	79.203
20180524:10:53:57	23.6	16.2	-3.0	23.8	0.25	2.2	0.25	1.9	123.9	285.6	286.3	82.0	50.9	81.7	63.341	63.207	81.146	80.961
20180524:10:58:57	23.6	16.1	-2.9	23.8	0.25	2.2	0.25	2.0	123.6	285.7	286.4	82.1	50.9	81.8	64.722	64.553	82.928	82.695
20180524:11:03:57	23.6	16.2	-2.8	23.8	0.25	2.2	0.25	2.0	123.8	285.6	286.3	82.3	50.9	82.0	66.064	65.876	84.657	84.4
20180524:11:08:57	23.6	16.2	-2.7	23.8	0.25	2.2	0.25	2.0	123.8	285.6	286.4	82.4	50.9	82.1	67.425	67.248	86.413	86.169
20180524:11:13:57	23.6	16.2	-2.7	23.8	0.25	2.2	0.25	2.0	123.8	285.7	286.4	82.5	51.0	82.2	68.783	68.576	88.165	87.882
20180524:11:18:57	23.6	16.2	-2.6	23.8	0.25	2.2	0.25	2.0	123.9	285.7	286.4	82.6	50.9	82.3	70.12	69.952	89.891	89.656
20180524:11:23:57	23.6	16.2	-2.6	23.8	0.25	2.2	0.25	2.0	123.8	285.7	286.4	82.7	51.0	82.4	71.509	71.279	91.683	91.368
20180524:11:28:57	23.6	16.1	-2.5	23.8	0.25	2.2	0.25	2.0	123.6	285.6	286.3	82.7	50.9	82.6	72.847	72.648	93.411	93.135
20180524:11:33:57	23.6	16.1	-2.6	23.8	0.25	2.2	0.25	2.0	123.6	285.6	286.4	82.9	51.0	82.7	74.185	73.994	95.139	94.872
20180524:11:38:57	23.6	16.0	-2.6	23.8	0.25	2.2	0.25	2.0	123.3	285.6	286.4	83.0	50.9	82.8	75.575	75.32	96.933	96.585
20180524:11:43:57	23.6	16.0	-2.6	23.8	0.25	2.2	0.25	2.0	123.4	285.7	286.4	83.2	51.0	82.9	76.91	76.691	98.659	98.355
20180524:11:48:57	23.6	16.0	-2.6	23.8	0.25	2.2	0.25	2.0	123.4	285.7	286.4	83.3	51.0	83.0	78.269	78.021	100.415	100.073
20180524:11:53:57	23.6	15.9	-2.7	23.8	0.25	2.2	0.25	1.9	123.1	285.7	286.4	83.4	51.0	83.2	79.628	79.397	102.172	101.852
20180524:11:58:57	23.6	15.6	-2.8	23.8	0.25	2.2	0.25	1.9	122.4	285.7	286.4	83.6	51.0	83.3	80.962	80.72	103.898	103.562
20180524:12:03:57	23.6	16.0	-2.5	23.8	0.25	2.2	0.25	2.0	123.5	285.7	286.4	83.6	51.0	83.4	82.351	82.082	105.694	105.323
20180524:12:08:57	23.6	16.2	-2.5	23.8	0.25	2.2	0.25	1.9	123.8	285.7	286.4	83.7	51.0	83.5	83.689	83.438	107.426	107.077
20180524:12:13:57	23.6	16.1	-2.4	23.8	0.25	2.2	0.25	1.9	123.7	285.8	286.5	83.8	50.9	83.6	85.027	84.758	109.157	108.786
20180524:12:18:57	23.6	16.2	-2.7	23.8	0.25	2.2	0.25	1.9	123.8	285.7	286.4	83.9	51.0	83.7	86.413	86.131	110.952	110.562
20180524:12:23:57	23.6	16.3	-2.7	23.8	0.25	2.2	0.25	1.9	124.0	285.8	286.5	84.0	50.9	83.8	87.74	87.46	112.67	112.282
20180524:12:28:57	23.6	16.2	-2.7	23.8	0.25	2.2	0.25	1.9	123.8	285.8	286.4	84.1	51.0	84.0	89.098	88.837	114.43	114.066
20180524:12:33:57	23.6	16.2	-2.7	23.8	0.25	2.2	0.25	1.9	123.8	285.8	286.4	84.2	50.9	84.1	90.472	90.155	116.209	115.773
20180524:12:38:57	23.6	16.1	-2.7	23.8	0.25	2.2	0.25	1.9	123.6	285.8	286.4	84.3	51.0	84.2	91.799	91.508	117.928	117.524
20180524:12:43:57	23.6	16.1	-2.6	23.8	0.25	2.2	0.25	1.9	123.6	285.8	286.3	84.3	50.9	84.3	93.179	92.877	119.717	119.299
20180524:12:48:57	23.6	16.1	-2.4	23.8	0.25	2.2	0.25	1.9	123.6	285.8	286.3	84.4	50.9	84.4	94.528	94.185	121.47	120.994
20180524:12:53:57	23.6	16.3	-2.4	23.8	0.25	2.2	0.25	1.9	124.0	285.7	286.3	84.4	50.9	84.5	95.854	95.567	123.189	122.786
20180524:12:58:57	23.6	16.3	-2.5	23.8	0.25	2.2	0.25	1.9	124.1	285.7	286.3	84.5	50.9	84.6	97.246	96.89	124.994	124.502
20180524:13:03:57	23.6	15.7	-3.0	23.8	0.25	2.2	0.25	1.9	122.6	285.7	286.4	84.5	50.9	84.7	98.567	98.266	126.707	126.286
20180524:13:08:57	23.6	16.0	-2.6	23.8	0.25	2.2	0.25	1.9	123.5	285.7	286.3	84.6	51.0	84.7	99.914	99.603	128.454	128.021
20180524:13:13:57	23.6	16.2	-2.5	23.8	0.25	2.2	0.25	1.9	123.8	285.8	286.4	84.6	50.9	84.9	101.299	100.929	130.25	129.741
20180524:13:18:57	23.6	16.2	-2.3	23.8	0.25	2.2	0.25	1.9	123.9	285.8	286.4	84.6	50.9	84.9	102.635	102.3	131.983	131.521
20180524:13:23:57	23.6	16.2	-2.3	23.8	0.25	2.2	0.25	1.9	123.9	285.8	286.3	84.7	50.9	85.0	103.997	103.631	133.75	133.248
20180524:13:28:57	23.6	16.3	-2.8	23.8	0.25	2.2	0.25	2.0	123.9	285.8	286.4	84.9	51.0	85.1	105.367	105.007	135.528	135.034
20180524:13:33:57	23.6	16.2	-2.8	23.8	0.25	2.2	0.25	1.9	123.8	285.8	286.3	85.0	50.9	85.2	106.698	106.324	137.256	136.744
20180524:13:38:57	23.6	16.4	-2.7	23.8	0.25	2.2	0.25	1.9	124.2	285.8	286.4	85.1	51.0	85.3	108.08	107.68	139.05	138.506
20180524:13:43:57	23.6	16.2	-2.7	23.8	0.25	2.2	0.25	1.9	123.9	285.8	286.4	85.2	51.0	85.4	109.432	109.046	140.806	140.28
20180524:13:48:57	23.6	16.3	-2.7	23.8	0.25	2.2	0.25	1.9	123.9	285.8	286.4	85.3	51.0	85.5	110.76	110.362	142.53	141.989
20180524:13:53:57	23.6	16.2	-2.7	23.8	0.25	2.2	0.25	1.9	123.9	285.8	286.4	85.4	51.0	85.6	112.149	111.74	144.333	143.78
20180524:13:58:57	23.6	16.3	-2.6	23.8	0.25	2.2	0.25	2.0	124.0	285.8	286.4	85.6	51.0	85.7	113.486	113.068	146.07	145.506
20180524:14:03:57	23.6	16.2	-2.6	23.8	0.25	2.2	0.25	2.0	123.8	285.7	286.4	85.7	51.0	85.8	114.827	114.432	147.813	147.278
20180524:14:08:57	23.6	15.6	-3.2	23.8	0.25	2.2	0.25	1.9	122.4	285.8	286.4	85.8	51.0	85.9	116.214	115.787	149.617	149.039
20180524:14:13:57	23.6	15.8	-2.7	23.8	0.25	2.2	0.25	1.9	122.9	285.8	286.4	85.9	51.0	86.0	117.54	117.107	151.341	150.758
20180524:14:18:57	23.6	16.0	-2.5	23.8	0.25	2.2	0.25	1.9	123.3	285.8	286.4	85.9	50.9	86.0	118.894	118.48	153.102	152.543
20180524:14:23:57	23.6	16.1	-2.4	23.8	0.25	2.2	0.25	1.9	123.5	285.8	286.3	85.9	50.9	86.1	120.272	119.804	154.894	154.265

Time:	Stack Pressure:	Sat% H2O:	Static:	Barometric:	Flowmeter1:	Vacuum1:	Flowmeter2:	Vacuum2:	Stack Temp:	Sorbent Temp:	Probe Temp:	DGM#1 Temp:	Condenser Temp:	DGM#2 Temp:	DGM1*:	DGM2*:	DGM1:	DGM2:
day:hh:mm:ss	in-Hg	Percent	in-H2O	in-Hg	l/min	in-Hg	l/min	in-Hg	degF	degF	degF	degF	degF	degF	liters STP	liters STP	liters nominal	liters nominal
20180524:14:28:57	23.6	16.3	-2.8	23.8	0.25	2.2	0.25	2.0	124.0	285.8	286.4	86.0	50.9	86.2	121.605	121.182	156.628	156.058
20180524:14:33:57	23.6	16.4	-2.8	23.8	0.25	2.2	0.25	1.9	124.2	285.8	286.4	86.1	51.0	86.3	122.973	122.514	158.407	157.791
20180524:14:38:57	23.6	16.4	-2.7	23.8	0.25	2.2	0.25	2.0	124.2	285.7	286.4	86.2	51.0	86.4	124.334	123.842	160.178	159.521
20180524:14:43:57	23.6	16.3	-2.5	23.8	0.25	2.2	0.25	1.9	123.9	285.8	286.4	86.3	51.0	86.5	125.669	125.219	161.917	161.314
20180524:14:48:57	23.6	16.2	-2.5	23.8	0.25	2.2	0.25	1.9	123.9	285.8	286.4	86.5	50.9	86.6	127.052	126.546	163.717	163.041
20180524:14:53:57	23.6	16.3	-2.5	23.8	0.25	2.2	0.25	2.0	124.2	285.8	286.4	86.6	51.0	86.7	128.407	127.927	165.481	164.84
20180524:14:58:57	23.6	16.4	-2.4	23.8	0.25	2.2	0.25	1.9	124.3	285.8	286.4	86.7	50.9	86.8	129.733	129.246	167.209	166.56
20180524:15:03:57	23.6	16.5	-2.3	23.8	0.25	2.2	0.25	1.9	124.4	285.8	286.4	86.9	51.0	86.9	131.12	130.581	169.019	168.301
20180524:15:08:57	23.6	16.5	-2.3	23.8	0.25	2.2	0.25	1.9	124.5	285.8	286.4	87.0	51.0	87.0	132.457	131.946	170.761	170.079
20180524:15:13:57	23.6	16.1	-2.9	23.8	0.25	2.2	0.25	1.9	123.5	285.8	286.4	87.2	51.0	87.1	133.786	133.273	172.494	171.81
20180524:15:18:57	23.6	16.1	-2.6	23.8	0.25	2.2	0.25	2.0	123.6	285.7	286.4	87.3	51.0	87.2	135.18	134.65	174.313	173.605
20180524:15:23:57	23.6	16.2	-2.5	23.8	0.25	2.2	0.25	2.0	123.9	285.8	286.4	87.4	51.0	87.3	136.509	135.961	176.046	175.316
20180524:15:28:57	23.6	16.3	-2.4	23.8	0.25	2.2	0.25	2.0	124.0	285.8	286.4	87.6	51.1	87.4	137.851	137.315	177.798	177.083
20180524:15:33:57	23.6	16.3	-2.5	23.8	0.25	2.2	0.25	1.9	124.1	285.8	286.4	87.7	51.0	87.5	139.24	138.675	179.611	178.857
20180524:15:38:57	23.6	16.2	-2.5	23.8	0.25	2.2	0.25	2.0	123.7	285.8	286.4	87.8	51.1	87.6	140.567	139.999	181.344	180.585
20180524:15:43:57	23.6	16.2	-2.5	23.8	0.25	2.2	0.25	2.0	123.8	285.7	286.4	87.9	51.0	87.7	141.918	141.375	183.109	182.382
20180524:15:48:57	23.6	15.8	-2.8	23.8	0.25	2.2	0.25	2.0	122.9	285.8	286.4	88.1	51.1	87.8	143.302	142.693	184.917	184.103
20180524:15:53:57	23.6	15.8	-2.6	23.8	0.25	2.2	0.25	1.9	122.9	285.7	286.4	88.2	51.1	87.9	144.639	144.049	186.665	185.874
20180524:15:58:57	23.6	16.0	-2.5	23.8	0.25	2.2	0.25	1.9	123.3	285.8	286.4	88.3	51.0	88.0	145.992	145.409	188.433	187.652
20180524:16:03:57	23.6	16.1	-2.5	23.8	0.25	2.2	0.25	2.0	123.5	285.7	286.4	88.4	51.1	88.1	147.366	146.733	190.23	189.382
20180524:16:08:57	23.6	16.0	-2.5	23.8	0.25	2.2	0.25	2.0	123.3	285.7	286.4	88.5	51.0	88.2	148.704	148.11	191.98	191.182
20180524:16:13:57	23.6	16.0	-2.3	23.8	0.25	2.2	0.25	2.0	123.2	285.7	286.4	88.6	51.1	88.3	150.061	149.425	193.756	192.902
20180524:16:18:57	23.6	16.0	-2.3	23.8	0.25	2.2	0.25	1.9	123.3	285.8	286.5	88.7	51.1	88.4	151.431	150.781	195.548	194.675
20180524:16:23:57	23.6	16.0	-2.2	23.8	0.25	2.2	0.25	1.9	123.4	285.8	286.4	88.8	51.1	88.5	152.764	152.14	197.293	196.453
20180524:16:28:57	23.6	16.0	-2.2	23.8	0.25	2.2	0.25	2.0	123.4	285.8	286.5	88.9	51.1	88.6	154.13	153.469	199.081	198.192
20180524:16:33:57	23.6	16.0	-2.1	23.8	0.25	2.2	0.25	1.9	123.3	285.7	286.5	88.9	51.0	88.7	155.497	154.846	200.87	199.994
20180524:16:38:57	23.6	16.1	-2.1	23.8	0.25	2.2	0.25	2.0	123.5	285.8	286.4	89.0	51.1	88.8	156.83	156.157	202.617	201.711
20180524:16:43:57	23.6	16.1	-2.5	23.8	0.25	2.2	0.25	2.0	123.5	285.8	286.4	89.0	51.0	88.9	158.199	157.509	204.409	203.479
20180524:16:48:57	23.6	15.9	-2.8	23.8	0.25	2.2	0.25	2.0	123.1	285.7	286.3	89.0	51.0	88.9	159.567	158.871	206.2	205.263
20180524:16:53:57	23.5	15.6	-2.9	23.8	0.25	2.2	0.25	2.0	122.3	285.7	286.4	89.0	51.1	89.0	160.899	160.204	207.943	207.008
20180524:16:58:57	23.6	15.9	-2.7	23.8	0.25	2.2	0.25	2.0	123.1	285.7	286.4	89.0	51.0	89.0	162.273	161.582	209.743	208.812
20180524:17:03:57	23.6	15.9	-2.7	23.8	0.25	2.2	0.25	2.0	123.1	285.7	286.4	89.2	51.1	89.1	163.641	162.907	211.533	210.547
20180524:17:08:57	23.6	15.9	-2.6	23.8	0.25	2.2	0.25	2.0	123.0	285.7	286.4	89.3	51.1	89.2	164.973	164.245	213.278	212.299
20180524:17:13:57	23.6	15.9	-2.4	23.8	0.25	2.2	0.25	2.0	123.1	285.7	286.4	89.4	51.0	89.3	166.346	165.616	215.078	214.096
20180524:17:18:57	23.6	16.0	-2.4	23.8	0.25	2.2	0.25	2.0	123.3	285.8	286.4	89.5	51.1	89.3	167.707	166.943	216.861	215.835
20180524:17:23:57	23.6	16.0	-2.3	23.8	0.25	2.2	0.25	2.0	123.3	285.8	286.5	89.6	51.1	89.4	169.039	168.322	218.607	217.641
20180524:17:28:57	23.6	15.9	-2.4	23.8	0.25	2.2	0.25	2.0	123.2	285.8	286.4	89.7	51.0	89.5	170.411	169.658	220.407	219.393
20180524:17:33:57	23.6	15.9	-2.4	23.8	0.25	2.2	0.25	2.0	123.2	285.8	286.5	89.8	51.1	89.6	171.777	170.98	222.198	221.126
20180524:17:38:57	23.6	16.0	-2.4	23.8	0.25	2.2	0.25	2.0	123.3	285.9	286.4	89.9	51.1	89.6	173.109	172.355	223.946	222.929
20180524:17:43:57	23.6	15.9	-2.3	23.8	0.25	2.2	0.25	2.0	123.1	285.8	286.4	90.0	51.0	89.8	174.48	173.682	225.744	224.669
20180524:17:48:57	23.6	15.8	-2.3	23.8	0.25	2.2	0.25	2.0	122.9	285.9	286.5	90.1	51.1	89.8	175.847	175.049	227.539	226.462
20180524:17:53:57	23.5	15.4	-2.8	23.8	0.25	2.2	0.25	2.0	121.8	285.8	286.4	90.2	51.1	89.9	177.18	176.407	229.289	228.244
20180524:17:58:57	23.5	14.8	-3.0	23.7	0.25	2.2	0.25	1.9	120.5	285.8	286.5	90.2	51.1	90.0	178.55	177.724	231.087	229.972
20180524:18:03:57	23.5	14.6	-2.8	23.8	0.25	2.2	0.25	1.9	120.0	285.8	286.4	90.3	51.2	90.0	179.925	179.104	232.893	231.784
20180524:18:08:57	23.6	14.9	-2.5	23.8	0.25	2.2	0.25	2.0	120.7	285.8	286.5	90.3	51.1	90.1	181.268	180.425	234.656	233.517
20180524:18:13:57	23.6	15.0	-2.5	23.8	0.25	2.2	0.25	2.0	120.9	285.8	286.4	90.3	51.0	90.2	182.623	181.778	236.435	235.293
20180524:18:18:57	23.5	15.0	-2.9	23.8	0.25	2.2	0.25	2.0	121.0	285.8	286.4	90.4	51.1	90.2	184.011	183.149	238.257	237.092
20180524:18:23:57	23.5	15.0	-2.8	23.7	0.25	2.2	0.25	2.0	120.8	285.8	286.4	90.5	51.1	90.3	185.348	184.48	240.013	238.84
20180524:18:28:57	23.5	15.0	-2.9	23.8	0.25	2.2	0.25	2.0	121.0	285.8	286.4	90.5	51.0	90.3	186.706	185.857	241.796	240.648
20180524:18:33:57	23.5	15.0	-2.9	23.7	0.25	2.2	0.25	2.0	121.0	285.8	286.4	90.6	51.1	90.4	188.102	187.202	243.631	242.415
20180524:18:38:57	23.5	14.9	-2.9	23.7	0.25	2.2	0.25	2.0	120.7	285.8	286.4	90.7	51.1	90.5	189.441	188.529	245.391	244.158
20180524:18:43:57	23.5	14.8	-2.9	23.8	0.25	2.2	0.25	2.0	120.3	285.7	286.5	90.7	51.1	90.5	190.789	189.909	247.161	245.97
20180524:18:48:57	23.5	14.8	-2.9	23.7	0.25	2.2	0.25	2.0	120.4	285.7	286.4	90.9	51.0	90.6	192.188	191.235	249	247.712
20180524:18:53:57	23.5	14.8	-2.9	23.7	0.25	2.2	0.25	2.0	120.4	285.8	286.4	90.9	51.1	90.7	193.539	192.59	250.776	249.492
20180524:18:58:57	23.5	14.8	-3.0	23.8	0.25	2.2	0.25	2.0	120.5	285.8	286.4	91.0	51.1	90.7	194.882	193.957	252.543	251.289
20180524:19:03:57	23.5	14.9	-2.9	23.8	0.25	2.2	0.25	2.0	120.6	285.9	286.4	91.1	51.0	90.8	196.274	195.292	254.372	253.043
20180524:19:08:57	23.5	14.9	-2.9	23.8	0.25	2.2	0.25	2.0	120.7	285.8	286.4	91.2	51.0	90.9	197.635	196.675	256.161	254.861
20180524:19:13:57	23.5	14.9	-2.9	23.8	0.25	2.2	0.25	2.0	120.6	285.9	286.5	91.2	51.0	90.9	198.97	198.017	257.917	256.624
20180524:19:18:57	23.5	14.8	-3.0	23.8	0.25	2.2	0.25	2.0	120.4	285.9	286.5	91.3	51.0	91.0	200.35	199.346	259.731	258.37
20180524:19:23:57	23.5	14.2	-2.9	23.8	0.25	2.2	0.25	2.0	119.0	285.8	286.5	91.3	51.0	91.0	201.715	200.727	261.526	260.186
20180524:19:28:57	23.5	14.1	-2.9	23.8	0.25	2.2	0.25	2.0	118.8	285.8	286.4	91.3	51.0	91.0	203.058	202.055	263.293	261.93
20180524:19:33:57	23.5	14.4	-2.9	23.8	0.25	2.2	0.25	2.0	119.5	285.8	286.5	91.3	51.0	91.1	204.427	203.41	265.093	263.712
20180524:19:38:57	23.5	14.6	-3.0	23.8	0.25	2.2	0.25	2.0	119.9	285.8	286.4	91.2	51.0	91.1	205.812	204.78	266.913	265.513
20180524:19:43:57	23.5	14.2	-3.0	23.8	0.25	2.2	0.25	2.0	118.9	285.7	286.4	91.2	51.0	91.1	207.153	206.118	268.676	267.271
20180524:19:48:57	23.5	14.1	-3.0	23.8	0.25	2.2	0.25	2.0	118.8	285.8	286.5	91.2	51.0	91.2	208.517	207.497	270.469	269.083
20180524:19:53:57	23.5	14.5	-3.0	23.8	0.25	2.2	0.25	2.0	119.8	285.8	286.4	91.2	51.0	91.2	209.922	208.858	272.315	270.872
20180524:19:58:57	23.5	14.9	-3.0	23.8	0.25	2.2	0.25	2.0	120.6	285.8	286.5	91.2	51.0	91.2	211.272	210.182	274.089	272.613
20180524:20:03:57	23.5	15.0	-3.0	23.8	0.25	2.2	0.25	2.0	120.9	285.9	286.4	91.2	51.0	91.2	212.621	211.571	275.863	274.438
20180524:20:08:57	23.5	15.2	-3.0	23.8	0.25	2.2	0.25	2.0	121.4	285.9	286.5	91.2	51.0	91.2	214.023	212.907	277.706	276.194
20180524:20:13:57	23.5	15.3	-3.1	23.8	0.25	2.2	0.25	2.0	121.6	285.9	286.4	91.3	51.0	91.3	215.385	214.249	279.496	277.959
20180524:20:18:57	23.5	15.3	-3.0	23.8	0.25	2.2	0.25	2.0	121.7	285.9	286.5	91.3	51.0	91.3	216.724	215.635	281.256	279.78
20180524:20:23:57	23.5	15.3	-3.0	23.8	0.25	2.2	0.25	2.0	121.8	285.9	286.4	91.2	51.0	91.2	218.107	216.976	283.074	281.543
20180524:20:28:57	23.5	15.4	-3.0	23.8	0.25	2.2	0.25	2.0	121.8	285.9	286.4	91.2	51.1	91.3	219.486	218.331	284.887	283.325
20180524:20:33:57	23.5	15.4	-3.1	23.8	0.25	2.2	0.25	2.0	121.8	285.9	286.5	91.2	51.0	91.3	220.837	219.7	286.663	285.124
20180524:20:38:57	23.5	14.8	-3.1	23.8	0.25	2.2	0.25	2.0	120.6	285.9	286.5	91.2	51.1	91.3	222.197	221.04	288.45	286.885
20180524:20:43:57	23.5	14.7	-3.1	23.8	0.25	2.2	0.25	2.0	120.2	285.8	286.4	91.1	51.1	91.2	223.599	222.421	290.293	288.701
20180524:20:48:57	23.5	14.8	-3.0	23.8	0.25	2.2	0.25	2.0	120.3	285.8	286.5	91.0	51.0	91.2	224.957	223.782	292.076	290.489
20180524:20:53:57	23.5	15.3	-3.1	23.8	0.25	2.2	0.25	2.0	121.5	285.9	286.5	91.1	51.2	91.3	226.316	225.11	293.861	292.235
20180524:20:58:57	23.5	15.4	-3.1	23.8	0.25	2.2	0.25	2.0	121.9	285.9	286.5	91.1	51.2	91.2	227.718	226.499	295.704	294.06
20180524:21:03:57	23.5	15.5	-3.1	23.8	0.25	2.2	0.25	2.0	122.0	285.8	286.5	91.1	51.1	91.2	229.083	227.841	297.496	295.823
20180524:21:08:57	23.5	15.5	-3.1	23.8	0.25	2.2	0.25	2.0	122.1	285.9	286.5	91.2	51.2	91.2	230.426	229.186	299.261	297.59
20180524:21:13:57	23.5	15.5	-3.1	23.8	0.25	2.2	0.25	2.0	122.1	285.9	286.4	91.2	51.2	91.3	231.812	230.575	301.081	299.415
20180524:21:18:57	23.5	15.5	-3.1	23.8	0.25	2.2	0.25	2.0	122.1	285.8	286.4	91.2	51.1	91.2	233.193	231.913	302.896	301.173
20180524:21:23:57	23.5	15.6	-3.2	23.8	0.25	2.2	0.25	2.0	122.3	285.9	286.5	91.2	51.2	91.2	234.542	233.272	304.669	302.959
20180524:21:28:57	23.5	15.6	-3.1	23.8	0.25	2.2	0.25	2.0	122.4	286.0	286.5	91.2	51.2	91.2	235.905	234.651	306.459	304.771
20180524:21:33:57	23.5	15.4	-3.2	23.8	0.25	2.2	0.25	2.0	122.0	286.0	286.6	91.2	51.2	91.2	237.312	235.992	308.307	306.532
20180524:21:38:57	23.5	14.9	-3.1	23.8	0.25	2.2	0.25	2.0	120.8	285.9	286.5	91.2	51.3	91.2	238.666	237.37	310.085	308.342
20180524:21:43:57	23.5	14.7	-3.2	23.8	0.25	2.2	0.25	2.0	120.3	285.8	286.5	91.1	51.2	91.2	240.021	238.737	311.865	310.137
20180524:21:48:57	23.5	15.1	-3.2	23.8	0.25	2.2	0.25	2.0	121.1	285.7	286.3	91.0	51.1	91.1	241.424	240.074	313.707	311.893

Time: day:hh:mm:ss	Stack Pressure: in-Hg	Sat% H2O: Percent	Static: in-H2O	Barometric: in-Hg	Flowmeter1: l/min	Vacuum1: in-Hg	Flowmeter2: l/min	Vacuum2: in-Hg	Stack Temp: degF	Sorbent Temp: degF	Probe Temp: degF	DGM#1 Temp: degF	Condenser Temp: degF	DGM#2 Temp: degF	DGM1*: liters STP	DGM2*: liters STP	DGM1: liters nominal	DGM2: liters nominal
20180524:21:53:57	23.5	15.4	-3.2	23.8	0.25	2.2	0.25	2.0	121.9	285.9	286.5	91.0	51.2	91.1	242.787	241.471	315.496	313.727
20180524:21:58:57	23.5	15.6	-3.2	23.8	0.25	2.3	0.25	2.0	122.3	285.9	286.4	91.0	51.2	91.1	244.143	242.822	317.276	315.502
20180524:22:03:57	23.5	15.6	-3.2	23.8	0.25	2.2	0.25	2.0	122.2	285.9	286.6	91.1	51.3	91.1	245.522	244.157	319.087	317.256
20180524:22:08:57	23.5	15.6	-3.2	23.8	0.25	2.2	0.25	2.0	122.2	285.8	286.4	91.1	51.3	91.1	246.911	245.556	320.911	319.092
20180524:22:13:57	23.5	15.5	-3.2	23.8	0.25	2.2	0.25	2.0	122.2	285.9	286.5	91.2	51.2	91.1	248.258	246.892	322.681	320.848
20180524:22:18:57	23.5	15.5	-3.2	23.8	0.25	2.2	0.25	2.0	122.1	285.8	286.4	91.2	51.3	91.1	249.624	248.239	324.476	322.617
20180524:22:23:57	23.5	15.5	-3.2	23.8	0.25	2.2	0.25	2.0	122.0	285.9	286.5	91.2	51.2	91.1	251.034	249.63	326.328	324.444
20180524:22:28:57	23.5	15.5	-3.2	23.8	0.25	2.2	0.25	2.0	122.1	285.9	286.5	91.2	51.3	91.1	252.39	250.972	328.109	326.207
20180524:22:33:57	23.5	15.0	-3.2	23.8	0.25	2.2	0.25	2.0	120.9	285.9	286.5	91.2	51.3	91.1	253.742	252.332	329.885	327.992
20180524:22:38:57	23.5	14.8	-3.2	23.8	0.25	2.2	0.25	2.0	120.3	285.9	286.5	91.2	51.2	91.1	255.139	253.709	331.72	329.801
20180524:22:43:57	23.5	14.7	-3.2	23.8	0.25	2.2	0.25	2.0	120.2	285.8	286.5	91.2	51.3	91.1	256.502	255.048	333.511	331.56
20180524:22:48:57	23.5	15.2	-3.3	23.8	0.25	2.2	0.25	2.0	121.4	285.9	286.5	91.2	51.2	91.0	257.856	256.433	335.289	333.378
20180524:22:53:57	23.5	15.3	-3.3	23.8	0.25	2.2	0.25	2.0	121.7	286.0	286.6	91.2	51.3	91.0	259.23	257.8	337.094	335.173
20180524:22:58:57	23.5	15.3	-3.3	23.8	0.25	2.2	0.25	2.0	121.7	286.0	286.5	91.1	51.3	91.0	260.625	259.135	338.926	336.927
20180524:23:03:57	23.5	15.3	-3.3	23.8	0.25	2.2	0.25	2.0	121.7	285.8	286.4	91.0	51.3	91.0	261.977	260.53	340.702	338.758
20180524:23:08:57	23.5	14.8	-3.3	23.8	0.25	2.2	0.25	2.0	120.4	285.7	286.4	91.0	51.3	90.9	263.34	261.878	342.493	340.528
20180524:23:13:57	23.5	14.6	-3.3	23.8	0.25	2.2	0.25	2.0	119.8	285.7	286.4	91.0	51.2	90.9	264.751	263.212	344.344	342.28
20180524:23:18:57	23.5	14.6	-3.3	23.8	0.25	2.2	0.25	2.0	119.8	285.7	286.4	91.0	51.3	90.9	266.118	264.608	346.141	344.113
20180524:23:23:57	23.5	15.1	-3.3	23.8	0.25	2.2	0.25	2.0	121.0	285.8	286.4	91.0	51.2	90.8	267.462	265.945	347.906	345.868
20180524:23:28:57	23.5	15.2	-3.3	23.8	0.25	2.2	0.25	2.0	121.3	285.8	286.4	90.8	51.2	90.8	268.854	267.3	349.733	347.647
20180524:23:33:57	23.5	15.3	-3.3	23.8	0.25	2.2	0.25	2.0	121.5	285.8	286.4	90.7	51.2	90.8	270.228	268.684	351.537	349.464
20180524:23:38:57	23.5	15.4	-3.4	23.8	0.25	2.2	0.25	2.0	121.8	285.9	286.4	90.6	51.2	90.7	271.576	270.024	353.306	351.224
20180524:23:43:57	23.5	15.4	-3.4	23.8	0.25	2.2	0.25	2.0	121.9	285.8	286.4	90.5	51.2	90.7	272.942	271.392	355.098	353.019
20180524:23:48:57	23.5	15.5	-3.4	23.8	0.25	2.2	0.25	2.0	122.0	285.9	286.4	90.3	51.1	90.7	274.337	272.757	356.928	354.81
20180524:23:53:57	23.5	15.6	-3.4	23.8	0.25	2.2	0.25	2.0	122.2	285.9	286.5	90.3	51.2	90.6	275.68	274.1	358.691	356.573
20180524:23:58:57	23.5	15.5	-3.4	23.8	0.25	2.2	0.25	2.0	122.2	285.9	286.4	90.2	51.2	90.6	277.048	275.489	360.485	358.397
20180525:00:03:57	23.5	15.6	-3.4	23.8	0.25	2.2	0.25	2.0	122.3	285.8	286.4	90.1	51.2	90.6	278.456	276.846	362.331	360.179
20180525:00:08:57	23.5	15.5	-3.4	23.8	0.25	2.2	0.25	2.0	122.0	285.9	286.5	90.0	51.2	90.5	279.807	278.178	364.104	361.927
20180525:00:13:57	23.5	14.8	-3.4	23.8	0.25	2.2	0.25	2.0	120.5	285.8	286.4	89.9	51.2	90.4	281.156	279.574	365.872	363.759
20180525:00:18:57	23.5	14.6	-3.4	23.8	0.25	2.2	0.25	2.0	120.0	285.8	286.4	89.9	51.2	90.4	282.556	280.911	367.707	365.513
20180525:00:23:57	23.5	14.9	-3.3	23.8	0.25	2.2	0.25	2.0	120.6	285.8	286.4	89.8	51.2	90.3	283.92	282.26	369.496	367.284
20180525:00:28:57	23.5	15.3	-3.4	23.8	0.25	2.2	0.25	2.0	121.6	285.9	286.4	89.7	51.2	90.3	285.264	283.649	371.257	369.107
20180525:00:33:57	23.5	15.5	-3.3	23.8	0.25	2.2	0.25	2.0	122.1	285.8	286.4	89.6	51.1	90.2	286.648	284.993	373.072	370.87
20180525:00:38:57	23.5	15.5	-3.1	23.8	0.25	2.2	0.25	2.0	122.2	285.9	286.4	89.6	51.2	90.2	288.023	286.351	374.874	372.652
20180525:00:43:57	23.5	15.7	-3.1	23.8	0.25	2.2	0.25	2.0	122.4	285.9	286.4	89.5	51.1	90.2	289.372	287.727	376.643	374.459
20180525:00:48:57	23.5	15.9	-3.0	23.8	0.25	2.2	0.25	2.0	123.0	285.9	286.4	89.4	51.2	90.1	290.739	289.069	378.433	376.22
20180525:00:53:57	23.5	16.0	-3.1	23.8	0.25	2.2	0.25	2.0	123.3	285.9	286.4	89.4	51.1	90.0	292.128	290.453	380.254	378.036
20180525:00:58:57	23.5	16.1	-3.1	23.8	0.25	2.2	0.25	2.0	123.5	285.9	286.4	89.3	51.2	90.0	293.473	291.819	382.017	379.827
20180525:01:03:57	23.5	16.2	-2.9	23.8	0.25	2.2	0.25	2.0	123.8	286.0	286.5	89.3	51.1	89.9	294.836	293.151	383.802	381.575
20180525:01:08:57	23.5	16.6	-3.4	23.8	0.25	2.2	0.25	2.0	124.6	285.9	286.4	89.2	51.2	89.9	296.242	294.54	385.644	383.397
20180525:01:13:57	23.5	16.9	-4.0	23.8	0.25	2.2	0.25	2.0	125.1	285.9	286.4	89.1	51.1	89.8	297.591	295.883	387.411	385.158
20180525:01:18:57	23.4	16.8	-4.1	23.8	0.25	2.2	0.25	2.0	125.0	285.9	286.4	89.0	51.2	89.8	298.935	297.227	389.172	386.921
20180525:01:23:57	23.4	16.0	-4.3	23.8	0.25	2.2	0.25	2.0	123.1	285.8	286.4	89.0	51.1	89.7	300.34	298.614	391.013	388.741
20180525:01:28:57	23.4	15.9	-4.5	23.8	0.25	2.2	0.25	2.0	122.9	285.8	286.4	88.9	51.2	89.6	301.698	299.955	392.791	390.498
20180525:01:33:57	23.4	16.1	-4.4	23.8	0.25	2.2	0.25	2.0	123.3	285.8	286.4	88.9	51.2	89.6	303.043	301.316	394.552	392.282
20180525:01:38:57	23.4	16.6	-4.3	23.8	0.25	2.2	0.25	2.0	124.4	285.9	286.4	88.8	51.2	89.5	304.438	302.686	396.378	394.079
20180525:01:43:57	23.4	16.9	-4.3	23.8	0.25	2.2	0.25	2.0	125.0	286.0	286.4	88.8	51.2	89.5	305.8	304.024	398.161	395.833
20180525:01:48:57	23.4	16.9	-4.3	23.8	0.25	2.2	0.25	2.0	125.2	286.0	286.4	88.7	51.2	89.4	307.138	305.411	399.913	397.65
20180525:01:53:57	23.4	17.0	-4.3	23.8	0.25	2.2	0.25	2.0	125.2	285.9	286.5	88.6	51.2	89.4	308.526	306.772	401.73	399.434
20180525:01:58:57	23.4	16.9	-4.3	23.8	0.25	2.2	0.25	2.0	125.0	285.9	286.4	88.6	51.2	89.3	309.886	308.1	403.509	401.175
20180525:02:03:57	23.4	16.9	-4.3	23.8	0.25	2.2	0.25	2.0	125.0	285.9	286.4	88.5	51.2	89.3	311.232	309.501	405.27	403.009
20180525:02:08:57	23.4	16.9	-4.4	23.8	0.25	2.2	0.25	2.0	125.0	285.8	286.4	88.5	51.2	89.2	312.615	310.836	407.08	404.759
20180525:02:13:57	23.4	16.7	-4.4	23.8	0.25	2.2	0.25	2.0	124.7	285.8	286.4	88.4	51.2	89.2	313.99	312.185	408.878	406.526
20180525:02:18:57	23.4	16.6	-4.3	23.8	0.25	2.2	0.25	2.0	124.5	285.8	286.4	88.3	51.2	89.1	315.336	313.57	410.639	408.34
20180525:02:23:57	23.5	16.5	-4.1	23.8	0.25	2.2	0.25	2.0	124.2	285.8	286.4	88.3	51.2	89.0	316.703	314.909	412.428	410.094
20180525:02:28:57	23.5	16.3	-3.9	23.8	0.25	2.2	0.25	2.0	123.9	285.7	286.3	88.2	51.2	89.0	318.086	316.278	414.237	411.887
20180525:02:33:57	23.4	15.6	-4.2	23.8	0.25	2.2	0.25	2.0	122.3	285.7	286.4	88.2	51.2	88.9	319.433	317.644	415.998	413.677
20180525:02:38:57	23.4	15.2	-4.4	23.8	0.25	2.2	0.25	1.9	121.3	285.7	286.3	88.2	51.2	88.9	320.791	318.983	417.774	415.43
20180525:02:43:57	23.4	15.8	-4.2	23.8	0.25	2.2	0.25	2.0	122.6	285.7	286.4	88.2	51.2	88.8	322.183	320.374	419.594	417.252
20180525:02:48:57	23.4	16.0	-4.2	23.8	0.25	2.2	0.25	2.0	123.2	285.9	286.4	88.1	51.2	88.8	323.525	321.717	421.35	419.009
20180525:02:53:57	23.4	16.2	-4.2	23.7	0.25	2.2	0.25	2.0	123.7	285.9	286.4	88.1	51.2	88.7	324.883	323.049	423.126	420.754
20180525:02:58:57	23.4	16.3	-4.3	23.8	0.25	2.2	0.25	2.0	123.7	285.9	286.4	88.0	51.2	88.7	326.277	324.439	424.948	422.573
20180525:03:03:57	23.4	16.4	-4.3	23.8	0.25	2.2	0.25	2.0	124.1	285.9	286.5	87.9	51.2	88.6	327.615	325.779	426.698	424.327
20180525:03:08:57	23.4	16.4	-4.5	23.8	0.25	2.2	0.25	1.9	124.0	285.9	286.4	87.9	51.2	88.6	328.968	327.137	428.467	426.105
20180525:03:13:57	23.4	16.4	-4.4	23.8	0.25	2.2	0.25	1.9	124.0	285.8	286.3	87.8	51.1	88.5	330.369	328.499	430.298	427.887
20180525:03:18:57	23.4	16.3	-4.4	23.8	0.25	2.2	0.25	1.9	123.8	285.9	286.5	87.8	51.2	88.5	331.711	329.838	432.052	429.639
20180525:03:23:57	23.4	16.4	-4.5	23.8	0.25	2.2	0.25	1.9	123.9	285.9	286.4	87.7	51.2	88.4	333.06	331.224	433.815	431.453
20180525:03:28:57	23.4	16.3	-4.5	23.8	0.25	2.2	0.25	1.9	123.7	285.8	286.4	87.7	51.2	88.4	334.459	332.557	435.643	433.197
20180525:03:33:57	23.4	16.3	-4.5	23.8	0.25	2.2	0.25	1.9	123.9	285.8	286.3	87.6	51.1	88.3	335.793	333.895	437.385	434.947
20180525:03:38:57	23.4	16.3	-4.4	23.8	0.25	2.2	0.25	2.0	123.7	285.8	286.4	87.6	51.1	88.3	337.141	335.276	439.146	436.754
20180525:03:43:57	23.4	15.3	-4.7	23.8	0.25	2.2	0.25	2.0	121.4	285.7	286.4	87.6	51.1	88.2	338.536	336.604	440.969	438.491
20180525:03:48:57	23.4	15.2	-4.7	23.8	0.25	2.2	0.25	2.0	121.1	285.6	286.4	87.7	51.2	88.2	339.871	337.98	442.713	440.291
20180525:03:53:57	23.4	15.6	-4.6	23.8	0.25	2.2	0.25	2.0	122.2	285.7	286.4	87.7	51.2	88.2	341.22	339.337	444.476	442.066
20180525:03:58:57	23.4	16.0	-4.4	23.8	0.25	2.2	0.25	2.0	123.0	285.8	286.4	87.8	51.3	88.1	342.61	340.66	446.293	443.795
20180525:04:03:57	23.4	16.2	-4.4	23.8	0.25	2.2	0.25	2.0	123.5	285.9	286.4	87.8	51.2	88.1	343.949	342.047	448.043	445.609
20180525:04:08:57	23.4	16.2	-4.4	23.8	0.25	2.2	0.25	2.0	123.6	285.9	286.4	87.7	51.3	88.0	345.303	343.375	449.811	447.346
20180525:04:13:57	23.4	16.4	-4.4	23.8	0.25	2.2	0.25	1.9	123.9	285.9	286.4	87.6	51.2	88.0	346.7	344.734	451.637	449.122
20180525:04:18:57	23.4	16.4	-4.5	23.7	0.25	2.2	0.25	1.9	124.1	285.9	286.4	87.5	51.3	88.0	348.038	346.101	453.385	450.91
20180525:04:23:57	23.4	16.4	-4.5	23.8	0.25	2.2	0.25	1.9	123.9	285.8	286.3	87.4	51.2	87.9	349.39	347.435	455.15	452.654
20180525:04:28:57	23.4	16.4	-4.5	23.8	0.25	2.2	0.25	1.9	124.1	285.8	286.3	87.4	51.2	87.9	350.786	348.826	456.974	454.472
20180525:04:33:57	23.4	16.3	-4.5	23.8	0.25	2.2	0.25	1.9	123.7	285.8	286.4	87.3	51.1	87.9	352.119	350.16	458.715	456.216
20180525:04:38:57	23.4	16.3	-4.4	23.8	0.25	2.2	0.25	1.9	123.8	285.8	286.4	87.3	51.2	87.9	353.464	351.492	460.47	457.957
20180525:04:43:57	23.4	16.2	-4.4	23.8	0.25	2.2	0.25	2.0	123.6	285.8	286.4	87.2	51.1	87.8	354.859	352.869	462.293	459.758
20180525:04:48:57	23.4	16.2	-4.3	23.7	0.25	2.2	0.25	2.0	123.6	285.8	286.4	87.2	51.2	87.8	356.191	354.2	464.031	461.496
20180525:04:53:57	23.4	16.3	-4.4	23.8	0.25	2.2	0.25	2.0	123.7	285.8	286.4	87.0	51.1	87.7	357.542	355.579	465.794	463.299
20180525:04:58:57	23.4	16.2	-4.4	23.8	0.25	2.2	0.25	2.0	123.5	285.8	286.4	87.0	51.3	87.6	358.936	356.937	467.613	465.073
20180525:05:03:57	23.4	16.0	-4.4	23.8	0.25	2.2	0.25	2.0	123.1	285.7	286.4	86.9	51.2	87.6	360.268	358.258	469.352	466.799
20180525:05:08:57	23.4	15.9	-4.4	23.8	0.25	2.2	0.25	2.0	122.9	285.7	286.4	86.9	51.2	87.5	361.626	359.65	471.122	468.617
20180525:05:13:57	23.4	15.8	-4.3	23.8	0.25	2.2	0.25	2.0	122.7	285.7	286.4	86.8	51.2	87.5	363.022	360.978	472.944	470.352

Time:	Stack Pressure:	Sat% H2O:	Static:	Barometric:	Flowmeter1:	Vacuum1:	Flowmeter2:	Vacuum2:	Stack Temp:	Sorbent Temp:	Probe Temp:	DGM#1 Temp:	Condenser Temp:	DGM#2 Temp:	DGM1*:	DGM2*:	DGM1:	DGM2:
day:hh:mm:ss	in-Hg	Percent	in-H2O	in-Hg	l/min	in-Hg	l/min	in-Hg	degF	degF	degF	degF	degF	degF	liters STP	liters STP	liters nominal	liters nominal
20180525:05:18:57	23.4	15.4	-4.3	23.8	0.25	2.2	0.25	2.0	121.8	285.6	286.4	86.7	51.2	87.4	364.353	362.342	474.68	472.132
20180525:05:23:57	23.4	15.5	-4.3	23.8	0.25	2.2	0.25	2.0	121.9	285.6	286.4	86.7	51.2	87.4	365.715	363.717	476.456	473.927
20180525:05:28:57	23.5	15.4	-3.9	23.8	0.25	2.2	0.25	2.0	121.7	285.7	286.3	86.8	51.3	87.3	367.115	365.057	478.281	475.677
20180525:05:33:57	23.5	15.2	-3.3	23.8	0.25	2.2	0.25	2.0	121.3	285.7	286.4	86.8	51.2	87.3	368.458	366.448	480.033	477.492
20180525:05:38:57	23.5	15.2	-3.4	23.8	0.25	2.2	0.25	2.0	121.3	285.7	286.3	86.7	51.3	87.3	369.814	367.8	481.802	479.258
20180525:05:43:57	23.5	15.1	-3.2	23.8	0.25	2.2	0.25	2.0	121.1	285.8	286.4	86.8	51.2	87.2	371.22	369.135	483.635	481
20180525:05:48:57	23.5	14.9	-3.2	23.8	0.25	2.2	0.25	2.0	120.7	285.7	286.4	86.8	51.3	87.2	372.567	370.524	485.393	482.814
20180525:05:53:57	23.5	15.0	-3.2	23.8	0.25	2.2	0.25	2.0	120.9	285.7	286.4	86.8	51.2	87.2	373.923	371.862	487.161	484.56
20180525:05:58:57	23.5	15.1	-3.2	23.8	0.25	2.2	0.25	2.0	121.2	285.7	286.4	86.9	51.3	87.2	375.331	373.223	488.998	486.336
20180525:06:03:57	23.5	15.1	-3.3	23.8	0.25	2.2	0.25	2.0	121.2	285.7	286.2	86.9	51.2	87.1	376.681	374.596	490.759	488.128
20180525:06:08:57	23.5	15.3	-3.1	23.8	0.25	2.2	0.25	2.0	121.6	285.8	286.5	86.9	51.3	87.2	378.025	375.94	492.513	489.882
20180525:06:13:57	23.5	15.2	-3.2	23.8	0.25	2.2	0.25	2.0	121.3	285.8	286.3	86.9	51.2	87.1	379.429	377.332	494.344	491.699
20180525:06:18:57	23.5	15.3	-3.1	23.8	0.25	2.2	0.25	2.0	121.5	285.9	286.5	87.0	51.3	87.1	380.785	378.676	496.113	493.453
20180525:06:23:57	23.5	15.2	-3.2	23.8	0.25	2.2	0.25	2.0	121.4	285.9	286.4	87.0	51.2	87.1	382.129	380.008	497.867	495.19
20180525:06:28:57	23.5	15.1	-3.4	23.8	0.25	2.2	0.25	2.0	121.2	285.8	286.4	86.9	51.2	87.0	383.531	381.398	499.694	497.004
20180525:06:33:57	23.5	15.1	-3.4	23.8	0.25	2.2	0.25	2.0	121.1	285.8	286.4	87.0	51.2	87.0	384.895	382.735	501.474	498.748
20180525:06:38:57	23.5	15.1	-3.4	23.8	0.25	2.2	0.25	2.0	121.1	285.8	286.4	87.0	51.3	87.0	386.232	384.103	503.219	500.532
20180525:06:43:57	23.5	15.1	-3.4	23.8	0.25	2.2	0.25	2.0	121.0	285.7	286.4	87.0	51.2	87.0	387.629	385.473	505.041	502.32
20180525:06:48:57	23.5	15.0	-3.4	23.8	0.25	2.2	0.25	2.0	121.0	285.8	286.4	87.0	51.2	87.0	388.995	386.805	506.822	504.056
20180525:06:53:57	23.5	14.9	-3.4	23.8	0.25	2.2	0.25	2.0	120.8	285.8	286.4	87.0	51.2	87.0	390.333	388.194	508.567	505.868
20180525:06:58:57	23.5	15.0	-3.4	23.8	0.25	2.2	0.25	2.0	120.8	285.8	286.4	87.1	51.3	87.1	391.726	389.521	510.383	507.6
20180525:07:03:57	23.5	14.5	-3.4	23.8	0.25	2.2	0.25	2.0	119.8	285.8	286.5	87.1	51.3	87.1	393.09	390.875	512.163	509.365
20180525:07:08:57	23.5	14.4	-3.3	23.8	0.25	2.2	0.25	2.0	119.5	285.7	286.4	87.0	51.2	87.0	394.432	392.257	513.913	511.167
20180525:07:13:57	23.5	14.8	-3.3	23.8	0.25	2.2	0.25	2.0	120.4	285.8	286.4	87.0	51.2	87.0	395.824	393.597	515.728	512.914
20180525:07:18:57	23.5	14.9	-3.3	23.8	0.25	2.2	0.25	2.0	120.6	285.8	286.4	87.0	51.2	87.0	397.186	394.982	517.504	514.72
20180525:07:23:57	23.5	14.9	-3.3	23.8	0.25	2.2	0.25	2.0	120.7	285.8	286.3	87.0	51.2	87.0	398.537	396.342	519.265	516.492
20180525:07:28:57	23.5	15.1	-3.3	23.8	0.25	2.2	0.25	2.0	121.0	285.9	286.4	86.9	51.2	87.0	399.925	397.67	521.074	518.224
20180525:07:33:57	23.5	15.2	-3.3	23.8	0.25	2.2	0.25	2.0	121.3	285.8	286.3	86.8	51.2	87.0	401.304	399.066	522.87	520.043
20180525:07:38:57	23.5	15.2	-3.2	23.8	0.25	2.2	0.25	2.0	121.5	285.9	286.4	86.7	51.2	86.9	402.649	400.398	524.624	521.78
20180525:07:43:57	23.5	15.4	-3.3	23.8	0.25	2.2	0.25	2.0	121.8	285.8	286.3	86.6	51.2	86.9	404.027	401.762	526.419	523.558
20180525:07:48:57	23.5	15.4	-3.3	23.8	0.25	2.2	0.25	2.0	121.9	285.9	286.4	86.5	51.1	86.9	405.413	403.141	528.224	525.355
20180525:07:53:57	23.5	15.5	-3.2	23.8	0.25	2.2	0.25	2.0	122.0	285.8	286.3	86.5	51.1	86.9	406.769	404.482	529.991	527.103
20180525:07:58:57	23.5	15.2	-3.3	23.8	0.25	2.2	0.25	2.0	121.4	285.8	286.4	86.4	51.1	86.8	408.133	405.876	531.767	528.921
20180525:08:03:57	23.6	15.1	-2.9	23.8	0.25	2.2	0.25	2.0	121.1	285.8	286.3	86.4	51.2	86.8	409.522	407.224	533.576	530.679
20180525:08:08:57	23.6	15.6	-2.8	23.8	0.25	2.2	0.25	2.0	122.4	285.9	286.4	86.3	51.0	86.8	410.87	408.563	535.331	532.423
20180525:08:13:57	23.5	15.8	-3.1	23.8	0.25	2.2	0.25	2.0	122.7	285.8	286.3	86.3	51.1	86.8	412.231	409.951	537.104	534.233
20180525:08:18:57	23.5	15.8	-3.1	23.8	0.25	2.2	0.25	2.0	122.9	285.9	286.4	86.3	51.0	86.8	413.622	411.293	538.915	535.981
20180525:08:23:57	23.6	15.7	-2.8	23.8	0.25	2.2	0.25	2.0	122.7	285.8	286.4	86.2	51.1	86.8	414.966	412.655	540.665	537.758
20180525:08:28:57	23.6	15.7	-3.0	23.8	0.25	2.2	0.25	2.0	122.7	285.8	286.4	86.2	51.0	86.8	416.33	414.024	542.441	539.541
20180525:08:33:57	23.6	15.7	-2.8	23.8	0.25	2.2	0.25	2.0	122.7	285.8	286.4	86.2	51.0	86.8	417.719	415.363	544.25	541.288
20180525:08:38:57	23.6	15.7	-2.7	23.8	0.25	2.2	0.25	2.0	122.5	285.8	286.4	86.2	50.9	86.7	419.063	416.751	546	543.096
20180525:08:43:57	23.6	15.7	-2.8	23.8	0.25	2.2	0.25	2.0	122.6	285.8	286.4	86.2	51.0	86.8	420.425	418.09	547.774	544.842
20180525:08:48:57	23.6	15.7	-2.6	23.8	0.25	2.2	0.25	2.0	122.6	285.7	286.4	86.2	50.9	86.8	421.815	419.438	549.585	546.6
20180525:08:53:57	23.6	15.2	-2.6	23.8	0.25	2.2	0.25	2.0	121.6	285.7	286.4	86.3	51.0	86.8	423.159	420.826	551.335	548.41
20180525:08:58:57	23.6	14.7	-2.7	23.8	0.25	2.2	0.25	2.0	120.2	285.7	286.4	86.5	50.9	86.9	424.524	422.161	553.115	550.15
20180525:09:03:57	23.6	14.7	-2.6	23.8	0.25	2.2	0.25	2.0	120.2	285.6	286.4	86.6	51.1	86.9	425.921	423.54	554.935	551.949
20180525:09:08:57	23.6	15.2	-2.8	23.8	0.25	2.2	0.25	2.0	121.3	285.7	286.4	86.7	51.0	87.0	427.259	424.903	556.68	553.727
20180525:09:13:57	23.5	15.2	-2.9	23.8	0.25	2.2	0.25	2.0	121.5	285.7	286.4	86.8	51.1	87.0	428.62	426.23	558.456	555.459
20180525:09:18:57	23.5	15.4	-3.0	23.8	0.25	2.2	0.25	2.0	121.8	285.7	286.4	87.0	51.0	87.2	430.02	427.621	560.281	557.274
20180525:09:23:57	23.5	15.4	-3.1	23.8	0.25	2.2	0.25	2.0	121.9	285.8	286.4	87.0	51.1	87.2	431.361	428.948	562.031	559.006
20180525:09:28:57	23.5	15.5	-3.0	23.8	0.25	2.2	0.25	2.0	122.0	285.8	286.5	87.2	51.1	87.3	432.718	430.31	563.802	560.784
20180525:09:33:57	23.5	15.4	-3.1	23.8	0.25	2.2	0.25	2.0	122.0	285.8	286.4	87.3	51.1	87.3	434.117	431.684	565.628	562.577
20180525:09:38:57	23.5	15.0	-3.1	23.8	0.25	2.2	0.25	2.0	120.9	285.7	286.4	87.4	51.1	87.4	435.46	433.023	567.381	564.325
20180525:09:43:57	23.5	14.6	-3.0	23.8	0.25	2.2	0.25	2.0	119.9	285.7	286.4	87.5	51.1	87.5	436.814	434.412	569.15	566.139
20180525:09:48:57	23.5	14.5	-3.0	23.8	0.25	2.2	0.25	2.0	119.6	285.7	286.4	87.6	51.2	87.6	438.217	435.757	570.981	567.897
20180525:09:53:57	23.5	15.2	-3.2	23.8	0.25	2.2	0.25	2.0	121.3	285.7	286.4	87.7	51.1	87.7	439.559	437.091	572.735	569.639
20180525:09:58:57	23.5	15.4	-3.3	23.8	0.25	2.2	0.25	2.0	121.9	285.8	286.4	87.8	51.2	87.8	440.906	438.476	574.494	571.447
20180525:10:03:57	23.5	15.5	-3.3	23.8	0.25	2.2	0.25	2.0	122.2	285.8	286.3	87.9	51.1	87.8	442.312	439.809	576.331	573.19
20180525:10:08:57	23.5	15.6	-3.3	23.8	0.25	2.2	0.25	2.0	122.3	285.8	286.4	88.0	51.1	87.9	443.662	441.173	578.096	574.972
20180525:10:13:57	23.5	15.7	-3.3	23.8	0.25	2.2	0.25	2.0	122.5	285.9	286.4	88.1	51.1	88.0	445.005	442.539	579.852	576.758
20180525:10:18:57	23.5	15.7	-3.2	23.8	0.25	2.2	0.25	2.0	122.5	285.8	286.4	88.2	51.1	88.0	446.405	443.871	581.683	578.498
20180525:10:23:57	23.5	15.7	-3.2	23.8	0.25	2.2	0.25	2.0	122.6	285.9	286.4	88.3	51.2	88.1	447.756	445.255	583.45	580.308
20180525:10:28:57	23.5	15.8	-3.3	23.8	0.25	2.2	0.25	2.0	122.8	285.9	286.4	88.3	51.1	88.2	449.099	446.592	585.207	582.056
20180525:10:33:57	23.5	15.9	-3.2	23.8	0.25	2.2	0.25	2.0	122.9	285.8	286.4	88.4	51.2	88.3	450.498	447.934	587.037	583.812
20180525:10:38:57	23.5	15.5	-3.3	23.8	0.25	2.2	0.25	2.0	122.1	285.8	286.5	88.5	51.1	88.3	451.859	449.321	588.819	585.626
20180525:10:43:57	23.5	15.0	-3.2	23.8	0.25	2.2	0.25	2.0	120.8	285.8	286.4	88.6	51.1	88.4	453.195	450.654	590.567	587.37
20180525:10:48:57	23.5	15.3	-2.9	23.7	0.25	2.2	0.25	2.0	121.7	285.8	286.5	88.6	51.1	88.5	454.586	452.028	592.387	589.169
20180525:10:53:57	23.5	15.6	-3.0	23.7	0.25	2.2	0.25	2.0	122.4	285.8	286.4	88.7	51.1	88.6	455.943	453.388	594.165	590.949
20180525:10:58:57	23.5	15.7	-2.8	23.7	0.25	2.2	0.25	2.0	122.6	285.8	286.4	88.8	51.2	88.6	457.289	454.712	595.928	592.682
20180525:11:03:57	23.5	15.5	-2.8	23.7	0.25	2.2	0.25	2.0	122.1	285.8	286.5	88.9	51.1	88.7	458.672	456.096	597.739	594.494
20180525:11:08:57	23.5	14.9	-2.7	23.7	0.25	2.2	0.25	2.0	120.8	285.7	286.4	89.0	51.1	88.8	460.044	457.42	599.537	596.229
20180525:11:13:57	23.5	14.7	-2.7	23.7	0.25	2.2	0.25	2.0	120.2	285.7	286.5	89.0	51.1	88.9	461.388	458.779	601.298	598.009
20180525:11:18:57	23.5	15.2	-2.8	23.7	0.25	2.2	0.25	2.0	121.3	285.7	286.4	89.1	51.1	88.9	462.758	460.153	603.093	599.81
20180525:11:23:57	23.5	15.6	-2.8	23.7	0.25	2.2	0.25	2.0	122.3	285.8	286.4	89.2	51.2	89.0	464.142	461.493	604.907	601.566
20180525:11:28:57	23.5	15.7	-2.7	23.7	0.25	2.2	0.25	2.0	122.7	285.9	286.4	89.3	51.1	89.1	465.485	462.873	606.669	603.374
20180525:11:33:57	23.5	15.9	-2.9	23.7	0.25	2.2	0.25	2.0	123.0	285.8	286.4	89.3	51.1	89.2	466.847	464.234	608.454	605.158
20180525:11:38:57	23.5	16.0	-2.9	23.7	0.25	2.2	0.25	2.0	123.2	285.9	286.4	89.4	51.2	89.3	468.248	465.559	610.291	606.895
20180525:11:43:57	23.5	15.4	-3.0	23.7	0.25	2.2	0.25	2.0	122.0	285.8	286.4	89.5	51.1	89.3	469.594	466.954	612.056	608.724
20180525:11:48:57	23.5	15.4	-3.0	23.7	0.25	2.2	0.25	2.0	121.8	285.8	286.4	89.6	51.1	89.4	470.944	468.281	613.828	610.464
20180525:11:53:57	23.5	15.9	-3.4	23.7	0.25	2.2	0.25	2.0	122.9	285.8	286.4	89.6	51.2	89.5	472.35	469.629	615.672	612.233
20180525:11:58:57	23.5	15.9	-2.8	23.7	0.25	2.2	0.25	2.0	123.1	285.8	286.4	89.7	51.1	89.5	473.71	471.013	617.457	614.049
20180525:12:03:57	23.5	16.2	-2.6	23.7	0.25	2.2	0.25	2.0	123.7	285.8	286.4	89.8	51.1	89.6	475.055	472.347	619.222	615.799
20180525:12:08:57	23.5	16.4	-2.7	23.7	0.25	2.2	0.25	2.0	124.1	285.9	286.4	89.8	51.2	89.7	476.447	473.719	621.05	617.6
20180525:12:13:57	23.5	16.4	-2.9	23.7	0.25	2.2	0.25	2.0	124.2	285.8	286.4	89.9	51.1	89.8	477.808	475.083	622.837	619.391
20180525:12:18:57	23.5	16.5	-3.4	23.7	0.25	2.2	0.25	2.0	124.2	286.0	286.5	89.9	51.1	89.8	479.158	476.413	624.611	621.137
20180525:12:23:57	23.5	16.5	-3.5	23.7	0.25	2.2	0.25	2.0	124.3	286.0	286.5	90.0	51.1	89.9	480.536	477.798	626.42	622.957
20180525:12:28:57	23.4	16.5	-3.9	23.7	0.25	2.2	0.25	2.0	124.3	286.0	286.5	90.0	51.1	89.9	481.918	479.141	628.235	624.72
20180525:12:33:57	23.4	16.6	-4.2	23.7	0.25	2.2	0.25	2.0	124.5	286.0	286.5	90.0	51.0	90.0	483.263	480.479	630.002	626.477
20180525:12:38:57	23.4	16.8	-4.1	23.7	0.25	2.2	0.25	2.0	124.8	286.0	286.5	90.0	51.1	90.0	484.625	481.863	631.791	628.295

Time:	Stack Pressure:	Sat% H2O:	Static:	Barometric:	Flowmeter1:	Vacuum1:	Flowmeter2:	Vacuum2:	Stack Temp:	Sorbent Temp:	Probe Temp:	DGM#1 Temp:	Condenser Temp:	DGM#2 Temp:	DGM1*:	DGM2*:	DGM1:	DGM2:
day:hh:mm:ss	in-Hg	Percent	in-H2O	in-Hg	l/min	in-Hg	l/min	in-Hg	degF	degF	degF	degF	degF	degF	liters STP	liters STP	liters nominal	liters nominal
20180525:12:43:57	23.4	16.3	-4.5	23.7	0.25	2.2	0.25	2.0	123.7	285.9	286.5	90.0	51.1	90.1	486.027	483.197	633.633	630.049
20180525:12:48:57	23.4	15.9	-4.3	23.7	0.25	2.2	0.25	2.0	122.9	285.8	286.3	90.1	51.0	90.2	487.379	484.556	635.409	631.835
20180525:12:53:57	23.5	15.6	-3.5	23.7	0.25	2.2	0.25	2.0	122.3	285.8	286.4	90.1	51.0	90.2	488.73	485.93	637.185	633.641
20180525:12:58:57	23.5	16.1	-2.8	23.7	0.25	2.2	0.25	2.0	123.4	285.8	286.4	90.2	51.0	90.3	490.133	487.267	639.03	635.398
20180525:13:03:57	23.5	16.5	-3.2	23.7	0.25	2.2	0.25	2.0	124.4	285.8	286.4	90.2	51.0	90.3	491.496	488.646	640.82	637.211
20180525:13:08:57	23.5	16.8	-3.5	23.7	0.25	2.2	0.25	2.0	124.9	285.8	286.4	90.2	50.9	90.3	492.835	490.004	642.58	638.996
20180525:13:13:57	23.5	16.9	-3.4	23.7	0.25	2.2	0.25	2.0	125.2	285.9	286.4	90.2	51.0	90.4	494.221	491.332	644.402	640.742
20180525:13:18:57	23.5	17.1	-3.5	23.7	0.25	2.2	0.25	2.0	125.5	285.9	286.4	90.2	50.9	90.5	495.588	492.717	646.2	642.564
20180525:13:23:57	23.5	17.1	-3.6	23.7	0.25	2.2	0.25	2.0	125.6	285.8	286.4	90.2	50.9	90.5	496.932	494.051	647.967	644.32
20180525:13:28:57	23.4	17.1	-3.6	23.7	0.25	2.2	0.25	2.0	125.7	285.8	286.3	90.3	50.9	90.6	498.3	495.39	649.765	646.081
20180525:13:33:57	23.5	17.1	-3.5	23.7	0.25	2.2	0.25	2.0	125.7	285.9	286.4	90.3	50.9	90.6	499.689	496.777	651.593	647.906
20180525:13:38:57	23.4	17.1	-3.6	23.7	0.25	2.2	0.25	2.0	125.6	285.8	286.4	90.3	50.9	90.7	501.027	498.117	653.352	649.669
20180525:13:43:57	23.5	17.2	-3.5	23.7	0.25	2.2	0.25	2.0	125.7	285.8	286.4	90.4	50.9	90.7	502.385	499.47	655.139	651.451
20180525:13:48:57	23.5	17.3	-3.5	23.7	0.25	2.2	0.25	2.0	125.9	285.8	286.4	90.4	50.9	90.8	503.786	500.837	656.981	653.25
20180525:13:53:57	23.4	17.1	-3.6	23.7	0.25	2.2	0.25	2.0	125.6	285.8	286.5	90.6	51.0	90.9	505.136	502.175	658.757	655.011
20180525:13:58:57	23.4	16.2	-3.7	23.7	0.25	2.2	0.25	2.0	123.7	285.8	286.4	90.7	51.0	90.9	506.484	503.555	660.531	656.829
20180525:14:03:57	23.4	16.3	-3.5	23.7	0.25	2.2	0.25	2.0	123.7	285.7	286.4	90.8	51.0	91.0	507.88	504.909	662.37	658.613
20180525:14:08:57	23.4	16.5	-3.5	23.7	0.25	2.2	0.25	2.0	124.2	285.7	286.4	90.9	51.0	91.1	509.241	506.235	664.163	660.359
20180525:14:13:57	23.4	16.6	-3.5	23.7	0.25	2.2	0.25	2.0	124.4	285.8	286.5	91.1	51.0	91.2	510.577	507.622	665.922	662.188
20180525:14:18:57	23.4	16.6	-3.5	23.7	0.25	2.2	0.25	2.0	124.5	285.8	286.4	91.2	51.0	91.3	511.957	508.956	667.741	663.945
20180525:14:23:57	23.4	16.7	-3.4	23.7	0.25	2.2	0.25	2.0	124.7	285.8	286.4	91.3	51.0	91.3	513.327	510.295	669.548	665.711
20180525:14:28:57	23.4	16.9	-3.4	23.7	0.25	2.2	0.25	2.0	125.0	285.9	286.4	91.5	51.0	91.4	514.674	511.676	671.324	667.532
20180525:14:33:57	23.4	16.9	-3.4	23.7	0.25	2.2	0.25	2.0	125.1	285.8	286.5	91.6	51.1	91.5	516.026	513.011	673.107	669.293
20180525:14:38:57	23.4	16.9	-3.4	23.7	0.25	2.2	0.25	2.0	125.0	285.8	286.4	91.7	51.0	91.6	517.415	514.362	674.941	671.075
20180525:14:43:57	23.4	16.9	-3.3	23.7	0.25	2.2	0.25	2.0	125.1	285.9	286.5	91.8	51.1	91.7	518.756	515.725	676.711	672.874
20180525:14:48:57	23.4	17.0	-3.3	23.7	0.25	2.2	0.25	2.0	125.4	285.9	286.4	91.9	51.1	91.8	520.105	517.058	678.493	674.633
20180525:14:53:57	23.4	17.0	-3.3	23.7	0.25	2.2	0.25	2.0	125.4	286.0	286.5	91.9	51.1	91.8	521.501	518.436	680.335	676.453
20180525:14:58:57	23.4	16.9	-3.3	23.7	0.25	2.2	0.25	1.9	125.0	286.0	286.5	92.0	51.1	91.9	522.856	519.786	682.126	678.237
20180525:15:03:57	23.4	16.6	-3.4	23.7	0.25	2.2	0.25	1.9	124.4	285.9	286.4	92.0	51.1	91.9	524.192	521.104	683.891	679.977
20180525:15:08:57	23.4	15.8	-3.6	23.7	0.25	2.2	0.25	1.9	122.5	285.8	286.4	91.9	51.1	92.0	525.579	522.487	685.722	681.805
20180525:15:13:57	23.4	16.2	-3.4	23.7	0.25	2.2	0.25	1.9	123.6	285.8	286.4	91.9	51.1	92.0	526.93	523.806	687.507	683.547
20180525:15:18:57	23.4	16.5	-3.4	23.7	0.25	2.2	0.25	2.0	124.3	285.9	286.4	91.9	51.1	92.1	528.268	525.145	689.274	685.316
20180525:15:23:57	23.4	16.6	-3.4	23.7	0.25	2.2	0.25	2.0	124.5	285.8	286.4	91.9	51.2	92.1	529.639	526.52	691.085	687.133
20180525:15:28:57	23.4	16.7	-3.3	23.7	0.25	2.2	0.25	2.0	124.8	285.9	286.5	91.9	51.2	92.2	531.01	527.845	692.896	688.883
20180525:15:33:57	23.4	16.7	-3.4	23.7	0.25	2.2	0.25	2.0	124.7	285.9	286.5	92.0	51.2	92.2	532.35	529.206	694.667	690.682
20180525:15:38:57	23.4	16.8	-3.3	23.7	0.25	2.2	0.25	2.0	125.0	285.8	286.4	92.0	51.3	92.3	533.699	530.563	696.448	692.476
20180525:15:43:57	23.4	17.0	-3.3	23.7	0.25	2.2	0.25	2.0	125.3	285.8	286.4	92.1	51.3	92.3	535.09	531.889	698.287	694.229
20180525:15:48:57	23.4	17.0	-3.3	23.7	0.25	2.2	0.25	2.0	125.3	285.8	286.5	92.2	51.4	92.4	536.434	533.273	700.063	696.058
20180525:15:53:57	23.4	16.9	-3.3	23.7	0.25	2.2	0.25	2.0	125.0	285.8	286.4	92.3	51.4	92.5	537.783	534.61	701.846	697.827
20180525:15:58:57	23.4	16.9	-3.2	23.7	0.25	2.2	0.25	2.0	125.0	285.8	286.5	92.5	51.5	92.6	539.18	535.934	703.694	699.579
20180525:16:03:57	23.4	17.0	-3.3	23.7	0.25	2.2	0.25	2.0	125.4	285.9	286.5	92.6	51.5	92.7	540.539	537.312	705.493	701.402
20180525:16:08:57	23.4	17.1	-3.2	23.7	0.25	2.2	0.25	2.0	125.5	285.9	286.6	92.8	51.5	92.7	541.872	538.631	707.256	703.147
20180525:16:13:57	23.4	16.5	-3.3	23.7	0.25	2.2	0.25	1.9	124.1	285.8	286.5	92.9	51.5	92.8	543.248	539.982	709.078	704.936
20180525:16:18:57	23.4	16.5	-3.2	23.7	0.25	2.2	0.25	1.9	124.2	285.8	286.5	93.0	51.5	92.9	544.614	541.351	710.887	706.748
20180525:16:23:57	23.4	16.8	-3.3	23.7	0.25	2.2	0.25	2.0	124.8	285.9	286.5	93.1	51.5	92.9	545.958	542.68	712.667	708.508
20180525:16:28:57	23.4	16.9	-3.2	23.7	0.25	2.2	0.25	2.0	125.1	285.9	286.5	93.2	51.5	93.0	547.308	544.041	714.456	710.31
20180525:16:33:57	23.4	16.9	-3.1	23.7	0.25	2.2	0.25	2.0	125.1	285.9	286.5	93.3	51.5	93.1	548.701	545.392	716.3	712.1
20180525:16:38:57	23.4	17.0	-3.1	23.7	0.25	2.2	0.25	2.0	125.3	285.9	286.5	93.4	51.6	93.2	550.047	546.721	718.085	713.861
20180525:16:43:57	23.4	16.9	-3.1	23.7	0.25	2.2	0.25	2.0	125.2	285.9	286.5	93.5	51.6	93.2	551.393	548.103	719.869	715.692
20180525:16:48:57	23.4	16.8	-3.2	23.7	0.25	2.2	0.25	2.0	124.8	285.9	286.5	93.5	51.6	93.3	552.783	549.442	721.711	717.466
20180525:16:53:57	23.4	16.7	-3.0	23.7	0.25	2.2	0.25	2.0	124.7	285.9	286.5	93.6	51.6	93.3	554.133	550.764	723.502	719.218
20180525:16:58:57	23.4	16.7	-3.0	23.7	0.25	2.2	0.25	2.0	124.7	285.9	286.4	93.7	51.7	93.4	555.476	552.156	725.283	721.064
20180525:17:03:57	23.4	16.9	-3.0	23.7	0.25	2.2	0.25	2.0	125.1	285.9	286.6	93.8	51.7	93.5	556.843	553.482	727.096	722.821
20180525:17:08:57	23.4	16.9	-3.1	23.7	0.25	2.2	0.25	2.0	125.1	285.9	286.5	93.8	51.6	93.6	558.227	554.818	728.933	724.594
20180525:17:13:57	23.4	16.8	-3.1	23.7	0.25	2.2	0.25	1.9	124.9	285.9	286.4	93.9	51.7	93.6	559.572	556.199	730.717	726.425
20180525:17:18:57	23.4	16.6	-3.2	23.7	0.25	2.2	0.25	1.9	124.3	285.9	286.5	94.0	51.7	93.7	560.918	557.523	732.504	728.18
20180525:17:23:57	23.4	16.1	-3.3	23.7	0.25	2.2	0.25	1.9	123.3	285.8	286.5	94.0	51.6	93.8	562.318	558.873	734.361	729.972
20180525:17:28:57	23.4	16.5	-3.1	23.7	0.25	2.2	0.25	2.0	124.2	285.9	286.5	94.0	51.6	93.8	563.677	560.246	736.165	731.793
20180525:17:33:57	23.4	16.6	-3.2	23.7	0.25	2.2	0.25	2.0	124.5	285.9	286.5	94.0	51.6	93.8	565.011	561.578	737.935	733.56
20180525:17:38:57	23.4	16.7	-3.1	23.7	0.25	2.2	0.25	2.0	124.7	285.9	286.4	93.9	51.6	93.9	566.383	562.934	739.756	735.359
20180525:17:43:57	23.4	16.7	-3.0	23.6	0.25	2.2	0.25	2.0	124.7	285.9	286.4	93.9	51.6	93.9	567.76	564.288	741.583	737.156
20180525:17:48:57	23.4	16.7	-3.0	23.7	0.25	2.2	0.25	2.0	124.6	285.9	286.5	93.9	51.6	93.9	569.102	565.622	743.365	738.927
20180525:17:53:57	23.4	16.5	-3.1	23.7	0.25	2.2	0.25	2.0	124.3	285.9	286.4	93.9	51.6	93.9	570.456	566.998	745.161	740.754
20180525:17:58:57	23.4	16.6	-3.0	23.6	0.25	2.2	0.25	2.0	124.5	285.9	286.5	93.9	51.6	94.0	571.857	568.355	747.02	742.555
20180525:18:03:57	23.4	16.5	-3.0	23.6	0.25	2.2	0.25	2.0	124.2	285.9	286.4	93.9	51.6	94.0	573.219	569.677	748.828	744.31
20180525:18:08:57	23.4	16.6	-3.0	23.6	0.25	2.2	0.25	2.0	124.5	285.9	286.4	93.9	51.6	94.0	574.552	571.062	750.598	746.148
20180525:18:13:57	23.4	16.8	-3.0	23.7	0.25	2.2	0.25	2.0	125.0	285.9	286.5	93.9	51.6	94.1	575.927	572.404	752.422	747.93
20180525:18:18:57	23.4	16.8	-2.9	23.7	0.25	2.2	0.25	2.0	124.9	285.9	286.5	93.9	51.5	94.1	577.304	573.73	754.25	749.69
20180525:18:23:57	23.4	16.6	-3.0	23.7	0.25	2.2	0.25	2.0	124.4	285.8	286.4	93.9	51.6	94.2	578.647	575.109	756.031	751.521
20180525:18:28:57	23.4	15.8	-3.3	23.7	0.25	2.2	0.25	2.0	122.6	285.7	286.4	93.8	51.6	94.2	580.001	576.446	757.828	753.295
20180525:18:33:57	23.4	15.9	-3.1	23.7	0.25	2.2	0.25	2.0	122.9	285.7	286.4	93.9	51.6	94.2	581.402	577.783	759.687	755.071
20180525:18:38:57	23.4	15.8	-3.0	23.7	0.25	2.2	0.25	2.0	122.6	285.8	286.4	93.9	51.6	94.2	582.763	579.165	761.493	756.906
20180525:18:43:57	23.4	15.6	-3.0	23.7	0.25	2.2	0.25	2.0	122.3	285.7	286.4	93.9	51.6	94.3	584.096	580.496	763.261	758.673
20180525:18:48:57	23.4	15.5	-2.9	23.7	0.25	2.2	0.25	2.0	121.9	285.8	286.4	94.0	51.7	94.3	585.473	581.841	765.089	760.459
20180525:18:53:57	23.5	15.5	-2.7	23.7	0.25	2.2	0.25	2.0	121.9	285.8	286.5	94.1	51.7	94.3	586.857	583.227	766.926	762.299
20180525:18:58:57	23.4	15.3	-2.8	23.6	0.25	2.2	0.25	2.0	121.5	285.8	286.4	94.2	51.7	94.3	588.207	584.554	768.719	764.062
20180525:19:03:57	23.4	15.1	-2.8	23.7	0.25	2.2	0.25	2.0	121.1	285.8	286.5	94.3	51.7	94.4	589.561	585.906	770.517	765.857
20180525:19:08:57	23.5	15.0	-2.5	23.7	0.25	2.2	0.25	2.0	120.9	285.8	286.5	94.4	51.7	94.5	590.961	587.288	772.376	767.694
20180525:19:13:57	23.5	15.0	-2.4	23.6	0.25	2.2	0.25	2.0	120.7	285.9	286.6	94.5	51.7	94.5	592.313	588.621	774.172	769.464
20180525:19:18:57	23.5	14.8	-2.7	23.6	0.25	2.2	0.25	2.0	120.3	285.9	286.5	94.6	51.7	94.5	593.665	589.972	775.969	771.259
20180525:19:23:57	23.5	14.1	-2.8	23.7	0.25	2.2	0.25	2.0	118.6	285.8	286.5	94.6	51.7	94.6	595.027	591.352	777.778	773.092
20180525:19:28:57	23.5	14.5	-2.5	23.7	0.25	2.2	0.25	2.0	119.6	285.8	286.5	94.6	51.7	94.6	596.422	592.69	779.631	774.87
20180525:19:33:57	23.5	14.8	-2.6	23.7	0.25	2.2	0.25	2.0	120.2	285.9	286.5	94.7	51.7	94.6	597.781	594.04	781.437	776.664
20180525:19:38:57	23.5	14.9	-2.6	23.7	0.25	2.2	0.25	2.0	120.7	286.0	286.5	94.7	51.7	94.6	599.13	595.415	783.23	778.491
20180525:19:43:57	23.4	15.2	-2.9	23.7	0.25	2.2	0.25	2.0	121.1	286.0	286.5	94.7	51.7	94.7	600.518	596.758	785.074	780.274
20180525:19:48:57	23.4	14.9	-3.0	23.7	0.25	2.2	0.25	2.0	120.4	285.9	286.5	94.7	51.7	94.7	601.891	598.113	786.898	782.075
20180525:19:53:57	23.5	14.2	-2.9	23.7	0.25	2.2	0.25	2.0	118.8	285.8	286.4	94.7	51.7	94.7	603.234	599.483	788.681	783.895
20180525:19:58:57	23.5	14.4	-2.7	23.7	0.25	2.2	0.25	2.0	119.4	285.8	286.5	94.7	51.7	94.7	604.599	600.821	790.494	785.673
20180525:20:03:57	23.4	14.8	-2.9	23.7	0.25	2.2	0.25	2.0	120.3	285.9	286.5	94.8	51.7	94.7	606.002	602.182	792.359	787.481

Time: day:hh:mm:ss	Stack Pressure: in-Hg	Sat% H2O: Percent	Static: in-H2O	Barometric: in-Hg	Flowmeter1: l/min	Vacuum1: in-Hg	Flowmeter2: l/min	Vacuum2: in-Hg	Stack Temp: degF	Sorbent Temp: degF	Probe Temp: degF	DGM#1 Temp: degF	Condenser Temp: degF	DGM#2 Temp: degF	DGM1*: liters STP	DGM2*: liters STP	DGM1: liters nominal	DGM2: liters nominal
20180525:20:08:57	23.4	14.9	-3.1	23.7	0.25	2.2	0.25	2.0	120.6	285.9	286.5	94.8	51.7	94.8	607.363	603.548	794.167	789.295
20180525:20:13:57	23.4	15.0	-3.0	23.7	0.25	2.2	0.25	2.0	120.7	286.0	286.6	94.8	51.7	94.8	608.708	604.887	795.954	791.075
20180525:20:18:57	23.4	15.0	-3.0	23.7	0.25	2.3	0.25	2.0	120.8	285.9	286.4	94.8	51.7	94.8	610.078	606.253	797.774	792.889
20180525:20:23:57	23.4	15.0	-3.0	23.7	0.25	2.2	0.25	2.0	120.8	285.9	286.5	94.8	51.7	94.8	611.474	607.62	799.63	794.705
20180525:20:28:57	23.4	15.0	-3.0	23.7	0.25	2.2	0.25	2.0	120.8	285.9	286.5	94.7	51.7	94.8	612.831	608.957	801.431	796.481
20180525:20:33:57	23.4	15.0	-3.0	23.7	0.25	2.2	0.25	2.0	120.8	285.8	286.4	94.7	51.7	94.8	614.181	610.325	803.224	798.299
20180525:20:38:57	23.4	15.1	-3.0	23.7	0.25	2.2	0.25	2.0	120.9	285.8	286.5	94.6	51.7	94.8	615.57	611.686	805.069	800.107
20180525:20:43:57	23.4	15.0	-3.1	23.7	0.25	2.2	0.25	2.0	120.7	285.8	286.3	94.6	51.7	94.8	616.939	613.026	806.887	801.887
20180525:20:48:57	23.4	14.4	-3.1	23.7	0.25	2.2	0.25	2.0	119.3	285.8	286.5	94.6	51.7	94.8	618.288	614.399	808.678	803.711
20180525:20:53:57	23.5	14.3	-3.0	23.7	0.25	2.2	0.25	2.0	119.1	285.8	286.4	94.6	51.7	94.9	619.658	615.756	810.496	805.513
20180525:20:58:57	23.4	14.8	-3.1	23.7	0.25	2.2	0.25	2.0	120.4	285.8	286.5	94.7	51.7	94.9	621.059	617.098	812.357	807.295
20180525:21:03:57	23.4	15.0	-3.2	23.7	0.25	2.3	0.25	2.0	120.8	285.9	286.5	94.8	51.7	94.9	622.423	618.472	814.169	809.12
20180525:21:08:57	23.4	15.1	-3.1	23.7	0.25	2.2	0.25	2.0	121.1	286.0	286.5	94.8	51.7	94.9	623.767	619.826	815.954	810.919
20180525:21:13:57	23.4	15.2	-3.1	23.7	0.25	2.2	0.25	2.0	121.3	285.9	286.4	94.9	51.7	94.9	625.136	621.168	817.772	812.701
20180525:21:18:57	23.5	15.3	-3.0	23.7	0.25	2.2	0.25	2.0	121.5	286.0	286.5	94.9	51.7	94.9	626.535	622.545	819.63	814.53
20180525:21:23:57	23.5	15.3	-2.9	23.7	0.25	2.2	0.25	2.0	121.6	285.9	286.5	95.0	51.7	94.9	627.891	623.9	821.431	816.329
20180525:21:28:57	23.5	15.4	-3.0	23.7	0.25	2.2	0.25	2.0	121.7	286.0	286.5	95.0	51.7	94.9	629.242	625.237	823.226	818.105
20180525:21:33:57	23.4	15.3	-3.1	23.7	0.25	2.3	0.25	2.0	121.4	286.0	286.5	95.1	51.8	94.9	630.631	626.617	825.07	819.938
20180525:21:38:57	23.5	14.6	-3.1	23.7	0.25	2.2	0.25	2.0	119.9	286.0	286.6	95.1	51.8	94.9	631.999	627.976	826.889	821.742
20180525:21:43:57	23.5	14.7	-2.9	23.7	0.25	2.2	0.25	2.0	120.1	286.0	286.6	95.0	51.8	94.9	633.344	629.303	828.676	823.506
20180525:21:48:57	23.5	14.9	-2.9	23.7	0.25	2.2	0.25	2.0	120.5	286.0	286.6	95.0	51.8	94.9	634.715	630.687	830.496	825.344
20180525:21:53:57	23.5	14.3	-2.8	23.7	0.25	2.2	0.25	2.0	119.0	285.9	286.6	95.0	51.8	94.9	636.115	632.045	832.357	827.148
20180525:21:58:57	23.5	14.3	-2.8	23.7	0.25	2.2	0.25	2.0	119.2	285.9	286.5	95.0	51.8	94.9	637.477	633.371	834.167	828.91
20180525:22:03:57	23.5	14.8	-2.9	23.7	0.25	2.3	0.25	2.0	120.3	286.1	286.7	95.0	51.8	94.9	638.822	634.759	835.954	830.754
20180525:22:08:57	23.5	14.9	-2.9	23.7	0.25	2.3	0.25	2.0	120.6	286.0	286.5	95.0	51.8	94.9	640.192	636.112	837.774	832.551
20180525:22:13:57	23.5	15.0	-2.8	23.7	0.25	2.3	0.25	2.0	120.8	285.9	286.6	94.9	51.8	94.8	641.592	637.444	839.633	834.32
20180525:22:18:57	23.5	15.1	-2.8	23.7	0.25	2.2	0.25	2.0	121.0	285.9	286.4	95.0	51.8	94.8	642.948	638.833	841.435	836.165
20180525:22:23:57	23.5	15.1	-3.0	23.7	0.25	2.2	0.25	2.0	121.1	286.0	286.6	95.0	51.8	94.8	644.298	640.183	843.23	837.959
20180525:22:28:57	23.5	15.2	-2.9	23.7	0.25	2.2	0.25	2.0	121.2	286.0	286.6	95.0	51.8	94.8	645.686	641.518	845.074	839.731
20180525:22:33:57	23.5	15.3	-2.8	23.7	0.25	2.3	0.25	2.0	121.4	286.0	286.5	95.0	51.9	94.7	647.062	642.909	846.902	841.579
20180525:22:38:57	23.5	15.3	-2.9	23.7	0.25	2.3	0.25	2.0	121.6	286.1	286.6	94.9	51.8	94.7	648.413	644.259	848.696	843.372
20180525:22:43:57	23.5	15.4	-2.9	23.7	0.25	2.2	0.25	2.0	121.8	286.0	286.5	94.9	51.8	94.6	649.773	645.593	850.504	845.143
20180525:22:48:57	23.4	15.2	-3.1	23.7	0.25	2.2	0.25	2.0	121.4	286.0	286.6	94.9	51.8	94.6	651.182	646.985	852.376	846.992
20180525:22:53:57	23.4	14.6	-2.9	23.7	0.25	2.2	0.25	2.0	119.7	285.9	286.5	94.8	51.8	94.5	652.545	648.338	854.187	848.789
20180525:22:58:57	23.4	14.8	-3.0	23.7	0.25	2.2	0.25	2.0	120.4	285.9	286.5	94.7	51.8	94.5	653.907	649.673	855.996	850.562
20180525:23:03:57	23.4	15.2	-3.0	23.7	0.25	2.2	0.25	2.0	121.2	286.0	286.5	94.6	51.7	94.5	655.267	651.063	857.802	852.408
20180525:23:08:57	23.4	15.3	-3.0	23.7	0.25	2.3	0.25	2.0	121.4	286.0	286.6	94.6	51.7	94.4	656.675	652.416	859.672	854.205
20180525:23:13:57	23.4	15.3	-3.1	23.7	0.25	2.3	0.25	2.0	121.6	286.0	286.5	94.5	51.7	94.3	658.047	653.75	861.494	855.976
20180525:23:18:57	23.4	15.5	-3.3	23.7	0.25	2.3	0.25	2.0	121.9	286.0	286.5	94.5	51.7	94.3	659.388	655.14	863.276	857.821
20180525:23:23:57	23.4	15.6	-3.2	23.7	0.25	2.3	0.25	2.0	122.2	286.0	286.5	94.4	51.7	94.3	660.764	656.495	865.104	859.62
20180525:23:28:57	23.4	15.7	-3.6	23.7	0.25	2.3	0.25	2.0	122.4	286.1	286.6	94.3	51.6	94.2	662.165	657.828	866.965	861.391
20180525:23:33:57	23.4	15.9	-3.8	23.7	0.25	2.3	0.25	2.0	122.8	286.0	286.5	94.3	51.6	94.2	663.526	659.22	868.772	863.239
20180525:23:38:57	23.4	15.8	-3.1	23.6	0.25	2.3	0.25	2.0	122.7	286.0	286.5	94.2	51.5	94.1	664.882	660.575	870.572	865.038
20180525:23:43:57	23.4	15.8	-2.9	23.6	0.25	2.3	0.25	2.0	122.6	286.0	286.5	94.1	51.5	94.0	666.269	661.908	872.415	866.808
20180525:23:48:57	23.4	15.7	-2.8	23.6	0.25	2.3	0.25	2.0	122.4	285.9	286.5	94.1	51.4	94.0	667.649	663.299	874.246	868.654
20180525:23:53:57	23.4	15.4	-2.9	23.6	0.25	2.2	0.25	2.0	121.6	285.9	286.5	94.1	51.4	93.9	669.006	664.659	876.048	870.461
20180525:23:58:57	23.4	14.6	-3.3	23.6	0.25	2.2	0.25	2.0	119.7	285.9	286.5	94.1	51.4	93.9	670.368	665.993	877.857	872.231
20180526:00:03:57	23.4	14.4	-2.9	23.6	0.25	2.2	0.25	2.0	119.4	285.8	286.6	94.1	51.4	93.9	671.77	667.38	879.719	874.071
20180526:00:08:57	23.3	15.2	-4.0	23.6	0.25	2.2	0.25	2.0	121.2	285.9	286.5	94.1	51.4	93.8	673.139	668.735	881.537	875.87
20180526:00:13:57	23.3	15.7	-4.0	23.6	0.25	2.3	0.25	2.0	122.2	286.0	286.6	94.0	51.4	93.8	674.493	670.064	883.335	877.635
20180526:00:18:57	23.4	15.7	-3.9	23.6	0.25	2.3	0.25	2.0	122.4	286.0	286.5	93.9	51.4	93.8	675.853	671.453	885.141	879.479
20180526:00:23:57	23.3	15.8	-4.5	23.6	0.25	2.2	0.25	2.0	122.5	286.0	286.6	93.9	51.4	93.7	677.259	672.807	887.007	881.276
20180526:00:28:57	23.3	16.0	-4.2	23.6	0.25	2.2	0.25	2.0	122.8	286.1	286.5	93.9	51.4	93.6	678.625	674.139	888.822	883.043
20180526:00:33:57	23.3	16.1	-5.0	23.6	0.25	2.3	0.25	2.0	123.0	286.1	286.6	93.9	51.4	93.6	679.969	675.531	890.606	884.891
20180526:00:38:57	23.3	16.2	-4.6	23.6	0.25	2.2	0.25	2.0	123.3	286.1	286.6	93.7	51.4	93.6	681.344	676.881	892.431	886.682
20180526:00:43:57	23.3	16.3	-4.3	23.6	0.25	2.2	0.25	2.0	123.7	286.1	286.6	93.6	51.4	93.5	682.738	678.218	894.281	888.457
20180526:00:48:57	23.3	16.5	-4.4	23.6	0.25	2.2	0.25	2.0	124.1	286.1	286.5	93.5	51.4	93.4	684.096	679.611	896.083	890.305
20180526:00:53:57	23.3	15.8	-4.7	23.6	0.25	2.2	0.25	2.0	122.4	286.0	286.6	93.4	51.4	93.4	685.451	680.96	897.881	892.094
20180526:00:58:57	23.3	15.4	-4.8	23.6	0.25	2.2	0.25	2.0	121.6	286.0	286.6	93.3	51.4	93.3	686.846	682.294	899.731	893.865
20180526:01:03:57	23.3	15.6	-4.6	23.6	0.25	2.2	0.25	2.0	121.9	285.9	286.5	93.2	51.4	93.3	688.219	683.687	901.552	895.712
20180526:01:08:57	23.3	16.1	-4.2	23.6	0.25	2.2	0.25	2.0	123.1	286.0	286.5	93.1	51.4	93.2	689.566	685.031	903.339	897.494
20180526:01:13:57	23.3	16.1	-4.0	23.6	0.25	2.2	0.25	2.0	123.2	285.9	286.5	93.1	51.4	93.2	690.929	686.366	905.146	899.265
20180526:01:18:57	23.4	16.0	-3.6	23.6	0.25	2.3	0.25	2.0	122.9	285.9	286.5	93.0	51.4	93.1	692.34	687.761	907.017	901.115
20180526:01:23:57	23.4	15.9	-3.4	23.6	0.25	2.3	0.25	2.0	122.8	285.9	286.5	93.0	51.5	93.1	693.709	689.112	908.831	902.906
20180526:01:28:57	23.4	15.8	-3.4	23.6	0.25	2.2	0.25	2.0	122.6	286.0	286.6	92.9	51.4	93.0	695.054	690.445	910.615	904.673
20180526:01:33:57	23.4	15.8	-3.4	23.6	0.25	2.2	0.25	2.0	122.5	285.9	286.5	92.8	51.4	92.9	696.428	691.832	912.435	906.511
20180526:01:38:57	23.4	15.8	-3.8	23.6	0.25	2.2	0.25	2.0	122.5	285.9	286.5	92.6	51.4	92.8	697.827	693.179	914.289	908.297
20180526:01:43:57	23.4	15.9	-3.9	23.6	0.25	2.2	0.25	2.0	122.8	285.9	286.5	92.4	51.3	92.8	699.185	694.512	916.087	910.064
20180526:01:48:57	23.3	15.9	-3.9	23.6	0.25	2.2	0.25	2.0	122.8	286.0	286.6	92.3	51.4	92.7	700.537	695.911	917.878	911.917
20180526:01:53:57	23.3	15.9	-4.0	23.6	0.25	2.2	0.25	2.0	122.8	285.9	286.5	92.2	51.3	92.7	701.932	697.248	919.724	913.688
20180526:01:58:57	23.3	15.8	-4.1	23.6	0.25	2.2	0.25	2.0	122.5	285.9	286.5	92.2	51.3	92.6	703.297	698.591	921.531	915.468
20180526:02:03:57	23.3	15.0	-4.3	23.6	0.25	2.2	0.25	2.0	120.5	285.8	286.5	92.1	51.4	92.5	704.647	699.979	923.319	917.306
20180526:02:08:57	23.3	14.7	-4.3	23.6	0.25	2.2	0.25	2.0	119.9	285.8	286.5	92.1	51.3	92.4	706.009	701.318	925.12	919.079
20180526:02:13:57	23.3	15.3	-4.1	23.6	0.25	2.2	0.25	2.0	121.3	285.9	286.5	92.1	51.4	92.4	707.413	702.665	926.98	920.863
20180526:02:18:57	23.3	15.5	-4.1	23.6	0.25	2.2	0.25	2.0	121.9	286.0	286.5	92.2	51.4	92.3	708.771	704.054	928.778	922.703
20180526:02:23:57	23.3	15.6	-4.0	23.6	0.25	2.2	0.25	2.0	121.9	286.0	286.5	92.1	51.4	92.2	710.119	705.386	930.561	924.466
20180526:02:28:57	23.3	15.6	-4.0	23.6	0.25	2.2	0.25	2.0	121.9	285.9	286.5	92.1	51.4	92.2	711.509	706.742	932.402	926.261
20180526:02:33:57	23.3	15.6	-4.0	23.6	0.25	2.2	0.25	2.0	121.9	285.9	286.6	92.1	51.4	92.1	712.874	708.123	934.209	928.09
20180526:02:38:57	23.3	15.6	-3.9	23.6	0.25	2.2	0.25	2.0	122.0	285.9	286.5	92.1	51.4	92.1	714.227	709.46	936	929.859
20180526:02:43:57	23.3	15.7	-3.9	23.6	0.25	2.2	0.25	2.0	122.2	285.9	286.5	92.1	51.4	92.0	715.585	710.813	937.798	931.65
20180526:02:48:57	23.3	15.9	-4.0	23.6	0.25	2.2	0.25	2.0	122.7	286.0	286.5	92.1	51.5	92.0	716.988	712.189	939.656	933.472
20180526:02:53:57	23.3	16.0	-4.0	23.6	0.25	2.2	0.25	2.0	122.9	286.0	286.6	92.1	51.4	92.0	718.342	713.53	941.448	935.246
20180526:02:58:57	23.3	15.8	-4.0	23.6	0.25	2.2	0.25	2.0	122.6	285.9	286.5	92.0	51.4	91.9	719.688	714.892	943.23	937.049
20180526:03:03:58	23.4	15.6	-3.6	23.6	0.25	2.2	0.25	2.0	122.0	285.9	286.5	92.0	51.4	91.9	721.08	716.26	945.072	938.859
20180526:03:08:58	23.4	15.3	-3.4	23.6	0.25	2.2	0.25	2.0	121.3	285.9	286.5	92.0	51.4	91.8	722.451	717.599	946.887	940.632
20180526:03:13:58	23.4	15.3	-3.4	23.6	0.25	2.2	0.25	2.0	121.4	286.0	286.5	92.0	51.5	91.8	723.798	718.971	948.67	942.447
20180526:03:18:58	23.4	15.4	-3.4	23.6	0.25	2.2	0.25	2.0	121.6	285.9	286.4	91.9	51.4	91.7	725.156	720.327	950.467	944.241
20180526:03:23:58	23.4	15.4	-3.6	23.6	0.25	2.2	0.25	2.0	121.6	286.0	286.5	91.9	51.5	91.7	726.562	721.666	952.328	946.013
20180526:03:28:58	23.3	15.4	-4.0	23.6	0.25	2.2	0.25	2.0	121.7	286.0	286.5	91.9	51.4	91.6	727.919	723.047	954.124	947.84

Time: day:hh:mm:ss	Stack Pressure: in-Hg	Sat% H2O: Percent	Static: in-H2O	Barometric: in-Hg	Flowmeter1: l/min	Vacuum1: in-Hg	Flowmeter2: l/min	Vacuum2: in-Hg	Stack Temp: degF	Sorbent Temp: degF	Probe Temp: degF	DGM#1 Temp: degF	Condenser Temp: degF	DGM#2 Temp: degF	DGM1*: liters STP	DGM2*: liters STP	DGM1: liters nominal	DGM2: liters nominal
20180526:03:33:58	23.3	14.8	-4.2	23.6	0.25	2.2	0.25	2.0	120.0	286.0	286.5	91.8	51.5	91.6	729.268	724.409	955.909	949.641
20180526:03:38:58	23.3	14.9	-4.0	23.6	0.25	2.2	0.25	2.0	120.3	285.8	286.4	91.7	51.4	91.5	730.655	725.738	957.744	951.398
20180526:03:43:58	23.3	15.3	-4.0	23.6	0.25	2.2	0.25	2.0	121.3	285.9	286.5	91.7	51.5	91.5	732.027	727.132	959.559	953.242
20180526:03:48:58	23.3	15.4	-4.0	23.6	0.25	2.2	0.25	2.0	121.6	286.0	286.5	91.7	51.4	91.4	733.373	728.479	961.341	955.024
20180526:03:53:58	23.3	15.5	-4.0	23.6	0.25	2.2	0.25	2.0	121.9	286.0	286.5	91.6	51.5	91.4	734.734	729.812	963.141	956.786
20180526:03:58:58	23.3	15.6	-4.1	23.6	0.25	2.2	0.25	2.0	122.1	285.9	286.4	91.6	51.5	91.3	736.144	731.201	965.006	958.622
20180526:04:03:58	23.3	15.7	-4.1	23.6	0.25	2.2	0.25	2.0	122.2	286.0	286.5	91.5	51.4	91.3	737.498	732.545	966.796	960.398
20180526:04:08:58	23.3	15.7	-4.1	23.6	0.25	2.2	0.25	2.0	122.2	286.0	286.4	91.4	51.5	91.2	738.839	733.883	968.569	962.167
20180526:04:13:58	23.3	15.9	-4.0	23.6	0.25	2.2	0.25	2.0	122.7	285.9	286.5	91.3	51.4	91.2	740.23	735.271	970.407	964.002
20180526:04:18:58	23.3	16.1	-4.0	23.6	0.25	2.2	0.25	2.0	123.1	285.9	286.3	91.2	51.4	91.1	741.598	736.604	972.215	965.763
20180526:04:23:58	23.3	16.1	-4.0	23.6	0.25	2.2	0.25	2.0	123.2	285.9	286.5	91.2	51.4	91.0	742.948	737.949	974	967.539
20180526:04:28:58	23.3	16.1	-4.0	23.6	0.25	2.2	0.25	2.0	123.1	285.9	286.4	91.1	51.5	90.9	744.302	739.332	975.789	969.367
20180526:04:33:58	23.3	15.8	-4.1	23.6	0.25	2.3	0.25	2.0	122.6	285.8	286.4	91.0	51.4	90.9	745.707	740.673	977.644	971.137
20180526:04:38:58	23.3	15.1	-4.3	23.6	0.25	2.2	0.25	2.0	120.9	285.7	286.4	91.0	51.5	90.8	747.062	742.024	979.433	972.921
20180526:04:43:58	23.3	15.4	-4.2	23.6	0.25	2.2	0.25	2.0	121.6	285.8	286.5	90.9	51.4	90.7	748.411	743.396	981.215	974.731
20180526:04:48:58	23.3	15.6	-4.2	23.6	0.25	2.2	0.25	2.0	122.1	285.8	286.4	90.9	51.5	90.7	749.808	744.736	983.059	976.5
20180526:04:53:58	23.3	15.7	-4.1	23.6	0.25	2.2	0.25	2.0	122.3	286.0	286.5	90.8	51.4	90.6	751.169	746.11	984.856	978.314
20180526:04:58:58	23.3	15.9	-4.2	23.6	0.25	2.2	0.25	2.0	122.8	285.9	286.5	90.7	51.5	90.6	752.52	747.471	986.639	980.109
20180526:05:03:58	23.3	16.1	-4.2	23.6	0.25	2.2	0.25	2.0	123.1	285.9	286.4	90.7	51.4	90.5	753.886	748.811	988.443	981.878
20180526:05:08:58	23.3	16.1	-4.2	23.6	0.25	2.2	0.25	2.0	123.2	285.9	286.4	90.6	51.5	90.5	755.284	750.196	990.287	983.705
20180526:05:13:58	23.3	16.1	-4.2	23.6	0.25	2.2	0.25	2.0	123.3	285.9	286.5	90.6	51.4	90.4	756.632	751.552	992.067	985.494
20180526:05:18:58	23.3	16.2	-4.2	23.6	0.25	2.2	0.25	2.0	123.5	285.9	286.5	90.5	51.5	90.3	757.984	752.877	993.85	987.242
20180526:05:23:58	23.3	16.1	-4.2	23.6	0.25	2.2	0.25	2.0	123.1	285.9	286.4	90.4	51.4	90.3	759.388	754.264	995.702	989.071
20180526:05:28:58	23.3	16.2	-4.2	23.6	0.25	2.2	0.25	2.0	123.4	285.9	286.5	90.3	51.4	90.2	760.749	755.608	997.498	990.844
20180526:05:33:58	23.3	16.3	-4.2	23.6	0.25	2.2	0.25	2.0	123.6	285.8	286.4	90.3	51.4	90.2	762.085	756.945	999.259	992.607
20180526:05:38:58	23.3	16.3	-4.2	23.6	0.25	2.2	0.25	2.0	123.7	285.9	286.5	90.2	51.4	90.1	763.465	758.327	1001.08	994.429
20180526:05:43:58	23.3	16.4	-4.3	23.6	0.25	2.2	0.25	2.0	123.8	286.0	286.5	90.1	51.4	90.0	764.838	759.657	1002.891	996.182
20180526:05:48:58	23.3	16.3	-4.2	23.6	0.25	2.3	0.25	2.0	123.6	286.0	286.6	90.0	51.4	89.9	766.184	761.012	1004.665	997.968
20180526:05:53:58	23.3	16.4	-4.2	23.6	0.25	2.2	0.25	2.0	123.8	286.0	286.5	89.9	51.4	89.9	767.538	762.385	1006.45	999.778
20180526:05:58:58	23.3	16.5	-4.2	23.6	0.25	2.2	0.25	2.0	124.0	286.0	286.5	89.8	51.4	89.8	768.934	763.72	1008.289	1001.538
20180526:06:03:58	23.3	16.4	-4.2	23.6	0.25	2.2	0.25	2.0	123.9	286.0	286.5	89.6	51.3	89.7	770.282	765.097	1010.065	1003.352
20180526:06:08:58	23.3	16.5	-4.2	23.6	0.25	2.2	0.25	2.0	124.0	286.0	286.5	89.4	51.4	89.6	771.631	766.458	1011.841	1005.145
20180526:06:13:58	23.3	16.4	-4.2	23.6	0.25	2.2	0.25	2.0	123.9	285.9	286.4	89.3	51.3	89.6	773.035	767.787	1013.689	1006.895
20180526:06:18:58	23.3	16.4	-4.2	23.6	0.25	2.2	0.25	2.0	124.0	285.9	286.4	89.1	51.4	89.5	774.394	769.174	1015.478	1008.722
20180526:06:23:58	23.3	16.5	-4.2	23.6	0.25	2.2	0.25	2.0	124.0	285.8	286.4	89.0	51.2	89.4	775.734	770.517	1017.241	1010.489
20180526:06:28:58	23.3	16.4	-4.2	23.6	0.25	2.2	0.25	2.0	123.9	285.9	286.4	88.9	51.4	89.3	777.125	771.855	1019.07	1012.25
20180526:06:33:58	23.3	16.4	-4.2	23.6	0.25	2.2	0.25	2.0	123.9	285.8	286.4	88.9	51.3	89.3	778.491	773.238	1020.867	1014.071
20180526:06:38:58	23.3	16.5	-4.2	23.6	0.25	2.2	0.25	2.0	124.0	285.8	286.4	88.7	51.4	89.2	779.833	774.565	1022.631	1015.818
20180526:06:43:58	23.3	16.4	-4.2	23.7	0.25	2.2	0.25	2.0	123.9	285.8	286.4	88.7	51.2	89.1	781.202	775.922	1024.431	1017.603
20180526:06:48:58	23.3	16.3	-4.2	23.6	0.25	2.2	0.25	2.0	123.5	285.8	286.4	88.6	51.3	89.0	782.584	777.303	1026.248	1019.419
20180526:06:53:58	23.3	16.4	-4.2	23.7	0.25	2.2	0.25	2.0	123.8	285.8	286.4	88.5	51.2	89.0	783.928	778.636	1028.015	1021.173
20180526:06:58:58	23.3	16.4	-4.2	23.7	0.25	2.2	0.25	2.0	123.9	285.8	286.4	88.4	51.3	88.9	785.288	780.009	1029.802	1022.979
20180526:07:03:58	23.3	16.4	-4.2	23.7	0.25	2.2	0.25	2.0	124.0	285.8	286.4	88.4	51.2	88.9	786.689	781.373	1031.643	1024.773
20180526:07:08:58	23.3	16.5	-4.2	23.7	0.25	2.2	0.25	2.0	124.1	285.7	286.3	88.4	51.3	88.8	788.035	782.707	1033.411	1026.526
20180526:07:13:58	23.3	16.5	-4.2	23.7	0.25	2.2	0.25	2.0	124.1	285.8	286.4	88.4	51.2	88.7	789.385	784.096	1035.185	1028.353
20180526:07:18:58	23.3	16.5	-4.1	23.7	0.25	2.2	0.25	2.0	124.2	285.8	286.5	88.4	51.3	88.7	790.786	785.438	1037.026	1030.117
20180526:07:23:58	23.3	16.6	-4.1	23.7	0.25	2.2	0.25	2.0	124.3	285.7	286.3	88.4	51.2	88.6	792.146	786.772	1038.813	1031.87
20180526:07:28:58	23.4	16.6	-4.1	23.6	0.25	2.2	0.25	2.0	124.2	285.7	286.4	88.5	51.3	88.6	793.482	788.156	1040.569	1033.69
20180526:07:33:58	23.4	16.6	-4.1	23.6	0.25	2.2	0.25	2.0	124.3	285.8	286.4	88.5	51.2	88.6	794.87	789.483	1042.393	1035.434
20180526:07:38:58	23.4	16.6	-4.0	23.6	0.25	2.2	0.25	2.0	124.3	285.8	286.4	88.5	51.3	88.6	796.222	790.84	1044.17	1037.218
20180526:07:43:58	23.4	16.5	-4.0	23.6	0.25	2.2	0.25	2.0	124.2	285.8	286.4	88.5	51.2	88.5	797.566	792.213	1045.937	1039.023
20180526:07:48:58	23.4	16.6	-4.0	23.6	0.25	2.2	0.25	2.0	124.2	285.9	286.4	88.5	51.3	88.5	798.947	793.547	1047.752	1040.776
20180526:07:53:58	23.4	16.5	-4.0	23.6	0.25	2.2	0.25	2.0	124.1	285.9	286.5	88.4	51.2	88.4	800.316	794.927	1049.552	1042.59
20180526:07:58:58	23.4	16.5	-4.0	23.6	0.25	2.2	0.25	2.0	124.1	285.9	286.4	88.4	51.2	88.4	801.661	796.286	1051.319	1044.376
20180526:08:03:58	23.4	16.5	-4.0	23.6	0.25	2.2	0.25	2.0	124.1	285.8	286.4	88.3	51.1	88.4	803.022	797.613	1053.107	1046.12
20180526:08:08:58	23.4	16.6	-3.9	23.6	0.25	2.2	0.25	2.0	124.2	285.8	286.4	88.3	51.2	88.3	804.406	799.001	1054.926	1047.945
20180526:08:13:58	23.4	16.6	-3.9	23.6	0.25	2.2	0.25	2.0	124.4	285.8	286.3	88.2	51.1	88.3	805.746	800.333	1056.687	1049.695
20180526:08:18:58	23.4	16.6	-3.9	23.6	0.25	2.2	0.25	2.0	124.4	285.8	286.3	88.3	51.2	88.3	807.104	801.675	1058.472	1051.459
20180526:08:23:58	23.4	16.4	-3.9	23.6	0.25	2.2	0.25	2.0	123.9	285.8	286.5	88.3	51.2	88.3	808.509	803.056	1060.319	1053.274
20180526:08:28:58	23.4	16.6	-3.8	23.6	0.25	2.2	0.25	2.0	124.2	285.9	286.5	88.4	51.3	88.4	809.855	804.386	1062.087	1055.023
20180526:08:33:58	23.4	16.6	-3.8	23.6	0.25	2.2	0.25	2.0	124.3	285.8	286.4	88.4	51.2	88.4	811.194	805.752	1063.848	1056.818
20180526:08:38:58	23.4	16.6	-3.8	23.6	0.25	2.2	0.25	2.0	124.4	285.8	286.4	88.5	51.3	88.4	812.593	807.113	1065.687	1058.607
20180526:08:43:58	23.4	16.6	-3.7	23.6	0.25	2.2	0.25	2.0	124.4	285.8	286.4	88.5	51.2	88.4	813.946	808.439	1067.467	1060.352
20180526:08:48:58	23.4	16.6	-3.6	23.6	0.25	2.2	0.25	2.0	124.4	285.8	286.4	88.5	51.3	88.5	815.284	809.82	1069.228	1062.167
20180526:08:53:58	23.4	16.6	-3.4	23.6	0.25	2.2	0.25	2.0	124.4	285.8	286.4	88.5	51.2	88.5	816.672	811.158	1071.054	1063.929
20180526:08:58:58	23.4	16.6	-3.3	23.6	0.25	2.2	0.25	2.0	124.3	285.8	286.4	88.5	51.2	88.4	818.027	812.491	1072.837	1065.682
20180526:09:03:58	23.4	16.5	-3.3	23.6	0.25	2.2	0.25	2.0	124.2	285.8	286.4	88.5	51.1	88.5	819.364	813.873	1074.596	1067.5
20180526:09:08:58	23.4	16.5	-3.2	23.6	0.25	2.2	0.25	2.0	124.2	285.8	286.4	88.5	51.2	88.5	820.745	815.207	1076.413	1069.256
20180526:09:13:58	23.4	16.5	-3.3	23.6	0.25	2.2	0.25	2.0	124.2	285.9	286.5	88.6	51.1	88.5	822.112	816.563	1078.211	1071.039
20180526:09:18:58	23.4	16.4	-3.2	23.6	0.25	2.2	0.25	2.0	124.0	285.8	286.4	88.5	51.2	88.5	823.448	817.924	1079.969	1072.829
20180526:09:23:58	23.4	16.5	-3.2	23.6	0.25	2.2	0.25	2.0	124.2	285.9	286.4	88.4	51.1	88.5	824.814	819.26	1081.765	1074.586
20180526:09:28:58	23.4	16.5	-3.2	23.6	0.25	2.2	0.25	2.0	124.2	285.8	286.4	88.4	51.1	88.5	826.192	820.643	1083.578	1076.406
20180526:09:33:58	23.4	16.5	-3.2	23.6	0.25	2.2	0.25	2.0	124.2	285.8	286.4	88.3	51.1	88.5	827.534	821.988	1085.343	1078.175
20180526:09:38:58	23.4	16.4	-3.2	23.6	0.25	2.2	0.25	2.0	124.0	285.8	286.4	88.4	51.1	88.5	828.892	823.316	1087.128	1079.923
20180526:09:43:58	23.4	16.5	-3.2	23.6	0.25	2.2	0.25	2.0	124.2	285.9	286.4	88.4	51.1	88.6	830.29	824.699	1088.967	1081.742
20180526:09:48:58	23.4	16.5	-3.0	23.6	0.25	2.2	0.25	2.0	124.2	285.8	286.4	88.5	51.1	88.6	831.63	826.023	1090.73	1083.485
20180526:09:53:58	23.4	16.5	-3.0	23.6	0.25	2.2	0.25	2.0	124.1	285.8	286.4	88.4	51.1	88.6	832.977	827.377	1092.502	1085.267
20180526:09:58:58	23.4	16.5	-3.1	23.6	0.25	2.2	0.25	2.0	124.1	285.8	286.4	88.3	51.0	88.6	834.375	828.747	1094.341	1087.07
20180526:10:03:58	23.4	16.2	-3.1	23.6	0.25	2.2	0.25	2.0	123.5	285.7	286.3	88.3	51.1	88.6	835.718	830.08	1096.107	1088.823
20180526:10:08:58	23.4	16.4	-2.9	23.6	0.25	2.2	0.25	2.0	123.9	285.8	286.4	88.3	51.0	88.6	837.058	831.456	1097.87	1090.633
20180526:10:13:58	23.4	16.5	-2.9	23.6	0.25	2.2	0.25	2.0	124.2	285.8	286.4	88.3	51.1	88.6	838.452	832.806	1099.704	1092.412
20180526:10:18:58	23.4	16.5	-2.9	23.6	0.25	2.2	0.25	2.0	124.3	285.7	286.3	88.3	51.0	88.6	839.809	834.126	1101.489	1094.148
20180526:10:23:58	23.4	16.6	-2.8	23.6	0.25	2.2	0.25	2.0	124.4	285.8	286.4	88.5	51.1	88.7	841.143	835.512	1103.244	1095.974
20180526:10:28:58	23.4	16.6	-2.8	23.6	0.25	2.2	0.25	2.0	124.5	285.7	286.3	88.5	51.1	88.7	842.527	836.84	1105.067	1097.722
20180526:10:33:58	23.4	16.6	-2.8	23.6	0.25	2.2	0.25	2.0	124.4	285.7	286.4	88.6	51.0	88.8	843.883	838.184	1106.852	1099.492
20180526:10:38:58	23.4	16.6	-2.8	23.6	0.25	2.2	0.25	2.0	124.4	285.7	286.4	88.7	51.1	88.9	845.223	839.557	1108.617	1101.301
20180526:10:43:58	23.4	16.7	-2.7	23.6	0.25	2.2	0.25	2.0	124.5	285.8	286.5	88.8	51.1	88.9	846.595	840.886	1110.424	1103.053
20180526:10:48:58	23.4	16.7	-2.7	23.6	0.25	2.2	0.25	2.0	124.6	285.8	286.4	88.9	51.1	88.9	847.97	842.254	1112.237	1104.855
20180526:10:53:58	23.4	16.7	-2.7	23.6	0.25	2.2	0.25	2.0	124.7	285.8	286.4	89.0	51.1	89.0	849.311	843.614	1114.004	1106.648

Time:	Stack Pressure:	Sat% H2O:	Static:	Barometric:	Flowmeter1:	Vacuum1:	Flowmeter2:	Vacuum2:	Stack Temp:	Sorbent Temp:	Probe Temp:	DGM#1 Temp:	Condenser Temp:	DGM#2 Temp:	DGM1*:	DGM2*:	DGM1:	DGM2:
day:hh:mm:ss	in-Hg	Percent	in-H2O	in-Hg	l/min	in-Hg	l/min	in-Hg	degF	degF	degF	degF	degF	degF	liters STP	liters STP	liters nominal	liters nominal
20180526:10:58:58	23.4	16.5	-3.0	23.6	0.25	2.2	0.25	2.0	124.0	285.8	286.4	89.0	51.1	89.0	850.663	844.933	1115.787	1108.387
20180526:11:03:58	23.4	16.3	-2.9	23.6	0.25	2.2	0.25	2.0	123.6	285.8	286.4	89.0	51.2	89.1	852.057	846.317	1117.624	1110.212
20180526:11:08:58	23.4	16.6	-2.7	23.6	0.25	2.2	0.25	2.0	124.3	285.8	286.4	89.0	51.0	89.1	853.402	847.653	1119.396	1111.974
20180526:11:13:58	23.4	16.7	-2.7	23.6	0.25	2.2	0.25	2.0	124.5	285.8	286.4	88.9	51.1	89.1	854.746	848.988	1121.169	1113.733
20180526:11:18:58	23.4	16.7	-2.6	23.6	0.25	2.2	0.25	2.0	124.5	285.7	286.3	88.9	51.0	89.1	856.144	850.372	1123.011	1115.558
20180526:11:23:58	23.4	16.7	-2.5	23.6	0.25	2.2	0.25	2.0	124.6	285.8	286.4	88.9	51.1	89.2	857.502	851.703	1124.802	1117.314
20180526:11:28:58	23.4	16.7	-2.8	23.6	0.25	2.2	0.25	2.0	124.6	285.8	286.4	89.0	51.1	89.2	858.842	853.054	1126.569	1119.096
20180526:11:33:58	23.4	16.7	-2.8	23.6	0.25	2.2	0.25	2.0	124.6	285.8	286.4	89.0	51.0	89.3	860.228	854.42	1128.396	1120.898
20180526:11:38:58	23.3	16.2	-3.3	23.6	0.25	2.2	0.25	2.0	123.5	285.7	286.4	89.2	51.1	89.3	861.591	855.75	1130.194	1122.654
20180526:11:43:58	23.4	16.1	-3.0	23.6	0.25	2.2	0.25	2.0	123.1	285.7	286.4	89.3	51.1	89.3	862.926	857.123	1131.957	1124.466
20180526:11:48:58	23.4	16.4	-2.7	23.6	0.25	2.2	0.25	2.0	123.9	285.8	286.4	89.3	51.1	89.4	864.294	858.471	1133.763	1126.246
20180526:11:53:58	23.4	16.5	-2.7	23.6	0.25	2.2	0.25	2.0	124.3	285.8	286.4	89.4	51.1	89.5	865.666	859.788	1135.574	1127.985
20180526:11:58:58	23.4	16.6	-2.8	23.6	0.25	2.2	0.25	2.0	124.4	285.8	286.4	89.5	51.1	89.6	867.006	861.171	1137.343	1129.81
20180526:12:03:58	23.4	16.6	-2.6	23.6	0.25	2.2	0.25	2.0	124.4	285.7	286.4	89.6	51.1	89.6	868.357	862.498	1139.128	1131.564
20180526:12:08:58	23.4	16.6	-2.7	23.6	0.25	2.2	0.25	2.0	124.5	285.8	286.4	89.7	51.2	89.7	869.744	863.837	1140.961	1133.333
20180526:12:13:58	23.4	16.7	-2.5	23.6	0.25	2.2	0.25	2.0	124.5	285.8	286.5	89.9	51.1	89.8	871.085	865.214	1142.733	1135.152
20180526:12:18:58	23.4	16.7	-2.6	23.6	0.25	2.2	0.25	2.0	124.5	285.8	286.4	89.9	51.2	89.8	872.431	866.537	1144.513	1136.902
20180526:12:23:58	23.4	16.7	-2.6	23.6	0.25	2.2	0.25	2.0	124.5	285.8	286.4	90.0	51.2	89.9	873.83	867.9	1146.363	1138.703
20180526:12:28:58	23.4	16.8	-2.6	23.6	0.25	2.2	0.25	2.0	124.7	285.8	286.4	90.1	51.1	89.9	875.184	869.253	1148.154	1140.492
20180526:12:33:58	23.4	16.7	-2.4	23.6	0.25	2.2	0.25	2.0	124.7	285.8	286.4	90.2	51.2	90.0	876.518	870.585	1149.919	1142.254
20180526:12:38:58	23.4	16.7	-2.4	23.6	0.25	2.2	0.25	2.0	124.7	285.9	286.4	90.2	51.2	90.0	877.897	871.966	1151.743	1144.081
20180526:12:43:58	23.4	16.8	-2.4	23.6	0.25	2.2	0.25	2.0	124.8	285.9	286.5	90.2	51.1	90.1	879.258	873.305	1153.544	1145.852
20180526:12:48:58	23.4	16.7	-2.5	23.6	0.25	2.2	0.25	2.0	124.7	285.9	286.4	90.3	51.1	90.2	880.595	874.623	1155.313	1147.596
20180526:12:53:58	23.4	16.7	-2.4	23.6	0.25	2.2	0.25	2.0	124.6	285.8	286.4	90.3	51.2	90.2	881.953	876.013	1157.111	1149.436
20180526:12:58:58	23.4	16.7	-2.5	23.6	0.25	2.2	0.25	2.0	124.6	285.8	286.4	90.3	51.1	90.3	883.341	877.341	1158.948	1151.194
20180526:13:03:58	23.4	16.7	-2.5	23.6	0.25	2.2	0.25	2.0	124.6	285.8	286.4	90.4	51.1	90.3	884.682	878.682	1160.724	1152.968
20180526:13:08:58	23.4	16.6	-2.6	23.6	0.25	2.2	0.25	2.0	124.4	285.8	286.4	90.4	51.1	90.3	886.032	880.062	1162.511	1154.795
20180526:13:13:58	23.4	16.6	-2.5	23.6	0.25	2.2	0.25	2.0	124.4	285.8	286.4	90.4	51.0	90.4	887.432	881.395	1164.365	1156.56
20180526:13:18:58	23.3	15.9	-2.9	23.5	0.25	2.2	0.25	2.0	122.8	285.7	286.3	90.4	51.0	90.4	888.793	882.743	1166.169	1158.346
20180526:13:23:58	23.4	16.3	-2.6	23.5	0.25	2.2	0.25	2.0	123.7	285.8	286.4	90.3	51.1	90.4	890.129	884.109	1167.937	1160.156
20180526:13:28:58	23.4	16.4	-2.5	23.5	0.25	2.2	0.25	2.0	124.0	285.7	286.3	90.3	51.0	90.5	891.505	885.444	1169.759	1161.925
20180526:13:33:58	23.4	16.5	-2.5	23.5	0.25	2.2	0.25	2.0	124.2	285.8	286.3	90.3	51.0	90.5	892.877	886.812	1171.578	1163.737
20180526:13:38:58	23.4	16.6	-2.5	23.5	0.25	2.2	0.25	2.0	124.3	285.7	286.3	90.4	51.0	90.6	894.216	888.165	1173.352	1165.53
20180526:13:43:58	23.4	16.6	-2.5	23.5	0.25	2.2	0.25	2.0	124.4	285.8	286.4	90.5	51.0	90.6	895.576	889.496	1175.154	1167.295
20180526:13:48:58	23.4	16.7	-2.4	23.5	0.25	2.2	0.25	2.0	124.5	285.8	286.5	90.6	51.0	90.7	896.978	890.874	1177.013	1169.122
20180526:13:53:58	23.4	16.7	-2.3	23.5	0.25	2.2	0.25	2.0	124.6	285.8	286.4	90.8	51.0	90.8	898.326	892.219	1178.8	1170.906
20180526:13:58:58	23.4	16.7	-2.3	23.5	0.25	2.2	0.25	2.0	124.6	285.8	286.4	90.9	51.0	90.9	899.663	893.541	1180.574	1172.66
20180526:14:03:58	23.4	16.7	-2.4	23.5	0.25	2.2	0.25	2.0	124.7	285.8	286.4	91.0	51.0	90.9	901.045	894.921	1182.407	1174.491
20180526:14:08:58	23.4	16.7	-2.5	23.5	0.25	2.2	0.25	2.0	124.6	285.8	286.3	91.1	51.0	91.0	902.407	896.259	1184.215	1176.265
20180526:14:13:58	23.3	16.8	-2.5	23.5	0.25	2.2	0.25	2.0	124.7	285.9	286.5	91.2	51.0	91.0	903.748	897.592	1185.994	1178.034
20180526:14:18:58	23.3	16.7	-2.3	23.5	0.25	2.2	0.25	2.0	124.5	285.8	286.4	91.2	51.0	91.1	905.102	898.967	1187.793	1179.859
20180526:14:23:58	23.3	16.1	-2.9	23.5	0.25	2.2	0.25	2.0	123.1	285.8	286.5	91.3	51.0	91.2	906.496	900.292	1189.643	1181.618
20180526:14:28:58	23.3	16.2	-2.8	23.5	0.25	2.2	0.25	2.0	123.3	285.8	286.4	91.3	51.0	91.2	907.844	901.642	1191.433	1183.41
20180526:14:33:58	23.3	16.4	-2.8	23.5	0.25	2.2	0.25	2.0	123.8	285.8	286.4	91.3	51.0	91.2	909.189	903.018	1193.219	1185.237
20180526:14:38:58	23.3	16.5	-2.8	23.5	0.25	2.2	0.25	2.0	124.0	285.8	286.3	91.2	51.0	91.2	910.579	904.354	1195.063	1187.009
20180526:14:43:58	23.3	16.6	-2.7	23.5	0.25	2.2	0.25	2.0	124.2	285.8	286.4	91.2	50.9	91.3	911.933	905.699	1196.861	1188.795
20180526:14:48:58	23.3	16.6	-2.6	23.5	0.25	2.2	0.25	2.0	124.3	285.8	286.3	91.2	50.9	91.3	913.277	907.06	1198.644	1190.603
20180526:14:53:58	23.3	16.6	-2.5	23.5	0.25	2.2	0.25	2.0	124.3	285.8	286.3	91.2	51.0	91.3	914.635	908.392	1200.448	1192.372
20180526:14:58:58	23.3	16.6	-2.4	23.5	0.25	2.2	0.25	2.0	124.4	285.8	286.4	91.2	51.0	91.4	916.021	909.762	1202.289	1194.192
20180526:15:03:58	23.3	16.7	-2.5	23.5	0.25	2.2	0.25	2.0	124.4	285.9	286.4	91.2	51.0	91.4	917.364	911.113	1204.072	1195.987
20180526:15:08:58	23.3	16.7	-2.3	23.5	0.25	2.2	0.25	2.0	124.5	285.9	286.4	91.2	50.9	91.4	918.712	912.444	1205.863	1197.756
20180526:15:13:58	23.3	16.4	-2.6	23.5	0.25	2.2	0.25	2.0	123.8	285.8	286.4	91.2	50.9	91.5	920.111	913.822	1207.72	1199.586
20180526:15:18:58	23.3	16.0	-2.6	23.5	0.25	2.2	0.25	2.0	122.9	285.8	286.4	91.2	51.0	91.5	921.46	915.178	1209.513	1201.389
20180526:15:23:58	23.3	16.4	-2.4	23.5	0.25	2.2	0.25	2.0	123.9	285.8	286.4	91.2	50.9	91.5	922.808	916.503	1211.304	1203.15
20180526:15:28:58	23.3	16.6	-2.5	23.5	0.25	2.2	0.25	2.0	124.2	285.9	286.4	91.2	51.0	91.6	924.173	917.886	1213.117	1204.989
20180526:15:33:58	23.3	16.6	-2.6	23.5	0.25	2.2	0.25	2.0	124.3	285.9	286.4	91.2	50.9	91.6	925.566	919.229	1214.967	1206.773
20180526:15:38:58	23.3	16.6	-2.4	23.5	0.25	2.2	0.25	1.9	124.3	285.9	286.4	91.2	50.9	91.6	926.913	920.553	1216.757	1208.534
20180526:15:43:58	23.3	16.7	-2.5	23.5	0.25	2.2	0.25	2.0	124.4	285.8	286.4	91.2	51.0	91.6	928.262	921.936	1218.55	1210.372
20180526:15:48:58	23.3	16.6	-2.4	23.5	0.25	2.2	0.25	2.0	124.4	285.8	286.4	91.2	50.9	91.6	929.652	923.274	1220.396	1212.152
20180526:15:53:58	23.3	16.6	-2.4	23.5	0.25	2.2	0.25	2.0	124.3	285.8	286.4	91.3	51.0	91.7	931	924.601	1222.187	1213.917
20180526:15:58:58	23.3	16.6	-2.4	23.5	0.25	2.2	0.25	2.0	124.4	285.8	286.4	91.3	51.0	91.7	932.341	925.987	1223.97	1215.759
20180526:16:03:58	23.3	16.7	-2.5	23.5	0.25	2.2	0.25	2.0	124.4	285.9	286.5	91.3	51.0	91.8	933.706	927.313	1225.783	1217.523
20180526:16:08:58	23.3	16.6	-2.3	23.5	0.25	2.2	0.25	2.0	124.3	285.8	286.4	91.3	51.0	91.8	935.093	928.65	1227.628	1219.303
20180526:16:13:58	23.3	16.6	-2.4	23.5	0.25	2.2	0.25	2.0	124.3	285.9	286.4	91.4	51.0	91.8	936.431	930.031	1229.406	1221.139
20180526:16:18:58	23.3	16.6	-2.3	23.5	0.25	2.2	0.25	2.0	124.3	285.9	286.5	91.5	51.0	91.9	937.776	931.353	1231.194	1222.898
20180526:16:23:58	23.3	16.6	-2.3	23.5	0.25	2.2	0.25	2.0	124.4	285.8	286.4	91.5	51.0	91.9	939.173	932.701	1233.052	1224.692
20180526:16:28:58	23.3	16.6	-2.2	23.5	0.25	2.2	0.25	2.0	124.4	285.9	286.5	91.5	51.1	91.9	940.527	934.082	1234.852	1226.53
20180526:16:33:58	23.3	16.7	-2.1	23.5	0.25	2.2	0.25	2.0	124.5	285.8	286.4	91.5	51.0	91.9	941.864	935.412	1236.631	1228.301
20180526:16:38:58	23.3	16.7	-2.2	23.5	0.25	2.2	0.25	2.0	124.5	285.9	286.5	91.6	51.1	92.0	943.232	936.757	1238.45	1230.09
20180526:16:43:58	23.3	16.7	-2.2	23.5	0.25	2.2	0.25	2.0	124.5	285.8	286.4	91.6	51.1	92.0	944.619	938.129	1240.296	1231.917
20180526:16:48:58	23.3	16.7	-2.2	23.5	0.25	2.2	0.25	2.0	124.5	285.8	286.4	91.6	51.1	92.0	945.96	939.462	1242.08	1233.692
20180526:16:53:58	23.3	16.6	-2.4	23.5	0.25	2.2	0.25	2.0	124.3	285.8	286.4	91.6	51.1	92.0	947.303	940.819	1243.867	1235.498
20180526:16:58:58	23.3	16.7	-2.5	23.5	0.25	2.3	0.25	2.0	124.4	285.8	286.4	91.7	51.2	92.1	948.702	942.184	1245.728	1237.316
20180526:17:03:58	23.3	16.7	-2.5	23.5	0.25	2.2	0.25	2.0	124.4	285.9	286.5	91.8	51.2	92.1	950.052	943.523	1247.524	1239.1
20180526:17:08:58	23.3	16.6	-2.6	23.5	0.25	2.2	0.25	2.0	124.2	285.8	286.5	91.9	51.3	92.2	951.402	944.88	1249.322	1240.906
20180526:17:13:58	23.3	15.8	-2.9	23.5	0.25	2.2	0.25	1.9	122.5	285.8	286.4	92.0	51.3	92.2	952.759	946.242	1251.13	1242.722
20180526:17:18:58	23.3	16.0	-2.8	23.5	0.25	2.2	0.25	2.0	122.9	285.8	286.5	92.1	51.3	92.3	954.148	947.577	1252.98	1244.5
20180526:17:23:58	23.3	15.8	-2.9	23.5	0.25	2.2	0.25	2.0	122.5	285.8	286.5	92.2	51.4	92.3	955.497	948.936	1254.778	1246.312
20180526:17:28:58	23.3	16.2	-2.7	23.5	0.25	2.2	0.25	2.0	123.3	285.9	286.6	92.3	51.4	92.4	956.84	950.293	1256.567	1248.12
20180526:17:33:58	23.3	16.4	-2.8	23.5	0.25	2.2	0.25	2.0	123.8	286.0	286.5	92.4	51.4	92.4	958.221	951.622	1258.407	1249.891
20180526:17:38:58	23.3	16.5	-2.8	23.5	0.25	2.2	0.25	2.0	124.0	285.9	286.6	92.5	51.4	92.5	959.572	952.991	1260.207	1251.716
20180526:17:43:58	23.3	16.5	-2.8	23.5	0.25	2.2	0.25	2.0	123.9	285.9	286.4	92.6	51.4	92.6	960.915	954.34	1261.996	1253.513
20180526:17:48:58	23.3	16.5	-2.8	23.5	0.25	2.2	0.25	2.0	124.0	285.8	286.4	92.7	51.5	92.7	962.268	955.666	1263.8	1255.28
20180526:17:53:58	23.3	16.6	-2.8	23.5	0.25	2.2	0.25	2.0	124.1	285.9	286.5	92.8	51.5	92.7	963.657	957.038	1265.652	1257.109
20180526:17:58:58	23.3	16.6	-2.9	23.5	0.25	2.3	0.25	2.0	124.2	285.9	286.4	92.8	51.5	92.8	965.002	958.384	1267.444	1258.902
20180526:18:03:58	23.3	16.6	-2.8	23.5	0.25	2.2	0.25	2.0	124.2	285.8	286.4	92.9	51.5	92.8	966.345	959.702	1269.235	1260.66
20180526:18:08:58	23.3	16.5	-2.7	23.5	0.25	2.2	0.25	2.0	124.1	285.8	286.4	92.9	51.5	92.8	967.726	961.081	1271.076	1262.498
20180526:18:13:58	23.3	16.5	-2.8	23.5	0.25	2.2	0.25	2.0	124.0	285.9	286.5	93.0	51.6	92.9	969.083	962.414	1272.885	1264.274
20180526:18:18:58	23.3	16.5	-2.8	23.5	0.25	2.2	0.25	2.0	123.9	285.8	286.4	93.1	51.6	92.9	970.423	963.732	1274.672	1266.032

Time:	Stack Pressure:	Sat% H2O:	Static:	Barometric:	Flowmeter1:	Vacuum1:	Flowmeter2:	Vacuum2:	Stack Temp:	Sorbent Temp:	Probe Temp:	DGM#1 Temp:	Condenser Temp:	DGM#2 Temp:	DGM1*:	DGM2*:	DGM1:	DGM2:
day:hh:mm:ss	in-Hg	Percent	in-H2O	in-Hg	l/min	in-Hg	l/min	in-Hg	degF	degF	degF	degF	degF	degF	liters STP	liters STP	liters nominal	liters nominal
20180526:18:23:58	23.3	16.5	-2.8	23.5	0.25	2.2	0.25	2.0	123.9	285.8	286.4	93.1	51.6	93.0	971.77	965.119	1276.469	1267.882
20180526:18:28:58	23.3	16.5	-2.7	23.5	0.25	2.2	0.25	2.0	124.0	285.8	286.4	93.2	51.6	93.0	973.159	966.443	1278.322	1269.647
20180526:18:33:58	23.3	16.5	-2.5	23.5	0.25	2.2	0.25	2.0	124.1	285.9	286.4	93.3	51.6	93.1	974.505	967.773	1280.119	1271.421
20180526:18:38:58	23.3	16.6	-2.4	23.5	0.25	2.2	0.25	2.0	124.3	285.9	286.6	93.3	51.6	93.1	975.844	969.148	1281.906	1273.256
20180526:18:43:58	23.3	16.6	-2.6	23.5	0.25	2.2	0.25	2.0	124.3	285.9	286.5	93.4	51.6	93.2	977.223	970.468	1283.746	1275.017
20180526:18:48:58	23.3	16.6	-2.7	23.5	0.25	2.2	0.25	2.0	124.2	285.9	286.5	93.5	51.7	93.2	978.579	971.81	1285.557	1276.808
20180526:18:53:58	23.3	16.0	-2.9	23.5	0.25	2.2	0.25	2.0	122.9	285.8	286.6	93.5	51.7	93.2	979.922	973.185	1287.35	1278.643
20180526:18:58:58	23.3	16.1	-2.8	23.5	0.25	2.3	0.25	2.0	123.1	285.9	286.6	93.6	51.7	93.3	981.272	974.51	1289.154	1280.412
20180526:19:03:58	23.3	16.2	-2.8	23.5	0.25	2.2	0.25	2.0	123.4	285.9	286.6	93.6	51.7	93.3	982.672	975.855	1291.022	1282.207
20180526:19:08:58	23.3	16.3	-2.7	23.5	0.25	2.2	0.25	2.0	123.6	285.9	286.5	93.7	51.7	93.3	984.028	977.228	1292.833	1284.039
20180526:19:13:58	23.3	16.4	-2.7	23.5	0.25	2.2	0.25	2.0	123.9	285.9	286.5	93.7	51.7	93.4	985.362	978.562	1294.615	1285.82
20180526:19:18:58	23.3	16.7	-2.8	23.5	0.25	2.2	0.25	2.0	124.5	285.9	286.6	93.7	51.7	93.4	986.731	979.909	1296.443	1287.617
20180526:19:23:58	23.3	16.7	-2.8	23.5	0.25	2.2	0.25	2.0	124.5	285.9	286.5	93.7	51.7	93.4	988.111	981.284	1298.285	1289.451
20180526:19:28:58	23.3	16.6	-2.9	23.5	0.25	2.3	0.25	2.0	124.2	285.9	286.6	93.8	51.7	93.5	989.458	982.62	1300.083	1291.235
20180526:19:33:58	23.3	16.1	-3.2	23.5	0.25	2.2	0.25	2.0	123.1	285.8	286.5	93.8	51.7	93.5	990.814	983.965	1301.894	1293.03
20180526:19:38:58	23.3	15.7	-3.1	23.5	0.25	2.2	0.25	2.0	122.1	285.8	286.5	93.8	51.7	93.5	992.202	985.338	1303.748	1294.863
20180526:19:43:58	23.3	16.0	-2.9	23.5	0.25	2.2	0.25	2.0	122.8	285.8	286.5	93.8	51.7	93.5	993.566	986.676	1305.57	1296.648
20180526:19:48:58	23.3	15.9	-3.0	23.5	0.25	2.3	0.25	2.0	122.6	285.8	286.4	93.8	51.7	93.5	994.913	988.021	1307.369	1298.444
20180526:19:53:58	23.3	15.1	-2.8	23.5	0.25	2.2	0.25	2.0	120.9	285.8	286.4	93.7	51.7	93.5	996.272	989.403	1309.183	1300.288
20180526:19:58:58	23.3	15.4	-2.6	23.5	0.25	2.2	0.25	2.0	121.5	285.8	286.4	93.7	51.7	93.5	997.68	990.738	1311.063	1302.07
20180526:20:03:58	23.3	15.3	-2.8	23.5	0.25	2.3	0.25	2.0	121.3	285.8	286.5	93.6	51.7	93.4	999.041	992.091	1312.88	1303.876
20180526:20:08:58	23.3	15.1	-2.7	23.5	0.25	2.2	0.25	2.0	120.7	285.8	286.4	93.6	51.6	93.4	1000.396	993.482	1314.689	1305.731
20180526:20:13:58	23.3	14.8	-2.7	23.5	0.25	2.3	0.25	2.0	120.2	285.8	286.5	93.6	51.6	93.4	1001.758	994.816	1316.507	1307.511
20180526:20:18:58	23.3	14.8	-2.8	23.5	0.25	2.2	0.25	2.0	120.0	285.8	286.5	93.6	51.6	93.4	1003.161	996.162	1318.38	1309.308
20180526:20:23:58	23.3	14.7	-2.8	23.5	0.25	2.2	0.25	2.0	119.7	285.8	286.5	93.6	51.5	93.4	1004.513	997.55	1320.185	1311.16
20180526:20:28:58	23.3	14.7	-2.8	23.5	0.25	2.2	0.25	2.0	119.9	285.8	286.5	93.6	51.4	93.3	1005.866	998.893	1321.991	1312.951
20180526:20:33:58	23.3	14.5	-2.9	23.5	0.25	2.2	0.25	2.0	119.3	285.8	286.5	93.6	51.4	93.3	1007.229	1000.24	1323.809	1314.748
20180526:20:38:58	23.3	14.0	-2.7	23.5	0.25	2.2	0.25	2.0	118.2	285.8	286.4	93.6	51.4	93.4	1008.637	1001.632	1325.689	1316.605
20180526:20:43:58	23.3	14.2	-2.6	23.5	0.25	2.2	0.25	2.0	118.6	285.9	286.5	93.6	51.4	93.4	1009.998	1002.97	1327.506	1318.391
20180526:20:48:58	23.3	14.7	-2.8	23.5	0.25	2.2	0.25	2.0	119.9	285.9	286.4	93.6	51.4	93.4	1011.34	1004.301	1329.296	1320.165
20180526:20:53:58	23.3	15.0	-2.7	23.5	0.25	2.3	0.25	2.0	120.5	285.9	286.5	93.6	51.4	93.3	1012.711	1005.694	1331.126	1322.024
20180526:20:58:58	23.3	15.1	-2.8	23.5	0.25	2.3	0.25	2.0	120.9	285.8	286.5	93.6	51.3	93.3	1014.11	1007.04	1332.993	1323.82
20180526:21:03:58	23.3	15.3	-3.0	23.5	0.25	2.2	0.25	2.0	121.4	286.0	286.5	93.6	51.3	93.3	1015.467	1008.377	1334.804	1325.602
20180526:21:08:58	23.3	15.5	-3.3	23.5	0.25	2.2	0.25	2.0	121.8	285.9	286.4	93.6	51.3	93.3	1016.815	1009.771	1336.602	1327.461
20180526:21:13:58	23.3	15.6	-3.1	23.5	0.25	2.2	0.25	2.0	121.9	285.9	286.5	93.6	51.4	93.3	1018.193	1011.118	1338.441	1329.258
20180526:21:18:58	23.3	15.6	-2.9	23.5	0.25	2.3	0.25	2.0	121.9	286.0	286.5	93.5	51.3	93.2	1019.581	1012.45	1340.293	1331.034
20180526:21:23:58	23.3	15.6	-2.9	23.5	0.25	2.3	0.25	2.0	121.9	286.0	286.5	93.5	51.4	93.2	1020.933	1013.844	1342.096	1332.893
20180526:21:28:58	23.3	15.5	-2.9	23.5	0.25	2.3	0.25	2.0	121.8	285.9	286.5	93.5	51.4	93.2	1022.293	1015.198	1343.911	1334.697
20180526:21:33:58	23.3	15.5	-2.9	23.5	0.25	2.3	0.25	2.0	121.7	285.9	286.4	93.4	51.3	93.2	1023.681	1016.528	1345.761	1336.47
20180526:21:38:58	23.3	15.3	-2.9	23.5	0.25	2.3	0.25	2.0	121.4	285.9	286.5	93.3	51.4	93.1	1025.057	1017.914	1347.596	1338.318
20180526:21:43:58	23.3	14.7	-2.7	23.5	0.25	2.3	0.25	2.0	119.8	285.8	286.4	93.3	51.4	93.1	1026.414	1019.272	1349.406	1340.128
20180526:21:48:58	23.3	14.5	-2.6	23.5	0.25	2.3	0.25	2.0	119.4	285.8	286.4	93.2	51.3	93.1	1027.779	1020.603	1351.224	1341.9
20180526:21:53:58	23.3	14.8	-3.1	23.5	0.25	2.3	0.25	2.0	120.0	285.8	286.5	93.2	51.4	93.0	1029.172	1021.985	1353.081	1343.742
20180526:21:58:58	23.3	14.8	-2.9	23.5	0.25	2.3	0.25	2.0	120.1	285.9	286.5	93.2	51.4	93.0	1030.542	1023.338	1354.907	1345.545
20180526:22:03:58	23.3	14.8	-2.9	23.5	0.25	2.3	0.25	2.0	120.2	285.8	286.5	93.2	51.3	92.9	1031.89	1024.68	1356.704	1347.333
20180526:22:08:58	23.3	14.9	-3.0	23.5	0.25	2.3	0.25	2.0	120.2	285.8	286.4	93.2	51.4	92.9	1033.255	1026.056	1358.522	1349.165
20180526:22:13:58	23.3	14.9	-3.0	23.5	0.25	2.3	0.25	2.0	120.3	285.8	286.5	93.2	51.4	92.9	1034.664	1027.416	1360.4	1350.977
20180526:22:18:58	23.3	14.9	-3.0	23.5	0.25	2.3	0.25	2.0	120.3	285.9	286.5	93.2	51.3	92.9	1036.032	1028.759	1362.224	1352.765
20180526:22:23:58	23.3	14.9	-3.0	23.5	0.25	2.3	0.25	2.0	120.3	285.9	286.5	93.1	51.4	92.9	1037.383	1030.129	1364.024	1354.59
20180526:22:28:58	23.3	14.9	-3.1	23.5	0.25	2.3	0.25	2.0	120.3	285.9	286.5	93.1	51.3	92.8	1038.75	1031.5	1365.844	1356.415
20180526:22:33:58	23.3	14.9	-3.1	23.5	0.25	2.3	0.25	2.0	120.3	285.9	286.4	93.1	51.3	92.8	1040.157	1032.847	1367.719	1358.209
20180526:22:38:58	23.3	14.5	-3.0	23.5	0.25	2.3	0.25	2.0	119.4	285.8	286.5	93.0	51.4	92.7	1041.517	1034.206	1369.53	1360.017
20180526:22:43:58	23.3	14.1	-3.0	23.5	0.25	2.2	0.25	2.0	118.3	285.8	286.4	92.9	51.3	92.7	1042.878	1035.584	1371.343	1361.852
20180526:22:48:58	23.3	14.0	-3.0	23.5	0.25	2.2	0.25	2.0	118.0	285.8	286.5	92.9	51.4	92.7	1044.237	1036.936	1373.152	1363.652
20180526:22:53:58	23.3	14.5	-3.1	23.5	0.25	2.3	0.25	2.0	119.4	285.8	286.5	92.9	51.4	92.6	1045.649	1038.288	1375.033	1365.451
20180526:22:58:58	23.3	14.7	-3.1	23.5	0.25	2.3	0.25	2.0	119.9	285.9	286.5	92.8	51.3	92.6	1047.016	1039.674	1376.854	1367.297
20180526:23:03:58	23.3	14.9	-3.1	23.5	0.25	2.3	0.25	2.0	120.2	285.9	286.5	92.8	51.4	92.5	1048.367	1041.011	1378.652	1369.075
20180526:23:08:58	23.3	14.9	-3.0	23.5	0.25	2.3	0.25	2.0	120.4	285.8	286.4	92.7	51.3	92.4	1049.737	1042.367	1380.476	1370.88
20180526:23:13:58	23.3	14.5	-3.0	23.5	0.25	2.3	0.25	2.0	119.2	285.9	286.5	92.7	51.3	92.4	1051.149	1043.758	1382.356	1372.731
20180526:23:18:58	23.3	14.3	-3.0	23.5	0.25	2.3	0.25	2.0	118.8	285.8	286.5	92.6	51.3	92.3	1052.514	1045.095	1384.172	1374.509
20180526:23:23:58	23.3	14.2	-3.0	23.5	0.25	2.3	0.25	2.0	118.6	285.8	286.5	92.6	51.3	92.3	1053.858	1046.451	1385.961	1376.314
20180526:23:28:58	23.3	14.8	-3.1	23.5	0.25	2.3	0.25	2.0	120.1	285.8	286.5	92.5	51.4	92.3	1055.232	1047.845	1387.791	1378.169
20180526:23:33:58	23.3	15.1	-3.0	23.5	0.25	2.3	0.25	2.0	120.7	285.9	286.5	92.5	51.3	92.3	1056.635	1049.192	1389.657	1379.961
20180526:23:38:58	23.3	15.2	-3.1	23.5	0.25	2.3	0.25	2.0	121.0	285.9	286.4	92.4	51.3	92.2	1058.001	1050.54	1391.476	1381.754
20180526:23:43:58	23.3	14.8	-3.1	23.5	0.25	2.3	0.25	2.0	120.2	285.9	286.5	92.4	51.4	92.2	1059.356	1051.936	1393.278	1383.611
20180526:23:48:58	23.3	14.5	-3.0	23.5	0.25	2.3	0.25	2.0	119.5	285.8	286.4	92.3	51.2	92.1	1060.738	1053.292	1395.117	1385.414
20180526:23:53:58	23.3	14.4	-3.0	23.5	0.25	2.3	0.25	2.0	119.1	285.9	286.5	92.3	51.3	92.1	1062.134	1054.633	1396.974	1387.197
20180526:23:58:58	23.3	14.7	-2.9	23.5	0.25	2.3	0.25	2.0	119.9	285.8	286.5	92.2	51.2	92.0	1063.499	1056.032	1398.791	1389.058
20180527:00:03:58	23.3	15.2	-2.9	23.5	0.25	2.3	0.25	2.0	121.0	285.9	286.4	92.1	51.3	92.0	1064.853	1057.386	1400.593	1390.859
20180527:00:08:58	23.3	15.3	-2.9	23.5	0.25	2.3	0.25	2.0	121.4	285.9	286.4	92.0	51.3	92.0	1066.241	1058.724	1402.439	1392.639
20180527:00:13:58	23.3	15.4	-2.8	23.5	0.25	2.3	0.25	2.0	121.6	286.0	286.5	92.0	51.2	91.9	1067.626	1060.116	1404.281	1394.491
20180527:00:18:58	23.3	15.5	-2.7	23.5	0.25	2.3	0.25	2.0	121.7	286.0	286.4	91.8	51.2	91.9	1068.987	1061.477	1406.091	1396.301
20180527:00:23:58	23.3	15.4	-2.8	23.5	0.25	2.3	0.25	2.0	121.6	285.9	286.4	91.7	51.2	91.9	1070.346	1062.808	1407.898	1398.071
20180527:00:28:58	23.3	15.4	-2.9	23.5	0.25	2.3	0.25	2.0	121.5	285.9	286.3	91.5	51.2	91.8	1071.74	1064.194	1409.752	1399.915
20180527:00:33:58	23.3	15.5	-2.8	23.5	0.25	2.3	0.25	2.0	121.8	285.9	286.4	91.4	51.2	91.7	1073.108	1065.554	1411.57	1401.724
20180527:00:38:58	23.3	15.6	-2.9	23.5	0.25	2.3	0.25	2.0	121.9	285.9	286.4	91.3	51.1	91.7	1074.458	1066.897	1413.365	1403.509
20180527:00:43:58	23.3	15.6	-2.9	23.5	0.25	2.3	0.25	2.0	121.9	285.9	286.4	91.2	51.2	91.6	1075.824	1068.275	1415.18	1405.342
20180527:00:48:58	23.3	15.5	-3.1	23.5	0.25	2.3	0.25	2.0	121.8	285.9	286.4	91.1	51.1	91.5	1077.227	1069.631	1417.043	1407.145
20180527:00:53:58	23.3	15.0	-3.3	23.5	0.25	2.2	0.25	2.0	120.6	285.8	286.3	91.0	51.2	91.5	1078.59	1070.972	1418.852	1408.927
20180527:00:58:58	23.2	15.7	-3.8	23.5	0.25	2.3	0.25	2.0	122.0	285.9	286.3	90.9	51.1	91.4	1079.929	1072.348	1420.63	1410.756
20180527:01:03:58	23.2	16.0	-3.9	23.5	0.25	2.3	0.25	2.0	122.8	285.9	286.4	90.8	51.1	91.3	1081.302	1073.705	1422.452	1412.558
20180527:01:08:58	23.2	16.2	-3.9	23.5	0.25	2.3	0.25	2.0	123.2	285.9	286.3	90.7	51.1	91.3	1082.694	1075.045	1424.298	1414.338
20180527:01:13:58	23.2	16.3	-4.0	23.5	0.25	2.3	0.25	2.0	123.5	285.9	286.4	90.6	51.1	91.2	1084.042	1076.421	1426.087	1416.165
20180527:01:18:58	23.2	15.7	-4.3	23.5	0.25	2.3	0.25	2.0	122.0	285.9	286.4	90.6	51.2	91.2	1085.397	1077.777	1427.883	1417.964
20180527:01:23:58	23.2	16.2	-4.2	23.5	0.25	2.3	0.25	2.0	123.3	285.9	286.3	90.5	51.1	91.1	1086.794	1079.116	1429.735	1419.742
20180527:01:28:58	23.2	16.4	-4.1	23.5	0.25	2.3	0.25	2.0	123.7	285.8	286.3	90.4	51.2	91.1	1088.151	1080.494	1431.533	1421.571
20180527:01:33:58	23.2	16.6	-4.1	23.5	0.25	2.3	0.25	2.0	124.1	285.9	286.3	90.4	51.1	91.0	1089.5	1081.856	1433.322	1423.378
20180527:01:38:58	23.2	16.8	-4.2	23.5	0.25	2.2	0.25	2.0	124.5	285.9	286.4	90.4	51.1	91.0	1090.864	1083.186	1435.13	1425.143
20180527:01:43:58	23.2	16.7	-4.2	23.5	0.25	2.2	0.25	2.0	124.4	285.9	286.3	90.5	51.2	90.9	1092.258	1084.569	1436.978	1426.977

Time:	Stack Pressure:	Sat% H2O:	Static:	Barometric:	Flowmeter1:	Vacuum1:	Flowmeter2:	Vacuum2:	Stack Temp:	Sorbent Temp:	Probe Temp:	DGM#1 Temp:	Condenser Temp:	DGM#2 Temp:	DGM1*:	DGM2*:	DGM1:	DGM2:
day:hh:mm:ss	in-Hg	Percent	in-H2O	in-Hg	l/min	in-Hg	l/min	in-Hg	degF	degF	degF	degF	degF	degF	liters STP	liters STP	liters nominal	liters nominal
20180527:01:48:58	23.2	16.9	-4.3	23.5	0.25	2.2	0.25	2.0	124.8	285.8	286.4	90.6	51.2	90.9	1093.602	1085.925	1438.759	1428.776
20180527:01:53:58	23.2	16.9	-4.2	23.5	0.25	2.3	0.25	2.0	124.8	285.9	286.3	90.6	51.2	90.9	1094.95	1087.246	1440.546	1430.528
20180527:01:58:58	23.2	16.9	-4.3	23.5	0.25	2.3	0.25	2.0	124.7	285.9	286.4	90.7	51.1	90.8	1096.344	1088.627	1442.394	1432.359
20180527:02:03:58	23.2	16.9	-4.4	23.6	0.25	2.3	0.25	2.0	124.9	285.9	286.4	90.7	51.2	90.8	1097.697	1089.966	1444.187	1434.133
20180527:02:08:58	23.2	16.9	-4.3	23.6	0.25	2.3	0.25	2.0	124.7	285.9	286.3	90.7	51.2	90.8	1099.035	1091.298	1445.959	1435.898
20180527:02:13:58	23.2	16.9	-4.3	23.6	0.25	2.3	0.25	2.0	124.8	285.8	286.4	90.7	51.2	90.7	1100.404	1092.681	1447.774	1437.731
20180527:02:18:58	23.2	17.0	-4.4	23.6	0.25	2.3	0.25	2.0	125.1	285.9	286.3	90.8	51.2	90.8	1101.777	1094.007	1449.593	1439.487
20180527:02:23:58	23.2	16.4	-4.8	23.6	0.25	2.3	0.25	2.0	123.7	285.9	286.4	90.8	51.2	90.7	1103.117	1095.351	1451.367	1441.267
20180527:02:28:58	23.2	16.5	-4.5	23.6	0.25	2.2	0.25	2.0	123.9	285.8	286.3	90.8	51.3	90.7	1104.473	1096.734	1453.163	1443.098
20180527:02:33:58	23.2	16.8	-4.5	23.6	0.25	2.3	0.25	2.0	124.6	285.9	286.4	90.7	51.2	90.7	1105.876	1098.068	1455.02	1444.865
20180527:02:38:58	23.2	16.9	-4.7	23.6	0.25	2.3	0.25	2.0	124.8	285.9	286.5	90.8	51.4	90.7	1107.227	1099.418	1456.809	1446.652
20180527:02:43:58	23.2	17.0	-4.7	23.6	0.25	2.3	0.25	2.0	124.9	285.9	286.4	90.8	51.3	90.7	1108.564	1100.783	1458.58	1448.459
20180527:02:48:58	23.2	16.9	-4.7	23.6	0.25	2.3	0.25	2.0	124.8	285.8	286.5	90.8	51.4	90.6	1109.949	1102.121	1460.413	1450.229
20180527:02:53:58	23.2	17.0	-4.7	23.6	0.25	2.3	0.25	2.0	125.0	285.9	286.5	90.8	51.4	90.6	1111.312	1103.492	1462.217	1452.043
20180527:02:58:58	23.2	17.0	-4.7	23.6	0.25	2.3	0.25	2.0	125.0	285.9	286.4	90.7	51.4	90.6	1112.655	1104.852	1463.994	1453.842
20180527:03:03:58	23.2	17.2	-4.7	23.6	0.25	2.3	0.25	2.0	125.4	285.9	286.5	90.7	51.4	90.6	1114.018	1106.18	1465.798	1455.6
20180527:03:08:58	23.2	17.0	-4.6	23.6	0.25	2.3	0.25	2.0	125.1	285.9	286.5	90.7	51.4	90.5	1115.418	1107.568	1467.65	1457.436
20180527:03:13:58	23.2	17.1	-4.5	23.6	0.25	2.3	0.25	2.0	125.3	285.9	286.5	90.6	51.4	90.4	1116.768	1108.918	1469.437	1459.222
20180527:03:18:58	23.2	17.1	-4.6	23.6	0.25	2.3	0.25	2.0	125.3	285.9	286.5	90.5	51.3	90.4	1118.12	1110.248	1471.226	1460.981
20180527:03:23:58	23.2	17.0	-4.5	23.6	0.25	2.2	0.25	2.0	124.9	285.9	286.4	90.4	51.4	90.3	1119.514	1111.634	1473.07	1462.816
20180527:03:28:58	23.2	17.0	-4.5	23.6	0.25	2.3	0.25	2.0	125.0	285.8	286.4	90.3	51.3	90.3	1120.873	1112.974	1474.869	1464.588
20180527:03:33:58	23.2	17.1	-4.6	23.6	0.25	2.3	0.25	2.0	125.2	285.9	286.4	90.1	51.4	90.2	1122.226	1114.314	1476.659	1466.361
20180527:03:38:58	23.2	17.2	-4.6	23.6	0.25	2.2	0.25	2.0	125.4	285.9	286.5	90.0	51.3	90.2	1123.589	1115.696	1478.461	1468.19
20180527:03:43:58	23.2	17.3	-4.6	23.6	0.25	2.3	0.25	2.0	125.7	285.8	286.4	89.8	51.3	90.1	1124.98	1117.028	1480.3	1469.951
20180527:03:48:58	23.2	17.3	-4.6	23.6	0.25	2.3	0.25	2.0	125.5	285.8	286.4	89.7	51.3	90.1	1126.322	1118.375	1482.074	1471.733
20180527:03:53:58	23.2	17.1	-4.7	23.6	0.25	2.3	0.25	2.0	125.2	285.8	286.5	89.6	51.3	90.0	1127.673	1119.758	1483.859	1473.562
20180527:03:58:58	23.2	17.1	-4.6	23.6	0.25	2.3	0.25	2.0	125.3	285.8	286.4	89.5	51.2	89.9	1129.075	1121.094	1485.713	1475.329
20180527:04:03:58	23.2	17.1	-4.6	23.6	0.25	2.3	0.25	2.0	125.1	285.9	286.4	89.4	51.3	89.9	1130.438	1122.446	1487.513	1477.117
20180527:04:08:58	23.2	17.1	-4.6	23.6	0.25	2.3	0.25	2.0	125.1	285.8	286.4	89.3	51.2	89.8	1131.768	1123.816	1489.27	1478.929
20180527:04:13:58	23.2	17.1	-4.6	23.6	0.25	2.2	0.25	2.0	125.1	285.8	286.3	89.2	51.3	89.7	1133.149	1125.148	1491.094	1480.69
20180527:04:18:58	23.2	17.2	-4.5	23.6	0.25	2.3	0.25	2.0	125.5	285.8	286.4	89.1	51.2	89.6	1134.519	1126.521	1492.904	1482.504
20180527:04:23:58	23.2	17.2	-4.5	23.6	0.25	2.3	0.25	2.0	125.4	285.8	286.3	89.2	51.3	89.5	1135.869	1127.877	1494.687	1484.297
20180527:04:28:58	23.2	17.2	-4.6	23.6	0.25	2.3	0.25	2.0	125.4	285.8	286.4	89.2	51.3	89.5	1137.222	1129.213	1496.474	1486.062
20180527:04:33:58	23.2	17.1	-4.5	23.6	0.25	2.3	0.25	2.0	125.3	285.8	286.4	89.3	51.4	89.4	1138.615	1130.596	1498.315	1487.889
20180527:04:38:58	23.2	17.0	-4.6	23.6	0.25	2.3	0.25	2.0	125.1	285.8	286.3	89.3	51.3	89.4	1139.964	1131.946	1500.096	1489.673
20180527:04:43:58	23.2	17.0	-4.7	23.6	0.25	2.3	0.25	2.0	125.0	285.9	286.4	89.3	51.4	89.3	1141.314	1133.273	1501.88	1491.427
20180527:04:48:58	23.2	17.0	-4.7	23.6	0.25	2.3	0.25	2.0	125.1	285.8	286.4	89.3	51.3	89.3	1142.712	1134.659	1503.726	1493.258
20180527:04:53:58	23.2	17.1	-4.7	23.6	0.25	2.3	0.25	2.0	125.2	285.8	286.4	89.3	51.4	89.3	1144.07	1135.996	1505.52	1495.023
20180527:04:58:58	23.2	17.0	-4.8	23.6	0.25	2.3	0.25	2.0	124.9	285.8	286.3	89.3	51.3	89.3	1145.408	1137.333	1507.287	1496.788
20180527:05:03:58	23.2	17.0	-4.8	23.6	0.25	2.3	0.25	2.0	125.1	285.9	286.4	89.3	51.4	89.2	1146.788	1138.718	1509.109	1498.617
20180527:05:08:58	23.2	17.0	-4.8	23.6	0.25	2.2	0.25	2.0	124.9	285.9	286.4	89.3	51.3	89.2	1148.16	1140.048	1510.92	1500.372
20180527:05:13:58	23.2	17.0	-4.8	23.6	0.25	2.2	0.25	2.0	124.9	285.9	286.3	89.3	51.4	89.2	1149.501	1141.4	1512.691	1502.156
20180527:05:18:58	23.2	16.9	-4.7	23.6	0.25	2.3	0.25	2.0	124.9	285.8	286.3	89.2	51.2	89.1	1150.859	1142.77	1514.483	1503.964
20180527:05:23:58	23.2	16.7	-4.8	23.6	0.25	2.3	0.25	2.0	124.4	285.8	286.3	89.2	51.3	89.0	1152.261	1144.109	1516.333	1505.731
20180527:05:28:58	23.2	16.7	-4.8	23.6	0.25	2.3	0.25	2.0	124.3	285.8	286.3	89.0	51.2	89.0	1153.611	1145.483	1518.115	1507.543
20180527:05:33:58	23.2	16.8	-4.8	23.6	0.25	2.3	0.25	2.0	124.5	285.8	286.3	89.0	51.3	88.9	1154.958	1146.842	1519.893	1509.336
20180527:05:38:58	23.2	16.7	-4.8	23.6	0.25	2.3	0.25	2.0	124.5	285.8	286.4	89.0	51.2	88.9	1156.352	1148.172	1521.731	1511.09
20180527:05:43:58	23.2	16.7	-4.8	23.6	0.25	2.3	0.25	2.0	124.4	285.9	286.3	88.9	51.3	88.8	1157.71	1149.56	1523.522	1512.921
20180527:05:48:58	23.2	16.7	-4.9	23.6	0.25	2.2	0.25	2.0	124.4	285.9	286.3	88.7	51.2	88.7	1159.05	1150.902	1525.289	1514.69
20180527:05:53:58	23.2	16.7	-4.9	23.6	0.25	2.2	0.25	2.0	124.3	285.8	286.3	88.6	51.3	88.7	1160.43	1152.231	1527.107	1516.442
20180527:05:58:58	23.2	15.9	-5.2	23.6	0.25	2.2	0.25	2.0	122.5	285.8	286.3	88.5	51.2	88.7	1161.806	1153.616	1528.92	1518.267
20180527:06:03:58	23.2	16.3	-5.0	23.6	0.25	2.2	0.25	2.0	123.4	285.8	286.3	88.4	51.2	88.6	1163.151	1154.941	1530.691	1520.013
20180527:06:08:58	23.2	16.3	-5.0	23.6	0.25	2.3	0.25	2.0	123.5	285.8	286.4	88.2	51.2	88.6	1164.506	1156.294	1532.476	1521.795
20180527:06:13:58	23.2	16.5	-5.1	23.6	0.25	2.3	0.25	2.0	124.0	285.8	286.3	88.1	51.3	88.5	1165.899	1157.667	1534.309	1523.603
20180527:06:18:58	23.2	16.4	-5.1	23.6	0.25	2.3	0.25	2.0	123.8	285.8	286.4	88.0	51.2	88.4	1167.238	1158.999	1536.07	1525.357
20180527:06:23:58	23.2	16.6	-5.1	23.6	0.25	2.3	0.25	2.0	124.2	285.8	286.3	88.0	51.3	88.3	1168.591	1160.375	1537.85	1527.169
20180527:06:28:58	23.2	16.7	-5.1	23.6	0.25	2.3	0.25	2.0	124.4	285.8	286.3	88.0	51.2	88.3	1169.988	1161.737	1539.689	1528.962
20180527:06:33:58	23.2	16.8	-5.1	23.6	0.25	2.3	0.25	2.0	124.5	285.8	286.3	88.1	51.3	88.2	1171.34	1163.061	1541.467	1530.705
20180527:06:38:58	23.2	16.8	-5.1	23.6	0.25	2.3	0.25	2.0	124.6	285.8	286.3	88.1	51.3	88.2	1172.686	1164.441	1543.239	1532.521
20180527:06:43:58	23.2	16.8	-5.1	23.6	0.25	2.3	0.25	2.0	124.6	285.8	286.4	88.1	51.4	88.2	1174.078	1165.778	1545.07	1534.28
20180527:06:48:58	23.2	16.9	-5.1	23.6	0.25	2.3	0.25	2.0	124.7	285.8	286.3	88.2	51.3	88.1	1175.435	1167.113	1546.856	1536.036
20180527:06:53:58	23.2	16.8	-5.2	23.6	0.25	2.2	0.25	2.0	124.6	285.8	286.3	88.2	51.4	88.1	1176.778	1168.495	1548.622	1537.853
20180527:06:58:58	23.2	16.8	-5.2	23.6	0.25	2.3	0.25	2.0	124.6	285.8	286.3	88.1	51.2	88.0	1178.155	1169.834	1550.433	1539.615
20180527:07:03:58	23.2	16.9	-5.1	23.6	0.25	2.3	0.25	2.0	124.7	285.9	286.4	88.1	51.3	88.0	1179.53	1171.191	1552.243	1541.4
20180527:07:08:58	23.2	16.8	-5.1	23.6	0.25	2.3	0.25	2.0	124.7	285.9	286.3	88.0	51.2	87.9	1180.876	1172.552	1554.013	1543.19
20180527:07:13:58	23.2	16.8	-5.1	23.6	0.25	2.3	0.25	2.0	124.6	285.8	286.3	87.9	51.2	87.9	1182.231	1173.89	1555.794	1544.949
20180527:07:18:58	23.2	16.7	-5.1	23.6	0.25	2.3	0.25	2.0	124.4	285.9	286.3	87.8	51.2	87.9	1183.614	1175.275	1557.613	1546.771
20180527:07:23:58	23.2	16.8	-5.1	23.6	0.25	2.3	0.25	2.0	124.6	285.8	286.3	87.6	51.2	87.8	1184.954	1176.615	1559.374	1548.532
20180527:07:28:58	23.2	16.7	-5.1	23.6	0.25	2.3	0.25	2.0	124.4	285.7	286.3	87.5	51.2	87.8	1186.31	1177.946	1561.156	1550.282
20180527:07:33:58	23.2	16.8	-5.1	23.6	0.25	2.3	0.25	2.0	124.5	285.8	286.3	87.4	51.1	87.7	1187.71	1179.328	1562.994	1552.098
20180527:07:38:58	23.2	16.7	-5.1	23.6	0.25	2.3	0.25	2.0	124.4	285.8	286.4	87.3	51.1	87.6	1189.054	1180.657	1564.759	1553.844
20180527:07:43:58	23.2	16.7	-5.1	23.6	0.25	2.3	0.25	2.0	124.4	285.7	286.3	87.3	51.1	87.6	1190.397	1182.012	1566.522	1555.624
20180527:07:48:58	23.2	16.6	-5.1	23.6	0.25	2.3	0.25	2.0	124.2	285.8	286.3	87.3	51.2	87.6	1191.798	1183.38	1568.361	1557.421
20180527:07:53:58	23.3	16.7	-5.1	23.6	0.25	2.3	0.25	2.0	124.4	285.8	286.3	87.3	51.1	87.5	1193.15	1184.715	1570.137	1559.175
20180527:07:58:58	23.2	16.5	-5.1	23.6	0.25	2.3	0.25	2.0	124.0	285.8	286.3	87.3	51.2	87.4	1194.495	1186.098	1571.902	1560.991
20180527:08:03:58	23.2	16.2	-5.2	23.6	0.25	2.3	0.25	2.0	123.2	285.7	286.3	87.3	51.1	87.4	1195.887	1187.45	1573.73	1562.765
20180527:08:08:58	23.3	16.6	-5.1	23.6	0.25	2.3	0.25	2.0	124.1	285.7	286.2	87.3	51.2	87.4	1197.25	1188.771	1575.519	1564.5
20180527:08:13:58	23.3	16.7	-5.1	23.6	0.25	2.3	0.25	2.0	124.3	285.8	286.3	87.3	51.2	87.4	1198.583	1190.162	1577.269	1566.325
20180527:08:18:58	23.3	16.8	-5.1	23.6	0.25	2.3	0.25	2.0	124.5	285.8	286.4	87.4	51.2	87.4	1199.967	1191.489	1579.085	1568.068
20180527:08:23:58	23.3	16.8	-5.1	23.6	0.25	2.3	0.25	2.0	124.5	285.8	286.3	87.4	51.1	87.4	1201.32	1192.841	1580.861	1569.842
20180527:08:28:58	23.3	16.8	-5.1	23.6	0.25	2.3	0.25	2.0	124.6	285.8	286.3	87.5	51.2	87.4	1202.66	1194.211	1582.62	1571.641
20180527:08:33:58	23.3	16.8	-4.9	23.6	0.25	2.3	0.25	2.0	124.6	285.8	286.3	87.5	51.1	87.4	1204.038	1195.541	1584.43	1573.387
20180527:08:38:58	23.3	16.9	-4.9	23.6	0.25	2.3	0.25	2.0	124.8	285.8	286.4	87.6	51.2	87.4	1205.406	1196.923	1586.226	1575.201
20180527:08:43:58	23.3	16.9	-4.9	23.6	0.25	2.2	0.25	2.0	124.8	285.8	286.3	87.6	51.2	87.4	1206.74	1198.27	1587.978	1576.97
20180527:08:48:58	23.3	16.8	-4.9	23.6	0.25	2.2	0.25	2.0	124.7	285.8	286.3	87.6	51.2	87.4	1208.109	1199.591	1589.776	1578.705
20180527:08:53:58	23.3	16.8	-4.9	23.6	0.25	2.2	0.25	2.0	124.6	285.8	286.3	87.6	51.1	87.4	1209.481	1200.967	1591.578	1580.511
20180527:08:58:58	23.3	16.7	-4.9	23.6	0.25	2.2	0.25	2.0	124.5	285.8	286.3	87.6	51.2	87.4	1210.824	1202.298	1593.341	1582.258
20180527:09:03:58	23.3	16.6	-5.0	23.6	0.25	2.2	0.25	2.0	124.2	285.8	286.3	87.6	51.2	87.5	1212.18	1203.65	1595.122	1584.034
20180527:09:08:58	23.3	16.1	-4.8	23.6	0.25	2.2	0.25	2.0	123.0	285.8	286.3	87.7	51.2	87.5	1213.562	1205.011	1596.937	1585.82

Time:	Stack Pressure:	Sat% H2O:	Static:	Barometric:	Flowmeter1:	Vacuum1:	Flowmeter2:	Vacuum2:	Stack Temp:	Sorbent Temp:	Probe Temp:	DGM#1 Temp:	Condenser Temp:	DGM#2 Temp:	DGM1*:	DGM2*:	DGM1:	DGM2:
day:hh:mm:ss	in-Hg	Percent	in-H2O	in-Hg	l/min	in-Hg	l/min	in-Hg	degF	degF	degF	degF	degF	degF	liters STP	liters STP	liters nominal	liters nominal
20180527:09:13:58	23.3	16.6	-4.6	23.6	0.25	2.3	0.25	2.0	124.3	285.9	286.4	87.7	51.2	87.5	1214.898	1206.345	1598.693	1587.571
20180527:09:18:58	23.3	16.7	-4.5	23.6	0.25	2.3	0.25	2.0	124.5	285.9	286.3	87.7	51.2	87.5	1216.252	1207.728	1600.47	1589.387
20180527:09:23:58	23.3	16.7	-4.6	23.6	0.25	2.3	0.25	2.0	124.5	285.8	286.3	87.7	51.1	87.5	1217.646	1209.058	1602.302	1591.133
20180527:09:28:58	23.3	16.7	-4.6	23.6	0.25	2.2	0.25	2.0	124.5	285.8	286.4	87.7	51.2	87.5	1218.983	1210.389	1604.057	1592.882
20180527:09:33:58	23.3	16.7	-4.5	23.6	0.25	2.2	0.25	2.0	124.5	285.9	286.4	87.7	51.1	87.5	1220.336	1211.767	1605.833	1594.69
20180527:09:38:58	23.3	16.7	-4.5	23.6	0.25	2.2	0.25	2.0	124.4	285.9	286.4	87.6	51.2	87.5	1221.733	1213.094	1607.669	1596.432
20180527:09:43:58	23.3	16.7	-4.6	23.6	0.25	2.2	0.25	2.0	124.5	285.9	286.4	87.6	51.1	87.5	1223.072	1214.463	1609.426	1598.229
20180527:09:48:58	23.3	16.7	-4.5	23.6	0.25	2.3	0.25	2.0	124.4	285.8	286.4	87.6	51.2	87.5	1224.416	1215.822	1611.191	1600.013
20180527:09:53:58	23.3	16.8	-4.5	23.6	0.25	2.3	0.25	2.0	124.6	285.8	286.4	87.6	51.1	87.5	1225.817	1217.137	1613.03	1601.741
20180527:09:58:58	23.3	16.8	-4.4	23.6	0.25	2.3	0.25	2.0	124.6	285.8	286.2	87.6	51.2	87.5	1227.163	1218.522	1614.798	1603.558
20180527:10:03:58	23.3	16.8	-4.5	23.6	0.25	2.3	0.25	2.0	124.6	285.8	286.3	87.6	51.2	87.5	1228.505	1219.842	1616.559	1605.291
20180527:10:08:58	23.3	16.8	-4.5	23.6	0.25	2.2	0.25	2.0	124.6	285.8	286.3	87.6	51.3	87.5	1229.897	1221.195	1618.387	1607.068
20180527:10:13:58	23.3	16.8	-4.4	23.6	0.25	2.3	0.25	2.0	124.6	285.8	286.3	87.6	51.2	87.5	1231.252	1222.563	1620.167	1608.865
20180527:10:18:58	23.3	16.8	-4.4	23.6	0.25	2.3	0.25	2.0	124.7	285.8	286.3	87.6	51.2	87.5	1232.589	1223.893	1621.922	1610.611
20180527:10:23:58	23.3	16.8	-4.4	23.6	0.25	2.3	0.25	2.0	124.8	285.8	286.3	87.6	51.1	87.6	1233.975	1225.274	1623.743	1612.423
20180527:10:28:58	23.3	16.8	-4.4	23.6	0.25	2.3	0.25	2.0	124.6	285.8	286.4	87.6	51.2	87.6	1235.335	1226.617	1625.528	1614.186
20180527:10:33:58	23.3	16.8	-4.4	23.6	0.25	2.2	0.25	2.0	124.6	285.9	286.4	87.6	51.1	87.6	1236.671	1227.938	1627.281	1615.921
20180527:10:38:58	23.3	16.7	-4.4	23.6	0.25	2.2	0.25	2.0	124.5	285.9	286.3	87.6	51.2	87.6	1238.054	1229.321	1629.098	1617.737
20180527:10:43:58	23.3	16.7	-4.4	23.6	0.25	2.2	0.25	2.0	124.4	285.8	286.3	87.6	51.1	87.6	1239.404	1230.651	1630.87	1619.483
20180527:10:48:58	23.3	16.6	-4.4	23.6	0.25	2.2	0.25	2.0	124.3	285.8	286.3	87.6	51.2	87.6	1240.742	1232.001	1632.628	1621.256
20180527:10:53:58	23.3	16.6	-4.4	23.6	0.25	2.2	0.25	2.0	124.3	285.8	286.3	87.6	51.1	87.6	1242.123	1233.361	1634.441	1623.041
20180527:10:58:58	23.3	16.6	-4.4	23.6	0.25	2.3	0.25	2.0	124.2	285.8	286.3	87.6	51.2	87.6	1243.487	1234.688	1636.231	1624.784
20180527:11:03:58	23.3	16.6	-4.5	23.6	0.25	2.3	0.25	2.0	124.2	285.8	286.3	87.6	51.1	87.6	1244.822	1236.063	1637.983	1626.588
20180527:11:08:58	23.3	16.5	-4.4	23.6	0.25	2.2	0.25	2.0	124.1	285.7	286.3	87.6	51.2	87.6	1246.193	1237.393	1639.783	1628.335
20180527:11:13:58	23.3	16.6	-4.4	23.6	0.25	2.2	0.25	2.0	124.2	285.7	286.3	87.6	51.1	87.6	1247.561	1238.73	1641.58	1630.09
20180527:11:18:58	23.3	16.6	-4.4	23.6	0.25	2.2	0.25	2.0	124.2	285.8	286.3	87.7	51.2	87.6	1248.894	1240.102	1643.33	1631.891
20180527:11:23:58	23.3	16.6	-4.4	23.6	0.25	2.3	0.25	2.0	124.3	285.8	286.4	87.8	51.1	87.7	1250.259	1241.43	1645.122	1633.635
20180527:11:28:58	23.3	16.6	-4.2	23.6	0.25	2.2	0.25	2.0	124.3	285.8	286.3	87.8	51.2	87.8	1251.63	1242.805	1646.924	1635.442
20180527:11:33:58	23.3	16.6	-4.3	23.6	0.25	2.3	0.25	2.0	124.4	285.9	286.4	87.8	51.1	87.8	1252.97	1244.146	1648.683	1637.203
20180527:11:38:58	23.3	16.7	-4.4	23.6	0.25	2.3	0.25	2.0	124.4	285.8	286.3	87.8	51.2	87.8	1254.326	1245.469	1650.465	1638.94
20180527:11:43:58	23.3	16.7	-4.3	23.6	0.25	2.3	0.25	2.0	124.5	285.9	286.3	87.8	51.1	87.8	1255.702	1246.848	1652.272	1640.752
20180527:11:48:58	23.3	16.7	-4.3	23.6	0.25	2.3	0.25	2.0	124.5	285.8	286.3	87.8	51.2	87.8	1257.043	1248.181	1654.033	1642.502
20180527:11:53:58	23.3	16.8	-4.1	23.6	0.25	2.2	0.25	2.0	124.7	285.8	286.3	87.8	51.1	87.8	1258.394	1249.531	1655.809	1644.276
20180527:11:58:58	23.3	16.8	-4.2	23.6	0.25	2.3	0.25	2.0	124.8	285.9	286.4	87.7	51.2	87.8	1259.773	1250.889	1657.62	1646.06
20180527:12:03:58	23.3	16.9	-4.1	23.6	0.25	2.3	0.25	2.0	125.0	285.8	286.3	87.6	51.0	87.8	1261.11	1252.218	1659.376	1647.806
20180527:12:08:58	23.3	16.9	-4.1	23.6	0.25	2.3	0.25	2.0	124.9	285.7	286.2	87.6	51.1	87.8	1262.465	1253.596	1661.156	1649.617
20180527:12:13:58	23.3	16.8	-4.0	23.6	0.25	2.3	0.25	2.0	124.8	285.7	286.2	87.6	51.0	87.8	1263.856	1254.925	1662.983	1651.363
20180527:12:18:58	23.3	16.8	-4.0	23.6	0.25	2.3	0.25	2.0	124.8	285.7	286.3	87.6	51.1	87.8	1265.191	1256.262	1664.737	1653.12
20180527:12:23:58	23.3	16.8	-4.2	23.6	0.25	2.3	0.25	2.0	124.7	285.8	286.3	87.5	51.0	87.8	1266.542	1257.643	1666.511	1654.934
20180527:12:28:58	23.3	15.9	-4.4	23.6	0.25	2.2	0.25	2.0	122.6	285.7	286.3	87.5	51.1	87.8	1267.938	1258.969	1668.344	1656.677
20180527:12:33:58	23.3	16.3	-4.1	23.6	0.25	2.2	0.25	2.0	123.5	285.8	286.3	87.5	51.0	87.8	1269.277	1260.337	1670.102	1658.474
20180527:12:38:58	23.3	16.0	-4.2	23.6	0.25	2.2	0.25	2.0	123.0	285.7	286.3	87.5	51.1	87.8	1270.622	1261.697	1671.869	1660.261
20180527:12:43:58	23.3	15.8	-4.2	23.6	0.25	2.2	0.25	2.0	122.4	285.7	286.3	87.4	51.0	87.8	1272.014	1263.013	1673.696	1661.991
20180527:12:48:58	23.3	16.2	-4.1	23.6	0.25	2.2	0.25	2.0	123.4	285.7	286.2	87.4	51.0	87.8	1273.352	1264.397	1675.454	1663.81
20180527:12:53:58	23.3	16.3	-4.0	23.6	0.25	2.2	0.25	2.0	123.5	285.7	286.2	87.4	51.0	87.8	1274.687	1265.714	1677.207	1665.541
20180527:12:58:58	23.3	16.3	-3.9	23.6	0.25	2.3	0.25	2.0	123.7	285.8	286.2	87.4	51.0	87.9	1276.086	1267.062	1679.044	1667.312
20180527:13:03:58	23.3	16.4	-4.0	23.6	0.25	2.3	0.25	2.0	123.9	285.8	286.3	87.4	51.0	87.9	1277.424	1268.427	1680.802	1669.107
20180527:13:08:58	23.3	16.4	-3.8	23.6	0.25	2.2	0.25	2.0	123.9	285.8	286.3	87.4	50.9	87.9	1278.759	1269.756	1682.556	1670.853
20180527:13:13:58	23.3	16.4	-3.9	23.6	0.25	2.2	0.25	2.0	123.9	285.8	286.3	87.4	51.0	87.9	1280.151	1271.133	1684.383	1672.664
20180527:13:18:58	23.3	16.4	-3.9	23.6	0.25	2.3	0.25	2.0	123.9	285.8	286.3	87.4	51.0	87.9	1281.497	1272.472	1686.152	1674.425
20180527:13:23:58	23.3	16.4	-3.9	23.6	0.25	2.3	0.25	2.0	123.9	285.8	286.4	87.4	51.0	87.9	1282.832	1273.796	1687.906	1676.165
20180527:13:28:58	23.3	16.5	-3.7	23.6	0.25	2.2	0.25	2.0	124.1	285.7	286.2	87.5	50.9	87.9	1284.222	1275.174	1689.731	1677.977
20180527:13:33:58	23.3	16.6	-3.7	23.6	0.25	2.2	0.25	2.0	124.2	285.8	286.3	87.6	51.1	88.0	1285.573	1276.507	1691.507	1679.731
20180527:13:38:58	23.3	16.5	-3.7	23.6	0.25	2.2	0.25	2.0	124.1	285.8	286.3	87.6	50.9	88.0	1286.907	1277.854	1693.261	1681.504
20180527:13:43:58	23.3	16.4	-3.8	23.6	0.25	2.2	0.25	2.0	123.8	285.7	286.2	87.6	51.0	88.0	1288.292	1279.211	1695.081	1683.288
20180527:13:48:58	23.3	15.9	-4.0	23.6	0.25	2.2	0.25	2.0	122.7	285.7	286.2	87.6	50.9	88.0	1289.643	1280.54	1696.857	1685.036
20180527:13:53:58	23.3	16.3	-3.9	23.6	0.25	2.3	0.25	2.0	123.5	285.8	286.3	87.6	51.0	88.1	1290.975	1281.916	1698.607	1686.846
20180527:13:58:58	23.3	16.3	-3.6	23.6	0.25	2.2	0.25	2.0	123.7	285.8	286.3	87.6	50.9	88.1	1292.358	1283.245	1700.426	1688.594
20180527:14:03:58	23.3	16.4	-3.5	23.6	0.25	2.2	0.25	2.0	123.8	285.8	286.3	87.7	51.0	88.1	1293.713	1284.577	1702.209	1690.348
20180527:14:08:58	23.3	16.4	-3.7	23.6	0.25	2.2	0.25	2.0	123.9	285.8	286.2	87.8	51.0	88.2	1295.045	1285.953	1703.961	1692.16
20180527:14:13:58	23.3	16.4	-3.6	23.6	0.25	2.2	0.25	2.0	123.9	285.7	286.3	87.8	50.9	88.2	1296.425	1287.277	1705.776	1693.902
20180527:14:18:58	23.3	16.4	-3.6	23.6	0.25	2.2	0.25	2.0	123.9	285.8	286.3	87.8	51.0	88.3	1297.776	1288.642	1707.554	1695.699
20180527:14:23:58	23.3	16.4	-3.5	23.6	0.25	2.2	0.25	2.0	123.9	285.8	286.3	87.8	50.9	88.3	1299.117	1290	1709.317	1697.487
20180527:14:28:58	23.3	16.5	-3.5	23.6	0.25	2.2	0.25	2.0	124.0	285.8	286.3	87.9	51.1	88.3	1300.488	1291.313	1711.12	1699.216
20180527:14:33:58	23.3	16.4	-3.5	23.6	0.25	2.2	0.25	2.0	123.9	285.7	286.3	87.9	50.9	88.3	1301.854	1292.697	1712.919	1701.038
20180527:14:38:58	23.3	16.5	-3.5	23.6	0.25	2.2	0.25	2.0	124.1	285.7	286.3	87.9	51.0	88.3	1303.19	1294.015	1714.676	1702.774
20180527:14:43:58	23.3	16.5	-3.6	23.6	0.25	2.2	0.25	2.0	124.0	285.7	286.2	88.0	51.0	88.4	1304.554	1295.356	1716.47	1704.539
20180527:14:48:58	23.3	16.5	-3.6	23.6	0.25	2.2	0.25	2.0	124.0	285.7	286.3	88.1	51.1	88.4	1305.926	1296.728	1718.276	1706.346
20180527:14:53:58	23.3	16.0	-3.7	23.6	0.25	2.2	0.25	2.0	122.9	285.7	286.3	88.3	51.1	88.5	1307.266	1298.052	1720.041	1708.09
20180527:14:58:58	23.3	16.3	-3.6	23.6	0.25	2.2	0.25	2.0	123.6	285.8	286.3	88.4	51.1	88.6	1308.614	1299.421	1721.817	1709.895
20180527:15:03:58	23.3	16.4	-3.5	23.6	0.25	2.2	0.25	2.0	123.8	285.8	286.3	88.5	51.2	88.6	1309.993	1300.771	1723.633	1711.673
20180527:15:08:58	23.3	16.4	-3.4	23.6	0.25	2.2	0.25	2.0	123.9	285.8	286.4	88.6	51.1	88.7	1311.324	1302.084	1725.387	1713.404
20180527:15:13:58	23.3	16.4	-3.4	23.6	0.25	2.2	0.25	2.0	123.9	285.8	286.3	88.8	51.2	88.8	1312.672	1303.464	1727.165	1715.224
20180527:15:18:58	23.3	16.4	-3.4	23.6	0.25	2.2	0.25	2.0	123.8	285.8	286.3	88.9	51.1	88.8	1314.06	1304.78	1728.994	1716.959
20180527:15:23:58	23.3	16.5	-3.2	23.6	0.25	2.2	0.25	2.0	124.1	285.8	286.4	88.9	51.2	88.9	1315.388	1306.13	1730.746	1718.739
20180527:15:28:58	23.3	16.6	-3.4	23.6	0.25	2.2	0.25	2.0	124.2	285.8	286.3	89.1	51.1	88.9	1316.736	1307.491	1732.524	1720.534
20180527:15:33:58	23.3	16.5	-3.4	23.6	0.25	2.2	0.25	2.0	124.2	285.8	286.3	89.1	51.1	89.0	1318.125	1308.817	1734.356	1722.282
20180527:15:38:58	23.4	16.6	-3.4	23.6	0.25	2.2	0.25	2.0	124.2	285.8	286.4	89.2	51.1	89.0	1319.458	1310.193	1736.113	1724.096
20180527:15:43:58	23.4	16.6	-3.4	23.6	0.25	2.2	0.25	2.0	124.3	285.8	286.3	89.3	51.1	89.1	1320.793	1311.528	1737.874	1725.855
20180527:15:48:58	23.4	16.6	-3.5	23.6	0.25	2.2	0.25	2.0	124.3	285.8	286.4	89.4	51.2	89.2	1322.187	1312.85	1739.713	1727.598
20180527:15:53:58	23.3	16.5	-3.6	23.6	0.25	2.2	0.25	2.0	124.0	285.8	286.3	89.5	51.1	89.3	1323.528	1314.223	1741.481	1729.408
20180527:15:58:58	23.3	16.1	-3.6	23.6	0.25	2.2	0.25	2.0	123.1	285.8	286.4	89.5	51.2	89.3	1324.86	1315.548	1743.239	1731.156
20180527:16:03:58	23.3	16.5	-3.5	23.6	0.25	2.2	0.25	2.0	124.0	285.8	286.3	89.6	51.1	89.4	1326.248	1316.896	1745.07	1732.934
20180527:16:08:58	23.3	16.6	-3.5	23.6	0.25	2.2	0.25	2.0	124.3	285.9	286.3	89.7	51.1	89.4	1327.6	1318.252	1746.854	1734.722
20180527:16:13:58	23.4	16.6	-3.5	23.6	0.25	2.2	0.25	2.0	124.3	285.8	286.4	89.7	51.2	89.5	1328.93	1319.577	1748.609	1736.47
20180527:16:18:58	23.4	16.6	-3.5	23.6	0.25	2.2	0.25	2.0	124.4	285.8	286.3	89.8	51.1	89.6	1330.313	1320.957	1750.433	1738.289
20180527:16:23:58	23.4	16.7	-3.5	23.6	0.25	2.2	0.25	2.0	124.5	285.9	286.4	89.8	51.2	89.6	1331.66	1322.288	1752.211	1740.045
20180527:16:28:58	23.4	16.7	-3.5	23.6	0.25	2.2	0.25	2.0	124.6	285.9	286.4	89.8	51.1	89.6	1332.999	1323.612	1753.978	1741.791
20180527:16:33:58	23.4	16.7	-3.5	23.6	0.25	2.2	0.25	2.0	124.6	285.8	286.3	89.8	51.1	89.6	1334.374	1324.99	1755.793	1743.609

Time:	Stack Pressure:	Sat% H2O:	Static:	Barometric:	Flowmeter1:	Vacuum1:	Flowmeter2:	Vacuum2:	Stack Temp:	Sorbent Temp:	Probe Temp:	DGM#1 Temp:	Condenser Temp:	DGM#2 Temp:	DGM1*:	DGM2*:	DGM1:	DGM2:
day:hh:mm:ss	in-Hg	Percent	in-H2O	in-Hg	l/min	in-Hg	l/min	in-Hg	degF	degF	degF	degF	degF	degF	liters STP	liters STP	liters nominal	liters nominal
20180527:16:38:58	23.4	16.6	-3.5	23.6	0.25	2.2	0.25	2.0	124.4	285.9	286.3	89.7	51.1	89.6	1335.739	1326.322	1757.593	1745.367
20180527:16:43:58	23.4	16.7	-3.5	23.6	0.25	2.2	0.25	2.0	124.5	285.8	286.4	89.6	51.1	89.6	1337.079	1327.676	1759.359	1747.152
20180527:16:48:58	23.4	16.7	-3.5	23.6	0.25	2.2	0.25	2.0	124.6	285.8	286.2	89.6	51.1	89.6	1338.433	1329.032	1761.146	1748.94
20180527:16:53:58	23.4	16.7	-3.4	23.6	0.25	2.2	0.25	2.0	124.6	285.8	286.3	89.6	51.1	89.7	1339.814	1330.365	1762.967	1750.699
20180527:16:58:58	23.4	16.7	-3.4	23.6	0.25	2.2	0.25	2.0	124.5	285.8	286.3	89.6	51.1	89.7	1341.15	1331.748	1764.73	1752.523
20180527:17:03:58	23.3	16.1	-3.6	23.6	0.25	2.2	0.25	2.0	123.3	285.8	286.3	89.6	51.1	89.7	1342.502	1333.084	1766.513	1754.286
20180527:17:08:58	23.4	16.5	-3.5	23.6	0.25	2.2	0.25	2.0	124.1	285.8	286.4	89.6	51.1	89.7	1343.896	1334.412	1768.352	1756.038
20180527:17:13:58	23.4	16.7	-3.5	23.6	0.25	2.2	0.25	2.0	124.4	285.8	286.3	89.5	51.0	89.7	1345.239	1335.79	1770.122	1757.855
20180527:17:18:58	23.4	16.7	-3.5	23.6	0.25	2.2	0.25	2.0	124.5	285.8	286.4	89.5	51.0	89.8	1346.577	1337.115	1771.887	1759.603
20180527:17:23:58	23.4	16.7	-3.5	23.6	0.25	2.2	0.25	2.0	124.6	285.9	286.4	89.5	51.1	89.8	1347.977	1338.466	1773.733	1761.385
20180527:17:28:58	23.4	16.4	-3.5	23.6	0.25	2.2	0.25	2.0	123.8	285.7	286.2	89.4	51.0	89.7	1349.33	1339.834	1775.517	1763.19
20180527:17:33:58	23.4	16.0	-3.6	23.6	0.25	2.2	0.25	2.0	122.9	285.7	286.3	89.4	51.1	89.8	1350.663	1341.164	1777.274	1764.945
20180527:17:38:58	23.4	16.4	-3.5	23.6	0.25	2.2	0.25	2.0	123.8	285.7	286.3	89.4	51.0	89.8	1352.048	1342.536	1779.1	1766.756
20180527:17:43:58	23.4	16.5	-3.5	23.6	0.25	2.2	0.25	2.0	124.1	285.8	286.4	89.5	51.1	89.8	1353.398	1343.891	1780.88	1768.543
20180527:17:48:58	23.4	16.6	-3.5	23.6	0.25	2.2	0.25	2.0	124.4	285.7	286.3	89.5	51.1	89.8	1354.735	1345.208	1782.643	1770.28
20180527:17:53:58	23.4	16.7	-3.5	23.6	0.25	2.2	0.25	2.0	124.5	285.7	286.2	89.6	51.0	89.8	1356.109	1346.593	1784.456	1772.107
20180527:17:58:58	23.4	16.7	-3.5	23.6	0.25	2.2	0.25	2.0	124.5	285.8	286.3	89.7	51.2	89.9	1357.473	1347.911	1786.254	1773.846
20180527:18:03:58	23.4	16.7	-3.5	23.6	0.25	2.2	0.25	2.0	124.6	285.8	286.4	89.9	51.1	89.9	1358.806	1349.252	1788.013	1775.615
20180527:18:08:58	23.4	16.7	-3.5	23.6	0.25	2.3	0.25	2.0	124.5	285.9	286.4	89.9	51.2	89.9	1360.168	1350.621	1789.809	1777.421
20180527:18:13:58	23.4	16.7	-3.5	23.6	0.25	2.3	0.25	2.0	124.6	285.9	286.4	90.0	51.1	90.0	1361.546	1351.948	1791.628	1779.173
20180527:18:18:58	23.4	16.7	-3.5	23.6	0.25	2.2	0.25	2.0	124.6	285.9	286.4	90.0	51.2	90.0	1362.884	1353.316	1793.393	1780.977
20180527:18:23:59	23.4	16.7	-3.6	23.6	0.25	2.2	0.25	2.0	124.6	285.9	286.4	90.2	51.2	90.0	1364.239	1354.675	1795.181	1782.771
20180527:18:28:59	23.4	16.7	-3.6	23.6	0.25	2.2	0.25	2.0	124.5	285.9	286.4	90.2	51.2	90.0	1365.631	1355.993	1797.019	1784.509
20180527:18:33:59	23.4	16.6	-3.6	23.6	0.25	2.2	0.25	2.0	124.4	285.9	286.4	90.2	51.2	90.0	1366.97	1357.369	1798.785	1786.325
20180527:18:38:59	23.4	15.8	-3.6	23.6	0.25	2.2	0.25	2.0	122.5	285.8	286.4	90.3	51.2	90.1	1368.311	1358.7	1800.556	1788.081
20180527:18:43:59	23.4	15.7	-3.3	23.6	0.25	2.3	0.25	2.0	122.2	285.7	286.4	90.3	51.2	90.1	1369.707	1360.035	1802.398	1789.842
20180527:18:48:59	23.4	15.7	-3.1	23.6	0.25	2.3	0.25	2.0	122.5	285.8	286.3	90.3	51.1	90.2	1371.064	1361.415	1804.189	1791.664
20180527:18:53:59	23.4	15.7	-3.2	23.6	0.25	2.2	0.25	2.0	122.4	285.9	286.5	90.3	51.2	90.2	1372.398	1362.746	1805.95	1793.419
20180527:18:58:59	23.4	15.7	-3.2	23.6	0.25	2.2	0.25	2.0	122.3	285.8	286.3	90.3	51.2	90.2	1373.785	1364.102	1807.78	1795.209
20180527:19:03:59	23.4	15.6	-3.0	23.6	0.25	2.2	0.25	2.0	122.1	285.8	286.3	90.3	51.2	90.2	1375.145	1365.463	1809.574	1797.004
20180527:19:08:59	23.4	15.4	-2.7	23.6	0.25	2.3	0.25	2.0	121.7	285.8	286.4	90.3	51.3	90.2	1376.49	1366.798	1811.348	1798.765
20180527:19:13:59	23.5	15.3	-2.4	23.6	0.25	2.3	0.25	2.0	121.4	285.8	286.3	90.3	51.2	90.2	1377.856	1368.181	1813.15	1800.588
20180527:19:18:59	23.5	15.0	-2.4	23.6	0.25	2.3	0.25	2.0	120.8	285.8	286.3	90.2	51.2	90.2	1379.25	1369.539	1814.989	1802.38
20180527:19:23:59	23.5	14.9	-2.3	23.6	0.25	2.2	0.25	2.0	120.6	285.8	286.2	90.1	51.1	90.1	1380.598	1370.867	1816.767	1804.132
20180527:19:28:59	23.5	14.9	-2.3	23.6	0.25	2.2	0.25	2.0	120.7	285.8	286.4	90.1	51.3	90.2	1381.949	1372.257	1818.548	1805.964
20180527:19:33:59	23.5	14.9	-2.4	23.6	0.25	2.3	0.25	2.0	120.6	285.8	286.4	90.0	51.2	90.2	1383.356	1373.604	1820.404	1807.741
20180527:19:38:59	23.5	14.3	-2.4	23.6	0.25	2.3	0.25	2.0	119.1	285.7	286.4	90.0	51.2	90.1	1384.722	1374.943	1822.206	1809.508
20180527:19:43:59	23.5	14.4	-2.4	23.6	0.25	2.3	0.25	2.0	119.2	285.7	286.3	90.0	51.2	90.1	1386.062	1376.333	1823.972	1811.34
20180527:19:48:59	23.5	14.6	-2.5	23.6	0.25	2.3	0.25	2.0	119.9	285.8	286.4	90.1	51.3	90.1	1387.445	1377.667	1825.796	1813.1
20180527:19:53:59	23.4	14.7	-2.5	23.6	0.25	2.3	0.25	2.0	120.1	285.7	286.3	90.2	51.3	90.2	1388.824	1379.015	1827.615	1814.878
20180527:19:58:59	23.4	14.8	-2.5	23.6	0.25	2.3	0.25	2.0	120.3	285.8	286.4	90.2	51.3	90.2	1390.167	1380.4	1829.387	1816.705
20180527:20:03:59	23.4	14.9	-2.5	23.6	0.25	2.3	0.25	2.0	120.5	285.8	286.4	90.2	51.4	90.2	1391.527	1381.742	1831.181	1818.476
20180527:20:08:59	23.4	15.0	-2.6	23.6	0.25	2.3	0.25	2.0	120.8	285.8	286.4	90.2	51.3	90.2	1392.937	1383.097	1833.041	1820.263
20180527:20:13:59	23.5	15.1	-2.6	23.6	0.25	2.3	0.25	2.0	121.0	285.9	286.4	90.2	51.3	90.2	1394.293	1384.471	1834.83	1822.075
20180527:20:18:59	23.4	15.1	-2.6	23.6	0.25	2.3	0.25	2.0	121.1	285.9	286.3	90.1	51.2	90.1	1395.641	1385.814	1836.607	1823.846
20180527:20:23:59	23.4	15.2	-2.5	23.6	0.25	2.3	0.25	2.0	121.2	285.8	286.3	90.0	51.3	90.1	1397.035	1387.186	1838.446	1825.656
20180527:20:28:59	23.4	14.7	-2.6	23.6	0.25	2.3	0.25	2.0	119.9	285.8	286.3	89.9	51.2	90.1	1398.408	1388.552	1840.256	1827.457
20180527:20:33:59	23.4	14.5	-2.6	23.6	0.25	2.3	0.25	2.0	119.5	285.7	286.3	89.8	51.3	90.0	1399.763	1389.896	1842.043	1829.229
20180527:20:38:59	23.4	14.9	-2.6	23.6	0.25	2.3	0.25	2.0	120.6	285.7	286.3	89.8	51.2	90.0	1401.125	1391.279	1843.837	1831.053
20180527:20:43:59	23.4	15.0	-2.6	23.6	0.25	2.3	0.25	2.0	120.8	285.7	286.3	89.7	51.2	90.0	1402.535	1392.648	1845.694	1832.857
20180527:20:48:59	23.5	15.0	-2.6	23.6	0.25	2.3	0.25	2.0	120.9	285.8	286.4	89.6	51.2	89.9	1403.897	1393.981	1847.489	1834.615
20180527:20:53:59	23.4	15.1	-2.7	23.6	0.25	2.3	0.25	2.0	121.0	285.8	286.4	89.6	51.2	89.9	1405.249	1395.374	1849.27	1836.451
20180527:20:58:59	23.4	15.1	-2.7	23.6	0.25	2.3	0.25	2.0	121.1	285.8	286.5	89.6	51.2	89.9	1406.645	1396.732	1851.109	1838.241
20180527:21:03:59	23.4	15.2	-2.7	23.6	0.25	2.3	0.25	2.0	121.2	285.8	286.4	89.5	51.2	89.9	1408.021	1398.067	1852.92	1840
20180527:21:08:59	23.4	15.3	-2.7	23.6	0.25	2.3	0.25	2.0	121.4	285.8	286.3	89.5	51.2	89.8	1409.376	1399.461	1854.706	1841.836
20180527:21:13:59	23.4	15.2	-2.7	23.6	0.25	2.3	0.25	2.0	121.4	285.8	286.3	89.6	51.3	89.8	1410.737	1400.814	1856.498	1843.618
20180527:21:18:59	23.4	15.0	-2.8	23.7	0.25	2.3	0.25	2.0	120.7	285.8	286.4	89.6	51.2	89.8	1412.146	1402.149	1858.354	1845.378
20180527:21:23:59	23.4	14.6	-2.7	23.7	0.25	2.3	0.25	2.0	119.7	285.8	286.3	89.6	51.2	89.7	1413.505	1403.556	1860.143	1847.231
20180527:21:28:59	23.4	15.0	-2.8	23.7	0.25	2.3	0.25	2.0	120.9	285.8	286.4	89.6	51.3	89.8	1414.858	1404.893	1861.924	1848.992
20180527:21:33:59	23.4	15.1	-2.8	23.7	0.25	2.3	0.25	2.0	121.1	285.8	286.3	89.6	51.2	89.7	1416.257	1406.239	1863.767	1850.765
20180527:21:38:59	23.4	15.2	-2.8	23.7	0.25	2.3	0.25	2.0	121.2	285.9	286.4	89.7	51.4	89.7	1417.619	1407.635	1865.561	1852.603
20180527:21:43:59	23.4	15.2	-2.9	23.7	0.25	2.3	0.25	2.0	121.3	285.9	286.4	89.8	51.3	89.8	1418.972	1408.97	1867.343	1854.361
20180527:21:48:59	23.4	15.2	-2.9	23.7	0.25	2.3	0.25	2.0	121.3	285.9	286.4	89.8	51.3	89.7	1420.345	1410.329	1869.15	1856.15
20180527:21:53:59	23.4	15.2	-2.9	23.7	0.25	2.3	0.25	2.0	121.4	285.9	286.4	89.8	51.3	89.7	1421.742	1411.718	1870.991	1857.979
20180527:21:58:59	23.4	15.2	-2.9	23.7	0.25	2.3	0.25	2.0	121.3	285.9	286.3	89.8	51.4	89.7	1423.096	1413.065	1872.774	1859.754
20180527:22:03:59	23.4	15.2	-2.9	23.7	0.25	2.3	0.25	2.0	121.3	285.9	286.4	89.8	51.3	89.8	1424.45	1414.425	1874.557	1861.545
20180527:22:08:59	23.4	15.1	-2.8	23.7	0.25	2.3	0.25	2.0	121.0	285.9	286.4	89.8	51.4	89.7	1425.856	1415.796	1876.409	1863.35
20180527:22:13:59	23.5	14.5	-2.8	23.7	0.25	2.3	0.25	2.0	119.6	285.8	286.4	89.8	51.3	89.7	1427.226	1417.136	1878.213	1865.115
20180527:22:18:59	23.5	14.3	-2.8	23.7	0.25	2.3	0.25	2.0	119.1	285.7	286.4	89.8	51.4	89.7	1428.564	1418.517	1879.976	1866.932
20180527:22:23:59	23.4	14.8	-2.9	23.7	0.25	2.3	0.25	2.0	120.2	285.9	286.4	89.9	51.3	89.7	1429.948	1419.882	1881.798	1868.729
20180527:22:28:59	23.4	15.1	-2.8	23.7	0.25	2.3	0.25	2.0	120.9	285.9	286.5	89.9	51.4	89.7	1431.33	1421.215	1883.619	1870.485
20180527:22:33:59	23.4	15.2	-2.9	23.7	0.25	2.3	0.25	2.0	121.2	286.0	286.4	89.8	51.3	89.6	1432.677	1422.609	1885.393	1872.32
20180527:22:38:59	23.4	15.2	-2.9	23.7	0.25	2.3	0.25	2.0	121.3	285.9	286.4	89.8	51.4	89.6	1434.042	1423.962	1887.191	1874.102
20180527:22:43:59	23.4	15.2	-2.8	23.7	0.25	2.3	0.25	2.0	121.4	286.0	286.4	89.8	51.3	89.6	1435.454	1425.294	1889.05	1875.855
20180527:22:48:59	23.4	14.8	-2.9	23.7	0.25	2.3	0.25	2.0	120.2	286.0	286.5	89.7	51.4	89.6	1436.811	1426.692	1890.837	1877.695
20180527:22:53:59	23.5	14.5	-2.8	23.7	0.25	2.3	0.25	2.0	119.6	285.9	286.4	89.7	51.3	89.5	1438.158	1428.031	1892.611	1879.459
20180527:22:58:59	23.5	14.4	-2.7	23.7	0.25	2.3	0.25	2.0	119.2	285.8	286.3	89.6	51.4	89.4	1439.551	1429.377	1894.444	1881.229
20180527:23:03:59	23.5	14.9	-2.8	23.7	0.25	2.3	0.25	2.0	120.6	285.9	286.4	89.6	51.3	89.4	1440.924	1430.768	1896.252	1883.06
20180527:23:08:59	23.5	15.1	-2.9	23.7	0.25	2.3	0.25	2.0	121.1	285.9	286.3	89.6	51.4	89.4	1442.28	1432.105	1898.037	1884.82
20180527:23:13:59	23.4	15.1	-2.9	23.7	0.25	2.3	0.25	2.0	121.1	285.9	286.4	89.5	51.3	89.3	1443.642	1433.466	1899.83	1886.609
20180527:23:18:59	23.4	15.2	-2.9	23.7	0.25	2.3	0.25	2.0	121.1	285.9	286.3	89.4	51.4	89.3	1445.044	1434.856	1901.674	1888.438
20180527:23:23:59	23.5	15.1	-2.9	23.7	0.25	2.3	0.25	2.0	121.1	285.9	286.4	89.3	51.3	89.2	1446.401	1436.201	1903.459	1890.207
20180527:23:28:59	23.4	15.2	-3.0	23.7	0.25	2.3	0.25	2.0	121.2	286.0	286.5	89.3	51.4	89.2	1447.761	1437.563	1905.248	1891.998
20180527:23:33:59	23.5	15.2	-2.9	23.7	0.25	2.3	0.25	2.0	121.3	286.0	286.3	89.2	51.2	89.2	1449.163	1438.94	1907.091	1893.808
20180527:23:38:59	23.4	15.2	-3.0	23.7	0.25	2.3	0.25	2.0	121.3	285.9	286.4	89.0	51.3	89.1	1450.523	1440.282	1908.88	1895.573
20180527:23:43:59	23.4	15.2	-3.1	23.7	0.25	2.3	0.25	2.0	121.3	285.9	286.3	88.9	51.2	89.1	1451.88	1441.665	1910.663	1897.391
20180527:23:48:59	23.4	14.7	-3.1	23.7	0.25	2.3	0.25	2.0	120.0	285.8	286.3	88.8	51.3	89.0	1453.26	1443.032	1912.476	1899.188
20180527:23:53:59	23.4	14.5	-3.0	23.7	0.25	2.3	0.25	2.0	119.6	285.8	286.3	88.7	51.3	89.0	1454.653	1444.373	1914.306	1900.951
20180527:23:58:59	23.5	14.4	-2.9	23.7	0.25	2.3	0.25	2.0	119.4	285.7	286.3	88.6	51.3	88.9	1456.009	1445.768	1916.087	1902.784

Time:	Stack Pressure:	Sat% H2O:	Static:	Barometric:	Flowmeter1:	Vacuum1:	Flowmeter2:	Vacuum2:	Stack Temp:	Sorbent Temp:	Probe Temp:	DGM#1 Temp:	Condenser Temp:	DGM#2 Temp:	DGM1*:	DGM2*:	DGM1:	DGM2:
day:hh:mm:ss	in-Hg	Percent	in-H2O	in-Hg	l/min	in-Hg	l/min	in-Hg	degF	degF	degF	degF	degF	degF	liters STP	liters STP	liters nominal	liters nominal
20180528:00:03:59	23.5	15.0	-2.8	23.7	0.25	2.3	0.25	2.0	120.9	285.8	286.3	88.6	51.2	88.9	1457.372	1447.127	1917.878	1904.57
20180528:00:08:59	23.5	15.2	-2.8	23.7	0.25	2.3	0.25	2.0	121.3	285.8	286.3	88.5	51.3	88.8	1458.784	1448.464	1919.731	1906.327
20180528:00:13:59	23.4	14.8	-2.9	23.7	0.25	2.3	0.25	2.0	120.4	285.8	286.3	88.5	51.2	88.7	1460.155	1449.857	1921.533	1908.158
20180528:00:18:59	23.5	14.5	-2.8	23.7	0.25	2.3	0.25	2.0	119.6	285.9	286.4	88.5	51.3	88.7	1461.5	1451.205	1923.3	1909.929
20180528:00:23:59	23.5	14.4	-2.9	23.7	0.25	2.3	0.25	2.0	119.2	285.8	286.4	88.4	51.2	88.6	1462.892	1452.55	1925.128	1911.695
20180528:00:28:59	23.5	14.8	-2.6	23.7	0.25	2.3	0.25	2.0	120.4	285.9	286.4	88.3	51.3	88.6	1464.276	1453.945	1926.944	1913.528
20180528:00:33:59	23.4	15.1	-3.0	23.7	0.25	2.3	0.25	2.0	121.0	285.9	286.3	88.2	51.2	88.5	1465.628	1455.281	1928.72	1915.284
20180528:00:38:59	23.4	15.2	-3.0	23.7	0.25	2.3	0.25	2.0	121.4	285.9	286.3	88.2	51.3	88.5	1466.994	1456.639	1930.513	1917.068
20180528:00:43:59	23.5	15.4	-2.8	23.7	0.25	2.3	0.25	2.0	121.7	285.9	286.4	88.1	51.2	88.4	1468.405	1458.032	1932.367	1918.897
20180528:00:48:59	23.4	15.4	-2.8	23.7	0.25	2.3	0.25	2.0	121.8	285.9	286.3	88.1	51.3	88.3	1469.766	1459.378	1934.154	1920.665
20180528:00:53:59	23.4	15.4	-3.0	23.7	0.25	2.3	0.25	2.0	121.7	285.9	286.4	88.0	51.2	88.3	1471.121	1460.742	1935.931	1922.457
20180528:00:58:59	23.4	15.3	-3.0	23.7	0.25	2.3	0.25	2.0	121.5	285.9	286.3	88.0	51.3	88.3	1472.52	1462.116	1937.769	1924.261
20180528:01:03:59	23.4	14.9	-3.2	23.7	0.25	2.3	0.25	2.0	120.5	285.9	286.4	87.9	51.2	88.2	1473.886	1463.463	1939.561	1926.03
20180528:01:08:59	23.4	14.5	-3.1	23.7	0.25	2.3	0.25	2.0	119.4	285.8	286.3	87.9	51.3	88.2	1475.24	1464.844	1941.339	1927.844
20180528:01:13:59	23.4	14.3	-3.1	23.7	0.25	2.3	0.25	2.0	119.1	285.8	286.4	87.9	51.2	88.1	1476.618	1466.215	1943.146	1929.643
20180528:01:18:59	23.4	14.9	-3.1	23.7	0.25	2.3	0.25	2.0	120.4	285.8	286.3	87.8	51.3	88.0	1478.012	1467.554	1944.976	1931.4
20180528:01:23:59	23.4	15.0	-3.0	23.7	0.25	2.3	0.25	2.0	120.9	285.8	286.3	87.8	51.2	88.0	1479.363	1468.953	1946.748	1933.237
20180528:01:28:59	23.4	15.1	-3.0	23.7	0.25	2.3	0.25	2.0	121.0	285.8	286.3	87.8	51.3	88.0	1480.73	1470.309	1948.543	1935.017
20180528:01:33:59	23.4	15.0	-3.1	23.7	0.25	2.3	0.25	2.0	120.8	285.9	286.4	87.8	51.2	87.9	1482.14	1471.644	1950.393	1936.769
20180528:01:38:59	23.4	14.5	-3.2	23.7	0.25	2.3	0.25	2.0	119.4	285.9	286.4	87.8	51.3	87.9	1483.507	1473.047	1952.187	1938.611
20180528:01:43:59	23.4	14.2	-3.1	23.7	0.25	2.3	0.25	2.0	118.8	285.8	286.3	87.8	51.2	87.8	1484.852	1474.387	1953.952	1940.368
20180528:01:48:59	23.4	14.5	-2.9	23.7	0.25	2.3	0.25	2.0	119.4	285.7	286.4	87.8	51.3	87.8	1486.245	1475.734	1955.78	1942.137
20180528:01:53:59	23.4	15.0	-2.9	23.7	0.25	2.3	0.25	2.0	120.7	285.8	286.4	87.8	51.3	87.8	1487.613	1477.124	1957.574	1943.961
20180528:01:58:59	23.4	15.0	-3.1	23.7	0.25	2.3	0.25	2.0	120.9	285.9	286.4	87.8	51.4	87.8	1488.963	1478.468	1959.346	1945.724
20180528:02:03:59	23.4	15.1	-3.2	23.7	0.25	2.3	0.25	2.0	121.1	285.9	286.4	87.9	51.3	87.8	1490.336	1479.824	1961.148	1947.504
20180528:02:08:59	23.4	15.2	-3.1	23.7	0.25	2.3	0.25	2.0	121.2	285.9	286.4	87.9	51.3	87.8	1491.729	1481.199	1962.976	1949.308
20180528:02:13:59	23.4	15.2	-3.1	23.7	0.25	2.3	0.25	2.0	121.2	286.0	286.4	87.8	51.3	87.7	1493.08	1482.542	1964.75	1951.07
20180528:02:18:59	23.4	15.3	-3.0	23.7	0.25	2.3	0.25	2.0	121.4	285.9	286.3	87.8	51.3	87.6	1494.445	1483.928	1966.541	1952.889
20180528:02:23:59	23.4	15.4	-2.9	23.7	0.25	2.3	0.25	2.0	121.6	286.0	286.5	87.8	51.3	87.6	1495.849	1485.298	1968.383	1954.686
20180528:02:28:59	23.4	15.5	-2.8	23.7	0.25	2.3	0.25	2.0	122.0	286.0	286.4	87.8	51.3	87.6	1497.213	1486.629	1970.174	1956.432
20180528:02:33:59	23.4	15.5	-2.9	23.7	0.25	2.3	0.25	2.0	122.0	286.0	286.4	87.7	51.3	87.5	1498.561	1488.023	1971.943	1958.261
20180528:02:38:59	23.4	15.2	-2.8	23.7	0.25	2.3	0.25	2.0	121.4	286.0	286.4	87.6	51.2	87.5	1499.956	1489.372	1973.772	1960.03
20180528:02:43:59	23.5	15.5	-2.6	23.7	0.25	2.3	0.25	2.0	121.9	285.9	286.3	87.6	51.2	87.4	1501.319	1490.712	1975.561	1961.788
20180528:02:48:59	23.5	15.5	-2.6	23.7	0.25	2.3	0.25	2.0	122.1	286.0	286.4	87.5	51.2	87.4	1502.675	1492.105	1977.339	1963.615
20180528:02:53:59	23.5	15.6	-2.6	23.7	0.25	2.3	0.25	2.0	122.2	286.0	286.4	87.3	51.2	87.3	1504.052	1493.439	1979.144	1965.363
20180528:02:58:59	23.5	15.6	-2.5	23.7	0.25	2.3	0.25	2.0	122.3	286.0	286.4	87.2	51.2	87.3	1505.438	1494.799	1980.961	1967.147
20180528:03:03:59	23.5	15.7	-2.5	23.7	0.25	2.3	0.25	2.0	122.5	286.0	286.4	87.1	51.2	87.2	1506.785	1496.18	1982.728	1968.957
20180528:03:08:59	23.5	15.8	-2.7	23.7	0.25	2.3	0.25	2.0	122.7	285.9	286.3	86.9	51.2	87.2	1508.149	1497.517	1984.515	1970.711
20180528:03:13:59	23.4	15.5	-3.1	23.7	0.25	2.3	0.25	2.0	121.9	285.8	286.3	86.8	51.2	87.2	1509.554	1498.897	1986.356	1972.519
20180528:03:18:59	23.4	15.0	-3.2	23.7	0.25	2.2	0.25	2.0	120.8	285.8	286.3	86.7	51.2	87.1	1510.9	1500.269	1988.119	1974.318
20180528:03:23:59	23.4	15.3	-2.8	23.7	0.25	2.2	0.25	2.0	121.6	285.9	286.3	86.6	51.2	87.0	1512.247	1501.599	1989.881	1976.06
20180528:03:28:59	23.4	15.8	-3.1	23.7	0.25	2.3	0.25	2.0	122.6	285.8	286.3	86.5	51.2	86.9	1513.65	1502.992	1991.719	1977.885
20180528:03:33:59	23.4	15.3	-3.5	23.7	0.25	2.2	0.25	2.0	121.4	285.9	286.4	86.4	51.2	86.9	1515.009	1504.333	1993.498	1979.643
20180528:03:38:59	23.4	15.2	-3.7	23.7	0.25	2.2	0.25	2.0	121.1	285.8	286.3	86.3	51.1	86.9	1516.353	1505.679	1995.257	1981.406
20180528:03:43:59	23.4	15.7	-3.8	23.7	0.25	2.3	0.25	2.0	122.4	285.8	286.4	86.3	51.2	86.8	1517.751	1507.067	1997.087	1983.224
20180528:03:48:59	23.4	16.1	-4.0	23.7	0.25	2.3	0.25	2.0	123.2	285.9	286.2	86.2	51.1	86.7	1519.118	1508.406	1998.876	1984.977
20180528:03:53:59	23.4	16.4	-4.0	23.7	0.25	2.3	0.25	2.0	124.0	285.9	286.3	86.2	51.2	86.6	1520.457	1509.765	2000.628	1986.758
20180528:03:58:59	23.4	16.7	-4.0	23.7	0.25	2.3	0.25	2.0	124.5	285.9	286.3	86.1	51.1	86.6	1521.845	1511.134	2002.444	1988.551
20180528:04:03:59	23.4	16.7	-4.0	23.6	0.25	2.3	0.25	2.0	124.7	285.9	286.3	86.1	51.2	86.5	1523.211	1512.477	2004.231	1990.31
20180528:04:08:59	23.4	16.8	-4.1	23.6	0.25	2.3	0.25	2.0	124.7	286.0	286.4	86.1	51.1	86.5	1524.559	1513.865	2005.996	1992.128
20180528:04:13:59	23.3	16.9	-4.1	23.6	0.25	2.2	0.25	2.0	124.9	285.9	286.2	86.0	51.2	86.4	1525.936	1515.218	2007.798	1993.898
20180528:04:18:59	23.3	16.8	-4.1	23.6	0.25	2.2	0.25	2.0	124.8	285.9	286.3	86.0	51.2	86.4	1527.312	1516.547	2009.598	1995.639
20180528:04:23:59	23.3	16.8	-4.1	23.6	0.25	2.2	0.25	2.0	124.7	285.8	286.3	86.0	51.2	86.3	1528.653	1517.94	2011.352	1997.462
20180528:04:28:59	23.3	16.6	-4.2	23.6	0.25	2.3	0.25	2.0	124.4	285.8	286.3	85.9	51.1	86.3	1530.019	1519.268	2013.139	1999.201
20180528:04:33:59	23.3	16.8	-4.2	23.6	0.25	2.3	0.25	2.0	124.6	285.8	286.3	85.9	51.3	86.2	1531.398	1520.631	2014.943	2000.985
20180528:04:38:59	23.3	16.9	-4.3	23.6	0.25	2.3	0.25	2.0	124.9	285.8	286.3	85.9	51.2	86.2	1532.748	1522.006	2016.709	2002.784
20180528:04:43:59	23.3	16.7	-4.3	23.6	0.25	2.3	0.25	2.0	124.4	285.8	286.3	85.9	51.3	86.1	1534.106	1523.343	2018.485	2004.534
20180528:04:48:59	23.3	16.8	-4.2	23.6	0.25	2.3	0.25	2.0	124.7	285.8	286.3	85.9	51.2	86.0	1535.497	1524.728	2020.306	2006.346
20180528:04:53:59	23.3	16.9	-4.2	23.6	0.25	2.3	0.25	2.0	124.9	285.7	286.3	85.8	51.3	86.0	1536.837	1526.083	2022.057	2008.118
20180528:04:58:59	23.3	16.8	-4.2	23.6	0.25	2.3	0.25	2.0	124.8	285.8	286.3	85.7	51.2	85.9	1538.199	1527.406	2023.839	2009.85
20180528:05:03:59	23.3	16.9	-4.2	23.6	0.25	2.3	0.25	2.0	125.0	285.8	286.3	85.7	51.3	85.9	1539.598	1528.8	2025.669	2011.673
20180528:05:08:59	23.3	16.9	-4.3	23.6	0.25	2.3	0.25	2.0	125.0	285.8	286.3	85.7	51.2	85.8	1540.943	1530.129	2027.428	2013.412
20180528:05:13:59	23.3	16.8	-4.4	23.6	0.25	2.2	0.25	2.0	124.7	285.8	286.3	85.7	51.4	85.8	1542.297	1531.493	2029.198	2015.195
20180528:05:18:59	23.3	16.7	-4.4	23.6	0.25	2.2	0.25	2.0	124.5	285.8	286.3	85.7	51.2	85.7	1543.695	1532.869	2031.026	2016.994
20180528:05:23:59	23.3	16.5	-4.4	23.6	0.25	2.2	0.25	2.0	124.1	285.8	286.3	85.5	51.2	85.7	1545.039	1534.203	2032.783	2018.739
20180528:05:28:59	23.3	16.4	-4.5	23.7	0.25	2.2	0.25	2.0	123.9	285.8	286.2	85.4	51.2	85.7	1546.385	1535.586	2034.543	2020.547
20180528:05:33:59	23.3	16.5	-4.5	23.7	0.25	2.2	0.25	2.0	124.0	285.8	286.3	85.3	51.3	85.6	1547.783	1536.92	2036.369	2022.291
20180528:05:38:59	23.3	16.5	-4.6	23.7	0.25	2.2	0.25	2.0	124.1	285.8	286.3	85.3	51.1	85.5	1549.12	1538.249	2038.115	2024.028
20180528:05:43:59	23.3	16.4	-4.6	23.7	0.25	2.2	0.25	2.0	123.9	285.8	286.3	85.3	51.3	85.4	1550.465	1539.63	2039.872	2025.833
20180528:05:48:59	23.3	16.1	-4.7	23.7	0.25	2.2	0.25	2.0	123.1	285.7	286.2	85.3	51.2	85.4	1551.856	1540.957	2041.689	2027.566
20180528:05:53:59	23.3	16.1	-4.7	23.7	0.25	2.3	0.25	2.0	123.2	285.8	286.3	85.3	51.3	85.3	1553.189	1542.33	2043.43	2029.359
20180528:05:58:59	23.3	16.2	-4.7	23.7	0.25	2.2	0.25	2.0	123.3	285.8	286.3	85.3	51.2	85.3	1554.531	1543.68	2045.181	2031.122
20180528:06:03:59	23.3	16.1	-4.6	23.7	0.25	2.3	0.25	2.0	123.1	285.8	286.2	85.3	51.3	85.3	1555.924	1545.005	2047	2032.852
20180528:06:08:59	23.3	16.1	-4.5	23.7	0.25	2.3	0.25	2.0	123.1	285.8	286.3	85.2	51.2	85.2	1557.257	1546.387	2048.741	2034.656
20180528:06:13:59	23.3	16.2	-4.5	23.7	0.25	2.3	0.25	2.0	123.3	285.8	286.3	85.2	51.3	85.2	1558.611	1547.721	2050.509	2036.398
20180528:06:18:59	23.3	16.2	-4.5	23.7	0.25	2.3	0.25	2.0	123.3	285.9	286.4	85.2	51.2	85.1	1560.006	1549.082	2052.33	2038.175
20180528:06:23:59	23.3	16.1	-4.5	23.7	0.25	2.3	0.25	2.0	123.2	285.8	286.2	85.1	51.3	85.1	1561.339	1550.45	2054.07	2039.961
20180528:06:28:59	23.3	16.3	-4.5	23.7	0.25	2.3	0.25	2.0	123.6	285.8	286.3	85.1	51.2	85.0	1562.698	1551.779	2055.844	2041.695
20180528:06:33:59	23.3	16.5	-4.4	23.7	0.25	2.3	0.25	2.0	124.0	285.8	286.3	85.0	51.3	85.0	1564.1	1553.169	2057.674	2043.509
20180528:06:38:59	23.3	16.5	-4.3	23.7	0.25	2.2	0.25	2.0	124.1	285.9	286.3	85.0	51.2	85.0	1565.444	1554.504	2059.428	2045.252
20180528:06:43:59	23.3	16.5	-4.3	23.7	0.25	2.2	0.25	2.0	124.1	285.8	286.2	84.9	51.2	84.9	1566.796	1555.853	2061.193	2047.011
20180528:06:48:59	23.3	16.3	-4.3	23.7	0.25	2.3	0.25	2.0	123.7	285.9	286.3	84.7	51.1	84.9	1568.199	1557.228	2063.022	2048.806
20180528:06:53:59	23.4	16.3	-4.2	23.7	0.25	2.2	0.25	2.0	123.6	285.8	286.3	84.6	51.2	84.9	1569.536	1558.566	2064.767	2050.553
20180528:06:58:59	23.4	16.3	-4.2	23.7	0.25	2.2	0.25	2.0	123.7	285.8	286.2	84.6	51.1	84.9	1570.885	1559.953	2066.526	2052.363
20180528:07:03:59	23.4	16.2	-4.2	23.7	0.25	2.3	0.25	2.0	123.5	285.8	286.3	84.4	51.1	84.8	1572.284	1561.305	2068.35	2054.126
20180528:07:08:59	23.4	16.3	-4.1	23.7	0.25	2.3	0.25	2.0	123.7	285.8	286.2	84.4	51.1	84.7	1573.624	1562.635	2070.096	2055.861
20180528:07:13:59	23.4	16.4	-4.1	23.7	0.25	2.3	0.25	2.0	123.9	285.8	286.2	84.3	51.1	84.7	1574.975	1564.02	2071.857	2057.667
20180528:07:18:59	23.4	16.3	-4.2	23.7	0.25	2.2	0.25	2.0	123.8	285.7	286.2	84.2	51.0	84.7	1576.37	1565.359	2073.676	2059.414
20180528:07:23:59	23.4	16.4	-4.1	23.7	0.25	2.2	0.25	2.0	123.8	285.7	286.3	84.2	51.1	84.6	1577.708	1566.718	2075.419	2061.186

Time:	Stack Pressure:	Sat% H2O:	Static:	Barometric:	Flowmeter1:	Vacuum1:	Flowmeter2:	Vacuum2:	Stack Temp:	Sorbent Temp:	Probe Temp:	DGM#1 Temp:	Condenser Temp:	DGM#2 Temp:	DGM1*:	DGM2*:	DGM1:	DGM2:
day:hh:mm:ss	in-Hg	Percent	in-H2O	in-Hg	l/min	in-Hg	l/min	in-Hg	degF	degF	degF	degF	degF	degF	liters STP	liters STP	liters nominal	liters nominal
20180528:07:28:59	23.4	16.4	-4.1	23.7	0.25	2.2	0.25	2.0	123.9	285.7	286.2	84.1	51.0	84.6	1579.058	1568.086	2077.178	2062.97
20180528:07:33:59	23.4	16.3	-4.1	23.7	0.25	2.2	0.25	2.0	123.8	285.8	286.3	84.1	51.1	84.6	1580.451	1569.411	2078.993	2064.697
20180528:07:38:59	23.4	16.3	-4.1	23.7	0.25	2.2	0.25	2.0	123.6	285.7	286.2	84.1	51.0	84.6	1581.783	1570.798	2080.728	2066.506
20180528:07:43:59	23.4	16.3	-4.2	23.7	0.25	2.2	0.25	2.0	123.8	285.7	286.2	84.1	51.1	84.5	1583.139	1572.116	2082.494	2068.224
20180528:07:48:59	23.4	16.3	-4.1	23.7	0.25	2.3	0.25	2.0	123.8	285.7	286.2	84.2	51.0	84.5	1584.525	1573.472	2084.3	2069.992
20180528:07:53:59	23.4	16.2	-4.2	23.7	0.25	2.3	0.25	2.0	123.4	285.7	286.2	84.1	51.0	84.4	1585.866	1574.838	2086.046	2071.773
20180528:07:58:59	23.4	16.1	-4.2	23.7	0.25	2.2	0.25	2.0	123.2	285.8	286.2	84.1	51.0	84.4	1587.221	1576.171	2087.811	2073.509
20180528:08:03:59	23.4	16.1	-4.1	23.7	0.25	2.3	0.25	2.0	123.3	285.7	286.1	84.0	51.0	84.4	1588.597	1577.553	2089.604	2075.31
20180528:08:08:59	23.4	16.3	-4.0	23.7	0.25	2.3	0.25	2.0	123.7	285.7	286.2	84.0	51.0	84.4	1589.936	1578.865	2091.346	2077.021
20180528:08:13:59	23.4	16.3	-3.9	23.7	0.25	2.3	0.25	2.0	123.8	285.8	286.3	84.0	51.0	84.4	1591.305	1580.225	2093.13	2078.793
20180528:08:18:59	23.4	16.4	-4.0	23.7	0.25	2.3	0.25	2.0	123.8	285.8	286.2	84.0	51.0	84.3	1592.672	1581.589	2094.909	2080.57
20180528:08:23:59	23.4	16.4	-3.9	23.7	0.25	2.2	0.25	2.0	123.9	285.8	286.2	84.0	51.0	84.3	1594.006	1582.924	2096.646	2082.31
20180528:08:28:59	23.4	16.4	-3.9	23.7	0.25	2.3	0.25	2.0	123.9	285.8	286.3	84.0	51.1	84.4	1595.387	1584.309	2098.444	2084.115
20180528:08:33:59	23.4	16.4	-3.8	23.7	0.25	2.2	0.25	2.0	124.0	285.7	286.2	84.0	51.0	84.3	1596.744	1585.626	2100.213	2085.831
20180528:08:38:59	23.4	16.5	-3.7	23.7	0.25	2.3	0.25	2.0	124.2	285.7	286.2	84.2	51.0	84.4	1598.079	1586.982	2101.952	2087.598
20180528:08:43:59	23.4	16.6	-3.7	23.7	0.25	2.3	0.25	2.0	124.3	285.7	286.2	84.2	51.1	84.4	1599.465	1588.346	2103.757	2089.376
20180528:08:48:59	23.4	16.4	-3.7	23.7	0.25	2.2	0.25	2.0	123.9	285.7	286.3	84.3	51.1	84.5	1600.819	1589.678	2105.522	2091.113
20180528:08:53:59	23.4	15.9	-3.8	23.7	0.25	2.2	0.25	2.0	122.9	285.7	286.3	84.4	51.1	84.5	1602.152	1591.058	2107.259	2092.912
20180528:08:58:59	23.4	16.2	-3.8	23.7	0.25	2.2	0.25	2.0	123.5	285.8	286.2	84.5	51.1	84.6	1603.537	1592.373	2109.065	2094.626
20180528:09:03:59	23.4	16.4	-3.7	23.7	0.25	2.2	0.25	2.0	123.8	285.8	286.3	84.6	51.1	84.6	1604.88	1593.728	2110.817	2096.393
20180528:09:08:59	23.4	16.4	-3.8	23.7	0.25	2.3	0.25	2.0	124.0	285.8	286.3	84.6	51.1	84.6	1606.211	1595.089	2112.552	2098.167
20180528:09:13:59	23.4	16.5	-3.7	23.7	0.25	2.2	0.25	2.0	124.1	285.7	286.2	84.6	51.1	84.6	1607.611	1596.42	2114.378	2099.902
20180528:09:18:59	23.4	16.6	-3.6	23.7	0.25	2.2	0.25	2.0	124.3	285.8	286.3	84.6	51.0	84.6	1608.944	1597.8	2116.115	2101.703
20180528:09:23:59	23.4	16.5	-3.6	23.7	0.25	2.2	0.25	2.0	124.2	285.8	286.3	84.7	51.1	84.7	1610.284	1599.113	2117.863	2103.415
20180528:09:28:59	23.4	16.5	-3.6	23.7	0.25	2.2	0.25	2.0	124.2	285.8	286.3	84.7	51.1	84.7	1611.674	1600.47	2119.676	2105.184
20180528:09:33:59	23.4	16.5	-3.5	23.7	0.25	2.2	0.25	2.0	124.3	285.8	286.3	84.7	51.1	84.7	1613.006	1601.832	2121.413	2106.961
20180528:09:38:59	23.4	16.5	-3.5	23.7	0.25	2.2	0.25	2.0	124.2	285.8	286.3	84.8	51.1	84.8	1614.354	1603.16	2123.172	2108.694
20180528:09:43:59	23.4	16.5	-3.5	23.7	0.25	2.2	0.25	2.0	124.1	285.7	286.3	84.9	51.1	84.9	1615.738	1604.54	2124.978	2110.494
20180528:09:48:59	23.4	16.5	-3.5	23.7	0.25	2.3	0.25	2.0	124.3	285.7	286.2	84.9	51.0	84.9	1617.073	1605.854	2126.719	2112.209
20180528:09:53:59	23.4	16.4	-3.5	23.7	0.25	2.3	0.25	2.0	124.0	285.8	286.3	84.9	51.1	84.9	1618.428	1607.213	2128.487	2113.981
20180528:09:58:59	23.4	16.0	-3.6	23.7	0.25	2.2	0.25	2.0	123.1	285.8	286.3	84.9	51.0	84.9	1619.809	1608.576	2130.289	2115.759
20180528:10:03:59	23.4	16.3	-3.6	23.7	0.25	2.2	0.25	2.0	123.8	285.8	286.2	84.9	51.1	84.9	1621.15	1609.907	2132.039	2117.496
20180528:10:08:59	23.4	16.4	-3.5	23.7	0.25	2.2	0.25	2.0	124.1	285.8	286.3	84.9	51.0	85.0	1622.505	1611.289	2133.807	2119.301
20180528:10:13:59	23.4	16.3	-3.4	23.7	0.25	2.2	0.25	2.0	123.8	285.8	286.2	84.8	51.0	84.9	1623.878	1612.602	2135.598	2121.013
20180528:10:18:59	23.4	16.4	-3.4	23.7	0.25	2.3	0.25	2.0	124.0	285.8	286.2	84.7	50.9	84.9	1625.213	1613.959	2137.339	2122.784
20180528:10:23:59	23.4	16.5	-3.3	23.7	0.25	2.2	0.25	2.0	124.2	285.8	286.3	84.7	51.0	85.0	1626.584	1615.323	2139.128	2124.564
20180528:10:28:59	23.4	16.6	-3.3	23.7	0.25	2.2	0.25	2.0	124.4	285.8	286.2	84.6	50.9	85.0	1627.943	1616.655	2140.9	2126.303
20180528:10:33:59	23.4	16.4	-3.3	23.7	0.25	2.2	0.25	2.0	124.1	285.7	286.3	84.7	51.0	85.0	1629.276	1618.035	2142.639	2128.103
20180528:10:38:59	23.4	16.3	-3.3	23.7	0.25	2.2	0.25	2.0	123.8	285.7	286.2	84.6	50.9	85.0	1630.661	1619.351	2144.444	2129.821
20180528:10:43:59	23.4	16.4	-3.2	23.7	0.25	2.3	0.25	2.0	124.1	285.7	286.2	84.6	51.0	85.0	1632.018	1620.702	2146.215	2131.585
20180528:10:48:59	23.4	16.5	-3.2	23.7	0.25	2.3	0.25	2.0	124.1	285.8	286.3	84.7	50.9	85.0	1633.355	1622.066	2147.959	2133.365
20180528:10:53:59	23.4	16.5	-3.2	23.7	0.25	2.3	0.25	2.0	124.2	285.7	286.3	84.7	51.0	85.1	1634.739	1623.397	2149.765	2135.102
20180528:10:58:59	23.4	16.5	-3.2	23.7	0.25	2.3	0.25	2.0	124.3	285.7	286.3	84.9	51.0	85.1	1636.1	1624.773	2151.541	2136.898
20180528:11:03:59	23.4	16.6	-3.2	23.7	0.25	2.3	0.25	2.0	124.5	285.8	286.3	85.0	51.1	85.2	1637.427	1626.1	2153.272	2138.632
20180528:11:08:59	23.4	16.6	-3.2	23.7	0.25	2.3	0.25	2.0	124.5	285.7	286.3	85.1	51.0	85.3	1638.814	1627.446	2155.083	2140.389
20180528:11:13:59	23.4	16.5	-3.3	23.7	0.25	2.3	0.25	2.0	124.1	285.7	286.3	85.2	51.1	85.3	1640.16	1628.815	2156.841	2142.177
20180528:11:18:59	23.4	16.5	-3.3	23.7	0.25	2.3	0.25	2.0	124.2	285.8	286.4	85.3	51.1	85.4	1641.491	1630.143	2158.58	2143.912
20180528:11:23:59	23.4	16.5	-3.3	23.7	0.25	2.3	0.25	2.0	124.2	285.8	286.3	85.4	51.1	85.4	1642.882	1631.52	2160.396	2145.711
20180528:11:28:59	23.4	16.5	-3.3	23.7	0.25	2.3	0.25	2.0	124.1	285.8	286.3	85.5	51.1	85.5	1644.226	1632.842	2162.152	2147.436
20180528:11:33:59	23.4	16.4	-3.3	23.7	0.25	2.2	0.25	2.0	124.0	285.8	286.3	85.6	51.1	85.5	1645.552	1634.185	2163.883	2149.19
20180528:11:38:59	23.4	16.5	-3.2	23.7	0.25	2.2	0.25	2.0	124.1	285.8	286.3	85.7	51.1	85.6	1646.948	1635.55	2165.707	2150.974
20180528:11:43:59	23.4	16.6	-3.4	23.7	0.25	2.2	0.25	2.0	124.3	285.8	286.4	85.8	51.1	85.6	1648.278	1636.88	2167.444	2152.711
20180528:11:48:59	23.4	16.5	-3.4	23.7	0.25	2.2	0.25	2.0	124.2	285.8	286.3	85.9	51.1	85.7	1649.616	1638.259	2169.193	2154.511
20180528:11:53:59	23.4	16.5	-3.5	23.7	0.25	2.2	0.25	2.0	124.1	285.8	286.3	85.9	51.1	85.7	1651.004	1639.58	2171.006	2156.237
20180528:11:58:59	23.4	16.5	-3.5	23.7	0.25	2.2	0.25	2.0	124.2	285.8	286.4	86.0	51.1	85.8	1652.331	1640.917	2172.739	2157.983
20180528:12:03:59	23.4	16.3	-3.8	23.7	0.25	2.2	0.25	2.0	123.8	285.8	286.3	86.0	51.2	85.9	1653.681	1642.284	2174.502	2159.767
20180528:12:08:59	23.4	16.5	-4.0	23.7	0.25	2.2	0.25	2.0	124.2	285.7	286.3	86.1	51.2	85.9	1655.065	1643.611	2176.309	2161.5
20180528:12:13:59	23.4	16.5	-4.0	23.7	0.25	2.3	0.25	2.0	124.2	285.8	286.3	86.2	51.2	86.0	1656.398	1644.987	2178.052	2163.297
20180528:12:18:59	23.4	16.6	-4.1	23.7	0.25	2.2	0.25	2.0	124.3	285.9	286.4	86.2	51.2	86.0	1657.751	1646.317	2179.819	2165.034
20180528:12:23:59	23.4	16.6	-4.0	23.7	0.25	2.2	0.25	2.0	124.5	285.8	286.3	86.2	51.2	86.0	1659.13	1647.657	2181.62	2166.784
20180528:12:28:59	23.4	16.7	-4.1	23.7	0.25	2.2	0.25	2.0	124.5	285.8	286.3	86.2	51.3	86.0	1660.465	1649.027	2183.365	2168.573
20180528:12:33:59	23.4	16.6	-4.2	23.7	0.25	2.2	0.25	2.0	124.4	285.8	286.3	86.2	51.3	86.1	1661.826	1650.357	2185.143	2170.31
20180528:12:38:59	23.4	16.6	-4.2	23.7	0.25	2.2	0.25	2.0	124.3	285.8	286.3	86.2	51.3	86.1	1663.2	1651.74	2186.937	2172.117
20180528:12:43:59	23.4	16.1	-4.2	23.7	0.25	2.2	0.25	2.0	123.2	285.8	286.3	86.2	51.3	86.1	1664.537	1653.066	2188.683	2173.848
20180528:12:48:59	23.4	16.5	-4.1	23.7	0.25	2.2	0.25	2.0	124.1	285.8	286.4	86.1	51.3	86.0	1665.905	1654.401	2190.47	2175.592
20180528:12:53:59	23.4	16.6	-4.1	23.7	0.25	2.2	0.25	2.0	124.5	285.9	286.4	86.0	51.2	86.0	1667.275	1655.78	2192.259	2177.393
20180528:12:58:59	23.4	16.9	-4.1	23.7	0.25	2.2	0.25	2.0	125.0	285.9	286.4	86.0	51.3	86.0	1668.607	1657.109	2194	2179.13
20180528:13:03:59	23.4	16.9	-4.1	23.7	0.25	2.3	0.25	2.0	125.1	285.8	286.4	85.9	51.2	86.0	1669.983	1658.491	2195.796	2180.934
20180528:13:08:59	23.4	16.8	-4.2	23.7	0.25	2.2	0.25	2.0	124.9	285.8	286.3	85.9	51.3	86.0	1671.347	1659.838	2197.578	2182.694
20180528:13:13:59	23.4	16.8	-4.2	23.7	0.25	2.2	0.25	2.0	124.7	285.8	286.4	85.9	51.2	86.0	1672.683	1661.164	2199.322	2184.425
20180528:13:18:59	23.4	16.7	-4.0	23.7	0.25	2.2	0.25	2.0	124.5	285.8	286.3	85.9	51.3	85.9	1674.063	1662.54	2201.124	2186.222
20180528:13:23:59	23.4	16.6	-3.9	23.7	0.25	2.2	0.25	2.0	124.4	285.8	286.3	85.9	51.2	85.9	1675.428	1663.868	2202.907	2187.957
20180528:13:28:59	23.4	16.6	-3.9	23.7	0.25	2.2	0.25	2.0	124.5	285.8	286.3	85.9	51.3	86.0	1676.765	1665.238	2204.654	2189.746
20180528:13:33:59	23.4	16.7	-3.9	23.7	0.25	2.2	0.25	2.0	124.6	285.7	286.3	85.9	51.2	85.9	1678.145	1666.594	2206.456	2191.517
20180528:13:38:59	23.4	16.7	-3.8	23.7	0.25	2.2	0.25	2.0	124.6	285.8	286.3	85.9	51.3	85.9	1679.501	1667.913	2208.228	2193.241
20180528:13:43:59	23.4	16.0	-4.0	23.7	0.25	2.2	0.25	2.0	123.0	285.8	286.3	86.0	51.2	86.0	1680.839	1669.296	2209.978	2195.049
20180528:13:48:59	23.4	16.3	-4.0	23.7	0.25	2.2	0.25	2.0	123.7	285.8	286.3	86.0	51.3	86.0	1682.222	1670.628	2211.785	2196.789
20180528:13:53:59	23.4	16.4	-4.0	23.7	0.25	2.2	0.25	2.0	124.0	285.8	286.2	86.0	51.2	86.0	1683.575	1671.979	2213.554	2198.556
20180528:13:58:59	23.4	16.5	-4.0	23.7	0.25	2.3	0.25	2.0	124.2	285.8	286.3	86.0	51.3	86.0	1684.914	1673.346	2215.304	2200.342
20180528:14:03:59	23.4	16.5	-4.0	23.7	0.25	2.2	0.25	2.0	124.1	285.8	286.4	86.0	51.2	85.9	1686.296	1674.664	2217.109	2202.064
20180528:14:08:59	23.4	16.6	-3.9	23.7	0.25	2.2	0.25	2.0	124.4	285.8	286.3	85.9	51.2	85.9	1687.655	1676.046	2218.885	2203.87
20180528:14:13:59	23.4	16.7	-3.9	23.7	0.25	2.3	0.25	2.0	124.5	285.8	286.2	85.9	51.1	85.9	1688.988	1677.367	2220.626	2205.596
20180528:14:18:59	23.4	16.6	-3.9	23.7	0.25	2.3	0.25	2.0	124.5	285.8	286.3	85.9	51.3	85.9	1690.375	1678.726	2222.437	2207.37
20180528:14:23:59	23.4	16.6	-3.9	23.7	0.25	2.2	0.25	2.0	124.3	285.8	286.3	85.8	51.2	85.8	1691.736	1680.086	2224.215	2209.147
20180528:14:28:59	23.4	16.6	-3.9	23.7	0.25	2.2	0.25	2.0	124.4	285.8	286.3	85.7	51.2	85.7	1693.066	1681.418	2225.952	2210.885
20180528:14:33:59	23.4	16.5	-3.9	23.7	0.25	2.3	0.25	2.0	124.3	285.8	286.3	85.6	51.1	85.7	1694.455	1682.803	2227.765	2212.694
20180528:14:38:59	23.4	16.6	-3.7	23.7	0.25	2.3	0.25	2.0	124.3	285.8	286.2	85.6	51.2	85.7	1695.815	1684.13	2229.541	2214.427
20180528:14:43:59	23.4	16.6	-3.7	23.7	0.25	2.3	0.25	2.0	124.4	285.7	286.3	85.6	51.1	85.7	1697.147	1685.476	2231.28	2216.184
20180528:14:48:59	23.4	16.4	-3.8	23.7	0.25	2.3	0.25	2.0	124.0	285.8	286.3	85.6	51.2	85.7	1698.536	1686.849	2233.093	2217.977

Time:	Stack Pressure:	Sat% H2O:	Static:	Barometric:	Flowmeter1:	Vacuum1:	Flowmeter2:	Vacuum2:	Stack Temp:	Sorbent Temp:	Probe Temp:	DGM#1 Temp:	Condenser Temp:	DGM#2 Temp:	DGM1*:	DGM2*:	DGM1:	DGM2:
day:hh:mm:ss	in-Hg	Percent	in-H2O	in-Hg	l/min	in-Hg	l/min	in-Hg	degF	degF	degF	degF	degF	degF	liters STP	liters STP	liters nominal	liters nominal
20180528:14:53:59	23.4	16.5	-3.7	23.7	0.25	2.3	0.25	2.0	124.2	285.8	286.3	85.6	51.1	85.7	1699.89	1688.18	2234.861	2219.716
20180528:14:58:59	23.4	16.6	-3.6	23.7	0.25	2.2	0.25	2.0	124.4	285.8	286.3	85.7	51.2	85.7	1701.222	1689.564	2236.6	2221.523
20180528:15:03:59	23.4	16.5	-3.6	23.7	0.25	2.2	0.25	2.0	124.3	285.8	286.3	85.7	51.1	85.7	1702.611	1690.892	2238.415	2223.258
20180528:15:08:59	23.4	15.9	-3.6	23.7	0.25	2.2	0.25	2.0	122.8	285.8	286.3	85.8	51.2	85.8	1703.961	1692.226	2240.178	2225
20180528:15:13:59	23.4	16.1	-3.5	23.7	0.25	2.2	0.25	2.0	123.3	285.8	286.3	85.8	51.1	85.8	1705.295	1693.6	2241.92	2226.795
20180528:15:18:59	23.4	16.4	-3.4	23.7	0.25	2.3	0.25	2.0	123.9	285.8	286.2	85.8	51.1	85.8	1706.686	1694.927	2243.737	2228.528
20180528:15:23:59	23.4	16.5	-3.4	23.7	0.25	2.3	0.25	2.0	124.3	285.8	286.3	85.8	51.0	85.7	1708.033	1696.308	2245.496	2230.331
20180528:15:28:59	23.4	16.5	-3.3	23.7	0.25	2.3	0.25	2.0	124.3	285.9	286.2	85.7	51.1	85.7	1709.368	1697.64	2247.241	2232.071
20180528:15:33:59	23.4	16.5	-3.2	23.7	0.25	2.3	0.25	2.0	124.2	285.8	286.3	85.6	50.9	85.7	1710.76	1698.967	2249.059	2233.805
20180528:15:38:59	23.4	16.6	-3.3	23.7	0.25	2.3	0.25	2.0	124.4	285.8	286.2	85.6	51.1	85.7	1712.109	1700.339	2250.82	2235.598
20180528:15:43:59	23.4	16.2	-3.4	23.7	0.25	2.2	0.25	2.0	123.6	285.8	286.3	85.7	51.0	85.7	1713.442	1701.667	2252.563	2237.333
20180528:15:48:59	23.4	16.3	-3.2	23.7	0.25	2.2	0.25	2.0	123.9	285.8	286.3	85.7	51.1	85.7	1714.841	1703.045	2254.391	2239.133
20180528:15:53:59	23.4	16.5	-3.2	23.7	0.25	2.3	0.25	2.0	124.2	285.9	286.3	85.7	51.0	85.7	1716.182	1704.392	2256.143	2240.895
20180528:15:58:59	23.4	16.6	-3.2	23.7	0.25	2.3	0.25	2.0	124.4	285.9	286.4	85.6	51.0	85.7	1717.515	1705.717	2257.885	2242.626
20180528:16:03:59	23.4	16.6	-3.2	23.7	0.25	2.2	0.25	2.0	124.4	285.8	286.2	85.6	50.9	85.7	1718.914	1707.093	2259.713	2244.425
20180528:16:08:59	23.4	16.5	-3.1	23.7	0.25	2.2	0.25	2.0	124.3	285.7	286.2	85.5	50.9	85.7	1720.249	1708.42	2261.457	2246.16
20180528:16:13:59	23.4	16.5	-3.1	23.7	0.25	2.3	0.25	2.0	124.3	285.8	286.3	85.4	50.9	85.7	1721.594	1709.788	2263.215	2247.947
20180528:16:18:59	23.4	16.6	-3.1	23.7	0.25	2.2	0.25	2.0	124.4	285.8	286.3	85.5	51.0	85.8	1722.983	1711.14	2265.03	2249.716
20180528:16:23:59	23.4	16.6	-3.0	23.7	0.25	2.2	0.25	2.0	124.4	285.8	286.3	85.4	51.0	85.8	1724.314	1712.457	2266.769	2251.438
20180528:16:28:59	23.4	16.6	-3.0	23.7	0.25	2.2	0.25	2.0	124.5	285.8	286.3	85.5	50.9	85.8	1725.657	1713.842	2268.524	2253.248
20180528:16:33:59	23.4	16.6	-3.0	23.7	0.25	2.3	0.25	2.0	124.5	285.7	286.3	85.5	51.0	85.8	1727.053	1715.171	2270.348	2254.987
20180528:16:38:59	23.4	16.7	-3.1	23.7	0.25	2.3	0.25	2.0	124.6	285.8	286.3	85.5	50.9	85.8	1728.382	1716.527	2272.085	2256.759
20180528:16:43:59	23.4	16.5	-3.1	23.7	0.25	2.2	0.25	2.0	124.2	285.8	286.3	85.7	51.1	85.9	1729.732	1717.89	2273.85	2258.541
20180528:16:48:59	23.4	16.5	-3.2	23.7	0.25	2.2	0.25	2.0	124.2	285.7	286.3	85.8	51.0	86.0	1731.12	1719.213	2275.665	2260.273
20180528:16:53:59	23.4	16.5	-3.2	23.7	0.25	2.2	0.25	2.0	124.3	285.8	286.3	85.9	51.1	86.0	1732.447	1720.596	2277.4	2262.081
20180528:16:58:59	23.4	16.3	-3.2	23.7	0.25	2.2	0.25	2.0	123.8	285.8	286.3	85.9	51.0	86.0	1733.8	1721.911	2279.169	2263.801
20180528:17:03:59	23.4	16.3	-3.3	23.7	0.25	2.2	0.25	2.0	123.9	285.9	286.3	86.0	51.1	86.1	1735.184	1723.267	2280.978	2265.573
20180528:17:08:59	23.4	16.5	-3.3	23.7	0.25	2.3	0.25	2.0	124.1	285.8	286.3	85.9	51.0	86.0	1736.519	1724.631	2282.724	2267.357
20180528:17:13:59	23.4	16.6	-3.3	23.7	0.25	2.3	0.25	2.0	124.4	285.8	286.3	85.9	51.0	86.1	1737.873	1725.96	2284.494	2269.096
20180528:17:18:59	23.4	16.3	-3.3	23.7	0.25	2.2	0.25	2.0	123.7	285.7	286.3	85.8	50.9	86.1	1739.254	1727.339	2286.298	2270.898
20180528:17:23:59	23.4	16.1	-3.4	23.7	0.25	2.2	0.25	2.0	123.4	285.7	286.2	85.7	51.0	86.1	1740.594	1728.669	2288.05	2272.637
20180528:17:28:59	23.4	16.5	-3.4	23.7	0.25	2.2	0.25	2.0	124.2	285.8	286.3	85.7	51.0	86.1	1741.946	1730.01	2289.817	2274.391
20180528:17:33:59	23.4	16.5	-3.3	23.7	0.25	2.3	0.25	2.0	124.2	285.7	286.2	85.7	51.0	86.1	1743.325	1731.379	2291.619	2276.18
20180528:17:38:59	23.4	16.5	-3.3	23.7	0.25	2.3	0.25	2.0	124.3	285.7	286.2	85.7	50.9	86.1	1744.661	1732.708	2293.363	2277.919
20180528:17:43:59	23.4	16.6	-3.3	23.7	0.25	2.2	0.25	2.0	124.5	285.8	286.2	85.7	51.0	86.1	1746.024	1734.093	2295.144	2279.729
20180528:17:48:59	23.4	16.6	-3.2	23.7	0.25	2.3	0.25	2.0	124.4	285.7	286.2	85.6	50.9	86.1	1747.395	1735.42	2296.935	2281.464
20180528:17:53:59	23.4	16.6	-3.2	23.7	0.25	2.3	0.25	2.0	124.4	285.7	286.3	85.6	51.0	86.1	1748.732	1736.753	2298.681	2283.207
20180528:17:58:59	23.4	16.6	-3.2	23.7	0.25	2.3	0.25	2.0	124.4	285.8	286.2	85.7	51.0	86.2	1750.106	1738.138	2300.476	2285.019
20180528:18:03:59	23.4	16.7	-3.2	23.7	0.25	2.3	0.25	2.0	124.6	285.8	286.3	85.7	51.1	86.2	1751.479	1739.467	2302.27	2286.756
20180528:18:08:59	23.4	16.5	-3.2	23.7	0.25	2.2	0.25	2.0	124.3	285.7	286.3	85.8	51.0	86.2	1752.82	1740.839	2304.022	2288.551
20180528:18:13:59	23.4	16.0	-3.3	23.7	0.25	2.2	0.25	2.0	123.0	285.8	286.3	85.9	51.1	86.2	1754.187	1742.2	2305.809	2290.331
20180528:18:18:59	23.4	16.4	-3.3	23.7	0.25	2.2	0.25	2.0	124.1	285.8	286.4	86.0	51.0	86.3	1755.565	1743.518	2307.611	2292.055
20180528:18:23:59	23.4	16.6	-3.3	23.7	0.25	2.3	0.25	2.0	124.4	285.8	286.2	86.1	51.1	86.3	1756.905	1744.905	2309.363	2293.868
20180528:18:28:59	23.4	16.7	-3.3	23.7	0.25	2.2	0.25	2.0	124.6	285.8	286.3	86.2	51.0	86.3	1758.267	1746.231	2311.144	2295.602
20180528:18:33:59	23.4	16.7	-3.3	23.7	0.25	2.2	0.25	2.0	124.6	285.9	286.4	86.3	51.2	86.4	1759.641	1747.586	2312.941	2297.374
20180528:18:38:59	23.4	16.5	-3.3	23.7	0.25	2.3	0.25	2.0	124.3	285.8	286.3	86.4	51.1	86.4	1760.978	1748.946	2314.689	2299.152
20180528:18:43:59	23.4	16.4	-3.3	23.7	0.25	2.3	0.25	2.0	124.1	285.8	286.3	86.5	51.1	86.4	1762.344	1750.276	2316.476	2300.893
20180528:18:48:59	23.4	16.3	-3.3	23.7	0.25	2.3	0.25	2.0	123.8	285.8	286.3	86.5	51.1	86.5	1763.716	1751.659	2318.27	2302.701
20180528:18:53:59	23.4	16.2	-3.3	23.7	0.25	2.3	0.25	2.0	123.6	285.7	286.4	86.6	51.2	86.5	1765.053	1752.982	2320.02	2304.432
20180528:18:58:59	23.4	15.9	-3.3	23.7	0.25	2.3	0.25	2.0	122.9	285.8	286.3	86.6	51.1	86.6	1766.421	1754.33	2321.809	2306.195
20180528:19:03:59	23.4	15.0	-3.3	23.7	0.25	2.3	0.25	2.0	120.8	285.8	286.3	86.6	51.2	86.6	1767.796	1755.703	2323.609	2307.992
20180528:19:08:59	23.5	14.9	-2.3	23.7	0.25	2.3	0.25	2.0	120.6	285.7	286.3	86.6	51.1	86.6	1769.142	1757.035	2325.37	2309.735
20180528:19:13:59	23.5	15.0	-2.1	23.7	0.25	2.3	0.25	2.0	121.0	285.8	286.4	86.6	51.2	86.6	1770.505	1758.417	2327.154	2311.543
20180528:19:18:59	23.5	14.9	-2.6	23.7	0.25	2.3	0.25	2.0	120.6	285.8	286.2	86.5	51.1	86.6	1771.888	1759.763	2328.963	2313.305
20180528:19:23:59	23.5	14.9	-2.8	23.7	0.25	2.3	0.25	2.0	120.5	285.8	286.3	86.4	51.1	86.6	1773.233	1761.092	2330.722	2315.043
20180528:19:28:59	23.5	14.8	-2.6	23.7	0.25	2.3	0.25	2.0	120.4	285.8	286.3	86.3	51.0	86.6	1774.59	1762.479	2332.496	2316.857
20180528:19:33:59	23.5	14.8	-2.4	23.7	0.25	2.3	0.25	2.0	120.3	285.7	286.3	86.2	51.0	86.6	1775.979	1763.816	2334.313	2318.607
20180528:19:38:59	23.5	14.8	-2.3	23.7	0.25	2.3	0.25	2.0	120.3	285.8	286.3	86.2	51.0	86.6	1777.316	1765.174	2336.061	2320.383
20180528:19:43:59	23.5	14.8	-2.2	23.7	0.25	2.3	0.25	2.0	120.4	285.8	286.3	86.2	51.0	86.6	1778.68	1766.542	2337.844	2322.173
20180528:19:48:59	23.5	14.8	-2.2	23.7	0.25	2.3	0.25	2.0	120.3	285.7	286.3	86.1	51.1	86.6	1780.078	1767.883	2339.672	2323.929
20180528:19:53:59	23.5	14.7	-2.2	23.7	0.25	2.3	0.25	2.0	120.2	285.7	286.2	86.1	51.0	86.5	1781.42	1769.273	2341.426	2325.746
20180528:19:58:59	23.5	14.4	-2.4	23.7	0.25	2.3	0.25	2.0	119.3	285.7	286.3	86.1	51.1	86.5	1782.777	1770.621	2343.2	2327.509
20180528:20:03:59	23.5	13.9	-2.3	23.7	0.25	2.3	0.25	2.0	118.0	285.6	286.1	86.1	51.0	86.5	1784.181	1771.954	2345.035	2329.254
20180528:20:08:59	23.5	14.3	-2.1	23.7	0.25	2.3	0.25	2.0	119.1	285.7	286.2	86.1	51.1	86.5	1785.527	1773.341	2346.794	2331.068
20180528:20:13:59	23.5	14.6	-2.0	23.7	0.25	2.3	0.25	2.0	120.0	285.7	286.3	86.2	51.0	86.5	1786.873	1774.677	2348.554	2332.816
20180528:20:18:59	23.5	14.9	-2.2	23.7	0.25	2.3	0.25	2.0	120.6	285.8	286.3	86.2	51.2	86.5	1788.278	1776.035	2350.391	2334.592
20180528:20:23:59	23.5	15.0	-2.2	23.7	0.25	2.3	0.25	2.0	120.8	285.8	286.4	86.3	51.1	86.5	1789.632	1777.4	2352.161	2336.378
20180528:20:28:59	23.5	15.0	-2.2	23.7	0.25	2.3	0.25	2.0	120.8	285.8	286.3	86.4	51.2	86.6	1790.975	1778.739	2353.919	2338.13
20180528:20:33:59	23.5	15.1	-2.3	23.7	0.25	2.3	0.25	2.0	121.0	285.9	286.3	86.5	51.2	86.6	1792.374	1780.13	2355.748	2339.949
20180528:20:38:59	23.5	15.1	-2.3	23.7	0.25	2.3	0.25	2.0	121.2	285.9	286.4	86.5	51.2	86.6	1793.736	1781.47	2357.53	2341.703
20180528:20:43:59	23.5	15.1	-2.3	23.7	0.25	2.3	0.25	2.0	121.2	285.9	286.4	86.5	51.2	86.6	1795.076	1782.808	2359.283	2343.453
20180528:20:48:59	23.5	15.2	-2.4	23.7	0.25	2.3	0.25	2.0	121.3	285.9	286.3	86.5	51.2	86.6	1796.467	1784.193	2361.102	2345.265
20180528:20:53:59	23.5	15.3	-2.4	23.7	0.25	2.3	0.25	2.0	121.6	285.9	286.3	86.4	51.1	86.6	1797.832	1785.53	2362.887	2347.015
20180528:20:58:59	23.5	15.5	-2.3	23.7	0.25	2.3	0.25	2.0	122.1	285.9	286.3	86.3	51.2	86.5	1799.171	1786.894	2364.639	2348.799
20180528:21:03:59	23.5	15.7	-2.6	23.7	0.25	2.3	0.25	2.0	122.4	285.9	286.4	86.2	51.1	86.5	1800.559	1788.26	2366.454	2350.586
20180528:21:08:59	23.5	15.9	-2.8	23.7	0.25	2.3	0.25	2.0	122.9	285.9	286.3	86.2	51.2	86.5	1801.925	1789.6	2368.239	2352.338
20180528:21:13:59	23.5	16.0	-2.8	23.7	0.25	2.3	0.25	2.0	123.2	285.8	286.3	86.2	51.1	86.4	1803.272	1790.991	2370	2354.158
20180528:21:18:59	23.5	16.0	-2.9	23.7	0.25	2.3	0.25	2.0	123.2	285.8	286.2	86.3	51.2	86.4	1804.652	1792.329	2371.804	2355.908
20180528:21:23:59	23.5	16.0	-2.7	23.7	0.25	2.3	0.25	2.0	123.1	285.8	286.3	86.3	51.1	86.4	1806.028	1793.666	2373.604	2357.656
20180528:21:28:59	23.5	15.9	-2.9	23.7	0.25	2.3	0.25	2.0	122.9	285.8	286.4	86.3	51.2	86.5	1807.374	1795.053	2375.363	2359.47
20180528:21:33:59	23.5	15.9	-3.0	23.7	0.25	2.3	0.25	2.0	122.9	285.8	286.3	86.4	51.1	86.5	1808.741	1796.392	2377.152	2361.222
20180528:21:38:59	23.5	15.7	-3.0	23.7	0.25	2.3	0.25	2.0	122.5	285.7	286.3	86.4	51.2	86.5	1810.127	1797.763	2378.963	2363.015
20180528:21:43:59	23.5	15.6	-2.7	23.7	0.25	2.3	0.25	2.0	122.2	285.8	286.3	86.5	51.1	86.5	1811.472	1799.129	2380.722	2364.801
20180528:21:48:59	23.5	15.5	-2.5	23.7	0.25	2.3	0.25	2.0	122.1	285.8	286.4	86.5	51.2	86.5	1812.831	1800.463	2382.5	2366.545
20180528:21:53:59	23.5	15.4	-2.5	23.7	0.25	2.3	0.25	2.0	121.8	285.8	286.4	86.6	51.2	86.5	1814.227	1801.847	2384.326	2368.355
20180528:21:58:59	23.5	15.3	-2.5	23.7	0.25	2.3	0.25	2.0	121.5	285.9	286.4	86.6	51.3	86.5	1815.568	1803.188	2386.08	2370.109
20180528:22:03:59	23.5	15.1	-2.6	23.7	0.25	2.3	0.25	2.0	121.2	285.9	286.4	86.6	51.2	86.5	1816.929	1804.532	2387.859	2371.867
20180528:22:08:59	23.5	15.1	-2.5	23.7	0.25	2.3	0.25	2.0	121.1	285.9	286.4	86.6	51.3	86.5	1818.332	1805.923	2389.694	2373.684
20180528:22:13:59	23.5	15.0	-2.5	23.7	0.25	2.3	0.25	2.0	121.0	285.9	286.4	86.5	51.2	86.4	1819.682	1807.261	2391.459	2375.434

Time:	Stack Pressure:	Sat% H2O:	Static:	Barometric:	Flowmeter1:	Vacuum1:	Flowmeter2:	Vacuum2:	Stack Temp:	Sorbent Temp:	Probe Temp:	DGM#1 Temp:	Condenser Temp:	DGM#2 Temp:	DGM1*:	DGM2*:	DGM1:	DGM2:
day:hh:mm:ss	in-Hg	Percent	in-H2O	in-Hg	l/min	in-Hg	l/min	in-Hg	degF	degF	degF	degF	degF	degF	liters STP	liters STP	liters nominal	liters nominal
20180528:22:18:59	23.5	15.1	-2.6	23.7	0.25	2.3	0.25	2.0	121.0	285.8	286.3	86.3	51.2	86.3	1821.03	1808.632	2393.22	2377.226
20180528:22:23:59	23.5	15.1	-2.5	23.7	0.25	2.3	0.25	2.0	121.1	285.8	286.3	86.3	51.1	86.3	1822.438	1810.002	2395.061	2379.017
20180528:22:28:59	23.5	15.1	-2.4	23.7	0.25	2.3	0.25	2.0	121.2	285.8	286.3	86.2	51.2	86.3	1823.797	1811.34	2396.837	2380.765
20180528:22:33:59	23.5	14.7	-2.6	23.7	0.25	2.3	0.25	2.0	120.1	285.8	286.3	86.2	51.1	86.3	1825.144	1812.736	2398.598	2382.59
20180528:22:38:59	23.5	14.4	-2.4	23.7	0.25	2.3	0.25	2.0	119.3	285.8	286.3	86.2	51.2	86.2	1826.544	1814.082	2400.428	2384.35
20180528:22:43:59	23.5	14.9	-2.2	23.7	0.25	2.3	0.25	2.0	120.7	285.8	286.4	86.2	51.1	86.2	1827.916	1815.424	2402.22	2386.103
20180528:22:48:59	23.5	15.1	-2.3	23.7	0.25	2.3	0.25	2.0	121.2	285.8	286.4	86.2	51.2	86.2	1829.256	1816.814	2403.972	2387.919
20180528:22:53:59	23.5	15.3	-2.5	23.7	0.25	2.3	0.25	2.0	121.5	285.9	286.4	86.2	51.2	86.2	1830.648	1818.157	2405.791	2389.675
20180528:22:58:59	23.5	15.3	-2.5	23.7	0.25	2.3	0.25	2.0	121.5	285.8	286.3	86.1	51.2	86.1	1832.019	1819.518	2407.581	2391.453
20180528:23:03:59	23.5	15.3	-2.4	23.7	0.25	2.3	0.25	2.0	121.7	285.8	286.3	86.1	51.2	86.1	1833.365	1820.891	2409.341	2393.246
20180528:23:08:59	23.5	15.4	-2.4	23.7	0.25	2.3	0.25	2.0	121.9	285.9	286.4	86.2	51.2	86.1	1834.742	1822.234	2411.139	2395
20180528:23:13:59	23.5	15.4	-2.4	23.7	0.25	2.3	0.25	2.0	121.8	285.9	286.3	86.1	51.1	86.1	1836.121	1823.625	2412.941	2396.818
20180528:23:18:59	23.5	14.8	-2.8	23.7	0.25	2.3	0.25	2.0	120.2	285.8	286.4	86.2	51.1	86.1	1837.47	1824.97	2414.702	2398.573
20180528:23:23:59	23.5	15.1	-3.0	23.7	0.25	2.3	0.25	2.0	121.0	285.8	286.4	86.2	51.2	86.1	1838.833	1826.305	2416.483	2400.318
20180528:23:28:59	23.4	15.8	-3.4	23.7	0.25	2.3	0.25	2.0	122.6	285.9	286.3	86.2	51.1	86.0	1840.22	1827.693	2418.294	2402.13
20180528:23:33:59	23.4	15.9	-3.4	23.7	0.25	2.3	0.25	2.0	122.9	285.9	286.4	86.2	51.2	86.0	1841.568	1829.033	2420.056	2403.88
20180528:23:38:59	23.5	16.0	-3.2	23.7	0.25	2.3	0.25	2.0	123.2	286.0	286.4	86.2	51.2	86.1	1842.927	1830.394	2421.83	2405.656
20180528:23:43:59	23.4	16.1	-3.5	23.7	0.25	2.3	0.25	2.0	123.4	285.9	286.4	86.2	51.2	86.0	1844.319	1831.76	2423.648	2407.44
20180528:23:48:59	23.4	16.2	-3.6	23.7	0.25	2.3	0.25	2.0	123.5	285.9	286.3	86.1	51.1	86.0	1845.661	1833.101	2425.4	2409.192
20180528:23:53:59	23.5	16.1	-3.4	23.7	0.25	2.3	0.25	2.0	123.5	285.9	286.4	86.1	51.1	86.0	1847.022	1834.489	2427.178	2411.004
20180528:23:58:59	23.4	16.3	-3.6	23.7	0.25	2.3	0.25	2.0	123.7	285.9	286.3	86.1	51.1	86.0	1848.42	1835.83	2429.004	2412.754
20180529:00:03:59	23.4	16.5	-3.7	23.7	0.25	2.3	0.25	2.0	124.2	285.9	286.4	86.1	51.2	86.0	1849.757	1837.17	2430.75	2414.504
20180529:00:08:59	23.4	16.5	-3.7	23.7	0.25	2.3	0.25	2.0	124.3	286.1	286.4	86.1	51.1	86.0	1851.114	1838.555	2432.522	2416.312
20180529:00:13:59	23.4	16.6	-3.7	23.7	0.25	2.3	0.25	2.0	124.3	285.9	286.4	86.0	51.1	85.9	1852.516	1839.888	2434.354	2418.053
20180529:00:18:59	23.4	16.5	-3.7	23.7	0.25	2.3	0.25	2.0	124.2	285.9	286.2	85.8	51.1	85.9	1853.861	1841.265	2436.109	2419.852
20180529:00:23:59	23.4	15.8	-3.8	23.7	0.25	2.3	0.25	2.0	122.7	285.8	286.3	85.7	51.1	85.9	1855.217	1842.631	2437.88	2421.635
20180529:00:28:59	23.4	15.4	-3.8	23.7	0.25	2.3	0.25	2.0	121.5	285.8	286.3	85.6	51.1	85.8	1856.618	1843.955	2439.709	2423.365
20180529:00:33:59	23.4	16.0	-3.8	23.7	0.25	2.3	0.25	2.0	123.0	285.8	286.3	85.5	51.1	85.7	1857.965	1845.346	2441.467	2425.18
20180529:00:38:59	23.4	16.3	-3.8	23.7	0.25	2.3	0.25	2.0	123.7	285.8	286.3	85.4	51.0	85.7	1859.308	1846.672	2443.22	2426.912
20180529:00:43:59	23.4	16.5	-3.8	23.7	0.25	2.3	0.25	2.0	124.1	285.9	286.3	85.3	51.1	85.7	1860.716	1848.033	2445.057	2428.69
20180529:00:48:59	23.4	16.6	-3.8	23.7	0.25	2.3	0.25	2.0	124.3	285.8	286.3	85.3	51.0	85.6	1862.07	1849.408	2446.824	2430.485
20180529:00:53:59	23.4	16.6	-3.8	23.7	0.25	2.3	0.25	2.0	124.5	285.9	286.4	85.2	51.1	85.6	1863.414	1850.748	2448.578	2432.235
20180529:00:58:59	23.4	16.7	-3.8	23.7	0.25	2.3	0.25	2.0	124.6	285.8	286.3	85.2	51.1	85.6	1864.816	1852.136	2450.407	2434.047
20180529:01:03:59	23.4	16.7	-3.8	23.7	0.25	2.3	0.25	2.0	124.6	285.9	286.3	85.2	51.1	85.5	1866.173	1853.488	2452.178	2435.812
20180529:01:08:59	23.4	16.6	-3.9	23.7	0.25	2.2	0.25	2.0	124.4	285.9	286.4	85.2	51.1	85.5	1867.512	1854.817	2453.924	2437.547
20180529:01:13:59	23.4	16.6	-3.9	23.7	0.25	2.2	0.25	2.0	124.3	285.9	286.3	85.1	51.1	85.4	1868.904	1856.198	2455.741	2439.35
20180529:01:18:59	23.4	16.6	-3.9	23.7	0.25	2.3	0.25	2.0	124.4	285.8	286.2	85.0	51.0	85.4	1870.248	1857.527	2457.494	2441.085
20180529:01:23:59	23.4	16.6	-3.9	23.7	0.25	2.3	0.25	2.0	124.3	285.8	286.3	85.0	51.1	85.3	1871.579	1858.891	2459.23	2442.865
20180529:01:28:59	23.4	16.5	-3.9	23.7	0.25	2.3	0.25	2.0	124.2	285.8	286.3	84.9	51.0	85.3	1872.977	1860.249	2461.054	2444.637
20180529:01:33:59	23.4	15.8	-4.1	23.7	0.25	2.3	0.25	2.0	122.5	285.8	286.3	84.9	51.1	85.3	1874.306	1861.563	2462.787	2446.352
20180529:01:38:59	23.4	15.2	-4.2	23.7	0.25	2.2	0.25	2.0	121.2	285.7	286.3	84.9	51.0	85.2	1875.652	1862.948	2464.543	2448.16
20180529:01:43:59	23.4	15.9	-4.1	23.7	0.25	2.3	0.25	2.0	122.7	285.8	286.3	84.8	51.1	85.2	1877.045	1864.276	2466.359	2449.893
20180529:01:48:59	23.4	16.2	-4.1	23.7	0.25	2.3	0.25	2.0	123.4	285.8	286.3	84.7	51.0	85.1	1878.378	1865.635	2468.096	2451.665
20180529:01:53:59	23.4	16.4	-4.1	23.7	0.25	2.3	0.25	2.0	123.9	285.9	286.4	84.7	51.1	85.1	1879.724	1867	2469.852	2453.445
20180529:01:58:59	23.4	16.5	-4.1	23.7	0.25	2.3	0.25	2.0	124.2	285.8	286.2	84.7	51.0	85.0	1881.117	1868.315	2471.667	2455.162
20180529:02:03:59	23.4	16.5	-4.1	23.7	0.25	2.3	0.25	2.0	124.2	285.7	286.3	84.7	51.2	85.0	1882.448	1869.703	2473.402	2456.972
20180529:02:08:59	23.4	16.6	-4.0	23.7	0.25	2.3	0.25	2.0	124.3	285.8	286.3	84.7	51.1	85.0	1883.806	1871.032	2475.172	2458.705
20180529:02:13:59	23.4	16.6	-4.0	23.7	0.25	2.3	0.25	2.0	124.3	285.8	286.3	84.7	51.2	84.9	1885.192	1872.39	2476.98	2460.477
20180529:02:18:59	23.4	16.6	-4.0	23.7	0.25	2.3	0.25	2.0	124.3	285.9	286.3	84.8	51.1	85.0	1886.529	1873.755	2478.724	2462.258
20180529:02:23:59	23.4	16.5	-4.0	23.7	0.25	2.3	0.25	2.0	124.2	285.8	286.3	84.8	51.2	84.9	1887.887	1875.085	2480.494	2463.992
20180529:02:28:59	23.4	16.5	-3.9	23.7	0.25	2.3	0.25	2.0	124.2	285.8	286.3	84.7	51.1	84.9	1889.27	1876.472	2482.298	2465.803
20180529:02:33:59	23.4	16.5	-3.9	23.7	0.25	2.3	0.25	2.0	124.2	285.8	286.3	84.7	51.2	84.9	1890.612	1877.791	2484.048	2467.523
20180529:02:38:59	23.4	16.5	-3.9	23.7	0.25	2.3	0.25	2.0	124.2	285.8	286.4	84.7	51.1	84.8	1891.969	1879.145	2485.819	2469.289
20180529:02:43:59	23.4	15.7	-4.2	23.7	0.25	2.2	0.25	2.0	122.2	285.8	286.2	84.6	51.1	84.7	1893.345	1880.514	2487.613	2471.075
20180529:02:48:59	23.3	15.3	-4.4	23.7	0.25	2.2	0.25	2.0	121.4	285.7	286.3	84.6	51.1	84.7	1894.686	1881.847	2489.361	2472.814
20180529:02:53:59	23.3	15.9	-4.3	23.7	0.25	2.3	0.25	2.0	122.6	285.7	286.2	84.5	51.2	84.7	1896.052	1883.226	2491.143	2474.613
20180529:02:58:59	23.4	16.1	-4.2	23.7	0.25	2.3	0.25	2.0	123.1	285.7	286.3	84.5	51.1	84.7	1897.425	1884.558	2492.933	2476.35
20180529:03:03:59	23.4	16.3	-4.2	23.7	0.25	2.3	0.25	2.0	123.6	285.8	286.3	84.5	51.2	84.7	1898.76	1885.899	2494.674	2478.1
20180529:03:08:59	23.4	16.4	-4.2	23.7	0.25	2.3	0.25	2.0	123.8	285.8	286.4	84.6	51.2	84.6	1900.135	1887.271	2496.467	2479.889
20180529:03:13:59	23.4	16.4	-4.2	23.7	0.25	2.3	0.25	2.0	124.0	285.8	286.3	84.6	51.2	84.6	1901.501	1888.604	2498.248	2481.628
20180529:03:18:59	23.4	16.4	-4.2	23.7	0.25	2.3	0.25	2.0	124.0	285.8	286.3	84.6	51.2	84.6	1902.837	1889.991	2499.991	2483.436
20180529:03:23:59	23.4	16.4	-4.1	23.7	0.25	2.3	0.25	2.0	123.9	285.8	286.3	84.6	51.2	84.6	1904.219	1891.328	2501.794	2485.18
20180529:03:28:59	23.4	16.4	-4.1	23.7	0.25	2.3	0.25	2.0	124.0	285.8	286.3	84.6	51.2	84.6	1905.578	1892.66	2503.567	2486.917
20180529:03:33:59	23.4	16.4	-4.0	23.7	0.25	2.3	0.25	2.0	124.0	285.8	286.4	84.6	51.2	84.6	1906.923	1894.043	2505.32	2488.722
20180529:03:38:59	23.4	16.4	-4.0	23.7	0.25	2.3	0.25	2.0	123.9	285.8	286.4	84.6	51.2	84.6	1908.305	1895.374	2507.124	2490.459
20180529:03:43:59	23.4	16.4	-4.0	23.7	0.25	2.3	0.25	2.0	123.8	285.8	286.3	84.6	51.2	84.5	1909.664	1896.755	2508.896	2492.259
20180529:03:48:59	23.4	16.4	-4.0	23.7	0.25	2.2	0.25	2.0	123.8	285.8	286.3	84.6	51.2	84.6	1911.005	1898.109	2510.646	2494.026
20180529:03:53:59	23.4	16.3	-4.0	23.7	0.25	2.2	0.25	2.0	123.6	285.8	286.2	84.5	51.1	84.5	1912.39	1899.436	2512.452	2495.756
20180529:03:58:59	23.4	16.2	-4.0	23.7	0.25	2.3	0.25	2.0	123.5	285.8	286.3	84.5	51.2	84.5	1913.746	1900.813	2514.22	2497.553
20180529:04:03:59	23.4	16.2	-4.0	23.7	0.25	2.3	0.25	2.0	123.5	285.8	286.2	84.5	51.1	84.4	1915.082	1902.143	2515.963	2499.286
20180529:04:08:59	23.4	16.2	-4.0	23.7	0.25	2.3	0.25	2.0	123.4	285.8	286.2	84.3	51.1	84.4	1916.467	1903.506	2517.769	2501.064
20180529:04:13:59	23.4	16.3	-3.9	23.7	0.25	2.3	0.25	2.0	123.6	285.8	286.3	84.2	51.0	84.3	1917.824	1904.865	2519.537	2502.835
20180529:04:18:59	23.4	16.3	-4.0	23.7	0.25	2.3	0.25	2.0	123.6	285.8	286.2	84.1	51.1	84.3	1919.154	1906.182	2521.27	2504.553
20180529:04:23:59	23.4	16.3	-4.0	23.7	0.25	2.3	0.25	2.0	123.7	285.7	286.2	84.0	51.0	84.3	1920.544	1907.563	2523.081	2506.352
20180529:04:28:59	23.4	16.2	-4.0	23.7	0.25	2.3	0.25	2.0	123.5	285.7	286.2	83.9	51.1	84.3	1921.892	1908.895	2524.837	2508.088
20180529:04:33:59	23.4	16.1	-4.0	23.7	0.25	2.3	0.25	2.0	123.2	285.7	286.2	83.8	51.0	84.2	1923.226	1910.259	2526.574	2509.867
20180529:04:38:59	23.4	16.0	-3.9	23.7	0.25	2.3	0.25	2.0	122.9	285.7	286.2	83.7	51.1	84.2	1924.622	1911.631	2528.393	2511.654
20180529:04:43:59	23.4	15.9	-4.0	23.7	0.25	2.3	0.25	2.0	122.7	285.6	286.2	83.7	51.0	84.2	1925.971	1912.955	2530.148	2513.38
20180529:04:48:59	23.4	15.8	-3.9	23.7	0.25	2.3	0.25	2.0	122.4	285.6	286.2	83.7	51.1	84.1	1927.306	1914.349	2531.887	2515.195
20180529:04:53:59	23.4	15.6	-3.8	23.7	0.25	2.3	0.25	2.0	122.2	285.6	286.3	83.7	51.1	84.0	1928.716	1915.677	2533.722	2516.927
20180529:04:58:59	23.4	15.6	-3.5	23.7	0.25	2.3	0.25	2.0	122.1	285.7	286.3	83.8	51.2	84.0	1930.062	1917.036	2535.476	2518.697
20180529:05:03:59	23.4	15.4	-3.3	23.7	0.25	2.3	0.25	2.0	121.7	285.7	286.2	83.8	51.1	84.0	1931.405	1918.414	2537.224	2520.492
20180529:05:08:59	23.4	15.2	-3.1	23.7	0.25	2.3	0.25	2.0	121.4	285.7	286.3	83.8	51.2	84.0	1932.813	1919.755	2539.057	2522.239
20180529:05:13:59	23.4	15.0	-3.0	23.7	0.25	2.3	0.25	2.0	120.8	285.7	286.3	83.9	51.1	84.0	1934.159	1921.143	2540.811	2524.047
20180529:05:18:59	23.4	14.8	-3.0	23.7	0.25	2.3	0.25	2.0	120.4	285.7	286.2	83.9	51.2	84.0	1935.498	1922.488	2542.556	2525.799
20180529:05:23:59	23.4	14.7	-2.9	23.7	0.25	2.3	0.25	2.0	120.0	285.6	286.2	84.0	51.1	84.0	1936.904	1923.821	2544.387	2527.536
20180529:05:28:59	23.4	14.0	-3.1	23.7	0.25	2.3	0.25	2.0	118.2	285.6	286.4	84.0	51.2	84.0	1938.246	1925.207	2546.135	2529.34
20180529:05:33:59	23.5	14.5	-2.5	23.7	0.25	2.3	0.25	2.0	119.5	285.6	286.3	84.0	51.1	84.0	1939.59	1926.543	2547.885	2531.081
20180529:05:38:59	23.5	14.7	-2.5	23.7	0.25	2.3	0.25	2.0	120.0	285.8	286.5	84.1	51.2	84.0	1940.989	1927.915	2549.707	2532.867

Time:	Stack Pressure:	Sat% H2O:	Static:	Barometric:	Flowmeter1:	Vacuum1:	Flowmeter2:	Vacuum2:	Stack Temp:	Sorbent Temp:	Probe Temp:	DGM#1 Temp:	Condenser Temp:	DGM#2 Temp:	DGM1*:	DGM2*:	DGM1:	DGM2:
day:hh:mm:ss	in-Hg	Percent	in-H2O	in-Hg	l/min	in-Hg	l/min	in-Hg	degF	degF	degF	degF	degF	degF	liters STP	liters STP	liters nominal	liters nominal
20180529:05:43:59	23.5	14.7	-2.5	23.7	0.25	2.3	0.25	2.0	120.2	285.8	286.4	84.1	51.1	84.0	1942.33	1929.283	2551.454	2534.648
20180529:05:48:59	23.5	14.6	-2.7	23.7	0.25	2.3	0.25	2.0	119.9	285.9	286.4	84.0	51.2	83.9	1943.682	1930.607	2553.215	2536.372
20180529:05:53:59	23.5	14.7	-2.7	23.7	0.25	2.3	0.25	2.0	120.0	285.7	286.3	83.9	51.1	83.9	1945.085	1931.997	2555.041	2538.182
20180529:05:58:59	23.5	14.7	-2.7	23.7	0.25	2.3	0.25	2.0	120.2	285.8	286.3	83.9	51.2	83.8	1946.431	1933.327	2556.794	2539.914
20180529:06:03:59	23.5	14.8	-2.8	23.7	0.25	2.3	0.25	2.0	120.3	285.8	286.4	83.9	51.1	83.8	1947.781	1934.692	2558.552	2541.69
20180529:06:08:59	23.5	14.9	-2.6	23.7	0.25	2.3	0.25	2.0	120.5	285.8	286.4	83.9	51.2	83.8	1949.185	1936.061	2560.38	2543.472
20180529:06:13:59	23.5	14.9	-2.6	23.7	0.25	2.3	0.25	2.0	120.6	285.8	286.3	83.8	51.1	83.7	1950.53	1937.405	2562.13	2545.222
20180529:06:18:59	23.5	15.2	-2.9	23.7	0.25	2.3	0.25	2.0	121.2	285.8	286.4	83.8	51.1	83.7	1951.879	1938.794	2563.885	2547.028
20180529:06:23:59	23.5	15.4	-2.6	23.7	0.25	2.3	0.25	2.0	121.8	285.8	286.4	83.8	51.2	83.7	1953.285	1940.125	2565.715	2548.761
20180529:06:28:59	23.5	15.0	-3.0	23.7	0.25	2.3	0.25	2.0	120.8	285.8	286.4	83.9	51.1	83.8	1954.629	1941.47	2567.465	2550.511
20180529:06:33:59	23.5	15.2	-2.7	23.7	0.25	2.3	0.25	2.0	121.3	285.7	286.3	83.8	51.1	83.7	1955.975	1942.85	2569.217	2552.306
20180529:06:38:59	23.5	15.4	-2.7	23.7	0.25	2.3	0.25	2.0	121.7	285.7	286.3	83.9	51.0	83.7	1957.382	1944.184	2571.048	2554.043
20180529:06:43:59	23.5	15.5	-2.5	23.7	0.25	2.3	0.25	2.0	122.1	285.8	286.4	83.9	51.2	83.7	1958.723	1945.574	2572.794	2555.852
20180529:06:48:59	23.5	15.8	-2.8	23.7	0.25	2.3	0.25	2.0	122.6	285.9	286.4	84.0	51.1	83.7	1960.072	1946.917	2574.55	2557.6
20180529:06:53:59	23.4	15.9	-3.1	23.7	0.25	2.3	0.25	2.0	122.9	285.9	286.4	84.0	51.2	83.8	1961.47	1948.25	2576.37	2559.335
20180529:06:58:59	23.4	16.0	-3.3	23.7	0.25	2.3	0.25	2.0	123.1	285.9	286.4	83.9	51.0	83.8	1962.806	1949.635	2578.109	2561.137
20180529:07:03:59	23.4	16.1	-3.3	23.7	0.25	2.3	0.25	2.0	123.3	285.8	286.3	83.9	51.1	83.7	1964.157	1950.97	2579.869	2562.874
20180529:07:08:59	23.4	16.2	-3.3	23.7	0.25	2.3	0.25	2.0	123.6	285.9	286.4	83.9	51.0	83.7	1965.555	1952.348	2581.687	2564.667
20180529:07:13:59	23.4	16.3	-3.3	23.7	0.25	2.3	0.25	2.0	123.9	285.9	286.4	83.8	51.1	83.7	1966.891	1953.709	2583.426	2566.438
20180529:07:18:59	23.4	16.5	-3.3	23.7	0.25	2.3	0.25	2.0	124.2	285.9	286.4	83.8	51.0	83.7	1968.243	1955.033	2585.185	2568.16
20180529:07:23:59	23.4	16.5	-3.3	23.7	0.25	2.3	0.25	2.0	124.2	285.8	286.4	83.7	51.1	83.7	1969.641	1956.419	2587.004	2569.962
20180529:07:28:59	23.4	16.5	-3.3	23.7	0.25	2.3	0.25	2.0	124.3	285.8	286.3	83.7	51.0	83.7	1970.973	1957.753	2588.735	2571.697
20180529:07:33:59	23.4	16.2	-3.4	23.7	0.25	2.2	0.25	2.0	123.5	285.8	286.4	83.7	51.0	83.7	1972.332	1959.117	2590.504	2573.472
20180529:07:38:59	23.4	15.7	-3.5	23.7	0.25	2.2	0.25	2.0	122.4	285.8	286.4	83.7	51.0	83.7	1973.718	1960.484	2592.306	2575.25
20180529:07:43:59	23.4	16.1	-3.5	23.7	0.25	2.3	0.25	2.0	123.4	285.9	286.4	83.6	51.0	83.7	1975.059	1961.797	2594.05	2576.957
20180529:07:48:59	23.4	15.3	-3.6	23.7	0.25	2.3	0.25	2.0	121.5	285.8	286.4	83.5	50.9	83.6	1976.415	1963.183	2595.813	2578.759
20180529:07:53:59	23.4	15.1	-3.6	23.7	0.25	2.2	0.25	2.0	120.9	285.7	286.3	83.4	50.9	83.6	1977.786	1964.509	2597.596	2580.485
20180529:07:58:59	23.4	15.7	-3.5	23.7	0.25	2.3	0.25	2.0	122.5	285.8	286.4	83.4	50.9	83.6	1979.119	1965.878	2599.328	2582.265
20180529:08:03:59	23.4	16.1	-3.4	23.7	0.25	2.3	0.25	2.0	123.4	285.8	286.4	83.3	50.9	83.6	1980.498	1967.233	2601.12	2584.026
20180529:08:08:59	23.4	16.4	-3.4	23.7	0.25	2.3	0.25	2.0	124.0	285.8	286.3	83.3	50.9	83.6	1981.857	1968.555	2602.887	2585.746
20180529:08:13:59	23.4	16.6	-3.3	23.7	0.25	2.3	0.25	2.0	124.4	285.7	286.3	83.3	51.0	83.6	1983.19	1969.934	2604.62	2587.539
20180529:08:18:59	23.4	16.7	-3.3	23.7	0.25	2.3	0.25	2.0	124.6	285.8	286.4	83.3	50.9	83.6	1984.581	1971.264	2606.428	2589.269
20180529:08:23:59	23.5	16.7	-3.3	23.7	0.25	2.3	0.25	2.0	124.7	285.8	286.4	83.4	51.0	83.6	1985.936	1972.64	2608.189	2591.058
20180529:08:28:59	23.5	16.7	-3.2	23.7	0.25	2.3	0.25	2.0	124.8	285.8	286.4	83.4	50.9	83.6	1987.271	1973.996	2609.924	2592.821
20180529:08:33:59	23.5	16.7	-3.2	23.7	0.25	2.3	0.25	2.0	124.7	285.8	286.4	83.4	51.0	83.7	1988.666	1975.323	2611.737	2594.547
20180529:08:38:59	23.5	16.8	-3.1	23.7	0.25	2.3	0.25	2.0	124.8	285.8	286.4	83.4	50.9	83.7	1990.012	1976.702	2613.487	2596.34
20180529:08:43:59	23.4	16.0	-3.4	23.7	0.25	2.3	0.25	2.0	123.0	285.7	286.3	83.4	50.9	83.7	1991.344	1978.031	2615.219	2598.068
20180529:08:48:59	23.4	15.5	-3.4	23.7	0.25	2.3	0.25	2.0	121.9	285.7	286.4	83.4	50.9	83.7	1992.742	1979.404	2617.035	2599.853
20180529:08:53:59	23.5	16.1	-3.3	23.7	0.25	2.3	0.25	2.0	123.4	285.7	286.3	83.4	50.9	83.7	1994.077	1980.758	2618.77	2601.615
20180529:08:58:59	23.5	16.4	-3.2	23.7	0.25	2.3	0.25	2.0	124.0	285.7	286.2	83.5	50.9	83.7	1995.423	1982.082	2620.52	2603.336
20180529:09:03:59	23.5	16.5	-3.2	23.7	0.25	2.3	0.25	2.0	124.4	285.8	286.3	83.6	51.0	83.8	1996.813	1983.461	2622.328	2605.13
20180529:09:08:59	23.5	16.6	-3.1	23.7	0.25	2.3	0.25	2.0	124.5	285.7	286.3	83.6	50.9	83.8	1998.145	1984.789	2624.059	2606.857
20180529:09:13:59	23.5	16.7	-3.0	23.7	0.25	2.3	0.25	2.0	124.7	285.8	286.3	83.7	51.0	83.9	1999.503	1986.166	2625.826	2608.648
20180529:09:18:59	23.5	16.7	-3.0	23.7	0.25	2.3	0.25	2.0	124.8	285.8	286.4	83.7	50.9	83.9	2000.883	1987.515	2627.62	2610.404
20180529:09:23:59	23.5	16.8	-2.9	23.7	0.25	2.3	0.25	2.0	124.9	285.8	286.3	83.7	51.0	83.9	2002.222	1988.84	2629.361	2612.128
20180529:09:28:59	23.5	16.7	-3.0	23.7	0.25	2.3	0.25	2.0	124.8	285.8	286.4	83.7	50.9	84.0	2003.59	1990.217	2631.141	2613.919
20180529:09:33:59	23.5	16.8	-2.9	23.7	0.25	2.3	0.25	2.0	124.9	285.8	286.4	83.7	51.0	84.0	2004.962	1991.54	2632.926	2615.641
20180529:09:38:59	23.5	16.8	-2.9	23.7	0.25	2.3	0.25	2.0	125.0	285.7	286.3	83.9	50.9	84.0	2006.293	1992.921	2634.657	2617.438
20180529:09:43:59	23.5	16.8	-2.9	23.7	0.25	2.3	0.25	2.0	125.1	285.7	286.4	84.0	51.0	84.1	2007.675	1994.265	2636.456	2619.188
20180529:09:48:59	23.5	16.8	-2.9	23.7	0.25	2.3	0.25	2.0	125.0	285.7	286.3	84.1	50.9	84.2	2009.032	1995.587	2638.222	2620.91
20180529:09:53:59	23.5	16.9	-2.8	23.7	0.25	2.3	0.25	2.0	125.2	285.7	286.4	84.2	51.0	84.2	2010.363	1996.972	2639.956	2622.712
20180529:09:58:59	23.5	17.0	-2.7	23.7	0.25	2.3	0.25	2.0	125.3	285.7	286.4	84.3	51.0	84.3	2011.751	1998.294	2641.763	2624.434
20180529:10:03:59	23.5	17.0	-2.6	23.7	0.25	2.3	0.25	2.0	125.4	285.8	286.3	84.4	51.0	84.3	2013.102	1999.675	2643.522	2626.233
20180529:10:08:59	23.5	17.0	-2.6	23.7	0.25	2.3	0.25	2.0	125.5	285.8	286.4	84.5	51.0	84.4	2014.434	2001.012	2645.257	2627.974
20180529:10:13:59	23.5	17.0	-2.5	23.7	0.25	2.3	0.25	2.0	125.5	285.7	286.4	84.6	51.0	84.5	2015.825	2002.339	2647.07	2629.703
20180529:10:18:59	23.5	17.0	-2.5	23.7	0.25	2.3	0.25	2.0	125.5	285.8	286.4	84.6	51.0	84.5	2017.171	2003.713	2648.824	2631.492
20180529:10:23:59	23.5	17.1	-2.4	23.7	0.25	2.3	0.25	2.0	125.5	285.8	286.4	84.7	51.0	84.6	2018.5	2005.04	2650.556	2633.222
20180529:10:28:59	23.5	17.1	-2.4	23.7	0.25	2.3	0.25	2.0	125.7	285.7	286.3	84.7	51.0	84.6	2019.903	2006.423	2652.385	2635.024
20180529:10:33:59	23.5	17.1	-2.2	23.7	0.25	2.3	0.25	2.0	125.7	285.8	286.4	84.8	51.0	84.7	2021.236	2007.748	2654.122	2636.752
20180529:10:38:59	23.5	17.1	-2.2	23.7	0.25	2.3	0.25	2.0	125.6	285.7	286.4	84.9	51.0	84.8	2022.579	2009.08	2655.874	2638.489
20180529:10:43:59	23.5	17.0	-2.1	23.7	0.25	2.3	0.25	2.0	125.5	285.7	286.3	85.0	51.0	84.9	2023.969	2010.451	2657.687	2640.276
20180529:10:48:59	23.5	17.0	-2.1	23.7	0.25	2.3	0.25	2.0	125.5	285.7	286.4	85.0	51.0	84.9	2025.305	2011.783	2659.43	2642.013
20180529:10:53:59	23.5	17.1	-2.2	23.7	0.25	2.3	0.25	2.0	125.7	285.7	286.3	85.1	51.0	85.0	2026.654	2013.167	2661.189	2643.818
20180529:10:58:59	23.5	17.1	-2.2	23.7	0.25	2.3	0.25	2.0	125.6	285.8	286.4	85.2	51.0	85.0	2028.049	2014.499	2663.009	2645.555
20180529:11:03:59	23.5	16.9	-2.1	23.7	0.25	2.3	0.25	2.0	125.4	285.8	286.4	85.2	51.0	85.1	2029.383	2015.83	2664.75	2647.291
20180529:11:08:59	23.5	16.9	-2.0	23.7	0.25	2.3	0.25	2.0	125.2	285.8	286.4	85.3	51.0	85.2	2030.737	2017.209	2666.517	2649.09
20180529:11:13:59	23.5	16.9	-2.0	23.7	0.25	2.3	0.25	2.0	125.4	285.8	286.4	85.3	51.0	85.3	2032.129	2018.54	2668.333	2650.827
20180529:11:18:59	23.5	16.9	-2.0	23.7	0.25	2.3	0.25	2.0	125.3	285.7	286.4	85.3	51.0	85.3	2033.463	2019.921	2670.074	2652.63
20180529:11:23:59	23.5	16.7	-2.4	23.7	0.25	2.3	0.25	2.0	124.7	285.8	286.4	85.4	51.0	85.3	2034.819	2021.272	2671.844	2654.393
20180529:11:28:59	23.5	16.7	-2.4	23.7	0.25	2.3	0.25	2.0	124.9	285.8	286.5	85.4	51.0	85.4	2036.21	2022.599	2673.661	2656.126
20180529:11:33:59	23.5	16.8	-2.4	23.7	0.25	2.3	0.25	2.0	124.9	285.8	286.4	85.5	51.0	85.5	2037.541	2023.976	2675.398	2657.923
20180529:11:38:59	23.5	16.7	-2.4	23.7	0.25	2.3	0.25	2.0	124.9	285.9	286.4	85.5	50.9	85.5	2038.895	2025.305	2677.167	2659.658
20180529:11:43:59	23.5	16.8	-2.2	23.7	0.25	2.3	0.25	2.0	125.0	285.8	286.4	85.5	50.9	85.6	2040.278	2026.668	2678.972	2661.438
20180529:11:48:59	23.5	16.8	-2.2	23.7	0.25	2.3	0.25	2.0	125.1	285.8	286.3	85.5	50.9	85.6	2041.615	2028.017	2680.719	2663.201
20180529:11:53:59	23.5	16.8	-2.2	23.7	0.25	2.3	0.25	2.0	125.1	285.8	286.3	85.5	50.9	85.7	2042.967	2029.338	2682.483	2664.927
20180529:11:58:59	23.5	16.9	-2.2	23.7	0.25	2.3	0.25	2.0	125.2	285.7	286.3	85.4	50.9	85.7	2044.341	2030.71	2684.278	2666.718
20180529:12:03:59	23.5	16.9	-2.1	23.7	0.25	2.3	0.25	2.0	125.3	285.8	286.4	85.5	50.9	85.7	2045.675	2032.034	2686.02	2668.447
20180529:12:08:59	23.5	16.9	-2.1	23.7	0.25	2.3	0.25	2.0	125.2	285.8	286.4	85.6	51.0	85.8	2047.044	2033.4	2687.807	2670.233
20180529:12:13:59	23.5	16.8	-2.1	23.7	0.25	2.3	0.25	2.0	125.0	285.7	286.4	85.7	51.0	85.9	2048.413	2034.753	2689.596	2672
20180529:12:18:59	23.5	16.7	-2.1	23.7	0.25	2.3	0.25	2.0	124.9	285.8	286.4	85.8	51.0	85.9	2049.747	2036.073	2691.339	2673.726
20180529:12:23:59	23.5	16.7	-2.0	23.7	0.25	2.3	0.25	2.0	124.8	285.7	286.4	85.9	51.0	86.0	2051.123	2037.458	2693.137	2675.536
20180529:12:28:59	23.5	16.3	-2.2	23.7	0.25	2.3	0.25	2.0	124.0	285.7	286.4	86.0	51.0	86.1	2052.491	2038.791	2694.926	2677.278
20180529:12:33:59	23.5	16.5	-1.9	23.7	0.25	2.3	0.25	2.0	124.3	285.7	286.3	86.2	51.0	86.1	2053.83	2040.147	2696.676	2679.051
20180529:12:38:59	23.5	16.3	-1.9	23.7	0.25	2.3	0.25	2.0	124.0	285.8	286.5	86.2	51.0	86.2	2055.205	2041.511	2698.474	2680.835
20180529:12:43:59	23.5	16.2	-1.8	23.7	0.25	2.3	0.25	2.0	123.6	285.7	286.4	86.3	51.0	86.2	2056.58	2042.843	2700.272	2682.577
20180529:12:48:59	23.5	16.1	-1.7	23.7	0.25	2.3	0.25	2.0	123.4	285.7	286.4	86.3	50.9	86.3	2057.922	2044.226	2702.028	2684.385
20180529:12:54:00	23.5	15.9	-1.7	23.7	0.25	2.3	0.25	2.0	123.1	285.8	286.4	86.3	51.0	86.4	2059.29	2045.564	2703.817	2686.135
20180529:12:59:00	23.6	15.8	-1.6	23.7	0.25	2.3	0.25	2.0	122.9	285.7	286.3	86.3	51.0	86.4	2060.672	2046.905	2705.624	2687.889
20180529:13:04:00	23.5	15.5	-1.8	23.7	0.25	2.3	0.25	2.0	122.2	285.7	286.4	86.4	51.0	86.5	2062.021	2048.288	2707.389	2689.699

Time:	Stack Pressure:	Sat% H2O:	Static:	Barometric:	Flowmeter1:	Vacuum1:	Flowmeter2:	Vacuum2:	Stack Temp:	Sorbent Temp:	Probe Temp:	DGM#1 Temp:	Condenser Temp:	DGM#2 Temp:	DGM1*:	DGM2*:	DGM1:	DGM2:
day:hh:mm:ss	in-Hg	Percent	in-H2O	in-Hg	l/min	in-Hg	l/min	in-Hg	degF	degF	degF	degF	degF	degF	liters STP	liters STP	liters nominal	liters nominal
20180529:13:09:00	23.5	15.2	-1.8	23.7	0.25	2.3	0.25	2.0	121.5	285.8	286.4	86.5	50.9	86.6	2063.378	2049.621	2709.165	2691.444
20180529:13:14:00	23.5	15.2	-1.7	23.7	0.25	2.3	0.25	2.0	121.4	285.7	286.5	86.5	51.0	86.6	2064.764	2050.996	2710.978	2693.242
20180529:13:19:00	23.5	15.1	-1.7	23.7	0.25	2.3	0.25	2.0	121.3	285.8	286.4	86.5	50.9	86.6	2066.104	2052.36	2712.731	2695.028
20180529:13:24:00	23.5	15.1	-1.7	23.7	0.25	2.3	0.25	2.0	121.1	285.7	286.3	86.5	51.0	86.7	2067.466	2053.683	2714.513	2696.759
20180529:13:29:00	23.5	15.0	-1.7	23.7	0.25	2.3	0.25	2.0	121.0	285.7	286.3	86.6	50.9	86.7	2068.864	2055.072	2716.343	2698.577
20180529:13:34:00	23.5	15.2	-1.6	23.7	0.25	2.3	0.25	2.0	121.4	285.7	286.4	86.6	51.0	86.8	2070.205	2056.397	2718.098	2700.312
20180529:13:39:00	23.5	15.2	-1.6	23.7	0.25	2.3	0.25	2.0	121.4	285.8	286.4	86.7	51.0	86.9	2071.557	2057.752	2719.869	2702.086
20180529:13:44:00	23.6	15.2	-1.5	23.7	0.25	2.3	0.25	2.0	121.5	285.7	286.4	86.8	51.0	86.9	2072.957	2059.124	2721.702	2703.883
20180529:13:49:00	23.6	15.3	-1.5	23.7	0.25	2.3	0.25	2.0	121.6	285.7	286.3	86.9	51.0	87.0	2074.302	2060.46	2723.463	2705.633
20180529:13:54:00	23.6	15.3	-1.4	23.7	0.25	2.3	0.25	2.0	121.8	285.6	286.4	87.0	51.0	87.0	2075.645	2061.841	2725.222	2707.444
20180529:13:59:00	23.6	15.4	-1.3	23.7	0.25	2.3	0.25	2.0	121.8	285.7	286.3	87.2	51.0	87.1	2077.047	2063.19	2727.059	2709.211
20180529:14:04:00	23.6	15.4	-1.3	23.7	0.25	2.3	0.25	2.0	121.9	285.7	286.4	87.3	51.1	87.2	2078.4	2064.519	2728.833	2710.953
20180529:14:09:00	23.6	15.4	-1.5	23.7	0.25	2.3	0.25	2.0	121.9	285.8	286.4	87.4	51.0	87.3	2079.742	2065.903	2730.593	2712.767
20180529:14:14:00	23.6	15.3	-1.4	23.7	0.25	2.3	0.25	2.0	121.7	285.8	286.4	87.5	51.1	87.3	2081.139	2067.233	2732.424	2714.509
20180529:14:19:00	23.6	15.4	-1.5	23.7	0.25	2.3	0.25	2.0	121.8	285.8	286.4	87.6	51.0	87.4	2082.5	2068.589	2734.209	2716.288
20180529:14:24:00	23.5	15.3	-1.5	23.7	0.25	2.3	0.25	2.0	121.6	285.8	286.4	87.6	51.1	87.4	2083.836	2069.958	2735.961	2718.083
20180529:14:29:00	23.5	14.7	-1.5	23.7	0.25	2.3	0.25	2.0	120.2	285.8	286.4	87.7	51.1	87.5	2085.223	2071.294	2737.781	2719.835
20180529:14:34:00	23.6	15.1	-1.4	23.7	0.25	2.3	0.25	2.0	121.1	285.8	286.4	87.8	51.0	87.6	2086.58	2072.678	2739.561	2721.65
20180529:14:39:00	23.6	14.9	-1.4	23.7	0.25	2.3	0.25	2.0	120.7	285.7	286.4	87.8	51.1	87.7	2087.923	2074.024	2741.324	2723.415
20180529:14:44:00	23.6	14.7	-1.4	23.7	0.25	2.3	0.25	2.0	120.3	285.7	286.4	87.9	51.0	87.7	2089.303	2075.355	2743.135	2725.162
20180529:14:49:00	23.6	15.2	-1.3	23.7	0.25	2.3	0.25	2.0	121.3	285.8	286.4	87.9	51.1	87.8	2090.675	2076.739	2744.935	2726.977
20180529:14:54:00	23.6	15.4	-1.4	23.7	0.25	2.3	0.25	2.0	121.8	285.8	286.4	88.0	51.0	87.8	2092.022	2078.068	2746.704	2728.722
20180529:14:59:00	23.6	15.4	-1.4	23.7	0.25	2.3	0.25	2.0	121.8	285.8	286.3	88.1	51.1	87.9	2093.385	2079.426	2748.493	2730.504
20180529:15:04:00	23.6	15.3	-1.3	23.7	0.25	2.3	0.25	2.0	121.8	285.8	286.5	88.1	51.0	87.9	2094.773	2080.796	2750.315	2732.303
20180529:15:09:00	23.6	15.4	-1.3	23.7	0.25	2.3	0.25	2.0	121.9	285.8	286.4	88.2	51.1	88.0	2096.111	2082.134	2752.072	2734.058
20180529:15:14:00	23.6	15.4	-1.2	23.7	0.25	2.3	0.25	2.0	122.0	285.8	286.4	88.2	51.0	88.0	2097.472	2083.517	2753.859	2735.874
20180529:15:19:00	23.6	15.5	-1.3	23.7	0.25	2.3	0.25	2.0	122.1	285.8	286.4	88.2	51.1	88.1	2098.879	2084.874	2755.707	2737.656
20180529:15:24:00	23.6	15.5	-1.3	23.7	0.25	2.3	0.25	2.0	122.1	285.8	286.4	88.2	51.0	88.1	2100.23	2086.201	2757.481	2739.398
20180529:15:29:00	23.6	15.4	-1.3	23.6	0.25	2.3	0.25	2.0	121.9	285.8	286.4	88.2	51.0	88.2	2101.579	2087.593	2759.254	2741.227
20180529:15:34:00	23.5	14.9	-1.4	23.7	0.25	2.3	0.25	2.0	120.6	285.8	286.4	88.2	51.1	88.2	2102.981	2088.921	2761.094	2742.972
20180529:15:39:00	23.6	15.2	-1.3	23.7	0.25	2.3	0.25	2.0	121.5	285.8	286.4	88.2	51.0	88.2	2104.347	2090.269	2762.889	2744.742
20180529:15:44:00	23.6	15.4	-1.2	23.6	0.25	2.3	0.25	2.0	121.9	285.7	286.3	88.1	51.0	88.2	2105.686	2091.654	2764.648	2746.562
20180529:15:49:00	23.6	15.5	-1.1	23.7	0.25	2.3	0.25	2.0	122.2	285.8	286.4	88.2	51.0	88.3	2107.071	2092.994	2766.467	2748.321
20180529:15:54:00	23.6	15.6	-1.1	23.7	0.25	2.3	0.25	2.0	122.3	285.8	286.4	88.2	51.1	88.3	2108.445	2094.357	2768.272	2750.113
20180529:15:59:00	23.6	15.0	-1.2	23.7	0.25	2.3	0.25	2.0	120.9	285.8	286.4	88.3	51.0	88.3	2109.789	2095.721	2770.037	2751.904
20180529:16:04:00	23.6	15.0	-0.9	23.7	0.25	2.3	0.25	2.0	120.9	285.7	286.4	88.3	51.0	88.4	2111.152	2097.059	2771.828	2753.662
20180529:16:09:00	23.6	15.3	-0.9	23.6	0.25	2.3	0.25	2.0	121.6	285.8	286.3	88.3	51.0	88.4	2112.543	2098.448	2773.656	2755.487
20180529:16:14:00	23.6	15.4	-0.8	23.6	0.25	2.3	0.25	2.0	121.9	285.8	286.4	88.3	51.0	88.5	2113.889	2099.792	2775.424	2757.254
20180529:16:19:00	23.6	15.4	-0.9	23.6	0.25	2.3	0.25	2.0	122.0	285.8	286.4	88.3	51.0	88.5	2115.252	2101.12	2777.215	2759
20180529:16:24:00	23.6	15.5	-0.9	23.7	0.25	2.3	0.25	2.1	122.2	285.8	286.4	88.3	51.0	88.5	2116.656	2102.512	2779.059	2760.829
20180529:16:29:00	23.6	15.6	-1.1	23.7	0.25	2.3	0.25	2.1	122.4	285.8	286.4	88.3	51.0	88.6	2118.006	2103.839	2780.833	2762.573
20180529:16:34:00	23.6	15.7	-1.1	23.6	0.25	2.3	0.25	2.0	122.7	285.8	286.4	88.4	51.0	88.6	2119.352	2105.195	2782.602	2764.355
20180529:16:39:00	23.6	15.8	-1.0	23.6	0.25	2.3	0.25	2.0	122.8	285.8	286.4	88.4	51.0	88.6	2120.747	2106.574	2784.435	2766.169
20180529:16:44:00	23.6	15.8	-1.2	23.6	0.25	2.3	0.25	2.0	122.9	285.9	286.4	88.5	51.0	88.7	2122.109	2107.911	2786.224	2767.927
20180529:16:49:00	23.6	15.8	-1.1	23.6	0.25	2.3	0.25	2.0	122.8	285.8	286.4	88.4	51.0	88.7	2123.45	2109.282	2787.987	2769.729
20180529:16:54:00	23.6	15.7	-1.3	23.6	0.25	2.3	0.25	2.0	122.6	285.8	286.3	88.5	51.0	88.7	2124.835	2110.648	2789.807	2771.524
20180529:16:59:00	23.5	15.2	-1.4	23.6	0.25	2.3	0.25	2.0	121.4	285.8	286.4	88.5	50.9	88.7	2126.212	2111.983	2791.617	2773.28
20180529:17:04:00	23.5	15.0	-1.7	23.6	0.25	2.3	0.25	2.0	121.0	285.8	286.4	88.5	51.0	88.8	2127.563	2113.374	2793.393	2775.109
20180529:17:09:00	23.5	15.2	-2.3	23.6	0.25	2.3	0.25	2.0	121.3	285.8	286.4	88.6	51.0	88.8	2128.922	2114.72	2795.18	2776.88
20180529:17:14:00	23.4	15.8	-2.7	23.6	0.25	2.3	0.25	2.0	122.7	285.8	286.4	88.6	51.0	88.8	2130.322	2116.05	2797.02	2778.63
20180529:17:19:00	23.5	15.8	-2.3	23.6	0.25	2.3	0.25	2.0	122.7	285.8	286.3	88.6	51.0	88.9	2131.672	2117.443	2798.794	2780.462
20180529:17:24:00	23.5	15.1	-2.1	23.6	0.25	2.3	0.25	2.0	121.2	285.8	286.4	88.6	51.0	88.9	2133.021	2118.778	2800.569	2782.218
20180529:17:29:00	23.5	14.8	-1.9	23.6	0.25	2.3	0.25	2.0	120.5	285.7	286.4	88.7	51.1	89.0	2134.422	2120.126	2802.411	2783.992
20180529:17:34:00	23.5	15.1	-1.4	23.6	0.25	2.3	0.25	2.0	121.0	285.8	286.4	88.8	51.0	89.0	2135.786	2121.51	2804.206	2785.814
20180529:17:39:00	23.6	15.4	-1.0	23.6	0.25	2.3	0.25	2.1	121.8	285.8	286.4	88.9	51.0	89.1	2137.124	2122.848	2805.967	2787.575
20180529:17:44:00	23.6	15.4	-0.9	23.6	0.25	2.3	0.25	2.1	122.0	285.7	286.4	88.9	51.0	89.1	2138.513	2124.211	2807.794	2789.368
20180529:17:49:00	23.6	15.5	-1.0	23.6	0.25	2.3	0.25	2.1	122.2	285.7	286.4	89.0	51.0	89.2	2139.883	2125.577	2809.598	2791.167
20180529:17:54:00	23.6	15.5	-1.0	23.6	0.25	2.3	0.25	2.0	122.2	285.7	286.4	89.1	51.1	89.2	2141.229	2126.914	2811.37	2792.929
20180529:17:59:00	23.5	15.5	-1.3	23.6	0.25	2.3	0.25	2.0	122.1	285.6	286.3	89.2	51.0	89.3	2142.591	2128.3	2813.163	2794.754
20180529:18:04:00	23.5	15.5	-1.5	23.6	0.25	2.3	0.25	2.0	122.2	285.7	286.3	89.3	51.1	89.4	2143.988	2129.656	2815.004	2796.539
20180529:18:09:00	23.5	15.6	-1.6	23.6	0.25	2.3	0.25	2.0	122.2	285.8	286.4	89.4	51.1	89.4	2145.334	2130.982	2816.776	2798.286
20180529:18:14:00	23.5	15.5	-1.6	23.6	0.25	2.3	0.25	2.0	122.2	285.8	286.4	89.5	51.0	89.5	2146.685	2132.372	2818.556	2800.117
20180529:18:19:00	23.5	15.5	-1.4	23.6	0.25	2.3	0.25	2.0	122.1	285.8	286.4	89.6	51.1	89.5	2148.087	2133.706	2820.404	2801.874
20180529:18:24:00	23.5	15.0	-1.5	23.6	0.25	2.3	0.25	2.0	120.8	285.7	286.3	89.7	51.1	89.6	2149.446	2135.045	2822.194	2803.639
20180529:18:29:00	23.5	14.8	-1.4	23.6	0.25	2.3	0.25	2.0	120.4	285.7	286.4	89.8	51.1	89.6	2150.786	2136.429	2823.961	2805.462
20180529:18:34:00	23.5	15.2	-1.2	23.6	0.25	2.3	0.25	2.0	121.4	285.8	286.4	89.8	51.1	89.7	2152.174	2137.767	2825.791	2807.226
20180529:18:39:00	23.5	15.5	-1.4	23.6	0.25	2.3	0.25	2.1	122.1	285.8	286.4	89.9	51.0	89.7	2153.545	2139.119	2827.598	2809.008
20180529:18:44:00	23.5	15.6	-1.4	23.6	0.25	2.3	0.25	2.1	122.2	285.8	286.4	89.9	51.1	89.8	2154.895	2140.492	2829.378	2810.818
20180529:18:49:00	23.5	15.6	-1.4	23.6	0.25	2.3	0.25	2.0	122.3	285.9	286.4	89.9	51.1	89.8	2156.257	2141.832	2831.174	2812.585
20180529:18:54:00	23.5	15.5	-1.2	23.6	0.25	2.3	0.25	2.0	122.2	285.8	286.4	90.0	51.1	89.9	2157.655	2143.21	2833.017	2814.4
20180529:18:59:00	23.5	15.5	-1.4	23.6	0.25	2.3	0.25	2.1	122.1	285.8	286.4	90.1	51.1	89.9	2159.004	2144.573	2834.796	2816.197
20180529:19:04:00	23.5	15.5	-1.3	23.6	0.25	2.3	0.25	2.0	122.1	285.8	286.4	90.1	51.1	90.0	2160.355	2145.903	2836.578	2817.951
20180529:19:09:00	23.5	15.2	-1.4	23.6	0.25	2.3	0.25	2.0	121.4	285.8	286.5	90.2	51.1	90.0	2161.755	2147.291	2838.424	2819.782
20180529:19:14:00	23.5	14.8	-1.4	23.6	0.25	2.3	0.25	2.0	120.4	285.8	286.4	90.3	51.2	90.1	2163.121	2148.64	2840.226	2821.56
20180529:19:19:00	23.5	14.7	-1.4	23.6	0.25	2.3	0.25	2.0	120.3	285.7	286.4	90.3	51.1	90.1	2164.455	2149.966	2841.985	2823.308
20180529:19:24:00	23.5	15.2	-1.5	23.6	0.25	2.3	0.25	2.0	121.5	285.7	286.4	90.3	51.2	90.2	2165.836	2151.361	2843.807	2825.148
20180529:19:29:00	23.5	15.3	-1.4	23.6	0.25	2.3	0.25	2.0	121.7	285.8	286.5	90.4	51.2	90.2	2167.215	2152.688	2845.626	2826.898
20180529:19:34:00	23.5	14.9	-1.6	23.6	0.25	2.3	0.25	2.1	120.6	285.8	286.5	90.4	51.1	90.3	2168.561	2154.035	2847.402	2828.675
20180529:19:39:00	23.5	14.7	-1.5	23.6	0.25	2.3	0.25	2.0	120.1	285.7	286.4	90.5	51.2	90.3	2169.921	2155.423	2849.196	2830.506
20180529:19:44:00	23.5	14.7	-1.5	23.6	0.25	2.3	0.25	2.0	120.2	285.7	286.4	90.6	51.1	90.3	2171.324	2156.765	2851.048	2832.274
20180529:19:49:00	23.5	15.3	-1.4	23.6	0.25	2.3	0.25	2.0	121.7	285.8	286.5	90.6	51.2	90.4	2172.677	2158.117	2852.833	2834.058
20180529:19:54:00	23.5	15.4	-1.6	23.6	0.25	2.3	0.25	2.0	121.9	285.8	286.4	90.7	51.2	90.4	2174.024	2159.485	2854.611	2835.863
20180529:19:59:00	23.5	15.4	-1.5	23.7	0.25	2.3	0.25	2.0	122.0	286.0	286.6	90.7	51.2	90.5	2175.416	2160.823	2856.448	2837.628
20180529:20:04:00	23.5	15.5	-1.6	23.7	0.25	2.3	0.25	2.1	122.0	285.8	286.4	90.8	51.3	90.5	2176.776	2162.201	2858.243	2839.445
20180529:20:09:00	23.5	15.5	-1.6	23.6	0.25	2.3	0.25	2.0	122.0	285.9	286.4	90.9	51.2	90.6	2178.128	2163.562	2860.028	2841.241
20180529:20:14:00	23.5	15.5	-1.5	23.6	0.25	2.3	0.25	2.1	122.1	285.8	286.4	90.9	51.2	90.6	2179.496	2164.888	2861.833	2842.991
20180529:20:19:00	23.5	15.5	-1.5	23.6	0.25	2.3	0.25	2.1	122.2	285.9	286.5	91.0	51.3	90.6	2180.89	2166.274	2863.674	2844.82
20180529:20:24:00	23.5	15.6	-1.5	23.6	0.25	2.3	0.25	2.1	122.4	285.9	286.5	91.0	51.2	90.7	2182.235	2167.619	2865.45	2846.594
20180529:20:29:00	23.5	15.4	-1.6	23.7	0.25	2.3	0.25	2.0	122.0	285.9	286.5	91.1	51.3	90.7	2183.589	2168.954	2867.237	2848.355

Time:	Stack Pressure:	Sat% H2O:	Static:	Barometric:	Flowmeter1:	Vacuum1:	Flowmeter2:	Vacuum2:	Stack Temp:	Sorbent Temp:	Probe Temp:	DGM#1 Temp:	Condenser Temp:	DGM#2 Temp:	DGM1*:	DGM2*:	DGM1:	DGM2:
day:hh:mm:ss	in-Hg	Percent	in-H2O	in-Hg	l/min	in-Hg	l/min	in-Hg	degF	degF	degF	degF	degF	degF	liters STP	liters STP	liters nominal	liters nominal
20180529:20:34:00	23.5	14.9	-1.5	23.7	0.25	2.3	0.25	2.0	120.7	285.8	286.4	91.0	51.2	90.7	2184.996	2170.342	2869.094	2850.186
20180529:20:39:00	23.5	14.7	-1.6	23.7	0.25	2.3	0.25	2.0	120.3	285.8	286.5	91.0	51.2	90.7	2186.36	2171.672	2870.896	2851.942
20180529:20:44:00	23.5	15.1	-1.6	23.7	0.25	2.3	0.25	2.1	121.2	285.8	286.5	91.0	51.2	90.7	2187.704	2173.023	2872.67	2853.724
20180529:20:49:00	23.5	15.4	-1.7	23.7	0.25	2.3	0.25	2.0	121.9	285.9	286.5	91.0	51.2	90.7	2189.082	2174.413	2874.489	2855.558
20180529:20:54:00	23.5	15.5	-1.8	23.7	0.25	2.3	0.25	2.0	122.2	285.8	286.4	90.9	51.2	90.7	2190.471	2175.755	2876.322	2857.329
20180529:20:59:00	23.5	15.6	-1.7	23.7	0.25	2.3	0.25	2.1	122.4	285.9	286.4	90.9	51.1	90.7	2191.825	2177.108	2878.109	2859.115
20180529:21:04:00	23.5	15.6	-1.6	23.7	0.25	2.3	0.25	2.1	122.4	285.9	286.4	90.9	51.2	90.7	2193.182	2178.489	2879.9	2860.936
20180529:21:09:00	23.5	15.1	-1.7	23.7	0.25	2.3	0.25	2.0	121.1	285.9	286.5	90.9	51.2	90.7	2194.592	2179.831	2881.761	2862.707
20180529:21:14:00	23.5	14.8	-1.6	23.7	0.25	2.3	0.25	2.0	120.6	285.8	286.5	90.9	51.2	90.7	2195.957	2181.199	2883.563	2864.511
20180529:21:19:00	23.5	14.9	-1.5	23.7	0.25	2.3	0.25	2.0	120.7	285.8	286.5	90.8	51.2	90.7	2197.305	2182.567	2885.341	2866.316
20180529:21:24:00	23.5	15.4	-1.7	23.7	0.25	2.3	0.25	2.0	121.8	285.9	286.5	90.7	51.1	90.7	2198.682	2183.907	2887.157	2868.085
20180529:21:29:00	23.5	15.5	-1.7	23.7	0.25	2.3	0.25	2.1	122.2	285.8	286.4	90.7	51.2	90.7	2200.073	2185.29	2888.993	2869.908
20180529:21:34:00	23.5	15.7	-1.8	23.7	0.25	2.3	0.25	2.1	122.5	285.9	286.4	90.6	51.1	90.7	2201.426	2186.653	2890.778	2871.707
20180529:21:39:00	23.5	15.8	-1.8	23.7	0.25	2.3	0.25	2.1	122.7	285.9	286.4	90.6	51.2	90.7	2202.784	2187.991	2892.569	2873.472
20180529:21:44:00	23.5	15.8	-1.8	23.7	0.25	2.3	0.25	2.1	122.9	285.9	286.4	90.6	51.2	90.7	2204.192	2189.382	2894.426	2875.306
20180529:21:49:00	23.5	15.9	-2.0	23.7	0.25	2.3	0.25	2.1	123.0	285.9	286.4	90.6	51.2	90.7	2205.56	2190.744	2896.23	2877.103
20180529:21:54:00	23.5	15.9	-2.0	23.7	0.25	2.3	0.25	2.1	122.9	286.0	286.5	90.6	51.3	90.7	2206.911	2192.08	2898.011	2878.865
20180529:21:59:00	23.5	15.9	-1.8	23.7	0.25	2.4	0.25	2.1	123.0	285.9	286.4	90.5	51.2	90.7	2208.289	2193.472	2899.828	2880.701
20180529:22:04:00	23.5	15.7	-1.7	23.7	0.25	2.3	0.25	2.1	122.6	285.9	286.5	90.4	51.2	90.7	2209.686	2194.824	2901.67	2882.485
20180529:22:09:00	23.5	15.3	-1.7	23.7	0.25	2.3	0.25	2.1	121.6	285.9	286.4	90.4	51.2	90.7	2211.04	2196.159	2903.456	2884.246
20180529:22:14:00	23.5	15.1	-1.6	23.7	0.25	2.3	0.25	2.1	121.2	285.8	286.4	90.3	51.2	90.6	2212.399	2197.553	2905.246	2886.085
20180529:22:19:00	23.5	15.5	-1.6	23.7	0.25	2.3	0.25	2.1	122.2	285.7	286.4	90.3	51.2	90.6	2213.808	2198.907	2907.104	2887.87
20180529:22:24:00	23.5	15.7	-1.6	23.7	0.25	2.3	0.25	2.1	122.6	285.8	286.4	90.3	51.2	90.6	2215.171	2200.248	2908.902	2889.639
20180529:22:29:00	23.5	15.7	-1.5	23.7	0.25	2.3	0.25	2.1	122.5	285.8	286.4	90.4	51.2	90.6	2216.531	2201.643	2910.694	2891.479
20180529:22:34:00	23.5	15.7	-1.6	23.7	0.25	2.3	0.25	2.1	122.5	285.8	286.4	90.5	51.2	90.6	2217.903	2202.987	2912.504	2893.252
20180529:22:39:00	23.5	15.7	-1.6	23.7	0.25	2.3	0.25	2.1	122.5	285.9	286.5	90.5	51.2	90.6	2219.306	2204.338	2914.354	2895.034
20180529:22:44:00	23.5	15.7	-1.7	23.7	0.25	2.3	0.25	2.0	122.6	285.9	286.4	90.4	51.1	90.5	2220.661	2205.731	2916.141	2896.87
20180529:22:49:00	23.5	15.8	-1.7	23.7	0.25	2.3	0.25	2.1	122.8	285.9	286.5	90.3	51.2	90.5	2222.019	2207.065	2917.931	2898.63
20180529:22:54:00	23.5	15.8	-1.8	23.7	0.25	2.3	0.25	2.1	122.8	285.9	286.5	90.3	51.2	90.5	2223.419	2208.423	2919.776	2900.421
20180529:22:59:00	23.5	15.7	-1.7	23.7	0.25	2.3	0.25	2.1	122.7	285.9	286.4	90.3	51.2	90.5	2224.781	2209.814	2921.572	2902.256
20180529:23:04:00	23.5	15.1	-1.9	23.7	0.25	2.3	0.25	2.0	121.2	285.8	286.5	90.3	51.2	90.5	2226.135	2211.159	2923.357	2904.03
20180529:23:09:00	23.5	14.8	-1.6	23.7	0.25	2.3	0.25	2.0	120.5	285.8	286.4	90.2	51.2	90.5	2227.507	2212.516	2925.165	2905.82
20180529:23:14:00	23.5	14.9	-1.7	23.7	0.25	2.3	0.25	2.0	120.7	285.8	286.4	90.2	51.3	90.5	2228.91	2213.897	2927.015	2907.641
20180529:23:19:00	23.5	15.4	-1.8	23.7	0.25	2.3	0.25	2.0	121.9	285.9	286.5	90.3	51.2	90.5	2230.265	2215.243	2928.802	2909.415
20180529:23:24:00	23.5	15.6	-1.8	23.7	0.25	2.3	0.25	2.0	122.3	285.9	286.5	90.3	51.3	90.5	2231.624	2216.609	2930.593	2911.218
20180529:23:29:00	23.5	15.8	-1.9	23.7	0.25	2.3	0.25	2.0	122.8	285.9	286.4	90.2	51.2	90.4	2233.024	2217.982	2932.439	2913.028
20180529:23:34:00	23.5	15.9	-2.2	23.7	0.25	2.3	0.25	2.0	122.9	285.9	286.4	90.3	51.2	90.4	2234.383	2219.325	2934.23	2914.799
20180529:23:39:00	23.5	15.8	-2.3	23.7	0.25	2.3	0.25	2.0	122.8	285.9	286.5	90.3	51.3	90.4	2235.736	2220.705	2936.013	2916.618
20180529:23:44:00	23.5	15.7	-2.4	23.7	0.25	2.3	0.25	2.0	122.5	285.9	286.5	90.3	51.3	90.4	2237.108	2222.067	2937.822	2918.414
20180529:23:49:00	23.5	15.1	-2.5	23.7	0.25	2.3	0.25	2.0	121.0	285.8	286.5	90.4	51.4	90.5	2238.494	2223.404	2939.65	2920.177
20180529:23:54:00	23.5	14.7	-2.3	23.7	0.25	2.3	0.25	2.0	120.1	285.8	286.4	90.5	51.3	90.5	2239.841	2224.792	2941.426	2922.008
20180529:23:59:00	23.5	14.6	-2.0	23.7	0.25	2.3	0.25	2.0	119.9	285.7	286.5	90.4	51.4	90.4	2241.204	2226.143	2943.222	2923.789
20180530:00:04:00	23.5	15.1	-1.7	23.7	0.25	2.3	0.25	2.0	121.3	285.8	286.4	90.5	51.3	90.4	2242.605	2227.473	2945.07	2925.543
20180530:00:09:00	23.5	15.1	-2.0	23.7	0.25	2.3	0.25	2.0	121.1	285.9	286.6	90.5	51.4	90.5	2243.97	2228.863	2946.87	2927.376
20180530:00:14:00	23.5	14.6	-2.0	23.6	0.25	2.3	0.25	2.0	119.9	285.8	286.4	90.5	51.3	90.4	2245.313	2230.205	2948.643	2929.147
20180530:00:19:00	23.5	14.4	-1.8	23.6	0.25	2.3	0.25	2.0	119.4	285.8	286.5	90.6	51.4	90.4	2246.7	2231.548	2950.472	2930.917
20180530:00:24:00	23.5	14.9	-1.7	23.6	0.25	2.3	0.25	2.0	120.6	285.9	286.5	90.5	51.4	90.4	2248.074	2232.939	2952.285	2932.752
20180530:00:29:00	23.5	14.9	-1.9	23.6	0.25	2.3	0.25	2.1	120.7	285.9	286.5	90.5	51.4	90.4	2249.424	2234.273	2954.067	2934.511
20180530:00:34:00	23.5	14.5	-1.9	23.6	0.25	2.3	0.25	2.0	119.6	285.8	286.4	90.5	51.3	90.4	2250.781	2235.628	2955.857	2936.299
20180530:00:39:00	23.5	14.3	-1.9	23.6	0.25	2.3	0.25	2.0	119.3	285.8	286.5	90.5	51.4	90.3	2252.191	2237.016	2957.717	2938.13
20180530:00:44:00	23.5	15.0	-1.9	23.6	0.25	2.3	0.25	2.0	120.9	285.9	286.5	90.5	51.3	90.3	2253.548	2238.358	2959.507	2939.9
20180530:00:49:00	23.5	15.3	-1.9	23.6	0.25	2.3	0.25	2.0	121.6	286.0	286.5	90.5	51.4	90.3	2254.9	2239.715	2961.291	2941.69
20180530:00:54:00	23.5	15.4	-2.0	23.6	0.25	2.3	0.25	2.0	121.7	286.0	286.6	90.5	51.3	90.3	2256.292	2241.089	2963.128	2943.502
20180530:00:59:00	23.5	15.4	-2.0	23.6	0.25	2.3	0.25	2.0	121.9	286.0	286.5	90.4	51.4	90.3	2257.663	2242.43	2964.937	2945.271
20180530:01:04:00	23.5	15.5	-2.1	23.6	0.25	2.3	0.25	2.1	121.9	286.0	286.6	90.4	51.3	90.3	2259.015	2243.804	2966.72	2947.083
20180530:01:09:00	23.5	15.5	-2.0	23.6	0.25	2.3	0.25	2.1	121.9	286.0	286.5	90.4	51.4	90.3	2260.372	2245.166	2968.511	2948.88
20180530:01:14:00	23.5	15.5	-1.9	23.6	0.25	2.3	0.25	2.1	122.0	285.9	286.5	90.3	51.3	90.2	2261.777	2246.51	2970.365	2950.652
20180530:01:19:00	23.5	15.6	-2.0	23.6	0.25	2.3	0.25	2.0	122.3	285.9	286.5	90.3	51.4	90.2	2263.138	2247.895	2972.159	2952.479
20180530:01:24:00	23.5	15.6	-2.1	23.6	0.25	2.3	0.25	2.0	122.3	285.9	286.5	90.3	51.3	90.2	2264.492	2249.259	2973.946	2954.278
20180530:01:29:00	23.5	15.2	-2.2	23.6	0.25	2.3	0.25	2.0	121.4	285.9	286.5	90.2	51.3	90.1	2265.888	2250.593	2975.787	2956.038
20180530:01:34:00	23.5	14.7	-2.2	23.6	0.25	2.3	0.25	2.0	120.0	285.9	286.5	90.2	51.3	90.1	2267.261	2251.99	2977.598	2957.88
20180530:01:39:00	23.5	14.5	-2.0	23.6	0.25	2.3	0.25	2.0	119.7	285.9	286.5	90.2	51.4	90.0	2268.613	2253.344	2979.381	2959.665
20180530:01:44:00	23.5	15.0	-1.8	23.6	0.25	2.3	0.25	2.0	120.8	285.9	286.5	90.2	51.3	90.0	2269.976	2254.676	2981.18	2961.421
20180530:01:49:00	23.5	15.3	-1.9	23.6	0.25	2.3	0.25	2.0	121.5	286.0	286.6	90.2	51.4	90.0	2271.384	2256.07	2983.037	2963.259
20180530:01:54:00	23.5	15.4	-2.1	23.6	0.25	2.3	0.25	2.0	121.8	286.1	286.5	90.1	51.3	89.9	2272.744	2257.42	2984.831	2965.039
20180530:01:59:00	23.5	15.5	-2.3	23.6	0.25	2.3	0.25	2.1	122.0	286.0	286.5	90.0	51.3	89.9	2274.101	2258.762	2986.62	2966.808
20180530:02:04:00	23.5	15.5	-2.3	23.6	0.25	2.3	0.25	2.1	122.0	286.0	286.5	89.9	51.3	89.8	2275.496	2260.154	2988.459	2968.645
20180530:02:09:00	23.5	15.5	-2.3	23.6	0.25	2.3	0.25	2.0	121.9	285.9	286.4	89.8	51.3	89.8	2276.871	2261.493	2990.272	2970.41
20180530:02:14:00	23.5	15.4	-2.3	23.6	0.25	2.3	0.25	2.0	121.8	285.9	286.5	89.6	51.3	89.7	2278.227	2262.845	2992.059	2972.192
20180530:02:19:00	23.5	15.4	-2.2	23.6	0.25	2.3	0.25	2.0	121.7	285.9	286.4	89.5	51.3	89.6	2279.586	2264.239	2993.85	2974.028
20180530:02:24:00	23.5	15.3	-2.2	23.6	0.25	2.3	0.25	2.0	121.6	285.9	286.5	89.5	51.3	89.6	2280.997	2265.573	2995.709	2975.788
20180530:02:29:00	23.5	15.3	-2.2	23.6	0.25	2.3	0.25	2.0	121.5	285.8	286.4	89.5	51.3	89.6	2282.358	2266.933	2997.504	2977.579
20180530:02:34:00	23.5	14.6	-2.3	23.6	0.25	2.3	0.25	2.0	119.9	285.8	286.5	89.5	51.3	89.5	2283.71	2268.322	2999.285	2979.41
20180530:02:39:00	23.5	14.3	-2.1	23.6	0.25	2.3	0.25	2.0	119.2	285.8	286.5	89.5	51.4	89.5	2285.106	2269.664	3001.124	2981.179
20180530:02:44:00	23.5	14.8	-1.9	23.6	0.25	2.3	0.25	2.0	120.3	285.9	286.5	89.5	51.3	89.5	2286.477	2271.023	3002.931	2982.97
20180530:02:49:00	23.5	15.2	-2.1	23.6	0.25	2.3	0.25	2.0	121.2	285.9	286.5	89.5	51.4	89.4	2287.826	2272.401	3004.709	2984.786
20180530:02:54:00	23.5	15.3	-2.1	23.6	0.25	2.3	0.25	2.0	121.5	285.9	286.5	89.5	51.3	89.4	2289.19	2273.744	3006.507	2986.555
20180530:02:59:00	23.5	15.4	-2.2	23.6	0.25	2.3	0.25	2.0	121.7	285.9	286.4	89.4	51.3	89.3	2290.593	2275.122	3008.356	2988.37
20180530:03:04:00	23.5	15.5	-2.3	23.6	0.25	2.3	0.25	2.0	121.9	286.0	286.5	89.3	51.2	89.3	2291.95	2276.488	3010.143	2990.169
20180530:03:09:00	23.5	15.5	-2.3	23.6	0.25	2.3	0.25	2.0	122.1	286.0	286.4	89.2	51.3	89.2	2293.308	2277.836	3011.931	2991.945
20180530:03:14:00	23.5	15.5	-2.2	23.6	0.25	2.3	0.25	2.0	122.1	285.9	286.5	89.0	51.2	89.2	2294.709	2279.221	3013.776	2993.769
20180530:03:19:00	23.5	15.6	-2.3	23.6	0.25	2.3	0.25	2.0	122.3	285.9	286.4	88.9	51.3	89.1	2296.069	2280.589	3015.567	2995.571
20180530:03:24:00	23.4	15.7	-2.5	23.6	0.25	2.3	0.25	2.0	122.4	285.9	286.4	88.8	51.2	89.0	2297.423	2281.924	3017.35	2997.329
20180530:03:29:00	23.4	15.8	-2.8	23.6	0.25	2.3	0.25	2.0	122.6	286.0	286.5	88.7	51.3	89.0	2298.798	2283.32	3019.159	2999.167
20180530:03:34:00	23.4	15.9	-3.4	23.6	0.25	2.3	0.25	2.0	122.7	285.9	286.4	88.6	51.2	88.9	2300.192	2284.67	3020.994	3000.945
20180530:03:39:00	23.3	15.4	-4.1	23.6	0.25	2.3	0.25	2.0	121.5	285.9	286.4	88.5	51.2	88.9	2301.546	2286.003	3022.776	3002.701
20180530:03:44:00	23.3	15.0	-4.0	23.6	0.25	2.3	0.25	2.0	120.7	285.8	286.5	88.5	51.2	88.8	2302.904	2287.398	3024.563	3004.538
20180530:03:49:00	23.3	15.3	-3.8	23.6	0.25	2.3	0.25	2.0	121.4	285.8	286.4	88.4	51.2	88.8	2304.315	2288.744	3026.419	3006.31
20180530:03:54:00	23.3	15.6	-3.9	23.6	0.25	2.3	0.25	2.0	122.0	285.9	286.4	88.3	51.1	88.7	2305.681	2290.091	3028.215	3008.083

Time:	Stack Pressure:	Sat% H2O:	Static:	Barometric:	Flowmeter1:	Vacuum1:	Flowmeter2:	Vacuum2:	Stack Temp:	Sorbent Temp:	Probe Temp:	DGM#1 Temp:	Condenser Temp:	DGM#2 Temp:	DGM1*:	DGM2*:	DGM1:	DGM2:
day:hh:mm:ss	in-Hg	Percent	in-H2O	in-Hg	l/min	in-Hg	l/min	in-Hg	degF	degF	degF	degF	degF	degF	liters STP	liters STP	liters nominal	liters nominal
20180530:03:59:00	23.4	15.5	-3.5	23.6	0.25	2.3	0.25	2.0	121.9	285.9	286.4	88.2	51.2	88.6	2307.022	2291.484	3029.98	3009.915
20180530:04:04:00	23.3	15.9	-4.1	23.6	0.25	2.3	0.25	2.0	122.6	285.9	286.4	88.1	51.1	88.6	2308.411	2292.815	3031.806	3011.667
20180530:04:09:00	23.3	15.9	-3.9	23.6	0.25	2.3	0.25	2.0	122.6	285.9	286.5	88.0	51.2	88.5	2309.79	2294.174	3033.619	3013.455
20180530:04:14:00	23.3	15.9	-3.8	23.6	0.25	2.3	0.25	2.0	122.8	285.9	286.5	88.0	51.2	88.5	2311.143	2295.561	3035.396	3015.28
20180530:04:19:00	23.3	16.1	-4.5	23.6	0.25	2.3	0.25	2.0	123.0	285.9	286.4	87.9	51.2	88.4	2312.504	2296.901	3037.185	3017.043
20180530:04:24:00	23.3	16.2	-4.8	23.6	0.25	2.3	0.25	2.0	123.3	285.9	286.4	87.9	51.1	88.3	2313.912	2298.266	3039.035	3018.838
20180530:04:29:00	23.3	16.3	-4.2	23.6	0.25	2.3	0.25	2.0	123.5	285.9	286.5	87.8	51.2	88.3	2315.263	2299.634	3040.811	3020.637
20180530:04:34:00	23.3	16.3	-3.9	23.6	0.25	2.3	0.25	2.0	123.7	285.9	286.4	87.7	51.1	88.2	2316.612	2300.975	3042.583	3022.4
20180530:04:39:00	23.4	16.3	-2.8	23.6	0.25	2.3	0.25	2.0	123.7	285.9	286.4	87.6	51.2	88.2	2318.012	2302.359	3044.422	3024.22
20180530:04:44:00	23.4	16.3	-2.7	23.6	0.25	2.3	0.25	2.0	123.7	285.9	286.4	87.6	51.1	88.1	2319.371	2303.722	3046.207	3026.011
20180530:04:49:00	23.4	16.3	-2.5	23.6	0.25	2.3	0.25	2.0	123.8	285.8	286.4	87.5	51.2	88.0	2320.714	2305.054	3047.97	3027.763
20180530:04:54:00	23.4	16.4	-2.8	23.6	0.25	2.3	0.25	2.0	123.9	285.8	286.4	87.4	51.1	88.0	2322.101	2306.444	3049.793	3029.59
20180530:04:59:00	23.4	16.6	-3.3	23.6	0.25	2.3	0.25	2.0	124.4	285.8	286.5	87.3	51.2	87.9	2323.468	2307.794	3051.587	3031.365
20180530:05:04:00	23.4	16.7	-3.6	23.6	0.25	2.3	0.25	2.0	124.6	285.9	286.5	87.3	51.2	87.9	2324.816	2309.14	3053.357	3033.133
20180530:05:09:00	23.4	16.8	-3.7	23.6	0.25	2.3	0.25	2.0	124.7	285.9	286.4	87.3	51.2	87.8	2326.187	2310.529	3055.157	3034.959
20180530:05:14:00	23.4	16.7	-3.6	23.6	0.25	2.3	0.25	2.0	124.7	285.8	286.4	87.3	51.2	87.7	2327.569	2311.865	3056.972	3036.714
20180530:05:19:00	23.4	16.6	-3.5	23.6	0.25	2.3	0.25	2.0	124.4	285.8	286.5	87.3	51.3	87.7	2328.917	2313.223	3058.741	3038.498
20180530:05:24:00	23.4	16.4	-3.0	23.6	0.25	2.3	0.25	2.0	124.0	285.8	286.4	87.4	51.2	87.6	2330.276	2314.612	3060.526	3040.323
20180530:05:29:00	23.4	16.3	-2.9	23.6	0.25	2.3	0.25	2.0	123.7	285.8	286.5	87.4	51.2	87.6	2331.684	2315.95	3062.374	3042.081
20180530:05:34:00	23.4	16.1	-2.9	23.6	0.25	2.3	0.25	2.0	123.4	285.8	286.4	87.4	51.2	87.5	2333.039	2317.317	3064.154	3043.876
20180530:05:39:00	23.4	16.0	-3.1	23.6	0.25	2.3	0.25	2.0	123.0	285.8	286.5	87.4	51.3	87.5	2334.389	2318.68	3065.926	3045.665
20180530:05:44:00	23.4	15.8	-3.2	23.6	0.25	2.3	0.25	2.0	122.5	285.8	286.4	87.5	51.2	87.5	2335.789	2320.022	3067.765	3047.429
20180530:05:49:00	23.4	15.6	-3.2	23.6	0.25	2.3	0.25	2.0	122.1	285.8	286.5	87.4	51.2	87.4	2337.155	2321.415	3069.559	3049.258
20180530:05:54:00	23.4	15.4	-3.1	23.6	0.25	2.3	0.25	2.0	121.8	285.8	286.4	87.4	51.3	87.4	2338.489	2322.771	3071.311	3051.038
20180530:05:59:00	23.4	15.4	-3.0	23.6	0.25	2.3	0.25	2.0	121.6	285.8	286.5	87.4	51.2	87.3	2339.879	2324.101	3073.135	3052.784
20180530:06:04:00	23.4	15.4	-3.1	23.6	0.25	2.3	0.25	2.0	121.6	285.8	286.5	87.4	51.2	87.3	2341.248	2325.499	3074.933	3054.618
20180530:06:09:00	23.4	15.3	-2.9	23.6	0.25	2.3	0.25	2.0	121.5	285.9	286.4	87.4	51.2	87.3	2342.6	2326.832	3076.707	3056.368
20180530:06:14:00	23.5	15.2	-2.4	23.6	0.25	2.3	0.25	2.0	121.4	285.9	286.5	87.3	51.2	87.2	2343.966	2328.183	3078.5	3058.141
20180530:06:19:00	23.4	15.3	-2.7	23.6	0.25	2.3	0.25	2.0	121.4	285.8	286.4	87.3	51.2	87.2	2345.36	2329.571	3080.33	3059.962
20180530:06:24:00	23.4	15.3	-2.9	23.6	0.25	2.3	0.25	2.0	121.4	285.9	286.5	87.2	51.2	87.2	2346.705	2330.917	3082.094	3061.727
20180530:06:29:00	23.4	15.2	-2.5	23.6	0.25	2.3	0.25	2.0	121.3	285.8	286.5	87.2	51.2	87.1	2348.063	2332.279	3083.876	3063.515
20180530:06:34:00	23.5	15.2	-2.4	23.6	0.25	2.3	0.25	2.0	121.3	285.8	286.4	87.2	51.2	87.1	2349.466	2333.643	3085.717	3065.305
20180530:06:39:00	23.5	15.2	-2.3	23.6	0.25	2.3	0.25	2.0	121.3	285.8	286.4	87.2	51.2	87.1	2350.818	2334.983	3087.491	3067.062
20180530:06:44:00	23.4	15.1	-2.7	23.6	0.25	2.3	0.25	2.0	121.1	285.9	286.5	87.2	51.2	87.0	2352.165	2336.373	3089.257	3068.885
20180530:06:49:00	23.4	15.1	-2.8	23.6	0.25	2.3	0.25	2.0	121.0	285.9	286.5	87.2	51.2	87.0	2353.568	2337.728	3091.098	3070.662
20180530:06:54:00	23.5	15.0	-2.3	23.6	0.25	2.3	0.25	2.0	120.8	285.8	286.5	87.0	51.2	86.9	2354.936	2339.055	3092.893	3072.402
20180530:06:59:00	23.5	14.9	-2.3	23.6	0.25	2.3	0.25	2.0	120.5	285.9	286.4	87.0	51.1	86.9	2356.273	2340.451	3094.646	3074.233
05/30/2018:06:59:00	**Sampling**	**complete**	**6 Days**	**0 Hrs**	**0 Minutes**	**sampled**												

Hg-324K-1099								
HgK_324 Data	HTG2LEE2018R5	5/30/2018	9:08:19					
DGM1 ID	DGM2 ID	Trap1 ID	Trap2 ID					
3605445	3605446	451931	480728					
Time:	Leak 1	Status	Leak 2	Status	Vacuum1	Vacuum2	DGM 1	DGM 2
Day:hh:mm	ccpermin	P-F	ccpermin	P-F	in-Hg	in-Hg	liter	liter
05/30/2018:09:08:33	1369.87	Fail	1255.139	Fail	2.912	2.785	0.435	0.378
05/30/2018:09:08:48	1440.741	Fail	1492.481	Fail	7.049	6.899	0.72	0.746
05/30/2018:09:09:03	1092.593	Fail	1165.414	Fail	9.85	9.751	0.981	0.961
05/30/2018:09:09:18	859.259	Fail	872.18	Fail	11.822	11.773	1.15	1.182
05/30/2018:09:09:33	548.148	Fail	736.842	Fail	13.311	13.308	1.256	1.329
05/30/2018:09:09:48	451.852	Fail	515.038	Fail	14.442	14.508	1.376	1.44
05/30/2018:09:10:03	433.333	Fail	334.586	Fail	15.3	15.386	1.472	1.496
05/30/2018:09:10:18	385.185	Fail	278.195	Fail	15.956	16.122	1.569	1.579
05/30/2018:09:10:33	314.815	Fail	304.511	Fail	16.584	16.726	1.63	1.648
05/30/2018:09:10:48	255.556	Fail	274.436	Fail	17.101	17.224	1.696	1.716
05/30/2018:09:11:03	237.037	Fail	225.564	Fail	17.519	17.629	1.748	1.761
05/30/2018:09:11:18	177.778	Fail	206.767	Fail	17.864	17.961	1.785	1.82
05/30/2018:09:11:33	118.519	Fail	199.248	Fail	18.124	18.216	1.807	1.861
05/30/2018:09:11:48	81.481	Fail	127.82	Fail	18.335	18.419	1.826	1.883
05/30/2018:09:12:03	59.259	Fail	71.429	Fail	18.508	18.58	1.837	1.897
05/30/2018:09:12:18	48.148	Fail	67.669	Fail	18.653	18.721	1.85	1.917
05/30/2018:09:12:33	48.148	Fail	82.707	Fail	18.776	18.855	1.861	1.938
05/30/2018:09:12:48	48.148	Fail	82.707	Fail	18.872	18.964	1.874	1.959
05/30/2018:09:13:03	48.148	Fail	63.91	Fail	18.951	19.062	1.885	1.97
05/30/2018:09:13:18	51.852	Fail	52.632	Fail	19.015	19.141	1.9	1.985
05/30/2018:09:13:33	44.444	Fail	52.632	Fail	19.067	19.214	1.907	1.996
05/30/2018:09:13:48	14.815	Fail	41.353	Fail	19.097	19.272	1.907	2.006
05/30/2018:09:14:03	3.704	Pass	33.835	Fail	19.101	19.321	1.909	2.013
05/30/2018:09:14:18	18.519	Fail	33.835	Fail	19.118	19.362	1.917	2.023
05/30/2018:09:14:33	22.222	Fail	33.835	Fail	19.119	19.403	1.92	2.03
05/30/2018:09:14:48	18.519	Fail	30.075	Fail	19.141	19.437	1.926	2.038
05/30/2018:09:15:03	18.519	Fail	33.835	Fail	19.145	19.462	1.93	2.047
05/30/2018:09:15:18	14.815	Fail	18.797	Fail	19.151	19.479	1.933	2.047
05/30/2018:09:15:33	14.815	Fail	0	Pass	19.16	19.496	1.937	2.047
05/30/2018:09:15:48	14.815	Fail	3.759	Pass	19.164	19.513	1.941	2.049
05/30/2018:09:16:03	14.815	Fail	3.759	Pass	19.168	19.528	1.944	2.049
05/30/2018:09:16:18	14.815	Fail	3.759	Pass	19.178	19.537	1.948	2.051
05/30/2018:09:16:33	11.111	Fail	7.519	Pass	19.179	19.543	1.95	2.053
05/30/2018:09:16:48	11.111	Fail	11.278	Fail	19.181	19.55	1.954	2.056
05/30/2018:09:17:03	14.815	Fail	15.038	Fail	19.181	19.558	1.957	2.06
05/30/2018:09:17:18	11.111	Fail	15.038	Fail	19.189	19.556	1.959	2.064
05/30/2018:09:17:33	7.407	Pass	11.278	Fail	19.198	19.559	1.961	2.066
05/30/2018:09:17:48	7.407	Pass	7.519	Pass	19.192	19.566	1.963	2.068

Appendix C: CEMS Data

CEMS Data Log

Average Data

Plant: HUNTINGTON PLANT
Interval: 1 Hour
Type: Block
Report Period: 04/24/2018 08:00 Through 04/30/2018 08:59
Time Online Criteria: 1 minute(s

Source		UNIT2			
Parameter Unit		CO2 (PCT)	FLOWSCFH (SCFH)	HEATIN (MMBTU/HR)	UNITLOAD (MW)
04/24/18	08:00	8.6	27,559,789.4	1,316.8	124
04/24/18	09:00	8.9	27,416,198.3	1,355.6	125
04/24/18	10:00	8.9	27,400,066.3	1,354.8	127
04/24/18	11:00	9.0	27,426,984.0	1,371.4	129
04/24/18	12:00	8.9	27,482,689.3	1,358.9	127
04/24/18	13:00	9.1	27,581,973.3	1,394.4	131
04/24/18	14:00	8.6	27,699,160.4	1,323.4	125
04/24/18	15:00	8.8	27,501,200.7	1,344.5	126
04/24/18	16:00	8.8	27,567,795.0	1,347.8	126
04/24/18	17:00	9.2	28,521,525.9	1,457.8	139
04/24/18	18:00	9.1	28,706,866.2	1,451.3	136
04/24/18	19:00	10.3	41,166,078.8	2,355.6	237
04/24/18	20:00	10.4	51,137,757.0	2,954.6	308
04/24/18	21:00	10.1	34,630,633.0	1,943.2	201
04/24/18	22:00	9.9	30,916,952.5	1,700.4	171
04/24/18	23:00	8.9	28,104,407.6	1,389.6	136
04/25/18	00:00	9.9	30,627,605.1	1,684.5	160
04/25/18	01:00	8.4	27,633,329.6	1,289.5	125
04/25/18	02:00	8.9	27,533,405.9	1,361.4	126
04/25/18	03:00	8.9	27,547,611.9	1,362.1	127
04/25/18	04:00	9.1	27,486,147.6	1,389.6	129
04/25/18	05:00	10.0 C	29,480,246.7 C	1,637.8	143
04/25/18	06:00	9.2	30,506,372.2	1,559.2	157
04/25/18	07:00	8.9	27,128,360.9	1,341.3	124
04/25/18	08:00	9.0	27,456,309.5	1,372.8	125
04/25/18	09:00	9.0	27,489,017.9	1,374.5	126
04/25/18	10:00	8.9	27,620,049.6	1,365.7	126
04/25/18	11:00	8.9	27,575,032.3	1,363.4	126
04/25/18	12:00	8.7	27,696,901.9	1,338.7	125
04/25/18	13:00	8.7	27,630,753.2	1,335.5	125
04/25/18	14:00	8.7	27,651,360.5	1,336.5	125
04/25/18	15:00	9.2	27,858,417.5	1,423.9	132
04/25/18	16:00	8.4	27,583,162.6	1,287.2	126
04/25/18	17:00	9.3	29,218,792.7	1,509.6	140
04/25/18	18:00	9.8	34,736,366.3	1,891.2	192
04/25/18	19:00	9.8	44,185,028.1	2,405.6	253
04/25/18	20:00	10.0	40,849,658.4	2,269.4	241
04/25/18	21:00	8.6	28,576,500.3	1,365.3	141
04/25/18	22:00	8.4	27,894,767.4	1,301.8	123

F = Unit Offline
E = Exceedance
M = Maintenance
T = Out Of Control

C = Calibration
S = Substituted
*** = Suspect**

Average Data

Plant: HUNTINGTON PLANT
Interval: 1 Hour
Type: Block
Report Period: 04/24/2018 08:00 Through 04/30/2018 08:59
Time Online Criteria: 1 minute(s

04/25/18	23:00	8.4	27,741,417.2	1,294.6	125
04/26/18	00:00	8.6	27,629,694.7	1,320.1	126
04/26/18	01:00	8.8	27,706,870.6	1,354.6	128
04/26/18	02:00	8.4	27,805,667.0	1,297.6	125
04/26/18	03:00	8.5	27,670,067.7	1,306.6	125
04/26/18	04:00	8.5	27,604,246.2	1,303.5	125
04/26/18	05:00	8.9 C	27,671,852.5 C	1,368.2	127
04/26/18	06:00	10.2	36,293,441.2	2,056.6	204
04/26/18	07:00	9.9	32,771,862.7	1,802.5	186
04/26/18	08:00	8.7	27,652,672.0	1,336.6	128
04/26/18	09:00	8.8	27,496,041.4	1,344.2	126
04/26/18	10:00	8.7	27,599,007.8	1,334.0	125
04/26/18	11:00	8.7	27,679,279.6	1,337.8	125
04/26/18	12:00	8.8	27,696,606.8	1,354.1	126
04/26/18	13:00	8.9	27,813,070.9	1,375.2	129
04/26/18	14:00	9.2	28,034,021.0	1,432.8	135
04/26/18	15:00	8.5	28,026,880.7	1,323.5	127
04/26/18	16:00	9.0	28,083,976.3	1,404.2	134
04/26/18	17:00	9.3	29,140,351.7	1,505.6	144
04/26/18	18:00	10.0	37,796,871.9	2,099.8	213
04/26/18	19:00	10.0	40,257,837.3	2,236.6	229
04/26/18	20:00	10.2	33,944,980.3	1,923.6	194
04/26/18	21:00	10.5	36,170,162.2	2,109.9	215
04/26/18	22:00	10.6	47,556,620.7	2,800.6	286
04/26/18	23:00	10.5	52,808,797.3	3,080.5	321
04/27/18	00:00	10.4	45,865,245.6	2,650.0	279
04/27/18	01:00	10.3	36,861,695.9	2,109.3	220
04/27/18	02:00	8.2	28,078,130.0	1,279.1	127
04/27/18	03:00	8.7	27,633,117.4	1,335.6	124
04/27/18	04:00	8.8	27,454,771.8	1,342.2	126
04/27/18	05:00	9.9 C	27,747,741.5 C	1,526.1	132
04/27/18	06:00	8.8	27,477,918.8	1,343.4	129
04/27/18	07:00	8.9	27,460,866.0	1,357.8	126
04/27/18	08:00	8.9	27,544,053.1	1,361.9	126
04/27/18	09:00	8.9	27,441,383.8	1,356.8	127
04/27/18	10:00	9.0	27,654,450.4	1,382.7	128
04/27/18	11:00	8.8	27,570,528.3	1,347.9	126
04/27/18	12:00	9.6 M	27,738,583.2	1,479.4	132
04/27/18	13:00	9.0	27,566,718.6	1,378.4	130
04/27/18	14:00	9.1	27,481,563.0	1,389.4	131
04/27/18	15:00	8.9	27,573,507.2	1,363.4	129
04/27/18	16:00	8.8	27,533,116.6	1,346.1	127

F = Unit Offline
E = Exceedance
M = Maintenance
T = Out Of Control

C = Calibration
S = Substituted
*** = Suspect**

Average Data

Plant: HUNTINGTON PLANT
Interval: 1 Hour
Type: Block
Report Period: 04/24/2018 08:00 Through 04/30/2018 08:59
Time Online Criteria: 1 minute(s

04/27/18	17:00	9.0	27,787,902.7	1,389.4	132
04/27/18	18:00	9.2	29,689,704.8	1,517.5	143
04/27/18	19:00	10.5	45,479,109.7	2,652.9	271
04/27/18	20:00	10.5	54,442,225.6	3,175.8	331
04/27/18	21:00	10.2	44,139,822.8	2,501.3	266
04/27/18	22:00	10.0	34,680,636.2	1,926.7	200
04/27/18	23:00	8.6	28,242,502.6	1,349.4	135
04/28/18	00:00	8.7	27,625,194.7	1,335.2	126
04/28/18	01:00	9.0	27,627,766.9	1,381.4	130
04/28/18	02:00	8.8	27,502,214.4	1,344.5	128
04/28/18	03:00	8.8	27,924,059.1	1,365.2	131
04/28/18	04:00	9.9	31,699,233.1	1,743.4	169
04/28/18	05:00	10.0 C	31,423,168.8 C	1,745.7	179
04/28/18	06:00	9.6	29,934,531.1	1,596.5	162
04/28/18	07:00	8.4	28,139,861.1	1,313.2	129
04/28/18	08:00	8.4	27,722,564.0	1,293.7	124
04/28/18	09:00	8.6	27,656,013.1	1,321.3	125
04/28/18	10:00	8.5	27,739,897.3	1,309.9	125
04/28/18	11:00	8.7	27,795,684.6	1,343.5	127
04/28/18	12:00	8.6	27,945,366.4	1,335.2	128
04/28/18	13:00	8.6	27,896,544.7	1,332.9	128
04/28/18	14:00	8.6	28,361,163.5	1,355.0	131
04/28/18	15:00	8.6	28,460,107.4	1,359.8	133
04/28/18	16:00	9.0	28,133,023.6	1,406.7	133
04/28/18	17:00	8.2	28,088,346.2	1,279.6	126
04/28/18	18:00	8.8	28,719,059.8	1,404.0	134
04/28/18	19:00	10.4	42,933,160.1	2,480.6	256
04/28/18	20:00	10.4	58,967,720.9	3,407.0	358
04/28/18	21:00	10.3	55,211,548.5	3,159.4	338
04/28/18	22:00	10.1	44,049,190.2	2,471.6	268
04/28/18	23:00	10.1	37,593,315.2	2,109.4	224
04/29/18	00:00	10.3	50,595,868.1	2,895.2	309
04/29/18	01:00	10.4	59,710,249.2	3,449.9	368
04/29/18	02:00	10.1	42,340,487.0	2,375.7	258
04/29/18	03:00	8.4	28,790,646.0	1,343.6	142
04/29/18	04:00	9.7	29,783,270.2	1,605.0	155
04/29/18	05:00	9.6 C	29,141,678.2 C	1,554.2	142
04/29/18	06:00	8.6	28,607,726.4	1,366.8	141
04/29/18	07:00	8.8	27,519,126.1	1,345.4	130
04/29/18	08:00	8.7	27,988,603.8	1,352.8	131
04/29/18	09:00	8.8	28,135,282.2	1,375.5	136
04/29/18	10:00	9.0	28,004,171.3	1,400.2	138

F = Unit Offline
E = Exceedance
M = Maintenance
T = Out Of Control

C = Calibration
S = Substituted
*** = Suspect**

Average Data

Plant: HUNTINGTON PLANT
Interval: 1 Hour
Type: Block
Report Period: 04/24/2018 08:00 Through 04/30/2018 08:59
Time Online Criteria: 1 minute(s

04/29/18	11:00	8.9	27,966,691.4	1,382.8	135
04/29/18	12:00	9.2	27,913,383.0	1,426.7	144
04/29/18	13:00	8.4	28,507,759.1	1,330.4	135
04/29/18	14:00	8.5	27,965,823.7	1,320.6	130
04/29/18	15:00	8.9	28,652,041.5	1,416.7	138
04/29/18	16:00	8.1	28,010,346.1	1,260.5	132
04/29/18	17:00	8.7	27,905,392.1	1,348.7	130
04/29/18	18:00	9.1	28,506,738.2	1,441.2	142
04/29/18	19:00	9.1	29,851,018.9	1,509.1	155
04/29/18	20:00	10.3	42,401,604.9	2,426.3	255
04/29/18	21:00	10.0	41,283,379.9	2,293.5	248
04/29/18	22:00	10.0	35,939,645.0	1,996.7	214
04/29/18	23:00	9.6	30,390,804.5	1,620.9	167
04/30/18	00:00	8.1	27,560,675.7	1,240.2	128
04/30/18	01:00	8.6	27,376,650.3	1,308.0	125
04/30/18	02:00	8.5	27,316,620.6	1,290.0	125
04/30/18	03:00	8.5	27,282,846.0	1,288.4	125
04/30/18	04:00	8.5	27,438,606.5	1,295.7	125
04/30/18	05:00	10.0 C	30,606,130.1 C	1,700.3	155
04/30/18	06:00	10.2	36,859,030.5	2,088.7	217
04/30/18	07:00	10.5	52,888,076.5	3,085.1	326
04/30/18	08:00	10.6	59,640,288.7	3,512.1	378

Average	9.2	31,769,739.8	1,646.9	163
Minimum	8.1	27,128,360.9	1,240.2	123
Maximum	10.6	59,710,249.2	3,512.1	378
Summation	1,333.6	4,606,612,265.5	238,794.0	23,601
Geometric Mean	9.2	31,051,019.9	1,582.3	154
Included Data Points	145	145	145	145
Total number of Data Points	145	145	145	145

F = Unit Offline
E = Exceedance
M = Maintenance
T = Out Of Control

C = Calibration
S = Substituted
*** = Suspect**

Average Data

Plant: HUNTINGTON PLANT
Interval: 1 Hour
Type: Block
Report Period: 04/30/2018 14:00 Through 05/06/2018 14:59
Time Online Criteria: 1 minute(s)

Source		UNIT2			
Parameter Unit		CO2 (PCT)	FLOWSCFH (SCFH)	HEATIN (MMBTU/HR)	UNITLOAD (MW)
04/30/18	14:00	8.4	27,774,692.0	1,296.2	126
04/30/18	15:00	8.5	27,970,962.8	1,320.9	128
04/30/18	16:00	10.2	37,186,667.4	2,107.3	212
04/30/18	17:00	10.3	46,403,611.8	2,655.3	284
04/30/18	18:00	10.3	44,124,211.1	2,524.9	273
04/30/18	19:00	10.6	58,909,350.2	3,469.1	370
04/30/18	20:00	10.7	74,711,179.6	4,441.2	471
04/30/18	21:00	10.6	74,680,941.8	4,397.9	474
04/30/18	22:00	10.6	74,371,928.0	4,379.7	474
04/30/18	23:00	10.6	66,656,687.3	3,925.4	427
05/01/18	00:00	10.2	53,532,139.7	3,033.5	334
05/01/18	01:00	9.7	34,660,113.5	1,867.8	203
05/01/18	02:00	8.3	28,773,768.6	1,326.8	135
05/01/18	03:00	8.5	27,868,726.2	1,316.0	125
05/01/18	04:00	8.6	27,892,491.7	1,332.6	126
05/01/18	05:00	10.1 C	34,440,891.8 C	1,932.5	183
05/01/18	06:00	10.1	40,351,519.0	2,264.2	239
05/01/18	07:00	10.4	53,218,343.8	3,074.8	330
05/01/18	08:00	10.7	65,113,681.8	3,870.7	412
05/01/18	09:00	10.6	63,267,768.7	3,725.8	402
05/01/18	10:00	10.1	48,493,255.9	2,721.0	302
05/01/18	11:00	10.1	48,910,619.8	2,744.5	302
05/01/18	12:00	10.0	59,303,644.4	3,294.7	359
05/01/18	13:00	9.7	57,915,061.8	3,121.0	342
05/01/18	14:00	9.7	43,674,318.8	2,353.5	261
05/01/18	15:00	9.9	42,106,379.6	2,315.8	254
05/01/18	16:00	9.9	47,129,362.2	2,592.1	286
05/01/18	17:00	9.4	39,536,388.1	2,064.7	230
05/01/18	18:00	9.0	32,131,294.6	1,606.6	166
05/01/18	19:00	9.7	37,896,780.8	2,042.2	216
05/01/18	20:00	9.9	56,723,142.9	3,119.8	335
05/01/18	21:00	9.7	52,655,217.3	2,837.5	312
05/01/18	22:00	9.6	45,494,242.3	2,426.3	269
05/01/18	23:00	9.5	32,991,794.0	1,741.2	184
05/02/18	00:00	9.7	34,703,212.4	1,870.1	196
05/02/18	01:00	9.6	35,218,897.6	1,878.3	199
05/02/18	02:00	8.4	28,139,841.4	1,313.2	135

F = Unit Offline
E = Exceedance
M = Maintenance
T = Out Of Control

C = Calibration
S = Substituted
*** = Suspect**

Average Data

Plant: HUNTINGTON PLANT
Interval: 1 Hour
Type: Block
Report Period: 04/30/2018 14:00 Through 05/06/2018 14:59
Time Online Criteria: 1 minute(s)

05/02/18	03:00	8.6	27,585,410.0	1,318.0	126
05/02/18	04:00	9.0	28,242,206.4	1,412.1	134
05/02/18	05:00	9.6 C	29,729,629.1 C	1,585.6	149
05/02/18	06:00	9.4	33,685,014.7	1,759.1	183
05/02/18	07:00	10.0	47,077,543.5	2,615.4	280
05/02/18	08:00	10.0	41,709,415.1	2,317.2	252
05/02/18	09:00	10.0	35,802,036.3	1,989.0	212
05/02/18	10:00	8.4	28,673,868.7	1,338.1	139
05/02/18	11:00	8.6	27,789,375.8	1,327.7	127
05/02/18	12:00	8.3	27,835,096.9	1,283.5	125
05/02/18	13:00	8.9	29,548,482.2	1,461.0	142
05/02/18	14:00	9.1	31,876,671.1	1,611.6	170
05/02/18	15:00	8.0	27,653,776.9	1,229.1	124
05/02/18	16:00	8.5	27,747,337.0	1,310.3	126
05/02/18	17:00	8.4	27,649,119.6	1,290.3	126
05/02/18	18:00	8.8	28,049,636.5	1,371.3	133
05/02/18	19:00	9.5	35,235,155.6	1,859.6	191
05/02/18	20:00	9.7	42,298,629.5	2,279.4	243
05/02/18	21:00	8.9	31,588,749.1	1,561.9	166
05/02/18	22:00	9.0	28,377,920.5	1,418.9	139
05/02/18	23:00	8.9	28,070,608.1	1,388.0	135
05/03/18	00:00	8.6	27,352,842.0	1,306.9	125
05/03/18	01:00	8.6	27,279,698.7	1,303.4	125
05/03/18	02:00	8.7	27,356,373.5	1,322.2	125
05/03/18	03:00	8.8	27,575,306.6	1,348.1	129
05/03/18	04:00	8.6	27,437,978.1	1,310.9	126
05/03/18	05:00	9.7 C	32,075,307.4 C	1,728.5	155
05/03/18	06:00	10.0	46,372,608.2	2,576.3	269
05/03/18	07:00	9.8	40,828,302.8	2,222.9	234
05/03/18	08:00	7.7	28,387,755.3	1,214.4	126
05/03/18	09:00	8.4	27,895,412.7	1,301.8	125
05/03/18	10:00	8.5	27,985,155.9	1,321.5	127
05/03/18	11:00	8.5	27,714,009.4	1,308.7	125
05/03/18	12:00	8.5	27,692,655.4	1,307.7	125
05/03/18	13:00	8.4	27,764,269.1	1,295.7	125
05/03/18	14:00	8.5	27,715,440.8	1,308.8	126
05/03/18	15:00	8.4	27,797,038.2	1,297.2	125
05/03/18	16:00	8.4	27,881,192.6	1,301.1	125
05/03/18	17:00	8.4	27,953,892.3	1,304.5	125
05/03/18	18:00	9.1	30,118,348.2	1,522.6	150
05/03/18	19:00	10.3	43,858,715.7	2,509.7	259

F = Unit Offline
E = Exceedance
M = Maintenance
T = Out Of Control

C = Calibration
S = Substituted
*** = Suspect**

Average Data

Plant: HUNTINGTON PLANT
Interval: 1 Hour
Type: Block
Report Period: 04/30/2018 14:00 Through 05/06/2018 14:59
Time Online Criteria: 1 minute(s)

05/03/18	20:00	10.4	61,694,333.8	3,564.5	369
05/03/18	21:00	10.5	75,027,246.8	4,376.6	459
05/03/18	22:00	10.4	75,803,891.2	4,379.8	461
05/03/18	23:00	10.2	59,106,229.6	3,349.3	357
05/04/18	00:00	10.1	43,077,808.4	2,417.2	260
05/04/18	01:00	8.8	29,124,929.9	1,423.9	147
05/04/18	02:00	8.6	27,524,024.5	1,315.0	124
05/04/18	03:00	8.7	27,560,879.4	1,332.1	125
05/04/18	04:00	8.8	27,500,503.6	1,344.5	126
05/04/18	05:00	10.4 C	35,820,246.7 C	2,069.6	191
05/04/18	06:00	10.3	35,411,023.3	2,026.3	208
05/04/18	07:00	8.9	27,513,042.4	1,360.4	136
05/04/18	08:00	8.6 M	27,537,954.2	1,315.7	125
05/04/18	09:00	8.6 MC	27,630,123.5	1,320.1	125
05/04/18	10:00	8.5	27,712,082.9	1,308.6	125
05/04/18	11:00	8.4	27,723,949.0	1,293.8	125
05/04/18	12:00	8.4	27,755,748.7	1,295.3	125
05/04/18	13:00	8.7	28,126,926.1	1,359.5	129
05/04/18	14:00	8.5	28,324,586.5	1,337.6	133
05/04/18	15:00	9.6	30,961,415.2	1,651.3	165
05/04/18	16:00	9.0	30,560,087.1	1,528.0	155
05/04/18	17:00	10.0	51,938,288.4	2,885.4	304
05/04/18	18:00	10.3	70,569,469.8	4,038.1	425
05/04/18	19:00	10.4	76,785,769.0	4,436.5	471
05/04/18	20:00	10.5	76,117,511.8	4,440.2	475
05/04/18	21:00	10.5	75,550,333.7	4,407.1	472
05/04/18	22:00	10.4	72,095,769.1	4,165.5	447
05/04/18	23:00	10.4	66,873,275.6	3,863.8	415
05/05/18	00:00	10.1	57,054,595.9	3,201.4	352
05/05/18	01:00	9.8	35,910,167.8	1,955.1	218
05/05/18	02:00	8.6	28,350,927.2	1,354.5	140
05/05/18	03:00	8.4	27,784,918.5	1,296.6	126
05/05/18	04:00	10.2	34,401,888.5	1,949.4	193
05/05/18	05:00	10.1 C	34,746,152.4 C	1,949.6	204
05/05/18	06:00	8.4	28,594,250.3	1,334.4	140
05/05/18	07:00	8.6	27,421,503.3	1,310.2	125
05/05/18	08:00	8.5	27,906,157.0	1,317.8	125
05/05/18	09:00	8.7	27,732,867.4	1,340.4	128
05/05/18	10:00	8.5	27,713,923.2	1,308.7	126
05/05/18	11:00	8.5	27,776,261.0	1,311.6	127
05/05/18	12:00	9.2	30,949,305.4	1,581.8	154

F = Unit Offline
E = Exceedance
M = Maintenance
T = Out Of Control

C = Calibration
S = Substituted
*** = Suspect**

Average Data

Plant: HUNTINGTON PLANT
Interval: 1 Hour
Type: Block
Report Period: 04/30/2018 14:00 Through 05/06/2018 14:59
Time Online Criteria: 1 minute(s)

05/05/18	13:00	9.9	45,176,378.2	2,484.7	263
05/05/18	14:00	9.9	57,504,811.1	3,162.8	345
05/05/18	15:00	10.1	66,548,098.4	3,734.1	402
05/05/18	16:00	10.3	76,302,756.0	4,366.2	467
05/05/18	17:00	10.4	75,657,642.6	4,371.4	475
05/05/18	18:00	10.5	75,405,538.5	4,398.7	475
05/05/18	19:00	10.5	75,066,666.4	4,378.9	471
05/05/18	20:00	10.6	75,453,609.8	4,443.4	475
05/05/18	21:00	10.5	75,717,243.2	4,416.8	473
05/05/18	22:00	10.5	73,137,019.1	4,266.3	458
05/05/18	23:00	10.5	63,139,245.8	3,683.1	396
05/06/18	00:00	10.2	56,697,945.4	3,212.9	352
05/06/18	01:00	10.2	41,321,312.3	2,341.5	260
05/06/18	02:00	10.3	42,221,143.6	2,416.0	264
05/06/18	03:00	8.7	29,192,279.3	1,410.9	151
05/06/18	04:00	8.5	27,628,735.0	1,304.7	126
05/06/18	05:00	8.6 C	27,369,786.9 C	1,307.7	126
05/06/18	06:00	9.2	28,040,072.1	1,433.2	138
05/06/18	07:00	10.1	31,978,883.2	1,794.4	182
05/06/18	08:00	10.4	35,370,085.9	2,043.6	215
05/06/18	09:00	8.3	28,491,547.3	1,313.8	136
05/06/18	10:00	8.5	27,735,021.6	1,309.7	127
05/06/18	11:00	8.5	27,718,710.5	1,309.0	127
05/06/18	12:00	8.4	27,778,861.0	1,296.4	125
05/06/18	13:00	8.4	27,800,018.1	1,297.3	127
05/06/18	14:00	9.5	29,662,898.4	1,565.5	153

Average	9.4	40,800,605.5	2,193.3	228
Minimum	7.7	27,279,698.7	1,214.4	124
Maximum	10.7	76,785,769.0	4,443.4	475
Summation	1,363.4	5,916,087,794.0	318,025.3	33,095
Geometric Mean	9.4	38,064,620.6	1,980.7	202
Included Data Points	145	145	145	145
Total number of Data Points	145	145	145	145

F = Unit Offline
E = Exceedance
M = Maintenance
T = Out Of Control

C = Calibration
S = Substituted
*** = Suspect**

Average Data

Plant: HUNTINGTON PLANT
Interval: 1 Hour
Type: Block
Report Period: 05/08/2018 10:00 Through 05/14/2018 10:59
Time Online Criteria: 1 minute(s)

Source		UNIT2			
Parameter Unit		CO2 (PCT)	FLOWSCFH (SCFH)	HEATIN (MMBTU/HR)	UNITLOAD (MW)
05/08/18	10:00	10.4	77,953,620.8	4,504.0	470
05/08/18	11:00	10.4	68,091,086.5	3,934.1	418
05/08/18	12:00	10.4	56,800,262.4	3,281.8	351
05/08/18	13:00	10.6	72,078,497.1	4,244.6	445
05/08/18	14:00	10.6	71,975,428.9	4,238.5	445
05/08/18	15:00	10.5	59,743,436.9	3,485.0	375
05/08/18	16:00	10.5	70,610,784.1	4,119.0	437
05/08/18	17:00	10.4	74,920,552.9	4,328.8	457
05/08/18	18:00	10.5	77,425,637.1	4,516.5	477
05/08/18	19:00	10.6	77,518,249.6	4,564.9	481
05/08/18	20:00	10.6	76,697,897.5	4,516.7	481
05/08/18	21:00	10.5	73,494,410.8	4,287.2	456
05/08/18	22:00	10.4	66,074,102.8	3,817.6	404
05/08/18	23:00	10.5	74,309,617.1	4,334.8	458
05/09/18	00:00	10.4	61,340,723.1	3,544.1	380
05/09/18	01:00	10.2	49,606,970.2	2,811.1	306
05/09/18	02:00	10.0	39,603,490.5	2,200.2	237
05/09/18	03:00	10.3 C	56,606,569.5 C	3,239.2	343
05/09/18	04:00	10.1	64,181,968.5	3,601.3	385
05/09/18	05:00	9.9	63,907,202.7	3,514.9	382
05/09/18	06:00	10.0	64,673,055.1	3,592.9	386
05/09/18	07:00	10.2	75,674,483.7	4,288.2	456
05/09/18	08:00	10.3	76,616,480.5	4,384.1	474
05/09/18	09:00	10.3	77,099,958.8	4,411.8	474
05/09/18	10:00	10.4	76,841,706.9	4,439.8	473
05/09/18	11:00	10.4	76,492,016.9	4,472.6	473
05/09/18	12:00	10.6 C	75,865,427.6	4,521.2	480
05/09/18	13:00	10.3 C	68,642,573.6	3,975.1	423
05/09/18	14:00	10.0	48,408,845.9	2,721.7	299
05/09/18	15:00	9.6	32,741,063.1	1,767.1	187
05/09/18	16:00	8.7	29,912,642.9	1,463.1	151
05/09/18	17:00	8.9	29,715,351.9	1,486.9	142
05/09/18	18:00	10.0	45,449,673.2	2,555.3	262
05/09/18	19:00	10.1	66,772,163.3	3,791.6	394
05/09/18	20:00	10.3	72,256,778.1	4,184.3	439
05/09/18	21:00	10.2	62,254,346.7	3,570.1	378
05/09/18	22:00	10.3	55,645,886.3	3,222.4	344

F = Unit Offline
E = Exceedance
M = Maintenance
T = Out Of Control

C = Calibration
S = Substituted
*** = Suspect**

Average Data

Plant: HUNTINGTON PLANT
Interval: 1 Hour
Type: Block
Report Period: 05/08/2018 10:00 Through 05/14/2018 10:59
Time Online Criteria: 1 minute(s)

05/09/18	23:00	9.6	34,268,181.7	1,849.5	201
05/10/18	00:00	9.3	32,389,449.0	1,693.5	174
05/10/18	01:00	8.0	28,158,449.4	1,266.5	127
05/10/18	02:00	8.8	28,225,614.1	1,396.5	135
05/10/18	03:00	9.0	30,155,256.8	1,525.9	150
05/10/18	04:00	8.9	29,297,598.7	1,466.0	144
05/10/18	05:00	9.9 C	38,885,341.3 C	2,164.4	203
05/10/18	06:00	9.5	33,830,677.0	1,807.0	190
05/10/18	07:00	9.0	31,367,669.9	1,587.2	161
05/10/18	08:00	8.6	27,820,249.6	1,345.1	125
05/10/18	09:00	8.8	27,878,378.5	1,379.3	129
05/10/18	10:00	8.7	28,197,243.8	1,379.2	130
05/10/18	11:00	8.7	28,075,080.2	1,373.2	130
05/10/18	12:00	8.5	27,896,815.3	1,333.2	126
05/10/18	13:00	8.7	27,842,224.1	1,361.8	128
05/10/18	14:00	8.5	28,044,258.3	1,340.2	127
05/10/18	15:00	8.7	29,263,380.5	1,431.3	138
05/10/18	16:00	8.7	28,017,834.4	1,370.4	130
05/10/18	17:00	10.0	34,806,600.6	1,956.9	194
05/10/18	18:00	9.6	38,548,823.9	2,080.6	221
05/10/18	19:00	9.9	43,020,762.6	2,394.5	250
05/10/18	20:00	9.9	60,271,284.2	3,354.7	357
05/10/18	21:00	9.7	55,358,175.6	3,019.0	329
05/10/18	22:00	9.5	50,707,495.8	2,708.3	298
05/10/18	23:00	9.2	37,573,894.8	1,943.5	213
05/11/18	00:00	7.8	28,075,292.3	1,231.2	128
05/11/18	01:00	8.4	27,514,647.1	1,299.4	126
05/11/18	02:00	8.4	27,491,175.0	1,298.3	126
05/11/18	03:00	8.3	27,458,464.6	1,281.3	125
05/11/18	04:00	8.4	27,497,430.5	1,298.6	126
05/11/18	05:00	8.9 C	28,553,371.6 C	1,428.7	133
05/11/18	06:00	9.4	34,874,198.3	1,843.0	196
05/11/18	07:00	9.7	37,917,376.2	2,067.8	224
05/11/18	08:00	7.7	27,998,232.9	1,212.1	128
05/11/18	09:00	8.3	27,620,500.0	1,288.9	125
05/11/18	10:00	8.3	27,796,396.1	1,297.1	125
05/11/18	11:00	8.3	27,576,984.9	1,286.9	125
05/11/18	12:00	8.5	26,843,216.5	1,282.8	125
05/11/18	13:00	8.6	26,745,313.1	1,293.2	126
05/11/18	14:00	8.4	26,723,870.2	1,262.1	126

F = Unit Offline
E = Exceedance
M = Maintenance
T = Out Of Control

C = Calibration
S = Substituted
*** = Suspect**

Average Data

Plant: HUNTINGTON PLANT
Interval: 1 Hour
Type: Block
Report Period: 05/08/2018 10:00 Through 05/14/2018 10:59
Time Online Criteria: 1 minute(s)

05/11/18	15:00	8.3	26,803,534.2	1,250.8	125
05/11/18	16:00	8.3	26,597,022.3	1,241.1	125
05/11/18	17:00	8.3	26,704,583.1	1,246.2	125
05/11/18	18:00	8.6	28,819,224.7	1,393.4	138
05/11/18	19:00	9.4	44,747,476.6	2,364.8	255
05/11/18	20:00	9.9	65,713,572.0	3,657.7	387
05/11/18	21:00	10.0	74,912,660.2	4,211.8	458
05/11/18	22:00	10.1	76,120,377.3	4,322.4	477
05/11/18	23:00	10.0	75,530,441.4	4,246.4	472
05/12/18	00:00	10.1	75,280,622.9	4,274.8	473
05/12/18	01:00	10.0	66,073,909.0	3,714.8	410
05/12/18	02:00	9.9	51,959,162.3	2,892.1	323
05/12/18	03:00	9.3	36,720,152.1	1,920.0	213
05/12/18	04:00	9.6	39,607,288.9	2,137.7	233
05/12/18	05:00	9.6 C	50,956,378.0 C	2,750.2	295
05/12/18	06:00	9.9	58,468,893.9	3,254.4	354
05/12/18	07:00	9.8	54,407,442.5	2,997.7	328
05/12/18	08:00	9.0	34,955,753.1	1,768.8	196
05/12/18	09:00	8.2	26,923,359.2	1,241.2	125
05/12/18	10:00	8.7	27,114,739.3	1,326.3	126
05/12/18	11:00	8.7	27,333,932.3	1,337.0	126
05/12/18	12:00	8.6	27,367,384.9	1,323.2	125
05/12/18	13:00	8.6	27,292,098.2	1,319.6	126
05/12/18	14:00	8.7	28,127,061.4	1,375.8	131
05/12/18	15:00	8.4	27,319,221.6	1,290.2	126
05/12/18	16:00	8.7	27,220,461.8	1,331.4	126
05/12/18	17:00	8.7	27,185,837.3	1,329.7	126
05/12/18	18:00	9.0	29,357,576.9	1,485.5	140
05/12/18	19:00	9.6	41,698,411.3	2,250.6	232
05/12/18	20:00	9.8	60,837,547.9	3,352.0	355
05/12/18	21:00	10.0	64,315,681.1	3,616.0	392
05/12/18	22:00	9.8	51,191,376.4	2,820.5	314
05/12/18	23:00	9.8	43,349,441.1	2,388.4	265
05/13/18	00:00	8.5	28,451,154.2	1,359.6	146
05/13/18	01:00	9.1	30,796,611.5	1,575.7	160
05/13/18	02:00	8.4	26,861,498.6	1,268.5	125
05/13/18	03:00	8.9	27,153,008.1	1,358.7	130
05/13/18	04:00	8.4	26,953,224.4	1,272.9	126
05/13/18	05:00	8.7 C	26,931,673.1 C	1,317.3	125
05/13/18	06:00	8.6	26,896,996.8	1,300.5	126

F = Unit Offline
E = Exceedance
M = Maintenance
T = Out Of Control

C = Calibration
S = Substituted
*** = Suspect**

Average Data

Plant: HUNTINGTON PLANT
Interval: 1 Hour
Type: Block
Report Period: 05/08/2018 10:00 Through 05/14/2018 10:59
Time Online Criteria: 1 minute(s)

05/13/18	07:00	8.6	27,009,453.1	1,305.9	125
05/13/18	08:00	8.6	27,019,854.9	1,306.4	125
05/13/18	09:00	8.5	27,007,680.5	1,290.7	125
05/13/18	10:00	8.5	27,030,563.0	1,291.8	125
05/13/18	11:00	8.7	27,043,188.3	1,322.8	125
05/13/18	12:00	8.7	27,082,478.6	1,324.7	125
05/13/18	13:00	8.7	27,083,966.3	1,324.8	125
05/13/18	14:00	8.7	27,089,418.3	1,325.0	125
05/13/18	15:00	9.0	28,583,331.7	1,446.3	138
05/13/18	16:00	8.6	28,206,834.8	1,363.8	135
05/13/18	17:00	8.8	27,402,714.1	1,355.8	129
05/13/18	18:00	9.1	28,129,384.5	1,439.2	140
05/13/18	19:00	9.7	43,240,512.8	2,358.2	242
05/13/18	20:00	10.0	63,438,932.6	3,566.7	375
05/13/18	21:00	10.2	70,892,040.3	4,065.4	430
05/13/18	22:00	10.3	66,579,799.5	3,855.6	411
05/13/18	23:00	10.0	53,273,730.9	2,995.2	325
05/14/18	00:00	9.8	37,960,229.9	2,091.5	223
05/14/18	01:00	8.7	27,732,182.6	1,356.5	140
05/14/18	02:00	9.0	26,993,360.0	1,365.9	130
05/14/18	03:00	9.2	28,850,971.2	1,492.3	141
05/14/18	04:00	9.7	33,737,543.1	1,839.9	188
05/14/18	05:00	9.4 C	29,737,889.8 C	1,571.6	155
05/14/18	06:00	9.5	31,764,864.8	1,696.6	170
05/14/18	07:00	8.6	27,715,598.1	1,340.1	134
05/14/18	08:00	8.8	26,985,155.5	1,335.1	125
05/14/18	09:00	9.0	27,403,614.5	1,386.7	130
05/14/18	10:00	9.3	27,752,502.9	1,451.1	137

Average	9.3	43,147,550.1	2,330.2	242
Minimum	7.7	26,597,022.3	1,212.1	125
Maximum	10.6	77,953,620.8	4,564.9	481
Summation	1,355.2	6,256,394,761.4	337,882.9	35,155
Geometric Mean	9.3	39,665,277.3	2,072.9	211
Included Data Points	145	145	145	145
Total number of Data Points	145	145	145	145

F = Unit Offline
E = Exceedance
M = Maintenance
T = Out Of Control

C = Calibration
S = Substituted
*** = Suspect**

Average Data

Plant: HUNTINGTON PLANT
Interval: 1 Hour
Type: Block
Report Period: 05/15/2018 08:00 Through 05/21/2018 08:59
Time Online Criteria: 1 minute(s)

Source		UNIT2			
Parameter Unit		CO2 (PCT)	FLOWSCFH (SCFH)	HEATIN (MMBTU/HR)	UNITLOAD (MW)
05/15/18	08:00	9.4	33,209,515.5	1,741.2	188
05/15/18	09:00	8.5	26,990,252.5	1,279.6	124
05/15/18	10:00	9.2	27,337,885.7	1,402.8	130
05/15/18	11:00	8.8	27,407,580.1	1,345.3	129
05/15/18	12:00	8.6	27,386,777.8	1,313.7	126
05/15/18	13:00	8.9	27,081,523.3	1,344.4	127
05/15/18	14:00	8.8	27,420,031.2	1,345.9	128
05/15/18	15:00	8.7	27,786,020.3	1,348.4	131
05/15/18	16:00	9.3	27,470,317.6	1,425.0	134
05/15/18	17:00	9.1	29,679,483.5	1,506.5	149
05/15/18	18:00	9.6	34,351,293.2	1,839.4	188
05/15/18	19:00	10.1	51,955,533.9	2,927.0	307
05/15/18	20:00	10.1	70,933,560.9	3,996.1	421
05/15/18	21:00	10.1	77,123,671.2	4,344.8	458
05/15/18	22:00	10.3	77,331,005.0	4,442.7	466
05/15/18	23:00	10.5	72,159,932.6	4,226.2	446
05/16/18	00:00	10.2	55,629,026.1	3,164.9	340
05/16/18	01:00	9.7	43,250,802.5	2,340.1	255
05/16/18	02:00	9.5	31,345,747.7	1,661.0	175
05/16/18	03:00	8.4	27,408,595.6	1,284.2	125
05/16/18	04:00	9.2	29,772,850.1	1,527.8	144
05/16/18	05:00	9.7 C	37,296,171.3 C	2,017.9	199
05/16/18	06:00	9.8	47,253,706.0	2,583.0	273
05/16/18	07:00	9.1	37,018,433.7	1,878.9	202
05/16/18	08:00	8.3	27,530,203.2	1,274.5	125
05/16/18	09:00	8.6	27,433,862.1	1,316.0	126
05/16/18	10:00	8.7	27,332,461.4	1,326.3	126
05/16/18	11:00	9.2	30,595,918.7	1,570.0	152
05/16/18	12:00	9.2	35,103,190.4	1,801.3	189
05/16/18	13:00	9.2	37,072,973.2	1,902.4	199
05/16/18	14:00	9.8	48,031,937.0	2,625.5	279
05/16/18	15:00	9.2	34,229,791.9	1,756.5	186
05/16/18	16:00	8.3	29,018,299.7	1,343.4	134
05/16/18	17:00	9.1	29,566,815.7	1,500.7	148
05/16/18	18:00	9.0	33,993,995.2	1,706.5	174
05/16/18	19:00	9.8	55,116,670.7	3,012.8	320
05/16/18	20:00	10.0	72,858,772.2	4,063.9	432

F = Unit Offline
E = Exceedance
M = Maintenance
T = Out Of Control

C = Calibration
S = Substituted
*** = Suspect**

Average Data

Plant: HUNTINGTON PLANT
Interval: 1 Hour
Type: Block
Report Period: 05/15/2018 08:00 Through 05/21/2018 08:59
Time Online Criteria: 1 minute(s)

05/16/18	21:00	10.1	73,769,190.6	4,155.8	446
05/16/18	22:00	9.8	52,813,426.1	2,886.9	318
05/16/18	23:00	9.2	33,411,961.3	1,714.6	184
05/17/18	00:00	8.3	27,478,532.6	1,272.2	124
05/17/18	01:00	8.7	27,203,230.1	1,320.1	125
05/17/18	02:00	8.7	27,111,081.9	1,315.6	125
05/17/18	03:00	8.7	26,970,599.2	1,308.8	125
05/17/18	04:00	8.7	27,126,504.4	1,316.4	125
05/17/18	05:00	9.5 C	31,549,456.0 C	1,671.7	153
05/17/18	06:00	9.6	36,842,011.2	1,972.7	207
05/17/18	07:00	8.5	27,350,624.1	1,296.7	132
05/17/18	08:00	8.8	26,828,495.8	1,316.8	124
05/17/18	09:00	8.9	26,890,124.8	1,334.9	127
05/17/18	10:00	8.8	26,902,369.5	1,320.5	126
05/17/18	11:00	8.7	26,973,681.0	1,309.0	125
05/17/18	12:00	9.0	27,703,073.7	1,390.7	132
05/17/18	13:00	8.7	27,161,849.8	1,318.1	127
05/17/18	14:00	8.9	27,104,067.4	1,345.5	129
05/17/18	15:00	8.6	27,256,296.7	1,307.4	125
05/17/18	16:00	8.7	27,177,778.5	1,318.9	126
05/17/18	17:00	8.8	27,549,577.3	1,352.3	130
05/17/18	18:00	9.2	29,451,975.3	1,511.4	147
05/17/18	19:00	9.8	54,445,529.8	2,976.2	314
05/17/18	20:00	10.1	75,227,068.1	4,238.0	453
05/17/18	21:00	10.5	66,964,182.6	3,921.9	423
05/17/18	22:00	10.1	53,131,221.0	2,993.2	329
05/17/18	23:00	9.3	34,663,213.3	1,798.1	196
05/18/18	00:00	7.9	27,968,078.3	1,232.4	123
05/18/18	01:00	8.7	27,520,380.3	1,335.5	128
05/18/18	02:00	8.6	27,242,064.5	1,306.8	126
05/18/18	03:00	8.7	26,782,157.9	1,299.6	126
05/18/18	04:00	9.0	27,155,868.9	1,363.3	129
05/18/18	05:00	9.7 C	34,522,291.8 C	1,867.8	187
05/18/18	06:00	9.7	36,659,448.3	1,983.4	210
05/18/18	07:00	9.0	29,276,673.0	1,469.7	156
05/18/18	08:00	8.9	26,422,644.9	1,311.7	124
05/18/18	09:00	9.0	26,379,733.0	1,324.3	125
05/18/18	10:00	8.9	26,540,199.4	1,317.5	125
05/18/18	11:00	8.8	26,565,876.5	1,304.0	125
05/18/18	12:00	8.8	26,597,998.8	1,305.5	125
05/18/18	13:00	8.7	26,725,095.3	1,296.9	125

F = Unit Offline
E = Exceedance
M = Maintenance
T = Out Of Control

C = Calibration
S = Substituted
*** = Suspect**

Average Data

Plant: HUNTINGTON PLANT
Interval: 1 Hour
Type: Block
Report Period: 05/15/2018 08:00 Through 05/21/2018 08:59
Time Online Criteria: 1 minute(s)

05/18/18	14:00	8.7	26,823,695.2	1,301.7	125
05/18/18	15:00	8.7	26,684,284.4	1,294.9	125
05/18/18	16:00	8.7	26,718,302.2	1,296.5	125
05/18/18	17:00	9.3	28,503,203.5	1,478.5	143
05/18/18	18:00	10.0	44,844,223.6	2,501.3	265
05/18/18	19:00	10.2	55,139,434.9	3,137.1	336
05/18/18	20:00	10.1	60,433,402.5	3,404.5	364
05/18/18	21:00	10.0	57,165,742.1	3,188.6	344
05/18/18	22:00	10.0	60,298,263.3	3,363.3	362
05/18/18	23:00	9.8	54,068,190.7	2,955.5	322
05/19/18	00:00	9.3	35,642,393.7	1,848.9	203
05/19/18	01:00	8.6	26,484,180.8	1,270.4	125
05/19/18	02:00	8.9	26,573,693.0	1,319.2	125
05/19/18	03:00	8.9	26,570,516.0	1,319.0	125
05/19/18	04:00	9.4	28,599,244.7	1,499.5	141
05/19/18	05:00	8.3 C	27,167,123.7 C	1,257.7	133
05/19/18	06:00	9.1	26,763,860.8	1,358.5	128
05/19/18	07:00	8.9	26,468,309.2	1,313.9	125
05/19/18	08:00	8.9	26,632,989.3	1,322.1	126
05/19/18	09:00	8.9	26,667,668.3	1,323.9	126
05/19/18	10:00	8.8	26,773,836.1	1,314.2	126
05/19/18	11:00	8.8	26,816,836.2	1,316.3	127
05/19/18	12:00	8.7	26,856,889.1	1,303.3	126
05/19/18	13:00	8.7	26,866,797.8	1,303.7	127
05/19/18	14:00	8.8	27,019,872.8	1,326.3	129
05/19/18	15:00	8.7	26,936,569.4	1,307.2	126
05/19/18	16:00	8.8	26,949,472.7	1,322.8	127
05/19/18	17:00	9.0	27,532,533.0	1,382.2	135
05/19/18	18:00	8.9	30,762,299.5	1,527.1	151
05/19/18	19:00	9.3	39,297,401.6	2,038.5	216
05/19/18	20:00	9.8	54,325,645.6	2,969.6	317
05/19/18	21:00	9.9	51,502,300.9	2,843.9	307
05/19/18	22:00	9.7	55,905,747.5	3,024.8	323
05/19/18	23:00	8.9	33,692,025.2	1,672.6	176
05/20/18	00:00	8.8	27,601,301.4	1,354.8	126
05/20/18	01:00	8.8	27,573,626.9	1,353.4	126
05/20/18	02:00	8.8	27,510,377.6	1,350.3	126
05/20/18	03:00	8.8	27,507,944.8	1,350.2	126
05/20/18	04:00	8.8	27,479,502.3	1,348.8	126
05/20/18	05:00	8.5 C	27,377,835.8 C	1,298.0	126
05/20/18	06:00	8.7	27,218,903.3	1,320.9	125

F = Unit Offline
E = Exceedance
M = Maintenance
T = Out Of Control

C = Calibration
S = Substituted
*** = Suspect**

Average Data

Plant: HUNTINGTON PLANT
Interval: 1 Hour
Type: Block
Report Period: 05/15/2018 08:00 Through 05/21/2018 08:59
Time Online Criteria: 1 minute(s)

05/20/18	07:00	8.6	27,397,251.6	1,314.2	126
05/20/18	08:00	8.6	27,286,381.4	1,308.9	126
05/20/18	09:00	8.6	27,362,037.4	1,312.5	126
05/20/18	10:00	8.6	27,344,721.2	1,311.7	126
05/20/18	11:00	8.5	27,303,095.2	1,294.5	126
05/20/18	12:00	8.6	27,314,238.2	1,310.2	126
05/20/18	13:00	8.6	27,304,757.6	1,309.8	125
05/20/18	14:00	8.5	27,231,064.2	1,291.1	126
05/20/18	15:00	8.5	27,290,991.5	1,293.9	125
05/20/18	16:00	9.0	28,310,703.0	1,421.2	136
05/20/18	17:00	8.7	28,819,486.7	1,398.5	140
05/20/18	18:00	9.4	33,783,793.1	1,771.3	180
05/20/18	19:00	9.5	38,962,269.7	2,064.6	216
05/20/18	20:00	9.6	44,204,690.9	2,367.0	256
05/20/18	21:00	8.6	29,277,677.8	1,404.4	149
05/20/18	22:00	8.5	27,438,985.9	1,300.9	125
05/20/18	23:00	8.7	27,218,788.0	1,320.9	126
05/21/18	00:00	8.7	27,375,068.4	1,328.4	126
05/21/18	01:00	8.7	27,362,128.7	1,327.8	126
05/21/18	02:00	8.6	27,435,573.8	1,316.1	125
05/21/18	03:00	8.6	27,436,236.1	1,316.1	125
05/21/18	04:00	8.9	27,294,016.0	1,354.9	127
05/21/18	05:00	8.6 C	27,348,457.4 C	1,311.8	127
05/21/18	06:00	9.5	32,924,825.8	1,744.7	170
05/21/18	07:00	9.6	37,470,093.5	2,006.4	209
05/21/18	08:00	9.7	36,201,584.4	1,958.7	201

Average	9.1	34,499,004.1	1,782.3	180
Minimum	7.9	26,379,733.0	1,232.4	123
Maximum	10.5	77,331,005.0	4,442.7	466
Summation	1,317.8	5,002,355,600.6	258,433.8	26,144
Geometric Mean	9.1	32,779,125.2	1,658.8	165
Included Data Points	145	145	145	145
Total number of Data Points	145	145	145	145

F = Unit Offline
E = Exceedance
M = Maintenance
T = Out Of Control

C = Calibration
S = Substituted
*** = Suspect**

Average Data

Plant: HUNTINGTON PLANT
Interval: 1 Hour
Type: Block
Report Period: 05/24/2018 07:00 Through 05/30/2018 08:59
Time Online Criteria: 1 minute(s)

Source		UNIT2			
Parameter Unit		CO2 (PCT)	FLOWSCFH (SCFH)	HEATIN (MMBTU/HR)	UNITLOAD (MW)
05/24/18	07:00	10.7	40,469,522.4	2,415.3	247
05/24/18	08:00	10.4	36,564,814.3	2,121.1	216
05/24/18	09:00	9.2 M	29,199,853.2	1,498.4	155
05/24/18	10:00	9.8	27,468,244.1	1,501.5	138
05/24/18	11:00	9.8	34,372,445.2	1,878.8	187
05/24/18	12:00	9.2	28,571,968.4	1,466.2	145
05/24/18	13:00	9.4	27,270,550.9	1,429.8	136
05/24/18	14:00	9.3	27,239,033.5	1,413.0	135
05/24/18	15:00	9.4	29,841,601.7	1,564.6	152
05/24/18	16:00	9.3	33,204,021.0	1,722.4	172
05/24/18	17:00	9.7	38,269,452.4	2,070.5	213
05/24/18	18:00	10.1	60,824,393.9	3,426.5	352
05/24/18	19:00	10.3	76,437,821.0	4,391.5	454
05/24/18	20:00	10.7	77,023,315.1	4,596.9	477
05/24/18	21:00	10.8	75,973,752.7	4,576.7	480
05/24/18	22:00	10.7	75,430,855.2	4,501.9	473
05/24/18	23:00	10.5	69,318,068.2	4,059.7	426
05/25/18	00:00	10.4	53,453,166.5	3,100.8	336
05/25/18	01:00	10.1	38,315,755.5	2,158.5	232
05/25/18	02:00	9.8	37,131,539.5	2,029.7	215
05/25/18	03:00	9.2	29,840,704.0	1,531.3	152
05/25/18	04:00	9.4	29,337,940.8	1,538.2	153
05/25/18	05:00	10.4 C	46,282,200.1 C	2,684.8	273
05/25/18	06:00	10.4	56,401,921.8	3,271.8	343
05/25/18	07:00	10.6	64,280,123.7	3,800.5	397
05/25/18	08:00	10.4	55,570,123.7	3,223.5	343
05/25/18	09:00	10.6	72,575,756.9	4,291.0	445
05/25/18	10:00	10.4	62,571,865.0	3,629.7	384
05/25/18	11:00	10.6	58,711,220.4	3,471.3	367
05/25/18	12:00	10.2	46,413,747.0	2,640.7	290
05/25/18	13:00	10.0	36,858,765.7	2,055.9	217
05/25/18	14:00	9.4	34,932,157.6	1,831.5	195
05/25/18	15:00	9.1	27,609,708.8	1,401.4	134
05/25/18	16:00	9.5	28,125,205.4	1,490.3	140
05/25/18	17:00	9.3	29,128,222.6	1,511.0	149
05/25/18	18:00	9.5	38,494,956.9	2,039.8	211
05/25/18	19:00	9.9	53,196,963.4	2,937.6	311

F = Unit Offline
E = Exceedance
M = Maintenance
T = Out Of Control

C = Calibration
S = Substituted
*** = Suspect**

Average Data

Plant: HUNTINGTON PLANT
Interval: 1 Hour
Type: Block
Report Period: 05/24/2018 07:00 Through 05/30/2018 08:59
Time Online Criteria: 1 minute(s)

05/25/18	20:00	10.1	62,634,824.6	3,528.6	367
05/25/18	21:00	9.8	55,384,296.8	3,027.4	323
05/25/18	22:00	10.0	56,234,492.9	3,136.6	337
05/25/18	23:00	9.9	49,134,351.3	2,713.2	295
05/26/18	00:00	9.7	40,541,508.9	2,193.5	240
05/26/18	01:00	9.8	39,993,494.1	2,186.1	232
05/26/18	02:00	9.6	37,476,019.9	2,006.7	210
05/26/18	03:00	9.6	39,585,877.1	2,119.7	224
05/26/18	04:00	9.5	32,452,767.1	1,719.7	175
05/26/18	05:00	9.3 C	27,188,243.1 C	1,410.3	136
05/26/18	06:00	9.3	27,008,683.7	1,401.0	134
05/26/18	07:00	9.3	27,234,612.1	1,412.8	135
05/26/18	08:00	9.2	27,150,224.2	1,393.2	135
05/26/18	09:00	9.1	27,386,797.2	1,390.1	135
05/26/18	10:00	9.2	27,448,408.9	1,408.5	135
05/26/18	11:00	9.2	27,624,380.9	1,417.5	137
05/26/18	12:00	9.2	27,774,276.2	1,425.2	138
05/26/18	13:00	9.3	28,574,081.0	1,482.2	146
05/26/18	14:00	9.2	28,296,426.7	1,452.0	141
05/26/18	15:00	9.0	28,516,109.9	1,431.5	143
05/26/18	16:00	9.2	28,180,849.3	1,446.1	138
05/26/18	17:00	8.6	27,968,824.7	1,341.6	133
05/26/18	18:00	8.8	29,560,935.8	1,451.0	139
05/26/18	19:00	9.6	37,317,743.3	1,998.2	209
05/26/18	20:00	9.7	50,546,019.5	2,734.8	294
05/26/18	21:00	9.9	46,976,619.2	2,594.1	276
05/26/18	22:00	10.1	64,861,727.0	3,654.0	388
05/26/18	23:00	10.5	66,040,356.2	3,867.7	409
05/27/18	00:00	9.7	49,452,485.0	2,675.6	296
05/27/18	01:00	8.9	30,348,449.7	1,506.5	162
05/27/18	02:00	9.1	27,192,339.3	1,380.2	134
05/27/18	03:00	9.1	27,723,276.5	1,407.2	138
05/27/18	04:00	9.2	27,828,703.6	1,428.0	139
05/27/18	05:00	8.9 C	28,176,777.0 C	1,398.8	142
05/27/18	06:00	9.0	27,166,036.5	1,363.8	135
05/27/18	07:00	9.0	27,111,407.2	1,361.0	134
05/27/18	08:00	8.8	27,292,063.8	1,339.6	133
05/27/18	09:00	8.9	27,434,491.2	1,361.9	134
05/27/18	10:00	8.6	27,430,971.7	1,315.8	128
05/27/18	11:00	8.6	27,087,742.6	1,299.4	125
05/27/18	12:00	8.6	27,069,241.3	1,298.5	125

F = Unit Offline
E = Exceedance
M = Maintenance
T = Out Of Control

C = Calibration
S = Substituted
*** = Suspect**

Average Data

Plant: HUNTINGTON PLANT
Interval: 1 Hour
Type: Block
Report Period: 05/24/2018 07:00 Through 05/30/2018 08:59
Time Online Criteria: 1 minute(s)

05/27/18	13:00	8.6	27,228,269.0	1,306.1	125
05/27/18	14:00	8.6	27,268,497.0	1,308.0	125
05/27/18	15:00	8.6	27,302,062.4	1,309.6	125
05/27/18	16:00	8.6	27,211,111.5	1,305.3	125
05/27/18	17:00	8.6	27,261,587.5	1,307.7	125
05/27/18	18:00	9.4	32,378,940.9	1,697.7	166
05/27/18	19:00	10.1	53,504,497.3	3,014.2	315
05/27/18	20:00	10.6	72,800,200.5	4,304.2	449
05/27/18	21:00	10.5	74,449,826.7	4,360.3	462
05/27/18	22:00	10.5	76,131,921.5	4,458.8	471
05/27/18	23:00	10.6	74,124,333.8	4,382.5	462
05/28/18	00:00	10.6	70,842,035.9	4,188.5	444
05/28/18	01:00	10.5	73,367,510.5	4,296.9	454
05/28/18	02:00	10.3	60,846,749.0	3,495.7	374
05/28/18	03:00	9.8	37,460,651.8	2,047.7	225
05/28/18	04:00	9.4	30,787,077.8	1,614.2	166
05/28/18	05:00	8.3 C	27,848,172.4 C	1,289.2	130
05/28/18	06:00	9.6	29,248,998.3	1,566.2	154
05/28/18	07:00	8.7	27,307,114.1	1,325.1	130
05/28/18	08:00	8.7	26,973,965.5	1,309.0	126
05/28/18	09:00	8.7	27,161,558.3	1,318.1	126
05/28/18	10:00	8.7	27,233,101.6	1,321.5	126
05/28/18	11:00	8.7	27,298,877.3	1,324.7	126
05/28/18	12:00	8.7	27,228,388.9	1,321.3	126
05/28/18	13:00	8.7	27,246,352.0	1,322.2	126
05/28/18	14:00	8.7	27,110,326.6	1,315.5	126
05/28/18	15:00	8.8	27,134,171.2	1,331.9	126
05/28/18	16:00	8.7	27,087,146.7	1,314.4	126
05/28/18	17:00	9.1	28,066,294.0	1,424.6	134
05/28/18	18:00	9.3	30,999,193.6	1,608.0	160
05/28/18	19:00	9.9	50,469,057.9	2,786.9	292
05/28/18	20:00	9.9	56,960,232.7	3,145.3	333
05/28/18	21:00	10.1	51,524,581.1	2,902.7	312
05/28/18	22:00	10.2	61,622,865.7	3,505.9	367
05/28/18	23:00	9.8	45,010,886.7	2,460.4	268
05/29/18	00:00	9.6	32,481,541.5	1,739.3	186
05/29/18	01:00	8.3	27,184,009.4	1,258.5	125
05/29/18	02:00	8.7	27,183,792.0	1,319.2	126
05/29/18	03:00	8.9	27,733,533.4	1,376.8	133
05/29/18	04:00	9.3	32,253,370.5	1,673.1	164
05/29/18	05:00	9.9 C	51,215,258.3 C	2,828.1	292

F = Unit Offline
E = Exceedance
M = Maintenance
T = Out Of Control

C = Calibration
S = Substituted
*** = Suspect**

Average Data

Plant: HUNTINGTON PLANT
Interval: 1 Hour
Type: Block
Report Period: 05/24/2018 07:00 Through 05/30/2018 08:59
Time Online Criteria: 1 minute(s)

05/29/18	06:00	9.7	41,716,811.8	2,257.1	237
05/29/18	07:00	8.8	28,303,946.6	1,389.3	139
05/29/18	08:00	9.1	27,061,352.4	1,373.5	126
05/29/18	09:00	9.0	27,144,213.9	1,362.7	126
05/29/18	10:00	9.3	28,156,123.8	1,460.6	135
05/29/18	11:00	8.9	28,590,632.4	1,419.3	137
05/29/18	12:00	10.1	37,636,126.1	2,120.3	209
05/29/18	13:00	10.1	59,687,174.1	3,362.5	349
05/29/18	14:00	10.2	70,003,266.8	3,982.7	414
05/29/18	15:00	10.1	77,280,236.3	4,353.6	456
05/29/18	16:00	10.1	69,033,687.3	3,889.1	411
05/29/18	17:00	10.2	59,323,457.6	3,375.1	359
05/29/18	18:00	10.3	70,646,428.7	4,058.7	428
05/29/18	19:00	10.2	78,570,554.3	4,470.2	469
05/29/18	20:00	10.3	77,947,230.6	4,478.2	474
05/29/18	21:00	10.6	73,205,581.4	4,328.3	455
05/29/18	22:00	10.6	73,795,601.9	4,363.1	456
05/29/18	23:00	10.1	65,368,740.4	3,682.6	382
05/30/18	00:00	10.2	67,399,764.1	3,819.3	401
05/30/18	01:00	10.4	63,163,410.5	3,649.4	387
05/30/18	02:00	10.4	59,980,786.1	3,465.6	371
05/30/18	03:00	10.2	50,353,085.3	2,853.3	306
05/30/18	04:00	9.8	40,743,566.8	2,218.3	238
05/30/18	05:00	10.1 C	43,122,644.8 C	2,419.7	252
05/30/18	06:00	9.9	50,537,023.2	2,779.5	299
05/30/18	07:00	9.8	42,039,199.3	2,288.8	243
05/30/18	08:00	8.4	28,050,271.7	1,309.0	134

Average	9.6	42,606,353.9	2,334.0	241
Minimum	8.3	26,973,965.5	1,258.5	125
Maximum	10.8	78,570,554.3	4,596.9	480
Summation	1,400.8	6,220,527,676.5	340,768.8	35,120
Geometric Mean	9.6	39,540,171.0	2,110.5	214
Included Data Points	146	146	146	146
Total number of Data Points	146	146	146	146

F = Unit Offline
E = Exceedance
M = Maintenance
T = Out Of Control

C = Calibration
S = Substituted
*** = Suspect**

Appendix D: Laboratory Data

Laboratory Analysis

043AS-361457
PacifiCorp
Huntington Unit 2

EPA Method 30B Sample Analysis

Start Date	4/24/2018		4/30/2018		5/8/2018		5/15/2018		5/24/2018	
Start Time	8:38		14:23		10:22		8:01		6:58	
End Date	4/30/2018		5/6/2018		5/14/2018		5/21/2018		5/30/2018	
End Time	8:38		14:23		10:22		8:01		6:58	
Elapsed Time (hrs)	144		144		144		144		144	
Trap ID	451998	465597	450084	480741	451987	480732	450073	465536	451931	480728
Section 1 Hg Mass (ng)	67.9	45.6	56.5	33.4	38.3	16.9	32.3	10.7	60.1	30.9
Section 2 Hg Mass (ng)	0.0	0.0	0.5	1.0	1.3	1.2	2.0	1.5	0.0	0.4
Spike Mass (ng)	25	0	25	0	25	0	25	0	25	0
Total Hg Mass less Spike (ng)	42.9	45.6	32.0	34.4	14.6	18.1	9.2	12.2	35.1	31.2
Breakthrough (%)	0.0%	0.0%	1.0%	3.0%	3.4%	7.3%	6.0%	14.1%	0.0%	1.2%
Volume of Sample (Std L)	2315.529	2307.760	2338.201	2333.522	2349.421	2337.379	2347.805	2335.454	2356.273	2340.451
Volume of Sample (dscm)	2.316	2.308	2.338	2.334	2.349	2.337	2.348	2.335	2.356	2.340
Hg Concentration (µg/dscm)	0.02	0.02	0.01	0.01	0.01	0.01	0.00	0.01	0.01	0.01
Relative Deviation (%)	3.3%		3.7%		11.0%		14.3%		5.5%	
Measured Spike Concentration (µg/dscm)	0.01		0.01		0.01		0.01		0.01	
Spike Recovery (%)	88%	n/a	90%	n/a	86%	n/a	88%	n/a	115%	n/a
Average Spike Recovery (%)	**93%**	(85-115%)								
Average Hg Concentration >1 µg/dscm?	N									
Breakthrough Limit =	**20%**									
Relative Deviation Limit =	**20%**	**or +/- 0.2 ug/dscm**								

043AS-361457
PacifiCorp
Huntington Unit 2
Analysis Date: 5/11/18

EPA Method 30B §11.1: Calibration

Hg Mass (ng)	Area Counts	Calculated Hg Mass (ng)	% Difference
50	12400	53.3	**6.6%**
100	24300	100.4	**0.4%**
500	117000	490.4	**1.9%**
1000	227000	1007.5	**0.7%**
2000	410000	1998.5	**0.1%**

Polynomial Regression

Curve: y = 2.44E-09x^2 + 0.0039x + 5.0475

A_2 = 2.44E-09

A_1 = 0.0039

B = 5.0475

R^2 = 1.00

Low-Level Response Factor

Hg Mass (ng) =	25
Area Counts =	5810
Response Factor =	232.4

EPA Method 30B §11.1: Independent Calibration Standard

Expected Value (ng)	500
Area Counts	123000
Measured Value (ng)	517.0
% Difference	**3.4%**
Limit	**10%**

EPA Method 30B §11.4: Continuing Calibration Verification Standard

Run #	Expected Value (ng)	Area Counts	Measured Value (ng)	% Difference
1	500	111000	463.8	7.2%

EPA Method 30B Sample Analysis

Sample ID	451998	465597
Inputs		
Area Counts (Section 1)	16100	10600
Area Counts (Section 2)	34	120
Spike Mass (ng)	25	0
Calculations		
Section 1 Hg Mass (ng)	67.9	45.6
Section 2 Hg Mass (ng)	0.0	0.0
Total Hg Mass less Spike (ng)	42.9	45.6
Breakthrough (%)	0.0%	0.0%
Volume of Sample (Std L)	2315.529	2307.776
Volume of Sample (dscm)	2.316	2.308
Hg Concentration (µg/dscm)	0.02	0.02
Relative Deviation (%)	3.3%	
Measured Spike Concentration (µg/dscm)	0.01	
Spike Recovery (%)	88%	n/a

Average Hg Concentration =	**0.02**	
Breakthrough Limit =	**20%**	
Relative Deviation Limit =	**20%**	**or +/- 0.2 ug/dscm**

043AS-361457
PacifiCorp
Huntington Unit 2
Analysis Date: 5/11/18

EPA Method 30B §11.1: Calibration

Hg Mass (ng)	Area Counts	Calculated Hg Mass (ng)	% Difference
50	12400	53.3	**6.6%**
100	24300	100.4	**0.4%**
500	117000	490.4	**1.9%**
1000	227000	1007.5	**0.7%**
2000	410000	1998.5	**0.1%**

Polynomial Regression

Curve: y = 2.44E-09x^2 + 0.0039x + 5.0475

A_2 = 2.44E-09

A_1 = 0.0039

B = 5.0475

R^2 = 1.00

Low-Level Response Factor

Hg Mass (ng) =	25
Area Counts =	5810
Response Factor =	232.4

EPA Method 30B §11.1: Independent Calibration Standard

Expected Value (ng)	500
Area Counts	123000
Measured Value (ng)	517.0
% Difference	**3.4%**
Limit	**10%**

EPA Method 30B §11.4: Continuing Calibration Verification Standard

Run #	Expected Value (ng)	Area Counts	Measured Value (ng)	% Difference
1	500	124000	521.5	4.3%

EPA Method 30B Sample Analysis

Sample ID	450084	480741
Inputs		
Area Counts (Section 1)	13200	7760
Area Counts (Section 2)	126	236
Spike Mass (ng)	25	0
Calculations		
Section 1 Hg Mass (ng)	56.5	33.4
Section 2 Hg Mass (ng)	0.5	1.0
Total Hg Mass less Spike (ng)	32.0	34.4
Breakthrough (%)	1.0%	3.0%
Volume of Sample (Std L)	2338.201	2333.522
Volume of Sample (dscm)	2.338	2.334
Hg Concentration (µg/dscm)	0.01	0.01
Relative Deviation (%)	3.7%	
Measured Spike Concentration (µg/dscm)	0.01	
Spike Recovery (%)	90%	n/a

Average Hg Concentration =	**0.01**	
Breakthrough Limit =	**20%**	
Relative Deviation Limit =	**20%**	**or +/- 0.2 ug/dscm**

043AS-361457
PacifiCorp
Huntington Unit 2
Analysis Date: 5/24/18

EPA Method 30B §11.1: Calibration

Hg Mass (ng)	Area Counts	Calculated Hg Mass (ng)	% Difference
50	11500	51.6	**3.3%**
100	22800	96.2	**3.8%**
500	124000	505.0	**1.0%**
1000	240000	996.6	**0.3%**
2000	461000	2000.6	**0.0%**

Polynomial Regression

Curve: y = 9.07E-10x^2 + 0.0039x + 6.5903

A_2 = 9.07E-10

A_1 = 0.0039

B = 6.5903

R^2 = 1.00

Low-Level Response Factor

Hg Mass (ng) =	2.5
Area Counts =	712
Response Factor =	284.8

EPA Method 30B §11.1: Independent Calibration Standard

Expected Value (ng)	500
Area Counts	122000
Measured Value (ng)	496.8
% Difference	**0.6%**
Limit	**10%**

EPA Method 30B §11.4: Continuing Calibration Verification Standard

Run #	Expected Value (ng)	Area Counts	Measured Value (ng)	% Difference
1	500	117000	476.2	4.8%

EPA Method 30B Sample Analysis

Sample ID	451987	480732
Inputs		
Area Counts (Section 1)	10900	4810
Area Counts (Section 2)	376	350
Spike Mass (ng)	25	
Calculations		
Section 1 Hg Mass (ng)	38.3	16.9
Section 2 Hg Mass (ng)	1.3	1.2
Total Hg Mass less Spike (ng)	14.6	18.1
Breakthrough (%)	3.4%	7.3%
Volume of Sample (Std L)	2349.421	2337.379
Volume of Sample (dscm)	2.349	2.337
Hg Concentration (µg/dscm)	0.01	0.01
Relative Deviation (%)	11.0%	
Measured Spike Concentration (µg/dscm)	0.01	
Spike Recovery (%)	86%	n/a

Average Hg Concentration =	**0.01**	
Breakthrough Limit =	**20%**	
Relative Deviation Limit =	**20%**	**or +/- 0.2 ug/dscm**

043AS-361457
PacifiCorp
Huntington Unit 2
Analysis Date: 5/24/18

EPA Method 30B §11.1: Calibration

Hg Mass (ng)	Area Counts	Calculated Hg Mass (ng)	% Difference
50	11500	51.6	**3.3%**
100	22800	96.2	**3.8%**
500	124000	505.0	**1.0%**
1000	240000	996.6	**0.3%**
2000	461000	2000.6	**0.0%**

Polynomial Regression

Curve: y = 9.07E-10x^2 + 0.0039x + 6.5903

A_2 = 9.07E-10

A_1 = 0.0039

B = 6.5903

R^2 = 1.00

Low-Level Response Factor

Hg Mass (ng) =	2.5
Area Counts =	701
Response Factor =	280.4

EPA Method 30B §11.1: Independent Calibration Standard

Expected Value (ng)	500
Area Counts	122000
Measured Value (ng)	496.8
% Difference	**0.6%**
Limit	**10%**

EPA Method 30B §11.4: Continuing Calibration Verification Standard

Run #	Expected Value (ng)	Area Counts	Measured Value (ng)	% Difference
1	500	117000	476.2	4.8%

EPA Method 30B Sample Analysis

Sample ID	450073	465536
Inputs		
Area Counts (Section 1)	9050	3010
Area Counts (Section 2)	547	423
Spike Mass (ng)	25	0
Calculations		
Section 1 Hg Mass (ng)	32.3	10.7
Section 2 Hg Mass (ng)	2.0	1.5
Total Hg Mass less Spike (ng)	9.2	12.2
Breakthrough (%)	6.0%	14.1%
Volume of Sample (Std L)	2347.805	2335.454
Volume of Sample (dscm)	2.348	2.335
Hg Concentration (µg/dscm)	0.00	0.01
Relative Deviation (%)	14.3%	
Measured Spike Concentration (µg/dscm)	0.01	
Spike Recovery (%)	88%	n/a

Average Hg Concentration =	**0.00**	
Breakthrough Limit =	**20%**	
Relative Deviation Limit =	**20%**	**or +/- 0.2 ug/dscm**

043AS-361457
PacifiCorp
Huntington Unit 2
Analysis Date: 6/11/18

EPA Method 30B §11.1: Calibration

Hg Mass (ng)	Area Counts	Calculated Hg Mass (ng)	% Difference
5	1160	4.8	**3.8%**
10	2180	10.1	**0.6%**
50	9860	50.3	**0.6%**
100	19000	99.8	**0.2%**
500	83500	500.0	**0.0%**

Polynomial Regression

Curve: y = 1.07E-08x^2 + 0.0051x + -1.1349

A_2 = 1.07E-08

A_1 = 0.0051

B = -1.1349

R^2 = 1.00

Low-Level Response Factor

Hg Mass (ng) =	2.5
Area Counts =	702
Response Factor =	280.8

EPA Method 30B §11.1: Independent Calibration Standard

Expected Value (ng)	500
Area Counts	80200
Measured Value (ng)	477.4
% Difference	**4.5%**
Limit	**10%**

EPA Method 30B §11.4: Continuing Calibration Verification Standard

Run #	Expected Value (ng)	Area Counts	Measured Value (ng)	% Difference
1	500	85200	511.8	2.4%

EPA Method 30B Sample Analysis

Sample ID	451931	480728
Inputs		
Area Counts (Section 1)	11700	6180
Area Counts (Section 2)	-22	108
Spike Mass (ng)	25	0
Calculations		
Section 1 Hg Mass (ng)	60.1	30.9
Section 2 Hg Mass (ng)	0.0	0.4
Total Hg Mass less Spike (ng)	35.1	31.2
Breakthrough (%)	0.0%	1.2%
Volume of Sample (Std L)	2356.273	2340.451
Volume of Sample (dscm)	2.356	2.340
Hg Concentration (µg/dscm)	0.01	0.01
Relative Deviation (%)	5.5%	
Measured Spike Concentration (µg/dscm)	0.01	
Spike Recovery (%)	115%	n/a

Average Hg Concentration =	**0.01**	
Breakthrough Limit =	**20%**	
Relative Deviation Limit =	**20%**	**or +/- 0.2 ug/dscm**

Ohio Lumex Co.
9263 Ravenna Rd, Unit A-3
Twinsburg Ohio 44087
Tel. 1-888-876-2611
email: mail@ohiolumex.com

Analyzer # 1350 Certification

MDL (Method Detection Limit)

8 Replicates of 1.08 ng Standard

Rep. No.	Area Response	ng Response
1	241	1
2	278	1.15
3	238	0.989
4	269	1.12
5	258	1.07
6	285	1.18
7	260	1.08
8	251	1.04

Std. Dev. (ng) = 0.069

MDL (ng) = 0.206

EPA Method 30-B Bias Test

Hg	Trap/Std. No.	Actual ng	ng Response	Recovery (%)	Avg.Rec. (%)
Hg(0)	19248	20	22.1	110	113
	64276	20	22.8	114	
	64618	20	23	115	
	52232	2000	2098	105	102
	52248	2000	2070	104	
	52250	2000	1952	98	
Hg(2+)	1	20	19.3	96	95
	2	20	19.3	96	
	3	20	18.6	93	
	1	2000	1900	95	97
	2	2000	2040	102	
	3	2000	1900	95	

40 CFR Part 75 Appendix-K Spike Recovery Test

Number	(ng)	Response	(%)	Rec. (%)
19248	20	22.1	110	113
64276	20	22.8	114	
64618	20	23	115	
52232	2000	2098	105	102
52248	2000	2070	104	
52250	2000	1952	98	
37982	30000	30200	101	107
38020	30000	33700	112	
37992	30000	32400	108	

QA/QC manager: PW

Analyst: Philip D Lo

Date: 3/5/2010

All Standards Used are NIST-Ttraceable
Method Detection Limit (MDL) is defined by "40 CFR, Part 136, Appendix-B"

Ohio Lumex

RA-915+/RP-M324 Calibration Serviceability Test

Serial Number: **1350**

Customer: **EMCo**

Flows, Profile # 1: **2** L/min, Profiles # 2, 3, 4: **4.5** L/min

Date: **3-4-2010**

Profiles Entered?: **X**

Steady State RSD: **0.7**

"Profiles Ready" Light Operational?: **X**

Baseline Drift: **Minimal**

Profile # 1

Profiles Saved?: **X**

ng	Area	Area/ng	Response
5	1,030	206	5.01
10	2,190	219	10.7
50	10,000	200	48.7
100	18,900	189	92
500	107,000	214	521
1,000	206,000	206	1,000
2,200	449,000	204.09	2,190

Mean (Area/ng):	205.440
Std. Dev.:	9.66
% RSD.:	4.7%
1/Mean (Area/ng):	0.00486760

Blank	7		0
500 ng 2nd Src.	106000		516

Profile # 4

ng	Area	Area/ng	Response
10	719	71.9	9.8
50	4,000	80	54.6
100	7,670	76.7	105
500	33,100	66.2	452
1,000	67,800	67.8	926
10,000	758,000	75.8	10,400
50,000	3,500,000	70	47,800
100,000	7,730,000	77.3	106,000

Mean (Area/ng):	73.213
Std. Dev.:	4.96
% RSD.:	6.80%
1/Mean (Area/ng):	0.013659

Appendix E: Calibration Information

Dry Gas Meter Pre-Test and Post-Test Calibrations
Reference Meter Certification
STAC Certification

Hg-324K THERMOCOUPLE CALIBRATION

Date: April 27, 2015

Console S/N: Hg-324K- 1099

Reference Thermocouple: PIE Thermocouple
Serial Number: 104547 (NIST Traceable)
Model: 520

TC Simulator Output (°F)	Stack TC (°F)	Sorbent TC (°F)	Probe TC (°F)	Condenser TC (°F)	Pr Box TC (°F)	Ht Line TC (°F)	Max % Difference	Min % Difference
30	31.15	31.17	31.17	31.22	31.00	31.06	0.25	0.20
60	61.13	61.16	61.16	61.20	60.96	61.01	0.23	0.18
120	121.04	121.09	121.08	121.13	120.93	120.99	0.19	0.16
250	251.02	251.05	251.04	251.09	250.85	250.92	0.15	0.12
500	500.99	501.04	501.02	501.11	500.86	500.98	0.12	0.09

Hg-324K BAROMETER CALIBRATION

Reference Barometer: Compact Digital Barometer from Control Company
Serial Number: 72402089 (NIST Traceable)
Model: 61161-396
ES Elevation: 379' above sea level

Date	Time	Reference (in Hg)	HG-324K (in Hg)	Difference (in Hg)	% Diff.
04/27/15	9:45	29.47	29.512	0.042	0.14

Hg-324K FLOWMETER CALIBRATION

Reference Flowmeter TSI Inc.
Serial Number: 1214006 (NIST Traceable)
Model: MFM 41211

Flowmeter 1	
Sensor Voltage	Reference Meter Flow (lpm)
0.0316	0.000
0.6407	0.311
1.2242	0.605
1.8333	0.911

SLOPE 0.5055

INTERCEPT -0.0146

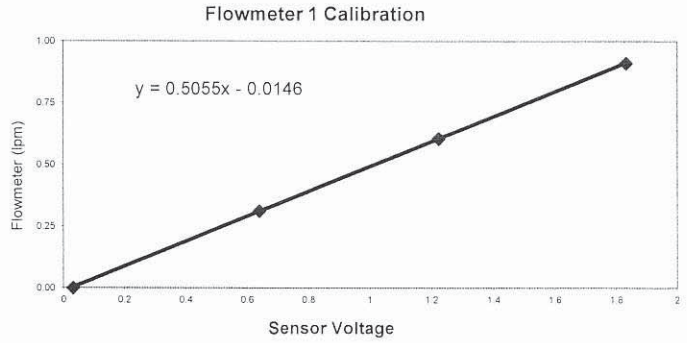

Flowmeter 2	
Sensor Voltage	Reference Meter Flow (lpm)
0.0437	0.000
0.6384	0.305
1.2398	0.604
1.8661	0.919

SLOPE 0.5036

INTERCEPT -0.0199

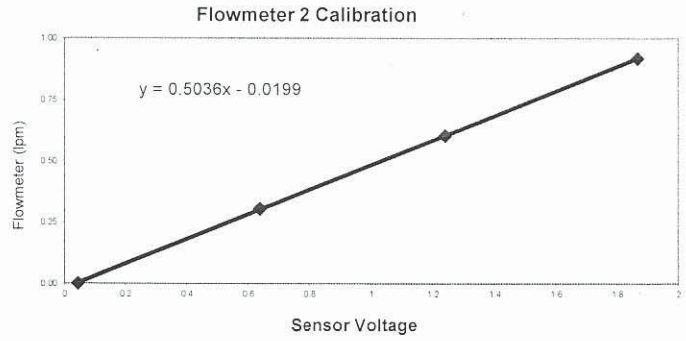

DGM Reference Calibration

Date: April 27, 2015

Reference Meter: Shinagawa Wet Test Meter
Model: W-NK-1A
S/N: 538787

Pbar: 29.46 in. Hg

Dry Gas Meter: Actaris ACD G1.6
S/N: 3605445

AVG γ: 1.000

Counts Per Liter (CPL): 540

Counter Scale Factor: 1.8519 at dP 1.000

RUN #	Flow (lpm)	DGM (liters)	DGM (°F)	WTM initial	WTM final	WTM (liters)	WTM (°F)	DGM Gamma (γ)	Diff (%)
1	0.300	9.433	73.9	205.360	214.752	9.392	72.0	0.999	-0.08
2	0.600	18.613	74.2	214.752	233.307	18.555	72.2	1.001	0.07
3	0.900	27.883	74.6	233.307	261.088	27.781	72.6	1.000	0.01

Assigned To: Hg-324K-1099 Ch-1

Signature

04/27/15
Date

DGM Reference Calibration

Date: April 27, 2015

Reference Meter: Shinagawa Wet Test Meter
Model: W-NK-1A
S/N: 538789

Pbar: 29.46 in. Hg

Dry Gas Meter: Actaris ACD G1.6
S/N: 3605446

AVG γ: 1.000

Counts Per Liter (CPL): 532

Counter Scale Factor: 1.8797 at dP 1.000

RUN #	Flow (lpm)	DGM (liters)	DGM (°F)	WTM initial	WTM final	WTM (liters)	WTM (°F)	DGM Gamma (γ)	Diff (%)
1	0.300	9.421	74.3	607.614	617.021	9.407	71.8	1.003	0.30
2	0.600	18.613	74.7	617.021	635.516	18.495	72.1	0.999	-0.16
3	0.900	27.795	75.0	635.516	663.145	27.629	72.4	0.999	-0.14

Assigned To: Hg-324K-1099 Ch-2

Signature

04/27/15
Date

METHOD 30B DRY GAS METER POST-CALIBRATION USING METRIC REFERENCE METER

1) Connect meterbox to Reference Meter.
2) Record barometric pressure before and after calibration procedure.
3) Run at maximum tested sample rate for a period of 20 minutes.
4) Record data and information in the **GREEN** cells; YELLOW cells are calculated.
5) If the Post-Cal Y differs from the Pre-Cal by less than 5%, no adjustments are necessary.

DATE:	5/31/2018	METER ID #:	HG324K-1099		INITIAL	FINAL
OPERATOR:	sls	REFERENCE METER Y:	1.0082	BAROMETRIC PRESSURE (in Hg):	24.58	24.58

	REFERENCE METER				30B DRY GAS METER					ELAPSED	(1)	(2)	(3)
	DGM TEMP.	DGM READINGS (m^3)			FLOW	DGM TEMP.	DGM READINGS (L)			TIME (MIN)	V_{cr} (STD)	V_m (STD)	Y
RUN #	(°F)	INITIAL	FINAL	NET (V_{cr})	RATE (LPM)	(°F)	INITIAL	FINAL	NET (V_m)	θ	(m^3)	(m^3)	(unitless)
1	75	18.8790	18.8864	0.0074	1	76	0.000	7.323	7.323	6.00	0.0060	0.0059	1.021
2	76	18.8864	18.8937	0.0073	1	76	0.000	7.326	7.326	6.00	0.0060	0.0059	1.005
3	76	18.8937	18.9012	0.0075	1	77	0.000	7.325	7.325	6.00	0.0061	0.0059	1.034

AVERAGE DRY GAS METER CALIBRATION FACTOR, Y = **1.020**

PRE-TEST CALIBRATION FACTOR, Y = 1.000

DIFFERENCE = 1.98% (<5%)

DATE:	5/31/2018	METER ID #:	HG324K-1099		INITIAL	FINAL
OPERATOR:	sls	REFERENCE METER Y:	1.0082	BAROMETRIC PRESSURE (in Hg):	24.58	24.58

	REFERENCE METER				30B DRY GAS METER					ELAPSED	(1)	(2)	(3)
	DGM TEMP.	DGM READINGS (m^3)			FLOW	DGM TEMP.	DGM READINGS (L)			TIME (MIN)	V_{cr} (STD)	V_m (STD)	Y
RUN #	(°F)	INITIAL	FINAL	NET (V_{cr})	RATE (LPM)	(°F)	INITIAL	FINAL	NET (V_m)	θ	(m^3)	(m^3)	(unitless)
1	77	18.9012	18.9085	0.0073	1	77	0.000	7.350	7.350	6.00	0.0059	0.0059	1.001
2	77	18.9085	18.9156	0.0071	1	77	0.000	7.351	7.351	6.00	0.0058	0.0059	0.974
3	77	18.9156	18.9230	0.0074	1	77	0.000	7.350	7.350	6.00	0.0060	0.0059	1.015

AVERAGE DRY GAS METER CALIBRATION FACTOR, Y = **0.997**

PRE-TEST CALIBRATION FACTOR, Y = 1.000

DIFFERENCE = 0.33% (<5%)

MONTROSE AIR QUALITY SERVICES

Calibration Meter Information	
Serial #	904001
Gamma	1.0000
Press. Sensor ID	RF-DPG-001
Temp. Sensor ID	T-THR-017

Calibration Conditions		
Date	02/09/18	
Time	16:48	
Barometric Pressure	739	mmHg
Calibration Technician	RS	
DGM Number	SK25	
DGM Serial Number	8005211	

Factors/Conversions		
Std. Temperature	293	K
Std. Pressure	760	mmHg
K_1	0.3858	°K/mmHg

Calibration Data													Results			
Run Time	Dry Gas Meter						Calibration Meter						Dry Gas Meter			
Elapsed	Meter Pressure	Volume Initial	Volume Final	Sample Volume	Outlet Temp Initial	Outlet Temp Final	Volume Initial	Volume Final	Sample Volume	Outlet Temp Initial	Outlet Temp Final	Meter Pressure	Calibration Factor		Flowrate	
θ	(P_m)	(V_{mi})	(V_{mf})	(V_m)	(t_{mi})	(t_{mf})	(V_{si})	(V_{sf})	(V_s)	(t_{si})	(t_{sf})	(P_s)	Value	Variation	Std & Corr	
min	mmH2O	L	L	L	°F	°F	L	L	L	°F	°F	mmH2O	(γ)	(Δγ)	($Q_{m(std)corr}$)	
10	0	17551.00	17590.10	39.10	64	64	0.000	39.207	39.207	60	62	0	1.0085	0.0001	3.897	Variation
10	0	17684.00	17723.80	39.80	65	65	0.000	39.980	39.980	64	63	0	1.0074	-0.0010	3.950	from Overall
10	0	17726.00	17765.55	39.55	65	65	0.000	39.803	39.803	63	64	0	1.0093	0.0009	3.940	Average Y
												Averages	**1.0084**		3.929	0.0002
10	0	17598.00	17626.20	28.20	64	65	0.000	28.188	28.188	62	62	0	1.0044	-0.0040	2.785	Variation
10	0	17770.50	17800.00	29.50	65	66	0.000	29.673	29.673	64	65	0	1.0078	-0.0006	2.927	from overall
10	0	17816.00	17845.40	29.40	66	65	0.000	29.579	29.579	65	64	0	1.0080	-0.0004	2.919	average Y
												Averages	**1.0067**		2.877	-0.0015
10	0	17908.35	17927.75	19.40	64	65	0.000	19.520	19.520	63	63	0	1.0090	0.0006	1.934	Variation
10	0	17937.00	17956.30	19.30	65	66	0.000	19.436	19.436	63	64	0	1.0109	0.0025	1.927	from overall
10	0	17964.50	17983.80	19.30	66	66	0.000	19.407	19.407	65	65	0	1.0075	-0.0009	1.912	average Y
												Averages	**1.0091**		1.924	0.0010
10	0	17988.00	17997.70	9.70	66	66	0.000	9.748	9.748	65	65	0	1.0069	-0.0015	0.960	Variation
10	0	17999.00	18009.00	10.00	67	67	0.000	10.060	10.060	65	65	0	1.0098	0.0014	0.993	from overall
10	0	18013.00	18023.05	10.05	67	67	0.000	10.105	10.105	65	65	0	1.0093	0.0009	0.997	average Y
												Averages	**1.0087**		0.984	0.0005
10	0	18043.40	18048.37	4.97	68	68	0.000	4.998	4.998	66	66	0	1.0095	0.0011	0.492	Variation
10	0	18067.00	18072.05	5.05	68	68	0.000	5.062	5.062	66	66	0	1.0062	-0.0022	0.497	from overall
10	0	18072.20	18077.20	5.00	68	68	0.000	5.032	5.032	67	67	0	1.0083	-0.0001	0.494	average Y
													1.0080		0.495	-0.0002
												Overall Average γ	**1.0082**			

Note: For Calibration Factor Y, the ratio of the reading of the calibration meter to the dry gas meter, acceptable tolerance of individual values from the average is ±0.02.

I certify that the above Dry Gas Meter was calibrated in accordance with USEPA Methods, CFR 40 Part 60, using the Test Meter listed above, which in turn was calibrated using NIST traceable Calibration Standards.

RF-DGM-003

APEX INSTRUMENTS REFERENCE METER CALIBRATION
15-POINT METRIC UNITS
MAQS Cleveland

Calibration Meter Information	
WTM Model	W-NK-1A
WTM Serial #	541008
WTM Gamma	1.0005
DGM Serial #	0904001

Calibration Conditions	
Date Start	22-Jan-18
Date End	22-Jan-18
Calibration Tech	EW
Initial Scale Factor	0.7000
Final Scale Factor	0.6776

Factors/Conversions		
Std Temp	293	K
Std Press	760	mm Hg
K_1	0.3858	°K / mm Hg

Date	Barometric Pressure	Run Time Elapsed	Dry Gas Meter Meter Pressure	Dry Gas Meter Volume Initial	Dry Gas Meter Volume Final	Dry Gas Meter Sample Volume	Dry Gas Meter Outlet Temp Initial	Dry Gas Meter Outlet Temp Final	Calibration Meter Volume Initial	Calibration Meter Volume Final	Calibration Meter Sample Volume	Calibration Meter Outlet Temp Initial	Calibration Meter Outlet Temp Final	Calibration Meter Meter Pressure	Results: Dry Gas Meter Totalizer Calibration Factor Value	Results: Dry Gas Meter Totalizer Calibration Factor Variation	Results: Flowrate Std & Corr
		(Θ)	(P_m)	(V_{mi})	(V_{mf})	V	(t_{mi})	(t_{mf})	(Vw_i)	(Vw_f)	V	(t_{wi})	(t_{wf})	(P_{wm})	Y	(ΔY)	($Q_{std(corr)}$)
	mm Hg	min	mm H_2O	L	L	L	°C	°C	L	L	L	°C	°C	mm H_2O	Final		Lpm
22-Jan-18	756	5	-62	0.000	22.231	22.231	20.0	21.0	113.071	134.399	21.328	21.0	21.0	18.36	0.9955	-0.00160	4.221
22-Jan-18	756	5	-62	22.231	44.538	22.307	21.0	21.0	134.399	155.814	21.415	21.0	21.0	18.36	0.9978	0.00075	4.238
22-Jan-18	756	5	-62	44.538	66.854	22.316	21.0	21.0	155.814	177.240	21.426	21.0	21.0	18.36	0.9980	0.00086	4.241
										Passed Calibration Factor Variation Requirements					0.9971	Averages	4.233
22-Jan-18	756	5	-46	0.000	16.841	16.841	21.0	21.0	177.240	193.418	16.178	21.0	21.0	16.32	0.9971	-0.00140	3.203
22-Jan-18	756	5	-46	16.841	33.573	16.732	21.0	21.0	193.418	209.535	16.117	21.0	21.0	16.32	0.9998	0.00131	3.190
22-Jan-18	756	5	-46	33.573	50.371	16.798	21.0	21.0	209.535	225.696	16.161	21.0	21.0	16.32	0.9986	0.00010	3.199
										Passed Calibration Factor Variation Requirements					0.9985	Averages	3.197
22-Jan-18	756	6	-30	0.000	12.312	12.312	21.0	21.0	225.696	237.560	11.864	21.0	21.0	14.28	0.9989	-0.00015	1.957
22-Jan-18	756	6	-30	12.312	24.577	12.265	21.0	21.0	237.560	249.385	11.825	21.0	21.0	14.28	0.9994	0.00038	1.951
22-Jan-18	756	6	-30	24.577	36.889	12.312	21.0	21.0	249.385	261.248	11.863	21.0	21.0	14.28	0.9988	-0.00023	1.957
										Passed Calibration Factor Variation Requirements					0.9990	Averages	1.955
22-Jan-18	756	12	-21	0.000	12.809	12.809	21.0	22.0	261.248	273.622	12.374	21.0	21.0	12.24	1.0024	-0.00001	1.021
22-Jan-18	756	12	-21	12.809	25.586	12.777	22.0	22.0	273.622	285.962	12.340	21.0	21.0	12.24	1.0038	0.00144	1.018
22-Jan-18	756	12	-21	25.586	38.383	12.797	22.0	22.0	285.962	298.307	12.345	21.0	22.0	12.24	1.0010	-0.00143	1.017
										Passed Calibration Factor Variation Requirements					1.0024	Averages	1.019
22-Jan-18	756	24	-18	0.000	14.355	14.355	22.0	22.0	298.307	312.187	13.880	22.0	22.0	10.20	1.0015	-0.00145	0.571
22-Jan-18	756	24	-18	14.355	28.710	14.355	22.0	23.0	312.187	326.057	13.870	22.0	22.0	10.20	1.0025	-0.00047	0.570
22-Jan-18	756	24	-18	28.710	42.996	14.286	23.0	23.0	326.057	339.870	13.813	22.0	22.0	10.20	1.0049	0.00192	0.568
										Passed Calibration Factor Variation Requirements					1.0030	Averages	0.570
														Overall Average Y	1.0000		

Note: For Calibration Factor Y, the ratio of the reading of the calibration meter to the dry gas meter, acceptable tolerance of individual values from the average is +-0.02.

I certify that the above Dry Gas Meter was calibrated in accordance with USEPA Methods, CFR 40 Part 60, using a Precision Wet Test Meter, which in turn was calibrated using the American Bell Prover # 3785, certificate # F107, which is traceable to the National Bureau of Standards (N.I.S.T.).

Signature [signature] Date 1/22/18

Calibration Date: 7-10-2013

Calibration Technician: EW

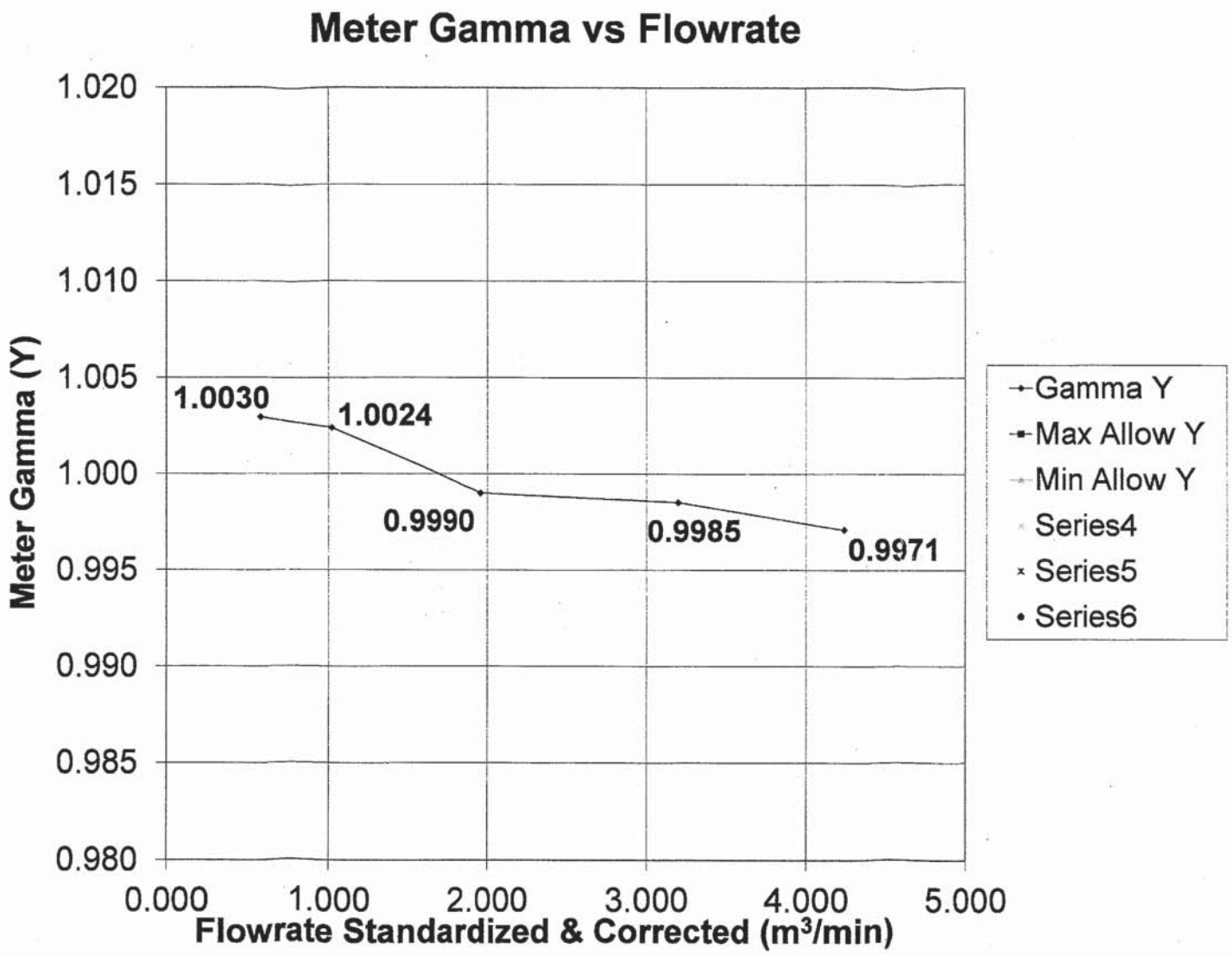

Console Serial:

Console Model:

Console Model:

Calibration Technician: EW

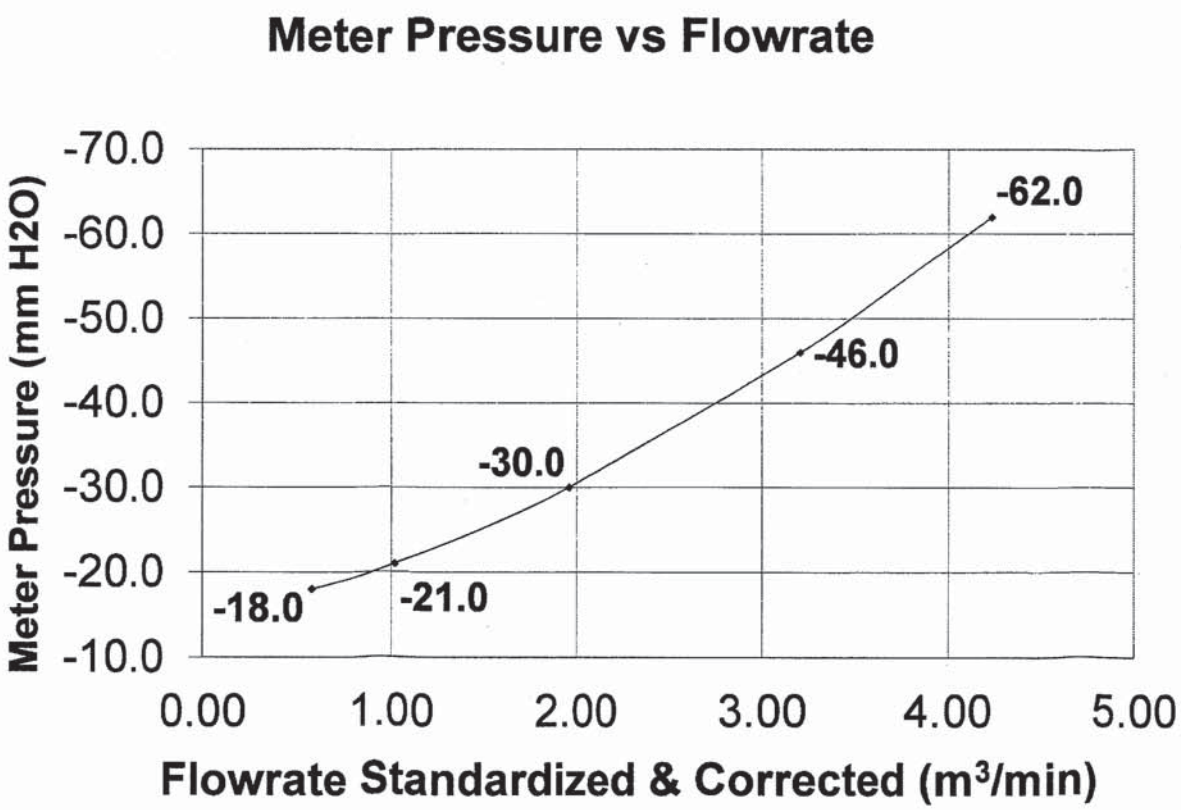

Console Serial:

Console Model:

Certificate of Calibration

OCS TECHNOLOGIES
14901 Emery Avenue | Cleveland, OH 44135
800.362.0364 | ocscal.com | info@ocscal.com

LABORATORY ACCREDITATION BUREAU a division of A2LA ACCREDITED ISO/IEC 17025
CERT# L1152-1 Calibration / Dim Insp

CUSTOMER:
AIR COMPLIANCE TESTING, INC.
10060 BRECKSVILLE ROAD
BRECKSVILLE, OH 44141
PO# PO1007872

ASSET NUMBER:	**RF-DPR-001**	**PERFORMED ON:**	**04 Apr 2017**
OWNER ASSET #:	RF-DPR-001	**DATE DUE:**	**04 Apr 2018**
UNIT UNDER TEST:	MITUTOYO PRO 360 DIGITAL PROTRACTOR	TEST RESULT:	PASS
		DATA TYPE:	FOUND-LEFT
		TEMP / HUMIDITY:	68.2 °F/ 47 %RH
SERIAL NUMBER:	12111032	SERVICE SITE:	OCS
LOCATION:		CALIBRATED BY:	ANDREW VUCETIC
PROCEDURE NAME:	OCSCP#33	APPROVED BY:	

Unless Otherwise Noted: OCS Technologies, Inc. certifies that the above listed instrument has been tested using standards that are traceable to the International System of Units (SI) through the National Institute of Standards & Technology (NIST) or through another National Metrology Institute (NMI). The item tested meets or exceeds all specifications as stated in the referenced procedure solely at the time of calibration. Measurement uncertainty if reported has been calculated at k=2 providing a 95% confidence interval and has been excluded from the Pass/Fail Result above. OCS is ISO/IEC 17025 accredited by the Laboratory Accreditation Bureau. Calibration performed in accordance with ISO 17025:2005 and ISO 10012:2003. This report may only be reproduced in full. Temperature and Humidity for on-site work may be reported above as the mean of high and low values recorded for all items on the day of service. If the data type is FOUND-LEFT then the As Found and As Left data are the same.

Remarks: . VERIFIED AT 5, 10, 20, 30 AND 45 DEGREES. GAGE READ 5.0, 10.0, 20.0, 30.0 AND 45.0 DEGREES.

Standards Used

Asset	Traceable Through	Description	Cal Date	Cal Due Date
B30038	D-22-06-122016	MISC GRADE B SURFACE PLATE, 36" x 72"	21 Dec 2016	21 Dec 2017
ANGLE-3	ANGLE-3 11/18/2015	SPI 30-139-0 ANGLE BLOCK SET	18 Nov 2015	18 Nov 2017

Certificate # 0a88660400f383499afc4c5a74361edb
Date Printed: 18 Apr 2017

Form No.: 133 Rev 04/2014

Digital Thermometer Audit

Effective Date: 4/21/2017
Rev No. 2
Issued by: District Manager

Hygrometer ID: RF-HGR-007

Digital Thermometer ID: T-THR- 017 (T2)

Temperature (°F): 65

Date: 2/8/18

Relative Humidity (%): 28

Initials: TP

Digital Thermometer (Tolerance: 50-100° ± 2°F, 200-300° ±5°F, 400-1500° ±8°F)

Reference THR ID: RF-THC-008

THR ID: T-THR- 017 (T2)

Reference Simulator (°F)	As Found THR (°F)	Tolerance (Pass/Fail)	Adjustment (Yes/No)	As Left THR (°F)
50	51	PASS	NO	SAME
100	101	PASS	NO	SAME
200	201	PASS	NO	SAME
300	301	PASS	NO	SAME
400	401	PASS	NO	SAME
600	600	PASS	NO	SAME
800	800	PASS	NO	SAME
1000	1000	PASS	NO	SAME
1500	1500	PASS	NO	SAME

American Association for Laboratory Accreditation

Accredited Air Emission Testing Body

A2LA has accredited

MONTROSE AIR QUALITY SERVICES

In recognition of the successful completion of the joint A2LA and Stack Testing Accreditation Council (STAC) evaluation process, this laboratory is accredited to perform testing activities in compliance with ASTM D7036:2004 - Standard Practice for Competence of Air Emission Testing Bodies.

Presented this 5th day of March 2018.

President and CEO
For the Accreditation Council
Certificate Number 3925.01
Valid to February 29, 2020

This accreditation program is not included under the A2LA ILAC Mutual Recognition Arrangement.