PACIFICORP

June 1, 2016

Mr. Bryce Bird, Director
Division of Air Quality
Utah Department of Environmental Quality
P. O. Box 144820
Salt Lake City, Utah 84114-4820

Subject: PacifiCorp Huntington Plant – Title V Permit # 1501001004 – Submittal of 40 CFR §63 Subpart UUUUU Mercury Low Emitter EGU Demonstration for Unit 2

Attn: Mr. Norm Erikson

Dear Sirs:

The Huntington Plant recently completed a 30-boiler operating day performance test using Method 30B in accordance to 40 CFR 63.10005(h)(3) to qualify Unit 2 for mercury low emitter electrical generating unit (LEE) status.

The 30-boiler operating day test demonstrated successful low emitter status as outlined in Huntington Title V permit conditions II.B.3.f.1(d)(2) and II.B.3.g.1(c), and 40 CFR §63.10005(h)(1)(ii)(A) and 40 CFR§63.10005(h)(1)(ii)(B). Summary test results follow:

Unit 2	LEE Threshold	Actual Value	LEE Threshold	Actual Value
	29 lb/yr Hg	0.9 lb/yr	0.12 lb/tbtu	0.02 lb/tbtu

We would appreciate receiving a notice of your office's acceptance of this LEE demonstration at your earliest convenience.

Should you have any questions, please contact Richard Neilson at (435) 687-4334.

Sincerely,

Darrell Cunningham
Plant Managing Director and Responsible Official

Enclosure: "Emissions Testing Report for PacifiCorp Huntington Unit 2 Mercury LEE Demonstration"

cc: Director, EPA Region VIII, w/enclosure
Richard Neilson – Huntington Plant, w/enclosure
Bill Lawson – 210 NTO, w/o enclosure
Steve Jensen – 210 NTO, w/o enclosure
Frank Zampedri – 210 NTO, w/o enclosure

EMCo

EMISSIONS MEASUREMENT COMPANY

Emissions Testing Report for PacifiCorp
Huntington Unit 2
Huntington, Utah

Mercury LEE Demonstration

Project Code PC16-0021

11990 W. 52nd Avenue
Wheat Ridge, CO 80033

Office (303) 495-3936
Toll Free (800) 984-9883
Fax (888) 605-0243
www.stacktest.us

5160 Parfet Street
Suite A3
Wheat Ridge, CO 80033

EMCO
EMISSIONS MEASUREMENT COMPANY

Office (303) 495-3936
Toll Free (800) 984-9883
Fax (888) 605-0243
www.stacktest.us

Certification Statement

I certify that all field data were acquired under my direction in accordance with a system designed to assure data quality. Based on reasonable inquiry, the information submitted is to the best of my knowledge true, accurate and complete.

I certify that this document and all attachments were prepared under my direction in accordance with a system designed to assure that qualified personnel properly gathered and evaluated the information submitted. Based on reasonable inquiry, the information submitted is to the best of my knowledge true, accurate and complete.

Matthew Parks
Technical Director
Emissions Measurement Company

Introduction

EMCo was contracted by PacifiCorp to conduct source testing services at the Huntington Power Plant near Huntington, Utah. The Huntington Plant comprises two pulverized coal-fired boilers. Huntington Unit #1 is equipped with low-NO_x burners and overfire air for nitrogen oxides (NO_x) control, a flue gas desulfurization (FGD) scrubber for sulfur dioxide (SO_2) control and pulse-jet fabric filters for particulate matter (PM) control. Huntington Unit #2 is equipped with low-NO_x burners and overfire air for NO_x control, an FGD scrubber for SO_2 control and pulse-jet fabric filters for PM control.

Testing was conducted to determine mercury (Hg) emission rates in accordance with 40 CFR Part 63, Subpart UUUUU. Contact information for the project is listed in the table below.

Contact	Affiliation	Telephone	E-mail
Frank Zampedri Environmental Analyst	PacifiCorp	(801) 220-2169	frank.zampedri@pacificorp.com
Richard Neilson Environmental Engineer	PacifiCorp	(435) 687-4334	richard.neilson@pacificorp.com
Norm Erikson Environmental Scientist	UDEQ	(801) 536-4063	nerikson@utah.gov
Matthew Parks Technical Director	EMCo	(303) 495-3936	mparks@stacktest.us

Scope of Work

Testing was performed to demonstrate that Huntington 2 qualifies as a Low Emitting EGU (LEE) unit in accordance with the requirements of 40 CFR Part 63, Subpart UUUUU. The details of the test are given in the table below.

Source	Regulation	Parameter
Huntington Unit 2	40 CFR Part 63, Subpart UUUUU	Hg (lbs/year)

Testing Methods

EMCo used the following EPA Reference Method for the testing program. No deviations from the Reference Methods were noted.

Source	Parameter	EPA Reference Method	Test Runs/Duration
Huntington Unit 2	Hg (lbs/year)	30B, ALT-091	5 @ 144 hrs

Testing Location

The sampling location consists of a vertical, circular stack with four orthogonal sampling ports located at least six diameters downstream and two diameters upstream of the nearest flow disturbances. Mercury sampling was performed at a single point in the stack, located within 10% of the centroid as required by Subpart UUUUU. See the schematic below.

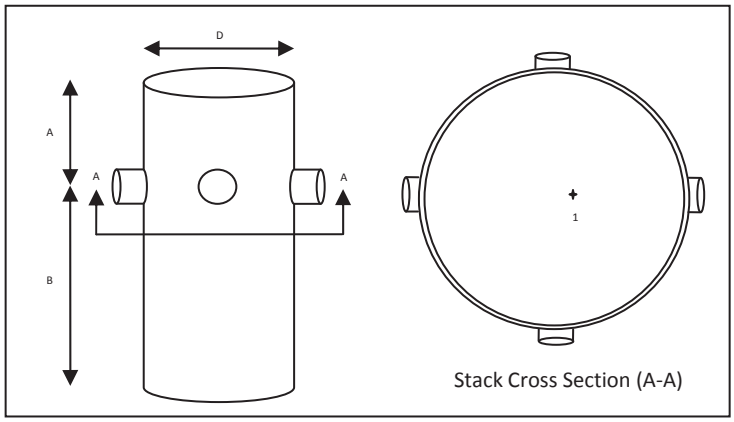

Huntington Test Diagram	
Unit #	**2**
Diameter (D)	322.7”
Upstream Distance (A)	>220’
Downstream Distance (B)	>266’
Sample Point Distances from Stack Wall	
Traverse Point 1	9.2’

Test Results

The results of the testing program are given in the table below. Detailed test results are located in Appendix A, along with sample calculations for all computed values.

PacifiCorp Huntington Unit 2 Test Results Summary (4/13 – 5/15/2016)		
Parameter	**Average***	**Emission Limit**
Hg Emission Rate (#/TBtu)	**0.02**	**1.2****
Hg Emission Rate (#/GW-hr)	**0.0002**	**0.013****
Maximum Potential Electrical Output (GW-hrs/yr)	**4,468**	**——**
Hg Emission Rate (#/Year, Based on Electrical Output)	**0.8**	**29.0*****
Maximum Potential Heat Input (TBtu/yr)	**50.2**	**——**
Hg Emission Rate (#/Year, Based on Heat Input)	**0.9**	**29.0*****

*All values represent the average of 720 hours of data.
**40 CFR §63.10005(h)(1)(ii)(A): LEE status may be achieved by demonstrating emissions less than 10% of the applicable limit from Table 2 (i.e., 0.12 #/TBtu or 0.0013 #/GW-hr).
***40 CFR §63.10005(h)(1)(ii)(B): LEE status may also be achieved by demonstrating a potential to emit less than 29.0 #/year and compliance with either of the emission limits from Table 2 (i.e., 1.2 #/TBtu or 0.013 #/GW-hr).

Abbreviations:
#/TBtu: pounds per trillion British thermal units
#/hr: pounds per hour
#/GW-hr: pounds per gigawatt hour
#/year: pounds per year, assuming maximum potential electrical output or heat input

Testing Equipment

All testing equipment was installed in the sampling shelter on the Huntington 2 stack. All required quality assurance tests were performed as required by the applicable Reference Method. Detailed equipment descriptions are given in the table below.

Parameter	Equipment	EPA Reference Method
Exhaust Gas Moisture Content (H_2O)	Gravimetric analysis Saturation calculations	ALT-091
Mercury (Hg)	Heated probe Sorbent traps Chilled glass impingers Dry gas meters Ohio Lumex 915+ Mercury Analyzer	30B

Method 30B Quality Assurance

All mercury analysis was performed by EMCo. In accordance with §8.2.6.1 of EPA Method 30B, plant CEMS data were used to determine mercury spiking levels prior to testing. Sorbent tubes spiked with 200 ng of elemental mercury were used on all five test runs to fulfill the requirement for Field Spike Recovery tests. As required by Method 30B, spike recovery was calculated as the average of the spiked runs. QA/QC results are summarized in the table below. Detailed analytical results are appended in Appendix A of this report.

Method 30B QA Test	Acceptance Criteria	Actual Value
Sorbent Trap Breakthrough	Breakthrough ≤20%	Maximum = 2.5%
Paired Trap Agreement	Relative Deviation ≤20% or ±0.2µg	Maximum RD = 0.06 µg
Field Spike Recovery	85% ≤ Average ≤ 115%	Average = 98%

Test Details

Mercury testing was performed using EPA Method 30B. Each test run was 144 hours in duration. Each test run consisted of withdrawing samples of stack gas through paired sorbent tubes, through heated stainless steel probes, through paired moisture removal systems, and through dual calibrated dry gas meters. Following each test run, the sorbent traps were removed from the sample probes, capped to avoid media loss or contamination, and shipped to EMCo for analysis. In accordance with EPA Method ALT-091, the knockout impingers and desiccant vessels in each moisture removal system were weighed before and after each test run. Measured moisture content was compared with the calculated saturation moisture content for each test run, and the lower of the two was used in subsequent emission calculations. Samples were analyzed in accordance with EPA Method 30B using an Ohio Lumex RA-915+ differential atomic absorption spectrometer. All Quality Assurance requirements of Method 30B were strictly followed. Following analysis, the Relative Deviation of the mercury masses from each paired sample was evaluated for acceptability. The mercury mass from each trap was combined with the corresponding volume of stack gas for the test run and reported as micrograms of mercury per dry

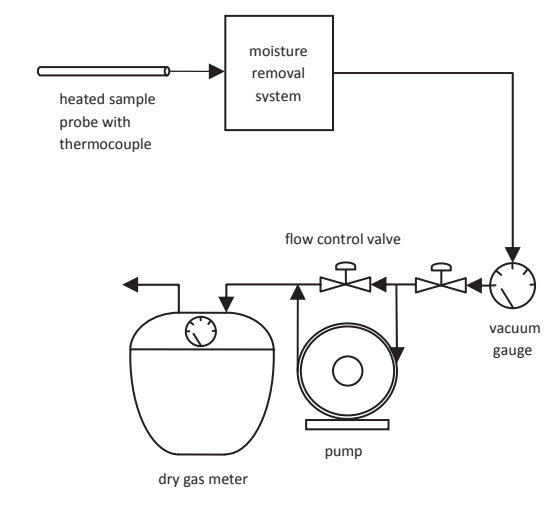

40 CFR Part 60, Appendix A-8: Method 30B, Figure 30B-1

standard cubic meter (µg/dscm). The average mercury concentration was combined with concurrent CO_2 and volumetric flow rate data from the Continuous Emissions Monitoring System (CEMS) to calculate mercury emission rates for comparison to the emission limits listed in 40 CFR Part 63, Subpart UUUUU.

Appended Information

Supporting data for this testing program are included as follows.

Appendix A: Test Summary

- Data Reduction Spreadsheets
- Sample Calculations

Appendix B: Field Data

- Mercury Sampler Data Logs

Appendix C: CEMS Data

- CEMS Data Logs

Appendix D: Laboratory Data

- Laboratory Analysis

Appendix E: Calibration Information

- Dry Gas Meter Pre-Test and Post-Test Calibrations
- Reference Meter Calibration Certificate

EMCO
EMISSIONS MEASUREMENT COMPANY

Project PC16-21

Appendix A: Test Summary

Data Reduction Spreadsheets

Sample Calculations

PC16-21
PacifiCorp
Huntington Unit 2

EPA Method 30B Sample Analysis

Start Date	4/13/2016		4/19/2016		4/26/2016		5/3/2016		5/9/2016				
Start Time	8:42		11:43		10:01		9:49		16:50				
End Date	4/19/2016		4/25/2016		5/2/2016		5/9/2016		5/15/2016				
End Time	8:42		11:43		10:01		9:49		16:50				
Elapsed Time (hrs)	144		144		144		144		144				
Trap ID	20099	285623	20077	285673	312610	285580	312537	283989	312666	283917	**30-Day Average**		
Hg Concentration (µg/dscm)	0.01	0.01	0.01	0.01	0.01	0.01	0.01	0.02	0.09	0.03	**0.02**		
Hg Concentration (#/dscf)	8.2E-13	7.8E-13	5.6E-13	7.2E-13	4.6E-13	5.9E-13	6.9E-13	9.4E-13	5.5E-12	1.7E-12	**1.3E-12**		
Fuel Factor (dscf/mmBtu, F_c)	1800	1800	1800	1800	1800	1800	1800	1800	1800	1800	**1800**		
Volume of Water Condensed (mL)	272.1	236	251.6	243.3	252.2	246.4	259.6	252.9	313.4	259.6			
Condensed Water Volume (scf)	12.8	11.1	11.8	11.4	11.9	11.6	12.2	11.9	14.7	12.2			
Sample Gas Volume (dscf)	83.0	81.7	83.2	81.7	83.3	82.1	83.3	81.8	48.2	81.9			
Measured Stack Gas Moisture Content (%/100)	0.134	0.120	0.125	0.123	0.125	0.124	0.128	0.127	0.234	0.130			
Saturated Moisture Content (%/100)	0.122	0.122	0.125	0.125	0.123	0.123	0.127	0.127	0.127	0.127			
Moisture Content (%/100, default)	0.060	0.060	0.060	0.060	0.060	0.060	0.060	0.060	0.060	0.060			
Moisture Content Used	0.122	0.120	0.125	0.123	0.123	0.123	0.127	0.127	0.127	0.127	**0.124**		
Average CO_2 Concentration (%vw, from CEMS)	11.0	11.0	11.1	11.1	11.1	11.1	11.3	11.3	11.5	11.5	**11.2**		
Average Stack Flow Rate (wscfh, from CEMS)	41,520,760	41,520,760	46,900,084	46,900,084	46,189,675	46,189,675	50,737,406	50,737,406	51,571,151	51,571,151	**47,383,815**		
Average Gross Electrical Load (MWg, from CEMS)	270	270	307	307	305	305	334	334	341	341	**311**		
Maximum Potential Electrical Output (GWh)	4,468	4,468	4,468	4,468	4,468	4,468	4,468	4,468	4,468	4,468	**4,468**		
Maximum Potential Heat Input (TBtu/yr)	50.2	50.2	50.2	50.2	50.2	50.2	50.2	50.2	50.2	50.2	**50.2**		
												LEE Limit	
Hg Emission Rate (#/TBtu)	**0.01**	**0.01**	**0.01**	**0.01**	**0.01**	**0.01**	**0.01**	**0.01**	**0.08**	**0.02**	**0.02**	**0.12**	**#/Tbtu**
Hg Emission Rate (#/hr)	**0.00003**	**0.00003**	**0.00002**	**0.00003**	**0.00002**	**0.00002**	**0.00003**	**0.00004**	**0.00025**	**0.00008**	**0.00005**	**---**	**#/hr**
Hg Emission Rate (#/GWh)	**0.0001**	**0.0001**	**0.0001**	**0.0001**	**0.0001**	**0.0001**	**0.0001**	**0.0001**	**0.0007**	**0.0002**	**0.0002**	**0.0013**	**#/GWh**
Hg Emission Rate (#/yr, Based on Max Electrical Output)	**0.5**	**0.5**	**0.3**	**0.4**	**0.3**	**0.3**	**0.4**	**0.6**	**3.3**	**1.0**	**0.8**	**29**	**#/yr**
Hg Emission Rate (#/yr, based on Max Heat Input)	**0.6**	**0.6**	**0.4**	**0.5**	**0.3**	**0.4**	**0.5**	**0.7**	**3.8**	**1.2**	**0.9**	**29**	**#/yr**

PacifiCorp
Huntington Unit 2
4/21/2016
Run #1 Sample Calculations

EPA Method 30B: Determination of Total Vapor Phase Mercury Emissions from Coal-Fired Combustion Sources Using Carbon Sorbent Traps (40 CFR Part 60, Appendix A-8)

Variable	Value	Definition	Unit of Measurement
A_2	-1.19E-09	Coefficient from Calibration Curve	unitless
A_1	0.0045	Coefficient from Calibration Curve	unitless
b	-2.0681	Y intercept of Calibration Curve	unitless
AC1	52300	Area Counts from Tube Section 1	unitless
AC2	210	Area Counts from Tube Section 2	unitless
m_1	230.2	Hg mass from Tube Section 1	nanograms
m_2	0.6	Hg mass from Tube Section 2	nanograms

$\mathbf{m_1} = A_2(AC1)^2 + A_1(AC1) + b$
= -1.19E-09 (52300)^2 + 0.0045 (52300) + (-2.07)
= **230.2 ng**

$\mathbf{m_2} =$ AC2/RF
= 210/347
= **0.6 ng**

PC16-21
PacifiCorp
Huntington Unit 2
Run #1 Sample Calculations

EPA Method 30B: Determination of Total Vapor Phase Mercury Emissions from Coal-Fired Combustion Sources Using Carbon Sorbent Traps (40 CFR Part 60, Appendix A-8)

Variable	Value	Definition	Unit of Measurement
$V_{m(std)}$	2.351	Sample Gas Volume	dscm
m_1	230.2	Hg mass from Tube Section 1	nanograms
m_2	0.6	Hg mass from Tube Section 2	nanograms
B	0.3%	Breakthrough	percent
C_a	0.01	Hg Concentration, Sorbent Trap A	µg/dscm
C_b	0.01	Hg Concentration, Sorbent Trap B	µg/dscm
RD	2.4%	Relative Deviation between Traps A and B	percent
C_{avg}	0.020	Average Hg Concentration from all traps	µg/dscm
K	6.24E-11	Conversion Factor	lb-dscm / ug-dscf
C_d	1.28E-12	Average Hg Concentration from all traps	lb/dscf
F_c	1800	Fuel Factor	dscf/mmBtu
B_{ws}	0.124	Stack Gas Moisture Content (default)	%/100
$\%CO_{2vw}$	11.2	Average Stack Gas CO_2 Concentration	wet volume percent
E	0.018	Average Hg Emission Rate	lb/Tbtu
Q_h	47,383,815	Average Stack Gas Volumetric Flow Rate	wet standard cubic feet per hour
M_h	0.0001	Average Hg Emission Rate	lb/hr
MW_{avg}	311	Average Load	Gross Megawatts
E_{ho}	0.0002	Average Hg Emission Rate	lb/GW-hr
MEO	510	Maximum Electrical Output of the unit	MW
GW_h	4468	Maximum Annual Potential Electrical Output	GW-hr
E_{yr}	0.8	Average Hg Emission Rate	lb/yr
MHI	5733	Maximum Heat Input of the unit	mmBtu/hr
HI_{max}	50	Maximum Annual Potential Heat Input	TBtu/yr
E_{yr}	0.9	Average Hg Emission Rate	lb/yr

B = $100\ (m_2 / m_1)$
= 100 (0.6 / 230.2)
= **0.3%**

$$\mathbf{C_a} = \frac{(m_1 + m_2 - \text{Spike})}{(1000\ \text{ng}/\mu\text{g})\ (\text{dscm})}$$

$$= \frac{(230.2 + 0.6 - 200)}{(1000)\ (2.351)}$$

= **0.01 ug/dscm** *(Eq. 30B-3)*

$$\mathbf{RD} = \frac{100\ |C_a - C_b|}{C_a + C_b}$$

$$= \frac{100\ |\ 0.01 - 0.01\ |}{0.01 + 0.01}$$

= **2.4%** *(Eq. 30B-5)*

$\mathbf{C_d} = C_{avg} * K$

= 0.020 * 6.24E-11

= **1.3E-12 #/dscf**

$$\mathbf{E} = \frac{C_d * F_c * (1 - B_{ws}) * 100 * 10^6}{\%CO_{2vw}}$$

$$= \frac{1.3E\text{-}12 * 1800 * (1 - 0.124) * 100 * 10^6}{11.2}$$

= **0.02 lb/TBtu** *(Eq. 19-9)*

$\mathbf{M_h} = K * C_h * Q_h * (1 - B_{ws})$

= 6.24E-11 * 0.02 * 47,383,815 * (1 - 0.124)

= **0.00005 lb/hr** *(Eq. A-3)*

$$\mathbf{E_{ho}} = \frac{Mh * 10^3}{MW_{avg}}$$

$$= \frac{0.0001 * 1000}{311}$$

= **0.0002 #/GW-hr** *(Eq. A-4)*

$$GW_h = \frac{MEO * 8{,}760}{1000\ \text{MW/GW}}$$

$$= \frac{510 * 8760}{1{,}000}$$

= **4468 GW-hr/yr**

$\mathbf{E_{yr}} = E_{ho} * GW_h$

= 0.0002 * 4468

= **0.8 lbs/yr**

$$HI_{max} = \frac{MHI * 8{,}760}{1{,}000{,}000\ \text{mm/T}}$$

$$= \frac{5733 * 8760}{1{,}000{,}000}$$

= **50.2 TBtu/yr**

$\mathbf{E_{yr}} = E * HI_{max}$

= 0.0180 * 50

= **0.9 lbs/yr**

EMCO
EMISSIONS MEASUREMENT COMPANY

Project PC16-21

Appendix B: Field Data

Mercury Sampler Data Logs

Hg-324K-1099								
HgK_324 Data	huntington2	4/13/2016	8:08:44					
DGM1 ID	DGM2 ID	Trap1 ID	Trap2 ID					
3605445	3605446	20099	285623					
Time:	Leak 1	Status	Leak 2	Status	Vacuum1	Vacuum2	DGM 1	DGM 2
Day:hh:mm	ccpermin	P-F	ccpermin	P-F	in-Hg	in-Hg	liter	liter
04/13/2016:08:08:58	1099.5	Fail	1277.695	Fail	2.506	2.599	0.3	0.389
04/13/2016:08:09:13	1344.444	Fail	1552.632	Fail	6.066	6.24	0.672	0.776
04/13/2016:08:09:28	1177.778	Fail	1218.045	Fail	8.634	8.925	0.889	0.998
04/13/2016:08:09:43	907.407	Fail	924.812	Fail	10.645	10.94	1.126	1.239
04/13/2016:08:09:58	829.63	Fail	838.346	Fail	12.227	12.498	1.304	1.417
04/13/2016:08:10:13	544.444	Fail	545.113	Fail	13.471	13.737	1.398	1.511
04/13/2016:08:10:28	381.481	Fail	383.459	Fail	14.398	14.68	1.494	1.609
04/13/2016:08:10:43	374.074	Fail	368.421	Fail	15.178	15.455	1.585	1.695
04/13/2016:08:10:58	355.556	Fail	319.549	Fail	15.891	16.118	1.672	1.769
04/13/2016:08:11:13	370.37	Fail	349.624	Fail	16.519	16.691	1.77	1.87
04/13/2016:08:11:28	285.185	Fail	296.992	Fail	17.023	17.172	1.815	1.917
04/13/2016:08:11:43	203.704	Fail	210.526	Fail	17.422	17.569	1.872	1.976
04/13/2016:08:11:58	207.407	Fail	199.248	Fail	17.744	17.899	1.919	2.017
04/13/2016:08:12:13	174.074	Fail	150.376	Fail	18	18.16	1.959	2.051
04/13/2016:08:12:28	129.63	Fail	120.301	Fail	18.203	18.362	1.983	2.077
04/13/2016:08:12:43	92.593	Fail	101.504	Fail	18.367	18.52	2.006	2.102
04/13/2016:08:12:58	74.074	Fail	90.226	Fail	18.49	18.653	2.02	2.122
04/13/2016:08:13:13	44.444	Fail	63.91	Fail	18.581	18.769	2.028	2.133
04/13/2016:08:13:28	33.333	Fail	41.353	Fail	18.654	18.875	2.037	2.143
04/13/2016:08:13:43	33.333	Fail	37.594	Fail	18.719	18.968	2.044	2.152
04/13/2016:08:13:58	22.222	Fail	30.075	Fail	18.783	19.055	2.048	2.158
04/13/2016:08:14:13	18.519	Fail	18.797	Fail	18.838	19.118	2.054	2.162
04/13/2016:08:14:28	22.222	Fail	18.797	Fail	18.887	19.173	2.059	2.167
04/13/2016:08:14:43	18.519	Fail	18.797	Fail	18.93	19.22	2.063	2.171
04/13/2016:08:14:58	14.815	Fail	15.038	Fail	18.968	19.258	2.067	2.175
04/13/2016:08:15:13	14.815	Fail	15.038	Fail	18.997	19.29	2.07	2.179
04/13/2016:08:15:28	11.111	Fail	11.278	Fail	19.018	19.314	2.072	2.18
04/13/2016:08:15:43	7.407	Pass	7.519	Pass	19.038	19.333	2.074	2.182

Time: day:hh:mm:ss	Stack Pressure: in-Hg	Sat% H2O: Percent	Static: in-H2O	Barometric: in-Hg	Flowmeter1: l/min	Vacuum1: in-Hg	Flowmeter2: l/min	Vacuum2: in-Hg	Stack Temp: degF	Sorbent Temp: degF	Probe Temp: degF	DGM#1 Temp: degF	Condenser Temp: degF	DGM#2 Temp: degF	DAQ Temp: degF	DGM1*: liters STP	DGM2*: liters STP	DGM1: liters nominal	DGM2: liters nominal
20160413:08:47:15	23.483	11.514	-3.669	23.752	0.24	1.738	0.24	1.666	111.448	298.705	299.078	65.619	51.363	65.805	68.298	1.226	1.2	1.537	1.506
20160413:08:52:15	23.482	11.504	-3.648	23.75	0.25	2.038	0.25	2.024	111.416	299.291	299.753	65.958	51.089	66.2	68.97	2.518	2.486	3.159	3.12
20160413:08:57:15	23.482	11.5	-3.636	23.75	0.25	2.093	0.25	2.064	111.404	299.582	300.051	66.313	51.026	66.598	69.648	3.767	3.746	4.728	4.703
20160413:09:02:15	23.483	11.502	-3.627	23.75	0.25	2.123	0.25	2.082	111.412	299.788	300.297	66.632	50.984	66.962	70.312	5.089	4.981	6.389	6.256
20160413:09:07:15	23.484	11.499	-3.654	23.752	0.25	2.134	0.25	2.092	111.401	299.932	300.519	66.946	50.939	67.312	70.96	6.365	6.279	7.993	7.889
20160413:09:12:15	23.484	11.505	-3.616	23.75	0.25	2.135	0.25	2.102	111.421	300.077	300.704	67.264	50.903	67.666	71.587	7.675	7.542	9.641	9.479
20160413:09:17:15	23.484	11.506	-3.635	23.751	0.25	2.152	0.25	2.107	111.424	300.125	300.774	67.558	50.864	67.993	72.191	8.985	8.809	11.289	11.075
20160413:09:22:15	23.484	11.514	-3.571	23.747	0.25	2.121	0.25	2.108	111.448	300.251	300.879	67.857	50.832	68.313	72.771	10.253	10.121	12.887	12.729
20160413:09:27:15	23.484	11.524	-3.585	23.748	0.25	2.058	0.25	2.074	111.478	300.307	300.995	68.145	50.779	68.612	73.326	11.589	11.363	14.57	14.295
20160413:09:32:15	23.483	11.533	-3.618	23.749	0.25	2.022	0.25	2.042	111.505	300.366	301.004	68.418	50.678	68.895	73.855	12.874	12.685	16.191	15.964
20160413:09:37:15	23.483	11.547	-3.608	23.748	0.25	2.02	0.25	2.019	111.547	300.414	301.043	68.691	50.611	69.171	74.36	14.231	13.966	17.902	17.581
20160413:09:42:15	23.482	11.554	-3.584	23.745	0.25	2.028	0.25	2.014	111.565	300.469	301.127	68.95	50.536	69.452	74.843	15.519	15.242	19.528	19.194
20160413:09:47:15	23.481	11.561	-3.599	23.746	0.25	2.026	0.25	2.024	111.585	300.513	301.187	69.168	50.395	69.703	75.285	16.875	16.58	21.241	20.885
20160413:09:52:15	23.481	11.571	-3.606	23.746	0.25	2.033	0.25	2.011	111.616	300.521	301.22	69.408	50.293	69.955	75.721	18.175	17.853	22.883	22.494
20160413:09:57:15	23.48	11.581	-3.606	23.745	0.25	2.035	0.25	2.013	111.645	300.495	301.193	69.624	50.208	70.177	76.137	19.535	19.188	24.602	24.184
20160413:10:02:15	23.48	11.581	-3.597	23.745	0.25	2.016	0.25	2.009	111.646	300.533	301.215	69.848	50.184	70.406	76.531	20.833	20.464	26.243	25.799
20160413:10:07:15	23.48	11.591	-3.57	23.743	0.25	2.017	0.25	1.995	111.675	300.561	301.226	70.057	50.159	70.63	76.906	22.194	21.803	27.965	27.494
20160413:10:12:15	23.48	11.583	-3.587	23.744	0.25	2.024	0.25	2.003	111.653	300.588	301.212	70.26	50.042	70.814	77.261	23.499	23.093	29.617	29.13
20160413:10:17:15	23.48	11.593	-3.619	23.746	0.25	2.045	0.25	2.018	111.68	300.613	301.275	70.442	50.086	71.015	77.598	24.845	24.429	31.32	30.821
20160413:10:22:15	23.479	11.593	-3.619	23.745	0.25	2.017	0.25	2.021	111.68	300.584	301.267	70.644	49.997	71.168	77.918	26.182	25.732	33.013	32.474
20160413:10:27:15	23.479	11.13	-3.618	23.746	0.25	2.023	0.25	2.021	110.233	300.579	301.273	70.811	50.029	71.359	78.222	27.5	27.032	34.683	34.122
20160413:10:32:15	23.48	10.337	-3.627	23.746	0.25	2.007	0.25	1.99	107.71	300.543	301.265	71.005	49.995	71.563	78.509	28.855	28.375	36.4	35.825
20160413:10:37:15	23.477	11.046	-3.628	23.744	0.25	2.012	0.25	2.005	109.981	300.579	301.274	71.173	49.985	71.723	78.783	30.155	29.659	38.048	37.455
20160413:10:42:15	23.476	11.448	-3.607	23.741	0.25	2.029	0.25	2.006	111.235	300.64	301.283	71.367	49.992	71.916	79.048	31.512	30.999	39.769	39.156
20160413:10:47:15	23.473	11.518	-3.633	23.74	0.25	2.015	0.25	2.013	111.446	300.673	301.3	71.551	49.939	72.06	79.302	32.824	32.279	41.433	40.782
20160413:10:52:15	23.47	11.558	-3.596	23.735	0.25	2.017	0.25	2.017	111.562	300.641	301.256	71.697	49.991	72.241	79.545	34.192	33.624	43.17	42.491
20160413:10:57:15	23.467	11.587	-3.637	23.734	0.25	2.029	0.25	2.016	111.643	300.662	301.244	71.882	49.917	72.38	79.78	35.5	34.906	44.831	44.12
20160413:11:02:15	23.466	11.607	-3.55	23.727	0.25	2.019	0.25	1.988	111.702	300.632	301.287	72.02	49.975	72.554	80.003	36.873	36.249	46.576	45.829
20160413:11:07:15	23.464	11.628	-3.563	23.726	0.25	2.024	0.25	2.004	111.764	300.639	301.281	72.203	49.907	72.692	80.222	38.176	37.529	48.231	47.457
20160413:11:12:15	23.462	11.647	-3.553	23.723	0.25	2.023	0.25	2.009	111.816	300.642	301.299	72.341	49.951	72.874	80.431	39.546	38.871	49.974	49.165
20160413:11:17:15	23.46	11.663	-3.581	23.723	0.25	2.02	0.25	2.012	111.86	300.703	301.289	72.515	49.907	73.022	80.637	40.849	40.161	51.631	50.808
20160413:11:22:15	23.458	11.671	-3.584	23.721	0.25	2.036	0.25	1.999	111.881	300.67	301.34	72.669	49.914	73.192	80.838	42.201	41.506	53.352	52.521
20160413:11:27:15	23.456	11.684	-3.539	23.716	0.25	2.045	0.25	2.012	111.918	300.746	301.351	72.842	49.935	73.337	81.04	43.545	42.79	55.063	54.158
20160413:11:32:15	23.454	11.692	-3.544	23.715	0.25	2.038	0.25	2.022	111.94	300.683	301.309	72.996	49.905	73.506	81.228	44.857	44.129	56.733	55.865
20160413:11:37:15	23.452	11.712	-3.506	23.709	0.25	2.018	0.25	2.026	111.996	300.664	301.289	73.154	49.963	73.636	81.411	46.215	45.429	58.465	57.523
20160413:11:42:15	23.448	11.728	-3.57	23.71	0.25	2.036	0.25	2.01	112.038	300.742	301.373	73.293	49.903	73.787	81.591	47.532	46.752	60.143	59.211
20160413:11:47:15	23.446	11.727	-3.545	23.706	0.25	2.023	0.25	2.023	112.031	300.754	301.369	73.424	49.971	73.922	81.763	48.9	48.067	61.887	60.889
20160413:11:52:15	23.444	11.738	-3.558	23.706	0.25	2.033	0.25	2.032	112.061	300.747	301.38	73.581	49.914	74.051	81.935	50.214	49.371	63.563	62.553
20160413:11:57:15	23.442	11.765	-3.525	23.702	0.25	2.034	0.25	2.016	112.138	300.752	301.36	73.681	49.95	74.204	82.101	51.585	50.707	65.313	64.259
20160413:12:02:15	23.442	11.785	-3.518	23.7	0.25	2.035	0.25	2.029	112.199	300.738	301.352	73.849	49.924	74.304	82.261	52.888	51.988	66.976	65.897
20160413:12:07:15	23.439	11.785	-3.512	23.697	0.25	2.041	0.25	2.03	112.194	300.769	301.312	73.952	49.901	74.451	82.421	54.244	53.343	68.707	67.628
20160413:12:12:15	23.439	11.786	-3.467	23.694	0.25	2.041	0.25	2.035	112.197	300.784	301.371	74.07	49.933	74.561	82.572	55.591	54.627	70.428	69.269
20160413:12:17:15	23.438	11.793	-3.484	23.694	0.25	2.031	0.25	2.017	112.217	300.717	301.367	74.203	49.872	74.72	82.721	56.903	55.979	72.104	70.998
20160413:12:22:15	23.435	11.809	-3.578	23.698	0.25	2.029	0.25	2.023	112.258	300.765	301.404	74.298	49.955	74.816	82.864	58.274	57.261	73.856	72.637
20160413:12:27:15	23.432	11.814	-3.634	23.699	0.25	2.035	0.25	2.026	112.269	300.76	301.389	74.431	49.883	74.92	83.004	59.589	58.604	75.535	74.355
20160413:12:32:15	23.429	11.836	-3.666	23.699	0.25	2.027	0.25	2.029	112.329	300.781	301.422	74.553	49.949	75.075	83.137	60.962	59.886	77.291	75.996
20160413:12:37:15	23.427	11.831	-3.642	23.694	0.25	2.039	0.25	2.029	112.312	300.755	301.414	74.668	49.897	75.175	83.272	62.273	61.238	78.967	77.726
20160413:12:42:15	23.424	11.83	-3.675	23.694	0.25	2.04	0.25	2.04	112.304	300.763	301.383	74.795	49.91	75.266	83.403	63.634	62.515	80.707	79.361
20160413:12:47:15	23.423	11.837	-3.665	23.692	0.25	2.04	0.25	2.039	112.324	300.775	301.416	74.893	49.943	75.406	83.532	64.967	63.867	82.413	81.092
20160413:12:52:15	23.421	11.845	-3.653	23.69	0.25	2.044	0.25	2.044	112.346	300.753	301.386	75.007	49.865	75.503	83.655	66.285	65.147	84.1	82.731
20160413:12:57:15	23.419	11.86	-3.66	23.688	0.25	2.042	0.25	2.05	112.385	300.796	301.421	75.108	49.954	75.586	83.779	67.642	66.493	85.837	84.457
20160413:13:02:15	23.417	11.879	-3.674	23.687	0.25	2.055	0.25	2.033	112.438	300.794	301.415	75.201	49.901	75.703	83.9	68.965	67.78	87.531	86.105
20160413:13:07:15	23.416	11.887	-3.673	23.686	0.25	2.047	0.25	2.041	112.461	300.841	301.497	75.289	49.93	75.806	84.015	70.338	69.129	89.289	87.835
20160413:13:12:15	23.414	11.919	-3.7	23.686	0.25	2.049	0.25	2.043	112.552	300.841	301.438	75.415	49.957	75.901	84.13	71.652	70.415	90.972	89.483
20160413:13:17:15	23.413	11.955	-3.667	23.682	0.25	2.059	0.25	2.054	112.655	300.873	301.504	75.5	49.906	75.99	84.24	73.018	71.76	92.722	91.209
20160413:13:22:15	23.409	12.027	-3.682	23.68	0.25	2.08	0.25	2.081	112.86	300.826	301.421	75.556	49.965	76.088	84.348	74.356	73.045	94.437	92.857
20160413:13:27:15	23.404	12.101	-3.718	23.678	0.25	2.053	0.25	2.071	113.068	300.848	301.355	75.656	49.928	76.18	84.453	75.677	74.393	96.131	94.586
20160413:13:32:15	23.401	12.11	-3.686	23.672	0.25	2.057	0.25	2.07	113.09	300.833	301.408	75.753	49.934	76.234	84.552	77.049	75.683	97.891	96.242
20160413:13:37:15	23.403	11.639	-3.609	23.669	0.25	2.06	0.25	2.07	111.679	300.854	301.383	75.823	49.956	76.318	84.647	78.37	77.032	99.585	97.976
20160413:13:42:15	23.402	10.908	-3.592	23.666	0.25	2.04	0.25	2.05	109.448	300.814	301.37	75.869	49.894	76.416	84.74	79.747	78.325	101.352	99.635
20160413:13:47:15	23.402	10.935	-3.471	23.657	0.25	2.025	0.25	2.026	109.531	300.783	301.402	75.932	49.958	76.48	84.832	81.063	79.676	103.041	101.372
20160413:13:52:15	23.398	11.338	-3.533	23.657	0.25	2.043	0.25	2.037	110.764	300.767	301.363	76.062	49.941	76.548	84.917	82.418	80.968	104.781	103.032
20160413:13:57:15	23.395	12.033	-3.518	23.654	0.25	2.06	0.25	2.047	112.857	300.865	301.414	76.133	49.897	76.626	85.004	83.779	82.322	106.53	104.773
20160413:14:02:15	23.393	12.117	-3.575	23.656	0.25	2.06	0.25	2.062	113.096	300.877	301.378	76.199	49.966	76.72	85.088	85.114	83.611	108.244	106.43
20160413:14:07:15	23.392	12.168	-3.612	23.658	0.25	2.063	0.25	2.058	113.245	300.887	301.398	76.262	49.942	76.797	85.168	86.5	84.968	110.024	108.175
20160413:14:12:15	23.395	12.209	-3.569	23.657	0.25	2.062	0.25	2.056	113.366	300.88	301.362	76.395	49.913	76.884	85.251	87.819	86.261	111.719	109.838
20160413:14:17:15	23.39	12.239	-3.639	23.658	0.25	2.066	0.25	2.071	113.444	300.87	301.401	76.465	49.945	76.966	85.338	89.175	87.619	113.461	111.585
20160413:14:22:15	23.386	12.277	-3.603	23.651	0.25	2.082	0.25	2.041	113.55	300.87	301.395	76.534	49.956	77.067	85.421	90.543	88.915	115.22	113.252
20160413:14:27:15	23.383	12.314	-3.608	23.648	0.25	2.054	0.25	2.044	113.648	300.813	301.32	76.595	49.921	77.132	85.502	91.878	90.269	116.937	114.994
20160413:14:32:15	23.382	12.344	-3.64	23.649	0.25	2.063	0.25	2.056	113.733	300.872	301.404	76.706	49.918	77.235	85.584	93.259	91.549	118.713	116.643
20160413:14:37:15	23.381	12.364	-3.605	23.646	0.25	2.071	0.25	2.06	113.789	300.818	301.33	76.791	49.936	77.329	85.667	94.587	92.907	120.42	118.391
20160413:14:42:16	23.379	12.373	-3.609	23.645	0.25	2.08	0.25	2.069	113.811	300.789	301.406	76.853	49.909	77.392	85.748	95.931	94.207	122.15	120.066
20160413:14:47:16	23.383	12.381	-3.579	23.646	0.25	2.06	0.25	2.079	113.84	300.807	301.413	76.915	49.901	77.449	85.831	97.305	95.547	123.919	121.791
20160413:14:52:16	23.387	12.386	-3.559	23.649	0.25	2.031	0.25	2.046	113.861	300.759	301.358	77.011	49.925	77.522	85.914	98.632	96.868	125.626	123.492
20160413:14:57:16	23.385	12.433	-3.619	23.651	0.25	2.055	0.25	2.051	113.99	300.775	301.342	77.087	49.922	77.622	85.994	100.018	98.187	127.409	125.192
20160413:15:02:16	23.379	12.465	-3.675	23.649	0.25	2.067	0.25	2.051	114.071	300.782	301.42	77.164	49.926	77.706	86.074	101.355	99.526	129.13	126.917
20160413:15:07:16	23.374	12.488	-3.723	23.648	0.25	2.077	0.25	2.069	114.13	300.741	301.365	77.239	49.925	77.764	86.153	102.685	100.829	130.843	128.596
20160413:15:12:16	23.37	12.508	-3.711	23.643	0.25	2.061	0.25	2.06	114.18	300.815	301.419	77.321	49.933	77.82	86.235	104.064	102.181	132.619	130.338
20160413:15:17:16	23.368	12.527	-3.677	23.638	0.25	2.06	0.25	2.05	114.229	300.78	301.384	77.382	49.94	77.922	86.315	105.39	103.475	134.326	132.008
20160413:15:22:16	23.367	12.528	-3.639	23.635	0.25	2.062	0.25	2.064	114.231	300.759	301.384	77.444	49.927	77.998	86.393	106.771	104.821	136.106	133.744
20160413:15:27:16	23.368	12.538	-3.64	23.636	0.25	2.063	0.25	2.071	114.261	300.821	301.477	77.521	49.931	78.064	86.473	108.11	106.121	137.831	135.421
20160413:15:32:16	23.363	12.552	-3.648	23.631	0.25	2.051	0.25	2.051	114.294	300.813	301.446	77.601	49.929	78.117	86.551	109.437	107.48	139.543	137.175
20160413:15:37:16	23.361	12.561	-3.672	23.631	0.25	2.056	0.25	2.058	114.315	300.866	301.402	77.652	49.929	78.155	86.622	110.818	108.778	141.322	138.85
20160413:15:42:16	23.358	12.567	-3.712	23.63	0.25	2.064	0.25	2.07	114.327	300.847	301.442	77.7	49.933	78.219	86.693	112.149	110.134	143.039	140.6
20160413:15:47:16	23.357	12.576	-3.698	23.629	0.25	2.067	0.25	2.066	114.351	300.856	301.488	77.757	49.94	78.312	86.764	113.522	111.43	144.809	142.273
20160413:15:52:16	23.357	12.578	-3.678	23.627	0.25	2.076	0.25	2.047	114.358	300.734	301.321	77.811	49.939	78.369	86.834	114.881	112.791	146.563	144.03
20160413:15:57:16	23.358	12.578	-3.632	23.625	0.25	2.072	0.25	2.045	114.357	300.85	301.49	77.88	49.944	78.419	86.902	116.203	114.078	148.269	145.692
20160413:16:02:16	23.355	12.58	-3.612	23.621	0.25	2.065	0.25	2.05	114.361	300.782	301.506	77.948	49.943	78.464	86.966	117.592	115.438	150.061	147.449
20160413:16:07:16	23.355	12.582	-3.617	23.621	0.25	2.073	0.25	2.067	114.365	300.855	301.454	78.009	49.949	78.521	87.031	118.911	116.73	151.763	149.118
20160413:16:12:16	23.353	12.582	-3.608	23.618	0.25	2.06	0.25	2.045	114.361	300.852	301.476	78.048	49.953	78.58	87.099	120.268	118.085	153.515	150.868
20160413:16:17:16	23.348	12.586	-3.568	23.611	0.25	2.055	0.25	2.05	114.365	300.884	301.445	78.095	49.961	78.656	87.163	121.637	119.38	155.283	152.543
20160413:16:22:16	23.347	12.57	-3.582	23.611	0.25	2.066	0.25	2.051	114.32	300.797	301.428	78.13	49.956	78.692	87.221	122.971	120.72	157.006	154.276
20160413:16:27:16	23.349	12.563	-3.617	23.615	0.25	2.071	0.25	2.061	114.302	300.833	301.484	78.18	49.955	78.741	87.268	124.359	122.046	158.798	155.991
20160413:16:32:16	23.349	12.55	-3.638	23.617	0.25	2.056	0.25	2.051	114.267	300.843	301.44	78.275	49.945	78.788	87.328	125.701	123.357	160.531	157.684
20160413:16:37:16	23.349	12.556	-3.664	23.619	0.25	2.067	0.25	2.057	114.282	300.866	301.397	78.335	49.948	78.838	87.391	127.039	124.707	162.259	159.43
20160413:16:42:16	23.352	11.58	-3.604	23.617	0.25	2.065	0.25	2.053	111.433	300.752	301.391	78.386	49.954	78.92	87.453	128.422	126.001	164.046	161.103
20160413:16:47:16	23.35	11.387	-3.621	23.617	0.25	2.048	0.25	2.042	110.861	300.754	301.483	78.436	49.954	78.989	87.511	129.752	127.347	165.765	162.844
20160413:16:52:16	23.35	11.868	-3.631	23.617	0.25	2.06	0.25	2.059	112.288	300.759	301.416	78.483	49.956	79.035	87.567	131.124	128.645	167.537	164.523
20160413:16:57:16	23.349	12.387	-3.637	23.616	0.25	2.058	0.25	2.077	113.807	300.784	301.438	78.546	49.951	79.087	87.629	132.481	130.006	169.291	166.284
20160413:17:02:16	23.346	12.438	-3.661	23.615	0.25	2.067	0.25	2.046	113.946	300.849	301.436	78.639	49.955	79.139	87.689	133.806	131.304	171.004	167.962
20160413:17:07:16	23.346	12.457	-3.662	23.615	0.25	2.07	0.25	2.051	114	300.869	301.447	78.691	49.955	79.189	87.749	135.193	132.662	172.796	169.72
20160413:17:12:16	23.348	12.47	-3.631	23.615	0.25	2.061	0.25	2.054	114.039	300.834	301.4	78.749	49.962	79.298	87.809	136.515	133.955	174.506	171.393
20160413:17:17:16	23.347	12.475	-3.64	23.615	0.25	2.064	0.25	2.056	114.053	300.869	301.443	78.802	49.972	79.353	87.87	137.862	135.311	176.246	173.148
20160413:17:22:16	23.348	12.488	-3.652	23.617	0.25	2.065	0.25	2.047	114.09	300.883	301.445	78.857	49.984	79.404	87.934	139.241	136.613	178.03	174.833
20160413:17:27:16	23.347	12.494	-3.659	23.616	0.25	2.061	0.25	2.048	114.105	300.818	301.356	78.944	49.99	79.454	87.995	140.567	137.963	179.744	176.581
20160413:17:32:16	23.348	12.5	-3.664	23.617	0.25	2.067	0.25	2.054	114.125	300.86	301.481	79.007	49.998	79.502	88.059	141.952	139.256	181.535	178.254
20160413:17:37:16	23.348	12.511	-3.655	23.617	0.25	2.059	0.25	2.055	114.156	300.914	301.486	79.062	50.017	79.59	88.119	143.303	140.597	183.283	179.991
20160413:17:42:16	23.347	12.532	-3.659	23.616	0.25	2.066	0.25	2.058	114.214	300.853	301.429	79.105	50.022	79.645	88.177	144.623	141.927	184.991	181.712
20160413:17:47:16	23.346	12.545	-3.672	23.616	0.25	2.07	0.25	2.07	114.248	300.814	301.383	79.137	50.023	79.677	88.236	146.02	143.235	186.798	183.406
20160413:17:52:16	23.347	12.547	-3.649	23.615	0.25	2.083	0.25	2.073	114.254	300.852	301.45	79.163	50.026	79.709	88.293	147.341	144.586	188.507	185.156
20160413:17:57:16	23.349	12.548	-3.66	23.618	0.25	2.07	0.25	2.089	114.261	300.854	301.493	79.197	50.042	79.749	88.35	148.695	145.884	190.259	186.836
20160413:18:02:16	23.348	12.564	-3.682	23.619	0.25	2.071	0.25	2.064	114.303	300.911	301.523	79.286	50.054	79.789	88.403	150.069	147.238	192.037	188.59
20160413:18:07:16	23.348	12.555	-3.65	23.616	0.25	2.077	0.25	2.055	114.279	300.905	301.512	79.314	50.045	79.819	88.454	151.4	148.538	193.759	190.274
20160413:18:12:16	23.346	12.554	-3.698	23.618	0.25	2.089	0.25	2.069	114.272	300.901	301.506	79.326	50.045	79.834	88.501	152.791	149.898	195.559	192.036
20160413:18:17:16	23.344	12.578	-3.673	23.615	0.25	2.092	0.25	2.077	114.338	300.871	301.496	79.359	50.056	79.901	88.543	154.139	151.195	197.304	193.716
20160413:18:22:16	23.343	12.581	-3.671	23.613	0.25	2.059	0.25	2.05	114.343	300.843	301.499	79.382	50.074	79.91	88.585	155.464	152.556	199.019	195.479
20160413:18:27:16	23.343	12.588	-3.708	23.616	0.25	2.07	0.25	2.054	114.365	300.86	301.507	79.383	50.067	79.924	88.621	156.862	153.859	200.828	197.167
20160413:18:32:16	23.345	12.587	-3.692	23.616	0.25	2.073	0.25	2.062	114.363	300.854	301.532	79.396	50.106	79.948	88.655	158.187	155.211	202.543	198.919
20160413:18:37:16	23.345	12.235	-3.634	23.612	0.25	2.069	0.25	2.061	113.349	300.855	301.534	79.415	50.085	79.96	88.68	159.547	156.515	204.304	200.609
20160413:18:42:16	23.346	11.595	-3.643	23.614	0.25	2.079	0.25	2.056	112.486	300.764	301.536	79.412	50.063	79.948	88.708	160.931	157.847	206.094	202.335
20160413:18:47:16	23.347	12.152	-3.648	23.615	0.25	2.073	0.25	2.054	113.107	300.824	301.57	79.444	50.152	80	88.732	162.263	159.187	207.819	204.071
20160413:18:52:16	23.344	12.616	-3.675	23.614	0.25	2.07	0.25	2.063	114.444	300.776	301.457	79.43	50.136	79.994	88.751	163.642	160.49	209.604	205.759
20160413:18:57:16	23.346	12.601	-3.666	23.615	0.25	2.074	0.25	2.069

Time:	Stack Pressure:	Sat% H2O:	Static:	Barometric:	Flowmeter1:	Vacuum1:	Flowmeter2:	Vacuum2:	Stack Temp:	Sorbent Temp:	Probe Temp:	DGM#1 Temp:	Condenser Temp:	DGM#2 Temp:	DAQ Temp:	DGM1*:	DGM2*:	DGM1:	DGM2:
20160413:22:27:16	23.357	12.509	-3.735	23.631	0.25	2.073	0.25	2.055	114.149	300.847	301.53	79.02	50.234	79.6	88.73	222.037	217.728	285.148	279.885
20160413:22:32:16	23.354	12.83	-3.755	23.63	0.25	2.094	0.25	2.08	115.053	300.849	301.511	78.967	50.209	79.509	88.7	223.429	219.028	286.948	281.568
20160413:22:37:16	23.353	12.869	-3.721	23.627	0.25	2.084	0.25	2.081	115.16	300.969	301.563	78.965	50.274	79.499	88.668	224.765	220.382	288.674	283.32
20160413:22:42:16	23.353	12.877	-3.747	23.628	0.25	2.076	0.25	2.086	115.179	300.903	301.518	78.853	50.19	79.435	88.634	226.133	221.687	290.443	285.008
20160413:22:47:16	23.352	12.898	-3.748	23.627	0.25	2.1	0.25	2.066	115.237	300.888	301.534	78.828	50.277	79.418	88.599	227.499	223.048	292.207	286.769
20160413:22:52:16	23.35	12.9	-3.732	23.624	0.25	2.076	0.25	2.071	115.237	300.899	301.447	78.766	50.206	79.363	88.56	228.844	224.349	293.946	288.451
20160413:22:57:16	23.35	12.916	-3.731	23.624	0.25	2.075	0.25	2.077	115.283	300.945	301.555	78.736	50.254	79.342	88.522	230.237	225.713	295.746	290.216
20160413:23:02:16	23.35	12.91	-3.786	23.628	0.25	2.08	0.25	2.085	115.266	300.868	301.559	78.69	50.233	79.289	88.483	231.577	227.019	297.478	291.906
20160413:23:07:16	23.351	12.915	-3.763	23.627	0.25	2.081	0.25	2.069	115.282	300.885	301.505	78.649	50.215	79.213	88.443	232.916	228.376	299.207	293.66
20160413:23:12:16	23.352	12.955	-3.753	23.628	0.25	2.087	0.25	2.072	115.393	300.937	301.537	78.623	50.261	79.174	88.401	234.304	229.677	301	295.342
20160413:23:17:16	23.353	12.621	-3.753	23.629	0.25	2.088	0.25	2.08	114.454	300.911	301.554	78.52	50.18	79.122	88.358	235.632	231.016	302.715	297.073
20160413:23:22:16	23.353	11.897	-3.742	23.629	0.25	2.06	0.25	2.062	112.394	300.791	301.525	78.491	50.255	79.09	88.315	237.003	232.362	304.485	298.814
20160413:23:27:16	23.351	12.38	-3.765	23.628	0.25	2.066	0.25	2.054	113.766	300.87	301.561	78.461	50.195	79.057	88.268	238.374	233.667	306.256	300.502
20160413:23:32:16	23.35	12.912	-3.792	23.629	0.25	2.089	0.25	2.071	115.272	300.873	301.527	78.407	50.241	79.002	88.225	239.719	235.021	307.993	302.252
20160413:23:37:16	23.348	12.945	-3.795	23.627	0.25	2.085	0.25	2.082	115.36	300.923	301.518	78.381	50.198	78.96	88.18	241.111	236.326	309.791	303.938
20160413:23:42:16	23.346	12.945	-3.818	23.627	0.25	2.086	0.25	2.09	115.357	300.887	301.49	78.35	50.223	78.896	88.134	242.458	237.691	311.53	305.703
20160413:23:47:16	23.347	12.936	-3.807	23.627	0.25	2.087	0.25	2.096	115.334	300.927	301.544	78.296	50.216	78.818	88.09	243.789	238.996	313.248	307.389
20160413:23:52:16	23.349	12.941	-3.806	23.628	0.25	2.082	0.25	2.086	115.349	300.962	301.551	78.215	50.192	78.773	88.039	245.188	240.368	315.054	309.162
20160413:23:57:16	23.347	12.951	-3.806	23.627	0.25	2.082	0.25	2.09	115.374	300.938	301.543	78.164	50.261	78.747	87.99	246.517	241.666	316.769	310.838
20160414:00:02:16	23.347	12.955	-3.818	23.627	0.25	2.092	0.25	2.067	115.385	300.872	301.5	78.124	50.193	78.717	87.942	247.88	243.027	318.528	312.598
20160414:00:07:16	23.347	12.946	-3.797	23.626	0.25	2.096	0.25	2.078	115.36	300.885	301.453	78.078	50.265	78.681	87.894	249.257	244.324	320.306	314.273
20160414:00:12:16	23.346	12.936	-3.829	23.628	0.25	2.103	0.25	2.088	115.332	300.854	301.467	78.045	50.189	78.646	87.847	250.596	245.669	322.033	316.011
20160414:00:17:16	23.349	12.925	-3.773	23.626	0.25	2.111	0.25	2.087	115.305	300.916	301.567	78.016	50.272	78.619	87.802	251.984	247.005	323.824	317.737
20160414:00:22:16	23.351	12.937	-3.721	23.624	0.25	2.073	0.25	2.058	115.341	300.913	301.547	77.967	50.201	78.523	87.76	253.334	248.316	325.567	319.43
20160414:00:27:16	23.349	12.998	-3.738	23.623	0.25	2.091	0.25	2.082	115.506	300.885	301.519	77.928	50.259	78.497	87.718	254.661	249.671	327.278	321.18
20160414:00:32:16	23.346	12.983	-3.726	23.62	0.25	2.093	0.25	2.093	115.459	300.847	301.488	77.86	50.213	78.461	87.679	256.058	250.981	329.081	322.872
20160414:00:37:16	23.351	11.949	-3.726	23.625	0.25	2.084	0.25	2.078	112.543	300.843	301.523	77.819	50.234	78.423	87.638	257.389	252.334	330.798	324.62
20160414:00:42:16	23.353	12.268	-3.68	23.624	0.25	2.046	0.25	2.051	113.454	300.824	301.504	77.8	50.239	78.405	87.597	258.751	253.641	332.556	326.308
20160414:00:47:16	23.352	12.83	-3.757	23.629	0.25	2.079	0.25	2.082	115.05	300.816	301.469	77.742	50.216	78.348	87.556	260.126	255.004	334.328	328.068
20160414:00:52:16	23.353	12.861	-3.774	23.63	0.25	2.083	0.25	2.099	115.135	300.896	301.493	77.723	50.241	78.323	87.517	261.464	256.307	336.054	329.75
20160414:00:57:16	23.349	12.849	-3.803	23.629	0.25	2.077	0.25	2.089	115.099	300.92	301.503	77.679	50.215	78.272	87.477	262.854	257.673	337.846	331.513
20160414:01:02:16	23.346	12.834	-3.779	23.624	0.25	2.082	0.25	2.081	115.053	300.876	301.488	77.636	50.249	78.188	87.433	264.211	258.972	339.596	333.19
20160414:01:07:16	23.346	12.818	-3.77	23.624	0.25	2.079	0.25	2.09	115.007	300.851	301.475	77.579	50.22	78.141	87.384	265.543	260.332	341.313	334.945
20160414:01:12:16	23.345	12.789	-3.785	23.624	0.25	2.081	0.25	2.091	114.926	300.877	301.468	77.501	50.262	78.097	87.335	266.947	261.645	343.124	336.641
20160414:01:17:16	23.345	12.741	-3.765	23.622	0.25	2.087	0.25	2.087	114.792	300.827	301.414	77.439	50.207	78.037	87.287	268.274	262.977	344.835	338.359
20160414:01:22:16	23.34	12.714	-3.783	23.618	0.25	2.098	0.25	2.096	114.712	300.776	301.438	77.392	50.255	78.005	87.241	269.636	264.329	346.591	340.105
20160414:01:27:16	23.339	12.691	-3.782	23.617	0.25	2.103	0.25	2.098	114.646	300.862	301.427	77.356	50.212	77.971	87.208	271.018	265.633	348.372	341.788
20160414:01:32:16	23.338	12.652	-3.757	23.614	0.25	2.108	0.25	2.103	114.536	300.873	301.493	77.308	50.274	77.889	87.158	272.358	266.99	350.1	343.539
20160414:01:37:16	23.338	12.621	-3.748	23.613	0.25	2.102	0.25	2.087	114.448	300.793	301.475	77.246	50.224	77.832	87.107	273.745	268.295	351.889	345.224
20160414:01:42:16	23.337	12.593	-3.77	23.615	0.25	2.089	0.25	2.075	114.37	300.848	301.466	77.179	50.27	77.783	87.053	275.106	269.661	353.643	346.987
20160414:01:47:16	23.337	12.554	-3.778	23.614	0.25	2.097	0.25	2.082	114.258	300.875	301.525	77.124	50.214	77.738	87.001	276.435	270.968	355.356	348.673
20160414:01:52:16	23.336	12.528	-3.765	23.613	0.25	2.106	0.25	2.088	114.185	300.875	301.497	77.071	50.253	77.683	86.949	277.838	272.337	357.165	350.44
20160414:01:57:16	23.334	12.052	-3.761	23.61	0.25	2.095	0.25	2.069	112.795	300.814	301.477	77.002	50.215	77.644	86.9	279.168	273.636	358.878	352.117
20160414:02:02:16	23.335	11.413	-3.726	23.609	0.25	2.067	0.25	2.056	110.918	300.782	301.468	76.937	50.253	77.586	86.847	280.524	275	360.626	353.876
20160414:02:07:16	23.334	12.262	-3.73	23.608	0.25	2.064	0.25	2.074	113.423	300.86	301.492	76.891	50.211	77.505	86.791	281.909	276.295	362.411	355.547
20160414:02:12:16	23.332	12.421	-3.762	23.608	0.25	2.08	0.25	2.086	113.876	300.825	301.462	76.84	50.247	77.452	86.738	283.243	277.647	364.13	357.291
20160414:02:17:16	23.33	12.447	-3.755	23.606	0.25	2.088	0.25	2.093	113.947	300.822	301.401	76.789	50.195	77.402	86.683	284.627	278.984	365.913	359.015
20160414:02:22:16	23.33	12.45	-3.775	23.608	0.25	2.085	0.25	2.108	113.957	300.876	301.518	76.745	50.231	77.36	86.63	285.985	280.298	367.663	360.711
20160414:02:27:16	23.33	12.457	-3.762	23.607	0.25	2.077	0.25	2.081	113.975	300.904	301.514	76.693	50.197	77.322	86.58	287.315	281.652	369.376	362.457
20160414:02:32:16	23.327	12.459	-3.772	23.604	0.25	2.079	0.25	2.079	113.976	300.841	301.47	76.615	50.253	77.282	86.527	288.719	282.966	371.185	364.152
20160414:02:37:16	23.327	12.456	-3.766	23.604	0.25	2.075	0.25	2.089	113.967	300.872	301.464	76.561	50.187	77.172	86.472	290.05	284.325	372.9	365.904
20160414:02:42:16	23.326	12.451	-3.788	23.604	0.25	2.093	0.25	2.07	113.952	300.9	301.508	76.515	50.237	77.126	86.416	291.406	285.632	374.646	367.59
20160414:02:47:16	23.325	12.449	-3.788	23.609	0.25	2.095	0.25	2.076	113.945	300.865	301.462	76.471	50.184	77.078	86.359	292.795	286.998	376.435	369.352
20160414:02:52:16	23.323	12.442	-3.793	23.602	0.25	2.077	0.25	2.078	113.922	300.803	301.412	76.432	50.241	77.014	86.306	294.132	288.302	378.157	371.032
20160414:02:57:16	23.324	12.441	-3.797	23.603	0.25	2.083	0.25	2.094	113.921	300.834	301.459	76.375	50.197	76.939	86.25	295.519	289.675	379.943	372.803
20160414:03:02:16	23.323	12.445	-3.785	23.601	0.25	2.082	0.25	2.099	113.931	300.847	301.508	76.295	50.237	76.896	86.194	296.885	290.969	381.702	374.47
20160414:03:07:16	23.32	12.434	-3.782	23.598	0.25	2.09	0.25	2.088	113.894	300.802	301.448	76.238	50.174	76.844	86.138	298.214	292.332	383.413	376.227
20160414:03:12:16	23.318	12.435	-3.79	23.596	0.25	2.081	0.25	2.074	113.895	300.812	301.447	76.199	50.224	76.802	86.086	299.617	293.655	385.22	377.932
20160414:03:17:16	23.32	12.036	-3.768	23.597	0.25	2.08	0.25	2.078	112.731	300.848	301.487	76.156	50.195	76.755	86.032	300.945	294.983	386.93	379.645
20160414:03:22:16	23.322	11.372	-3.745	23.597	0.25	2.063	0.25	2.068	110.774	300.766	301.52	76.113	50.204	76.696	85.978	302.301	296.342	388.676	381.397
20160414:03:27:16	23.32	12.128	-3.753	23.596	0.25	2.073	0.25	2.083	113.012	300.782	301.44	76.076	50.186	76.619	85.924	303.689	297.646	390.463	383.077
20160414:03:32:16	23.319	12.337	-3.771	23.596	0.25	2.076	0.25	2.08	113.617	300.828	301.401	76.002	50.191	76.563	85.868	305.026	299.006	392.183	384.829
20160414:03:37:16	23.317	12.36	-3.771	23.594	0.25	2.08	0.25	2.072	113.68	300.909	301.504	75.936	50.174	76.517	85.813	306.413	300.314	393.969	386.515
20160414:03:42:16	23.317	12.371	-3.763	23.594	0.25	2.089	0.25	2.082	113.712	300.866	301.486	75.883	50.149	76.471	85.756	307.778	301.681	395.726	388.276
20160414:03:47:16	23.315	12.377	-3.748	23.591	0.25	2.081	0.25	2.09	113.726	300.845	301.464	75.857	50.175	76.43	85.702	309.106	302.99	397.435	389.962
20160414:03:52:16	23.316	12.382	-3.752	23.592	0.25	2.086	0.25	2.099	113.741	300.917	301.501	75.814	50.155	76.384	85.647	310.506	304.358	399.237	391.726
20160414:03:57:16	23.318	12.388	-3.743	23.593	0.25	2.099	0.25	2.084	113.761	300.885	301.475	75.765	50.173	76.282	85.589	311.835	305.669	400.946	393.414
20160414:04:02:16	23.318	12.394	-3.723	23.592	0.25	2.073	0.25	2.075	113.78	300.806	301.474	75.717	50.1	76.232	85.533	313.192	307.029	402.693	395.165
20160414:04:07:16	23.315	12.404	-3.734	23.59	0.25	2.086	0.25	2.085	113.802	300.782	301.451	75.639	50.182	76.203	85.476	314.579	308.342	404.478	396.857
20160414:04:12:16	23.314	12.417	-3.738	23.589	0.25	2.093	0.25	2.098	113.838	300.844	301.446	75.59	50.097	76.178	85.424	315.916	309.681	406.198	398.581
20160414:04:17:16	23.312	11.934	-3.719	23.586	0.25	2.097	0.25	2.073	112.42	300.819	301.436	75.556	50.174	76.147	85.372	317.307	311.033	407.987	400.323
20160414:04:22:16	23.31	11.415	-3.715	23.584	0.25	2.058	0.25	2.073	110.888	300.715	301.403	75.529	50.067	76.105	85.32	318.672	312.341	409.744	402.008
20160414:04:27:16	23.305	12.289	-3.724	23.578	0.25	2.08	0.25	2.078	113.457	300.733	301.386	75.5	50.173	76.066	85.268	320.005	313.702	411.459	403.761
20160414:04:32:16	23.305	12.448	-3.694	23.576	0.25	2.087	0.25	2.092	113.911	300.824	301.422	75.475	50.126	76.032	85.219	321.409	315.011	413.267	405.447
20160414:04:37:16	23.304	12.489	-3.721	23.578	0.25	2.096	0.25	2.101	114.026	300.781	301.395	75.439	50.209	76.002	85.174	322.737	316.382	414.976	407.214
20160414:04:42:16	23.303	12.513	-3.748	23.579	0.25	2.112	0.25	2.108	114.093	300.739	301.365	75.392	50.114	75.942	85.132	324.093	317.691	416.72	408.9
20160414:04:47:16	23.301	12.538	-3.744	23.576	0.25	2.083	0.25	2.09	114.158	300.82	301.485	75.392	50.232	75.928	85.096	325.476	319.063	418.5	410.667
20160414:04:52:16	23.3	12.545	-3.775	23.577	0.25	2.091	0.25	2.1	114.178	300.809	301.451	75.344	50.116	75.884	85.057	326.812	320.374	420.219	412.355
20160414:04:57:16	23.3	12.561	-3.777	23.578	0.25	2.098	0.25	2.105	114.224	300.826	301.423	75.342	50.238	75.876	85.023	328.203	321.735	422.009	414.109
20160414:05:02:16	23.297	12.56	-3.779	23.575	0.25	2.093	0.25	2.092	114.217	300.774	301.383	75.267	50.122	75.839	84.989	329.566	323.041	423.763	415.791
20160414:05:07:16	23.298	12.575	-3.774	23.575	0.25	2.095	0.25	2.082	114.258	300.78	301.403	75.264	50.24	75.841	84.956	330.891	324.389	425.467	417.526
20160414:05:12:16	23.297	12.564	-3.743	23.572	0.25	2.1	0.25	2.088	114.228	300.768	301.461	75.213	50.116	75.797	84.928	332.291	325.737	427.269	419.263
20160414:05:17:16	23.293	12.591	-3.75	23.569	0.25	2.111	0.25	2.095	114.297	300.823	301.414	75.214	50.231	75.801	84.9	333.616	327.049	428.974	420.953
20160414:05:22:16	23.293	12.608	-3.771	23.57	0.25	2.101	0.25	2.1	114.343	300.86	301.448	75.18	50.134	75.767	84.872	334.979	328.403	430.728	422.697
20160414:05:27:16	23.292	12.603	-3.773	23.569	0.25	2.091	0.25	2.112	114.328	300.847	301.468	75.159	50.205	75.747	84.849	336.364	329.712	432.509	424.383
20160414:05:32:16	23.29	12.477	-3.773	23.567	0.25	2.094	0.25	2.118	113.964	300.846	301.441	75.161	50.132	75.746	84.828	337.701	331.084	434.23	426.15
20160414:05:37:16	23.289	11.486	-3.74	23.564	0.25	2.075	0.25	2.062	111.072	300.768	301.394	75.122	50.188	75.69	84.805	339.094	332.394	436.022	427.838
20160414:05:42:16	23.287	11.997	-3.751	23.563	0.25	2.07	0.25	2.066	112.564	300.709	301.393	75.102	50.132	75.659	84.779	340.448	333.766	437.765	429.605
20160414:05:47:16	23.285	12.529	-3.765	23.562	0.25	2.105	0.25	2.087	114.109	300.747	301.398	75.102	50.193	75.658	84.756	341.776	335.071	439.474	431.288
20160414:05:52:16	23.284	12.571	-3.754	23.56	0.25	2.116	0.25	2.096	114.227	300.796	301.352	75.06	50.148	75.594	84.732	343.178	336.44	441.278	433.051
20160414:05:57:16	23.286	12.701	-3.739	23.561	0.25	2.131	0.25	2.103	114.593	300.749	301.448	75.046	50.151	75.574	84.707	344.505	337.743	442.985	434.729
20160414:06:02:16	23.288	12.818	-3.71	23.56	0.25	2.118	0.25	2.086	114.917	300.801	301.417	75.047	50.196	75.578	84.686	345.872	339.094	444.744	436.47
20160414:06:07:16	23.289	12.862	-3.725	23.563	0.25	2.098	0.25	2.098	115.042	300.723	301.4	74.955	50.127	75.54	84.663	347.252	340.44	446.52	438.203
20160414:06:12:16	23.289	12.943	-3.727	23.563	0.25	2.108	0.25	2.11	115.263	300.776	301.432	74.943	50.179	75.53	84.641	348.588	341.752	448.239	439.893
20160414:06:17:16	23.287	12.943	-3.766	23.564	0.25	2.11	0.25	2.094	115.262	300.785	301.426	74.955	50.17	75.533	84.62	349.983	343.107	450.033	441.637
20160414:06:22:16	23.289	12.89	-3.745	23.564	0.25	2.089	0.25	2.088	115.119	300.789	301.432	74.922	50.21	75.502	84.602	351.342	344.42	451.781	443.329
20160414:06:27:16	23.291	12.869	-3.774	23.568	0.25	2.082	0.25	2.086	115.064	300.782	301.443	74.894	50.132	75.483	84.582	352.672	345.794	453.493	445.098
20160414:06:32:16	23.293	12.882	-3.753	23.569	0.25	2.083	0.25	2.091	115.102	300.779	301.386	74.886	50.223	75.478	84.563	354.076	347.104	455.298	446.784
20160414:06:37:16	23.293	12.332	-3.758	23.57	0.25	2.082	0.25	2.095	113.551	300.758	301.402	74.88	50.163	75.467	84.545	355.404	348.475	457.006	448.549
20160414:06:42:16	23.294	11.928	-3.742	23.569	0.25	2.06	0.25	2.084	112.393	300.691	301.414	74.825	50.192	75.409	84.53	356.775	349.779	458.769	450.227
20160414:06:47:16	23.293	12.682	-3.76	23.57	0.25	2.069	0.25	2.082	114.55	300.795	301.497	74.822	50.095	75.386	84.509	358.149	351.15	460.535	451.992
20160414:06:52:16	23.293	12.75	-3.757	23.569	0.25	2.09	0.25	2.095	114.738	300.837	301.484	74.82	50.213	75.374	84.485	359.49	352.448	462.259	453.664
20160414:06:57:16	23.291	12.879	-3.749	23.567	0.25	2.096	0.25	2.113	115.093	300.789	301.421	74.775	50.087	75.298	84.462	360.882	353.805	464.05	455.41
20160414:07:02:16	23.291	12.954	-3.732	23.565	0.25	2.116	0.25	2.111	115.297	300.774	301.377	74.745	50.196	75.257	84.433	362.233	355.144	465.787	457.133
20160414:07:07:16	23.292	12.988	-3.687	23.563	0.25	2.103	0.25	2.098	115.393	300.789	301.461	74.682	50.087	75.225	84.401	363.57	356.461	467.506	458.829
20160414:07:12:16	23.291	12.974	-3.679	23.562	0.25	2.104	0.25	2.11	115.353	300.766	301.41	74.636	50.168	75.204	84.372	364.961	357.822	469.294	460.581
20160414:07:17:16	23.293	12.985	-3.692	23.564	0.25	2.117	0.25	2.114	115.383	300.746	301.404	74.627	50.107	75.187	84.341	366.295	359.134	471.009	462.269
20160414:07:22:16	23.293	13.078	-3.709	23.566	0.25	2.109	0.25	2.102	115.639	300.745	301.376	74.587	50.143	75.156	84.314	367.665	360.494	472.77	464.019
20160414:07:27:16	23.29	13.164	-3.701	23.562	0.25	2.126	0.25	2.111	115.865	300.845	301.461	74.595	50.13	75.163	84.284	369.03	361.804	474.526	465.705
20160414:07:32:16	23.288	13.003	-3.696	23.56	0.25	2.127	0.25	2.111	115.423	300.805	301.45	74.55	50.107	75.131	84.259	370.374	363.171	476.254	467.464
20160414:07:37:16	23.289	12.128	-3.676	23.559	0.25	2.103	0.25	2.073	112.969	300.76	301.456	74.544	50.117	75.127	84.239	371.77	364.476	478.048	469.145
20160414:07:42:16	23.289	12.194	-3.666	23.558	0.25	2.078	0.25	2.066	113.162	300.791	301.486	74.558	50.126	75.146	84.217	373.111	365.848	479.772	470.91
20160414:07:47:16	23.289	12.344	-3.671	23.559	0.25	2.092	0.25	2.064	113.593	300.8	301.482	74.56	50.141	75.132	84.199	374.453	367.152	481.498	472.588
20160414:07:52:16	23.289	12.428	-3.622	23.556	0.25	2.089	0.25	2.08	113.831	300.775	301.447	74.539	50.058	75.099	84.184	375.848	368.517	483.293	474.346
20160414:07:57:16	23.288	12.421	-3.622	23.554	0.25	2.093	0.25	2.095	113.809	300.831	301.468	74.542	50.105	75.103	84.167	377.192	369.84	485.02	476.049
20160414:08:02:16	23.287	12.947	-3.593	23.551	0.25	2.094	0.25	2.101	115.267	300.773	301.401	74.551	50.05	75.117	84.154	378.567	371.173	486.789	477.765
20160414:08:07:16	23.283	13.21	-3.589	23.547	0.25	2.105	0.25	2.114	115.978	300.802	301.451	74.575	50.135	75.139	84.142	379.93	372.536	488.543	479.521
20160414:08:12:16	23.284	13.342	-3.583	23.547	0.25	2.115	0.25	2.102	116.333	300.864	301.46	74.595	50.043	75.154	84.136	381.274	373.842	490.272	481.203
20160414:08:17:16	23.282	13.44	-3.572	23.545	0.25	2.101	0.25	2.104	116.591	300.827	301.356	74.59	50.114	75.148	84.132	382.666	375.201	492.063	482.953
20160414:08:22:16	23.282	13.466	-3.575	23.545	0.25	2.117	0.25	2.126	116.659	300.796	301.329	74.59	49.985	75.144	84.13	384.006	376.509	493.787	484.637
20160414:08:27:16	23.28	13.434	-3.587	23.544	0.25	2.114	0.25	2.094	116.572	300.828	301.416	74.645	50.09	75.172	84.131	385.352	377.875	495.519	486.397
20160414:08:32:16	23.279	13.426	-3.578	23.542	0.25	2.117	0.25	2.084	116.549	300.892	301.478	74.703	50.017	75.207	84.134	386.74	379.178	497.306	488.075
20160414:08:37:16	23.279	13.447	-3.55	23.54	0.25	2.112	0.25	2.096	116.604	300.835	301.441	74.729	50.111	75.22	84.137	388.074	380.549	499.022	489.842
20160414:08:42

Time:	Stack Pressure:	Sat% H2O:	Static:	Barometric:	Flowmeter1:	Vacuum1:	Flowmeter2:	Vacuum2:	Stack Temp:	Sorbent Temp:	Probe Temp:	DGM#1 Temp:	Condenser Temp:	DGM#2 Temp:	DAQ Temp:	DGM1*:	DGM2*:	DGM1:	DGM2:
20160414:12:12:16	23.194	12.999	-3.576	23.457	0.25	2.201	0.25	2.106	115.245	300.738	301.343	76.637	49.969	77.164	85.746	446.658	438.016	574.67	564.12
20160414:12:17:16	23.193	12.653	-3.507	23.451	0.25	2.164	0.25	2.084	114.313	300.753	301.47	76.733	49.982	77.245	85.807	447.989	439.319	576.396	565.812
20160414:12:22:16	23.189	13.143	-3.584	23.452	0.25	2.183	0.25	2.102	115.631	300.775	301.389	76.79	49.948	77.332	85.868	449.386	440.676	578.209	567.573
20160414:12:27:16	23.192	12.344	-3.506	23.45	0.25	2.137	0.25	2.054	113.445	300.745	301.363	76.839	50.024	77.388	85.93	450.708	441.98	579.924	569.267
20160414:12:32:16	23.186	13.142	-3.502	23.444	0.25	2.156	0.25	2.058	115.636	300.751	301.407	76.892	49.974	77.44	85.99	452.06	443.342	581.678	571.036
20160414:12:37:16	23.184	13.435	-3.551	23.445	0.25	2.161	0.25	2.099	116.426	300.782	301.424	76.95	49.969	77.497	86.052	453.444	444.645	583.474	572.729
20160414:12:42:16	23.181	13.443	-3.524	23.44	0.25	2.168	0.25	2.098	116.443	300.826	301.38	77.048	50.026	77.59	86.115	454.779	446	585.207	574.491
20160414:12:47:16	23.177	13.365	-3.502	23.434	0.25	2.169	0.25	2.111	116.231	300.888	301.425	77.108	49.961	77.654	86.178	456.142	447.306	586.978	576.188
20160414:12:52:16	23.175	13.273	-3.423	23.427	0.25	2.158	0.25	2.106	115.982	300.87	301.414	77.158	50.011	77.707	86.244	457.509	448.637	588.754	577.919
20160414:12:57:16	23.174	13.229	-3.46	23.429	0.25	2.167	0.25	2.119	115.864	300.78	301.371	77.246	50.012	77.753	86.309	458.845	449.99	590.491	579.679
20160414:13:02:16	23.173	13.204	-3.466	23.428	0.25	2.157	0.25	2.122	115.794	300.846	301.406	77.316	49.956	77.797	86.371	460.233	451.29	592.294	581.37
20160414:13:07:16	23.165	13.152	-3.472	23.42	0.25	2.161	0.25	2.097	115.641	300.863	301.443	77.369	50.031	77.854	86.435	461.582	452.647	594.048	583.135
20160414:13:12:16	23.164	13.076	-3.514	23.422	0.25	2.171	0.25	2.093	115.435	300.823	301.436	77.412	50.008	77.92	86.498	462.912	453.952	595.778	584.835
20160414:13:17:16	23.167	12.996	-3.55	23.428	0.25	2.168	0.25	2.101	115.224	300.804	301.421	77.45	49.955	77.982	86.56	464.303	455.32	597.585	586.615
20160414:13:22:16	23.161	12.455	-3.575	23.424	0.25	2.183	0.25	2.103	113.685	300.842	301.456	77.48	50.014	78.025	86.616	465.636	456.62	599.319	588.306
20160414:13:27:16	23.161	11.696	-3.525	23.42	0.25	2.144	0.25	2.093	111.511	300.803	301.468	77.528	49.983	78.071	86.675	466.978	457.97	601.065	590.064
20160414:13:32:16	23.161	12.53	-3.536	23.421	0.25	2.145	0.25	2.083	113.917	300.802	301.452	77.623	49.95	78.122	86.734	468.369	459.282	602.874	591.773
20160414:13:37:16	23.163	12.742	-3.547	23.423	0.25	2.163	0.25	2.099	114.52	300.823	301.491	77.672	49.995	78.166	86.79	469.696	460.606	604.6	593.496
20160414:13:42:16	23.167	12.719	-3.51	23.425	0.25	2.163	0.25	2.08	114.462	300.904	301.505	77.716	50.006	78.239	86.848	471.059	461.955	606.372	595.252
20160414:13:47:16	23.163	12.791	-3.569	23.426	0.25	2.178	0.25	2.083	114.655	300.887	301.461	77.755	49.97	78.299	86.902	472.437	463.258	608.165	596.949
20160414:13:52:16	23.157	12.873	-3.583	23.42	0.25	2.17	0.25	2.088	114.872	300.849	301.43	77.79	49.978	78.345	86.951	473.77	464.625	609.9	598.729
20160414:13:57:16	23.155	12.94	-3.567	23.417	0.25	2.176	0.25	2.106	115.051	300.871	301.489	77.839	50.028	78.397	87.003	475.145	465.926	611.689	600.425
20160414:14:02:16	23.152	12.924	-3.551	23.413	0.25	2.159	0.25	2.099	115.003	300.889	301.473	77.923	50.004	78.446	87.055	476.499	467.293	613.452	602.207
20160414:14:07:16	23.15	12.861	-3.557	23.411	0.25	2.172	0.25	2.107	114.828	300.816	301.386	77.97	49.995	78.48	87.11	477.841	468.584	615.2	603.889
20160414:14:12:16	23.144	12.864	-3.568	23.406	0.25	2.178	0.25	2.112	114.827	300.827	301.456	78.01	50.015	78.526	87.162	479.226	469.937	617.004	605.652
20160414:14:17:16	23.142	12.909	-3.524	23.401	0.25	2.176	0.25	2.09	114.946	300.866	301.513	78.051	49.984	78.595	87.213	480.581	471.278	618.769	607.402
20160414:14:22:16	23.141	12.313	-3.502	23.399	0.25	2.181	0.25	2.088	113.251	300.843	301.498	78.074	49.971	78.629	87.244	481.908	472.581	620.498	609.102
20160414:14:27:16	23.14	11.677	-3.511	23.398	0.25	2.158	0.25	2.083	111.424	300.785	301.501	78.097	49.983	78.67	87.293	483.299	473.935	622.311	610.868
20160414:14:32:16	23.137	12.55	-3.536	23.397	0.25	2.152	0.25	2.084	113.944	300.741	301.414	78.142	49.968	78.72	87.342	484.639	475.239	624.057	612.57
20160414:14:37:16	23.139	12.623	-3.478	23.395	0.25	2.139	0.25	2.092	114.151	300.848	301.485	78.21	49.969	78.768	87.394	485.979	476.603	625.804	614.35
20160414:14:42:16	23.136	12.608	-3.511	23.395	0.25	2.157	0.25	2.097	114.107	300.825	301.463	78.293	49.972	78.809	87.445	487.365	477.904	627.611	616.047
20160414:14:47:16	23.133	12.608	-3.522	23.392	0.25	2.153	0.25	2.094	114.101	300.803	301.414	78.354	49.963	78.853	87.493	488.688	479.255	629.337	617.81
20160414:14:52:16	23.129	12.641	-3.538	23.389	0.25	2.166	0.25	2.1	114.186	300.868	301.485	78.406	49.975	78.943	87.541	490.042	480.566	631.104	619.523
20160414:14:57:16	23.126	12.651	-3.543	23.386	0.25	2.162	0.25	2.113	114.209	300.886	301.469	78.451	49.98	78.999	87.592	491.425	481.886	632.907	621.246
20160414:15:02:16	23.128	12.673	-3.479	23.384	0.25	2.174	0.25	2.112	114.275	300.804	301.431	78.493	49.976	79.046	87.647	492.76	483.23	634.65	623.002
20160414:15:07:16	23.126	12.637	-3.491	23.383	0.25	2.171	0.25	2.119	114.17	300.857	301.452	78.547	49.975	79.085	87.7	494.117	484.533	636.42	624.705
20160414:15:12:16	23.119	12.63	-3.563	23.381	0.25	2.174	0.25	2.112	114.142	300.879	301.471	78.63	49.978	79.13	87.753	495.494	485.897	638.219	626.487
20160414:15:17:16	23.121	12.652	-3.539	23.381	0.25	2.179	0.25	2.096	114.206	300.865	301.482	78.686	49.999	79.177	87.806	496.828	487.195	639.959	628.182
20160414:15:22:16	23.123	12.054	-3.551	23.384	0.25	2.166	0.25	2.095	112.486	300.81	301.428	78.715	49.993	79.221	87.859	498.199	488.564	641.75	629.972
20160414:15:27:16	23.124	11.56	-3.48	23.38	0.25	2.143	0.25	2.065	111.047	300.753	301.441	78.745	50.009	79.273	87.912	499.558	489.858	643.524	631.664
20160414:15:32:16	23.127	12.167	-3.395	23.376	0.25	2.143	0.25	2.066	112.828	300.784	301.459	78.764	50.003	79.319	87.963	500.895	491.194	645.27	633.41
20160414:15:37:16	23.13	12.461	-3.455	23.384	0.25	2.165	0.25	2.075	113.683	300.91	301.495	78.801	50.01	79.358	88.012	502.281	492.543	647.08	635.173
20160414:15:42:16	23.127	12.469	-3.584	23.39	0.25	2.177	0.25	2.097	113.703	300.884	301.523	78.838	50.028	79.382	88.061	503.637	493.845	648.85	636.874
20160414:15:47:16	23.13	12.468	-3.535	23.39	0.25	2.165	0.25	2.107	113.703	300.924	301.514	78.843	50.018	79.393	88.105	504.972	495.203	650.593	638.648
20160414:15:52:16	23.135	12.5	-3.503	23.392	0.25	2.17	0.25	2.097	113.802	300.914	301.504	78.856	50.017	79.409	88.141	506.366	496.509	652.413	640.355
20160414:15:57:16	23.132	12.51	-3.599	23.396	0.25	2.186	0.25	2.113	113.825	300.888	301.493	78.866	50.022	79.408	88.176	507.726	497.877	654.187	642.143
20160414:16:02:16	23.131	12.522	-3.539	23.391	0.25	2.168	0.25	2.113	113.857	300.879	301.509	78.861	50.036	79.412	88.204	509.055	499.173	655.922	643.836
20160414:16:07:16	23.134	12.521	-3.465	23.389	0.25	2.167	0.25	2.091	113.859	300.844	301.483	78.845	50.013	79.391	88.23	510.446	500.517	657.739	645.592
20160414:16:12:16	23.137	12.509	-3.469	23.392	0.25	2.18	0.25	2.103	113.828	300.818	301.489	78.848	50.077	79.401	88.251	511.798	501.867	659.504	647.357
20160414:16:17:16	23.14	12.522	-3.487	23.396	0.25	2.159	0.25	2.108	113.87	300.831	301.471	78.855	50.073	79.41	88.265	513.129	503.165	661.241	649.053
20160414:16:22:16	23.145	12.105	-3.515	23.403	0.25	2.164	0.25	2.116	112.668	300.83	301.525	78.835	50.161	79.399	88.28	514.524	504.528	663.061	650.833
20160414:16:27:16	23.151	11.375	-3.38	23.399	0.25	2.143	0.25	2.065	111.047	300.753	301.441	78.745	50.009	79.273	87.912	499.558	489.858	643.524	631.664
20160414:16:32:16	23.154	11.772	-3.426	23.405	0.25	2.132	0.25	2.069	111.709	300.791	301.459	78.796	50.173	79.362	88.301	517.207	507.204	666.561	654.327
20160414:16:37:16	23.147	12.266	-3.496	23.405	0.25	2.13	0.25	2.093	113.156	300.89	301.575	78.759	50.135	79.344	88.311	518.607	508.502	668.387	656.023
20160414:16:42:16	23.146	12.31	-3.539	23.406	0.25	2.148	0.25	2.109	113.28	300.894	301.525	78.745	50.092	79.318	88.315	519.944	509.842	670.131	657.773
20160414:16:47:16	23.15	12.318	-3.511	23.408	0.25	2.149	0.25	2.096	113.308	300.849	301.488	78.722	50.215	79.295	88.313	521.288	511.196	671.883	659.539
20160414:16:52:16	23.156	12.337	-3.559	23.417	0.25	2.151	0.25	2.097	113.373	300.91	301.542	78.692	50.167	79.267	88.306	522.684	512.495	673.704	661.235
20160414:16:57:16	23.167	12.356	-3.601	23.432	0.25	2.141	0.25	2.099	113.442	300.915	301.528	78.685	50.218	79.223	88.297	524.019	513.864	675.443	663.021
20160414:17:02:16	23.166	12.366	-3.645	23.434	0.25	2.147	0.25	2.093	113.469	300.943	301.556	78.653	50.246	79.198	88.286	525.375	515.17	677.209	664.724
20160414:17:07:16	23.171	12.4	-3.634	23.438	0.25	2.15	0.25	2.095	113.573	300.936	301.561	78.633	50.22	79.184	88.271	526.767	516.542	679.022	666.511
20160414:17:12:16	23.165	12.426	-3.602	23.43	0.25	2.149	0.25	2.096	113.638	300.897	301.523	78.616	50.29	79.164	88.256	528.097	517.84	680.754	668.205
20160414:17:17:16	23.162	12.428	-3.542	23.423	0.25	2.141	0.25	2.097	113.64	300.885	301.494	78.492	50.188	79.099	88.238	529.458	519.181	682.528	669.953
20160414:17:22:16	23.159	12.491	-3.487	23.416	0.25	2.147	0.25	2.1	113.812	300.922	301.564	78.468	50.26	79.084	88.217	530.845	520.535	684.335	671.72
20160414:17:27:16	23.162	12.537	-3.463	23.417	0.25	2.146	0.25	2.083	113.946	300.945	301.575	78.464	50.258	79.077	88.192	532.184	521.835	686.08	673.415
20160414:17:32:16	23.17	12.525	-3.534	23.43	0.25	2.148	0.25	2.102	113.924	300.903	301.541	78.412	50.234	79.022	88.169	533.547	523.203	687.854	675.199
20160414:17:37:16	23.175	12.504	-3.607	23.441	0.25	2.157	0.25	2.107	113.874	300.905	301.539	78.394	50.282	79.003	88.14	534.927	524.509	689.65	676.9
20160414:17:42:16	23.172	12.473	-3.607	23.437	0.25	2.148	0.25	2.099	113.782	300.947	301.572	78.355	50.236	78.948	88.114	536.263	525.882	691.389	678.69
20160414:17:47:16	23.173	12.451	-3.536	23.434	0.25	2.14	0.25	2.089	113.723	300.961	301.589	78.303	50.298	78.87	88.082	537.635	527.179	693.176	680.38
20160414:17:52:16	23.18	12.414	-3.516	23.439	0.25	2.156	0.25	2.093	113.626	300.894	301.535	78.238	50.249	78.829	88.047	538.997	528.524	694.948	682.132
20160414:17:57:16	23.182	12.44	-3.544	23.442	0.25	2.147	0.25	2.105	113.703	300.871	301.576	78.177	50.33	78.79	88.011	540.337	529.876	696.691	683.893
20160414:18:02:16	23.182	12.443	-3.531	23.441	0.25	2.146	0.25	2.115	113.711	300.96	301.552	78.113	50.259	78.744	87.974	541.725	531.181	698.496	685.592
20160414:18:07:16	23.18	12.436	-3.481	23.436	0.25	2.136	0.25	2.09	113.69	300.915	301.54	78.076	50.334	78.703	87.933	543.09	532.54	700.272	687.363
20160414:18:12:16	23.178	12.425	-3.443	23.431	0.25	2.146	0.25	2.072	113.653	300.961	301.574	78.015	50.258	78.633	87.889	544.423	533.846	702.007	689.064
20160414:18:17:16	23.176	12.402	-3.48	23.432	0.25	2.15	0.25	2.092	113.587	300.928	301.567	77.963	50.33	78.557	87.842	545.816	535.214	703.819	690.846
20160414:18:22:16	23.181	12.424	-3.546	23.441	0.25	2.155	0.25	2.09	113.657	300.938	301.572	77.866	50.281	78.488	87.794	547.166	536.509	705.574	692.532
20160414:18:27:16	23.184	12.43	-3.566	23.446	0.25	2.15	0.25	2.084	113.677	300.902	301.534	77.792	50.321	78.415	87.743	548.501	537.866	707.309	694.297
20160414:18:32:16	23.185	12.415	-3.476	23.44	0.25	2.142	0.25	2.088	113.638	300.966	301.584	77.73	50.262	78.348	87.689	549.897	539.206	709.124	696.041
20160414:18:37:16	23.185	12.354	-3.487	23.441	0.25	2.146	0.25	2.088	113.463	300.899	301.55	77.657	50.315	78.255	87.629	551.24	540.516	710.87	697.746
20160414:18:42:16	23.185	12.31	-3.468	23.44	0.25	2.151	0.25	2.101	113.339	300.945	301.562	77.545	50.273	78.152	87.562	552.59	541.877	712.624	699.517
20160414:18:47:16	23.186	12.259	-3.448	23.44	0.25	2.158	0.25	2.087	113.196	300.924	301.577	77.467	50.333	78.082	87.496	553.992	543.189	714.446	701.224
20160414:18:52:16	23.185	12.228	-3.52	23.444	0.25	2.146	0.25	2.083	113.103	300.956	301.6	77.377	50.286	78.001	87.422	555.325	544.567	716.178	703.015
20160414:18:57:16	23.185	12.244	-3.536	23.445	0.25	2.146	0.25	2.067	113.152	300.928	301.566	77.278	50.338	77.854	87.34	556.677	545.87	717.933	704.709
20160414:19:02:16	23.184	12.217	-3.553	23.445	0.25	2.142	0.25	2.076	113.069	300.917	301.53	77.146	50.271	77.758	87.257	558.072	547.225	719.744	706.47
20160414:19:07:16	23.182	12.208	-3.579	23.445	0.25	2.148	0.25	2.096	113.041	300.975	301.613	77.035	50.34	77.674	87.185	559.406	548.561	721.476	708.207
20160414:19:12:16	23.187	12.196	-3.537	23.448	0.25	2.154	0.25	2.1	113.017	300.957	301.574	76.917	50.289	77.548	87.09	560.775	549.878	723.252	709.917
20160414:19:17:16	23.189	11.856	-3.615	23.455	0.25	2.173	0.25	2.11	112.008	300.935	301.571	76.817	50.341	77.429	86.988	562.16	551.24	725.048	711.686
20160414:19:22:16	23.19	11.172	-3.714	23.463	0.25	2.141	0.25	2.108	109.959	300.871	301.58	76.709	50.267	77.336	86.888	563.503	552.554	726.789	713.391
20160414:19:27:16	23.191	12.038	-3.71	23.464	0.25	2.161	0.25	2.076	112.565	300.863	301.531	76.555	50.321	77.178	86.779	564.88	553.925	728.574	715.169
20160414:19:32:16	23.189	12.102	-3.676	23.46	0.25	2.188	0.25	2.099	112.748	300.898	301.564	76.455	50.256	77.057	86.67	566.252	555.233	730.352	716.867
20160414:19:37:16	23.189	12.187	-3.747	23.465	0.25	2.178	0.25	2.106	112.993	300.951	301.587	76.335	50.316	76.924	86.565	567.593	556.599	732.089	718.637
20160414:19:42:16	23.198	12.294	-3.568	23.46	0.25	2.181	0.25	2.102	113.311	300.933	301.543	76.213	50.257	76.826	86.454	568.987	557.919	733.894	720.35
20160414:19:47:16	23.199	12.305	-3.625	23.466	0.25	2.189	0.25	2.119	113.347	300.923	301.571	76.118	50.302	76.723	86.341	570.353	559.251	735.663	722.075
20160414:19:52:16	23.198	12.245	-3.681	23.469	0.25	2.163	0.25	2.092	113.172	300.876	301.525	75.996	50.258	76.583	86.227	571.687	560.604	737.389	723.829
20160414:19:57:16	23.199	12.205	-3.65	23.467	0.25	2.164	0.25	2.094	113.059	300.864	301.586	75.874	50.283	76.488	86.112	573.087	561.919	739.2	725.532
20160414:20:02:16	23.2	12.26	-3.627	23.466	0.25	2.165	0.25	2.077	113.218	300.833	301.513	75.784	50.257	76.386	85.999	574.442	563.295	740.954	727.314
20160414:20:07:16	23.205	12.331	-3.556	23.467	0.25	2.16	0.25	2.071	113.43	300.798	301.5	75.695	50.284	76.26	85.887	575.781	564.605	742.685	729.011
20160414:20:12:16	23.206	12.387	-3.603	23.471	0.25	2.171	0.25	2.09	113.59	300.821	301.489	75.566	50.248	76.175	85.772	577.194	565.985	744.513	730.797
20160414:20:17:16	23.21	12.159	-3.618	23.476	0.25	2.178	0.25	2.09	112.933	300.807	301.477	75.497	50.265	76.108	85.664	578.534	567.288	746.244	732.483
20160414:20:22:16	23.21	11.53	-3.612	23.476	0.25	2.161	0.25	2.076	111.09	300.8	301.509	75.41	50.254	75.998	85.556	579.888	568.64	747.994	734.233
20160414:20:27:16	23.208	12.09	-3.562	23.47	0.25	2.136	0.25	2.079	112.734	300.796	301.473	75.29	50.243	75.896	85.453	581.285	570.003	749.8	735.996
20160414:20:32:16	23.207	12.32	-3.488	23.463	0.25	2.159	0.25	2.082	113.4	300.803	301.471	75.211	50.26	75.83	85.355	582.623	571.313	751.53	737.692
20160414:20:37:16	23.209	12.347	-3.455	23.463	0.25	2.163	0.25	2.081	113.481	300.896	301.51	75.155	50.229	75.768	85.255	583.996	572.686	753.304	739.468
20160414:20:42:16	23.209	12.338	-3.529	23.468	0.25	2.167	0.25	2.089	113.455	300.869	301.476	75.077	50.258	75.658	85.16	585.387	574	755.102	741.167
20160414:20:47:16	23.205	12.366	-3.585	23.469	0.25	2.169	0.25	2.088	113.51	300.931	301.516	74.977	50.213	75.568	85.07	586.734	575.373	756.841	742.944
20160414:20:52:16	23.203	12.402	-3.62	23.469	0.25	2.163	0.25	2.098	113.628	300.867	301.481	74.879	50.254	75.494	84.977	588.114	576.682	758.624	744.635
20160414:20:57:16	23.203	12.41	-3.604	23.468	0.25	2.173	0.25	2.099	113.649	300.873	301.487	74.805	50.177	75.422	84.888	589.484	578.047	760.393	746.4
20160414:21:02:16	23.203	12.421	-3.548	23.464	0.25	2.164	0.25	2.098	113.682	300.869	301.506	74.742	50.252	75.325	84.803	590.83	579.393	762.131	748.141
20160414:21:07:16	23.207	12.439	-3.546	23.468	0.25	2.165	0.25	2.111	113.739	300.89	301.506	74.65	50.175	75.237	84.715	592.232	580.714	763.941	749.848
20160414:21:12:16	23.211	12.468	-3.564	23.473	0.25	2.181	0.25	2.094	113.826	300.919	301.476	74.555	50.242	75.161	84.63	593.601	582.083	765.707	751.617
20160414:21:17:16	23.213	12.515	-3.502	23.47	0.25	2.17	0.25	2.09	113.961	300.849	301.476	74.491	50.161	75.096	84.546	594.938	583.401	767.433	753.32
20160414:21:22:16	23.214	11.789	-3.455	23.468	0.25	2.17	0.25	2.083	111.869	300.836	301.496	74.411	50.238	75.034	84.463	596.34	584.779	769.243	755.1
20160414:21:27:16	23.209	11.801	-3.465	23.464	0.25	2.148	0.25	2.09	111.891	300.798	301.493	74.322	50.134	74.925	84.377	597.692	586.094	770.987	756.799
20160414:21:32:16	23.204	12.478	-3.544	23.465	0.249	2.642	0.25	2.089	113.843	300.756	301.463	74.246	50.211	74.847	84.293	599.037	587.462	772.722	758.566
20160414:21:37:16	23.205	12.523	-3.502	23.463	0.25	2.79	0.25	2.072	113.972	300.867	301.504	74.184	50.143	74.783	84.211	600.444	588.788	774.537	760.278
20160414:21:42:16	23.206	12.554	-3.575	23.469	0.25	2.375	0.25	2.076	114.062	300.835	301.479	74.091	50.211	74.713	84.128	601.785	590.122	776.267	762
20160414:21:47:16	23.205	12.58	-3.661	23.475	0.25	2.25	0.25	2.092	114.133	300.866	301.475	73.991	50.124	74.606	84.046	603.151	591.481	778.028	763.754
20160414:21:52:16	23.212	12.63	-3.645	23.48	0.25	2.245	0.25	2.108	114.282	300.883	301.432	73.913	50.172	74.525	83.963	604.552	592.799	779.833	765.455
20160414:21:57:16	23.214	12.667	-3.673	23.484	0.25	2.209	0.25	2.114	114.388	300.826	301.407	73.851	50.125	74.441	83.884	605.902	594.18	781.572	767.235
20160414:22:02:16	23.211	12.654	-3.636	23.479	0.25	2.211	0.25	2.116	114.349	300.836	301.465	73.768	50.157	74.346	83.804	607.275	595.496	783.341	768.932
20160414:22:07:16	23.21	12.656	-3.66	23.479	0.25	2.218	0.25	2.091	114.352	300.809	301.454	73.688	50.136	74.293	83.725	608.648	596.876	785.109	770.712
20160414:22:12:16	23.208	12.651	-3.705	23.481	0.25	2.207	0.25	2.084	114.336	300.782	301.418	73.637	50.162	74.244	83.65	609.995	598.18	786.844	772.393
20160414:22:17:16	23.211	12.617	-3.703	23.483	0.25	2.209	0.25	2.107	114.246	300.819	301.412	73.595	50.161	74.202	83.579	611.393	599.544	788.644	774.152
20160414:22:22:16	23.213	12.274	-3.71	23.485	0.25	2.21	0.25	2.103	113.265	300.778	301.433	73.538	50.137	74.148	83.509	612.763	600.895	790.407	775.893
20160414:22:27:16

Time:	Stack Pressure:	Sat% H2O:	Static:	Barometric:	Flowmeter1:	Vacuum1:	Flowmeter2:	Vacuum2:	Stack Temp:	Sorbent Temp:	Probe Temp:	DGM#1 Temp:	Condenser Temp:	DGM#2 Temp:	DAQ Temp:	DGM1*:	DGM2*:	DGM1:	DGM2:
20160415:01:57:16	23.205	12.095	-3.786	23.483	0.25	2.192	0.25	2.135	112.75	300.779	301.394	71.238	49.977	71.862	81.158	671.44	658.574	865.767	850.053
20160415:02:02:16	23.205	12.151	-3.783	23.483	0.25	2.188	0.25	2.124	112.913	300.8	301.395	71.167	50.06	71.787	81.1	672.788	659.948	867.494	851.816
20160415:02:07:16	23.204	12.154	-3.763	23.481	0.25	2.199	0.25	2.122	112.919	300.787	301.366	71.126	49.994	71.721	81.044	674.181	661.262	869.28	853.502
20160415:02:12:16	23.203	12.134	-3.718	23.476	0.25	2.206	0.25	2.118	112.86	300.77	301.39	71.077	50.055	71.672	80.981	675.52	662.643	870.996	855.274
20160415:02:17:16	23.203	12.117	-3.764	23.48	0.25	2.216	0.25	2.126	112.812	300.7	301.272	71.021	49.983	71.613	80.915	676.906	663.95	872.772	856.951
20160415:02:22:16	23.203	12.098	-3.755	23.479	0.25	2.203	0.25	2.105	112.756	300.698	301.353	70.984	50.013	71.568	80.854	678.276	665.322	874.528	858.711
20160415:02:27:16	23.204	12.083	-3.757	23.481	0.25	2.203	0.25	2.118	112.717	300.708	301.391	70.899	50.009	71.512	80.795	679.609	666.632	876.235	860.391
20160415:02:32:16	23.206	11.696	-3.747	23.481	0.25	2.202	0.25	2.118	111.554	300.739	301.361	70.832	49.99	71.415	80.733	681.017	667.988	878.039	862.13
20160415:02:37:16	23.206	10.973	-3.707	23.479	0.25	2.173	0.25	2.084	109.363	300.589	301.311	70.788	50.046	71.368	80.675	682.341	669.336	879.735	863.859
20160415:02:42:16	23.205	11.381	-3.737	23.48	0.25	2.169	0.25	2.092	110.61	300.55	301.282	70.749	49.987	71.328	80.618	683.707	670.654	881.485	865.549
20160415:02:47:16	23.203	11.86	-3.742	23.478	0.25	2.186	0.25	2.106	112.061	300.646	301.322	70.71	50.076	71.303	80.561	685.085	672.014	883.25	867.293
20160415:02:52:16	23.202	11.893	-3.769	23.479	0.25	2.192	0.25	2.097	112.159	300.709	301.386	70.673	49.985	71.275	80.51	686.426	673.333	884.969	868.985
20160415:02:57:16	23.203	11.924	-3.776	23.481	0.25	2.209	0.25	2.105	112.25	300.674	301.357	70.621	50.071	71.178	80.461	687.82	674.703	886.754	870.741
20160415:03:02:16	23.203	11.928	-3.79	23.482	0.25	2.22	0.25	2.116	112.263	300.704	301.268	70.563	49.987	71.148	80.414	689.164	676.017	888.474	872.425
20160415:03:07:16	23.203	11.943	-3.765	23.48	0.25	2.219	0.25	2.118	112.304	300.678	301.341	70.542	50.055	71.125	80.369	690.505	677.391	890.191	874.186
20160415:03:12:16	23.203	11.937	-3.761	23.479	0.25	2.189	0.25	2.106	112.287	300.702	301.321	70.474	50.011	71.072	80.325	691.901	678.701	891.978	875.865
20160415:03:17:16	23.201	11.931	-3.726	23.475	0.25	2.196	0.25	2.096	112.268	300.682	301.353	70.446	50.001	71.042	80.282	693.24	680.076	893.693	877.628
20160415:03:22:16	23.199	11.948	-3.726	23.473	0.25	2.205	0.25	2.105	112.314	300.751	301.359	70.427	50.055	71.018	80.241	694.627	681.381	895.469	879.301
20160415:03:27:16	23.199	11.96	-3.715	23.472	0.25	2.193	0.25	2.115	112.348	300.675	301.304	70.378	49.973	70.972	80.201	695.992	682.749	897.217	881.055
20160415:03:32:16	23.199	11.802	-3.741	23.474	0.25	2.196	0.25	2.119	111.871	300.666	301.326	70.365	50.106	70.953	80.164	697.317	684.072	898.933	882.75
20160415:03:37:16	23.202	10.887	-3.673	23.472	0.25	2.172	0.25	2.093	109.085	300.643	301.321	70.314	49.976	70.851	80.121	698.719	685.414	900.707	884.47
20160415:03:42:16	23.199	11.061	-3.697	23.471	0.25	2.168	0.25	2.078	109.614	300.553	301.287	70.28	50.033	70.819	80.079	700.046	686.774	902.407	886.212
20160415:03:47:16	23.198	11.746	-3.715	23.471	0.25	2.184	0.25	2.098	111.717	300.689	301.333	70.252	50.018	70.794	80.039	701.422	688.086	904.169	887.895
20160415:03:52:16	23.198	11.772	-3.722	23.472	0.25	2.184	0.25	2.112	111.793	300.67	301.295	70.179	49.988	70.752	80	702.789	689.448	905.919	889.639
20160415:03:57:16	23.195	11.789	-3.772	23.473	0.25	2.197	0.25	2.123	111.841	300.675	301.287	70.157	50.063	70.74	79.963	704.133	690.762	907.639	891.323
20160415:04:02:16	23.194	11.77	-3.769	23.471	0.25	2.188	0.25	2.124	111.781	300.706	301.312	70.095	49.962	70.681	79.926	705.53	692.14	909.426	893.088
20160415:04:07:16	23.195	11.768	-3.749	23.471	0.25	2.19	0.25	2.113	111.776	300.741	301.332	70.08	50.085	70.676	79.888	706.871	693.453	911.143	894.771
20160415:04:12:16	23.195	11.746	-3.762	23.472	0.25	2.192	0.25	2.102	111.712	300.693	301.342	70.017	49.979	70.62	79.852	708.22	694.826	912.869	896.53
20160415:04:17:16	23.195	11.737	-3.718	23.468	0.25	2.183	0.25	2.114	111.686	300.695	301.299	69.985	50.002	70.571	79.812	709.606	696.135	914.643	898.207
20160415:04:22:16	23.192	11.725	-3.778	23.47	0.25	2.204	0.25	2.119	111.647	300.732	301.351	69.949	50.032	70.501	79.771	710.945	697.512	916.356	899.97
20160415:04:27:16	23.192	11.713	-3.767	23.469	0.25	2.182	0.25	2.115	111.611	300.732	301.346	69.86	49.956	70.437	79.728	712.339	698.812	918.139	901.635
20160415:04:32:16	23.192	11.711	-3.77	23.469	0.25	2.191	0.25	2.091	111.605	300.672	301.301	69.814	50.036	70.39	79.682	713.695	700.184	919.874	903.393
20160415:04:37:16	23.191	11.708	-3.792	23.469	0.25	2.194	0.25	2.109	111.592	300.665	301.353	69.776	49.959	70.344	79.637	715.034	701.514	921.587	905.096
20160415:04:42:16	23.19	11.697	-3.797	23.469	0.25	2.19	0.25	2.098	111.557	300.711	301.361	69.724	49.992	70.297	79.588	716.432	702.85	923.374	906.806
20160415:04:47:16	23.19	11.693	-3.802	23.469	0.25	2.192	0.25	2.079	111.548	300.723	301.324	69.664	50.008	70.226	79.536	717.774	704.217	925.091	908.556
20160415:04:52:16	23.19	11.687	-3.809	23.47	0.25	2.194	0.25	2.086	111.53	300.705	301.31	69.597	49.951	70.157	79.482	719.148	705.527	926.848	910.233
20160415:04:57:16	23.19	11.679	-3.789	23.469	0.25	2.201	0.25	2.095	111.505	300.701	301.346	69.533	50.026	70.114	79.432	720.518	706.894	928.6	911.983
20160415:05:02:16	23.188	11.665	-3.796	23.467	0.25	2.193	0.25	2.11	111.461	300.717	301.362	69.485	49.951	70.066	79.378	721.86	708.209	930.315	913.665
20160415:05:07:16	23.187	11.664	-3.796	23.466	0.25	2.192	0.25	2.114	111.456	300.676	301.321	69.446	49.969	70.017	79.322	723.26	709.585	932.106	915.427
20160415:05:12:16	23.188	11.688	-3.779	23.465	0.25	2.192	0.25	2.101	111.53	300.672	301.334	69.408	50.004	69.975	79.267	724.589	710.898	933.804	917.107
20160415:05:17:16	23.186	11.695	-3.788	23.465	0.25	2.194	0.25	2.099	111.548	300.721	301.369	69.361	49.938	69.908	79.209	725.953	712.278	935.548	918.874
20160415:05:22:16	23.188	11.684	-3.788	23.466	0.25	2.183	0.25	2.088	111.516	300.729	301.294	69.325	50.015	69.844	79.153	727.337	713.587	937.317	920.549
20160415:05:27:16	23.187	11.676	-3.789	23.466	0.25	2.194	0.25	2.088	111.49	300.628	301.266	69.218	49.956	69.798	79.103	728.678	714.967	939.031	922.314
20160415:05:32:16	23.185	11.674	-3.768	23.462	0.25	2.184	0.25	2.086	111.483	300.644	301.292	69.179	49.959	69.768	79.05	730.078	716.266	940.82	923.976
20160415:05:37:16	23.186	11.655	-3.802	23.465	0.25	2.184	0.25	2.102	111.428	300.692	301.34	69.137	50.013	69.734	78.998	731.427	717.636	942.544	925.729
20160415:05:42:16	23.188	11.637	-3.808	23.468	0.25	2.187	0.25	2.116	111.378	300.714	301.336	69.111	49.951	69.716	78.949	732.77	718.968	944.259	927.432
20160415:05:47:16	23.191	11.621	-3.795	23.47	0.25	2.18	0.25	2.089	111.333	300.671	301.33	69.068	49.991	69.66	78.899	734.163	720.304	946.039	929.141
20160415:05:52:16	23.192	11.618	-3.811	23.472	0.25	2.186	0.25	2.099	111.325	300.657	301.319	69.045	49.988	69.602	78.854	735.501	721.671	947.748	930.889
20160415:05:57:16	23.192	11.66	-3.814	23.473	0.25	2.195	0.25	2.098	111.451	300.642	301.304	69.025	49.96	69.55	78.807	736.89	722.981	949.522	932.564
20160415:06:02:16	23.194	11.669	-3.789	23.473	0.25	2.198	0.25	2.114	111.482	300.667	301.308	68.974	50.019	69.504	78.761	738.255	724.346	951.265	934.308
20160415:06:07:16	23.196	11.685	-3.776	23.473	0.25	2.185	0.25	2.12	111.533	300.675	301.311	68.916	49.939	69.466	78.719	739.583	725.661	952.961	935.989
20160415:06:12:16	23.198	11.712	-3.784	23.476	0.25	2.192	0.25	2.106	111.616	300.74	301.408	68.877	49.978	69.447	78.676	740.982	727.04	954.746	937.752
20160415:06:17:16	23.2	11.715	-3.758	23.476	0.25	2.174	0.25	2.105	111.628	300.673	301.293	68.824	49.993	69.39	78.632	742.318	728.352	956.452	939.429
20160415:06:22:16	23.2	11.706	-3.743	23.475	0.25	2.181	0.25	2.116	111.602	300.71	301.389	68.798	49.939	69.368	78.592	743.693	729.726	958.207	941.184
20160415:06:27:16	23.2	11.699	-3.756	23.476	0.25	2.172	0.25	2.105	111.581	300.683	301.339	68.765	49.996	69.332	78.547	745.067	731.039	959.961	942.861
20160415:06:32:16	23.202	11.653	-3.746	23.477	0.25	2.169	0.25	2.099	111.444	300.606	301.261	68.712	49.96	69.233	78.503	746.401	732.416	961.663	944.62
20160415:06:37:16	23.2	11.666	-3.751	23.476	0.25	2.175	0.25	2.116	111.483	300.669	301.305	68.681	49.939	69.201	78.459	747.798	733.73	963.446	946.299
20160415:06:42:16	23.199	11.707	-3.749	23.475	0.25	2.187	0.25	2.102	111.601	300.642	301.323	68.639	50.005	69.163	78.409	749.123	735.101	965.137	948.051
20160415:06:47:16	23.199	11.736	-3.778	23.477	0.25	2.192	0.25	2.113	111.688	300.621	301.312	68.548	49.955	69.115	78.364	750.499	736.417	966.893	949.731
20160415:06:52:16	23.2	11.796	-3.74	23.475	0.25	2.193	0.25	2.109	111.87	300.602	301.26	68.513	49.953	69.082	78.319	751.866	737.771	968.637	951.461
20160415:06:57:16	23.2	11.831	-3.71	23.473	0.25	2.2	0.25	2.112	111.971	300.625	301.251	68.484	50.026	69.053	78.275	753.212	739.119	970.354	953.182
20160415:07:02:16	23.201	11.737	-3.699	23.473	0.25	2.187	0.25	2.109	111.692	300.633	301.291	68.429	49.939	69.003	78.227	754.61	740.441	972.137	954.87
20160415:07:07:16	23.205	10.82	-3.64	23.472	0.25	2.162	0.25	2.078	108.878	300.65	301.322	68.394	49.954	68.951	78.183	755.934	741.809	973.826	956.617
20160415:07:12:16	23.205	10.91	-3.612	23.471	0.25	2.143	0.25	2.063	109.154	300.583	301.295	68.354	50.024	68.884	78.136	757.3	743.119	975.569	958.289
20160415:07:17:16	23.205	11.686	-3.637	23.472	0.25	2.162	0.25	2.082	111.547	300.573	301.244	68.258	49.915	68.829	78.089	758.668	744.482	977.313	960.03
20160415:07:22:16	23.205	11.771	-3.614	23.471	0.25	2.171	0.25	2.098	111.802	300.662	301.307	68.231	49.934	68.802	78.044	760.011	745.794	979.026	961.705
20160415:07:27:16	23.202	11.787	-3.624	23.468	0.25	2.17	0.25	2.1	111.844	300.648	301.281	68.205	50.007	68.772	77.995	761.408	747.168	980.807	963.459
20160415:07:32:16	23.199	11.804	-3.627	23.465	0.25	2.169	0.25	2.111	111.889	300.651	301.298	68.153	49.937	68.724	77.946	762.73	748.481	982.494	965.135
20160415:07:37:16	23.197	11.87	-3.626	23.463	0.25	2.18	0.25	2.099	112.082	300.638	301.273	68.115	49.933	68.698	77.901	764.101	749.856	984.243	966.891
20160415:07:42:16	23.197	11.957	-3.633	23.464	0.25	2.19	0.25	2.112	112.336	300.628	301.224	68.089	49.995	68.677	77.857	765.475	751.167	985.994	968.566
20160415:07:47:16	23.199	12.011	-3.636	23.466	0.25	2.184	0.25	2.12	112.498	300.65	301.224	68.045	49.93	68.63	77.817	766.821	752.544	987.711	970.323
20160415:07:52:16	23.2	12.037	-3.658	23.469	0.25	2.193	0.25	2.123	112.576	300.662	301.275	68.008	49.926	68.599	77.779	768.217	753.862	989.491	972.006
20160415:07:57:16	23.2	12.088	-3.653	23.469	0.25	2.174	0.25	2.116	112.723	300.59	301.252	67.969	49.979	68.541	77.743	769.549	755.234	991.189	973.756
20160415:08:02:16	23.199	12.173	-3.641	23.466	0.25	2.191	0.25	2.115	112.965	300.64	301.255	67.958	49.939	68.52	77.706	770.91	756.537	992.924	975.419
20160415:08:07:16	23.196	12.23	-3.645	23.464	0.25	2.192	0.25	2.108	113.128	300.647	301.349	67.926	49.911	68.497	77.672	772.287	757.902	994.68	977.162
20160415:08:12:16	23.195	12.318	-3.668	23.465	0.25	2.214	0.25	2.12	113.377	300.652	301.336	67.908	49.979	68.497	77.641	773.635	759.235	996.398	978.863
20160415:08:17:16	23.194	12.38	-3.67	23.463	0.25	2.21	0.25	2.121	113.551	300.613	301.288	67.885	49.938	68.481	77.61	775.025	760.574	998.17	980.571
20160415:08:22:16	23.191	12.452	-3.704	23.464	0.25	2.184	0.25	2.109	113.753	300.68	301.299	67.908	49.92	68.486	77.584	776.36	761.935	999.872	982.308
20160415:08:27:16	23.19	12.438	-3.681	23.461	0.25	2.198	0.25	2.112	113.709	300.658	301.243	67.871	49.938	68.439	77.56	777.716	763.248	1001.602	983.985
20160415:08:32:16	23.189	12.4	-3.696	23.461	0.25	2.199	0.25	2.127	113.6	300.646	301.288	67.871	49.93	68.438	77.538	779.09	764.61	1003.354	985.724
20160415:08:37:16	23.187	12.382	-3.71	23.46	0.25	2.19	0.25	2.114	113.548	300.652	301.281	67.873	49.894	68.442	77.519	780.435	765.934	1005.069	987.414
20160415:08:42:16	23.186	12.399	-3.69	23.457	0.25	2.182	0.25	2.113	113.594	300.618	301.266	67.853	49.953	68.424	77.503	781.828	767.301	1006.844	989.158
20160415:08:47:16	23.186	12.359	-3.683	23.457	0.25	2.201	0.25	2.113	113.48	300.611	301.235	67.819	49.888	68.398	77.483	783.164	768.616	1008.548	990.836
20160415:08:52:16	23.185	12.33	-3.689	23.456	0.25	2.206	0.25	2.119	113.395	300.618	301.255	67.821	49.863	68.402	77.464	784.523	769.99	1010.281	992.59
20160415:08:57:16	23.185	12.298	-3.71	23.458	0.25	2.198	0.25	2.124	113.304	300.576	301.271	67.824	49.954	68.409	77.445	785.905	771.303	1012.043	994.267
20160415:09:02:16	23.183	12.232	-3.762	23.46	0.25	2.204	0.25	2.131	113.113	300.55	301.235	67.797	49.853	68.37	77.432	787.247	772.685	1013.754	996.03
20160415:09:07:16	23.184	12.192	-3.765	23.46	0.25	2.204	0.25	2.119	112.999	300.509	301.224	67.791	49.831	68.365	77.417	788.641	773.99	1015.531	997.695
20160415:09:12:16	23.182	12.187	-3.791	23.461	0.25	2.201	0.25	2.115	112.981	300.52	301.112	67.805	49.935	68.37	77.402	789.982	775.367	1017.241	999.453
20160415:09:17:16	23.181	12.189	-3.789	23.459	0.25	2.203	0.25	2.12	112.987	300.544	301.152	67.815	49.858	68.377	77.389	791.33	776.669	1018.959	1001.115
20160415:09:22:16	23.182	11.394	-3.746	23.458	0.25	2.198	0.25	2.115	110.626	300.492	301.144	67.816	49.895	68.382	77.377	792.715	778.04	1020.726	1002.865
20160415:09:27:16	23.181	11.399	-3.762	23.457	0.25	2.194	0.25	2.119	110.629	300.508	301.146	67.79	49.904	68.352	77.368	794.055	779.361	1022.433	1004.551
20160415:09:32:16	23.179	12.127	-3.8	23.459	0.25	2.214	0.25	2.112	112.806	300.499	301.141	67.78	49.768	68.342	77.364	795.452	780.711	1024.215	1006.274
20160415:09:37:16	23.183	12.2	-3.74	23.458	0.25	2.21	0.25	2.11	113.02	300.574	301.146	67.8	49.85	68.362	77.359	796.79	782.062	1025.92	1007.998
20160415:09:42:16	23.183	12.249	-3.683	23.454	0.25	2.184	0.25	2.122	113.161	300.615	301.183	67.812	49.83	68.369	77.355	798.139	783.384	1027.641	1009.686
20160415:09:47:16	23.181	12.292	-3.72	23.455	0.25	2.204	0.25	2.135	113.28	300.615	301.21	67.816	49.763	68.374	77.353	799.526	784.753	1029.409	1011.434
20160415:09:52:16	23.181	12.297	-3.747	23.456	0.25	2.196	0.25	2.139	113.295	300.588	301.212	67.818	49.858	68.375	77.351	800.866	786.066	1031.119	1013.109
20160415:09:57:16	23.181	12.375	-3.732	23.456	0.25	2.207	0.25	2.149	113.518	300.604	301.238	67.821	49.738	68.383	77.351	802.26	787.431	1032.896	1014.852
20160415:10:02:17	23.181	12.379	-3.739	23.456	0.25	2.2	0.25	2.117	113.529	300.602	301.209	67.827	49.799	68.39	77.35	803.608	788.741	1034.615	1016.524
20160415:10:07:17	23.182	12.365	-3.747	23.457	0.25	2.204	0.25	2.134	113.49	300.599	301.271	67.848	49.787	68.401	77.351	804.953	790.118	1036.33	1018.282
20160415:10:12:17	23.181	12.348	-3.72	23.455	0.25	2.209	0.25	2.117	113.442	300.621	301.264	67.867	49.737	68.424	77.352	806.342	791.431	1038.102	1019.959
20160415:10:17:17	23.182	12.32	-3.699	23.454	0.25	2.184	0.25	2.104	113.362	300.575	301.227	67.874	49.822	68.433	77.356	807.678	792.802	1039.806	1021.709
20160415:10:22:17	23.183	11.32	-3.712	23.456	0.25	2.185	0.25	2.103	110.405	300.535	301.042	67.878	49.718	68.443	77.362	809.072	794.111	1041.583	1023.38
20160415:10:27:17	23.183	11.55	-3.712	23.456	0.25	2.166	0.25	2.107	111.083	300.558	301.165	67.927	49.822	68.475	77.367	810.411	795.486	1043.291	1025.135
20160415:10:32:17	23.183	12.193	-3.708	23.455	0.25	2.187	0.25	2.112	113	300.644	301.194	68.018	49.806	68.529	77.378	811.754	796.798	1045.004	1026.81
20160415:10:37:17	23.185	12.199	-3.708	23.458	0.25	2.196	0.25	2.12	113.02	300.65	301.207	68.033	49.798	68.539	77.391	813.142	798.17	1046.774	1028.562
20160415:10:42:17	23.184	12.18	-3.735	23.458	0.25	2.217	0.25	2.126	112.964	300.658	301.188	68.039	49.85	68.547	77.407	814.473	799.47	1048.472	1030.222
20160415:10:47:17	23.184	12.167	-3.718	23.458	0.25	2.213	0.25	2.113	112.929	300.55	301.158	68.044	49.735	68.556	77.425	815.868	800.839	1050.252	1031.97
20160415:10:52:17	23.184	12.171	-3.669	23.454	0.25	2.194	0.25	2.105	112.938	300.658	301.206	68.096	49.894	68.654	77.441	817.211	802.165	1051.965	1033.664
20160415:10:57:17	23.185	12.132	-3.632	23.452	0.25	2.187	0.25	2.113	112.829	300.63	301.246	68.101	49.772	68.667	77.461	818.554	803.504	1053.68	1035.374
20160415:11:02:17	23.185	12.118	-3.652	23.453	0.25	2.2	0.25	2.109	112.786	300.654	301.238	68.103	49.821	68.673	77.483	819.94	804.856	1055.448	1037.102
20160415:11:07:17	23.185	12.096	-3.551	23.446	0.25	2.174	0.25	2.088	112.725	300.67	301.251	68.151	49.857	68.722	77.506	821.275	806.174	1057.152	1038.786
20160415:11:12:17	23.186	12.082	-3.629	23.453	0.25	2.185	0.25	2.105	112.684	300.723	301.266	68.165	49.8	68.731	77.525	822.67	807.541	1058.931	1040.532
20160415:11:17:17	23.186	12.07	-3.614	23.451	0.25	2.179	0.25	2.108	112.65	300.711	301.268	68.163	49.881	68.722	77.548	824.016	808.852	1060.65	1042.207
20160415:11:22:17	23.185	12.072	-3.644	23.453	0.25	2.185	0.25	2.122	112.653	300.666	301.286	68.189	49.764	68.748	77.571	825.361	810.214	1062.367	1043.947
20160415:11:27:17	23.186	12.056	-3.601	23.45	0.25	2.196	0.25	2.122	112.608	300.646	301.271	68.212	49.887	68.77	77.591	826.75	811.525	1064.139	1045.622
20160415:11:32:17	23.186	12.062	-3.522	23.445	0.25	2.175	0.25	2.119	112.628	300.649	301.246	68.211	49.801	68.768	77.611	828.084	812.903	1065.843	1047.383
20160415:11:37:17	23.187	12.032	-3.599	23.452	0.25	2.188	0.25	2.093	112.541	300.663	301.266	68.226	49.81	68.781	77.633	829.476	814.216	1067.619	1049.06
20160415:11:42:17	23.186	12.063	-3.658	23.455	0.25	2.205	0.25	2.108	112.63	300.711	301.338	68.265	49.9	68.818	77.652	830.828	815.59	1069.344	1050.816
20160415:11:47:17	23.189	12.046	-3.629	23.456	0.25	2.195	0.25	2.106	112.586	300.736	301.321	68.263	49.816	68.814	77.668	832.166	816.898	1071.052	1052.487
20160415:11:52:17	23.193	12.026	-3.677	23.464	0.25	2.21	0.25	2.133	112.532	300.657	301.263	68.256	49.919	68.808	77.684	833.557	818.274	1072.826	1054.244
20160415:11:57:17	23.195	12.006	-3.684	23.466	0.25	2.187	0.25	2.127	112.479	300.59	301.246	68.254	49.808	68.815	77.7	834.894	819.588	1074.531	1055.923
20160415:12:02:17	23.197	11.354	-3.681	23.467	0.25	2.181	0.25	2.114	110.51	300.604	301.243	68.288	49.948	68.847	77.717	836.283	820.956	1076.304	1057.669
20160415:12:07:17	23.198	10.98	-3.688	23.469	0.25	2.173	0.25	2.092

Time:	Stack Pressure:	Sat% H2O:	Static:	Barometric:	Flowmeter1:	Vacuum1:	Flowmeter2:	Vacuum2:	Stack Temp:	Sorbent Temp:	Probe Temp:	DGM#1 Temp:	Condenser Temp:	DGM#2 Temp:	DAQ Temp:	DGM1*:	DGM2*:	DGM1:	DGM2:
20160415:15:42:17	23.239	11.605	-3.667	23.509	0.25	2.198	0.25	2.089	111.357	300.634	301.286	67.678	49.889	68.244	77.338	896.077	879.876	1152.476	1132.81
20160415:15:47:17	23.237	11.604	-3.669	23.507	0.25	2.187	0.25	2.106	111.353	300.658	301.289	67.691	49.935	68.244	77.323	897.46	881.205	1154.235	1134.502
20160415:15:52:17	23.238	11.6	-3.634	23.505	0.25	2.185	0.25	2.098	111.341	300.642	301.257	67.678	49.854	68.238	77.306	898.798	882.547	1155.937	1136.211
20160415:15:57:17	23.238	11.595	-3.635	23.505	0.25	2.177	0.25	2.099	111.326	300.593	301.229	67.631	49.904	68.2	77.291	900.189	883.894	1157.707	1137.927
20160415:16:02:17	23.241	11.578	-3.675	23.512	0.25	2.18	0.25	2.103	111.281	300.624	301.242	67.643	49.905	68.206	77.278	901.522	885.216	1159.402	1139.609
20160415:16:07:17	23.251	11.541	-3.514	23.51	0.25	2.18	0.25	2.071	111.184	300.627	301.282	67.647	49.841	68.211	77.265	902.88	886.579	1161.13	1141.344
20160415:16:12:17	23.25	11.532	-3.554	23.512	0.25	2.187	0.25	2.077	111.154	300.648	301.278	67.65	49.937	68.217	77.254	904.252	887.89	1162.874	1143.013
20160415:16:17:17	23.25	11.539	-3.513	23.508	0.25	2.184	0.25	2.08	111.176	300.643	301.267	67.652	49.929	68.23	77.246	905.593	889.255	1164.58	1144.752
20160415:16:22:17	23.25	11.538	-3.557	23.512	0.25	2.171	0.25	2.091	111.174	300.69	301.292	67.657	49.921	68.24	77.239	906.988	890.566	1166.354	1146.421
20160415:16:27:17	23.248	11.572	-3.649	23.517	0.25	2.187	0.25	2.107	111.272	300.637	301.275	67.66	49.967	68.233	77.232	908.309	891.925	1168.033	1148.15
20160415:16:32:17	23.251	11.575	-3.594	23.516	0.25	2.188	0.25	2.111	111.286	300.511	301.225	67.638	49.827	68.209	77.226	909.685	893.245	1169.783	1149.831
20160415:16:37:17	23.253	11.582	-3.625	23.519	0.25	2.192	0.25	2.092	111.31	300.54	301.171	67.646	49.863	68.21	77.225	911.056	894.604	1171.526	1151.56
20160415:16:42:17	23.255	11.616	-3.562	23.517	0.25	2.174	0.25	2.089	111.415	300.536	301.194	67.649	49.925	68.213	77.225	912.377	895.911	1173.206	1153.224
20160415:16:47:17	23.257	11.625	-3.488	23.514	0.25	2.177	0.25	2.101	111.446	300.536	301.194	67.654	49.801	68.213	77.225	913.768	897.28	1174.974	1154.966
20160415:16:52:17	23.252	11.61	-3.656	23.521	0.25	2.202	0.25	2.127	111.393	300.592	301.198	67.655	49.881	68.219	77.225	915.098	898.59	1176.665	1156.633
20160415:16:57:17	23.254	11.596	-3.531	23.514	0.25	2.175	0.25	2.112	111.352	300.59	301.235	67.655	49.87	68.219	77.226	916.484	899.96	1178.428	1158.378
20160415:17:02:17	23.253	11.331	-3.637	23.52	0.25	2.192	0.25	2.12	110.532	300.597	301.201	67.664	49.784	68.224	77.228	917.826	901.269	1180.133	1160.043
20160415:17:07:17	23.254	10.502	-3.55	23.515	0.25	2.175	0.25	2.07	107.921	300.577	301.259	67.692	49.602	68.236	77.23	919.166	902.639	1181.837	1161.788
20160415:17:12:17	23.252	11.432	-3.618	23.518	0.25	2.183	0.25	2.088	110.852	300.609	301.272	67.726	49.851	68.256	77.231	920.548	903.946	1183.594	1163.451
20160415:17:17:17	23.255	11.546	-3.646	23.523	0.25	2.18	0.25	2.107	111.203	300.638	301.26	67.744	49.863	68.27	77.233	921.882	905.317	1185.291	1165.195
20160415:17:22:17	23.253	11.598	-3.651	23.521	0.25	2.179	0.25	2.107	111.356	300.561	301.171	67.753	49.919	68.282	77.232	923.276	906.624	1187.063	1166.859
20160415:17:27:17	23.257	11.657	-3.615	23.522	0.25	2.181	0.25	2.087	111.538	300.587	301.206	67.773	49.827	68.301	77.235	924.604	907.996	1188.752	1168.605
20160415:17:32:17	23.256	11.685	-3.588	23.52	0.25	2.196	0.25	2.105	111.622	300.605	301.226	67.787	49.913	68.311	77.238	925.97	909.306	1190.489	1170.273
20160415:17:37:17	23.254	11.741	-3.643	23.522	0.25	2.204	0.25	2.094	111.785	300.627	301.257	67.8	49.867	68.309	77.24	927.335	910.677	1192.224	1172.017
20160415:17:42:17	23.251	11.786	-3.666	23.52	0.25	2.211	0.25	2.105	111.916	300.617	301.284	67.804	49.822	68.329	77.242	928.673	911.983	1193.926	1173.68
20160415:17:47:17	23.252	11.795	-3.643	23.52	0.25	2.204	0.25	2.104	111.943	300.583	301.253	67.809	49.92	68.342	77.246	930.07	913.351	1195.702	1175.421
20160415:17:52:17	23.251	11.807	-3.615	23.517	0.25	2.201	0.25	2.114	111.978	300.635	301.265	67.811	49.791	68.354	77.249	931.399	914.649	1197.393	1177.073
20160415:17:57:17	23.258	11.806	-3.48	23.513	0.25	2.18	0.25	2.078	111.984	300.66	301.28	67.815	49.877	68.367	77.253	932.772	916.021	1199.139	1178.821
20160415:18:02:17	23.257	11.769	-3.502	23.514	0.25	2.169	0.25	2.086	111.875	300.652	301.281	67.816	49.871	68.373	77.258	934.133	917.334	1200.87	1180.492
20160415:18:07:17	23.258	11.722	-3.541	23.518	0.25	2.179	0.25	2.095	111.737	300.66	301.289	67.818	49.814	68.375	77.265	935.466	918.688	1202.565	1182.216
20160415:18:12:17	23.258	11.705	-3.583	23.521	0.25	2.173	0.25	2.096	111.686	300.655	301.231	67.818	49.919	68.379	77.274	936.851	920.021	1204.326	1183.914
20160415:18:17:17	23.261	11.687	-3.498	23.519	0.25	2.17	0.25	2.092	111.638	300.593	301.116	67.819	49.793	68.383	77.284	938.182	921.357	1206.019	1185.615
20160415:18:22:17	23.26	11.669	-3.538	23.52	0.25	2.184	0.25	2.103	111.58	300.55	301.203	67.821	49.85	68.385	77.293	939.575	922.704	1207.791	1187.329
20160415:18:27:17	23.263	11.657	-3.476	23.519	0.25	2.175	0.25	2.08	111.549	300.625	301.284	67.859	49.92	68.424	77.304	940.916	924.028	1209.496	1189.015
20160415:18:32:17	23.269	11.635	-3.469	23.524	0.25	2.172	0.25	2.079	111.493	300.649	301.261	67.876	49.854	68.44	77.317	942.26	925.388	1211.206	1190.746
20160415:18:37:17	23.27	11.639	-3.448	23.524	0.25	2.165	0.25	2.075	111.505	300.608	301.242	67.876	49.933	68.438	77.331	943.641	926.7	1212.961	1192.415
20160415:18:42:17	23.273	11.63	-3.436	23.525	0.25	2.164	0.25	2.078	111.483	300.539	301.209	67.876	49.828	68.439	77.344	944.979	928.067	1214.663	1194.156
20160415:18:47:17	23.274	11.65	-3.44	23.526	0.25	2.176	0.25	2.1	111.544	300.529	301.181	67.878	49.863	68.44	77.358	946.37	929.372	1216.431	1195.818
20160415:18:52:17	23.275	11.655	-3.447	23.529	0.25	2.172	0.25	2.104	111.56	300.534	301.191	67.919	49.949	68.472	77.369	947.69	930.731	1218.109	1197.547
20160415:18:57:17	23.278	11.638	-3.44	23.531	0.25	2.174	0.25	2.096	111.516	300.602	301.231	67.967	49.89	68.495	77.383	949.063	932.052	1219.856	1199.227
20160415:19:02:17	23.279	11.628	-3.431	23.531	0.25	2.164	0.25	2.084	111.487	300.623	301.236	67.985	49.948	68.501	77.398	950.437	933.412	1221.602	1200.959
20160415:19:07:17	23.281	11.618	-3.385	23.51	0.25	2.149	0.25	2.073	111.458	300.67	301.244	67.985	49.906	68.498	77.412	951.758	934.72	1223.281	1202.624
20160415:19:12:17	23.281	11.645	-3.455	23.535	0.25	2.161	0.25	2.093	111.541	300.668	301.243	67.966	49.872	68.498	77.427	953.153	936.085	1225.056	1204.361
20160415:19:17:17	23.283	11.664	-3.482	23.539	0.25	2.164	0.25	2.071	111.6	300.738	301.297	68.034	49.984	68.538	77.44	954.482	937.394	1226.744	1206.026
20160415:19:22:17	23.284	11.639	-3.457	23.538	0.25	2.16	0.25	2.076	111.527	300.66	301.25	68.04	49.899	68.535	77.454	955.866	938.767	1228.504	1207.773
20160415:19:27:17	23.284	11.662	-3.462	23.539	0.25	2.172	0.25	2.092	111.596	300.581	301.231	68.026	49.922	68.518	77.466	957.221	940.075	1230.226	1209.438
20160415:19:32:17	23.285	11.706	-3.489	23.541	0.25	2.189	0.25	2.101	111.729	300.573	301.209	67.966	49.944	68.495	77.475	958.553	941.442	1231.919	1211.177
20160415:19:37:17	23.286	11.708	-3.466	23.541	0.25	2.192	0.25	2.103	111.736	300.544	301.204	67.938	49.868	68.489	77.482	959.94	942.756	1233.681	1212.848
20160415:19:42:17	23.288	11.711	-3.488	23.544	0.25	2.187	0.25	2.117	111.746	300.57	301.209	67.929	49.925	68.482	77.485	961.27	944.129	1235.372	1214.594
20160415:19:47:17	23.287	11.712	-3.489	23.543	0.25	2.18	0.25	2.078	111.748	300.581	301.254	67.924	49.909	68.476	77.485	962.665	945.434	1237.144	1216.254
20160415:19:52:17	23.287	11.689	-3.519	23.546	0.25	2.179	0.25	2.083	111.68	300.597	301.258	67.919	49.894	68.47	77.483	963.997	946.814	1238.837	1218.009
20160415:19:57:17	23.289	11.732	-3.525	23.548	0.25	2.165	0.25	2.081	111.813	300.598	301.255	67.906	49.969	68.463	77.48	965.355	948.113	1240.561	1219.662
20160415:20:02:17	23.291	11.764	-3.492	23.548	0.25	2.174	0.25	2.082	111.91	300.593	301.253	67.887	49.901	68.452	77.476	966.731	949.486	1242.309	1221.408
20160415:20:07:17	23.293	11.788	-3.463	23.548	0.25	2.174	0.25	2.086	111.985	300.595	301.216	67.879	49.925	68.445	77.473	968.07	950.797	1244.011	1223.075
20160415:20:12:17	23.296	11.812	-3.449	23.55	0.25	2.178	0.25	2.093	112.059	300.562	301.203	67.875	49.983	68.441	77.468	969.469	952.169	1245.787	1224.82
20160415:20:17:17	23.3	11.833	-3.4	23.55	0.25	2.167	0.25	2.083	112.129	300.576	301.19	67.877	49.919	68.441	77.461	970.787	953.47	1247.461	1226.474
20160415:20:22:17	23.301	11.787	-3.468	23.556	0.25	2.18	0.25	2.094	111.992	300.621	301.291	67.877	49.97	68.442	77.454	972.162	954.844	1249.207	1228.22
20160415:20:27:17	23.302	11.781	-3.429	23.555	0.25	2.168	0.25	2.094	111.979	300.672	301.336	67.88	49.989	68.442	77.446	973.531	956.146	1250.946	1229.876
20160415:20:32:17	23.304	11.804	-3.433	23.556	0.25	2.177	0.25	2.061	112.047	300.676	301.311	67.885	49.943	68.444	77.441	974.858	957.514	1252.631	1231.615
20160415:20:37:17	23.302	11.809	-3.467	23.557	0.25	2.174	0.25	2.068	112.06	300.682	301.318	67.881	49.996	68.435	77.436	976.251	958.83	1254.4	1233.288
20160415:20:42:17	23.305	11.79	-3.478	23.56	0.25	2.174	0.25	2.079	112.009	300.656	301.277	67.849	49.949	68.407	77.434	977.582	960.185	1256.091	1235.009
20160415:20:47:17	23.306	11.784	-3.477	23.562	0.25	2.181	0.25	2.102	111.993	300.631	301.247	67.828	49.91	68.39	77.43	978.971	961.521	1257.854	1236.707
20160415:20:52:17	23.307	11.77	-3.403	23.558	0.25	2.188	0.25	2.068	111.953	300.6	301.23	67.822	49.973	68.384	77.426	980.316	962.858	1259.561	1238.406
20160415:20:57:17	23.307	11.847	-3.43	23.559	0.25	2.182	0.25	2.076	112.18	300.559	301.243	67.818	49.939	68.376	77.421	981.661	964.208	1261.269	1240.122
20160415:21:02:17	23.307	11.906	-3.454	23.561	0.25	2.184	0.25	2.09	112.353	300.512	301.194	67.816	49.92	68.374	77.413	983.041	965.53	1263.02	1241.803
20160415:21:07:17	23.306	11.968	-3.465	23.561	0.25	2.194	0.25	2.098	112.533	300.594	301.197	67.812	49.984	68.365	77.406	984.383	966.893	1264.724	1243.534
20160415:21:12:17	23.308	11.947	-3.476	23.563	0.25	2.194	0.25	2.111	112.475	300.592	301.239	67.801	49.971	68.355	77.396	985.775	968.205	1266.491	1245.201
20160415:21:17:17	23.31	11.882	-3.436	23.563	0.25	2.198	0.25	2.098	112.286	300.624	301.239	67.783	49.943	68.335	77.386	987.104	969.578	1268.178	1246.945
20160415:21:22:17	23.309	11.796	-3.434	23.561	0.25	2.195	0.25	2.085	112.032	300.659	301.294	67.745	49.996	68.286	77.373	988.474	970.885	1269.917	1248.607
20160415:21:27:17	23.308	11.761	-3.396	23.558	0.25	2.177	0.25	2.061	111.927	300.546	301.22	67.653	49.98	68.216	77.36	989.844	972.251	1271.656	1250.342
20160415:21:32:17	23.309	11.758	-3.423	23.561	0.25	2.176	0.25	2.072	111.92	300.567	301.23	67.649	49.923	68.211	77.342	991.185	973.577	1273.357	1252.026
20160415:21:37:17	23.309	11.757	-3.417	23.561	0.25	2.175	0.25	2.081	111.917	300.589	301.24	67.649	49.984	68.211	77.322	992.579	974.941	1275.126	1253.759
20160415:21:42:17	23.311	11.718	-3.313	23.554	0.25	2.157	0.25	2.067	111.803	300.533	301.223	67.629	50.014	68.193	77.303	993.911	976.256	1276.817	1255.43
20160415:21:47:17	23.307	11.656	-3.393	23.556	0.25	2.168	0.25	2.062	111.61	300.527	301.196	67.596	49.925	68.158	77.287	995.288	977.633	1278.565	1257.18
20160415:21:52:17	23.305	11.656	-3.444	23.558	0.25	2.186	0.25	2.083	111.61	300.55	301.179	67.598	49.962	68.157	77.268	996.658	978.946	1280.304	1258.848
20160415:21:57:17	23.302	11.746	-3.451	23.556	0.25	2.17	0.25	2.078	111.872	300.642	301.314	67.599	50.028	68.16	77.251	997.984	980.319	1281.987	1260.592
20160415:22:02:17	23.304	11.804	-3.439	23.557	0.25	2.183	0.25	2.077	112.047	300.638	301.207	67.588	49.993	68.149	77.235	999.373	981.628	1283.75	1262.256
20160415:22:07:17	23.304	11.805	-3.462	23.558	0.25	2.196	0.25	2.091	112.05	300.602	301.199	67.543	49.948	68.108	77.22	1000.704	983.006	1285.439	1264.006
20160415:22:12:17	23.304	11.833	-3.47	23.559	0.25	2.189	0.25	2.099	112.132	300.633	301.181	67.54	50.006	68.101	77.2	1002.101	984.317	1287.211	1265.671
20160415:22:17:17	23.31	11.873	-3.407	23.561	0.25	2.181	0.25	2.075	112.261	300.649	301.307	67.538	50.018	68.1	77.183	1003.448	985.691	1288.92	1267.417
20160415:22:22:17	23.311	11.898	-3.432	23.563	0.25	2.193	0.25	2.099	112.337	300.6	301.255	67.517	49.954	68.077	77.165	1004.793	987.009	1290.626	1269.09
20160415:22:27:17	23.312	11.967	-3.444	23.565	0.25	2.21	0.25	2.101	112.538	300.52	301.214	67.474	49.963	68.036	77.149	1006.187	988.386	1292.394	1270.838
20160415:22:32:17	23.316	12.027	-3.401	23.566	0.25	2.213	0.25	2.113	112.719	300.606	301.248	67.456	50.011	68.021	77.13	1007.524	989.69	1294.091	1272.494
20160415:22:37:17	23.315	12.04	-3.447	23.568	0.25	2.21	0.25	2.115	112.757	300.627	301.252	67.413	49.957	67.987	77.107	1008.919	991.068	1295.859	1274.244
20160415:22:42:17	23.314	12.026	-3.435	23.567	0.25	2.21	0.25	2.088	112.715	300.601	301.227	67.328	49.944	67.905	77.085	1010.257	992.385	1297.556	1275.915
20160415:22:47:17	23.315	12.043	-3.464	23.57	0.25	2.219	0.25	2.097	112.767	300.661	301.266	67.316	50.012	67.892	77.061	1011.618	993.747	1299.281	1277.645
20160415:22:52:17	23.315	11.964	-3.49	23.571	0.25	2.226	0.25	2.104	112.53	300.599	301.249	67.303	50	67.873	77.034	1013.006	995.091	1301.041	1279.35
20160415:22:57:17	23.319	11.347	-3.419	23.57	0.25	2.22	0.25	2.1	110.694	300.507	301.206	67.26	49.931	67.828	77.009	1014.353	996.43	1302.748	1281.049
20160415:23:02:17	23.315	11.856	-3.453	23.569	0.25	2.2	0.25	2.086	112.204	300.488	301.229	67.258	49.979	67.826	76.981	1015.751	997.791	1304.52	1282.776
20160415:23:07:17	23.313	12.218	-3.461	23.568	0.25	2.21	0.25	2.088	113.269	300.508	301.136	67.22	50.005	67.792	76.956	1017.083	999.112	1306.209	1284.453
20160415:23:12:17	23.312	12.26	-3.493	23.569	0.25	2.214	0.25	2.102	113.39	300.554	301.192	67.207	49.972	67.782	76.931	1018.455	1000.488	1307.948	1286.199
20160415:23:17:17	23.311	12.346	-3.513	23.569	0.25	2.21	0.25	2.101	113.632	300.617	301.24	67.208	49.955	67.788	76.905	1019.828	1001.801	1309.689	1287.865
20160415:23:22:17	23.312	12.381	-3.508	23.57	0.25	2.217	0.25	2.115	113.731	300.555	301.212	67.174	49.965	67.73	76.883	1021.178	1003.171	1311.4	1289.603
20160415:23:27:17	23.308	12.41	-3.543	23.568	0.25	2.221	0.25	2.098	113.809	300.554	301.202	67.188	50.024	67.739	76.859	1022.572	1004.493	1313.167	1291.28
20160415:23:32:17	23.308	12.402	-3.472	23.564	0.25	2.216	0.25	2.086	113.787	300.563	301.196	67.185	49.998	67.723	76.834	1023.901	1005.869	1314.852	1293.026
20160415:23:37:17	23.306	12.392	-3.505	23.563	0.25	2.213	0.25	2.097	113.754	300.584	301.225	67.146	49.955	67.649	76.814	1025.282	1007.187	1316.602	1294.699
20160415:23:42:17	23.308	12.391	-3.482	23.564	0.25	2.212	0.25	2.08	113.754	300.665	301.276	67.145	50.003	67.648	76.79	1026.656	1008.565	1318.344	1296.447
20160415:23:47:17	23.305	12.39	-3.506	23.563	0.25	2.22	0.25	2.09	113.747	300.673	301.226	67.147	50.05	67.652	76.771	1027.981	1009.882	1320.024	1298.118
20160415:23:52:17	23.307	12.38	-3.499	23.564	0.25	2.232	0.25	2.1	113.723	300.604	301.212	67.087	49.962	67.618	76.756	1029.388	1011.264	1321.807	1299.872
20160415:23:57:17	23.299	11.704	-3.552	23.56	0.25	2.215	0.25	2.071	111.74	300.561	301.177	67.037	49.956	67.593	76.738	1030.728	1012.578	1323.506	1301.539
20160416:00:02:17	23.301	11.764	-3.514	23.56	0.25	2.2	0.25	2.057	111.911	300.537	301.247	67.033	49.999	67.589	76.72	1032.114	1013.955	1325.263	1303.288
20160416:00:07:17	23.302	12.309	-3.516	23.56	0.25	2.229	0.25	2.095	113.513	300.621	301.282	67.028	50.035	67.581	76.705	1033.482	1015.277	1326.996	1304.964
20160416:00:12:17	23.3	12.356	-3.51	23.558	0.25	2.223	0.25	2.075	113.643	300.619	301.297	66.982	49.992	67.546	76.686	1034.821	1016.654	1328.694	1306.712
20160416:00:17:17	23.298	12.359	-3.56	23.559	0.25	2.22	0.25	2.077	113.649	300.608	301.267	66.945	49.966	67.511	76.662	1036.215	1017.959	1330.461	1308.368
20160416:00:22:17	23.297	12.37	-3.57	23.56	0.25	2.219	0.25	2.07	113.68	300.633	301.25	66.936	50.016	67.507	76.641	1037.554	1019.337	1332.157	1310.117
20160416:00:27:17	23.298	12.385	-3.563	23.56	0.25	2.214	0.25	2.086	113.724	300.6	301.2	66.89	50.018	67.44	76.617	1038.946	1020.665	1333.922	1311.801
20160416:00:32:17	23.303	12.39	-3.546	23.564	0.25	2.224	0.25	2.091	113.745	300.583	301.166	66.869	49.954	67.418	76.592	1040.304	1022.019	1335.643	1313.519
20160416:00:37:17	23.31	12.37	-3.441	23.563	0.25	2.222	0.25	2.096	113.699	300.668	301.243	66.867	49.995	67.406	76.569	1041.643	1023.374	1337.339	1315.237
20160416:00:42:17	23.313	12.339	-3.429	23.565	0.25	2.226	0.25	2.103	113.614	300.565	301.2	66.817	49.997	67.333	76.543	1043.036	1024.707	1339.104	1316.927
20160416:00:47:17	23.313	12.345	-3.437	23.566	0.25	2.22	0.25	2.096	113.633	300.631	301.257	66.809	50.032	67.318	76.518	1044.376	1026.078	1340.802	1318.665
20160416:00:52:17	23.313	12.336	-3.474	23.569	0.25	2.236	0.25	2.083	113.607	300.525	301.218	66.762	50.031	67.293	76.488	1045.779	1027.397	1342.578	1320.338
20160416:00:57:17	23.315	12.327	-3.455	23.569	0.25	2.223	0.25	2.084	113.582	300.504	301.194	66.695	50.009	67.258	76.461	1047.121	1028.765	1344.278	1322.071
20160416:01:02:17	23.315	12.331	-3.513	23.573	0.25	2.238	0.25	2.087	113.596	300.535	301.185	66.692	50.051	67.255	76.432	1048.477	1030.089	1345.994	1323.75
20160416:01:07:17	23.313	12.324	-3.523	23.572	0.25	2.232	0.25	2.078	113.572	300.507	301.175	66.642	50.019	67.205	76.401	1049.867	1031.461	1347.754	1325.489
20160416:01:12:17	23.314	12.341	-3.483	23.57	0.25	2.225	0.25	2.088	113.621	300.599	301.225	66.64	50.05	67.205	76.37	1051.211	1032.778	1349.456	1327.158
20160416:01:17:17	23.314	12.338	-3.523	23.573	0.25	2.234	0.25	2.087	113.613	300.576	301.2	66.597	50.023	67.162	76.343	1052.605	1034.16	1351.22	1328.91
20160416:01:22:17	23.316	12.367	-3.534	23.575	0.25	2.239	0.25	2.093	113.699	300.625	301.261	66.583	50.041	67.147	76.313	1053.938	1035.482	1352.907	1330.585
20160416:01:27:17	23.316	12.357	-3.519	23.574	0.25	2.227	0.25	2.089	113.671	300.62	301.217	66.561	50.037	67.105	76.285	1055.315	1036.857	1354.65	1332.327
20160416:01:32:17	23.316	12.35	-3.484	23.573	0.25	2.224	0.25	2.098	113.651	300.55	301.161	66.525	50.02	67.034	76.25	1056.688	1038.175	1356.389	1333.996
20160416:01:37:17	23.314	12.367	-3.527	23.574	0.25	2.229	0.25	2.081	113.697	300.606	301.266	66.501	50.033	67.011	76.219	1058.04	1039.556	1358.1	1335.746
20160416:01:42:17	23.316	12.382	-3.497	23.573	0.25	2.246	0.25	2.077	113.741	300.601	301.212

Time:	Stack Pressure:	Sat% H2O:	Static:	Barometric:	Flowmeter1:	Vacuum1:	Flowmeter2:	Vacuum2:	Stack Temp:	Sorbent Temp:	Probe Temp:	DGM#1 Temp:	Condenser Temp:	DGM#2 Temp:	DAQ Temp:	DGM1*:	DGM2*:	DGM1:	DGM2:
20160416:05:27:17	23.374	12.252	-3.13	23.605	0.25	2.242	0.25	2.106	113.459	300.597	301.204	65.001	49.705	65.573	74.674	1120.846	1101.514	1437.437	1414.096
20160416:05:32:17	23.375	12.263	-3.124	23.605	0.25	2.253	0.25	2.111	113.492	300.574	301.195	64.968	49.682	65.536	74.647	1122.237	1102.834	1439.191	1415.761
20160416:05:37:17	23.38	12.237	-3.108	23.608	0.25	2.252	0.25	2.091	113.422	300.619	301.234	64.956	49.664	65.521	74.624	1123.579	1104.208	1440.881	1417.494
20160416:05:42:17	23.386	12.203	-3.015	23.607	0.25	2.253	0.25	2.068	113.336	300.659	301.283	64.958	49.664	65.52	74.6	1124.974	1105.522	1442.639	1419.152
20160416:05:47:17	23.384	12.184	-3.074	23.611	0.25	2.244	0.25	2.09	113.277	300.62	301.249	64.913	49.62	65.436	74.577	1126.301	1106.899	1444.311	1420.889
20160416:05:52:17	23.383	12.199	-3.079	23.609	0.25	2.236	0.25	2.093	113.319	300.601	301.26	64.908	49.614	65.426	74.555	1127.68	1108.214	1446.048	1422.547
20160416:05:57:17	23.389	12.205	-3.019	23.61	0.25	2.23	0.25	2.096	113.344	300.596	301.227	64.909	49.619	65.445	74.532	1129.06	1109.582	1447.787	1424.273
20160416:06:02:17	23.39	12.21	-3.028	23.613	0.25	2.239	0.25	2.107	113.36	300.553	301.207	64.861	49.59	65.39	74.51	1130.395	1110.908	1449.469	1425.944
20160416:06:07:17	23.392	11.897	-2.95	23.609	0.25	2.248	0.25	2.1	112.442	300.539	301.22	64.878	49.598	65.389	74.491	1131.784	1112.219	1451.219	1427.665
20160416:06:12:17	23.393	11.426	-2.921	23.608	0.25	2.229	0.25	2.086	111.045	300.574	301.236	64.896	49.605	65.399	74.473	1133.122	1113.601	1452.904	1429.34
20160416:06:17:17	23.397	11.3	-2.887	23.609	0.25	2.243	0.25	2.073	110.666	300.562	301.3	64.863	49.59	65.376	74.457	1134.523	1114.971	1454.669	1431.068
20160416:06:22:17	23.398	11.643	-2.908	23.612	0.25	2.218	0.25	2.074	111.695	300.578	301.281	64.796	49.558	65.348	74.442	1135.862	1116.293	1456.356	1432.735
20160416:06:27:17	23.4	12.164	-2.921	23.615	0.25	2.455	0.25	2.091	113.245	300.608	301.278	64.79	49.553	65.346	74.426	1137.228	1117.664	1458.076	1434.462
20160416:06:32:17	23.401	12.191	-2.888	23.614	0.25	2.66	0.25	2.107	113.323	300.621	301.271	64.79	49.553	65.346	74.413	1138.608	1118.98	1459.813	1436.122
20160416:06:37:17	23.397	12.202	-2.94	23.614	0.25	2.462	0.25	2.08	113.351	300.639	301.278	64.788	49.55	65.343	74.399	1139.941	1120.359	1461.493	1437.861
20160416:06:42:17	23.399	12.224	-2.923	23.614	0.25	2.343	0.25	2.09	113.414	300.565	301.238	64.762	49.503	65.322	74.384	1141.343	1121.677	1463.257	1439.523
20160416:06:47:17	23.398	12.266	-2.978	23.616	0.25	2.295	0.25	2.094	113.532	300.54	301.195	64.729	49.434	65.286	74.37	1142.678	1123.056	1464.939	1441.259
20160416:06:52:17	23.401	12.332	-2.948	23.618	0.25	2.288	0.25	2.106	113.729	300.575	301.193	64.73	49.43	65.287	74.357	1144.073	1124.372	1466.694	1442.919
20160416:06:57:17	23.402	12.303	-2.95	23.619	0.25	2.28	0.25	2.11	113.645	300.508	301.187	64.732	49.438	65.292	74.342	1145.417	1125.749	1468.387	1444.654
20160416:07:02:17	23.403	12.255	-2.948	23.62	0.25	2.269	0.25	2.123	113.511	300.554	301.19	64.732	49.433	65.288	74.327	1146.773	1127.065	1470.094	1446.312
20160416:07:07:17	23.403	12.273	-2.999	23.624	0.25	2.271	0.25	2.079	113.562	300.599	301.262	64.694	49.383	65.251	74.313	1148.152	1128.44	1471.83	1448.045
20160416:07:12:17	23.407	12.028	-2.968	23.625	0.25	2.269	0.25	2.087	112.848	300.604	301.249	64.68	49.354	65.237	74.298	1149.497	1129.758	1473.522	1449.705
20160416:07:17:17	23.408	11.584	-2.984	23.628	0.25	2.248	0.25	2.096	111.548	300.559	301.252	64.681	49.341	65.241	74.286	1150.895	1131.135	1475.281	1451.44
20160416:07:22:17	23.415	11.521	-2.955	23.632	0.25	2.247	0.25	2.068	111.366	300.532	301.226	64.682	49.334	65.24	74.273	1152.232	1132.454	1476.963	1453.102
20160416:07:27:17	23.411	11.92	-3.016	23.633	0.25	2.253	0.25	2.077	112.537	300.514	301.273	64.682	49.332	65.238	74.26	1153.626	1133.832	1478.717	1454.836
20160416:07:32:17	23.409	12.448	-3.033	23.632	0.25	2.279	0.25	2.086	114.067	300.56	301.223	64.666	49.304	65.188	74.249	1154.977	1135.15	1480.417	1456.496
20160416:07:37:17	23.408	12.507	-3.121	23.637	0.25	2.275	0.25	2.097	114.234	300.597	301.221	64.669	49.307	65.192	74.239	1156.327	1136.526	1482.115	1458.229
20160416:07:42:17	23.408	12.513	-3.132	23.638	0.25	2.271	0.25	2.097	114.252	300.604	301.177	64.68	49.319	65.218	74.231	1157.705	1137.84	1483.848	1459.883
20160416:07:47:17	23.41	12.554	-3.121	23.639	0.25	2.277	0.25	2.106	114.369	300.593	301.137	64.683	49.327	65.234	74.225	1159.049	1139.217	1485.539	1461.617
20160416:07:52:17	23.412	12.561	-3.134	23.643	0.25	2.287	0.25	2.101	114.394	300.589	301.212	64.709	49.329	65.243	74.221	1160.447	1140.531	1487.296	1463.271
20160416:07:57:17	23.419	12.615	-3.021	23.641	0.25	2.274	0.25	2.109	114.553	300.608	301.254	64.73	49.328	65.258	74.22	1161.781	1141.906	1488.974	1465.002
20160416:08:02:17	23.421	12.669	-3.05	23.646	0.249	2.822	0.25	2.107	114.707	300.622	301.245	64.736	49.327	65.27	74.223	1163.171	1143.22	1490.722	1466.656
20160416:08:07:17	23.422	12.73	-3.043	23.646	0.25	3.27	0.25	2.097	114.878	300.639	301.287	64.742	49.321	65.285	74.226	1164.515	1144.595	1492.413	1468.387
20160416:08:12:17	23.415	12.751	-3.073	23.641	0.25	2.777	0.25	2.108	114.927	300.587	301.246	64.763	49.303	65.294	74.231	1165.874	1145.912	1494.122	1470.045
20160416:08:17:17	23.418	12.729	-2.938	23.635	0.25	2.489	0.25	2.105	114.872	300.545	301.183	64.79	49.286	65.302	74.238	1167.253	1147.291	1495.857	1471.782
20160416:08:22:17	23.415	12.717	-3.06	23.64	0.25	2.373	0.25	2.122	114.832	300.592	301.187	64.829	49.316	65.327	74.248	1168.597	1148.604	1497.548	1473.436
20160416:08:27:17	23.412	12.741	-3.107	23.64	0.25	2.324	0.25	2.111	114.895	300.659	301.269	64.906	49.342	65.382	74.261	1169.992	1149.98	1499.304	1475.169
20160416:08:32:17	23.411	12.713	-3.036	23.635	0.25	2.305	0.25	2.117	114.817	300.666	301.244	64.912	49.338	65.392	74.276	1171.324	1151.292	1500.98	1476.821
20160416:08:37:17	23.408	12.791	-3.029	23.631	0.25	2.291	0.25	2.13	115.028	300.687	301.276	64.925	49.332	65.398	74.291	1172.716	1152.674	1502.731	1478.562
20160416:08:42:17	23.412	12.329	-3.04	23.636	0.25	2.287	0.25	2.126	113.722	300.645	301.252	64.952	49.336	65.416	74.308	1174.064	1153.982	1504.428	1480.211
20160416:08:47:17	23.413	11.918	-3.047	23.637	0.25	2.271	0.25	2.088	112.547	300.664	301.314	65.011	49.382	65.513	74.327	1175.417	1155.362	1506.131	1481.949
20160416:08:52:17	23.414	11.748	-3.032	23.637	0.25	2.255	0.25	2.102	112.046	300.619	301.252	65.015	49.384	65.522	74.347	1176.794	1156.672	1507.865	1483.6
20160416:08:57:17	23.413	12.367	-3.045	23.637	0.25	2.256	0.25	2.103	113.829	300.537	301.209	65.017	49.379	65.527	74.368	1178.143	1158.06	1509.563	1485.348
20160416:09:02:17	23.41	12.79	-3.081	23.636	0.25	2.274	0.25	2.129	115.027	300.643	301.283	65.062	49.412	65.571	74.392	1179.539	1159.367	1511.32	1486.994
20160416:09:07:17	23.408	12.825	-3.095	23.636	0.25	2.277	0.25	2.092	115.121	300.673	301.251	65.077	49.427	65.593	74.415	1180.877	1160.748	1513.004	1488.735
20160416:09:12:17	23.413	12.8	-3.025	23.635	0.25	2.273	0.25	2.085	115.059	300.639	301.234	65.092	49.446	65.616	74.44	1182.265	1162.055	1514.752	1490.382
20160416:09:17:17	23.416	12.834	-3.01	23.637	0.25	2.447	0.25	2.096	115.157	300.647	301.253	65.196	49.543	65.676	74.468	1183.608	1163.434	1516.443	1492.12
20160416:09:22:17	23.418	12.858	-3.007	23.64	0.25	3.206	0.25	2.109	115.226	300.61	301.209	65.233	49.554	65.684	74.497	1184.958	1164.744	1518.143	1493.771
20160416:09:27:17	23.425	12.816	-2.898	23.638	0.25	3.124	0.25	2.11	115.123	300.673	301.287	65.282	49.608	65.732	74.53	1186.335	1166.121	1519.876	1495.506
20160416:09:32:17	23.429	12.748	-2.805	23.635	0.25	2.779	0.25	2.074	114.94	300.648	301.23	65.31	49.635	65.761	74.563	1187.68	1167.431	1521.57	1497.158
20160416:09:37:17	23.431	12.695	-2.818	23.638	0.25	2.423	0.25	2.072	114.795	300.628	301.268	65.378	49.7	65.866	74.597	1189.076	1168.805	1523.328	1498.889
20160416:09:42:17	23.43	12.647	-2.924	23.645	0.25	2.312	0.25	2.089	114.661	300.638	301.268	65.409	49.717	65.901	74.632	1190.408	1170.114	1525.006	1500.539
20160416:09:47:17	23.434	12.62	-2.885	23.646	0.25	2.269	0.25	2.086	114.59	300.667	301.274	65.511	49.759	65.96	74.67	1191.796	1171.489	1526.754	1502.273
20160416:09:52:17	23.427	12.595	-2.984	23.646	0.25	2.268	0.25	2.097	114.51	300.629	301.146	65.541	49.772	65.981	74.711	1193.131	1172.795	1528.435	1503.919
20160416:09:57:17	23.427	12.569	-3.024	23.649	0.25	2.28	0.25	2.1	114.436	300.639	301.199	65.593	49.825	66.029	74.756	1194.487	1174.172	1530.143	1505.654
20160416:10:02:18	23.428	12.562	-3.005	23.649	0.25	2.262	0.25	2.083	114.418	300.66	301.23	65.642	49.816	66.085	74.801	1195.866	1175.475	1531.88	1507.297
20160416:10:07:18	23.431	12.575	-2.951	23.648	0.25	2.27	0.25	2.08	114.46	300.605	301.175	65.681	49.73	66.139	74.847	1197.188	1176.857	1533.544	1509.039
20160416:10:12:18	23.432	12.593	-2.933	23.648	0.25	2.256	0.25	2.085	114.513	300.568	301.008	65.732	49.803	66.212	74.894	1198.577	1178.156	1535.294	1510.677
20160416:10:17:18	23.435	12.572	-2.857	23.645	0.25	2.257	0.25	2.07	114.458	300.632	301.061	65.826	49.77	66.268	74.942	1199.905	1179.534	1536.969	1512.415
20160416:10:22:18	23.435	11.763	-2.81	23.641	0.25	2.252	0.25	2.067	112.102	300.595	301.121	65.88	49.689	66.31	74.99	1201.297	1180.835	1538.722	1514.056
20160416:10:27:18	23.436	11.432	-2.795	23.641	0.25	2.226	0.25	2.05	111.129	300.471	301.081	65.915	49.766	66.356	75.04	1202.619	1182.21	1540.389	1515.791
20160416:10:32:18	23.436	11.275	-2.866	23.647	0.25	2.245	0.25	2.07	110.647	300.55	301.177	65.968	49.765	66.454	75.09	1204	1183.514	1542.13	1517.436
20160416:10:37:18	23.434	12.103	-2.922	23.649	0.25	2.256	0.25	2.065	113.098	300.517	301.157	65.996	49.677	66.491	75.125	1205.362	1184.886	1543.846	1519.167
20160416:10:42:18	23.435	12.479	-2.807	23.641	0.25	2.247	0.25	2.08	114.197	300.547	301.122	66.029	49.733	66.528	75.176	1206.691	1186.194	1545.522	1520.818
20160416:10:47:18	23.428	12.477	-2.95	23.645	0.25	2.264	0.25	2.089	114.179	300.531	301.121	66.08	49.717	66.581	75.23	1208.075	1187.563	1547.267	1522.545
20160416:10:52:18	23.427	12.509	-3.024	23.65	0.25	2.269	0.25	2.106	114.268	300.521	301.139	66.166	49.679	66.628	75.286	1209.41	1188.871	1548.95	1524.195
20160416:10:57:18	23.431	12.479	-2.95	23.648	0.25	2.248	0.25	2.091	114.19	300.547	301.169	66.199	49.772	66.663	75.341	1210.808	1190.239	1550.713	1525.923
20160416:11:02:18	23.432	12.447	-3	23.652	0.25	2.267	0.25	2.085	114.1	300.519	301.162	66.226	49.68	66.694	75.393	1212.136	1191.547	1552.387	1527.573
20160416:11:07:18	23.431	12.429	-3.072	23.657	0.25	2.27	0.25	2.101	114.048	300.502	301.17	66.26	49.701	66.741	75.441	1213.515	1192.918	1554.126	1529.303
20160416:11:12:18	23.433	12.414	-2.976	23.652	0.25	2.259	0.25	2.11	114.009	300.564	301.237	66.302	49.764	66.816	75.488	1214.868	1194.227	1555.831	1530.955
20160416:11:17:18	23.434	12.375	-2.976	23.653	0.25	2.277	0.25	2.111	113.901	300.568	301.248	66.334	49.667	66.849	75.535	1216.21	1195.598	1557.524	1532.686
20160416:11:22:18	23.434	12.387	-2.947	23.651	0.25	2.268	0.25	2.089	113.936	300.503	301.14	66.364	49.708	66.871	75.581	1217.591	1196.91	1559.265	1534.342
20160416:11:27:18	23.434	12.418	-2.949	23.651	0.25	2.269	0.25	2.101	114.02	300.568	301.228	66.469	49.759	66.921	75.629	1218.931	1198.283	1560.956	1536.075
20160416:11:32:18	23.429	12.412	-2.981	23.648	0.25	2.257	0.25	2.09	113.998	300.51	301.145	66.495	49.685	66.949	75.672	1220.324	1199.592	1562.713	1537.727
20160416:11:37:18	23.431	12.427	-2.909	23.644	0.25	2.257	0.25	2.078	114.041	300.538	301.185	66.525	49.748	66.979	75.714	1221.658	1200.964	1564.396	1539.461
20160416:11:42:18	23.436	12.433	-2.907	23.649	0.25	2.259	0.25	2.093	114.066	300.538	301.2	66.571	49.724	67.028	75.757	1223.036	1202.272	1566.135	1541.113
20160416:11:47:18	23.434	12.43	-2.894	23.647	0.25	2.269	0.25	2.085	114.057	300.5	301.113	66.594	49.715	67.067	75.798	1224.392	1203.646	1567.846	1542.848
20160416:11:52:18	23.438	12.504	-2.866	23.649	0.25	2.284	0.25	2.1	114.269	300.509	301.139	66.637	49.783	67.147	75.838	1225.732	1204.954	1569.537	1544.5
20160416:11:57:18	23.439	12.511	-2.771	23.643	0.25	2.256	0.25	2.079	114.293	300.527	301.17	66.671	49.696	67.19	75.881	1227.112	1206.324	1571.28	1546.231
20160416:12:02:18	23.435	12.502	-2.831	23.643	0.25	2.259	0.25	2.082	114.26	300.576	301.211	66.695	49.747	67.217	75.925	1228.453	1207.635	1572.972	1547.887
20160416:12:07:18	23.439	12.503	-2.771	23.643	0.25	2.28	0.25	2.088	114.269	300.529	301.201	66.804	49.701	67.27	75.968	1229.841	1209.007	1574.724	1549.622
20160416:12:12:18	23.43	12.503	-2.899	23.643	0.25	2.271	0.25	2.09	114.255	300.463	301.152	66.835	49.705	67.3	76.012	1231.175	1210.313	1576.409	1551.273
20160416:12:17:18	23.425	12.485	-2.934	23.641	0.25	2.263	0.25	2.096	114.198	300.55	301.205	66.872	49.734	67.339	76.058	1232.555	1211.687	1578.152	1553.009
20160416:12:22:18	23.425	12.468	-2.959	23.642	0.25	2.273	0.25	2.095	114.149	300.564	301.203	66.922	49.709	67.426	76.102	1233.904	1212.996	1579.856	1554.664
20160416:12:27:18	23.433	12.447	-2.858	23.644	0.25	2.262	0.25	2.073	114.104	300.498	301.169	66.947	49.77	67.483	76.147	1235.244	1214.371	1581.548	1556.402
20160416:12:32:18	23.44	12.414	-2.766	23.644	0.25	2.263	0.25	2.09	114.02	300.508	301.127	66.981	49.673	67.529	76.19	1236.625	1215.675	1583.293	1558.051
20160416:12:37:18	23.435	12.394	-2.841	23.644	0.25	2.257	0.25	2.097	113.954	300.58	301.16	67.035	49.755	67.586	76.236	1237.965	1217.055	1584.985	1559.795
20160416:12:42:18	23.433	11.394	-2.853	23.643	0.25	2.252	0.25	2.052	111.005	300.491	301.202	67.121	49.694	67.629	76.287	1239.361	1218.355	1586.748	1561.44
20160416:12:47:18	23.429	11.713	-2.925	23.644	0.25	2.241	0.25	2.062	111.942	300.442	301.139	67.179	49.743	67.673	76.336	1240.693	1219.736	1588.431	1563.186
20160416:12:52:18	23.43	12.365	-2.896	23.643	0.25	2.251	0.25	2.077	113.864	300.593	301.2	67.233	49.74	67.761	76.384	1242.071	1221.038	1590.172	1564.833
20160416:12:57:18	23.434	12.416	-2.843	23.643	0.25	2.263	0.25	2.082	114.016	300.554	301.219	67.286	49.734	67.813	76.436	1243.423	1222.412	1591.881	1566.571
20160416:13:02:18	23.441	12.397	-2.726	23.641	0.25	2.263	0.25	2.09	113.973	300.53	301.169	67.321	49.751	67.847	76.484	1244.761	1223.719	1593.572	1568.226
20160416:13:07:18	23.438	12.405	-2.782	23.643	0.25	2.269	0.25	2.097	113.99	300.529	301.122	67.374	49.698	67.886	76.535	1246.145	1225.089	1595.322	1569.959
20160416:13:12:18	23.437	12.403	-2.826	23.645	0.25	2.26	0.25	2.091	113.984	300.56	301.208	67.455	49.769	67.935	76.586	1247.484	1226.398	1597.015	1571.615
20160416:13:17:18	23.44	12.401	-2.781	23.644	0.25	2.245	0.25	2.087	113.983	300.579	301.226	67.514	49.703	68.021	76.637	1248.88	1227.769	1598.78	1573.35
20160416:13:22:18	23.436	12.449	-2.821	23.643	0.25	2.261	0.25	2.089	114.111	300.548	301.146	67.559	49.797	68.077	76.691	1250.198	1229.079	1600.446	1575.008
20160416:13:27:18	23.436	12.512	-2.883	23.648	0.25	2.274	0.25	2.095	114.29	300.585	301.184	67.591	49.706	68.115	76.74	1251.575	1230.45	1602.187	1576.742
20160416:13:32:18	23.439	12.494	-2.856	23.648	0.25	2.269	0.25	2.102	114.244	300.572	301.177	67.639	49.77	68.161	76.79	1252.936	1231.758	1603.907	1578.398
20160416:13:37:18	23.438	12.387	-2.798	23.644	0.25	2.257	0.25	2.104	113.935	300.507	301.119	67.731	49.746	68.216	76.845	1254.264	1233.127	1605.587	1580.132
20160416:13:42:18	23.443	11.306	-2.69	23.641	0.25	2.245	0.25	2.086	110.752	300.528	301.183	67.79	49.768	68.291	76.898	1255.652	1234.432	1607.343	1581.784
20160416:13:47:18	23.436	11.704	-2.765	23.64	0.25	2.229	0.25	2.051	111.93	300.535	301.162	67.839	49.773	68.372	76.952	1256.985	1235.8	1609.03	1583.517
20160416:13:52:18	23.438	12.243	-2.746	23.639	0.25	2.239	0.25	2.081	113.527	300.528	301.158	67.902	49.757	68.436	77.005	1258.377	1237.109	1610.791	1585.175
20160416:13:57:18	23.44	12.257	-2.755	23.642	0.25	2.251	0.25	2.083	113.571	300.57	301.187	68.016	49.812	68.489	77.063	1259.698	1238.48	1612.463	1586.912
20160416:14:02:18	23.439	12.231	-2.759	23.642	0.25	2.204	0.25	2.09	113.497	300.488	301.164	68.088	49.754	68.539	77.123	1261.075	1239.788	1614.206	1588.568
20160416:14:07:18	23.439	12.212	-2.753	23.641	0.25	2.266	0.25	2.103	113.44	300.51	301.092	68.141	49.822	68.641	77.186	1262.442	1241.157	1615.937	1590.303
20160416:14:12:18	23.441	12.205	-2.724	23.641	0.25	2.262	0.25	2.081	113.423	300.586	301.18	68.199	49.739	68.708	77.253	1263.768	1242.461	1617.615	1591.955
20160416:14:17:18	23.445	12.191	-2.688	23.643	0.25	2.279	0.25	2.095	113.391	300.666	301.278	68.246	49.831	68.756	77.315	1265.153	1243.833	1619.369	1593.694
20160416:14:22:18	23.441	12.181	-2.811	23.648	0.25	2.26	0.25	2.103	113.356	300.617	301.201	68.332	49.724	68.809	77.38	1266.484	1245.132	1621.054	1595.34
20160416:14:27:18	23.445	12.175	-2.781	23.649	0.25	2.256	0.25	2.097	113.343	300.635	301.259	68.403	49.829	68.864	77.445	1267.873	1246.506	1622.813	1597.081
20160416:14:32:18	23.434	12.152	-2.776	23.638	0.25	2.248	0.25	2.071	113.26	300.617	301.25	68.45	49.749	68.955	77.508	1269.196	1247.804	1624.489	1598.727
20160416:14:37:18	23.427	12.114	-2.872	23.638	0.25	2.252	0.25	2.067	113.141	300.545	301.205	68.474	49.843	69.013	77.569	1270.564	1249.178	1626.222	1600.47
20160416:14:42:18	23.429	12.094	-2.857	23.639	0.25	2.254	0.25	2.067	113.085	300.567	301.235	68.516	49.757	69.058	77.632	1271.94	1250.48	1627.965	1602.12
20160416:14:47:18	23.43	12.08	-2.918	23.645	0.25	2.252	0.25	2.057	113.045	300.585	301.261	68.576	49.887	69.099	77.691	1273.269	1251.851	1629.648	1603.859
20160416:14:52:18	23.428	12.068	-2.992	23.648	0.25	2.256	0.25	2.083	113.007	300.545	301.228	68.654	49.805	69.124	77.75	1274.662	1253.157	1631.413	1605.515
20160416:14:57:18	23.431	12.066	-2.976	23.65	0.25	2.254	0.25	2.09	113.007	300.512	301.165	68.692	49.91	69.167	77.803	1275.993	1254.524	1633.1	1607.248
20160416:15:02:18	23.435	12.057	-3.066	23.661	0.25	2.257	0.25	2.099	112.987	300.541	301.201	68.717	49.831	69.203	77.855	1277.38	1255.835	1634.856	1608.91
20160416:15:07:18	23.44	11.852	-3.022	23.663	0.25	2.255	0.25	2.074	112.384	300.582	301.206	68.748	49.887	69.268	77.908	1278.722	1257.198	1636.556	1610.637
20160416:15:12:18	23.44	10.973	-3.012	23.662	0.25	2.239	0.25	2.064	109.71	300.576	301.232	68.785	49.866	69.327	77.96	1280.063	1258.514	1638.254	1612.306
20160416:15:17:18	23.442	11.558	-2.996	23.662	0.25	2.217	0.25	2.067	111.5	300.494	301.207	68.827	49.9	69.37	78.012	1281.438	1259.871	1639.994	1614.026
20160416:15:22:18	23.44	11.908	-3.059	23.665	0.25	2

Time:	Stack Pressure:	Sat% H2O:	Static:	Barometric:	Flowmeter1:	Vacuum1:	Flowmeter2:	Vacuum2:	Stack Temp:	Sorbent Temp:	Probe Temp:	DGM#1 Temp:	Condenser Temp:	DGM#2 Temp:	DAQ Temp:	DGM1*:	DGM2*:	DGM1:	DGM2:
20160416:19:12:18	23.551	12.032	-2.874	23.763	0.25	2.225	0.25	2.101	113.088	300.678	301.317	68.527	50.078	69.096	78.252	1345.337	1322.813	1720.757	1693.662
20160416:19:17:18	23.551	12.029	-2.909	23.765	0.25	2.237	0.25	2.103	113.08	300.661	301.273	68.49	50.018	69.053	78.225	1346.677	1324.136	1722.446	1695.331
20160416:19:22:18	23.551	12.028	-2.95	23.767	0.25	2.219	0.25	2.107	113.074	300.664	301.262	68.487	50.026	69.051	78.197	1348.073	1325.5	1724.206	1697.051
20160416:19:27:18	23.552	12.039	-2.96	23.77	0.25	2.224	0.25	2.088	113.11	300.646	301.246	68.431	50.055	69	78.17	1349.409	1326.823	1725.889	1698.72
20160416:19:32:18	23.55	12.096	-3.017	23.772	0.25	2.243	0.25	2.097	113.271	300.631	301.271	68.402	50.004	68.982	78.14	1350.791	1328.187	1727.63	1700.44
20160416:19:37:18	23.549	12.101	-3.005	23.77	0.25	2.248	0.25	2.106	113.285	300.646	301.277	68.328	49.997	68.905	78.107	1352.141	1329.509	1729.33	1702.107
20160416:19:42:18	23.55	12.1	-3.019	23.772	0.25	2.247	0.25	2.099	113.284	300.632	301.264	68.288	50.08	68.873	78.076	1353.485	1330.88	1731.022	1703.835
20160416:19:47:18	23.554	12.089	-2.982	23.774	0.25	2.216	0.25	2.095	113.257	300.62	301.273	68.248	49.983	68.836	78.042	1354.872	1332.193	1732.769	1705.491
20160416:19:52:18	23.562	12.071	-2.924	23.777	0.25	2.231	0.25	2.106	113.217	300.598	301.283	68.223	50.017	68.815	78.005	1356.216	1333.562	1734.461	1707.216
20160416:19:57:18	23.557	11.596	-3	23.778	0.25	2.223	0.25	2.09	111.783	300.619	301.25	68.192	50.083	68.777	77.968	1357.61	1334.878	1736.215	1708.874
20160416:20:02:18	23.562	11.136	-2.958	23.78	0.25	2.204	0.25	2.071	110.401	300.566	301.277	68.172	50	68.76	77.93	1358.944	1336.249	1737.894	1710.602
20160416:20:07:18	23.565	11.056	-2.957	23.782	0.25	2.206	0.25	2.062	110.156	300.553	301.305	68.128	50.002	68.71	77.896	1360.327	1337.564	1739.635	1712.258
20160416:20:12:18	23.569	11.604	-2.955	23.787	0.25	2.214	0.25	2.076	111.826	300.538	301.236	68.118	50.094	68.704	77.859	1361.674	1338.937	1741.33	1713.987
20160416:20:17:18	23.567	12.14	-2.988	23.787	0.25	2.243	0.25	2.102	113.426	300.57	301.198	68.068	49.995	68.64	77.826	1363.023	1340.252	1743.026	1715.643
20160416:20:22:18	23.571	12.153	-2.995	23.791	0.25	2.25	0.25	2.075	113.468	300.659	301.27	68.06	50.026	68.636	77.792	1364.401	1341.623	1744.759	1717.37
20160416:20:27:18	23.573	12.127	-2.971	23.792	0.25	2.217	0.25	2.076	113.395	300.654	301.276	67.959	50.057	68.536	77.76	1365.744	1342.939	1746.448	1719.026
20160416:20:32:18	23.574	12.111	-2.964	23.792	0.25	2.221	0.25	2.067	113.351	300.698	301.317	67.94	50.001	68.526	77.726	1367.14	1344.307	1748.204	1720.748
20160416:20:37:18	23.578	12.096	-2.92	23.793	0.25	2.216	0.25	2.077	113.313	300.611	301.253	67.881	49.976	68.464	77.689	1368.474	1345.627	1749.881	1722.41
20160416:20:42:18	23.578	12.137	-2.953	23.795	0.25	2.231	0.25	2.083	113.433	300.63	301.307	67.868	50.054	68.439	77.653	1369.865	1346.992	1751.63	1724.128
20160416:20:47:18	23.584	12.269	-2.889	23.796	0.25	2.274	0.25	2.105	113.82	300.698	301.308	67.818	49.968	68.388	77.612	1371.209	1348.316	1753.319	1725.793
20160416:20:52:18	23.591	12.305	-2.794	23.796	0.249	2.725	0.25	2.1	113.936	300.645	301.278	67.793	49.966	68.346	77.572	1372.561	1349.683	1755.019	1727.513
20160416:20:57:18	23.59	12.27	-2.812	23.797	0.25	2.856	0.25	2.091	113.834	300.608	301.241	67.761	50.024	68.285	77.532	1373.941	1351.005	1756.752	1729.177
20160416:21:02:18	23.587	12.259	-2.856	23.797	0.25	2.922	0.25	2.091	113.798	300.557	301.216	67.694	50.017	68.25	77.496	1375.28	1352.368	1758.435	1730.891
20160416:21:07:18	23.595	11.74	-2.811	23.802	0.25	2.992	0.25	2.08	112.284	300.549	301.25	67.652	49.967	68.233	77.455	1376.682	1353.692	1760.196	1732.556
20160416:21:12:18	23.595	11.569	-2.853	23.805	0.25	3.011	0.25	2.07	111.778	300.526	301.237	67.617	49.994	68.199	77.418	1378.019	1355.057	1761.876	1734.273
20160416:21:17:18	23.592	11.993	-2.873	23.803	0.25	3.02	0.25	2.08	113.019	300.578	301.317	67.619	50.027	68.191	77.379	1379.416	1356.382	1763.63	1735.938
20160416:21:22:18	23.599	12.347	-2.802	23.805	0.25	2.875	0.25	2.087	114.066	300.606	301.263	67.59	49.941	68.154	77.346	1380.754	1357.745	1765.311	1737.652
20160416:21:27:18	23.598	12.37	-2.85	23.807	0.25	2.499	0.25	2.083	114.13	300.601	301.252	67.583	50.001	68.145	77.311	1382.119	1359.073	1767.024	1739.321
20160416:21:32:18	23.601	12.395	-2.834	23.809	0.25	2.324	0.25	2.097	114.206	300.634	301.246	67.541	50.039	68.106	77.281	1383.505	1360.441	1768.765	1741.041
20160416:21:37:18	23.606	12.446	-2.806	23.812	0.25	2.287	0.25	2.077	114.359	300.712	301.332	67.547	49.992	68.12	77.252	1384.834	1361.763	1770.433	1742.703
20160416:21:42:18	23.605	12.463	-2.791	23.81	0.25	2.272	0.25	2.077	114.405	300.667	301.254	67.523	49.978	68.093	77.226	1386.228	1363.129	1772.183	1744.419
20160416:21:47:18	23.605	12.478	-2.854	23.815	0.25	2.279	0.25	2.09	114.447	300.682	301.292	67.511	50.04	68.075	77.193	1387.566	1364.453	1773.863	1746.083
20160416:21:52:18	23.604	12.485	-2.853	23.813	0.25	2.266	0.25	2.091	114.465	300.62	301.24	67.484	49.99	68.049	77.164	1388.963	1365.816	1775.617	1747.795
20160416:21:57:18	23.603	12.483	-2.885	23.815	0.25	2.27	0.25	2.089	114.46	300.661	301.258	67.407	49.949	68.001	77.141	1390.29	1367.143	1777.281	1749.462
20160416:22:02:18	23.606	12.528	-2.854	23.816	0.25	2.278	0.25	2.095	114.59	300.638	301.263	67.388	50.007	67.986	77.113	1391.676	1368.507	1779.02	1751.177
20160416:22:07:18	23.609	12.547	-2.809	23.816	0.25	2.276	0.25	2.093	114.65	300.611	301.27	67.327	50.029	67.908	77.086	1393.038	1369.832	1780.73	1752.84
20160416:22:12:18	23.616	12.535	-2.667	23.812	0.25	2.252	0.25	2.083	114.627	300.65	301.297	67.318	49.977	67.905	77.059	1394.381	1371.199	1782.415	1754.558
20160416:22:17:18	23.613	12.509	-2.763	23.816	0.25	2.266	0.25	2.094	114.548	300.635	301.252	67.302	49.974	67.882	77.031	1395.77	1372.519	1784.157	1756.216
20160416:22:22:18	23.606	12.507	-2.79	23.812	0.25	2.266	0.25	2.092	114.531	300.6	301.229	67.26	50.003	67.831	77.005	1397.111	1373.893	1785.841	1757.942
20160416:22:27:18	23.609	12.512	-2.798	23.815	0.25	2.283	0.25	2.11	114.551	300.649	301.289	67.257	50.049	67.82	76.977	1398.508	1375.211	1787.593	1759.598
20160416:22:32:18	23.613	12.477	-2.771	23.817	0.25	2.276	0.25	2.106	114.458	300.615	301.266	67.202	49.947	67.76	76.947	1399.845	1376.586	1789.27	1761.323
20160416:22:37:18	23.614	12.475	-2.762	23.817	0.25	2.28	0.25	2.091	114.453	300.66	301.311	67.197	49.994	67.757	76.913	1401.236	1377.901	1791.015	1762.976
20160416:22:42:18	23.61	12.455	-2.813	23.817	0.25	2.27	0.25	2.093	114.389	300.6	301.207	67.14	50.009	67.656	76.879	1402.578	1379.279	1792.698	1764.705
20160416:22:47:18	23.609	12.454	-2.832	23.817	0.25	2.263	0.25	2.09	114.385	300.609	301.219	67.13	50.003	67.649	76.843	1403.939	1380.594	1794.406	1766.355
20160416:22:52:18	23.609	12.441	-2.858	23.82	0.25	2.265	0.25	2.099	114.35	300.575	301.173	67.033	49.951	67.6	76.807	1405.32	1381.971	1796.137	1768.085
20160416:22:57:18	23.609	12.453	-2.853	23.819	0.25	2.267	0.25	2.086	114.383	300.601	301.234	67.03	50.017	67.601	76.771	1406.658	1383.286	1797.815	1769.735
20160416:23:02:18	23.616	12.441	-2.776	23.82	0.25	2.266	0.25	2.095	114.359	300.586	301.233	66.98	50.011	67.558	76.739	1408.06	1384.661	1799.572	1771.461
20160416:23:07:18	23.612	12.457	-2.875	23.824	0.25	2.259	0.25	2.095	114.4	300.603	301.23	66.983	49.952	67.564	76.709	1409.391	1385.978	1801.241	1773.113
20160416:23:12:18	23.613	12.456	-2.906	23.826	0.25	2.266	0.25	2.093	114.396	300.571	301.21	66.951	49.966	67.532	76.677	1410.789	1387.349	1802.993	1774.833
20160416:23:17:18	23.605	12.468	-2.963	23.823	0.25	2.249	0.25	2.093	114.419	300.701	301.329	66.964	50.018	67.53	76.645	1412.116	1388.67	1804.656	1776.491
20160416:23:22:18	23.602	12.46	-2.995	23.822	0.25	2.269	0.25	2.091	114.394	300.651	301.28	66.936	50.002	67.497	76.618	1413.499	1390.039	1806.389	1778.209
20160416:23:27:18	23.606	12.445	-2.993	23.826	0.25	2.262	0.25	2.087	114.356	300.641	301.279	66.92	49.977	67.481	76.591	1414.866	1391.362	1808.102	1779.868
20160416:23:32:18	23.609	12.411	-2.958	23.827	0.25	2.26	0.25	2.102	114.265	300.648	301.277	66.92	50.024	67.48	76.568	1416.202	1392.724	1809.776	1781.577
20160416:23:37:18	23.61	12.365	-2.962	23.827	0.25	2.262	0.25	2.1	114.134	300.589	301.215	66.87	50.017	67.381	76.541	1417.588	1394.053	1811.513	1783.244
20160416:23:42:18	23.611	11.48	-2.976	23.83	0.25	2.254	0.25	2.073	111.528	300.553	301.212	66.864	49.998	67.372	76.519	1418.924	1395.41	1813.187	1784.945
20160416:23:47:18	23.614	12.211	-2.935	23.83	0.25	2.242	0.25	2.086	113.698	300.623	301.258	66.852	49.996	67.362	76.495	1420.316	1396.745	1814.931	1786.62
20160416:23:52:18	23.614	12.253	-2.979	23.833	0.25	2.267	0.25	2.081	113.819	300.648	301.298	66.788	49.989	67.308	76.47	1421.648	1398.092	1816.6	1788.308
20160416:23:57:18	23.615	12.244	-2.946	23.832	0.25	2.278	0.25	2.078	113.796	300.654	301.25	66.758	50.037	67.293	76.446	1423.044	1399.439	1818.348	1789.998
20160417:00:02:18	23.62	12.214	-2.827	23.828	0.25	2.244	0.25	2.092	113.718	300.59	301.233	66.684	50.024	67.241	76.415	1424.373	1400.777	1820.013	1791.675
20160417:00:07:18	23.619	12.209	-2.863	23.829	0.25	2.254	0.25	2.091	113.701	300.642	301.298	66.644	50.016	67.207	76.381	1425.754	1402.132	1821.743	1793.374
20160417:00:12:18	23.612	12.203	-3.002	23.833	0.25	2.255	0.25	2.102	113.675	300.673	301.312	66.611	50.021	67.174	76.348	1427.127	1403.456	1823.461	1795.034
20160417:00:17:18	23.614	12.191	-2.983	23.833	0.25	2.248	0.25	2.086	113.64	300.651	301.28	66.584	50.016	67.147	76.311	1428.461	1404.827	1825.131	1796.752
20160417:00:22:18	23.615	12.183	-2.954	23.833	0.25	2.252	0.25	2.096	113.619	300.605	301.23	66.547	50.023	67.07	76.273	1429.846	1406.135	1826.865	1798.391
20160417:00:27:18	23.618	12.18	-2.963	23.836	0.25	2.268	0.25	2.088	113.615	300.638	301.263	66.52	50.034	67.026	76.233	1431.184	1407.517	1828.541	1800.122
20160417:00:32:18	23.622	12.184	-2.933	23.837	0.25	2.26	0.25	2.077	113.633	300.576	301.232	66.457	50.007	66.97	76.194	1432.577	1408.827	1830.283	1801.763
20160417:00:37:18	23.626	11.588	-2.841	23.835	0.25	2.266	0.25	2.087	111.858	300.494	301.187	66.412	50.03	66.948	76.155	1433.909	1410.21	1831.95	1803.496
20160417:00:42:18	23.625	11.101	-2.816	23.833	0.25	2.234	0.25	2.084	110.387	300.559	301.21	66.348	50.014	66.911	76.113	1435.304	1411.524	1833.696	1805.143
20160417:00:47:18	23.623	10.937	-2.84	23.832	0.25	2.224	0.25	2.067	109.866	300.52	301.243	66.319	50.023	66.882	76.07	1436.63	1412.897	1835.356	1806.863
20160417:00:52:18	23.619	11.52	-2.915	23.833	0.25	2.236	0.25	2.073	111.647	300.543	301.236	66.288	50.032	66.849	76.027	1438.012	1414.207	1837.085	1808.504
20160417:00:57:18	23.62	12.015	-2.875	23.831	0.25	2.256	0.25	2.073	113.14	300.566	301.215	66.244	50.016	66.8	75.982	1439.377	1415.58	1838.793	1810.224
20160417:01:02:18	23.621	12.062	-2.846	23.831	0.25	2.243	0.25	2.076	113.28	300.55	301.183	66.21	50.024	66.736	75.94	1440.714	1416.895	1840.467	1811.87
20160417:01:07:18	23.617	12.085	-2.931	23.832	0.25	2.253	0.25	2.08	113.34	300.669	301.251	66.184	50.038	66.695	75.897	1442.097	1418.277	1842.196	1813.602
20160417:01:12:18	23.618	12.085	-2.899	23.832	0.25	2.261	0.25	2.092	113.341	300.634	301.196	66.081	50.009	66.644	75.855	1443.44	1419.582	1843.876	1815.235
20160417:01:17:18	23.616	12.094	-2.939	23.832	0.25	2.264	0.25	2.083	113.365	300.712	301.224	66.065	50.038	66.628	75.815	1444.833	1420.958	1845.619	1816.959
20160417:01:22:18	23.618	12.095	-2.876	23.829	0.25	2.258	0.25	2.096	113.368	300.675	301.214	66.025	50.019	66.593	75.777	1446.167	1422.269	1847.287	1818.6
20160417:01:27:18	23.617	12.101	-2.883	23.829	0.25	2.243	0.25	2.11	113.387	300.655	301.177	65.994	50.02	66.559	75.738	1447.563	1423.644	1849.033	1820.321
20160417:01:32:18	23.62	12.112	-2.828	23.828	0.25	2.253	0.25	2.104	113.424	300.624	301.14	65.971	50.026	66.541	75.7	1448.888	1424.956	1850.691	1821.964
20160417:01:37:18	23.617	12.113	-2.871	23.828	0.25	2.26	0.25	2.097	113.419	300.679	301.19	65.933	50.014	66.507	75.664	1450.272	1426.329	1852.422	1823.684
20160417:01:42:18	23.616	11.935	-2.876	23.827	0.25	2.254	0.25	2.099	112.888	300.651	301.21	65.919	50.018	66.486	75.627	1451.631	1427.644	1854.122	1825.331
20160417:01:47:18	23.614	11.001	-2.878	23.826	0.25	2.24	0.25	2.067	110.057	300.6	301.219	65.871	50	66.401	75.587	1452.973	1429.017	1855.8	1827.049
20160417:01:52:18	23.614	10.994	-2.83	23.822	0.25	2.231	0.25	2.096	110.033	300.652	301.22	65.871	50.012	66.406	75.55	1454.352	1430.324	1857.526	1828.686
20160417:01:57:18	23.611	11.083	-2.835	23.82	0.25	2.233	0.25	2.075	110.299	300.554	301.151	65.799	49.999	66.346	75.515	1455.691	1431.701	1859.2	1830.41
20160417:02:02:18	23.615	11.955	-2.772	23.819	0.25	2.25	0.25	2.088	112.956	300.624	301.177	65.813	49.998	66.348	75.483	1457.085	1433.014	1860.944	1832.055
20160417:02:07:18	23.614	12.023	-2.776	23.818	0.25	2.262	0.25	2.091	113.155	300.61	301.112	65.738	49.967	66.303	75.452	1458.422	1434.383	1862.617	1833.769
20160417:02:12:18	23.612	12.079	-2.816	23.819	0.25	2.28	0.25	2.077	113.314	300.643	301.15	65.742	49.994	66.304	75.423	1459.82	1435.704	1864.365	1835.423
20160417:02:17:18	23.611	12.089	-2.852	23.82	0.25	2.248	0.25	2.075	113.341	300.586	301.146	65.706	49.966	66.268	75.398	1461.15	1437.067	1866.028	1837.13
20160417:02:22:18	23.61	12.087	-2.88	23.822	0.25	2.249	0.25	2.08	113.335	300.625	301.174	65.689	49.977	66.253	75.373	1462.533	1438.389	1867.757	1838.784
20160417:02:27:18	23.612	12.099	-2.847	23.822	0.25	2.24	0.25	2.09	113.373	300.688	301.218	65.689	49.997	66.259	75.349	1463.876	1439.766	1869.437	1840.508
20160417:02:32:18	23.608	12.111	-2.92	23.823	0.25	2.254	0.25	2.101	113.403	300.57	301.173	65.649	49.969	66.218	75.321	1465.233	1441.08	1871.133	1842.152
20160417:02:37:18	23.608	12.129	-2.922	23.823	0.25	2.263	0.25	2.083	113.454	300.58	301.152	65.66	49.991	66.222	75.302	1466.617	1442.451	1872.865	1843.868
20160417:02:42:18	23.605	12.141	-2.921	23.82	0.25	2.259	0.25	2.087	113.484	300.647	301.224	65.672	49.998	66.231	75.281	1467.949	1443.771	1874.53	1845.521
20160417:02:47:18	23.61	12.134	-2.891	23.822	0.25	2.25	0.25	2.066	113.471	300.603	301.213	65.655	49.981	66.197	75.264	1469.336	1445.13	1876.265	1847.222
20160417:02:52:18	23.616	12.109	-2.845	23.826	0.25	2.251	0.25	2.075	113.409	300.617	301.23	65.628	49.956	66.174	75.244	1470.674	1446.461	1877.937	1848.887
20160417:02:57:18	23.61	12.118	-2.966	23.828	0.25	2.229	0.25	2.082	113.423	300.673	301.309	65.631	49.981	66.174	75.229	1472.069	1447.802	1879.681	1850.566
20160417:03:02:18	23.613	12.126	-2.895	23.825	0.25	2.238	0.25	2.09	113.452	300.642	301.314	65.632	49.996	66.18	75.215	1473.401	1449.154	1881.346	1852.258
20160417:03:07:18	23.614	12.118	-2.838	23.823	0.25	2.235	0.25	2.095	113.432	300.656	301.3	65.608	49.97	66.14	75.199	1474.796	1450.478	1883.091	1853.915
20160417:03:12:18	23.617	12.138	-2.777	23.821	0.25	2.241	0.25	2.085	113.491	300.652	301.247	65.581	49.944	66.08	75.185	1476.126	1451.847	1884.754	1855.628
20160417:03:17:18	23.612	12.199	-2.826	23.82	0.25	2.232	0.25	2.096	113.662	300.643	301.275	65.581	49.943	66.081	75.175	1477.499	1453.156	1886.47	1857.267
20160417:03:22:18	23.614	12.273	-2.861	23.824	0.25	2.248	0.25	2.091	113.876	300.653	301.263	65.58	49.949	66.08	75.162	1478.873	1454.54	1888.187	1858.998
20160417:03:27:18	23.614	12.281	-2.948	23.831	0.25	2.237	0.25	2.1	113.899	300.648	301.27	65.578	49.98	66.079	75.15	1480.209	1455.852	1889.857	1860.639
20160417:03:32:18	23.617	12.265	-2.925	23.832	0.25	2.237	0.25	2.079	113.858	300.655	301.273	65.578	49.997	66.079	75.14	1481.595	1457.228	1891.589	1862.361
20160417:03:37:18	23.612	12.265	-3.038	23.836	0.25	2.246	0.25	2.089	113.852	300.614	301.242	65.555	49.981	66.056	75.13	1482.938	1458.536	1893.267	1863.996
20160417:03:42:18	23.618	12.267	-2.969	23.836	0.25	2.244	0.25	2.099	113.867	300.642	301.26	65.514	49.956	66.014	75.116	1484.331	1459.911	1895.007	1865.716
20160417:03:47:18	23.61	12.278	-3.07	23.836	0.25	2.248	0.25	2.1	113.885	300.605	301.247	65.508	49.997	66.011	75.106	1485.665	1461.222	1896.674	1867.355
20160417:03:52:18	23.612	12.275	-3.023	23.834	0.25	2.25	0.25	2.088	113.881	300.696	301.361	65.506	50.009	66.009	75.1	1487.066	1462.606	1898.424	1869.086
20160417:03:57:18	23.609	12.27	-3.059	23.834	0.25	2.242	0.25	2.099	113.861	300.715	301.384	65.499	50.043	66.01	75.083	1488.397	1463.912	1900.087	1870.72
20160417:04:02:18	23.609	12.253	-3.046	23.833	0.25	2.243	0.25	2.096	113.812	300.673	301.338	65.453	50.035	65.99	75.065	1489.778	1465.289	1901.813	1872.442
20160417:04:07:18	23.613	12.239	-3.002	23.834	0.25	2.245	0.25	2.108	113.777	300.633	301.319	65.4	50.027	65.959	75.046	1491.148	1466.603	1903.524	1874.085
20160417:04:12:18	23.607	12.236	-3.082	23.834	0.25	2.241	0.25	2.121	113.762	300.682	301.342	65.404	50.052	65.963	75.027	1492.483	1467.978	1905.193	1875.805
20160417:04:17:18	23.605	12.228	-3.109	23.834	0.25	2.252	0.25	2.095	113.735	300.684	301.334	65.408	50.06	65.966	75.011	1493.867	1469.293	1906.92	1877.449
20160417:04:22:18	23.606	12.207	-3.07	23.831	0.25	2.238	0.25	2.077	113.674	300.656	301.308	65.384	50.054	65.943	74.994	1495.21	1470.666	1908.598	1879.165
20160417:04:27:18	23.604	12.188	-3.108	23.832	0.25	2.231	0.25	2.081	113.617	300.613	301.287	65.357	50.027	65.914	74.981	1496.602	1471.976	1910.337	1880.805
20160417:04:32:18	23.602	12.194	-3.13	23.832	0.25	2.226	0.25	2.088	113.633	300.622	301.286	65.355	50.024	65.913	74.968	1497.934	1473.349	1912.002	1882.521
20160417:04:37:18	23.599	12.203	-3.165	23.831	0.25	2.233	0.25	2.104	113.653	300.645	301.234	65.357	50.028	65.914	74.955	1499.332	1474.664	1913.748	1884.165
20160417:04:42:18	23.602	12.21	-3.147	23.834	0.25	2.233	0.25	2.096	113.678	300.704	301.274	65.354	50.042	65.91	74.944	1500.662	1476.034	1915.409	1885.878
20160417:04:47:18	23.602	12.206	-3.108	23.83	0.25	2.227	0.25	2.079	113.665	300.64	301.273	65.342	50.033	65.899	74.932	1502.048	1477.352	1917.141	1887.526
20160417:04:52:18	23.597	12.191	-3.204	23.832	0.25	2.242	0.25	2.075	113.615	300.661	301.307	65.303	49.987	65.857	74.919	1503.402	1478.72	1918.831	1889.237
20160417:04:57:18	23.593	12.205	-3.228	23.831	0.25	2.232	0.25	2.082	113.65	300.65	301.279	65.296	49.991	65.851	74.907	1504.754	1480.037	1920.52	1890.883
20160417:05:02:18	23.594	12.211	-3.208	23.83	0.25	2.233	0.25	2.084	113.67	300.663	301.27	65.295	49.979	65.84	74.893	1506.14	1481.411	1922.252	1892.602
20160417:05:07:18	23.596	12.227	-3.197	23.831	0.25	2.241

Time:	Stack Pressure:	Sat% H2O:	Static:	Barometric:	Flowmeter1:	Vacuum1:	Flowmeter2:	Vacuum2:	Stack Temp:	Sorbent Temp:	Probe Temp:	DGM#1 Temp:	Condenser Temp:	DGM#2 Temp:	DAQ Temp:	DGM1*:	DGM2*:	DGM1:	DGM2:
20160417:08:57:18	23.648	11.92	-2.687	23.846	0.25	2.218	0.25	0.058	112.902	300.632	301.272	64.562	49.631	65.047	74.007	1570.139	1544.543	2002.072	1971.421
20160417:09:02:18	23.651	11.889	-2.742	23.852	0.25	2.238	0.25	2.07	112.815	300.627	301.291	64.563	49.619	65.05	74.007	1571.534	1545.914	2003.811	1973.132
20160417:09:07:18	23.651	11.868	-2.667	23.847	0.25	2.24	0.25	2.062	112.754	300.67	301.309	64.561	49.612	65.042	74.006	1572.865	1547.236	2005.47	1974.78
20160417:09:12:18	23.653	10.904	-2.705	23.852	0.25	2.219	0.25	2.056	109.795	300.619	301.334	64.567	49.621	65.045	74.005	1574.259	1548.592	2007.207	1976.472
20160417:09:17:18	23.647	10.999	-2.769	23.851	0.25	2.201	0.25	2.067	110.075	300.602	301.286	64.566	49.621	65.048	74.002	1575.583	1549.93	2008.857	1978.141
20160417:09:22:18	23.65	11.712	-2.781	23.855	0.25	2.214	0.25	2.075	112.289	300.649	301.28	64.566	49.633	65.05	73.998	1576.969	1551.256	2010.585	1979.795
20160417:09:27:18	23.653	11.757	-2.702	23.851	0.25	2.207	0.25	2.073	112.428	300.638	301.296	64.565	49.645	65.054	73.996	1578.323	1552.624	2012.272	1981.502
20160417:09:32:18	23.652	11.773	-2.664	23.848	0.25	2.218	0.25	2.082	112.473	300.658	301.29	64.568	49.643	65.054	73.994	1579.675	1553.934	2013.957	1983.135
20160417:09:37:18	23.65	11.779	-2.712	23.85	0.25	2.233	0.25	2.07	112.49	300.671	301.322	64.568	49.659	65.055	73.991	1581.061	1555.318	2015.685	1984.863
20160417:09:42:18	23.652	11.78	-2.663	23.848	0.25	2.223	0.25	2.071	112.495	300.666	301.332	64.567	49.657	65.058	73.986	1582.391	1556.629	2017.343	1986.498
20160417:09:47:18	23.654	11.776	-2.753	23.856	0.25	2.223	0.25	2.086	112.486	300.656	301.327	64.568	49.661	65.062	73.984	1583.776	1558	2019.069	1988.209
20160417:09:52:18	23.65	11.78	-2.769	23.853	0.25	2.231	0.25	2.088	112.493	300.666	301.293	64.553	49.651	65.058	73.981	1585.115	1559.31	2020.737	1989.842
20160417:09:57:18	23.655	11.767	-2.582	23.844	0.25	2.226	0.25	2.068	112.46	300.604	301.27	64.504	49.627	65.031	73.978	1586.504	1560.685	2022.469	1991.558
20160417:10:02:18	23.66	11.75	-2.594	23.851	0.25	2.221	0.25	2.073	112.416	300.574	301.241	64.48	49.612	65.018	73.975	1587.834	1561.993	2024.126	1993.19
20160417:10:07:18	23.664	11.755	-2.553	23.851	0.25	2.214	0.25	2.081	112.438	300.619	301.248	64.486	49.614	65.017	73.973	1589.233	1563.366	2025.869	1994.902
20160417:10:12:18	23.663	11.757	-2.463	23.844	0.25	2.219	0.25	2.083	112.443	300.632	301.286	64.505	49.614	65.022	73.972	1590.565	1564.678	2027.53	1996.539
20160417:10:17:18	23.668	11.747	-2.434	23.847	0.25	2.219	0.25	2.085	112.42	300.631	301.285	64.524	49.612	65.026	73.973	1591.95	1566.048	2029.256	1998.248
20160417:10:22:18	23.668	11.742	-2.462	23.849	0.25	2.219	0.25	2.08	112.407	300.611	301.283	64.541	49.613	65.038	73.975	1593.286	1567.362	2030.92	1999.887
20160417:10:27:18	23.664	11.759	-2.464	23.845	0.25	2.223	0.25	2.083	112.45	300.673	301.338	64.575	49.636	65.061	73.978	1594.651	1568.733	2032.622	2001.598
20160417:10:32:18	23.671	11.755	-2.342	23.844	0.25	2.232	0.25	2.086	112.45	300.722	301.375	64.616	49.671	65.099	73.983	1596.017	1570.051	2034.326	2003.242
20160417:10:37:18	23.673	11.759	-2.379	23.848	0.25	2.205	0.25	2.098	112.463	300.693	301.385	64.622	49.672	65.105	73.988	1597.35	1571.426	2035.987	2004.959
20160417:10:42:18	23.671	11.761	-2.432	23.85	0.25	2.221	0.25	2.087	112.466	300.674	301.302	64.623	49.682	65.103	73.994	1598.729	1572.737	2037.706	2006.594
20160417:10:47:18	23.672	11.754	-2.427	23.851	0.25	2.218	0.25	2.085	112.446	300.619	301.276	64.624	49.694	65.109	73.999	1600.067	1574.103	2039.374	2008.299
20160417:10:52:18	23.677	11.744	-2.357	23.851	0.25	2.233	0.25	2.089	112.426	300.636	301.283	64.626	49.702	65.117	74.005	1601.462	1575.431	2041.113	2009.955
20160417:10:57:18	23.676	11.739	-2.3	23.845	0.25	2.222	0.25	2.069	112.408	300.645	301.277	64.628	49.716	65.119	74.011	1602.798	1576.773	2042.778	2011.63
20160417:11:02:18	23.675	11.29	-2.371	23.849	0.25	2.223	0.25	2.069	111.018	300.602	301.208	64.637	49.716	65.123	74.018	1604.191	1578.126	2044.515	2013.318
20160417:11:07:18	23.671	10.616	-2.384	23.847	0.25	2.204	0.25	2.054	108.907	300.555	301.266	64.64	49.721	65.124	74.027	1605.52	1579.445	2046.172	2014.964
20160417:11:12:18	23.676	11.366	-2.361	23.85	0.25	2.206	0.25	2.067	111.271	300.583	301.261	64.647	49.723	65.127	74.035	1606.914	1580.821	2047.909	2016.68
20160417:11:17:18	23.678	11.625	-2.226	23.842	0.25	2.224	0.25	2.075	112.07	300.633	301.255	64.669	49.748	65.162	74.043	1608.239	1582.134	2049.561	2018.32
20160417:11:22:18	23.681	11.679	-2.155	23.84	0.25	2.234	0.25	2.068	112.236	300.678	301.31	64.718	49.792	65.238	74.053	1609.624	1583.51	2051.289	2020.038
20160417:11:27:18	23.686	11.684	-1.983	23.832	0.25	2.219	0.25	2.073	112.261	300.687	301.315	64.722	49.8	65.243	74.064	1610.986	1584.818	2052.989	2021.671
20160417:11:32:18	23.699	11.681	-1.813	23.832	0.25	2.23	0.25	2.069	112.27	300.697	301.339	64.727	49.809	65.249	74.075	1612.328	1586.196	2054.663	2023.393
20160417:11:37:18	23.699	11.677	-1.78	23.83	0.25	2.215	0.25	2.069	112.258	300.718	301.341	64.732	49.834	65.261	74.087	1613.708	1587.503	2056.385	2025.024
20160417:11:42:18	23.696	11.672	-1.788	23.827	0.25	2.224	0.25	2.067	112.239	300.605	301.262	64.735	49.875	65.272	74.1	1615.042	1588.878	2058.05	2026.742
20160417:11:47:18	23.703	11.682	-1.668	23.825	0.25	2.222	0.25	2.079	112.277	300.65	301.254	64.766	49.917	65.315	74.113	1616.43	1590.188	2059.781	2028.38
20160417:11:52:18	23.705	11.694	-1.573	23.82	0.25	2.225	0.25	2.083	112.318	300.616	301.258	64.801	49.946	65.349	74.129	1617.763	1591.559	2061.446	2030.092
20160417:11:57:18	23.704	11.695	-1.509	23.815	0.25	2.208	0.25	2.088	112.318	300.648	301.319	64.847	49.917	65.351	74.149	1619.156	1592.874	2063.185	2031.737
20160417:12:02:18	23.712	11.69	-1.407	23.816	0.25	2.222	0.25	2.077	112.318	300.592	301.225	64.904	49.897	65.383	74.17	1620.489	1594.244	2064.85	2033.449
20160417:12:07:18	23.702	11.705	-1.529	23.815	0.25	2.212	0.25	2.063	112.345	300.616	301.247	64.961	49.93	65.489	74.197	1621.881	1595.549	2066.589	2035.081
20160417:12:12:18	23.693	11.698	-1.696	23.818	0.25	2.229	0.25	2.062	112.311	300.629	301.245	64.983	49.758	65.514	74.225	1623.2	1596.922	2068.237	2036.797
20160417:12:17:18	23.688	11.708	-1.692	23.813	0.25	2.209	0.25	2.055	112.333	300.615	301.24	65.053	49.835	65.567	74.257	1624.589	1598.237	2069.972	2038.442
20160417:12:22:18	23.684	11.708	-1.693	23.808	0.25	2.211	0.25	2.065	112.328	300.595	301.264	65.085	49.904	65.613	74.293	1625.937	1599.601	2071.657	2040.148
20160417:12:27:18	23.688	11.713	-1.561	23.802	0.25	2.218	0.25	2.059	112.347	300.637	301.297	65.208	49.828	65.678	74.332	1627.284	1600.914	2073.341	2041.791
20160417:12:32:18	23.69	11.707	-1.498	23.8	0.25	2.207	0.25	2.072	112.333	300.619	301.244	65.256	49.756	65.713	74.374	1628.668	1602.28	2075.072	2043.502
20160417:12:37:18	23.697	11.707	-1.422	23.801	0.25	2.211	0.25	2.048	112.343	300.606	301.156	65.301	49.877	65.784	74.419	1629.998	1603.597	2076.735	2045.15
20160417:12:42:18	23.698	11.702	-1.434	23.803	0.25	2.21	0.25	2.059	112.329	300.644	301.232	65.356	49.871	65.875	74.469	1631.385	1604.947	2078.47	2046.84
20160417:12:47:18	23.693	11.699	-1.532	23.806	0.25	2.222	0.25	2.065	112.314	300.583	301.135	65.43	49.749	65.93	74.521	1632.718	1606.285	2080.137	2048.515
20160417:12:52:18	23.684	11.716	-1.561	23.799	0.25	2.206	0.25	2.064	112.352	300.569	301.146	65.517	49.831	65.979	74.575	1634.109	1607.615	2081.878	2050.18
20160417:12:57:18	23.685	11.708	-1.574	23.801	0.25	2.221	0.25	2.07	112.331	300.621	301.15	65.57	49.9	66.024	74.628	1635.439	1608.974	2083.543	2051.883
20160417:13:02:18	23.689	11.708	-1.602	23.807	0.25	2.228	0.25	2.08	112.336	300.634	301.208	65.623	49.771	66.076	74.682	1636.832	1610.282	2085.285	2053.521
20160417:13:07:18	23.685	11.714	-1.653	23.806	0.25	2.223	0.25	2.1	112.345	300.624	301.205	65.664	49.852	66.15	74.737	1638.152	1611.663	2086.937	2055.25
20160417:13:12:18	23.682	11.717	-1.763	23.811	0.25	2.225	0.25	2.067	112.351	300.574	301.112	65.697	49.928	66.209	74.792	1639.535	1612.973	2088.667	2056.891
20160417:13:17:18	23.687	11.715	-1.708	23.812	0.25	2.221	0.25	2.066	112.353	300.56	301.143	65.716	49.789	66.244	74.848	1640.9	1614.339	2090.374	2058.602
20160417:13:22:18	23.681	11.728	-1.783	23.812	0.25	2.219	0.25	2.081	112.383	300.617	301.173	65.753	49.795	66.274	74.903	1642.236	1615.646	2092.046	2060.239
20160417:13:27:18	23.683	11.732	-1.808	23.816	0.25	2.227	0.25	2.062	112.399	300.655	301.217	65.846	49.931	66.311	74.957	1643.613	1617.026	2093.769	2061.966
20160417:13:32:18	23.68	11.734	-1.894	23.819	0.25	2.237	0.25	2.068	112.399	300.59	301.113	65.881	49.87	66.346	75.008	1644.949	1618.33	2095.441	2063.6
20160417:13:37:18	23.674	11.74	-1.999	23.821	0.25	2.222	0.25	2.081	112.41	300.621	301.209	65.898	49.821	66.392	75.057	1646.344	1619.704	2097.185	2065.32
20160417:13:42:18	23.678	11.749	-1.915	23.819	0.25	2.223	0.25	2.073	112.441	300.405	301.139	65.919	49.917	66.446	75.099	1647.677	1621.012	2098.854	2066.959
20160417:13:47:18	23.673	11.776	-1.983	23.818	0.25	2.225	0.25	2.074	112.514	300.531	301.141	64.948	49.897	66.479	75.132	1649.076	1622.383	2100.604	2068.675
20160417:13:52:18	23.678	11.232	-1.905	23.818	0.25	2.215	0.25	2.081	110.841	300.513	301.154	65.965	49.787	66.488	75.176	1650.406	1623.693	2102.269	2070.316
20160417:13:57:18	23.683	10.619	-1.792	23.815	0.25	2.201	0.25	2.067	108.931	300.484	301.19	65.996	49.914	66.527	75.219	1651.79	1625.062	2104	2072.032
20160417:14:02:18	23.693	10.93	-1.689	23.817	0.25	2.208	0.25	2.04	109.927	300.482	301.175	65.997	49.899	66.545	75.26	1653.127	1626.371	2105.674	2073.671
20160417:14:07:18	23.698	11.609	-1.609	23.816	0.25	2.219	0.25	2.055	112.053	300.522	301.197	66.022	49.778	66.554	75.299	1654.487	1627.741	2107.376	2075.387
20160417:14:12:18	23.696	11.675	-1.636	23.816	0.25	2.226	0.25	2.07	112.247	300.636	301.189	66.043	49.854	66.567	75.334	1655.871	1629.055	2109.107	2077.034
20160417:14:17:18	23.695	11.7	-1.617	23.814	0.25	2.236	0.25	2.057	112.32	300.663	301.261	66.053	49.892	66.586	75.368	1657.196	1630.418	2110.767	2078.742
20160417:14:22:18	23.692	11.719	-1.648	23.814	0.25	2.216	0.25	2.068	112.373	300.602	301.181	66.052	49.761	66.598	75.396	1658.587	1631.737	2112.507	2080.395
20160417:14:27:18	23.692	11.741	-1.551	23.806	0.25	2.214	0.25	2.053	112.44	300.57	301.213	66.094	49.876	66.639	75.421	1659.923	1633.103	2114.181	2082.107
20160417:14:32:18	23.7	11.726	-1.331	23.798	0.25	2.22	0.25	2.052	112.405	300.531	301.154	66.084	49.863	66.635	75.448	1661.323	1634.419	2115.935	2083.758
20160417:14:37:18	23.7	11.731	-1.305	23.796	0.25	2.228	0.25	2.067	112.42	300.475	301.124	66.151	49.766	66.668	75.472	1662.654	1635.795	2117.602	2085.483
20160417:14:42:18	23.698	11.741	-1.348	23.797	0.25	2.219	0.25	2.05	112.447	300.525	301.155	66.194	49.866	66.692	75.495	1664.044	1637.105	2119.344	2087.126
20160417:14:47:18	23.694	11.74	-1.403	23.797	0.25	2.216	0.25	2.061	112.44	300.455	301.154	66.194	49.833	66.69	75.519	1665.375	1638.47	2121.011	2088.838
20160417:14:52:18	23.689	11.717	-1.472	23.797	0.25	2.227	0.25	2.069	112.359	300.595	301.238	66.238	49.771	66.773	75.541	1666.744	1639.79	2122.728	2090.494
20160417:14:57:18	23.698	10.729	-1.433	23.803	0.25	2.195	0.25	2.055	109.309	300.568	301.222	66.25	49.879	66.787	75.563	1668.121	1641.151	2124.452	2092.201
20160417:15:02:18	23.697	11.052	-1.388	23.799	0.25	2.189	0.25	2.047	110.316	300.567	301.221	66.25	49.815	66.787	75.583	1669.451	1642.481	2126.119	2093.868
20160417:15:07:18	23.698	11.648	-1.462	23.805	0.25	2.214	0.25	2.087	112.168	300.607	301.254	66.276	49.77	66.82	75.603	1670.834	1643.827	2127.852	2095.556
20160417:15:12:18	23.701	11.701	-1.399	23.804	0.25	2.229	0.25	2.07	112.333	300.549	301.249	66.308	49.897	66.855	75.627	1672.173	1645.168	2129.53	2097.239
20160417:15:17:18	23.694	11.716	-1.524	23.807	0.25	2.207	0.25	2.073	112.367	300.594	301.229	66.307	49.817	66.859	75.649	1673.567	1646.502	2131.276	2098.912
20160417:15:22:18	23.689	11.741	-1.466	23.796	0.25	2.2	0.25	2.068	112.432	300.578	301.196	66.334	49.807	66.883	75.67	1674.897	1647.858	2132.943	2100.613
20160417:15:27:18	23.697	11.745	-1.445	23.803	0.25	2.218	0.25	2.053	112.455	300.586	301.212	66.381	49.927	66.922	75.693	1676.292	1649.178	2134.691	2102.269
20160417:15:32:18	23.694	11.754	-1.407	23.798	0.25	2.211	0.25	2.062	112.48	300.572	301.21	66.399	49.79	66.924	75.719	1677.619	1650.547	2136.354	2103.987
20160417:15:37:18	23.69	11.768	-1.504	23.8	0.25	2.214	0.25	2.07	112.516	300.546	301.152	66.471	49.84	66.964	75.744	1678.994	1651.857	2138.078	2105.63
20160417:15:42:18	23.684	11.777	-1.648	23.805	0.25	2.229	0.25	2.06	112.532	300.547	301.192	66.509	49.907	66.99	75.773	1680.363	1653.235	2139.793	2107.359
20160417:15:47:18	23.675	11.795	-1.638	23.795	0.25	2.201	0.25	2.066	112.573	300.575	301.19	66.535	49.763	67.014	75.802	1681.696	1654.543	2141.465	2109
20160417:15:52:18	23.68	11.806	-1.601	23.797	0.25	2.213	0.25	2.075	112.613	300.606	301.243	66.576	49.881	67.08	75.831	1683.074	1655.919	2143.193	2110.727
20160417:15:57:18	23.684	11.798	-1.521	23.796	0.25	2.22	0.25	2.077	112.596	300.546	301.174	66.587	49.895	67.091	75.862	1684.412	1657.226	2144.87	2112.368
20160417:16:02:18	23.685	11.802	-1.536	23.798	0.25	2.221	0.25	2.089	112.61	300.564	301.217	66.64	49.818	67.178	75.892	1685.806	1658.594	2146.619	2114.085
20160417:16:07:18	23.68	11.8	-1.647	23.801	0.25	2.218	0.25	2.054	112.527	300.487	301.171	66.644	49.894	67.182	75.927	1687.134	1659.901	2148.283	2115.726
20160417:16:12:18	23.683	11.809	-1.526	23.795	0.25	2.23	0.25	2.059	112.626	300.598	301.235	66.703	49.875	67.239	75.961	1688.529	1661.28	2150.033	2117.457
20160417:16:17:18	23.682	11.804	-1.568	23.797	0.25	2.231	0.25	2.079	112.611	300.607	301.252	66.724	49.791	67.251	75.996	1689.855	1662.581	2151.696	2119.09
20160417:16:22:18	23.68	11.819	-1.704	23.805	0.25	2.223	0.25	2.094	112.651	300.594	301.2	66.817	49.937	67.304	76.035	1691.234	1663.953	2153.426	2120.812
20160417:16:27:18	23.675	11.29	-1.758	23.804	0.25	2.215	0.25	2.08	111.014	300.624	301.265	66.838	49.833	67.319	76.072	1692.601	1665.258	2155.141	2122.451
20160417:16:32:18	23.671	10.731	-1.842	23.807	0.25	2.203	0.25	2.044	109.279	300.582	301.29	66.865	49.881	67.339	76.109	1693.932	1666.63	2156.809	2124.173
20160417:16:37:18	23.67	11.559	-1.79	23.802	0.25	2.202	0.25	2.051	111.854	300.564	301.238	66.881	49.911	67.342	76.144	1695.314	1667.94	2158.543	2125.818
20160417:16:42:18	23.672	11.738	-1.828	23.806	0.25	2.222	0.25	2.066	112.399	300.57	301.185	66.901	49.814	67.369	76.177	1696.651	1669.309	2160.22	2127.536
20160417:16:47:18	23.673	11.759	-1.809	23.806	0.25	2.233	0.25	2.085	112.463	300.554	301.186	66.882	49.885	67.367	76.203	1698.045	1670.617	2161.969	2129.179
20160417:16:52:18	23.669	11.793	-1.871	23.807	0.25	2.228	0.25	2.079	112.558	300.577	301.212	66.922	49.894	67.428	76.232	1699.373	1671.987	2163.633	2130.898
20160417:16:57:18	23.671	11.797	-1.844	23.807	0.25	2.214	0.25	2.084	112.574	300.533	301.199	66.919	49.814	67.378	76.256	1700.768	1673.293	2165.383	2132.538
20160417:17:02:18	23.67	11.806	-1.869	23.807	0.25	2.217	0.25	2.096	112.6	300.555	301.23	66.997	49.94	67.431	76.282	1702.1	1674.666	2167.054	2134.261
20160417:17:07:18	23.669	11.82	-2.01	23.816	0.25	2.227	0.25	2.075	112.639	300.591	301.276	66.943	49.869	67.474	76.301	1703.475	1675.98	2168.778	2135.91
20160417:17:12:18	23.675	11.83	-1.993	23.822	0.25	2.222	0.25	2.075	112.679	300.581	301.211	66.928	49.881	67.463	76.317	1704.849	1677.346	2170.5	2137.624
20160417:17:17:18	23.673	11.832	-2.046	23.823	0.25	2.222	0.25	2.083	112.68	300.545	301.212	66.925	49.927	67.446	76.334	1706.182	1678.667	2172.17	2139.282
20160417:17:22:18	23.67	11.84	-2.099	23.824	0.25	2.226	0.25	2.08	112.699	300.596	301.209	66.939	49.817	67.459	76.348	1707.564	1680.029	2173.904	2140.991
20160417:17:27:18	23.664	11.337	-2.131	23.821	0.25	2.231	0.25	2.086	111.154	300.57	301.272	66.976	49.929	67.506	76.358	1708.904	1681.347	2175.583	2142.645
20160417:17:32:18	23.67	10.871	-2.089	23.823	0.25	2.22	0.25	2.057	109.724	300.557	301.261	66.974	49.929	67.5	76.368	1710.299	1682.72	2177.331	2144.367
20160417:17:37:18	23.665	10.74	-2.152	23.824	0.25	2.211	0.25	2.061	109.3	300.531	301.26	66.97	49.858	67.492	76.379	1711.636	1684.035	2179.007	2146.017
20160417:17:42:18	23.662	11.289	-2.263	23.829	0.25	2.217	0.25	2.061	111.004	300.507	301.23	66.966	49.934	67.491	76.389	1713.028	1685.409	2180.752	2147.741
20160417:17:47:18	23.663	11.796	-2.299	23.832	0.25	2.232	0.25	2.089	112.558	300.536	301.19	66.957	49.869	67.488	76.398	1714.366	1686.722	2182.428	2149.387
20160417:17:52:18	23.669	11.84	-2.238	23.834	0.25	2.241	0.25	2.094	112.698	300.536	301.192	66.945	49.873	67.486	76.407	1715.73	1688.089	2184.137	2151.102
20160417:17:57:18	23.667	11.884	-2.313	23.837	0.25	2.246	0.25	2.103	112.825	300.556	301.202	66.951	49.948	67.497	76.414	1717.111	1689.411	2185.867	2152.759
20160417:18:02:18	23.667	11.924	-2.287	23.835	0.25	2.233	0.25	2.102	112.942	300.61	301.245	66.979	49.902	67.533	76.422	1718.439	1690.775	2187.531	2154.47
20160417:18:07:18	23.665	11.917	-2.328	23.836	0.25	2.223	0.25	2.097	112.92	300.65	301.279	66.981	49.951	67.536	76.43	1719.825	1692.101	2189.267	2156.133
20160417:18:12:18	23.668	11.93	-2.297	23.837	0.25	2.24	0.25	2.063	112.962	300.642	301.266	66.982	49.957	67.536	76.438	1721.164	1693.456	2190.944	2157.833
20160417:18:17:18	23.665	11.966	-2.286	23.833	0.25	2.235	0.25	2.073	113.064	300.661	301.272	66.984	49.899	67.538	76.448	1722.56	1694.792	2192.694	2159.508
20160417:18:22:18	23.668	11.968	-2.284	23.835	0.25	2.233	0.25	2.087	113.072	300.652	301.268	66.983	49.96	67.539	76.456	1723.892	1696.133	2194.363	2161.19
20160417:18:27:18	23.667	11.963	-2.308	23.837	0.25	2.234	0.25	2.076	113.059	300.635	301.276	66.983	49.888	67.538	76.465	1725.283	1697.483	2196.106	2162.883
20160417:18:32:18	23.669	11.833	-2.291	23.838	0.25	2.225	0.25	2.086	112.669	300.638	301.281	66.982	49.869	67.538	76.473	1726.624	1698.814	2197.785	2164.553
20160417:18:37:18	23.667	11.023	-2.329	23.838	0.25	2.211	0.25	2.058	110.203	300.586	301.33	66.996	49.951	67.552	76.482	1727.984	1700.177	2199.489	2166.261
20160417:18:42:18	23.667	11.019	-2.31	23.836	0.25	2.209	0.25	2.057	110.187	300.634	301.379	67.037	49.914	67.589	76.491	1729.37	1701.496	2201.226	2167.915
20160417:18:47:18	23.663	11.127	-2.372	23.838	0.25	2.21	0.25	2.061	110.514	300.619	301.298	67.039	49.937	67.592	76.5	1730.702	1702.867	2202.894	2169.635
20160417:18:52:18	23.665	11.978	-2.359	23.838	0.25	2.23

Time:	Stack Pressure:	Satl% H2O:	Static:	Barometric:	Flowmeter1:	Vacuum1:	Flowmeter2:	Vacuum2:	Stack Temp:	Sorbent Temp:	Probe Temp:	DGM#1 Temp:	Condenser Temp:	DGM#2 Temp:	DAQ Temp:	DGM1*:	DGM2*:	DGM1:	DGM2:
20160417:22:42:18	23.647	12.578	-3.1	23.875	0.25	2.29	0.25	2.1	114.791	300.586	301.194	66.446	50.04	66.983	76.145	1794.878	1766.11	2283.191	2248.844
20160417:22:47:18	23.65	12.577	-3.092	23.877	0.25	2.293	0.25	2.075	114.793	300.668	301.263	66.414	50.083	66.966	76.114	1796.256	1767.45	2284.913	2250.521
20160417:22:52:18	23.645	12.583	-3.143	23.876	0.25	2.302	0.25	2.081	114.804	300.637	301.29	66.404	50.141	66.955	76.084	1797.633	1768.807	2286.633	2252.218
20160417:22:57:18	23.648	12.568	-3.046	23.872	0.25	2.289	0.25	2.082	114.766	300.601	301.213	66.344	50.063	66.915	76.054	1798.966	1770.137	2288.298	2253.882
20160417:23:02:18	23.647	12.591	-3.081	23.874	0.25	2.298	0.25	2.09	114.829	300.567	301.229	66.345	50.119	66.911	76.024	1800.353	1771.508	2290.031	2255.596
20160417:23:07:18	23.641	12.63	-3.152	23.873	0.25	2.299	0.25	2.097	114.928	300.551	301.163	66.302	50.063	66.861	75.994	1801.699	1772.825	2291.713	2257.242
20160417:23:12:18	23.646	12.673	-3.083	23.873	0.25	2.302	0.25	2.094	115.058	300.627	301.2	66.304	50.14	66.864	75.967	1803.095	1774.206	2293.457	2258.97
20160417:23:17:18	23.652	12.28	-2.982	23.872	0.25	2.301	0.25	2.087	113.94	300.59	301.224	66.264	50.097	66.823	75.939	1804.432	1775.518	2295.128	2260.611
20160417:23:22:18	23.65	11.763	-3.029	23.873	0.25	2.293	0.25	2.082	112.442	300.563	301.197	66.248	50.085	66.806	75.913	1805.829	1776.904	2296.872	2262.344
20160417:23:27:18	23.65	11.965	-3.031	23.873	0.25	2.298	0.25	2.069	113.022	300.586	301.3	66.24	50.127	66.787	75.885	1807.169	1778.221	2298.546	2263.991
20160417:23:32:18	23.656	12.573	-2.977	23.875	0.25	2.282	0.25	2.098	114.791	300.561	301.21	66.192	50.064	66.697	75.859	1808.542	1779.597	2300.261	2265.711
20160417:23:37:18	23.658	12.612	-2.903	23.871	0.25	2.289	0.25	2.095	114.905	300.593	301.205	66.191	50.124	66.693	75.832	1809.928	1780.911	2301.993	2267.353
20160417:23:42:18	23.66	12.6	-2.877	23.871	0.25	2.28	0.25	2.103	114.872	300.592	301.255	66.126	50.097	66.66	75.806	1811.263	1782.287	2303.659	2269.073
20160417:23:47:18	23.658	12.592	-2.866	23.869	0.25	2.293	0.25	2.1	114.849	300.652	301.21	66.078	50.071	66.633	75.779	1812.659	1783.604	2305.404	2270.72
20160417:23:52:18	23.656	12.58	-2.915	23.871	0.25	2.291	0.25	2.098	114.812	300.709	301.277	66.069	50.091	66.624	75.751	1814	1784.987	2307.078	2272.449
20160417:23:57:18	23.661	12.559	-2.83	23.869	0.25	2.297	0.25	2.108	114.758	300.712	301.284	66.022	50.048	66.576	75.724	1815.401	1786.295	2308.828	2274.085
20160418:00:02:18	23.657	12.548	-2.915	23.871	0.25	2.291	0.25	2.102	114.721	300.72	301.266	66.024	50.056	66.576	75.695	1816.736	1787.678	2310.494	2275.814
20160418:00:07:18	23.654	12.521	-2.923	23.869	0.25	2.287	0.25	2.089	114.643	300.696	301.212	65.986	50.023	66.541	75.669	1818.127	1788.99	2312.231	2277.453
20160418:00:12:18	23.658	12.515	-2.851	23.867	0.25	2.282	0.25	2.098	114.63	300.678	301.193	65.968	50.038	66.516	75.642	1819.471	1790.368	2313.909	2279.177
20160418:00:17:18	23.659	12.52	-2.874	23.87	0.25	2.286	0.25	2.102	114.646	300.699	301.228	65.951	50.043	66.49	75.612	1820.838	1791.683	2315.617	2280.82
20160418:00:22:18	23.679	12.18	-2.589	23.869	0.25	2.276	0.25	2.105	113.692	300.684	301.212	65.901	50.016	66.428	75.582	1822.222	1793.061	2317.344	2282.541
20160418:00:27:18	23.688	11.526	-2.466	23.87	0.25	2.262	0.25	2.097	111.786	300.713	301.255	65.892	50.041	66.411	75.552	1823.558	1794.375	2319.013	2284.184
20160418:00:32:18	23.688	11.622	-2.457	23.868	0.25	2.255	0.25	2.062	112.062	300.657	301.132	65.795	50.004	66.334	75.522	1824.948	1795.75	2320.748	2285.902
20160418:00:37:18	23.689	12.353	-2.451	23.869	0.25	2.283	0.25	2.079	114.219	300.671	301.24	65.783	50.001	66.318	75.491	1826.291	1797.065	2322.424	2287.545
20160418:00:42:18	23.689	12.381	-2.45	23.869	0.25	2.284	0.25	2.092	114.298	300.669	301.236	65.717	49.97	66.271	75.459	1827.687	1798.44	2324.167	2289.263
20160418:00:47:18	23.688	12.405	-2.418	23.866	0.25	2.281	0.25	2.095	114.365	300.685	301.305	65.697	49.987	66.256	75.427	1829.021	1799.753	2325.831	2290.904
20160418:00:52:18	23.686	12.407	-2.458	23.867	0.25	2.282	0.25	2.088	114.367	300.68	301.338	65.656	49.957	66.213	75.396	1830.416	1801.13	2327.572	2292.624
20160418:00:57:18	23.689	12.412	-2.408	23.866	0.25	2.284	0.25	2.096	114.388	300.702	301.338	65.634	49.944	66.193	75.364	1831.75	1802.457	2329.237	2294.282
20160418:01:02:18	23.691	12.395	-2.384	23.867	0.25	2.285	0.25	2.091	114.341	300.672	301.308	65.593	49.909	66.113	75.325	1833.128	1803.822	2330.957	2295.987
20160418:01:07:18	23.692	12.37	-2.331	23.864	0.25	2.278	0.25	2.097	114.271	300.734	301.371	65.566	49.895	66.07	75.288	1834.51	1805.149	2332.681	2297.645
20160418:01:12:18	23.692	12.334	-2.297	23.861	0.25	2.285	0.25	2.088	114.168	300.701	301.369	65.476	49.824	66.015	75.248	1835.847	1806.518	2334.35	2299.355
20160418:01:17:18	23.692	12.325	-2.298	23.861	0.25	2.279	0.25	2.081	114.144	300.681	301.311	65.413	49.822	65.984	75.208	1837.236	1807.839	2336.083	2301.006
20160418:01:22:18	23.69	12.326	-2.319	23.86	0.25	2.28	0.25	2.082	114.142	300.677	301.275	65.36	49.772	65.941	75.167	1838.581	1809.216	2337.761	2302.726
20160418:01:27:18	23.687	12.096	-2.316	23.857	0.25	2.287	0.25	2.107	113.461	300.695	301.274	65.328	49.762	65.912	75.127	1839.977	1810.534	2339.504	2304.372
20160418:01:32:18	23.683	11.245	-2.346	23.856	0.25	2.267	0.25	2.069	110.918	300.712	301.366	65.299	49.769	65.874	75.096	1841.314	1811.908	2341.172	2306.088
20160418:01:37:18	23.683	11.331	-2.325	23.854	0.25	2.257	0.25	2.061	111.175	300.649	301.333	65.26	49.741	65.81	75.054	1842.712	1813.236	2342.917	2307.746
20160418:01:42:18	23.681	12.186	-2.369	23.855	0.25	2.266	0.25	2.086	113.727	300.686	301.342	65.223	49.739	65.771	75.008	1844.044	1814.601	2344.578	2309.451
20160418:01:47:18	23.684	12.249	-2.318	23.854	0.25	2.275	0.25	2.11	113.911	300.694	301.347	65.131	49.718	65.71	74.962	1845.427	1815.936	2346.304	2311.118
20160418:01:52:18	23.686	12.267	-2.293	23.854	0.25	2.279	0.25	2.092	113.967	300.763	301.379	65.09	49.68	65.668	74.917	1846.799	1817.286	2348.015	2312.805
20160418:01:57:18	23.68	12.288	-2.367	23.854	0.25	2.287	0.25	2.089	114.018	300.717	301.334	65.06	49.662	65.634	74.871	1848.138	1818.638	2349.685	2314.492
20160418:02:02:18	23.676	12.314	-2.409	23.853	0.25	2.297	0.25	2.096	114.088	300.74	301.355	65.017	49.658	65.586	74.824	1849.531	1819.976	2351.422	2316.164
20160418:02:07:18	23.673	12.34	-2.425	23.851	0.25	2.298	0.25	2.104	114.157	300.72	301.367	64.97	49.627	65.533	74.774	1850.882	1821.34	2353.107	2317.867
20160418:02:12:18	23.674	12.347	-2.41	23.851	0.25	2.288	0.25	2.104	114.178	300.684	301.344	64.928	49.628	65.465	74.723	1852.276	1822.668	2354.846	2319.524
20160418:02:17:18	23.673	12.334	-2.371	23.847	0.25	2.294	0.25	2.093	114.14	300.684	301.299	64.888	49.618	65.404	74.67	1853.617	1824.043	2356.519	2321.241
20160418:02:22:18	23.677	12.327	-2.329	23.848	0.25	2.291	0.25	2.109	114.127	300.672	301.301	64.792	49.604	65.359	74.619	1855.02	1825.363	2358.269	2322.889
20160418:02:27:18	23.672	12.342	-2.363	23.846	0.25	2.282	0.25	2.114	114.161	300.688	301.343	64.744	49.57	65.312	74.566	1856.357	1826.748	2359.935	2324.618
20160418:02:32:18	23.667	12.212	-2.417	23.845	0.25	2.294	0.25	2.133	113.773	300.671	301.337	64.698	49.562	65.264	74.51	1857.737	1828.062	2361.656	2326.258
20160418:02:37:18	23.67	11.354	-2.317	23.84	0.25	2.279	0.25	2.086	111.236	300.578	301.283	64.656	49.537	65.206	74.456	1859.121	1829.453	2363.381	2327.994
20160418:02:42:18	23.671	11.346	-2.297	23.84	0.25	2.269	0.25	2.079	111.21	300.59	301.319	64.622	49.54	65.142	74.403	1860.456	1830.769	2365.046	2329.637
20160418:02:47:18	23.673	12.214	-2.276	23.84	0.25	2.288	0.25	2.099	113.793	300.663	301.292	64.574	49.513	65.089	74.353	1861.85	1832.156	2366.785	2331.368
20160418:02:52:18	23.672	12.281	-2.271	23.839	0.25	2.275	0.25	2.085	113.985	300.654	301.281	64.498	49.466	65.05	74.301	1863.198	1833.478	2368.465	2333.019
20160418:02:57:18	23.677	12.282	-2.158	23.836	0.25	2.261	0.25	2.075	113.997	300.614	301.279	64.454	49.449	65.023	74.249	1864.598	1834.856	2370.211	2334.739
20160418:03:02:18	23.679	12.29	-2.122	23.835	0.25	2.272	0.25	2.08	114.022	300.615	301.244	64.422	49.427	64.992	74.197	1865.941	1836.173	2371.885	2336.382
20160418:03:07:18	23.668	12.305	-2.264	23.834	0.25	2.277	0.25	2.067	114.049	300.674	301.316	64.385	49.389	64.946	74.147	1867.337	1837.549	2373.626	2338.1
20160418:03:12:18	23.666	12.318	-2.285	23.834	0.25	2.292	0.25	2.084	114.085	300.634	301.261	64.352	49.387	64.905	74.1	1868.678	1838.867	2375.298	2339.744
20160418:03:17:18	23.672	12.327	-2.18	23.833	0.25	2.287	0.25	2.079	114.12	300.712	301.312	64.323	49.37	64.862	74.053	1870.052	1840.257	2377.011	2341.479
20160418:03:22:18	23.667	12.318	-2.323	23.837	0.25	2.309	0.25	2.089	114.085	300.668	301.31	64.286	49.376	64.792	74.007	1871.436	1841.568	2378.735	2343.115
20160418:03:27:18	23.661	12.251	-2.379	23.836	0.25	2.26	0.25	2.092	113.885	300.597	301.217	64.192	49.363	64.746	73.963	1872.769	1842.953	2380.396	2344.842
20160418:03:32:18	23.656	12.2	-2.447	23.836	0.25	2.264	0.25	2.073	113.71	300.637	301.279	64.162	49.375	64.725	73.918	1874.164	1844.267	2382.135	2346.481
20160418:03:37:18	23.66	12.08	-2.422	23.838	0.25	2.265	0.25	2.07	113.383	300.614	301.252	64.122	49.369	64.686	73.874	1875.509	1845.646	2383.811	2348.201
20160418:03:42:18	23.663	11.096	-2.376	23.838	0.25	2.25	0.25	2.061	110.426	300.519	301.21	64.084	49.347	64.647	73.832	1876.907	1846.96	2385.552	2349.84
20160418:03:47:18	23.66	10.993	-2.392	23.836	0.25	2.235	0.25	2.043	110.097	300.527	301.236	64.057	49.359	64.625	73.788	1878.24	1848.336	2387.213	2351.556
20160418:03:52:18	23.66	11.831	-2.418	23.837	0.25	2.242	0.25	2.065	112.657	300.539	301.177	64.014	49.347	64.584	73.746	1879.639	1849.652	2388.956	2353.197
20160418:03:57:18	23.663	11.941	-2.375	23.838	0.25	2.257	0.25	2.063	112.987	300.659	301.294	63.984	49.353	64.534	73.705	1880.965	1851.025	2390.607	2354.91
20160418:04:02:18	23.669	11.949	-2.283	23.837	0.25	2.266	0.25	2.065	113.02	300.626	301.243	63.961	49.353	64.498	73.663	1882.354	1852.341	2392.237	2356.551
20160418:04:07:18	23.671	11.933	-2.277	23.839	0.25	2.251	0.25	2.083	112.977	300.575	301.199	63.876	49.335	64.441	73.623	1883.704	1853.712	2394.019	2358.259
20160418:04:12:18	23.67	11.934	-2.258	23.836	0.25	2.253	0.25	2.098	112.977	300.558	301.188	63.882	49.349	64.44	73.586	1885.055	1855.034	2395.702	2359.908
20160418:04:17:18	23.668	11.926	-2.297	23.837	0.25	2.247	0.25	2.069	112.95	300.516	301.164	63.828	49.333	64.397	73.55	1886.443	1856.408	2397.43	2361.62
20160418:04:22:18	23.669	11.928	-2.275	23.836	0.25	2.251	0.25	2.062	112.958	300.589	301.223	63.825	49.349	64.386	73.515	1887.768	1857.723	2399.08	2363.259
20160418:04:27:18	23.665	11.921	-2.314	23.835	0.25	2.267	0.25	2.076	112.931	300.545	301.176	63.785	49.326	64.346	73.482	1889.155	1859.092	2400.807	2364.966
20160418:04:32:18	23.669	11.926	-2.267	23.836	0.25	2.268	0.25	2.066	112.953	300.616	301.223	63.79	49.337	64.355	73.453	1890.497	1860.417	2402.478	2366.618
20160418:04:37:18	23.663	11.926	-2.354	23.836	0.25	2.248	0.25	2.07	112.943	300.562	301.22	63.766	49.326	64.322	73.425	1891.89	1861.762	2404.213	2368.295
20160418:04:42:18	23.664	11.95	-2.36	23.838	0.25	2.249	0.25	2.069	113.015	300.601	301.253	63.764	49.321	64.319	73.397	1893.224	1863.115	2405.874	2369.981
20160418:04:47:18	23.657	12.038	-2.483	23.839	0.25	2.26	0.25	2.082	113.263	300.649	301.256	63.753	49.323	64.304	73.374	1894.635	1864.436	2407.63	2371.628
20160418:04:52:18	23.66	12.064	-2.403	23.837	0.25	2.251	0.25	2.079	113.342	300.6	301.222	63.7	49.288	64.231	73.353	1895.963	1865.813	2409.283	2373.344
20160418:04:57:18	23.661	12.154	-2.384	23.836	0.25	2.263	0.25	2.094	113.606	300.578	301.207	63.7	49.31	64.236	73.333	1897.351	1867.127	2411.011	2374.981
20160418:05:02:18	23.661	12.2	-2.391	23.837	0.25	2.264	0.25	2.111	113.739	300.561	301.187	63.68	49.329	64.218	73.313	1898.686	1868.498	2412.674	2376.69
20160418:05:07:18	23.662	12.211	-2.348	23.835	0.25	2.267	0.25	2.076	113.77	300.522	301.148	63.597	49.293	64.146	73.29	1900.061	1869.807	2414.385	2378.321
20160418:05:12:18	23.668	12.307	-2.278	23.835	0.25	2.259	0.25	2.089	114.054	300.576	301.202	63.59	49.333	64.136	73.268	1901.431	1871.189	2416.091	2380.043
20160418:05:17:18	23.668	12.125	-2.277	23.836	0.25	2.263	0.25	2.082	113.522	300.562	301.205	63.578	49.332	64.135	73.245	1902.772	1872.497	2417.759	2381.673
20160418:05:22:18	23.668	11.377	-2.309	23.838	0.25	2.251	0.25	2.082	111.301	300.532	301.23	63.539	49.297	64.088	73.223	1904.154	1873.872	2419.48	2383.385
20160418:05:27:18	23.677	11.245	-2.169	23.837	0.25	2.242	0.25	2.063	110.908	300.501	301.235	63.532	49.297	64.074	73.202	1905.494	1875.184	2421.148	2385.021
20160418:05:32:18	23.673	11.438	-2.238	23.837	0.249	2.7	0.25	2.065	111.485	300.481	301.262	63.534	49.321	64.075	73.181	1906.887	1876.556	2422.881	2386.729
20160418:05:37:18	23.666	12.14	-2.312	23.836	0.25	3.155	0.25	2.077	113.57	300.532	301.226	63.51	49.299	64.045	73.161	1908.228	1877.865	2424.55	2388.361
20160418:05:42:18	23.66	12.252	-2.374	23.835	0.25	3.091	0.25	2.072	113.886	300.511	301.197	63.493	49.296	64.031	73.14	1909.628	1879.241	2426.293	2390.075
20160418:05:47:18	23.669	12.32	-2.274	23.837	0.25	2.752	0.25	2.097	114.094	300.524	301.185	63.493	49.328	64.03	73.121	1910.964	1880.563	2427.956	2391.722
20160418:05:52:18	23.665	12.346	-2.354	23.838	0.25	2.439	0.25	2.093	114.163	300.51	301.185	63.475	49.315	64.021	73.103	1912.368	1881.932	2429.702	2393.427
20160418:05:57:18	23.664	12.409	-2.373	23.838	0.25	2.371	0.25	2.098	114.34	300.471	301.134	63.417	49.293	63.97	73.086	1913.698	1883.255	2431.357	2395.075
20160418:06:02:18	23.662	12.418	-2.419	23.84	0.25	2.33	0.25	2.093	114.364	300.532	301.188	63.404	49.305	63.96	73.068	1915.082	1884.63	2433.08	2396.788
20160418:06:07:18	23.661	12.401	-2.465	23.842	0.25	2.313	0.25	2.101	114.313	300.545	301.221	63.397	49.333	63.955	73.045	1916.448	1885.952	2434.778	2398.434
20160418:06:12:18	23.667	12.37	-2.381	23.842	0.25	2.309	0.25	2.083	114.233	300.57	301.215	63.313	49.287	63.874	73.024	1917.791	1887.312	2436.448	2400.128
20160418:06:17:18	23.663	12.377	-2.506	23.847	0.25	2.323	0.25	2.099	114.247	300.555	301.191	63.281	49.299	63.841	73.003	1919.176	1888.653	2438.17	2401.797
20160418:06:22:18	23.659	12.385	-2.536	23.846	0.25	2.326	0.25	2.11	114.265	300.543	301.164	63.279	49.322	63.838	72.982	1920.514	1889.988	2439.835	2403.459
20160418:06:27:18	23.663	12.375	-2.497	23.846	0.25	2.318	0.25	2.102	114.242	300.499	301.148	63.248	49.317	63.805	72.958	1921.91	1891.356	2441.57	2405.162
20160418:06:32:18	23.662	12.377	-2.49	23.845	0.25	2.32	0.25	2.112	114.246	300.521	301.158	63.219	49.291	63.778	72.933	1923.247	1892.673	2443.233	2406.801
20160418:06:37:18	23.667	12.382	-2.44	23.846	0.25	2.335	0.25	2.11	114.267	300.542	301.205	63.209	49.325	63.768	72.907	1924.644	1894.06	2444.97	2408.526
20160418:06:42:18	23.672	12.379	-2.41	23.849	0.25	2.313	0.25	2.106	114.267	300.56	301.207	63.154	49.28	63.714	72.878	1925.973	1895.375	2446.622	2410.164
20160418:06:47:18	23.671	12.4	-2.434	23.85	0.25	2.324	0.25	2.12	114.325	300.586	301.212	63.144	49.323	63.71	72.85	1927.371	1896.749	2448.359	2411.872
20160418:06:52:18	23.676	12.394	-2.398	23.852	0.25	2.319	0.25	2.093	114.314	300.56	301.163	63.105	49.268	63.641	72.822	1928.706	1898.063	2450.019	2413.508
20160418:06:57:18	23.678	12.408	-2.368	23.852	0.25	2.32	0.25	2.093	114.358	300.539	301.136	63.076	49.316	63.585	72.795	1930.101	1899.444	2451.752	2415.226
20160418:07:02:18	23.683	12.415	-2.318	23.853	0.25	2.316	0.25	2.105	114.384	300.574	301.204	63.053	49.287	63.57	72.766	1931.451	1900.757	2453.43	2416.859
20160418:07:07:18	23.687	12.408	-2.247	23.853	0.25	2.33	0.25	2.117	114.374	300.555	301.192	62.964	49.295	63.524	72.732	1932.815	1902.136	2455.124	2418.573
20160418:07:12:18	23.684	12.418	-2.324	23.855	0.25	2.335	0.25	2.126	114.397	300.584	301.213	62.944	49.257	63.508	72.697	1934.197	1903.452	2456.841	2420.211
20160418:07:17:18	23.688	12.418	-2.264	23.854	0.25	2.332	0.25	2.115	114.4	300.579	301.228	62.901	49.269	63.468	72.662	1935.532	1904.828	2458.5	2421.921
20160418:07:22:18	23.69	12.434	-2.258	23.856	0.25	2.327	0.25	2.105	114.45	300.527	301.2	62.887	49.241	63.455	72.629	1936.921	1906.139	2460.224	2423.551
20160418:07:27:18	23.696	12.443	-2.194	23.857	0.25	2.331	0.25	2.113	114.485	300.497	301.121	62.857	49.237	63.415	72.596	1938.263	1907.518	2461.891	2425.265
20160418:07:32:18	23.703	12.457	-2.101	23.857	0.249	3.455	0.25	2.104	114.535	300.458	301.1	62.861	49.241	63.409	72.564	1939.652	1908.842	2463.617	2426.912
20160418:07:37:18	23.708	12.464	-2.046	23.859	0.251	3.291	0.25	2.104	114.561	300.44	301.106	62.825	49.171	63.374	72.53	1940.996	1910.214	2465.285	2428.617
20160418:07:42:18	23.712	11.877	-2.002	23.859	0.25	2.799	0.25	2.074	112.863	300.531	301.215	62.821	49.223	63.369	72.495	1942.399	1911.534	2467.028	2430.258
20160418:07:47:18	23.715	11.675	-1.966	23.859	0.25	2.491	0.25	2.078	112.275	300.476	301.2	62.784	49.158	63.297	72.464	1943.733	1912.907	2468.683	2431.964
20160418:07:52:18	23.719	11.514	-1.881	23.858	0.25	2.433	0.25	2.07	111.797	300.521	301.238	62.81	49.223	63.337	72.435	1945.127	1914.236	2470.415	2433.617
20160418:07:57:18	23.722	12.188	-1.938	23.864	0.25	2.405	0.25	2.085	113.782	300.409	301.138	62.787	49.153	63.301	72.41	1946.459	1915.589	2472.069	2435.297
20160418:08:02:18	23.725	12.501	-1.88	23.863	0.25	2.409	0.25	2.076	114.69	300.482	301.127	62.778	49.173	63.294	72.386	1947.845	1916.941	2473.789	2436.977
20160418:08:07:18	23.727	12.574	-1.83	23.862	0.25	2.412	0.25	2.082	114.902	300.561	301.18	62.812	49.194	63.347	72.365	1949.207	1918.267	2475.48	2438.626
20160418:08:12:18	23.73	12.622	-1.814	23.864	0.25	2.413	0.25	2.092	115.041	300.578	301.181	62.796	49.127	63.317	72.347	1950.555	1919.645	2477.154	2440.338
20160418:08:17:18	23.732	12.656	-1.753	23.861	0.25	2.405	0.25	2.107	115.136	300.59	301.178	62.803	49.147	63.309	72.334	1951.948	1920.964	2478.883	2441.977
20160418:08:22:18	23.735	12.661	-1.673	23.858	0.25	2.419	0.25	2.089	115.156	300.524	301.156	62.83	49.131	63.366	72.325	1953.277	1922.339	2480.533	2443.686
20160418:08:27:18	23.741	12.663	-1.609	23.859	0.25	2.403	0.25	2.099	115.171	300.531	301.165	62.85	49.154	63.39	72.322	1954.662	1923.648	2482.254	2445.314
20160418:08:32:18	23.747	12.665	-1.553	23.861	0.25	2.412	0.25	2.115	115.185	300.484	301.123	62.884	49.15	63.416	72.321	1956.006	1925.029	2483.922	2447.03
20160418:08:37:18	23.746	12.742	-1.574	23.862	0.25

Time:	Stack Pressure:	Sat% H2O:	Static:	Barometric:	Flowmeter1:	Vacuum1:	Flowmeter2:	Vacuum2:	Stack Temp:	Sorbent Temp:	Probe Temp:	DGM#1 Temp:	Condenser Temp:	DGM#2 Temp:	DAQ Temp:	DGM1*:	DGM2*:	DGM1:	DGM2:
20160418:12:27:19	23.76	12.502	-1.063	23.839	0.25	2.4	0.25	2.103	114.748	300.617	301.299	64.939	49.585	65.408	74.211	2020.026	1988.107	2563.626	2525.633
20160418:12:32:19	23.763	12.514	-0.978	23.835	0.25	2.4	0.25	2.092	114.784	300.624	301.265	64.941	49.576	65.421	74.239	2021.355	1989.434	2565.283	2527.291
20160418:12:37:19	23.762	12.548	-0.984	23.835	0.25	2.407	0.25	2.102	114.879	300.705	301.306	64.992	49.632	65.52	74.266	2022.74	1990.8	2567.013	2528.998
20160418:12:42:19	23.769	12.543	-0.874	23.834	0.25	2.395	0.25	2.098	114.877	300.597	301.263	64.992	49.63	65.521	74.293	2024.087	1992.111	2568.694	2530.635
20160418:12:47:19	23.77	12.565	-0.911	23.837	0.25	2.402	0.25	2.101	114.937	300.649	301.297	65.021	49.65	65.553	74.318	2025.481	1993.493	2570.433	2532.363
20160418:12:52:19	23.765	12.533	-0.975	23.837	0.25	2.408	0.25	2.114	114.838	300.692	301.324	65.057	49.679	65.581	74.344	2026.817	1994.802	2572.102	2533.998
20160418:12:57:19	23.768	11.46	-0.905	23.835	0.25	2.393	0.25	2.095	111.704	300.564	301.241	65.071	49.692	65.596	74.37	2028.212	1996.171	2573.843	2535.709
20160418:13:02:19	23.771	11.928	-0.902	23.837	0.25	2.383	0.25	2.092	113.085	300.564	301.281	65.127	49.746	65.667	74.399	2029.538	1997.481	2575.498	2537.346
20160418:13:07:19	23.777	12.539	-0.807	23.836	0.25	2.394	0.25	2.11	114.875	300.605	301.25	65.133	49.752	65.679	74.429	2030.926	1998.86	2577.231	2539.07
20160418:13:12:19	23.769	12.603	-0.913	23.837	0.25	2.402	0.25	2.104	115.044	300.689	301.337	65.227	49.797	65.729	74.463	2032.282	2000.167	2578.924	2540.703
20160418:13:17:19	23.763	12.633	-0.922	23.83	0.25	2.402	0.25	2.093	115.118	300.668	301.302	65.261	49.801	65.746	74.499	2033.633	2001.543	2580.611	2542.423
20160418:13:22:19	23.755	12.66	-1.004	23.829	0.25	2.401	0.25	2.091	115.182	300.686	301.305	65.318	49.891	65.843	74.538	2035.011	2002.854	2582.333	2544.062
20160418:13:27:19	23.751	12.672	-1.036	23.827	0.25	2.397	0.25	2.11	115.211	300.593	301.242	65.341	49.925	65.874	74.576	2036.347	2004.229	2584.002	2545.782
20160418:13:32:19	23.754	12.675	-1.007	23.828	0.25	2.389	0.25	2.121	115.223	300.665	301.293	65.39	49.86	65.916	74.614	2037.749	2005.544	2585.754	2547.427
20160418:13:37:19	23.751	12.66	-1.067	23.829	0.25	2.393	0.25	2.081	115.178	300.699	301.371	65.44	49.877	65.943	74.65	2039.087	2006.921	2587.426	2549.148
20160418:13:42:19	23.755	12.74	-1.061	23.833	0.25	2.394	0.25	2.088	115.404	300.668	301.332	65.508	49.847	65.974	74.689	2040.489	2008.227	2589.178	2550.782
20160418:13:47:19	23.748	12.822	-1.118	23.83	0.25	2.419	0.25	2.112	115.622	300.673	301.28	65.544	49.732	66.009	74.727	2041.824	2009.602	2590.846	2552.502
20160418:13:52:19	23.738	12.813	-1.192	23.825	0.25	2.403	0.25	2.091	115.582	300.629	301.205	65.573	49.812	66.037	74.766	2043.208	2010.92	2592.576	2554.15
20160418:13:57:19	23.742	12.794	-1.149	23.826	0.25	2.399	0.25	2.101	115.535	300.669	301.279	65.622	49.883	66.116	74.804	2044.548	2012.284	2594.252	2555.857
20160418:14:02:19	23.737	12.771	-1.198	23.825	0.25	2.399	0.25	2.095	115.466	300.642	301.191	65.638	49.692	66.161	74.843	2045.908	2013.604	2595.952	2557.509
20160418:14:07:19	23.74	12.762	-1.174	23.827	0.25	2.401	0.25	2.112	115.446	300.619	301.161	65.691	49.794	66.241	74.883	2047.298	2014.974	2597.689	2559.224
20160418:14:12:19	23.737	12.746	-1.175	23.824	0.25	2.406	0.25	2.101	115.396	300.675	301.199	65.734	49.86	66.272	74.925	2048.627	2016.292	2599.352	2560.874
20160418:14:17:19	23.74	12.734	-1.094	23.821	0.25	2.398	0.25	2.102	115.368	300.578	301.182	65.811	49.708	66.307	74.968	2050.016	2017.669	2601.089	2562.598
20160418:14:22:19	23.744	12.72	-1.063	23.822	0.25	2.402	0.25	2.108	115.333	300.541	301.149	65.899	49.801	66.381	75.013	2051.353	2018.981	2602.761	2564.241
20160418:14:27:19	23.74	12.695	-1.127	23.823	0.25	2.397	0.25	2.089	115.258	300.552	301.191	65.936	49.849	66.453	75.06	2052.747	2020.348	2604.506	2565.953
20160418:14:32:19	23.731	12.674	-1.204	23.82	0.25	2.386	0.25	2.104	115.187	300.494	301.132	65.969	49.711	66.516	75.103	2054.076	2021.672	2606.169	2567.611
20160418:14:37:19	23.734	12.664	-1.185	23.821	0.25	2.388	0.25	2.099	115.162	300.485	301.096	66.019	49.832	66.565	75.141	2055.464	2023.031	2607.906	2569.314
20160418:14:42:19	23.732	12.645	-1.192	23.82	0.25	2.391	0.25	2.1	115.108	300.544	301.186	66.094	49.784	66.604	75.191	2056.798	2024.362	2609.574	2570.981
20160418:14:47:19	23.726	12.646	-1.24	23.817	0.25	2.393	0.25	2.095	115.101	300.517	301.155	66.2	49.73	66.654	75.245	2058.17	2025.706	2611.293	2572.665
20160418:14:52:19	23.73	12.628	-1.149	23.814	0.25	2.397	0.25	2.095	115.057	300.578	301.199	66.252	49.882	66.729	75.302	2059.546	2027.052	2613.015	2574.352
20160418:14:57:19	23.727	12.618	-1.166	23.813	0.25	2.395	0.25	2.102	115.024	300.543	301.199	66.321	49.761	66.837	75.364	2060.872	2028.376	2614.676	2576.011
20160418:15:02:19	23.727	12.607	-1.157	23.813	0.25	2.39	0.25	2.106	114.994	300.508	301.197	66.406	49.763	66.893	75.422	2062.26	2029.743	2616.415	2577.726
20160418:15:07:19	23.726	11.574	-1.145	23.81	0.25	2.382	0.25	2.064	111.978	300.525	301.22	66.487	49.853	66.948	75.483	2063.601	2031.05	2618.094	2579.365
20160418:15:12:19	23.726	11.417	-1.133	23.81	0.25	2.364	0.25	2.06	111.508	300.483	301.177	66.552	49.736	67.004	75.546	2064.991	2032.43	2619.837	2581.096
20160418:15:17:19	23.725	11.228	-1.143	23.809	0.25	2.357	0.25	2.06	110.927	300.472	301.145	66.606	49.825	67.083	75.612	2066.322	2033.738	2621.506	2582.737
20160418:15:22:19	23.722	12.182	-1.144	23.806	0.25	2.375	0.25	2.078	113.767	300.496	301.166	66.667	49.791	67.16	75.679	2067.721	2035.116	2623.259	2584.466
20160418:15:27:19	23.725	12.412	-1.106	23.806	0.25	2.388	0.25	2.102	114.439	300.599	301.178	66.741	49.749	67.218	75.744	2069.052	2036.424	2624.928	2586.107
20160418:15:32:19	23.724	12.456	-1.081	23.804	0.25	2.392	0.25	2.088	114.562	300.591	301.18	66.801	49.839	67.267	75.81	2070.421	2037.796	2626.644	2587.829
20160418:15:37:19	23.724	12.514	-1.029	23.799	0.25	2.386	0.25	2.094	114.725	300.64	301.241	66.844	49.718	67.311	75.876	2071.8	2039.103	2628.374	2589.47
20160418:15:42:19	23.709	12.596	-1.192	23.797	0.25	2.391	0.25	2.101	114.935	300.648	301.256	66.89	49.805	67.346	75.942	2073.131	2040.477	2630.044	2591.195
20160418:15:47:19	23.71	12.643	-1.141	23.794	0.25	2.402	0.25	2.081	115.068	300.602	301.204	66.939	49.757	67.409	76.004	2074.522	2041.785	2631.791	2592.838
20160418:15:52:19	23.707	12.65	-1.125	23.789	0.25	2.394	0.25	2.085	115.084	300.587	301.197	66.982	49.747	67.494	76.066	2075.862	2043.168	2633.472	2594.577
20160418:15:57:19	23.707	12.648	-1.165	23.793	0.25	2.392	0.25	2.102	115.079	300.603	301.232	67.005	49.806	67.534	76.124	2077.267	2044.473	2635.235	2596.216
20160418:16:02:19	23.697	12.715	-1.268	23.79	0.25	2.399	0.25	2.095	115.251	300.6	301.22	67.054	49.721	67.58	76.177	2078.593	2045.852	2636.9	2597.949
20160418:16:07:19	23.702	12.763	-1.22	23.792	0.25	2.418	0.25	2.104	115.39	300.625	301.216	67.126	49.831	67.618	76.229	2079.978	2047.163	2638.639	2599.596
20160418:16:12:19	23.702	12.783	-1.193	23.789	0.25	2.401	0.25	2.091	115.446	300.555	301.188	67.182	49.716	67.682	76.285	2081.342	2048.546	2640.352	2601.335
20160418:16:17:19	23.7	11.803	-1.216	23.789	0.25	2.381	0.25	2.089	112.627	300.529	301.218	67.22	49.818	67.747	76.337	2082.681	2049.851	2642.033	2602.976
20160418:16:22:19	23.702	11.679	-1.22	23.792	0.25	2.374	0.25	2.063	112.267	300.491	301.22	67.26	49.755	67.806	76.388	2084.065	2051.23	2643.772	2604.709
20160418:16:27:19	23.702	11.542	-1.219	23.792	0.25	2.356	0.25	2.058	111.854	300.397	301.189	67.316	49.809	67.862	76.442	2085.413	2052.538	2645.465	2606.353
20160418:16:32:19	23.699	12.442	-1.292	23.794	0.25	2.366	0.25	2.071	114.481	300.444	301.197	67.37	49.794	67.904	76.491	2086.809	2053.912	2647.219	2608.081
20160418:16:37:19	23.703	12.646	-1.26	23.796	0.25	2.412	0.25	2.094	115.067	300.487	301.176	67.465	49.797	67.972	76.545	2088.147	2055.223	2648.898	2609.729
20160418:16:42:19	23.704	12.772	-1.279	23.798	0.249	3.336	0.25	2.104	115.417	300.511	301.149	67.543	49.839	68.052	76.6	2089.529	2056.601	2650.635	2611.462
20160418:16:47:19	23.703	12.743	-1.274	23.797	0.25	3.266	0.25	2.099	115.337	300.602	301.185	67.596	49.759	68.112	76.657	2090.878	2057.912	2652.33	2613.111
20160418:16:52:19	23.702	12.696	-1.294	23.797	0.25	2.68	0.25	2.085	115.205	300.537	301.18	67.661	49.878	68.17	76.718	2092.234	2059.289	2654.033	2614.842
20160418:16:57:19	23.697	12.796	-1.334	23.795	0.25	2.684	0.25	2.089	115.473	300.517	301.162	67.762	49.773	68.221	76.778	2093.61	2060.599	2655.763	2616.491
20160418:17:02:19	23.693	12.879	-1.367	23.794	0.25	3.288	0.25	2.08	115.698	300.588	301.208	67.827	49.876	68.309	76.845	2094.949	2061.971	2657.446	2618.216
20160418:17:07:19	23.698	12.885	-1.295	23.793	0.25	3.204	0.25	2.077	115.72	300.559	301.183	67.884	49.792	68.384	76.909	2096.344	2063.281	2659.2	2619.865
20160418:17:12:19	23.699	12.904	-1.3	23.795	0.25	3.02	0.25	2.1	115.775	300.545	301.162	67.958	49.871	68.445	76.973	2097.679	2064.653	2660.878	2621.592
20160418:17:17:19	23.702	12.888	-1.271	23.796	0.25	2.688	0.25	2.098	115.736	300.6	301.214	68.033	49.835	68.491	77.036	2099.075	2065.965	2662.633	2623.242
20160418:17:22:19	23.7	12.913	-1.311	23.797	0.25	2.558	0.25	2.106	115.803	300.59	301.218	68.096	49.851	68.541	77.101	2100.398	2067.336	2664.298	2624.968
20160418:17:27:19	23.694	12.919	-1.397	23.797	0.25	2.52	0.25	2.095	115.81	300.52	301.185	68.15	49.873	68.622	77.166	2101.768	2068.648	2666.02	2626.62
20160418:17:32:19	23.694	12.915	-1.417	23.798	0.25	2.505	0.25	2.102	115.798	300.537	301.201	68.2	49.848	68.694	77.237	2103.143	2070.019	2667.75	2628.346
20160418:17:37:19	23.695	12.901	-1.435	23.801	0.25	2.504	0.25	2.106	115.761	300.631	301.244	68.246	49.907	68.738	77.3	2104.471	2071.331	2669.42	2629.998
20160418:17:42:19	23.697	12.89	-1.437	23.802	0.25	2.503	0.25	2.089	115.734	300.591	301.187	68.315	49.83	68.789	77.365	2105.863	2072.701	2671.17	2631.722
20160418:17:47:19	23.699	12.883	-1.357	23.799	0.25	2.501	0.25	2.084	115.717	300.564	301.202	68.399	49.933	68.835	77.428	2107.198	2074.011	2672.85	2633.372
20160418:17:52:19	23.699	12.858	-1.357	23.799	0.25	2.498	0.25	2.092	115.649	300.592	301.21	68.452	49.837	68.891	77.492	2108.599	2075.382	2674.613	2635.098
20160418:17:57:19	23.697	12.835	-1.385	23.799	0.25	2.495	0.25	2.098	115.584	300.627	301.284	68.491	49.933	68.94	77.55	2109.922	2076.69	2676.278	2636.746
20160418:18:02:19	23.694	12.833	-1.448	23.8	0.25	2.492	0.25	2.087	115.571	300.61	301.242	68.524	49.817	69.009	77.612	2111.304	2078.062	2678.017	2638.474
20160418:18:07:19	23.694	12.867	-1.437	23.8	0.25	2.498	0.25	2.094	115.668	300.597	301.235	68.554	49.928	69.052	77.673	2112.665	2079.371	2679.73	2640.122
20160418:18:12:19	23.695	12.966	-1.429	23.8	0.25	2.502	0.25	2.094	115.94	300.643	301.26	68.648	49.861	69.099	77.731	2114.004	2080.743	2681.415	2641.852
20160418:18:17:19	23.694	13.005	-1.451	23.801	0.25	2.491	0.25	2.102	116.045	300.673	301.268	68.68	49.933	69.125	77.785	2115.389	2082.052	2683.159	2643.5
20160418:18:22:19	23.695	13	-1.455	23.802	0.25	2.498	0.25	2.097	116.032	300.594	301.209	68.689	49.86	69.143	77.836	2116.731	2083.423	2684.848	2645.227
20160418:18:27:19	23.695	12.976	-1.419	23.8	0.25	2.51	0.25	2.1	115.968	300.647	301.266	68.717	49.915	69.17	77.888	2118.132	2084.732	2686.611	2646.876
20160418:18:32:19	23.693	13.022	-1.48	23.802	0.25	2.512	0.25	2.099	116.09	300.598	301.174	68.764	49.889	69.216	77.936	2119.467	2086.106	2688.293	2648.607
20160418:18:37:19	23.694	13.016	-1.513	23.805	0.25	2.496	0.25	2.094	116.075	300.642	301.218	68.789	49.927	69.288	77.988	2120.846	2087.414	2690.028	2650.256
20160418:18:42:19	23.695	13.016	-1.495	23.805	0.25	2.501	0.25	2.104	116.078	300.671	301.258	68.799	49.902	69.306	78.034	2122.202	2088.788	2691.735	2651.987
20160418:18:47:19	23.692	13.026	-1.536	23.805	0.25	2.506	0.25	2.101	116.098	300.672	301.305	68.831	49.918	69.35	78.076	2123.542	2090.095	2693.422	2653.633
20160418:18:52:19	23.693	12.996	-1.52	23.805	0.25	2.513	0.25	2.107	116.018	300.621	301.273	68.856	49.911	69.368	78.114	2124.93	2091.469	2695.169	2655.365
20160418:18:57:19	23.69	12.974	-1.592	23.807	0.25	2.507	0.25	2.107	115.953	300.607	301.267	68.882	49.909	69.389	78.154	2126.273	2092.778	2696.859	2657.015
20160418:19:02:19	23.692	12.872	-1.58	23.808	0.25	2.5	0.25	2.11	115.669	300.607	301.254	68.97	49.94	69.435	78.192	2127.667	2094.152	2698.615	2658.746
20160418:19:07:19	23.691	12.082	-1.601	23.809	0.25	2.487	0.25	2.088	113.44	300.53	301.175	68.966	49.9	69.441	78.229	2129.004	2095.463	2700.298	2660.398
20160418:19:12:19	23.692	11.899	-1.578	23.808	0.25	2.483	0.25	2.071	112.906	300.505	301.226	69.015	49.948	69.487	78.267	2130.388	2096.833	2702.041	2662.124
20160418:19:17:19	23.686	12.333	-1.667	23.809	0.25	2.474	0.25	2.086	114.142	300.471	301.197	69.008	49.897	69.489	78.3	2131.741	2098.147	2703.744	2663.78
20160418:19:22:19	23.683	12.862	-1.726	23.81	0.25	2.488	0.25	2.095	115.637	300.586	301.299	69.052	49.975	69.531	78.332	2133.083	2099.517	2705.433	2665.508
20160418:19:27:19	23.681	12.893	-1.782	23.812	0.25	2.504	0.25	2.116	115.718	300.657	301.281	69.052	49.897	69.526	78.363	2134.464	2100.832	2707.172	2667.164
20160418:19:32:19	23.681	12.93	-1.783	23.812	0.25	2.506	0.25	2.099	115.819	300.739	301.326	69.1	49.988	69.576	78.393	2135.808	2102.201	2708.865	2668.889
20160418:19:37:19	23.679	12.952	-1.808	23.812	0.25	2.505	0.25	2.1	115.878	300.744	301.336	69.099	49.909	69.566	78.424	2137.201	2103.516	2710.619	2670.547
20160418:19:42:19	23.675	13.014	-1.888	23.814	0.25	2.508	0.25	2.107	116.04	300.653	301.255	69.12	50.001	69.633	78.456	2138.538	2104.884	2712.302	2672.271
20160418:19:47:19	23.67	13.014	-2.033	23.82	0.25	2.515	0.25	2.118	116.033	300.682	301.281	69.114	49.933	69.664	78.484	2139.922	2106.201	2714.044	2673.93
20160418:19:52:19	23.67	13.023	-2.006	23.817	0.25	2.532	0.25	2.101	116.058	300.656	301.261	69.107	49.978	69.638	78.507	2141.275	2107.569	2715.748	2675.654
20160418:19:57:19	23.668	13.041	-2.047	23.818	0.25	2.658	0.25	2.107	116.104	300.671	301.275	69.155	49.948	69.678	78.53	2142.618	2108.886	2717.439	2677.314
20160418:20:02:19	23.669	13.084	-2.054	23.82	0.25	2.602	0.25	2.102	116.224	300.746	301.358	69.136	49.994	69.669	78.549	2144.003	2110.259	2719.181	2679.043
20160418:20:07:19	23.666	13.109	-2.105	23.821	0.25	2.55	0.25	2.103	116.285	300.721	301.383	69.112	49.923	69.656	78.565	2145.35	2111.573	2720.878	2680.699
20160418:20:12:19	23.663	12.585	-2.191	23.824	0.25	2.518	0.25	2.102	114.826	300.67	301.306	69.106	49.961	69.62	78.579	2146.754	2112.946	2722.644	2682.429
20160418:20:17:19	23.66	12.269	-2.247	23.825	0.25	2.499	0.25	2.103	113.934	300.649	301.29	69.134	49.961	69.639	78.589	2148.092	2114.26	2724.328	2684.085
20160418:20:22:19	23.661	12.213	-2.214	23.823	0.25	2.49	0.25	2.097	113.774	300.621	301.324	69.131	49.995	69.665	78.596	2149.475	2115.633	2726.069	2685.814
20160418:20:27:19	23.661	12.975	-2.25	23.827	0.25	2.505	0.25	2.104	115.913	300.662	301.339	69.116	49.992	69.658	78.599	2150.835	2116.948	2727.78	2687.47
20160418:20:32:19	23.663	13.013	-2.222	23.826	0.25	2.512	0.25	2.115	116.02	300.676	301.318	69.108	49.976	69.639	78.6	2152.175	2118.322	2729.467	2689.201
20160418:20:37:19	23.661	12.982	-2.267	23.827	0.25	2.51	0.25	2.113	115.933	300.647	301.296	69.106	50.01	69.619	78.6	2153.562	2119.635	2731.211	2690.855
20160418:20:42:19	23.66	12.963	-2.314	23.83	0.25	2.517	0.25	2.104	115.879	300.696	301.333	69.097	49.967	69.592	78.598	2154.904	2121.01	2732.9	2692.586
20160418:20:47:19	23.657	12.977	-2.392	23.833	0.25	2.514	0.25	2.111	115.912	300.727	301.368	69.082	50.031	69.566	78.594	2156.307	2122.322	2734.665	2694.239
20160418:20:52:19	23.655	12.946	-2.412	23.832	0.25	2.518	0.25	2.102	115.823	300.649	301.326	69.046	49.94	69.536	78.587	2157.639	2123.697	2736.341	2695.97
20160418:20:57:19	23.653	12.919	-2.413	23.831	0.25	2.528	0.25	2.114	115.748	300.633	301.278	69.013	49.998	69.506	78.581	2159.023	2125.009	2738.081	2697.622
20160418:21:02:19	23.655	12.908	-2.389	23.83	0.25	2.519	0.25	2.091	115.721	300.663	301.315	69.011	49.946	69.507	78.575	2160.383	2126.384	2739.793	2699.353
20160418:21:07:19	23.654	12.99	-2.421	23.832	0.25	2.514	0.25	2.114	115.942	300.667	301.284	69.001	50.006	69.503	78.569	2161.721	2127.697	2741.476	2701.006
20160418:21:12:19	23.651	13.02	-2.445	23.831	0.25	2.518	0.25	2.116	116.022	300.682	301.289	68.998	49.953	69.501	78.562	2163.113	2129.071	2743.226	2702.737
20160418:21:17:19	23.648	12.833	-2.486	23.831	0.25	2.529	0.25	2.136	115.498	300.725	301.333	68.995	50.008	69.499	78.554	2164.46	2130.385	2744.92	2704.391
20160418:21:22:19	23.652	12.12	-2.44	23.831	0.248	4.643	0.25	2.133	113.492	300.66	301.379	68.995	49.995	69.5	78.546	2165.849	2131.762	2746.669	2706.124
20160418:21:27:19	23.648	11.946	-2.497	23.832	0.251	3.482	0.25	2.068	112.977	300.584	301.39	68.995	50.012	69.5	78.537	2167.195	2133.074	2748.361	2707.776
20160418:21:32:19	23.647	12.332	-2.535	23.833	0.25	3.061	0.25	2.067	114.082	300.604	301.361	68.993	50.06	69.497	78.528	2168.581	2134.451	2750.104	2709.509
20160418:21:37:19	23.645	12.798	-2.543	23.832	0.25	3.001	0.25	2.089	115.401	300.687	301.348	68.952	49.989	69.477	78.52	2169.947	2135.762	2751.822	2711.16
20160418:21:42:19	23.646	12.809	-2.517	23.831	0.25	2.974	0.25	2.1	115.434	300.743	301.318	68.92	50.034	69.457	78.514	2171.281	2137.138	2753.5	2712.893
20160418:21:47:19	23.643	12.813	-2.52	23.829	0.25	2.966	0.25	2.099	115.441	300.79	301.378	68.906	49.958	69.46	78.508	2172.665	2138.449	2755.241	2714.543
20160418:21:52:19	23.642	12.81	-2.52	23.827	0.25	2.946	0.25	2.111	115.431	300.734	301.339	68.89	50.035	69.45	78.504	2174.008	2139.827	2756.93	2716.278
20160418:21:57:19	23.64	12.81	-2.512	23.824	0.25	2.912	0.25	2.105	115.429	300.722	301.326	68.883	49.991	69.444	78.499	2175.411	2141.139	2758.694	2717.93
20160418:22:02:19	23.634	12.809	-2.611	23.826	0.25	2.943	0.25	2.105	115.417	300.72	301.301	68.881	50.028	69.439	78.497	2176.743	2142.514	2760.37	2719.662
20160418:22:07:19	23.639	12.804	-2.563	23.828	0.25	2.931	0.25	2.111	115.411	300.734	301.411	68.865	50.017	69.429	78.487	2178.13	2143.824	2762.115	2721.312
20160418:22:12:19	23.636	12.815	-2.594	23.826	0.25	2.939	0.25	2.102	115.436	300.754	301.309	68.838	50.014	69.4	78.475	2179.49	2145.201	2763.826	2723.045
20160418:22:17:19	23.639	12.826	-2.517	23.824	0.25	2.935	0.25	2.111	115.473	300.795	301.429	68.825	50.088	69.384	78.459	2180.832	2146.512	2765.513	2724.695
20160418:22:22:19	23.639	12.805	-2.534	23.825	0.25

Time:	Stack Pressure:	Sat% H2O:	Static:	Barometric:	Flowmeter1:	Vacuum1:	Flowmeter2:	Vacuum2:	Stack Temp:	Sorbent Temp:	Probe Temp:	DGM#1 Temp:	Condenser Temp:	DGM#2 Temp:	DAQ Temp:	DGM1*:	DGM2*:	DGM1:	DGM2:
20160419:02:12:19	23.615	12.391	-2.561	23.803	0.25	3.005	0.25	2.098	114.217	300.668	301.274	67.141	49.99	67.654	76.877	2245.058	2209.786	2846.181	2804.252
20160419:02:17:19	23.613	12.415	-2.546	23.801	0.25	3.027	0.25	2.097	114.282	300.682	301.27	67.132	50.046	67.654	76.841	2246.387	2211.092	2847.85	2805.893
20160419:02:22:19	23.616	12.358	-2.518	23.801	0.25	3.011	0.25	2.093	114.124	300.628	301.233	67.036	50.052	67.603	76.808	2247.763	2212.464	2849.576	2807.617
20160419:02:27:19	23.618	12.32	-2.466	23.799	0.25	2.99	0.25	2.074	114.018	300.65	301.255	67.037	50.042	67.609	76.773	2249.134	2213.781	2851.296	2809.271
20160419:02:32:19	23.607	12.293	-2.594	23.798	0.25	2.979	0.25	2.08	113.924	300.581	301.204	66.998	50.036	67.575	76.744	2250.462	2215.142	2852.963	2810.981
20160419:02:37:19	23.61	11.773	-2.524	23.796	0.25	2.988	0.25	2.088	112.385	300.653	301.257	67.012	50.094	67.575	76.715	2251.845	2216.462	2854.698	2812.639
20160419:02:42:19	23.607	11.089	-2.539	23.794	0.25	2.966	0.25	2.082	110.323	300.611	301.257	66.991	50.029	67.546	76.688	2253.184	2217.824	2856.38	2814.35
20160419:02:47:19	23.607	10.896	-2.508	23.792	0.25	2.955	0.25	2.057	109.714	300.602	301.318	66.973	50.038	67.526	76.658	2254.574	2219.145	2858.124	2816.009
20160419:02:52:19	23.609	11.667	-2.496	23.792	0.25	2.964	0.25	2.076	112.077	300.676	301.341	66.967	50.116	67.525	76.634	2255.905	2220.513	2859.794	2817.729
20160419:02:57:19	23.609	11.973	-2.468	23.791	0.25	2.977	0.25	2.086	113	300.677	301.3	66.909	50.056	67.45	76.608	2257.296	2221.829	2861.541	2819.382
20160419:03:02:19	23.606	11.989	-2.549	23.794	0.25	2.992	0.25	2.077	113.044	300.698	301.304	66.899	50.056	67.445	76.584	2258.628	2223.202	2863.211	2821.107
20160419:03:07:19	23.613	11.982	-2.452	23.793	0.251	2.998	0.25	2.071	113.031	300.691	301.282	66.882	50.114	67.418	76.56	2260	2224.513	2864.933	2822.754
20160419:03:12:19	23.612	11.958	-2.425	23.791	0.25	2.99	0.25	2.08	112.961	300.658	301.248	66.833	50.03	67.343	76.534	2261.386	2225.882	2866.672	2824.474
20160419:03:17:19	23.617	11.936	-2.34	23.789	0.25	2.987	0.25	2.087	112.903	300.674	301.311	66.834	50.044	67.343	76.509	2262.715	2227.198	2868.341	2826.126
20160419:03:22:19	23.619	11.9	-2.36	23.793	0.25	3.005	0.25	2.083	112.803	300.639	301.264	66.782	50.072	67.306	76.482	2264.104	2228.563	2870.083	2827.84
20160419:03:27:19	23.607	11.873	-2.516	23.792	0.25	2.982	0.25	2.082	112.704	300.65	301.288	66.756	50.025	67.293	76.458	2265.442	2229.886	2871.761	2829.502
20160419:03:32:19	23.603	11.868	-2.543	23.79	0.25	2.983	0.25	2.089	112.683	300.717	301.346	66.754	50.041	67.294	76.435	2266.839	2231.245	2873.515	2831.209
20160419:03:37:19	23.601	11.851	-2.518	23.786	0.25	3.007	0.25	2.072	112.629	300.635	301.287	66.677	50.061	67.24	76.408	2268.166	2232.572	2875.18	2832.876
20160419:03:42:19	23.605	11.462	-2.449	23.785	0.25	2.996	0.25	2.074	111.447	300.603	301.256	66.658	50.023	67.23	76.381	2269.552	2233.925	2876.919	2834.575
20160419:03:47:19	23.609	10.675	-2.406	23.786	0.25	2.959	0.25	2.06	109.008	300.599	301.265	66.633	50	67.204	76.355	2270.91	2235.261	2878.622	2836.254
20160419:03:52:19	23.601	10.526	-2.495	23.785	0.25	2.921	0.25	2.052	108.511	300.569	301.234	66.589	50.024	67.16	76.326	2272.25	2236.608	2880.304	2837.945
20160419:03:57:19	23.596	11.278	-2.56	23.784	0.25	2.916	0.25	2.063	110.869	300.625	301.322	66.587	50.108	67.15	76.298	2273.63	2237.952	2882.035	2839.633
20160419:04:02:19	23.598	11.751	-2.524	23.784	0.25	2.951	0.25	2.071	112.331	300.674	301.305	66.535	50.059	67.047	76.266	2274.972	2239.289	2883.719	2841.312
20160419:04:07:19	23.596	11.776	-2.495	23.78	0.25	2.949	0.25	2.073	112.401	300.667	301.308	66.528	50.059	67.034	76.234	2276.368	2240.638	2885.47	2843.006
20160419:04:12:19	23.592	11.764	-2.56	23.78	0.25	2.945	0.25	2.092	112.359	300.673	301.266	66.474	50.051	66.975	76.2	2277.701	2241.973	2887.143	2844.682
20160419:04:17:19	23.593	11.755	-2.539	23.78	0.25	2.953	0.25	2.091	112.334	300.662	301.263	66.465	50.055	66.967	76.169	2279.102	2243.329	2888.9	2846.385
20160419:04:22:19	23.591	11.738	-2.546	23.778	0.25	2.951	0.25	2.094	112.279	300.574	301.22	66.359	50.031	66.912	76.132	2280.434	2244.655	2890.57	2848.051
20160419:04:27:19	23.589	11.754	-2.553	23.777	0.25	2.956	0.25	2.077	112.324	300.609	301.252	66.347	50.095	66.905	76.094	2281.807	2246.02	2892.293	2849.765
20160419:04:32:19	23.591	11.766	-2.507	23.776	0.25	2.967	0.25	2.08	112.364	300.561	301.245	66.29	50.047	66.855	76.055	2283.187	2247.341	2894.024	2851.423
20160419:04:37:19	23.594	11.812	-2.462	23.775	0.25	2.978	0.25	2.096	112.505	300.674	301.213	66.261	50.065	66.827	76.014	2284.514	2248.709	2895.689	2853.141
20160419:04:42:19	23.588	11.805	-2.544	23.775	0.25	2.946	0.25	2.085	112.475	300.612	301.238	66.233	50.071	66.793	75.976	2285.898	2250.016	2897.424	2854.782
20160419:04:47:19	23.588	11.58	-2.571	23.777	0.25	2.941	0.25	2.089	111.788	300.634	301.158	66.192	50.084	66.725	75.938	2287.236	2251.396	2899.102	2856.515
20160419:04:52:19	23.592	10.84	-2.543	23.779	0.25	2.932	0.25	2.062	109.512	300.543	301.225	66.183	50.101	66.695	75.902	2288.634	2252.705	2900.856	2858.158
20160419:04:57:19	23.592	10.737	-2.577	23.781	0.25	2.928	0.25	2.07	109.181	300.474	301.172	66.102	50.072	66.653	75.866	2289.971	2254.088	2902.531	2859.893
20160419:05:02:19	23.582	11.331	-2.716	23.782	0.25	2.94	0.25	2.07	111.017	300.513	301.229	66.08	50.075	66.639	75.831	2291.357	2255.4	2904.269	2861.539
20160419:05:07:19	23.583	11.805	-2.708	23.783	0.25	2.956	0.25	2.101	112.466	300.702	301.277	66.033	50.073	66.594	75.796	2292.709	2256.778	2905.963	2863.269
20160419:05:12:19	23.583	11.851	-2.743	23.785	0.25	2.96	0.25	2.108	112.603	300.72	301.259	66.023	50.108	66.585	75.762	2294.064	2258.097	2907.661	2864.923
20160419:05:17:19	23.583	11.868	-2.764	23.786	0.25	2.951	0.25	2.111	112.654	300.64	301.234	65.974	50.074	66.539	75.727	2295.441	2259.472	2909.387	2866.648
20160419:05:22:19	23.586	11.893	-2.717	23.786	0.25	2.956	0.25	2.115	112.731	300.655	301.225	65.971	50.125	66.545	75.694	2296.778	2260.784	2911.063	2868.293
20160419:05:27:19	23.583	11.91	-2.771	23.787	0.25	2.961	0.25	2.099	112.778	300.627	301.168	65.937	50.077	66.506	75.663	2298.18	2262.158	2912.819	2870.017
20160419:05:32:19	23.6	11.974	-2.543	23.787	0.249	3.198	0.25	2.115	112.989	300.634	301.203	65.946	50.099	66.507	75.633	2299.514	2263.471	2914.491	2871.664
20160419:05:37:19	23.608	12.022	-2.467	23.789	0.25	3.712	0.25	2.11	113.143	300.632	301.233	65.93	50.09	66.475	75.601	2300.917	2264.844	2916.248	2873.385
20160419:05:42:19	23.609	12.098	-2.475	23.791	0.25	3.632	0.25	2.114	113.366	300.655	301.214	65.911	50.057	66.456	75.574	2302.245	2266.158	2917.911	2875.034
20160419:05:47:19	23.609	12.244	-2.48	23.792	0.25	3.646	0.25	2.102	113.787	300.667	301.231	65.909	50.095	66.459	75.547	2303.634	2267.539	2919.652	2876.765
20160419:05:52:19	23.616	12.363	-2.422	23.794	0.25	3.717	0.25	2.111	114.137	300.611	301.169	65.857	50.035	66.362	75.523	2305.009	2268.845	2921.374	2878.402
20160419:05:57:19	23.621	12.505	-2.348	23.793	0.25	3.636	0.25	2.126	114.548	300.66	301.302	65.848	50.048	66.355	75.498	2306.345	2270.226	2923.046	2880.133
20160419:06:02:19	23.626	12.596	-2.254	23.792	0.25	3.431	0.25	2.121	114.812	300.666	301.269	65.811	50.038	66.339	75.475	2307.741	2271.535	2924.794	2881.774
20160419:06:07:19	23.631	12.674	-2.199	23.793	0.249	3.951	0.25	2.134	115.037	300.571	301.207	65.727	50.002	66.292	75.451	2309.084	2272.918	2926.476	2883.508
20160419:06:12:19	23.633	12.786	-2.173	23.792	0.25	3.823	0.25	2.121	115.351	300.575	301.2	65.722	50.024	66.289	75.426	2310.49	2274.231	2928.237	2885.154
20160419:06:17:19	23.633	12.856	-2.194	23.794	0.25	3.426	0.25	2.109	115.545	300.641	301.226	65.701	50.014	66.262	75.402	2311.83	2275.612	2929.915	2886.885
20160419:06:22:19	23.641	12.85	-2.155	23.799	0.25	3.183	0.25	2.125	115.54	300.672	301.274	65.669	49.998	66.233	75.379	2313.215	2276.927	2931.648	2888.532
20160419:06:27:19	23.646	12.846	-2.073	23.798	0.25	3.11	0.25	2.135	115.536	300.663	301.308	65.672	50.004	66.237	75.354	2314.569	2278.305	2933.343	2890.259
20160419:06:32:19	23.647	12.845	-1.992	23.794	0.25	3.064	0.25	2.147	115.536	300.64	301.322	65.628	49.972	66.184	75.325	2315.924	2279.622	2935.039	2891.91
20160419:06:37:19	23.645	12.881	-2.075	23.797	0.25	3.058	0.25	2.122	115.63	300.728	301.35	65.623	49.974	66.172	75.3	2317.307	2281.004	2936.77	2893.641
20160419:06:42:19	23.644	12.876	-2.056	23.795	0.25	3.063	0.25	2.115	115.616	300.699	301.348	65.621	49.989	66.165	75.275	2318.652	2282.318	2938.454	2895.288
20160419:06:47:19	23.646	12.92	-2.095	23.8	0.25	3.061	0.25	2.124	115.739	300.618	301.296	65.58	49.951	66.087	75.251	2320.052	2283.697	2940.206	2897.015
20160419:06:52:19	23.646	12.918	-2.085	23.799	0.25	3.06	0.25	2.119	115.735	300.694	301.304	65.577	49.957	66.081	75.228	2321.385	2285.01	2941.874	2898.66
20160419:06:57:19	23.645	12.865	-2.114	23.8	0.25	3.077	0.25	2.122	115.587	300.683	301.314	65.569	49.954	66.073	75.206	2322.787	2286.386	2943.628	2900.383
20160419:07:02:19	23.646	12.812	-2.072	23.799	0.25	3.057	0.25	2.122	115.444	300.629	301.261	65.539	49.917	66.032	75.186	2324.114	2287.704	2945.289	2902.034
20160419:07:07:19	23.649	12.792	-1.998	23.796	0.25	3.056	0.25	2.114	115.392	300.618	301.279	65.554	49.919	66.032	75.167	2325.498	2289.08	2947.02	2903.758
20160419:07:12:19	23.652	12.799	-1.965	23.796	0.25	3.067	0.25	2.11	115.415	300.665	301.321	65.568	49.935	66.041	75.148	2326.869	2290.394	2948.737	2905.404
20160419:07:17:19	23.649	12.79	-1.975	23.794	0.25	3.061	0.25	2.115	115.385	300.654	301.286	65.565	49.93	66.047	75.134	2328.207	2291.77	2950.411	2907.128
20160419:07:22:19	23.65	12.765	-1.957	23.794	0.25	3.047	0.25	2.114	115.319	300.626	301.273	65.524	49.896	66.012	75.119	2329.599	2293.083	2952.154	2908.773
20160419:07:27:19	23.65	12.748	-1.928	23.792	0.25	3.043	0.25	2.115	115.272	300.624	301.266	65.522	49.893	66.015	75.106	2330.944	2294.461	2953.837	2910.498
20160419:07:32:19	23.652	12.731	-1.92	23.793	0.25	3.06	0.25	2.114	115.226	300.628	301.309	65.525	49.898	66.019	75.107	2332.342	2295.775	2955.587	2912.145
20160419:07:37:19	23.654	12.721	-1.848	23.79	0.25	3.046	0.25	2.115	115.203	300.655	301.307	65.532	49.906	66.022	75.098	2333.677	2297.152	2957.257	2913.87
20160419:07:42:19	23.656	12.719	-1.798	23.789	0.25	3.038	0.25	2.116	115.201	300.678	301.243	65.542	49.922	66.02	75.088	2335.071	2298.468	2959.004	2915.519
20160419:07:47:19	23.656	12.727	-1.811	23.789	0.25	3.043	0.25	2.118	115.22	300.692	301.296	65.545	49.939	66.023	75.079	2336.409	2299.842	2960.678	2917.241
20160419:07:52:19	23.656	12.733	-1.797	23.788	0.25	3.041	0.25	2.121	115.239	300.701	301.316	65.549	49.939	66.018	75.069	2337.777	2301.165	2962.391	2918.898
20160419:07:57:19	23.658	12.724	-1.731	23.785	0.25	3.032	0.25	2.11	115.216	300.662	301.25	65.516	49.91	65.99	75.061	2339.157	2302.527	2964.119	2920.605
20160419:08:02:19	23.661	12.725	-1.648	23.782	0.25	3.042	0.25	2.104	115.224	300.656	301.231	65.507	49.89	65.972	75.052	2340.492	2303.85	2965.791	2922.263
20160419:08:07:19	23.67	12.725	-1.564	23.785	0.25	3.045	0.25	2.112	115.236	300.616	301.21	65.508	49.886	65.974	75.046	2341.884	2305.216	2967.533	2923.976
20160419:08:12:19	23.672	12.721	-1.5	23.782	0.25	3.05	0.25	2.122	115.229	300.635	301.302	65.508	49.886	65.973	75.039	2343.223	2306.538	2969.209	2925.632
20160419:08:17:19	23.67	12.73	-1.468	23.778	0.25	3.067	0.25	2.113	115.251	300.637	301.215	65.508	49.886	65.976	75.035	2344.625	2307.913	2970.965	2927.355
20160419:08:22:19	23.672	12.724	-1.452	23.779	0.25	3.082	0.25	2.126	115.239	300.75	301.37	65.502	49.889	65.979	75.029	2345.961	2309.228	2972.639	2929.004
20160419:08:27:19	23.677	12.72	-1.353	23.777	0.25	3.041	0.25	2.103	115.234	300.732	301.379	65.508	49.889	65.981	75.024	2347.347	2310.606	2974.374	2930.731
20160419:08:32:19	23.686	12.705	-1.206	23.775	0.25	3.045	0.25	2.103	115.206	300.712	301.377	65.507	49.885	65.983	75.02	2348.701	2311.922	2976.07	2932.382
20160419:08:37:19	23.693	12.678	-1.082	23.772	0.25	3.033	0.25	2.101	115.141	300.732	301.374	65.506	49.885	65.984	75.015	2350.049	2313.299	2977.759	2934.107
20160419:08:42:19	23.697	12.672	-1.006	23.771	0.25	3.044	0.25	2.108	115.131	300.728	301.406	65.51	49.885	65.987	75.009	2351.431	2314.615	2979.491	2935.758
04/19/2016:08:42:19	Sampling	complete	6 Days	0 Hrs	0 Minutes	sampled													

C:Drive Code:0
Compact Flash Code:0

Hg-324K-1099								
HgK_324 Data	huntington2	4/19/2016	9:59:07					
DGM1 ID	DGM2 ID	Trap1 ID	Trap2 ID					
3605445	3605446	20099	285623					
Time:	Leak 1	Status	Leak 2	Status	Vacuum1	Vacuum2	DGM 1	DGM 2
Day:hh:mm	ccpermin	P-F	ccpermin	P-F	in-Hg	in-Hg	liter	liter
04/19/2016:09:59:21	710.611	Fail	1206.267	Fail	14.703	2.866	0.106	0.353
04/19/2016:09:59:36	381.481	Fail	1447.368	Fail	15.601	6.442	0.191	0.724
04/19/2016:09:59:51	337.037	Fail	1161.654	Fail	16.344	9.017	0.274	0.934
04/19/2016:10:00:06	270.37	Fail	808.271	Fail	16.918	10.989	0.326	1.128
04/19/2016:10:00:21	166.667	Fail	770.677	Fail	17.375	12.515	0.357	1.32
04/19/2016:10:00:36	107.407	Fail	657.895	Fail	17.734	13.722	0.38	1.457
04/19/2016:10:00:51	92.593	Fail	436.09	Fail	18.02	14.672	0.404	1.538
04/19/2016:10:01:06	103.704	Fail	285.714	Fail	18.243	15.417	0.431	1.6
04/19/2016:10:01:21	77.778	Fail	270.677	Fail	18.42	16.09	0.443	1.673
04/19/2016:10:01:36	70.37	Fail	274.436	Fail	18.556	16.663	0.467	1.737
04/19/2016:10:01:51	88.889	Fail	233.083	Fail	18.67	17.146	0.487	1.789
04/19/2016:10:02:06	66.667	Fail	221.805	Fail	18.761	17.545	0.5	1.848
04/19/2016:10:02:21	48.148	Fail	233.083	Fail	18.829	17.868	0.511	1.906
04/19/2016:10:02:36	40.741	Fail	195.489	Fail	18.886	18.124	0.52	1.945
04/19/2016:10:02:51	33.333	Fail	105.263	Fail	18.923	18.321	0.528	1.959
04/19/2016:10:03:06	22.222	Fail	63.91	Fail	18.957	18.491	0.531	1.977
04/19/2016:10:03:21	14.815	Fail	82.707	Fail	18.977	18.634	0.535	2
04/19/2016:10:03:36	22.222	Fail	86.466	Fail	19	18.774	0.543	2.021
04/19/2016:10:03:51	22.222	Fail	82.707	Fail	19.017	18.892	0.546	2.041
04/19/2016:10:04:06	18.519	Fail	63.91	Fail	19.029	18.999	0.552	2.053
04/19/2016:10:04:21	18.519	Fail	45.113	Fail	19.034	19.082	0.556	2.064
04/19/2016:10:04:36	18.519	Fail	45.113	Fail	19.037	19.148	0.561	2.075
04/19/2016:10:04:51	18.519	Fail	37.594	Fail	19.043	19.209	0.565	2.083
04/19/2016:10:05:06	14.815	Fail	30.075	Fail	19.045	19.26	0.569	2.09
04/19/2016:10:05:21	18.519	Fail	26.316	Fail	19.054	19.296	0.574	2.096
04/19/2016:10:05:36	18.519	Fail	22.556	Fail	19.055	19.331	0.578	2.102
04/19/2016:10:05:51	18.519	Fail	15.038	Fail	19.059	19.347	0.583	2.103
04/19/2016:10:06:06	18.519	Fail	11.278	Fail	19.063	19.366	0.587	2.107
04/19/2016:10:06:21	18.519	Fail	11.278	Fail	19.063	19.368	0.593	2.109
04/19/2016:10:06:36	22.222	Fail	7.519	Pass	19.07	19.385	0.598	2.111
04/19/2016:10:06:51	14.815	Fail	7.519	Pass	19.073	19.391	0.6	2.113
04/19/2016:10:07:06	3.704	Pass	3.759	Pass	19.073	19.397	0.6	2.113

Hg-324K-1099								
HgK_324 Data	huntington2	4/19/2016	11:04:51					
DGM1 ID	DGM2 ID	Trap1 ID	Trap2 ID					
3605445	3605446	20077	285673					
Time:	Leak 1	Status	Leak 2	Status	Vacuum1	Vacuum2	DGM 1	DGM 2
Day:hh:mm	ccpermin	P-F	ccpermin	P-F	in-Hg	in-Hg	liter	liter
04/19/2016:11:05:06	1236.537	Fail	1356.643	Fail	2.437	2.423	0.369	0.429
04/19/2016:11:05:21	1462.963	Fail	1563.91	Fail	5.891	6.045	0.731	0.782
04/19/2016:11:05:36	1177.778	Fail	1281.955	Fail	8.447	8.695	0.957	1.07
04/19/2016:11:05:51	862.963	Fail	906.015	Fail	10.414	10.698	1.163	1.235
04/19/2016:11:06:06	814.815	Fail	687.97	Fail	11.985	12.3	1.365	1.414
04/19/2016:11:06:21	696.296	Fail	661.654	Fail	13.251	13.548	1.511	1.566
04/19/2016:11:06:36	429.63	Fail	552.632	Fail	14.243	14.509	1.58	1.69
04/19/2016:11:06:51	296.296	Fail	387.218	Fail	15.044	15.279	1.659	1.759
04/19/2016:11:07:06	344.444	Fail	236.842	Fail	15.802	15.932	1.752	1.808
04/19/2016:11:07:21	322.222	Fail	218.045	Fail	16.429	16.517	1.82	1.868
04/19/2016:11:07:36	303.704	Fail	236.842	Fail	16.931	17.005	1.904	1.927
04/19/2016:11:07:51	300	Fail	214.286	Fail	17.333	17.409	1.97	1.976
04/19/2016:11:08:06	185.185	Fail	203.008	Fail	17.655	17.747	1.996	2.028
04/19/2016:11:08:21	133.333	Fail	135.338	Fail	17.908	18.015	2.037	2.043
04/19/2016:11:08:36	137.037	Fail	116.541	Fail	18.115	18.231	2.065	2.086
04/19/2016:11:08:51	111.111	Fail	157.895	Fail	18.278	18.402	2.093	2.122
04/19/2016:11:09:06	100	Fail	127.82	Fail	18.41	18.536	2.115	2.15
04/19/2016:11:09:21	92.593	Fail	105.263	Fail	18.517	18.651	2.139	2.175
04/19/2016:11:09:36	59.259	Fail	86.466	Fail	18.603	18.752	2.144	2.194
04/19/2016:11:09:51	44.444	Fail	56.391	Fail	18.685	18.849	2.161	2.203
04/19/2016:11:10:06	59.259	Fail	22.556	Fail	18.742	18.928	2.174	2.205
04/19/2016:11:10:21	44.444	Fail	33.835	Fail	18.795	18.999	2.183	2.22
04/19/2016:11:10:36	37.037	Fail	56.391	Fail	18.834	19.056	2.193	2.233
04/19/2016:11:10:51	29.63	Fail	45.113	Fail	18.865	19.108	2.198	2.242
04/19/2016:11:11:06	22.222	Fail	37.594	Fail	18.898	19.151	2.204	2.252
04/19/2016:11:11:21	18.519	Fail	37.594	Fail	18.92	19.184	2.207	2.261
04/19/2016:11:11:36	14.815	Fail	37.594	Fail	18.94	19.216	2.211	2.271
04/19/2016:11:11:51	14.815	Fail	33.835	Fail	18.955	19.234	2.215	2.278
04/19/2016:11:12:06	14.815	Fail	26.316	Fail	18.973	19.253	2.219	2.284
04/19/2016:11:12:21	14.815	Fail	18.797	Fail	18.984	19.267	2.222	2.288
04/19/2016:11:12:36	11.111	Fail	15.038	Fail	18.985	19.277	2.224	2.291
04/19/2016:11:12:51	11.111	Fail	15.038	Fail	18.998	19.287	2.228	2.295
04/19/2016:11:13:06	11.111	Fail	18.797	Fail	18.997	19.29	2.23	2.301
04/19/2016:11:13:21	7.407	Pass	18.797	Fail	18.995	19.299	2.231	2.305
04/19/2016:11:13:36	11.111	Fail	18.797	Fail	18.99	19.299	2.235	2.31
04/19/2016:11:13:51	11.111	Fail	18.797	Fail	18.989	19.304	2.237	2.314
04/19/2016:11:14:06	7.407	Pass	18.797	Fail	18.988	19.306	2.239	2.32
04/19/2016:11:14:21	7.407	Pass	18.797	Fail	18.987	19.305	2.241	2.323
04/19/2016:11:14:36	7.407	Pass	15.038	Fail	18.983	19.307	2.243	2.327
04/19/2016:11:14:51	14.815	Fail	15.038	Fail	18.992	19.308	2.248	2.331
04/19/2016:11:15:06	14.815	Fail	15.038	Fail	18.993	19.308	2.25	2.335
04/19/2016:11:15:21	11.111	Fail	18.797	Fail	18.993	19.307	2.254	2.34
04/19/2016:11:15:36	14.815	Fail	22.556	Fail	18.992	19.309	2.257	2.346
04/19/2016:11:15:51	14.815	Fail	22.556	Fail	18.991	19.308	2.261	2.352
04/19/2016:11:16:06	18.519	Fail	22.556	Fail	19.008	19.309	2.267	2.357
04/19/2016:11:16:21	18.519	Fail	22.556	Fail	19.011	19.308	2.27	2.363
04/19/2016:11:16:36	14.815	Fail	18.797	Fail	19.016	19.307	2.274	2.367
04/19/2016:11:16:51	18.519	Fail	7.519	Pass	19.022	19.307	2.28	2.367
04/19/2016:11:17:06	22.222	Fail	0	Pass	19.015	19.303	2.285	2.367
04/19/2016:11:17:21	22.222	Fail	3.759	Pass	19.01	19.305	2.291	2.368
04/19/2016:11:17:36	22.222	Fail	15.038	Fail	19.005	19.304	2.296	2.374
04/19/2016:11:17:51	22.222	Fail	22.556	Fail	18.995	19.301	2.302	2.38
04/19/2016:11:18:06	14.815	Fail	26.316	Fail	18.989	19.302	2.304	2.387
04/19/2016:11:18:21	3.704	Pass	26.316	Fail	18.981	19.3	2.304	2.393
04/19/2016:11:18:36	3.704	Pass	22.556	Fail	18.974	19.3	2.306	2.398
04/19/2016:11:18:51	14.815	Fail	26.316	Fail	18.967	19.297	2.311	2.406
04/19/2016:11:19:06	51.852	Fail	52.632	Fail	18.961	19.299	2.331	2.425
04/19/2016:11:19:21	55.556	Fail	45.113	Fail	18.961	19.299	2.339	2.429
04/19/2016:11:19:36	25.926	Fail	18.797	Fail	18.97	19.302	2.344	2.434
04/19/2016:11:19:51	29.63	Fail	18.797	Fail	18.972	19.306	2.354	2.438
04/19/2016:11:20:06	25.926	Fail	7.519	Pass	18.974	19.309	2.357	2.438
04/19/2016:11:20:21	18.519	Fail	0	Pass	18.987	19.315	2.363	2.438
04/19/2016:11:20:36	18.519	Fail	0	Pass	18.999	19.317	2.367	2.438
04/19/2016:11:20:51	18.519	Fail	0	Pass	19.026	19.327	2.372	2.438
04/19/2016:11:21:06	22.222	Fail	3.759	Pass	19.046	19.331	2.378	2.44
04/19/2016:11:21:21	18.519	Fail	3.759	Pass	19.057	19.336	2.381	2.44
04/19/2016:11:21:36	14.815	Fail	3.759	Pass	19.063	19.343	2.385	2.442
04/19/2016:11:21:51	11.111	Fail	7.519	Pass	19.061	19.348	2.387	2.444
04/19/2016:11:22:06	11.111	Fail	3.759	Pass	19.063	19.353	2.391	2.444
04/19/2016:11:22:21	14.815	Fail	3.759	Pass	19.064	19.351	2.394	2.445
04/19/2016:11:22:36	11.111	Fail	7.519	Pass	19.07	19.358	2.396	2.447
04/19/2016:11:22:51	7.407	Pass	3.759	Pass	19.082	19.358	2.398	2.447

Time: day:hh:mm:ss	Stack Pressure: in-Hg	Sat% H2O: Percent	Static: in-H2O	Barometric: in-Hg	Flowmeter1: l/min	Vacuum1: in-Hg	Flowmeter2: l/min	Vacuum2: in-Hg	Stack Temp: degF	Sorbent Temp: degF	Probe Temp: degF	DGM#1 Temp: degF	Condenser Temp: degF	DGM#2 Temp: degF	DAQ Temp: degF	DGM1*: liters STP	DGM2*: liters STP	DGM1: liters nominal	DGM2: liters nominal
20160419:11:48:50	23.641	12.87	17:49:55	23.586	0.238	1.699	0.24	1.504	115.605	296.193	291.43	67.918	52.991	68.397	74.729	1.25	1.213	1.585	1.539
20160419:11:53:50	23.652	12.812	0.74	23.597	0.25	2.145	0.25	1.908	115.452	300.371	300.845	68.095	52.973	68.546	74.973	2.525	2.507	3.202	3.182
20160419:11:58:50	23.652	12.101	-0.442	23.685	0.25	2.323	0.25	2.071	113.437	300.967	301.679	68.206	53.199	68.698	75.217	3.854	3.773	4.881	4.784
20160419:12:03:50	23.713	11.963	-0.13	23.722	0.25	2.383	0.25	2.116	113.123	301.022	301.594	68.365	53.299	68.822	75.489	5.151	5.083	6.519	6.438
20160419:12:08:50	23.737	12.162	0.222	23.72	0.25	2.384	0.25	2.104	113.731	300.834	301.497	68.475	53.31	68.967	75.763	6.485	6.401	8.204	8.103
20160419:12:13:50	23.744	12.788	0.331	23.72	0.25	2.362	0.25	2.06	115.523	300.744	301.452	68.572	53.294	69.08	76.03	7.795	7.675	9.857	9.714
20160419:12:18:50	23.744	12.84	0.323	23.72	0.25	2.287	0.25	2.034	115.667	300.724	301.438	68.68	53.238	69.155	76.285	9.134	9.027	11.548	11.423
20160419:12:23:50	23.745	12.87	0.353	23.719	0.25	2.241	0.25	2.015	115.75	300.659	301.348	68.735	53.203	69.229	76.525	10.45	10.311	13.211	13.047
20160419:12:28:50	23.758	12.878	0.559	23.717	0.25	2.227	0.25	2.02	115.793	300.682	301.385	68.783	53.088	69.312	76.749	11.816	11.676	14.937	14.773
20160419:12:33:50	23.756	12.889	0.582	23.713	0.25	2.23	0.25	2.008	115.819	300.621	301.368	68.814	53.019	69.358	76.955	13.15	12.983	16.622	16.427
20160419:12:38:50	23.756	12.914	0.333	23.731	0.25	2.249	0.25	2.042	115.889	300.609	301.326	68.85	52.967	69.397	77.142	14.544	14.354	18.383	18.16
20160419:12:43:50	23.754	12.945	0.087	23.748	0.25	2.26	0.25	2.058	115.972	300.598	301.293	68.889	52.934	69.434	77.316	15.877	15.666	20.065	19.818
20160419:12:48:50	23.753	12.967	0.075	23.747	0.25	2.259	0.25	2.055	116.028	300.544	301.268	68.938	52.886	69.466	77.47	17.264	17.04	21.819	21.553
20160419:12:53:50	23.754	12.978	0.09	23.748	0.25	2.28	0.25	2.064	116.061	300.566	301.277	68.974	52.832	69.486	77.611	18.609	18.35	23.513	23.209
20160419:12:58:50	23.759	12.79	0.174	23.747	0.25	2.268	0.25	2.048	115.543	300.547	301.243	69.01	52.748	69.514	77.74	19.967	19.731	25.228	24.953
20160419:13:03:50	23.763	12.204	0.271	23.743	0.25	2.272	0.25	2.044	113.9	300.497	301.254	69.021	52.696	69.534	77.854	21.353	21.038	26.978	26.605
20160419:13:08:50	23.763	12.3	0.362	23.736	0.249	2.257	0.25	2.048	114.177	300.499	301.248	69.055	52.665	69.577	77.963	22.692	22.416	28.669	28.348
20160419:13:13:50	23.738	12.818	-0.016	23.739	0.25	2.256	0.25	2.057	115.588	300.494	301.278	69.065	52.615	69.605	78.062	24.089	23.725	30.433	30.002
20160419:13:18:50	23.733	13.137	-0.043	23.736	0.25	2.262	0.25	2.042	116.461	300.589	301.277	69.088	52.567	69.644	78.148	25.425	25.1	32.12	31.741
20160419:13:23:50	23.719	13.142	-0.126	23.728	0.25	2.267	0.25	2.05	116.454	300.62	301.329	69.114	52.502	69.682	78.227	26.805	26.415	33.865	33.404
20160419:13:28:50	23.721	13.194	-0.13	23.73	0.25	2.266	0.25	2.063	116.599	300.599	301.25	69.133	52.454	69.714	78.302	28.171	27.788	35.591	35.141
20160419:13:33:50	23.725	13.162	-0.108	23.733	0.25	2.274	0.25	2.051	116.517	300.604	301.244	69.18	52.429	69.744	78.37	29.505	29.105	37.276	36.806
20160419:13:38:50	23.728	13.216	-0.025	23.73	0.25	2.289	0.25	2.049	116.668	300.58	301.232	69.215	52.408	69.79	78.441	30.901	30.476	39.041	38.541
20160419:13:43:50	23.725	13.211	-0.066	23.73	0.25	2.271	0.25	2.048	116.649	300.638	301.279	69.257	52.384	69.827	78.507	32.239	31.782	40.731	40.194
20160419:13:48:50	23.728	13.196	-0.074	23.733	0.25	2.287	0.25	2.068	116.613	300.639	301.299	69.343	52.359	69.867	78.571	33.64	33.158	42.502	41.934
20160419:13:53:50	23.734	13.239	-0.029	23.737	0.25	2.293	0.25	2.068	116.739	300.61	301.241	69.385	52.328	69.943	78.628	34.973	34.462	44.187	43.585
20160419:13:58:50	23.739	13.272	0.079	23.733	0.25	2.275	0.25	2.079	116.833	300.616	301.254	69.428	52.334	69.991	78.688	36.336	35.841	45.909	45.329
20160419:14:03:50	23.736	12.845	0.056	23.732	0.25	2.274	0.25	2.062	115.66	300.615	301.316	69.467	52.31	70.031	78.744	37.711	37.151	47.648	46.987
20160419:14:08:50	23.736	12.484	0.061	23.731	0.25	2.251	0.25	2.055	114.66	300.538	301.254	69.506	52.311	70.07	78.802	39.054	38.52	49.346	48.72
20160419:14:13:50	23.737	12.395	0.084	23.731	0.25	2.244	0.25	2.046	114.409	300.419	301.199	69.56	52.292	70.115	78.859	40.456	39.845	51.119	50.397
20160419:14:18:50	23.736	13.064	0.185	23.723	0.25	2.245	0.25	2.058	116.264	300.504	301.26	69.644	52.298	70.174	78.913	41.796	41.201	52.815	52.115
20160419:14:23:50	23.741	13.164	0.156	23.729	0.25	2.267	0.25	2.067	116.547	300.544	301.228	69.703	52.269	70.246	78.971	43.176	42.537	54.559	53.806
20160419:14:28:50	23.745	13.151	0.305	23.723	0.25	2.268	0.25	2.081	116.519	300.591	301.243	69.764	52.277	70.316	79.029	44.544	43.882	56.291	55.509
20160419:14:33:50	23.707	13.17	-0.225	23.724	0.25	2.268	0.25	2.083	116.513	300.614	301.235	69.815	52.255	70.363	79.088	45.878	45.229	57.98	57.216
20160419:14:38:50	23.659	13.204	-0.835	23.72	0.25	2.27	0.25	2.069	116.53	300.663	301.259	69.899	52.263	70.401	79.142	47.272	46.563	59.744	58.906
20160419:14:43:50	23.658	13.264	-0.862	23.721	0.25	2.275	0.25	2.08	116.691	300.638	301.224	69.954	52.235	70.439	79.198	48.612	47.923	61.441	60.63
20160419:14:48:50	23.664	13.288	-0.713	23.716	0.25	2.269	0.25	2.07	116.765	300.591	301.234	70.008	52.243	70.494	79.257	50.016	49.243	63.219	62.303
20160419:14:53:50	23.664	13.289	-0.731	23.718	0.25	2.276	0.25	2.072	116.768	300.615	301.27	70.054	52.239	70.557	79.312	51.359	50.616	64.919	64.043
20160419:14:58:50	23.667	13.198	-0.666	23.716	0.25	2.278	0.25	2.074	116.524	300.566	301.192	70.105	52.245	70.652	79.369	52.711	51.926	66.631	65.705
20160419:15:03:50	23.674	12.574	-0.508	23.711	0.25	2.273	0.25	2.05	114.82	300.534	301.176	70.164	52.245	70.716	79.425	54.095	53.293	68.385	67.438
20160419:15:08:50	23.673	12.394	-0.468	23.708	0.25	2.254	0.25	2.058	114.312	300.562	301.227	70.243	52.244	70.764	79.479	55.441	54.611	70.091	69.111
20160419:15:13:50	23.676	12.675	-0.441	23.708	0.25	2.253	0.25	2.03	115.096	300.47	301.181	70.312	52.23	70.817	79.541	56.833	55.973	71.856	70.838
20160419:15:18:50	23.67	13.257	-0.532	23.709	0.25	2.277	0.25	2.057	116.691	300.542	301.212	70.37	52.244	70.91	79.606	58.158	57.294	73.535	72.515
20160419:15:23:50	23.662	13.305	-0.651	23.71	0.25	2.285	0.25	2.076	116.807	300.542	301.152	70.421	52.248	70.99	79.67	59.537	58.66	75.283	74.248
20160419:15:28:50	23.662	13.272	-0.614	23.708	0.25	2.278	0.25	2.071	116.72	300.582	301.206	70.511	52.245	71.06	79.739	60.908	59.969	77.022	75.91
20160419:15:33:50	23.669	13.249	-0.482	23.705	0.25	2.274	0.25	2.07	116.667	300.629	301.203	70.622	52.257	71.128	79.813	62.246	61.346	78.719	77.658
20160419:15:38:50	23.669	13.236	-0.511	23.706	0.25	2.281	0.25	2.057	116.631	300.609	301.187	70.704	52.254	71.218	79.885	63.638	62.656	80.485	79.321
20160419:15:43:50	23.668	13.216	-0.473	23.703	0.25	2.265	0.25	2.058	116.578	300.578	301.195	70.765	52.258	71.308	79.959	64.977	64.025	82.183	81.06
20160419:15:48:50	23.67	13.199	-0.494	23.706	0.25	2.267	0.25	2.069	116.533	300.614	301.219	70.827	52.24	71.375	80.034	66.354	65.337	83.931	82.727
20160419:15:53:50	23.675	13.195	-0.404	23.705	0.25	2.282	0.25	2.065	116.531	300.597	301.204	70.944	52.253	71.465	80.113	67.726	66.71	85.672	84.472
20160419:15:58:50	23.68	13.16	-0.351	23.706	0.25	2.277	0.25	2.058	116.445	300.61	301.249	71.013	52.236	71.555	80.189	69.059	68.023	87.365	86.139
20160419:16:03:50	23.684	12.441	-0.223	23.7	0.25	2.269	0.25	2.042	114.461	300.605	301.26	71.071	52.251	71.612	80.261	70.456	69.399	89.139	87.889
20160419:16:08:50	23.687	12.277	-0.255	23.705	0.25	2.257	0.25	2.047	113.997	300.593	301.261	71.133	52.232	71.664	80.335	71.795	70.705	90.839	89.549
20160419:16:13:50	23.688	12.55	-0.175	23.701	0.25	2.252	0.25	2.039	114.762	300.526	301.218	71.193	52.25	71.714	80.409	73.184	72.079	92.602	91.295
20160419:16:18:50	23.689	13.201	-0.234	23.706	0.25	2.264	0.25	2.065	116.568	300.632	301.268	71.285	52.23	71.804	80.481	74.541	73.395	94.326	92.968
20160419:16:23:50	23.676	13.253	-0.38	23.704	0.25	2.263	0.25	2.055	116.688	300.586	301.19	71.352	52.254	71.889	80.551	75.878	74.767	96.024	94.712
20160419:16:28:50	23.679	13.304	-0.384	23.707	0.25	2.275	0.25	2.074	116.831	300.571	301.216	71.427	52.251	71.948	80.624	77.269	76.068	97.791	96.367
20160419:16:33:50	23.681	13.295	-0.321	23.705	0.25	2.269	0.25	2.056	116.809	300.603	301.248	71.517	52.262	72.011	80.695	78.605	77.442	99.489	98.115
20160419:16:38:50	23.678	12.957	-0.353	23.704	0.25	2.283	0.25	2.057	115.878	300.709	301.319	71.579	52.253	72.077	80.769	80.001	78.759	101.263	99.789
20160419:16:43:50	23.686	12.38	-0.249	23.704	0.25	2.27	0.25	2.056	114.29	300.657	301.331	71.648	52.269	72.175	80.84	81.355	80.117	102.983	101.517
20160419:16:48:50	23.688	12.207	-0.221	23.704	0.25	2.256	0.25	2.049	113.797	300.526	301.206	71.702	52.257	72.235	80.912	82.694	81.455	104.685	103.22
20160419:16:53:50	23.673	12.867	-0.408	23.703	0.25	2.264	0.25	2.061	115.624	300.502	301.198	71.81	52.34	72.309	80.989	84.085	82.789	106.454	104.917
20160419:16:58:50	23.668	13.19	-0.479	23.703	0.25	2.281	0.25	2.073	116.507	300.624	301.238	71.895	52.454	72.373	81.063	85.423	84.149	108.156	106.648
20160419:17:03:50	23.67	13.218	-0.401	23.699	0.25	2.294	0.25	2.069	116.587	300.573	301.173	71.954	52.479	72.457	81.132	86.821	85.466	109.933	108.325
20160419:17:08:50	23.653	12.738	-0.63	23.699	0.25	2.274	0.25	2.063	115.24	300.588	301.238	72.024	52.474	72.561	81.204	88.173	86.836	111.654	110.07
20160419:17:13:50	23.633	12.539	-0.928	23.701	0.25	2.261	0.25	2.061	114.662	300.537	301.244	72.094	52.475	72.62	81.276	89.515	88.15	113.361	111.742
20160419:17:18:50	23.621	12.538	-1.097	23.701	0.25	2.253	0.25	2.064	114.639	300.46	301.198	72.194	52.48	72.685	81.351	90.911	89.512	115.137	113.477
20160419:17:23:50	23.622	13.322	-1.059	23.7	0.25	2.269	0.25	2.069	116.792	300.515	301.244	72.259	52.484	72.764	81.422	92.25	90.824	116.841	115.148
20160419:17:28:50	23.623	13.351	-1.043	23.7	0.25	2.285	0.25	2.079	116.87	300.577	301.222	72.325	52.498	72.867	81.499	93.644	92.199	118.615	116.9
20160419:17:33:50	23.626	13.321	-0.941	23.695	0.25	2.276	0.25	2.085	116.796	300.589	301.244	72.382	52.496	72.931	81.573	94.998	93.513	120.339	118.575
20160419:17:38:50	23.625	13.324	-0.949	23.695	0.25	2.282	0.25	2.058	116.803	300.596	301.199	72.471	52.517	72.993	81.649	96.34	94.883	122.048	120.321
20160419:17:43:50	23.629	13.162	-0.964	23.7	0.25	2.272	0.25	2.058	116.37	300.551	301.153	72.558	52.523	73.086	81.722	97.732	96.194	123.82	121.992
20160419:17:48:50	23.629	12.545	-0.958	23.7	0.25	2.262	0.25	2.074	114.673	300.602	301.279	72.621	52.537	73.176	81.799	99.065	97.562	125.519	123.737
20160419:17:53:50	23.631	12.387	-0.946	23.701	0.25	2.259	0.25	2.037	114.23	300.539	301.223	72.683	52.544	73.24	81.877	100.46	98.87	127.294	125.404
20160419:17:58:50	23.631	12.799	-0.945	23.701	0.25	2.262	0.25	2.043	115.374	300.614	301.203	72.768	52.555	73.31	81.957	101.812	100.243	129.017	127.154
20160419:18:03:50	23.631	13.236	-0.936	23.7	0.25	2.279	0.25	2.052	116.576	300.682	301.272	72.851	52.572	73.374	82.033	103.149	101.557	130.72	128.831
20160419:18:08:50	23.632	13.267	-0.863	23.696	0.25	2.276	0.25	2.063	116.661	300.717	301.275	72.912	52.562	73.458	82.113	104.542	102.929	132.496	130.581
20160419:18:13:50	23.639	13.268	-0.834	23.701	0.25	2.288	0.25	2.072	116.673	300.735	301.332	72.958	52.587	73.527	82.189	105.881	104.227	134.202	132.237
20160419:18:18:50	23.642	13.285	-0.794	23.7	0.25	2.279	0.25	2.069	116.724	300.71	301.29	73.01	52.577	73.572	82.261	107.273	105.603	135.976	133.992
20160419:18:23:50	23.64	13.291	-0.804	23.699	0.25	2.286	0.25	2.072	116.736	300.777	301.398	73.102	52.594	73.619	82.332	108.628	106.925	137.704	135.679
20160419:18:28:50	23.644	13.302	-0.772	23.7	0.25	2.286	0.25	2.081	116.771	300.759	301.335	73.17	52.595	73.67	82.403	109.971	108.273	139.415	137.398
20160419:18:33:50	23.649	13.292	-0.714	23.702	0.25	2.273	0.25	2.077	116.754	300.806	301.328	73.197	52.608	73.703	82.469	111.365	109.622	141.193	139.12
20160419:18:38:50	23.648	13.295	-0.723	23.702	0.25	2.284	0.25	2.068	116.76	300.782	301.39	73.234	52.597	73.774	82.531	112.705	110.943	142.9	140.806
20160419:18:43:50	23.648	13.234	-0.731	23.702	0.25	2.285	0.25	2.078	116.593	300.733	301.304	73.277	52.602	73.831	82.587	114.095	112.315	144.672	142.556
20160419:18:48:50	23.648	12.593	-0.745	23.703	0.25	2.269	0.25	2.043	114.834	300.7	301.32	73.31	52.61	73.87	82.643	115.461	113.627	146.415	144.231
20160419:18:53:50	23.648	12.426	-0.74	23.703	0.25	2.267	0.25	2.045	114.363	300.669	301.334	73.315	52.611	73.883	82.697	116.792	114.994	148.111	145.976
20160419:18:58:50	23.646	12.729	-0.767	23.702	0.25	2.257	0.25	2.043	115.201	300.661	301.319	73.363	52.616	73.929	82.744	118.198	116.304	149.904	147.648
20160419:19:03:50	23.646	13.293	-0.796	23.704	0.25	2.275	0.25	2.074	116.751	300.763	301.382	73.413	52.616	73.951	82.79	119.537	117.685	151.611	149.412
20160419:19:08:50	23.646	13.327	-0.8	23.705	0.25	2.281	0.25	2.062	116.842	300.778	301.343	73.461	52.624	73.979	82.834	120.913	118.996	153.367	151.085
20160419:19:13:50	23.648	13.373	-0.809	23.707	0.25	2.292	0.25	2.05	116.967	300.806	301.419	73.508	52.644	74.034	82.879	122.288	120.368	155.12	152.836
20160419:19:18:50	23.648	13.412	-0.833	23.709	0.25	2.286	0.25	2.056	117.07	300.821	301.387	73.517	52.631	74.07	82.92	123.624	121.679	156.824	154.509
20160419:19:23:50	23.666	13.399	-0.591	23.71	0.25	2.297	0.25	2.071	117.064	300.823	301.383	73.535	52.641	74.104	82.96	125.029	123.057	158.615	156.269
20160419:19:28:50	23.718	13.337	0.091	23.711	0.25	2.279	0.25	2.079	116.977	300.764	301.366	73.562	52.635	74.124	82.999	126.358	124.375	160.309	157.951
20160419:19:33:50	23.727	13.337	0.167	23.715	0.25	2.285	0.25	2.07	116.989	300.772	301.364	73.587	52.641	74.156	83.037	127.732	125.745	162.061	159.699
20160419:19:38:50	23.731	13.403	0.241	23.713	0.25	2.292	0.25	2.066	117.172	300.775	301.394	73.618	52.659	74.195	83.072	129.104	127.055	163.811	161.372
20160419:19:43:50	23.729	13.372	0.22	23.713	0.25	2.27	0.25	2.061	117.086	300.728	301.396	73.609	52.643	74.2	83.101	130.453	128.416	165.531	163.109
20160419:19:48:50	23.73	13.14	0.199	23.715	0.25	2.268	0.25	2.061	116.454	300.771	301.406	73.617	52.65	74.213	83.128	131.846	129.76	167.307	164.825
20160419:19:53:50	23.73	12.576	0.191	23.716	0.25	2.253	0.25	2.038	114.91	300.715	301.406	73.645	52.654	74.235	83.156	133.182	131.087	169.011	166.519
20160419:19:58:50	23.729	12.442	0.169	23.716	0.25	2.254	0.25	2.05	114.528	300.725	301.39	73.643	52.63	74.214	83.181	134.55	132.457	170.756	168.267
20160419:20:03:50	23.729	13.211	0.146	23.718	0.25	2.259	0.25	2.065	116.643	300.8	301.444	73.684	52.684	74.258	83.205	135.937	133.766	172.524	169.938
20160419:20:08:50	23.732	13.495	0.145	23.721	0.25	2.273	0.25	2.092	117.417	300.805	301.427	73.666	52.677	74.26	83.229	137.282	135.13	174.239	171.679
20160419:20:13:50	23.735	13.453	0.175	23.722	0.25	2.269	0.25	2.094	117.311	300.816	301.418	73.648	52.666	74.256	83.25	138.68	136.445	176.02	173.357
20160419:20:18:50	23.737	13.403	0.189	23.723	0.25	2.273	0.25	2.088	117.181	300.807	301.448	73.675	52.677	74.276	83.267	140.025	137.819	177.735	175.111
20160419:20:23:50	23.738	13.352	0.186	23.724	0.25	2.278	0.25	2.062	117.048	300.82	301.448	73.699	52.693	74.29	83.286	141.375	139.131	179.456	176.786
20160419:20:28:50	23.742	13.296	0.222	23.726	0.25	2.283	0.25	2.082	116.904	300.805	301.456	73.686	52.687	74.28	83.302	142.766	140.506	181.23	178.539
20160419:20:33:50	23.743	13.25	0.173	23.73	0.25	2.279	0.25	2.093	116.782	300.773	301.438	73.662	52.685	74.264	83.314	144.102	141.816	182.931	180.211
20160419:20:38:50	23.743	13.215	0.174	23.731	0.25	2.277	0.25	2.06	116.688	300.718	301.449	73.662	52.686	74.274	83.33	145.498	143.196	184.711	181.972
20160419:20:43:50	23.747	13.189	0.221	23.731	0.25	2.276	0.25	2.067	116.623	300.793	301.464	73.699	52.722	74.299	83.34	146.85	144.501	186.433	183.637
20160419:20:48:50	23.748	13.164	0.213	23.732	0.25	2.274	0.25	2.071	116.557	300.783	301.4	73.689	52.697	74.276	83.346	148.194	145.879	188.146	185.395
20160419:20:53:50	23.749	12.613	0.213	23.733	0.25	2.265	0.25	2.059	115.033	300.778	301.458	73.661	52.698	74.26	83.348	149.593	147.182	189.93	187.056
20160419:20:58:50	23.751	12.318	0.247	23.733	0.25	2.274	0.25	2.052	114.21	300.789	301.435	73.647	52.691	74.247	83.346	150.936	148.557	191.641	188.81
20160419:21:03:50	23.749	12.274	0.236	23.732	0.25	2.266	0.25	2.042	114.08	300.741	301.417	73.643	52.705	74.226	83.34	152.333	149.884	193.42	190.504
20160419:21:08:50	23.748	12.998	0.203	23.733	0.25	2.269	0.25	2.054	116.105	300.75	301.448	73.595	52.658	74.169	83.33	153.698	151.23	195.159	192.22
20160419:21:13:50	23.747	13.047	0.203	23.732	0.25	2.288	0.25	2.075	116.24	300.783	301.367	73.555	52.665	74.146	83.314	155.032	152.587	196.859	193.951
20160419:21:18:50	23.747	13.112	0.208	23.732	0.25	2.266	0.25	2.081	116.416	300.767	301.384	73.536	52.655	74.127	83.301	156.435	153.906	198.646	195.633
20160419:21:23:50	23.745	13.205	0.199	23.73	0.25	2.284	0.25	2.096	116.664	300.839	301.396	73.534	52.689	74.1	83.282	157.782	155.274	200.363	197.378
20160419:21:28:50	23.742	13.178	0.192	23.728	0.25	2.287	0.25	2.075	116.586	300.838	301.435	73.482	52.649	74.013	83.26	159.165	156.597	202.124	199.066
20160419:21:33:50	23.745	13.155	0.224	23.729	0.25	2.278	0.25	2.063	116.529	300.877	301.437	73.445	52.672	73.986	83.237	160.538	157.968	203.874	200.814
20160419:21:38:50	23.743	13.142	0.205	23.728	0.25	2.273	0.25	2.079	116.489	300.855	301.386	73.391	52.672	73.977	83.207	161.882	159.286	205.585	202.494
20160419:21:43:50	23.745	13.12	0.22	23.729	0.25	2.271	0.25	2.061	116.432	300.782	301.35	73.313	52.641	73.921	83.176	163.286	160.663	207.374	204.25
20160419:21:48:50	23.744	13.115	0.224	23.728	0.25	2.274	0.25	2.066	116.418	300.83	301.462	73.308	52.665	73.912	83.145	164.615	161.978	209.067	205.927
20160419:21:53:50	23.743	13.081	0.227	23.726	0.25	2.278	0.25	2.062	116.323	300.772	301.364	73.254	52.64	73.859	83.112	165.992	163.359	210.82	207.688
20160419:21:58:50	23.745	12.329	0.236	23.727	0.25	2.277	0.25

Time: day:hh:mm:ss	Stack Pressure: in-Hg	Sat% H2O: Percent	Static: in-H2O	Barometric: in-Hg	Flowmeter1: l/min	Vacuum1: in-Hg	Flowmeter2: l/min	Vacuum2: in-Hg	Stack Temp: degF	Sorbent Temp: degF	Probe Temp: degF	DGM#1 Temp: degF	Condenser Temp: degF	DGM#2 Temp: degF	DAQ Temp: degF	DGM1*: liters STP	DGM2*: liters STP	DGM1: liters nominal	DGM2: liters nominal
20160420:01:28:50	23.725	11.379	0.065	23.72	0.25	2.254	0.25	2.034	111.392	300.588	301.324	71.738	52.546	72.344	81.613	224.776	221.109	285.596	281.231
20160420:01:33:50	23.725	11.686	0.087	23.719	0.25	2.248	0.25	2.049	112.307	300.545	301.303	71.713	52.53	72.305	81.577	226.151	222.436	287.343	282.919
20160420:01:38:50	23.721	12.344	0.042	23.718	0.25	2.261	0.25	2.044	114.239	300.69	301.375	71.679	52.528	72.266	81.541	227.492	223.805	289.046	284.66
20160420:01:43:50	23.72	12.396	0.072	23.715	0.25	2.25	0.25	2.044	114.387	300.742	301.364	71.643	52.525	72.224	81.501	228.893	225.12	290.826	286.333
20160420:01:48:50	23.721	12.404	0.079	23.715	0.25	2.249	0.25	2.041	114.41	300.69	301.384	71.6	52.546	72.187	81.458	230.222	226.483	292.515	288.066
20160420:01:53:50	23.719	12.398	0.058	23.715	0.25	2.264	0.25	2.051	114.391	300.758	301.384	71.536	52.478	72.087	81.416	231.604	227.809	294.27	289.752
20160420:01:58:50	23.72	12.4	0.094	23.713	0.25	2.257	0.25	2.05	114.398	300.823	301.463	71.493	52.528	72.059	81.374	232.984	229.175	296.022	291.489
20160420:02:03:50	23.72	12.397	0.082	23.714	0.25	2.26	0.25	2.04	114.389	300.812	301.45	71.427	52.477	72.018	81.332	234.331	230.49	297.733	293.16
20160420:02:08:50	23.72	12.395	0.067	23.715	0.25	2.266	0.25	2.051	114.383	300.712	301.347	71.369	52.497	71.974	81.285	235.733	231.87	299.513	294.914
20160420:02:13:50	23.719	12.399	0.067	23.714	0.25	2.261	0.25	2.057	114.392	300.655	301.27	71.338	52.516	71.95	81.24	237.06	233.186	301.198	296.586
20160420:02:18:50	23.719	12.419	0.071	23.714	0.25	2.261	0.25	2.04	114.451	300.653	301.303	71.296	52.513	71.909	81.194	238.443	234.561	302.954	298.335
20160420:02:23:50	23.72	12.457	0.074	23.715	0.25	2.262	0.25	2.045	114.56	300.699	301.367	71.215	52.487	71.867	81.152	239.823	235.873	304.706	300.002
20160420:02:28:50	23.72	12.462	0.068	23.715	0.25	2.262	0.25	2.052	114.575	300.688	301.313	71.179	52.505	71.821	81.108	241.159	237.254	306.402	301.758
20160420:02:33:50	23.722	12.434	0.091	23.715	0.25	2.264	0.25	2.057	114.496	300.662	301.327	71.135	52.464	71.746	81.068	242.562	238.559	308.181	303.415
20160420:02:38:50	23.722	12.427	0.041	23.719	0.25	2.262	0.25	2.053	114.479	300.768	301.408	71.105	52.479	71.709	81.022	243.9	239.937	309.88	305.165
20160420:02:43:50	23.722	12.427	0.053	23.718	0.25	2.263	0.25	2.053	114.478	300.754	301.367	71.078	52.462	71.677	80.976	245.278	241.252	311.628	306.836
20160420:02:48:50	23.721	12.434	0.047	23.714	0.25	2.258	0.25	2.05	114.498	300.835	301.423	71.029	52.462	71.627	80.924	246.661	242.624	313.383	308.579
20160420:02:53:50	23.721	12.441	0.049	23.717	0.25	2.268	0.25	2.062	114.515	300.71	301.353	70.983	52.43	71.576	80.876	247.991	243.928	315.07	310.235
20160420:02:58:50	23.722	12.442	0.076	23.716	0.25	2.272	0.25	2.053	114.521	300.755	301.364	70.927	52.45	71.547	80.829	249.398	245.304	316.856	311.983
20160420:03:03:50	23.725	12.482	0.096	23.718	0.25	2.267	0.25	2.051	114.639	300.74	301.262	70.858	52.444	71.5	80.78	250.739	246.629	318.556	313.665
20160420:03:08:50	23.727	12.526	0.137	23.716	0.25	2.259	0.25	2.067	114.765	300.68	301.253	70.8	52.428	71.4	80.729	252.12	247.982	320.307	315.383
20160420:03:13:50	23.725	12.562	0.141	23.715	0.25	2.271	0.25	2.074	114.863	300.712	301.27	70.754	52.421	71.36	80.678	253.497	249.331	322.054	317.096
20160420:03:18:50	23.726	12.642	0.151	23.715	0.25	2.271	0.25	2.098	115.089	300.686	301.287	70.719	52.43	71.321	80.627	254.824	250.664	323.737	318.788
20160420:03:23:50	23.727	12.636	0.17	23.715	0.25	2.279	0.25	2.088	115.075	300.658	301.256	70.681	52.416	71.275	80.575	256.231	252.033	325.52	320.526
20160420:03:28:50	23.723	12.64	0.112	23.714	0.25	2.269	0.25	2.069	115.078	300.654	301.269	70.635	52.42	71.18	80.522	257.574	253.348	327.224	322.195
20160420:03:33:50	23.72	12.628	0.045	23.717	0.25	2.275	0.25	2.081	115.042	300.672	301.328	70.566	52.413	71.136	80.471	258.956	254.717	328.976	323.932
20160420:03:38:50	23.719	12.61	0.059	23.715	0.25	2.282	0.25	2.061	114.991	300.664	301.286	70.512	52.43	71.097	80.419	260.337	256.041	330.726	325.613
20160420:03:43:50	23.719	12.616	0.05	23.715	0.25	2.282	0.25	2.054	115.006	300.579	301.251	70.472	52.425	71.063	80.367	261.665	257.411	332.409	327.352
20160420:03:48:50	23.719	12.711	0.048	23.715	0.25	2.294	0.25	2.063	115.272	300.584	301.243	70.425	52.434	71.019	80.317	263.072	258.73	334.193	329.024
20160420:03:53:50	23.719	12.761	0.057	23.715	0.25	2.289	0.25	2.071	115.41	300.586	301.253	70.379	52.415	70.98	80.267	264.418	260.111	335.898	330.776
20160420:03:58:50	23.719	12.805	0.043	23.716	0.25	2.276	0.25	2.077	115.534	300.594	301.243	70.359	52.446	70.949	80.223	265.809	261.429	337.661	332.449
20160420:04:03:50	23.719	12.801	0.076	23.713	0.25	2.282	0.25	2.072	115.521	300.638	301.256	70.326	52.426	70.907	80.18	267.181	262.804	339.4	334.194
20160420:04:08:50	23.719	12.79	0.072	23.714	0.25	2.273	0.25	2.082	115.492	300.576	301.241	70.29	52.431	70.853	80.137	268.514	264.123	341.089	335.867
20160420:04:13:50	23.719	12.826	0.089	23.712	0.25	2.284	0.25	2.082	115.591	300.57	301.239	70.257	52.422	70.818	80.093	269.914	265.502	342.863	337.617
20160420:04:18:50	23.718	12.848	0.065	23.713	0.25	2.274	0.25	2.062	115.651	300.541	301.201	70.168	52.413	70.773	80.053	271.259	266.813	344.567	339.278
20160420:04:23:50	23.72	12.847	0.08	23.714	0.25	2.264	0.25	2.072	115.649	300.565	301.176	70.144	52.399	70.754	80.014	272.652	268.189	346.331	341.024
20160420:04:28:50	23.721	12.838	0.089	23.715	0.25	2.271	0.25	2.089	115.628	300.637	301.293	70.115	52.409	70.721	79.976	274.013	269.51	348.056	342.699
20160420:04:33:50	23.719	12.887	0.038	23.716	0.25	2.283	0.25	2.079	115.759	300.595	301.277	70.082	52.384	70.689	79.941	275.358	270.887	349.759	344.445
20160420:04:38:50	23.719	12.85	0.055	23.715	0.25	2.282	0.25	2.072	115.654	300.623	301.278	70.059	52.407	70.664	79.903	276.756	272.192	351.53	346.1
20160420:04:43:50	23.72	12.064	0.093	23.713	0.25	2.262	0.25	2.047	113.43	300.586	301.262	70.026	52.384	70.619	79.868	278.096	273.572	353.228	347.85
20160420:04:48:50	23.72	11.906	0.036	23.717	0.25	2.25	0.25	2.051	112.966	300.571	301.286	70.002	52.402	70.58	79.829	279.494	274.891	354.998	349.523
20160420:04:53:50	23.721	12.159	0.053	23.717	0.25	2.252	0.25	2.055	113.696	300.503	301.253	69.949	52.375	70.493	79.789	280.859	276.253	356.726	351.248
20160420:04:58:50	23.722	12.758	0.032	23.72	0.25	2.285	0.25	2.05	115.407	300.518	301.192	69.91	52.397	70.471	79.749	282.205	277.597	358.43	352.951
20160420:05:03:50	23.728	12.779	0.073	23.723	0.25	2.287	0.25	2.069	115.475	300.593	301.248	69.835	52.389	70.428	79.709	283.603	278.938	360.2	354.65
20160420:05:08:50	23.729	12.785	0.098	23.721	0.25	2.28	0.25	2.079	115.491	300.588	301.237	69.795	52.376	70.391	79.667	284.945	280.3	361.898	356.376
20160420:05:13:50	23.728	12.804	0.081	23.722	0.25	2.279	0.25	2.082	115.545	300.668	301.328	69.777	52.388	70.376	79.63	286.349	281.623	363.674	358.053
20160420:05:18:50	23.728	12.821	0.087	23.721	0.25	2.268	0.25	2.072	115.588	300.641	301.286	69.735	52.377	70.335	79.592	287.704	283.002	365.389	359.799
20160420:05:23:50	23.734	12.849	0.164	23.722	0.25	2.279	0.25	2.055	115.678	300.632	301.26	69.719	52.403	70.321	79.554	289.053	284.315	367.096	361.462
20160420:05:28:50	23.738	12.885	0.17	23.726	0.25	2.281	0.25	2.063	115.781	300.579	301.196	69.667	52.37	70.267	79.517	290.452	285.68	368.867	363.192
20160420:05:33:50	23.738	12.912	0.189	23.724	0.25	2.283	0.25	2.06	115.856	300.575	301.193	69.652	52.397	70.254	79.482	291.792	287.007	370.561	364.872
20160420:05:38:50	23.74	12.996	0.215	23.724	0.25	2.28	0.25	2.082	116.086	300.606	301.266	69.556	52.358	70.164	79.449	293.194	288.375	372.335	366.605
20160420:05:43:50	23.74	12.788	0.197	23.725	0.25	2.283	0.25	2.079	115.507	300.634	301.28	69.553	52.384	70.157	79.417	294.54	289.694	374.037	368.274
20160420:05:48:50	23.743	12.201	0.201	23.728	0.25	2.253	0.25	2.052	113.861	300.571	301.227	69.501	52.353	70.098	79.381	295.899	291.075	375.756	370.023
20160420:05:53:50	23.742	12.088	0.209	23.727	0.25	2.254	0.25	2.051	113.534	300.507	301.252	69.483	52.368	70.074	79.343	297.286	292.393	377.509	371.692
20160420:05:58:50	23.74	12.675	0.223	23.724	0.25	2.265	0.25	2.074	115.192	300.491	301.216	69.442	52.353	70.025	79.304	298.633	293.769	379.213	373.434
20160420:06:03:50	23.74	12.95	0.233	23.722	0.25	2.292	0.25	2.059	115.962	300.615	301.339	69.414	52.358	69.986	79.266	300.036	295.089	380.987	375.105
20160420:06:08:50	23.74	12.961	0.227	23.724	0.25	2.291	0.25	2.073	115.992	300.657	301.315	69.381	52.348	69.952	79.223	301.377	296.47	382.683	376.853
20160420:06:13:50	23.741	12.909	0.219	23.725	0.25	2.292	0.25	2.061	115.851	300.533	301.234	69.318	52.334	69.854	79.18	302.748	297.788	384.417	378.521
20160420:06:18:50	23.744	12.906	0.218	23.728	0.25	2.281	0.25	2.071	115.847	300.591	301.25	69.288	52.34	69.824	79.139	304.125	299.172	386.157	380.273
20160420:06:23:50	23.75	12.873	0.243	23.732	0.25	2.284	0.25	2.073	115.766	300.646	301.263	69.208	52.327	69.78	79.099	305.474	300.49	387.861	381.94
20160420:06:28:50	23.751	12.871	0.226	23.734	0.25	2.272	0.25	2.075	115.763	300.643	301.32	69.175	52.312	69.744	79.055	306.878	301.871	389.635	383.686
20160420:06:33:50	23.754	12.88	0.246	23.736	0.25	2.279	0.25	2.075	115.791	300.577	301.257	69.147	52.318	69.712	79.008	308.21	303.188	391.319	385.352
20160420:06:38:50	23.756	12.914	0.258	23.737	0.25	2.281	0.25	2.056	115.888	300.611	301.224	69.105	52.296	69.674	78.965	309.599	304.564	393.072	387.092
20160420:06:43:50	23.762	12.499	0.299	23.739	0.25	2.276	0.25	2.057	114.734	300.488	301.227	69.07	52.304	69.626	78.92	305.87	304.819	388.742	380.948
20160420:06:48:50	23.766	12.289	0.368	23.739	0.25	2.267	0.25	2.058	114.15	300.593	301.262	69.049	52.295	69.622	78.877	312.311	307.251	396.498	390.489
20160420:06:53:50	23.767	12.241	0.301	23.745	0.25	2.26	0.25	2.065	114.013	300.505	301.255	69.004	52.274	69.55	78.838	313.714	308.576	398.269	392.164
20160420:06:58:50	23.765	12.994	0.258	23.746	0.25	2.28	0.25	2.09	116.12	300.529	301.241	69.004	52.278	69.537	78.797	315.055	309.939	399.961	393.885
20160420:07:03:50	23.767	13.09	0.273	23.747	0.25	2.281	0.25	2.084	116.387	300.596	301.284	68.989	52.276	69.508	78.759	316.445	311.281	401.717	395.581
20160420:07:08:50	23.769	13.134	0.334	23.744	0.25	2.284	0.25	2.083	116.506	300.658	301.279	68.944	52.276	69.501	78.725	317.802	312.627	403.43	397.282
20160420:07:13:50	23.77	13.127	0.37	23.743	0.25	2.268	0.25	2.078	116.488	300.677	301.289	68.896	52.262	69.486	78.695	319.149	313.985	405.13	398.998
20160420:07:18:50	23.768	13.131	0.354	23.742	0.25	2.277	0.25	2.091	116.498	300.682	301.301	68.923	52.287	69.484	78.665	320.546	315.316	406.893	400.68
20160420:07:23:50	23.769	13.097	0.347	23.743	0.25	2.29	0.25	2.102	116.407	300.658	301.263	68.879	52.246	69.447	78.638	321.889	316.686	408.589	402.412
20160420:07:28:50	23.773	13.06	0.408	23.743	0.25	2.251	0.25	2.06	116.313	300.682	301.259	68.882	52.27	69.456	78.614	323.288	318.007	410.354	404.081
20160420:07:33:50	23.773	13.037	0.431	23.741	0.25	2.265	0.25	2.065	116.25	300.675	301.281	68.878	52.257	69.465	78.595	324.627	319.386	412.044	405.823
20160420:07:38:50	23.774	13.048	0.365	23.747	0.25	2.281	0.25	2.065	116.28	300.619	301.255	68.845	52.236	69.434	78.574	325.997	320.7	413.774	407.483
20160420:07:43:50	23.773	12.639	0.362	23.746	0.25	2.279	0.25	2.06	115.14	300.642	301.265	68.874	52.239	69.44	78.555	327.375	322.07	415.513	409.214
20160420:07:48:50	23.773	12.249	0.41	23.743	0.25	2.271	0.25	2.061	114.044	300.629	301.292	68.882	52.254	69.447	78.539	328.725	323.4	417.217	410.895
20160420:07:53:50	23.776	12.158	0.446	23.743	0.25	2.274	0.25	2.053	113.786	300.624	301.305	68.884	52.239	69.46	78.525	330.128	324.768	418.987	412.624
20160420:07:58:50	23.778	12.997	0.501	23.741	0.25	2.265	0.25	2.05	116.142	300.529	301.216	68.863	52.22	69.441	78.515	331.467	326.089	420.678	414.293
20160420:08:03:50	23.778	13.155	0.511	23.741	0.25	2.264	0.25	2.061	116.577	300.604	301.233	68.879	52.165	69.447	78.51	332.849	327.465	422.422	416.032
20160420:08:08:50	23.78	13.218	0.543	23.74	0.25	2.271	0.25	2.065	116.749	300.579	301.199	68.887	52.211	69.474	78.508	334.216	328.778	424.148	417.692
20160420:08:13:50	23.778	13.249	0.498	23.741	0.25	2.278	0.25	2.069	116.832	300.609	301.202	68.936	52.156	69.496	78.511	335.555	330.157	425.839	419.434
20160420:08:18:50	23.781	13.194	0.578	23.739	0.25	2.268	0.25	2.064	116.687	300.665	301.253	69.009	52.196	69.529	78.519	336.95	331.47	427.6	421.094
20160420:08:23:50	23.78	13.196	0.594	23.737	0.25	2.278	0.25	2.071	116.692	300.683	301.285	69.056	52.243	69.619	78.532	338.285	332.847	429.287	422.835
20160420:08:28:50	23.778	13.131	0.57	23.737	0.25	2.274	0.25	2.059	116.513	300.631	301.187	69.091	52.233	69.659	78.552	339.684	334.161	431.054	424.496
20160420:08:33:50	23.777	13.079	0.55	23.736	0.25	2.268	0.25	2.058	116.369	300.605	301.177	69.112	52.192	69.683	78.577	341.018	335.532	432.739	426.229
20160420:08:38:50	23.779	13.044	0.611	23.734	0.25	2.265	0.25	2.066	116.279	300.64	301.251	69.174	52.24	69.754	78.603	342.381	336.845	434.461	427.891
20160420:08:43:50	23.778	13.006	0.564	23.737	0.25	2.264	0.25	2.056	116.172	300.557	301.176	69.208	52.216	69.774	78.632	343.756	338.22	436.198	429.63
20160420:08:48:50	23.78	12.269	0.606	23.736	0.25	2.247	0.25	2.053	114.106	300.541	301.229	69.313	52.25	69.834	78.67	345.103	339.532	437.9	431.289
20160420:08:53:50	23.782	12.021	0.68	23.732	0.25	2.223	0.25	2.032	113.397	300.529	301.227	69.354	52.206	69.881	78.712	346.498	340.905	439.663	433.026
20160420:08:58:50	23.782	12.066	0.678	23.733	0.25	2.232	0.25	2.035	113.522	300.495	301.173	69.423	52.239	69.981	78.755	347.837	342.215	441.356	434.684
20160420:09:03:50	23.78	12.753	0.655	23.731	0.25	2.249	0.25	2.042	115.48	300.595	301.231	69.483	52.224	70.037	78.804	349.218	343.592	443.102	436.427
20160420:09:08:50	23.78	12.855	0.666	23.731	0.25	2.244	0.25	2.038	115.76	300.601	301.226	69.524	52.221	70.081	78.856	350.58	344.9	444.824	438.083
20160420:09:13:50	23.781	13.019	0.687	23.73	0.25	2.261	0.25	2.046	116.213	300.656	301.197	69.57	52.189	70.121	78.905	351.92	346.281	446.519	439.831
20160420:09:18:50	23.775	13.038	0.651	23.727	0.25	2.255	0.25	2.047	116.258	300.721	301.268	69.67	52.226	70.174	78.96	353.315	347.589	448.283	441.487
20160420:09:23:50	23.779	13.02	0.707	23.727	0.25	2.254	0.25	2.05	116.212	300.678	301.248	69.72	52.204	70.262	79.012	354.652	348.962	449.974	443.226
20160420:09:28:50	23.782	12.966	0.704	23.729	0.25	2.251	0.25	2.044	116.068	300.633	301.225	69.773	52.209	70.321	79.068	356.051	350.275	451.744	444.889
20160420:09:33:50	23.78	12.879	0.626	23.734	0.25	2.258	0.25	2.051	115.829	300.691	301.241	69.839	52.187	70.364	79.121	357.382	351.649	453.428	446.628
20160420:09:38:50	23.78	12.814	0.669	23.731	0.25	2.236	0.25	2.046	115.648	300.638	301.237	69.918	52.185	70.411	79.172	358.747	352.962	455.156	448.291
20160420:09:43:50	23.782	12.783	0.669	23.732	0.25	2.255	0.25	2.043	115.565	300.622	301.259	69.993	52.155	70.469	79.227	360.125	354.333	456.9	450.028
20160420:09:48:50	23.784	12.746	0.683	23.734	0.25	2.251	0.25	2.054	115.465	300.675	301.284	70.048	52.2	70.554	79.284	361.473	355.638	458.606	451.68
20160420:09:53:50	23.784	11.785	0.714	23.732	0.25	2.241	0.25	2.033	112.675	300.601	301.216	70.091	52.179	70.63	79.339	362.869	357.011	460.372	453.421
20160420:09:58:50	23.788	11.333	0.728	23.734	0.25	2.224	0.25	2.016	111.343	300.539	301.222	70.141	52.21	70.696	79.398	364.206	358.311	462.065	455.068
20160420:10:03:50	23.789	11.265	0.776	23.732	0.25	2.225	0.25	2.011	111.136	300.561	301.241	70.195	52.185	70.739	79.452	365.586	359.686	463.811	456.81
20160420:10:08:50	23.793	12.387	0.82	23.732	0.25	2.232	0.25	2.016	114.466	300.582	301.2	70.297	52.203	70.789	79.51	366.938	360.988	465.524	458.461
20160420:10:13:50	23.787	12.605	0.799	23.728	0.25	2.248	0.25	2.038	115.077	300.637	301.207	70.37	52.217	70.848	79.572	368.273	362.358	467.215	460.197
20160420:10:18:50	23.782	12.63	0.76	23.726	0.25	2.245	0.25	2.047	115.14	300.682	301.243	70.431	52.227	70.963	79.632	369.662	363.671	468.974	461.863
20160420:10:23:50	23.776	12.606	0.661	23.727	0.25	2.25	0.25	2.042	115.063	300.652	301.174	70.488	52.215	71.021	79.693	370.998	365.033	470.667	463.59
20160420:10:28:50	23.783	12.56	0.791	23.725	0.25	2.244	0.25	2.026	114.945	300.669	301.183	70.59	52.227	71.095	79.759	372.385	366.349	472.424	465.259
20160420:10:33:50	23.787	12.515	0.837	23.725	0.25	2.23	0.25	2.035	114.822	300.597	301.217	70.662	52.226	71.158	79.827	373.707	367.704	474.1	466.977
20160420:10:38:50	23.782	12.479	0.832	23.721	0.25	2.234	0.25	2.031	114.715	300.547	301.22	70.726	52.249	71.273	79.896	375.081	369.023	475.843	468.652
20160420:10:43:50	23.777	12.439	0.734	23.723	0.25	2.233	0.25	2.015	114.593	300.506	301.185	70.795	52.244	71.341	79.969	376.459	370.372	477.589	470.365
20160420:10:48:50	23.78	12.386	0.802	23.721	0.25	2.227	0.25	2.028	114.446	300.571	301.176	70.925	52.235	71.424	80.046	377.776	371.695	479.259	472.043
20160420:10:53:50	23.784	12.353	0.861	23.72	0.25	2.235	0.25	2.037	114.358	300.584	301.228	71.026	52.262	71.549	80.13	379.165	373.037	481.022	473.748
20160420:10:58:50	23.777	12.302	0.782	23.719	0.25	2.224	0.25	2.026	114.203	300.609	301.257	71.091	52.245	71.62	80.212	380.494	374.365	482.707	475.434
20160420:11:03:50	23.773	11.798	0.721	23.72	0.25	2.219	0.25	2.028	112.7	300.65	301.271	71.159	52.254	71.69	80.294	381.881	375.707	484.469	477.139
20160420:11:08:50	23.778	10.986	0.806	23.718	0.25	2.2	0.25	1.999	110.246	300.636	301.361	71.285	52.256	71.805	80.382	383.215	377.038	486.161	478.831
20160420:11:13:50	23.78	10.773	0.844	23.718	0.25	2.186	0.25	2.004	109.572	300.542	301.209	71.368	52.272	71.91	80.472	384.567	378.374	487.878	480.528
20160420:11:18:50	23.783	11.479	0.891	23.717	0.25	2.196	0.25	2.015	111.762	300.531	301.21	71.478	52.271	71.99	80.562	385.939	379.712	489.62	482.229
20160420:11:23:50	23.776	11.865	0.817	23.716	0.25	2.18	0.25	2.03	112.929	300.587	301.197	71.582	52.275	72.08	80.657	387.282	381.039	491.326	483.915
20160420:11:28:50	23.772	11.796	0.73	23.718	0.25	2.181	0.25	2.008	112.72	300.595	301.198	71.672	52.237	72.207	80.754	388.667	382.381	493.085	485.622
20160420:11:33:50	23.774	11.722	0.879	23.709	0.25	2.161	0.25	1.975	112.502	300.591	301.192	71.778	52.245	72.288	80.851	389.996	383.7	494.774	487.301
20160420:11:38:50	23.771	11.641	0.787	23.713	0.25	2.164	0.25	1

Time: day:hh:mm:ss	Stack Pressure: in-Hg	Sat% H2O: Percent	Static: in-H2O	Barometric: in-Hg	Flowmeter1: l/min	Vacuum1: in-Hg	Flowmeter2: l/min	Vacuum2: in-Hg	Stack Temp: degF	Sorbent Temp: degF	Probe Temp: degF	DGM#1 Temp: degF	Condenser Temp: degF	DGM#2 Temp: degF	DAQ Temp: degF	DGM1*: liters STP	DGM2*: liters STP	DGM1: liters nominal	DGM2: liters nominal
20160420:15:08:50	23.741	12.544	0.769	23.685	0.25	2.246	0.25	2.05	114.838	300.804	301.3	75.621	52.479	76.167	84.706	448.261	440.94	569.143	560.43
20160420:15:13:50	23.735	12.588	0.739	23.681	0.25	2.24	0.25	2.024	114.953	300.764	301.403	75.745	52.454	76.246	84.801	449.601	442.3	570.861	562.175
20160420:15:18:51	23.738	12.621	0.748	23.683	0.25	2.245	0.25	2.037	115.05	300.772	301.407	75.815	52.456	76.352	84.891	450.979	443.617	572.628	563.865
20160420:15:23:51	23.742	12.663	0.752	23.687	0.25	2.242	0.25	2.044	115.171	300.735	301.367	75.898	52.473	76.455	84.985	452.351	444.976	574.387	565.609
20160420:15:28:51	23.743	12.7	0.776	23.686	0.25	2.246	0.25	2.053	115.276	300.776	301.37	76.001	52.456	76.529	85.08	453.686	446.288	576.098	567.293
20160420:15:33:51	23.739	12.743	0.811	23.68	0.25	2.248	0.25	2.055	115.391	300.75	301.351	76.1	52.442	76.601	85.169	455.087	447.657	577.896	569.051
20160420:15:38:51	23.733	12.763	0.742	23.678	0.25	2.239	0.25	2.055	115.436	300.782	301.381	76.184	52.446	76.738	85.262	456.412	448.965	579.596	570.731
20160420:15:43:51	23.732	12.783	0.68	23.682	0.25	2.252	0.25	2.055	115.49	300.734	301.359	76.262	52.439	76.814	85.356	457.777	450.336	581.348	572.492
20160420:15:48:51	23.734	12.797	0.64	23.687	0.25	2.255	0.25	2.049	115.533	300.775	301.381	76.383	52.441	76.887	85.446	459.161	451.649	583.124	574.179
20160420:15:53:51	23.741	12.834	0.782	23.684	0.25	2.243	0.25	2.029	115.645	300.729	301.398	76.473	52.456	76.987	85.538	460.5	453.008	584.843	575.925
20160420:15:58:51	23.741	12.862	0.789	23.683	0.25	2.252	0.25	2.037	115.724	300.765	301.419	76.549	52.455	77.102	85.632	461.894	454.313	586.631	577.602
20160420:16:03:51	23.741	12.877	0.783	23.683	0.25	2.248	0.25	2.041	115.764	300.678	301.351	76.661	52.455	77.2	85.725	463.249	455.664	588.372	579.338
20160420:16:08:51	23.744	12.916	0.768	23.687	0.25	2.241	0.25	2.059	115.874	300.704	301.354	76.79	52.454	77.334	85.822	464.589	457.002	590.093	581.058
20160420:16:13:51	23.747	12.972	0.829	23.686	0.25	2.247	0.25	2.069	116.035	300.69	301.344	76.883	52.471	77.427	85.923	465.985	458.319	591.885	582.752
20160420:16:18:51	23.748	13.07	0.875	23.684	0.25	2.258	0.25	2.077	116.302	300.717	301.321	76.999	52.471	77.528	86.023	467.319	459.681	593.6	584.504
20160420:16:23:51	23.747	13.314	0.863	23.683	0.25	2.272	0.25	2.067	116.959	300.757	301.383	77.114	52.488	77.652	86.126	468.69	460.987	595.361	586.184
20160420:16:28:51	23.748	13.352	0.86	23.685	0.25	2.266	0.25	2.077	117.061	300.697	301.338	77.227	52.483	77.737	86.231	470.054	462.346	597.115	587.932
20160420:16:33:51	23.749	13.302	0.803	23.69	0.249	2.257	0.25	2.072	116.931	300.736	301.364	77.345	52.502	77.828	86.338	471.401	463.654	598.846	589.615
20160420:16:38:51	23.749	13.279	0.818	23.689	0.25	2.262	0.25	2.078	116.867	300.743	301.416	77.431	52.505	77.95	86.445	472.793	465.021	600.635	591.374
20160420:16:43:51	23.751	13.056	0.884	23.686	0.25	2.249	0.25	2.052	116.262	300.866	301.429	77.529	52.513	78.05	86.552	474.135	466.33	602.361	593.058
20160420:16:48:51	23.753	12.54	0.955	23.683	0.251	2.252	0.25	2.047	114.843	300.713	301.381	77.622	52.493	78.111	86.654	475.491	467.699	604.106	594.821
20160420:16:53:51	23.751	12.37	0.941	23.682	0.249	2.237	0.25	2.037	114.359	300.737	301.46	77.71	52.526	78.226	86.758	476.875	469.01	605.887	596.509
20160420:16:58:51	23.744	12.833	0.787	23.686	0.251	2.25	0.25	2.026	115.637	300.686	301.36	77.785	52.524	78.34	86.864	478.223	470.37	607.62	598.261
20160420:17:03:51	23.744	13.156	0.838	23.683	0.25	2.249	0.25	2.038	116.529	300.792	301.413	77.891	52.564	78.422	86.962	479.594	471.679	609.385	599.947
20160420:17:08:51	23.745	13.186	0.803	23.686	0.25	2.259	0.25	2.059	116.613	300.797	301.435	78.003	52.571	78.496	87.064	480.962	473.022	611.146	601.679
20160420:17:13:51	23.745	13.214	0.793	23.687	0.25	2.245	0.25	2.074	116.687	300.87	301.421	78.086	52.591	78.608	87.165	482.309	474.373	612.88	603.419
20160420:17:18:51	23.747	13.231	0.773	23.69	0.25	2.245	0.25	2.062	116.734	300.82	301.374	78.139	52.58	78.685	87.248	483.706	475.683	614.678	605.107
20160420:17:23:51	23.747	13.285	0.774	23.69	0.25	2.252	0.25	2.058	116.883	300.849	301.433	78.229	52.597	78.755	87.339	485.049	477.04	616.407	606.855
20160420:17:28:51	23.748	13.3	0.814	23.688	0.25	2.255	0.25	2.058	116.924	300.854	301.412	78.332	52.608	78.832	87.44	486.396	478.348	618.143	608.541
20160420:17:33:51	23.749	13.352	0.809	23.69	0.25	2.268	0.25	2.049	117.065	300.763	301.414	78.397	52.61	78.943	87.532	487.793	479.718	619.941	610.308
20160420:17:38:51	23.75	13.38	0.809	23.691	0.249	2.262	0.25	2.06	117.14	300.821	301.397	78.48	52.628	79.033	87.626	489.124	481.028	621.656	611.996
20160420:17:43:51	23.751	13.329	0.812	23.691	0.25	2.25	0.25	2.058	117.004	300.723	301.375	78.581	52.639	79.101	87.719	490.494	482.401	623.42	613.767
20160420:17:48:51	23.754	12.844	0.814	23.694	0.251	2.271	0.25	2.052	115.681	300.771	301.445	78.676	52.653	79.164	87.808	491.87	483.705	625.193	615.449
20160420:17:53:51	23.754	12.471	0.861	23.69	0.25	2.237	0.25	2.047	114.65	300.741	301.43	78.736	52.671	79.256	87.898	493.213	485.071	626.924	617.211
20160420:17:58:51	23.754	12.344	0.868	23.69	0.25	2.233	0.25	2.041	114.289	300.669	301.355	78.784	52.684	79.343	87.986	494.607	486.382	628.72	618.902
20160420:18:03:51	23.756	13.032	0.836	23.694	0.25	2.245	0.25	2.045	116.207	300.77	301.422	78.85	52.699	79.408	88.074	495.969	487.724	630.476	620.633
20160420:18:08:51	23.757	13.144	0.794	23.699	0.25	2.25	0.25	2.061	116.516	300.789	301.422	78.976	52.717	79.478	88.154	497.3	489.079	632.191	622.382
20160420:18:13:51	23.756	13.132	0.766	23.7	0.25	2.255	0.25	2.043	116.483	300.785	301.42	79.027	52.721	79.541	88.234	498.704	490.389	634	624.071
20160420:18:18:51	23.756	13.154	0.777	23.699	0.25	2.255	0.25	2.052	116.542	300.852	301.449	79.065	52.753	79.622	88.314	500.034	491.748	635.715	625.825
20160420:18:23:51	23.758	13.146	0.767	23.701	0.25	2.269	0.25	2.055	116.524	300.824	301.419	79.117	52.797	79.682	88.392	501.398	493.061	637.472	627.519
20160420:18:28:51	23.758	13.155	0.796	23.7	0.249	2.255	0.25	2.057	116.55	300.834	301.41	79.176	52.811	79.736	88.467	502.779	494.429	639.254	629.284
20160420:18:33:51	23.76	13.161	0.801	23.701	0.25	2.264	0.25	2.046	116.567	300.861	301.418	79.263	52.843	79.793	88.54	504.121	495.735	640.983	630.97
20160420:18:38:51	23.76	13.156	0.797	23.701	0.25	2.263	0.25	2.054	116.554	300.897	301.462	79.307	52.864	79.876	88.614	505.508	497.107	642.772	632.741
20160420:18:43:51	23.762	13.165	0.8	23.703	0.25	2.264	0.25	2.058	116.58	300.921	301.478	79.358	52.88	79.926	88.683	506.877	498.404	644.537	634.415
20160420:18:48:51	23.764	13.171	0.784	23.706	0.251	2.286	0.25	2.046	116.598	300.857	301.441	79.396	52.889	79.968	88.745	508.227	499.769	646.278	636.177
20160420:18:53:51	23.766	12.473	0.815	23.706	0.25	2.264	0.25	2.042	114.67	300.868	301.512	79.413	52.899	79.992	88.805	509.627	501.104	648.083	637.9
20160420:18:58:51	23.77	12.307	0.84	23.708	0.25	2.249	0.25	2.045	114.206	300.863	301.497	79.447	52.901	80.016	88.861	510.977	502.424	649.824	639.603
20160420:19:03:51	23.769	12.44	0.816	23.709	0.25	2.224	0.25	2.042	114.577	300.76	301.436	79.465	52.922	80.05	88.916	512.315	503.778	651.548	641.352
20160420:19:08:51	23.768	13.129	0.792	23.71	0.25	2.25	0.25	2.044	116.493	300.816	301.458	79.475	52.921	80.066	88.964	513.715	505.093	653.354	643.049
20160420:19:13:51	23.77	13.181	0.815	23.71	0.25	2.258	0.25	2.039	116.636	300.907	301.526	79.524	52.944	80.097	89.01	515.053	506.463	655.08	644.818
20160420:19:18:51	23.769	13.241	0.78	23.712	0.25	2.261	0.25	2.039	116.796	300.886	301.482	79.525	52.938	80.106	89.05	516.421	507.771	656.843	646.506
20160420:19:23:51	23.769	13.304	0.775	23.712	0.25	2.259	0.25	2.044	116.965	300.88	301.499	79.529	52.962	80.123	89.083	517.811	509.149	658.635	648.284
20160420:19:28:51	23.771	13.301	0.786	23.713	0.25	2.268	0.25	2.044	116.96	300.844	301.47	79.532	52.947	80.108	89.114	519.154	510.459	660.367	649.976
20160420:19:33:51	23.769	13.292	0.774	23.712	0.25	2.263	0.25	2.057	116.934	300.86	301.502	79.543	52.974	80.142	89.144	520.538	511.82	662.152	651.731
20160420:19:38:51	23.771	13.273	0.771	23.714	0.25	2.261	0.25	2.06	116.884	300.844	301.486	79.528	52.968	80.131	89.166	521.9	513.136	663.907	653.43
20160420:19:43:51	23.77	13.25	0.744	23.716	0.25	2.256	0.25	2.054	116.823	300.871	301.489	79.566	52.973	80.137	89.189	523.25	514.473	665.648	655.156
20160420:19:48:51	23.772	13.256	0.731	23.719	0.25	2.255	0.25	2.048	116.842	300.854	301.507	79.552	52.976	80.146	89.208	524.65	515.837	667.452	656.915
20160420:19:53:51	23.774	13.076	0.734	23.72	0.25	2.261	0.25	2.06	116.352	300.833	301.453	79.529	52.97	80.135	89.223	526.003	517.145	669.196	658.603
20160420:19:58:51	23.778	12.454	0.728	23.724	0.25	2.249	0.25	2.052	114.637	300.86	301.513	79.521	52.949	80.11	89.235	527.342	518.508	670.922	660.363
20160420:20:03:51	23.779	12.377	0.744	23.725	0.25	2.255	0.25	2.053	114.42	300.816	301.497	79.481	52.923	80.087	89.244	528.751	519.823	672.737	662.058
20160420:20:08:51	23.783	12.855	0.763	23.726	0.25	2.263	0.25	2.065	115.751	300.817	301.546	79.471	52.914	80.073	89.248	530.085	521.196	674.456	663.829
20160420:20:13:51	23.779	13.365	0.715	23.727	0.25	2.265	0.25	2.052	117.143	300.857	301.512	79.449	52.91	80.045	89.247	531.45	522.504	676.215	665.517
20160420:20:18:51	23.78	13.388	0.715	23.727	0.25	2.271	0.25	2.057	117.206	300.86	301.502	79.422	52.905	80.032	89.24	532.849	523.879	678.017	667.289
20160420:20:23:51	23.781	13.401	0.713	23.728	0.25	2.277	0.25	2.069	117.24	300.9	301.494	79.416	52.899	80.021	89.228	534.194	525.192	679.75	668.983
20160420:20:28:51	23.78	13.388	0.657	23.731	0.25	2.272	0.25	2.086	117.206	300.905	301.507	79.404	52.898	80.009	89.215	535.575	526.536	681.528	670.716
20160420:20:33:51	23.785	13.404	0.654	23.737	0.25	2.272	0.25	2.094	117.256	300.965	301.568	79.378	52.895	79.989	89.198	536.941	527.896	683.287	672.47
20160420:20:38:51	23.79	13.365	0.663	23.742	0.25	2.266	0.25	2.064	117.162	300.9	301.542	79.311	52.836	79.929	89.176	538.296	529.209	685.031	674.162
20160420:20:43:51	23.793	13.388	0.682	23.743	0.25	2.267	0.25	2.068	117.227	300.901	301.528	79.306	52.851	79.92	89.157	539.697	530.573	686.835	675.919
20160420:20:48:51	23.791	13.401	0.645	23.744	0.25	2.262	0.25	2.062	117.258	300.906	301.485	79.298	52.85	79.913	89.134	541.048	531.889	688.574	677.615
20160420:20:53:51	23.792	13.401	0.66	23.744	0.25	2.266	0.25	2.05	117.258	300.883	301.483	79.193	52.77	79.808	89.11	542.391	533.26	690.302	679.382
20160420:20:58:51	23.795	13.131	0.682	23.745	0.25	2.266	0.25	2.051	116.528	300.917	301.544	79.191	52.837	79.807	89.085	543.797	534.569	692.111	681.068
20160420:21:03:51	23.796	12.753	0.694	23.745	0.25	2.255	0.25	2.052	115.504	300.891	301.549	79.17	52.822	79.788	89.061	545.13	535.945	693.826	682.84
20160420:21:08:51	23.799	12.589	0.733	23.745	0.25	2.26	0.25	2.038	115.048	300.821	301.538	79.116	52.754	79.74	89.034	546.501	537.247	695.591	684.517
20160420:21:13:51	23.799	13.235	0.696	23.748	0.25	2.251	0.25	2.052	116.818	300.83	301.51	79.096	52.808	79.735	89.005	547.895	538.606	697.383	686.267
20160420:21:18:51	23.803	13.406	0.731	23.75	0.25	2.257	0.25	2.069	117.29	300.851	301.489	79.035	52.749	79.672	88.975	549.24	539.952	699.113	688
20160420:21:23:51	23.802	13.41	0.701	23.751	0.25	2.259	0.25	2.072	117.299	300.934	301.533	79.026	52.749	79.66	88.947	550.626	541.268	700.896	689.695
20160420:21:28:51	23.802	13.405	0.663	23.753	0.25	2.262	0.25	2.064	117.284	300.954	301.55	78.989	52.744	79.582	88.918	551.996	542.629	702.657	691.447
20160420:21:33:51	23.802	13.391	0.635	23.755	0.25	2.259	0.25	2.058	117.248	300.938	301.525	78.967	52.741	79.539	88.884	553.334	543.942	704.378	693.137
20160420:21:38:51	23.804	13.363	0.65	23.756	0.25	2.253	0.25	2.073	117.175	300.903	301.512	78.912	52.74	79.502	88.855	554.73	545.318	706.172	694.908
20160420:21:43:51	23.809	13.292	0.716	23.756	0.25	2.259	0.25	2.072	116.993	300.98	301.566	78.848	52.743	79.469	88.821	556.077	546.633	707.904	696.6
20160420:21:48:51	23.811	13.24	0.695	23.76	0.25	2.256	0.25	2.055	116.857	300.981	301.593	78.802	52.723	79.432	88.788	557.429	548.008	709.641	698.368
20160420:21:53:51	23.811	13.216	0.67	23.761	0.25	2.256	0.25	2.066	116.791	300.974	301.541	78.751	52.741	79.385	88.75	558.831	549.321	711.443	700.058
20160420:21:58:51	23.814	13.195	0.693	23.763	0.25	2.26	0.25	2.061	116.738	300.936	301.536	78.712	52.733	79.341	88.714	560.182	550.685	713.178	701.812
20160420:22:03:51	23.816	13.226	0.751	23.761	0.25	2.263	0.25	2.06	116.824	300.996	301.599	78.684	52.742	79.302	88.671	561.554	552.006	714.941	703.511
20160420:22:08:51	23.818	12.499	0.724	23.765	0.25	2.257	0.25	2.05	114.822	300.904	301.512	78.617	52.726	79.19	88.626	562.927	553.347	716.704	705.235
20160420:22:13:51	23.816	12.32	0.734	23.762	0.25	2.239	0.25	2.042	114.311	300.871	301.581	78.53	52.709	79.149	88.576	564.28	554.709	718.441	706.987
20160420:22:18:51	23.818	12.548	0.76	23.762	0.25	2.246	0.25	2.029	114.95	300.896	301.536	78.46	52.715	79.097	88.524	565.68	556.018	720.239	708.669
20160420:22:23:51	23.817	13.183	0.757	23.761	0.25	2.276	0.25	2.047	116.712	300.912	301.569	78.404	52.692	79.038	88.469	567.038	557.382	721.983	710.423
20160420:22:28:51	23.817	13.203	0.754	23.761	0.25	2.268	0.25	2.053	116.765	300.933	301.593	78.352	52.697	78.981	88.413	568.38	558.7	723.706	712.117
20160420:22:33:51	23.817	13.209	0.753	23.761	0.25	2.261	0.25	2.063	116.78	300.957	301.584	78.296	52.693	78.865	88.354	569.789	560.075	725.515	713.883
20160420:22:38:51	23.819	13.175	0.746	23.764	0.25	2.26	0.25	2.059	116.693	300.926	301.525	78.199	52.681	78.809	88.291	571.125	561.386	727.23	715.568
20160420:22:43:51	23.819	13.145	0.765	23.763	0.25	2.256	0.25	2.059	116.614	300.919	301.552	78.135	52.688	78.755	88.228	572.496	562.762	728.989	717.336
20160420:22:48:51	23.821	13.038	0.749	23.766	0.25	2.261	0.25	2.071	116.321	300.956	301.54	78.085	52.68	78.706	88.164	573.892	564.068	730.78	719.013
20160420:22:53:51	23.819	12.299	0.748	23.765	0.25	2.247	0.25	2.049	114.257	300.918	301.527	78.032	52.686	78.652	88.101	575.234	565.436	732.502	720.771
20160420:22:58:51	23.823	12.136	0.813	23.763	0.25	2.245	0.25	2.052	113.792	300.874	301.538	77.972	52.688	78.557	88.033	576.632	566.763	734.294	722.476
20160420:23:03:51	23.822	12.46	0.808	23.762	0.25	2.234	0.25	2.05	114.706	300.846	301.578	77.88	52.679	78.492	87.966	578.005	568.1	736.056	724.192
20160420:23:08:51	23.822	13.053	0.762	23.766	0.25	2.268	0.25	2.073	116.366	300.821	301.494	77.809	52.597	78.442	87.901	579.342	569.466	737.77	725.945
20160420:23:13:51	23.822	13.108	0.795	23.764	0.25	2.26	0.25	2.048	116.516	300.863	301.505	77.755	52.295	78.399	87.837	580.747	570.776	739.572	727.628
20160420:23:18:51	23.825	13.147	0.821	23.764	0.25	2.255	0.25	2.056	116.625	300.896	301.5	77.705	52.299	78.36	87.776	582.079	572.139	741.28	729.378
20160420:23:23:51	23.824	13.164	0.809	23.764	0.25	2.245	0.25	2.059	116.671	300.87	301.46	77.66	52.275	78.317	87.717	583.439	573.457	743.024	731.07
20160420:23:28:51	23.822	13.143	0.806	23.763	0.25	2.251	0.25	2.059	116.611	300.884	301.526	77.61	52.28	78.256	87.66	584.836	574.83	744.815	732.831
20160420:23:33:51	23.823	13.121	0.815	23.763	0.25	2.259	0.25	2.051	116.554	300.917	301.567	77.538	52.274	78.178	87.602	586.178	576.14	746.535	734.513
20160420:23:38:51	23.824	13.103	0.84	23.762	0.25	2.266	0.25	2.055	116.507	300.884	301.477	77.478	52.257	78.126	87.546	587.573	577.511	748.322	736.273
20160420:23:43:51	23.822	13.095	0.81	23.762	0.25	2.259	0.25	2.051	116.48	300.876	301.486	77.451	52.253	78.083	87.495	588.948	578.825	750.085	737.959
20160420:23:48:51	23.822	13.087	0.827	23.761	0.25	2.258	0.25	2.044	116.458	300.884	301.468	77.42	52.255	78.046	87.443	590.28	580.191	751.793	739.711
20160420:23:53:51	23.823	13.08	0.815	23.763	0.25	2.257	0.25	2.047	116.442	300.888	301.465	77.382	52.261	78.004	87.389	591.686	581.506	753.594	741.398
20160420:23:58:51	23.823	12.574	0.811	23.763	0.25	2.257	0.25	2.052	115.03	300.881	301.499	77.343	52.246	77.972	87.337	593.022	582.853	755.306	743.126
20160421:00:03:51	23.824	12.167	0.802	23.765	0.25	2.241	0.25	2.056	113.883	300.79	301.463	77.292	52.242	77.89	87.287	594.385	584.21	757.052	744.867
20160421:00:08:51	23.825	12.075	0.864	23.762	0.25	2.23	0.25	2.051	113.618	300.715	301.434	77.227	52.221	77.848	87.241	595.781	585.526	758.841	746.555
20160421:00:13:51	23.824	12.864	0.835	23.763	0.25	2.249	0.25	2.042	115.847	300.842	301.536	77.182	52.26	77.82	87.211	597.126	586.888	760.563	748.301
20160421:00:18:51	23.824	13.021	0.83	23.763	0.25	2.262	0.25	2.057	116.283	300.897	301.55	77.142	52.229	77.784	87.163	598.525	588.202	762.356	749.987
20160421:00:23:51	23.82	13.029	0.772	23.763	0.25	2.251	0.25	2.062	116.298	300.913	301.486	77.11	52.244	77.757	87.116	599.903	589.579	764.12	751.752
20160421:00:28:51	23.819	13.028	0.774	23.762	0.25	2.253	0.25	2.045	116.293	300.89	301.451	77.075	52.235	77.721	87.067	601.236	590.894	765.828	753.438
20160421:00:33:51	23.817	13.012	0.741	23.762	0.25	2.26	0.25	2.05	116.248	300.904	301.49	76.997	52.187	77.673	87.018	602.645	592.269	767.631	755.201
20160421:00:38:51	23.814	13.023	0.669	23.764	0.25	2.266	0.25	2.066	116.271	300.881	301.497	76.97	52.183	77.633	86.971	603.979	593.58	769.341	756.882
20160421:00:43:51	23.814	13.033	0.664	23.765	0.25	2.262	0.25	2.053	116.299	300.97	301.528	76.939	52.201	77.615	86.926	605.343	594.958	771.087	758.648
20160421:00:48:51	23.817	13.035	0.717	23.765	0.25	2.261	0.25	2.056	116.311	300.902	301.512	76.885	52.185	77.506	86.881	606.742	596.257	772.878	760.314
20160421:00:53:51	23.829	13.041	0.877	23.764	0.25	2.259	0.25	2.066	116.344	300.908	301.489	76.85	52.202	77.473	86.832	608.086	597.621	774.598	762.062
20160421:00:58:51	23.83	13.051	0.958	23.76	0.25	2.265	0.25	2.079	116.374	300.878	301.48	76.804	52.211	77.429	86.781	609.483	598.962	776.387	763.78
20160421:01:03:51	23.833	12.981	1.006	23.759	0.25	2.258	0.25	2.053	116.183	300.891	301.514	76.75	52.168	77.389	86.731	610.855	600.29	778.143	765.483
20160421:01:08:51	23.837	12.158	1.08	23.757	0.25	2.244	0.25	2.049	113.875	300.779	301.443	76.663	52.16	77.334	86.679	612.193	601.659	779.856	767.237
20160421:01:13:51	23.824	12.039	0.889	23.759	0.25	2.242	0.25	2.038	113.51	300.773	301.476	76.613	52.151	77.297	86.628	613.602	602.97	781.659	768.917
20160421:01:18:51	23.822	12.371	0.873	23.758	0.25	2.238	0.25	2.041

Time: day:hh:mm:ss	Stack Pressure: in-Hg	Sat% H2O: Percent	Static: in-H2O	Barometric: in-Hg	Flowmeter1: l/min	Vacuum1: in-Hg	Flowmeter2: l/min	Vacuum2: in-Hg	Stack Temp: degF	Sorbent Temp: degF	Probe Temp: degF	DGM#1 Temp: degF	Condenser Temp: degF	DGM#2 Temp: degF	DAQ Temp: degF	DGM1*: liters STP	DGM2*: liters STP	DGM1: liters nominal	DGM2: liters nominal
20160421:04:48:51	23.816	12.75	0.702	23.764	0.25	2.257	0.25	2.076	115.525	300.835	301.468	74.883	52.057	75.519	84.819	672.361	660.65	856.743	842.707
20160421:04:53:51	23.82	12.784	0.738	23.765	0.25	2.262	0.25	2.045	115.625	300.852	301.472	74.845	52.034	75.481	84.772	673.759	662.031	858.526	844.47
20160421:04:58:51	23.819	12.82	0.71	23.767	0.25	2.266	0.25	2.053	115.724	300.776	301.41	74.806	52.035	75.442	84.727	675.114	663.346	860.254	846.148
20160421:05:03:51	23.823	12.834	0.753	23.768	0.25	2.274	0.25	2.054	115.768	300.842	301.474	74.786	52.041	75.416	84.685	676.459	664.722	861.969	847.906
20160421:05:08:51	23.822	12.841	0.763	23.766	0.25	2.275	0.25	2.054	115.784	300.825	301.453	74.736	52.022	75.354	84.64	677.861	666.036	863.756	849.583
20160421:05:13:51	23.821	12.852	0.739	23.767	0.25	2.271	0.25	2.059	115.814	300.835	301.458	74.688	52.024	75.295	84.597	679.208	667.416	865.472	851.344
20160421:05:18:51	23.823	12.867	0.746	23.769	0.25	2.269	0.25	2.052	115.86	300.81	301.43	74.666	52.031	75.254	84.553	680.591	668.724	867.235	853.013
20160421:05:23:51	23.822	12.115	0.723	23.769	0.25	2.257	0.25	2.042	113.727	300.748	301.413	74.586	52.019	75.209	84.513	681.974	670.097	868.998	854.765
20160421:05:28:51	23.82	12.006	0.699	23.769	0.25	2.24	0.25	2.046	113.411	300.73	301.452	74.566	52.037	75.187	84.47	683.312	671.421	870.704	856.455
20160421:05:33:51	23.822	12.807	0.726	23.768	0.25	2.237	0.25	2.054	115.681	300.772	301.464	74.533	52.041	75.15	84.425	684.717	672.772	872.494	858.179
20160421:05:38:51	23.829	13.023	0.786	23.771	0.25	2.253	0.25	2.07	116.294	300.753	301.444	74.468	52.017	75.095	84.381	686.05	674.131	874.193	859.912
20160421:05:43:51	23.835	13.046	0.896	23.769	0.25	2.254	0.25	2.06	116.369	300.765	301.409	74.416	52.025	75.065	84.337	687.428	675.451	875.948	861.596
20160421:05:48:51	23.84	13.044	0.959	23.769	0.25	2.266	0.25	2.064	116.368	300.783	301.402	74.356	52.018	75.028	84.294	688.815	676.816	877.715	863.336
20160421:05:53:51	23.835	13.027	0.848	23.772	0.25	2.271	0.25	2.068	116.316	300.74	301.421	74.307	52.006	74.938	84.252	690.165	678.142	879.435	865.028
20160421:05:58:51	23.835	13.173	0.83	23.774	0.25	2.277	0.25	2.086	116.711	300.834	301.517	74.304	52.016	74.925	84.212	691.569	679.512	881.222	866.774
20160421:06:03:51	23.827	13.3	0.726	23.774	0.25	2.279	0.25	2.099	117.04	300.775	301.468	74.26	52.016	74.879	84.173	692.923	680.832	882.946	868.457
20160421:06:08:51	23.842	13.253	0.885	23.777	0.25	2.278	0.25	2.101	116.938	300.788	301.439	74.243	52.032	74.863	84.136	694.272	682.207	884.665	870.211
20160421:06:13:51	23.847	13.264	0.929	23.779	0.25	2.281	0.25	2.067	116.974	300.734	301.374	74.205	52.026	74.828	84.102	695.675	683.521	886.45	871.885
20160421:06:18:51	23.847	13.18	0.919	23.78	0.25	2.261	0.25	2.064	116.749	300.757	301.454	74.192	52.017	74.811	84.07	697.017	684.903	888.159	873.647
20160421:06:23:51	23.847	13.115	0.929	23.779	0.25	2.255	0.25	2.05	116.573	300.696	301.419	74.148	52.021	74.765	84.039	698.414	686.209	889.937	875.31
20160421:06:28:51	23.85	13.101	0.915	23.782	0.25	2.255	0.25	2.055	116.537	300.797	301.438	74.061	51.988	74.723	84.007	699.776	687.585	891.67	877.064
20160421:06:33:51	23.849	13.1	0.916	23.782	0.25	2.262	0.25	2.043	116.536	300.775	301.431	74.035	52.015	74.708	83.977	701.119	688.891	893.38	878.727
20160421:06:38:51	23.848	13.08	0.893	23.782	0.25	2.256	0.25	2.058	116.478	300.801	301.441	74.019	52.01	74.683	83.951	702.514	690.262	895.154	880.474
20160421:06:43:51	23.856	13.099	1.011	23.782	0.25	2.257	0.25	2.06	116.543	300.71	301.395	73.97	51.987	74.597	83.923	703.855	691.572	896.861	882.143
20160421:06:48:51	23.855	13.228	0.981	23.783	0.25	2.27	0.25	2.06	116.89	300.745	301.363	73.969	51.998	74.594	83.895	705.244	692.934	898.628	883.878
20160421:06:53:51	23.85	13.189	0.921	23.783	0.25	2.263	0.25	2.068	116.776	300.731	301.399	73.924	51.978	74.551	83.868	706.61	694.268	900.365	885.577
20160421:06:58:51	23.855	13.163	0.976	23.783	0.25	2.271	0.25	2.068	116.714	300.743	301.415	73.912	51.978	74.535	83.839	707.944	695.605	902.063	887.28
20160421:07:03:51	23.857	13.184	0.988	23.784	0.25	2.257	0.25	2.075	116.775	300.832	301.431	73.887	51.99	74.51	83.81	709.343	696.96	903.843	889.006
20160421:07:08:51	23.857	13.133	0.966	23.786	0.25	2.256	0.25	2.066	116.637	300.823	301.365	73.856	51.964	74.467	83.781	710.683	698.279	905.546	890.684
20160421:07:13:51	23.863	13.102	1.026	23.787	0.25	2.265	0.25	2.065	116.561	300.787	301.39	73.846	51.968	74.448	83.752	712.072	699.652	907.313	892.432
20160421:07:18:51	23.863	13.13	1.042	23.787	0.25	2.273	0.25	2.075	116.638	300.754	301.377	73.78	51.908	74.355	83.721	713.443	700.959	909.056	894.096
20160421:07:23:51	23.862	13.107	1.037	23.786	0.25	2.281	0.25	2.072	116.575	300.828	301.477	73.765	51.957	74.35	83.687	714.774	702.323	910.748	895.833
20160421:07:28:51	23.864	13.105	1.058	23.786	0.25	2.276	0.25	2.059	116.569	300.795	301.465	73.677	51.893	74.286	83.657	716.179	703.642	912.535	897.511
20160421:07:33:51	23.864	13.173	1.056	23.786	0.25	2.255	0.25	2.065	116.754	300.82	301.499	73.67	51.937	74.287	83.622	717.521	705.015	914.241	899.259
20160421:07:38:51	23.87	13.182	1.151	23.786	0.25	2.259	0.25	2.052	116.789	300.788	301.401	73.622	51.872	74.229	83.586	718.902	706.331	915.996	900.934
20160421:07:43:51	23.873	13.186	1.173	23.787	0.25	2.259	0.25	2.067	116.802	300.789	301.38	73.617	51.887	74.224	83.55	720.283	707.706	917.752	902.684
20160421:07:48:51	23.876	12.55	1.174	23.79	0.25	2.251	0.25	2.064	115.052	300.703	301.298	73.582	51.849	74.193	83.512	721.614	709.019	919.444	904.355
20160421:07:53:51	23.879	12.489	1.233	23.788	0.25	2.251	0.25	2.043	114.887	300.696	301.362	73.568	51.841	74.179	83.475	723.02	710.395	921.231	906.105
20160421:07:58:51	23.884	12.376	1.292	23.789	0.25	2.241	0.25	2.044	114.573	300.702	301.361	73.535	51.841	74.152	83.439	724.361	711.705	922.935	907.773
20160421:08:03:51	23.882	13.125	1.241	23.791	0.25	2.247	0.25	2.062	116.646	300.706	301.394	73.541	51.832	74.15	83.405	725.738	713.079	924.685	909.521
20160421:08:08:51	23.882	13.343	1.216	23.792	0.25	2.258	0.25	2.064	117.237	300.757	301.449	73.53	51.807	74.134	83.378	727.118	714.396	926.439	911.195
20160421:08:13:51	23.886	13.365	1.296	23.791	0.25	2.268	0.25	2.061	117.305	300.789	301.39	73.537	51.814	74.152	83.354	728.45	715.771	928.131	912.945
20160421:08:18:51	23.884	13.375	1.322	23.787	0.25	2.259	0.25	2.058	117.327	300.761	301.331	73.546	51.814	74.138	83.332	729.85	717.071	929.911	914.6
20160421:08:23:51	23.892	13.316	1.451	23.785	0.25	2.266	0.25	2.063	117.18	300.794	301.382	73.536	51.776	74.142	83.311	731.189	718.449	931.613	916.353
20160421:08:28:51	23.89	13.254	1.46	23.782	0.25	2.258	0.25	2.057	117.011	300.839	301.421	73.567	51.777	74.163	83.299	732.565	719.768	933.363	918.032
20160421:08:33:51	23.887	13.245	1.469	23.779	0.25	2.262	0.25	2.057	116.984	300.867	301.467	73.591	51.755	74.196	83.291	733.946	721.119	935.119	919.752
20160421:08:38:51	23.881	13.214	1.416	23.776	0.25	2.254	0.25	2.054	116.891	300.833	301.413	73.628	51.765	74.215	83.287	735.274	722.46	936.807	921.459
20160421:08:43:51	23.873	13.207	1.327	23.776	0.25	2.248	0.25	2.051	116.86	300.785	301.382	73.652	51.74	74.25	83.289	736.676	723.79	938.591	923.152
20160421:08:48:51	23.875	12.598	1.353	23.776	0.25	2.241	0.25	2.051	115.185	300.829	301.491	73.695	51.739	74.268	83.296	738.02	725.149	940.3	924.883
20160421:08:53:51	23.877	12.472	1.364	23.777	0.25	2.236	0.25	2.056	114.834	300.741	301.409	73.749	51.728	74.308	83.307	739.397	726.464	942.052	926.558
20160421:08:58:51	23.874	12.341	1.322	23.777	0.25	2.235	0.25	2.029	114.456	300.672	301.368	73.832	51.742	74.352	83.327	740.771	727.833	943.8	928.301
20160421:09:03:51	23.87	13.029	1.295	23.775	0.25	2.244	0.25	2.042	116.369	300.748	301.455	73.912	51.742	74.476	83.353	742.1	729.143	945.491	929.97
20160421:09:08:51	23.864	13.201	1.257	23.772	0.25	2.246	0.25	2.038	116.83	300.687	301.288	73.94	51.738	74.504	83.382	743.502	730.503	947.276	931.703
20160421:09:13:51	23.862	13.222	1.226	23.772	0.25	2.257	0.25	2.041	116.885	300.794	301.411	74.034	51.751	74.595	83.416	744.839	731.819	948.978	933.38
20160421:09:18:51	23.86	13.238	1.208	23.772	0.25	2.246	0.25	2.056	116.923	300.791	301.376	74.102	51.756	74.671	83.461	746.214	733.187	950.728	935.124
20160421:09:23:51	23.858	13.248	1.238	23.767	0.25	2.245	0.25	2.046	116.948	300.779	301.38	74.206	51.754	74.764	83.511	747.586	734.5	952.476	936.797
20160421:09:28:51	23.856	13.264	1.194	23.768	0.25	2.248	0.25	2.048	116.988	300.729	301.35	74.291	51.786	74.835	83.566	748.915	735.866	954.169	938.539
20160421:09:33:51	23.859	13.418	1.239	23.768	0.25	2.253	0.25	2.053	117.404	300.773	301.373	74.366	51.784	74.917	83.627	750.312	737.178	955.948	940.212
20160421:09:38:51	23.858	13.441	1.243	23.767	0.25	2.257	0.25	2.066	117.463	300.752	301.347	74.485	51.793	75.02	83.693	751.657	738.547	957.663	941.959
20160421:09:43:51	23.863	13.394	1.281	23.769	0.25	2.241	0.25	2.038	117.348	300.729	301.299	74.587	51.802	75.118	83.767	753.033	739.852	959.417	943.624
20160421:09:48:51	23.863	12.754	1.267	23.77	0.25	2.237	0.25	2.039	115.603	300.721	301.377	74.722	51.808	75.211	83.849	754.405	741.224	961.165	945.374
20160421:09:53:51	23.864	12.657	1.289	23.769	0.25	2.235	0.25	2.036	115.334	300.661	301.33	74.813	51.826	75.306	83.929	755.728	742.523	962.852	947.032
20160421:09:58:51	23.865	12.499	1.304	23.769	0.25	2.227	0.25	2.013	114.894	300.638	301.381	74.9	51.818	75.411	84.015	757.126	743.895	964.635	948.784
20160421:10:03:51	23.866	13.153	1.342	23.767	0.25	2.236	0.25	2.04	116.7	300.662	301.361	75.054	51.869	75.512	84.106	758.466	745.206	966.344	950.457
20160421:10:08:51	23.865	13.27	1.316	23.769	0.25	2.235	0.25	2.053	117.018	300.717	301.384	75.132	51.842	75.595	84.198	759.839	746.567	968.096	952.195
20160421:10:13:51	23.859	13.273	1.255	23.767	0.25	2.251	0.25	2.054	117.017	300.83	301.446	75.203	51.863	75.709	84.293	761.212	747.862	969.848	953.85
20160421:10:18:51	23.86	13.267	1.265	23.767	0.25	2.234	0.25	2.033	117.001	300.878	301.414	75.313	51.859	75.806	84.391	762.537	749.234	971.539	955.602
20160421:10:23:51	23.863	13.25	1.252	23.771	0.25	2.236	0.25	2.046	116.962	300.858	301.45	75.426	51.864	75.882	84.492	763.94	750.549	973.33	957.282
20160421:10:28:51	23.862	13.251	1.286	23.767	0.25	2.245	0.25	2.045	116.962	300.855	301.385	75.511	51.871	75.984	84.585	765.277	751.895	975.037	959.002
20160421:10:33:51	23.859	12.917	1.258	23.767	0.25	2.243	0.25	2.04	116.04	300.812	301.438	75.583	51.852	76.091	84.681	766.656	753.238	976.798	960.718
20160421:10:38:51	23.863	12.548	1.316	23.766	0.25	2.226	0.25	2.028	115.03	300.788	301.447	75.701	51.898	76.171	84.778	768.026	754.561	978.548	962.41
20160421:10:43:51	23.86	12.456	1.263	23.768	0.25	2.23	0.25	2.029	114.766	300.737	301.409	75.774	51.869	76.244	84.871	769.363	755.924	980.256	964.152
20160421:10:48:51	23.86	12.834	1.283	23.766	0.25	2.225	0.25	2.031	115.815	300.768	301.464	75.829	51.872	76.335	84.964	770.765	757.229	982.046	965.821
20160421:10:53:51	23.862	13.275	1.319	23.765	0.25	2.24	0.25	2.035	117.028	300.743	301.362	75.905	51.908	76.439	85.058	772.088	758.585	983.737	967.556
20160421:10:58:51	23.861	13.319	1.297	23.766	0.25	2.238	0.25	2.041	117.142	300.805	301.458	75.997	51.869	76.503	85.147	773.46	759.905	985.491	969.244
20160421:11:03:51	23.859	13.335	1.284	23.764	0.25	2.24	0.25	2.041	117.181	300.823	301.462	76.098	51.897	76.569	85.235	774.833	761.265	987.246	970.985
20160421:11:08:51	23.858	13.369	1.255	23.766	0.25	2.241	0.25	2.052	117.272	300.795	301.362	76.175	51.92	76.653	85.326	776.18	762.574	988.969	972.66
20160421:11:13:51	23.859	13.346	1.261	23.766	0.25	2.25	0.25	2.066	117.212	300.87	301.465	76.246	51.91	76.768	85.412	777.575	763.94	990.752	974.408
20160421:11:18:51	23.859	13.125	1.34	23.761	0.25	2.234	0.25	2.041	116.612	300.774	301.393	76.34	51.925	76.827	85.496	778.913	765.25	992.463	976.085
20160421:11:23:51	23.86	12.793	1.368	23.759	0.25	2.234	0.25	2.036	115.708	300.759	301.428	76.432	51.92	76.891	85.581	780.268	766.624	994.196	977.844
20160421:11:28:51	23.858	12.628	1.349	23.759	0.25	2.234	0.25	2.046	115.244	300.725	301.379	76.503	51.914	76.985	85.668	781.656	767.928	995.972	979.515
20160421:11:33:51	23.855	12.897	1.34	23.757	0.25	2.216	0.25	2.034	115.979	300.749	301.398	76.559	51.93	77.086	85.752	782.991	769.297	997.681	981.269
20160421:11:38:51	23.853	13.384	1.284	23.758	0.25	2.232	0.25	2.045	117.305	300.799	301.448	76.633	51.925	77.153	85.838	784.387	770.603	999.469	982.942
20160421:11:43:51	23.852	13.369	1.291	23.757	0.25	2.246	0.25	2.058	117.262	300.806	301.46	76.729	51.911	77.264	85.924	785.744	771.967	1001.206	984.69
20160421:11:48:51	23.851	13.426	1.32	23.754	0.25	2.253	0.25	2.048	117.415	300.857	301.451	76.798	51.945	77.343	86.004	787.087	773.274	1002.926	986.365
20160421:11:53:51	23.849	13.417	1.323	23.752	0.25	2.257	0.25	2.057	117.388	300.871	301.444	76.862	51.949	77.407	86.085	788.48	774.627	1004.709	988.1
20160421:11:58:51	23.847	13.368	1.31	23.751	0.25	2.251	0.25	2.056	117.253	300.807	301.42	76.924	51.932	77.471	86.162	789.821	775.968	1006.428	989.82
20160421:12:03:51	23.847	13.347	1.354	23.747	0.25	2.241	0.25	2.064	117.196	300.815	301.427	77.02	51.925	77.561	86.243	791.196	777.289	1008.189	991.513
20160421:12:08:51	23.846	13.324	1.342	23.748	0.25	2.247	0.25	2.077	117.134	300.772	301.398	77.107	51.929	77.658	86.323	792.565	778.653	1009.944	993.263
20160421:12:13:51	23.841	13.322	1.312	23.745	0.25	2.248	0.25	2.049	117.121	300.832	301.457	77.185	51.932	77.733	86.402	793.904	779.958	1011.661	994.938
20160421:12:18:51	23.844	13.052	1.408	23.74	0.25	2.243	0.25	2.042	116.388	300.801	301.418	77.306	51.939	77.802	86.483	795.301	781.318	1013.452	996.684
20160421:12:23:51	23.843	12.585	1.36	23.743	0.25	2.225	0.25	2.033	115.102	300.774	301.447	77.37	51.939	77.887	86.565	796.636	782.624	1015.165	998.361
20160421:12:28:51	23.841	12.467	1.364	23.74	0.25	2.232	0.25	2.023	114.766	300.765	301.425	77.434	51.947	77.987	86.641	797.992	783.996	1016.904	1000.122
20160421:12:33:51	23.835	12.748	1.292	23.74	0.25	2.223	0.25	2.033	115.537	300.772	301.474	77.516	51.946	78.056	86.723	799.385	785.303	1018.691	1001.801
20160421:12:38:51	23.837	12.702	1.346	23.738	0.25	2.224	0.25	2.04	115.416	300.773	301.467	77.656	51.967	78.137	86.809	800.719	786.674	1020.404	1003.562
20160421:12:43:51	23.835	12.575	1.387	23.734	0.25	2.216	0.25	2.045	115.065	300.803	301.499	77.743	51.973	78.237	86.896	802.111	787.977	1022.191	1005.237
20160421:12:48:51	23.835	12.569	1.375	23.734	0.25	2.24	0.25	2.011	115.048	300.74	301.438	77.819	51.97	78.339	86.982	803.47	789.346	1023.935	1006.996
20160421:12:53:51	23.833	12.76	1.356	23.734	0.25	2.231	0.25	2.027	115.572	300.82	301.505	77.943	51.978	78.415	87.073	804.796	790.64	1025.639	1008.66
20160421:12:58:51	23.834	13.275	1.38	23.733	0.25	2.237	0.25	2.041	116.984	300.859	301.471	78.028	51.977	78.493	87.165	806.196	792.005	1027.437	1010.415
20160421:13:03:51	23.832	13.329	1.417	23.728	0.25	2.24	0.25	2.041	117.127	300.89	301.461	78.071	51.967	78.567	87.241	807.527	793.325	1029.148	1012.113
20160421:13:08:51	23.831	13.358	1.325	23.734	0.25	2.252	0.25	2.055	117.204	300.88	301.44	78.13	51.954	78.667	87.321	808.905	794.658	1030.919	1013.827
20160421:13:13:51	23.825	13.397	1.385	23.723	0.25	2.256	0.25	2.046	117.298	300.925	301.461	78.211	51.962	78.738	87.41	810.28	796.012	1032.685	1015.57
20160421:13:18:51	23.827	13.16	1.394	23.724	0.25	2.26	0.25	2.056	116.656	300.899	301.507	78.32	51.979	78.813	87.495	811.622	797.32	1034.411	1017.254
20160421:13:23:51	23.825	12.714	1.393	23.723	0.25	2.247	0.25	2.048	115.438	300.77	301.455	78.385	51.981	78.905	87.575	813.021	798.678	1036.211	1019.002
20160421:13:28:51	23.824	12.629	1.436	23.718	0.25	2.237	0.25	2.051	115.199	300.694	301.476	78.449	51.986	79.002	87.661	814.377	799.986	1037.956	1020.686
20160421:13:33:51	23.829	12.909	1.472	23.721	0.25	2.243	0.25	2.035	115.974	300.684	301.496	78.52	51.991	79.072	87.741	815.715	801.357	1039.676	1022.451
20160421:13:38:51	23.824	13.398	1.443	23.718	0.25	2.242	0.25	2.044	117.298	300.732	301.459	78.647	52.001	79.144	87.822	817.112	802.663	1041.474	1024.133
20160421:13:43:51	23.823	13.404	1.348	23.724	0.25	2.252	0.25	2.057	117.313	300.733	301.456	78.712	52.017	79.233	87.905	818.445	804.035	1043.189	1025.9
20160421:13:48:51	23.825	13.403	1.404	23.721	0.25	2.253	0.25	2.041	117.313	300.752	301.478	78.778	52.027	79.332	87.986	819.814	805.338	1044.952	1027.579
20160421:13:53:51	23.824	13.417	1.464	23.716	0.25	2.248	0.25	2.053	117.349	300.814	301.508	78.843	52.046	79.397	88.069	821.191	806.706	1046.724	1029.342
20160421:13:58:51	23.821	13.427	1.425	23.716	0.25	2.247	0.25	2.067	117.372	300.796	301.5	78.972	52.064	79.471	88.148	822.533	808.002	1048.452	1031.013
20160421:14:03:51	23.817	13.415	1.465	23.71	0.25	2.251	0.25	2.04	117.335	300.77	301.406	79.037	52.076	79.55	88.226	823.925	809.361	1050.246	1032.765
20160421:14:08:51	23.823	13.405	1.43	23.718	0.25	2.269	0.25	2.042	117.315	300.751	301.46	79.104	52.088	79.658	88.308	825.281	810.699	1051.993	1034.491
20160421:14:13:51	23.819	13.183	1.421	23.714	0.25	2.269	0.25	2.034	116.706	300.742	301.361	79.168	52.1	79.721	88.389	826.614	812.014	1053.709	1036.186
20160421:14:18:51	23.817	12.728	1.436	23.712	0.25	2.238	0.25	2.031	115.465	300.69	301.446	79.274	52.119	79.785	88.47	828.02	813.367	1055.522	1037.932
20160421:14:23:51	23.815	12.565	1.455	23.708	0.25	2.237	0.25	2.019	115.004	300.681	301.473	79.361	52.159	79.898	88.55	829.349	814.68	1057.235	1039.626
20160421:14:28:51	23.815	12.931	1.515	23.704	0.25	2.234	0.25	2.031	116.01	300.756	301.461	79.431	52.213	79.975	88.632	830.716	816.05	1058.998	1041.395
20160421:14:33:51	23.81	13.601	1.403	23.706	0.25	2.258	0.25	2.05	117.813	300.783	301.475	79.492	52.246	80.038	88.709	832.113	817.358	1060.8	1043.083
20160421:14:38:51	23.805	13.135	1.382	23.704	0.25	2.261	0.25	2.042	116.553	300.762	301.432	79.575	52.264	80.097	88.782	833.454	818.727	1062.53	1044.852
20160421:14:43:51	23.804	12.774	1.385	23.703	0.25	2.234	0.25	2.028	115.574	300.76	301.471	79.657	52.281	80.169	88.859	834.835	820.033	1064.311	1046.538
20160421:14:48:51	23.803	12.6	1.375	23.702	0.25	2.236	0.25	2.034	115.087	300.736	301.478	79.711	52.312	80.249	88.937	836.203	821.397	1066.076	1048.299
20160421:14:53:51	23.8	13.134	1.354	23.701	0.25	2.239	0.25	2.019	116.541	300.786	301.515	79.757	52.341	80.309	89.012	837.546	822.702	1067

Time: day:hh:mm:ss	Stack Pressure: in-Hg	Sat% H2O: Percent	Static: in-H2O	Barometric: in-Hg	Flowmeter1: l/min	Vacuum1: in-Hg	Flowmeter2: l/min	Vacuum2: in-Hg	Stack Temp: degF	Sorbent Temp: degF	Probe Temp: degF	DGM#1 Temp: degF	Condenser Temp: degF	DGM#2 Temp: degF	DAQ Temp: degF	DGM1*: liters STP	DGM2*: liters STP	DGM1: liters nominal	DGM2: liters nominal
20160421:18:28:51	23.768	13.445	1.275	23.674	0.25	2.266	0.25	2.039	117.341	300.892	301.489	82.437	52.708	83.005	91.849	896.23	880.123	1143.813	1124.429
20160421:18:33:51	23.769	13.476	1.285	23.675	0.25	2.248	0.25	2.043	117.424	300.907	301.55	82.473	52.722	83.049	91.894	897.593	881.465	1145.581	1126.173
20160421:18:38:51	23.771	13.464	1.3	23.676	0.25	2.251	0.25	2.057	117.395	300.924	301.594	82.494	52.714	83.073	91.937	898.935	882.823	1147.324	1127.938
20160421:18:43:51	23.768	13.487	1.243	23.677	0.25	2.256	0.25	2.048	117.451	300.874	301.574	82.555	52.723	83.099	91.981	900.331	884.128	1149.137	1129.633
20160421:18:48:51	23.764	13.23	1.174	23.678	0.25	2.247	0.25	2.045	116.749	300.876	301.555	82.597	52.732	83.17	92.024	901.697	885.493	1150.911	1131.408
20160421:18:53:51	23.761	12.599	1.112	23.679	0.249	2.225	0.25	2.029	115.02	300.796	301.522	82.61	52.725	83.172	92.063	903.029	886.801	1152.641	1133.109
20160421:18:58:51	23.762	12.453	1.116	23.68	0.25	2.231	0.25	2.039	114.61	300.777	301.503	82.657	52.746	83.245	92.101	904.428	888.169	1154.457	1134.887
20160421:19:03:51	23.763	12.574	1.133	23.679	0.251	2.222	0.25	2.052	114.954	300.757	301.531	82.665	52.769	83.256	92.141	905.778	889.465	1156.211	1136.571
20160421:19:08:51	23.759	12.5	1.036	23.683	0.25	2.234	0.25	2.032	114.74	300.836	301.574	82.687	52.755	83.284	92.174	907.115	890.824	1157.946	1138.338
20160421:19:13:51	23.761	12.383	1.028	23.686	0.25	2.225	0.25	2.024	114.41	300.836	301.604	82.691	52.779	83.301	92.209	908.524	892.17	1159.776	1140.088
20160421:19:18:51	23.765	13.201	1.071	23.687	0.25	2.239	0.25	2.028	116.679	300.879	301.619	82.722	52.766	83.323	92.24	909.86	893.481	1161.511	1141.791
20160421:19:23:51	23.769	13.383	1.092	23.689	0.25	2.249	0.25	2.039	117.176	300.853	301.598	82.716	52.759	83.306	92.27	911.217	894.845	1163.272	1143.564
20160421:19:28:51	23.777	13.431	1.14	23.693	0.25	2.256	0.25	2.05	117.316	300.887	301.589	82.731	52.814	83.338	92.296	912.622	896.155	1165.096	1145.267
20160421:19:33:51	23.78	13.136	1.134	23.696	0.25	2.266	0.25	2.057	116.521	300.803	301.556	82.721	52.753	83.328	92.316	913.96	897.528	1166.833	1147.051
20160421:19:38:51	23.777	12.655	1.082	23.698	0.25	2.247	0.25	2.047	115.202	300.807	301.557	82.71	52.745	83.312	92.336	915.322	898.832	1168.6	1148.744
20160421:19:43:51	23.781	12.515	1.073	23.702	0.25	2.246	0.25	2.031	114.815	300.798	301.598	82.729	52.819	83.342	92.353	916.723	900.19	1170.419	1150.509
20160421:19:48:51	23.787	13.051	1.127	23.704	0.25	2.245	0.25	2.041	116.302	300.787	301.598	82.725	52.837	83.341	92.367	918.058	901.527	1172.15	1152.246
20160421:19:53:51	23.786	13.29	1.097	23.705	0.25	2.254	0.25	2.05	116.952	300.844	301.563	82.721	52.771	83.335	92.378	919.431	902.843	1173.931	1153.955
20160421:19:58:51	23.786	13.289	1.089	23.706	0.249	2.26	0.25	2.052	116.95	300.818	301.549	82.703	52.78	83.318	92.384	920.821	904.203	1175.735	1155.722
20160421:20:03:51	23.786	13.342	1.069	23.707	0.25	2.26	0.25	2.053	117.093	300.847	301.572	82.675	52.753	83.296	92.388	922.172	905.519	1177.487	1157.43
20160421:20:08:51	23.787	13.371	1.053	23.709	0.25	2.269	0.25	2.064	117.172	300.878	301.583	82.666	52.762	83.281	92.39	923.537	906.893	1179.257	1159.214
20160421:20:13:51	23.791	13.363	1.115	23.709	0.25	2.26	0.25	2.053	117.155	300.95	301.65	82.655	52.782	83.27	92.387	924.92	908.205	1181.052	1160.917
20160421:20:18:51	23.791	13.342	1.122	23.708	0.25	2.262	0.25	2.057	117.098	300.912	301.528	82.624	52.776	83.252	92.383	926.263	909.562	1182.793	1162.68
20160421:20:23:51	23.79	13.41	1.086	23.711	0.25	2.26	0.25	2.063	117.279	300.885	301.423	82.611	52.842	83.233	92.376	927.648	910.889	1184.589	1164.402
20160421:20:28:51	23.788	13.462	1.029	23.712	0.25	2.26	0.25	2.069	117.413	300.864	301.485	82.606	52.841	83.22	92.363	929.016	912.212	1186.363	1166.12
20160421:20:33:51	23.789	13.442	1.011	23.714	0.25	2.262	0.25	2.067	117.363	300.922	301.521	82.541	52.802	83.15	92.347	930.362	913.565	1188.107	1167.876
20160421:20:38:51	23.792	13.49	1.038	23.715	0.25	2.273	0.25	2.072	117.493	300.927	301.574	82.453	52.768	83.088	92.329	931.756	914.879	1189.915	1169.581
20160421:20:43:51	23.794	13.412	1.044	23.717	0.25	2.27	0.25	2.064	117.29	300.909	301.541	82.442	52.796	83.068	92.31	933.119	916.252	1191.681	1171.363
20160421:20:48:51	23.795	13.409	1.052	23.717	0.25	2.263	0.25	2.054	117.285	300.887	301.528	82.43	52.835	83.051	92.291	934.464	917.562	1193.424	1173.062
20160421:20:53:51	23.795	13.439	1.043	23.718	0.25	2.27	0.25	2.066	117.363	300.909	301.526	82.355	52.762	82.996	92.264	935.861	918.935	1195.235	1174.844
20160421:20:58:51	23.797	13.156	1.06	23.719	0.25	2.268	0.25	2.055	116.6	300.924	301.561	82.332	52.819	82.984	92.236	937.222	920.238	1196.998	1176.534
20160421:21:03:51	23.8	12.727	1.086	23.72	0.25	2.252	0.25	2.045	115.436	300.85	301.525	82.29	52.817	82.929	92.207	938.56	921.583	1198.731	1178.278
20160421:21:08:51	23.8	12.58	1.068	23.722	0.25	2.248	0.25	2.04	115.026	300.782	301.52	82.27	52.849	82.9	92.173	939.962	922.941	1200.548	1180.039
20160421:21:13:51	23.802	12.935	1.072	23.723	0.25	2.259	0.25	2.037	116.003	300.851	301.514	82.217	52.806	82.82	92.141	941.311	924.245	1202.294	1181.731
20160421:21:18:51	23.804	13.348	1.108	23.722	0.25	2.262	0.25	2.05	117.134	300.849	301.504	82.147	52.854	82.776	92.104	942.655	925.61	1204.035	1183.5
20160421:21:23:51	23.801	13.285	1.06	23.723	0.25	2.272	0.25	2.049	116.963	300.827	301.464	82.067	52.802	82.727	92.069	944.042	926.92	1205.844	1185.199
20160421:21:28:51	23.801	13.268	1.071	23.722	0.25	2.263	0.25	2.058	116.918	300.917	301.519	82.05	52.837	82.705	92.033	945.385	928.295	1207.57	1186.981
20160421:21:33:51	23.799	13.242	1.049	23.722	0.25	2.255	0.25	2.067	116.844	300.922	301.526	81.996	52.783	82.638	91.995	946.748	929.6	1209.335	1188.673
20160421:21:38:51	23.797	13.243	1.044	23.721	0.25	2.257	0.25	2.057	116.844	300.887	301.48	81.976	52.83	82.601	91.952	948.138	930.957	1211.135	1190.432
20160421:21:43:51	23.803	13.275	1.111	23.721	0.25	2.271	0.25	2.054	116.937	300.946	301.471	81.907	52.823	82.55	91.911	949.486	932.286	1212.88	1192.154
20160421:21:48:51	23.798	13.291	1.027	23.722	0.25	2.266	0.25	2.063	116.973	300.939	301.522	81.813	52.778	82.464	91.866	950.855	933.609	1214.652	1193.868
20160421:21:53:51	23.8	13.325	1.101	23.719	0.25	2.266	0.25	2.065	117.067	300.895	301.481	81.758	52.816	82.417	91.82	952.232	934.965	1216.433	1195.626
20160421:21:58:51	23.794	13.269	1.021	23.719	0.25	2.265	0.25	2.062	116.908	300.905	301.539	81.714	52.82	82.364	91.771	953.574	936.281	1218.17	1197.331
20160421:22:03:51	23.795	12.556	1.03	23.719	0.25	2.249	0.25	2.049	114.951	300.882	301.484	81.66	52.785	82.29	91.721	954.965	937.653	1219.97	1199.109
20160421:22:08:51	23.801	12.506	1.112	23.719	0.25	2.238	0.25	2.029	114.818	300.794	301.442	81.613	52.797	82.237	91.666	956.33	938.962	1221.737	1200.805
20160421:22:13:51	23.8	12.49	1.08	23.721	0.25	2.243	0.25	2.038	114.77	300.779	301.466	81.534	52.79	82.166	91.61	957.674	940.338	1223.476	1202.586
20160421:22:18:51	23.797	13.233	1.049	23.71	0.25	2.253	0.25	2.055	116.817	300.893	301.527	81.463	52.796	82.091	91.556	959.076	941.643	1225.289	1204.276
20160421:22:23:51	23.796	13.245	1.048	23.719	0.25	2.254	0.25	2.065	116.847	300.873	301.486	81.414	52.794	82.04	91.497	960.432	942.99	1227.043	1206.021
20160421:22:28:51	23.796	13.232	1.035	23.72	0.25	2.256	0.25	2.078	116.813	300.875	301.499	81.364	52.787	81.993	91.438	961.768	944.346	1228.77	1207.776
20160421:22:33:51	23.796	13.202	1.03	23.72	0.25	2.27	0.25	2.056	116.73	300.896	301.512	81.312	52.782	81.938	91.377	963.18	945.657	1230.596	1209.474
20160421:22:38:51	23.797	12.653	1.012	23.722	0.25	2.257	0.25	2.052	115.216	300.847	301.451	81.243	52.785	81.884	91.314	964.519	947.023	1232.328	1211.242
20160421:22:43:51	23.796	12.43	1.042	23.72	0.25	2.25	0.25	2.038	114.595	300.779	301.468	81.163	52.769	81.795	91.256	965.87	948.337	1234.074	1212.944
20160421:22:48:51	23.803	12.254	1.172	23.717	0.25	2.253	0.25	2.049	114.105	300.82	301.491	81.105	52.771	81.736	91.197	967.273	949.716	1235.889	1214.727
20160421:22:53:51	23.805	12.781	1.173	23.719	0.25	2.244	0.25	2.041	115.584	300.806	301.399	81.056	52.759	81.684	91.135	968.613	951.024	1237.62	1216.421
20160421:22:58:51	23.799	13.065	1.119	23.717	0.25	2.249	0.25	2.057	116.366	300.891	301.495	81.004	52.739	81.631	91.072	969.985	952.384	1239.394	1218.18
20160421:23:03:51	23.799	13.117	1.082	23.72	0.25	2.262	0.25	2.063	116.506	300.927	301.541	80.931	52.723	81.547	91.008	971.378	953.715	1241.194	1219.902
20160421:23:08:51	23.792	13.183	1.021	23.717	0.25	2.25	0.25	2.064	116.673	300.895	301.461	80.849	52.713	81.467	90.945	972.727	955.038	1242.937	1221.615
20160421:23:13:51	23.792	13.297	1.041	23.716	0.25	2.268	0.25	2.056	116.98	300.89	301.46	80.778	52.712	81.416	90.883	974.102	956.398	1244.715	1223.374
20160421:23:18:51	23.796	13.332	1.079	23.716	0.25	2.264	0.25	2.066	117.08	300.947	301.515	80.723	52.692	81.36	90.818	975.478	957.715	1246.493	1225.077
20160421:23:23:51	23.794	13.393	1.07	23.715	0.25	2.271	0.25	2.069	117.241	300.93	301.421	80.672	52.674	81.302	90.752	976.823	959.09	1248.23	1226.855
20160421:23:28:51	23.798	13.374	1.143	23.714	0.25	2.272	0.25	2.063	117.196	300.889	301.474	80.61	52.662	81.228	90.683	978.218	960.401	1250.031	1228.551
20160421:23:33:51	23.795	13.438	1.099	23.714	0.249	2.271	0.25	2.053	117.362	300.925	301.502	80.551	52.656	81.142	90.618	979.587	961.779	1251.8	1230.333
20160421:23:38:51	23.787	13.432	1.001	23.714	0.251	2.294	0.25	2.06	117.335	300.878	301.46	80.463	52.646	81.09	90.552	980.93	963.087	1253.535	1232.024
20160421:23:43:51	23.791	13.382	1.064	23.713	0.25	2.27	0.25	2.056	117.207	300.853	301.462	80.411	52.628	81.039	90.485	982.334	964.439	1255.348	1233.773
20160421:23:48:51	23.788	13.356	1.018	23.713	0.25	2.267	0.25	2.06	117.131	300.889	301.491	80.355	52.616	80.982	90.418	983.691	965.804	1257.1	1235.538
20160421:23:53:51	23.79	13.302	1.052	23.713	0.25	2.266	0.25	2.064	116.992	300.856	301.475	80.301	52.612	80.933	90.351	985.029	967.118	1258.828	1237.235
20160421:23:58:51	23.796	13.278	1.076	23.717	0.25	2.277	0.25	2.074	116.936	300.796	301.402	80.24	52.587	80.856	90.287	986.442	968.488	1260.652	1239.006
20160422:00:03:51	23.789	13.248	1.003	23.715	0.25	2.274	0.25	2.073	116.843	300.878	301.457	80.134	52.56	80.785	90.219	987.785	969.801	1262.385	1240.703
20160422:00:08:51	23.787	13.201	1.003	23.713	0.25	2.271	0.25	2.062	116.716	300.84	301.447	80.08	52.545	80.743	90.149	989.148	971.173	1264.144	1242.476
20160422:00:13:51	23.791	13.151	1.054	23.714	0.25	2.266	0.25	2.08	116.587	300.821	301.478	80.034	52.525	80.696	90.083	990.548	972.482	1265.95	1244.167
20160422:00:18:51	23.783	13.142	0.952	23.713	0.25	2.264	0.25	2.072	116.552	300.816	301.434	80.01	52.499	80.653	90.022	991.892	973.847	1267.685	1245.93
20160422:00:23:51	23.794	13.194	1.118	23.712	0.25	2.262	0.25	2.066	116.708	300.818	301.414	79.972	52.467	80.616	89.966	993.264	975.188	1269.456	1247.664
20160422:00:28:51	23.791	12.587	1.067	23.712	0.25	2.257	0.25	2.06	115.02	300.768	301.403	79.93	52.446	80.571	89.912	994.649	976.508	1271.243	1249.368
20160422:00:33:51	23.784	12.309	1	23.711	0.25	2.253	0.25	2.048	114.234	300.72	301.389	79.863	52.439	80.518	89.86	995.991	977.87	1272.974	1251.128
20160422:00:38:51	23.791	12.071	1.12	23.709	0.25	2.238	0.25	2.035	113.557	300.697	301.403	79.82	52.421	80.473	89.811	997.379	979.186	1274.765	1252.827
20160422:00:43:51	23.79	12.69	1.094	23.71	0.25	2.237	0.25	2.043	115.31	300.716	301.431	79.775	52.391	80.425	89.766	998.75	980.561	1276.533	1254.603
20160422:00:48:51	23.785	12.999	1.065	23.707	0.25	2.257	0.25	2.051	116.164	300.827	301.485	79.749	52.372	80.388	89.721	1000.089	981.869	1278.261	1256.293
20160422:00:53:51	23.792	13.005	1.139	23.709	0.25	2.261	0.25	2.063	116.191	300.857	301.466	79.727	52.351	80.362	89.677	1001.489	983.243	1280.067	1258.068
20160422:00:58:51	23.788	13.003	1.122	23.706	0.25	2.252	0.25	2.057	116.179	300.784	301.425	79.674	52.328	80.311	89.633	1002.845	984.544	1281.817	1259.748
20160422:01:03:51	23.787	12.996	1.114	23.705	0.25	2.269	0.25	2.046	116.158	300.806	301.448	79.625	52.313	80.278	89.587	1004.186	985.905	1283.546	1261.506
20160422:01:08:51	23.783	13.005	1.04	23.706	0.25	2.278	0.25	2.063	116.178	300.856	301.471	79.577	52.285	80.229	89.54	1005.599	987.253	1285.369	1263.246
20160422:01:13:51	23.783	13.002	1.053	23.706	0.25	2.273	0.25	2.06	116.17	300.808	301.445	79.514	52.263	80.143	89.496	1006.934	988.569	1287.091	1264.945
20160422:01:18:51	23.781	13.1	1.05	23.704	0.25	2.282	0.25	2.059	116.433	300.767	301.412	79.473	52.252	80.105	89.45	1008.297	989.933	1288.848	1266.707
20160422:01:23:51	23.78	13.265	1.036	23.704	0.249	2.291	0.25	2.069	116.878	300.821	301.457	79.448	52.233	80.076	89.407	1009.693	991.249	1290.648	1268.406
20160422:01:28:51	23.781	13.29	1.043	23.704	0.251	2.299	0.25	2.059	116.947	300.812	301.418	79.406	52.223	80.036	89.364	1011.043	992.619	1292.389	1270.175
20160422:01:33:51	23.782	12.656	1.08	23.703	0.25	2.274	0.25	2.049	115.201	300.821	301.461	79.379	52.192	80.004	89.321	1012.414	993.928	1294.157	1271.865
20160422:01:38:51	23.775	12.409	1.028	23.7	0.25	2.242	0.25	2.049	114.507	300.785	301.472	79.356	52.215	79.98	89.279	1013.791	995.307	1295.933	1273.645
20160422:01:43:51	23.777	12.153	1.061	23.699	0.25	2.236	0.25	2.04	113.774	300.696	301.366	79.299	52.159	79.937	89.233	1015.138	996.606	1297.67	1275.321
20160422:01:48:51	23.777	12.815	1.039	23.701	0.25	2.244	0.25	2.031	115.635	300.707	301.36	79.257	52.178	79.887	89.193	1016.536	997.964	1299.472	1277.075
20160422:01:53:51	23.78	13.224	1.075	23.701	0.251	2.272	0.25	2.054	116.767	300.825	301.411	79.19	52.137	79.831	89.153	1017.91	999.317	1301.244	1278.821
20160422:01:58:51	23.775	13.221	1.052	23.697	0.25	2.275	0.25	2.061	116.751	300.861	301.459	79.149	52.128	79.78	89.114	1019.248	1000.629	1302.969	1280.515
20160422:02:03:51	23.773	13.22	1.037	23.696	0.25	2.271	0.25	2.072	116.746	300.83	301.458	79.131	52.121	79.759	89.077	1020.654	1001.991	1304.781	1282.273
20160422:02:08:51	23.775	13.247	1.037	23.698	0.25	2.271	0.25	2.071	116.822	300.772	301.357	79.078	52.127	79.71	89.041	1022.006	1003.309	1306.524	1283.974
20160422:02:13:51	23.781	13.236	1.148	23.696	0.249	2.26	0.25	2.066	116.799	300.847	301.453	79.056	52.122	79.692	89.002	1023.35	1004.678	1308.257	1285.741
20160422:02:18:51	23.772	13.3	1.007	23.698	0.25	2.266	0.25	2.068	116.96	300.842	301.464	79.007	52.108	79.642	88.962	1024.747	1005.988	1310.057	1287.43
20160422:02:23:51	23.78	13.295	1.145	23.696	0.25	2.278	0.25	2.058	116.957	300.872	301.474	78.977	52.107	79.594	88.925	1026.08	1007.363	1311.776	1289.205
20160422:02:28:51	23.778	13.242	1.115	23.696	0.25	2.271	0.25	2.061	116.812	300.832	301.428	78.932	52.087	79.527	88.884	1027.454	1008.661	1313.546	1290.88
20160422:02:33:51	23.777	13.206	1.123	23.695	0.25	2.274	0.25	2.054	116.714	300.771	301.407	78.853	52.082	79.483	88.845	1028.839	1010.02	1315.331	1292.633
20160422:02:38:51	23.779	13.253	1.153	23.694	0.25	2.271	0.25	2.062	116.843	300.846	301.453	78.825	52.101	79.467	88.805	1030.184	1011.369	1317.065	1294.374
20160422:02:43:51	23.776	12.425	1.135	23.692	0.25	2.257	0.25	2.054	114.549	300.818	301.434	78.768	52.069	79.409	88.764	1031.574	1012.685	1318.856	1296.071
20160422:02:48:51	23.78	12.349	1.219	23.691	0.25	2.24	0.25	2.053	114.342	300.755	301.439	78.744	52.078	79.388	88.726	1032.945	1014.051	1320.622	1297.835
20160422:02:53:51	23.779	12.149	1.216	23.69	0.25	2.242	0.25	2.037	113.765	300.735	301.426	78.706	52.07	79.348	88.681	1034.283	1015.367	1322.346	1299.532
20160422:02:58:51	23.776	12.899	1.183	23.689	0.25	2.245	0.25	2.046	115.872	300.741	301.423	78.654	52.045	79.273	88.635	1035.683	1016.74	1324.15	1301.303
20160422:03:03:51	23.776	13.104	1.138	23.693	0.25	2.259	0.25	2.055	116.437	300.792	301.43	78.588	52.057	79.2	88.586	1037.03	1018.05	1325.885	1302.992
20160422:03:08:51	23.777	13.134	1.15	23.692	0.25	2.273	0.25	2.078	116.518	300.802	301.422	78.522	52.063	79.149	88.535	1038.378	1019.43	1327.622	1304.773
20160422:03:13:51	23.771	13.153	1.117	23.689	0.25	2.273	0.25	2.06	116.563	300.793	301.435	78.469	52.045	79.1	88.487	1039.779	1020.732	1329.426	1306.451
20160422:03:18:51	23.772	13.146	1.151	23.687	0.25	2.256	0.25	2.066	116.543	300.864	301.448	78.428	52.046	79.063	88.439	1041.113	1022.09	1331.144	1308.203
20160422:03:23:51	23.767	13.186	1.078	23.688	0.25	2.257	0.25	2.057	116.645	300.854	301.456	78.399	52.049	79.046	88.391	1042.486	1023.442	1332.913	1309.945
20160422:03:28:51	23.771	13.155	1.15	23.686	0.25	2.26	0.25	2.07	116.567	300.837	301.44	78.369	52.05	79.012	88.345	1043.875	1024.757	1334.702	1311.641
20160422:03:33:51	23.771	13.117	1.189	23.684	0.25	2.265	0.25	2.066	116.465	300.788	301.393	78.336	52.044	78.971	88.299	1045.22	1026.121	1336.435	1313.4
20160422:03:38:51	23.77	13.093	1.164	23.684	0.25	2.264	0.25	2.064	116.399	300.776	301.42	78.31	52.047	78.921	88.253	1046.611	1027.437	1338.226	1315.098
20160422:03:43:51	23.765	13.034	1.09	23.685	0.25	2.264	0.25	2.056	116.231	300.761	301.427	78.273	52.061	78.858	88.211	1047.984	1028.811	1339.994	1316.868
20160422:03:48:51	23.767	12.971	1.089	23.687	0.25	2.262	0.25	2.062	116.062	300.851	301.47	78.209	52.039	78.821	88.17	1049.325	1030.12	1341.72	1318.556
20160422:03:53:51	23.768	12.92	1.058	23.691	0.25	2.261	0.25	2.058	115.922	300.793	301.453	78.181	52.058	78.802	88.129	1050.724	1031.499	1343.522	1320.333
20160422:03:58:51	23.77	12.863	1.06	23.692	0.25	2.269	0.25	2.057	115.768	300.728	301.379	78.127	52.033	78.751	88.092	1052.078	1032.803	1345.265	1322.013
20160422:04:03:51	23.768	12.824	0.989	23.695	0.25	2.261	0.25	2.06	115.658	300.783	301.416	78.098	52.027	78.721	88.048	1053.429	1034.162	1347.004	1323.765
20160422:04:08:51	23.774	12.815	1.103	23.693	0.25	2.246	0.25	2.057	115.642	300.817	301.438	78.067	52.032	78.69	88.005	1054.828	1035.518	1348.804	1325.511
20160422:04:13:51	23.774	12.821	1.1	23.693	0.25	2.251	0.25	2.069	115.658	300.829	301.447	78.014	52.011	78.638	87.964	1056.161	1036.832	1350.519	1327.205
20160422:04:18:51	23.771	12.781	1.02	23.696	0.25	2.262	0.25	2.061	115.543	300.726	301.401	77.987	52.028	78.593	87.92	1057.534	1038.2	1352.285	1328.966
20160422:04:23:51	23.764	12.745	0.937	23.695	0.25	2.252	0.25	2.054	115.433	300.817	301.394	77.936	52.031	78.518	87.874	1058.925	1039.519	1354.074	1330.665

Time: day:hh:mm:ss	Stack Pressure: in-Hg	Sat% H2O: Percent	Static: in-H2O	Barometric: in-Hg	Flowmeter1: l/min	Vacuum1: in-Hg	Flowmeter2: l/min	Vacuum2: in-Hg	Stack Temp: degF	Sorbent Temp: degF	Probe Temp: degF	DGM#1 Temp: degF	Condenser Temp: degF	DGM#2 Temp: degF	DAQ Temp: degF	DGM1*: liters STP	DGM2*: liters STP	DGM1: liters nominal	DGM2: liters nominal
20160422:08:08:52	23.826	12.455	1.93	23.684	0.25	2.226	0.25	2.036	114.712	300.718	301.350	76.127	51.803	76.762	85.991	1120.459	1099.935	1433.1	1408.346
20160422:08:13:52	23.83	12.465	2.022	23.682	0.25	2.215	0.25	2.036	114.746	300.714	301.328	76.135	51.783	76.753	85.964	1121.837	1101.262	1434.867	1410.051
20160422:08:18:52	23.826	12.418	2.02	23.677	0.25	2.226	0.25	2.037	114.606	300.729	301.32	76.118	51.777	76.744	85.945	1123.185	1102.595	1436.596	1411.763
20160422:08:23:52	23.821	12.39	1.987	23.675	0.25	2.227	0.25	2.027	114.519	300.738	301.343	76.159	51.756	76.775	85.928	1124.583	1103.953	1438.391	1413.508
20160422:08:28:52	23.82	12.384	1.945	23.677	0.25	2.23	0.25	2.036	114.501	300.772	301.38	76.182	51.773	76.79	85.916	1125.934	1105.26	1440.124	1415.186
20160422:08:33:52	23.817	12.233	1.902	23.677	0.25	2.232	0.25	2.022	114.055	300.806	301.389	76.221	51.757	76.827	85.91	1127.28	1106.617	1441.852	1416.93
20160422:08:38:52	23.811	11.347	1.85	23.675	0.25	2.218	0.25	2.012	111.422	300.695	301.363	76.252	51.765	76.846	85.91	1128.671	1107.924	1443.637	1418.609
20160422:08:43:52	23.81	11.286	1.871	23.672	0.25	2.218	0.25	2.007	111.23	300.613	301.286	76.291	51.743	76.882	85.915	1130.012	1109.296	1445.359	1420.372
20160422:08:48:52	23.81	11.318	1.869	23.673	0.25	2.189	0.25	1.998	111.322	300.663	301.386	76.375	51.746	76.903	85.925	1131.381	1110.603	1447.117	1422.053
20160422:08:53:52	23.805	12.143	1.805	23.672	0.25	2.208	0.25	2.025	113.787	300.674	301.349	76.405	51.742	76.936	85.943	1132.748	1111.969	1448.872	1423.808
20160422:08:58:52	23.805	12.216	1.821	23.672	0.25	2.226	0.25	2.013	113.997	300.659	301.283	76.467	51.752	77.002	85.963	1134.085	1113.272	1450.589	1425.483
20160422:09:03:52	23.805	12.225	1.745	23.677	0.25	2.228	0.25	2.024	114.024	300.767	301.349	76.52	51.772	77.096	85.994	1135.478	1114.639	1452.378	1427.241
20160422:09:08:52	23.799	12.239	1.613	23.68	0.25	2.239	0.25	2.025	114.054	300.78	301.373	76.575	51.759	77.139	86.026	1136.809	1115.945	1454.087	1428.919
20160422:09:13:52	23.8	12.304	1.637	23.68	0.25	2.238	0.25	2.037	114.244	300.769	301.351	76.615	51.751	77.182	86.065	1138.165	1117.305	1455.828	1430.667
20160422:09:18:52	23.799	12.341	1.619	23.68	0.25	2.247	0.25	2.035	114.347	300.81	301.403	76.7	51.776	77.265	86.107	1139.552	1118.612	1457.609	1432.348
20160422:09:23:52	23.798	12.342	1.599	23.68	0.25	2.238	0.25	2.032	114.349	300.776	301.391	76.736	51.75	77.301	86.147	1140.887	1119.958	1459.324	1434.079
20160422:09:28:52	23.801	12.35	1.659	23.679	0.25	2.24	0.25	2.047	114.376	300.787	301.404	76.788	51.776	77.35	86.19	1142.28	1121.302	1461.113	1435.866
20160422:09:33:52	23.806	12.33	1.745	23.678	0.25	2.24	0.25	2.028	114.326	300.769	301.392	76.816	51.763	77.382	86.233	1143.637	1122.616	1462.857	1437.496
20160422:09:38:52	23.805	12.326	1.717	23.679	0.25	2.238	0.25	2.043	114.312	300.771	301.399	76.847	51.748	77.409	86.276	1144.964	1123.973	1464.561	1439.242
20160422:09:43:52	23.804	12.29	1.722	23.677	0.25	2.238	0.25	2.038	114.208	300.751	301.367	76.902	51.785	77.466	86.317	1146.366	1125.289	1466.363	1440.934
20160422:09:48:52	23.805	12.252	1.751	23.676	0.25	2.234	0.25	2.028	114.101	300.725	301.341	76.923	51.755	77.495	86.356	1147.692	1126.65	1468.067	1442.686
20160422:09:53:52	23.805	12.233	1.753	23.676	0.25	2.228	0.25	2.033	114.047	300.707	301.328	76.995	51.769	77.571	86.399	1149.06	1127.959	1469.826	1444.37
20160422:09:58:52	23.801	12.227	1.702	23.676	0.25	2.226	0.25	2.036	114.024	300.729	301.326	77.072	51.777	77.646	86.442	1150.432	1129.325	1471.589	1446.128
20160422:10:03:52	23.801	12.252	1.678	23.678	0.25	2.241	0.25	2.029	114.095	300.725	301.311	77.117	51.763	77.683	86.486	1151.772	1130.625	1473.311	1447.801
20160422:10:08:52	23.799	12.269	1.7	23.674	0.25	2.231	0.25	2.035	114.139	300.651	301.328	77.172	51.786	77.734	86.532	1153.16	1131.992	1475.096	1449.56
20160422:10:13:52	23.796	12.277	1.667	23.673	0.25	2.223	0.25	2.039	114.16	300.774	301.393	77.251	51.784	77.776	86.579	1154.502	1133.3	1476.822	1451.244
20160422:10:18:52	23.798	12.32	1.766	23.668	0.25	2.224	0.25	2.026	114.285	300.721	301.333	77.298	51.767	77.811	86.625	1155.845	1134.661	1478.55	1452.996
20160422:10:23:52	23.797	12.296	1.817	23.663	0.25	2.224	0.25	2.026	114.213	300.728	301.329	77.343	51.76	77.859	86.675	1157.243	1135.966	1480.348	1454.677
20160422:10:28:52	23.797	12.314	1.822	23.663	0.25	2.232	0.25	2.029	114.265	300.725	301.361	77.393	51.78	77.959	86.725	1158.582	1137.314	1482.072	1456.414
20160422:10:33:52	23.796	12.334	1.851	23.66	0.25	2.224	0.25	2.02	114.324	300.755	301.399	77.437	51.776	78.008	86.777	1159.953	1138.653	1483.837	1458.139
20160422:10:38:52	23.8	12.342	1.897	23.66	0.25	2.225	0.25	2.035	114.351	300.788	301.392	77.483	51.765	78.053	86.83	1161.317	1139.966	1485.593	1459.831
20160422:10:43:52	23.799	12.378	1.954	23.655	0.25	2.218	0.25	2.035	114.452	300.767	301.409	77.533	51.761	78.093	86.884	1162.662	1141.319	1487.324	1461.575
20160422:10:48:52	23.795	12.351	1.976	23.65	0.25	2.223	0.25	2.018	114.369	300.74	301.413	77.635	51.761	78.151	86.933	1164.056	1142.632	1489.12	1463.269
20160422:10:53:52	23.794	12.301	1.966	23.65	0.25	2.229	0.25	2.02	114.224	300.739	301.388	77.683	51.76	78.226	86.985	1165.399	1143.998	1490.85	1465.03
20160422:10:58:52	23.793	11.749	1.996	23.646	0.25	2.222	0.25	2.01	112.59	300.705	301.37	77.743	51.755	78.302	87.038	1166.744	1145.307	1492.583	1466.718
20160422:11:03:52	23.792	11.273	1.955	23.648	0.25	2.205	0.25	2.001	111.165	300.709	301.367	77.8	51.757	78.36	87.095	1168.132	1146.672	1494.372	1468.479
20160422:11:08:52	23.791	11.105	1.902	23.651	0.25	2.199	0.25	2.008	110.642	300.621	301.39	77.852	51.748	78.405	87.151	1169.47	1147.976	1496.096	1470.162
20160422:11:13:52	23.794	11.569	1.929	23.652	0.25	2.201	0.25	2.021	112.056	300.666	301.404	77.96	51.751	78.46	87.207	1170.842	1149.346	1497.865	1471.929
20160422:11:18:52	23.787	12.008	1.91	23.647	0.25	2.208	0.25	2.035	113.367	300.721	301.407	77.989	51.741	78.494	87.246	1172.201	1150.638	1499.617	1473.596
20160422:11:23:52	23.784	12.039	1.842	23.649	0.25	2.219	0.25	2.015	113.454	300.716	301.374	78.043	51.75	78.571	87.303	1173.548	1151.998	1501.354	1475.352
20160422:11:28:52	23.785	12.101	1.922	23.644	0.25	2.21	0.25	2.025	113.635	300.752	301.336	78.107	51.751	78.659	87.365	1174.944	1153.331	1503.154	1477.071
20160422:11:33:52	23.781	12.125	1.889	23.642	0.25	2.219	0.25	2.004	113.698	300.749	301.45	78.192	51.757	78.729	87.432	1176.288	1154.649	1504.887	1478.774
20160422:11:38:52	23.782	12.118	1.989	23.636	0.25	2.214	0.25	2.021	113.68	300.784	301.41	78.296	51.763	78.798	87.496	1177.634	1156.007	1506.624	1480.528
20160422:11:43:52	23.778	12.152	2.017	23.63	0.25	2.225	0.25	2.037	113.772	300.846	301.402	78.361	51.763	78.869	87.56	1179.022	1157.316	1508.417	1482.22
20160422:11:48:52	23.78	12.165	2.061	23.628	0.25	2.222	0.25	2.015	113.811	300.769	301.364	78.423	51.784	78.972	87.631	1180.356	1158.676	1510.139	1483.977
20160422:11:53:52	23.774	12.158	1.991	23.627	0.25	2.219	0.25	2.012	113.783	300.738	301.362	78.485	51.796	79.043	87.701	1181.724	1159.982	1511.906	1485.665
20160422:11:58:52	23.765	12.157	1.942	23.622	0.25	2.209	0.25	2.012	113.766	300.745	301.353	78.581	51.807	79.109	87.774	1183.097	1161.346	1513.68	1487.43
20160422:12:03:52	23.763	12.132	1.946	23.62	0.25	2.21	0.25	2.004	113.693	300.78	301.384	78.688	51.808	79.19	87.85	1184.438	1162.65	1515.413	1489.117
20160422:12:08:52	23.756	12.113	1.947	23.613	0.25	2.189	0.25	1.988	113.628	300.726	301.313	78.775	51.83	79.298	87.931	1185.825	1164.018	1517.206	1490.887
20160422:12:13:52	23.752	12.098	1.812	23.619	0.25	2.202	0.25	2.004	113.577	300.762	301.322	78.848	51.841	79.381	88.01	1187.181	1165.312	1518.959	1492.562
20160422:12:18:52	23.749	12.093	1.713	23.623	0.25	2.206	0.25	2.001	113.559	300.734	301.324	78.978	51.884	79.461	88.094	1188.509	1166.663	1520.676	1494.31
20160422:12:23:52	23.749	12.082	1.676	23.626	0.25	2.218	0.25	2.006	113.527	300.759	301.394	79.043	51.899	79.519	88.172	1189.911	1168.002	1522.489	1496.043
20160422:12:28:52	23.745	12.102	1.705	23.62	0.25	2.212	0.25	2.007	113.578	300.743	301.401	79.101	51.927	79.606	88.252	119.24	1169.313	1524.207	1497.741
20160422:12:33:52	23.749	12.13	1.744	23.621	0.25	2.215	0.25	2.02	113.667	300.723	301.332	79.16	51.964	79.693	88.333	1192.594	1170.666	1525.959	1499.492
20160422:12:38:52	23.752	12.128	1.961	23.608	0.25	2.214	0.25	1.992	113.665	300.752	301.385	79.234	51.99	79.749	88.41	1193.983	1171.975	1527.757	1501.188
20160422:12:43:52	23.752	12.125	1.93	23.61	0.25	2.218	0.25	2.006	113.657	300.729	301.344	79.333	52.022	79.832	88.486	1195.33	1173.346	1529.5	1502.964
20160422:12:48:52	23.756	12.079	2.136	23.599	0.25	2.194	0.25	1.993	113.528	300.736	301.37	79.388	52.041	79.937	88.562	1196.695	1174.65	1531.269	1504.654
20160422:12:53:52	23.76	11.191	2.205	23.598	0.25	2.187	0.25	1.985	110.862	300.645	301.334	79.459	52.066	80.012	88.64	1198.056	1176.015	1533.031	1506.425
20160422:12:58:52	23.761	11.118	2.118	23.606	0.25	2.193	0.25	1.983	110.636	300.659	301.358	79.563	52.093	80.085	88.717	1199.4	1177.311	1534.772	1508.105
20160422:13:03:52	23.754	11.001	2.151	23.596	0.25	2.176	0.25	1.978	110.259	300.649	301.373	79.666	52.107	80.18	88.793	1200.792	1178.669	1536.576	1509.867
20160422:13:08:52	23.751	11.882	2.209	23.589	0.25	2.18	0.25	1.989	112.943	300.729	301.43	79.738	52.139	80.287	88.874	1202.147	1179.994	1538.333	1511.586
20160422:13:13:52	23.749	11.996	2.043	23.599	0.25	2.213	0.25	2.026	113.276	300.753	301.358	79.826	52.198	80.369	88.961	1203.477	1181.312	1540.057	1513.297
20160422:13:18:52	23.743	12.03	1.97	23.598	0.25	2.221	0.25	2.022	113.366	300.831	301.406	79.946	52.21	80.439	89.048	1204.88	1182.661	1541.876	1515.047
20160422:13:23:52	23.748	12.067	2.195	23.587	0.25	2.211	0.25	1.999	113.481	300.789	301.398	80.011	52.228	80.515	89.132	1206.214	1183.966	1543.607	1516.742
20160422:13:28:52	23.758	12.112	2.393	23.582	0.25	2.204	0.25	1.999	113.629	300.8	301.394	80.08	52.252	80.594	89.217	1207.558	1185.334	1545.352	1518.519
20160422:13:33:52	23.75	12.128	2.248	23.585	0.25	2.214	0.25	1.996	113.661	300.879	301.473	80.159	52.256	80.665	89.303	1208.952	1186.639	1547.161	1520.214
20160422:13:38:52	23.753	12.12	2.302	23.584	0.25	2.197	0.25	2.008	113.643	300.785	301.408	80.252	52.273	80.724	89.381	1210.283	1188.003	1548.889	1521.987
20160422:13:43:52	23.749	12.118	2.309	23.58	0.249	2.196	0.25	2.012	113.63	300.788	301.432	80.315	52.278	80.787	89.459	1211.648	1189.301	1550.661	1523.673
20160422:13:48:52	23.738	12.121	2.129	23.581	0.25	2.206	0.25	2.027	113.624	300.762	301.43	80.368	52.285	80.886	89.536	1213.022	1190.657	1552.444	1525.436
20160422:13:53:52	23.74	12.117	2.291	23.571	0.249	2.187	0.25	2.012	113.615	300.717	301.343	80.441	52.318	80.976	89.617	1214.353	1191.993	1554.174	1527.173
20160422:13:58:52	23.743	12.113	2.208	23.581	0.251	2.215	0.25	2.003	113.608	300.771	301.391	80.567	52.32	81.058	89.695	1215.741	1193.302	1555.978	1528.876
20160422:14:03:52	23.736	12.112	2.223	23.573	0.25	2.197	0.25	1.988	113.595	300.746	301.375	80.658	52.345	81.146	89.776	1217.101	1194.659	1557.744	1530.641
20160422:14:08:52	23.736	12.11	2.191	23.575	0.25	2.211	0.25	2.009	113.589	300.764	301.36	80.727	52.339	81.261	89.857	1218.44	1195.97	1559.485	1532.346
20160422:14:13:52	23.734	12.153	2.18	23.574	0.25	2.215	0.25	2.015	113.711	300.753	301.37	80.796	52.358	81.345	89.941	1219.833	1197.332	1561.296	1534.118
20160422:14:18:52	23.736	12.139	2.326	23.565	0.25	2.211	0.25	2.006	113.67	300.778	301.355	80.909	52.372	81.414	90.022	1221.179	1198.634	1563.046	1535.814
20160422:14:23:52	23.74	11.239	2.379	23.565	0.25	2.202	0.25	1.994	110.983	300.689	301.329	81.001	52.378	81.51	90.107	1222.51	1199.998	1564.778	1537.59
20160422:14:28:52	23.733	11.177	2.292	23.564	0.251	2.205	0.25	1.979	110.779	300.689	301.375	81.07	52.394	81.615	90.198	1223.911	1201.299	1566.602	1539.284
20160422:14:33:52	23.736	11.038	2.426	23.557	0.25	2.178	0.25	1.971	110.351	300.655	301.379	81.143	52.391	81.69	90.287	1225.254	1202.636	1568.35	1541.026
20160422:14:38:52	23.732	11.94	2.339	23.56	0.249	2.185	0.25	1.988	113.086	300.742	301.382	81.274	52.407	81.775	90.373	1226.599	1203.988	1570.1	1542.788
20160422:14:43:52	23.731	12.05	2.444	23.551	0.25	2.191	0.25	1.997	113.407	300.744	301.315	81.345	52.412	81.879	90.46	1227.989	1205.286	1571.911	1544.481
20160422:14:48:52	23.73	12.128	2.408	23.553	0.25	2.208	0.25	2.013	113.633	300.772	301.382	81.413	52.419	81.952	90.547	1229.314	1206.646	1573.637	1546.254
20160422:14:53:52	23.727	12.156	2.412	23.55	0.25	2.194	0.25	1.992	113.709	300.79	301.403	81.484	52.423	82.017	90.633	1230.674	1207.947	1575.409	1547.951
20160422:14:58:52	23.72	12.177	2.317	23.55	0.25	2.211	0.25	1.997	113.759	300.792	301.356	81.604	52.436	82.089	90.718	1232.063	1209.309	1577.219	1549.727
20160422:15:03:52	23.722	12.217	2.197	23.56	0.25	2.217	0.25	2.019	113.878	300.804	301.372	81.672	52.453	82.184	90.807	1233.397	1210.606	1578.957	1551.419
20160422:15:08:52	23.719	12.245	2.302	23.55	0.25	2.215	0.25	2.008	113.953	300.754	301.361	81.731	52.451	82.265	90.893	1234.761	1211.959	1580.735	1553.184
20160422:15:13:52	23.72	12.252	2.378	23.545	0.25	2.226	0.25	2.028	113.974	300.769	301.38	81.814	52.458	82.334	90.976	1236.147	1213.288	1582.543	1554.919
20160422:15:18:52	23.717	12.273	2.36	23.543	0.25	2.213	0.25	2.027	114.031	300.813	301.424	81.913	52.473	82.408	91.063	1237.486	1214.596	1584.289	1556.626
20160422:15:23:52	23.713	12.262	2.326	23.542	0.25	2.213	0.25	2.018	113.993	300.849	301.426	81.973	52.488	82.501	91.146	1238.852	1215.949	1586.07	1558.393
20160422:15:28:52	23.717	12.244	2.293	23.549	0.25	2.223	0.25	2.011	113.948	300.854	301.43	82.038	52.468	82.581	91.229	1240.22	1217.259	1587.856	1560.103
20160422:15:33:52	23.715	12.217	2.418	23.538	0.25	2.207	0.25	1.998	113.867	300.81	301.408	82.107	52.496	82.642	91.306	1241.554	1218.623	1589.596	1561.885
20160422:15:38:52	23.709	12.204	2.217	23.546	0.25	2.235	0.25	2.008	113.821	300.833	301.438	82.219	52.498	82.705	91.39	1242.935	1219.924	1591.398	1563.585
20160422:15:43:52	23.705	12.28	2.272	23.538	0.25	2.223	0.25	2.009	114.033	300.843	301.475	82.267	52.505	82.756	91.468	1244.292	1221.278	1593.17	1565.353
20160422:15:48:52	23.7	12.295	2.291	23.532	0.25	2.223	0.25	2.017	114.067	300.778	301.413	82.32	52.524	82.844	91.544	1245.635	1222.598	1594.924	1567.079
20160422:15:53:52	23.699	12.33	2.292	23.53	0.25	2.214	0.25	2.005	114.167	300.744	301.408	82.368	52.537	82.925	91.617	1247.02	1223.913	1596.733	1568.799
20160422:15:58:52	23.699	12.335	2.223	23.536	0.25	2.22	0.25	2.001	114.182	300.832	301.433	82.427	52.537	82.984	91.69	1248.373	1225.265	1598.5	1570.566
20160422:16:03:52	23.696	12.33	2.183	23.536	0.25	2.208	0.25	2.002	114.164	300.738	301.406	82.531	52.553	83.043	91.764	1249.716	1226.571	1600.254	1572.274
20160422:16:08:52	23.698	12.349	2.212	23.536	0.25	2.206	0.25	2.011	114.222	300.726	301.452	82.601	52.545	83.097	91.838	1251.101	1227.933	1602.063	1574.055
20160422:16:13:52	23.701	12.365	2.28	23.533	0.25	2.212	0.25	2.015	114.268	300.856	301.483	82.651	52.564	83.177	91.908	1252.458	1229.236	1603.837	1575.759
20160422:16:18:52	23.696	12.085	2.274	23.529	0.25	2.212	0.25	2.008	113.443	300.868	301.446	82.693	52.55	83.251	91.978	1253.794	1230.592	1605.583	1577.534
20160422:16:23:52	23.694	11.266	2.264	23.527	0.25	2.182	0.25	1.982	110.998	300.769	301.412	82.729	52.576	83.293	92.047	1255.188	1231.907	1607.406	1579.254
20160422:16:28:52	23.69	11.2	2.181	23.53	0.25	2.187	0.25	1.978	110.788	300.812	301.478	82.779	52.56	83.342	92.113	1256.55	1233.224	1609.185	1580.977
20160422:16:33:52	23.69	11.365	2.198	23.528	0.25	2.197	0.25	1.98	111.286	300.828	301.534	82.89	52.58	83.392	92.176	1257.881	1234.576	1610.926	1582.746
20160422:16:38:52	23.691	12.091	2.118	23.535	0.25	2.21	0.25	2.012	113.465	300.83	301.476	82.931	52.571	83.43	92.235	1259.275	1235.883	1612.748	1584.457
20160422:16:43:52	23.689	12.135	2.101	23.535	0.25	2.224	0.25	2.022	113.591	300.823	301.412	82.956	52.581	83.497	92.292	1260.633	1237.246	1614.524	1586.241
20160422:16:48:52	23.689	12.142	2.207	23.527	0.25	2.218	0.25	2.027	113.612	300.837	301.436	82.977	52.571	83.547	92.346	1261.974	1238.553	1616.278	1587.951
20160422:16:53:52	23.689	12.15	2.177	23.529	0.25	2.21	0.25	2.019	113.635	300.908	301.486	83.015	52.582	83.584	92.4	1263.369	1239.904	1618.102	1589.72
20160422:16:58:52	23.687	12.182	2.25	23.522	0.25	2.216	0.25	2.026	113.725	300.929	301.541	83.055	52.576	83.62	92.449	1264.731	1241.226	1619.883	1591.451
20160422:17:03:52	23.683	12.201	2.28	23.515	0.25	2.203	0.25	2	113.771	300.908	301.52	83.094	52.586	83.665	92.498	1266.062	1242.538	1621.626	1593.171
20160422:17:08:52	23.681	12.212	2.177	23.521	0.25	2.221	0.25	2.017	113.803	300.861	301.462	83.124	52.58	83.693	92.545	1267.456	1243.893	1623.45	1594.945
20160422:17:13:52	23.682	12.238	2.151	23.524	0.25	2.229	0.25	2.014	113.88	300.763	301.437	83.172	52.581	83.729	92.586	1268.815	1245.203	1625.228	1596.662
20160422:17:18:52	23.681	12.251	2.161	23.522	0.25	2.223	0.25	2.019	113.915	300.781	301.487	83.229	52.595	83.773	92.632	1270.148	1246.571	1626.972	1598.453
20160422:17:23:52	23.679	12.269	2.18	23.519	0.25	2.226	0.25	2.034	113.964	300.89	301.49	83.257	52.591	83.815	92.677	1271.544	1247.863	1628.8	1600.147
20160422:17:28:52	23.68	12.038	2.163	23.521	0.25	2.221	0.25	2.014	113.283	300.841	301.448	83.289	52.582	83.88	92.72	1272.904	1249.215	1630.58	1601.917
20160422:17:33:52	23.676	11.279	2.092	23.522	0.25	2.198	0.25	2.002	111.012	300.837	301.494	83.322	52.589	83.92	92.76	1274.238	1250.555	1632.326	1603.673
20160422:17:38:52	23.673	11.173	2.084	23.52	0.25	2.201	0.25	2.008	110.679	300.76	301.44	83.344	52.587	83.94	92.801	1275.632	1251.86	1634.15	1605.383
20160422:17:43:52	23.674	11.345	2.094	23.52	0.25	2.2	0.25	2.011	111.201	300.772	301.475	83.395	52.609	83.991	92.839	1276.99	1253.221	1635.928	1607.167
20160422:17:48:52	23.671	12.09	2.099	23.516	0.25	2.211	0.25	2.028	113.432	300.858	301.507	83.414	52.601	84.009	92.878	1278.323	1254.526	1637.674	1608.878
20160422:17:53:52	23.668	12.146	1.987	23.522	0.25	2.222	0.25	2.017	113.592	300.896	301.566	83.45	52.607	84.051	92.909	1279.716	1255.892	1639.498	1610.669
20160422:17:58:52	23.667	12.149	2.062	23.516	0.25	2.214	0.25	2.015	113.6	300.894	301.492	83.489	52.598	84.08	92.

Time: day:hh:mm:ss	Stack Pressure: in-Hg	Sat% H2O: Percent	Static: in-H2O	Barometric: in-Hg	Flowmeter1: l/min	Vacuum1: in-Hg	Flowmeter2: l/min	Vacuum2: in-Hg	Stack Temp: degF	Sorbent Temp: degF	Probe Temp: degF	DGM#1 Temp: degF	Condenser Temp: degF	DGM#2 Temp: degF	DAQ Temp: degF	DGM1*: liters STP	DGM2*: liters STP	DGM1: liters nominal	DGM2: liters nominal
20160422:21:48:52	23.622	12.318	1.645	23.501	0.25	2.242	0.25	2.037	114.018	300.892	301.534	84.004	52.683	84.626	93.794	1343.733	1318.514	1723.431	1692.863
20160422:21:53:52	23.619	12.317	1.677	23.496	0.25	2.236	0.25	2.033	114.011	300.905	301.533	84.007	52.688	84.628	93.781	1345.074	1319.866	1725.191	1694.639
20160422:21:58:52	23.622	12.283	1.689	23.498	0.25	2.24	0.25	2.037	113.919	300.964	301.561	83.997	52.68	84.62	93.766	1346.469	1321.2	1727.02	1696.391
20160422:22:03:52	23.626	12.237	1.743	23.498	0.25	2.234	0.25	2.029	113.791	300.931	301.527	83.948	52.633	84.572	93.751	1347.821	1322.508	1728.794	1698.109
20160422:22:08:52	23.629	12.228	1.831	23.495	0.25	2.239	0.25	2.028	113.771	300.902	301.518	83.949	52.639	84.573	93.736	1349.158	1323.871	1730.548	1699.898
20160422:22:13:52	23.627	12.222	1.797	23.495	0.25	2.241	0.25	2.03	113.749	300.916	301.558	83.951	52.639	84.575	93.722	1350.555	1325.174	1732.381	1701.611
20160422:22:18:52	23.627	12.221	1.826	23.493	0.25	2.244	0.25	2.024	113.747	300.917	301.532	83.954	52.668	84.578	93.712	1351.916	1326.544	1734.167	1703.41
20160422:22:23:52	23.623	12.098	1.812	23.49	0.25	2.243	0.25	2.034	113.38	300.905	301.56	83.954	52.68	84.584	93.7	1353.254	1327.851	1735.922	1705.128
20160422:22:28:52	23.617	11.284	1.737	23.489	0.25	2.231	0.25	2.021	110.943	300.838	301.518	83.907	52.639	84.544	93.69	1354.641	1329.175	1737.743	1706.867
20160422:22:33:52	23.617	11.382	1.743	23.489	0.25	2.21	0.25	2.011	111.226	300.801	301.513	83.903	52.636	84.551	93.681	1355.996	1330.529	1739.52	1708.645
20160422:22:38:52	23.614	12.129	1.693	23.49	0.25	2.231	0.25	2.035	113.464	300.869	301.514	83.913	52.636	84.557	93.674	1357.337	1331.839	1741.28	1710.367
20160422:22:43:52	23.613	12.202	1.648	23.492	0.25	2.247	0.25	2.027	113.673	300.908	301.486	83.919	52.642	84.559	93.669	1358.72	1333.207	1743.094	1712.164
20160422:22:48:52	23.613	12.218	1.666	23.491	0.25	2.238	0.25	2.011	113.717	300.923	301.504	83.916	52.646	84.556	93.664	1360.086	1334.499	1744.887	1713.861
20160422:22:53:52	23.61	12.272	1.645	23.489	0.25	2.231	0.25	2.027	113.869	300.959	301.474	83.915	52.661	84.558	93.66	1361.432	1335.851	1746.654	1715.637
20160422:22:58:52	23.613	12.265	1.768	23.483	0.25	2.222	0.25	2.028	113.853	300.926	301.551	83.91	52.649	84.555	93.655	1362.805	1337.2	1748.456	1717.41
20160423:03:03:52	23.608	12.281	1.765	23.479	0.25	2.217	0.25	2.028	113.893	300.937	301.512	83.907	52.681	84.551	93.651	1364.183	1338.495	1750.265	1719.111
20160423:03:08:52	23.611	12.326	1.709	23.485	0.25	2.227	0.25	2.015	114.024	300.924	301.497	83.904	52.66	84.541	93.647	1365.524	1339.862	1752.024	1720.908
20160423:03:13:52	23.608	12.387	1.694	23.483	0.25	2.228	0.25	2.029	114.195	300.929	301.511	83.901	52.677	84.53	93.644	1366.89	1341.166	1753.817	1722.62
20160423:03:18:52	23.607	12.434	1.713	23.481	0.25	2.232	0.25	2.017	114.326	301.013	301.597	83.899	52.67	84.522	93.64	1368.27	1342.527	1755.628	1724.41
20160423:03:23:52	23.608	12.44	1.739	23.48	0.25	2.238	0.25	2.023	114.346	300.98	301.598	83.898	52.68	84.516	93.633	1369.608	1343.848	1757.385	1726.145
20160423:03:28:52	23.607	12.398	1.705	23.482	0.25	2.248	0.25	2.039	114.224	300.905	301.511	83.816	52.633	84.432	93.625	1370.969	1345.161	1759.17	1727.87
20160423:03:33:52	23.604	12.192	1.617	23.485	0.25	2.251	0.25	2.041	113.615	300.917	301.487	83.785	52.632	84.399	93.616	1372.358	1346.518	1760.993	1729.652
20160423:03:38:52	23.606	11.27	1.683	23.483	0.25	2.232	0.25	2.024	110.882	300.885	301.527	83.784	52.626	84.396	93.605	1373.693	1347.827	1762.744	1731.372
20160423:03:43:52	23.606	12.108	1.652	23.485	0.25	2.237	0.25	2.027	113.385	300.916	301.58	83.777	52.633	84.39	93.592	1375.059	1349.193	1764.537	1733.167
20160423:03:48:52	23.599	12.253	1.597	23.482	0.25	2.246	0.25	2.038	113.798	300.943	301.577	83.766	52.635	84.382	93.577	1376.452	1350.494	1766.365	1734.876
20160423:03:53:52	23.598	12.266	1.594	23.48	0.25	2.245	0.25	2.032	113.833	300.942	301.555	83.737	52.645	84.358	93.562	1377.782	1351.832	1768.111	1736.633
20160423:03:58:52	23.593	12.249	1.51	23.482	0.25	2.247	0.25	2.058	113.778	300.905	301.48	83.682	52.626	84.305	93.545	1379.145	1353.177	1769.898	1738.4
20160423:00:03:52	23.594	12.253	1.517	23.482	0.25	2.244	0.25	2.036	113.79	300.897	301.527	83.676	52.637	84.307	93.523	1380.546	1354.491	1771.737	1740.126
20160423:00:08:52	23.59	12.259	1.435	23.484	0.25	2.239	0.25	2.044	113.802	300.962	301.548	83.676	52.656	84.304	93.5	1381.883	1355.859	1773.491	1741.923
20160423:00:13:52	23.59	12.244	1.47	23.482	0.25	2.247	0.25	2.04	113.758	300.882	301.513	83.623	52.635	84.261	93.479	1383.232	1357.164	1775.261	1743.637
20160423:00:18:52	23.592	12.243	1.485	23.482	0.25	2.251	0.25	2.047	113.759	300.919	301.552	83.619	52.644	84.262	93.456	1384.629	1358.512	1777.093	1745.408
20160423:00:23:52	23.592	12.237	1.603	23.474	0.25	2.233	0.25	2.03	113.741	301.011	301.626	83.62	52.669	84.266	93.435	1385.965	1359.854	1778.846	1747.171
20160423:00:28:52	23.593	12.216	1.621	23.473	0.25	2.238	0.25	2.039	113.68	300.944	301.569	83.572	52.639	84.215	93.417	1387.311	1361.161	1780.613	1748.887
20160423:00:33:52	23.592	11.277	1.551	23.478	0.25	2.229	0.25	2.018	110.87	300.911	301.547	83.566	52.637	84.214	93.403	1388.714	1362.517	1782.454	1750.669
20160423:00:38:52	23.589	11.71	1.501	23.479	0.25	2.222	0.25	2.014	112.181	300.884	301.541	83.565	52.668	84.22	93.387	1390.052	1363.822	1784.209	1752.383
20160423:00:43:52	23.587	12.081	1.503	23.477	0.25	2.237	0.25	2.034	113.284	300.924	301.546	83.567	52.674	84.219	93.369	1391.389	1365.19	1785.963	1754.18
20160423:00:48:52	23.584	12.112	1.534	23.471	0.25	2.238	0.25	2.038	113.368	300.901	301.509	83.49	52.65	84.166	93.352	1392.786	1366.499	1787.796	1755.9
20160423:00:53:52	23.583	12.122	1.604	23.466	0.25	2.237	0.25	2.033	113.397	300.885	301.489	83.455	52.635	84.148	93.339	1394.139	1367.823	1789.572	1757.639
20160423:00:58:52	23.581	12.13	1.581	23.464	0.25	2.234	0.25	2.034	113.417	300.959	301.573	83.451	52.653	84.131	93.324	1395.478	1369.174	1791.33	1759.415
20160423:01:03:52	23.582	12.134	1.594	23.464	0.25	2.241	0.25	2.041	113.427	300.941	301.573	83.451	52.668	84.118	93.308	1396.877	1370.486	1793.165	1761.139
20160423:01:08:52	23.577	12.128	1.507	23.467	0.25	2.253	0.25	2.031	113.406	300.962	301.557	83.425	52.657	84.062	93.291	1398.23	1371.851	1794.941	1762.932
20160423:01:13:52	23.578	12.123	1.558	23.463	0.25	2.241	0.25	2.025	113.392	300.96	301.554	83.393	52.632	84.013	93.273	1399.565	1373.143	1796.693	1764.63
20160423:01:18:52	23.581	12.13	1.669	23.458	0.25	2.254	0.25	2.041	113.415	300.944	301.558	83.385	52.637	84.006	93.256	1400.963	1374.493	1798.528	1766.404
20160423:01:23:52	23.577	12.137	1.52	23.465	0.25	2.243	0.25	2.057	113.431	300.924	301.513	83.356	52.657	83.992	93.233	1402.316	1375.844	1800.304	1768.179
20160423:01:28:52	23.569	12.138	1.412	23.465	0.25	2.249	0.25	2.037	113.422	300.941	301.555	83.292	52.62	83.937	93.208	1403.652	1377.139	1802.056	1769.88
20160423:01:33:52	23.567	12.153	1.405	23.464	0.25	2.252	0.25	2.038	113.463	300.963	301.572	83.283	52.643	83.925	93.185	1405.046	1378.511	1803.885	1771.682
20160423:01:38:52	23.567	12.154	1.372	23.46	0.25	2.254	0.25	2.038	113.455	300.927	301.553	83.254	52.636	83.862	93.156	1406.401	1379.816	1805.663	1773.397
20160423:01:43:52	23.567	12.152	1.501	23.457	0.25	2.251	0.25	2.028	113.459	300.891	301.502	83.219	52.635	83.803	93.126	1407.743	1381.173	1807.424	1775.179
20160423:01:48:52	23.567	12.149	1.594	23.45	0.25	2.248	0.25	2.038	113.451	300.926	301.554	83.175	52.646	83.775	93.097	1409.13	1382.499	1809.244	1776.921
20160423:01:53:52	23.573	12.142	1.6	23.455	0.25	2.25	0.25	2.054	113.438	300.918	301.503	83.088	52.627	83.728	93.063	1410.482	1383.809	1811.019	1778.643
20160423:01:58:52	23.569	12.151	1.546	23.456	0.25	2.243	0.25	2.043	113.459	300.946	301.608	83.065	52.644	83.717	93.03	1411.827	1385.172	1812.783	1780.432
20160423:02:03:52	23.559	12.148	1.405	23.456	0.25	2.256	0.25	2.045	113.437	300.928	301.57	83.011	52.624	83.669	92.993	1413.211	1386.477	1814.598	1782.147
20160423:02:08:52	23.565	12.152	1.503	23.454	0.25	2.253	0.25	2.057	113.454	300.933	301.542	82.989	52.627	83.652	92.96	1414.571	1387.849	1816.383	1783.949
20160423:02:13:52	23.558	12.146	1.432	23.453	0.25	2.257	0.25	2.055	113.43	300.931	301.526	82.947	52.63	83.602	92.922	1415.914	1389.153	1818.144	1785.662
20160423:02:18:52	23.561	11.857	1.594	23.444	0.25	2.238	0.25	2.031	112.573	300.985	301.567	82.928	52.615	83.561	92.89	1417.291	1390.481	1819.952	1787.406
20160423:02:23:52	23.563	11.037	1.605	23.445	0.25	2.222	0.25	2.011	110.093	300.901	301.568	82.889	52.62	83.478	92.85	1418.673	1391.836	1821.765	1789.186
20160423:02:28:52	23.559	11.417	1.619	23.44	0.25	2.215	0.25	2.01	111.246	300.812	301.523	82.803	52.598	83.423	92.808	1420.013	1393.151	1823.524	1790.914
20160423:02:33:52	23.56	12.021	1.67	23.437	0.25	2.237	0.25	2.027	113.067	300.884	301.519	82.752	52.607	83.386	92.762	1421.379	1394.52	1825.317	1792.712
20160423:02:38:52	23.555	12.072	1.577	23.439	0.25	2.247	0.25	2.028	113.21	300.942	301.6	82.712	52.608	83.348	92.718	1422.763	1395.813	1827.131	1794.412
20160423:02:43:52	23.554	12.097	1.494	23.445	0.25	2.255	0.25	2.043	113.282	300.954	301.574	82.667	52.588	83.304	92.672	1424.104	1397.166	1828.891	1796.188
20160423:02:48:52	23.551	12.122	1.481	23.443	0.25	2.258	0.25	2.05	113.349	300.922	301.554	82.636	52.592	83.277	92.624	1425.465	1398.517	1830.676	1797.962
20160423:02:53:52	23.555	12.131	1.545	23.441	0.25	2.25	0.25	2.048	113.38	300.91	301.531	82.605	52.598	83.241	92.577	1426.858	1399.816	1832.504	1799.667
20160423:02:58:52	23.554	12.142	1.514	23.442	0.25	2.254	0.25	2.052	113.411	300.943	301.498	82.556	52.576	83.166	92.535	1428.191	1401.186	1834.252	1801.466
20160423:03:03:52	23.547	12.151	1.459	23.44	0.25	2.255	0.25	2.042	113.427	300.971	301.564	82.51	52.583	83.135	92.488	1429.554	1402.495	1836.039	1803.186
20160423:03:08:52	23.551	12.156	1.487	23.442	0.25	2.236	0.25	2.032	113.447	300.948	301.561	82.44	52.581	83.075	92.442	1430.952	1403.85	1837.872	1804.964
20160423:03:13:52	23.548	12.153	1.51	23.437	0.25	2.238	0.25	2.035	113.434	300.923	301.553	82.393	52.557	83.026	92.398	1432.289	1405.187	1839.626	1806.72
20160423:03:18:52	23.55	12.056	1.477	23.441	0.25	2.249	0.25	2.042	113.151	300.925	301.522	82.357	52.56	82.991	92.351	1433.647	1406.497	1841.406	1808.44
20160423:03:23:52	23.55	11.1	1.511	23.439	0.25	2.231	0.25	2.025	110.27	300.908	301.545	82.323	52.575	82.954	92.303	1435.048	1407.862	1843.243	1810.231
20160423:03:28:52	23.549	11.212	1.578	23.433	0.25	2.213	0.25	2.011	110.605	300.849	301.511	82.267	52.535	82.899	92.255	1436.388	1409.174	1845	1811.953
20160423:03:33:52	23.544	12.004	1.524	23.432	0.25	2.233	0.25	2.039	112.995	300.9	301.54	82.225	52.557	82.838	92.209	1437.739	1410.541	1846.772	1813.748
20160423:03:38:52	23.542	12.073	1.456	23.435	0.25	2.238	0.25	2.04	113.193	300.88	301.538	82.173	52.561	82.776	92.16	1439.142	1411.856	1848.611	1815.474
20160423:03:43:52	23.541	12.106	1.508	23.43	0.25	2.235	0.25	2.046	113.287	300.861	301.471	82.093	52.547	82.728	92.108	1440.487	1413.178	1850.374	1817.209
20160423:03:48:52	23.54	12.127	1.409	23.436	0.25	2.237	0.25	2.054	113.347	300.889	301.496	82.038	52.545	82.675	92.058	1441.829	1414.536	1852.133	1818.991
20160423:03:53:52	23.541	12.129	1.544	23.427	0.25	2.23	0.25	2.039	113.352	300.892	301.53	82.004	52.574	82.639	92.007	1443.23	1415.85	1853.97	1820.716
20160423:03:58:52	23.541	12.138	1.444	23.435	0.25	2.258	0.25	2.049	113.379	300.864	301.474	81.961	52.552	82.602	91.953	1444.581	1417.22	1855.741	1822.513
20160423:04:03:52	23.54	12.153	1.499	23.43	0.25	2.245	0.25	2.049	113.421	300.851	301.46	81.919	52.565	82.563	91.904	1445.925	1418.523	1857.502	1824.224
20160423:04:08:52	23.536	12.16	1.498	23.426	0.25	2.252	0.25	2.034	113.435	300.87	301.52	81.854	52.539	82.466	91.853	1447.322	1419.861	1859.333	1825.979
20160423:04:13:52	23.537	12.171	1.448	23.431	0.25	2.262	0.25	2.056	113.47	300.86	301.491	81.794	52.562	82.432	91.802	1448.682	1421.208	1861.115	1827.746
20160423:04:18:52	23.536	12.174	1.626	23.417	0.25	2.242	0.25	2.025	113.477	300.848	301.475	81.745	52.563	82.392	91.751	1450.022	1422.523	1862.872	1829.472
20160423:04:23:52	23.536	11.17	1.508	23.425	0.25	2.249	0.25	2.042	110.463	300.77	301.427	81.711	52.578	82.362	91.704	1451.417	1423.894	1864.7	1831.271
20160423:04:28:52	23.532	11.702	1.377	23.43	0.25	2.232	0.25	2.018	112.066	300.757	301.418	81.658	52.563	82.315	91.657	1452.773	1425.198	1866.476	1832.981
20160423:04:33:52	23.533	12.107	1.472	23.425	0.25	2.243	0.25	2.034	113.278	300.811	301.446	81.634	52.573	82.292	91.614	1454.106	1426.548	1868.222	1834.752
20160423:04:38:52	23.537	12.132	1.484	23.428	0.25	2.239	0.25	2.044	113.357	300.906	301.536	81.601	52.579	82.259	91.574	1455.498	1427.891	1870.046	1836.513
20160423:04:43:52	23.534	12.126	1.505	23.424	0.25	2.241	0.25	2.051	113.336	300.869	301.512	81.523	52.561	82.215	91.534	1456.859	1429.199	1871.83	1838.229
20160423:04:48:52	23.533	12.148	1.494	23.424	0.25	2.253	0.25	2.053	113.398	300.85	301.492	81.484	52.577	82.181	91.494	1458.192	1430.558	1873.576	1840.011
20160423:04:53:52	23.529	12.232	1.523	23.417	0.25	2.245	0.25	2.047	113.632	300.88	301.468	81.434	52.556	82.09	91.455	1459.58	1431.864	1875.394	1841.726
20160423:04:58:52	23.533	12.296	1.495	23.423	0.25	2.259	0.25	2.06	113.823	300.899	301.485	81.414	52.559	82.064	91.413	1460.936	1433.233	1877.17	1843.521
20160423:05:03:52	23.53	12.344	1.511	23.419	0.25	2.264	0.25	2.048	113.953	300.917	301.518	81.377	52.566	82.016	91.371	1462.276	1434.545	1878.926	1845.241
20160423:05:08:52	23.529	12.404	1.539	23.416	0.25	2.261	0.25	2.053	114.124	300.836	301.468	81.328	52.539	81.967	91.322	1463.663	1435.869	1880.743	1846.977
20160423:05:13:52	23.526	12.422	1.459	23.419	0.25	2.262	0.25	2.063	114.17	300.87	301.509	81.3	52.554	81.94	91.28	1465.016	1437.226	1882.515	1848.758
20160423:05:18:52	23.527	12.11	1.511	23.416	0.25	2.243	0.25	2.05	113.256	300.872	301.507	81.256	52.572	81.893	91.236	1466.362	1438.539	1884.278	1850.479
20160423:05:23:52	23.526	11.442	1.52	23.414	0.25	2.23	0.25	2.011	111.288	300.815	301.51	81.17	52.565	81.819	91.192	1467.753	1439.905	1886.1	1852.271
20160423:05:28:52	23.52	12.376	1.575	23.404	0.25	2.228	0.25	2.033	114.032	300.825	301.494	81.131	52.581	81.797	91.146	1469.112	1441.205	1887.88	1853.976
20160423:05:33:52	23.519	12.458	1.362	23.419	0.25	2.251	0.25	2.038	114.262	300.838	301.493	81.096	52.576	81.741	91.101	1470.451	1442.556	1889.633	1855.746
20160423:05:38:52	23.52	12.502	1.312	23.424	0.25	2.257	0.25	2.052	114.39	300.883	301.394	81.052	52.56	81.697	91.059	1471.832	1443.907	1891.441	1857.517
20160423:05:43:52	23.522	12.543	1.396	23.419	0.25	2.265	0.25	2.053	114.507	300.908	301.508	81.014	52.558	81.652	91.012	1473.194	1445.209	1893.224	1859.224
20160423:05:48:52	23.52	12.563	1.374	23.419	0.25	2.267	0.25	2.047	114.56	300.875	301.48	80.978	52.569	81.615	90.965	1474.535	1446.581	1894.98	1861.021
20160423:05:53:52	23.524	12.574	1.43	23.419	0.25	2.265	0.25	2.052	114.597	300.875	301.463	80.909	52.501	81.51	90.924	1475.918	1447.89	1896.789	1862.737
20160423:05:58:52	23.524	12.553	1.356	23.424	0.25	2.266	0.25	2.041	114.537	300.922	301.53	80.84	52.52	81.47	90.875	1477.283	1449.249	1898.576	1864.517
20160423:06:03:52	23.526	12.521	1.18	23.439	0.25	2.247	0.25	2.048	114.452	300.885	301.479	80.771	52.51	81.428	90.826	1478.628	1450.583	1900.333	1866.263
20160423:06:08:52	23.526	12.56	1.105	23.445	0.25	2.269	0.25	2.052	114.561	300.876	301.478	80.708	52.48	81.373	90.776	1480.008	1451.896	1902.137	1867.981
20160423:06:13:52	23.53	12.631	1.134	23.446	0.25	2.264	0.25	2.058	114.764	300.875	301.48	80.659	52.491	81.32	90.718	1481.381	1453.261	1903.931	1869.767
20160423:06:18:52	23.536	11.883	1.054	23.458	0.25	2.265	0.25	2.05	112.605	300.812	301.472	80.613	52.49	81.245	90.662	1482.728	1454.572	1905.691	1871.481
20160423:06:23:52	23.531	12.282	1.065	23.453	0.25	2.257	0.25	2.053	113.765	300.864	301.533	80.517	52.484	81.154	90.607	1484.105	1455.944	1907.489	1873.274
20160423:06:28:52	23.53	12.609	1.114	23.448	0.25	2.282	0.25	2.068	114.705	300.846	301.489	80.412	52.461	81.083	90.546	1485.483	1457.248	1909.289	1874.979
20160423:06:33:52	23.533	12.639	1.14	23.449	0.25	2.29	0.25	2.061	114.792	300.919	301.523	80.352	52.441	81.02	90.482	1486.826	1458.589	1911.043	1876.733
20160423:06:38:52	23.531	12.693	1.131	23.448	0.25	2.283	0.25	2.064	114.939	300.867	301.475	80.256	52.429	80.927	90.414	1488.198	1459.941	1912.833	1878.5
20160423:06:43:52	23.533	12.736	1.078	23.454	0.249	2.263	0.25	2.065	115.063	300.894	301.541	80.129	52.396	80.812	90.342	1489.576	1461.257	1914.631	1880.22
20160423:06:48:52	23.533	12.76	1.066	23.455	0.25	2.265	0.25	2.061	115.128	300.849	301.509	80.064	52.385	80.735	90.269	1490.92	1462.628	1916.385	1882.011
20160423:06:53:52	23.533	12.772	1.188	23.446	0.249	2.259	0.25	2.052	115.162	300.831	301.467	79.989	52.36	80.661	90.185	1492.292	1463.944	1918.176	1883.731
20160423:06:58:52	23.537	12.754	1.193	23.449	0.249	2.263	0.25	2.055	115.119	300.848	301.48	79.873	52.338	80.56	90.101	1493.66	1465.297	1919.961	1885.498
20160423:07:03:52	23.543	12.747	1.331	23.445	0.251	2.278	0.25	2.061	115.107	300.799	301.435	79.745	52.291	80.434	90.017	1495.023	1466.634	1921.739	1887.244
20160423:07:08:52	23.536	12.77	1.251	23.444	0.25	2.28	0.25	2.074	115.162	300.828	301.5	79.671	52.272	80.353	89.934	1496.396	1467.948	1923.53	1888.961
20160423:07:13:52	23.534	12.743	1.229	23.444	0.25	2.273	0.25	2.084	115.085	300.841	301.458	79.561	52.253	80.275	89.845	1497.77	1469.314	1925.322	1890.744
20160423:07:18:52	23.532	12.745	1.326	23.435	0.25	2.285	0.25	2.061	115.086	300.814	301.491	79.466	52.221	80.146	89.758	1499.115	1470.623	1927.076	1892.455
20160423:07:23:52	23.534	12.718	1.461	23.426	0.25	2.264	0.25	2.057	115.013	300.803	301.454	79.388	52.172	80.064	89.668	1500.493	1471.996	1928.874	1894.248
20160423:07:28:52	23.537	12.712	1.425	23.432	0.252	2.298	0.25	2.077	115.001	300.86	301.501	79.304	52.173	79.99	89.576	1501.882	1473.297	1930.685	1895.947
20160423:07:33:52	23.538	12.699	1.334	23.439	0.25	2.28	0.25	2.089	114.966	300.845	301.442	79.169	52.109	79.89	89.484	1503.226	1474.644	1932.437	1897.705
20160423:07:38:52	23.537	12.66	1.35	23.438	0.25	2.275	0.25	2.07	114.857	300.812	301.471	79.098	52.094	79.776	89

Time: day:hh:mm:ss	Stack Pressure: in-Hg	Sat% H2O: Percent	Static: in-H2O	Barometric: in-Hg	Flowmeter1: l/min	Vacuum1: in-Hg	Flowmeter2: l/min	Vacuum2: in-Hg	Stack Temp: degF	Sorbent Temp: degF	Probe Temp: degF	DGM#1 Temp: degF	Condenser Temp: degF	DGM#2 Temp: degF	DAQ Temp: degF	DGM1*: liters STP	DGM2*: liters STP	DGM1: liters nominal	DGM2: liters nominal
20160423:11:28:52	23.6	11.656	1.725	23.473	0.25	2.249	0.25	2.062	112.05	300.759	301.378	76.274	51.697	76.927	86.321	1567.264	1537.44	2015.617	1979.37
20160423:11:33:52	23.586	11.649	1.551	23.472	0.25	2.236	0.25	2.042	112.008	300.705	301.386	76.24	51.705	76.893	86.27	1568.593	1538.753	2017.337	1981.071
20160423:11:38:52	23.592	11.666	1.722	23.466	0.25	2.239	0.25	2.039	112.066	300.704	301.329	76.226	51.695	76.856	86.221	1569.944	1540.123	2019.087	1982.848
20160423:11:43:52	23.597	11.68	1.831	23.462	0.25	2.246	0.25	2.036	112.115	300.7	301.359	76.211	51.714	76.851	86.176	1571.334	1541.429	2020.887	1984.541
20160423:11:48:52	23.597	11.663	1.892	23.458	0.25	2.241	0.25	2.037	112.066	300.69	301.323	76.171	51.681	76.826	86.136	1572.672	1542.799	2022.62	1986.318
20160423:11:53:52	23.596	11.658	1.815	23.463	0.25	2.249	0.25	2.046	112.048	300.707	301.312	76.166	51.698	76.812	86.1	1574.038	1544.104	2024.389	1988.009
20160423:11:58:52	23.593	11.668	1.709	23.467	0.25	2.251	0.25	2.047	112.073	300.771	301.387	76.155	51.681	76.783	86.064	1575.408	1545.445	2026.163	1989.748
20160423:12:03:52	23.598	11.708	1.791	23.466	0.25	2.255	0.25	2.055	112.2	300.763	301.346	76.136	51.681	76.755	86.029	1576.75	1546.804	2027.9	1991.509
20160423:12:08:52	23.601	11.729	1.843	23.465	0.25	2.245	0.25	2.043	112.269	300.754	301.365	76.111	51.677	76.727	85.998	1578.145	1548.11	2029.706	1993.203
20160423:12:13:52	23.599	11.717	1.781	23.468	0.25	2.254	0.25	2.047	112.23	300.781	301.371	76.079	51.66	76.665	85.962	1579.51	1549.474	2031.472	1994.97
20160423:12:18:52	23.595	11.72	1.756	23.465	0.25	2.252	0.25	2.044	112.233	300.736	301.391	76.054	51.657	76.621	85.931	1580.84	1550.785	2033.194	1996.669
20160423:12:23:52	23.595	11.744	1.73	23.468	0.25	2.251	0.25	2.049	112.305	300.726	301.355	76.021	51.66	76.602	85.897	1582.236	1552.158	2035.002	1998.447
20160423:12:28:52	23.598	11.722	1.799	23.465	0.25	2.242	0.25	2.054	112.242	300.7	301.316	75.948	51.643	76.57	85.863	1583.581	1553.465	2036.743	2000.141
20160423:12:33:52	23.602	11.728	1.791	23.471	0.25	2.247	0.25	2.054	112.266	300.748	301.4	75.933	51.649	76.555	85.829	1584.927	1554.824	2038.483	2001.902
20160423:12:38:52	23.595	11.78	1.653	23.473	0.25	2.26	0.25	2.061	112.411	300.749	301.361	75.906	51.634	76.536	85.797	1586.324	1556.155	2040.291	2003.626
20160423:12:43:52	23.59	11.769	1.453	23.483	0.25	2.254	0.25	2.061	112.372	300.734	301.349	75.908	51.646	76.53	85.764	1587.653	1557.475	2042.009	2005.335
20160423:12:48:52	23.586	11.779	1.366	23.486	0.25	2.248	0.25	2.054	112.394	300.702	301.335	75.883	51.647	76.502	85.733	1589.019	1558.828	2043.776	2007.086
20160423:12:53:52	23.587	11.798	1.288	23.492	0.25	2.25	0.25	2.056	112.452	300.729	301.375	75.886	51.674	76.507	85.708	1590.404	1560.14	2045.567	2008.784
20160423:12:58:52	23.585	11.805	1.251	23.493	0.25	2.255	0.25	2.054	112.471	300.678	301.365	75.847	51.672	76.481	85.683	1591.741	1561.512	2047.294	2010.56
20160423:13:03:52	23.591	11.827	1.347	23.492	0.25	2.251	0.25	2.063	112.545	300.68	301.334	75.84	51.674	76.485	85.663	1593.122	1562.823	2049.08	2012.256
20160423:13:08:52	23.594	11.85	1.347	23.495	0.25	2.254	0.25	2.058	112.617	300.694	301.349	75.847	51.684	76.49	85.645	1594.483	1564.192	2050.839	2014.028
20160423:13:13:52	23.593	11.863	1.333	23.495	0.25	2.249	0.25	2.075	112.655	300.723	301.338	75.847	51.687	76.493	85.629	1595.825	1565.491	2052.572	2015.709
20160423:13:18:52	23.59	11.88	1.318	23.493	0.25	2.251	0.25	2.049	112.698	300.724	301.399	75.804	51.671	76.446	85.614	1597.219	1566.854	2054.374	2017.472
20160423:13:23:52	23.597	11.867	1.462	23.489	0.25	2.25	0.25	2.053	112.671	300.717	301.414	75.801	51.668	76.443	85.601	1598.561	1568.189	2056.109	2019.199
20160423:13:28:52	23.594	11.86	1.432	23.489	0.25	2.265	0.25	2.056	112.646	300.734	301.353	75.807	51.675	76.442	85.589	1599.905	1569.505	2057.846	2020.902
20160423:13:33:52	23.591	11.854	1.371	23.491	0.25	2.256	0.25	2.056	112.625	300.746	301.387	75.801	51.67	76.44	85.578	1601.299	1570.86	2059.648	2022.656
20160423:13:38:52	23.591	11.839	1.342	23.493	0.25	2.252	0.25	2.059	112.579	300.715	301.406	75.8	51.682	76.44	85.565	1602.627	1572.172	2061.365	2024.353
20160423:13:43:52	23.596	11.831	1.396	23.493	0.25	2.259	0.25	2.049	112.564	300.671	301.327	75.765	51.65	76.399	85.554	1603.992	1573.544	2063.128	2026.13
20160423:13:48:52	23.597	11.826	1.39	23.495	0.25	2.254	0.25	2.046	112.549	300.697	301.301	75.738	51.64	76.361	85.542	1605.377	1574.852	2064.919	2027.821
20160423:13:53:52	23.597	11.836	1.365	23.496	0.25	2.258	0.25	2.051	112.58	300.715	301.318	75.73	51.635	76.345	85.532	1606.713	1576.224	2066.644	2029.596
20160423:13:58:52	23.601	11.84	1.418	23.496	0.25	2.256	0.25	2.051	112.595	300.715	301.363	75.722	51.663	76.331	85.516	1608.102	1577.522	2068.439	2031.274
20160423:14:03:52	23.596	11.852	1.357	23.496	0.25	2.255	0.25	2.061	112.626	300.718	301.372	75.721	51.669	76.314	85.499	1609.47	1578.886	2070.206	2033.039
20160423:14:08:52	23.599	11.856	1.396	23.497	0.25	2.258	0.25	2.061	112.641	300.764	301.422	75.627	51.639	76.243	85.481	1610.803	1580.225	2071.928	2034.771
20160423:14:13:52	23.597	11.835	1.349	23.497	0.25	2.248	0.25	2.051	112.576	300.748	301.395	75.606	51.625	76.224	85.462	1612.192	1581.545	2073.722	2036.477
20160423:14:18:52	23.594	11.784	1.305	23.498	0.25	2.267	0.25	2.052	112.421	300.75	301.392	75.602	51.635	76.219	85.44	1613.54	1582.902	2075.463	2038.233
20160423:14:23:52	23.591	11.752	1.295	23.495	0.25	2.271	0.25	2.054	112.321	300.759	301.399	75.574	51.645	76.195	85.421	1614.884	1584.216	2077.2	2039.932
20160423:14:28:52	23.594	11.727	1.339	23.496	0.25	2.257	0.25	2.05	112.253	300.699	301.352	75.515	51.631	76.15	85.396	1616.281	1585.589	2079.004	2041.707
20160423:14:33:52	23.592	11.718	1.322	23.494	0.25	2.254	0.25	2.059	112.222	300.806	301.434	75.508	51.643	76.142	85.367	1617.61	1586.898	2080.72	2043.4
20160423:14:38:52	23.59	11.695	1.429	23.485	0.25	2.248	0.25	2.044	112.15	300.748	301.392	75.46	51.634	76.088	85.339	1618.98	1588.274	2082.491	2045.18
20160423:14:43:52	23.586	11.681	1.43	23.481	0.25	2.245	0.25	2.038	112.1	300.74	301.383	75.445	51.64	76.079	85.312	1620.36	1589.572	2084.274	2046.859
20160423:14:48:52	23.586	11.685	1.41	23.483	0.25	2.234	0.25	2.034	112.115	300.683	301.338	75.407	51.646	76.031	85.28	1621.699	1590.928	2086.004	2048.613
20160423:14:53:52	23.593	11.676	1.495	23.483	0.25	2.239	0.25	2.036	112.098	300.769	301.411	75.383	51.633	75.99	85.248	1623.09	1592.276	2087.8	2050.357
20160423:14:58:52	23.595	11.696	1.457	23.488	0.25	2.243	0.25	2.045	112.159	300.715	301.374	75.358	51.665	75.96	85.219	1624.459	1593.591	2089.569	2052.056
20160423:15:03:52	23.596	11.695	1.443	23.49	0.25	2.237	0.25	2.045	112.157	300.66	301.31	75.27	51.626	75.899	85.188	1625.791	1594.954	2091.289	2053.82
20160423:15:08:52	23.595	11.702	1.426	23.491	0.25	2.244	0.25	2.056	112.178	300.625	301.296	75.252	51.656	75.884	85.154	1627.187	1596.272	2093.091	2055.523
20160423:15:13:52	23.595	11.713	1.452	23.489	0.25	2.247	0.25	2.04	112.211	300.708	301.322	75.212	51.626	75.838	85.124	1628.533	1597.639	2094.83	2057.289
20160423:15:18:52	23.591	11.79	1.458	23.484	0.25	2.248	0.25	2.041	112.435	300.707	301.362	75.201	51.661	75.824	85.092	1629.883	1598.947	2096.572	2058.981
20160423:15:23:52	23.59	11.822	1.434	23.484	0.25	2.247	0.25	2.06	112.526	300.701	301.347	75.152	51.627	75.776	85.056	1631.278	1600.321	2098.374	2060.758
20160423:15:28:52	23.598	11.841	1.578	23.482	0.25	2.237	0.25	2.032	112.594	300.667	301.325	75.125	51.659	75.758	85.02	1632.607	1601.628	2100.091	2062.447
20160423:15:33:52	23.604	11.835	1.652	23.483	0.25	2.239	0.25	2.037	112.588	300.708	301.351	75.068	51.624	75.718	84.979	1633.983	1602.974	2101.867	2064.188
20160423:15:38:52	23.604	11.821	1.6	23.487	0.25	2.239	0.25	2.041	112.546	300.723	301.365	74.992	51.629	75.648	84.94	1635.367	1604.337	2103.654	2065.949
20160423:15:43:52	23.605	11.794	1.528	23.492	0.25	2.248	0.25	2.046	112.467	300.64	301.364	74.942	51.62	75.601	84.901	1636.706	1605.648	2105.381	2067.643
20160423:15:48:52	23.601	11.812	1.415	23.497	0.25	2.24	0.25	2.057	112.516	300.58	301.295	74.889	51.59	75.55	84.859	1638.093	1607.013	2107.17	2069.406
20160423:15:53:52	23.601	11.843	1.414	23.497	0.25	2.248	0.25	2.04	112.605	300.678	301.365	74.875	51.607	75.532	84.821	1639.458	1608.326	2108.931	2071.102
20160423:15:58:52	23.611	11.861	1.46	23.503	0.25	2.247	0.25	2.059	112.672	300.685	301.317	74.839	51.614	75.489	84.776	1640.798	1609.705	2110.659	2072.882
20160423:16:03:52	23.619	11.85	1.465	23.512	0.25	2.25	0.25	2.072	112.655	300.743	301.354	74.812	51.561	75.456	84.733	1642.2	1611.014	2112.467	2074.571
20160423:16:08:52	23.617	11.568	1.351	23.518	0.25	2.264	0.25	2.061	111.793	300.71	301.387	74.804	51.586	75.436	84.692	1643.55	1612.381	2114.206	2076.335
20160423:16:13:52	23.626	11.863	1.437	23.521	0.25	2.261	0.25	2.045	112.702	300.655	301.325	74.764	51.543	75.388	84.652	1644.891	1613.695	2115.933	2078.03
20160423:16:18:52	23.633	11.903	1.599	23.515	0.25	2.265	0.25	2.049	112.829	300.652	301.318	74.754	51.591	75.39	84.614	1646.291	1615.034	2117.737	2079.758
20160423:16:23:52	23.629	11.943	1.476	23.52	0.25	2.265	0.25	2.049	112.943	300.672	301.302	74.719	51.55	75.371	84.579	1647.623	1616.395	2119.454	2081.513
20160423:16:28:52	23.631	11.966	1.496	23.521	0.25	2.263	0.25	2.048	113.012	300.719	301.316	74.741	51.57	75.37	84.547	1648.992	1617.703	2121.217	2083.199
20160423:16:33:52	23.633	11.94	1.51	23.522	0.25	2.267	0.25	2.055	112.939	300.682	301.306	74.708	51.508	75.278	84.524	1650.366	1619.067	2122.987	2084.959
20160423:16:38:52	23.634	11.952	1.526	23.522	0.25	2.261	0.25	2.051	112.977	300.7	301.318	74.71	51.516	75.307	84.497	1651.711	1620.383	2124.72	2086.656
20160423:16:43:52	23.636	11.968	1.522	23.524	0.25	2.247	0.25	2.049	113.026	300.689	301.299	74.712	51.554	75.324	84.475	1653.102	1621.755	2126.511	2088.425
20160423:16:48:52	23.635	11.95	1.528	23.522	0.25	2.256	0.25	2.052	112.972	300.627	301.271	74.642	51.503	75.25	84.453	1654.462	1623.065	2128.263	2090.115
20160423:16:53:52	23.63	11.96	1.475	23.522	0.25	2.264	0.25	2.053	112.994	300.676	301.29	74.669	51.518	75.264	84.43	1655.793	1624.439	2129.978	2091.885
20160423:16:58:52	23.63	11.971	1.456	23.523	0.25	2.256	0.25	2.047	113.028	300.601	301.285	74.661	51.526	75.247	84.406	1657.198	1625.743	2131.787	2093.568
20160423:17:03:52	23.631	11.968	1.421	23.527	0.25	2.268	0.25	2.052	113.018	300.694	301.326	74.597	51.506	75.215	84.388	1658.523	1627.097	2133.493	2095.312
20160423:17:08:52	23.63	11.956	1.261	23.537	0.25	2.253	0.25	2.067	112.982	300.71	301.339	74.598	51.512	75.221	84.369	1659.886	1628.449	2135.248	2097.055
20160423:17:13:52	23.631	11.947	1.228	23.541	0.25	2.261	0.25	2.066	112.957	300.69	301.39	74.6	51.56	75.236	84.352	1661.269	1629.76	2137.028	2098.744
20160423:17:18:52	23.63	11.934	1.18	23.543	0.25	2.249	0.25	2.053	112.918	300.751	301.336	74.596	51.556	75.238	84.339	1662.608	1631.122	2138.75	2100.498
20160423:17:23:52	23.63	11.898	1.165	23.544	0.25	2.249	0.25	2.053	112.812	300.67	301.311	74.559	51.513	75.196	84.328	1664.003	1632.434	2140.544	2102.188
20160423:17:28:52	23.627	11.965	1.184	23.54	0.25	2.251	0.25	2.054	113.004	300.677	301.327	74.565	51.515	75.204	84.322	1665.364	1633.806	2142.296	2103.957
20160423:17:33:52	23.627	11.98	1.276	23.533	0.25	2.236	0.25	2.047	113.048	300.693	301.321	74.572	51.569	75.207	84.313	1666.696	1635.115	2144.011	2105.643
20160423:17:38:52	23.622	11.569	1.273	23.528	0.25	2.236	0.25	2.039	111.791	300.668	301.338	74.565	51.574	75.208	84.305	1668.1	1636.486	2145.819	2107.41
20160423:17:43:52	23.618	11.018	1.232	23.527	0.25	2.218	0.25	2.021	110.103	300.662	301.364	74.556	51.625	75.206	84.3	1669.425	1637.796	2147.524	2109.1
20160423:17:48:52	23.618	11.861	1.34	23.519	0.25	2.228	0.25	2.017	112.684	300.661	301.339	74.544	51.623	75.194	84.294	1670.782	1639.156	2149.272	2110.853
20160423:17:53:52	23.619	11.877	1.369	23.518	0.25	2.242	0.25	2.033	112.735	300.759	301.337	74.541	51.635	75.172	84.285	1672.175	1640.477	2151.067	2112.556
20160423:17:58:52	23.62	11.866	1.38	23.519	0.25	2.242	0.25	2.038	112.702	300.717	301.333	74.533	51.634	75.158	84.277	1673.515	1641.811	2152.793	2114.276
20160423:18:03:52	23.622	11.868	1.367	23.522	0.25	2.236	0.25	2.041	112.712	300.69	301.278	74.475	51.626	75.136	84.268	1674.897	1643.174	2154.572	2116.034
20160423:18:08:52	23.627	11.858	1.387	23.525	0.25	2.235	0.25	2.042	112.689	300.625	301.257	74.378	51.553	75.075	84.259	1676.266	1644.483	2156.333	2117.72
20160423:18:13:52	23.623	11.865	1.311	23.527	0.25	2.238	0.25	2.034	112.703	300.671	301.336	74.372	51.607	75.057	84.247	1677.598	1645.845	2158.048	2119.476
20160423:18:18:52	23.623	11.891	1.293	23.528	0.25	2.247	0.25	2.044	112.781	300.738	301.396	74.354	51.619	75.046	84.231	1678.994	1647.159	2159.844	2121.169
20160423:18:23:52	23.625	11.891	1.294	23.529	0.25	2.254	0.25	2.046	112.784	300.672	301.351	74.333	51.623	75.035	84.212	1680.328	1648.529	2161.561	2122.934
20160423:18:28:52	23.624	11.886	1.237	23.533	0.25	2.244	0.25	2.054	112.767	300.646	301.291	74.285	51.576	74.954	84.194	1681.682	1649.838	2163.304	2124.62
20160423:18:33:52	23.627	11.882	1.249	23.535	0.25	2.237	0.25	2.041	112.759	300.648	301.323	74.261	51.57	74.896	84.172	1683.073	1651.213	2165.093	2126.391
20160423:18:38:52	23.631	11.135	1.253	23.539	0.25	2.224	0.25	2.041	110.486	300.692	301.372	74.26	51.619	74.89	84.147	1684.41	1652.51	2166.813	2128.062
20160423:18:43:52	23.639	11.406	1.324	23.542	0.25	2.222	0.25	2.038	111.331	300.632	301.352	74.211	51.539	74.836	84.123	1685.793	1653.874	2168.591	2129.818
20160423:18:48:52	23.645	11.84	1.383	23.543	0.25	2.235	0.25	2.043	112.661	300.643	301.315	74.193	51.581	74.822	84.094	1687.163	1655.212	2170.352	2131.539
20160423:18:53:52	23.641	11.856	1.249	23.549	0.25	2.246	0.25	2.056	112.704	300.681	301.283	74.148	51.568	74.797	84.066	1688.5	1656.532	2172.07	2133.239
20160423:18:58:52	23.642	11.844	1.268	23.549	0.25	2.245	0.25	2.045	112.669	300.669	301.331	74.085	51.523	74.762	84.036	1689.893	1657.892	2173.861	2134.989
20160423:19:03:52	23.643	11.84	1.311	23.547	0.25	2.263	0.25	2.056	112.66	300.607	301.291	74.009	51.475	74.707	84.002	1691.233	1659.21	2175.583	2136.684
20160423:19:08:52	23.645	11.841	1.383	23.543	0.25	2.245	0.25	2.053	112.667	300.689	301.317	73.995	51.519	74.694	83.97	1692.583	1660.584	2177.319	2138.453
20160423:19:13:52	23.641	11.842	1.388	23.539	0.25	2.244	0.25	2.045	112.663	300.649	301.339	73.954	51.493	74.622	83.941	1693.978	1661.897	2179.111	2140.143
20160423:19:18:52	23.641	11.871	1.406	23.538	0.25	2.253	0.25	2.053	112.748	300.645	301.272	73.933	51.509	74.578	83.906	1695.323	1663.277	2180.841	2141.919
20160423:19:23:52	23.641	11.892	1.362	23.541	0.25	2.25	0.25	2.054	112.812	300.642	301.329	73.894	51.488	74.533	83.872	1696.702	1664.585	2182.613	2143.602
20160423:19:28:52	23.64	11.933	1.314	23.543	0.25	2.252	0.25	2.042	112.93	300.674	301.383	73.87	51.507	74.5	83.834	1698.07	1665.954	2184.37	2145.363
20160423:19:33:52	23.645	11.951	1.448	23.539	0.25	2.248	0.25	2.046	112.988	300.642	301.327	73.822	51.474	74.406	83.792	1699.416	1667.272	2186.1	2147.058
20160423:19:38:52	23.646	11.381	1.466	23.539	0.25	2.239	0.25	2.039	111.277	300.621	301.346	73.787	51.495	74.368	83.752	1700.812	1668.616	2187.894	2148.788
20160423:19:43:52	23.648	11.878	1.502	23.538	0.25	2.237	0.25	2.036	112.776	300.598	301.318	73.7	51.474	74.318	83.709	1702.16	1669.982	2189.626	2150.545
20160423:19:48:52	23.649	11.986	1.473	23.541	0.25	2.254	0.25	2.034	113.099	300.665	301.366	73.661	51.473	74.278	83.665	1703.511	1671.293	2191.361	2152.231
20160423:19:53:52	23.648	12.017	1.448	23.541	0.25	2.242	0.25	2.037	113.186	300.654	301.32	73.638	51.488	74.257	83.623	1704.906	1672.661	2193.154	2153.991
20160423:19:58:52	23.654	12.048	1.491	23.544	0.25	2.25	0.25	2.046	113.285	300.579	301.255	73.582	51.468	74.204	83.578	1706.253	1673.98	2194.883	2155.686
20160423:20:03:52	23.658	12.093	1.578	23.542	0.25	2.25	0.25	2.051	113.424	300.594	301.315	73.548	51.476	74.172	83.533	1707.629	1675.351	2196.65	2157.449
20160423:20:08:52	23.656	12.163	1.535	23.543	0.25	2.245	0.25	2.054	113.623	300.66	301.326	73.521	51.489	74.14	83.489	1708.999	1676.663	2198.409	2159.135
20160423:20:13:52	23.651	12.184	1.48	23.542	0.25	2.247	0.25	2.045	113.677	300.662	301.286	73.463	51.461	74.047	83.444	1710.346	1678.04	2200.139	2160.906
20160423:20:18:52	23.653	12.181	1.474	23.544	0.25	2.25	0.25	2.042	113.669	300.646	301.262	73.421	51.48	74.022	83.4	1711.745	1679.339	2201.935	2162.575
20160423:20:23:52	23.655	12.182	1.549	23.541	0.25	2.243	0.25	2.051	113.678	300.653	301.307	73.363	51.48	73.99	83.362	1713.099	1680.705	2203.674	2164.331
20160423:20:28:52	23.66	12.167	1.62	23.541	0.25	2.25	0.25	2.038	113.642	300.62	301.308	73.32	51.469	73.947	83.321	1714.447	1682.052	2205.404	2166.062
20160423:20:33:52	23.657	12.13	1.541	23.543	0.25	2.249	0.25	2.039	113.525	300.695	301.342	73.303	51.492	73.93	83.282	1715.843	1683.373	2207.196	2167.759
20160423:20:38:52	23.659	11.492	1.594	23.542	0.25	2.247	0.25	2.038	111.64	300.63	301.296	73.253	51.458	73.886	83.246	1717.18	1684.731	2208.913	2169.506
20160423:20:43:52	23.665	11.538	1.742	23.537	0.25	2.231	0.25	2.024	111.777	300.599	301.298	73.247	51.489	73.883	83.209	1718.554	1686.049	2210.676	2171.199
20160423:20:48:52	23.674	12.11	1.906	23.534	0.25	2.244	0.25	2.043	113.498	300.585	301.242	73.199	51.45	73.836	83.174	1719.925	1687.424	2212.437	2172.966
20160423:20:53:52	23.681	12.142	2.008	23.533	0.25	2.244	0.25	2.036	113.6	300.639	301.271	73.202	51.465	73.843	83.144	1721.274	1688.737	2214.169	2174.654
20160423:20:58:52	23.671	12.119	1.827	23.536	0.25	2.258	0.25	2.045	113.519	300.613	301.284	73.16	51.429	73.781	83.114	1722.672	1690.112	2215.963	2176.421
20160423:21:03:52	23.669	12.142	1.817	23.536	0.25	2.267	0.25	2.052	113.582	300.676	301.354	73.173	51.457	73.792	83.09	1724.018	1691.422	2217.691	2178.105
20160423:21:08:52	23.667	12.154	1.835	23.532	0.25	2.244	0.25	2.045	113.613	300.705	301.339	73.165	51.453	73.771	83.066	1725.365	1692.792	2219.42	2179.867
20160423:21:13:52	23.667	11.592	1.915	23.526	0.25	2.233	0.25	2.037	111.945	300.617	301.274	73.126	51.454	73.698	83.042	1726.761	1694.104	2221.213	2181.553
20160423:21:18:52	23.666	11.395	1.905	23.526	0.25	2.229	0.25	2.03	111.356	300.618	301.264	73.123	51.453	73.695

Time: day:hh:mm:ss	Stack Pressure: in-Hg	Sat% H2O: Percent	Static: in-H2O	Barometric: in-Hg	Flowmeter1: l/min	Vacuum1: in-Hg	Flowmeter2: l/min	Vacuum2: in-Hg	Stack Temp: degF	Sorbent Temp: degF	Probe Temp: degF	DGM#1 Temp: degF	Condenser Temp: degF	DGM#2 Temp: degF	DAQ Temp: degF	DGM1*: liters STP	DGM2*: liters STP	DGM1: liters nominal	DGM2: liters nominal
20160424:01:08:52	23.659	11.935	1.324	23.562	0.25	2.252	0.25	2.06	112.964	300.661	301.303	71.908	51.243	72.518	81.76	1790.877	1757.148	2303.413	2262.472
20160424:01:13:53	23.655	11.974	1.247	23.564	0.25	2.268	0.25	2.059	113.072	300.661	301.279	71.908	51.286	72.516	81.741	1792.229	1758.501	2305.143	2264.205
20160424:01:18:53	23.648	11.989	1.19	23.56	0.25	2.269	0.25	2.049	113.106	300.669	301.27	71.906	51.327	72.5	81.721	1793.569	1759.816	2306.857	2265.889
20160424:01:23:53	23.65	12.005	1.222	23.56	0.25	2.273	0.25	2.064	113.154	300.583	301.196	71.853	51.244	72.409	81.698	1794.966	1761.178	2308.644	2267.633
20160424:01:28:53	23.651	12.011	1.222	23.561	0.25	2.26	0.25	2.071	113.175	300.681	301.293	71.851	51.261	72.408	81.677	1796.304	1762.495	2310.356	2269.32
20160424:01:33:53	23.648	12.023	1.192	23.561	0.25	2.272	0.25	2.07	113.205	300.687	301.324	71.851	51.316	72.409	81.659	1797.688	1763.862	2312.126	2271.07
20160424:01:38:53	23.648	12.016	1.184	23.561	0.25	2.262	0.25	2.07	113.186	300.629	301.252	71.779	51.269	72.372	81.637	1799.056	1765.176	2313.876	2272.752
20160424:01:43:53	23.651	12.008	1.222	23.561	0.25	2.253	0.25	2.061	113.164	300.574	301.219	71.739	51.275	72.351	81.616	1800.387	1766.548	2315.578	2274.509
20160424:01:48:53	23.649	11.679	1.229	23.559	0.25	2.25	0.25	2.05	112.169	300.626	301.278	71.74	51.323	72.354	81.592	1801.79	1767.859	2317.372	2276.188
20160424:01:53:53	23.651	10.967	1.323	23.554	0.25	2.237	0.25	2.036	110.001	300.56	301.264	71.704	51.283	72.32	81.571	1803.116	1769.236	2319.069	2277.951
20160424:01:58:53	23.656	11.613	1.371	23.556	0.25	2.246	0.25	2.047	111.992	300.554	301.251	71.684	51.237	72.302	81.554	1804.49	1770.544	2320.826	2279.626
20160424:02:03:53	23.647	11.874	1.238	23.556	0.25	2.264	0.25	2.068	112.766	300.658	301.277	71.686	51.318	72.305	81.538	1805.861	1771.914	2322.58	2281.38
20160424:02:08:53	23.644	11.894	1.244	23.552	0.25	2.247	0.25	2.054	112.819	300.68	301.296	71.688	51.306	72.308	81.526	1807.205	1773.212	2324.298	2283.043
20160424:02:13:53	23.65	11.894	1.354	23.55	0.25	2.254	0.25	2.071	112.829	300.707	301.324	71.688	51.343	72.305	81.513	1808.597	1774.579	2326.08	2284.793
20160424:02:18:53	23.647	11.876	1.309	23.551	0.25	2.266	0.25	2.053	112.772	300.669	301.28	71.654	51.267	72.27	81.5	1809.932	1775.919	2327.787	2286.509
20160424:02:23:53	23.645	11.879	1.29	23.55	0.25	2.261	0.25	2.054	112.778	300.572	301.218	71.629	51.236	72.243	81.484	1811.294	1777.246	2329.53	2288.209
20160424:02:28:53	23.647	11.92	1.304	23.551	0.25	2.261	0.25	2.051	112.902	300.592	301.235	71.628	51.241	72.242	81.466	1812.678	1778.611	2331.3	2289.957
20160424:02:33:53	23.65	11.937	1.365	23.549	0.25	2.26	0.25	2.056	112.957	300.666	301.261	71.624	51.311	72.237	81.446	1814.016	1779.921	2333.011	2291.635
20160424:02:38:53	23.649	11.956	1.394	23.546	0.25	2.244	0.25	2.051	113.009	300.61	301.221	71.58	51.237	72.19	81.428	1815.413	1781.283	2334.798	2293.38
20160424:02:43:53	23.649	11.967	1.364	23.548	0.25	2.249	0.25	2.055	113.042	300.672	301.337	71.57	51.239	72.174	81.408	1816.757	1782.593	2336.519	2295.056
20160424:02:48:53	23.646	11.995	1.313	23.55	0.25	2.252	0.25	2.05	113.122	300.67	301.311	71.569	51.25	72.17	81.386	1818.097	1783.971	2338.231	2296.821
20160424:02:53:53	23.646	12.012	1.402	23.543	0.25	2.254	0.25	2.055	113.17	300.642	301.264	71.54	51.273	72.124	81.368	1819.491	1785.281	2340.015	2298.5
20160424:02:58:53	23.66	12.008	1.636	23.54	0.25	2.241	0.25	2.038	113.181	300.613	301.239	71.502	51.217	72.068	81.345	1820.825	1786.654	2341.722	2300.258
20160424:03:03:53	23.653	12.065	1.467	23.545	0.25	2.26	0.25	2.051	113.336	300.608	301.24	71.504	51.239	72.066	81.324	1822.215	1787.959	2343.5	2301.929
20160424:03:08:53	23.651	12.135	1.397	23.548	0.25	2.265	0.25	2.063	113.534	300.615	301.207	71.468	51.222	72.049	81.301	1823.582	1789.334	2345.248	2303.69
20160424:03:13:53	23.643	12.115	1.281	23.549	0.25	2.255	0.25	2.061	113.464	300.628	301.238	71.4	51.223	72.012	81.277	1824.91	1790.641	2346.946	2305.363
20160424:03:18:53	23.639	12.065	1.227	23.549	0.25	2.26	0.25	2.055	113.31	300.65	301.237	71.402	51.23	72.013	81.256	1826.313	1792.008	2348.741	2307.113
20160424:03:23:53	23.641	11.25	1.28	23.547	0.25	2.247	0.25	2.041	110.866	300.58	301.281	71.387	51.252	71.995	81.235	1827.645	1793.323	2350.444	2308.797
20160424:03:28:53	23.643	12.05	1.322	23.546	0.25	2.259	0.25	2.053	113.275	300.648	301.303	71.345	51.205	71.955	81.212	1829.021	1794.673	2352.204	2310.524
20160424:03:33:53	23.643	12.102	1.274	23.549	0.25	2.267	0.25	2.05	113.426	300.659	301.277	71.345	51.234	71.957	81.188	1830.387	1796.021	2353.95	2312.25
20160424:03:38:53	23.639	12.118	1.244	23.548	0.25	2.268	0.25	2.065	113.467	300.578	301.261	71.32	51.22	71.934	81.165	1831.732	1797.339	2355.67	2313.938
20160424:03:43:53	23.641	12.124	1.295	23.546	0.25	2.251	0.25	2.063	113.487	300.608	301.207	71.289	51.228	71.906	81.144	1833.129	1798.705	2357.456	2315.686
20160424:03:48:53	23.638	12.108	1.256	23.546	0.25	2.269	0.25	2.06	113.438	300.604	301.241	71.292	51.232	71.903	81.121	1834.449	1800.018	2359.144	2317.367
20160424:03:53:53	23.638	12.07	1.242	23.547	0.25	2.265	0.25	2.073	113.327	300.591	301.25	71.229	51.211	71.869	81.098	1835.817	1801.381	2360.893	2319.111
20160424:03:58:53	23.641	11.836	1.208	23.552	0.25	2.265	0.25	2.054	112.633	300.606	301.264	71.179	51.204	71.841	81.08	1837.195	1802.692	2362.654	2320.789
20160424:04:03:53	23.641	10.953	1.217	23.552	0.25	2.233	0.25	2.046	109.944	300.574	301.27	71.179	51.233	71.844	81.059	1838.541	1804.064	2364.374	2322.545
20160424:04:08:53	23.636	11.231	1.115	23.554	0.25	2.232	0.25	2.042	110.787	300.549	301.283	71.177	51.244	71.846	81.038	1839.933	1805.372	2366.154	2324.218
20160424:04:13:53	23.632	11.908	1.007	23.558	0.25	2.255	0.25	2.058	112.844	300.564	301.25	71.129	51.236	71.75	81.016	1841.273	1806.744	2367.865	2325.974
20160424:04:18:53	23.629	11.968	0.967	23.558	0.25	2.26	0.25	2.059	113.015	300.56	301.181	71.126	51.237	71.742	80.998	1842.622	1808.052	2369.589	2327.647
20160424:04:23:53	23.635	11.995	1.035	23.558	0.25	2.264	0.25	2.052	113.103	300.644	301.262	71.126	51.287	71.746	80.985	1844.007	1809.426	2371.357	2329.404
20160424:04:28:53	23.636	12.032	0.989	23.563	0.25	2.263	0.25	2.057	113.212	300.697	301.332	71.126	51.285	71.748	80.972	1845.343	1810.735	2373.065	2331.077
20160424:04:33:53	23.636	12.056	1.003	23.562	0.25	2.271	0.25	2.063	113.282	300.685	301.303	71.106	51.299	71.724	80.962	1846.741	1812.102	2374.85	2332.825
20160424:04:38:53	23.636	12.038	0.969	23.564	0.25	2.271	0.25	2.065	113.23	300.632	301.214	71.07	51.229	71.685	80.949	1848.085	1813.412	2376.567	2334.5
20160424:04:43:53	23.638	12.038	0.988	23.565	0.25	2.272	0.25	2.058	113.233	300.611	301.186	71.066	51.233	71.68	80.93	1849.426	1814.767	2378.28	2336.233
20160424:04:48:53	23.641	12.043	0.963	23.57	0.25	2.271	0.25	2.073	113.253	300.578	301.189	71.059	51.233	71.673	80.917	1850.82	1816.107	2380.059	2337.945
20160424:04:53:53	23.639	12.03	0.899	23.573	0.25	2.264	0.25	2.073	113.213	300.63	301.245	71.041	51.261	71.657	80.902	1852.155	1817.432	2381.763	2339.639
20160424:04:58:53	23.641	12	0.892	23.576	0.25	2.265	0.25	2.063	113.123	300.586	301.196	70.978	51.201	71.593	80.885	1853.546	1818.791	2383.539	2341.376
20160424:05:03:53	23.647	11.232	0.966	23.576	0.25	2.256	0.25	2.046	110.821	300.624	301.239	70.967	51.227	71.586	80.868	1854.894	1820.101	2385.259	2343.049
20160424:05:08:53	23.644	11.973	0.92	23.576	0.25	2.25	0.25	2.046	113.053	300.658	301.232	70.957	51.224	71.575	80.85	1856.235	1821.461	2386.97	2344.788
20160424:05:13:53	23.642	11.996	0.85	23.579	0.25	2.264	0.25	2.048	113.116	300.611	301.162	70.928	51.222	71.551	80.829	1857.623	1822.781	2388.741	2346.474
20160424:05:18:53	23.642	11.98	0.836	23.581	0.25	2.263	0.25	2.061	113.07	300.561	301.211	70.843	51.18	71.495	80.808	1858.958	1824.144	2390.444	2348.214
20160424:05:23:53	23.642	11.975	0.882	23.577	0.25	2.262	0.25	2.055	113.056	300.575	301.187	70.832	51.225	71.478	80.779	1860.346	1825.455	2392.215	2349.889
20160424:05:28:53	23.644	11.953	0.815	23.584	0.25	2.276	0.25	2.064	112.993	300.56	301.15	70.768	51.189	71.389	80.749	1861.705	1826.832	2393.948	2351.647
20160424:05:33:53	23.64	11.949	0.754	23.585	0.25	2.262	0.25	2.065	112.976	300.572	301.203	70.741	51.216	71.359	80.718	1863.043	1828.144	2395.654	2353.321
20160424:05:38:53	23.649	11.928	0.898	23.583	0.25	2.253	0.25	2.055	112.929	300.562	301.116	70.699	51.196	71.318	80.686	1864.432	1829.514	2397.426	2355.071
20160424:05:43:53	23.654	11.91	0.873	23.59	0.25	2.256	0.25	2.059	112.882	300.574	301.198	70.677	51.207	71.297	80.652	1865.769	1830.821	2399.13	2356.739
20160424:05:48:53	23.656	11.877	0.897	23.59	0.25	2.262	0.25	2.066	112.787	300.584	301.172	70.64	51.19	71.224	80.617	1867.158	1832.192	2400.9	2358.489
20160424:05:53:53	23.66	11.868	1.046	23.583	0.25	2.261	0.25	2.053	112.769	300.507	301.071	70.618	51.196	71.185	80.582	1868.514	1833.51	2402.63	2360.171
20160424:05:58:53	23.661	11.875	1.036	23.585	0.25	2.261	0.25	2.064	112.79	300.498	301.083	70.541	51.187	71.14	80.544	1869.857	1834.88	2404.341	2361.919
20160424:06:03:53	23.663	11.905	1.05	23.586	0.25	2.255	0.25	2.059	112.88	300.526	301.123	70.509	51.187	71.127	80.51	1871.246	1836.182	2406.111	2363.581
20160424:06:08:53	23.663	11.899	1.067	23.585	0.25	2.26	0.25	2.056	112.865	300.611	301.263	70.462	51.173	71.081	80.475	1872.582	1837.548	2407.815	2365.323
20160424:06:13:53	23.666	11.887	1.07	23.587	0.25	2.265	0.25	2.063	112.831	300.562	301.205	70.457	51.176	71.075	80.442	1873.97	1838.874	2409.583	2367.015
20160424:06:18:53	23.67	11.865	1.12	23.588	0.25	2.263	0.25	2.052	112.773	300.603	301.221	70.42	51.152	71.04	80.409	1875.33	1840.217	2411.317	2368.729
20160424:06:23:53	23.668	11.882	1.105	23.586	0.25	2.257	0.25	2.061	112.819	300.602	301.242	70.417	51.167	71.039	80.377	1876.669	1841.568	2413.022	2370.453
20160424:06:28:53	23.668	11.947	1.14	23.584	0.25	2.252	0.25	2.056	113.012	300.478	301.101	70.409	51.16	71.024	80.347	1878.056	1842.887	2414.791	2372.135
20160424:06:33:53	23.674	11.938	1.182	23.587	0.25	2.255	0.25	2.054	112.994	300.417	301.079	70.39	51.149	71.003	80.319	1879.395	1844.257	2416.496	2373.883
20160424:06:38:53	23.673	11.962	1.162	23.588	0.25	2.273	0.25	2.059	113.065	300.413	301.094	70.386	51.167	70.996	80.292	1880.784	1845.566	2418.267	2375.553
20160424:06:43:53	23.675	11.776	1.257	23.583	0.25	2.257	0.25	2.053	112.507	300.395	301.047	70.34	51.118	70.95	80.267	1882.139	1846.929	2419.993	2377.291
20160424:06:48:53	23.673	10.895	1.183	23.586	0.25	2.248	0.25	2.049	109.807	300.428	301.14	70.339	51.13	70.955	80.244	1883.477	1848.243	2421.698	2378.968
20160424:06:53:53	23.671	11.462	1.146	23.587	0.25	2.242	0.25	2.044	111.549	300.475	301.154	70.33	51.135	70.93	80.222	1884.868	1849.616	2423.47	2380.72
20160424:06:58:53	23.671	11.829	1.1	23.591	0.25	2.263	0.25	2.062	112.668	300.451	301.069	70.29	51.121	70.85	80.198	1886.204	1850.93	2425.172	2382.395
20160424:07:03:53	23.677	11.847	1.169	23.591	0.25	2.258	0.25	2.063	112.729	300.483	301.105	70.296	51.124	70.854	80.179	1887.594	1852.299	2426.943	2384.141
20160424:07:08:53	23.675	11.855	1.141	23.591	0.25	2.27	0.25	2.074	112.752	300.501	301.129	70.303	51.153	70.854	80.157	1888.949	1853.61	2428.669	2385.812
20160424:07:13:53	23.677	11.853	1.19	23.589	0.25	2.249	0.25	2.064	112.748	300.527	301.222	70.229	51.1	70.801	80.134	1890.291	1854.984	2430.378	2387.564
20160424:07:18:53	23.681	11.906	1.235	23.59	0.25	2.257	0.25	2.065	112.909	300.544	301.158	70.255	51.123	70.805	80.109	1891.685	1856.29	2432.154	2389.229
20160424:07:23:53	23.682	11.927	1.271	23.589	0.25	2.265	0.25	2.065	112.975	300.546	301.154	70.264	51.111	70.808	80.087	1893.021	1857.664	2433.856	2390.981
20160424:07:28:53	23.684	11.93	1.346	23.585	0.25	2.255	0.25	2.058	112.984	300.478	301.084	70.173	51.076	70.762	80.067	1894.414	1858.98	2435.63	2392.66
20160424:07:33:53	23.683	11.944	1.314	23.586	0.25	2.277	0.25	2.062	113.026	300.447	301.116	70.171	51.077	70.768	80.047	1895.769	1860.348	2437.356	2394.404
20160424:07:38:53	23.684	11.943	1.334	23.586	0.25	2.264	0.25	2.066	113.025	300.46	301.119	70.171	51.119	70.776	80.027	1897.108	1861.649	2439.061	2396.064
20160424:07:43:53	23.688	11.942	1.42	23.583	0.25	2.254	0.25	2.063	113.026	300.47	301.053	70.138	51.052	70.742	80.009	1898.498	1863.017	2440.831	2397.808
20160424:07:48:53	23.689	11.933	1.392	23.587	0.25	2.262	0.25	2.056	113.002	300.391	301.023	70.12	51.046	70.728	79.99	1864.344	2442.533	2399.5
20160424:07:53:53	23.687	11.936	1.381	23.586	0.25	2.256	0.25	2.066	113.008	300.363	301.072	70.135	51.089	70.734	79.975	1901.23	1865.686	2444.311	2401.211
20160424:07:58:53	23.69	11.937	1.391	23.587	0.25	2.261	0.25	2.069	113.016	300.48	301.047	70.156	51.119	70.752	79.962	1902.579	1867.034	2446.03	2402.93
20160424:08:03:53	23.69	11.95	1.39	23.588	0.25	2.268	0.25	2.066	113.055	300.467	301.077	70.163	51.107	70.759	79.949	1903.92	1868.354	2447.737	2404.613
20160424:08:08:53	23.692	11.965	1.418	23.587	0.25	2.266	0.25	2.072	113.098	300.411	300.983	70.122	51.044	70.729	79.94	1905.311	1869.72	2449.509	2406.355
20160424:08:13:53	23.693	11.993	1.432	23.588	0.25	2.275	0.25	2.061	113.185	300.489	301.117	70.122	51.024	70.731	79.933	1906.644	1871.028	2451.207	2408.023
20160424:08:18:53	23.693	12	1.426	23.588	0.25	2.269	0.25	2.062	113.202	300.463	301.093	70.137	51.085	70.734	79.93	1908.036	1872.386	2452.98	2409.754
20160424:08:23:53	23.694	11.28	1.484	23.585	0.25	2.247	0.25	2.047	111.024	300.438	301.115	70.159	51.043	70.739	79.928	1909.382	1873.707	2454.694	2411.438
20160424:08:28:53	23.698	10.996	1.516	23.586	0.25	2.235	0.25	2.037	110.151	300.46	301.157	70.169	51.059	70.748	79.928	1910.728	1875.067	2456.409	2413.173
20160424:08:33:53	23.697	11.79	1.5	23.587	0.25	2.245	0.25	2.059	112.591	300.543	301.187	70.172	51.018	70.748	79.93	1912.12	1876.376	2458.181	2414.842
20160424:08:38:53	23.698	11.869	1.54	23.584	0.25	2.249	0.25	2.057	112.825	300.493	301.143	70.171	51.032	70.749	79.932	1913.454	1877.749	2459.881	2416.592
20160424:08:43:53	23.698	11.89	1.576	23.582	0.25	2.253	0.25	2.064	112.889	300.443	301.09	70.173	51.013	70.76	79.935	1914.85	1879.06	2461.659	2418.265
20160424:08:48:53	23.702	11.926	1.614	23.584	0.25	2.251	0.25	2.052	113.002	300.459	301.082	70.19	51.032	70.775	79.941	1916.187	1880.431	2463.363	2420.013
20160424:08:53:53	23.709	11.931	1.707	23.583	0.25	2.258	0.25	2.052	113.025	300.517	301.133	70.264	51.088	70.818	79.946	1917.537	1881.74	2465.083	2421.682
20160424:08:58:53	23.708	11.916	1.725	23.581	0.25	2.264	0.25	2.065	112.98	300.556	301.179	70.286	51.112	70.829	79.951	1918.921	1883.116	2466.846	2423.438
20160424:09:03:53	23.709	11.909	1.739	23.581	0.25	2.255	0.25	2.077	112.96	300.549	301.201	70.296	51.091	70.835	79.958	1920.264	1884.42	2468.557	2425.102
20160424:09:08:53	23.711	11.898	1.798	23.579	0.25	2.243	0.25	2.052	112.931	300.522	301.13	70.303	51.098	70.84	79.964	1921.654	1885.793	2470.33	2426.853
20160424:09:13:53	23.712	11.881	1.86	23.575	0.25	2.245	0.25	2.05	112.883	300.45	301.066	70.323	51.056	70.842	79.972	1922.986	1887.107	2472.028	2428.53
20160424:09:18:53	23.716	11.745	1.893	23.576	0.25	2.249	0.25	2.06	112.479	300.489	301.115	70.332	51.061	70.848	79.979	1924.34	1888.474	2473.754	2430.274
20160424:09:23:53	23.713	10.826	1.821	23.579	0.25	2.236	0.25	2.047	109.643	300.496	301.131	70.338	51.025	70.863	79.992	1925.716	1889.774	2475.507	2431.932
20160424:09:28:53	23.713	11.333	1.832	23.579	0.25	2.228	0.25	2.056	111.21	300.526	301.152	70.345	51.025	70.887	80.005	1927.059	1891.14	2477.219	2433.675
20160424:09:33:53	23.717	11.845	1.859	23.58	0.25	2.249	0.25	2.046	112.784	300.551	301.159	70.397	51.11	70.983	80.021	1928.449	1892.458	2478.991	2435.357
20160424:09:38:53	23.716	11.887	1.841	23.581	0.25	2.248	0.25	2.052	112.907	300.553	301.164	70.401	51.101	70.991	80.039	1929.782	1893.805	2480.689	2437.075
20160424:09:43:53	23.719	11.933	1.814	23.586	0.25	2.261	0.25	2.06	113.047	300.524	301.175	70.409	51.026	70.994	80.059	1931.145	1895.145	2482.426	2438.786
20160424:09:48:53	23.716	11.946	1.78	23.585	0.25	2.252	0.25	2.06	113.081	300.543	301.078	70.44	51.073	71.025	80.081	1932.516	1896.47	2484.174	2440.476
20160424:09:53:53	23.72	11.931	1.836	23.586	0.25	2.253	0.25	2.073	113.043	300.547	301.09	70.468	51.092	71.054	80.102	1933.857	1897.83	2485.883	2442.211
20160424:09:58:53	23.721	11.907	1.853	23.585	0.25	2.247	0.25	2.056	112.974	300.533	301.094	70.47	51.069	71.057	80.127	1935.251	1899.139	2487.659	2443.882
20160424:10:03:53	23.728	11.906	1.91	23.587	0.25	2.25	0.25	2.06	112.981	300.609	301.152	70.548	51.08	71.097	80.151	1936.576	1900.503	2489.348	2445.622
20160424:10:08:53	23.725	11.804	1.932	23.582	0.25	2.236	0.25	2.049	112.668	300.591	301.201	70.607	51.116	71.121	80.174	1937.946	1901.813	2491.094	2447.293
20160424:10:13:53	23.726	10.864	1.941	23.583	0.25	2.226	0.25	2.038	109.785	300.494	301.051	70.619	51.045	71.124	80.196	1939.309	1903.172	2492.833	2449.028
20160424:10:18:53	23.724	11.296	1.942	23.581	0.25	2.227	0.25	2.022	111.114	300.49	301.144	70.663	51.11	71.178	80.223	1940.651	1904.484	2494.544	2450.703
20160424:10:23:53	23.726	11.789	1.972	23.58	0.25	2.247	0.25	2.036	112.63	300.559	301.139	70.677	51.11	71.199	80.251	1942.047	1905.851	2496.324	2452.447
20160424:10:28:53	23.732	11.813	2.052	23.581	0.25	2.261	0.25	2.046	112.712	300.592	301.187	70.707	51.098	71.258	80.282	1943.371	1907.16	2498.013	2454.118
20160424:10:33:53	23.731	11.857	2.116	23.575	0.25	2.245	0.25	2.045	112.839	300.595	301.145	70.738	51.111	71.312	80.316	1944.746	1908.527	2499.767	2455.865
20160424:10:38:53	23.731	11.892	2.138	23.574	0.25	2.249	0.25	2.043	112.944	300.649	301.202	70.771	51.114	71.345	80.349	1946.119	1909.835	2501.519	2457.536
20160424:10:43:53	23.732	11.444	2.09	23.578	0.25	2.248	0.25	2.044	111.575	300.652	301.21	70.793	51.094	71.371	80.383	1947.447	1911.204	2503.213	2459.284
20160424:10:48:53	23.733	10.884	2.159	23.574	0.25	2.227	0.25	2.028	109.859	300.659	301.261	70.822	51.097	71.393	80.417	1948.846	1912.511	2504.998	2460.953
20160424:10:53:53	23.739	11.658	2.257	23.573	0.25	2.229	0.25	2.026	112.253	300.585	301.182	70.853	51.077	71.418	80.45	1950.175	1913.884	2506.694	2462.707
20160424:10:58:53	23.737	11.833	2.234	23.573	0.25	2.244	0.25	2.042	112.778	300.643	301.242	70.883	51.059	71.445	80.481	1951.551

Time: day:hh:mm:ss	Stack Pressure: in-Hg	Sat% H2O: Percent	Static: in-H2O	Barometric: in-Hg	Flowmeter1: l/min	Vacuum1: in-Hg	Flowmeter2: l/min	Vacuum2: in-Hg	Stack Temp: degF	Sorbent Temp: degF	Probe Temp: degF	DGM#1 Temp: degF	Condenser Temp: degF	DGM#2 Temp: degF	DAQ Temp: degF	DGM1*: liters STP	DGM2*: liters STP	DGM1: liters nominal	DGM2: liters nominal
20160424:14:48:53	23.697	12.444	2.302	23.527	0.25	2.281	0.25	2.065	114.489	300.497	301.137	72.719	51.176	73.277	82.113	2014.134	1976.741	2588.509	2543.197
20160424:14:53:53	23.704	12.423	2.437	23.525	0.25	2.265	0.25	2.066	114.44	300.518	301.137	72.786	51.167	73.326	82.17	2015.468	1978.048	2590.222	2544.876
20160424:14:58:53	23.7	12.389	2.4	23.524	0.25	2.26	0.25	2.075	114.336	300.567	301.133	72.88	51.168	73.388	82.231	2016.82	1979.414	2591.957	2546.632
20160424:15:03:53	23.689	11.37	2.282	23.521	0.25	2.25	0.25	2.061	111.311	300.536	301.183	72.944	51.155	73.488	82.29	2018.2	1980.724	2593.73	2548.316
20160424:15:08:53	23.678	11.617	2.13	23.521	0.25	2.244	0.25	2.031	112.028	300.607	301.25	73.015	51.18	73.554	82.355	2019.534	1982.084	2595.443	2550.064
20160424:15:13:53	23.675	12.236	2.102	23.521	0.25	2.258	0.25	2.059	113.863	300.655	301.273	73.109	51.182	73.606	82.422	2020.928	1983.39	2597.233	2551.742
20160424:15:18:53	23.676	12.276	2.131	23.52	0.25	2.264	0.25	2.072	113.979	300.642	301.284	73.178	51.208	73.661	82.487	2022.278	1984.739	2598.967	2553.477
20160424:15:23:53	23.675	12.346	2.124	23.519	0.25	2.267	0.25	2.077	114.177	300.648	301.226	73.229	51.218	73.734	82.549	2023.617	1986.081	2600.687	2555.203
20160424:15:28:53	23.678	12.386	2.204	23.516	0.25	2.273	0.25	2.07	114.297	300.635	301.192	73.288	51.238	73.826	82.613	2025.006	1987.396	2602.472	2556.895
20160424:15:33:53	23.68	12.393	2.256	23.514	0.25	2.274	0.25	2.066	114.318	300.626	301.224	73.344	51.235	73.892	82.683	2026.345	1988.753	2604.193	2558.641
20160424:15:38:53	23.678	12.427	2.229	23.514	0.25	2.272	0.25	2.069	114.412	300.68	301.312	73.428	51.26	73.944	82.749	2027.715	1990.067	2605.954	2560.331
20160424:15:43:53	23.686	12.414	2.373	23.511	0.25	2.272	0.25	2.074	114.385	300.607	301.22	73.5	51.234	73.995	82.817	2029.08	1991.426	2607.709	2562.081
20160424:15:48:53	23.695	12.403	2.512	23.511	0.25	2.266	0.25	2.08	114.37	300.681	301.246	73.547	51.26	74.072	82.888	2030.423	1992.736	2609.437	2563.767
20160424:15:53:53	23.695	12.402	2.554	23.507	0.25	2.273	0.25	2.072	114.368	300.678	301.264	73.6	51.242	74.156	82.954	2031.817	1994.103	2611.23	2565.526
20160424:15:58:53	23.684	12.41	2.387	23.509	0.25	2.272	0.25	2.071	114.373	300.621	301.274	73.651	51.259	74.203	83.024	2033.153	1995.408	2612.948	2567.207
20160424:16:03:53	23.689	12.401	2.506	23.505	0.25	2.268	0.25	2.052	114.354	300.65	301.283	73.722	51.25	74.265	83.09	2034.499	1996.778	2614.68	2568.972
20160424:16:08:53	23.689	12.416	2.493	23.506	0.25	2.259	0.25	2.056	114.397	300.629	301.287	73.809	51.268	74.313	83.154	2035.884	1998.08	2616.463	2570.648
20160424:16:13:53	23.684	12.431	2.453	23.504	0.25	2.261	0.25	2.059	114.432	300.668	301.272	73.867	51.247	74.37	83.224	2037.217	1999.44	2618.178	2572.4
20160424:16:18:53	23.691	12.454	2.562	23.502	0.25	2.266	0.25	2.06	114.506	300.576	301.273	73.919	51.275	74.47	83.291	2038.606	2000.755	2619.967	2574.096
20160424:16:23:53	23.695	12.472	2.579	23.505	0.25	2.275	0.25	2.067	114.566	300.703	301.352	73.976	51.259	74.535	83.36	2039.971	2002.09	2621.724	2575.816
20160424:16:28:53	23.695	12.345	2.544	23.508	0.25	2.279	0.25	2.074	114.198	300.688	301.277	74.03	51.297	74.589	83.423	2041.298	2003.446	2623.431	2577.564
20160424:16:33:53	23.693	11.398	2.559	23.505	0.25	2.254	0.25	2.059	111.404	300.591	301.251	74.126	51.272	74.682	83.491	2042.696	2004.753	2625.231	2579.248
20160424:16:38:53	23.693	11.856	2.627	23.499	0.25	2.248	0.25	2.034	112.758	300.649	301.339	74.188	51.288	74.745	83.555	2044.023	2006.11	2626.941	2580.998
20160424:16:43:53	23.697	12.31	2.779	23.493	0.25	2.255	0.25	2.041	114.107	300.669	301.313	74.229	51.267	74.791	83.618	2045.386	2007.419	2628.698	2582.686
20160424:16:48:53	23.694	12.334	2.755	23.492	0.25	2.255	0.25	2.05	114.172	300.714	301.334	74.257	51.276	74.816	83.677	2046.77	2008.785	2630.481	2584.449
20160424:16:53:53	23.699	12.337	2.814	23.492	0.25	2.266	0.25	2.059	114.186	300.643	301.263	74.289	51.256	74.853	83.737	2048.105	2010.095	2632.202	2586.139
20160424:16:58:53	23.701	12.339	2.92	23.487	0.25	2.258	0.25	2.057	114.197	300.669	301.294	74.334	51.269	74.894	83.795	2049.497	2011.461	2633.996	2587.902
20160424:17:03:53	23.699	12.383	2.913	23.485	0.25	2.256	0.25	2.06	114.317	300.68	301.32	74.379	51.26	74.938	83.851	2050.86	2012.771	2635.754	2589.592
20160424:17:08:53	23.691	12.396	2.81	23.485	0.25	2.258	0.25	2.052	114.344	300.663	301.351	74.483	51.31	75.045	83.903	2052.187	2014.129	2637.465	2591.346
20160424:17:13:53	23.686	12.415	2.743	23.484	0.25	2.257	0.25	2.053	114.391	300.673	301.287	74.523	51.298	75.085	83.954	2053.594	2015.446	2639.28	2593.047
20160424:17:18:53	23.684	12.405	2.732	23.483	0.25	2.254	0.25	2.056	114.357	300.69	301.307	74.559	51.303	75.12	84.005	2054.916	2016.778	2640.985	2594.767
20160424:17:23:53	23.685	12.382	2.774	23.481	0.25	2.257	0.25	2.062	114.295	300.675	301.295	74.648	51.35	75.185	84.061	2056.272	2018.136	2642.735	2596.521
20160424:17:28:53	23.68	12.213	2.701	23.482	0.25	2.27	0.25	2.056	113.797	300.684	301.306	74.721	51.356	75.228	84.115	2057.657	2019.44	2644.522	2598.205
20160424:17:33:53	23.679	12.171	2.661	23.483	0.25	2.262	0.25	2.053	113.673	300.653	301.325	74.766	51.358	75.275	84.168	2058.989	2020.799	2646.241	2599.961
20160424:17:38:53	23.683	12.311	2.734	23.482	0.25	2.257	0.25	2.074	114.087	300.7	301.359	74.82	51.366	75.38	84.223	2060.378	2022.109	2648.033	2601.652
20160424:17:43:53	23.681	12.299	2.747	23.479	0.25	2.272	0.25	2.054	114.052	300.704	301.319	74.856	51.358	75.415	84.275	2061.741	2023.478	2649.793	2603.421
20160424:17:48:53	23.68	12.286	2.732	23.479	0.25	2.267	0.25	2.054	114.013	300.711	301.35	74.895	51.36	75.452	84.329	2063.067	2024.78	2651.506	2605.103
20160424:17:53:53	23.677	12.285	2.749	23.475	0.25	2.265	0.25	2.065	114.006	300.622	301.28	74.927	51.359	75.49	84.38	2064.467	2026.154	2653.313	2606.88
20160424:17:58:53	23.675	12.308	2.705	23.476	0.25	2.271	0.25	2.06	114.069	300.732	301.345	74.993	51.368	75.54	84.433	2065.798	2027.448	2655.031	2608.553
20160424:18:03:53	23.674	12.341	2.727	23.473	0.25	2.265	0.25	2.062	114.161	300.768	301.41	75.046	51.386	75.582	84.483	2067.147	2028.809	2656.774	2610.312
20160424:18:08:53	23.671	12.358	2.676	23.474	0.25	2.274	0.25	2.066	114.205	300.711	301.329	75.072	51.371	75.613	84.531	2068.536	2030.145	2658.569	2612.039
20160424:18:13:53	23.672	12.379	2.673	23.475	0.25	2.278	0.25	2.071	114.267	300.655	301.283	75.104	51.387	75.659	84.575	2069.878	2031.459	2660.302	2613.739
20160424:18:18:53	23.672	12.113	2.659	23.476	0.25	2.284	0.25	2.078	113.488	300.709	301.35	75.154	51.39	75.725	84.622	2071.249	2032.811	2662.072	2615.487
20160424:18:23:53	23.665	11.248	2.58	23.475	0.25	2.26	0.25	2.066	110.902	300.689	301.324	75.181	51.385	75.744	84.668	2072.611	2034.12	2663.831	2617.18
20160424:18:28:53	23.663	11.175	2.581	23.473	0.25	2.259	0.25	2.046	110.669	300.67	301.374	75.207	51.379	75.775	84.711	2073.958	2035.491	2665.572	2618.953
20160424:18:33:53	23.659	11.686	2.541	23.473	0.25	2.254	0.25	2.051	112.201	300.704	301.427	75.235	51.406	75.82	84.754	2075.345	2036.8	2667.365	2620.647
20160424:18:38:53	23.655	12.189	2.501	23.471	0.25	2.26	0.25	2.061	113.699	300.716	301.338	75.23	51.386	75.824	84.795	2076.691	2038.166	2669.104	2622.414
20160424:18:43:53	23.65	12.224	2.414	23.472	0.25	2.271	0.25	2.06	113.79	300.727	301.347	75.271	51.406	75.856	84.833	2078.031	2039.475	2670.835	2624.107
20160424:18:48:53	23.649	12.226	2.42	23.471	0.25	2.274	0.25	2.079	113.795	300.722	301.362	75.283	51.385	75.848	84.864	2079.425	2040.836	2672.637	2625.868
20160424:18:53:53	23.65	12.271	2.41	23.473	0.25	2.273	0.25	2.073	113.926	300.735	301.38	75.354	51.411	75.888	84.897	2080.753	2042.164	2674.354	2627.586
20160424:18:58:53	23.648	12.295	2.348	23.476	0.25	2.28	0.25	2.072	113.992	300.735	301.358	75.296	51.39	75.886	84.928	2082.119	2043.487	2676.119	2629.297
20160424:19:03:53	23.645	12.306	2.279	23.478	0.25	2.267	0.25	2.069	114.018	300.802	301.369	75.377	51.409	75.934	84.956	2083.502	2044.841	2677.906	2631.049
20160424:19:08:53	23.647	11.657	2.266	23.481	0.25	2.268	0.25	2.073	112.094	300.744	301.4	75.382	51.397	75.926	84.985	2084.835	2046.152	2679.628	2632.744
20160424:19:13:53	23.642	11.205	2.181	23.481	0.25	2.254	0.25	2.045	110.731	300.725	301.44	75.408	51.407	75.957	85.014	2086.221	2047.522	2681.419	2634.517
20160424:19:18:53	23.645	12.149	2.186	23.485	0.25	2.267	0.25	2.064	113.565	300.787	301.44	75.43	51.418	75.969	85.035	2087.586	2048.831	2683.181	2636.209
20160424:19:23:53	23.645	12.234	2.163	23.486	0.25	2.279	0.25	2.072	113.811	300.758	301.426	75.412	51.401	75.968	85.058	2088.917	2050.203	2684.902	2637.983
20160424:19:28:53	23.643	12.286	2.129	23.486	0.25	2.27	0.25	2.082	113.957	300.722	301.378	75.427	51.423	76.004	85.08	2090.308	2051.511	2686.698	2639.675
20160424:19:33:53	23.648	12.323	2.185	23.487	0.25	2.286	0.25	2.073	114.072	300.783	301.4	75.452	51.419	76.058	85.102	2091.649	2052.87	2688.431	2641.432
20160424:19:38:53	23.642	12.353	2.093	23.488	0.25	2.289	0.25	2.078	114.149	300.725	301.382	75.447	51.414	76.059	85.121	2093.001	2054.201	2690.178	2643.154
20160424:19:43:53	23.642	12.368	2.1	23.487	0.25	2.283	0.25	2.074	114.19	300.744	301.399	75.443	51.4	76.056	85.137	2094.396	2055.524	2691.98	2644.865
20160424:19:48:53	23.645	12.427	2.172	23.485	0.25	2.275	0.25	2.079	114.362	300.736	301.369	75.499	51.451	76.108	85.156	2095.727	2056.878	2693.7	2646.617
20160424:19:53:53	23.643	12.473	2.146	23.485	0.25	2.284	0.25	2.069	114.491	300.684	301.37	75.499	51.424	76.11	85.176	2097.096	2058.189	2695.469	2648.312
20160424:19:58:53	23.64	12.534	2.071	23.487	0.25	2.288	0.25	2.083	114.659	300.66	301.309	75.497	51.415	76.111	85.196	2098.479	2059.562	2697.256	2650.088
20160424:20:03:53	23.639	12.591	2.029	23.49	0.25	2.289	0.25	2.07	114.816	300.712	301.37	75.539	51.446	76.153	85.216	2099.82	2060.873	2698.987	2651.784
20160424:20:08:53	23.639	12.641	2.008	23.491	0.25	2.284	0.25	2.072	114.958	300.742	301.386	75.55	51.453	76.163	85.233	2101.207	2062.242	2700.78	2653.555
20160424:20:13:53	23.638	12.689	1.938	23.495	0.25	2.297	0.25	2.079	115.09	300.746	301.371	75.55	51.433	76.16	85.253	2102.574	2063.546	2702.544	2655.241
20160424:20:18:53	23.637	12.711	1.95	23.494	0.25	2.3	0.25	2.088	115.148	300.716	301.36	75.55	51.419	76.159	85.272	2103.915	2064.911	2704.278	2657.006
20160424:20:23:53	23.635	12.148	1.928	23.493	0.25	2.272	0.25	2.076	113.536	300.776	301.441	75.598	51.457	76.199	85.294	2105.309	2066.249	2706.078	2658.737
20160424:20:28:53	23.632	12.227	1.873	23.494	0.25	2.271	0.25	2.066	113.758	300.729	301.435	75.598	51.457	76.202	85.311	2106.658	2067.566	2707.82	2660.44
20160424:20:33:53	23.633	12.685	1.915	23.492	0.25	2.274	0.25	2.072	115.07	300.73	301.413	75.583	51.447	76.181	85.324	2108.001	2068.925	2709.556	2662.197
20160424:20:38:53	23.632	12.707	1.876	23.494	0.25	2.285	0.25	2.086	115.13	300.743	301.387	75.568	51.441	76.176	85.339	2109.403	2070.243	2711.367	2663.902
20160424:20:43:53	23.63	12.743	1.849	23.494	0.25	2.292	0.25	2.081	115.229	300.8	301.427	75.607	51.467	76.211	85.354	2110.733	2071.618	2713.085	2665.68
20160424:20:48:53	23.633	12.792	1.879	23.495	0.25	2.3	0.25	2.092	115.369	300.796	301.415	75.608	51.465	76.221	85.368	2112.099	2072.929	2714.85	2667.376
20160424:20:53:53	23.632	12.799	1.803	23.499	0.25	2.296	0.25	2.084	115.387	300.757	301.457	75.605	51.465	76.218	85.379	2113.493	2074.306	2716.65	2669.156
20160424:20:58:53	23.626	12.774	1.69	23.501	0.25	2.28	0.25	2.077	115.308	300.744	301.424	75.597	51.457	76.208	85.391	2114.834	2075.603	2718.381	2670.833
20160424:21:03:53	23.631	12.756	1.725	23.504	0.25	2.287	0.25	2.083	115.264	300.737	301.422	75.572	51.459	76.194	85.4	2116.212	2076.958	2720.161	2672.585
20160424:21:08:53	23.629	12.748	1.676	23.506	0.25	2.297	0.25	2.082	115.24	300.722	301.389	75.553	51.456	76.175	85.405	2117.577	2078.31	2721.924	2674.333
20160424:21:13:53	23.634	12.747	1.759	23.505	0.25	2.298	0.25	2.084	115.246	300.727	301.354	75.551	51.46	76.167	85.41	2118.926	2079.619	2723.665	2676.024
20160424:21:18:53	23.635	12.724	1.765	23.505	0.25	2.291	0.25	2.088	115.183	300.735	301.349	75.54	51.456	76.157	85.412	2120.321	2080.985	2725.467	2677.789
20160424:21:23:53	23.634	12.195	1.735	23.506	0.25	2.289	0.25	2.086	113.672	300.731	301.44	75.504	51.457	76.126	85.41	2121.677	2082.304	2727.217	2679.494
20160424:21:28:53	23.636	12.286	1.727	23.509	0.25	2.276	0.25	2.081	113.933	300.819	301.494	75.494	51.452	76.112	85.403	2123.015	2083.675	2728.944	2681.267
20160424:21:33:53	23.634	12.74	1.656	23.512	0.25	2.289	0.25	2.08	115.226	300.81	301.448	75.476	51.459	76.103	85.394	2124.426	2084.986	2730.765	2682.961
20160424:21:38:53	23.635	12.816	1.627	23.516	0.25	2.302	0.25	2.094	115.438	300.797	301.416	75.445	51.461	76.086	85.377	2125.765	2086.355	2732.493	2684.729
20160424:21:43:53	23.635	12.581	1.645	23.514	0.25	2.298	0.25	2.091	114.773	300.796	301.41	75.431	51.476	76.045	85.358	2127.118	2087.669	2734.239	2686.427
20160424:21:48:53	23.636	12.013	1.665	23.513	0.25	2.291	0.25	2.075	113.157	300.747	301.404	75.37	51.45	75.943	85.334	2128.519	2089.011	2736.046	2688.16
20160424:21:53:53	23.639	12.325	1.69	23.514	0.25	2.27	0.25	2.078	114.052	300.708	301.384	75.331	51.483	75.94	85.312	2129.857	2090.373	2737.772	2689.919
20160424:21:58:53	23.632	12.727	1.664	23.51	0.25	2.282	0.25	2.075	115.187	300.708	301.354	75.263	51.476	75.911	85.285	2131.226	2091.683	2739.539	2691.611
20160424:22:03:53	23.63	12.746	1.688	23.506	0.25	2.282	0.25	2.085	115.236	300.75	301.374	75.218	51.458	75.876	85.255	2132.606	2093.049	2741.319	2693.376
20160424:22:08:53	23.632	12.772	1.738	23.505	0.25	2.299	0.25	2.087	115.31	300.834	301.465	75.214	51.479	75.865	85.227	2133.949	2094.363	2743.052	2695.073
20160424:22:13:53	23.63	12.745	1.811	23.497	0.25	2.295	0.25	2.095	115.231	300.779	301.39	75.161	51.462	75.798	85.2	2135.341	2095.742	2744.848	2696.855
20160424:22:18:53	23.632	12.751	1.897	23.492	0.25	2.292	0.25	2.09	115.253	300.8	301.381	75.143	51.469	75.777	85.167	2136.711	2097.053	2746.617	2698.549
20160424:22:23:53	23.626	12.763	1.878	23.487	0.25	2.295	0.25	2.084	115.277	300.803	301.342	75.073	51.447	75.721	85.133	2138.048	2098.415	2748.343	2700.31
20160424:22:28:53	23.623	12.775	1.869	23.486	0.25	2.296	0.25	2.096	115.307	300.872	301.467	75.05	51.475	75.71	85.102	2139.449	2099.75	2750.152	2702.036
20160424:22:33:53	23.623	12.789	1.897	23.483	0.25	2.295	0.25	2.098	115.345	300.732	301.377	74.94	51.442	75.598	85.061	2140.799	2101.077	2751.894	2703.75
20160424:22:38:53	23.621	12.85	1.906	23.481	0.25	2.298	0.25	2.091	115.51	300.773	301.39	74.917	51.454	75.558	85.021	2142.143	2102.436	2753.63	2705.508
20160424:22:43:53	23.625	12.859	1.976	23.48	0.25	2.305	0.25	2.1	115.541	300.798	301.424	74.873	51.449	75.511	84.975	2143.543	2103.754	2755.437	2707.211
20160424:22:48:53	23.623	12.302	1.974	23.478	0.25	2.29	0.25	2.095	113.961	300.762	301.419	74.823	51.442	75.463	84.93	2144.876	2105.13	2757.157	2708.989
20160424:22:53:53	23.619	11.914	1.9	23.479	0.25	2.271	0.25	2.081	112.841	300.739	301.37	74.779	51.431	75.422	84.883	2146.239	2106.441	2758.917	2710.682
20160424:22:58:53	23.618	12.634	1.921	23.477	0.25	2.278	0.25	2.083	114.902	300.777	301.431	74.728	51.435	75.38	84.836	2147.631	2107.821	2760.713	2712.466
20160424:23:03:53	23.615	12.74	1.903	23.476	0.25	2.294	0.25	2.085	115.196	300.799	301.423	74.622	51.406	75.274	84.784	2148.98	2109.129	2762.454	2714.156
20160424:23:08:53	23.617	12.742	1.944	23.474	0.25	2.302	0.25	2.097	115.206	300.782	301.393	74.568	51.409	75.223	84.728	2150.359	2110.482	2764.233	2715.904
20160424:23:13:53	23.617	12.794	1.941	23.474	0.25	2.3	0.25	2.098	115.35	300.816	301.452	74.52	51.401	75.178	84.673	2151.728	2111.845	266	2717.665
20160424:23:18:53	23.613	12.848	1.91	23.473	0.25	2.307	0.25	2.093	115.493	300.779	301.425	74.452	51.406	75.118	84.614	2153.077	2113.156	2767.741	2719.359
20160424:23:23:53	23.611	12.867	1.833	23.476	0.25	2.311	0.25	2.095	115.541	300.772	301.429	74.363	51.392	75.059	84.555	2154.471	2114.527	2769.539	2721.13
20160424:23:28:53	23.613	12.866	1.881	23.475	0.25	2.299	0.25	2.096	115.543	300.831	301.443	74.316	51.4	74.994	84.495	2155.837	2115.843	2771.3	2722.829
20160424:23:33:53	23.614	12.823	1.863	23.477	0.25	2.313	0.25	2.091	115.424	300.769	301.371	74.256	51.381	74.902	84.43	2157.172	2117.222	2773.022	2724.609
20160424:23:38:53	23.612	12.79	1.81	23.479	0.25	2.319	0.25	2.09	115.332	300.76	301.373	74.202	51.387	74.853	84.364	2158.577	2118.534	2774.833	2726.303
20160424:23:43:53	23.615	12.747	1.868	23.478	0.25	2.284	0.25	2.096	115.217	300.784	301.438	74.147	51.365	74.798	84.298	2159.917	2119.897	2776.561	2728.062
20160424:23:48:53	23.612	12.779	1.861	23.475	0.25	2.295	0.25	2.105	115.301	300.81	301.422	74.055	51.374	74.75	84.234	2161.272	2121.238	2778.307	2729.793
20160424:23:53:53	23.613	11.911	1.862	23.476	0.25	2.293	0.25	2.096	112.822	300.694	301.355	74.002	51.36	74.697	84.169	2162.673	2122.563	2780.113	2731.504
20160424:23:58:53	23.609	11.801	1.816	23.476	0.25	2.276	0.25	2.076	112.488	300.689	301.395	73.957	51.356	74.604	84.103	2164.014	2123.925	2781.843	2733.261
20160425:00:03:53	23.606	12.681	1.787	23.475	0.25	2.285	0.25	2.093	115.02	300.77	301.418	73.912	51.337	74.539	84.038	2165.384	2125.244	2783.607	2734.962
20160425:00:08:53	23.609	12.819	1.882	23.47	0.25	2.301	0.25	2.1	115.407	300.731	301.294	73.864	51.34	74.486	83.972	2166.766	2126.624	2785.389	2736.744
20160425:00:13:53	23.608	12.83	1.945	23.465	0.25	2.302	0.25	2.103	115.435	300.752	301.345	73.809	51.32	74.384	83.91	2168.112	2127.938	2787.124	2738.44
20160425:00:18:53	23.608	12.872	1.977	23.463	0.25	2.299	0.25	2.104	115.55	300.764	301.394	73.708	51.321	74.341	83.847	2169.506	2129.316	2788.92	2740.218
20160425:00:23:53	23.608	12.855	2.016	23.46	0.25	2.304	0.25	2.103	115.505	300.787	301.383	73.653	51.309	74.302	83.782	2170.873	2130.627	2790.683	2741.91
20160425:00:28:53	23.605	12.84	1.994	23.459	0.25	2.302	0.25	2.109	115.458	300.7	301.331	73.602	51.292	74.253	83.719	2172.209	2131.979	2792.406	2743.654
20160425:00:33:53	23.607	12.804	1.93	23.465	0.25	2.298	0.25	2.107	115.363	300.696	301.326	73.558	51.295	74.214	83.659	2173.606	2133.344	2794.206	2745.415
20160425:00:38:53	23.609	12.747	1.963	23.465	0.25	2.303	0.25	2.104	115.208	300.707	301.361	73.536	51.28	74.171	83.

Time:	Stack Pressure:	Sat% H2O:	Static:	Barometric:	Flowmeter1:	Vacuum1:	Flowmeter2:	Vacuum2:	Stack Temp:	Sorbent Temp:	Probe Temp:	DGM#1 Temp:	Condenser Temp:	DGM#2 Temp:	DAQ Temp:	DGM1*:	DGM2*:	DGM1:	DGM2:
day:hh:mm:ss	in-Hg	Percent	in-H2O	in-Hg	l/min	in-Hg	l/min	in-Hg	degF	degF	degF	degF	degF	degF	degF	liters STP	liters STP	liters nominal	liters nominal
20160425:04:28:54	23.544	12.46	2.125	23.388	0.25	2.3	0.25	2.111	114.306	300.683	301.34	71.852	51.168	72.413	81.81	2237.717	2196.392	2876.815	2826.752
20160425:04:33:54	23.537	12.434	1.999	23.39	0.25	2.309	0.25	2.101	114.222	300.687	301.347	71.788	51.161	72.376	81.774	2239.049	2197.704	2878.531	2828.444
20160425:04:38:54	23.54	12.412	1.998	23.393	0.25	2.299	0.25	2.109	114.163	300.641	301.293	71.73	51.17	72.341	81.735	2240.448	2199.083	2880.333	2830.222
20160425:04:43:54	23.54	11.819	1.961	23.396	0.25	2.289	0.25	2.1	112.418	300.639	301.312	71.671	51.155	72.295	81.692	2241.786	2200.389	2882.056	2831.906
20160425:04:48:54	23.54	11.305	2.075	23.387	0.25	2.279	0.25	2.081	110.89	300.598	301.228	71.654	51.167	72.281	81.655	2243.14	2201.746	2883.8	2833.656
20160425:04:53:54	23.544	12.129	2.095	23.39	0.25	2.282	0.25	2.081	113.358	300.677	301.355	71.611	51.145	72.233	81.615	2244.532	2203.103	2885.593	2835.406
20160425:04:58:54	23.536	12.237	2.007	23.389	0.25	2.298	0.25	2.096	113.658	300.67	301.338	71.587	51.145	72.196	81.574	2245.875	2204.415	2887.322	2837.098
20160425:05:03:54	23.535	12.248	2.006	23.388	0.25	2.298	0.25	2.094	113.689	300.657	301.334	71.564	51.157	72.176	81.535	2247.248	2205.781	2889.091	2838.859
20160425:05:08:54	23.532	12.244	1.942	23.389	0.25	2.303	0.25	2.091	113.672	300.592	301.246	71.529	51.141	72.111	81.493	2248.608	2207.099	2890.843	2840.558
20160425:05:13:54	23.53	12.257	1.951	23.386	0.25	2.284	0.25	2.083	113.705	300.639	301.279	71.5	51.164	72.069	81.452	2249.958	2208.473	2892.581	2842.329
20160425:05:18:54	23.536	12.27	1.939	23.393	0.25	2.288	0.25	2.091	113.751	300.58	301.255	71.407	51.139	72.024	81.416	2251.355	2209.783	2894.38	2844.017
20160425:05:23:54	23.541	12.266	2.069	23.389	0.25	2.284	0.25	2.079	113.748	300.677	301.345	71.402	51.175	72.025	81.38	2252.697	2211.158	2896.107	2845.789
20160425:05:28:54	23.536	12.248	1.95	23.393	0.25	2.293	0.25	2.098	113.69	300.69	301.351	71.349	51.129	71.979	81.349	2254.039	2212.46	2897.835	2847.468
20160425:05:33:54	23.535	12.294	1.885	23.397	0.25	2.291	0.25	2.09	113.822	300.668	301.352	71.348	51.173	71.975	81.319	2255.432	2213.817	2899.628	2849.216
20160425:05:38:54	23.536	12.341	1.872	23.398	0.25	2.291	0.25	2.105	113.957	300.619	301.254	71.303	51.138	71.927	81.286	2256.777	2215.167	2901.357	2850.955
20160425:05:43:54	23.536	11.73	1.868	23.399	0.25	2.292	0.25	2.09	112.154	300.587	301.238	71.295	51.166	71.923	81.256	2258.147	2216.484	2903.12	2852.652
20160425:05:48:54	23.535	11.385	1.809	23.402	0.25	2.279	0.25	2.085	111.125	300.613	301.28	71.233	51.146	71.89	81.229	2259.51	2217.846	2904.874	2854.406
20160425:05:53:54	23.536	12.221	1.877	23.398	0.25	2.289	0.25	2.083	113.612	300.663	301.288	71.181	51.156	71.865	81.2	2260.856	2219.161	2906.606	2856.1
20160425:05:58:54	23.538	12.334	1.958	23.394	0.25	2.303	0.25	2.1	113.936	300.747	301.304	71.171	51.145	71.84	81.173	2262.251	2220.535	2908.4	2857.87
20160425:06:03:54	23.537	12.344	2.062	23.386	0.25	2.3	0.25	2.101	113.967	300.693	301.25	71.123	51.121	71.74	81.144	2263.596	2221.848	2910.131	2859.562
20160425:06:08:54	23.534	12.348	1.946	23.391	0.25	2.299	0.25	2.091	113.974	300.683	301.306	71.112	51.127	71.728	81.111	2264.943	2223.224	2911.865	2861.335
20160425:06:13:54	23.532	12.339	1.906	23.392	0.25	2.303	0.25	2.094	113.943	300.644	301.242	71.052	51.116	71.666	81.079	2266.341	2224.526	2913.663	2863.011
20160425:06:18:54	23.53	12.34	1.862	23.393	0.25	2.309	0.25	2.099	113.944	300.698	301.255	71.032	51.121	71.65	81.042	2267.677	2225.894	2915.381	2864.773
20160425:06:23:54	23.532	12.322	1.877	23.394	0.25	2.289	0.25	2.098	113.895	300.649	301.221	70.967	51.126	71.595	80.997	2269.046	2227.243	2917.143	2866.509
20160425:06:28:54	23.536	12.337	1.917	23.395	0.25	2.307	0.25	2.104	113.943	300.638	301.211	70.898	51.107	71.557	80.954	2270.423	2228.562	2918.913	2868.209
20160425:06:33:54	23.534	12.373	1.897	23.394	0.25	2.309	0.25	2.117	114.043	300.601	301.21	70.828	51.119	71.494	80.904	2271.771	2229.927	2920.646	2869.966
20160425:06:38:54	23.537	12.385	2.066	23.385	0.25	2.31	0.25	2.121	114.083	300.528	301.108	70.788	51.103	71.424	80.859	2273.163	2231.246	2922.437	2871.664
20160425:06:43:54	23.537	11.755	2.084	23.384	0.25	2.311	0.25	2.118	112.237	300.517	301.16	70.746	51.11	71.376	80.815	2274.521	2232.621	2924.183	2873.434
20160425:06:48:54	23.534	11.612	1.999	23.387	0.25	2.309	0.25	2.092	111.808	300.504	301.177	70.717	51.092	71.352	80.769	2275.859	2233.936	2925.904	2875.128
20160425:06:53:54	23.532	12.343	1.914	23.391	0.25	2.307	0.25	2.096	113.953	300.556	301.158	70.677	51.093	71.306	80.727	2277.266	2235.316	2927.713	2876.904
20160425:06:58:54	23.533	12.386	1.903	23.393	0.25	2.298	0.25	2.107	114.08	300.51	301.124	70.641	51.052	71.237	80.684	2278.596	2236.622	2929.422	2878.585
20160425:07:03:54	23.532	12.399	1.974	23.387	0.25	2.301	0.25	2.11	114.114	300.554	301.18	70.609	51.083	71.194	80.64	2279.963	2237.989	2931.18	2880.344
20160425:07:08:54	23.529	12.374	2.012	23.381	0.25	2.298	0.25	2.104	114.038	300.572	301.157	70.509	51.029	71.13	80.596	2281.351	2239.341	2932.965	2882.085
20160425:07:13:54	23.526	12.376	1.973	23.381	0.25	2.309	0.25	2.106	114.041	300.564	301.167	70.476	51.053	71.094	80.549	2282.692	2240.663	2934.689	2883.786
20160425:07:18:54	23.526	12.372	1.939	23.383	0.25	2.31	0.25	2.109	114.028	300.481	301.142	70.445	51.043	71.065	80.505	2284.084	2242.033	2936.478	2885.549
20160425:07:23:54	23.525	12.37	1.942	23.383	0.25	2.312	0.25	2.114	114.022	300.509	301.159	70.395	51.018	71.011	80.458	2285.454	2243.355	2938.239	2887.25
20160425:07:28:54	23.522	12.393	1.914	23.381	0.25	2.32	0.25	2.122	114.084	300.534	301.164	70.358	51.023	70.974	80.41	2286.791	2244.731	2939.957	2889.021
20160425:07:33:54	23.527	12.425	2.047	23.377	0.25	2.334	0.25	2.114	114.181	300.483	301.186	70.326	51.036	70.932	80.362	2288.195	2246.048	2941.763	2890.716
20160425:07:38:54	23.525	12.433	2.005	23.377	0.25	2.324	0.25	2.117	114.201	300.451	301.133	70.282	51.029	70.848	80.314	2289.54	2247.428	2943.491	2892.492
20160425:07:43:54	23.527	12.166	2.015	23.379	0.25	2.308	0.25	2.11	113.43	300.406	301.069	70.193	51.018	70.807	80.268	2290.891	2248.74	2945.228	2894.18
20160425:07:48:54	23.528	11.722	2.003	23.38	0.25	2.292	0.25	2.115	112.137	300.429	301.136	70.162	51.057	70.791	80.227	2292.288	2250.095	2947.022	2895.923
20160425:07:53:54	23.529	12.398	2.1	23.374	0.25	2.303	0.25	2.106	114.106	300.425	301.111	70.117	51.005	70.757	80.187	2293.632	2251.462	2948.75	2897.682
20160425:07:58:54	23.533	12.548	2.163	23.374	0.25	2.314	0.25	2.122	114.536	300.596	301.227	70.092	51.018	70.733	80.149	2295.011	2252.78	2950.522	2899.378
20160425:08:03:54	23.533	12.619	2.149	23.375	0.25	2.32	0.25	2.132	114.736	300.619	301.281	70.065	51	70.702	80.106	2296.38	2254.155	2952.281	2901.147
20160425:08:08:54	23.53	12.674	2.098	23.376	0.25	2.324	0.25	2.117	114.886	300.592	301.213	70.021	50.982	70.653	80.065	2297.731	2255.476	2954.017	2902.846
20160425:08:13:54	23.528	12.734	2.127	23.372	0.25	2.325	0.25	2.115	115.051	300.553	301.201	70.016	50.986	70.635	80.024	2299.133	2256.859	2955.819	2904.626
20160425:08:18:54	23.53	12.742	2.182	23.369	0.25	2.317	0.25	2.121	115.074	300.609	301.248	69.981	50.979	70.572	79.985	2300.489	2258.176	2957.561	2906.32
20160425:08:23:54	23.531	12.774	2.252	23.366	0.25	2.321	0.25	2.119	115.165	300.586	301.232	69.964	50.98	70.556	79.947	2301.829	2259.543	2959.283	2908.079
20160425:08:28:54	23.53	12.814	2.309	23.36	0.25	2.317	0.25	2.129	115.276	300.667	301.267	69.937	50.984	70.502	79.905	2303.235	2260.885	2961.091	2909.806
20160425:08:33:54	23.532	12.872	2.312	23.362	0.25	2.337	0.25	2.133	115.439	300.618	301.272	69.879	50.974	70.471	79.869	2304.573	2262.215	2962.811	2911.517
20160425:08:38:54	23.536	12.92	2.386	23.361	0.25	2.341	0.25	2.12	115.575	300.616	301.25	69.835	50.977	70.451	79.83	2305.948	2263.581	2964.578	2913.274
20160425:08:43:54	23.54	12.93	2.445	23.36	0.25	2.335	0.25	2.123	115.607	300.544	301.186	69.783	50.95	70.406	79.793	2307.34	2264.904	2966.367	2914.977
20160425:08:48:54	23.542	12.918	2.454	23.361	0.25	2.324	0.25	2.123	115.578	300.605	301.202	69.788	50.966	70.409	79.758	2308.686	2266.288	2968.096	2916.758
20160425:08:53:54	23.541	12.952	2.436	23.362	0.25	2.329	0.25	2.116	115.668	300.567	301.16	69.754	50.937	70.371	79.725	2310.074	2267.603	2969.88	2918.449
20160425:08:58:54	23.548	12.981	2.527	23.362	0.25	2.323	0.25	2.123	115.758	300.468	301.088	69.771	50.954	70.386	79.696	2311.441	2268.989	2971.637	2920.233
20160425:09:03:54	23.542	12.945	2.417	23.364	0.25	2.306	0.25	2.111	115.652	300.509	301.151	69.734	50.924	70.35	79.667	2312.785	2270.302	2973.363	2921.921
20160425:09:08:54	23.534	12.98	2.354	23.361	0.25	2.326	0.25	2.126	115.737	300.578	301.216	69.728	50.941	70.347	79.644	2314.183	2271.658	2975.159	2923.665
20160425:09:13:54	23.532	13.008	2.385	23.357	0.25	2.317	0.25	2.13	115.809	300.579	301.167	69.747	50.957	70.373	79.623	2315.528	2273.019	2976.889	2925.417
20160425:09:18:54	23.529	13.026	2.335	23.357	0.25	2.305	0.25	2.118	115.853	300.469	301.074	69.75	50.964	70.364	79.604	2316.87	2274.335	2978.613	2927.111
20160425:09:23:54	23.528	12.986	2.348	23.356	0.25	2.31	0.25	2.124	115.745	300.494	301.12	69.723	50.953	70.339	79.589	2318.266	2275.703	2980.407	2928.87
20160425:09:28:54	23.534	12.915	2.404	23.357	0.25	2.314	0.25	2.113	115.557	300.507	301.127	69.724	50.953	70.34	79.577	2319.615	2277.023	2982.141	2930.57
20160425:09:33:54	23.534	12.848	2.358	23.36	0.25	2.316	0.25	2.121	115.374	300.475	301.087	69.727	50.959	70.347	79.566	2320.985	2278.398	2983.902	2932.338
20160425:09:38:54	23.532	12.359	2.394	23.356	0.25	2.318	0.25	2.126	113.983	300.454	301.07	69.743	50.957	70.363	79.559	2322.35	2279.713	2985.656	2934.03
20160425:09:43:54	23.523	11.856	2.317	23.353	0.25	2.288	0.25	2.099	112.527	300.551	301.17	69.755	50.973	70.36	79.554	2323.698	2281.092	2987.389	2935.805
20160425:09:48:54	23.52	12.703	2.367	23.346	0.25	2.299	0.25	2.106	114.949	300.568	301.181	69.759	50.962	70.364	79.549	2325.094	2282.402	2989.183	2937.491
20160425:09:53:54	23.524	12.774	2.464	23.343	0.25	2.315	0.25	2.121	115.154	300.523	301.162	69.755	50.978	70.355	79.546	2326.441	2283.754	2990.917	2939.231
20160425:09:58:54	23.521	12.738	2.422	23.343	0.25	2.323	0.25	2.121	115.05	300.482	301.081	69.738	50.962	70.344	79.541	2327.789	2285.117	2992.65	2940.987
20160425:10:03:54	23.524	11.822	2.479	23.341	0.25	2.312	0.25	2.104	112.429	300.448	301.079	69.681	50.943	70.296	79.533	2329.185	2286.433	2994.444	2942.68
20160425:10:08:54	23.528	12.041	2.524	23.343	0.25	2.305	0.25	2.096	113.061	300.523	301.177	69.67	50.906	70.285	79.528	2330.52	2287.802	2996.161	2944.444
20160425:10:13:54	23.525	12.624	2.537	23.338	0.25	2.315	0.25	2.122	114.739	300.505	301.144	69.669	50.931	70.279	79.519	2331.891	2289.122	2997.924	2946.143
20160425:10:18:54	23.526	12.695	2.535	23.339	0.25	2.314	0.25	2.125	114.939	300.518	301.112	69.667	50.924	70.274	79.51	2333.264	2290.5	2999.691	2947.917
20160425:10:23:54	23.528	12.776	2.567	23.339	0.25	2.321	0.25	2.119	115.166	300.565	301.157	69.668	50.937	70.277	79.498	2334.611	2291.816	3001.422	2949.611
20160425:10:28:54	23.531	12.821	2.622	23.338	0.25	2.317	0.25	2.128	115.294	300.529	301.174	69.668	50.933	70.276	79.487	2336.005	2293.187	3003.215	2951.376
20160425:10:33:54	23.527	12.856	2.642	23.333	0.25	2.33	0.25	2.132	115.384	300.575	301.183	69.664	50.943	70.277	79.475	2337.364	2294.512	3004.963	2953.083
20160425:10:38:54	23.526	12.798	2.623	23.333	0.25	2.331	0.25	2.139	115.222	300.549	301.148	69.565	50.9	70.177	79.463	2338.698	2295.853	3006.68	2954.81
20160425:10:43:54	23.528	12.837	2.681	23.331	0.25	2.332	0.25	2.126	115.335	300.533	301.137	69.565	50.899	70.172	79.455	2340.107	2297.218	3008.491	2956.568
20160425:10:48:54	23.527	12.81	2.691	23.329	0.25	2.329	0.25	2.126	115.257	300.53	301.17	69.575	50.898	70.176	79.446	2341.442	2298.536	3010.209	2958.265
20160425:10:53:54	23.531	12.785	2.759	23.328	0.25	2.34	0.25	2.131	115.197	300.492	301.185	69.614	50.898	70.191	79.435	2342.804	2299.916	3011.961	2960.041
20160425:10:58:54	23.53	12.756	2.787	23.325	0.25	2.331	0.25	2.136	115.114	300.518	301.186	69.645	50.899	70.21	79.426	2344.199	2301.235	3013.756	2961.741
20160425:11:03:54	23.525	12.726	2.817	23.318	0.25	2.32	0.25	2.125	115.024	300.494	301.168	69.666	50.899	70.246	79.421	2345.543	2302.612	3015.485	2963.515
20160425:11:08:54	23.518	12.639	2.79	23.313	0.25	2.305	0.25	2.132	114.77	300.509	301.159	69.668	50.904	70.27	79.415	2346.92	2303.917	3017.259	2965.197
20160425:11:13:54	23.515	12.563	2.794	23.309	0.25	2.302	0.25	2.114	114.55	300.586	301.204	69.677	50.904	70.283	79.412	2348.287	2305.285	3019.019	2966.961
20160425:11:18:54	23.508	12.52	2.75	23.306	0.25	2.296	0.25	2.094	114.422	300.465	301.139	69.708	50.902	70.297	79.412	2349.63	2306.636	3020.748	2968.703
20160425:11:23:54	23.504	12.555	2.75	23.302	0.25	2.315	0.25	2.112	114.513	300.517	301.141	69.723	50.903	70.321	79.415	2351.025	2307.952	3022.546	2970.4
20160425:11:28:54	23.503	12.531	2.717	23.303	0.25	2.313	0.25	2.118	114.444	300.59	301.176	69.726	50.916	70.335	79.42	2352.37	2309.316	3024.278	2972.16
20160425:11:33:54	23.502	12.477	2.743	23.3	0.25	2.309	0.25	2.115	114.291	300.54	301.186	69.746	50.901	70.34	79.426	2353.712	2310.632	3026.007	2973.857
20160425:11:38:54	23.494	12.42	2.604	23.303	0.25	2.315	0.25	2.115	114.119	300.524	301.144	69.769	50.903	70.352	79.438	2355.107	2312.008	3027.804	2975.632
20160425:11:43:54	23.49	12.376	2.549	23.303	0.25	2.306	0.25	2.099	113.986	300.502	301.156	69.777	50.897	70.368	79.451	2356.446	2313.319	3029.53	2977.321
04/25/2016:11:43:54	Sampling	complete	6 Days	0 Hrs	0 Minutes	sampled													
C:Drive Code:0																			
Compact Flash Code:0																			

Hg-324K-1099

HgK_324 Data		huntington2	4/26/2016	8:44:08				
DGM1 ID		DGM2 ID	Trap1 ID	Trap2 ID				
	3605445	3605446	20077	285673				
Time:		Leak 1	Status	Leak 2	Status	Vacuum1	Vacuum2	DGM 1	DGM 2
Day:hh:mm		ccpermin	P-F	ccpermin	P-F	in-Hg	in-Hg	liter	liter
04/26/2016:08:44:22		1321.722	Fail	1371.68	Fail	2.797	2.693	0.411	0.436
04/26/2016:08:44:37		1403.704	Fail	1443.609	Fail	6.767	6.788	0.702	0.722
04/26/2016:08:44:52		1137.037	Fail	1127.82	Fail	9.507	9.62	0.98	1
04/26/2016:08:45:07		833.333	Fail	864.662	Fail	11.393	11.621	1.119	1.154
04/26/2016:08:45:22		559.259	Fail	556.391	Fail	12.806	13.11	1.259	1.278
04/26/2016:08:45:37		514.815	Fail	492.481	Fail	13.879	14.25	1.376	1.4
04/26/2016:08:45:52		481.481	Fail	454.887	Fail	14.679	15.129	1.5	1.506
04/26/2016:08:46:07		400	Fail	360.902	Fail	15.316	15.851	1.576	1.581
04/26/2016:08:46:22		322.222	Fail	300.752	Fail	15.933	16.425	1.661	1.656
04/26/2016:08:46:37		288.889	Fail	266.917	Fail	16.433	16.896	1.72	1.714
04/26/2016:08:46:52		192.593	Fail	210.526	Fail	16.888	17.282	1.757	1.761
04/26/2016:08:47:07		125.926	Fail	161.654	Fail	17.287	17.592	1.783	1.795
04/26/2016:08:47:22		111.111	Fail	101.504	Fail	17.601	17.842	1.813	1.812
04/26/2016:08:47:37		114.815	Fail	67.669	Fail	17.854	18.041	1.841	1.829
04/26/2016:08:47:52		107.407	Fail	63.91	Fail	18.059	18.204	1.867	1.844
04/26/2016:08:48:07		103.704	Fail	56.391	Fail	18.217	18.338	1.893	1.857
04/26/2016:08:48:22		88.889	Fail	60.15	Fail	18.349	18.46	1.911	1.874
04/26/2016:08:48:37		66.667	Fail	63.91	Fail	18.455	18.566	1.926	1.889
04/26/2016:08:48:52		48.148	Fail	56.391	Fail	18.542	18.657	1.935	1.902
04/26/2016:08:49:07		37.037	Fail	45.113	Fail	18.614	18.736	1.944	1.912
04/26/2016:08:49:22		37.037	Fail	22.556	Fail	18.667	18.801	1.954	1.914
04/26/2016:08:49:37		33.333	Fail	26.316	Fail	18.71	18.861	1.961	1.925
04/26/2016:08:49:52		25.926	Fail	48.872	Fail	18.738	18.909	1.967	1.938
04/26/2016:08:50:07		22.222	Fail	41.353	Fail	18.757	18.944	1.972	1.945
04/26/2016:08:50:22		18.519	Fail	30.075	Fail	18.76	18.976	1.976	1.953
04/26/2016:08:50:37		11.111	Fail	26.316	Fail	18.759	19.001	1.978	1.959
04/26/2016:08:50:52		7.407	Pass	22.556	Fail	18.752	19.021	1.98	1.964
04/26/2016:08:51:07		3.704	Pass	15.038	Fail	18.747	19.033	1.98	1.966
04/26/2016:08:51:22		3.704	Pass	11.278	Fail	18.753	19.051	1.981	1.97
04/26/2016:08:51:37		7.407	Pass	15.038	Fail	18.757	19.059	1.983	1.974
04/26/2016:08:51:52		3.704	Pass	11.278	Fail	18.759	19.066	1.983	1.976
04/26/2016:08:52:07		7.407	Pass	7.519	Pass	18.765	19.068	1.987	1.977

Hg-324K-1099								
HgK_324 Data	huntington2wk3	4/26/2016	9:44:09					
DGM1 ID	DGM2 ID	Trap1 ID	Trap2 ID					
3605445	3605446	312610	285580					
Time:	Leak 1	Status	Leak 2	Status	Vacuum1	Vacuum2	DGM 1	DGM 2
Day:hh:mm	ccpermin	P-F	ccpermin	P-F	in-Hg	in-Hg	liter	liter
04/26/2016:09:44:23	1347.648	Fail	1228.823	Fail	2.368	2.41	0.424	0.365
04/26/2016:09:44:38	1437.037	Fail	1473.684	Fail	5.908	5.965	0.719	0.737
04/26/2016:09:44:53	1192.593	Fail	1195.489	Fail	8.451	8.554	1.02	0.962
04/26/2016:09:45:08	918.519	Fail	921.053	Fail	10.436	10.538	1.178	1.197
04/26/2016:09:45:23	666.667	Fail	834.586	Fail	12.055	12.128	1.354	1.38
04/26/2016:09:45:38	666.667	Fail	541.353	Fail	13.3	13.374	1.511	1.468
04/26/2016:09:45:53	529.63	Fail	368.421	Fail	14.278	14.339	1.619	1.564
04/26/2016:09:46:08	407.407	Fail	357.143	Fail	15.133	15.063	1.715	1.647
04/26/2016:09:46:23	325.926	Fail	300.752	Fail	15.882	15.703	1.781	1.714
04/26/2016:09:46:38	211.111	Fail	338.346	Fail	16.482	16.317	1.82	1.816
04/26/2016:09:46:53	181.481	Fail	308.271	Fail	16.971	16.833	1.872	1.868
04/26/2016:09:47:08	188.889	Fail	214.286	Fail	17.371	17.265	1.915	1.923
04/26/2016:09:47:23	159.259	Fail	195.489	Fail	17.693	17.61	1.952	1.966
04/26/2016:09:47:38	129.63	Fail	157.895	Fail	17.952	17.885	1.98	2.002
04/26/2016:09:47:53	107.407	Fail	127.82	Fail	18.153	18.098	2.006	2.03
04/26/2016:09:48:08	96.296	Fail	90.226	Fail	18.313	18.27	2.028	2.047
04/26/2016:09:48:23	66.667	Fail	78.947	Fail	18.444	18.422	2.039	2.07
04/26/2016:09:48:38	29.63	Fail	71.429	Fail	18.551	18.566	2.043	2.083
04/26/2016:09:48:53	33.333	Fail	45.113	Fail	18.639	18.689	2.056	2.092
04/26/2016:09:49:08	44.444	Fail	33.835	Fail	18.706	18.787	2.065	2.1
04/26/2016:09:49:23	37.037	Fail	26.316	Fail	18.759	18.87	2.074	2.105
04/26/2016:09:49:38	37.037	Fail	18.797	Fail	18.799	18.935	2.083	2.109
04/26/2016:09:49:53	29.63	Fail	18.797	Fail	18.834	18.99	2.089	2.115
04/26/2016:09:50:08	18.519	Fail	15.038	Fail	18.862	19.037	2.093	2.117
04/26/2016:09:50:23	18.519	Fail	11.278	Fail	18.883	19.07	2.098	2.12
04/26/2016:09:50:38	14.815	Fail	11.278	Fail	18.903	19.097	2.1	2.122
04/26/2016:09:50:53	7.407	Pass	7.519	Pass	18.918	19.118	2.102	2.124

Time: day:hh:mm:ss	Stack Pressure: in-Hg	Sat% H2O: Percent	Static: in-H2O	Barometric: in-Hg	Flowmeter1: l/min	Vacuum1: in-Hg	Flowmeter2: l/min	Vacuum2: in-Hg	Stack Temp: degF	Sorbent Temp: degF	Probe Temp: degF	DGM#1 Temp: degF	Condenser Temp: degF	DGM#2 Temp: degF	DAQ Temp: degF	DGM1*: liters STP	DGM2*: liters STP	DGM1: liters nominal	DGM2: liters nominal
20160426:10:06:46	23.643	11.851	2.69	23.445	0.239	1.716	0.24	1.718	112.67	297.766	282.625	64.608	51.252	64.953	73.139	1.262	1.222	1.6	1.551
20160426:10:11:46	23.648	12.346	2.735	23.447	0.25	2.195	0.25	2.149	114.136	300.864	299.735	64.676	51.15	65.006	73.191	2.519	2.526	3.194	3.205
20160426:10:16:46	23.653	12.404	2.778	23.449	0.25	2.267	0.25	2.221	114.311	301.329	301.335	64.712	51.121	65.055	73.275	3.854	3.784	4.887	4.801
20160426:10:21:46	23.654	12.485	2.78	23.45	0.25	2.297	0.25	2.251	114.542	301.27	301.678	64.752	51.218	65.121	73.385	5.142	5.112	6.52	6.487
20160426:10:26:46	23.659	12.531	2.854	23.449	0.25	2.315	0.25	2.264	114.677	301.107	301.64	64.797	51.374	65.231	73.508	6.494	6.398	8.235	8.118
20160426:10:31:46	23.659	12.591	2.876	23.448	0.25	2.321	0.25	2.278	114.846	300.977	301.581	64.864	51.569	65.301	73.632	7.783	7.683	9.87	9.75
20160426:10:36:46	23.664	12.578	2.944	23.447	0.25	2.321	0.25	2.291	114.819	300.83	301.547	64.905	51.547	65.347	73.755	9.138	9.023	11.589	11.451
20160426:10:41:46	23.669	12.558	2.989	23.449	0.25	2.304	0.25	2.287	114.768	300.765	301.516	64.939	51.599	65.397	73.869	10.427	10.29	13.224	13.06
20160426:10:46:46	23.675	12.545	3.072	23.449	0.25	2.225	0.25	2.225	114.742	300.737	301.481	64.972	51.536	65.461	73.978	11.788	11.63	14.95	14.761
20160426:10:51:46	23.683	12.532	3.214	23.446	0.25	2.187	0.25	2.181	114.716	300.696	301.451	64.999	51.449	65.523	74.08	13.098	12.913	16.613	16.391
20160426:10:56:46	23.681	12.311	3.165	23.448	0.25	2.163	0.25	2.168	114.071	300.627	301.379	65.028	51.431	65.555	74.17	14.463	14.266	18.344	18.109
20160426:11:01:46	23.688	11.444	3.226	23.45	0.25	2.153	0.25	2.154	111.537	300.58	301.339	65.043	51.301	65.579	74.254	15.804	15.568	20.046	19.763
20160426:11:06:46	23.694	12.076	3.285	23.452	0.25	2.16	0.25	2.162	113.411	300.513	301.313	65.063	51.257	65.609	74.33	17.147	16.933	21.75	21.496
20160426:11:11:46	23.688	12.454	3.19	23.454	0.25	2.178	0.25	2.176	114.503	300.552	301.322	65.088	51.183	65.63	74.397	18.524	18.242	23.496	23.16
20160426:11:16:46	23.69	12.487	3.215	23.453	0.25	2.165	0.25	2.143	114.601	300.581	301.301	65.106	51.127	65.662	74.46	19.861	19.614	25.193	24.902
20160426:11:21:46	23.699	12.504	3.434	23.447	0.25	2.173	0.25	2.138	114.661	300.605	301.317	65.141	51.117	65.682	74.519	21.257	20.927	26.965	26.57
20160426:11:26:46	23.7	12.587	3.436	23.448	0.25	2.179	0.25	2.149	114.898	300.605	301.297	65.159	50.986	65.704	74.574	22.577	22.3	28.641	28.314
20160426:11:31:46	23.702	12.587	3.493	23.445	0.25	2.175	0.25	2.152	114.901	300.655	301.367	65.228	50.961	65.736	74.622	23.956	23.606	30.391	29.974
20160426:11:36:46	23.704	12.563	3.502	23.447	0.25	2.174	0.25	2.158	114.835	300.648	301.36	65.25	50.948	65.781	74.666	25.33	24.979	32.135	31.718
20160426:11:41:46	23.711	12.508	3.551	23.45	0.25	2.17	0.25	2.113	114.69	300.604	301.318	65.248	50.859	65.771	74.707	26.656	26.295	33.819	33.391
20160426:11:46:46	23.708	12.455	3.516	23.449	0.25	2.16	0.25	2.112	114.537	300.587	301.289	65.297	50.86	65.859	74.747	28.057	27.673	35.596	35.141
20160426:11:51:46	23.706	12.408	3.482	23.45	0.25	2.147	0.25	2.117	114.4	300.549	301.224	65.312	50.785	65.874	74.783	29.392	28.977	37.291	36.799
20160426:11:56:46	23.712	12.045	3.556	23.451	0.25	2.149	0.25	2.116	113.339	300.541	301.244	65.351	50.742	65.914	74.821	30.775	30.354	39.046	38.549
20160426:12:01:46	23.717	11.321	3.645	23.449	0.25	2.119	0.25	2.112	112.201	300.565	301.265	65.373	50.689	65.938	74.856	32.134	31.675	40.772	40.227
20160426:12:06:46	23.716	12.061	3.655	23.447	0.25	2.138	0.25	2.121	113.403	300.567	301.203	65.404	50.608	65.973	74.892	33.473	33.029	42.472	41.949
20160426:12:11:46	23.72	12.43	3.715	23.447	0.25	2.167	0.25	2.143	114.483	300.514	301.111	65.474	50.599	66.012	74.931	34.861	34.37	44.235	43.654
20160426:12:16:46	23.728	12.509	3.782	23.45	0.25	2.171	0.25	2.134	114.718	300.558	301.175	65.519	50.6	66.038	74.969	36.197	35.704	45.931	45.35
20160426:12:21:46	23.722	12.588	3.756	23.446	0.25	2.167	0.25	2.149	114.932	300.622	301.211	65.57	50.569	66.111	75.01	37.592	37.066	47.704	47.081
20160426:12:26:46	23.726	12.576	3.789	23.447	0.25	2.158	0.25	2.127	114.905	300.576	301.13	65.591	50.569	66.143	75.052	38.933	38.381	49.407	48.754
20160426:12:31:46	23.728	12.582	3.789	23.45	0.25	2.154	0.25	2.111	114.926	300.575	301.096	65.633	50.562	66.213	75.094	40.28	39.753	51.119	50.498
20160426:12:36:46	23.728	12.601	3.75	23.452	0.25	2.144	0.25	2.135	114.978	300.539	301.101	65.649	50.477	66.224	75.12	41.661	41.063	52.872	52.164
20160426:12:41:46	23.727	12.595	3.726	23.453	0.25	2.154	0.25	2.118	114.958	300.605	301.155	65.688	50.508	66.257	75.16	43.002	42.427	54.576	53.898
20160426:12:46:46	23.727	12.614	3.707	23.454	0.25	2.147	0.25	2.111	115.013	300.64	301.2	65.717	50.458	66.284	75.2	44.393	43.748	56.343	55.577
20160426:12:51:46	23.726	12.65	3.697	23.455	0.25	2.149	0.25	2.122	115.112	300.57	301.132	65.741	50.392	66.308	75.241	45.729	45.118	58.039	57.32
20160426:12:56:46	23.732	12.238	3.76	23.455	0.25	2.16	0.25	2.142	113.926	300.559	301.154	65.83	50.492	66.358	75.281	47.097	46.433	59.778	58.992
20160426:13:01:46	23.731	11.757	3.674	23.461	0.25	2.145	0.25	2.128	112.532	300.498	301.116	65.835	50.385	66.372	75.318	48.474	47.81	61.526	60.742
20160426:13:06:46	23.724	12.631	3.614	23.459	0.25	2.161	0.25	2.145	115.056	300.53	301.138	65.89	50.389	66.469	75.357	49.821	49.128	63.237	62.419
20160426:13:11:46	23.724	12.68	3.549	23.463	0.25	2.155	0.25	2.153	115.193	300.519	301.114	65.888	50.405	66.475	75.391	51.219	50.508	65.013	64.173
20160426:13:16:46	23.723	12.692	3.553	23.462	0.25	2.156	0.25	2.145	115.226	300.539	301.153	65.927	50.389	66.523	75.422	52.546	51.819	66.698	65.84
20160426:13:21:46	23.724	12.669	3.574	23.461	0.25	2.159	0.25	2.139	115.161	300.495	301.092	65.922	50.347	66.522	75.454	53.922	53.195	68.446	67.59
20160426:13:26:46	23.726	12.659	3.59	23.462	0.25	2.158	0.25	2.152	115.137	300.434	301.135	65.97	50.416	66.575	75.485	55.292	54.515	70.187	69.269
20160426:13:31:46	23.729	12.64	3.614	23.463	0.25	2.16	0.25	2.133	115.088	300.442	301.114	65.97	50.358	66.581	75.514	56.638	55.886	71.896	71.013
20160426:13:36:46	23.727	12.638	3.557	23.465	0.25	2.175	0.25	2.127	115.081	300.453	301.121	66.016	50.382	66.626	75.545	58.039	57.188	73.676	72.669
20160426:13:41:46	23.728	12.627	3.577	23.465	0.25	2.155	0.25	2.126	115.052	300.401	301.051	66.025	50.383	66.634	75.577	59.364	58.563	75.359	74.417
20160426:13:46:46	23.725	12.63	3.522	23.466	0.25	2.167	0.25	2.133	115.056	300.409	301.109	66.06	50.36	66.67	75.609	60.744	59.887	77.113	76.102
20160426:13:51:46	23.732	12.619	3.594	23.468	0.25	2.174	0.25	2.128	115.036	300.483	301.138	66.081	50.368	66.694	75.644	62.123	61.238	78.865	77.82
20160426:13:56:46	23.73	12.648	3.523	23.471	0.25	2.175	0.25	2.108	115.113	300.457	301.141	66.145	50.397	66.751	75.676	63.456	62.586	80.557	79.534
20160426:14:01:46	23.735	12.658	3.584	23.471	0.25	2.177	0.25	2.119	115.147	300.46	301.095	66.195	50.347	66.798	75.709	64.855	63.915	82.335	81.224
20160426:14:06:46	23.738	12.691	3.598	23.473	0.25	2.165	0.25	2.125	115.242	300.512	301.129	66.225	50.375	66.835	75.743	66.193	65.28	84.035	82.961
20160426:14:11:46	23.734	12.74	3.564	23.472	0.25	2.164	0.25	2.131	115.375	300.531	301.157	66.25	50.372	66.861	75.779	67.568	66.594	85.781	84.632
20160426:14:16:46	23.742	12.755	3.676	23.472	0.25	2.155	0.25	2.147	115.43	300.523	301.158	66.29	50.358	66.897	75.816	68.94	67.959	87.524	86.368
20160426:14:21:46	23.746	11.984	3.69	23.474	0.25	2.154	0.25	2.121	113.208	300.482	301.138	66.31	50.362	66.918	75.853	70.264	69.281	89.207	88.049
20160426:14:26:46	23.746	11.561	3.683	23.475	0.25	2.151	0.25	2.109	111.974	300.405	301.135	66.359	50.363	66.962	75.891	71.662	70.646	90.983	89.786
20160426:14:31:46	23.752	12.038	3.809	23.472	0.25	2.134	0.25	2.101	113.383	300.453	301.166	66.375	50.326	66.973	75.931	73.003	71.958	92.687	91.455
20160426:14:36:46	23.758	12.585	3.876	23.473	0.25	2.152	0.25	2.12	114.977	300.559	301.219	66.474	50.371	67.02	75.968	74.386	73.336	94.444	93.209
20160426:14:41:46	23.769	12.65	4.024	23.473	0.25	2.148	0.25	2.129	115.176	300.581	301.198	66.488	50.315	67.034	76.002	75.749	74.651	96.178	94.882
20160426:14:46:46	23.773	12.706	4.086	23.473	0.25	2.149	0.25	2.121	115.339	300.572	301.141	66.53	50.324	67.102	76.04	77.09	76.025	97.881	96.63
20160426:14:51:46	23.77	12.718	4.054	23.472	0.25	2.159	0.25	2.128	115.368	300.485	301.109	66.557	50.341	67.143	76.074	78.484	77.335	99.654	98.297
20160426:14:56:46	23.78	12.739	4.206	23.471	0.25	2.158	0.25	2.118	115.442	300.48	301.135	66.587	50.303	67.186	76.108	79.819	78.715	101.352	100.053
20160426:15:01:46	23.785	12.727	4.203	23.476	0.25	2.168	0.25	2.13	115.415	300.527	301.174	66.602	50.294	67.202	76.14	81.211	80.023	103.12	101.718
20160426:15:06:46	23.784	12.752	4.158	23.478	0.25	2.15	0.25	2.133	115.481	300.582	301.205	66.651	50.305	67.252	76.175	82.564	81.4	104.841	103.47
20160426:15:11:46	23.787	12.779	4.181	23.48	0.25	2.144	0.25	2.126	115.561	300.467	301.149	66.686	50.273	67.266	76.206	83.9	82.713	106.539	105.141
20160426:15:16:46	23.791	12.812	4.223	23.481	0.25	2.145	0.25	2.132	115.658	300.418	301.135	66.777	50.318	67.312	76.243	85.293	84.084	108.309	106.885
20160426:15:21:46	23.802	12.586	4.338	23.483	0.25	2.151	0.25	2.128	115.031	300.51	301.155	66.834	50.294	67.361	76.284	86.628	85.387	110.007	108.543
20160426:15:26:46	23.803	11.617	4.323	23.485	0.25	2.13	0.25	2.102	112.23	300.462	301.097	66.866	50.288	67.43	76.323	88.023	86.757	111.78	110.288
20160426:15:31:46	23.803	11.52	4.32	23.485	0.25	2.132	0.25	2.104	111.934	300.422	301.132	66.924	50.309	67.517	76.366	89.365	88.085	113.487	111.977
20160426:15:36:46	23.806	12.485	4.37	23.485	0.25	2.139	0.25	2.129	114.768	300.494	301.148	66.986	50.301	67.558	76.413	90.71	89.43	115.196	113.69
20160426:15:41:46	23.811	12.575	4.414	23.487	0.25	2.154	0.25	2.112	115.028	300.496	301.141	67.034	50.31	67.596	76.462	92.096	90.784	116.959	115.414
20160426:15:46:46	23.82	12.598	4.528	23.487	0.25	2.161	0.25	2.131	115.105	300.504	301.128	67.139	50.294	67.649	76.511	93.434	92.106	118.661	117.096
20160426:15:51:46	23.817	12.692	4.534	23.483	0.25	2.157	0.25	2.118	115.365	300.522	301.187	67.183	50.317	67.731	76.561	94.827	93.477	120.433	118.842
20160426:15:56:46	23.818	12.768	4.494	23.488	0.25	2.168	0.25	2.13	115.578	300.513	301.111	67.22	50.297	67.786	76.613	96.164	94.788	122.133	120.511
20160426:16:01:46	23.822	12.741	4.547	23.488	0.25	2.16	0.25	2.126	115.51	300.486	301.101	67.265	50.328	67.833	76.666	97.521	96.152	123.859	122.248
20160426:16:06:46	23.826	12.698	4.62	23.486	0.25	2.151	0.25	2.123	115.394	300.432	301.13	67.318	50.316	67.886	76.721	98.901	97.47	125.615	123.927
20160426:16:11:46	23.831	12.646	4.693	23.486	0.25	2.148	0.25	2.115	115.256	300.481	301.137	67.381	50.322	67.964	76.775	100.242	98.839	127.322	125.671
20160426:16:16:46	23.831	12.612	4.626	23.491	0.25	2.154	0.25	2.107	115.162	300.488	301.121	67.472	50.324	68.049	76.836	101.637	100.152	129.096	127.344
20160426:16:21:46	23.833	12.601	4.625	23.493	0.25	2.154	0.25	2.113	115.132	300.52	301.16	67.547	50.307	68.112	76.894	102.968	101.523	130.791	129.09
20160426:16:26:46	23.838	12.593	4.652	23.496	0.25	2.15	0.25	2.113	115.118	300.455	301.165	67.607	50.326	68.168	76.955	104.335	102.837	132.53	130.763
20160426:16:31:46	23.843	12.579	4.772	23.492	0.25	2.143	0.25	2.123	115.086	300.468	301.094	67.677	50.292	68.221	77.014	105.704	104.213	134.272	132.517
20160426:16:36:46	23.842	12.57	4.709	23.496	0.25	2.152	0.25	2.106	115.06	300.501	301.177	67.767	50.314	68.273	77.077	107.051	105.523	135.987	134.186
20160426:16:41:46	23.842	12.551	4.659	23.5	0.25	2.158	0.25	2.108	115.006	300.515	301.134	67.825	50.301	68.372	77.141	108.451	106.895	137.769	135.934
20160426:16:46:46	23.841	12.545	4.647	23.5	0.25	2.148	0.25	2.119	114.988	300.487	301.091	67.879	50.33	68.432	77.209	109.772	108.214	139.45	137.615
20160426:16:51:46	23.839	12.545	4.592	23.502	0.25	2.154	0.25	2.112	114.986	300.541	301.169	67.928	50.31	68.478	77.273	111.145	109.584	141.198	139.361
20160426:16:56:46	23.841	11.631	4.596	23.504	0.25	2.131	0.25	2.098	112.322	300.475	301.122	68.021	50.321	68.528	77.336	112.518	110.887	142.946	141.021
20160426:17:01:46	23.842	12.364	4.584	23.505	0.25	2.131	0.25	2.093	114.474	300.516	301.2	68.063	50.316	68.602	77.397	113.862	112.259	144.657	142.769
20160426:17:06:46	23.835	12.474	4.486	23.505	0.25	2.151	0.25	2.111	114.779	300.489	301.067	68.104	50.329	68.67	77.456	115.26	113.592	146.437	144.468
20160426:17:11:46	23.84	12.463	4.571	23.504	0.25	2.14	0.25	2.102	114.756	300.553	301.123	68.146	50.332	68.713	77.513	116.587	114.932	148.126	146.177
20160426:17:16:46	23.833	12.464	4.436	23.507	0.25	2.144	0.25	2.116	114.747	300.559	301.179	68.18	50.309	68.741	77.567	117.959	116.293	149.874	147.912
20160426:17:21:46	23.832	12.472	4.428	23.507	0.25	2.143	0.25	2.116	114.769	300.504	301.152	68.221	50.322	68.784	77.622	119.329	117.613	151.619	149.594
20160426:17:26:46	23.835	12.519	4.437	23.509	0.25	2.147	0.25	2.112	114.905	300.465	301.114	68.257	50.308	68.824	77.675	120.67	118.976	153.326	151.331
20160426:17:31:46	23.831	12.605	4.364	23.51	0.25	2.148	0.25	2.107	115.142	300.526	301.152	68.313	50.333	68.865	77.726	122.072	120.301	155.111	153.021
20160426:17:36:46	23.83	12.631	4.343	23.511	0.25	2.161	0.25	2.124	115.213	300.505	301.182	68.329	50.307	68.898	77.771	123.397	121.671	156.798	154.767
20160426:17:41:46	23.833	12.643	4.338	23.514	0.25	2.161	0.25	2.145	115.251	300.48	301.168	68.38	50.339	68.926	77.814	124.773	122.99	158.55	156.447
20160426:17:46:46	23.828	12.655	4.281	23.514	0.25	2.175	0.25	2.134	115.276	300.558	301.213	68.421	50.339	68.975	77.854	126.147	124.364	160.3	158.199
20160426:17:51:46	23.823	12.624	4.233	23.511	0.25	2.169	0.25	2.131	115.182	300.528	301.247	68.435	50.378	69.003	77.895	127.496	125.677	162.019	159.874
20160426:17:56:46	23.821	11.841	4.2	23.512	0.25	2.16	0.25	2.121	112.924	300.448	301.174	68.466	50.389	69.048	77.93	128.901	127.062	163.807	161.639
20160426:18:01:46	23.821	12.151	4.158	23.515	0.25	2.166	0.25	2.12	113.82	300.409	301.189	68.465	50.426	69.065	77.969	130.231	128.375	165.502	163.314
20160426:18:06:46	23.821	12.612	4.159	23.515	0.25	2.184	0.25	2.116	115.146	300.526	301.192	68.492	50.413	69.093	78.004	131.603	129.754	167.248	165.071
20160426:18:11:46	23.822	12.608	4.198	23.513	0.25	2.172	0.25	2.122	115.135	300.557	301.186	68.506	50.427	69.097	78.037	132.987	131.057	169.011	166.733
20160426:18:16:46	23.825	12.597	4.225	23.514	0.25	2.157	0.25	2.138	115.11	300.608	301.216	68.542	50.45	69.126	78.068	134.331	132.429	170.724	168.483
20160426:18:21:46	23.826	12.564	4.192	23.518	0.25	2.168	0.25	2.141	115.019	300.588	301.228	68.531	50.396	69.115	78.095	135.735	133.769	172.511	170.192
20160426:18:26:46	23.826	12.555	4.169	23.52	0.25	2.153	0.25	2.124	114.993	300.644	301.281	68.59	50.427	69.153	78.122	137.077	135.105	174.22	171.895
20160426:18:31:46	23.827	12.547	4.156	23.521	0.25	2.179	0.25	2.11	114.972	300.637	301.288	68.581	50.397	69.163	78.149	138.435	136.475	175.95	173.641
20160426:18:36:46	23.825	12.542	4.125	23.522	0.25	2.159	0.25	2.111	114.956	300.626	301.195	68.589	50.401	69.174	78.173	139.827	137.79	177.722	175.318
20160426:18:41:46	23.823	12.561	4.076	23.523	0.25	2.157	0.25	2.104	115.007	300.615	301.254	68.663	50.405	69.218	78.196	141.166	139.157	179.428	177.06
20160426:18:46:46	23.824	12.595	4.1	23.523	0.25	2.148	0.25	2.122	115.105	300.572	301.203	68.66	50.398	69.218	78.22	142.563	140.475	181.207	178.741
20160426:18:51:46	23.818	12.608	4.011	23.523	0.25	2.149	0.25	2.109	115.132	300.541	301.16	68.679	50.383	69.255	78.246	143.92	141.855	182.935	180.5
20160426:18:56:46	23.815	12.172	3.969	23.523	0.25	2.149	0.25	2.123	113.866	300.563	301.221	68.715	50.444	69.326	78.271	145.266	143.174	184.65	182.182
20160426:19:01:46	23.818	11.667	4.001	23.524	0.25	2.148	0.25	2.094	112.403	300.519	301.205	68.715	50.39	69.321	78.293	146.661	144.553	186.426	183.94
20160426:19:06:46	23.822	12.441	4.046	23.524	0.25	2.145	0.25	2.097	114.664	300.564	301.227	68.734	50.432	69.341	78.315	148.003	145.869	188.135	185.618
20160426:19:11:46	23.82	12.531	4.003	23.525	0.25	2.149	0.25	2.112	114.918	300.635	301.269	68.77	50.416	69.374	78.336	149.391	147.249	189.904	187.378
20160426:19:16:46	23.818	12.558	3.986	23.525	0.25	2.142	0.25	2.125	114.99	300.623	301.234	68.767	50.396	69.361	78.356	150.756	148.562	191.643	189.053
20160426:19:21:46	23.816	12.594	4.01	23.521	0.25	2.155	0.25	2.13	115.088	300.628	301.228	68.775	50.379	69.358	78.376	152.095	149.936	193.348	190.805
20160426:19:26:46	23.817	12.671	4.034	23.52	0.25	2.17	0.25	2.126	115.307	300.668	301.318	68.809	50.427	69.395	78.393	153.497	151.261	195.133	192.494
20160426:19:31:46	23.815	12.738	4.045	23.518	0.25	2.164	0.25	2.114	115.491	300.643	301.295	68.797	50.393	69.391	78.408	154.842	152.611	196.848	194.216
20160426:19:36:46	23.812	12.756	3.955	23.522	0.25	2.168	0.25	2.118	115.536	300.623	301.279	68.787	50.402	69.389	78.424	156.222	153.97	198.606	195.949
20160426:19:41:46	23.812	12.756	3.918	23.524	0.25	2.163	0.25	2.119	115.535	300.589	301.22	68.778	50.398	69.387	78.439	157.602	155.292	200.363	197.635
20160426:19:46:46	23.814	12.76	3.901	23.527	0.25	2.174	0.25	2.122	115.549	300.599	301.235	68.802	50.447	69.412	78.451	158.935	156.657	202.061	199.376
20160426:19:51:46	23.813	12.779	3.844	23.53	0.25	2.173	0.25	2.132	115.599	300.662	301.317	68.826	50.496	69.436	78.46	160.341	157.985	203.852	201.07
20160426:19:56:46	23.812	12.604	3.803	23.532	0.25	2.153	0.25	2.135	115.102	300.609	301.298	68.826	50.499	69.435	78.47	161.672	159.359	205.546	202.821
20160426:20:01:46	23.812	11.946	3.803	23.533	0.25	2.153	0.25	2.111	114.956	300.626	301.195	68.825	50.505	69.435	78.477	163.056	160.68	207.309	204.506
20160426:20:06:46	23.81	12.465	3.755	23.534	0.25	2.142	0.25	2.123	114.707	300.569	301.276	68.824	50.497	69.432	78.485	164.433	162.061	209.063	206.265
20160426:20:11:46	23.809	12.76	3.742	23.534	0.25	2.163	0.25	2.134	115.543	300.65	301.268	68.824	50.495	69.427	78.493	165.784	163.376	210.783	207.942
20160426:20:16:46	23.806	12.777	3.654	23.538	0.25	2.17	0.25	2

Time: day:hh:mm:ss	Stack Pressure: in-Hg	Sat% H2O: Percent	Static: in-H2O	Barometric: in-Hg	Flowmeter1: l/min	Vacuum1: in-Hg	Flowmeter2: l/min	Vacuum2: in-Hg	Stack Temp: degF	Sorbent Temp: degF	Probe Temp: degF	DGM#1 Temp: degF	Condenser Temp: degF	DGM#2 Temp: degF	DAQ Temp: degF	DGM1*: liters STP	DGM2*: liters STP	DGM1: liters nominal	DGM2: liters nominal
20160426:23:46:46	23.769	13.115	2.671	23.573	0.25	2.177	0.25	2.139	116.456	300.605	301.222	68.452	50.515	69.053	78.342	224.631	221.303	285.624	281.695
20160426:23:51:46	23.767	13.089	2.656	23.572	0.25	2.169	0.25	2.132	116.381	300.676	301.31	68.423	50.529	69.029	78.321	226.02	222.688	287.389	283.457
20160426:23:56:46	23.771	13	2.719	23.571	0.25	2.156	0.25	2.126	116.146	300.612	301.249	68.382	50.5	68.988	78.295	227.395	224.008	289.135	285.135
20160427:00:01:46	23.765	12.945	2.585	23.575	0.25	2.158	0.25	2.12	115.985	300.607	301.238	68.379	50.497	68.978	78.268	228.729	225.387	290.83	286.889
20160427:00:06:46	23.759	12.723	2.52	23.574	0.25	2.161	0.25	2.115	115.357	300.61	301.205	68.279	50.491	68.884	78.236	230.138	226.701	292.619	288.56
20160427:00:11:46	23.754	11.805	2.489	23.571	0.25	2.137	0.25	2.101	112.718	300.622	301.274	68.267	50.498	68.876	78.203	231.484	228.072	294.328	290.303
20160427:00:16:46	23.755	12.282	2.507	23.57	0.25	2.137	0.25	2.1	114.095	300.535	301.205	68.224	50.468	68.836	78.171	232.868	229.419	296.085	292.015
20160427:00:21:46	23.75	12.702	2.404	23.573	0.25	2.144	0.25	2.114	115.291	300.609	301.259	68.211	50.503	68.823	78.136	234.246	230.754	297.835	293.712
20160427:00:26:46	23.758	12.731	2.524	23.573	0.25	2.144	0.25	2.109	115.384	300.573	301.207	68.166	50.447	68.78	78.104	235.586	232.129	299.537	295.461
20160427:00:31:46	23.758	12.699	2.499	23.575	0.25	2.148	0.25	2.108	115.296	300.569	301.201	68.155	50.514	68.768	78.072	236.991	233.442	301.32	297.13
20160427:00:36:46	23.759	12.668	2.538	23.573	0.25	2.145	0.25	2.105	115.213	300.463	301.16	68.119	50.442	68.735	78.041	238.323	234.812	303.011	298.87
20160427:00:41:46	23.757	12.661	2.502	23.573	0.25	2.145	0.25	2.102	115.19	300.525	301.172	68.101	50.463	68.714	78.008	239.704	236.132	304.765	300.549
20160427:00:46:46	23.757	12.631	2.489	23.574	0.25	2.16	0.25	2.103	115.104	300.552	301.197	68.075	50.459	68.691	77.976	241.083	237.506	306.515	302.295
20160427:00:51:46	23.76	12.633	2.58	23.571	0.25	2.148	0.25	2.117	115.117	300.549	301.195	68.048	50.407	68.662	77.942	242.413	238.824	308.204	303.97
20160427:00:56:46	23.764	12.619	2.63	23.57	0.25	2.152	0.25	2.111	115.082	300.613	301.256	68.02	50.461	68.624	77.914	243.812	240.201	309.98	305.72
20160427:01:01:46	23.762	12.607	2.67	23.566	0.25	2.153	0.25	2.113	115.046	300.552	301.208	67.976	50.394	68.561	77.886	245.151	241.519	311.68	307.395
20160427:01:06:46	23.764	12.363	2.713	23.564	0.25	2.16	0.25	2.108	114.343	300.582	301.237	67.999	50.444	68.566	77.86	246.532	242.902	313.433	309.152
20160427:01:11:46	23.759	11.526	2.637	23.565	0.25	2.136	0.25	2.088	111.891	300.531	301.194	67.937	50.431	68.518	77.834	247.905	244.212	315.176	310.818
20160427:01:16:46	23.761	12.15	2.655	23.566	0.25	2.136	0.25	2.094	113.725	300.511	301.18	67.924	50.425	68.514	77.811	249.231	245.585	316.859	312.562
20160427:01:21:46	23.755	12.461	2.546	23.568	0.25	2.16	0.25	2.116	114.622	300.588	301.218	67.927	50.504	68.521	77.788	250.629	246.904	318.633	314.239
20160427:01:26:46	23.752	12.457	2.52	23.567	0.25	2.171	0.25	2.112	114.607	300.602	301.225	67.881	50.459	68.479	77.766	251.967	248.278	320.331	315.985
20160427:01:31:46	23.752	12.474	2.548	23.565	0.25	2.158	0.25	2.121	114.656	300.588	301.216	67.873	50.435	68.463	77.747	253.358	249.58	322.098	317.639
20160427:01:36:46	23.752	12.498	2.539	23.566	0.25	2.148	0.25	2.105	114.724	300.644	301.281	67.868	50.525	68.454	77.725	254.72	250.958	323.826	319.391
20160427:01:41:46	23.749	12.496	2.466	23.568	0.25	2.15	0.25	2.117	114.713	300.618	301.242	67.814	50.438	68.402	77.699	256.058	252.28	325.524	321.07
20160427:01:46:46	23.752	12.513	2.549	23.565	0.25	2.154	0.25	2.116	114.765	300.595	301.218	67.796	50.438	68.39	77.673	257.448	253.638	327.289	322.795
20160427:01:51:46	23.75	12.518	2.531	23.564	0.25	2.155	0.25	2.116	114.777	300.559	301.19	67.774	50.507	68.364	77.647	258.788	254.984	328.989	324.506
20160427:01:56:46	23.743	12.533	2.437	23.563	0.25	2.157	0.25	2.127	114.809	300.523	301.186	67.694	50.444	68.272	77.616	260.183	256.316	330.759	326.197
20160427:02:01:46	23.739	12.557	2.377	23.564	0.25	2.162	0.25	2.121	114.872	300.581	301.217	67.673	50.492	68.268	77.586	261.534	257.686	332.474	327.938
20160427:02:06:46	23.737	12.186	2.38	23.562	0.25	2.161	0.25	2.121	113.793	300.576	301.221	67.612	50.503	68.216	77.556	262.881	259.001	334.183	329.609
20160427:02:11:46	23.732	11.518	2.331	23.561	0.25	2.138	0.25	2.106	111.827	300.542	301.273	67.6	50.504	68.21	77.524	264.276	260.367	335.954	331.344
20160427:02:16:46	23.734	11.362	2.332	23.562	0.25	2.145	0.25	2.085	111.353	300.474	301.182	67.564	50.506	68.175	77.496	265.618	261.693	337.656	333.028
20160427:02:21:46	23.736	12.294	2.36	23.563	0.25	2.159	0.25	2.103	114.116	300.539	301.201	67.538	50.542	68.152	77.462	267.019	263.062	339.433	334.767
20160427:02:26:46	23.737	12.438	2.363	23.563	0.25	2.154	0.25	2.119	114.53	300.547	301.198	67.502	50.501	68.116	77.429	268.363	264.374	341.139	336.434
20160427:02:31:46	23.736	12.495	2.363	23.562	0.25	2.159	0.25	2.111	114.691	300.586	301.204	67.481	50.527	68.096	77.394	269.711	265.755	342.848	338.188
20160427:02:36:46	23.74	12.492	2.437	23.561	0.25	2.156	0.25	2.114	114.69	300.596	301.223	67.397	50.521	68.054	77.361	271.098	267.071	344.607	339.859
20160427:02:41:46	23.734	12.48	2.384	23.559	0.25	2.156	0.25	2.112	114.647	300.579	301.232	67.372	50.506	68.043	77.328	272.447	268.447	346.319	341.607
20160427:02:46:46	23.728	12.449	2.253	23.562	0.25	2.161	0.25	2.126	114.55	300.578	301.205	67.341	50.517	67.976	77.297	273.845	269.763	348.093	343.278
20160427:02:51:46	23.725	12.424	2.165	23.566	0.25	2.167	0.25	2.109	114.475	300.539	301.155	67.324	50.558	67.937	77.269	275.185	271.143	349.791	345.03
20160427:02:56:46	23.728	12.419	2.172	23.568	0.25	2.159	0.25	2.113	114.463	300.537	301.186	67.322	50.546	67.924	77.243	276.547	272.451	351.519	346.69
20160427:03:01:46	23.738	12.396	2.277	23.571	0.25	2.168	0.25	2.115	114.415	300.568	301.191	67.27	50.525	67.876	77.213	277.926	273.83	353.267	348.44
20160427:03:06:46	23.74	12.384	2.31	23.571	0.25	2.152	0.25	2.125	114.383	300.631	301.256	67.262	50.558	67.872	77.179	279.275	275.15	354.976	350.115
20160427:03:11:46	23.74	11.83	2.302	23.57	0.25	2.148	0.25	2.114	112.754	300.517	301.199	67.207	50.503	67.82	77.15	280.679	276.521	356.756	351.855
20160427:03:16:46	23.733	11.401	2.219	23.57	0.25	2.127	0.25	2.101	111.467	300.514	301.19	67.202	50.531	67.816	77.119	282.003	277.825	358.433	353.509
20160427:03:21:46	23.733	12.175	2.275	23.566	0.25	2.137	0.25	2.103	113.771	300.479	301.099	67.158	50.53	67.771	77.089	283.382	279.202	360.181	355.258
20160427:03:26:46	23.733	12.255	2.278	23.565	0.25	2.145	0.25	2.116	114.002	300.551	301.224	67.147	50.507	67.76	77.058	284.759	280.527	361.928	356.938
20160427:03:31:46	23.739	12.271	2.393	23.563	0.25	2.148	0.25	2.104	114.057	300.56	301.162	67.097	50.524	67.709	77.028	286.098	281.883	363.624	358.66
20160427:03:36:46	23.741	12.278	2.37	23.566	0.25	2.155	0.25	2.112	114.08	300.566	301.218	67.04	50.546	67.65	76.998	287.497	283.227	365.398	360.365
20160427:03:41:46	23.735	12.287	2.374	23.561	0.25	2.153	0.25	2.106	114.098	300.603	301.216	67.03	50.519	67.637	76.97	288.84	284.563	367.1	362.06
20160427:03:46:46	23.738	12.279	2.406	23.561	0.25	2.152	0.25	2.118	114.08	300.553	301.17	66.985	50.508	67.595	76.943	290.218	285.927	368.846	363.791
20160427:03:51:46	23.738	12.281	2.423	23.56	0.25	2.152	0.25	2.12	114.084	300.56	301.186	66.99	50.557	67.593	76.913	291.587	287.246	370.581	365.464
20160427:03:56:46	23.74	12.259	2.464	23.559	0.25	2.154	0.25	2.124	114.024	300.525	301.168	66.95	50.493	67.546	76.886	292.924	288.619	372.276	367.207
20160427:04:01:46	23.738	12.267	2.445	23.558	0.25	2.163	0.25	2.125	114.044	300.527	301.142	66.952	50.509	67.543	76.859	294.32	289.93	374.046	368.87
20160427:04:06:46	23.737	12.275	2.406	23.56	0.25	2.176	0.25	2.128	114.067	300.487	301.162	66.94	50.542	67.525	76.832	295.657	291.294	375.741	370.602
20160427:04:11:46	23.735	11.651	2.364	23.561	0.25	2.164	0.25	2.12	112.215	300.558	301.205	66.911	50.499	67.5	76.806	297.051	292.622	377.507	372.286
20160427:04:16:46	23.737	11.239	2.386	23.561	0.25	2.153	0.25	2.097	110.977	300.52	301.188	66.916	50.513	67.497	76.778	298.406	293.988	379.224	374.019
20160427:04:21:46	23.736	12.031	2.412	23.558	0.25	2.156	0.25	2.099	113.348	300.565	301.213	66.893	50.542	67.463	76.757	299.749	295.305	380.926	375.69
20160427:04:26:46	23.736	12.275	2.428	23.557	0.25	2.149	0.25	2.113	114.063	300.552	301.217	66.865	50.514	67.415	76.732	301.146	296.684	382.696	377.44
20160427:04:31:46	23.733	12.313	2.399	23.556	0.25	2.156	0.25	2.13	114.17	300.596	301.238	66.865	50.523	67.44	76.712	302.487	298.001	384.396	379.111
20160427:04:36:46	23.731	12.336	2.37	23.557	0.25	2.167	0.25	2.122	114.232	300.599	301.215	66.84	50.555	67.407	76.691	303.882	299.378	386.165	380.857
20160427:04:41:46	23.73	12.345	2.409	23.552	0.25	2.174	0.25	2.124	114.256	300.548	301.071	66.81	50.533	67.355	76.666	305.221	300.693	387.861	382.526
20160427:04:46:46	23.727	12.371	2.372	23.553	0.25	2.175	0.25	2.115	114.328	300.485	301.184	66.81	50.532	67.356	76.644	306.578	302.078	389.581	384.284
20160427:04:51:46	23.728	12.37	2.441	23.549	0.25	2.182	0.25	2.121	114.324	300.512	301.159	66.764	50.558	67.328	76.625	307.964	303.386	391.339	385.944
20160427:04:56:46	23.726	12.367	2.387	23.55	0.25	2.171	0.25	2.125	114.312	300.507	301.132	66.698	50.527	67.298	76.602	309.312	304.769	393.046	387.697
20160427:05:01:46	23.729	12.358	2.421	23.551	0.25	2.166	0.25	2.119	114.29	300.607	301.225	66.697	50.507	67.294	76.582	310.709	306.084	394.817	389.367
20160427:05:06:46	23.727	12.442	2.374	23.553	0.25	2.167	0.25	2.111	114.528	300.583	301.19	66.688	50.536	67.273	76.561	312.047	307.459	396.513	391.111
20160427:05:11:46	23.728	12.456	2.372	23.553	0.25	2.165	0.25	2.116	114.568	300.553	301.196	66.638	50.505	67.21	76.535	313.42	308.777	398.252	392.782
20160427:05:16:46	23.725	12.482	2.272	23.558	0.25	2.166	0.25	2.122	114.639	300.511	301.229	66.633	50.484	67.208	76.51	314.797	310.145	399.996	394.517
20160427:05:21:46	23.725	12.504	2.279	23.557	0.25	2.167	0.25	2.127	114.701	300.463	301.146	66.593	50.47	67.168	76.479	316.149	311.486	401.709	396.218
20160427:05:26:46	23.722	12.545	2.251	23.557	0.25	2.18	0.25	2.133	114.811	300.512	301.172	66.572	50.518	67.147	76.451	317.554	312.831	403.489	397.923
20160427:05:31:46	23.722	12.547	2.253	23.556	0.25	2.184	0.25	2.127	114.818	300.557	301.221	66.544	50.463	67.094	76.418	318.884	314.196	405.174	399.654
20160427:05:36:46	23.723	12.542	2.263	23.557	0.25	2.177	0.25	2.134	114.805	300.471	301.187	66.515	50.503	67.046	76.384	320.262	315.52	406.919	401.333
20160427:05:41:46	23.725	12.533	2.286	23.557	0.25	2.179	0.25	2.118	114.782	300.561	301.224	66.49	50.543	67.023	76.352	321.639	316.895	408.663	403.075
20160427:05:46:46	23.724	12.541	2.334	23.553	0.25	2.163	0.25	2.117	114.805	300.467	301.184	66.45	50.514	66.988	76.32	322.992	318.216	410.376	404.75
20160427:05:51:46	23.727	12.585	2.359	23.553	0.25	2.18	0.25	2.13	114.932	300.507	301.202	66.435	50.516	66.994	76.29	324.395	319.584	412.154	406.485
20160427:05:56:46	23.729	12.604	2.41	23.552	0.25	2.191	0.25	2.134	114.986	300.425	301.139	66.362	50.531	66.963	76.256	325.726	320.903	413.839	408.158
20160427:06:01:46	23.729	12.62	2.385	23.554	0.25	2.171	0.25	2.126	115.033	300.474	301.145	66.355	50.554	66.962	76.23	327.111	322.287	415.593	409.912
20160427:06:06:46	23.735	12.626	2.462	23.554	0.25	2.168	0.25	2.132	115.059	300.548	301.207	66.31	50.47	66.92	76.204	328.494	323.609	417.344	411.588
20160427:06:11:46	23.735	12.657	2.475	23.553	0.25	2.175	0.25	2.141	115.144	300.544	301.199	66.306	50.508	66.919	76.182	329.829	324.99	419.035	413.338
20160427:06:16:46	23.738	12.677	2.498	23.554	0.25	2.175	0.25	2.126	115.204	300.576	301.21	66.306	50.548	66.915	76.159	331.231	326.31	420.809	415.011
20160427:06:21:46	23.741	11.896	2.545	23.554	0.25	2.173	0.25	2.121	112.965	300.461	301.159	66.274	50.442	66.874	76.138	332.578	327.701	422.515	416.774
20160427:06:26:46	23.744	12.345	2.569	23.555	0.25	2.153	0.25	2.1	114.264	300.482	301.196	66.285	50.469	66.88	76.119	333.961	329.011	424.267	418.436
20160427:06:31:46	23.741	12.652	2.47	23.559	0.25	2.166	0.25	2.124	115.141	300.527	301.196	66.302	50.509	66.899	76.101	335.339	330.394	426.011	420.188
20160427:06:36:46	23.73	12.672	2.303	23.561	0.25	2.182	0.25	2.142	115.179	300.584	301.198	66.304	50.527	66.913	76.087	336.677	331.706	427.704	421.852
20160427:06:41:46	23.737	12.661	2.459	23.556	0.25	2.169	0.25	2.127	115.158	300.573	301.197	66.277	50.45	66.891	76.076	338.084	333.086	429.485	423.6
20160427:06:46:46	23.735	12.667	2.426	23.557	0.25	2.176	0.25	2.134	115.172	300.578	301.146	66.257	50.459	66.866	76.064	339.429	334.404	431.189	425.271
20160427:06:51:46	23.733	12.675	2.406	23.556	0.25	2.167	0.25	2.138	115.193	300.58	301.194	66.263	50.51	66.864	76.054	340.81	335.77	432.937	427.002
20160427:06:56:46	23.73	12.685	2.414	23.553	0.25	2.172	0.25	2.139	115.216	300.558	301.198	66.266	50.47	66.865	76.047	342.187	337.118	434.68	428.711
20160427:07:01:46	23.731	12.678	2.434	23.552	0.25	2.164	0.25	2.119	115.199	300.577	301.223	66.262	50.504	66.865	76.039	343.519	338.458	436.367	430.41
20160427:07:06:46	23.731	12.683	2.46	23.55	0.25	2.171	0.25	2.124	115.211	300.528	301.175	66.265	50.522	66.866	76.033	344.923	339.826	438.144	432.143
20160427:07:11:46	23.737	12.724	2.583	23.547	0.25	2.162	0.25	2.137	115.334	300.465	301.175	66.264	50.484	66.866	76.026	346.27	341.149	439.85	433.821
20160427:07:16:46	23.743	12.716	2.689	23.545	0.25	2.159	0.25	2.122	115.319	300.488	301.137	66.255	50.482	66.859	76.018	347.66	342.519	441.611	435.558
20160427:07:21:46	23.745	11.934	2.697	23.547	0.25	2.152	0.25	2.122	113.085	300.442	301.117	66.231	50.485	66.831	76.01	349.032	343.849	443.348	437.244
20160427:07:26:46	23.747	12.352	2.705	23.548	0.25	2.15	0.25	2.127	114.287	300.447	301.119	66.225	50.435	66.822	76.003	350.371	345.221	445.044	438.983
20160427:07:31:46	23.752	12.641	2.77	23.548	0.25	2.156	0.25	2.131	115.127	300.483	301.133	66.239	50.394	66.825	75.998	351.771	346.543	446.817	440.66
20160427:07:36:46	23.756	12.653	2.824	23.548	0.25	2.164	0.25	2.127	115.165	300.556	301.193	66.249	50.438	66.841	75.995	353.115	347.926	448.519	442.414
20160427:07:41:46	23.755	12.66	2.789	23.55	0.25	2.161	0.25	2.123	115.182	300.479	301.095	66.251	50.431	66.857	75.995	354.507	349.249	450.281	444.09
20160427:07:46:47	23.765	12.645	2.935	23.549	0.25	2.168	0.25	2.119	115.154	300.486	301.132	66.258	50.372	66.862	75.998	355.871	350.629	452.009	445.84
20160427:07:51:47	23.77	12.628	3.03	23.547	0.25	2.168	0.25	2.131	115.116	300.483	301.136	66.281	50.396	66.872	76.005	357.211	351.946	453.706	447.509
20160427:07:56:47	23.773	12.637	3.085	23.546	0.25	2.163	0.25	2.141	115.146	300.562	301.185	66.321	50.416	66.898	76.011	358.608	353.327	455.476	449.261
20160427:08:01:47	23.769	12.664	3.06	23.544	0.25	2.165	0.25	2.123	115.215	300.578	301.236	66.355	50.388	66.934	76.022	359.949	354.648	457.174	450.936
20160427:08:06:47	23.775	12.692	3.166	23.543	0.25	2.169	0.25	2.124	115.301	300.623	301.196	66.363	50.403	66.964	76.035	361.347	356.028	458.946	452.686
20160427:08:11:47	23.783	12.728	3.266	23.543	0.25	2.165	0.25	2.125	115.415	300.469	301.17	66.379	50.386	66.969	76.047	362.701	357.333	460.661	454.342
20160427:08:16:47	23.783	12.732	3.278	23.542	0.25	2.16	0.25	2.124	115.425	300.47	301.114	66.41	50.34	66.977	76.063	364.044	358.714	462.363	456.094
20160427:08:21:47	23.784	12.023	3.309	23.541	0.25	2.156	0.25	2.12	113.404	300.49	301.169	66.486	50.38	67.024	76.081	365.445	360.045	464.139	457.782
20160427:08:26:47	23.787	12.586	3.343	23.542	0.25	2.151	0.25	2.116	115.009	300.555	301.214	66.519	50.373	67.042	76.099	366.785	361.399	465.837	459.5
20160427:08:31:47	23.79	12.689	3.386	23.541	0.25	2.164	0.25	2.134	115.314	300.577	301.219	66.526	50.331	67.042	76.121	368.185	362.762	467.611	461.229
20160427:08:36:47	23.789	12.838	3.402	23.539	0.25	2.165	0.25	2.129	115.728	300.549	301.145	66.535	50.348	67.06	76.141	369.535	364.087	469.322	462.91
20160427:08:41:47	23.793	12.756	3.465	23.538	0.25	2.164	0.25	2.139	115.506	300.556	301.185	66.583	50.371	67.161	76.162	370.886	365.466	471.035	464.66
20160427:08:46:47	23.798	12.817	3.535	23.538	0.25	2.169	0.25	2.134	115.682	300.557	301.191	66.585	50.336	67.174	76.183	372.281	366.785	472.804	466.335
20160427:08:51:47	23.8	12.881	3.593	23.536	0.25	2.168	0.25	2.127	115.863	300.5	301.166	66.588	50.341	67.19	76.2	373.621	368.156	474.502	468.075
20160427:08:56:47	23.808	12.287	3.689	23.537	0.25	2.153	0.25	2.123	114.203	300.606	301.234	66.636	50.323	67.242	76.224	375.024	369.474	476.281	469.748
20160427:09:01:47	23.806	11.84	3.714	23.533	0.25	2.147	0.25	2.1	112.9	300.585	301.209	66.655	50.312	67.256	76.248	376.373	370.859	477.993	471.506
20160427:09:06:47	23.81	12.376	3.755	23.533	0.25	2.158	0.25	2.106	114.443	300.557	301.17	66.702	50.316	67.275	76.276	377.726	372.178	479.707	473.18
20160427:09:11:47	23.818	12.763	3.876	23.533	0.25	2.167	0.25	2.109	115.564	300.617	301.204	66.772	50.291	67.315	76.302	379.121	373.556	481.478	474.93
20160427:09:16:47	23.816	12.769	3.876	23.531	0.25	2.155	0.25	2.097	115.578	300.542	301.151	66.795	50.289	67.322	76.329	380.46	374.872	483.176	476.602
20160427:09:21:47	23.821	12.801	3.965	23.529	0.25	2.152	0.25	2.104	115.673	300.59	301.255	66.847	50.287	67.382	76.356	381.86	376.256	484.952	478.359
20160427:09:26:47	23.822	12.793	4.008	23.527	0.25	2.149	0.25	2.113	115.651	300.585	301.215	66.864	50.28	67.438	76.385	383.208	377.565	486.663	480.023
20160427:09:31:47	23.82	12.782	3.99	23.527	0.25	2.147	0.25	2.117	115.62	300.549	301.165	66.895	50.288	67.499	76.417	384.558	378.944	488.376	481.774
20160427:09:36:47	23.822	12.75	3.991	23.529	0.25	2.157	0.25	2.11	115.533	300.532	301.135	66.929	50.275	67.535	76.45	385.943	380.252	490.133	483.436
20160427:09:41:47	23.818	12.786	3.883	23.533	0.25	2.167	0.25	2.117	115.628	300.584	301.192	66.96	50.297	67.558	76.481	387.287	381.628	491.839	485.184
20160427:09:46:47	23.818	12.805	3.925	23.53	0.25	2.167	0.25	2.132	115.681	300.582	301.228	67.016	50.297	67.597	76.518	388.683	382.945	493.611	486.857
20160427:09:51:47	23.81	12.769	3.806	23.531	0.25	2.158	0.25	2.13	115.569	300.552	301.215	67.08	50.312	67.638	76.552	390.018	384.307	495.306	488.588
20160427:09:56:47	23.809	12.737	3.797	23.53	0.25	2.151	0.25	2.127

Time: day:hh:mm:ss	Stack Pressure: in-Hg	Sat% H2O: Percent	Static: in-H2O	Barometric: in-Hg	Flowmeter1: l/min	Vacuum1: in-Hg	Flowmeter2: l/min	Vacuum2: in-Hg	Stack Temp: degF	Sorbent Temp: degF	Probe Temp: degF	DGM#1 Temp: degF	Condenser Temp: degF	DGM#2 Temp: degF	DAQ Temp: degF	DGM1*: liters STP	DGM2*: liters STP	DGM1: liters nominal	DGM2: liters nominal
20160427:13:26:47	23.85	12.824	4.842	23.494	0.25	2.174	0.25	2.139	115.779	300.503	301.181	68.342	50.341	68.894	77.829	448.68	442.121	569.904	562.19
20160427:13:31:47	23.856	12.821	4.893	23.496	0.25	2.171	0.25	2.138	115.78	300.588	301.235	68.427	50.369	68.999	77.863	450.08	443.435	571.689	563.867
20160427:13:36:47	23.843	12.821	4.693	23.498	0.25	2.168	0.25	2.14	115.763	300.549	301.191	68.448	50.35	69.033	77.9	451.414	444.813	573.389	565.624
20160427:13:41:47	23.835	12.884	4.575	23.498	0.25	2.176	0.25	2.151	115.923	300.568	301.232	68.496	50.385	69.098	77.936	452.79	446.121	575.143	567.293
20160427:13:46:47	23.832	12.874	4.514	23.5	0.25	2.171	0.25	2.162	115.89	300.591	301.195	68.581	50.399	69.142	77.981	454.168	447.497	576.898	569.049
20160427:13:51:47	23.829	12.882	4.591	23.492	0.25	2.16	0.25	2.15	115.91	300.547	301.202	68.644	50.394	69.171	78.026	455.501	448.817	578.598	570.733
20160427:13:56:47	23.824	12.851	4.541	23.49	0.25	2.176	0.25	2.14	115.815	300.627	301.239	68.708	50.421	69.218	78.073	456.904	450.186	580.387	572.481
20160427:14:01:47	23.825	11.908	4.602	23.486	0.25	2.162	0.25	2.123	113.127	300.562	301.206	68.738	50.384	69.282	78.118	458.227	451.502	582.076	574.162
20160427:14:06:47	23.822	11.863	4.568	23.486	0.25	2.148	0.25	2.122	112.981	300.525	301.205	68.763	50.414	69.34	78.166	459.603	452.859	583.831	575.895
20160427:14:11:47	23.824	12.664	4.617	23.485	0.25	2.173	0.25	2.115	115.296	300.6	301.256	68.795	50.398	69.38	78.211	460.972	454.21	585.578	577.62
20160427:14:16:47	23.831	12.7	4.746	23.482	0.25	2.191	0.25	2.124	115.407	300.597	301.217	68.812	50.439	69.402	78.258	462.325	455.531	587.304	579.308
20160427:14:21:47	23.828	12.697	4.718	23.482	0.25	2.192	0.25	2.13	115.395	300.569	301.169	68.828	50.392	69.407	78.299	463.719	456.901	589.083	581.058
20160427:14:26:47	23.834	12.702	4.841	23.478	0.25	2.17	0.25	2.14	115.418	300.618	301.212	68.879	50.453	69.444	78.337	465.054	458.216	590.787	582.739
20160427:14:31:47	23.83	12.686	4.796	23.477	0.25	2.187	0.25	2.122	115.368	300.633	301.227	68.904	50.418	69.46	78.375	466.416	459.584	592.526	584.487
20160427:14:36:47	23.83	12.663	4.827	23.475	0.25	2.159	0.25	2.134	115.301	300.637	301.24	68.925	50.455	69.495	78.41	467.804	460.903	594.298	586.173
20160427:14:41:47	23.84	12.658	4.974	23.475	0.25	2.159	0.25	2.144	115.304	300.665	301.274	68.956	50.425	69.513	78.448	469.145	462.281	596.011	587.934
20160427:14:46:47	23.843	12.699	5.042	23.472	0.25	2.166	0.25	2.152	115.422	300.685	301.313	69	50.415	69.536	78.481	470.539	463.595	597.791	589.615
20160427:14:51:47	23.847	12.706	5.152	23.468	0.25	2.168	0.25	2.145	115.447	300.589	301.238	69.005	50.353	69.546	78.509	471.89	464.971	599.517	591.374
20160427:14:56:47	23.839	12.731	5.1	23.464	0.25	2.175	0.25	2.137	115.506	300.606	301.274	69.054	50.392	69.633	78.54	473.238	466.292	601.239	593.064
20160427:15:01:47	23.83	11.964	5.026	23.461	0.25	2.176	0.25	2.131	113.29	300.536	301.241	69.054	50.369	69.644	78.57	474.635	467.662	603.024	594.816
20160427:15:06:47	23.828	11.686	5.013	23.46	0.25	2.165	0.25	2.117	112.474	300.559	301.264	69.104	50.469	69.703	78.6	475.975	468.978	604.737	596.5
20160427:15:11:47	23.824	12.547	4.968	23.459	0.25	2.162	0.25	2.126	114.967	300.591	301.232	69.112	50.398	69.712	78.625	477.356	470.331	606.502	598.231
20160427:15:16:47	23.822	12.658	4.982	23.455	0.25	2.156	0.25	2.125	115.277	300.584	301.225	69.141	50.442	69.741	78.656	478.728	471.691	608.256	599.972
20160427:15:21:47	23.822	12.705	5.006	23.454	0.25	2.165	0.25	2.119	115.408	300.569	301.241	69.172	50.413	69.773	78.686	480.061	473.01	609.959	601.66
20160427:15:26:47	23.82	12.696	5.006	23.452	0.25	2.176	0.25	2.132	115.381	300.575	301.196	69.176	50.411	69.783	78.715	481.468	474.374	611.759	603.406
20160427:15:31:47	23.818	12.715	5.034	23.448	0.25	2.17	0.25	2.112	115.432	300.595	301.193	69.232	50.414	69.829	78.741	482.799	475.691	613.461	605.092
20160427:15:36:47	23.819	12.711	4.981	23.452	0.25	2.172	0.25	2.122	115.419	300.587	301.213	69.231	50.428	69.829	78.771	484.169	477.071	615.213	606.859
20160427:15:41:47	23.813	12.7	4.871	23.455	0.25	2.174	0.25	2.128	115.38	300.598	301.25	69.315	50.455	69.914	78.8	485.552	478.386	616.981	608.543
20160427:15:46:47	23.811	12.694	4.872	23.452	0.25	2.17	0.25	2.128	115.36	300.576	301.215	69.338	50.494	69.94	78.828	486.897	479.766	618.702	610.31
20160427:15:51:47	23.813	12.673	4.948	23.449	0.25	2.158	0.25	2.13	115.306	300.568	301.24	69.375	50.462	69.975	78.859	488.294	481.076	620.489	611.987
20160427:15:56:47	23.808	12.653	4.891	23.449	0.25	2.151	0.25	2.127	115.242	300.529	301.173	69.408	50.505	70.004	78.889	489.643	482.452	622.215	613.75
20160427:16:01:47	23.801	12.643	4.8	23.449	0.25	2.153	0.25	2.112	115.203	300.532	301.184	69.436	50.47	70.03	78.923	490.989	483.76	623.937	615.425
20160427:16:06:47	23.788	12.643	4.5	23.457	0.25	2.169	0.25	2.121	115.185	300.585	301.24	69.462	50.513	70.06	78.96	492.385	485.123	625.722	617.171
20160427:16:11:47	23.783	12.637	4.358	23.462	0.25	2.157	0.25	2.136	115.159	300.585	301.29	69.477	50.498	70.084	78.994	493.724	486.474	627.435	618.9
20160427:16:16:47	23.775	12.69	4.216	23.465	0.25	2.159	0.25	2.138	115.298	300.624	301.308	69.5	50.525	70.105	79.03	495.107	487.796	629.204	620.592
20160427:16:21:47	23.768	12.764	4.122	23.465	0.25	2.17	0.25	2.122	115.492	300.656	301.304	69.528	50.514	70.116	79.063	496.479	489.16	630.957	622.338
20160427:16:26:47	23.771	12.774	4.148	23.466	0.25	2.18	0.25	2.136	115.523	300.658	301.283	69.536	50.527	70.12	79.093	497.814	490.483	632.665	624.032
20160427:16:31:47	23.772	12.853	4.129	23.469	0.25	2.188	0.25	2.141	115.744	300.598	301.239	69.506	50.488	70.113	79.119	499.217	491.851	634.459	625.784
20160427:16:36:47	23.77	12.905	4.111	23.468	0.25	2.184	0.25	2.139	115.884	300.64	301.299	69.551	50.554	70.134	79.138	500.545	493.17	636.157	627.472
20160427:16:41:47	23.772	12.87	4.15	23.467	0.25	2.176	0.25	2.131	115.792	300.628	301.291	69.54	50.544	70.118	79.155	501.918	494.546	637.913	629.233
20160427:16:46:47	23.774	11.937	4.17	23.467	0.25	2.163	0.25	2.134	113.137	300.58	301.244	69.511	50.55	70.112	79.171	503.296	495.859	639.674	630.914
20160427:16:51:47	23.775	12.542	4.219	23.465	0.25	2.167	0.25	2.129	114.865	300.565	301.211	69.501	50.521	70.102	79.184	504.65	497.242	641.406	632.684
20160427:16:56:47	23.773	12.851	4.256	23.46	0.25	2.171	0.25	2.14	115.738	300.536	301.228	69.503	50.517	70.086	79.195	506.045	498.545	643.191	634.353
20160427:17:01:47	23.775	12.93	4.328	23.457	0.25	2.176	0.25	2.154	115.962	300.607	301.225	69.54	50.55	70.117	79.205	507.393	499.918	644.915	636.111
20160427:17:06:47	23.776	12.927	4.329	23.458	0.25	2.192	0.25	2.177	115.955	300.603	301.239	69.522	50.554	70.115	79.21	508.738	501.258	646.635	637.827
20160427:17:11:47	23.78	12.886	4.407	23.456	0.25	2.189	0.25	2.138	115.847	300.6	301.212	69.508	50.558	70.113	79.215	510.135	502.589	648.422	639.532
20160427:17:16:47	23.78	12.866	4.398	23.456	0.25	2.18	0.25	2.138	115.791	300.575	301.223	69.503	50.561	70.108	79.216	511.478	503.96	650.141	641.288
20160427:17:21:47	23.773	12.884	4.296	23.457	0.25	2.183	0.25	2.14	115.832	300.56	301.243	69.501	50.559	70.104	79.216	512.857	505.278	651.904	642.976
20160427:17:26:47	23.773	12.884	4.31	23.456	0.25	2.185	0.25	2.138	115.831	300.563	301.2	69.5	50.561	70.094	79.213	514.229	506.651	653.659	644.733
20160427:17:31:47	23.771	12.862	4.281	23.456	0.25	2.19	0.25	2.13	115.768	300.627	301.284	69.499	50.566	70.096	79.21	515.567	507.97	655.37	646.423
20160427:17:36:47	23.773	12.826	4.304	23.456	0.25	2.18	0.25	2.138	115.672	300.586	301.287	69.498	50.568	70.09	79.207	516.971	509.347	657.167	648.186
20160427:17:41:47	23.776	12.833	4.307	23.459	0.25	2.185	0.25	2.145	115.694	300.628	301.264	69.493	50.57	70.084	79.203	518.305	510.662	658.872	649.87
20160427:17:46:47	23.773	12.181	4.269	23.46	0.25	2.174	0.25	2.139	113.841	300.569	301.239	69.465	50.534	70.062	79.198	519.666	512.044	660.613	651.639
20160427:17:51:47	23.777	12.323	4.341	23.458	0.25	2.166	0.25	2.125	114.247	300.511	301.226	69.446	50.546	70.052	79.193	521.056	513.347	662.391	653.308
20160427:17:56:47	23.775	12.752	4.357	23.454	0.25	2.164	0.25	2.145	115.468	300.555	301.219	69.445	50.523	70.05	79.19	522.398	514.717	664.107	655.062
20160427:18:01:47	23.761	12.768	4.219	23.451	0.25	2.181	0.25	2.146	115.493	300.567	301.239	69.447	50.556	70.054	79.19	523.793	516.058	665.893	656.78
20160427:18:06:47	23.754	12.746	4.13	23.45	0.25	2.177	0.25	2.124	115.42	300.555	301.251	69.447	50.539	70.058	79.19	525.155	517.389	667.635	658.485
20160427:18:11:47	23.744	12.742	3.948	23.454	0.25	2.171	0.25	2.127	115.395	300.619	301.266	69.449	50.564	70.058	79.191	526.493	518.756	669.346	660.235
20160427:18:16:47	23.734	12.745	3.822	23.453	0.25	2.176	0.25	2.135	115.388	300.621	301.24	69.449	50.565	70.059	79.193	527.89	520.077	671.133	661.927
20160427:18:21:47	23.733	12.744	3.787	23.454	0.25	2.177	0.25	2.145	115.383	300.572	301.224	69.453	50.601	70.063	79.196	529.229	521.444	672.846	663.679
20160427:18:26:47	23.737	12.716	3.852	23.453	0.25	2.175	0.25	2.136	115.313	300.574	301.253	69.465	50.588	70.07	79.199	530.603	522.764	674.604	665.368
20160427:18:31:47	23.738	12.722	3.895	23.452	0.25	2.177	0.25	2.139	115.331	300.6	301.265	69.481	50.629	70.075	79.202	531.97	524.138	676.354	667.128
20160427:18:36:47	23.734	12.739	3.824	23.452	0.25	2.188	0.25	2.142	115.37	300.644	301.32	69.478	50.61	70.064	79.204	533.319	525.454	678.08	668.814
20160427:18:41:47	23.734	12.745	3.822	23.453	0.25	2.183	0.25	2.143	115.389	300.665	301.323	69.459	50.638	70.057	79.205	534.718	526.834	679.869	670.581
20160427:18:46:47	23.738	12.107	3.859	23.454	0.25	2.16	0.25	2.146	113.574	300.639	301.296	69.447	50.623	70.055	79.205	536.058	528.137	681.583	672.25
20160427:18:51:47	23.736	11.86	3.838	23.454	0.25	2.167	0.25	2.139	112.856	300.58	301.324	69.443	50.636	70.05	79.206	537.413	529.512	683.317	674.011
20160427:18:56:47	23.733	11.802	3.81	23.453	0.25	2.151	0.25	2.119	112.679	300.524	301.303	69.436	50.627	70.022	79.204	538.809	530.858	685.102	675.735
20160427:19:01:47	23.726	12.582	3.694	23.454	0.25	2.175	0.25	2.133	114.921	300.585	301.266	69.41	50.609	69.995	79.2	540.151	532.187	686.819	677.436
20160427:19:06:47	23.724	12.652	3.695	23.452	0.25	2.191	0.25	2.139	115.115	300.58	301.216	69.363	50.601	69.956	79.193	541.545	533.552	688.602	679.184
20160427:19:11:47	23.723	12.672	3.644	23.455	0.25	2.196	0.25	2.144	115.168	300.628	301.233	69.335	50.598	69.943	79.184	542.92	534.876	690.359	680.88
20160427:19:16:47	23.722	12.651	3.619	23.455	0.25	2.178	0.25	2.146	115.108	300.632	301.245	69.332	50.618	69.92	79.172	544.255	536.255	692.067	682.645
20160427:19:21:47	23.719	12.677	3.565	23.457	0.25	2.166	0.25	2.153	115.176	300.707	301.359	69.328	50.61	69.879	79.158	545.665	537.574	693.87	684.333
20160427:19:26:47	23.72	12.791	3.648	23.452	0.25	2.176	0.25	2.151	115.495	300.66	301.311	69.314	50.624	69.85	79.142	547	538.96	695.578	686.107
20160427:19:31:47	23.713	12.811	3.55	23.452	0.25	2.189	0.25	2.146	115.54	300.558	301.228	69.218	50.579	69.798	79.125	548.364	540.275	697.322	687.791
20160427:19:36:47	23.708	12.82	3.495	23.451	0.25	2.196	0.25	2.149	115.557	300.546	301.195	69.17	50.615	69.777	79.104	549.752	541.651	699.096	689.553
20160427:19:41:47	23.713	12.82	3.523	23.454	0.25	2.19	0.25	2.154	115.566	300.645	301.311	69.166	50.619	69.774	79.08	551.097	542.968	700.817	691.239
20160427:19:46:47	23.712	12.795	3.522	23.453	0.25	2.192	0.25	2.134	115.496	300.618	301.271	69.122	50.619	69.734	79.055	552.495	544.324	702.604	692.974
20160427:19:51:47	23.71	12.626	3.477	23.454	0.25	2.187	0.25	2.141	115.016	300.627	301.295	69.107	50.626	69.72	79.03	553.857	545.685	704.344	694.716
20160427:19:56:47	23.707	12.072	3.396	23.457	0.25	2.181	0.25	2.143	113.436	300.584	301.275	69.098	50.642	69.71	79.005	555.197	547.006	706.057	696.406
20160427:20:01:47	23.705	11.97	3.345	23.459	0.25	2.179	0.25	2.127	113.131	300.567	301.246	69.055	50.634	69.664	78.983	556.603	548.375	707.854	698.158
20160427:20:06:47	23.711	12.654	3.429	23.459	0.25	2.18	0.25	2.134	115.096	300.576	301.268	69.051	50.617	69.658	78.961	557.94	549.699	709.563	699.852
20160427:20:11:47	23.706	12.858	3.311	23.462	0.25	2.186	0.25	2.139	115.659	300.631	301.305	69.045	50.65	69.627	78.936	559.317	551.082	711.322	701.62
20160427:20:16:47	23.713	12.904	3.45	23.459	0.25	2.183	0.25	2.156	115.796	300.601	301.253	68.993	50.588	69.529	78.911	560.692	552.403	713.08	703.31
20160427:20:21:47	23.71	12.968	3.416	23.459	0.25	2.188	0.25	2.135	115.967	300.71	301.318	68.989	50.626	69.526	78.883	562.046	553.784	714.809	705.077
20160427:20:26:47	23.704	12.978	3.338	23.459	0.25	2.185	0.25	2.155	115.987	300.706	301.313	68.928	50.628	69.501	78.858	563.447	555.101	716.6	706.761
20160427:20:31:47	23.702	13.012	3.339	23.457	0.25	2.185	0.25	2.149	116.075	300.673	301.279	68.875	50.625	69.472	78.829	564.797	556.475	718.324	708.519
20160427:20:36:47	23.693	13.052	3.224	23.456	0.25	2.19	0.25	2.168	116.172	300.662	301.274	68.867	50.654	69.462	78.8	566.151	557.817	720.054	710.235
20160427:20:41:47	23.691	13.119	3.166	23.458	0.25	2.197	0.25	2.176	116.351	300.67	301.233	68.821	50.613	69.411	78.77	567.548	559.156	721.839	711.947
20160427:20:46:47	23.69	13.165	3.17	23.457	0.25	2.206	0.25	2.185	116.473	300.669	301.282	68.812	50.662	69.406	78.74	568.896	560.527	723.561	713.701
20160427:20:51:47	23.694	13.156	3.265	23.454	0.25	2.195	0.25	2.17	116.455	300.6	301.262	68.761	50.616	69.349	78.713	570.279	561.851	725.328	715.395
20160427:20:56:47	23.686	13.142	3.146	23.455	0.25	2.196	0.25	2.157	116.404	300.606	301.311	68.753	50.656	69.344	78.682	571.655	563.23	727.085	717.158
20160427:21:01:47	23.686	12.456	3.122	23.456	0.25	2.188	0.25	2.155	114.504	300.577	301.304	68.71	50.637	69.276	78.65	573.003	564.553	728.807	718.85
20160427:21:06:47	23.685	12.399	3.133	23.454	0.25	2.181	0.25	2.153	114.341	300.553	301.234	68.697	50.643	69.251	78.619	574.405	565.941	730.598	720.624
20160427:21:11:47	23.688	12.881	3.179	23.455	0.25	2.177	0.25	2.163	115.68	300.57	301.245	68.678	50.666	69.228	78.594	575.753	567.255	732.32	722.305
20160427:21:16:47	23.68	13.269	3.087	23.453	0.25	2.196	0.25	2.174	116.737	300.599	301.232	68.627	50.623	69.173	78.563	577.116	568.638	734.061	724.073
20160427:21:21:47	23.68	13.385	3.11	23.451	0.25	2.205	0.25	2.166	117.048	300.634	301.272	68.615	50.675	69.167	78.532	578.514	569.964	735.846	725.769
20160427:21:26:47	23.68	13.359	3.094	23.452	0.25	2.199	0.25	2.162	116.978	300.59	301.183	68.526	50.62	69.112	78.503	579.861	571.317	737.567	727.498
20160427:21:31:47	23.689	13.394	3.217	23.453	0.25	2.217	0.25	2.156	117.086	300.627	301.244	68.52	50.651	69.107	78.476	581.253	572.687	739.344	729.25
20160427:21:36:47	23.682	13.37	3.157	23.45	0.25	2.198	0.25	2.167	117.013	300.647	301.241	68.476	50.647	69.071	78.444	582.631	574.009	741.104	730.94
20160427:21:41:47	23.68	13.347	3.157	23.448	0.25	2.192	0.25	2.161	116.946	300.703	301.272	68.447	50.617	69.05	78.409	583.969	575.384	742.813	732.697
20160427:21:46:47	23.68	13.386	3.132	23.45	0.25	2.199	0.25	2.18	117.05	300.638	301.267	68.413	50.627	69.02	78.381	585.379	576.711	744.613	734.395
20160427:21:51:47	23.673	13.435	3.034	23.45	0.25	2.209	0.25	2.182	117.17	300.599	301.229	68.38	50.614	68.991	78.348	586.723	578.094	746.33	736.162
20160427:21:56:47	23.672	13.448	3.035	23.449	0.25	2.217	0.25	2.186	117.203	300.649	301.271	68.317	50.598	68.918	78.316	588.088	579.417	748.072	737.853
20160427:22:01:47	23.669	13.17	2.983	23.449	0.25	2.22	0.25	2.164	116.444	300.662	301.321	68.266	50.621	68.854	78.281	589.487	580.804	749.857	739.626
20160427:22:06:47	23.667	12.511	2.976	23.449	0.25	2.199	0.25	2.155	114.632	300.534	301.249	68.223	50.585	68.794	78.24	590.834	582.125	751.578	741.314
20160427:22:11:47	23.661	12.855	2.893	23.448	0.25	2.19	0.25	2.167	115.571	300.515	301.226	68.196	50.627	68.768	78.197	592.231	583.489	753.361	743.056
20160427:22:16:47	23.659	13.331	2.897	23.446	0.25	2.227	0.25	2.17	116.873	300.557	301.242	68.133	50.615	68.714	78.152	593.613	584.858	755.124	744.806
20160427:22:21:47	23.656	13.342	2.885	23.444	0.25	2.205	0.25	2.166	116.896	300.633	301.281	68.08	50.588	68.672	78.104	594.955	586.181	756.837	746.496
20160427:22:26:47	23.659	13.326	2.943	23.442	0.25	2.2	0.25	2.169	116.859	300.597	301.246	68.025	50.625	68.615	78.054	596.36	587.559	758.631	748.258
20160427:22:31:47	23.656	13.314	2.915	23.442	0.25	2.207	0.25	2.16	116.822	300.642	301.297	67.943	50.615	68.537	78.001	597.706	588.889	760.348	749.957
20160427:22:36:47	23.657	12.905	2.955	23.44	0.25	2.196	0.25	2.174	115.702	300.627	301.27	67.877	50.586	68.48	77.942	599.068	590.273	762.087	751.726
20160427:22:41:47	23.651	12.481	2.893	23.439	0.25	2.193	0.25	2.145	114.525	300.486	301.2	67.827	50.61	68.424	77.888	600.47	591.596	763.876	753.415
20160427:22:46:47	23.656	13.233	2.957	23.438	0.25	2.195	0.25	2.14	116.604	300.587	301.228	67.78	50.579	68.366	77.83	601.823	592.984	765.602	755.188
20160427:22:51:47	23.653	13.336	2.922	23.438	0.25	2.212	0.25	2.16	116.876	300.619	301.285	67.712	50.598	68.317	77.777	603.213	594.299	767.376	756.868
20160427:22:56:47	23.652	13.32	2.941	23.435	0.25	2.21	0.25	2.159	116.83	300.624	301.251	67.645	50.615	68.249	77.725	604.593	595.666	769.137	758.615
20160427:23:01:47	23.652	13.309	2.95	23.435	0.25	2.214	0.25	2.177	116.803	300.608	301.232	67.595	50.578	68.204	77.67	605.936	597.034	770.85	760.361
20160427:23:06:47	23.656	13.316	3.022	23.434	0.25	2.216	0.25	2.173	116.829	300.613	301.264	67.544	50.584	68.154	77.613	607.343	598.358	772.644	762.053
20160427:23:11:47	23.652	13.398	2.956	23.434	0.25	2.227	0.25	2.198	117.04	300.615	301.253	67.501	50.613	68.11	77.556	608.69	599.74	774.363	763.818
20160427:23:16:47	23.649	13.404	2.925	23.434	0.25	2.217	0.25	2.185	117.051	300.581	301.212	67.445	50.584	68.071	77.502	610.052	601.071	776.1	765.517
20160427:23:21:47	23.649	13.378	2.953	23.432	0.25	2.205	0.25	2.179	116.984	300.611	301.236	67.372	50.582	68.004	77.446	611.453	602.456	777.887	767.286
20160427:23:26:47	23.653	13.327	3.006	23.432	0.25	2.212	0.25	2.18	116.853	300.612	301.27	67.324	50.604	67.921	77.391	612.804	603.78	779.609	768.976
20160427:23:31:47	23.651	13.28	2.962	23.433	0.25	2.206	0.25	2.192	116.722	300.611	301.266	67.284	50.56	67.873	77.336	614.199	605.171	781.389	770.752
20160427:23:36:47	23.648	13.222	2.9	23.435	0.25	2.202	0.25	2.194

Time: day:hh:mm:ss	Stack Pressure: in-Hg	Sat% H2O: Percent	Static: in-H2O	Barometric: in-Hg	Flowmeter1: l/min	Vacuum1: in-Hg	Flowmeter2: l/min	Vacuum2: in-Hg	Stack Temp: degF	Sorbent Temp: degF	Probe Temp: degF	DGM#1 Temp: degF	Condenser Temp: degF	DGM#2 Temp: degF	DAQ Temp: degF	DGM1*: liters STP	DGM2*: liters STP	DGM1: liters nominal	DGM2: liters nominal
20160428:03:06:47	23.612	12.949	2.885	23.4	0.25	2.2	0.25	2.166	115.769	300.642	301.222	65.593	50.567	66.189	75.579	673.162	663.283	856.5	844.863
20160428:03:11:47	23.61	12.933	2.87	23.398	0.25	2.193	0.25	2.17	115.72	300.644	301.228	65.58	50.585	66.164	75.545	674.511	664.64	858.217	846.592
20160428:03:16:47	23.61	12.885	2.898	23.397	0.25	2.195	0.25	2.173	115.591	300.573	301.201	65.536	50.564	66.081	75.511	675.91	666.004	859.998	848.329
20160428:03:21:47	23.61	12.856	2.91	23.396	0.25	2.199	0.25	2.182	115.511	300.576	301.19	65.512	50.569	66.065	75.477	677.253	667.327	861.707	850.015
20160428:03:26:47	23.605	12.851	2.842	23.396	0.25	2.205	0.25	2.166	115.488	300.562	301.172	65.458	50.56	66.024	75.444	678.644	668.696	863.478	851.759
20160428:03:31:47	23.605	12.887	2.838	23.396	0.25	2.208	0.25	2.18	115.589	300.592	301.223	65.433	50.568	66.009	75.41	680.013	670.021	865.22	853.447
20160428:03:36:47	23.607	12.872	2.881	23.395	0.25	2.219	0.25	2.186	115.549	300.658	301.262	65.391	50.558	65.971	75.377	681.351	671.409	866.922	855.216
20160428:03:41:47	23.605	12.913	2.822	23.398	0.25	2.204	0.25	2.174	115.659	300.647	301.247	65.371	50.556	65.951	75.34	682.761	672.733	868.717	856.902
20160428:03:46:47	23.607	12.614	2.854	23.397	0.25	2.199	0.25	2.165	114.821	300.606	301.23	65.337	50.558	65.913	75.303	684.103	674.119	870.424	858.667
20160428:03:51:47	23.603	12.089	2.814	23.397	0.25	2.178	0.25	2.151	113.33	300.486	301.231	65.315	50.548	65.887	75.265	685.484	675.437	872.181	860.346
20160428:03:56:47	23.604	12.052	2.861	23.394	0.25	2.182	0.25	2.145	113.224	300.556	301.229	65.286	50.551	65.856	75.227	686.858	676.821	873.93	862.109
20160428:04:01:47	23.601	11.952	2.81	23.395	0.25	2.179	0.25	2.147	112.927	300.472	301.212	65.25	50.544	65.781	75.19	688.207	678.131	875.646	863.778
20160428:04:06:47	23.603	11.745	2.849	23.393	0.25	2.183	0.25	2.137	112.319	300.508	301.238	65.234	50.559	65.758	75.153	689.612	679.506	877.433	865.528
20160428:04:11:47	23.6	11.979	2.828	23.392	0.25	2.176	0.25	2.13	112.986	300.554	301.282	65.158	50.536	65.725	75.121	690.95	680.856	879.135	867.248
20160428:04:16:47	23.598	12.914	2.815	23.391	0.25	2.201	0.25	2.161	115.651	300.627	301.245	65.128	50.559	65.709	75.1	692.32	682.19	880.878	868.947
20160428:04:21:47	23.598	12.974	2.811	23.391	0.25	2.202	0.25	2.164	115.815	300.647	301.251	65.109	50.563	65.699	75.068	693.713	683.567	882.65	870.701
20160428:04:26:47	23.599	12.955	2.824	23.392	0.25	2.201	0.25	2.164	115.766	300.615	301.192	65.074	50.556	65.669	75.033	695.059	684.891	884.363	872.387
20160428:04:31:47	23.598	12.968	2.815	23.391	0.25	2.192	0.25	2.175	115.798	300.673	301.318	65.062	50.558	65.654	74.999	696.463	686.27	886.148	874.143
20160428:04:36:47	23.598	12.95	2.795	23.392	0.25	2.201	0.25	2.155	115.749	300.616	301.228	65.021	50.556	65.621	74.965	697.817	687.599	887.87	875.835
20160428:04:41:47	23.596	12.915	2.783	23.392	0.25	2.198	0.25	2.157	115.652	300.661	301.276	65.006	50.55	65.606	74.932	699.164	688.982	889.583	877.596
20160428:04:46:47	23.593	12.913	2.755	23.391	0.25	2.198	0.25	2.175	115.64	300.641	301.286	64.972	50.549	65.575	74.898	700.567	690.303	891.369	879.278
20160428:04:51:47	23.594	12.907	2.76	23.391	0.25	2.195	0.25	2.17	115.625	300.602	301.251	64.965	50.546	65.558	74.865	701.91	691.692	893.076	881.047
20160428:04:56:47	23.598	12.879	2.838	23.389	0.25	2.196	0.25	2.173	115.556	300.557	301.192	64.934	50.527	65.519	74.833	703.306	693.003	894.852	882.716
20160428:05:01:47	23.594	12.919	2.813	23.387	0.25	2.188	0.25	2.158	115.66	300.573	301.213	64.928	50.546	65.503	74.801	704.681	694.384	896.6	884.474
20160428:05:06:47	23.588	12.887	2.691	23.39	0.25	2.21	0.25	2.169	115.562	300.574	301.186	64.866	50.508	65.41	74.771	706.018	695.728	898.3	886.184
20160428:05:11:47	23.589	12.925	2.67	23.393	0.25	2.204	0.25	2.175	115.669	300.554	301.247	64.871	50.534	65.409	74.741	707.429	697.071	900.094	887.895
20160428:05:16:47	23.593	12.932	2.703	23.394	0.25	2.202	0.25	2.168	115.693	300.599	301.242	64.793	50.504	65.357	74.709	708.766	698.451	901.794	889.65
20160428:05:21:47	23.593	12.958	2.728	23.393	0.25	2.205	0.25	2.189	115.764	300.674	301.25	64.785	50.522	65.355	74.68	710.149	699.77	903.552	891.329
20160428:05:26:47	23.595	12.934	2.78	23.39	0.25	2.201	0.25	2.173	115.702	300.581	301.244	64.756	50.517	65.328	74.651	711.524	701.147	905.3	893.081
20160428:05:31:47	23.594	12.938	2.776	23.39	0.25	2.202	0.25	2.176	115.712	300.575	301.217	64.733	50.508	65.302	74.623	712.882	702.473	907.026	894.769
20160428:05:36:47	23.602	12.928	2.845	23.393	0.25	2.201	0.25	2.178	115.695	300.554	301.202	64.723	50.517	65.294	74.594	714.285	703.856	908.809	896.528
20160428:05:41:47	23.597	12.87	2.763	23.394	0.25	2.197	0.25	2.167	115.53	300.55	301.157	64.68	50.491	65.261	74.566	715.622	705.175	910.509	898.207
20160428:05:46:47	23.59	12.932	2.672	23.394	0.25	2.201	0.25	2.162	115.69	300.535	301.181	64.679	50.508	65.268	74.54	716.992	706.561	912.25	899.97
20160428:05:51:47	23.591	12.946	2.648	23.397	0.25	2.204	0.25	2.173	115.728	300.541	301.24	64.639	50.488	65.236	74.513	718.373	707.877	914.006	901.645
20160428:05:56:47	23.59	12.971	2.571	23.401	0.25	2.206	0.25	2.175	115.795	300.572	301.201	64.627	50.501	65.23	74.489	719.729	709.262	915.728	903.406
20160428:06:01:47	23.593	12.959	2.625	23.4	0.25	2.197	0.25	2.182	115.766	300.601	301.214	64.63	50.507	65.231	74.468	721.134	710.579	917.513	905.081
20160428:06:06:47	23.591	12.917	2.611	23.399	0.25	2.19	0.25	2.161	115.648	300.526	301.194	64.597	50.451	65.15	74.448	722.483	711.946	919.226	906.82
20160428:06:11:47	23.591	12.932	2.579	23.401	0.25	2.192	0.25	2.165	115.689	300.542	301.204	64.595	50.49	65.129	74.429	723.84	713.297	920.95	908.538
20160428:06:16:47	23.593	12.949	2.544	23.406	0.25	2.203	0.25	2.169	115.74	300.614	301.278	64.6	50.487	65.135	74.413	725.235	714.631	922.722	910.233
20160428:06:21:47	23.592	12.964	2.529	23.406	0.25	2.2	0.25	2.172	115.779	300.654	301.278	64.601	50.5	65.139	74.398	726.579	716.01	924.43	911.987
20160428:06:26:47	23.595	12.972	2.538	23.408	0.25	2.204	0.25	2.168	115.806	300.633	301.257	64.575	50.459	65.115	74.383	727.981	717.328	926.209	913.662
20160428:06:31:47	23.593	12.949	2.489	23.41	0.25	2.203	0.25	2.182	115.741	300.612	301.218	64.552	50.423	65.093	74.371	729.336	718.703	927.93	915.41
20160428:06:36:47	23.597	12.945	2.496	23.413	0.25	2.205	0.25	2.198	115.735	300.595	301.223	64.56	50.443	65.091	74.36	730.685	720.027	929.643	917.092
20160428:06:41:47	23.596	12.968	2.511	23.411	0.25	2.213	0.25	2.169	115.796	300.575	301.23	64.561	50.462	65.098	74.351	732.087	721.407	931.422	918.846
20160428:06:46:47	23.6	12.956	2.552	23.412	0.25	2.198	0.25	2.165	115.769	300.611	301.257	64.565	50.464	65.097	74.343	733.428	722.729	933.126	920.526
20160428:06:51:47	23.599	12.94	2.559	23.411	0.25	2.204	0.25	2.169	115.725	300.601	301.251	64.561	50.446	65.095	74.336	734.827	724.114	934.902	922.288
20160428:06:56:47	23.601	12.662	2.561	23.413	0.25	2.211	0.25	2.177	114.95	300.586	301.261	64.561	50.435	65.09	74.33	736.191	725.432	936.633	923.962
20160428:07:01:47	23.604	12.155	2.593	23.413	0.25	2.185	0.25	2.148	113.523	300.559	301.256	64.554	50.442	65.079	74.323	737.537	726.82	938.343	925.726
20160428:07:06:47	23.606	12.037	2.642	23.412	0.25	2.192	0.25	2.146	113.182	300.497	301.251	64.506	50.39	65.051	74.317	738.938	728.126	940.12	927.385
20160428:07:11:47	23.604	12.295	2.624	23.411	0.25	2.184	0.25	2.141	113.915	300.442	301.208	64.457	50.367	65.026	74.309	740.281	729.506	941.826	929.139
20160428:07:16:47	23.605	12.835	2.631	23.412	0.25	2.19	0.25	2.16	115.444	300.488	301.174	64.448	50.366	65.02	74.299	741.673	730.843	943.593	930.838
20160428:07:21:47	23.608	12.878	2.694	23.41	0.25	2.216	0.25	2.177	115.568	300.531	301.182	64.448	50.374	65.021	74.289	743.046	732.19	945.335	932.551
20160428:07:26:47	23.609	12.888	2.7	23.411	0.25	2.206	0.25	2.15	115.598	300.536	301.168	64.451	50.381	65.026	74.281	744.379	733.56	947.028	934.291
20160428:07:31:47	23.612	12.873	2.691	23.414	0.25	2.199	0.25	2.158	115.56	300.599	301.179	64.452	50.374	65.026	74.272	745.79	734.882	948.819	935.972
20160428:07:36:47	23.612	12.904	2.667	23.416	0.25	2.191	0.25	2.165	115.644	300.607	301.226	64.453	50.374	65.032	74.266	747.141	736.252	950.533	937.712
20160428:07:41:47	23.61	12.931	2.613	23.418	0.25	2.199	0.25	2.161	115.716	300.611	301.22	64.451	50.366	65.044	74.26	748.52	737.581	952.283	939.4
20160428:07:46:47	23.615	12.935	2.658	23.42	0.25	2.193	0.25	2.152	115.734	300.604	301.206	64.446	50.358	65.042	74.255	749.9	738.961	954.035	941.154
20160428:07:51:47	23.614	12.979	2.637	23.42	0.25	2.187	0.25	2.17	115.852	300.547	301.177	64.428	50.336	65.03	74.25	751.234	740.284	955.728	942.835
20160428:07:56:47	23.612	13.045	2.612	23.42	0.25	2.193	0.25	2.167	116.032	300.559	301.149	64.41	50.318	65.007	74.247	752.638	741.668	957.509	944.592
20160428:08:01:47	23.611	12.807	2.607	23.419	0.25	2.194	0.25	2.166	115.368	300.53	301.13	64.405	50.316	65.005	74.243	753.98	742.986	959.211	946.267
20160428:08:06:47	23.61	12.296	2.612	23.418	0.25	2.197	0.25	2.162	113.937	300.462	301.154	64.404	50.315	65.006	74.24	755.362	744.368	960.965	948.023
20160428:08:11:47	23.613	12.164	2.659	23.417	0.25	2.194	0.25	2.142	113.56	300.481	301.172	64.408	50.315	65.009	74.238	756.745	745.698	962.72	949.712
20160428:08:16:47	23.61	12.423	2.614	23.418	0.25	2.196	0.25	2.137	114.289	300.455	301.175	64.412	50.326	65.01	74.235	758.08	747.071	964.415	951.457
20160428:08:21:47	23.616	12.957	2.711	23.417	0.25	2.196	0.25	2.158	115.798	300.525	301.191	64.411	50.306	65.009	74.234	759.484	748.388	966.196	953.13
20160428:08:26:47	23.617	12.962	2.704	23.418	0.25	2.201	0.25	2.157	115.811	300.538	301.182	64.407	50.304	65.008	74.234	760.821	749.755	967.893	954.867
20160428:08:31:47	23.614	12.957	2.679	23.417	0.25	2.187	0.25	2.173	115.795	300.546	301.174	64.407	50.296	65.005	74.232	762.207	751.106	969.652	956.583
20160428:08:36:47	23.614	12.993	2.68	23.417	0.25	2.197	0.25	2.163	115.892	300.547	301.156	64.404	50.302	65.003	74.229	763.585	752.441	971.4	958.278
20160428:08:41:47	23.615	13.032	2.686	23.418	0.25	2.198	0.25	2.165	115.999	300.542	301.145	64.402	50.298	64.998	74.226	764.932	753.818	973.109	960.028
20160428:08:46:47	23.619	13.069	2.739	23.418	0.25	2.204	0.25	2.171	116.106	300.554	301.144	64.402	50.293	65.003	74.222	766.338	755.139	974.894	961.707
20160428:08:51:47	23.619	13.067	2.762	23.416	0.25	2.198	0.25	2.175	116.1	300.53	301.146	64.401	50.295	65.003	74.217	767.665	756.512	976.578	963.451
20160428:08:56:47	23.618	13.06	2.747	23.416	0.25	2.195	0.25	2.167	116.081	300.589	301.241	64.404	50.305	65.009	74.214	769.05	757.834	978.335	965.13
20160428:09:01:47	23.621	13.079	2.811	23.414	0.25	2.203	0.25	2.149	116.136	300.527	301.175	64.412	50.319	65.014	74.211	770.424	759.215	980.08	966.885
20160428:09:06:47	23.62	12.78	2.762	23.417	0.25	2.21	0.25	2.16	115.306	300.559	301.209	64.423	50.31	65.016	74.212	771.775	760.535	981.794	968.562
20160428:09:11:47	23.625	12.204	2.834	23.417	0.25	2.184	0.25	2.152	113.694	300.565	301.223	64.44	50.307	65.018	74.215	773.182	761.918	983.58	970.32
20160428:09:16:47	23.629	12.052	2.858	23.418	0.25	2.176	0.25	2.138	113.26	300.53	301.247	64.449	50.298	65.024	74.218	774.509	763.234	985.263	971.991
20160428:09:21:47	23.631	12.362	2.854	23.421	0.25	2.176	0.25	2.13	114.146	300.535	301.225	64.454	50.298	65.023	74.221	775.888	764.614	987.013	973.744
20160428:09:26:47	23.636	12.929	2.954	23.419	0.25	2.193	0.25	2.138	115.75	300.6	301.272	64.455	50.278	65.032	74.228	777.265	765.94	988.761	975.429
20160428:09:31:47	23.632	12.962	2.85	23.422	0.25	2.188	0.25	2.146	115.834	300.602	301.215	64.46	50.27	65.049	74.236	778.615	767.315	990.474	977.175
20160428:09:36:47	23.634	12.949	2.892	23.422	0.25	2.188	0.25	2.155	115.801	300.616	301.189	64.481	50.272	65.064	74.245	780.018	768.63	992.254	978.846
20160428:09:41:47	23.639	12.947	2.973	23.42	0.25	2.187	0.25	2.157	115.802	300.614	301.244	64.546	50.29	65.098	74.255	781.354	769.997	993.95	980.583
20160428:09:46:47	23.637	12.952	2.909	23.424	0.25	2.193	0.25	2.161	115.815	300.667	301.285	64.572	50.296	65.109	74.265	782.727	771.347	995.693	982.297
20160428:09:51:47	23.639	12.932	2.941	23.423	0.25	2.182	0.25	2.153	115.763	300.631	301.242	64.574	50.281	65.109	74.278	784.108	772.683	997.444	983.994
20160428:09:56:47	23.639	12.897	2.933	23.424	0.25	2.175	0.25	2.155	115.666	300.633	301.22	64.573	50.279	65.112	74.29	785.453	774.06	999.152	985.744
20160428:10:01:47	23.642	12.982	2.974	23.423	0.25	2.179	0.25	2.15	115.904	300.626	301.258	64.575	50.27	65.116	74.306	786.857	775.373	1000.933	987.412
20160428:10:06:47	23.642	12.956	2.901	23.428	0.25	2.182	0.25	2.173	115.832	300.609	301.221	64.612	50.278	65.175	74.321	788.178	776.746	1002.609	989.156
20160428:10:11:47	23.643	13.04	2.917	23.428	0.25	2.191	0.25	2.155	116.064	300.579	301.169	64.626	50.279	65.198	74.337	789.555	778.069	1004.357	990.836
20160428:10:16:47	23.643	12.546	2.933	23.427	0.25	2.195	0.25	2.153	114.682	300.556	301.195	64.626	50.283	65.204	74.352	790.93	779.446	1006.102	992.586
20160428:10:21:47	23.648	12.099	3.035	23.425	0.25	2.176	0.25	2.134	113.426	300.51	301.206	64.627	50.282	65.196	74.368	792.273	780.766	1007.806	994.263
20160428:10:26:47	23.656	11.859	3.199	23.421	0.25	2.17	0.25	2.127	112.733	300.543	301.228	64.655	50.295	65.218	74.384	793.673	782.142	1009.583	996.011
20160428:10:31:47	23.661	12.395	3.342	23.416	0.25	2.176	0.25	2.145	114.283	300.6	301.286	64.68	50.308	65.26	74.4	795.002	783.459	1011.27	997.686
20160428:10:36:47	23.67	12.789	3.501	23.413	0.25	2.185	0.25	2.145	115.415	300.659	301.28	64.681	50.283	65.254	74.416	796.381	784.839	1013.022	999.44
20160428:10:41:47	23.677	12.748	3.507	23.419	0.25	2.191	0.25	2.157	115.312	300.672	301.28	64.682	50.278	65.254	74.433	797.757	786.148	1014.769	1001.103
20160428:10:46:47	23.685	12.722	3.565	23.422	0.25	2.182	0.25	2.147	115.251	300.674	301.229	64.69	50.271	65.263	74.448	799.086	787.528	1016.456	1002.857
20160428:10:51:47	23.682	12.737	3.54	23.421	0.25	2.181	0.25	2.147	115.288	300.673	301.264	64.734	50.294	65.307	74.463	800.49	788.847	1018.239	1004.534
20160428:10:56:47	23.684	12.718	3.581	23.42	0.25	2.178	0.25	2.145	115.238	300.655	301.251	64.739	50.292	65.321	74.478	801.834	790.218	1019.944	1006.276
20160428:11:01:47	23.684	12.75	3.578	23.421	0.25	2.18	0.25	2.141	115.328	300.599	301.168	64.752	50.301	65.333	74.493	803.208	791.527	1021.689	1007.94
20160428:11:06:47	23.673	12.779	3.402	23.423	0.25	2.187	0.25	2.152	115.39	300.615	301.237	64.778	50.314	65.353	74.509	804.58	792.896	1023.431	1009.68
20160428:11:11:47	23.668	12.771	3.377	23.42	0.25	2.19	0.25	2.15	115.363	300.659	301.267	64.874	50.359	65.397	74.53	805.909	794.23	1025.119	1011.376
20160428:11:16:47	23.667	12.764	3.357	23.42	0.25	2.195	0.25	2.149	115.341	300.687	301.298	64.901	50.376	65.411	74.552	807.3	795.574	1026.885	1013.085
20160428:11:21:47	23.666	12.71	3.339	23.421	0.25	2.181	0.25	2.155	115.19	300.595	301.238	64.91	50.366	65.428	74.576	808.634	796.93	1028.58	1014.808
20160428:11:26:47	23.664	12.153	3.303	23.421	0.25	2.169	0.25	2.152	113.587	300.663	301.298	64.96	50.412	65.526	74.601	810.025	798.254	1030.346	1016.492
20160428:11:31:47	23.661	11.649	3.279	23.42	0.25	2.154	0.25	2.124	112.116	300.548	301.212	64.962	50.405	65.534	74.626	811.379	799.626	1032.067	1018.237
20160428:11:36:47	23.664	11.509	3.281	23.423	0.25	2.142	0.25	2.107	111.699	300.532	301.232	64.989	50.435	65.557	74.652	812.716	800.936	1033.765	1019.902
20160428:11:41:47	23.66	12.003	3.203	23.425	0.25	2.152	0.25	2.118	113.147	300.58	301.269	65.017	50.478	65.589	74.678	814.109	802.301	1035.533	1021.637
20160428:11:46:47	23.649	12.506	3.031	23.426	0.25	2.168	0.25	2.142	114.593	300.657	301.293	65.018	50.421	65.585	74.704	815.443	803.625	1037.228	1023.321
20160428:11:51:47	23.648	12.534	3.016	23.426	0.25	2.174	0.25	2.147	114.67	300.71	301.313	65.057	50.473	65.619	74.731	816.837	804.99	1038.998	1025.056
20160428:11:56:47	23.647	12.531	2.992	23.427	0.25	2.182	0.25	2.138	114.659	300.69	301.33	65.067	50.487	65.632	74.757	818.172	806.306	1040.694	1026.729
20160428:12:01:47	23.642	12.497	2.924	23.427	0.25	2.192	0.25	2.152	114.556	300.685	301.306	65.053	50.478	65.632	74.78	819.527	807.682	1042.415	1028.479
20160428:12:06:47	23.641	12.481	2.883	23.429	0.25	2.182	0.25	2.15	114.509	300.685	301.331	65.076	50.511	65.662	74.8	820.909	808.998	1044.17	1030.152
20160428:12:11:47	23.641	12.428	2.89	23.429	0.25	2.173	0.25	2.147	114.359	300.685	301.322	65.074	50.507	65.653	74.817	822.251	810.373	1045.874	1031.9
20160428:12:16:47	23.637	12.399	2.799	23.431	0.25	2.164	0.25	2.141	114.272	300.656	301.295	65.072	50.508	65.642	74.832	823.646	811.686	1047.646	1033.57
20160428:12:21:47	23.636	12.41	2.771	23.432	0.25	2.171	0.25	2.135	114.302	300.644	301.248	65.068	50.512	65.636	74.846	824.974	813.067	1049.331	1035.325
20160428:12:26:47	23.632	12.426	2.707	23.433	0.25	2.169	0.25	2.135	114.342	300.676	301.3	65.08	50.532	65.658	74.858	826.347	814.371	1051.076	1036.983
20160428:12:31:47	23.633	12.424	2.685	23.435	0.25	2.163	0.25	2.144	114.335	300.688	301.281	65.096	50.559	65.684	74.869	827.72	815.751	1052.819	1038.737
20160428:12:36:47	23.628	12.455	2.605	23.436	0.25	2.175	0.25	2.144	114.416	300.721	301.294	65.08	50.561	65.677	74.878	829.063	817.064	1054.524	1040.406
20160428:12:41:47	23.624	12.457	2.571	23.435	0.25	2.182	0.25	2.158	114.418	300.707	301.335	65.073	50.555	65.659	74.886	830.461	818.437	1056.298	1042.15
20160428:12:46:47	23.636	12.475	3.547	23.375	0.25	2.106	0.25	2.08	114.485	300.665	301.32	65.071	50.53	65.642	74.89	831.786	819.739	1057.985	1043.81
20160428:12:51:47	23.672	12.472	3.134	23.441	0.25	2.196	0.25	2.172	114.529	300.627	301.362	65.06	50.545	65.636	74.894	833.169	821.11	1059.741	1045.553
20160428:12:56:47	23.64	12.511	2.577	23.45	0.25	2.181	0.25	2.171	114.593	300.642	301.326	65.054	50.539	65.634	74.895	834.548	822.442	1061.491	1047.244
20160428:13:01:47	23.639	12.478	2.568	23.45	0.25	2.186	0.25	2.169	114.498	300.61	301.292	65.051	50.54	65.633	74.897	835.877	823.788	1063.176	1048.953
20160428:13:06:47	23.638	12.456	2.51	23.453	0.25	2.184	0.25	2.153	114.433	300.582	301.258	65.054	50.542	65.633	74.897	837.272	825.137	1064.946	1050.667
20160428:13:11:47	23.637	12.423	2.491	23.453	0.25	2.17	0.25	2.157	114.34	300.647	301.255	65.054	50.522	65.63	74.898	838.605	826.464	1

Time: day:hh:mm:ss	Stack Pressure: in-Hg	Sat% H2O: Percent	Static: in-H2O	Barometric: in-Hg	Flowmeter1: l/min	Vacuum1: in-Hg	Flowmeter2: l/min	Vacuum2: in-Hg	Stack Temp: degF	Sorbent Temp: degF	Probe Temp: degF	DGM#1 Temp: degF	Condenser Temp: degF	DGM#2 Temp: degF	DAQ Temp: degF	DGM1*: liters STP	DGM2*: liters STP	DGM1: liters nominal	DGM2: liters nominal
20160428:16:46:47	23.715	12.461	3.607	23.45	0.25	2.166	0.25	2.152	114.565	300.551	301.197	66.124	50.434	66.672	75.669	897.211	884.229	1141.061	1125.788
20160428:16:51:47	23.713	12.451	3.547	23.452	0.25	2.182	0.25	2.159	114.532	300.549	301.225	66.18	50.432	66.7	75.711	898.548	885.553	1142.761	1127.474
20160428:16:56:47	23.716	11.499	3.524	23.457	0.25	2.177	0.25	2.156	111.743	300.439	301.165	66.218	50.399	66.777	75.753	899.926	886.924	1144.513	1129.218
20160428:17:01:47	23.711	11.411	3.39	23.461	0.25	2.154	0.25	2.156	111.468	300.489	301.122	66.221	50.441	66.802	75.793	901.292	888.235	1146.25	1130.885
20160428:17:06:47	23.716	11.299	3.464	23.461	0.25	2.155	0.25	2.151	111.134	300.502	301.21	66.255	50.438	66.848	75.829	902.624	889.598	1147.943	1132.62
20160428:17:11:47	23.721	12.208	3.514	23.463	0.25	2.184	0.25	2.134	113.85	300.581	301.227	66.26	50.398	66.849	75.865	904.017	890.922	1149.713	1134.305
20160428:17:16:47	23.719	12.306	3.474	23.464	0.25	2.188	0.25	2.132	114.129	300.639	301.278	66.303	50.48	66.876	75.898	905.353	892.285	1151.411	1136.039
20160428:17:21:47	23.725	12.302	3.537	23.465	0.25	2.187	0.25	2.148	114.124	300.62	301.24	66.304	50.378	66.874	75.932	906.747	893.598	1153.183	1137.711
20160428:17:26:47	23.727	12.303	3.559	23.465	0.25	2.187	0.25	2.146	114.132	300.578	301.202	66.343	50.416	66.921	75.962	908.104	894.975	1154.907	1139.462
20160428:17:31:47	23.728	12.291	3.559	23.466	0.25	2.187	0.25	2.158	114.1	300.561	301.167	66.332	50.424	66.92	75.988	909.444	896.29	1156.611	1141.135
20160428:17:36:47	23.727	12.289	3.553	23.465	0.25	2.193	0.25	2.146	114.09	300.57	301.196	66.369	50.396	66.955	76.016	910.837	897.662	1158.381	1142.882
20160428:17:41:47	23.725	12.285	3.57	23.463	0.25	2.169	0.25	2.148	114.079	300.529	301.179	66.384	50.467	66.975	76.042	912.171	898.977	1160.078	1144.555
20160428:17:46:47	23.73	12.27	3.614	23.464	0.25	2.167	0.25	2.134	114.04	300.615	301.229	66.413	50.416	66.988	76.069	913.568	900.358	1161.854	1146.312
20160428:17:51:47	23.726	12.263	3.579	23.463	0.25	2.172	0.25	2.138	114.015	300.603	301.26	66.49	50.42	67.031	76.093	914.914	901.666	1163.565	1147.977
20160428:17:56:47	23.728	12.244	3.579	23.464	0.25	2.176	0.25	2.151	113.964	300.625	301.242	66.484	50.459	67.026	76.118	916.261	903.042	1165.278	1149.729
20160428:18:01:47	23.73	12.193	3.59	23.466	0.25	2.171	0.25	2.145	113.818	300.6	301.243	66.488	50.387	67.03	76.14	917.654	904.349	1167.048	1151.393
20160428:18:06:47	23.729	11.284	3.592	23.465	0.25	2.156	0.25	2.143	111.105	300.627	301.276	66.535	50.471	67.119	76.161	918.992	905.721	1168.75	1153.139
20160428:18:11:47	23.731	11.198	3.598	23.466	0.25	2.149	0.25	2.137	110.843	300.574	301.264	66.537	50.45	67.122	76.181	920.389	907.043	1170.526	1154.821
20160428:18:16:47	23.73	11.056	3.567	23.468	0.25	2.156	0.25	2.135	110.399	300.506	301.21	66.535	50.385	67.129	76.197	921.727	908.397	1172.228	1156.545
20160428:18:21:47	23.727	11.973	3.519	23.468	0.25	2.155	0.25	2.138	113.175	300.547	301.222	66.562	50.454	67.161	76.217	923.074	909.744	1173.941	1158.259
20160428:18:26:47	23.726	12.103	3.476	23.471	0.25	2.175	0.25	2.158	113.554	300.477	301.116	66.59	50.457	67.194	76.236	924.463	911.074	1175.706	1159.953
20160428:18:31:47	23.729	12.132	3.501	23.472	0.25	2.165	0.25	2.148	113.643	300.547	301.148	66.591	50.407	67.198	76.254	925.803	912.441	1177.409	1161.692
20160428:18:36:47	23.727	12.146	3.469	23.472	0.25	2.167	0.25	2.14	113.68	300.592	301.197	66.62	50.483	67.22	76.278	927.2	913.752	1179.185	1163.361
20160428:18:41:47	23.731	12.163	3.515	23.473	0.25	2.175	0.25	2.14	113.734	300.595	301.247	66.656	50.467	67.257	76.299	928.534	915.116	1180.881	1165.098
20160428:18:46:47	23.731	12.19	3.498	23.473	0.25	2.175	0.25	2.142	113.811	300.615	301.238	66.656	50.469	67.256	76.32	929.891	916.438	1182.607	1166.78
20160428:18:51:47	23.736	12.185	3.599	23.471	0.25	2.17	0.25	2.136	113.804	300.617	301.237	66.673	50.469	67.266	76.343	931.267	917.807	1184.357	1168.523
20160428:18:56:47	23.723	12.182	3.481	23.467	0.25	2.165	0.25	2.13	113.778	300.566	301.209	66.753	50.495	67.313	76.363	932.616	919.121	1186.072	1170.195
20160428:19:01:47	23.705	12.183	3.131	23.475	0.25	2.15	0.25	2.119	113.753	300.568	301.228	66.775	50.517	67.313	76.388	934.014	920.499	1187.85	1171.949
20160428:19:06:47	23.693	12.203	2.865	23.483	0.25	2.16	0.25	2.142	113.794	300.547	301.15	66.795	50.505	67.335	76.413	935.342	921.812	1189.539	1173.62
20160428:19:11:47	23.684	12.259	2.677	23.487	0.25	2.182	0.25	2.153	113.941	300.522	301.204	66.85	50.536	67.37	76.441	936.712	923.186	1191.28	1175.368
20160428:19:16:47	23.68	11.349	2.566	23.492	0.25	2.159	0.25	2.141	111.235	300.461	301.147	66.839	50.542	67.371	76.464	938.08	924.498	1193.019	1177.038
20160428:19:21:47	23.681	11.316	2.548	23.494	0.25	2.145	0.25	2.128	111.133	300.53	301.228	66.857	50.542	67.434	76.49	939.421	925.878	1194.722	1178.793
20160428:19:26:47	23.677	11.221	2.47	23.495	0.25	2.142	0.25	2.123	110.836	300.5	301.199	66.867	50.568	67.448	76.515	940.818	927.18	1196.498	1180.449
20160428:19:31:47	23.675	12.144	2.387	23.499	0.25	2.161	0.25	2.137	113.594	300.519	301.183	66.862	50.545	67.411	76.536	942.145	928.556	1198.183	1182.199
20160428:19:36:47	23.672	12.278	2.275	23.504	0.25	2.189	0.25	2.168	113.977	300.575	301.175	66.875	50.551	67.46	76.559	943.525	929.873	1199.937	1183.874
20160428:19:41:47	23.671	12.291	2.245	23.506	0.25	2.179	0.25	2.144	114.014	300.567	301.173	66.865	50.583	67.436	76.576	944.9	931.242	1201.683	1185.615
20160428:19:46:47	23.669	12.286	2.228	23.505	0.25	2.177	0.25	2.142	113.996	300.616	301.25	66.842	50.55	67.381	76.586	946.224	932.546	1203.365	1187.273
20160428:19:51:47	23.669	12.284	2.211	23.507	0.25	2.182	0.25	2.148	113.991	300.61	301.246	66.813	50.549	67.36	76.592	947.623	933.918	1205.141	1189.017
20160428:19:56:47	23.666	12.29	2.129	23.51	0.25	2.181	0.25	2.137	114.004	300.602	301.277	66.803	50.572	67.336	76.594	948.964	935.247	1206.844	1190.707
20160428:20:01:47	23.668	12.32	2.156	23.509	0.25	2.186	0.25	2.152	114.093	300.616	301.248	66.76	50.55	67.318	76.59	950.351	936.597	1208.606	1192.423
20160428:20:06:47	23.662	12.369	2.067	23.51	0.25	2.179	0.25	2.155	114.224	300.614	301.2	66.709	50.558	67.312	76.584	951.715	937.949	1210.337	1194.141
20160428:20:11:47	23.671	12.406	2.163	23.512	0.25	2.181	0.25	2.156	114.343	300.54	301.174	66.697	50.596	67.302	76.577	953.054	939.274	1212.037	1195.825
20160428:20:16:47	23.672	12.457	2.201	23.51	0.25	2.189	0.25	2.154	114.489	300.632	301.228	66.691	50.57	67.286	76.563	954.444	940.644	1213.802	1197.566
20160428:20:21:47	23.678	12.438	2.267	23.511	0.25	2.191	0.25	2.154	114.444	300.539	301.181	66.629	50.522	67.227	76.546	955.782	941.957	1215.5	1199.235
20160428:20:26:47	23.679	12.474	2.293	23.51	0.25	2.193	0.25	2.161	114.546	300.571	301.228	66.603	50.561	67.206	76.527	957.173	943.323	1217.265	1200.97
20160428:20:31:47	23.675	12.516	2.243	23.51	0.25	2.197	0.25	2.151	114.658	300.621	301.253	66.601	50.561	67.205	76.507	958.53	944.65	1218.987	1202.656
20160428:20:36:47	23.675	12.488	2.284	23.507	0.25	2.202	0.25	2.153	114.582	300.591	301.211	66.569	50.531	67.174	76.484	959.87	946.016	1220.689	1204.393
20160428:20:41:47	23.682	12.457	2.361	23.509	0.25	2.191	0.25	2.164	114.504	300.563	301.187	66.546	50.548	67.147	76.462	961.264	947.333	1222.457	1206.066
20160428:20:46:47	23.685	12.448	2.377	23.51	0.25	2.181	0.25	2.163	114.48	300.579	301.222	66.546	50.554	67.146	76.44	962.603	948.713	1224.157	1207.82
20160428:20:51:47	23.681	12.431	2.306	23.511	0.25	2.186	0.25	2.165	114.428	300.575	301.181	66.516	50.524	67.083	76.414	964	950.03	1225.93	1209.492
20160428:20:56:47	23.683	12.42	2.323	23.512	0.25	2.187	0.25	2.155	114.4	300.552	301.206	66.502	50.543	67.045	76.388	965.347	951.406	1227.639	1211.241
20160428:21:01:47	23.684	12.431	2.331	23.512	0.25	2.19	0.25	2.164	114.431	300.611	301.208	66.513	50.56	67.068	76.363	966.694	952.72	1229.348	1212.91
20160428:21:06:47	23.685	12.424	2.335	23.513	0.25	2.197	0.25	2.171	114.412	300.526	301.157	66.462	50.507	67.016	76.342	968.08	954.103	1231.107	1214.665
20160428:21:11:47	23.687	12.461	2.354	23.514	0.25	2.206	0.25	2.147	114.522	300.48	301.154	66.466	50.544	67.017	76.317	969.425	955.415	1232.813	1216.333
20160428:21:16:47	23.689	12.5	2.388	23.513	0.25	2.19	0.25	2.149	114.634	300.594	301.214	66.468	50.556	67.018	76.295	970.823	956.795	1234.587	1218.085
20160428:21:21:47	23.695	12.459	2.515	23.51	0.25	2.192	0.25	2.149	114.528	300.596	301.256	66.383	50.5	66.983	76.272	972.163	958.101	1236.287	1219.744
20160428:21:26:47	23.69	12.482	2.48	23.508	0.25	2.202	0.25	2.15	114.587	300.598	301.224	66.365	50.538	66.979	76.249	973.527	959.479	1238.019	1221.494
20160428:21:31:47	23.689	12.488	2.435	23.51	0.25	2.192	0.25	2.168	114.601	300.623	301.223	66.382	50.545	66.993	76.232	974.904	960.799	1239.765	1223.171
20160428:21:36:47	23.687	12.444	2.431	23.508	0.25	2.185	0.25	2.156	114.475	300.601	301.227	66.379	50.51	66.984	76.216	976.249	962.16	1241.472	1224.9
20160428:21:41:47	23.683	11.881	2.398	23.507	0.25	2.179	0.25	2.142	112.809	300.497	301.258	66.358	50.524	66.966	76.203	977.652	963.504	1243.252	1226.607
20160428:21:46:47	23.682	11.251	2.398	23.506	0.25	2.15	0.25	2.118	110.934	300.555	301.255	66.36	50.51	66.973	76.194	978.977	964.839	1244.933	1228.303
20160428:21:51:47	23.684	12.195	2.433	23.505	0.25	2.166	0.25	2.127	113.753	300.581	301.255	66.362	50.504	66.976	76.188	980.358	966.201	1246.685	1230.034
20160428:21:56:47	23.682	12.407	2.437	23.503	0.25	2.184	0.25	2.16	114.363	300.644	301.257	66.369	50.54	66.978	76.186	981.729	967.519	1248.426	1231.709
20160428:22:01:47	23.68	12.454	2.428	23.501	0.25	2.177	0.25	2.149	114.491	300.57	301.196	66.382	50.515	66.978	76.184	983.073	968.892	1250.131	1233.453
20160428:22:06:47	23.679	12.53	2.396	23.502	0.25	2.189	0.25	2.148	114.705	300.49	301.135	66.395	50.525	66.982	76.184	984.474	970.209	1251.909	1235.126
20160428:22:11:47	23.679	12.56	2.374	23.504	0.25	2.197	0.25	2.16	114.788	300.496	301.156	66.412	50.563	66.981	76.183	985.808	971.573	1253.602	1236.859
20160428:22:16:47	23.68	12.644	2.372	23.506	0.25	2.182	0.25	2.162	115.026	300.521	301.146	66.411	50.543	66.982	76.185	987.187	972.89	1255.352	1238.532
20160428:22:21:47	23.678	12.627	2.336	23.506	0.25	2.19	0.25	2.17	114.975	300.54	301.161	66.409	50.545	66.982	76.186	988.564	974.269	1257.1	1240.284
20160428:22:26:47	23.675	12.563	2.29	23.506	0.25	2.185	0.25	2.164	114.792	300.559	301.189	66.412	50.56	66.986	76.187	989.889	975.586	1258.781	1241.957
20160428:22:31:47	23.67	12.526	2.217	23.507	0.25	2.174	0.25	2.172	114.681	300.548	301.207	66.39	50.524	66.981	76.188	991.293	976.962	1260.563	1243.705
20160428:22:36:47	23.667	12.505	2.137	23.51	0.25	2.185	0.25	2.138	114.616	300.539	301.188	66.378	50.52	66.978	76.192	992.634	978.277	1262.265	1245.376
20160428:22:41:47	23.665	12.471	2.082	23.512	0.25	2.175	0.25	2.141	114.515	300.627	301.275	66.368	50.56	66.976	76.194	994.017	979.654	1264.019	1247.124
20160428:22:46:47	23.665	12.435	2.077	23.512	0.25	2.165	0.25	2.145	114.415	300.607	301.226	66.361	50.527	66.973	76.194	995.376	980.963	1265.743	1248.788
20160428:22:51:47	23.664	12.426	2.091	23.51	0.25	2.173	0.25	2.146	114.389	300.596	301.215	66.362	50.539	66.969	76.194	996.716	982.341	1267.443	1250.538
20160428:22:56:47	23.663	12.454	2.049	23.513	0.25	2.178	0.25	2.155	114.467	300.565	301.21	66.356	50.564	66.96	76.193	998.108	983.663	1269.209	1252.216
20160428:23:01:47	23.662	12.479	2.015	23.514	0.25	2.188	0.25	2.164	114.535	300.591	301.228	66.356	50.539	66.96	76.192	999.449	985.038	1270.909	1253.962
20160428:23:06:47	23.662	12.532	1.994	23.515	0.25	2.188	0.25	2.157	114.684	300.59	301.218	66.351	50.537	66.948	76.191	1000.843	986.339	1272.678	1255.615
20160428:23:11:47	23.663	12.627	1.999	23.516	0.25	2.173	0.25	2.157	114.954	300.574	301.234	66.338	50.58	66.931	76.189	1002.192	987.717	1274.389	1257.365
20160428:23:16:47	23.662	12.644	1.964	23.518	0.25	2.191	0.25	2.159	115	300.599	301.202	66.317	50.576	66.926	76.187	1003.538	989.039	1276.096	1259.043
20160428:23:21:47	23.661	12.664	1.955	23.517	0.25	2.175	0.25	2.147	115.054	300.557	301.154	66.308	50.56	66.921	76.184	1004.932	990.397	1277.863	1260.767
20160428:23:26:47	23.655	12.653	1.849	23.519	0.25	2.169	0.25	2.152	115.015	300.556	301.214	66.305	50.597	66.921	76.177	1006.268	991.741	1279.557	1262.474
20160428:23:31:47	23.657	12.64	1.873	23.519	0.25	2.178	0.25	2.151	114.982	300.581	301.184	66.303	50.617	66.914	76.169	1007.665	993.077	1281.33	1264.169
20160428:23:36:47	23.657	12.127	1.858	23.52	0.25	2.182	0.25	2.139	113.5	300.559	301.231	66.293	50.584	66.906	76.159	1009.002	994.441	1283.024	1265.9
20160428:23:41:47	23.654	11.584	1.839	23.519	0.25	2.164	0.25	2.137	111.907	300.48	301.17	66.253	50.573	66.865	76.148	1010.361	995.76	1284.748	1267.575
20160428:23:46:47	23.656	11.753	1.836	23.521	0.25	2.166	0.25	2.159	112.404	300.467	301.156	66.214	50.579	66.821	76.137	1011.74	997.134	1286.496	1269.32
20160428:23:51:47	23.659	11.495	1.867	23.522	0.25	2.162	0.25	2.138	111.643	300.513	301.25	66.195	50.595	66.811	76.123	1013.086	998.451	1288.202	1270.991
20160428:23:56:47	23.659	12.308	1.873	23.521	0.25	2.172	0.25	2.144	114.044	300.539	301.178	66.193	50.582	66.808	76.105	1014.488	999.815	1289.98	1272.722
20160429:00:01:47	23.668	12.342	2.023	23.519	0.25	2.178	0.25	2.143	114.156	300.629	301.187	66.186	50.605	66.794	76.087	1015.807	1001.135	1291.652	1274.397
20160429:00:06:47	23.662	12.349	1.952	23.519	0.25	2.172	0.25	2.139	114.167	300.674	301.218	66.099	50.593	66.71	76.07	1017.188	1002.509	1293.402	1276.141
20160429:00:11:47	23.662	12.375	1.94	23.519	0.25	2.173	0.25	2.146	114.241	300.666	301.173	66.072	50.586	66.681	76.048	1018.564	1003.826	1295.146	1277.812
20160429:00:16:47	23.66	12.413	1.892	23.521	0.25	2.171	0.25	2.138	114.347	300.644	301.192	66.069	50.584	66.675	76.027	1019.895	1005.202	1296.833	1279.558
20160429:00:21:47	23.659	12.39	1.855	23.522	0.25	2.175	0.25	2.156	114.279	300.557	301.129	66.024	50.568	66.633	76.003	1021.292	1006.518	1298.604	1281.227
20160429:00:26:47	23.658	12.422	1.837	23.523	0.25	2.185	0.25	2.145	114.369	300.588	301.194	66.013	50.591	66.622	75.981	1022.631	1007.893	1300.3	1282.972
20160429:00:31:47	23.658	12.447	1.852	23.522	0.25	2.181	0.25	2.145	114.439	300.624	301.173	66.004	50.61	66.611	75.961	1024.016	1009.206	1302.056	1284.637
20160429:00:36:47	23.66	12.432	1.92	23.519	0.25	2.18	0.25	2.145	114.4	300.655	301.17	65.953	50.563	66.566	75.937	1025.374	1010.585	1303.776	1286.387
20160429:00:41:47	23.671	12.46	2.067	23.519	0.25	2.177	0.25	2.141	114.496	300.714	301.2	65.937	50.565	66.551	75.916	1026.709	1011.892	1305.469	1288.045
20160429:00:46:47	23.667	12.46	2.004	23.519	0.25	2.187	0.25	2.148	114.488	300.72	301.234	65.933	50.591	66.541	75.89	1028.101	1013.265	1307.231	1289.788
20160429:00:51:47	23.661	12.455	1.967	23.516	0.25	2.173	0.25	2.157	114.466	300.645	301.163	65.884	50.568	66.491	75.867	1029.433	1014.584	1308.92	1291.461
20160429:00:56:47	23.664	12.473	1.984	23.518	0.25	2.183	0.25	2.167	114.523	300.637	301.139	65.869	50.561	66.481	75.841	1030.834	1015.962	1310.694	1293.209
20160429:01:01:47	23.665	12.504	1.99	23.519	0.25	2.197	0.25	2.157	114.611	300.662	301.181	65.841	50.566	66.456	75.815	1032.178	1017.266	1312.398	1294.863
20160429:01:06:47	23.663	12.48	1.989	23.517	0.25	2.206	0.25	2.162	114.54	300.648	301.199	65.763	50.567	66.383	75.786	1033.532	1018.643	1314.113	1296.609
20160429:01:11:47	23.664	12.504	2.033	23.515	0.25	2.191	0.25	2.152	114.611	300.631	301.172	65.765	50.566	66.383	75.758	1034.915	1019.956	1315.865	1298.274
20160429:01:16:47	23.664	12.521	2.026	23.515	0.25	2.182	0.25	2.158	114.657	300.628	301.21	65.707	50.555	66.324	75.728	1036.258	1021.324	1317.567	1300.009
20160429:01:21:47	23.666	12.522	2.069	23.514	0.25	2.187	0.25	2.162	114.663	300.66	301.24	65.713	50.573	66.322	75.696	1037.657	1022.657	1319.339	1301.701
20160429:01:26:47	23.667	12.552	2.115	23.512	0.25	2.18	0.25	2.154	114.75	300.62	301.186	65.685	50.547	66.291	75.668	1038.981	1024.003	1321.017	1303.408
20160429:01:31:47	23.664	12.524	2.071	23.511	0.25	2.179	0.25	2.149	114.664	300.637	301.178	65.677	50.547	66.287	75.639	1040.364	1025.36	1322.769	1305.13
20160429:01:36:47	23.666	12.473	2.118	23.51	0.25	2.182	0.25	2.165	114.524	300.598	301.136	65.663	50.549	66.274	75.607	1041.742	1026.685	1324.515	1306.81
20160429:01:41:47	23.662	12.435	2.033	23.513	0.25	2.182	0.25	2.16	114.41	300.594	301.188	65.631	50.557	66.244	75.579	1043.077	1028.053	1326.206	1308.545
20160429:01:46:47	23.663	12.454	2.039	23.513	0.25	2.189	0.25	2.16	114.465	300.64	301.28	65.631	50.558	66.243	75.551	1044.473	1029.369	1327.974	1310.214
20160429:01:51:47	23.659	12.17	2.019	23.51	0.25	2.182	0.25	2.151	113.63	300.615	301.204	65.586	50.529	66.197	75.526	1045.812	1030.739	1329.67	1311.951
20160429:01:56:47	23.656	11.257	2.024	23.507	0.25	2.159	0.25	2.147	110.917	300.578	301.233	65.577	50.554	66.187	75.497	1047.192	1032.058	1331.419	1313.624
20160429:02:01:48	23.658	11.741	2.059	23.507	0.25	2.17	0.25	2.141	112.371	300.607	301.261	65.554	50.547	66.139	75.471	1048.552	1033.424	1333.143	1315.357
20160429:02:06:48	23.663	12.237	2.13	23.506	0.25	2.171	0.25	2.145	113.845	300.641	301.239	65.522	50.512	66.079	75.444	1049.891	1034.743	1334.839	1317.03
20160429:02:11:48	23.658	12.35	2.103	23.503	0.25	2.172	0.25	2.145	114.162	300.636	301.225	65.518	50.551	66.077	75.415	1051.283	1036.12	1336.602	1318.776
20160429:02:16:48	23.659	12.366	2.083	23.506	0.25	2.173	0.25	2.159	114.211	300.563	301.194	65.425	50.534	66.028	75.39	1052.619	1037.436	1338.294	1320.445
20160429:02:21:48	23.656	12.411	2.053	23.505	0.25	2.178	0.25	2.153	114.333	300.575	301.208	65.431	50.563	66.026	75.364	1054.014	1038.813	1340.061	1322.192
20160429:02:26:48	23.656	12.382	2.049	23.505	0.25	2.189	0.25	2.143	114.251	300.646	301.248	65.42	50.546	66.008	75.336	1055.354	1040.129	1341.759	1323.861
20160429:02:31:48	23.655	12.333	2.011	23.507	0.25	2.188	0.25	2.15	114.11	300.62	301.287	65.377	50.547	65.973	75.312	1056.708	1041.505	1343.474	1325.605
20160429:02:36:48	23.656	12.311	2.061	23.505	0.25	2.18	0.25	2.143	114.05	300.62	301.298	65.377	50.562	65.974	75.288	1058.086	1042.82	1345.219	1327.273
20160429:02:41:48	23.654	12.322	2.008	23.506	0.25	2.184	0.25	2.162	114.077	300.613	301.246	65.357	50.543	65.945	75.265	1059.429	1044.202	1346.92	1329.024

Time: day:hh:mm:ss	Stack Pressure: in-Hg	Sat% H2O: Percent	Static: in-H2O	Barometric: in-Hg	Flowmeter1: l/min	Vacuum1: in-Hg	Flowmeter2: l/min	Vacuum2: in-Hg	Stack Temp: degF	Sorbent Temp: degF	Probe Temp: degF	DGM#1 Temp: degF	Condenser Temp: degF	DGM#2 Temp: degF	DAQ Temp: degF	DGM1*: liters STP	DGM2*: liters STP	DGM1: liters nominal	DGM2: liters nominal
20160429:06:26:48	23.64	12.618	1.633	23.52	0.25	2.191	0.25	2.164	114.893	300.67	301.328	64.739	50.565	65.349	74.607	1120.795	1104.663	1424.559	1405.605
20160429:06:31:48	23.645	12.538	1.675	23.522	0.25	2.185	0.25	2.161	114.677	300.641	301.275	64.729	50.558	65.339	74.592	1122.141	1106.027	1426.261	1407.331
20160429:06:36:48	23.643	12.465	1.626	23.523	0.25	2.19	0.25	2.153	114.466	300.558	301.213	64.684	50.517	65.296	74.577	1123.53	1107.347	1428.017	1409.002
20160429:06:41:48	23.647	12.418	1.664	23.525	0.25	2.192	0.25	2.165	114.34	300.568	301.214	64.682	50.529	65.29	74.563	1124.874	1108.721	1429.715	1410.741
20160429:06:46:48	23.646	12.368	1.656	23.525	0.25	2.184	0.25	2.149	114.199	300.612	301.238	64.682	50.542	65.29	74.545	1126.27	1110.034	1431.48	1412.402
20160429:06:51:48	23.648	12.34	1.65	23.527	0.25	2.187	0.25	2.145	114.119	300.575	301.239	64.667	50.538	65.27	74.526	1127.598	1111.406	1433.157	1414.137
20160429:06:56:48	23.65	12.304	1.658	23.528	0.25	2.19	0.25	2.159	114.019	300.499	301.167	64.627	50.5	65.227	74.507	1128.975	1112.73	1434.898	1415.812
20160429:07:01:48	23.653	12.263	1.716	23.527	0.25	2.177	0.25	2.143	113.908	300.604	301.271	64.626	50.506	65.23	74.49	1130.359	1114.095	1436.646	1417.539
20160429:07:06:48	23.653	12.241	1.734	23.526	0.25	2.177	0.25	2.145	113.843	300.606	301.256	64.628	50.514	65.234	74.474	1131.688	1115.419	1438.326	1419.214
20160429:07:11:48	23.652	12.23	1.722	23.525	0.25	2.194	0.25	2.152	113.811	300.599	301.235	64.62	50.504	65.214	74.459	1133.089	1116.788	1440.096	1420.945
20160429:07:16:48	23.655	12.04	1.721	23.528	0.25	2.174	0.25	2.14	113.252	300.593	301.188	64.594	50.473	65.148	74.446	1134.426	1118.104	1441.785	1422.611
20160429:07:21:48	23.657	11.208	1.735	23.53	0.25	2.164	0.25	2.131	110.765	300.553	301.226	64.604	50.493	65.143	74.435	1135.817	1119.481	1443.543	1424.352
20160429:07:26:48	23.658	11.709	1.752	23.529	0.25	2.162	0.25	2.135	112.276	300.587	301.28	64.617	50.492	65.172	74.426	1137.165	1120.797	1445.246	1426.017
20160429:07:31:48	23.663	11.832	1.833	23.528	0.25	2.177	0.25	2.149	112.653	300.59	301.224	64.623	50.485	65.199	74.418	1138.512	1122.173	1446.948	1427.758
20160429:07:36:48	23.665	11.089	1.904	23.525	0.25	2.162	0.25	2.137	110.407	300.495	301.206	64.624	50.489	65.215	74.413	1139.895	1123.49	1448.696	1429.423
20160429:07:41:48	23.669	11.741	1.951	23.526	0.25	2.161	0.25	2.13	112.391	300.552	301.196	64.624	50.498	65.22	74.409	1141.244	1124.864	1450.4	1431.162
20160429:07:46:48	23.679	12.04	2.081	23.526	0.25	2.179	0.25	2.144	113.3	300.565	301.213	64.63	50.49	65.232	74.405	1142.648	1126.179	1452.174	1432.825
20160429:07:51:48	23.677	12.067	2.057	23.526	0.25	2.179	0.25	2.141	113.375	300.618	301.25	64.64	50.49	65.237	74.402	1143.968	1127.555	1453.843	1434.566
20160429:07:56:48	23.679	12.095	2.07	23.527	0.25	2.187	0.25	2.142	113.461	300.62	301.249	64.661	50.501	65.243	74.4	1145.351	1128.868	1455.591	1436.227
20160429:08:01:48	23.685	12.127	2.093	23.531	0.25	2.18	0.25	2.156	113.563	300.615	301.287	64.675	50.496	65.26	74.402	1146.726	1130.247	1457.328	1437.972
20160429:08:06:48	23.684	12.167	2.103	23.53	0.25	2.176	0.25	2.149	113.678	300.626	301.285	64.68	50.5	65.279	74.408	1148.058	1131.556	1459.011	1439.628
20160429:08:11:48	23.683	12.191	2.099	23.529	0.25	2.181	0.25	2.146	113.745	300.625	301.226	64.69	50.487	65.292	74.414	1149.448	1132.937	1460.767	1441.374
20160429:08:16:48	23.683	12.203	2.063	23.531	0.25	2.181	0.25	2.153	113.78	300.637	301.259	64.708	50.488	65.296	74.427	1150.784	1134.246	1462.456	1443.03
20160429:08:21:48	23.685	12.194	2.038	23.535	0.25	2.175	0.25	2.155	113.756	300.535	301.205	64.73	50.483	65.305	74.441	1152.178	1135.622	1464.217	1444.771
20160429:08:26:48	23.685	12.201	2.033	23.535	0.25	2.182	0.25	2.151	113.774	300.607	301.265	64.774	50.509	65.353	74.458	1153.516	1136.936	1465.907	1446.432
20160429:08:31:48	23.685	11.681	2.057	23.534	0.25	2.169	0.25	2.134	112.228	300.65	301.292	64.793	50.517	65.385	74.477	1154.879	1138.312	1467.63	1448.173
20160429:08:36:48	23.687	11.195	2.08	23.534	0.25	2.151	0.25	2.126	110.767	300.615	301.277	64.799	50.494	65.391	74.499	1156.254	1139.624	1469.367	1449.833
20160429:08:41:48	23.685	12.07	2.039	23.535	0.25	2.172	0.25	2.126	113.397	300.615	301.216	64.877	50.518	65.461	74.523	1157.602	1140.998	1471.07	1451.571
20160429:08:46:48	23.681	12.188	1.978	23.536	0.25	2.173	0.25	2.136	113.734	300.662	301.27	64.927	50.518	65.508	74.549	1159	1142.301	1472.837	1453.22
20160429:08:51:48	23.684	12.237	1.998	23.537	0.25	2.175	0.25	2.141	113.877	300.579	301.235	64.931	50.497	65.51	74.573	1160.337	1143.679	1474.528	1454.964
20160429:08:56:48	23.685	12.276	2.023	23.536	0.25	2.18	0.25	2.164	113.991	300.619	301.238	64.982	50.546	65.567	74.599	1161.718	1144.991	1476.272	1456.624
20160429:09:01:48	23.682	12.28	1.989	23.536	0.25	2.184	0.25	2.15	113.998	300.62	301.239	64.994	50.517	65.573	74.625	1163.077	1146.361	1477.991	1458.357
20160429:09:06:48	23.692	12.315	2.126	23.536	0.25	2.176	0.25	2.155	114.114	300.612	301.297	65.019	50.515	65.598	74.651	1164.415	1147.683	1479.681	1460.03
20160429:09:11:48	23.691	12.32	2.077	23.538	0.25	2.173	0.25	2.157	114.127	300.665	301.332	65.047	50.529	65.624	74.678	1165.804	1149.042	1481.437	1461.75
20160429:09:16:48	23.693	12.321	2.129	23.537	0.25	2.175	0.25	2.146	114.132	300.65	301.24	65.046	50.442	65.622	74.705	1167.144	1150.382	1483.131	1463.445
20160429:09:21:48	23.693	11.948	2.163	23.534	0.25	2.165	0.25	2.134	113.027	300.614	301.262	65.086	50.481	65.669	74.732	1168.534	1151.726	1484.889	1465.147
20160429:09:26:48	23.694	11.263	2.188	23.533	0.25	2.135	0.25	2.108	110.988	300.6	301.318	65.1	50.499	65.68	74.759	1169.862	1153.076	1486.569	1466.855
20160429:09:31:48	23.694	12.041	2.221	23.531	0.25	2.154	0.25	2.136	113.312	300.595	301.225	65.121	50.474	65.695	74.786	1171.243	1154.406	1488.315	1468.539
20160429:09:36:48	23.696	12.37	2.249	23.53	0.25	2.165	0.25	2.156	114.275	300.629	301.26	65.17	50.455	65.726	74.813	1172.621	1155.761	1490.057	1470.256
20160429:09:41:48	23.709	12.409	2.438	23.53	0.25	2.174	0.25	2.14	114.407	300.637	301.245	65.157	50.427	65.726	74.84	1173.948	1157.086	1491.735	1471.932
20160429:09:46:48	23.715	12.418	2.529	23.529	0.25	2.178	0.25	2.135	114.44	300.701	301.329	65.219	50.472	65.775	74.863	1175.34	1158.451	1493.496	1473.662
20160429:09:51:48	23.711	12.39	2.436	23.532	0.25	2.169	0.25	2.134	114.355	300.688	301.349	65.246	50.433	65.805	74.887	1176.677	1159.765	1495.187	1475.325
20160429:09:56:48	23.709	12.387	2.449	23.529	0.25	2.16	0.25	2.126	114.344	300.639	301.241	65.25	50.354	65.821	74.912	1178.069	1161.135	1496.948	1477.06
20160429:10:01:48	23.712	12.354	2.493	23.529	0.25	2.169	0.25	2.139	114.255	300.664	301.297	65.299	50.407	65.883	74.935	1179.407	1162.446	1498.641	1478.72
20160429:10:06:48	23.718	12.315	2.577	23.528	0.25	2.17	0.25	2.139	114.151	300.671	301.288	65.309	50.427	65.895	74.957	1180.765	1163.817	1500.359	1480.457
20160429:10:11:48	23.726	12.301	2.707	23.527	0.25	2.168	0.25	2.134	114.124	300.599	301.245	65.313	50.359	65.9	74.98	1182.138	1165.127	1502.096	1482.117
20160429:10:16:48	23.733	12.29	2.822	23.525	0.25	2.17	0.25	2.13	114.102	300.671	301.293	65.367	50.386	65.946	75.003	1183.475	1166.489	1503.789	1483.842
20160429:10:21:48	23.734	12.259	2.829	23.526	0.25	2.163	0.25	2.142	114.015	300.67	301.295	65.382	50.391	65.96	75.024	1184.867	1167.808	1505.55	1485.513
20160429:10:26:48	23.734	12.276	2.823	23.526	0.25	2.166	0.25	2.141	114.066	300.661	301.29	65.396	50.359	65.965	75.046	1186.2	1169.169	1507.237	1487.237
20160429:10:31:48	23.742	12.275	3.05	23.518	0.25	2.162	0.25	2.13	114.073	300.621	301.223	65.485	50.363	66.009	75.069	1187.584	1170.492	1508.989	1488.914
20160429:10:36:48	23.75	12.227	3.164	23.518	0.25	2.168	0.25	2.144	113.948	300.623	301.221	65.518	50.384	66.025	75.093	1188.932	1171.855	1510.696	1490.641
20160429:10:41:48	23.754	12.193	3.272	23.513	0.25	2.17	0.25	2.113	113.856	300.597	301.191	65.522	50.343	66.038	75.107	1190.273	1173.167	1512.394	1492.305
20160429:10:46:48	23.754	12.147	3.284	23.513	0.25	2.179	0.25	2.128	113.724	300.636	301.216	65.56	50.314	66.106	75.127	1191.656	1174.534	1514.146	1494.038
20160429:10:51:48	23.748	11.763	3.181	23.514	0.25	2.16	0.25	2.129	112.561	300.601	301.199	65.616	50.373	66.184	75.153	1192.997	1175.843	1515.844	1495.697
20160429:10:56:48	23.749	10.943	3.105	23.521	0.25	2.137	0.25	2.127	110.07	300.532	301.108	65.64	50.342	66.204	75.186	1194.393	1177.216	1517.613	1497.438
20160429:11:01:48	23.742	11.623	2.96	23.525	0.25	2.15	0.25	2.13	112.145	300.605	301.196	65.691	50.347	66.272	75.222	1195.711	1178.525	1519.281	1499.098
20160429:11:06:48	23.739	11.933	2.837	23.531	0.25	2.163	0.25	2.143	113.075	300.608	301.151	65.742	50.389	66.314	75.263	1197.09	1179.897	1521.028	1500.836
20160429:11:11:48	23.737	11.952	2.878	23.526	0.25	2.164	0.25	2.125	113.13	300.527	301.092	65.8	50.354	66.345	75.304	1198.456	1181.206	1522.757	1502.496
20160429:11:16:48	23.737	12	2.899	23.524	0.25	2.156	0.25	2.141	113.271	300.577	301.135	65.871	50.375	66.44	75.348	1199.785	1182.576	1524.441	1504.233
20160429:11:21:48	23.742	11.993	2.964	23.524	0.25	2.164	0.25	2.153	113.257	300.618	301.175	65.9	50.395	66.468	75.393	1201.173	1183.886	1526.2	1505.895
20160429:11:26:48	23.75	12.042	3.163	23.518	0.25	2.17	0.25	2.153	113.412	300.644	301.216	65.933	50.363	66.511	75.434	1202.506	1185.255	1527.889	1507.632
20160429:11:31:48	23.757	12.02	3.267	23.517	0.25	2.159	0.25	2.124	113.359	300.576	301.205	65.964	50.366	66.543	75.476	1203.899	1186.565	1529.654	1509.293
20160429:11:36:48	23.754	11.972	3.19	23.52	0.25	2.159	0.25	2.129	113.214	300.506	301.134	65.981	50.38	66.562	75.516	1205.224	1187.94	1531.333	1511.038
20160429:11:41:48	23.755	11.929	3.104	23.527	0.25	2.18	0.25	2.137	113.089	300.499	301.143	66.029	50.361	66.615	75.556	1206.591	1189.247	1533.065	1512.695
20160429:11:46:48	23.756	11.898	3.132	23.525	0.25	2.159	0.25	2.113	112.998	300.497	301.122	66.048	50.355	66.627	75.596	1207.96	1190.622	1534.8	1514.44
20160429:11:51:48	23.755	11.878	3.186	23.521	0.25	2.157	0.25	2.115	112.937	300.525	301.174	66.088	50.385	66.662	75.64	1209.298	1191.924	1536.496	1516.092
20160429:11:56:48	23.741	11.836	2.926	23.526	0.25	2.162	0.25	2.112	112.794	300.517	301.175	66.155	50.369	66.715	75.677	1210.692	1193.303	1538.263	1517.842
20160429:12:01:48	23.736	11.248	2.845	23.527	0.25	2.152	0.25	2.125	110.973	300.51	301.173	66.196	50.393	66.737	75.716	1212.024	1194.606	1539.95	1519.494
20160429:12:06:48	23.724	10.752	2.717	23.524	0.25	2.135	0.25	2.109	109.424	300.514	301.219	66.238	50.439	66.797	75.752	1213.405	1195.974	1541.702	1521.231
20160429:12:11:48	23.723	11.59	2.713	23.524	0.25	2.16	0.25	2.118	112.029	300.545	301.177	66.249	50.391	66.813	75.789	1214.755	1197.285	1543.413	1522.895
20160429:12:16:48	23.723	11.766	2.798	23.517	0.25	2.169	0.25	2.123	112.559	300.619	301.228	66.293	50.493	66.863	75.824	1216.093	1198.659	1545.109	1524.639
20160429:12:21:48	23.724	11.813	2.852	23.514	0.25	2.166	0.25	2.133	112.7	300.597	301.219	66.273	50.441	66.861	75.858	1217.479	1199.969	1546.867	1526.303
20160429:12:26:48	23.731	11.824	2.941	23.515	0.25	2.171	0.25	2.134	112.741	300.634	301.307	66.306	50.466	66.903	75.889	1218.813	1201.34	1548.559	1528.043
20160429:12:31:48	23.743	11.848	3.153	23.511	0.25	2.166	0.25	2.123	112.831	300.619	301.286	66.305	50.451	66.889	75.92	1220.209	1202.643	1550.33	1529.697
20160429:12:36:48	23.752	11.864	3.316	23.508	0.25	2.16	0.25	2.134	112.89	300.618	301.237	66.329	50.439	66.902	75.946	1221.538	1204.015	1552.017	1531.44
20160429:12:41:48	23.755	11.878	3.427	23.503	0.25	2.168	0.25	2.131	112.937	300.592	301.193	66.35	50.394	66.925	75.972	1222.912	1205.333	1553.759	1533.115
20160429:12:46:48	23.77	11.88	3.636	23.503	0.25	2.168	0.25	2.12	112.967	300.528	301.174	66.346	50.4	66.923	75.995	1224.285	1206.688	1555.502	1534.836
20160429:12:51:48	23.774	11.87	3.647	23.506	0.25	2.165	0.25	2.12	112.941	300.502	301.185	66.42	50.399	66.966	76.02	1225.621	1208.023	1557.198	1536.532
20160429:12:56:48	23.777	11.875	3.723	23.504	0.25	2.152	0.25	2.125	112.962	300.54	301.17	66.454	50.38	66.98	76.044	1227.013	1209.363	1558.965	1538.235
20160429:13:01:48	23.776	11.849	3.691	23.504	0.25	2.171	0.25	2.14	112.888	300.559	301.214	66.478	50.379	66.995	76.067	1228.347	1210.71	1560.657	1539.945
20160429:13:06:48	23.776	11.889	3.691	23.505	0.25	2.165	0.25	2.127	113.003	300.558	301.202	66.529	50.376	67.084	76.09	1229.725	1212.039	1562.407	1541.635
20160429:13:11:48	23.784	11.886	3.824	23.503	0.25	2.17	0.25	2.129	113.005	300.567	301.155	66.536	50.374	67.124	76.116	1231.081	1213.399	1564.128	1543.363
20160429:13:16:48	23.783	11.864	3.856	23.499	0.25	2.16	0.25	2.134	112.938	300.53	301.149	66.575	50.353	67.157	76.143	1232.412	1214.712	1565.819	1545.032
20160429:13:21:48	23.782	11.829	3.894	23.496	0.25	2.161	0.25	2.135	112.831	300.591	301.238	66.636	50.348	67.204	76.173	1233.803	1216.079	1567.585	1546.771
20160429:13:26:48	23.778	11.794	3.856	23.495	0.25	2.155	0.25	2.124	112.723	300.57	301.169	66.649	50.366	67.222	76.201	1235.131	1217.387	1569.272	1548.434
20160429:13:31:48	23.779	11.772	3.938	23.489	0.25	2.137	0.25	2.124	112.66	300.517	301.15	66.708	50.368	67.294	76.238	1236.529	1218.748	1571.048	1550.165
20160429:13:36:48	23.76	11.793	3.567	23.498	0.25	2.142	0.25	2.108	112.694	300.564	301.204	66.8	50.431	67.335	76.277	1237.854	1220.067	1572.731	1551.842
20160429:13:41:48	23.751	11.707	3.335	23.506	0.25	2.16	0.25	2.119	112.416	300.519	301.179	66.864	50.406	67.375	76.318	1239.213	1221.425	1574.457	1553.57
20160429:13:46:48	23.749	11.558	3.309	23.505	0.25	2.141	0.25	2.115	111.954	300.536	301.156	66.907	50.463	67.466	76.361	1240.583	1222.741	1576.198	1555.242
20160429:13:51:48	23.746	11.363	3.271	23.505	0.25	2.156	0.25	2.118	111.346	300.518	301.183	66.941	50.488	67.519	76.408	1241.921	1224.104	1577.898	1556.976
20160429:13:56:48	23.737	10.789	3.212	23.501	0.25	2.131	0.25	2.094	109.562	300.508	301.214	66.979	50.449	67.555	76.458	1243.31	1225.41	1579.663	1558.637
20160429:14:01:48	23.738	11.591	3.311	23.494	0.25	2.133	0.25	2.088	112.048	300.508	301.192	67.03	50.521	67.605	76.507	1244.645	1226.782	1581.359	1560.383
20160429:14:06:48	23.749	11.824	3.476	23.494	0.25	2.151	0.25	2.115	112.769	300.555	301.223	67.102	50.49	67.636	76.558	1246.018	1228.094	1583.106	1562.053
20160429:14:11:48	23.763	11.835	3.711	23.49	0.25	2.149	0.25	2.109	112.822	300.482	301.136	67.158	50.508	67.683	76.609	1247.374	1229.464	1584.83	1563.797
20160429:14:16:48	23.765	11.858	3.77	23.488	0.25	2.16	0.25	2.115	112.893	300.529	301.163	67.202	50.499	67.764	76.661	1248.703	1230.774	1586.52	1565.464
20160429:14:21:48	23.772	11.91	3.917	23.484	0.25	2.16	0.25	2.127	113.057	300.573	301.192	67.25	50.49	67.817	76.715	1250.095	1232.143	1588.291	1567.209
20160429:14:26:48	23.779	11.904	4.055	23.481	0.25	2.148	0.25	2.14	113.051	300.523	301.176	67.285	50.499	67.852	76.764	1251.423	1233.452	1589.981	1568.876
20160429:14:31:48	23.785	11.891	4.149	23.48	0.25	2.162	0.25	2.131	113.019	300.509	301.138	67.317	50.429	67.885	76.817	1252.816	1234.824	1591.754	1570.624
20160429:14:36:48	23.787	11.895	4.195	23.479	0.25	2.157	0.25	2.117	113.035	300.55	301.176	67.362	50.458	67.926	76.869	1254.15	1236.127	1593.452	1572.284
20160429:14:41:48	23.779	11.881	4.107	23.477	0.25	2.142	0.25	2.12	112.983	300.594	301.191	67.471	50.452	68.029	76.919	1255.496	1237.496	1595.165	1574.028
20160429:14:46:48	23.78	11.856	4.19	23.472	0.25	2.143	0.25	2.114	112.911	300.53	301.169	67.516	50.464	68.075	76.97	1256.877	1238.812	1596.924	1575.707
20160429:14:51:48	23.776	11.83	4.127	23.473	0.25	2.138	0.25	2.114	112.828	300.553	301.168	67.558	50.474	68.117	77.021	1258.213	1240.177	1598.626	1577.447
20160429:14:56:48	23.767	11.834	4.005	23.472	0.25	2.14	0.25	2.116	112.824	300.53	301.163	67.595	50.428	68.156	77.073	1259.606	1241.475	1600.4	1579.102
20160429:15:01:48	23.771	11.831	3.996	23.477	0.25	2.155	0.25	2.124	112.821	300.547	301.15	67.651	50.49	68.207	77.127	1260.928	1242.843	1602.083	1580.846
20160429:15:06:48	23.776	11.856	4.127	23.473	0.25	2.143	0.25	2.115	112.905	300.506	301.168	67.745	50.444	68.257	77.184	1262.298	1244.159	1603.83	1582.524
20160429:15:11:48	23.778	11.88	4.171	23.472	0.25	2.145	0.25	2.116	112.979	300.575	301.206	67.803	50.482	68.347	77.243	1263.666	1245.509	1605.572	1584.246
20160429:15:16:48	23.767	11.852	3.998	23.474	0.25	2.142	0.25	2.113	112.878	300.517	301.163	67.84	50.438	68.399	77.296	1265.002	1246.847	1607.274	1585.953
20160429:15:21:48	23.771	11.868	3.971	23.479	0.25	2.146	0.25	2.125	112.93	300.5	301.138	67.882	50.491	68.442	77.349	1266.39	1248.176	1609.043	1587.648
20160429:15:26:48	23.772	11.85	4.062	23.473	0.25	2.136	0.25	2.115	112.88	300.52	301.172	67.932	50.44	68.492	77.404	1267.719	1249.532	1610.737	1589.378
20160429:15:31:48	23.768	11.846	4.005	23.474	0.25	2.143	0.25	2.104	112.861	300.587	301.234	68.039	50.505	68.547	77.457	1269.092	1250.843	1612.487	1591.051
20160429:15:36:48	23.765	11.829	4.005	23.47	0.25	2.154	0.25	2.112	112.807	300.524	301.19	68.088	50.497	68.637	77.512	1270.456	1252.211	1614.226	1592.797
20160429:15:41:48	23.753	11.841	3.86	23.469	0.25	2.147	0.25	2.116	112.825	300.472	301.158	68.123	50.524	68.683	77.565	1271.777	1253.514	1615.911	1594.461
20160429:15:46:48	23.755	11.46	3.906	23.467	0.25	2.133	0.25	2.122	111.657	300.495	301.195	68.169	50.519	68.73	77.621	1273.167	1254.873	1617.683	1596.195
20160429:15:51:48	23.761	10.691	4.015	23.465	0.25	2.11	0.25	2.08	109.28	300.505	301.191	68.211	50.532	68.772	77.677	1274.5	1256.189	1619.383	1597.876
20160429:15:56:48	23.757	11.341	3.937	23.467	0.25	2.123	0.25	2.095	111.311	300.486	301.156	68.262	50.54	68.819	77.731	1275.882	1257.551	1621.146	1599.615
20160429:16:01:48	23.766	11.633	4.065	23.467	0.25	2.142	0.25	2.112	112.222	300.532	301.164	68.331	50.541	68.855	77.782	1277.23	1258.862	1622.867	1601.289
20160429:16:06:48	23.772	11.681	4.162	23.466	0.25	2.143	0.25	2.105	112.375	300.519	301.175	68.374	50.531	68.901	77.832	1278.561	1260.229	1624.565	1603.036
20160429:16:11:48	23.774	11.694	4.119	23.471	0.25	2.151	0.25	2.117	112.418	300.567	301.215	68.408	50.515	68.947	77.884	1279.95	1261.538	1626.337	1604.707
20160429:16:16:48	23.777	11.733	4.2	23.468	0.25	2.152	0.25	2.113	112.54	300.584	301.224	68.449	50.538	69.011	77.934

Time: day:hh:mm:ss	Stack Pressure: in-Hg	Sat% H2O: Percent	Static: in-H2O	Barometric: in-Hg	Flowmeter1: l/min	Vacuum1: in-Hg	Flowmeter2: l/min	Vacuum2: in-Hg	Stack Temp: degF	Sorbent Temp: degF	Probe Temp: degF	DGM#1 Temp: degF	Condenser Temp: degF	DGM#2 Temp: degF	DAQ Temp: degF	DGM1*: liters STP	DGM2*: liters STP	DGM1: liters nominal	DGM2: liters nominal
20160429:20:06:48	23.722	12.269	2.787	23.517	0.25	2.181	0.25	2.137	114.028	300.558	301.217	70.011	50.671	70.62	79.801	1343.873	1324.525	1707.969	1685.229
20160429:20:11:48	23.722	12.339	2.771	23.518	0.25	2.179	0.25	2.15	114.226	300.624	301.257	70.032	50.661	70.638	79.808	1345.25	1325.899	1709.728	1686.987
20160429:20:16:48	23.721	12.389	2.727	23.52	0.25	2.185	0.25	2.153	114.366	300.69	301.334	70.054	50.714	70.644	79.813	1346.596	1327.212	1711.446	1688.665
20160429:20:21:48	23.716	12.386	2.671	23.52	0.25	2.18	0.25	2.158	114.354	300.709	301.315	70.036	50.679	70.626	79.814	1347.994	1328.59	1713.231	1690.427
20160429:20:26:48	23.714	12.375	2.645	23.52	0.25	2.179	0.25	2.168	114.318	300.671	301.312	70.012	50.698	70.608	79.812	1349.34	1329.903	1714.95	1692.105
20160429:20:31:48	23.71	12.348	2.584	23.52	0.25	2.18	0.25	2.146	114.233	300.634	301.24	69.973	50.652	70.549	79.807	1350.692	1331.275	1716.676	1693.859
20160429:20:36:48	23.708	12.326	2.568	23.519	0.25	2.186	0.25	2.15	114.171	300.6	301.211	69.949	50.661	70.506	79.802	1352.087	1332.603	1718.457	1695.556
20160429:20:41:48	23.712	12.32	2.628	23.518	0.25	2.174	0.25	2.14	114.158	300.582	301.173	69.947	50.648	70.499	79.793	1353.428	1333.947	1720.17	1697.274
20160429:20:46:48	23.708	12.322	2.555	23.521	0.25	2.177	0.25	2.146	114.16	300.655	301.239	69.94	50.681	70.495	79.783	1354.819	1335.312	1721.946	1699.019
20160429:20:51:48	23.708	12.321	2.531	23.522	0.25	2.18	0.25	2.152	114.154	300.64	301.315	69.936	50.674	70.493	79.772	1356.184	1336.627	1723.689	1700.699
20160429:20:56:48	23.705	12.325	2.471	23.523	0.25	2.188	0.25	2.141	114.162	300.568	301.285	69.923	50.73	70.489	79.759	1357.516	1337.992	1725.389	1702.444
20160429:21:01:48	23.7	12.33	2.459	23.52	0.25	2.173	0.25	2.148	114.168	300.62	301.266	69.891	50.714	70.474	79.744	1358.919	1339.308	1727.18	1704.126
20160429:21:06:48	23.702	12.322	2.505	23.518	0.25	2.182	0.25	2.135	114.148	300.551	301.184	69.82	50.686	70.445	79.731	1360.262	1340.687	1728.894	1705.889
20160429:21:11:48	23.703	12.383	2.499	23.519	0.25	2.177	0.25	2.14	114.324	300.655	301.27	69.812	50.682	70.442	79.717	1361.637	1342.002	1730.65	1707.57
20160429:21:16:48	23.701	12.373	2.455	23.52	0.25	2.185	0.25	2.145	114.292	300.642	301.281	69.806	50.746	70.442	79.705	1363.007	1343.379	1732.398	1709.329
20160429:21:21:48	23.696	12.422	2.403	23.519	0.25	2.18	0.25	2.154	114.425	300.629	301.291	69.8	50.748	70.437	79.696	1364.356	1344.691	1734.12	1711.006
20160429:21:26:48	23.695	12.424	2.383	23.519	0.25	2.181	0.25	2.141	114.428	300.61	301.285	69.798	50.778	70.432	79.684	1365.753	1346.067	1735.904	1712.765
20160429:21:31:48	23.693	12.053	2.375	23.519	0.25	2.184	0.25	2.139	113.348	300.516	301.144	69.759	50.705	70.394	79.673	1367.086	1347.377	1737.606	1714.438
20160429:21:36:48	23.696	11.605	2.453	23.516	0.25	2.151	0.25	2.119	112.038	300.375	301.143	69.736	50.727	70.375	79.663	1368.445	1348.75	1739.341	1716.194
20160429:21:41:48	23.692	11.44	2.361	23.518	0.25	2.157	0.25	2.118	111.53	300.409	301.142	69.73	50.679	70.366	79.655	1369.83	1350.077	1741.107	1717.889
20160429:21:46:48	23.693	11.82	2.44	23.514	0.25	2.155	0.25	2.107	112.661	300.491	301.198	69.725	50.765	70.356	79.647	1371.176	1351.42	1742.826	1719.605
20160429:21:51:48	23.69	12.286	2.348	23.517	0.25	2.171	0.25	2.138	114.029	300.549	301.254	69.724	50.721	70.345	79.637	1372.574	1352.782	1744.611	1721.346
20160429:21:56:48	23.691	12.31	2.283	23.523	0.25	2.182	0.25	2.158	114.099	300.634	301.288	69.721	50.783	70.34	79.627	1373.922	1354.099	1746.331	1723.028
20160429:22:01:48	23.693	12.314	2.304	23.524	0.25	2.188	0.25	2.157	114.112	300.693	301.346	69.712	50.731	70.332	79.614	1375.269	1355.463	1748.05	1724.771
20160429:22:06:48	23.69	12.307	2.267	23.523	0.25	2.18	0.25	2.155	114.087	300.62	301.232	69.637	50.702	70.266	79.599	1376.666	1356.784	1749.831	1726.459
20160429:22:11:48	23.691	12.31	2.262	23.525	0.25	2.172	0.25	2.135	114.098	300.662	301.221	69.578	50.672	70.199	79.581	1378.005	1358.163	1751.541	1728.22
20160429:22:16:48	23.691	12.318	2.254	23.525	0.25	2.173	0.25	2.142	114.121	300.668	301.289	69.561	50.712	70.177	79.559	1379.399	1359.482	1753.319	1729.904
20160429:22:21:48	23.689	12.316	2.237	23.525	0.25	2.181	0.25	2.154	114.112	300.665	301.287	69.521	50.68	70.137	79.534	1380.767	1360.861	1755.063	1731.665
20160429:22:26:48	23.69	12.32	2.255	23.524	0.25	2.182	0.25	2.147	114.124	300.672	301.303	69.498	50.679	70.113	79.506	1382.098	1362.176	1756.761	1733.344
20160429:22:31:48	23.689	12.375	2.22	23.526	0.25	2.191	0.25	2.151	114.281	300.651	301.257	69.484	50.698	70.098	79.476	1383.508	1363.559	1758.559	1735.111
20160429:22:36:48	23.688	12.387	2.23	23.524	0.25	2.196	0.25	2.14	114.313	300.592	301.222	69.441	50.665	70.056	79.447	1384.845	1364.861	1760.265	1736.773
20160429:22:41:48	23.688	11.917	2.254	23.523	0.25	2.184	0.25	2.146	112.943	300.556	301.219	69.439	50.73	70.056	79.418	1386.222	1366.237	1762.02	1738.53
20160429:22:46:48	23.695	11.634	2.355	23.522	0.25	2.178	0.25	2.137	112.124	300.554	301.239	69.397	50.675	70.016	79.39	1387.588	1367.566	1763.763	1740.227
20160429:22:51:48	23.699	11.488	2.394	23.523	0.25	2.163	0.25	2.117	111.686	300.565	301.273	69.386	50.71	70.006	79.361	1388.937	1368.908	1765.483	1741.94
20160429:22:56:48	23.701	12.046	2.386	23.525	0.25	2.168	0.25	2.142	113.34	300.556	301.222	69.357	50.651	69.986	79.333	1390.342	1370.268	1767.274	1743.677
20160429:23:01:48	23.697	12.372	2.347	23.524	0.25	2.181	0.25	2.15	114.284	300.594	301.24	69.335	50.672	69.97	79.307	1391.673	1371.586	1768.972	1745.359
20160429:23:06:48	23.696	12.433	2.324	23.525	0.25	2.182	0.25	2.146	114.457	300.7	301.286	69.341	50.67	69.98	79.285	1393.04	1372.949	1770.715	1747.1
20160429:23:11:48	23.689	12.455	2.193	23.528	0.25	2.195	0.25	2.159	114.509	300.673	301.327	69.296	50.682	69.942	79.262	1394.42	1374.272	1772.474	1748.788
20160429:23:16:48	23.686	12.477	2.136	23.529	0.25	2.191	0.25	2.172	114.565	300.679	301.288	69.271	50.648	69.924	79.24	1395.767	1375.646	1774.191	1750.541
20160429:23:21:48	23.682	12.505	2.083	23.528	0.25	2.193	0.25	2.148	114.637	300.666	301.295	69.276	50.72	69.922	79.217	1397.164	1376.963	1775.972	1752.222
20160429:23:26:48	23.68	12.48	2.112	23.525	0.25	2.183	0.25	2.158	114.567	300.641	301.251	69.229	50.683	69.864	79.195	1398.508	1378.338	1777.685	1753.977
20160429:23:31:48	23.684	12.474	2.157	23.525	0.25	2.177	0.25	2.153	114.555	300.612	301.221	69.205	50.69	69.831	79.174	1399.863	1379.651	1779.413	1755.652
20160429:23:36:48	23.682	12.45	2.121	23.526	0.25	2.184	0.25	2.166	114.483	300.632	301.234	69.207	50.684	69.832	79.156	1401.255	1381.028	1781.187	1757.41
20160429:23:41:48	23.682	12.43	2.13	23.525	0.25	2.18	0.25	2.166	114.426	300.622	301.253	69.207	50.728	69.83	79.14	1402.593	1382.347	1782.893	1759.094
20160429:23:46:48	23.684	12.391	2.167	23.525	0.25	2.193	0.25	2.166	114.318	300.632	301.244	69.163	50.691	69.788	79.126	1403.991	1383.72	1784.674	1760.846
20160429:23:51:48	23.682	11.738	2.151	23.524	0.25	2.197	0.25	2.166	112.412	300.583	301.232	69.138	50.666	69.77	79.11	1405.346	1385.03	1786.402	1762.517
20160429:23:56:48	23.679	11.611	2.11	23.524	0.25	2.17	0.25	2.134	112.026	300.555	301.282	69.127	50.694	69.768	79.091	1406.687	1386.394	1788.111	1764.258
20160430:00:01:48	23.68	12.306	2.163	23.521	0.25	2.183	0.25	2.141	114.071	300.676	301.336	69.122	50.684	69.76	79.073	1408.085	1387.743	1789.893	1765.979
20160430:00:06:48	23.676	12.414	2.081	23.523	0.25	2.185	0.25	2.153	114.37	300.65	301.277	69.067	50.685	69.705	79.055	1409.426	1389.07	1791.602	1767.673
20160430:00:11:48	23.684	12.406	2.195	23.523	0.25	2.193	0.25	2.162	114.363	300.627	301.255	69.057	50.66	69.682	79.033	1410.815	1390.443	1793.372	1769.425
20160430:00:16:48	23.685	12.394	2.177	23.525	0.25	2.18	0.25	2.158	114.33	300.625	301.235	69.05	50.696	69.679	79.011	1412.184	1391.757	1795.117	1771.102
20160430:00:21:48	23.673	12.367	1.969	23.528	0.25	2.196	0.25	2.157	114.232	300.593	301.212	69.011	50.643	69.614	78.989	1413.512	1393.123	1796.809	1772.844
20160430:00:26:48	23.666	12.36	1.893	23.527	0.25	2.186	0.25	2.145	114.204	300.649	301.291	69.002	50.702	69.603	78.971	1414.919	1394.442	1798.602	1774.526
20160430:00:31:48	23.669	12.346	1.924	23.527	0.25	2.182	0.25	2.14	114.169	300.655	301.28	69	50.681	69.585	78.95	1416.256	1395.821	1800.306	1776.286
20160430:00:36:48	23.672	12.329	1.997	23.525	0.25	2.196	0.25	2.137	114.124	300.692	301.317	68.96	50.718	69.556	78.929	1417.634	1397.141	1802.061	1777.97
20160430:00:41:48	23.68	12.313	2.106	23.525	0.25	2.204	0.25	2.146	114.09	300.665	301.304	68.885	50.666	69.501	78.907	1419.008	1398.528	1803.811	1779.739
20160430:00:46:48	23.673	12.313	2.037	23.523	0.25	2.186	0.25	2.153	114.079	300.647	301.274	68.882	50.68	69.498	78.884	1420.348	1399.84	1805.519	1781.412
20160430:00:51:48	23.673	12.312	2.049	23.522	0.25	2.177	0.25	2.144	114.077	300.611	301.221	68.857	50.711	69.475	78.861	1421.749	1401.218	1807.304	1783.169
20160430:00:56:48	23.678	12.304	2.136	23.521	0.25	2.189	0.25	2.142	114.063	300.654	301.282	68.823	50.653	69.44	78.836	1423.079	1402.526	1808.998	1784.838
20160430:01:01:48	23.677	11.755	2.143	23.519	0.25	2.184	0.25	2.125	112.448	300.63	301.281	68.818	50.693	69.436	78.809	1424.454	1403.894	1810.75	1786.583
20160430:01:06:48	23.668	11.517	2.006	23.521	0.25	2.164	0.25	2.123	111.729	300.518	301.212	68.776	50.647	69.397	78.781	1425.829	1405.233	1812.502	1788.291
20160430:01:11:48	23.665	11.344	1.965	23.52	0.25	2.155	0.25	2.131	111.196	300.616	301.351	68.769	50.716	69.386	78.754	1427.178	1406.569	1814.22	1789.994
20160430:01:16:48	23.656	11.954	1.855	23.519	0.25	2.169	0.25	2.129	113.005	300.635	301.321	68.75	50.681	69.366	78.729	1428.577	1407.935	1816.002	1791.737
20160430:01:21:48	23.659	12.23	1.912	23.519	0.25	2.179	0.25	2.151	113.82	300.627	301.243	68.714	50.668	69.33	78.704	1429.923	1409.251	1817.717	1793.415
20160430:01:26:48	23.664	12.275	1.996	23.517	0.25	2.163	0.25	2.154	113.956	300.612	301.215	68.71	50.706	69.32	78.678	1431.279	1410.622	1819.444	1795.164
20160430:01:31:48	23.673	12.264	2.12	23.517	0.25	2.178	0.25	2.146	113.94	300.637	301.263	68.665	50.659	69.251	78.651	1432.667	1411.939	1821.213	1796.844
20160430:01:36:48	23.679	12.266	2.218	23.516	0.25	2.186	0.25	2.152	113.953	300.635	301.262	68.631	50.673	69.209	78.624	1434.012	1413.32	1822.926	1798.605
20160430:01:41:48	23.681	12.277	2.275	23.514	0.25	2.167	0.25	2.132	113.99	300.639	301.237	68.615	50.657	69.205	78.601	1435.409	1414.639	1824.706	1800.288
20160430:01:46:48	23.674	12.276	2.173	23.514	0.25	2.175	0.25	2.132	113.974	300.565	301.186	68.534	50.642	69.154	78.574	1436.762	1416.016	1826.43	1802.043
20160430:01:51:48	23.68	12.291	2.266	23.513	0.25	2.175	0.25	2.14	114.026	300.578	301.188	68.537	50.633	69.153	78.545	1438.106	1417.33	1828.141	1803.718
20160430:01:56:48	23.671	12.29	2.148	23.514	0.25	2.185	0.25	2.144	114.012	300.557	301.175	68.504	50.625	69.117	78.516	1439.506	1418.711	1829.924	1805.479
20160430:02:01:48	23.664	12.29	2.06	23.512	0.25	2.184	0.25	2.157	114.001	300.632	301.27	68.485	50.638	69.1	78.49	1440.842	1420.021	1831.626	1807.15
20160430:02:06:48	23.67	12.334	2.16	23.511	0.25	2.176	0.25	2.149	114.134	300.701	301.334	68.477	50.63	69.088	78.461	1442.236	1421.394	1833.402	1808.9
20160430:02:11:48	23.68	12.315	2.312	23.51	0.25	2.182	0.25	2.158	114.095	300.642	301.258	68.431	50.627	69.042	78.428	1443.6	1422.728	1835.139	1810.602
20160430:02:16:48	23.678	12.353	2.292	23.509	0.25	2.176	0.25	2.144	114.201	300.631	301.236	68.432	50.617	69.041	78.398	1444.936	1424.075	1836.841	1812.32
20160430:02:21:48	23.67	12.381	2.174	23.51	0.25	2.181	0.25	2.162	114.269	300.555	301.212	68.378	50.608	68.99	78.368	1446.332	1425.44	1838.619	1814.06
20160430:02:26:48	23.668	12.39	2.128	23.511	0.25	2.181	0.25	2.154	114.29	300.589	301.238	68.376	50.622	68.988	78.336	1447.673	1426.761	1840.326	1815.744
20160430:02:31:48	23.648	12.37	1.842	23.512	0.25	2.189	0.25	2.157	114.205	300.648	301.269	68.281	50.599	68.896	78.306	1449.056	1428.128	1842.087	1817.487
20160430:02:36:48	23.647	12.424	1.88	23.509	0.25	2.193	0.25	2.156	114.359	300.603	301.25	68.266	50.663	68.879	78.277	1450.436	1429.449	1843.844	1819.171
20160430:02:41:48	23.658	12.432	2.036	23.508	0.25	2.186	0.25	2.154	114.396	300.636	301.279	68.231	50.628	68.844	78.245	1451.767	1430.832	1845.539	1820.934
20160430:02:46:48	23.657	12.43	1.994	23.51	0.25	2.185	0.25	2.156	114.389	300.564	301.245	68.21	50.654	68.825	78.211	1453.171	1432.152	1847.326	1822.617
20160430:02:51:48	23.658	12.393	1.978	23.513	0.25	2.195	0.25	2.144	114.284	300.535	301.226	68.186	50.634	68.8	78.181	1454.5	1433.531	1849.019	1824.374
20160430:02:56:48	23.656	12.36	1.925	23.514	0.25	2.188	0.25	2.154	114.189	300.539	301.262	68.154	50.63	68.77	78.149	1455.879	1434.845	1850.774	1826.049
20160430:03:01:48	23.654	12.341	1.915	23.513	0.25	2.177	0.25	2.14	114.13	300.634	301.276	68.13	50.649	68.746	78.116	1457.249	1436.228	1852.517	1827.81
20160430:03:06:48	23.647	12.36	1.789	23.515	0.25	2.174	0.25	2.149	114.175	300.568	301.229	68.098	50.624	68.714	78.085	1458.602	1437.538	1854.239	1829.479
20160430:03:11:48	23.644	12.152	1.711	23.518	0.25	2.178	0.25	2.148	113.567	300.571	301.253	68.086	50.701	68.705	78.055	1460.008	1438.916	1856.028	1831.235
20160430:03:16:48	23.639	11.647	1.643	23.518	0.25	2.17	0.25	2.144	112.077	300.586	301.257	68.043	50.637	68.662	78.025	1461.34	1440.244	1857.722	1832.927
20160430:03:21:48	23.637	11.607	1.588	23.52	0.25	2.173	0.25	2.13	111.952	300.549	301.222	68.039	50.677	68.658	77.996	1462.712	1441.594	1859.469	1834.647
20160430:03:26:48	23.633	11.823	1.517	23.521	0.25	2.16	0.25	2.136	112.582	300.525	301.235	67.955	50.691	68.573	77.966	1464.091	1442.957	1861.222	1836.382
20160430:03:31:48	23.637	12.492	1.569	23.522	0.25	2.182	0.25	2.16	114.534	300.552	301.231	67.921	50.665	68.543	77.935	1465.438	1444.279	1862.935	1838.066
20160430:03:36:48	23.634	12.472	1.512	23.523	0.25	2.195	0.25	2.155	114.474	300.646	301.262	67.867	50.681	68.504	77.908	1466.837	1445.645	1864.715	1839.805
20160430:03:41:48	23.635	12.496	1.531	23.522	0.25	2.187	0.25	2.154	114.544	300.618	301.245	67.833	50.679	68.466	77.878	1468.177	1446.974	1866.419	1841.496
20160430:03:46:48	23.643	12.495	1.629	23.523	0.25	2.188	0.25	2.15	114.551	300.573	301.171	67.798	50.664	68.426	77.845	1469.542	1448.346	1868.154	1843.242
20160430:03:51:48	23.645	12.479	1.634	23.524	0.25	2.206	0.25	2.152	114.509	300.615	301.215	67.763	50.678	68.387	77.815	1470.924	1449.666	1869.911	1844.923
20160430:03:56:48	23.645	12.438	1.66	23.522	0.25	2.183	0.25	2.153	114.394	300.598	301.254	67.736	50.658	68.356	77.783	1472.272	1451.044	1871.624	1846.677
20160430:04:01:48	23.647	12.383	1.665	23.525	0.25	2.188	0.25	2.163	114.242	300.632	301.284	67.651	50.632	68.27	77.751	1473.673	1452.363	1873.406	1848.355
20160430:04:06:48	23.644	12.341	1.622	23.525	0.25	2.186	0.25	2.165	114.118	300.629	301.228	67.636	50.667	68.256	77.717	1475.012	1453.747	1875.107	1850.117
20160430:04:11:48	23.641	12.311	1.544	23.528	0.25	2.187	0.25	2.143	114.026	300.608	301.209	67.594	50.631	68.21	77.681	1476.37	1455.059	1876.833	1851.786
20160430:04:16:48	23.633	12.289	1.461	23.525	0.25	2.19	0.25	2.151	113.95	300.635	301.239	67.572	50.645	68.194	77.646	1477.756	1456.441	1878.594	1853.543
20160430:04:21:48	23.635	11.869	1.481	23.526	0.25	2.182	0.25	2.134	112.721	300.617	301.273	67.532	50.671	68.153	77.607	1479.1	1457.742	1880.302	1855.199
20160430:04:26:48	23.639	11.451	1.57	23.523	0.25	2.159	0.25	2.126	111.486	300.593	301.291	67.484	50.635	68.12	77.57	1480.501	1459.122	1882.081	1856.955
20160430:04:31:48	23.642	11.285	1.607	23.524	0.25	2.156	0.25	2.118	110.983	300.574	301.262	67.422	50.629	68.075	77.53	1481.844	1460.454	1883.789	1858.648
20160430:04:36:48	23.64	11.763	1.525	23.527	0.25	2.169	0.25	2.131	112.412	300.559	301.246	67.348	50.642	67.993	77.491	1483.202	1461.802	1885.513	1860.363
20160430:04:41:48	23.637	12.199	1.478	23.528	0.25	2.183	0.25	2.149	113.698	300.651	301.257	67.307	50.606	67.931	77.445	1484.597	1463.168	1887.285	1862.1
20160430:04:46:48	23.632	12.245	1.403	23.528	0.25	2.176	0.25	2.149	113.823	300.608	301.224	67.261	50.622	67.877	77.398	1485.939	1464.491	1888.989	1863.782
20160430:04:51:48	23.636	12.272	1.485	23.527	0.25	2.183	0.25	2.142	113.908	300.643	301.264	67.207	50.634	67.825	77.349	1487.339	1465.86	1890.767	1865.523
20160430:04:56:48	23.636	12.262	1.488	23.526	0.25	2.177	0.25	2.145	113.879	300.649	301.249	67.169	50.603	67.787	77.298	1488.685	1467.189	1892.476	1867.212
20160430:05:01:48	23.634	12.297	1.433	23.529	0.25	2.194	0.25	2.139	113.977	300.638	301.275	67.126	50.606	67.741	77.247	1490.039	1468.568	1894.194	1868.964
20160430:05:06:48	23.633	12.308	1.39	23.531	0.25	2.18	0.25	2.152	114.006	300.595	301.197	67.032	50.627	67.649	77.191	1491.434	1469.89	1895.965	1870.645
20160430:05:11:48	23.635	12.31	1.389	23.533	0.25	2.189	0.25	2.164	114.014	300.594	301.23	66.979	50.615	67.596	77.136	1492.779	1471.269	1897.672	1872.397
20160430:05:16:48	23.64	12.281	1.445	23.534	0.25	2.189	0.25	2.152	113.94	300.645	301.272	66.93	50.575	67.547	77.081	1494.182	1472.586	1899.452	1874.07
20160430:05:21:48	23.644	12.257	1.494	23.534	0.25	2.185	0.25	2.166	113.875	300.603	301.267	66.895	50.6	67.512	77.027	1495.53	1473.974	1901.163	1875.833
20160430:05:26:48	23.646	11.843	1.506	23.535	0.25	2.183	0.25	2.162	112.661	300.54	301.215	66.855	50.602	67.457	76.975	1496.881	1475.291	1902.876	1877.506
20160430:05:31:48	23.643	11.44	1.445	23.536	0.25	2.172	0.25	2.141	111.459	300.554	301.192	66.819	50.573	67.401	76.922	1498.278	1476.674	1904.648	1879.261
20160430:05:36:48	23.646	11.259	1.449	23.539	0.25	2.163	0.25	2.13	110.908	300.499	301.181	66.768	50.584	67.357	76.871	1499.62	1477.979	1906.35	1880.917
20160430:05:41:48	23.643	11.694	1.385	23.542	0.25	2.155	0.25	2.132	112.213	300.514	301.197	66.735	50.617	67.333	76.821	1501.024	1479.359	1908.13	1882.669
20160430:05:46:48	23.643	12.123	1.359	23.543	0.25	2.172	0.25	2.141	113.487	300.63	301.327	66.697	50.598	67.316	76.775	1502.366	1480.695	1909.831	1884.365
20160430:05:51:48	23.646	12.124	1.423	23.542	0.25	2.178	0.25	2.142	113.495	300.652	301.247	66.667	50.574	67.285	76.736	1503.722	1482.042	1911.55	1886.075
20160430:05:56:48	23.645	12.171	1.395	23.543	0.25	2.178	0.25	2.156	113.631	300.654	301.223	66.68	50.62	67.294	76

Time: day:hh:mm:ss	Stack Pressure: in-Hg	Sat% H2O: Percent	Static: in-H2O	Barometric: in-Hg	Flowmeter1: l/min	Vacuum1: in-Hg	Flowmeter2: l/min	Vacuum2: in-Hg	Stack Temp: degF	Sorbent Temp: degF	Probe Temp: degF	DGM#1 Temp: degF	Condenser Temp: degF	DGM#2 Temp: degF	DAQ Temp: degF	DGM1*: liters STP	DGM2*: liters STP	DGM1: liters nominal	DGM2: liters nominal
20160430:09:46:49	23.718	12.182	1.816	23.585	0.25	2.185	0.25	2.143	113.77	300.544	301.183	66.583	50.473	67.164	76.216	1567.752	1545.161	1992.593	1966.053
20160430:09:51:49	23.722	12.247	1.865	23.584	0.25	2.186	0.25	2.147	113.962	300.527	301.197	66.615	50.509	67.199	76.237	1569.098	1546.535	1994.296	1967.793
20160430:09:56:49	23.719	12.248	1.895	23.58	0.25	2.171	0.25	2.134	113.961	300.486	301.173	66.622	50.519	67.202	76.259	1570.484	1547.853	1996.05	1969.462
20160430:10:01:49	23.721	12.248	1.964	23.577	0.25	2.167	0.25	2.129	113.965	300.541	301.223	66.677	50.489	67.245	76.287	1571.831	1549.228	1997.756	1971.205
20160430:10:06:49	23.725	12.248	2.002	23.577	0.25	2.172	0.25	2.138	113.969	300.573	301.222	66.693	50.542	67.262	76.311	1573.233	1550.543	1999.53	1972.872
20160430:10:11:49	23.732	12.356	2.079	23.579	0.25	2.175	0.25	2.136	114.29	300.539	301.154	66.709	50.491	67.276	76.339	1574.558	1551.929	2001.207	1974.628
20160430:10:16:49	23.733	12.422	2.1	23.579	0.25	2.174	0.25	2.143	114.479	300.579	301.214	66.805	50.503	67.333	76.364	1575.939	1553.237	2002.956	1976.286
20160430:10:21:49	23.731	12.401	2.048	23.581	0.25	2.179	0.25	2.151	114.418	300.502	301.121	66.811	50.529	67.35	76.394	1577.316	1554.616	2004.698	1978.034
20160430:10:26:49	23.738	12.394	2.189	23.577	0.25	2.177	0.25	2.148	114.407	300.53	301.185	66.855	50.5	67.421	76.426	1578.651	1555.936	2006.389	1979.707
20160430:10:31:49	23.744	12.381	2.296	23.575	0.25	2.177	0.25	2.141	114.378	300.586	301.195	66.878	50.52	67.456	76.459	1580.053	1557.307	2008.165	1981.445
20160430:10:36:49	23.748	12.37	2.38	23.573	0.25	2.169	0.25	2.145	114.355	300.584	301.198	66.929	50.506	67.508	76.493	1581.391	1558.61	2009.859	1983.098
20160430:10:41:49	23.748	12.385	2.348	23.575	0.25	2.165	0.25	2.129	114.395	300.44	301.11	66.966	50.506	67.536	76.529	1582.777	1559.989	2011.615	1984.846
20160430:10:46:49	23.755	12.354	2.435	23.576	0.25	2.167	0.25	2.125	114.318	300.533	301.209	67.023	50.53	67.585	76.568	1584.136	1561.311	2013.337	1986.523
20160430:10:51:49	23.756	12.319	2.414	23.579	0.25	2.177	0.25	2.131	114.222	300.525	301.195	67.061	50.468	67.611	76.61	1585.473	1562.669	2015.03	1988.244
20160430:10:56:49	23.75	12.362	2.259	23.584	0.25	2.174	0.25	2.135	114.333	300.601	301.205	67.148	50.521	67.665	76.654	1586.863	1564.011	2016.791	1989.945
20160430:11:01:49	23.75	12.423	2.29	23.581	0.25	2.177	0.25	2.142	114.508	300.558	301.188	67.199	50.519	67.755	76.701	1588.199	1565.351	2018.483	1991.645
20160430:11:06:49	23.749	12.457	2.313	23.579	0.25	2.181	0.25	2.136	114.604	300.61	301.21	67.234	50.528	67.795	76.745	1589.599	1566.71	2020.257	1993.368
20160430:11:11:49	23.752	12.47	2.315	23.582	0.25	2.164	0.25	2.137	114.644	300.586	301.197	67.287	50.527	67.841	76.793	1590.938	1568.033	2021.954	1995.047
20160430:11:16:49	23.752	12.45	2.32	23.581	0.25	2.171	0.25	2.147	114.589	300.547	301.195	67.338	50.541	67.891	76.845	1592.291	1569.405	2023.669	1996.788
20160430:11:21:49	23.756	12.426	2.363	23.582	0.25	2.175	0.25	2.148	114.525	300.596	301.225	67.382	50.546	67.936	76.895	1593.675	1570.716	2025.422	1998.451
20160430:11:26:49	23.757	12.45	2.417	23.579	0.25	2.183	0.25	2.14	114.596	300.6	301.242	67.421	50.511	67.976	76.944	1595.021	1572.082	2027.128	2000.184
20160430:11:31:49	23.762	12.468	2.488	23.579	0.25	2.18	0.25	2.146	114.654	300.526	301.203	67.495	50.547	68.05	76.992	1596.416	1573.405	2028.896	2001.863
20160430:11:36:49	23.757	12.5	2.393	23.581	0.25	2.177	0.25	2.155	114.735	300.561	301.221	67.53	50.524	68.093	77.039	1597.748	1574.774	2030.585	2003.6
20160430:11:41:49	23.76	12.497	2.419	23.582	0.25	2.173	0.25	2.157	114.732	300.478	301.163	67.553	50.532	68.114	77.087	1599.12	1576.087	2032.324	2005.267
20160430:11:46:49	23.756	12.541	2.345	23.583	0.25	2.175	0.25	2.155	114.85	300.577	301.182	67.596	50.535	68.156	77.135	1600.494	1577.466	2034.067	2007.017
20160430:11:51:49	23.754	12.538	2.319	23.584	0.25	2.177	0.25	2.163	114.838	300.553	301.187	67.642	50.554	68.203	77.182	1601.842	1578.785	2035.776	2008.69
20160430:11:56:49	23.759	12.523	2.383	23.584	0.25	2.183	0.25	2.154	114.804	300.598	301.199	67.716	50.562	68.243	77.235	1603.243	1580.157	2037.552	2010.432
20160430:12:01:49	23.765	12.496	2.526	23.579	0.25	2.184	0.25	2.153	114.736	300.505	301.16	67.764	50.534	68.273	77.279	1604.573	1581.475	2039.239	2012.105
20160430:12:06:49	23.778	12.466	2.737	23.577	0.25	2.18	0.25	2.136	114.673	300.569	301.191	67.815	50.56	68.373	77.326	1605.952	1582.85	2040.989	2013.852
20160430:12:11:49	23.78	12.478	2.748	23.578	0.25	2.184	0.25	2.136	114.709	300.61	301.227	67.847	50.532	68.406	77.372	1607.33	1584.163	2042.737	2015.519
20160430:12:16:49	23.778	12.493	2.744	23.576	0.25	2.182	0.25	2.136	114.746	300.541	301.198	67.876	50.547	68.439	77.418	1608.659	1585.539	2044.422	2017.267
20160430:12:21:49	23.777	12.508	2.757	23.574	0.25	2.181	0.25	2.144	114.789	300.573	301.222	67.925	50.532	68.487	77.462	1610.061	1586.853	2046.202	2018.936
20160430:12:26:49	23.777	12.513	2.776	23.572	0.25	2.178	0.25	2.146	114.802	300.581	301.177	67.996	50.559	68.525	77.507	1611.397	1588.234	2047.898	2020.69
20160430:12:31:49	23.784	12.517	2.923	23.569	0.25	2.17	0.25	2.139	114.827	300.602	301.213	68.036	50.528	68.548	77.55	1612.782	1589.537	2049.656	2022.346
20160430:12:36:49	23.787	12.569	3.017	23.565	0.25	2.166	0.25	2.137	114.976	300.57	301.197	68.093	50.561	68.646	77.595	1614.148	1590.913	2051.391	2024.096
20160430:12:41:49	23.79	12.576	2.963	23.572	0.25	2.186	0.25	2.138	115	300.543	301.189	68.128	50.545	68.681	77.642	1615.483	1592.234	2053.085	2025.774
20160430:12:46:49	23.793	12.614	3.022	23.571	0.25	2.178	0.25	2.149	115.11	300.493	301.175	68.155	50.545	68.719	77.685	1616.881	1593.592	2054.861	2027.5
20160430:12:51:49	23.785	12.619	3.081	23.558	0.25	2.162	0.25	2.133	115.114	300.602	301.255	68.206	50.548	68.767	77.731	1618.221	1594.938	2056.563	2029.212
20160430:12:56:49	23.788	12.268	3.119	23.559	0.25	2.159	0.25	2.141	114.11	300.588	301.193	68.233	50.545	68.796	77.773	1619.61	1596.268	2058.328	2030.904
20160430:13:01:49	23.785	11.668	3.065	23.56	0.25	2.142	0.25	2.125	112.358	300.553	301.234	68.262	50.541	68.826	77.816	1620.976	1597.634	2060.063	2032.641
20160430:13:06:49	23.788	11.427	3.04	23.565	0.25	2.142	0.25	2.13	111.629	300.462	301.188	68.356	50.557	68.874	77.86	1622.314	1598.954	2061.763	2034.32
20160430:13:11:49	23.783	11.738	3.007	23.561	0.25	2.139	0.25	2.119	112.545	300.506	301.244	68.39	50.555	68.925	77.905	1623.705	1600.317	2063.531	2036.055
20160430:13:16:49	23.79	12.376	3.003	23.569	0.25	2.162	0.25	2.135	114.434	300.625	301.249	68.425	50.56	68.992	77.949	1625.045	1601.648	2065.233	2037.746
20160430:13:21:49	23.792	12.416	2.992	23.572	0.25	2.171	0.25	2.146	114.551	300.63	301.207	68.476	50.569	69.046	77.997	1626.433	1603.013	2066.996	2039.483
20160430:13:26:49	23.796	12.386	3.085	23.569	0.25	2.18	0.25	2.137	114.47	300.673	301.217	68.497	50.542	69.071	78.043	1627.795	1604.334	2068.728	2041.164
20160430:13:31:49	23.802	12.38	3.209	23.566	0.25	2.167	0.25	2.131	114.464	300.699	301.285	68.513	50.536	69.098	78.083	1629.134	1605.705	2070.43	2042.908
20160430:13:36:49	23.806	11.802	3.212	23.57	0.25	2.164	0.25	2.12	112.759	300.703	301.329	68.556	50.536	69.138	78.123	1630.528	1607.02	2072.2	2044.581
20160430:13:41:49	23.806	11.155	3.339	23.56	0.25	2.127	0.25	2.091	110.818	300.577	301.226	68.576	50.522	69.154	78.164	1631.866	1608.395	2073.902	2046.331
20160430:13:46:49	23.806	11.036	3.301	23.564	0.25	2.126	0.25	2.094	110.446	300.565	301.193	68.667	50.54	69.205	78.201	1633.257	1609.707	2075.67	2048
20160430:13:51:49	23.803	11.526	3.339	23.557	0.25	2.116	0.25	2.087	111.932	300.548	301.221	68.68	50.532	69.23	78.239	1634.606	1611.085	2077.385	2049.754
20160430:13:56:49	23.798	12.132	3.169	23.565	0.25	2.151	0.25	2.141	113.743	300.653	301.282	68.736	50.539	69.317	78.277	1635.941	1612.391	2079.083	2051.417
20160430:14:01:49	23.792	11.797	3.014	23.57	0.25	2.159	0.25	2.127	112.725	300.647	301.284	68.757	50.552	69.342	78.313	1637.329	1613.767	2080.848	2053.167
20160430:14:06:49	23.788	11.171	2.902	23.574	0.25	2.136	0.25	2.11	110.81	300.609	301.311	68.787	50.539	69.376	78.349	1638.661	1615.072	2082.541	2054.829
20160430:14:11:49	23.785	12.106	2.882	23.574	0.25	2.164	0.25	2.134	113.649	300.624	301.26	68.815	50.567	69.408	78.386	1640.06	1616.448	2084.319	2056.579
20160430:14:16:49	23.787	12.152	2.987	23.567	0.25	2.158	0.25	2.141	113.784	300.575	301.2	68.829	50.559	69.434	78.421	1641.395	1617.759	2086.017	2058.248
20160430:14:21:49	23.783	12.159	2.844	23.574	0.25	2.169	0.25	2.139	113.8	300.646	301.256	68.869	50.595	69.472	78.458	1642.747	1619.119	2087.735	2059.979
20160430:14:26:49	23.783	12.159	2.903	23.57	0.25	2.16	0.25	2.131	113.799	300.619	301.281	68.883	50.564	69.477	78.492	1644.129	1620.457	2089.493	2061.682
20160430:14:31:49	23.78	12.134	2.877	23.569	0.25	2.151	0.25	2.123	113.723	300.678	301.304	68.946	50.601	69.516	78.523	1645.469	1621.793	2091.196	2063.383
20160430:14:36:49	23.777	12.089	2.735	23.576	0.25	2.166	0.25	2.117	113.589	300.581	301.25	68.993	50.588	69.545	78.557	1646.861	1623.146	2092.967	2065.105
20160430:14:41:49	23.775	12.061	2.745	23.573	0.25	2.145	0.25	2.118	113.503	300.644	301.3	69.029	50.604	69.585	78.592	1648.191	1624.466	2094.657	2066.786
20160430:14:46:49	23.776	12.052	2.682	23.579	0.25	2.154	0.25	2.117	113.479	300.571	301.226	69.05	50.585	69.612	78.622	1649.555	1625.832	2096.393	2068.524
20160430:14:51:49	23.776	12.075	2.662	23.58	0.25	2.157	0.25	2.134	113.547	300.607	301.211	69.082	50.614	69.652	78.659	1650.923	1627.14	2098.131	2070.19
20160430:14:56:49	23.778	12.083	2.725	23.577	0.25	2.166	0.25	2.135	113.571	300.606	301.213	69.104	50.59	69.681	78.694	1652.263	1628.5	2099.835	2071.921
20160430:15:01:49	23.776	12.085	2.74	23.575	0.25	2.164	0.25	2.126	113.576	300.664	301.261	69.125	50.604	69.701	78.725	1653.656	1629.817	2101.607	2073.598
20160430:15:06:49	23.78	12.108	2.741	23.578	0.25	2.16	0.25	2.135	113.646	300.658	301.265	69.139	50.61	69.723	78.757	1654.985	1631.177	2103.298	2075.329
20160430:15:11:49	23.778	12.148	2.664	23.582	0.25	2.173	0.25	2.129	113.76	300.699	301.334	69.151	50.62	69.746	78.789	1656.357	1632.49	2105.043	2077
20160430:15:16:49	23.777	12.279	2.758	23.574	0.25	2.17	0.25	2.143	114.136	300.633	301.276	69.172	50.62	69.773	78.82	1657.726	1633.858	2106.783	2078.742
20160430:15:21:49	23.775	12.331	2.7	23.576	0.25	2.174	0.25	2.14	114.284	300.602	301.221	69.173	50.625	69.78	78.849	1659.049	1635.173	2108.467	2080.417
20160430:15:26:49	23.776	12.44	2.799	23.571	0.25	2.164	0.25	2.13	114.595	300.647	301.285	69.219	50.638	69.813	78.874	1660.444	1636.544	2110.241	2082.164
20160430:15:31:49	23.785	12.424	2.962	23.567	0.25	2.166	0.25	2.137	114.563	300.602	301.288	69.218	50.616	69.808	78.898	1661.78	1637.856	2111.941	2083.835
20160430:15:36:49	23.785	12.417	2.912	23.571	0.25	2.171	0.25	2.132	114.543	300.581	301.202	69.263	50.628	69.833	78.923	1663.162	1639.227	2113.7	2085.581
20160430:15:41:49	23.785	12.45	2.852	23.576	0.25	2.168	0.25	2.145	114.638	300.593	301.236	69.329	50.646	69.866	78.949	1664.519	1640.536	2115.426	2087.248
20160430:15:46:49	23.787	12.431	2.948	23.57	0.25	2.171	0.25	2.136	114.586	300.596	301.216	69.33	50.63	69.875	78.974	1665.852	1641.916	2117.122	2089.006
20160430:15:51:49	23.788	12.415	2.945	23.571	0.25	2.167	0.25	2.138	114.543	300.639	301.234	69.358	50.636	69.922	78.996	1667.239	1643.22	2118.887	2090.667
20160430:15:56:49	23.792	12.382	2.955	23.575	0.25	2.17	0.25	2.136	114.453	300.673	301.288	69.386	50.637	69.966	79.02	1668.576	1644.595	2120.589	2092.419
20160430:16:01:49	23.801	12.325	3.06	23.576	0.25	2.168	0.25	2.14	114.303	300.563	301.239	69.387	50.612	69.963	79.044	1669.972	1645.903	2122.365	2094.085
20160430:16:06:49	23.806	11.816	3.226	23.569	0.25	2.154	0.25	2.128	112.81	300.578	301.239	69.429	50.631	70.014	79.068	1671.32	1647.274	2124.081	2095.833
20160430:16:11:49	23.8	11.268	3.059	23.575	0.25	2.147	0.25	2.118	111.163	300.575	301.273	69.443	50.619	70.034	79.092	1672.659	1648.582	2125.785	2097.498
20160430:16:16:49	23.79	11.095	2.956	23.572	0.25	2.14	0.25	2.114	110.607	300.493	301.22	69.444	50.617	70.039	79.115	1674.047	1649.943	2127.552	2099.233
20160430:16:21:49	23.787	11.553	2.843	23.578	0.25	2.142	0.25	2.111	111.997	300.559	301.273	69.492	50.638	70.095	79.137	1675.382	1651.273	2129.25	2100.927
20160430:16:26:49	23.786	12.021	2.781	23.581	0.25	2.155	0.25	2.124	113.404	300.659	301.282	69.502	50.636	70.099	79.162	1676.779	1652.617	2131.028	2102.639
20160430:16:31:49	23.782	12.042	2.758	23.579	0.25	2.154	0.25	2.126	113.459	300.644	301.3	69.505	50.605	70.097	79.188	1678.121	1653.967	2132.735	2104.359
20160430:16:36:49	23.779	12.111	2.636	23.585	0.25	2.168	0.25	2.124	113.655	300.711	301.35	69.555	50.649	70.142	79.213	1679.471	1655.289	2134.454	2106.043
20160430:16:41:49	23.777	12.152	2.653	23.582	0.25	2.165	0.25	2.131	113.77	300.712	301.352	69.554	50.618	70.126	79.234	1680.86	1656.663	2136.22	2107.793
20160430:16:46:49	23.78	12.134	2.71	23.58	0.25	2.16	0.25	2.131	113.723	300.688	301.317	69.553	50.623	70.12	79.253	1682.198	1657.975	2137.924	2109.464
20160430:16:51:49	23.779	12.13	2.697	23.581	0.25	2.157	0.25	2.132	113.71	300.724	301.345	69.619	50.642	70.161	79.272	1683.598	1659.344	2139.706	2111.209
20160430:16:56:49	23.776	12.135	2.593	23.585	0.25	2.157	0.25	2.133	113.72	300.691	301.346	69.6	50.652	70.172	79.284	1684.941	1660.659	2141.415	2112.883
20160430:17:01:49	23.778	12.175	2.61	23.586	0.25	2.169	0.25	2.136	113.84	300.671	301.313	69.575	50.621	70.17	79.296	1686.289	1662.037	2143.13	2114.639
20160430:17:06:49	23.78	12.185	2.583	23.59	0.25	2.178	0.25	2.14	113.869	300.638	301.301	69.566	50.628	70.169	79.306	1687.677	1663.352	2144.894	2116.314
20160430:17:11:49	23.778	12.186	2.609	23.586	0.25	2.176	0.25	2.135	113.87	300.525	301.203	69.558	50.616	70.167	79.316	1689.016	1664.727	2146.598	2118.066
20160430:17:16:49	23.78	12.18	2.72	23.58	0.25	2.157	0.25	2.135	113.857	300.519	301.205	69.562	50.632	70.174	79.324	1690.415	1666.039	2148.38	2119.737
20160430:17:21:49	23.778	12.146	2.638	23.584	0.25	2.162	0.25	2.128	113.754	300.541	301.252	69.597	50.641	70.208	79.332	1691.76	1667.421	2150.091	2121.498
20160430:17:26:49	23.772	12.128	2.515	23.587	0.25	2.156	0.25	2.13	113.694	300.645	301.324	69.668	50.688	70.276	79.342	1693.105	1668.735	2151.802	2123.171
20160430:17:31:49	23.771	12.112	2.503	23.587	0.25	2.164	0.25	2.127	113.647	300.53	301.213	69.683	50.667	70.285	79.353	1694.495	1670.11	2153.57	2124.923
20160430:17:36:49	23.768	12.09	2.428	23.59	0.25	2.169	0.25	2.128	113.577	300.533	301.2	69.69	50.671	70.287	79.367	1695.834	1671.41	2155.274	2126.579
20160430:17:41:49	23.767	12.083	2.36	23.594	0.25	2.165	0.25	2.135	113.557	300.565	301.185	69.687	50.644	70.294	79.382	1697.231	1672.785	2157.052	2128.331
20160430:17:46:49	23.769	11.984	2.326	23.598	0.25	2.172	0.25	2.133	113.265	300.609	301.245	69.71	50.698	70.313	79.399	1698.573	1674.109	2158.759	2130.017
20160430:17:51:49	23.765	11.358	2.327	23.593	0.25	2.154	0.25	2.12	111.387	300.571	301.271	69.733	50.678	70.341	79.416	1699.927	1675.458	2160.481	2131.735
20160430:17:56:49	23.767	11.282	2.3	23.598	0.25	2.147	0.25	2.128	111.155	300.53	301.275	69.724	50.686	70.337	79.429	1701.311	1676.809	2162.243	2133.455
20160430:18:01:49	23.766	11.314	2.302	23.596	0.25	2.143	0.25	2.108	111.247	300.506	301.243	69.722	50.644	70.333	79.443	1702.652	1678.133	2163.948	2135.141
20160430:18:06:49	23.764	12	2.152	23.606	0.25	2.159	0.25	2.132	113.31	300.566	301.242	69.72	50.66	70.325	79.453	1704.049	1679.501	2165.724	2136.883
20160430:18:11:49	23.763	12.1	2.214	23.6	0.25	2.16	0.25	2.139	113.599	300.615	301.217	69.719	50.63	70.313	79.463	1705.384	1680.812	2167.422	2138.553
20160430:18:16:49	23.758	12.141	2.148	23.6	0.25	2.173	0.25	2.141	113.71	300.636	301.239	69.748	50.684	70.339	79.472	1706.741	1682.178	2169.148	2140.291
20160430:18:21:49	23.761	12.169	2.11	23.606	0.25	2.181	0.25	2.136	113.797	300.617	301.243	69.742	50.674	70.339	79.48	1708.124	1683.5	2170.907	2141.976
20160430:18:26:49	23.752	12.19	1.898	23.613	0.25	2.194	0.25	2.144	113.844	300.6	301.28	69.728	50.707	70.34	79.486	1709.472	1684.871	2172.62	2143.72
20160430:18:31:49	23.751	12.193	1.809	23.618	0.25	2.19	0.25	2.146	113.85	300.596	301.228	69.725	50.677	70.338	79.489	1710.864	1686.186	2174.391	2145.393
20160430:18:36:49	23.753	12.173	1.815	23.62	0.25	2.174	0.25	2.131	113.796	300.588	301.195	69.723	50.718	70.336	79.491	1712.202	1687.563	2176.091	2147.145
20160430:18:41:49	23.758	12.186	1.884	23.62	0.25	2.187	0.25	2.134	113.842	300.608	301.276	69.723	50.679	70.334	79.491	1713.569	1688.875	2177.828	2148.814
20160430:18:46:49	23.757	12.197	1.782	23.626	0.25	2.179	0.25	2.149	113.871	300.607	301.24	69.723	50.73	70.336	79.491	1714.942	1690.249	2179.572	2150.562
20160430:18:51:49	23.753	12.101	1.699	23.628	0.25	2.168	0.25	2.136	113.581	300.581	301.17	69.723	50.686	70.335	79.492	1716.286	1691.557	2181.28	2152.226
20160430:18:56:49	23.754	11.459	1.695	23.629	0.25	2.154	0.25	2.143	111.68	300.537	301.199	69.723	50.747	70.338	79.493	1717.687	1692.937	2183.059	2153.981
20160430:19:01:49	23.755	11.459	1.688	23.631	0.25	2.15	0.25	2.13	111.678	300.52	301.242	69.723	50.698	70.337	79.496	1719.008	1694.247	2184.737	2155.647
20160430:19:06:49	23.752	12.132	1.682	23.628	0.25	2.161	0.25	2.129	113.674	300.543	301.209	69.723	50.756	70.337	79.5	1720.385	1695.623	2186.487	2157.397
20160430:19:11:49	23.747	12.191	1.599	23.629	0.25	2.175	0.25	2.136	113.844	300.566	301.205	69.723	50.699	70.337	79.505	1721.757	1696.931	2188.23	2159.06
20160430:19:16:49	23.745	12.191	1.546	23.631	0.25	2.168	0.25	2.141	113.835	300.635	301.285	69.724	50.73	70.337	79.51	1723.097	1698.304	2189.931	2160.806
20160430:19:21:49	23.744	12.215	1.502	23.633	0.25	2.163	0.25	2.138	113.904	300.622	301.232	69.723	50.674	70.336	79.515	1724.496	1699.618	2191.709	2162.477
20160430:19:26:49	23.74	12.249	1.552	23.626	0.25	2.173	0.25	2.142	113.997	300.679	301.331	69.722	50.682	70.323	79.518	1725.828	1700.98	2193.402	2164.211
20160430:19:31:49	23.738	12.249	1.363	23.638	0.25	2.179	0.25	2.139	113.991	300.663	301.312	69.715	50.67	70.31	79.52	1727.208	1702.321	2195.154	2165.915
20160430:19:36:49	23.737	12.255	1.363	23.637	0.25	2.173	0.25	2.138	114.01	300.631	301.258	69.693	50.691	70.29	79.52	1

Time: day:hh:mm:ss	Stack Pressure: in-Hg	Sat% H2O: Percent	Static: in-H2O	Barometric: in-Hg	Flowmeter1: l/min	Vacuum1: in-Hg	Flowmeter2: l/min	Vacuum2: in-Hg	Stack Temp: degF	Sorbent Temp: degF	Probe Temp: degF	DGM#1 Temp: degF	Condenser Temp: degF	DGM#2 Temp: degF	DAQ Temp: degF	DGM1*: liters STP	DGM2*: liters STP	DGM1: liters nominal	DGM2: liters nominal
20160430:23:26:49	23.725	11.519	0.852	23.663	0.25	2.155	0.25	2.123	111.82	300.608	301.267	68.779	50.651	69.39	78.72	1791.348	1765.498	2276.45	2246.083
20160430:23:31:49	23.726	11.403	0.901	23.66	0.25	2.152	0.25	2.126	111.467	300.572	301.246	68.759	50.679	69.371	78.698	1792.689	1766.825	2278.148	2247.765
20160430:23:36:49	23.726	12.127	0.892	23.66	0.25	2.159	0.25	2.128	113.621	300.592	301.333	68.749	50.674	69.365	78.674	1794.074	1768.183	2279.902	2249.487
20160430:23:41:49	23.725	12.207	0.835	23.664	0.25	2.175	0.25	2.143	113.854	300.622	301.281	68.701	50.672	69.313	78.648	1795.439	1769.531	2281.63	2251.195
20160430:23:46:49	23.721	12.206	0.778	23.664	0.25	2.182	0.25	2.141	113.844	300.643	301.246	68.681	50.672	69.288	78.623	1796.774	1770.864	2283.32	2252.885
20160430:23:51:49	23.721	12.211	0.817	23.661	0.25	2.175	0.25	2.144	113.858	300.659	301.26	68.674	50.699	69.283	78.603	1798.165	1772.227	2285.081	2254.613
20160430:23:56:49	23.717	12.191	0.76	23.661	0.25	2.18	0.25	2.151	113.793	300.699	301.294	68.599	50.685	69.204	78.579	1799.505	1773.55	2286.778	2256.289
20160501:00:01:49	23.716	12.197	0.738	23.661	0.25	2.182	0.25	2.136	113.809	300.669	301.321	68.577	50.669	69.183	78.554	1800.902	1774.925	2288.546	2258.032
20160501:00:06:49	23.716	12.224	0.742	23.662	0.25	2.178	0.25	2.133	113.89	300.629	301.269	68.555	50.735	69.168	78.528	1802.239	1776.236	2290.239	2259.694
20160501:00:11:49	23.723	12.205	0.788	23.665	0.25	2.176	0.25	2.148	113.844	300.606	301.219	68.5	50.645	69.119	78.504	1803.597	1777.605	2291.957	2261.429
20160501:00:16:49	23.718	12.217	0.778	23.661	0.25	2.175	0.25	2.136	113.871	300.617	301.264	68.495	50.677	69.117	78.479	1804.981	1778.93	2293.709	2263.107
20160501:00:21:49	23.722	12.208	0.773	23.665	0.25	2.177	0.25	2.14	113.852	300.637	301.268	68.47	50.683	69.087	78.451	1806.323	1780.298	2295.407	2264.84
20160501:00:26:49	23.722	12.204	0.808	23.663	0.25	2.172	0.25	2.146	113.84	300.623	301.258	68.438	50.651	69.055	78.42	1807.724	1781.612	2297.18	2266.506
20160501:00:31:49	23.721	12.208	0.835	23.66	0.25	2.171	0.25	2.142	113.851	300.686	301.315	68.427	50.676	69.044	78.392	1809.046	1782.994	2298.854	2268.256
20160501:00:36:49	23.717	12.19	0.731	23.663	0.25	2.178	0.25	2.137	113.791	300.605	301.229	68.382	50.623	69	78.365	1810.428	1784.311	2300.602	2269.925
20160501:00:41:49	23.718	12.202	0.781	23.661	0.25	2.176	0.25	2.148	113.828	300.577	301.251	68.378	50.684	68.993	78.334	1811.808	1785.687	2302.348	2271.667
20160501:00:46:49	23.72	11.62	0.796	23.662	0.25	2.175	0.25	2.14	112.11	300.543	301.243	68.284	50.629	68.91	78.306	1813.134	1787.003	2304.026	2273.335
20160501:00:51:49	23.721	11.47	0.78	23.664	0.25	2.174	0.25	2.134	111.666	300.567	301.232	68.269	50.653	68.897	78.278	1814.536	1788.379	2305.8	2275.077
20160501:00:56:49	23.718	11.282	0.678	23.668	0.25	2.159	0.25	2.123	111.084	300.501	301.209	68.238	50.654	68.869	78.248	1815.873	1789.697	2307.491	2276.746
20160501:01:01:49	23.709	11.938	0.565	23.667	0.25	2.166	0.25	2.125	113.038	300.574	301.278	68.215	50.627	68.842	78.219	1817.261	1791.083	2309.246	2278.502
20160501:01:06:49	23.71	12.158	0.616	23.664	0.25	2.181	0.25	2.136	113.69	300.659	301.33	68.214	50.69	68.846	78.193	1818.619	1792.39	2310.963	2280.156
20160501:01:11:49	23.709	12.154	0.568	23.667	0.25	2.173	0.25	2.144	113.676	300.654	301.27	68.167	50.621	68.793	78.166	1819.96	1793.769	2312.659	2281.902
20160501:01:16:49	23.705	12.17	0.508	23.667	0.25	2.186	0.25	2.154	113.717	300.637	301.243	68.165	50.661	68.786	78.139	1821.357	1795.087	2314.426	2283.571
20160501:01:21:49	23.703	12.174	0.52	23.665	0.25	2.175	0.25	2.144	113.726	300.634	301.255	68.132	50.668	68.755	78.111	1822.7	1796.465	2316.124	2285.316
20160501:01:26:49	23.701	12.176	0.509	23.663	0.25	2.178	0.25	2.149	113.726	300.643	301.228	68.106	50.645	68.731	78.085	1824.098	1797.77	2317.893	2286.968
20160501:01:31:49	23.702	12.176	0.517	23.664	0.25	2.184	0.25	2.145	113.729	300.633	301.236	68.101	50.717	68.724	78.059	1825.434	1799.152	2319.581	2288.718
20160501:01:36:49	23.704	12.174	0.576	23.661	0.25	2.174	0.25	2.141	113.726	300.661	301.304	68.051	50.633	68.675	78.031	1826.798	1800.464	2321.307	2290.38
20160501:01:41:49	23.707	12.169	0.588	23.664	0.25	2.176	0.25	2.155	113.717	300.65	301.284	68.045	50.673	68.666	78.003	1828.176	1801.833	2323.05	2292.113
20160501:01:46:49	23.702	12.184	0.536	23.662	0.25	2.179	0.25	2.134	113.752	300.599	301.226	67.991	50.703	68.613	77.975	1829.525	1803.165	2324.756	2293.799
20160501:01:51:49	23.697	12.183	0.476	23.662	0.25	2.184	0.25	2.14	113.741	300.578	301.167	67.938	50.645	68.561	77.945	1830.923	1804.518	2326.522	2295.511
20160501:01:56:49	23.694	12.189	0.49	23.658	0.25	2.173	0.25	2.135	113.754	300.558	301.196	67.932	50.713	68.557	77.919	1832.254	1805.868	2328.206	2297.22
20160501:02:01:49	23.697	12.183	0.483	23.662	0.25	2.178	0.25	2.14	113.744	300.617	301.257	67.884	50.653	68.502	77.893	1833.638	1807.201	2329.956	2298.908
20160501:02:06:49	23.697	12.224	0.578	23.655	0.25	2.176	0.25	2.148	113.861	300.592	301.247	67.883	50.671	68.497	77.866	1835.013	1808.564	2331.694	2300.633
20160501:02:11:49	23.699	12.254	0.582	23.657	0.25	2.182	0.25	2.16	113.949	300.626	301.229	67.846	50.691	68.462	77.84	1836.345	1809.889	2333.378	2302.31
20160501:02:16:49	23.697	12.286	0.584	23.654	0.25	2.175	0.25	2.144	114.038	300.637	301.263	67.821	50.628	68.441	77.816	1837.739	1811.265	2335.141	2304.053
20160501:02:21:49	23.697	12.29	0.532	23.658	0.25	2.183	0.25	2.139	114.051	300.631	301.216	67.816	50.66	68.433	77.79	1839.078	1812.58	2336.833	2305.716
20160501:02:26:49	23.693	12.282	0.421	23.662	0.25	2.181	0.25	2.149	114.02	300.634	301.268	67.767	50.654	68.378	77.762	1840.475	1813.946	2338.6	2307.445
20160501:02:31:49	23.694	12.301	0.442	23.661	0.25	2.164	0.25	2.149	114.075	300.614	301.251	67.759	50.642	68.366	77.734	1841.819	1815.271	2340.298	2309.122
20160501:02:36:49	23.697	12.272	0.484	23.661	0.25	2.178	0.25	2.141	113.999	300.646	301.29	67.691	50.656	68.297	77.701	1843.173	1816.641	2342.009	2310.855
20160501:02:41:49	23.697	12.298	0.466	23.663	0.25	2.18	0.25	2.156	114.072	300.614	301.262	67.64	50.641	68.246	77.668	1844.559	1817.959	2343.761	2312.523
20160501:02:46:49	23.696	12.312	0.441	23.663	0.25	2.184	0.25	2.151	114.111	300.624	301.228	67.595	50.614	68.194	77.631	1845.906	1819.34	2345.463	2314.269
20160501:02:51:49	23.692	12.312	0.355	23.666	0.25	2.184	0.25	2.148	114.105	300.64	301.272	67.567	50.66	68.169	77.59	1847.306	1820.66	2347.231	2315.938
20160501:02:56:49	23.692	12.315	0.321	23.669	0.25	2.189	0.25	2.15	114.115	300.635	301.269	67.509	50.616	68.108	77.549	1848.636	1822.038	2348.911	2317.68
20160501:03:01:49	23.694	12.331	0.345	23.669	0.25	2.192	0.25	2.161	114.162	300.613	301.251	67.486	50.623	68.094	77.51	1850.019	1823.356	2350.657	2319.348
20160501:03:06:49	23.696	11.935	0.39	23.667	0.25	2.188	0.25	2.141	113.007	300.556	301.177	67.416	50.648	68.049	77.468	1851.398	1824.735	2352.398	2321.09
20160501:03:11:49	23.698	11.556	0.403	23.669	0.25	2.172	0.25	2.138	111.891	300.568	301.291	67.348	50.624	67.976	77.425	1852.735	1826.052	2354.087	2322.756
20160501:03:16:49	23.697	11.504	0.395	23.668	0.25	2.165	0.25	2.132	111.732	300.551	301.258	67.327	50.613	67.936	77.379	1854.137	1827.435	2355.857	2324.504
20160501:03:21:49	23.694	11.96	0.363	23.667	0.25	2.162	0.25	2.143	113.077	300.579	301.28	67.288	50.642	67.895	77.335	1855.48	1828.75	2357.552	2326.165
20160501:03:26:49	23.69	12.445	0.277	23.67	0.25	2.177	0.25	2.156	114.482	300.608	301.225	67.252	50.625	67.857	77.29	1856.866	1830.129	2359.302	2327.908
20160501:03:31:49	23.695	12.489	0.343	23.669	0.25	2.177	0.25	2.154	114.613	300.611	301.22	67.238	50.62	67.844	77.248	1858.227	1831.447	2361.02	2329.573
20160501:03:36:49	23.692	12.169	0.296	23.67	0.25	2.179	0.25	2.153	113.685	300.636	301.222	67.189	50.637	67.796	77.202	1859.569	1832.829	2362.713	2331.32
20160501:03:41:49	23.692	11.698	0.297	23.671	0.25	2.157	0.25	2.147	112.31	300.555	301.251	67.148	50.633	67.761	77.156	1860.965	1834.144	2364.476	2332.981
20160501:03:46:49	23.688	11.562	0.223	23.672	0.25	2.163	0.25	2.129	111.895	300.59	301.295	67.117	50.628	67.739	77.113	1862.305	1835.524	2366.167	2334.726
20160501:03:51:49	23.687	11.844	0.242	23.669	0.25	2.154	0.25	2.129	112.724	300.523	301.23	67.032	50.647	67.651	77.073	1863.706	1836.831	2367.933	2336.376
20160501:03:56:49	23.694	12.353	0.325	23.67	0.25	2.176	0.25	2.153	114.225	300.572	301.227	67.022	50.665	67.642	77.037	1865.046	1838.212	2369.624	2338.12
20160501:04:01:49	23.691	12.377	0.27	23.671	0.25	2.187	0.25	2.155	114.289	300.564	301.227	66.98	50.618	67.606	77.005	1866.415	1839.535	2371.352	2339.791
20160501:04:06:49	23.69	12.409	0.257	23.671	0.25	2.18	0.25	2.158	114.38	300.578	301.208	66.978	50.669	67.607	76.974	1867.794	1840.901	2373.091	2341.517
20160501:04:11:49	23.687	12.402	0.187	23.673	0.25	2.179	0.25	2.156	114.356	300.592	301.202	66.938	50.671	67.558	76.946	1869.141	1842.242	2374.791	2343.211
20160501:04:16:49	23.681	12.392	0.096	23.674	0.25	2.177	0.25	2.166	114.317	300.614	301.244	66.939	50.651	67.559	76.918	1870.541	1843.592	2376.556	2344.915
20160501:04:21:49	23.688	12.376	0.2	23.674	0.25	2.182	0.25	2.162	114.282	300.64	301.273	66.902	50.632	67.522	76.892	1871.883	1844.947	2378.248	2346.626
20160501:04:26:49	23.688	12.375	0.231	23.671	0.25	2.188	0.25	2.143	114.278	300.643	301.247	66.878	50.661	67.493	76.864	1873.266	1846.281	2379.993	2348.31
20160501:04:31:49	23.691	12.403	0.293	23.669	0.25	2.178	0.25	2.145	114.362	300.627	301.218	66.863	50.688	67.46	76.836	1874.631	1847.647	2381.715	2350.036
20160501:04:36:49	23.691	12.403	0.286	23.67	0.25	2.182	0.25	2.147	114.365	300.56	301.207	66.814	50.618	67.375	76.808	1875.975	1848.969	2383.409	2351.705
20160501:04:41:49	23.687	12.104	0.236	23.669	0.25	2.174	0.25	2.142	113.488	300.59	301.213	66.81	50.648	67.369	76.775	1877.368	1850.345	2385.167	2353.442
20160501:04:46:49	23.695	11.596	0.335	23.67	0.25	2.156	0.25	2.139	112.006	300.549	301.228	66.719	50.647	67.323	76.746	1878.709	1851.663	2386.857	2355.105
20160501:04:51:49	23.692	11.449	0.27	23.672	0.25	2.158	0.25	2.144	111.556	300.552	301.245	66.697	50.667	67.311	76.715	1880.113	1853.04	2388.628	2356.844
20160501:04:56:49	23.691	11.756	0.233	23.673	0.25	2.158	0.25	2.148	112.467	300.557	301.237	66.66	50.629	67.277	76.684	1881.454	1854.364	2390.319	2358.515
20160501:05:01:49	23.69	12.295	0.211	23.675	0.25	2.172	0.25	2.142	114.054	300.575	301.213	66.638	50.632	67.255	76.647	1882.817	1855.733	2392.037	2360.242
20160501:05:06:49	23.692	12.304	0.244	23.674	0.25	2.174	0.25	2.151	114.084	300.504	301.168	66.598	50.643	67.213	76.614	1884.197	1857.061	2393.776	2361.919
20160501:05:11:49	23.693	12.31	0.244	23.675	0.25	2.188	0.25	2.151	114.099	300.626	301.218	66.585	50.669	67.201	76.583	1885.549	1858.43	2395.48	2363.647
20160501:05:16:49	23.689	12.309	0.188	23.675	0.25	2.187	0.25	2.154	114.092	300.614	301.202	66.556	50.64	67.17	76.551	1886.955	1859.749	2397.252	2365.31
20160501:05:21:49	23.69	12.33	0.162	23.678	0.25	2.198	0.25	2.162	114.153	300.659	301.274	66.528	50.651	67.145	76.521	1888.297	1861.131	2398.943	2367.055
20160501:05:26:49	23.688	12.327	0.123	23.679	0.25	2.186	0.25	2.145	114.142	300.64	301.251	66.51	50.677	67.105	76.491	1889.685	1862.449	2400.693	2368.716
20160501:05:31:49	23.689	12.308	0.109	23.681	0.25	2.176	0.25	2.148	114.091	300.593	301.218	66.473	50.665	67.034	76.462	1891.053	1863.83	2402.415	2370.459
20160501:05:36:49	23.689	12.312	0.12	23.68	0.25	2.172	0.25	2.148	114.1	300.614	301.207	66.47	50.661	67.031	76.434	1892.392	1865.147	2404.102	2372.118
20160501:05:41:49	23.691	12.301	0.109	23.683	0.25	2.175	0.25	2.155	114.073	300.545	301.135	66.373	50.629	66.983	76.403	1893.788	1866.522	2405.861	2373.853
20160501:05:46:49	23.691	12.004	0.119	23.682	0.25	2.179	0.25	2.164	113.201	300.603	301.26	66.364	50.67	66.978	76.374	1895.131	1867.843	2407.552	2375.519
20160501:05:51:49	23.69	11.485	0.087	23.683	0.25	2.172	0.25	2.132	111.664	300.577	301.187	66.329	50.681	66.943	76.346	1896.529	1869.221	2409.313	2377.256
20160501:05:56:49	23.689	11.338	0.059	23.685	0.25	2.158	0.25	2.133	111.213	300.508	301.174	66.316	50.673	66.923	76.318	1897.866	1870.539	2410.996	2378.917
20160501:06:01:49	23.688	11.65	0.042	23.685	0.25	2.151	0.25	2.124	112.146	300.485	301.175	66.307	50.672	66.914	76.292	1899.243	1871.919	2412.73	2380.658
20160501:06:06:49	23.692	12.175	0.1	23.686	0.25	2.172	0.25	2.143	113.713	300.475	301.113	66.259	50.662	66.87	76.261	1900.63	1873.235	2414.476	2382.316
20160501:06:11:49	23.698	12.215	0.148	23.688	0.25	2.182	0.25	2.149	113.837	300.618	301.235	66.254	50.673	66.867	76.234	1901.964	1874.617	2416.156	2384.058
20160501:06:16:49	23.699	12.209	0.149	23.688	0.25	2.181	0.25	2.15	113.821	300.665	301.185	66.208	50.634	66.821	76.206	1903.369	1875.931	2417.924	2385.714
20160501:06:21:49	23.694	12.225	0.073	23.689	0.25	2.18	0.25	2.16	113.858	300.67	301.216	66.196	50.656	66.807	76.181	1904.705	1877.318	2419.606	2387.462
20160501:06:26:49	23.695	12.26	0.072	23.69	0.25	2.179	0.25	2.165	113.961	300.664	301.206	66.15	50.651	66.763	76.152	1906.101	1878.628	2421.363	2389.113
20160501:06:31:49	23.697	12.26	0.062	23.692	0.25	2.172	0.25	2.149	113.964	300.636	301.162	66.084	50.652	66.696	76.123	1907.45	1880.007	2423.061	2390.85
20160501:06:36:49	23.703	12.267	0.185	23.689	0.25	2.184	0.25	2.152	113.991	300.641	301.185	66.083	50.664	66.693	76.092	1908.806	1881.33	2424.767	2392.517
20160501:06:41:49	23.706	12.256	0.199	23.692	0.25	2.183	0.25	2.152	113.965	300.656	301.198	66.033	50.631	66.646	76.062	1910.192	1882.711	2426.511	2394.256
20160501:06:46:49	23.708	12.265	0.234	23.691	0.25	2.175	0.25	2.152	113.994	300.679	301.21	66.029	50.653	66.641	76.03	1911.542	1884.031	2428.209	2395.919
20160501:06:51:49	23.706	12.265	0.141	23.696	0.25	2.173	0.25	2.167	113.991	300.613	301.16	65.99	50.619	66.592	75.996	1912.946	1885.41	2429.976	2397.656
20160501:06:56:49	23.709	12.292	0.136	23.699	0.25	2.175	0.25	2.164	114.074	300.607	301.168	66.007	50.621	66.592	75.969	1914.28	1886.723	2431.654	2399.308
20160501:07:01:49	23.713	12.294	0.181	23.699	0.25	2.184	0.25	2.157	114.084	300.661	301.205	65.975	50.604	66.562	75.938	1915.666	1888.107	2433.396	2401.051
20160501:07:06:49	23.712	12.325	0.179	23.699	0.25	2.184	0.25	2.16	114.172	300.666	301.223	65.966	50.617	66.552	75.908	1917.034	1889.414	2435.117	2402.697
20160501:07:11:49	23.712	12.323	0.208	23.697	0.25	2.174	0.25	2.151	114.166	300.671	301.226	65.947	50.604	66.544	75.879	1918.374	1890.8	2436.802	2404.442
20160501:07:16:49	23.718	12.292	0.275	23.697	0.25	2.182	0.25	2.143	114.085	300.656	301.166	65.913	50.601	66.517	75.849	1919.779	1892.118	2438.569	2406.102
20160501:07:21:49	23.717	12.35	0.216	23.701	0.25	2.174	0.25	2.143	114.25	300.647	301.168	65.915	50.608	66.523	75.823	1921.12	1893.498	2440.256	2407.838
20160501:07:26:49	23.721	12.344	0.264	23.701	0.25	2.169	0.25	2.143	114.239	300.601	301.139	65.87	50.569	66.477	75.796	1922.52	1894.827	2442.015	2409.511
20160501:07:31:49	23.721	12.359	0.3	23.699	0.25	2.181	0.25	2.146	114.283	300.615	301.16	65.88	50.591	66.476	75.772	1923.852	1896.192	2443.691	2411.229
20160501:07:36:49	23.719	12.407	0.28	23.699	0.25	2.177	0.25	2.156	114.416	300.645	301.152	65.884	50.588	66.456	75.746	1925.232	1897.531	2445.426	2412.915
20160501:07:41:49	23.725	12.393	0.35	23.699	0.25	2.179	0.25	2.149	114.384	300.599	301.083	65.855	50.56	66.413	75.724	1926.621	1898.887	2447.172	2414.622
20160501:07:46:49	23.723	12.393	0.344	23.698	0.25	2.173	0.25	2.151	114.383	300.588	301.089	65.858	50.577	66.455	75.702	1927.947	1900.234	2448.839	2416.318
20160501:07:51:49	23.724	12.427	0.354	23.698	0.25	2.173	0.25	2.144	114.482	300.643	301.165	65.862	50.566	66.469	75.684	1929.346	1901.579	2450.598	2418.011
20160501:07:56:49	23.727	12.437	0.388	23.699	0.25	2.171	0.25	2.136	114.515	300.619	301.133	65.84	50.552	66.419	75.67	1930.683	1902.931	2452.28	2419.712
20160501:08:01:49	23.731	12.475	0.433	23.699	0.25	2.17	0.25	2.146	114.627	300.607	301.128	65.851	50.561	66.437	75.659	1932.081	1904.272	2454.037	2421.4
20160501:08:06:49	23.735	12.555	0.485	23.699	0.25	2.176	0.25	2.146	114.858	300.636	301.201	65.858	50.55	66.468	75.651	1933.414	1905.626	2455.713	2423.105
20160501:08:11:49	23.739	12.555	0.55	23.698	0.25	2.17	0.25	2.139	114.865	300.657	301.206	65.873	50.527	66.475	75.647	1934.788	1906.962	2457.441	2424.788
20160501:08:16:49	23.741	12.527	0.614	23.696	0.25	2.176	0.25	2.148	114.79	300.578	301.165	65.906	50.557	66.493	75.647	1936.17	1908.325	2459.18	2426.504
20160501:08:21:49	23.746	12.555	0.69	23.695	0.25	2.176	0.25	2.135	114.874	300.577	301.16	65.914	50.554	66.514	75.651	1937.5	1909.653	2460.852	2428.175
20160501:08:26:49	23.753	11.997	0.762	23.697	0.25	2.174	0.25	2.138	113.269	300.519	301.128	65.922	50.507	66.524	75.658	1938.897	1911.017	2462.609	2429.893
20160501:08:31:49	23.75	11.567	0.74	23.695	0.25	2.157	0.25	2.139	112.001	300.406	301.105	65.959	50.516	66.542	75.668	1940.231	1912.341	2464.287	2431.56
20160501:08:36:49	23.756	11.327	0.834	23.694	0.25	2.161	0.25	2.125	111.278	300.478	301.174	66.015	50.557	66.586	75.681	1941.629	1913.705	2466.046	2433.278
20160501:08:41:49	23.756	11.618	0.827	23.696	0.25	2.161	0.25	2.113	112.156	300.522	301.21	66.026	50.52	66.61	75.696	1942.962	1915.029	2467.722	2434.945
20160501:08:46:49	23.759	11.285	0.953	23.688	0.25	2.15	0.25	2.118	111.152	300.525	301.203	66.03	50.481	66.622	75.716	1944.335	1916.395	2469.45	2436.665
20160501:08:51:49	23.769	11.195	1.097	23.689	0.25	2.142	0.25	2.121	110.89	300.474	301.151	66.073	50.522	66.653	75.737	1945.714	1917.718	2471.185	2438.333
20160501:08:56:49	23.773	11.445	1.116	23.691	0.25	2.137	0.25	2.119	111.651	300.454	301.114	66.152	50.523	66.694	75.762	1947.047	1919.08	2472.863	2440.049
20160501:09:01:49	23.773	12.103	1.1	23.692	0.25	2.16	0.25	2.13	113.623	300.486	301.162	66.184	50.452	66.699	75.788	1948.431	1920.404	2474.606	2441.716
20160501:09:06:49	23.776	12.16	1.169	23.69	0.25	2.168	0.25	2.126	113.792	300.603	301.173	66.236	50.503	66.785	75.816	1949.769	1921.764	2476.289	2443.43
20160501:09:11:49	23.785	12.254	1.308	23.689	0.25	2.162	0.25	2.134	114.076	300.556	301.15	66.252	50.515	66.819	75.845	1951.163	1923.086	2478.044	2445.096
20160501:09:16:49	23.787	12.227	1.315	23.69	0.25	2.158	0.25	2.139	114.002	300.629	301.259	66.296	50.46	66.865	75

Time: day:hh:mm:ss	Stack Pressure: in-Hg	Sat% H2O: Percent	Static: in-H2O	Barometric: in-Hg	Flowmeter1: l/min	Vacuum1: in-Hg	Flowmeter2: l/min	Vacuum2: in-Hg	Stack Temp: degF	Sorbent Temp: degF	Probe Temp: degF	DGM#1 Temp: degF	Condenser Temp: degF	DGM#2 Temp: degF	DAQ Temp: degF	DGM1*: liters STP	DGM2*: liters STP	DGM1: liters nominal	DGM2: liters nominal
20160501:13:06:49	23.848	11.492	2.092	23.694	0.25	2.151	0.25	2.121	111.917	300.542	301.235	68.851	50.588	69.407	78.243	2015.181	1986.245	2558.835	2524.885
20160501:13:11:49	23.844	12.145	2.007	23.696	0.25	2.16	0.25	2.124	113.84	300.57	301.26	68.921	50.611	69.46	78.308	2016.531	1987.554	2560.543	2526.543
20160501:13:16:49	23.848	12.384	2.086	23.695	0.25	2.157	0.25	2.132	114.541	300.645	301.236	69.013	50.587	69.511	78.371	2017.876	1988.929	2562.244	2528.284
20160501:13:21:49	23.847	12.413	2.103	23.693	0.25	2.165	0.25	2.145	114.623	300.598	301.214	69.061	50.619	69.569	78.438	2019.268	1990.232	2564.006	2529.934
20160501:13:26:49	23.857	12.415	2.239	23.692	0.25	2.167	0.25	2.133	114.643	300.64	301.289	69.094	50.601	69.61	78.502	2020.608	1991.61	2565.702	2531.68
20160501:13:31:49	23.865	12.417	2.371	23.69	0.25	2.164	0.25	2.137	114.66	300.632	301.249	69.13	50.618	69.677	78.564	2022.003	1992.925	2567.467	2533.346
20160501:13:36:49	23.867	12.398	2.436	23.688	0.25	2.166	0.25	2.141	114.611	300.61	301.27	69.166	50.588	69.726	78.622	2023.34	1994.288	2569.159	2535.073
20160501:13:41:49	23.855	12.406	2.205	23.693	0.25	2.17	0.25	2.14	114.616	300.611	301.231	69.216	50.609	69.774	78.683	2024.708	1995.621	2570.891	2536.763
20160501:13:46:49	23.859	12.422	2.181	23.699	0.25	2.176	0.25	2.14	114.667	300.64	301.273	69.306	50.593	69.819	78.74	2026.082	1996.97	2572.63	2538.472
20160501:13:51:49	23.857	12.416	2.267	23.69	0.25	2.168	0.25	2.119	114.646	300.677	301.305	69.36	50.612	69.889	78.797	2027.427	1998.318	2574.333	2540.18
20160501:13:56:49	23.86	12.43	2.261	23.693	0.25	2.169	0.25	2.125	114.691	300.639	301.252	69.4	50.601	69.944	78.854	2028.825	1999.649	2576.104	2541.867
20160501:14:01:49	23.863	11.985	2.276	23.696	0.25	2.163	0.25	2.127	113.404	300.554	301.194	69.425	50.624	69.988	78.905	2030.162	2001.011	2577.796	2543.594
20160501:14:06:49	23.862	12.428	2.254	23.697	0.25	2.162	0.25	2.134	114.689	300.616	301.26	69.458	50.608	70.022	78.959	2031.543	2002.33	2579.544	2545.265
20160501:14:11:49	23.863	12.5	2.306	23.693	0.25	2.17	0.25	2.142	114.892	300.666	301.296	69.49	50.613	70.055	79.006	2032.913	2003.703	2581.28	2547.006
20160501:14:16:49	23.868	12.574	2.333	23.696	0.25	2.177	0.25	2.148	115.109	300.647	301.282	69.52	50.591	70.082	79.054	2034.251	2005.017	2582.974	2548.671
20160501:14:21:49	23.866	12.575	2.262	23.699	0.25	2.167	0.25	2.14	115.109	300.63	301.238	69.555	50.61	70.118	79.101	2035.643	2006.383	2584.737	2550.402
20160501:14:26:49	23.864	12.612	2.321	23.693	0.25	2.172	0.25	2.149	115.21	300.649	301.245	69.647	50.605	70.162	79.141	2036.98	2007.705	2586.43	2552.079
20160501:14:31:49	23.867	12.624	2.366	23.693	0.25	2.172	0.25	2.143	115.249	300.58	301.193	69.666	50.603	70.178	79.182	2038.373	2009.076	2588.194	2553.818
20160501:14:36:49	23.87	12.64	2.44	23.69	0.25	2.157	0.25	2.138	115.298	300.637	301.279	69.717	50.606	70.272	79.223	2039.722	2010.393	2589.904	2555.489
20160501:14:41:49	23.872	12.617	2.426	23.694	0.25	2.166	0.25	2.141	115.237	300.664	301.286	69.731	50.611	70.299	79.262	2041.074	2011.77	2591.617	2557.235
20160501:14:46:49	23.864	12.632	2.332	23.692	0.25	2.168	0.25	2.151	115.265	300.624	301.261	69.758	50.609	70.333	79.297	2042.462	2013.091	2593.376	2558.91
20160501:14:51:49	23.862	12.636	2.208	23.7	0.25	2.172	0.25	2.152	115.274	300.614	301.265	69.784	50.632	70.364	79.333	2043.806	2014.468	2595.078	2560.656
20160501:14:56:49	23.868	12.63	2.328	23.696	0.25	2.169	0.25	2.143	115.266	300.547	301.214	69.818	50.617	70.394	79.37	2045.206	2015.784	2596.852	2562.325
20160501:15:01:49	23.867	12.626	2.312	23.697	0.25	2.163	0.25	2.145	115.253	300.604	301.267	69.887	50.64	70.435	79.406	2046.542	2017.162	2598.544	2564.073
20160501:15:06:49	23.867	12.602	2.42	23.689	0.25	2.157	0.25	2.138	115.186	300.656	301.262	69.933	50.619	70.453	79.44	2047.911	2018.473	2600.28	2565.737
20160501:15:11:49	23.872	12.617	2.487	23.689	0.25	2.164	0.25	2.133	115.236	300.642	301.223	69.978	50.64	70.494	79.475	2049.288	2019.853	2602.026	2567.489
20160501:15:16:49	23.876	12.646	2.49	23.693	0.25	2.166	0.25	2.148	115.324	300.582	301.211	70.002	50.616	70.522	79.514	2050.634	2021.166	2603.731	2569.154
20160501:15:21:49	23.875	12.715	2.458	23.694	0.25	2.184	0.25	2.138	115.513	300.589	301.215	70.055	50.655	70.62	79.556	2052.037	2022.542	2605.511	2570.9
20160501:15:26:49	23.869	12.722	2.367	23.695	0.25	2.176	0.25	2.136	115.525	300.63	301.26	70.081	50.635	70.65	79.597	2053.362	2023.854	2607.191	2572.566
20160501:15:31:49	23.866	12.778	2.374	23.692	0.25	2.185	0.25	2.14	115.677	300.66	301.289	70.115	50.647	70.687	79.638	2054.745	2025.227	2608.944	2574.308
20160501:15:36:49	23.87	12.595	2.393	23.694	0.25	2.167	0.25	2.13	115.166	300.61	301.222	70.142	50.633	70.715	79.676	2056.121	2026.532	2610.689	2575.964
20160501:15:41:49	23.875	11.847	2.487	23.692	0.25	2.162	0.25	2.124	113.023	300.552	301.27	70.171	50.637	70.738	79.715	2057.46	2027.906	2612.387	2577.709
20160501:15:46:49	23.867	11.781	2.368	23.693	0.25	2.163	0.25	2.126	112.812	300.514	301.221	70.268	50.649	70.782	79.755	2058.861	2029.233	2614.163	2579.393
20160501:15:51:49	23.868	11.8	2.407	23.691	0.25	2.141	0.25	2.108	112.867	300.513	301.24	70.281	50.638	70.794	79.794	2060.197	2030.586	2615.857	2581.111
20160501:15:56:49	23.871	12.565	2.395	23.695	0.25	2.158	0.25	2.123	115.089	300.602	301.248	70.329	50.668	70.849	79.83	2061.574	2031.935	2617.604	2582.823
20160501:16:01:49	23.866	12.093	2.313	23.695	0.25	2.164	0.25	2.129	113.718	300.623	301.234	70.349	50.66	70.886	79.866	2062.95	2033.263	2619.35	2584.509
20160501:16:06:49	23.862	11.765	2.28	23.694	0.25	2.15	0.25	2.12	112.759	300.57	301.272	70.381	50.682	70.96	79.9	2064.276	2034.629	2621.031	2586.244
20160501:16:11:49	23.864	11.604	2.202	23.702	0.25	2.141	0.25	2.13	112.278	300.482	301.179	70.396	50.655	70.975	79.937	2065.678	2035.945	2622.809	2587.915
20160501:16:16:49	23.868	12.28	2.228	23.704	0.25	2.155	0.25	2.138	114.262	300.561	301.194	70.434	50.679	71.013	79.973	2067.016	2037.317	2624.506	2589.656
20160501:16:21:49	23.874	12.61	2.274	23.707	0.25	2.172	0.25	2.139	115.22	300.626	301.211	70.459	50.66	71.036	80.009	2068.399	2038.634	2626.259	2591.329
20160501:16:26:49	23.873	12.608	2.366	23.699	0.25	2.169	0.25	2.138	115.212	300.625	301.231	70.496	50.679	71.069	80.048	2069.758	2040.002	2627.983	2593.066
20160501:16:31:49	23.873	12.616	2.345	23.701	0.25	2.173	0.25	2.135	115.235	300.631	301.216	70.567	50.673	71.108	80.086	2071.104	2041.318	2629.691	2594.737
20160501:16:36:49	23.876	12.585	2.346	23.704	0.25	2.154	0.25	2.141	115.153	300.572	301.164	70.61	50.686	71.131	80.127	2072.498	2042.693	2631.459	2596.483
20160501:16:41:49	23.873	12.576	2.338	23.701	0.25	2.159	0.25	2.138	115.123	300.613	301.226	70.668	50.687	71.185	80.169	2073.838	2044.011	2633.159	2598.156
20160501:16:46:49	23.87	12.549	2.265	23.704	0.25	2.162	0.25	2.144	115.042	300.626	301.219	70.684	50.722	71.216	80.206	2075.233	2045.384	2634.93	2599.9
20160501:16:51:49	23.87	12.535	2.255	23.704	0.25	2.161	0.25	2.125	115.004	300.666	301.299	70.723	50.687	71.292	80.245	2076.584	2046.7	2636.643	2601.571
20160501:16:56:49	23.87	12.529	2.268	23.704	0.25	2.151	0.25	2.133	114.986	300.632	301.199	70.756	50.738	71.324	80.286	2077.925	2048.075	2638.344	2603.318
20160501:17:01:49	23.873	12.586	2.328	23.702	0.25	2.158	0.25	2.141	115.151	300.636	301.267	70.776	50.681	71.35	80.328	2079.316	2049.386	2640.109	2604.983
20160501:17:06:50	23.874	12.178	2.254	23.708	0.25	2.161	0.25	2.144	113.977	300.691	301.342	70.814	50.774	71.401	80.367	2080.657	2050.768	2641.811	2606.739
20160501:17:11:50	23.872	11.904	2.258	23.706	0.25	2.157	0.25	2.119	113.185	300.609	301.259	70.822	50.689	71.418	80.406	2082.052	2052.079	2643.581	2608.404
20160501:17:16:50	23.875	11.719	2.312	23.705	0.25	2.136	0.25	2.115	112.642	300.604	301.281	70.868	50.753	71.497	80.445	2083.389	2053.455	2645.278	2610.152
20160501:17:21:50	23.87	12.245	2.232	23.705	0.25	2.155	0.25	2.114	114.164	300.634	301.294	70.887	50.703	71.502	80.481	2084.749	2054.764	2647.004	2611.816
20160501:17:26:50	23.869	12.65	2.198	23.707	0.25	2.166	0.25	2.136	115.323	300.643	301.243	70.956	50.76	71.539	80.516	2086.132	2056.137	2648.759	2613.56
20160501:17:31:50	23.872	12.642	2.222	23.709	0.25	2.166	0.25	2.144	115.306	300.633	301.25	70.971	50.707	71.548	80.546	2087.476	2057.444	2650.465	2615.22
20160501:17:36:50	23.871	12.704	2.195	23.709	0.25	2.179	0.25	2.14	115.476	300.667	301.29	71.008	50.757	71.578	80.578	2088.874	2058.814	2652.239	2616.961
20160501:17:41:50	23.871	12.703	2.17	23.712	0.25	2.172	0.25	2.146	115.476	300.653	301.254	71.004	50.683	71.577	80.607	2090.212	2060.141	2653.937	2618.647
20160501:17:46:50	23.871	12.719	2.148	23.713	0.25	2.175	0.25	2.134	115.52	300.714	301.337	71.038	50.768	71.625	80.635	2091.581	2061.492	2655.674	2620.363
20160501:17:51:50	23.871	12.721	2.151	23.713	0.25	2.188	0.25	2.148	115.526	300.692	301.333	71.021	50.69	71.627	80.661	2092.963	2062.846	2657.428	2622.083
20160501:17:56:50	23.874	12.694	2.143	23.716	0.25	2.173	0.25	2.147	115.455	300.686	301.308	71.025	50.722	71.631	80.683	2094.31	2064.173	2659.137	2623.769
20160501:18:01:50	23.875	12.677	2.169	23.716	0.25	2.174	0.25	2.134	115.408	300.739	301.374	71.068	50.754	71.668	80.704	2095.712	2065.546	2660.917	2625.513
20160501:18:06:50	23.873	12.645	2.135	23.716	0.25	2.167	0.25	2.143	115.315	300.741	301.36	71.068	50.741	71.659	80.722	2097.042	2066.861	2662.604	2627.184
20160501:18:11:50	23.87	12.591	2.086	23.716	0.25	2.172	0.25	2.141	115.161	300.703	301.342	71.066	50.704	71.656	80.739	2098.415	2068.227	2664.346	2628.919
20160501:18:16:50	23.871	12.558	2.076	23.718	0.25	2.17	0.25	2.136	115.069	300.697	301.347	71.071	50.695	71.652	80.752	2099.792	2069.553	2666.093	2630.603
20160501:18:21:50	23.872	12.567	2.068	23.72	0.25	2.168	0.25	2.138	115.094	300.686	301.329	71.115	50.774	71.695	80.766	2101.142	2070.926	2667.806	2632.348
20160501:18:26:50	23.874	12.556	2.073	23.722	0.25	2.171	0.25	2.139	115.068	300.642	301.297	71.113	50.743	71.697	80.78	2102.547	2072.242	2669.589	2634.019
20160501:18:31:50	23.871	12.635	2.041	23.721	0.25	2.173	0.25	2.137	115.285	300.617	301.262	71.105	50.763	71.691	80.792	2103.874	2073.62	2671.272	2635.769
20160501:18:36:50	23.874	12.642	2.079	23.721	0.25	2.186	0.25	2.148	115.311	300.628	301.282	71.099	50.704	71.689	80.804	2105.253	2074.934	2673.022	2637.438
20160501:18:41:50	23.875	12.62	2.086	23.721	0.25	2.177	0.25	2.152	115.249	300.619	301.261	71.095	50.73	71.698	80.812	2106.63	2076.31	2674.769	2639.186
20160501:18:46:50	23.874	12.626	2.101	23.72	0.25	2.177	0.25	2.145	115.265	300.605	301.241	71.112	50.694	71.71	80.82	2107.972	2077.623	2676.472	2640.853
20160501:18:51:50	23.869	12.635	2.028	23.72	0.25	2.173	0.25	2.142	115.282	300.611	301.262	71.157	50.809	71.771	80.83	2109.372	2079.005	2678.248	2642.609
20160501:18:56:50	23.868	12.594	1.964	23.724	0.25	2.181	0.25	2.15	115.168	300.599	301.258	71.175	50.785	71.792	80.842	2110.706	2080.315	2679.941	2644.273
20160501:19:01:50	23.869	12.58	1.952	23.726	0.25	2.172	0.25	2.148	115.128	300.607	301.246	71.176	50.796	71.812	80.856	2112.087	2081.692	2681.693	2646.023
20160501:19:06:50	23.867	12.562	1.902	23.728	0.25	2.172	0.25	2.142	115.074	300.609	301.264	71.18	50.763	71.832	80.872	2113.466	2083.002	2683.443	2647.686
20160501:19:11:50	23.867	12.554	1.887	23.729	0.25	2.171	0.25	2.137	115.053	300.653	301.273	71.204	50.797	71.84	80.89	2114.793	2084.377	2685.126	2649.432
20160501:19:16:50	23.868	12.547	1.852	23.732	0.25	2.163	0.25	2.142	115.033	300.719	301.333	71.29	50.804	71.898	80.909	2116.195	2085.685	2686.904	2651.094
20160501:19:21:50	23.869	12.534	1.855	23.733	0.25	2.164	0.25	2.142	114.999	300.656	301.256	71.292	50.803	71.9	80.931	2117.53	2087.054	2688.598	2652.833
20160501:19:26:50	23.867	12.376	1.834	23.732	0.25	2.175	0.25	2.134	114.541	300.645	301.272	71.316	50.788	71.911	80.958	2118.919	2088.386	2690.359	2654.524
20160501:19:31:50	23.865	11.707	1.761	23.735	0.25	2.153	0.25	2.126	112.591	300.662	301.284	71.345	50.824	71.924	80.976	2120.286	2089.732	2692.094	2656.233
20160501:19:36:50	23.866	11.617	1.763	23.736	0.25	2.158	0.25	2.122	112.32	300.604	301.277	71.332	50.785	71.911	80.993	2121.621	2091.086	2693.787	2657.953
20160501:19:41:50	23.863	11.72	1.66	23.741	0.25	2.16	0.25	2.117	112.619	300.624	301.338	71.313	50.794	71.907	81.005	2123.015	2092.413	2695.556	2659.637
20160501:19:46:50	23.859	12.416	1.562	23.744	0.25	2.166	0.25	2.126	114.648	300.671	301.357	71.304	50.785	71.912	81.02	2124.355	2093.782	2697.254	2661.376
20160501:19:51:50	23.861	12.472	1.551	23.747	0.25	2.176	0.25	2.134	114.81	300.695	301.401	71.343	50.829	71.954	81.034	2125.748	2095.094	2699.02	2663.041
20160501:19:56:50	23.86	12.5	1.537	23.747	0.25	2.165	0.25	2.14	114.889	300.749	301.394	71.347	50.825	71.957	81.04	2127.108	2096.461	2700.744	2664.776
20160501:20:01:50	23.859	12.548	1.509	23.748	0.25	2.169	0.25	2.137	115.024	300.751	301.4	71.346	50.825	71.952	81.049	2128.448	2097.784	2702.444	2666.455
20160501:20:06:50	23.856	12.592	1.4	23.753	0.25	2.181	0.25	2.146	115.143	300.721	301.371	71.343	50.817	71.949	81.055	2129.849	2099.152	2704.22	2668.192
20160501:20:11:50	23.855	12.621	1.358	23.755	0.25	2.171	0.25	2.148	115.222	300.693	301.304	71.341	50.814	71.949	81.06	2131.189	2100.469	2705.919	2669.863
20160501:20:16:50	23.855	12.608	1.318	23.758	0.25	2.178	0.25	2.146	115.187	300.695	301.373	71.338	50.817	71.949	81.064	2132.586	2101.848	2707.689	2671.613
20160501:20:21:50	23.85	12.596	1.261	23.758	0.25	2.171	0.25	2.134	115.147	300.672	301.338	71.338	50.817	71.946	81.07	2133.938	2103.165	2709.402	2673.284
20160501:20:26:50	23.858	12.572	1.321	23.761	0.25	2.174	0.25	2.145	115.09	300.653	301.261	71.336	50.808	71.945	81.076	2135.287	2104.54	2711.111	2675.028
20160501:20:31:50	23.853	12.561	1.177	23.766	0.25	2.17	0.25	2.136	115.051	300.654	301.275	71.332	50.791	71.934	81.083	2136.677	2105.856	2712.872	2676.697
20160501:20:36:50	23.85	12.562	1.173	23.764	0.25	2.17	0.25	2.14	115.048	300.606	301.233	71.322	50.805	71.925	81.09	2138.019	2107.232	2714.572	2678.442
20160501:20:41:50	23.849	12.555	1.134	23.766	0.25	2.178	0.25	2.136	115.03	300.648	301.299	71.314	50.786	71.919	81.092	2139.416	2108.543	2716.343	2680.105
20160501:20:46:50	23.848	12.564	1.046	23.771	0.25	2.183	0.25	2.143	115.05	300.721	301.345	71.305	50.796	71.912	81.095	2140.757	2109.925	2718.041	2681.857
20160501:20:51:50	23.843	12.072	0.938	23.774	0.25	2.172	0.25	2.134	113.623	300.68	301.337	71.299	50.779	71.911	81.095	2142.12	2111.235	2719.767	2683.519
20160501:20:56:50	23.845	11.752	0.952	23.775	0.25	2.156	0.25	2.132	112.696	300.644	301.313	71.295	50.794	71.909	81.095	2143.506	2112.614	2721.522	2685.267
20160501:21:01:50	23.846	11.553	0.939	23.777	0.25	2.159	0.25	2.126	112.101	300.591	301.299	71.292	50.776	71.9	81.092	2144.856	2113.928	2723.231	2686.932
20160501:21:06:50	23.836	12.123	0.804	23.777	0.25	2.164	0.25	2.127	113.763	300.596	301.3	71.289	50.795	71.893	81.086	2146.258	2115.301	2725.007	2688.673
20160501:21:11:50	23.839	12.49	0.82	23.778	0.25	2.179	0.25	2.147	114.831	300.65	301.273	71.273	50.792	71.884	81.079	2147.586	2116.605	2726.689	2690.325
20160501:21:16:50	23.836	12.505	0.773	23.779	0.25	2.18	0.25	2.152	114.866	300.614	301.273	71.256	50.831	71.88	81.072	2148.963	2117.984	2728.431	2692.073
20160501:21:21:50	23.834	12.502	0.725	23.78	0.25	2.178	0.25	2.154	114.857	300.634	301.257	71.236	50.817	71.878	81.064	2150.338	2119.307	2730.172	2693.75
20160501:21:26:50	23.83	12.429	0.637	23.783	0.25	2.168	0.25	2.156	114.642	300.659	301.264	71.216	50.841	71.875	81.056	2151.683	2120.667	2731.874	2695.474
20160501:21:31:50	23.828	12.471	0.624	23.782	0.25	2.153	0.25	2.139	114.759	300.703	301.271	71.2	50.839	71.849	81.049	2153.083	2122.009	2733.646	2697.175
20160501:21:36:50	23.829	12.571	0.637	23.782	0.25	2.18	0.25	2.152	115.043	300.765	301.352	71.187	50.854	71.864	81.041	2154.423	2123.349	2735.343	2698.872
20160501:21:41:50	23.83	12.63	0.663	23.781	0.25	2.196	0.25	2.159	115.211	300.729	301.344	71.174	50.842	71.843	81.033	2155.803	2124.703	2737.089	2700.588
20160501:21:46:50	23.823	12.635	0.577	23.781	0.25	2.189	0.25	2.156	115.213	300.66	301.275	71.138	50.851	71.769	81.023	2157.169	2126.028	2738.819	2702.267
20160501:21:51:50	23.823	12.614	0.598	23.779	0.25	2.18	0.25	2.154	115.157	300.62	301.279	71.125	50.825	71.745	81.009	2158.502	2127.394	2740.506	2703.998
20160501:21:56:50	23.826	12.59	0.646	23.779	0.25	2.171	0.25	2.148	115.093	300.678	301.349	71.124	50.841	71.743	81.003	2159.897	2128.709	2742.27	2705.665
20160501:22:01:50	23.832	12.403	0.714	23.78	0.25	2.176	0.25	2.156	114.565	300.687	301.335	71.123	50.827	71.739	80.995	2161.238	2130.083	2743.969	2707.406
20160501:22:06:50	23.829	11.745	0.675	23.78	0.25	2.162	0.25	2.132	112.652	300.633	301.329	71.122	50.849	71.738	80.986	2162.636	2131.397	2745.737	2709.071
20160501:22:11:50	23.825	11.64	0.607	23.781	0.25	2.154	0.25	2.127	112.332	300.615	301.345	71.12	50.84	71.733	80.975	2163.983	2132.764	2747.443	2710.803
20160501:22:16:50	23.82	11.765	0.517	23.782	0.25	2.146	0.25	2.121	112.689	300.548	301.328	71.113	50.865	71.723	80.966	2165.331	2134.093	2749.148	2712.487
20160501:22:21:50	23.818	12.4	0.508	23.781	0.25	2.163	0.25	2.127	114.543	300.544	301.239	71.062	50.816	71.671	80.952	2166.718	2135.461	2750.904	2714.22
20160501:22:26:50	23.819	12.444	0.509	23.782	0.25	2.165	0.25	2.135	114.669	300.639	301.335	71.042	50.845	71.656	80.933	2168.063	2136.773	2752.606	2715.882
20160501:22:31:50	23.824	12.452	0.546	23.783	0.25	2.169	0.25	2.14	114.699	300.728	301.381	71.029	50.839	71.643	80.917	2169.462	2138.151	2754.376	2717.628
20160501:22:36:50	23.825	12.455	0.543	23.785	0.25	2.17	0.25	2.142	114.71	300.751	301.365	71.007	50.85	71.623	80.901	2170.8	2139.468	2756.069	2719.295
20160501:22:41:50	23.825	12.467	0.546	23.785	0.25	2.179	0.25	2.145	114.744	300.7	301.344	70.962	50.805	71.579	80.884	2172.168	2140.842	2757.798	2721.036
20160501:22:46:50	23.82	12.524	0.462	23.786	0.25	2.177	0.25	2.143	114.898	300.717	301.324	70.957	50.837	71.575	80.867	2173.545	2142.159	2759.541	2722.703
20160501:22:51:50	23.816	12.575	0.408	23.786	0.25	2.178	0.25	2.143	115.036	300.694	301.3	70.955	50.834	71.572	80.849	2174.892	2143.533	2761.244	2724.444
20160501:22:56:50	23.822	12.591	0.463	23.788	0.25	2.172	0.25	2.143	115.089	300.706	301.339	70.922	50.843	71.551

Time:	Stack Pressure:	Sat% H2O:	Static:	Barometric:	Flowmeter1:	Vacuum1:	Flowmeter2:	Vacuum2:	Stack Temp:	Sorbent Temp:	Probe Temp:	DGM#1 Temp:	Condenser Temp:	DGM#2 Temp:	DAQ Temp:	DGM1*:	DGM2*:	DGM1:	DGM2:
day:hh:mm:ss	in-Hg	Percent	in-H2O	in-Hg	l/min	in-Hg	l/min	in-Hg	degF	degF	degF	degF	degF	degF	degF	liters STP	liters STP	liters nominal	liters nominal
20160502:02:46:50	23.805	12.253	0.027	23.803	0.25	2.172	0.25	2.137	114.105	300.69	301.329	69.332	50.726	69.945	79.224	2238.951	2206.633	2842.111	2804.192
20160502:02:51:50	23.804	12.11	-0.004	23.804	0.25	2.174	0.25	2.142	113.68	300.656	301.275	69.257	50.683	69.87	79.194	2240.34	2207.957	2843.861	2805.861
20160502:02:56:50	23.802	11.107	-0.023	23.804	0.25	2.144	0.25	2.126	110.664	300.606	301.264	69.218	50.702	69.828	79.164	2241.685	2209.319	2845.556	2807.579
20160502:03:01:50	23.799	11.169	-0.061	23.804	0.25	2.131	0.25	2.119	110.836	300.603	301.3	69.201	50.676	69.804	79.136	2243.037	2210.644	2847.259	2809.25
20160502:03:06:50	23.801	11.975	-0.038	23.804	0.25	2.153	0.25	2.143	113.291	300.648	301.324	69.158	50.689	69.76	79.105	2244.416	2212.005	2848.996	2810.966
20160502:03:11:50	23.812	12.067	0.109	23.804	0.25	2.161	0.25	2.136	113.576	300.687	301.331	69.14	50.668	69.737	79.069	2245.757	2213.33	2850.685	2812.637
20160502:03:16:50	23.811	12.085	0.13	23.801	0.25	2.165	0.25	2.127	113.627	300.642	301.276	69.1	50.685	69.699	79.032	2247.153	2214.689	2852.444	2814.352
20160502:03:21:50	23.815	12.102	0.145	23.804	0.25	2.166	0.25	2.133	113.681	300.614	301.24	69.072	50.648	69.663	78.995	2248.488	2216.013	2854.126	2816.021
20160502:03:26:50	23.816	12.12	0.173	23.803	0.25	2.155	0.25	2.131	113.736	300.636	301.289	69.048	50.651	69.633	78.961	2249.878	2217.375	2855.876	2817.739
20160502:03:31:50	23.814	12.114	0.093	23.807	0.25	2.155	0.25	2.141	113.716	300.645	301.299	69.017	50.645	69.587	78.922	2251.228	2218.701	2857.576	2819.41
20160502:03:36:50	23.801	12.142	-0.068	23.806	0.25	2.155	0.25	2.138	113.776	300.613	301.249	68.993	50.645	69.55	78.885	2252.578	2220.066	2859.276	2821.13
20160502:03:41:50	23.807	12.166	0.011	23.806	0.25	2.157	0.25	2.134	113.857	300.66	301.294	68.918	50.675	69.512	78.85	2253.956	2221.391	2861.011	2822.801
20160502:03:46:50	23.806	11.14	-0.002	23.806	0.25	2.136	0.25	2.118	110.76	300.612	301.288	68.892	50.656	69.498	78.811	2255.298	2222.751	2862.7	2824.515
20160502:03:51:50	23.809	11.612	0.027	23.807	0.25	2.131	0.25	2.116	112.202	300.549	301.238	68.843	50.658	69.446	78.774	2256.692	2224.075	2864.456	2826.182
20160502:03:56:50	23.809	12.08	0.048	23.806	0.25	2.152	0.25	2.124	113.611	300.617	301.255	68.838	50.64	69.437	78.737	2258.027	2225.435	2866.135	2827.897
20160502:04:01:50	23.806	12.099	0.005	23.806	0.25	2.163	0.25	2.134	113.661	300.64	301.288	68.798	50.645	69.39	78.704	2259.417	2226.758	2867.885	2829.564
20160502:04:06:50	23.803	12.102	-0.001	23.803	0.25	2.158	0.25	2.137	113.665	300.641	301.29	68.794	50.655	69.383	78.668	2260.763	2228.123	2869.58	2831.284
20160502:04:11:50	23.81	12.085	0.065	23.805	0.25	2.163	0.25	2.136	113.624	300.678	301.267	68.755	50.637	69.337	78.632	2262.121	2229.447	2871.289	2832.953
20160502:04:16:50	23.807	12.083	0.014	23.806	0.25	2.148	0.25	2.126	113.615	300.685	301.283	68.756	50.664	69.333	78.601	2263.494	2230.814	2873.017	2834.675
20160502:04:21:50	23.801	12.057	-0.068	23.806	0.25	2.144	0.25	2.131	113.532	300.6	301.221	68.706	50.627	69.264	78.569	2264.831	2232.134	2874.7	2836.338
20160502:04:26:50	23.804	12.085	-0.101	23.811	0.25	2.153	0.25	2.134	113.617	300.61	301.271	68.705	50.671	69.268	78.536	2266.228	2233.501	2876.457	2838.06
20160502:04:31:50	23.8	12.101	-0.142	23.811	0.25	2.157	0.25	2.138	113.658	300.55	301.221	68.654	50.622	69.204	78.505	2267.56	2234.821	2878.133	2839.722
20160502:04:36:50	23.803	12.114	-0.112	23.811	0.25	2.155	0.25	2.133	113.7	300.59	301.242	68.656	50.675	69.204	78.476	2268.957	2236.186	2879.891	2841.442
20160502:04:41:50	23.807	12.159	-0.058	23.811	0.25	2.142	0.25	2.123	113.835	300.624	301.214	68.583	50.64	69.171	78.445	2270.289	2237.506	2881.567	2843.103
20160502:04:46:50	23.807	12.153	-0.084	23.813	0.25	2.151	0.25	2.139	113.818	300.613	301.229	68.546	50.66	69.152	78.411	2271.66	2238.87	2883.291	2844.821
20160502:04:51:50	23.81	11.326	-0.062	23.814	0.25	2.14	0.25	2.12	111.333	300.558	301.23	68.519	50.642	69.128	78.382	2273.041	2240.19	2885.028	2846.483
20160502:04:56:50	23.804	10.969	-0.179	23.817	0.25	2.131	0.25	2.098	110.23	300.447	301.179	68.491	50.634	69.101	78.353	2274.369	2241.552	2886.698	2848.197
20160502:05:01:50	23.8	11.827	-0.231	23.817	0.25	2.142	0.25	2.108	112.847	300.524	301.24	68.477	50.66	69.091	78.325	2275.761	2242.873	2888.448	2849.861
20160502:05:06:50	23.797	11.987	-0.291	23.819	0.25	2.162	0.25	2.119	113.321	300.523	301.224	68.436	50.625	69.048	78.297	2277.097	2244.234	2890.128	2851.573
20160502:05:11:50	23.8	12.003	-0.248	23.818	0.25	2.147	0.25	2.124	113.372	300.622	301.256	68.434	50.677	69.047	78.27	2278.489	2245.555	2891.878	2853.237
20160502:05:16:50	23.799	11.995	-0.266	23.818	0.25	2.153	0.25	2.147	113.344	300.598	301.243	68.388	50.629	68.998	78.24	2279.815	2246.919	2893.544	2854.953
20160502:05:21:50	23.803	11.995	-0.214	23.819	0.25	2.146	0.25	2.119	113.352	300.587	301.217	68.38	50.68	68.992	78.212	2281.203	2248.244	2895.289	2856.62
20160502:05:26:50	23.801	11.996	-0.243	23.819	0.25	2.145	0.25	2.125	113.352	300.593	301.202	68.367	50.697	68.981	78.189	2282.571	2249.604	2897.009	2858.333
20160502:05:31:50	23.797	11.984	-0.283	23.818	0.25	2.138	0.25	2.119	113.312	300.535	301.158	68.283	50.651	68.894	78.167	2283.902	2250.925	2898.681	2859.994
20160502:05:36:50	23.805	11.989	-0.226	23.821	0.25	2.149	0.25	2.129	113.337	300.51	301.165	68.281	50.706	68.891	78.147	2285.291	2252.289	2900.428	2861.711
20160502:05:41:50	23.81	12.033	-0.224	23.826	0.25	2.159	0.25	2.129	113.474	300.542	301.186	68.292	50.672	68.89	78.128	2286.631	2253.607	2902.111	2863.368
20160502:05:46:50	23.81	12.081	-0.278	23.83	0.25	2.159	0.25	2.141	113.612	300.498	301.174	68.248	50.668	68.853	78.111	2288.023	2254.979	2903.859	2865.094
20160502:05:51:50	23.805	12.126	-0.354	23.831	0.25	2.156	0.25	2.128	113.737	300.495	301.17	68.22	50.66	68.826	78.097	2289.357	2256.292	2905.535	2866.744
20160502:05:56:50	23.808	12.118	-0.339	23.833	0.25	2.149	0.25	2.131	113.719	300.584	301.227	68.213	50.661	68.825	78.082	2290.748	2257.664	2907.281	2868.47
20160502:06:01:50	23.81	12.088	-0.321	23.834	0.25	2.15	0.25	2.128	113.634	300.61	301.286	68.211	50.689	68.821	78.067	2292.095	2258.978	2908.974	2870.122
20160502:06:06:50	23.807	12.095	-0.366	23.834	0.25	2.158	0.25	2.126	113.651	300.626	301.242	68.195	50.658	68.804	78.05	2293.452	2260.346	2910.678	2871.842
20160502:06:11:50	23.805	12.066	-0.42	23.836	0.25	2.151	0.25	2.137	113.564	300.557	301.192	68.154	50.653	68.757	78.032	2294.833	2261.662	2912.411	2873.496
20160502:06:16:50	23.809	12.125	-0.4	23.838	0.25	2.154	0.25	2.142	113.74	300.553	301.166	68.148	50.666	68.742	78.012	2296.162	2263.027	2914.08	2875.212
20160502:06:21:50	23.813	12.182	-0.369	23.84	0.25	2.171	0.25	2.145	113.911	300.604	301.231	68.139	50.665	68.719	77.99	2297.557	2264.348	2915.831	2876.872
20160502:06:26:50	23.815	12.205	-0.37	23.842	0.25	2.179	0.25	2.145	113.98	300.579	301.193	68.077	50.66	68.667	77.965	2298.892	2265.709	2917.507	2878.583
20160502:06:31:50	23.811	12.176	-0.416	23.842	0.25	2.173	0.25	2.143	113.892	300.628	301.244	68.056	50.633	68.656	77.936	2300.29	2267.036	2919.261	2880.25
20160502:06:36:50	23.812	11.685	-0.428	23.843	0.25	2.167	0.25	2.146	112.428	300.554	301.214	67.989	50.64	68.595	77.908	2301.618	2268.397	2920.928	2881.959
20160502:06:41:50	23.81	11.151	-0.453	23.844	0.25	2.143	0.25	2.116	110.815	300.482	301.185	67.937	50.667	68.543	77.877	2303.001	2269.725	2922.663	2883.628
20160502:06:46:50	23.819	10.975	-0.344	23.844	0.25	2.137	0.25	2.122	110.271	300.458	301.167	67.911	50.635	68.52	77.845	2304.369	2271.08	2924.38	2885.329
20160502:06:51:50	23.816	11.399	-0.388	23.845	0.25	2.137	0.25	2.116	111.57	300.444	301.161	67.882	50.657	68.49	77.816	2305.705	2272.416	2926.056	2887.008
20160502:06:56:50	23.814	11.915	-0.456	23.847	0.25	2.147	0.25	2.143	113.135	300.587	301.243	67.882	50.663	68.488	77.788	2307.088	2273.766	2927.791	2888.703
20160502:07:01:50	23.816	11.94	-0.432	23.848	0.25	2.152	0.25	2.147	113.209	300.586	301.217	67.834	50.622	68.437	77.76	2308.432	2275.109	2929.476	2890.389
20160502:07:06:50	23.815	11.971	-0.45	23.848	0.25	2.156	0.25	2.139	113.299	300.634	301.267	67.836	50.672	68.443	77.734	2309.829	2276.453	2931.228	2892.077
20160502:07:11:50	23.822	11.996	-0.374	23.849	0.25	2.157	0.25	2.138	113.385	300.622	301.227	67.816	50.64	68.421	77.705	2311.162	2277.801	2932.9	2893.769
20160502:07:16:50	23.823	12.04	-0.374	23.851	0.25	2.158	0.25	2.139	113.512	300.601	301.236	67.797	50.632	68.405	77.678	2312.555	2279.142	2934.646	2895.453
20160502:07:21:50	23.828	12.068	-0.317	23.851	0.25	2.164	0.25	2.131	113.601	300.639	301.236	67.809	50.672	68.415	77.657	2313.9	2280.493	2936.333	2897.148
20160502:07:26:50	23.833	12.068	-0.253	23.852	0.25	2.173	0.25	2.14	113.611	300.597	301.21	67.782	50.623	68.389	77.634	2315.259	2281.824	2938.037	2898.82
20160502:07:31:50	23.847	12.093	-0.065	23.852	0.25	2.158	0.25	2.131	113.702	300.588	301.176	67.762	50.611	68.366	77.613	2316.64	2283.184	2939.769	2900.526
20160502:07:36:50	23.856	12.179	0.04	23.853	0.25	2.172	0.25	2.131	113.966	300.611	301.192	67.764	50.624	68.374	77.593	2317.97	2284.504	2941.437	2902.184
20160502:07:41:50	23.862	12.182	0.139	23.851	0.25	2.149	0.25	2.136	113.983	300.631	301.24	67.767	50.596	68.365	77.578	2319.368	2285.872	2943.189	2903.9
20160502:07:46:50	23.869	12.153	0.259	23.85	0.25	2.156	0.25	2.142	113.909	300.59	301.19	67.727	50.563	68.277	77.561	2320.701	2287.189	2944.861	2905.555
20160502:07:51:50	23.871	12.138	0.311	23.848	0.25	2.151	0.25	2.134	113.871	300.623	301.236	67.758	50.561	68.305	77.544	2322.097	2288.564	2946.611	2907.28
20160502:07:56:50	23.876	12.143	0.368	23.848	0.25	2.15	0.25	2.135	113.89	300.615	301.253	67.763	50.555	68.343	77.529	2323.426	2289.876	2948.278	2908.927
20160502:08:01:50	23.88	12.171	0.429	23.849	0.25	2.152	0.25	2.128	113.978	300.66	301.312	67.784	50.576	68.369	77.518	2324.82	2291.255	2950.026	2910.658
20160502:08:06:50	23.882	12.211	0.45	23.849	0.25	2.16	0.25	2.136	114.095	300.597	301.233	67.81	50.559	68.385	77.512	2326.186	2292.562	2951.739	2912.299
20160502:08:11:50	23.882	12.245	0.448	23.849	0.25	2.142	0.25	2.137	114.193	300.628	301.242	67.817	50.576	68.413	77.505	2327.521	2293.945	2953.413	2914.036
20160502:08:16:50	23.89	12.247	0.551	23.85	0.25	2.15	0.25	2.139	114.213	300.648	301.249	67.827	50.555	68.417	77.502	2328.906	2295.254	2955.15	2915.679
20160502:08:21:50	23.898	12.218	0.626	23.852	0.25	2.147	0.25	2.151	114.141	300.594	301.209	67.854	50.541	68.425	77.502	2330.245	2296.637	2956.83	2917.415
20160502:08:26:50	23.897	12.202	0.616	23.851	0.25	2.152	0.25	2.155	114.093	300.602	301.269	67.874	50.558	68.455	77.505	2331.64	2297.95	2958.58	2919.064
20160502:08:31:50	23.899	12.175	0.621	23.854	0.25	2.156	0.25	2.13	114.018	300.632	301.298	67.896	50.537	68.479	77.512	2332.974	2299.324	2960.252	2920.789
20160502:08:36:50	23.903	12.138	0.689	23.852	0.25	2.152	0.25	2.135	113.916	300.605	301.292	67.921	50.554	68.49	77.517	2334.371	2300.639	2962.004	2922.44
20160502:08:41:50	23.904	12.112	0.718	23.852	0.25	2.152	0.25	2.124	113.844	300.572	301.244	67.93	50.507	68.494	77.527	2335.708	2302.01	2963.681	2924.162
20160502:08:46:50	23.91	12.091	0.785	23.852	0.25	2.15	0.25	2.13	113.791	300.522	301.196	67.936	50.516	68.512	77.541	2337.07	2303.32	2965.389	2925.806
20160502:08:51:50	23.911	11.609	0.791	23.853	0.25	2.156	0.25	2.141	112.357	300.467	301.167	67.973	50.484	68.535	77.558	2338.456	2304.69	2967.128	2927.526
20160502:08:56:50	23.914	11.547	0.835	23.853	0.25	2.15	0.25	2.116	112.181	300.579	301.227	68.074	50.546	68.639	77.578	2339.783	2306.001	2968.793	2929.173
20160502:09:01:50	23.921	11.468	0.927	23.852	0.25	2.155	0.25	2.111	111.95	300.494	301.194	68.097	50.532	68.668	77.598	2341.172	2307.378	2970.535	2930.902
20160502:09:06:50	23.918	12.202	0.88	23.854	0.25	2.148	0.25	2.12	114.115	300.475	301.196	68.111	50.514	68.708	77.625	2342.508	2308.678	2972.211	2932.536
20160502:09:11:50	23.921	12.526	0.891	23.855	0.25	2.155	0.25	2.133	115.052	300.563	301.22	68.191	50.558	68.769	77.657	2343.902	2310.052	2973.961	2934.261
20160502:09:16:50	23.925	12.631	0.975	23.853	0.25	2.157	0.25	2.14	115.354	300.552	301.179	68.215	50.54	68.781	77.689	2345.237	2311.36	2975.635	2935.904
20160502:09:21:50	23.937	12.681	1.175	23.851	0.25	2.166	0.25	2.15	115.512	300.547	301.205	68.273	50.572	68.849	77.73	2346.62	2312.735	2977.372	2937.632
20160502:09:26:50	23.945	12.703	1.277	23.851	0.25	2.165	0.25	2.148	115.586	300.556	301.211	68.351	50.534	68.911	77.772	2347.975	2314.045	2979.072	2939.278
20160502:09:31:50	23.944	12.706	1.329	23.847	0.25	2.162	0.25	2.137	115.593	300.56	301.17	68.422	50.551	68.977	77.816	2349.32	2315.418	2980.761	2941.004
20160502:09:36:50	23.941	12.755	1.253	23.848	0.25	2.163	0.25	2.136	115.722	300.638	301.263	68.485	50.549	69.045	77.865	2350.697	2316.728	2982.491	2942.65
20160502:09:41:50	23.947	12.78	1.285	23.852	0.25	2.167	0.25	2.143	115.802	300.624	301.246	68.527	50.574	69.088	77.918	2352.042	2318.101	2984.18	2944.376
20160502:09:46:50	23.953	12.775	1.373	23.852	0.25	2.178	0.25	2.139	115.796	300.595	301.199	68.611	50.548	69.14	77.975	2353.437	2319.413	2985.931	2946.026
20160502:09:51:50	23.954	12.808	1.46	23.847	0.25	2.165	0.25	2.151	115.891	300.641	301.254	68.682	50.57	69.189	78.033	2354.773	2320.786	2987.609	2947.752
20160502:09:56:50	23.96	12.802	1.468	23.852	0.25	2.171	0.25	2.144	115.882	300.608	301.245	68.726	50.543	69.242	78.088	2356.167	2322.1	2989.361	2949.404
20160502:10:01:50	23.957	12.805	1.436	23.851	0.25	2.162	0.25	2.146	115.887	300.583	301.207	68.784	50.567	69.338	78.145	2357.504	2323.475	2991.041	2951.133
05/02/2016:10:01:50	Sampling	complete	6 Days	0 Hrs	0 Minutes	sampled													

Hg-324K-1099								
HgK_324 Data	huntington2wk3	5/3/2016	8:56:53					
DGM1 ID	DGM2 ID	Trap1 ID	Trap2 ID					
3605445	3605446	312610	285580					
Time:	Leak 1	Status	Leak 2	Status	Vacuum1	Vacuum2	DGM 1	DGM 2
Day:hh:mm	ccpermin	P-F	ccpermin	P-F	in-Hg	in-Hg	liter	liter
05/03/2016:08:57:08	1269.87	Fail	1247.62	Fail	2.705	2.791	0.385	0.374
05/03/2016:08:57:23	1444.444	Fail	1503.759	Fail	6.574	6.805	0.722	0.752
05/03/2016:08:57:38	1188.889	Fail	1154.135	Fail	9.298	9.585	0.98	0.951
05/03/2016:08:57:53	781.481	Fail	812.03	Fail	11.265	11.569	1.113	1.158
05/03/2016:08:58:08	596.296	Fail	755.639	Fail	12.782	13.089	1.278	1.329
05/03/2016:08:58:23	611.111	Fail	612.782	Fail	13.978	14.266	1.419	1.464
05/03/2016:08:58:38	470.37	Fail	390.977	Fail	14.884	15.168	1.513	1.524
05/03/2016:08:58:53	385.185	Fail	270.677	Fail	15.64	15.916	1.611	1.6
05/03/2016:08:59:08	322.222	Fail	289.474	Fail	16.34	16.53	1.674	1.669
05/03/2016:08:59:23	200	Fail	259.398	Fail	16.902	17.041	1.711	1.729
05/03/2016:08:59:38	151.852	Fail	214.286	Fail	17.347	17.459	1.75	1.776
05/03/2016:08:59:53	151.852	Fail	229.323	Fail	17.709	17.801	1.787	1.844
05/03/2016:09:00:08	166.667	Fail	248.12	Fail	17.99	18.075	1.833	1.9
05/03/2016:09:00:23	151.852	Fail	187.97	Fail	18.218	18.299	1.863	1.938
05/03/2016:09:00:38	107.407	Fail	97.744	Fail	18.405	18.485	1.887	1.949
05/03/2016:09:00:53	96.296	Fail	78.947	Fail	18.558	18.635	1.911	1.977
05/03/2016:09:01:08	92.593	Fail	105.263	Fail	18.683	18.772	1.933	2.002
05/03/2016:09:01:23	66.667	Fail	97.744	Fail	18.781	18.889	1.944	2.026
05/03/2016:09:01:38	33.333	Fail	78.947	Fail	18.869	18.994	1.95	2.041
05/03/2016:09:01:53	33.333	Fail	63.91	Fail	18.939	19.08	1.961	2.058
05/03/2016:09:02:08	44.444	Fail	63.91	Fail	19	19.16	1.972	2.073
05/03/2016:09:02:23	48.148	Fail	67.669	Fail	19.054	19.233	1.985	2.092
05/03/2016:09:02:38	44.444	Fail	56.391	Fail	19.092	19.29	1.994	2.102
05/03/2016:09:02:53	33.333	Fail	22.556	Fail	19.125	19.34	2.002	2.103
05/03/2016:09:03:08	29.63	Fail	33.835	Fail	19.149	19.381	2.009	2.118
05/03/2016:09:03:23	25.926	Fail	52.632	Fail	19.169	19.418	2.015	2.13
05/03/2016:09:03:38	18.519	Fail	41.353	Fail	19.187	19.45	2.019	2.139
05/03/2016:09:03:53	14.815	Fail	30.075	Fail	19.202	19.477	2.022	2.145
05/03/2016:09:04:08	11.111	Fail	22.556	Fail	19.212	19.5	2.024	2.15
05/03/2016:09:04:23	11.111	Fail	18.797	Fail	19.217	19.519	2.028	2.154
05/03/2016:09:04:38	14.815	Fail	11.278	Fail	19.224	19.535	2.031	2.156
05/03/2016:09:04:53	11.111	Fail	7.519	Pass	19.233	19.544	2.033	2.158
05/03/2016:09:05:08	7.407	Pass	11.278	Fail	19.238	19.556	2.035	2.162

Hg-324K-1099								
HgK_324 Data	huntington2wk4	5/3/2016	9:32:28					
DGM1 ID	DGM2 ID	Trap1 ID	Trap2 ID					
3605445	3605446	312537	283989					
Time:	Leak 1	Status	Leak 2	Status	Vacuum1	Vacuum2	DGM 1	DGM 2
Day:hh:mm	ccpermin	P-F	ccpermin	P-F	in-Hg	in-Hg	liter	liter
05/03/2016:09:32:42	1251.352	Fail	1345.365	Fail	2.318	2.34	0.376	0.423
05/03/2016:09:32:57	1500	Fail	1492.481	Fail	5.613	5.768	0.75	0.746
05/03/2016:09:33:12	1259.259	Fail	1248.12	Fail	8.213	8.419	1.006	1.047
05/03/2016:09:33:27	925.926	Fail	1097.744	Fail	10.241	10.455	1.213	1.295
05/03/2016:09:33:42	807.407	Fail	748.12	Fail	11.864	12.09	1.409	1.421
05/03/2016:09:33:57	707.407	Fail	537.594	Fail	13.173	13.378	1.567	1.564
05/03/2016:09:34:12	488.889	Fail	530.075	Fail	14.22	14.403	1.654	1.686
05/03/2016:09:34:27	303.704	Fail	481.203	Fail	15.053	15.192	1.719	1.805
05/03/2016:09:34:42	311.111	Fail	383.459	Fail	15.842	15.833	1.809	1.878
05/03/2016:09:34:57	340.741	Fail	312.03	Fail	16.503	16.451	1.889	1.961
05/03/2016:09:35:13	281.481	Fail	285.714	Fail	17.04	16.99	1.95	2.021
05/03/2016:09:35:28	259.259	Fail	180.451	Fail	17.457	17.433	2.019	2.051
05/03/2016:09:35:43	244.444	Fail	116.541	Fail	17.795	17.799	2.072	2.079
05/03/2016:09:35:58	140.741	Fail	112.782	Fail	18.068	18.089	2.089	2.107
05/03/2016:09:36:13	103.704	Fail	120.301	Fail	18.287	18.319	2.124	2.139
05/03/2016:09:36:28	122.222	Fail	86.466	Fail	18.463	18.499	2.15	2.15
05/03/2016:09:36:43	88.889	Fail	75.188	Fail	18.601	18.642	2.169	2.177
05/03/2016:09:36:58	77.778	Fail	93.985	Fail	18.708	18.769	2.189	2.197
05/03/2016:09:37:13	70.37	Fail	75.188	Fail	18.787	18.885	2.204	2.214
05/03/2016:09:37:28	62.963	Fail	63.91	Fail	18.843	18.986	2.22	2.229
05/03/2016:09:37:43	66.667	Fail	56.391	Fail	18.889	19.078	2.237	2.242
05/03/2016:09:37:58	44.444	Fail	48.872	Fail	18.919	19.148	2.243	2.254
05/03/2016:09:38:13	22.222	Fail	48.872	Fail	18.961	19.213	2.248	2.267
05/03/2016:09:38:28	37.037	Fail	48.872	Fail	18.998	19.271	2.261	2.278
05/03/2016:09:38:43	44.444	Fail	45.113	Fail	19.037	19.316	2.27	2.289
05/03/2016:09:38:58	33.333	Fail	45.113	Fail	19.067	19.35	2.278	2.301
05/03/2016:09:39:13	25.926	Fail	33.835	Fail	19.099	19.377	2.283	2.306
05/03/2016:09:39:28	22.222	Fail	11.278	Fail	19.14	19.407	2.289	2.306
05/03/2016:09:39:43	18.519	Fail	3.759	Pass	19.174	19.431	2.293	2.308
05/03/2016:09:39:58	11.111	Fail	3.759	Pass	19.198	19.452	2.294	2.308
05/03/2016:09:40:13	11.111	Fail	7.519	Pass	19.208	19.468	2.298	2.312
05/03/2016:09:40:28	11.111	Fail	11.278	Fail	19.222	19.492	2.3	2.314
05/03/2016:09:40:43	7.407	Pass	7.519	Pass	19.234	19.506	2.302	2.316

Time: day:hh:mm:ss	Stack Pressure: in-Hg	Sat% H2O: Percent	Static: in-H2O	Barometric: in-Hg	Flowmeter1: l/min	Vacuum1: in-Hg	Flowmeter2: l/min	Vacuum2: in-Hg	Stack Temp: degF	Sorbent Temp: degF	Probe Temp: degF	DGM#1 Temp: degF	Condenser Temp: degF	DGM#2 Temp: degF	DAQ Temp: degF	DGM1*: liters STP	DGM2*: liters STP	DGM1: liters nominal	DGM2: liters nominal
20160503:09:54:09	24.148	12.348	3.636	23.881	0.239	1.719	0.24	1.636	114.881	297.521	284.34	71.136	55.568	71.642	79.443	1.233	1.28	1.554	1.615
20160503:09:59:09	24.149	12.299	3.681	23.878	0.251	2.133	0.25	2.012	114.74	300.648	299.828	71.314	55.42	71.754	79.506	2.563	2.527	3.231	3.188
20160503:10:04:09	24.157	12.449	3.775	23.879	0.25	2.198	0.25	2.079	115.172	301.128	301.3	71.478	55.796	71.898	79.623	3.841	3.831	4.843	4.835
20160503:10:09:09	24.156	13.141	3.771	23.879	0.25	2.244	0.25	2.125	117.103	301.117	301.571	71.616	56.095	72.028	79.773	5.191	5.138	6.546	6.485
20160503:10:14:09	24.161	13.15	3.864	23.877	0.25	2.259	0.25	2.137	117.135	301.011	301.541	71.727	56.032	72.212	79.944	6.484	6.411	8.178	8.092
20160503:10:19:09	24.166	13.124	3.961	23.875	0.25	2.261	0.25	2.15	117.069	300.912	301.554	71.889	55.788	72.342	80.126	7.835	7.742	9.883	9.774
20160503:10:24:09	24.166	13.106	3.9	23.88	0.25	2.229	0.25	2.151	117.022	300.835	301.542	71.999	55.523	72.496	80.31	9.127	9.014	11.515	11.382
20160503:10:29:09	24.167	13.083	4.001	23.873	0.25	2.169	0.25	2.102	116.961	300.747	301.469	72.138	55.283	72.638	80.494	10.482	10.34	13.226	13.058
20160503:10:34:09	24.171	13.076	3.988	23.878	0.25	2.126	0.25	2.02	116.948	300.687	301.425	72.267	55.061	72.771	80.676	11.791	11.626	14.88	14.684
20160503:10:39:09	24.17	13.058	3.939	23.88	0.25	2.098	0.25	2.003	116.895	300.686	301.455	72.385	54.839	72.916	80.855	13.175	12.977	16.628	16.393
20160503:10:44:09	24.176	13.04	4.043	23.879	0.25	2.082	0.25	2	116.857	300.639	301.39	72.553	54.645	73.053	81.037	14.498	14.279	18.3	18.039
20160503:10:49:09	24.175	13.034	4.063	23.877	0.25	2.084	0.25	1.993	116.84	300.68	301.42	72.645	54.443	73.198	81.205	15.872	15.634	20.037	19.754
20160503:10:54:09	24.182	13.053	4.101	23.881	0.25	2.091	0.25	1.997	116.9	300.736	301.421	72.755	54.244	73.297	81.368	17.217	16.947	21.737	21.415
20160503:10:59:09	24.177	12.742	4.011	23.882	0.25	2.08	0.25	1.985	116.023	300.693	301.427	72.907	54.095	73.431	81.529	18.554	18.298	23.428	23.126
20160503:11:04:09	24.18	12.234	4.11	23.878	0.25	2.059	0.25	1.968	114.6	300.694	301.38	72.985	53.913	73.542	81.684	19.926	19.617	25.163	24.795
20160503:11:09:09	24.189	12.126	4.205	23.88	0.25	2.069	0.25	1.967	114.3	300.653	301.382	73.134	53.752	73.639	81.834	21.27	20.967	26.863	26.506
20160503:11:14:09	24.189	12.51	4.229	23.878	0.25	2.067	0.25	1.973	115.39	300.679	301.409	73.228	53.607	73.77	81.981	22.662	22.293	28.624	28.184
20160503:11:19:09	24.192	13.028	4.283	23.877	0.25	2.086	0.25	1.985	116.847	300.739	301.412	73.318	53.478	73.886	82.123	23.996	23.644	30.313	29.897
20160503:11:24:09	24.195	13.027	4.327	23.877	0.25	2.09	0.25	1.987	116.849	300.77	301.437	73.43	53.311	73.962	82.26	25.375	24.966	32.059	31.571
20160503:11:29:09	24.197	13.022	4.366	23.876	0.25	2.082	0.25	1.985	116.839	300.757	301.402	73.53	53.191	74.062	82.394	26.727	26.317	33.77	33.284
20160503:11:34:09	24.199	13.028	4.38	23.876	0.25	2.087	0.25	1.996	116.855	300.817	301.453	73.614	53.044	74.18	82.524	28.066	27.635	35.467	34.955
20160503:11:39:09	24.191	13.041	4.284	23.876	0.25	2.086	0.25	2.001	116.88	300.797	301.405	73.684	52.958	74.273	82.646	29.458	28.991	37.23	36.675
20160503:11:44:09	24.201	13.036	4.513	23.869	0.25	2.08	0.25	2.001	116.881	300.777	301.402	73.806	52.868	74.338	82.766	30.792	30.307	38.92	38.344
20160503:11:49:09	24.204	13.037	4.527	23.871	0.25	2.076	0.25	1.991	116.888	300.808	301.44	73.87	52.734	74.459	82.884	32.186	31.667	40.687	40.07
20160503:11:54:09	24.201	13.049	4.445	23.874	0.25	2.093	0.25	1.998	116.917	300.766	301.415	73.946	52.672	74.546	82.994	33.519	32.98	42.376	41.735
20160503:11:59:09	24.206	13.048	4.555	23.871	0.25	2.087	0.25	1.993	116.922	300.762	301.41	74.001	52.601	74.626	83.098	34.887	34.345	44.111	43.468
20160503:12:04:09	24.21	13.075	4.658	23.868	0.25	2.086	0.25	1.999	117.002	300.704	301.371	74.097	52.519	74.737	83.198	36.257	35.653	45.848	45.128
20160503:12:09:09	24.206	12.597	4.637	23.865	0.25	2.078	0.25	1.977	115.662	300.703	301.406	74.201	52.452	74.818	83.3	37.599	37.022	47.55	46.867
20160503:12:14:09	24.207	12.328	4.605	23.868	0.25	2.072	0.25	1.978	114.909	300.711	301.421	74.271	52.411	74.889	83.396	38.992	38.329	49.317	48.526
20160503:12:19:09	24.207	12.115	4.643	23.865	0.25	2.065	0.25	1.97	114.295	300.636	301.377	74.33	52.358	74.979	83.492	40.329	39.687	51.013	50.252
20160503:12:24:09	24.208	12.725	4.656	23.866	0.25	2.067	0.25	1.979	116.022	300.665	301.411	74.426	52.331	75.082	83.585	41.709	41.004	52.765	51.925
20160503:12:29:09	24.211	13.096	4.71	23.865	0.25	2.085	0.25	1.981	117.059	300.681	301.363	74.518	52.301	75.143	83.675	43.069	42.365	54.491	53.654
20160503:12:34:09	24.21	13.12	4.637	23.869	0.25	2.088	0.25	1.976	117.124	300.652	301.328	74.593	52.27	75.212	83.766	44.407	43.684	56.189	55.331
20160503:12:39:09	24.208	13.121	4.625	23.868	0.25	2.073	0.25	1.983	117.125	300.646	301.246	74.73	52.24	75.313	83.859	45.796	45.044	57.952	57.058
20160503:12:44:09	24.208	13.108	4.719	23.861	0.25	2.071	0.25	1.986	117.087	300.656	301.303	74.798	52.196	75.412	83.948	47.128	46.35	59.644	58.72
20160503:12:49:09	24.216	13.125	4.837	23.86	0.25	2.075	0.25	1.984	117.146	300.628	301.224	74.878	52.136	75.492	84.039	48.524	47.722	61.417	60.464
20160503:12:54:09	24.219	13.149	4.895	23.859	0.25	2.078	0.25	1.978	117.216	300.68	301.282	74.992	52.117	75.575	84.131	49.867	49.034	63.124	62.133
20160503:12:59:09	24.221	13.141	4.905	23.861	0.25	2.075	0.25	1.983	117.196	300.649	301.253	75.09	52.092	75.686	84.222	51.215	50.402	64.837	63.874
20160503:13:04:09	24.229	13.157	4.982	23.863	0.25	2.081	0.25	1.987	117.253	300.762	301.301	75.169	52.063	75.777	84.312	52.601	51.711	66.598	65.539
20160503:13:09:09	24.226	12.818	4.972	23.861	0.25	2.074	0.25	1.979	116.309	300.722	301.317	75.242	52.047	75.848	84.404	53.943	53.082	68.304	67.284
20160503:13:14:09	24.223	12.33	4.892	23.863	0.25	2.08	0.25	1.949	114.937	300.725	301.351	75.367	52.032	75.922	84.497	55.344	54.391	70.085	68.949
20160503:13:19:09	24.22	12.204	4.883	23.861	0.25	2.072	0.25	1.952	114.572	300.681	301.329	75.453	52.027	76.043	84.583	56.685	55.762	71.791	70.695
20160503:13:24:09	24.221	12.554	4.918	23.859	0.25	2.064	0.25	1.957	115.561	300.678	301.348	75.519	52.017	76.114	84.671	58.041	57.069	73.515	72.359
20160503:13:29:09	24.224	13.087	4.981	23.857	0.25	2.073	0.25	1.974	117.053	300.756	301.419	75.564	52.001	76.166	84.758	59.427	58.442	75.278	74.107
20160503:13:34:09	24.226	13.112	4.949	23.862	0.25	2.087	0.25	1.995	117.126	300.776	301.382	75.636	52	76.231	84.845	60.768	59.754	76.983	75.778
20160503:13:39:09	24.225	13.112	4.985	23.859	0.25	2.084	0.25	1.976	117.124	300.791	301.405	75.736	51.988	76.315	84.928	62.165	61.125	78.761	77.524
20160503:13:44:09	24.229	13.141	4.983	23.862	0.25	2.082	0.25	1.993	117.209	300.819	301.419	75.802	51.97	76.417	85.013	63.502	62.426	80.463	79.182
20160503:13:49:09	24.226	13.222	4.955	23.862	0.25	2.083	0.25	1.995	117.425	300.824	301.416	75.862	51.968	76.479	85.094	64.859	63.798	82.189	80.93
20160503:13:54:09	24.236	13.2	5.154	23.857	0.25	2.089	0.25	1.986	117.38	300.837	301.413	75.9	51.938	76.53	85.168	66.243	65.108	83.952	82.6
20160503:13:59:09	24.236	13.311	5.2	23.854	0.25	2.089	0.25	1.986	117.679	300.85	301.444	75.952	51.913	76.581	85.242	67.585	66.469	85.659	84.335
20160503:14:04:09	24.235	13.295	5.174	23.854	0.25	2.092	0.25	1.989	117.632	300.826	301.381	76.051	51.905	76.646	85.318	68.984	67.807	87.441	86.039
20160503:14:09:09	24.234	13.355	5.135	23.856	0.25	2.091	0.25	1.994	117.792	300.766	301.372	76.115	51.902	76.745	85.387	70.327	69.139	89.152	87.739
20160503:14:14:09	24.233	12.768	5.196	23.851	0.25	2.072	0.25	1.99	116.18	300.789	301.367	76.167	51.896	76.793	85.452	71.682	70.498	90.878	89.472
20160503:14:19:09	24.237	12.507	5.208	23.854	0.25	2.076	0.25	1.965	115.462	300.727	301.363	76.221	51.878	76.85	85.521	73.07	71.813	92.646	91.148
20160503:14:24:09	24.235	12.309	5.171	23.855	0.25	2.075	0.25	1.961	114.897	300.718	301.402	76.276	51.866	76.908	85.587	74.409	73.179	94.352	92.891
20160503:14:29:09	24.236	13.002	5.178	23.855	0.25	2.079	0.25	1.982	116.83	300.759	301.438	76.383	51.884	76.978	85.655	75.809	74.491	96.135	94.564
20160503:14:34:09	24.243	13.252	5.31	23.853	0.25	2.094	0.25	1.976	117.531	300.75	301.389	76.44	51.878	77.071	85.72	77.152	75.852	97.846	96.301
20160503:14:39:09	24.242	13.233	5.272	23.854	0.25	2.098	0.25	1.98	117.478	300.727	301.382	76.492	51.856	77.13	85.786	78.5	77.165	99.565	97.976
20160503:14:44:09	24.241	13.211	5.316	23.85	0.25	2.098	0.25	1.981	117.415	300.784	301.386	76.553	51.87	77.221	85.854	79.892	78.54	101.339	99.731
20160503:14:49:09	24.242	13.195	5.399	23.845	0.25	2.092	0.25	1.981	117.373	300.772	301.364	76.613	51.875	77.325	85.922	81.233	79.852	103.05	101.406
20160503:14:54:09	24.244	13.245	5.441	23.844	0.25	2.085	0.25	1.992	117.513	300.787	301.38	76.715	51.855	77.381	85.989	82.629	81.22	104.83	103.154
20160503:14:59:09	24.239	13.246	5.316	23.848	0.25	2.083	0.25	1.988	117.509	300.759	301.347	76.796	51.856	77.443	86.059	83.98	82.532	106.554	104.829
20160503:15:04:09	24.238	13.279	5.36	23.844	0.25	2.091	0.25	1.974	117.594	300.79	301.394	76.878	51.886	77.509	86.129	85.324	83.905	108.269	106.583
20160503:15:09:09	24.237	13.31	5.351	23.843	0.25	2.089	0.25	1.982	117.675	300.718	301.334	76.959	51.894	77.629	86.203	86.714	85.207	110.043	108.246
20160503:15:14:09	24.232	13.286	5.328	23.841	0.25	2.083	0.25	1.978	117.605	300.787	301.383	77.075	51.883	77.699	86.281	88.049	86.577	111.746	109.998
20160503:15:19:09	24.229	13.277	5.33	23.837	0.25	2.093	0.25	1.973	117.576	300.725	301.387	77.139	51.9	77.772	86.357	89.44	87.883	113.522	111.667
20160503:15:24:09	24.227	12.884	5.27	23.84	0.25	2.08	0.25	1.983	116.493	300.719	301.349	77.242	51.897	77.853	86.437	90.804	89.249	115.265	113.414
20160503:15:29:09	24.225	12.503	5.183	23.844	0.25	2.068	0.25	1.979	115.435	300.738	301.384	77.34	51.89	77.956	86.519	92.131	90.556	116.959	115.085
20160503:15:34:09	24.216	12.351	5.12	23.84	0.25	2.065	0.25	1.958	114.99	300.727	301.422	77.406	51.895	78.03	86.599	93.533	91.914	118.75	116.821
20160503:15:39:09	24.217	12.809	5.146	23.839	0.25	2.07	0.25	1.959	116.273	300.744	301.42	77.481	51.919	78.104	86.679	94.874	93.248	120.463	118.528
20160503:15:44:09	24.215	13.181	5.157	23.836	0.25	2.086	0.25	1.972	117.298	300.762	301.396	77.571	51.911	78.166	86.763	96.245	94.577	122.215	120.227
20160503:15:49:09	24.211	13.189	5.085	23.837	0.25	2.091	0.25	1.989	117.312	300.86	301.426	77.662	51.891	78.266	86.849	97.615	95.935	123.967	121.966
20160503:15:54:09	24.206	13.201	5.006	23.838	0.25	2.087	0.25	1.976	117.338	300.81	301.412	77.726	51.876	78.344	86.931	98.958	97.247	125.683	123.645
20160503:15:59:09	24.202	13.246	5.007	23.834	0.25	2.084	0.25	1.979	117.454	300.86	301.396	77.793	51.892	78.414	87.011	100.356	98.607	127.47	125.385
20160503:16:04:09	24.202	13.254	5.008	23.834	0.25	2.093	0.25	1.968	117.475	300.871	301.462	77.841	51.868	78.472	87.094	101.684	99.924	129.169	127.071
20160503:16:09:09	24.196	13.277	4.917	23.835	0.25	2.096	0.25	1.972	117.528	300.872	301.463	77.903	51.861	78.528	87.171	103.052	101.292	130.919	128.823
20160503:16:14:09	24.195	13.335	4.913	23.833	0.25	2.096	0.25	1.98	117.682	300.818	301.415	77.975	51.846	78.584	87.234	104.436	102.604	132.689	130.504
20160503:16:19:09	24.189	13.331	4.791	23.836	0.25	2.097	0.25	1.985	117.661	300.868	301.465	78.032	51.844	78.658	87.295	105.778	103.975	134.406	132.259
20160503:16:24:09	24.185	13.33	4.799	23.832	0.25	2.099	0.25	1.983	117.655	300.862	301.449	78.082	51.855	78.711	87.366	107.175	105.286	136.193	133.938
20160503:16:29:09	24.175	12.979	4.671	23.832	0.25	2.087	0.25	1.973	116.68	300.82	301.449	78.118	51.863	78.765	87.436	108.531	106.656	137.928	135.694
20160503:16:34:09	24.168	12.621	4.584	23.831	0.25	2.077	0.25	1.962	115.685	300.763	301.43	78.155	51.851	78.815	87.5	109.877	107.974	139.65	137.382
20160503:16:39:09	24.161	12.567	4.506	23.83	0.25	2.077	0.25	1.981	115.523	300.803	301.462	78.208	51.867	78.868	87.559	111.276	109.337	141.441	139.128
20160503:16:44:09	24.158	12.975	4.44	23.832	0.25	2.087	0.25	1.979	116.643	300.747	301.42	78.301	51.878	78.954	87.622	112.618	110.648	143.157	140.808
20160503:16:49:09	24.16	13.413	4.464	23.832	0.25	2.095	0.25	1.981	117.838	300.789	301.418	78.351	51.873	79.014	87.681	113.99	112	144.915	142.541
20160503:16:54:09	24.155	13.433	4.397	23.832	0.25	2.096	0.25	1.974	117.885	300.875	301.447	78.401	51.895	79.057	87.737	115.359	113.345	146.667	144.265
20160503:16:59:09	24.154	13.408	4.418	23.83	0.25	2.094	0.25	1.982	117.817	300.865	301.42	78.45	51.889	79.106	87.793	116.705	114.663	148.391	145.955
20160503:17:04:09	24.152	13.417	4.453	23.825	0.25	2.103	0.25	1.968	117.837	300.846	301.389	78.495	51.885	79.154	87.85	118.102	116.028	150.18	147.705
20160503:17:09:09	24.142	13.378	4.3	23.826	0.25	2.09	0.25	1.983	117.72	300.834	301.45	78.571	51.902	79.225	87.91	119.445	117.337	151.9	149.383
20160503:17:14:09	24.137	13.348	4.181	23.829	0.25	2.096	0.25	1.989	117.63	300.814	301.431	78.649	51.935	79.301	87.969	120.8	118.697	153.635	151.128
20160503:17:19:09	24.132	13.329	4.136	23.828	0.25	2.087	0.25	2.002	117.574	300.802	301.438	78.697	51.947	79.362	88.028	122.195	120.013	155.422	152.816
20160503:17:24:09	24.124	13.263	4.064	23.826	0.25	2.089	0.25	1.987	117.383	300.849	301.323	78.754	51.971	79.419	88.091	123.534	121.383	157.139	154.573
20160503:17:29:09	24.121	12.552	3.966	23.829	0.25	2.088	0.25	1.969	115.421	300.834	301.479	78.8	51.966	79.467	88.147	124.928	122.695	158.924	156.258
20160503:17:34:09	24.121	12.455	3.964	23.829	0.25	2.076	0.25	1.974	115.146	300.74	301.435	78.854	51.974	79.52	88.206	126.293	124.07	160.674	158.021
20160503:17:39:09	24.123	12.387	4.002	23.829	0.25	2.072	0.25	1.966	114.954	300.723	301.389	78.94	51.972	79.588	88.264	127.626	125.379	162.381	159.701
20160503:17:44:09	24.126	13.122	4.047	23.828	0.25	2.088	0.25	1.981	117.004	300.834	301.468	78.993	51.984	79.654	88.323	129.028	126.746	164.18	161.455
20160503:17:49:09	24.122	13.192	3.98	23.83	0.25	2.095	0.25	1.977	117.19	300.85	301.452	79.038	51.986	79.699	88.38	130.363	128.052	165.891	163.132
20160503:17:54:09	24.124	13.189	4.025	23.828	0.25	2.087	0.25	1.981	117.184	300.838	301.459	79.077	52.005	79.742	88.435	131.73	129.411	167.643	164.876
20160503:17:59:09	24.12	13.209	3.958	23.829	0.25	2.091	0.25	1.976	117.231	300.854	301.457	79.12	52.016	79.786	88.489	133.118	130.757	169.422	166.603
20160503:18:04:09	24.118	13.218	3.973	23.826	0.25	2.087	0.25	1.974	117.253	300.943	301.508	79.168	52.036	79.859	88.543	134.457	132.072	171.139	168.291
20160503:18:09:09	24.113	13.228	3.901	23.826	0.25	2.092	0.25	1.979	117.273	300.887	301.465	79.23	52.056	79.922	88.599	135.852	133.433	172.928	170.039
20160503:18:14:09	24.11	13.269	3.864	23.826	0.25	2.091	0.25	1.983	117.379	300.881	301.445	79.287	52.064	79.966	88.652	137.212	134.746	174.672	171.726
20160503:18:19:09	24.112	13.319	3.899	23.826	0.25	2.09	0.25	1.998	117.516	300.866	301.431	79.34	52.085	80.011	88.702	138.541	136.11	176.378	173.477
20160503:18:24:09	24.103	13.318	3.783	23.825	0.25	2.09	0.25	1.985	117.501	300.9	301.478	79.382	52.12	80.057	88.75	139.95	137.424	178.185	175.165
20160503:18:29:09	24.102	13.247	3.737	23.827	0.25	2.093	0.25	1.986	117.306	300.865	301.443	79.427	52.136	80.109	88.8	141.284	138.795	179.896	176.927
20160503:18:34:09	24.1	12.514	3.727	23.826	0.25	2.08	0.25	1.973	115.283	300.772	301.419	79.468	52.182	80.155	88.851	142.655	140.1	181.656	178.603
20160503:18:39:09	24.098	12.474	3.691	23.827	0.25	2.073	0.25	1.968	115.167	300.751	301.432	79.517	52.231	80.225	88.902	144.035	141.471	183.426	180.365
20160503:18:44:09	24.094	12.411	3.579	23.83	0.25	2.069	0.25	1.962	114.98	300.765	301.459	79.616	52.275	80.288	88.955	145.383	142.781	185.156	182.047
20160503:18:49:09	24.094	13.242	3.584	23.831	0.25	2.088	0.25	1.981	117.283	300.792	301.44	79.68	52.298	80.335	89.008	146.781	144.143	186.95	183.797
20160503:18:54:09	24.092	13.323	3.548	23.831	0.25	2.098	0.25	1.971	117.496	300.887	301.511	79.726	52.332	80.377	89.06	148.133	145.453	188.685	185.481
20160503:18:59:09	24.09	13.336	3.506	23.832	0.25	2.097	0.25	1.988	117.53	300.95	301.545	79.759	52.341	80.409	89.111	149.473	146.801	190.406	187.212
20160503:19:04:09	24.087	13.358	3.468	23.832	0.25	2.098	0.25	1.984	117.584	300.897	301.482	79.785	52.366	80.44	89.166	150.873	148.149	192.202	188.945
20160503:19:09:09	24.086	13.39	3.405	23.836	0.25	2.099	0.25	1.986	117.668	300.957	301.489	79.819	52.401	80.482	89.219	152.208	149.464	193.915	190.635
20160503:19:14:09	24.088	13.454	3.436	23.835	0.25	2.101	0.25	1.989	117.84	300.928	301.513	79.9	52.418	80.547	89.274	153.581	150.822	195.678	192.38
20160503:19:19:09	24.093	13.465	3.482	23.837	0.25	2.1	0.25	1.998	117.877	300.834	301.435	79.925	52.433	80.553	89.321	154.959	152.135	197.446	194.068
20160503:19:24:09	24.088	13.408	3.39	23.839	0.25	2.103	0.25	1.987	117.714	300.865	301.453	79.935	52.455	80.594	89.364	156.31	153.512	199.18	195.836
20160503:19:29:09	24.094	12.626	3.486	23.838	0.25	2.087	0.25	1.988	115.59	300.81	301.481	79.964	52.468	80.626	89.403	157.71	154.824	200.978	197.523
20160503:19:34:09	24.093	12.544	3.454	23.84	0.25	2.085	0.25	1.974	115.358	300.762	301.45	79.976	52.468	80.626	89.442	159.064	156.2	202.715	199.291
20160503:19:39:09	24.09	12.536	3.391	23.84	0.25	2.082	0.25	1.974	115.326	300.835	301.516	80.022	52.522	80.658	89.478	160.401	157.508	204.431	200.972
20160503:19:44:09	24.084	13.412	3.306	23.841	0.25	2.098	0.25	1.985	117.724	300.862	301.509	80.003	52.477	80.649	89.512	161.811	158.88	206.241	202.735
20160503:19:49:09	24.084	13.51	3.309	23.841	0.25	2.103	0.25	1.985	117.984	300.935	301.551	80.039	52.574	80.699	89.543	163.142	160.184	207.95	204.412
20160503:19:54:09	24.081	13.529	3.239	23.843	0.25	2.109	0.25	1.993	118.03	300.932	301.529	80.033	52.576	80.686	89.575	164.515	161.542	209.711	206.156
20160503:19:59:09	24.081	13.609	3.24	23.843	0.25	2.107	0.25	1.999	118.239	300.973	301.557	80.076	52.627	80.709	89.605	165.902	162.893	211.493	207.893
20160503:20:04:09	24.086	13.607	3.318	23.842	0.25	2.124	0.25	1.998	118

Time: day:hh:mm:ss	Stack Pressure: in-Hg	Sat% H2O: Percent	Static: in-H2O	Barometric: in-Hg	Flowmeter1: l/min	Vacuum1: in-Hg	Flowmeter2: l/min	Vacuum2: in-Hg	Stack Temp: degF	Sorbent Temp: degF	Probe Temp: degF	DGM#1 Temp: degF	Condenser Temp: degF	DGM#2 Temp: degF	DAQ Temp: degF	DGM1*: liters STP	DGM2*: liters STP	DGM1: liters nominal	DGM2: liters nominal
20160503:23:34:09	24.051	13.358	2.579	23.861	0.25	2.091	0.25	1.983	117.529	300.815	301.463	78.935	52.335	79.618	88.928	224.767	220.584	286.957	281.944
20160503:23:39:09	24.049	13.365	2.538	23.862	0.25	2.085	0.25	1.989	117.546	300.827	301.423	78.865	52.34	79.549	88.881	226.107	221.92	288.672	283.656
20160503:23:44:09	24.046	13.369	2.471	23.865	0.25	2.093	0.25	1.975	117.553	300.79	301.382	78.819	52.307	79.498	88.837	227.508	223.251	290.465	285.361
20160503:23:49:09	24.049	13.343	2.522	23.864	0.25	2.096	0.25	1.977	117.487	300.827	301.427	78.801	52.294	79.486	88.795	228.875	224.617	292.213	287.111
20160503:23:54:09	24.043	13.303	2.406	23.866	0.25	2.086	0.25	1.983	117.37	300.838	301.422	78.765	52.296	79.449	88.754	230.212	225.93	293.924	288.793
20160503:23:59:09	24.039	13.291	2.393	23.863	0.25	2.094	0.25	1.983	117.333	300.822	301.454	78.736	52.284	79.414	88.717	231.622	227.298	295.728	290.545
20160504:00:04:09	24.044	13.276	2.434	23.865	0.25	2.096	0.25	1.985	117.299	300.822	301.405	78.707	52.296	79.38	88.674	232.955	228.615	297.433	292.231
20160504:00:09:09	24.044	13.254	2.443	23.864	0.25	2.096	0.25	1.987	117.241	300.832	301.424	78.647	52.273	79.325	88.63	234.332	229.99	299.194	293.992
20160504:00:14:09	24.044	13.254	2.435	23.865	0.25	2.09	0.25	1.991	117.241	300.868	301.459	78.581	52.267	79.266	88.584	235.722	231.302	300.972	295.673
20160504:00:19:09	24.042	12.872	2.396	23.866	0.25	2.101	0.25	1.986	116.186	300.854	301.447	78.52	52.276	79.205	88.536	237.067	232.679	302.691	297.436
20160504:00:24:09	24.039	12.397	2.368	23.865	0.25	2.074	0.25	1.974	114.861	300.723	301.402	78.464	52.251	79.142	88.488	238.466	233.997	304.48	299.122
20160504:00:29:09	24.039	12.265	2.349	23.867	0.25	2.084	0.25	1.972	114.484	300.718	301.445	78.423	52.25	79.101	88.439	239.836	235.367	306.231	300.876
20160504:00:34:09	24.03	12.996	2.218	23.867	0.25	2.092	0.25	1.983	116.512	300.775	301.479	78.386	52.264	79.063	88.389	241.173	236.684	307.941	302.562
20160504:00:39:09	24.032	13.24	2.242	23.867	0.25	2.096	0.25	1.998	117.186	300.768	301.435	78.343	52.266	79.023	88.337	242.584	238.037	309.744	304.293
20160504:00:44:09	24.035	13.273	2.307	23.866	0.25	2.102	0.25	1.986	117.279	300.804	301.404	78.284	52.248	78.974	88.281	243.92	239.394	311.452	306.03
20160504:00:49:09	24.035	13.28	2.303	23.865	0.25	2.101	0.25	1.996	117.298	300.821	301.42	78.189	52.254	78.884	88.229	245.297	240.715	313.211	307.72
20160504:00:54:09	24.034	13.267	2.325	23.863	0.25	2.098	0.25	1.996	117.261	300.878	301.432	78.145	52.24	78.841	88.176	246.691	242.078	314.993	309.464
20160504:00:59:09	24.033	13.256	2.302	23.864	0.25	2.093	0.25	1.992	117.23	300.819	301.421	78.111	52.26	78.806	88.124	248.036	243.396	316.711	311.15
20160504:01:04:09	24.034	13.241	2.328	23.863	0.25	2.093	0.25	1.993	117.192	300.824	301.385	78.064	52.254	78.768	88.072	249.44	244.775	318.506	312.915
20160504:01:09:09	24.034	13.218	2.331	23.863	0.25	2.089	0.25	1.982	117.131	300.813	301.457	78.014	52.244	78.727	88.018	250.803	246.09	320.246	314.598
20160504:01:14:09	24.029	13.224	2.227	23.865	0.25	2.085	0.25	1.988	117.138	300.836	301.446	77.971	52.246	78.688	87.966	252.137	247.469	321.95	316.361
20160504:01:19:09	24.028	13.22	2.186	23.867	0.25	2.096	0.25	1.996	117.125	300.813	301.384	77.911	52.256	78.653	87.916	253.546	248.781	323.75	318.039
20160504:01:24:09	24.03	13.184	2.231	23.866	0.25	2.1	0.25	1.992	117.031	300.772	301.43	77.841	52.257	78.612	87.864	254.88	250.161	325.454	319.805
20160504:01:29:09	24.026	12.379	2.218	23.863	0.25	2.08	0.25	1.971	114.791	300.781	301.401	77.792	52.246	78.515	87.816	256.26	251.464	327.217	321.47
20160504:01:34:09	24.028	12.226	2.261	23.862	0.25	2.075	0.25	1.974	114.355	300.771	301.457	77.751	52.252	78.476	87.767	257.648	252.835	328.989	323.224
20160504:01:39:09	24.026	12.452	2.218	23.862	0.25	2.074	0.25	1.978	114.989	300.734	301.412	77.717	52.231	78.445	87.72	258.995	254.177	330.709	324.94
20160504:01:44:09	24.023	13.157	2.174	23.863	0.25	2.091	0.25	1.99	116.948	300.763	301.399	77.681	52.242	78.406	87.674	260.398	255.509	332.5	326.643
20160504:01:49:09	24.016	13.229	2.116	23.86	0.25	2.097	0.25	1.981	117.132	300.801	301.406	77.629	52.248	78.355	87.628	261.747	256.881	334.222	328.397
20160504:01:54:09	24.017	13.265	2.136	23.86	0.25	2.09	0.25	1.989	117.231	300.769	301.37	77.574	52.262	78.325	87.579	263.099	258.192	335.948	330.073
20160504:01:59:09	24.017	13.261	2.112	23.861	0.25	2.096	0.25	1.98	117.218	300.751	301.371	77.511	52.255	78.293	87.535	264.497	259.558	337.733	331.82
20160504:02:04:09	24.018	13.272	2.173	23.858	0.25	2.095	0.25	1.986	117.25	300.723	301.359	77.46	52.252	78.192	87.492	265.843	260.88	339.452	333.509
20160504:02:09:09	24.011	13.271	2.066	23.86	0.25	2.091	0.25	1.989	117.239	300.792	301.391	77.43	52.269	78.156	87.446	267.225	262.258	341.215	335.271
20160504:02:14:09	24.019	13.253	2.162	23.86	0.25	2.094	0.25	1.989	117.2	300.748	301.335	77.395	52.255	78.119	87.399	268.599	263.573	342.969	336.951
20160504:02:19:09	24.021	13.229	2.151	23.863	0.25	2.093	0.25	1.995	117.139	300.719	301.332	77.342	52.24	78.064	87.35	269.945	264.955	344.687	338.716
20160504:02:24:09	24.014	13.221	2.085	23.861	0.25	2.097	0.25	1.993	117.108	300.77	301.355	77.298	52.235	78.02	87.3	271.352	266.265	346.481	340.391
20160504:02:29:09	24.01	13.21	2.031	23.861	0.25	2.1	0.25	2	117.073	300.794	301.393	77.247	52.249	77.981	87.253	272.69	267.64	348.189	342.147
20160504:02:34:09	24.015	12.856	2.113	23.859	0.25	2.098	0.25	1.994	116.101	300.672	301.342	77.166	52.241	77.929	87.223	274.057	268.943	349.933	343.812
20160504:02:39:09	24.013	12.383	2.084	23.859	0.25	2.081	0.25	1.966	114.783	300.691	301.355	77.137	52.263	77.887	87.177	275.457	270.314	351.719	345.564
20160504:02:44:09	24.019	12.26	2.166	23.859	0.25	2.07	0.25	1.973	114.439	300.676	301.366	77.097	52.25	77.825	87.129	276.798	271.654	353.43	347.274
20160504:02:49:09	24.014	12.976	2.148	23.857	0.25	2.077	0.25	1.967	116.433	300.704	301.377	77.034	52.239	77.772	87.078	278.196	272.985	355.213	348.976
20160504:02:54:09	24.017	13.248	2.182	23.857	0.25	2.085	0.25	1.991	117.186	300.711	301.314	76.966	52.211	77.734	87.026	279.561	274.355	356.954	350.726
20160504:02:59:09	24.017	13.252	2.177	23.857	0.25	2.099	0.25	1.989	117.197	300.757	301.335	76.918	52.208	77.7	86.977	280.902	275.667	358.665	352.4
20160504:03:04:09	24.019	13.286	2.212	23.856	0.25	2.101	0.25	1.987	117.289	300.792	301.372	76.887	52.206	77.666	86.93	282.308	277.034	360.457	354.147
20160504:03:09:09	24.012	13.27	2.12	23.856	0.25	2.101	0.25	1.986	117.238	300.818	301.393	76.836	52.206	77.602	86.884	283.647	278.347	362.165	355.823
20160504:03:14:09	24.016	13.256	2.17	23.856	0.25	2.094	0.25	1.988	117.205	300.796	301.324	76.8	52.187	77.536	86.833	285.027	279.731	363.924	357.59
20160504:03:19:09	24.011	13.237	2.115	23.855	0.25	2.105	0.25	1.991	117.147	300.744	301.321	76.764	52.192	77.483	86.782	286.405	281.047	365.681	359.271
20160504:03:24:09	24.012	13.226	2.104	23.858	0.25	2.097	0.25	1.995	117.118	300.788	301.393	76.716	52.196	77.442	86.732	287.755	282.427	367.402	361.032
20160504:03:29:09	24.006	13.199	2.021	23.858	0.25	2.102	0.25	1.996	117.038	300.82	301.414	76.614	52.153	77.387	86.681	289.158	283.739	369.191	362.707
20160504:03:34:09	24.006	13.179	2.063	23.855	0.25	2.102	0.25	1.994	116.982	300.752	301.359	76.573	52.161	77.349	86.631	290.505	285.12	370.907	364.47
20160504:03:39:09	24.01	13.142	2.082	23.857	0.25	2.091	0.25	1.991	116.887	300.773	301.355	76.533	52.164	77.313	86.583	291.862	286.424	372.637	366.133
20160504:03:44:09	24.009	12.361	2.043	23.858	0.25	2.092	0.25	1.981	114.712	300.75	301.401	76.487	52.142	77.249	86.531	293.265	287.801	374.424	367.891
20160504:03:49:09	24.008	12.165	2.049	23.857	0.25	2.077	0.25	1.969	114.146	300.708	301.378	76.43	52.164	77.16	86.476	294.607	289.136	376.135	369.594
20160504:03:54:09	24.006	12.335	2.036	23.856	0.25	2.073	0.25	1.971	114.624	300.65	301.331	76.367	52.159	77.113	86.42	296.007	290.476	377.919	371.305
20160504:03:59:09	24.009	13.047	2.089	23.856	0.25	2.1	0.25	1.993	116.628	300.695	301.359	76.282	52.134	77.052	86.362	297.38	291.847	379.667	373.053
20160504:04:04:09	24.01	13.161	2.111	23.855	0.25	2.098	0.25	1.997	116.941	300.696	301.4	76.236	52.126	76.997	86.307	298.714	293.161	381.367	374.729
20160504:04:09:09	24.005	13.157	1.993	23.859	0.25	2.104	0.25	1.989	116.923	300.786	301.359	76.199	52.14	76.932	86.251	300.126	294.529	383.165	376.474
20160504:04:14:09	24	13.163	1.923	23.858	0.25	2.093	0.25	1.989	116.929	300.72	301.35	76.159	52.129	76.893	86.194	301.46	295.847	384.863	378.154
20160504:04:19:09	24.002	13.295	1.97	23.857	0.25	2.1	0.25	1.992	117.287	300.768	301.361	76.106	52.111	76.839	86.138	302.844	297.228	386.626	379.915
20160504:04:24:09	24.002	13.443	1.988	23.856	0.25	2.106	0.25	1.996	117.684	300.811	301.407	76.066	52.126	76.799	86.084	304.218	298.543	388.376	381.592
20160504:04:29:09	23.993	13.412	1.899	23.854	0.25	2.114	0.25	2.007	117.588	300.79	301.371	75.994	52.154	76.753	86.028	305.572	299.918	390.1	383.346
20160504:04:34:09	24.002	13.322	1.989	23.856	0.25	2.111	0.25	2.006	117.36	300.71	301.323	75.922	52.136	76.691	85.973	306.98	301.232	391.893	385.021
20160504:04:39:09	24.002	13.339	2	23.855	0.25	2.1	0.25	1.993	117.407	300.736	301.336	75.886	52.16	76.624	85.92	308.323	302.605	393.602	386.771
20160504:04:44:09	24.002	13.386	1.982	23.857	0.25	2.117	0.25	2.001	117.532	300.716	301.38	75.832	52.132	76.573	85.864	309.688	303.929	395.339	388.459
20160504:04:49:09	24	13.343	1.963	23.856	0.25	2.1	0.25	1.999	117.416	300.755	301.368	75.785	52.127	76.537	85.81	311.08	305.298	397.111	390.203
20160504:04:54:09	23.996	13.394	1.89	23.857	0.25	2.098	0.25	1.989	117.544	300.695	301.329	75.747	52.133	76.498	85.757	312.422	306.612	398.819	391.878
20160504:04:59:09	24.001	13.33	1.947	23.858	0.25	2.097	0.25	1.994	117.382	300.731	301.374	75.719	52.15	76.48	85.707	313.828	307.977	400.607	393.617
20160504:05:04:09	24.002	13.413	1.932	23.86	0.25	2.099	0.25	2.001	117.605	300.698	301.315	75.647	52.124	76.436	85.66	315.185	309.328	402.333	395.338
20160504:05:09:09	24.001	13.408	1.964	23.857	0.25	2.105	0.25	1.984	117.589	300.779	301.376	75.62	52.137	76.406	85.612	316.534	310.658	404.05	397.032
20160504:05:14:09	24.005	13.381	1.968	23.86	0.25	2.107	0.25	1.988	117.525	300.776	301.352	75.59	52.124	76.364	85.566	317.93	312.03	405.826	398.78
20160504:05:19:09	24.011	13.319	2.047	23.861	0.25	2.109	0.25	1.99	117.365	300.721	301.329	75.55	52.126	76.286	85.525	319.276	313.342	407.537	400.451
20160504:05:24:09	24.004	12.505	1.938	23.862	0.25	2.085	0.25	1.982	115.116	300.662	301.28	75.522	52.133	76.269	85.484	320.663	314.715	409.302	402.199
20160504:05:29:09	24.006	12.297	1.964	23.862	0.25	2.08	0.25	1.973	114.527	300.613	301.288	75.505	52.135	76.252	85.445	322.034	316.031	411.044	403.876
20160504:05:34:09	24.002	12.514	1.893	23.863	0.25	2.08	0.25	1.979	115.13	300.624	301.339	75.492	52.146	76.233	85.414	323.365	317.413	412.737	405.635
20160504:05:39:09	24.006	13.087	1.899	23.866	0.25	2.096	0.25	1.992	116.733	300.686	301.395	75.481	52.148	76.216	85.38	324.773	318.73	414.528	407.312
20160504:05:44:09	24.005	13.086	1.844	23.869	0.25	2.103	0.25	1.997	116.729	300.709	301.362	75.459	52.144	76.189	85.348	326.116	320.108	416.235	409.066
20160504:05:49:09	23.999	12.756	1.746	23.87	0.25	2.095	0.25	1.995	115.803	300.791	301.414	75.436	52.143	76.165	85.319	327.497	321.42	417.991	410.737
20160504:05:54:09	24.001	12.307	1.772	23.87	0.25	2.083	0.25	1.986	114.547	300.757	301.368	75.413	52.164	76.14	85.289	328.882	322.801	419.75	412.494
20160504:05:59:09	23.998	12.16	1.701	23.873	0.25	2.087	0.25	1.978	114.118	300.702	301.344	75.364	52.133	76.102	85.256	330.219	324.122	421.45	414.175
20160504:06:04:09	23.995	12.526	1.705	23.87	0.25	2.079	0.25	1.973	115.147	300.739	301.366	75.342	52.163	76.094	85.225	331.625	325.494	423.237	415.921
20160504:06:09:09	24	13.115	1.744	23.872	0.25	2.094	0.25	1.985	116.801	300.732	301.327	75.243	52.132	76.008	85.194	332.963	326.809	424.937	417.594
20160504:06:14:09	24.006	13.123	1.834	23.872	0.25	2.092	0.25	1.986	116.831	300.732	301.328	75.221	52.125	75.979	85.16	334.344	328.171	426.691	419.327
20160504:06:19:09	24.005	13.131	1.779	23.874	0.25	2.09	0.25	1.99	116.849	300.701	301.279	75.166	52.101	75.902	85.128	335.721	329.516	428.441	421.038
20160504:06:24:09	24.007	13.139	1.817	23.874	0.25	2.092	0.25	1.982	116.876	300.758	301.352	75.154	52.115	75.897	85.096	337.073	330.85	430.157	422.735
20160504:06:29:09	24.008	13.144	1.756	23.878	0.25	2.101	0.25	1.988	116.89	300.725	301.3	75.11	52.087	75.853	85.06	338.474	332.217	431.937	424.474
20160504:06:34:09	24.008	13.123	1.733	23.88	0.25	2.1	0.25	1.985	116.832	300.756	301.372	75.104	52.112	75.852	85.026	339.812	333.533	433.635	426.147
20160504:06:39:09	24.007	13.14	1.703	23.882	0.25	2.099	0.25	1.992	116.879	300.725	301.357	75.067	52.084	75.808	84.991	341.181	334.899	435.374	427.883
20160504:06:44:09	24.006	13.146	1.662	23.883	0.25	2.095	0.25	1.994	116.893	300.725	301.319	75.057	52.104	75.794	84.955	342.564	336.223	437.13	429.566
20160504:06:49:09	24.008	13.127	1.687	23.884	0.25	2.097	0.25	1.977	116.844	300.663	301.258	74.981	52.081	75.758	84.924	343.911	337.59	438.839	431.305
20160504:06:54:09	24.009	12.82	1.687	23.885	0.25	2.105	0.25	1.984	115.996	300.648	301.344	74.985	52.108	75.753	84.89	345.314	338.907	440.62	432.977
20160504:06:59:09	24.008	12.327	1.643	23.887	0.25	2.088	0.25	1.981	114.614	300.64	301.29	74.915	52.091	75.701	84.856	346.658	340.285	442.326	434.729
20160504:07:04:09	24.008	12.18	1.622	23.889	0.25	2.094	0.25	1.983	114.192	300.67	301.351	74.928	52.123	75.709	84.827	348.026	341.599	444.061	436.398
20160504:07:09:09	24.011	12.522	1.656	23.889	0.25	2.085	0.25	1.98	115.16	300.654	301.369	74.879	52.094	75.614	84.794	349.412	342.979	445.82	438.152
20160504:07:14:09	24.009	13.021	1.599	23.891	0.25	2.105	0.25	1.985	116.556	300.706	301.35	74.876	52.119	75.607	84.762	350.758	344.293	447.528	439.821
20160504:07:19:09	24.01	13.013	1.635	23.89	0.25	2.107	0.25	1.992	116.538	300.715	301.347	74.842	52.096	75.574	84.734	352.158	345.678	449.304	441.581
20160504:07:24:09	24.012	13.033	1.639	23.891	0.25	2.091	0.25	1.989	116.594	300.709	301.298	74.822	52.094	75.553	84.705	353.498	346.983	451.004	443.239
20160504:07:29:09	24.012	13.082	1.65	23.891	0.25	2.097	0.25	1.992	116.729	300.69	301.283	74.81	52.107	75.54	84.679	354.869	348.364	452.743	444.992
20160504:07:34:09	24.016	13.073	1.716	23.89	0.25	2.094	0.25	1.988	116.709	300.759	301.3	74.765	52.071	75.495	84.649	356.253	349.676	454.498	446.66
20160504:07:39:09	24.021	13.124	1.783	23.89	0.25	2.103	0.25	1.985	116.857	300.741	301.309	74.765	52.079	75.493	84.62	357.602	351.051	456.209	448.406
20160504:07:44:09	24.028	13.116	1.87	23.89	0.25	2.101	0.25	1.977	116.845	300.695	301.277	74.717	52.054	75.447	84.592	358.999	352.364	457.981	450.073
20160504:07:49:09	24.03	13.126	1.916	23.889	0.25	2.094	0.25	1.981	116.874	300.7	301.305	74.711	52.065	75.444	84.562	360.34	353.73	459.681	451.808
20160504:07:54:09	24.039	13.115	2.035	23.889	0.25	2.087	0.25	1.981	116.859	300.679	301.273	74.674	52.043	75.439	84.537	361.706	355.065	461.415	453.504
20160504:07:59:09	24.038	13.115	2.03	23.889	0.25	2.086	0.25	1.975	116.887	300.673	301.311	75.448	51.971	76.093	84.728	386.298	379.239	492.637	484.235
20160504:08:04:09	24.044	13.16	2.132	23.888	0.25	2.091	0.25	1.981	116.988	300.795	301.36	74.709	52.027	75.436	84.488	364.438	357.763	464.88	456.93
20160504:08:09:09	24.051	13.199	2.265	23.885	0.25	2.093	0.25	1.983	117.102	300.796	301.384	74.695	52.012	75.433	84.469	365.835	359.086	466.652	458.611
20160504:08:14:09	24.059	13.201	2.366	23.885	0.25	2.09	0.25	1.985	117.121	300.696	301.295	74.692	52.01	75.423	84.451	367.171	360.457	468.346	460.353
20160504:08:19:09	24.066	13.14	2.453	23.885	0.25	2.095	0.25	1.994	116.966	300.683	301.288	74.715	52.009	75.437	84.438	368.54	361.768	470.083	462.019
20160504:08:24:09	24.072	13.091	2.578	23.882	0.25	2.087	0.25	1.997	116.842	300.686	301.276	74.753	52.013	75.462	84.426	369.918	363.131	471.831	463.75
20160504:08:29:09	24.076	13.065	2.671	23.88	0.25	2.085	0.25	1.979	116.775	300.652	301.319	74.775	51.985	75.49	84.42	371.265	364.455	473.541	465.432
20160504:08:34:09	24.081	13.087	2.751	23.878	0.25	2.095	0.25	1.974	116.843	300.755	301.326	74.819	51.99	75.508	84.422	372.665	365.82	475.319	467.167
20160504:08:39:09	24.081	13.076	2.799	23.876	0.25	2.099	0.25	1.98	116.814	300.718	301.338	74.846	51.969	75.542	84.431	373.989	367.132	476.998	468.835
20160504:08:44:09	24.088	13.135	2.893	23.875	0.25	2.089	0.25	1.97	116.985	300.667	301.338	74.878	51.961	75.559	84.445	375.37	368.506	478.752	470.581
20160504:08:49:09	24.092	13.148	3.026	23.87	0.25	2.086	0.25	1.985	117.025	300.725	301.326	74.957	51.952	75.639	84.465	376.745	369.818	480.498	472.25
20160504:08:54:09	24.095	13.164	3.051	23.87	0.25	2.085	0.25	1.964	117.073	300.691	301.274	75.048	51.963	75.727	84.487	378.081	371.185	482.194	473.989
20160504:08:59:09	24.096	12.959	3.066	23.87	0.25	2.085	0.25	1.975	116.506	300.691	301.258	75.085	51.922	75.756	84.517	379.483	372.498	483.976	475.658
20160504:09:04:09	24.099	12.371	3.125	23.869	0.25	2.065	0.25	1.966	114.876	300.64	301.328	75.151	51.948	75.819	84.548	380.815	373.87	485.669	477.404
20160504:09:09:09	24.101	12.212	3.141	23.87	0.25	2.067	0.25	1.964	114.421	300.719	301.388	75.191	51.936	75.85	84.586	382.194	375.18	487.42	479.07
20160504:09:14:09	24.101	12.494	3.15	23.87	0.25	2.071	0.25	1.958	115.217	300.622	301.324	75.27	51.96	75.933	84.628	383.571	376.56	489.17	480.825
20160504:09:19:09	24.1	13.098	3.154	23.868	0.25	2.082	0.25	1.974	116.902	300.75	301.326	75.359	51.975	76.009	84.676	384.899	377.864	490.857	482.485
20160504:09:24:09	24.102	13.091	3.19	23.868	0.25	2.087	0.25	1.975	116.887	300.673	301.311	75.448	51.971	76.093	84.728	386.298	379.239	492.637	484.235
20160504:09:29:09	24.104	13.076	3.232	23.867	0.25	2.08	0.25	1.973	116.848	300.737	301.275	75.501	51.971	76.163	84.785	387.638	380.551	494.341	485.906
20160504:09:34:10	24.105	13.084	3.274	23.865	0.25	2.072	0.25	1.976	116.872	300.747	301.356	75.562	51.976	76.222	84.844	389.02	381.918	496.098	487.647
20160504:09:39:10	24.104	13.078	3.258	23.864	0.25	2.079	0.25	1.969	116.854	300.697	301.309	75.666	51.998	76.288	84.905	390.389	383.214	497.839	489.297
20160504:09:44:10	24.107	13.046	3.299	23.864	0.25	2.081	0.25	1.967	116.771

Time: day:hh:mm:ss	Stack Pressure: in-Hg	Sat% H2O: Percent	Static: in-H2O	Barometric: in-Hg	Flowmeter1: l/min	Vacuum1: in-Hg	Flowmeter2: l/min	Vacuum2: in-Hg	Stack Temp: degF	Sorbent Temp: degF	Probe Temp: degF	DGM#1 Temp: degF	Condenser Temp: degF	DGM#2 Temp: degF	DAQ Temp: degF	DGM1*: liters STP	DGM2*: liters STP	DGM1: liters nominal	DGM2: liters nominal
20160504:13:14:10	24.134	13.037	4.495	23.803	0.25	2.072	0.25	1.948	116.785	300.667	301.325	79.281	52.267	79.95	88.536	448.964	440.754	572.683	562.904
20160504:13:19:10	24.134	13.113	4.46	23.806	0.25	2.064	0.25	1.963	116.994	300.755	301.342	79.35	52.283	80.014	88.608	450.298	442.124	574.396	564.665
20160504:13:24:10	24.13	13.132	4.368	23.809	0.25	2.074	0.25	1.967	117.04	300.721	301.376	79.413	52.297	80.078	88.678	451.686	443.431	576.178	566.346
20160504:13:29:10	24.128	13.159	4.394	23.805	0.25	2.078	0.25	1.958	117.109	300.808	301.401	79.478	52.325	80.14	88.749	453.056	444.8	577.937	568.105
20160504:13:34:10	24.133	12.628	4.639	23.792	0.25	2.054	0.25	1.939	115.644	300.766	301.31	79.575	52.348	80.255	88.821	454.387	446.1	579.648	569.778
20160504:13:39:10	24.134	12.403	4.607	23.796	0.25	2.059	0.25	1.94	115.019	300.773	301.414	79.679	52.37	80.325	88.898	455.792	447.472	581.454	571.543
20160504:13:44:10	24.135	12.223	4.608	23.797	0.25	2.047	0.25	1.944	114.504	300.713	301.358	79.751	52.402	80.387	88.976	457.122	448.767	583.163	573.211
20160504:13:49:10	24.131	12.908	4.544	23.797	0.25	2.051	0.25	1.931	116.418	300.698	301.359	79.85	52.429	80.456	89.054	458.485	450.134	584.915	574.97
20160504:13:54:10	24.127	13.22	4.48	23.797	0.25	2.067	0.25	1.951	117.272	300.731	301.348	79.945	52.457	80.552	89.129	459.873	451.459	586.7	576.675
20160504:13:59:10	24.126	13.285	4.39	23.803	0.25	2.077	0.25	1.97	117.446	300.802	301.415	80.016	52.505	80.639	89.209	461.209	452.788	588.417	578.385
20160504:14:04:10	24.128	13.296	4.666	23.785	0.25	2.056	0.25	1.959	117.477	300.796	301.381	80.087	52.562	80.709	89.292	462.597	454.148	590.204	580.137
20160504:14:09:10	24.13	13.302	4.485	23.8	0.25	2.084	0.25	1.976	117.497	300.766	301.369	80.165	52.585	80.774	89.371	463.965	455.455	591.963	581.82
20160504:14:14:10	24.128	13.313	4.668	23.784	0.25	2.071	0.25	1.961	117.524	300.845	301.36	80.27	52.598	80.861	89.45	465.296	456.815	593.676	583.573
20160504:14:19:10	24.129	13.313	4.657	23.786	0.25	2.076	0.25	1.964	117.524	300.817	301.352	80.332	52.585	80.956	89.53	466.702	458.128	595.485	585.265
20160504:14:24:10	24.124	13.328	4.612	23.785	0.25	2.075	0.25	1.98	117.557	300.848	301.393	80.383	52.612	81.022	89.613	468.031	459.496	597.196	587.028
20160504:14:29:10	24.127	13.3	4.688	23.782	0.25	2.068	0.25	1.961	117.488	300.818	301.469	80.435	52.633	81.083	89.692	469.392	460.8	598.95	588.709
20160504:14:34:10	24.124	13.332	4.466	23.795	0.25	2.083	0.25	1.975	117.568	300.8	301.395	80.503	52.643	81.152	89.769	470.788	462.168	600.746	590.472
20160504:14:39:10	24.122	12.723	4.501	23.791	0.25	2.09	0.25	1.976	115.894	300.757	301.389	80.605	52.665	81.244	89.843	472.133	463.477	602.478	592.16
20160504:14:44:10	24.128	12.488	4.817	23.774	0.25	2.063	0.25	1.937	115.251	300.713	301.406	80.665	52.677	81.3	89.915	473.514	464.835	604.257	593.912
20160504:14:49:10	24.13	12.26	4.691	23.785	0.25	2.067	0.25	1.963	114.601	300.682	301.376	80.721	52.682	81.357	89.985	474.876	466.154	606.013	595.613
20160504:14:54:10	24.122	12.943	4.726	23.775	0.25	2.066	0.25	1.968	116.503	300.699	301.409	80.778	52.695	81.415	90.053	476.227	467.487	607.754	597.333
20160504:14:59:10	24.124	13.258	4.83	23.768	0.25	2.073	0.25	1.967	117.368	300.782	301.438	80.855	52.708	81.473	90.123	477.624	468.845	609.556	599.086
20160504:15:04:10	24.12	13.262	4.787	23.768	0.25	2.077	0.25	1.952	117.374	300.78	301.306	80.94	52.715	81.553	90.196	478.978	470.151	611.302	600.773
20160504:15:09:10	24.119	13.257	4.854	23.762	0.25	2.067	0.25	1.963	117.362	300.821	301.376	80.999	52.729	81.636	90.269	480.313	471.513	613.024	602.532
20160504:15:14:10	24.113	13.245	4.797	23.76	0.25	2.075	0.25	1.976	117.32	300.838	301.394	81.042	52.736	81.689	90.335	481.717	472.827	614.835	604.229
20160504:15:19:10	24.112	13.266	4.803	23.759	0.25	2.075	0.25	1.959	117.375	300.774	301.389	81.089	52.738	81.743	90.402	483.051	474.197	616.557	606
20160504:15:24:10	24.117	13.329	4.83	23.762	0.25	2.071	0.25	1.961	117.55	300.786	301.375	81.154	52.744	81.827	90.469	484.412	475.507	618.313	607.692
20160504:15:29:10	24.116	13.315	4.713	23.769	0.25	2.081	0.25	1.972	117.511	300.801	301.427	81.246	52.783	81.911	90.535	485.805	476.877	620.111	609.462
20160504:15:34:10	24.115	13.342	4.736	23.766	0.25	2.079	0.25	1.973	117.583	300.789	301.377	81.314	52.784	81.966	90.601	487.144	478.179	621.839	611.145
20160504:15:39:10	24.113	13.347	4.798	23.761	0.25	2.079	0.25	1.981	117.595	300.791	301.389	81.36	52.781	82.017	90.665	488.521	479.527	623.617	612.887
20160504:15:44:10	24.116	12.743	4.901	23.756	0.25	2.057	0.25	1.947	115.94	300.776	301.399	81.415	52.806	82.073	90.732	489.882	480.878	625.374	614.633
20160504:15:49:10	24.118	12.516	4.87	23.76	0.25	2.066	0.25	1.951	115.315	300.733	301.391	81.472	52.8	82.153	90.8	491.234	482.189	627.12	616.329
20160504:15:54:10	24.112	12.294	4.833	23.757	0.25	2.059	0.25	1.953	114.673	300.675	301.378	81.546	52.833	82.236	90.866	492.629	483.546	628.922	618.085
20160504:15:59:10	24.113	12.964	4.889	23.753	0.25	2.068	0.25	1.95	116.544	300.754	301.448	81.624	52.832	82.287	90.931	493.982	484.86	630.67	619.784
20160504:16:04:10	24.114	13.255	4.832	23.758	0.25	2.085	0.25	1.973	117.347	300.773	301.407	81.675	52.841	82.338	90.994	495.316	486.226	632.394	621.551
20160504:16:09:10	24.115	13.273	4.805	23.762	0.25	2.106	0.25	1.98	117.397	300.806	301.408	81.732	52.845	82.384	91.06	496.722	487.534	634.211	623.242
20160504:16:14:10	24.115	13.265	4.842	23.759	0.25	2.089	0.25	1.975	117.376	300.808	301.403	81.791	52.857	82.428	91.122	498.059	488.908	635.939	625.021
20160504:16:19:10	24.112	13.252	4.943	23.748	0.25	2.08	0.25	1.971	117.335	300.789	301.407	81.86	52.859	82.473	91.18	499.413	490.208	637.689	626.703
20160504:16:24:10	24.113	13.272	4.96	23.748	0.25	2.087	0.25	1.978	117.393	300.773	301.382	81.908	52.866	82.562	91.239	500.812	491.561	639.498	628.455
20160504:16:29:10	24.113	13.296	5.093	23.739	0.25	2.07	0.25	1.971	117.455	300.807	301.461	81.95	52.877	82.608	91.293	502.155	492.916	641.235	630.211
20160504:16:34:10	24.114	13.036	5.038	23.743	0.25	2.071	0.25	1.978	116.745	300.796	301.424	81.989	52.874	82.653	91.35	503.525	494.227	643.007	631.908
20160504:16:39:10	24.114	12.62	4.93	23.751	0.25	2.08	0.25	1.961	115.601	300.781	301.44	82.032	52.886	82.699	91.407	504.903	495.592	644.789	633.675
20160504:16:44:10	24.112	12.472	4.892	23.752	0.25	2.069	0.25	1.957	115.182	300.744	301.437	82.07	52.877	82.738	91.462	506.246	496.902	646.526	635.372
20160504:16:49:10	24.111	12.812	4.885	23.752	0.25	2.068	0.25	1.962	116.123	300.739	301.476	82.122	52.894	82.787	91.517	507.64	498.276	648.33	637.15
20160504:16:54:10	24.112	13.269	5.083	23.738	0.25	2.078	0.25	1.963	117.382	300.809	301.434	82.225	52.906	82.894	91.57	509.005	499.581	650.096	638.842
20160504:16:59:10	24.113	13.269	5.044	23.743	0.25	2.093	0.25	1.976	117.383	300.81	301.365	82.267	52.902	82.936	91.624	510.35	500.943	651.837	640.607
20160504:17:04:10	24.112	13.272	5.074	23.739	0.25	2.09	0.25	1.971	117.389	300.868	301.437	82.31	52.896	82.978	91.677	511.749	502.266	653.648	642.321
20160504:17:09:10	24.111	13.283	5.106	23.735	0.25	2.078	0.25	1.965	117.417	300.869	301.433	82.354	52.904	83.023	91.734	513.105	503.592	655.404	644.041
20160504:17:14:10	24.11	13.307	5.006	23.742	0.25	2.107	0.25	1.977	117.48	300.86	301.463	82.397	52.908	83.067	91.79	514.443	504.948	657.135	645.799
20160504:17:19:10	24.11	13.309	5.018	23.741	0.25	2.098	0.25	1.975	117.486	300.832	301.442	82.445	52.919	83.117	91.846	515.843	506.257	658.948	647.496
20160504:17:24:10	24.111	13.299	5.033	23.741	0.25	2.095	0.25	1.978	117.463	300.901	301.526	82.545	52.928	83.215	91.899	517.187	507.632	660.689	649.278
20160504:17:29:10	24.111	13.291	5.086	23.737	0.25	2.075	0.25	1.975	117.44	300.855	301.406	82.593	52.922	83.265	91.953	518.534	508.942	662.433	650.977
20160504:17:34:10	24.113	13.259	5.162	23.734	0.25	2.086	0.25	1.972	117.355	300.834	301.428	82.634	52.913	83.304	92.009	519.932	510.316	664.244	652.759
20160504:17:39:10	24.112	12.632	5.16	23.733	0.25	2.078	0.25	1.958	115.633	300.806	301.429	82.671	52.918	83.335	92.061	521.268	511.617	665.976	654.447
20160504:17:44:10	24.111	12.714	5.116	23.735	0.25	2.075	0.25	1.965	115.861	300.828	301.47	82.718	52.928	83.38	92.112	522.633	512.973	667.744	656.207
20160504:17:49:10	24.11	12.673	5.099	23.735	0.25	2.076	0.25	1.969	115.743	300.82	301.504	82.76	52.925	83.428	92.162	524.028	514.325	669.552	657.961
20160504:17:54:10	24.109	13.403	5.121	23.732	0.25	2.078	0.25	1.97	117.735	300.805	301.494	82.803	52.929	83.478	92.211	525.372	515.636	671.294	659.662
20160504:17:59:10	24.109	13.514	5.08	23.736	0.25	2.096	0.25	1.985	118.031	300.855	301.437	82.851	52.917	83.53	92.256	526.738	517	673.065	661.432
20160504:18:04:10	24.111	13.475	5.107	23.735	0.25	2.095	0.25	1.974	117.93	300.923	301.501	82.918	52.945	83.606	92.303	528.122	518.314	674.859	663.137
20160504:18:09:10	24.109	13.441	5.058	23.737	0.25	2.093	0.25	1.981	117.838	300.973	301.515	82.946	52.938	83.632	92.351	529.463	519.686	676.596	664.917
20160504:18:14:10	24.11	13.373	5.037	23.74	0.25	2.097	0.25	1.981	117.658	300.874	301.404	82.973	52.936	83.663	92.398	530.849	520.989	678.393	666.609
20160504:18:19:10	24.109	13.346	5.03	23.739	0.25	2.093	0.25	1.977	117.584	300.886	301.428	83.02	52.959	83.715	92.442	532.216	522.349	680.165	668.374
20160504:18:24:10	24.108	13.308	5.072	23.735	0.25	2.093	0.25	1.978	117.482	300.861	301.471	83.054	52.955	83.752	92.488	533.563	523.687	681.911	670.111
20160504:18:29:10	24.109	13.275	4.993	23.742	0.25	2.102	0.25	1.984	117.393	300.875	301.438	83.072	52.951	83.768	92.534	534.957	525.005	683.719	671.821
20160504:18:34:10	24.109	13.252	4.985	23.743	0.25	2.1	0.25	1.983	117.331	300.87	301.506	83.127	52.974	83.847	92.574	536.326	526.371	685.493	673.594
20160504:18:39:10	24.109	12.804	5.01	23.741	0.25	2.094	0.25	1.981	116.102	300.82	301.441	83.176	52.968	83.871	92.618	537.664	527.684	687.228	675.299
20160504:18:44:10	24.109	12.533	4.963	23.744	0.25	2.092	0.25	1.964	115.351	300.809	301.455	83.231	52.974	83.914	92.663	539.062	529.054	689.041	677.077
20160504:18:49:10	24.108	12.515	4.903	23.747	0.25	2.081	0.25	1.971	115.297	300.778	301.441	83.281	52.994	83.961	92.704	540.425	530.363	690.807	678.776
20160504:18:54:10	24.104	13.046	4.852	23.748	0.25	2.086	0.25	1.96	116.758	300.78	301.441	83.298	52.985	83.977	92.744	541.765	531.728	692.544	680.549
20160504:18:59:10	24.106	13.278	4.892	23.746	0.25	2.094	0.25	1.981	117.397	300.845	301.47	83.339	52.986	84.017	92.786	543.16	533.053	694.354	682.269
20160504:19:04:10	24.107	13.292	4.91	23.746	0.25	2.088	0.25	1.978	117.435	300.897	301.516	83.382	53.001	84.06	92.828	544.513	534.378	696.107	683.989
20160504:19:09:10	24.107	13.317	4.9	23.747	0.25	2.089	0.25	1.985	117.503	300.908	301.486	83.405	52.983	84.087	92.871	545.851	535.736	697.843	685.752
20160504:19:14:10	24.103	13.333	4.835	23.748	0.25	2.102	0.25	1.976	117.542	300.909	301.478	83.45	53.004	84.179	92.908	547.259	537.05	699.669	687.459
20160504:19:19:10	24.098	13.365	4.729	23.75	0.25	2.104	0.25	1.99	117.617	300.865	301.44	83.491	52.994	84.2	92.949	548.596	538.423	701.402	689.241
20160504:19:24:10	24.094	13.415	4.656	23.752	0.25	2.102	0.25	1.992	117.748	300.92	301.442	83.545	53.017	84.23	92.988	549.952	539.731	703.161	690.94
20160504:19:29:10	24.089	13.399	4.597	23.751	0.25	2.102	0.25	1.996	117.698	300.948	301.5	83.578	53.018	84.266	93.028	551.352	541.105	704.976	692.724
20160504:19:34:10	24.089	13.375	4.596	23.751	0.25	2.109	0.25	1.998	117.633	300.897	301.467	83.584	53.028	84.268	93.064	552.684	542.414	706.704	694.423
20160504:19:39:10	24.087	13.436	4.537	23.753	0.25	2.106	0.25	1.989	117.791	300.937	301.518	83.618	53.064	84.301	93.102	554.052	543.753	708.478	696.162
20160504:19:44:10	24.09	13.035	4.548	23.755	0.25	2.104	0.25	1.989	116.706	300.798	301.428	83.62	53.048	84.299	93.131	555.444	545.109	710.283	697.923
20160504:19:49:10	24.09	12.762	4.538	23.756	0.25	2.097	0.25	1.971	115.963	300.767	301.435	83.658	53.064	84.332	93.164	556.791	546.417	712.03	699.62
20160504:19:54:10	24.086	12.583	4.477	23.757	0.25	2.089	0.25	1.966	115.455	300.764	301.458	83.67	53.063	84.344	93.195	558.156	547.789	713.8	701.402
20160504:19:59:10	24.082	13.081	4.423	23.757	0.25	2.09	0.25	1.975	116.823	300.757	301.499	83.682	53.055	84.36	93.223	559.545	549.099	715.602	703.103
20160504:20:04:10	24.081	13.403	4.389	23.758	0.25	2.099	0.25	1.99	117.694	300.846	301.503	83.689	53.077	84.367	93.255	560.885	550.473	717.339	704.887
20160504:20:09:10	24.081	13.456	4.395	23.757	0.25	2.107	0.25	1.993	117.836	300.86	301.492	83.682	53.064	84.356	93.279	562.267	551.774	719.131	706.577
20160504:20:14:10	24.079	13.51	4.347	23.76	0.25	2.112	0.25	1.993	117.975	300.901	301.512	83.73	53.109	84.401	93.305	563.634	553.125	720.904	708.331
20160504:20:19:10	24.074	13.46	4.28	23.759	0.25	2.109	0.25	1.996	117.837	300.885	301.501	83.716	53.081	84.387	93.328	564.978	554.477	722.646	710.086
20160504:20:24:10	24.07	13.438	4.212	23.76	0.25	2.104	0.25	1.993	117.771	300.893	301.518	83.694	53.084	84.37	93.346	566.373	555.785	724.456	711.784
20160504:20:29:10	24.068	13.427	4.219	23.757	0.25	2.1	0.25	1.983	117.74	300.924	301.552	83.729	53.138	84.405	93.364	567.738	557.148	726.226	713.555
20160504:20:34:10	24.066	13.392	4.137	23.762	0.25	2.114	0.25	1.999	117.644	300.914	301.509	83.73	53.133	84.398	93.381	569.075	558.462	727.959	715.259
20160504:20:39:10	24.065	13.35	4.109	23.763	0.25	2.111	0.25	1.996	117.53	300.916	301.533	83.714	53.106	84.379	93.395	570.479	559.836	729.78	717.043
20160504:20:44:10	24.06	13.16	4.005	23.765	0.25	2.109	0.25	1.983	117.004	300.891	301.504	83.682	53.107	84.355	93.405	571.836	561.139	731.539	718.735
20160504:20:49:10	24.06	12.603	3.977	23.767	0.25	2.097	0.25	1.983	115.473	300.855	301.472	83.674	53.12	84.344	93.408	573.175	562.496	733.274	720.496
20160504:20:54:10	24.064	12.481	4.003	23.77	0.25	2.085	0.25	1.987	115.134	300.811	301.471	83.662	53.097	84.329	93.412	574.573	563.83	735.087	722.227
20160504:20:59:10	24.057	12.622	3.937	23.767	0.25	2.079	0.25	1.975	115.515	300.73	301.415	83.628	53.104	84.304	93.412	575.923	565.148	736.837	723.938
20160504:21:04:10	24.057	13.194	3.921	23.769	0.25	2.096	0.25	1.981	117.097	300.821	301.498	83.62	53.15	84.293	93.409	577.268	566.507	738.58	725.701
20160504:21:09:10	24.06	13.228	3.919	23.771	0.25	2.093	0.25	1.987	117.193	300.879	301.526	83.614	53.16	84.286	93.406	578.674	567.822	740.402	727.408
20160504:21:14:10	24.052	13.218	3.831	23.771	0.25	2.096	0.25	1.99	117.157	300.971	301.585	83.593	53.141	84.268	93.4	580.012	569.193	742.135	729.186
20160504:21:19:10	24.051	13.218	3.805	23.771	0.25	2.102	0.25	1.986	117.155	300.962	301.561	83.572	53.187	84.25	93.39	581.367	570.501	743.891	730.883
20160504:21:24:10	24.054	13.221	3.834	23.773	0.25	2.101	0.25	1.988	117.168	300.945	301.512	83.563	53.187	84.237	93.377	582.766	571.872	745.704	732.662
20160504:21:29:10	24.046	13.271	3.769	23.769	0.25	2.098	0.25	1.981	117.29	300.96	301.535	83.531	53.172	84.217	93.361	584.101	573.187	747.433	734.368
20160504:21:34:10	24.044	13.247	3.72	23.77	0.25	2.1	0.25	1.99	117.223	300.932	301.484	83.423	53.097	84.14	93.343	585.474	574.522	749.213	736.1
20160504:21:39:10	24.044	13.279	3.723	23.77	0.25	2.097	0.25	1.979	117.309	300.991	301.557	83.407	53.165	84.106	93.322	586.868	575.877	751.019	737.857
20160504:21:44:10	24.048	13.3	3.785	23.77	0.25	2.098	0.25	1.979	117.37	300.97	301.484	83.384	53.167	84.07	93.297	588.215	577.186	752.763	739.555
20160504:21:49:10	24.045	13.094	3.763	23.768	0.25	2.106	0.25	1.986	116.803	300.897	301.474	83.339	53.124	84.014	93.271	589.586	578.562	754.539	741.34
20160504:21:54:10	24.045	12.504	3.799	23.766	0.25	2.074	0.25	1.976	115.174	300.857	301.501	83.339	53.19	84.011	93.244	590.961	579.874	756.32	743.041
20160504:21:59:10	24.047	12.43	3.822	23.766	0.25	2.078	0.25	1.981	114.965	300.821	301.515	83.288	53.111	83.959	93.212	592.303	581.248	758.059	744.823
20160504:22:04:10	24.041	12.579	3.722	23.768	0.25	2.084	0.25	1.97	115.371	300.83	301.5	83.282	53.175	83.95	93.186	593.691	582.546	759.857	746.508
20160504:22:09:10	24.037	13.212	3.667	23.767	0.25	2.105	0.25	1.99	117.117	300.923	301.524	83.249	53.153	83.912	93.154	595.053	583.902	761.62	748.265
20160504:22:14:10	24.038	13.222	3.689	23.767	0.25	2.107	0.25	1.991	117.145	300.936	301.516	83.224	53.174	83.886	93.124	596.407	585.254	763.374	750.019
20160504:22:19:10	24.041	13.204	3.747	23.766	0.25	2.105	0.25	1.989	117.101	300.906	301.491	83.187	53.162	83.853	93.096	597.803	586.565	765.183	751.718
20160504:22:24:10	24.037	13.174	3.694	23.765	0.25	2.107	0.25	1.995	117.016	300.875	301.453	83.111	53.158	83.777	93.062	599.171	587.927	766.954	753.485
20160504:22:29:10	24.029	13.173	3.58	23.765	0.25	2.106	0.25	1.996	116.999	300.916	301.556	83.095	53.189	83.766	93.03	600.509	589.241	768.687	755.188
20160504:22:34:10	24.03	12.53	3.634	23.763	0.25	2.085	0.25	1.987	115.221	300.878	301.557	83.047	53.168	83.716	92.994	601.909	590.619	770.5	756.976
20160504:22:39:10	24.043	12.382	3.639	23.765	0.25	2.081	0.25	1.974	114.81	300.855	301.54	83.025	53.167	83.698	92.96	603.262	591.926	772.252	758.669
20160504:22:44:10	24.024	12.281	3.541	23.764	0.25	2.079	0.25	1.967	114.507	300.799	301.492	82.972	53.128	83.65	92.924	604.601	593.283	773.985	760.429
20160504:22:49:10	24.02	12.966	3.498	23.762	0.25	2.1	0.25	1.977	116.42	300.844	301.557	82.952	53.157	83.631	92.893	606.012	594.618	775.813	762.16
20160504:22:54:10	24.018	13.122	3.468	23.763	0.25	2.103	0.25	1.974	116.847	300.868	301.546	82.894	53.166	83.575	92.857	607.357	595.939	777.554	763.872
20160504:22:59:10	24.02	13.14	3.498	23.763	0.25	2.085	0.25	1.977	116.897	300.979	301.551	82.835	53.133	83.511	92.818	608.709	597.304	779.304	765.641
20160504:23:04:10	24.029	13.152	3.626	23.763	0.25	2.095	0.25	1.979	116.943	300.968	301.52	82.777	53.091	83.452	92.776	610.114	598.621	781.122	767.348
20160504:23:09:10	24.022	13.204	3.525	23.762	0.25	2.105	0.25	1.991	117.074	300.972	301.526	82.722	53.071	83.392	92.734	611.453	599.995	782.856	769.128
20160504:23:14:10	24.016	13.237	3.44	23.763	0.25	2.105	0.25	1.998	117.154	300.966	301.557	82.692	53.085	83.366	92.688	612.813	601.308	784.615	770.829
20160504:23:19:10	24.01	13.25	3.369	23.762	0.25	2.108	0.25	1.989	117.18	301.011	301.553	82.653	53.098	83.334	92.64	614.215	602.677	786.43	772.603
20160504:23:24:10	24.003	13.295	3.268	23.763	0.25	2.107	0.25	1.986

Time: day:hh:mm:ss	Stack Pressure: in-Hg	Sat% H2O: Percent	Static: in-H2O	Barometric: in-Hg	Flowmeter1: l/min	Vacuum1: in-Hg	Flowmeter2: l/min	Vacuum2: in-Hg	Stack Temp: degF	Sorbent Temp: degF	Probe Temp: degF	DGM#1 Temp: degF	Condenser Temp: degF	DGM#2 Temp: degF	DAQ Temp: degF	DGM1*: liters STP	DGM2*: liters STP	DGM1: liters nominal	DGM2: liters nominal
20160505:02:54:10	23.923	13.049	2.464	23.742	0.25	2.109	0.25	1.981	116.507	300.829	301.439	80.834	53.15	81.546	90.796	673.069	660.307	862.47	847.162
20160505:02:59:10	23.923	13.046	2.475	23.741	0.25	2.104	0.25	1.992	116.498	300.893	301.504	80.783	53.187	81.506	90.758	674.409	661.677	864.2	848.932
20160505:03:04:10	23.921	12.752	2.437	23.742	0.25	2.099	0.25	1.984	115.677	300.804	301.44	80.713	53.147	81.439	90.716	675.811	662.992	866.009	850.632
20160505:03:09:10	23.927	12.332	2.496	23.743	0.25	2.089	0.25	1.981	114.511	300.837	301.462	80.691	53.158	81.418	90.674	677.17	664.363	867.763	852.402
20160505:03:14:10	23.922	12.185	2.417	23.744	0.25	2.08	0.25	1.979	114.08	300.739	301.426	80.652	53.156	81.382	90.633	678.509	665.672	869.491	854.094
20160505:03:19:10	23.921	12.627	2.403	23.744	0.25	2.09	0.25	1.97	115.326	300.721	301.405	80.616	53.159	81.348	90.592	679.924	667.037	871.317	855.857
20160505:03:24:10	23.921	13.074	2.429	23.742	0.25	2.103	0.25	1.986	116.57	300.832	301.463	80.593	53.187	81.337	90.55	681.265	668.38	873.046	857.592
20160505:03:29:10	23.922	13.097	2.412	23.744	0.25	2.096	0.25	1.988	116.635	300.844	301.422	80.519	53.132	81.298	90.508	682.618	669.702	874.793	859.301
20160505:03:34:10	23.919	13.131	2.413	23.742	0.25	2.101	0.25	1.988	116.724	300.915	301.48	80.501	53.136	81.271	90.47	684.021	671.067	876.602	861.064
20160505:03:39:10	23.918	13.155	2.362	23.744	0.25	2.105	0.25	2	116.786	300.931	301.485	80.452	53.101	81.225	90.429	685.359	672.385	878.328	862.767
20160505:03:44:10	23.917	13.177	2.344	23.745	0.25	2.103	0.25	1.992	116.844	300.881	301.448	80.413	53.097	81.151	90.388	686.734	673.761	880.102	864.543
20160505:03:49:10	23.917	13.196	2.356	23.744	0.25	2.11	0.25	1.997	116.897	300.917	301.489	80.382	53.087	81.127	90.349	688.133	675.075	881.906	866.241
20160505:03:54:10	23.918	13.198	2.354	23.745	0.25	2.109	0.25	1.988	116.903	300.88	301.458	80.327	53.074	81.065	90.307	689.48	676.451	883.643	868.017
20160505:03:59:10	23.918	13.205	2.37	23.744	0.25	2.107	0.25	1.991	116.922	300.922	301.463	80.294	53.06	81.039	90.266	690.862	677.764	885.424	869.712
20160505:04:04:10	23.917	13.215	2.345	23.745	0.25	2.109	0.25	1.985	116.946	300.875	301.425	80.261	53.057	81.016	90.219	692.235	679.109	887.194	871.449
20160505:04:09:10	23.917	13.246	2.352	23.744	0.25	2.105	0.25	1.997	117.03	300.819	301.419	80.165	53.036	80.959	90.173	693.582	680.475	888.931	873.212
20160505:04:14:10	23.918	12.698	2.399	23.742	0.25	2.093	0.25	1.993	115.521	300.837	301.438	80.131	53.031	80.925	90.127	694.98	681.788	890.733	874.908
20160505:04:19:10	23.922	12.454	2.458	23.741	0.25	2.081	0.25	1.994	114.85	300.848	301.529	80.098	53.024	80.898	90.081	696.345	683.16	892.493	876.679
20160505:04:24:10	23.919	12.242	2.464	23.738	0.25	2.083	0.25	1.969	114.24	300.746	301.446	80.059	52.997	80.811	90.037	697.685	684.477	894.22	878.38
20160505:04:29:10	23.915	12.941	2.391	23.739	0.25	2.1	0.25	1.985	116.187	300.733	301.411	80.039	52.997	80.784	89.996	699.087	685.85	896.028	880.152
20160505:04:34:10	23.917	13.241	2.424	23.738	0.25	2.112	0.25	2.004	117.018	300.75	301.391	80.027	53.001	80.761	89.955	700.439	687.158	897.77	881.84
20160505:04:39:10	23.915	13.256	2.421	23.737	0.25	2.108	0.25	1.996	117.054	300.787	301.403	79.983	52.978	80.717	89.916	701.789	688.525	899.511	883.605
20160505:04:44:10	23.914	13.264	2.427	23.735	0.25	2.11	0.25	1.995	117.075	300.87	301.445	79.967	52.978	80.706	89.875	703.191	689.874	901.319	885.346
20160505:04:49:10	23.913	13.27	2.416	23.735	0.25	2.1	0.25	1.99	117.091	300.886	301.461	79.921	52.958	80.673	89.84	704.526	691.192	903.039	887.047
20160505:04:54:10	23.914	13.308	2.392	23.738	0.25	2.107	0.25	1.997	117.192	300.889	301.466	79.897	52.958	80.652	89.804	705.899	692.559	904.809	888.812
20160505:04:59:10	23.913	13.304	2.321	23.742	0.25	2.104	0.25	2.001	117.18	300.831	301.423	79.809	52.92	80.608	89.77	707.291	693.882	906.602	890.519
20160505:05:04:10	23.909	13.294	2.255	23.744	0.25	2.105	0.25	2.002	117.149	300.84	301.455	79.787	52.932	80.562	89.732	708.636	695.257	908.335	892.293
20160505:05:09:10	23.908	13.286	2.219	23.745	0.25	2.112	0.25	1.998	117.123	300.883	301.358	79.752	52.914	80.496	89.697	710.026	696.573	910.126	893.991
20160505:05:14:10	23.904	13.306	2.158	23.746	0.25	2.111	0.25	2	117.173	300.822	301.362	79.723	52.896	80.466	89.658	711.396	697.948	911.891	895.763
20160505:05:19:10	23.9	12.789	2.058	23.748	0.25	2.107	0.25	1.998	115.749	300.78	301.385	79.696	52.909	80.43	89.62	712.75	699.264	913.633	897.461
20160505:05:24:10	23.899	12.554	2.039	23.749	0.25	2.1	0.25	1.981	115.1	300.782	301.417	79.64	52.878	80.379	89.579	714.152	700.608	915.439	899.194
20160505:05:29:10	23.901	12.329	2.066	23.749	0.25	2.088	0.25	1.981	114.462	300.813	301.497	79.582	52.884	80.352	89.536	715.514	701.975	917.193	900.957
20160505:05:34:10	23.903	12.929	2.078	23.751	0.25	2.094	0.25	1.988	116.139	300.715	301.411	79.491	52.85	80.311	89.495	716.852	703.291	918.915	902.652
20160505:05:39:10	23.909	13.178	2.142	23.752	0.25	2.111	0.25	2.004	116.835	300.788	301.415	79.441	52.784	80.263	89.451	718.269	704.659	920.739	904.415
20160505:05:44:10	23.909	13.187	2.117	23.753	0.25	2.111	0.25	2.008	116.861	300.817	301.41	79.408	52.748	80.219	89.407	719.609	705.976	922.463	906.113
20160505:05:49:10	23.904	13.199	2.054	23.753	0.25	2.113	0.25	2.003	116.884	300.82	301.435	79.363	52.723	80.14	89.364	720.966	707.356	924.209	907.891
20160505:05:54:10	23.904	13.149	2.049	23.753	0.25	2.107	0.25	1.99	116.75	300.78	301.378	79.33	52.711	80.102	89.321	722.368	708.669	926.013	909.583
20160505:05:59:10	23.906	13.189	2.07	23.754	0.25	2.112	0.25	1.999	116.86	300.871	301.435	79.299	52.687	80.079	89.276	723.718	710.031	927.75	911.338
20160505:06:04:10	23.906	13.197	2.079	23.753	0.25	2.108	0.25	2	116.882	300.815	301.405	79.196	52.66	80.024	89.227	725.092	711.355	929.517	913.043
20160505:06:09:10	23.909	13.171	2.082	23.756	0.25	2.103	0.25	1.992	116.816	300.879	301.445	79.16	52.653	79.99	89.182	726.474	712.691	931.294	914.765
20160505:06:14:10	23.905	13.176	2.061	23.753	0.25	2.096	0.25	1.999	116.823	300.849	301.444	79.13	52.64	79.961	89.138	727.819	714.056	933.024	916.523
20160505:06:19:10	23.907	13.208	2.061	23.756	0.25	2.109	0.25	2.004	116.915	300.805	301.398	79.09	52.633	79.916	89.092	729.218	715.371	934.824	918.216
20160505:06:24:10	23.907	12.65	2.021	23.758	0.25	2.103	0.25	2.005	115.37	300.827	301.382	79.066	52.632	79.853	89.048	730.582	716.737	936.578	919.976
20160505:06:29:10	23.906	12.436	2.02	23.758	0.25	2.094	0.25	1.981	114.777	300.8	301.443	79.046	52.635	79.802	89.005	731.923	718.054	938.302	921.671
20160505:06:34:10	23.904	12.217	1.985	23.758	0.25	2.096	0.25	1.982	114.145	300.796	301.454	79.004	52.614	79.753	88.959	733.331	719.432	940.111	923.445
20160505:06:39:10	23.898	12.826	1.925	23.756	0.25	2.096	0.25	1.989	115.849	300.742	301.43	78.965	52.618	79.719	88.917	734.669	720.745	941.831	925.135
20160505:06:44:10	23.902	13.099	1.964	23.758	0.25	2.094	0.25	1.989	116.612	300.763	301.399	78.936	52.62	79.694	88.871	736.027	722.113	943.578	926.897
20160505:06:49:10	23.903	13.082	1.963	23.759	0.25	2.095	0.25	1.987	116.567	300.81	301.408	78.846	52.588	79.646	88.828	737.426	723.433	945.376	928.596
20160505:06:54:10	23.902	13.072	1.924	23.761	0.25	2.107	0.25	1.992	116.539	300.864	301.445	78.819	52.595	79.594	88.786	738.774	724.776	947.107	930.323
20160505:06:59:10	23.901	13.077	1.907	23.761	0.25	2.103	0.25	1.996	116.55	300.889	301.44	78.789	52.579	79.545	88.744	740.152	726.144	948.878	932.085
20160505:07:04:10	23.899	13.074	1.915	23.758	0.25	2.108	0.25	1.989	116.538	300.777	301.399	78.747	52.577	79.49	88.704	741.528	727.456	950.646	933.773
20160505:07:09:10	23.904	13.094	1.98	23.758	0.25	2.106	0.25	1.988	116.6	300.783	301.338	78.725	52.587	79.473	88.662	742.875	728.824	952.378	935.532
20160505:07:14:10	23.906	13.099	1.988	23.76	0.25	2.105	0.25	1.993	116.616	300.731	301.374	78.687	52.572	79.443	88.619	744.274	730.14	954.174	937.226
20160505:07:19:10	23.911	13.091	2.015	23.762	0.25	2.11	0.25	1.985	116.602	300.785	301.377	78.653	52.585	79.421	88.579	745.629	731.514	955.915	938.992
20160505:07:24:10	23.912	13.131	2.004	23.765	0.25	2.108	0.25	1.993	116.712	300.791	301.392	78.638	52.576	79.41	88.539	746.968	732.826	957.635	940.68
20160505:07:29:10	23.911	12.763	1.945	23.768	0.25	2.101	0.25	1.991	115.694	300.783	301.417	78.579	52.505	79.368	88.504	748.377	734.201	959.444	942.449
20160505:07:34:10	23.908	12.534	1.896	23.769	0.25	2.091	0.25	1.987	115.058	300.767	301.418	78.601	52.575	79.36	88.47	749.711	735.51	961.157	944.132
20160505:07:39:10	23.912	12.318	1.96	23.768	0.25	2.086	0.25	1.989	114.449	300.677	301.383	78.531	52.491	79.317	88.438	751.084	736.863	962.92	945.872
20160505:07:44:10	23.912	12.905	1.955	23.768	0.25	2.099	0.25	1.981	116.088	300.695	301.408	78.521	52.551	79.318	88.409	752.481	738.217	964.713	947.613
20160505:07:49:10	23.915	13.186	2.023	23.766	0.25	2.107	0.25	1.987	116.866	300.707	301.377	78.493	52.528	79.288	88.382	753.822	739.531	966.435	949.303
20160505:07:54:10	23.917	13.186	2.08	23.764	0.25	2.105	0.25	1.984	116.87	300.714	301.316	78.484	52.501	79.275	88.358	755.217	740.895	968.226	951.056
20160505:07:59:10	23.922	13.234	2.175	23.762	0.25	2.101	0.25	1.998	117.006	300.739	301.335	78.508	52.566	79.296	88.334	756.591	742.212	969.991	952.75
20160505:08:04:10	23.927	13.342	2.207	23.765	0.25	2.101	0.25	2.004	117.302	300.746	301.387	78.489	52.508	79.246	88.316	757.931	743.588	971.711	954.519
20160505:08:09:10	23.928	13.326	2.174	23.768	0.25	2.108	0.25	1.999	117.262	300.747	301.365	78.478	52.464	79.214	88.296	759.328	744.901	973.506	956.207
20160505:08:14:10	23.928	13.301	2.121	23.772	0.25	2.107	0.25	1.994	117.195	300.761	301.388	78.509	52.465	79.265	88.283	760.673	746.274	975.231	957.972
20160505:08:19:10	23.933	13.221	2.176	23.773	0.25	2.108	0.25	1.996	116.987	300.82	301.411	78.518	52.463	79.286	88.273	762.029	747.585	976.972	959.658
20160505:08:24:10	23.936	13.24	2.223	23.773	0.25	2.109	0.25	1.981	117.044	300.848	301.424	78.522	52.461	79.299	88.266	763.427	748.953	978.767	961.415
20160505:08:29:10	23.94	13.282	2.308	23.771	0.25	2.1	0.25	1.984	117.162	300.839	301.476	78.54	52.448	79.306	88.263	764.773	750.277	980.494	963.118
20160505:08:34:10	23.946	13.277	2.405	23.769	0.25	2.105	0.25	1.988	117.155	300.791	301.361	78.562	52.447	79.306	88.262	766.152	751.613	982.265	964.836
20160505:08:39:10	23.958	13.252	2.575	23.768	0.25	2.092	0.25	1.985	117.108	300.786	301.384	78.592	52.416	79.314	88.262	767.517	752.979	984.019	966.592
20160505:08:44:10	23.961	13.229	2.653	23.766	0.25	2.096	0.25	1.988	117.051	300.804	301.429	78.617	52.407	79.325	88.264	768.87	754.29	985.756	968.278
20160505:08:49:10	23.965	13.218	2.753	23.763	0.25	2.102	0.25	1.984	117.029	300.8	301.411	78.631	52.392	79.342	88.268	770.27	755.658	987.554	970.038
20160505:08:54:10	23.967	13.218	2.775	23.763	0.25	2.102	0.25	1.982	117.029	300.806	301.382	78.636	52.372	79.354	88.274	771.618	756.975	989.285	971.731
20160505:08:59:10	23.972	13.209	2.84	23.763	0.25	2.101	0.25	1.997	117.012	300.803	301.395	78.656	52.356	79.36	88.283	772.967	758.347	991.019	973.496
20160505:09:04:10	23.974	13.201	2.885	23.762	0.25	2.1	0.25	1.983	116.994	300.832	301.433	78.685	52.35	79.374	88.294	774.366	759.658	992.815	975.182
20160505:09:09:10	23.979	13.227	2.959	23.761	0.25	2.101	0.25	1.973	117.07	300.747	301.442	78.694	52.331	79.403	88.307	775.705	761.034	994.535	976.953
20160505:09:14:10	23.983	13.276	3.018	23.761	0.25	2.106	0.25	1.975	117.21	300.809	301.393	78.776	52.359	79.471	88.324	777.078	762.336	996.3	978.628
20160505:09:19:10	23.983	13.29	3.031	23.76	0.25	2.093	0.25	1.992	117.249	300.821	301.432	78.8	52.35	79.497	88.341	778.452	763.698	998.065	980.38
20160505:09:24:10	23.986	13.298	3.06	23.761	0.25	2.102	0.25	1.994	117.271	300.787	301.407	78.824	52.319	79.522	88.367	779.802	765.043	999.8	982.111
20160505:09:29:10	23.992	13.292	3.19	23.758	0.25	2.101	0.25	1.988	117.265	300.744	301.403	78.951	52.348	79.63	88.394	781.199	766.362	1001.596	983.808
20160505:09:34:10	23.993	13.268	3.216	23.757	0.25	2.109	0.25	1.986	117.202	300.778	301.43	78.98	52.331	79.673	88.427	782.558	767.721	1003.343	985.558
20160505:09:39:10	23.994	13.287	3.254	23.754	0.25	2.095	0.25	1.982	117.255	300.829	301.423	79.062	52.351	79.738	88.464	783.89	769.034	1005.056	987.248
20160505:09:44:10	23.999	13.29	3.371	23.751	0.25	2.101	0.25	1.993	117.271	300.695	301.381	79.096	52.355	79.78	88.505	785.296	770.412	1006.865	989.023
20160505:09:49:10	24.006	12.785	3.458	23.752	0.25	2.095	0.25	1.987	115.897	300.726	301.408	79.164	52.358	79.885	88.549	786.628	771.724	1008.578	990.712
20160505:09:54:10	24.008	12.613	3.515	23.75	0.25	2.086	0.25	1.977	115.426	300.73	301.386	79.278	52.394	79.961	88.601	788.001	773.097	1010.344	992.481
20160505:09:59:10	24.011	12.468	3.595	23.747	0.25	2.081	0.25	1.957	115.022	300.722	301.4	79.339	52.414	80.014	88.655	789.389	774.409	1012.131	994.173
20160505:10:04:10	24.015	13.006	3.661	23.746	0.25	2.082	0.25	1.967	116.521	300.673	301.343	79.41	52.431	80.086	88.712	790.724	775.77	1013.85	995.927
20160505:10:09:10	24.019	13.176	3.681	23.748	0.25	2.095	0.25	1.985	116.995	300.786	301.391	79.477	52.444	80.158	88.769	792.121	777.093	1015.648	997.632
20160505:10:14:10	24.02	13.215	3.684	23.749	0.25	2.093	0.25	1.972	117.1	300.786	301.38	79.548	52.472	80.261	88.833	793.484	778.424	1017.402	999.348
20160505:10:19:10	24.025	13.228	3.765	23.748	0.25	2.093	0.25	1.991	117.141	300.835	301.43	79.655	52.504	80.324	88.902	794.817	779.786	1019.119	1001.103
20160505:10:24:10	24.028	13.233	3.786	23.75	0.25	2.099	0.25	1.992	117.161	300.786	301.341	79.722	52.574	80.389	88.973	796.222	781.094	1020.928	1002.789
20160505:10:29:10	24.029	13.245	3.827	23.748	0.25	2.093	0.25	1.985	117.195	300.854	301.427	79.809	52.6	80.464	89.047	797.556	782.455	1022.646	1004.545
20160505:10:34:10	24.033	12.753	3.889	23.747	0.25	2.087	0.25	1.973	115.851	300.764	301.393	79.909	52.623	80.56	89.118	798.911	783.769	1024.393	1006.241
20160505:10:39:10	24.035	12.611	3.973	23.743	0.25	2.076	0.25	1.963	115.459	300.81	301.364	79.994	52.655	80.646	89.194	800.299	785.137	1026.181	1008.006
20160505:10:44:10	24.039	12.489	3.985	23.746	0.25	2.079	0.25	1.972	115.122	300.779	301.416	80.06	52.672	80.705	89.273	801.64	786.447	1027.909	1009.695
20160505:10:49:10	24.038	13.078	3.922	23.749	0.25	2.091	0.25	1.98	116.751	300.733	301.421	80.123	52.688	80.769	89.351	803.021	787.821	1029.689	1011.468
20160505:10:54:10	24.036	12.678	3.921	23.748	0.25	2.091	0.25	1.979	115.65	300.792	301.428	80.226	52.717	80.843	89.427	804.384	789.118	1031.446	1013.143
20160505:10:59:10	24.036	12.597	3.981	23.743	0.25	2.074	0.25	1.96	115.422	300.796	301.406	80.295	52.74	80.944	89.506	805.733	790.474	1033.185	1014.893
20160505:11:04:10	24.041	13.072	4.009	23.746	0.25	2.089	0.25	1.97	116.738	300.788	301.425	80.353	52.761	81.011	89.586	807.131	791.818	1034.989	1016.628
20160505:11:09:10	24.041	13.273	3.998	23.747	0.25	2.094	0.25	1.992	117.288	300.839	301.425	80.408	52.795	81.073	89.664	808.481	793.134	1036.73	1018.327
20160505:11:14:10	24.038	13.329	4.036	23.741	0.25	2.093	0.25	1.982	117.433	300.835	301.412	80.465	52.828	81.135	89.741	809.819	794.492	1038.456	1020.081
20160505:11:19:10	24.037	13.373	4.038	23.74	0.25	2.098	0.25	1.985	117.55	300.85	301.4	80.569	52.856	81.239	89.817	811.223	795.804	1040.267	1021.776
20160505:11:24:10	24.039	13.245	4.057	23.741	0.25	2.099	0.25	1.983	117.205	300.858	301.436	80.642	52.864	81.313	89.893	812.556	797.174	1041.987	1023.547
20160505:11:29:10	24.039	12.726	4.079	23.739	0.25	2.087	0.25	1.982	115.788	300.8	301.368	80.707	52.89	81.376	89.968	813.919	798.482	1043.746	1025.237
20160505:11:34:10	24.042	12.611	4.164	23.736	0.25	2.078	0.25	1.958	115.469	300.843	301.46	80.767	52.894	81.434	90.04	815.316	799.855	1045.55	1027.011
20160505:11:39:10	24.043	12.705	4.108	23.741	0.25	2.072	0.25	1.972	115.729	300.762	301.438	80.843	52.914	81.503	90.112	816.656	801.155	1047.28	1028.692
20160505:11:44:10	24.043	13.279	4.177	23.736	0.25	2.082	0.25	1.977	117.308	300.763	301.396	80.931	52.919	81.601	90.188	818.038	802.517	1049.065	1030.453
20160505:11:49:10	24.04	13.319	4.18	23.733	0.25	2.087	0.25	1.974	117.409	300.888	301.468	80.988	52.93	81.666	90.265	819.403	803.854	1050.828	1032.182
20160505:11:54:10	24.042	13.357	4.171	23.736	0.25	2.101	0.25	1.983	117.514	300.881	301.459	81.034	52.941	81.723	90.335	820.754	805.171	1052.572	1033.885
20160505:11:59:10	24.041	13.37	4.195	23.732	0.25	2.089	0.25	1.991	117.546	300.814	301.404	81.082	52.948	81.774	90.406	822.147	806.53	1054.372	1035.643
20160505:12:04:10	24.04	13.285	4.247	23.728	0.25	2.09	0.25	1.979	117.315	300.857	301.438	81.136	52.958	81.85	90.477	823.508	807.844	1056.131	1037.344
20160505:12:09:10	24.043	12.745	4.355	23.723	0.25	2.085	0.25	1.974	115.846	300.827	301.389	81.231	52.963	81.922	90.546	824.842	809.216	1057.856	1039.12
20160505:12:14:10	24.041	12.668	4.32	23.723	0.25	2.091	0.25	1.977	115.628	300.736	301.419	81.304	52.97	81.977	90.613	826.245	810.525	1059.67	1040.814
20160505:12:19:10	24.043	12.69	4.353	23.722	0.25	2.09	0.25	1.97	115.69	300.768	301.446	81.355	52.974	82.026	90.678	827.586	811.899	1061.404	1042.594
20160505:12:24:10	24.049	13.291	4.421	23.724	0.25	2.099	0.25	1.985	117.348	300.758	301.397	81.407	52.973	82.079	90.746	828.932	813.199	1063.144	1044.276
20160505:12:29:10	24.048	13.332	4.47	23.72	0.25	2.101	0.25	1.988	117.456	300.802	301.385	81.464	52.985	82.172	90.814	830.331	814.553	1064.954	1046.03
20160505:12:34:10	24.045	12.879	4.534	23.712	0.25	2.085	0.25	1.983	116.217	300.903	301.5	81.547	52.988	82.247	90.879	831.66	815.905	1066.674	1047.782
20160505:12:39:10	24.051	12.709	4.606	23.712	0.25	2.086	0.25	1.983	115.759	300.87	301.46	81.619	53.002	82.302	90.943	833.029	817.216	1068.446	1049.481
20160505:12:44:10	24.049	12.587	4.542	23.715	0.25	2.081	0.25	1.97	115.413	300.853	301.418	81.675	53.001	82.351	91.008	834.424	818.579	1070.252	1051.248
20160505:12:49:10	24.049	13.186	4.568	23.713	0.25	2.079	0.25	1.973	117.058	300.839	301.472	81.732	53.018	82.409	91.074	835.766	819.893	1071.989	1052.951
20160505:12:54:10	24.049	13.421	4.625	23.709	0.25	2.104	0.25	1.985	117.695	300.874	301.495	81.812	53.038	82.486	91.139	837.143	821.272	1073.772	1054.739
20160505:12:59:10	24.054	13.466	4.702	23.708	0.25	2.101	0.25	1.994	117.823	300.896	301.484	81.884	53.04	82.571	91.203	838.517	822.576	1

Time: day:hh:mm:ss	Stack Pressure: in-Hg	Sat% H2O: Percent	Static: in-H2O	Barometric: in-Hg	Flowmeter1: l/min	Vacuum1: in-Hg	Flowmeter2: l/min	Vacuum2: in-Hg	Stack Temp: degF	Sorbent Temp: degF	Probe Temp: degF	DGM#1 Temp: degF	Condenser Temp: degF	DGM#2 Temp: degF	DAQ Temp: degF	DGM1*: liters STP	DGM2*: liters STP	DGM1: liters nominal	DGM2: liters nominal
20160505:16:34:10	24.305	13.177	9.3	23.621	0.25	2.103	0.25	1.986	117.417	300.88	301.513	84.604	53.252	85.282	93.988	897.216	880.079	1151.941	1131.355
20160505:16:39:10	24.295	12.979	9.194	23.619	0.25	2.109	0.25	1.994	116.856	300.91	301.51	84.645	53.258	85.325	94.042	898.609	881.44	1153.761	1133.135
20160505:16:44:10	24.297	12.565	9.261	23.616	0.25	2.096	0.25	1.979	115.716	300.825	301.469	84.67	53.254	85.355	94.092	899.951	882.752	1155.515	1134.853
20160505:16:49:10	24.298	13.188	9.231	23.619	0.25	2.093	0.25	1.992	117.436	300.901	301.541	84.716	53.257	85.412	94.139	901.313	884.126	1157.294	1136.65
20160505:16:54:10	24.298	12.588	9.257	23.617	0.25	2.096	0.25	1.987	115.772	300.884	301.527	84.76	53.268	85.486	94.193	902.704	885.43	1159.113	1138.357
20160505:16:59:10	24.297	13.243	9.349	23.609	0.25	2.093	0.25	1.984	117.582	300.893	301.497	84.796	53.268	85.532	94.242	904.047	886.773	1160.869	1140.117
20160505:17:04:10	24.294	13.392	9.348	23.607	0.25	2.102	0.25	1.994	117.98	300.914	301.455	84.861	53.268	85.577	94.293	905.407	888.123	1162.648	1141.883
20160505:17:09:10	24.293	13.443	9.433	23.6	0.25	2.101	0.25	1.988	118.116	300.959	301.456	84.908	53.291	85.621	94.345	906.803	889.438	1164.474	1143.607
20160505:17:14:10	24.296	13.456	9.428	23.603	0.25	2.089	0.25	1.977	118.153	300.994	301.527	84.956	53.302	85.665	94.396	908.139	890.81	1166.222	1145.404
20160505:17:19:10	24.288	13.492	9.189	23.612	0.25	2.108	0.25	1.982	118.238	300.96	301.511	84.984	53.285	85.674	94.444	909.502	892.123	1168.006	1147.124
20160505:17:24:10	24.284	13.498	9.215	23.606	0.25	2.1	0.25	1.979	118.248	300.921	301.506	85.016	53.301	85.699	94.493	910.904	893.472	1169.839	1148.891
20160505:17:29:10	24.281	13.482	9.104	23.611	0.25	2.098	0.25	1.985	118.2	300.935	301.516	85.059	53.319	85.747	94.541	912.244	894.817	1171.593	1150.652
20160505:17:34:10	24.279	12.872	9.064	23.612	0.25	2.089	0.25	1.983	116.543	300.841	301.436	85.062	53.329	85.793	94.584	913.602	896.129	1173.369	1152.37
20160505:17:39:10	24.278	12.756	9.009	23.615	0.25	2.098	0.25	1.969	116.222	300.792	301.47	85.082	53.326	85.833	94.628	915.004	897.489	1175.202	1154.152
20160505:17:44:10	24.272	12.687	8.999	23.61	0.25	2.093	0.25	1.966	116.022	300.83	301.533	85.186	53.358	85.886	94.671	916.345	898.802	1176.957	1155.872
20160505:17:49:10	24.269	13.374	8.974	23.61	0.25	2.097	0.25	1.978	117.894	300.833	301.497	85.178	53.358	85.881	94.71	917.695	900.171	1178.724	1157.665
20160505:17:54:10	24.269	13.475	8.925	23.613	0.25	2.108	0.25	1.991	118.166	300.872	301.508	85.195	53.367	85.911	94.744	919.102	901.491	1180.565	1159.395
20160505:17:59:10	24.268	13.479	8.941	23.61	0.25	2.096	0.25	1.988	118.173	300.887	301.504	85.199	53.365	85.913	94.776	920.455	902.813	1182.335	1161.128
20160505:18:04:10	24.266	13.475	8.933	23.61	0.25	2.101	0.25	1.991	118.161	300.94	301.501	85.24	53.385	85.935	94.805	921.798	904.17	1184.093	1162.906
20160505:18:09:10	24.267	13.464	8.938	23.61	0.25	2.107	0.25	1.989	118.132	300.922	301.499	85.227	53.36	85.921	94.835	923.201	905.483	1185.928	1164.626
20160505:18:14:10	24.268	13.5	8.934	23.611	0.25	2.112	0.25	1.985	118.229	300.942	301.504	85.247	53.419	85.962	94.86	924.556	906.847	1187.702	1166.414
20160505:18:19:10	24.267	13.578	8.941	23.609	0.25	2.106	0.25	1.986	118.433	300.903	301.502	85.244	53.382	85.957	94.884	925.898	908.148	1189.457	1168.118
20160505:18:24:10	24.267	13.557	8.899	23.613	0.25	2.108	0.25	1.989	118.38	300.934	301.49	85.242	53.361	85.94	94.904	927.296	909.501	1191.287	1169.891
20160505:18:29:10	24.268	13.528	8.845	23.617	0.25	2.119	0.25	2.005	118.103	300.96	301.526	85.277	53.431	85.964	94.921	928.655	910.856	1193.065	1171.665
20160505:18:34:10	24.268	12.901	8.87	23.616	0.25	2.104	0.25	1.985	116.609	300.92	301.612	85.279	53.398	85.974	94.94	929.997	912.158	1194.82	1173.372
20160505:18:39:10	24.267	12.751	8.877	23.614	0.25	2.082	0.25	1.977	116.193	300.932	301.568	85.265	53.365	85.969	94.953	931.391	913.533	1196.644	1175.173
20160505:18:44:10	24.267	12.631	8.873	23.615	0.25	2.081	0.25	1.974	115.858	300.868	301.524	85.252	53.356	85.965	94.967	932.752	914.846	1198.426	1176.893
20160505:18:49:10	24.268	13.235	8.843	23.617	0.25	2.096	0.25	1.988	117.519	300.898	301.507	85.246	53.355	85.953	94.98	934.089	916.2	1200.174	1178.667
20160505:18:54:10	24.267	13.355	8.816	23.618	0.25	2.1	0.25	1.983	117.84	300.926	301.575	85.287	53.394	85.991	94.992	935.483	917.539	1201.998	1180.421
20160505:18:59:10	24.264	13.361	8.81	23.616	0.25	2.106	0.25	1.987	117.853	300.988	301.605	85.299	53.417	85.991	95.001	936.839	918.853	1203.772	1182.143
20160505:19:04:10	24.263	13.343	8.732	23.621	0.25	2.091	0.25	1.994	117.804	300.955	301.565	85.296	53.394	85.985	95.01	938.188	920.22	1205.537	1183.932
20160505:19:09:10	24.262	13.35	8.676	23.624	0.25	2.099	0.25	1.997	117.821	300.97	301.559	85.288	53.374	85.972	95.018	939.575	921.532	1207.352	1185.65
20160505:19:14:10	24.26	13.376	8.81	23.612	0.25	2.088	0.25	1.973	117.887	300.954	301.535	85.27	53.364	85.972	95.023	940.935	922.903	1209.131	1187.447
20160505:19:19:10	24.262	13.426	8.878	23.609	0.25	2.093	0.25	1.974	118.023	300.925	301.515	85.261	53.383	85.969	95.026	942.285	924.217	1210.898	1189.169
20160505:19:24:10	24.26	13.527	8.71	23.62	0.25	2.115	0.25	1.998	118.289	300.915	301.557	85.255	53.366	85.966	95.027	943.668	925.543	1212.707	1190.906
20160505:19:29:10	24.257	13.501	8.654	23.621	0.25	2.11	0.25	1.998	118.216	300.917	301.526	85.252	53.389	85.967	95.028	945.04	926.905	1214.502	1192.69
20160505:19:34:10	24.256	12.908	8.66	23.619	0.25	2.101	0.25	1.987	116.61	300.853	301.523	85.247	53.376	85.963	95.028	946.383	928.221	1216.259	1194.414
20160505:19:39:10	24.255	12.781	8.535	23.628	0.25	2.098	0.25	1.989	116.258	300.88	301.535	85.246	53.391	85.958	95.027	947.754	929.59	1218.052	1196.207
20160505:19:44:10	24.254	12.66	8.425	23.634	0.25	2.086	0.25	1.991	115.917	300.833	301.506	85.244	53.388	85.957	95.026	949.14	930.893	1219.863	1197.912
20160505:19:49:10	24.253	13.322	8.389	23.636	0.25	2.099	0.25	1.984	117.729	300.817	301.494	85.243	53.395	85.949	95.024	950.488	932.243	1221.626	1199.679
20160505:19:54:10	24.252	13.147	8.356	23.638	0.25	2.105	0.25	1.997	117.253	300.925	301.57	85.236	53.396	85.931	95.021	951.853	933.596	1223.409	1201.449
20160505:19:59:10	24.254	12.732	8.366	23.639	0.25	2.094	0.25	1.985	116.121	300.888	301.545	85.218	53.405	85.918	95.015	953.24	934.903	1225.222	1203.16
20160505:20:04:10	24.254	12.648	8.348	23.64	0.25	2.099	0.25	1.979	115.885	300.917	301.572	85.197	53.408	85.914	95.007	954.585	936.277	1226.98	1204.959
20160505:20:09:10	24.255	12.983	8.355	23.64	0.25	2.101	0.25	1.98	116.807	300.958	301.625	85.19	53.455	85.909	94.997	955.949	937.589	1228.763	1206.675
20160505:20:14:10	24.251	13.439	8.307	23.64	0.25	2.116	0.25	1.994	118.043	300.965	301.569	85.11	53.385	85.857	94.986	957.348	938.948	1230.591	1208.453
20160505:20:19:10	24.249	13.492	8.328	23.637	0.25	2.116	0.25	2.002	118.18	300.922	301.537	85.075	53.374	85.831	94.971	958.684	940.287	1232.337	1210.205
20160505:20:24:10	24.25	13.506	8.344	23.637	0.25	2.116	0.25	2.002	118.22	300.958	301.53	85.072	53.373	85.821	94.956	960.053	941.6	1234.126	1211.923
20160505:20:29:10	24.252	13.474	8.405	23.634	0.25	2.108	0.25	2	118.136	300.959	301.517	85.071	53.425	85.815	94.944	961.453	942.967	1235.956	1213.712
20160505:20:34:10	24.251	13.492	8.379	23.635	0.25	2.117	0.25	1.998	118.184	300.942	301.544	85.057	53.403	85.783	94.928	962.791	944.276	1237.704	1215.425
20160505:20:39:10	24.249	13.477	8.343	23.636	0.25	2.123	0.25	2.009	118.141	300.957	301.522	84.988	53.368	85.711	94.91	964.154	945.652	1239.485	1217.226
20160505:20:44:10	24.25	13.387	8.357	23.635	0.25	2.122	0.25	1.995	117.899	300.966	301.568	84.973	53.361	85.7	94.892	965.56	946.961	1241.322	1218.938
20160505:20:49:10	24.251	12.786	8.387	23.634	0.25	2.105	0.25	1.992	116.267	301.002	301.628	84.968	53.385	85.697	94.872	966.905	948.295	1243.08	1220.684
20160505:20:54:10	24.25	12.726	8.382	23.634	0.25	2.101	0.25	1.987	116.099	300.964	301.584	84.937	53.382	85.666	94.85	968.262	949.652	1244.852	1222.459
20160505:20:59:10	24.247	12.673	8.354	23.632	0.25	2.097	0.25	1.981	115.944	300.879	301.551	84.91	53.372	85.64	94.827	969.662	950.969	1246.681	1224.182
20160505:21:04:10	24.243	13.445	8.314	23.632	0.25	2.105	0.25	1.991	118.047	300.909	301.541	84.913	53.425	85.643	94.801	971.004	952.344	1248.435	1225.981
20160505:21:09:10	24.245	13.495	8.306	23.635	0.25	2.117	0.25	2.007	118.182	300.896	301.494	84.875	53.389	85.604	94.779	972.352	953.643	1250.196	1227.68
20160505:21:14:10	24.245	13.441	8.299	23.635	0.25	2.114	0.25	2.003	118.038	300.934	301.484	84.868	53.384	85.598	94.753	973.758	954.999	1252.033	1229.455
20160505:21:19:10	24.245	13.402	8.341	23.631	0.25	2.114	0.25	1.989	117.936	300.964	301.514	84.878	53.443	85.601	94.735	975.106	956.353	1253.794	1231.226
20160505:21:24:10	24.247	13.372	8.333	23.634	0.25	2.12	0.25	1.992	117.856	300.974	301.542	84.835	53.381	85.567	94.712	976.453	957.656	1255.554	1232.93
20160505:21:29:10	24.244	12.989	8.366	23.629	0.25	2.112	0.25	1.994	116.808	300.931	301.556	84.814	53.381	85.556	94.69	977.856	959.025	1257.387	1234.722
20160505:21:34:10	24.247	12.66	8.512	23.622	0.25	2.098	0.25	1.976	115.909	300.923	301.547	84.817	53.423	85.556	94.669	979.215	960.337	1259.163	1236.438
20160505:21:39:10	24.246	12.496	8.493	23.622	0.25	2.097	0.25	1.978	115.447	300.853	301.522	84.786	53.416	85.527	94.649	980.561	961.701	1260.922	1238.224
20160505:21:44:10	24.246	12.903	8.558	23.617	0.25	2.107	0.25	1.976	116.576	300.885	301.552	84.735	53.361	85.49	94.627	981.962	963.028	1262.754	1239.961
20160505:21:49:10	24.247	13.215	8.507	23.621	0.25	2.097	0.25	1.997	117.437	300.916	301.537	84.737	53.369	85.504	94.611	983.316	964.348	1264.522	1241.688
20160505:21:54:10	24.247	13.243	8.469	23.625	0.25	2.115	0.25	1.988	117.512	300.895	301.568	84.721	53.381	85.473	94.589	984.655	965.712	1266.272	1243.472
20160505:21:59:10	24.243	13.258	8.445	23.622	0.25	2.11	0.25	1.992	117.547	300.857	301.532	84.683	53.353	85.405	94.572	986.057	967.028	1268.104	1245.194
20160505:22:04:10	24.241	13.321	8.372	23.625	0.25	2.105	0.25	1.994	117.711	300.859	301.54	84.684	53.364	85.41	94.558	987.419	968.4	1269.883	1246.989
20160505:22:09:10	24.238	13.326	8.341	23.624	0.25	2.115	0.25	2.001	117.722	300.885	301.562	84.684	53.413	85.412	94.543	988.758	969.703	1271.633	1248.694
20160505:22:14:10	24.236	13.359	8.312	23.624	0.25	2.117	0.25	1.994	117.805	300.883	301.572	84.683	53.44	85.41	94.525	990.157	971.049	1273.461	1250.455
20160505:22:19:10	24.234	13.405	8.239	23.628	0.25	2.119	0.25	1.998	117.926	300.853	301.501	84.63	53.36	85.357	94.51	991.523	972.4	1275.244	1252.222
20160505:22:24:10	24.236	13.516	8.307	23.625	0.25	2.118	0.25	2.012	118.223	300.824	301.523	84.625	53.358	85.349	94.497	992.864	973.715	1276.996	1253.942
20160505:22:29:10	24.235	12.981	8.272	23.626	0.25	2.108	0.25	2.001	116.775	300.874	301.579	84.621	53.37	85.342	94.477	994.257	975.089	1278.817	1255.739
20160505:22:34:10	24.232	12.818	8.219	23.627	0.25	2.111	0.25	1.994	116.327	300.913	301.589	84.594	53.374	85.32	94.458	995.617	976.405	1280.593	1257.461
20160505:22:39:10	24.231	12.644	8.272	23.623	0.25	2.094	0.25	1.987	115.839	300.834	301.538	84.531	53.352	85.263	94.435	996.965	977.758	1282.354	1259.229
20160505:22:44:10	24.227	13.262	8.344	23.613	0.25	2.11	0.25	1.978	117.527	300.842	301.541	84.522	53.363	85.259	94.411	998.353	979.101	1284.167	1260.987
20160505:22:49:10	24.225	13.517	8.36	23.611	0.25	2.108	0.25	2.001	118.212	300.881	301.53	84.512	53.422	85.251	94.39	999.722	980.415	1285.956	1262.707
20160505:22:54:10	24.224	12.819	8.285	23.615	0.25	2.104	0.25	2.002	116.319	300.857	301.548	84.406	53.358	85.199	94.362	1001.07	981.783	1287.717	1264.496
20160505:22:59:10	24.223	12.682	8.303	23.612	0.25	2.101	0.25	1.988	115.933	300.888	301.596	84.41	53.4	85.199	94.336	1002.45	983.097	1289.52	1266.216
20160505:23:04:10	24.222	12.544	8.29	23.612	0.25	2.097	0.25	1.986	115.545	300.844	301.532	84.369	53.393	85.135	94.309	1003.827	984.468	1291.319	1268.009
20160505:23:09:10	24.219	13.336	8.213	23.615	0.25	2.109	0.25	1.995	117.72	300.892	301.58	84.354	53.392	85.116	94.282	1005.175	985.793	1293.08	1269.742
20160505:23:14:10	24.218	13.485	8.169	23.618	0.25	2.115	0.25	1.995	118.115	300.925	301.607	84.348	53.444	85.105	94.257	1006.544	987.118	1294.869	1271.476
20160505:23:19:11	24.217	13.511	8.124	23.619	0.25	2.122	0.25	2.004	118.183	300.875	301.545	84.309	53.381	85.05	94.233	1007.934	988.485	1296.683	1273.263
20160505:23:24:11	24.215	13.506	8.11	23.619	0.25	2.112	0.25	2.013	118.168	300.886	301.521	84.31	53.459	85.053	94.211	1009.281	989.802	1298.443	1274.985
20160505:23:29:11	24.216	13.481	8.097	23.62	0.25	2.114	0.25	1.998	118.102	300.897	301.523	84.296	53.453	85.042	94.187	1010.64	991.173	1300.217	1276.778
20160505:23:34:11	24.218	13.427	8.11	23.622	0.25	2.112	0.25	2.002	117.962	300.888	301.538	84.244	53.376	84.988	94.163	1012.027	992.479	1302.028	1278.485
20160505:23:39:11	24.218	13.413	8.075	23.624	0.25	2.125	0.25	2.001	117.924	300.908	301.566	84.238	53.406	84.982	94.137	1013.372	993.823	1303.783	1280.242
20160505:23:44:11	24.218	12.896	8.071	23.624	0.25	2.119	0.25	2.003	116.512	300.844	301.526	84.205	53.408	84.946	94.111	1014.739	995.175	1305.569	1282.009
20160505:23:49:11	24.217	12.567	8.011	23.628	0.25	2.098	0.25	1.986	115.603	300.729	301.461	84.179	53.365	84.923	94.092	1016.137	996.498	1307.393	1283.739
20160505:23:54:11	24.217	12.396	8.044	23.625	0.25	2.092	0.25	1.983	115.117	300.734	301.483	84.179	53.44	84.915	94.069	1017.476	997.873	1309.141	1285.536
20160505:23:59:11	24.216	12.94	8.052	23.624	0.25	2.094	0.25	1.981	116.631	300.789	301.527	84.096	53.392	84.873	94.038	1018.843	999.186	1310.924	1287.252
20160506:00:04:11	24.213	13.285	8.082	23.618	0.25	2.103	0.25	1.993	117.573	300.795	301.498	84.066	53.43	84.862	94.011	1020.24	1000.542	1312.748	1289.024
20160506:00:09:11	24.209	13.311	7.954	23.624	0.25	2.118	0.25	2.004	117.639	300.872	301.593	84.041	53.418	84.815	93.98	1021.581	1001.891	1314.498	1290.788
20160506:00:14:11	24.205	13.351	7.901	23.624	0.25	2.111	0.25	2.005	117.738	300.83	301.555	84.011	53.403	84.757	93.951	1022.944	1003.206	1316.276	1292.506
20160506:00:19:11	24.201	13.42	7.9	23.62	0.25	2.116	0.25	2.004	117.919	300.83	301.541	83.994	53.427	84.751	93.921	1024.343	1004.575	1318.102	1294.295
20160506:00:24:11	24.203	13.422	7.912	23.621	0.25	2.112	0.25	1.999	117.925	300.778	301.454	83.955	53.381	84.7	93.887	1025.687	1005.89	1319.856	1296.013
20160506:00:29:11	24.202	13.442	7.863	23.624	0.25	2.119	0.25	2.004	117.977	300.872	301.551	83.954	53.434	84.694	93.859	1027.046	1007.261	1321.63	1297.805
20160506:00:34:11	24.202	13.453	7.877	23.623	0.25	2.123	0.25	1.998	118.006	300.864	301.511	83.926	53.423	84.663	93.828	1028.451	1008.59	1323.463	1299.541
20160506:00:39:11	24.204	13.428	7.892	23.624	0.25	2.12	0.25	2.003	117.945	300.892	301.556	83.892	53.393	84.631	93.797	1029.797	1009.911	1325.219	1301.267
20160506:00:44:11	24.198	13.459	7.829	23.623	0.25	2.116	0.25	2.011	118.018	300.868	301.551	83.855	53.417	84.609	93.766	1031.15	1011.278	1326.983	1303.053
20160506:00:49:11	24.192	12.96	7.8	23.618	0.25	2.112	0.25	2	116.649	300.816	301.522	83.781	53.386	84.571	93.732	1032.559	1012.596	1328.822	1304.774
20160506:00:54:11	24.189	12.654	7.881	23.61	0.25	2.097	0.25	1.998	115.806	300.81	301.516	83.754	53.427	84.55	93.699	1033.907	1013.974	1330.581	1306.575
20160506:00:59:11	24.189	12.492	7.824	23.614	0.25	2.108	0.25	2.002	115.351	300.78	301.503	83.71	53.397	84.513	93.662	1035.254	1015.283	1332.339	1308.286
20160506:01:04:11	24.185	13.054	7.723	23.618	0.25	2.11	0.25	2.001	116.896	300.782	301.551	83.674	53.417	84.464	93.629	1036.661	1016.625	1334.174	1310.039
20160506:01:09:11	24.177	13.41	7.693	23.611	0.25	2.119	0.25	2.012	117.857	300.836	301.525	83.633	53.45	84.401	93.592	1038.018	1017.983	1335.944	1311.814
20160506:01:14:11	24.177	13.425	7.821	23.602	0.25	2.118	0.25	2.009	117.897	300.808	301.492	83.599	53.422	84.375	93.558	1039.369	1019.305	1337.707	1313.541
20160506:01:19:11	24.176	13.434	7.845	23.599	0.25	2.122	0.25	2.008	117.919	300.893	301.534	83.566	53.437	84.34	93.523	1040.779	1020.681	1339.548	1315.34
20160506:01:24:11	24.174	13.413	7.871	23.595	0.25	2.126	0.25	2.008	117.858	300.882	301.586	83.502	53.407	84.302	93.487	1042.135	1021.981	1341.319	1317.039
20160506:01:29:11	24.166	13.422	7.797	23.593	0.25	2.13	0.25	2.013	117.871	300.905	301.567	83.45	53.406	84.267	93.447	1043.479	1023.343	1343.072	1318.82
20160506:01:34:11	24.163	13.428	7.805	23.589	0.25	2.126	0.25	2.021	117.884	300.835	301.513	83.393	53.375	84.196	93.408	1044.88	1024.699	1344.902	1320.592
20160506:01:39:11	24.162	13.414	7.802	23.589	0.25	2.134	0.25	2.019	117.843	300.851	301.572	83.346	53.405	84.147	93.365	1046.25	1026.013	1346.689	1322.31
20160506:01:44:11	24.161	13.397	7.802	23.587	0.25	2.131	0.25	2.008	117.796	300.87	301.55	83.289	53.409	84.065	93.32	1047.587	1027.392	1348.435	1324.113
20160506:01:49:11	24.157	13.352	7.835	23.581	0.25	2.127	0.25	2.011	117.67	300.807	301.511	83.234	53.374	84.011	93.271	1048.986	1028.709	1350.261	1325.835
20160506:01:54:11	24.153	13.33	7.781	23.581	0.25	2.126	0.25	2.011	117.608	300.848	301.541	83.155	53.389	83.967	93.218	1050.345	1030.064	1352.035	1327.605
20160506:01:59:11	24.151	12.654	7.775	23.579	0.25	2.108	0.25	1.999	115.746	300.805	301.547	83.097	53.396	83.914	93.168	1051.699	1031.417	1353.802	1329.374
20160506:02:04:11	24.151	12.471	7.789	23.579	0.25	2.107	0.25	1.991	115.236	300.749	301.49	83.058	53.402	83.865	93.116	1053.092	1032.726	1355.62	1331.085
20160506:02:09:11	24.147	12.299	7.755	23.577	0.25	2.103	0.25	1.987	114.739	300.72	301.52	83.002	53.398	83.768	93.062	1054.46	1034.102	1357.406	1332.883
20160506:02:14:11	24.147	12.975	7.822	23.572	0.25	2.11	0.25	1.999	116.629	300.836	301.577	82.96	53.392	83.723	93.007	1055.812	1035.419	1359.17	1334.605
20160506:02:19:11	24.148	13.164	7.853	23.571	0.25	2.122	0.25	2.019	117.153	300.805	301.507	82.907	53.387	83.674	92.952	1057.194	1036.787	1360.974	1336.393
20160506:02:24:11	24.149	13.223	7.926	23.566	0.25	2.125	0.25	2.01	117.312	300.817	301.49	82.847	53.376	83.624	92.898	1058.577	1038.13	1362.78	1338.148
20160506:02:29:11	24.153	13.237	8.008	23.564	0.25	2.119	0.25	2.006	117.356	300.806	301.54	82.757	53.358	83.571	92.844	1059.922	1039.449	1364.535	1339.872
20

Time: day:hh:mm:ss	Stack Pressure: in-Hg	Sat% H2O: Percent	Static: in-H2O	Barometric: in-Hg	Flowmeter1: l/min	Vacuum1: in-Hg	Flowmeter2: l/min	Vacuum2: in-Hg	Stack Temp: degF	Sorbent Temp: degF	Probe Temp: degF	DGM#1 Temp: degF	Condenser Temp: degF	DGM#2 Temp: degF	DAQ Temp: degF	DGM1*: liters STP	DGM2*: liters STP	DGM1: liters nominal	DGM2: liters nominal
20160506:06:14:11	24.099	13.195	6.998	23.585	0.25	2.13	0.25	2	117.162	300.785	301.45	80.622	53.337	81.381	90.602	1121.574	1099.894	1444.798	1418.679
20160506:06:19:11	24.101	13.234	6.998	23.587	0.25	2.129	0.25	2.02	117.272	300.721	301.388	80.591	53.338	81.352	90.558	1122.913	1101.216	1446.537	1420.398
20160506:06:24:11	24.099	12.71	6.979	23.585	0.25	2.123	0.25	2.011	115.829	300.7	301.453	80.485	53.323	81.302	90.513	1124.324	1102.588	1448.37	1422.182
20160506:06:29:11	24.095	12.583	6.937	23.585	0.25	2.112	0.25	2.002	115.469	300.762	301.484	80.454	53.331	81.267	90.468	1125.679	1103.906	1450.13	1423.897
20160506:06:34:11	24.102	12.428	7.053	23.584	0.25	2.098	0.25	1.995	115.042	300.71	301.465	80.424	53.323	81.224	90.424	1127.026	1105.285	1451.878	1425.69
20160506:06:39:11	24.101	13.036	7.037	23.583	0.25	2.104	0.25	2.01	116.73	300.66	301.398	80.369	53.29	81.136	90.378	1128.437	1106.598	1453.711	1427.397
20160506:06:44:11	24.104	13.18	7.064	23.584	0.25	2.127	0.25	2.016	117.129	300.766	301.464	80.348	53.289	81.116	90.337	1129.784	1107.948	1455.459	1429.152
20160506:06:49:11	24.109	13.178	7.129	23.585	0.25	2.126	0.25	2.012	117.131	300.752	301.441	80.314	53.272	81.084	90.296	1131.135	1109.304	1457.213	1430.915
20160506:06:54:11	24.104	13.198	7.047	23.586	0.25	2.126	0.25	2.013	117.179	300.824	301.494	80.274	53.262	81.046	90.254	1132.544	1110.627	1459.043	1432.635
20160506:06:59:11	24.1	13.237	7.033	23.583	0.25	2.119	0.25	2.02	117.278	300.808	301.487	80.244	53.264	81.025	90.208	1133.892	1112.007	1460.793	1434.429
20160506:07:04:11	24.106	13.256	7.12	23.582	0.25	2.118	0.25	2.01	117.338	300.778	301.434	80.202	53.249	80.987	90.166	1135.251	1113.327	1462.556	1436.145
20160506:07:09:11	24.108	13.268	7.101	23.586	0.25	2.125	0.25	2.02	117.373	300.753	301.403	80.178	53.24	80.961	90.126	1136.653	1114.688	1464.376	1437.914
20160506:07:14:11	24.104	13.242	7.02	23.588	0.25	2.122	0.25	2.014	117.298	300.736	301.423	80.142	53.246	80.945	90.086	1137.996	1116.032	1466.119	1439.66
20160506:07:19:11	24.105	13.23	7.034	23.588	0.25	2.12	0.25	2.009	117.266	300.684	301.387	80.099	53.21	80.903	90.052	1139.358	1117.351	1467.885	1441.374
20160506:07:24:11	24.109	12.999	7.089	23.588	0.25	2.128	0.25	2.023	116.637	300.716	301.445	80.089	53.234	80.907	90.017	1140.761	1118.722	1469.706	1443.156
20160506:07:29:11	24.11	12.611	7.171	23.583	0.25	2.118	0.25	2	115.572	300.695	301.447	80.052	53.201	80.829	89.987	1142.106	1120.041	1471.452	1444.87
20160506:07:34:11	24.117	12.452	7.268	23.583	0.25	2.112	0.25	1.993	115.132	300.744	301.425	80.06	53.195	80.817	89.958	1143.466	1121.417	1473.217	1446.658
20160506:07:39:11	24.12	12.758	7.32	23.582	0.25	2.108	0.25	2.004	115.987	300.704	301.428	80.05	53.149	80.797	89.929	1144.869	1122.727	1475.037	1448.361
20160506:07:44:11	24.12	13.212	7.315	23.582	0.25	2.125	0.25	2.015	117.239	300.737	301.435	80.031	53.111	80.785	89.904	1146.209	1124.081	1476.776	1450.12
20160506:07:49:11	24.122	13.31	7.32	23.583	0.25	2.129	0.25	2.016	117.507	300.782	301.447	80.036	53.149	80.805	89.876	1147.578	1125.444	1478.552	1451.891
20160506:07:54:11	24.125	13.401	7.382	23.582	0.25	2.137	0.25	2.028	117.755	300.762	301.423	80.013	53.091	80.767	89.858	1148.981	1126.75	1480.372	1453.588
20160506:07:59:11	24.129	13.454	7.422	23.584	0.25	2.134	0.25	2.022	117.902	300.764	301.408	80.028	53.084	80.766	89.837	1150.319	1128.13	1482.109	1455.382
20160506:08:04:11	24.128	13.575	7.449	23.58	0.25	2.125	0.25	2.021	118.22	300.845	301.464	80.034	53.11	80.793	89.819	1151.688	1129.448	1483.885	1457.094
20160506:08:09:11	24.134	13.589	7.556	23.579	0.25	2.13	0.25	2.014	118.267	300.862	301.479	80.048	53.108	80.811	89.807	1153.087	1130.823	1485.702	1458.882
20160506:08:14:11	24.136	13.588	7.573	23.579	0.25	2.128	0.25	2.014	118.266	300.819	301.47	80.061	53.108	80.807	89.795	1154.427	1132.147	1487.441	1460.602
20160506:08:19:11	24.135	13.576	7.582	23.578	0.25	2.132	0.25	2.013	118.233	300.688	301.363	80.033	53.064	80.783	89.79	1155.795	1133.477	1489.217	1462.331
20160506:08:24:11	24.136	13.541	7.611	23.577	0.25	2.129	0.25	2.013	118.144	300.707	301.374	80.045	53.077	80.804	89.787	1157.186	1134.839	1491.022	1464.102
20160506:08:29:11	24.138	13.144	7.619	23.578	0.25	2.128	0.25	2.013	117.074	300.726	301.411	80.084	53.084	80.821	89.787	1158.535	1136.16	1492.772	1465.818
20160506:08:34:11	24.14	12.647	7.642	23.578	0.25	2.104	0.25	1.996	115.717	300.647	301.396	80.099	53.091	80.864	89.791	1159.903	1137.534	1494.548	1467.603
20160506:08:39:11	24.143	12.498	7.695	23.577	0.25	2.103	0.25	1.982	115.3	300.669	301.41	80.22	53.184	80.868	89.799	1161.288	1138.848	1496.346	1469.312
20160506:08:44:11	24.144	12.812	7.72	23.576	0.25	2.1	0.25	1.989	116.17	300.642	301.412	80.257	53.193	80.984	89.814	1162.627	1140.205	1498.085	1471.077
20160506:08:49:11	24.145	13.268	7.738	23.576	0.25	2.115	0.25	2.008	117.428	300.7	301.45	80.282	53.188	80.994	89.833	1164.004	1141.547	1499.874	1472.821
20160506:08:54:11	24.146	13.272	7.785	23.574	0.25	2.111	0.25	2.005	117.441	300.729	301.451	80.323	53.17	81.03	89.857	1165.375	1142.863	1501.654	1474.534
20160506:08:59:11	24.146	13.286	7.807	23.572	0.25	2.114	0.25	1.994	117.478	300.789	301.408	80.369	53.207	81.086	89.882	1166.722	1144.229	1503.404	1476.31
20160506:09:04:11	24.148	13.294	7.838	23.572	0.25	2.112	0.25	1.995	117.501	300.703	301.415	80.373	53.189	81.093	89.914	1168.107	1145.545	1505.204	1478.023
20160506:09:09:11	24.149	13.365	7.939	23.565	0.25	2.111	0.25	2.001	117.694	300.785	301.463	80.435	53.219	81.152	89.945	1169.468	1146.919	1506.972	1479.81
20160506:09:14:11	24.153	13.383	8.107	23.557	0.25	2.106	0.25	1.995	117.748	300.766	301.438	80.445	53.19	81.153	89.98	1170.816	1148.224	1508.724	1481.509
20160506:09:19:11	24.157	13.37	8.119	23.56	0.25	2.115	0.25	2.001	117.719	300.799	301.466	80.543	53.206	81.26	90.011	1172.213	1149.582	1510.541	1483.276
20160506:09:24:11	24.152	13.328	8.018	23.562	0.25	2.109	0.25	1.999	117.599	300.724	301.419	80.577	53.2	81.279	90.049	1173.575	1150.942	1512.311	1485.047
20160506:09:29:11	24.155	13.306	8.077	23.561	0.25	2.116	0.25	1.995	117.545	300.779	301.484	80.64	53.21	81.325	90.086	1174.922	1152.247	1514.063	1486.746
20160506:09:34:11	24.151	12.953	8.106	23.555	0.25	2.104	0.25	1.987	116.572	300.781	301.521	80.671	53.218	81.356	90.127	1176.319	1153.62	1515.88	1488.534
20160506:09:39:11	24.154	12.488	8.124	23.557	0.25	2.091	0.25	1.989	115.289	300.706	301.433	80.704	53.226	81.386	90.167	1177.681	1154.933	1517.652	1490.244
20160506:09:44:11	24.151	12.343	8.045	23.56	0.25	2.096	0.25	1.997	114.87	300.651	301.41	80.749	53.226	81.436	90.21	1179.024	1156.307	1519.398	1492.034
20160506:09:49:11	24.151	12.679	8.037	23.56	0.25	2.098	0.25	1.993	115.809	300.68	301.459	80.775	53.216	81.457	90.255	1180.425	1157.626	1521.22	1493.752
20160506:09:54:11	24.152	13.179	8.152	23.553	0.25	2.107	0.25	1.991	117.199	300.761	301.503	80.814	53.236	81.504	90.297	1181.79	1158.958	1522.996	1495.487
20160506:09:59:11	24.151	13.25	8.121	23.554	0.25	2.111	0.25	1.993	117.387	300.798	301.471	80.876	53.235	81.571	90.337	1183.133	1160.318	1524.744	1497.259
20160506:10:04:11	24.149	13.295	8.054	23.556	0.25	2.118	0.25	1.992	117.507	300.767	301.453	80.91	53.238	81.608	90.376	1184.532	1161.639	1526.565	1498.979
20160506:10:09:11	24.151	13.299	8.096	23.556	0.25	2.112	0.25	2.003	117.519	300.743	301.441	80.968	53.251	81.66	90.419	1185.898	1163.016	1528.343	1500.774
20160506:10:14:11	24.151	13.296	8.107	23.554	0.25	2.112	0.25	1.994	117.512	300.746	301.45	80.989	53.224	81.683	90.46	1187.237	1164.319	1530.085	1502.472
20160506:10:19:11	24.15	13.333	8.164	23.549	0.25	2.11	0.25	1.984	117.609	300.78	301.486	81.023	53.25	81.719	90.5	1188.634	1165.676	1531.904	1504.241
20160506:10:24:11	24.152	13.328	8.165	23.552	0.25	2.112	0.25	2.006	117.6	300.752	301.442	81.06	53.257	81.757	90.543	1190.001	1167.031	1533.683	1506.008
20160506:10:29:11	24.152	13.305	8.219	23.548	0.25	2.111	0.25	2	117.539	300.689	301.408	81.087	53.249	81.79	90.585	1191.334	1168.345	1535.419	1507.72
20160506:10:34:11	24.151	13.279	8.155	23.551	0.25	2.111	0.25	2.002	117.467	300.666	301.423	81.142	53.259	81.883	90.625	1192.73	1169.714	1537.237	1509.506
20160506:10:39:11	24.149	12.922	8.173	23.548	0.25	2.107	0.25	2.003	116.482	300.745	301.454	81.188	53.26	81.906	90.665	1194.097	1171.026	1539.017	1511.216
20160506:10:44:11	24.149	12.476	8.135	23.551	0.25	2.089	0.25	1.992	115.247	300.724	301.47	81.25	53.254	81.939	90.71	1195.435	1172.401	1540.759	1513.009
20160506:10:49:11	24.154	12.327	8.254	23.547	0.25	2.079	0.25	1.98	114.829	300.711	301.484	81.3	53.278	81.985	90.754	1196.835	1173.717	1542.583	1514.726
20160506:10:54:11	24.152	12.664	8.156	23.553	0.25	2.094	0.25	1.993	115.768	300.696	301.426	81.321	53.268	82.014	90.798	1198.197	1175.05	1544.357	1516.464
20160506:10:59:11	24.151	13.161	8.232	23.546	0.25	2.105	0.25	1.989	117.15	300.683	301.44	81.34	53.262	82.046	90.843	1199.535	1176.41	1546.1	1518.239
20160506:11:04:11	24.158	13.189	8.337	23.545	0.25	2.112	0.25	1.99	117.234	300.789	301.501	81.373	53.277	82.087	90.883	1200.932	1177.729	1547.92	1519.959
20160506:11:09:11	24.159	13.189	8.373	23.543	0.25	2.111	0.25	1.995	117.235	300.8	301.49	81.384	53.251	82.089	90.926	1202.303	1179.107	1549.707	1521.758
20160506:11:14:11	24.165	13.181	8.455	23.543	0.25	2.111	0.25	1.993	117.224	300.863	301.531	81.432	53.265	82.134	90.961	1203.639	1180.407	1551.448	1523.453
20160506:11:19:11	24.159	13.188	8.345	23.546	0.25	2.111	0.25	1.999	117.233	300.804	301.478	81.444	53.246	82.153	91.001	1205.039	1181.767	1553.272	1525.227
20160506:11:24:11	24.159	13.182	8.38	23.542	0.25	2.117	0.25	1.999	117.215	300.787	301.473	81.467	53.254	82.218	91.038	1206.403	1183.122	1555.05	1526.996
20160506:11:29:11	24.155	13.185	8.286	23.546	0.25	2.12	0.25	2.002	117.221	300.804	301.492	81.48	53.271	82.246	91.071	1207.742	1184.431	1556.794	1528.705
20160506:11:34:11	24.156	13.192	8.376	23.54	0.25	2.117	0.25	2.003	117.24	300.824	301.5	81.493	53.254	82.269	91.097	1209.145	1185.808	1558.624	1530.502
20160506:11:39:11	24.149	13.207	8.256	23.542	0.25	2.118	0.25	2.008	117.27	300.726	301.442	81.498	53.253	82.269	91.126	1210.502	1187.127	1560.393	1532.224
20160506:11:44:11	24.15	12.983	8.275	23.542	0.25	2.117	0.25	2.002	116.652	300.784	301.472	81.6	53.293	82.314	91.15	1211.852	1188.491	1562.152	1534.004
20160506:11:49:11	24.152	12.568	8.25	23.545	0.25	2.109	0.25	1.991	115.512	300.714	301.454	81.599	53.262	82.312	91.173	1213.243	1189.829	1563.965	1535.75
20160506:11:54:11	24.153	12.411	8.285	23.544	0.25	2.109	0.25	1.997	115.068	300.704	301.449	81.609	53.259	82.32	91.198	1214.605	1191.148	1565.741	1537.472
20160506:11:59:11	24.153	12.772	8.345	23.539	0.25	2.101	0.25	1.993	116.071	300.749	301.52	81.651	53.288	82.368	91.22	1215.956	1192.518	1567.502	1539.261
20160506:12:04:11	24.148	13.209	8.253	23.542	0.25	2.119	0.25	2.015	117.274	300.764	301.505	81.652	53.279	82.361	91.237	1217.346	1193.831	1569.315	1540.976
20160506:12:09:11	24.147	13.176	8.229	23.542	0.25	2.118	0.25	2.004	117.184	300.812	301.518	81.653	53.258	82.367	91.259	1218.717	1195.206	1571.102	1542.771
20160506:12:14:11	24.145	13.168	8.251	23.538	0.25	2.119	0.25	2.021	117.158	300.836	301.524	81.696	53.29	82.403	91.278	1220.066	1196.516	1572.861	1544.481
20160506:12:19:11	24.148	13.131	8.381	23.532	0.25	2.116	0.25	2.007	117.063	300.77	301.458	81.703	53.293	82.419	91.297	1221.448	1197.855	1574.665	1546.229
20160506:12:24:11	24.147	13.097	8.373	23.532	0.25	2.122	0.25	2.011	116.97	300.748	301.45	81.702	53.267	82.419	91.315	1222.821	1199.212	1576.456	1548.002
20160506:12:29:11	24.147	13.073	8.381	23.53	0.25	2.12	0.25	2.011	116.902	300.732	301.4	81.725	53.274	82.46	91.336	1224.168	1200.533	1578.213	1549.727
20160506:12:34:11	24.145	13.055	8.478	23.521	0.25	2.11	0.25	1.995	116.852	300.777	301.452	81.766	53.301	82.524	91.361	1225.547	1201.91	1580.013	1551.528
20160506:12:39:11	24.145	13.025	8.437	23.525	0.25	2.112	0.25	1.997	116.768	300.739	301.446	81.768	53.286	82.532	91.382	1226.927	1203.213	1581.813	1553.231
20160506:12:44:11	24.144	13	8.451	23.523	0.25	2.105	0.25	1.993	116.7	300.811	301.519	81.813	53.288	82.559	91.404	1228.275	1204.571	1583.572	1555.006
20160506:12:49:11	24.146	12.32	8.488	23.522	0.25	2.101	0.25	1.992	114.797	300.789	301.532	81.882	53.306	82.605	91.428	1229.643	1205.924	1585.359	1556.774
20160506:12:54:11	24.146	12.243	8.469	23.523	0.25	2.098	0.25	1.993	114.575	300.789	301.519	81.889	53.295	82.606	91.451	1231.029	1207.231	1587.169	1558.483
20160506:12:59:11	24.148	12.167	8.511	23.522	0.25	2.101	0.25	1.981	114.36	300.728	301.453	81.918	53.286	82.632	91.476	1232.374	1208.603	1588.924	1560.276
20160506:13:04:11	24.144	12.957	8.505	23.519	0.25	2.116	0.25	1.999	116.582	300.786	301.514	81.955	53.298	82.664	91.503	1233.74	1209.917	1590.707	1561.994
20160506:13:09:11	24.138	13.068	8.297	23.528	0.25	2.126	0.25	2.006	116.875	300.794	301.509	81.962	53.294	82.669	91.53	1235.127	1211.285	1592.519	1563.782
20160506:13:14:11	24.138	13.098	8.359	23.524	0.25	2.121	0.25	2.017	116.959	300.887	301.572	82.017	53.316	82.722	91.559	1236.47	1212.616	1594.272	1565.523
20160506:13:19:11	24.141	13.07	8.336	23.528	0.25	2.121	0.25	2.014	116.887	300.808	301.467	82.017	53.299	82.721	91.584	1237.835	1213.936	1596.054	1567.248
20160506:13:24:11	24.138	13.06	8.304	23.527	0.25	2.115	0.25	2.005	116.854	300.846	301.507	82.05	53.312	82.753	91.612	1239.229	1215.305	1597.874	1569.038
20160506:13:29:11	24.132	13.05	8.214	23.528	0.25	2.122	0.25	2.004	116.818	300.82	301.492	82.083	53.306	82.778	91.643	1240.567	1216.621	1599.62	1570.758
20160506:13:34:11	24.13	13.048	8.105	23.534	0.25	2.123	0.25	2.007	116.809	300.812	301.492	82.109	53.312	82.802	91.668	1241.933	1217.996	1601.404	1572.555
20160506:13:39:11	24.124	13.055	8.038	23.533	0.25	2.126	0.25	2.005	116.821	300.846	301.54	82.156	53.318	82.881	91.7	1243.329	1219.307	1603.226	1574.269
20160506:13:44:11	24.123	13.082	7.981	23.536	0.25	2.13	0.25	2.004	116.893	300.825	301.503	82.115	53.305	82.867	91.729	1244.666	1220.643	1604.97	1576.015
20160506:13:49:11	24.121	13.15	7.991	23.533	0.25	2.131	0.25	2.014	117.072	300.867	301.573	82.214	53.343	82.917	91.754	1246.033	1222.003	1606.756	1577.799
20160506:13:54:11	24.12	12.489	7.856	23.543	0.25	2.116	0.25	2.006	115.242	300.82	301.544	82.204	53.317	82.901	91.781	1247.436	1223.321	1608.587	1579.515
20160506:13:59:11	24.122	12.342	7.735	23.553	0.25	2.099	0.25	1.994	114.824	300.792	301.535	82.167	53.314	82.896	91.802	1248.778	1224.698	1610.337	1581.314
20160506:14:04:11	24.114	12.243	7.587	23.556	0.25	2.093	0.25	1.985	114.528	300.801	301.586	82.221	53.359	82.943	91.822	1250.138	1225.999	1612.111	1583.013
20160506:14:09:11	24.102	13.028	7.381	23.559	0.25	2.114	0.25	1.989	116.713	300.824	301.569	82.217	53.358	82.938	91.84	1251.545	1227.359	1613.946	1584.789
20160506:14:14:11	24.101	13.131	7.211	23.57	0.25	2.107	0.25	1.993	116.992	300.821	301.521	82.188	53.355	82.923	91.852	1252.888	1228.719	1615.696	1586.564
20160506:14:19:11	24.104	13.168	7.121	23.58	0.25	2.108	0.25	1.999	117.098	300.799	301.496	82.122	53.349	82.901	91.866	1254.249	1230.024	1617.47	1588.267
20160506:14:24:11	24.098	13.268	6.95	23.587	0.25	2.107	0.25	1.986	117.358	300.772	301.466	82.1	53.354	82.879	91.872	1255.656	1231.405	1619.302	1590.068
20160506:14:29:11	24.092	13.275	6.732	23.597	0.25	2.092	0.25	1.979	117.369	300.781	301.475	82.067	53.366	82.847	91.874	1257.001	1232.721	1621.054	1591.784
20160506:14:34:11	24.072	13.344	6.573	23.589	0.25	2.122	0.25	1.997	117.523	300.817	301.55	82.051	53.383	82.798	91.873	1258.36	1234.086	1622.822	1593.564
20160506:14:39:11	24.068	13.355	6.58	23.584	0.25	2.111	0.25	1.994	117.547	300.804	301.541	82.037	53.458	82.774	91.869	1259.766	1235.425	1624.654	1595.31
20160506:14:44:11	24.059	13.351	6.517	23.58	0.25	2.125	0.25	2.018	117.522	300.76	301.493	82.001	53.469	82.758	91.858	1261.114	1236.744	1626.409	1597.03
20160506:14:49:11	24.054	13.342	6.418	23.582	0.25	2.138	0.25	2.021	117.491	300.795	301.562	81.991	53.477	82.728	91.846	1262.463	1238.115	1628.167	1598.818
20160506:14:54:11	24.053	13.269	6.243	23.594	0.25	2.135	0.25	2.015	117.294	300.786	301.531	81.955	53.499	82.712	91.831	1263.879	1239.431	1630.009	1600.534
20160506:14:59:11	24.058	12.548	6.24	23.599	0.25	2.117	0.25	2.005	115.315	300.765	301.527	81.899	53.49	82.649	91.808	1265.223	1240.81	1631.759	1602.331
20160506:15:04:11	24.068	12.475	6.143	23.617	0.25	2.114	0.25	1.996	115.124	300.783	301.523	81.809	53.478	82.604	91.785	1266.571	1242.12	1633.511	1604.036
20160506:15:09:11	24.071	12.37	5.878	23.639	0.25	2.112	0.25	1.995	114.83	300.695	301.506	81.764	53.513	82.57	91.755	1267.985	1243.465	1635.348	1605.786
20160506:15:14:11	24.053	13.093	5.912	23.619	0.25	2.113	0.25	1.994	116.819	300.779	301.531	81.685	53.479	82.444	91.724	1269.333	1244.822	1637.1	1607.551
20160506:15:19:11	24.041	13.189	5.98	23.601	0.25	2.128	0.25	2.009	117.061	300.815	301.524	81.643	53.503	82.41	91.685	1270.682	1246.144	1638.854	1609.273
20160506:15:24:11	24.045	13.197	6.027	23.602	0.25	2.124	0.25	2.009	117.09	300.805	301.505	81.593	53.482	82.342	91.646	1272.102	1247.521	1640.7	1611.066
20160506:15:29:11	24.039	13.195	6.013	23.597	0.25	2.128	0.25	2.023	117.074	300.838	301.521	81.483	53.474	82.29	91.6	1273.452	1248.837	1642.456	1612.78
20160506:15:34:11	24.03	13.213	5.988	23.59	0.25	2.133	0.25	2.023	117.109	300.837	301.506	81.422	53.488	82.244	91.556	1274.799	1250.2	1644.207	1614.555
20160506:15:39:11	24.031	13.289	6.099	23.582	0.25	2.133	0.25	2.023	117.316	300.835	301.521	81.368	53.478	82.145	91.503	1276.211	1251.543	1646.044	1616.305
20160506:15:44:11	24.027	13.283	6.123	23.577	0.25	2.138	0.25	2.02	117.293	300.857	301.52	81.29	53.443	82.05	91.449	1277.563	1252.862	1647.804	1618.023
20160506:15:49:11	24.024	13.273	6.088	23.576	0.25	2.135	0.25	2.022	117.261	300.83	301.459	81.184	53.4	82.001	91.39	1278.911	1254.232	1649.557	1619.808
20160506:15:54:11	24.024	13.254	6.084	23.576	0.25	2.134	0.25	2.036	117.211	300.855	301.547	81.113	53.396	81.94	91.326	1280.32	1255.55	1651.389	1621.524
20160506:15:59:11	24.026	13.215	6.097	23.578	0.25	2.137	0.25	2.015	117.11	300.809	301.479	81.059	53.369	81.851	91.263	1281.675	1256.93	1653.152	1623.321
20160506:16:04:11	24.02	12.52	6.087	23.572	0.25	2.118	0.25	2.014	115.182	300.795	301.542	81.001	53.354	81.763	91.199	1

Time: day:hh:mm:ss	Stack Pressure: in-Hg	Sat% H2O: Percent	Static: in-H2O	Barometric: in-Hg	Flowmeter1: l/min	Vacuum1: in-Hg	Flowmeter2: l/min	Vacuum2: in-Hg	Stack Temp: degF	Sorbent Temp: degF	Probe Temp: degF	DGM#1 Temp: degF	Condenser Temp: degF	DGM#2 Temp: degF	DAQ Temp: degF	DGM1*: liters STP	DGM2*: liters STP	DGM1: liters nominal	DGM2: liters nominal
20160506:19:54:11	23.978	13.024	5.512	23.572	0.25	2.13	0.25	2.017	116.519	300.728	301.449	78.77	52.744	79.506	88.672	1346.084	1320.087	1736.767	1705.429
20160506:19:59:11	23.975	13.023	5.468	23.572	0.25	2.129	0.25	2.024	116.513	300.684	301.386	78.726	52.721	79.457	88.644	1347.43	1321.464	1738.509	1707.214
20160506:20:04:11	23.971	13.035	5.445	23.571	0.25	2.129	0.25	2.019	116.54	300.688	301.374	78.701	52.74	79.433	88.614	1348.808	1322.775	1740.294	1708.914
20160506:20:09:11	23.969	13.046	5.417	23.571	0.25	2.126	0.25	2.018	116.568	300.695	301.412	78.662	52.716	79.396	88.584	1350.185	1324.136	1742.078	1710.679
20160506:20:14:11	23.97	13.061	5.448	23.569	0.25	2.126	0.25	2.012	116.609	300.733	301.396	78.634	52.723	79.366	88.55	1351.537	1325.498	1743.828	1712.445
20160506:20:19:11	23.968	12.611	5.43	23.569	0.25	2.127	0.25	2.018	115.352	300.74	301.445	78.587	52.722	79.339	88.519	1352.924	1326.81	1745.624	1714.147
20160506:20:24:11	23.972	12.226	5.378	23.576	0.25	2.116	0.25	2.001	114.272	300.677	301.368	78.519	52.703	79.299	88.485	1354.293	1328.185	1747.396	1715.929
20160506:20:29:11	23.97	12.078	5.28	23.582	0.25	2.11	0.25	1.995	113.84	300.705	301.411	78.488	52.718	79.249	88.451	1355.641	1329.503	1749.141	1717.637
20160506:20:34:11	23.971	12.559	5.256	23.584	0.25	2.113	0.25	2	115.207	300.692	301.428	78.456	52.723	79.184	88.416	1357.037	1330.885	1750.946	1719.427
20160506:20:39:11	23.967	12.972	5.204	23.585	0.25	2.127	0.25	2.014	116.362	300.678	301.456	78.42	52.721	79.15	88.38	1358.408	1332.196	1752.72	1721.126
20160506:20:44:11	23.964	13.091	5.151	23.585	0.25	2.132	0.25	2.024	116.681	300.744	301.419	78.397	52.743	79.132	88.342	1359.749	1333.542	1754.456	1722.868
20160506:20:49:11	23.962	13.123	5.137	23.584	0.25	2.125	0.25	2.008	116.765	300.672	301.366	78.36	52.724	79.093	88.305	1361.157	1334.904	1756.276	1724.633
20160506:20:54:11	23.963	13.141	5.144	23.584	0.25	2.127	0.25	2.024	116.815	300.722	301.387	78.347	52.75	79.08	88.267	1362.517	1336.213	1758.035	1726.329
20160506:20:59:11	23.958	13.138	5.054	23.586	0.25	2.135	0.25	2.02	116.799	300.691	301.386	78.294	52.74	79.029	88.234	1363.858	1337.592	1759.77	1728.115
20160506:21:04:11	23.958	13.128	5.06	23.586	0.25	2.136	0.25	2.017	116.774	300.717	301.446	78.288	52.758	79.023	88.2	1365.263	1338.906	1761.587	1729.816
20160506:21:09:11	23.956	13.107	4.995	23.589	0.25	2.14	0.25	2.023	116.715	300.714	301.405	78.2	52.748	78.975	88.168	1366.617	1340.286	1763.337	1731.603
20160506:21:14:11	23.952	13.079	4.965	23.587	0.25	2.134	0.25	2.023	116.632	300.714	301.397	78.179	52.749	78.964	88.135	1367.967	1341.594	1765.083	1733.297
20160506:21:19:11	23.949	13.04	4.973	23.583	0.25	2.134	0.25	2.016	116.521	300.697	301.384	78.14	52.77	78.894	88.107	1369.377	1342.944	1766.906	1735.045
20160506:21:24:11	23.947	13.02	4.969	23.582	0.25	2.129	0.25	2.023	116.463	300.717	301.423	78.116	52.751	78.853	88.073	1370.717	1344.31	1768.639	1736.814
20160506:21:29:11	23.948	12.362	4.945	23.585	0.25	2.128	0.25	2.018	114.619	300.693	301.397	78.07	52.737	78.807	88.038	1372.076	1345.62	1770.396	1738.509
20160506:21:34:11	23.951	12.596	4.931	23.588	0.25	2.117	0.25	2.013	115.282	300.707	301.458	78.048	52.749	78.788	88.004	1373.478	1346.995	1772.207	1740.289
20160506:21:39:11	23.944	12.914	4.866	23.587	0.25	2.124	0.25	2.013	116.168	300.678	301.407	77.991	52.734	78.728	87.971	1374.811	1348.31	1773.931	1741.991
20160506:21:44:11	23.942	12.932	4.929	23.58	0.25	2.12	0.25	2.021	116.213	300.708	301.401	77.97	52.758	78.706	87.937	1376.181	1349.692	1775.702	1743.78
20160506:21:49:11	23.94	12.906	4.942	23.577	0.25	2.124	0.25	2.022	116.139	300.697	301.385	77.871	52.724	78.651	87.9	1377.575	1350.997	1777.504	1745.47
20160506:21:54:11	23.937	12.91	4.952	23.573	0.25	2.126	0.25	2.012	116.145	300.746	301.463	77.845	52.756	78.625	87.861	1378.918	1352.35	1779.241	1747.222
20160506:21:59:11	23.931	12.897	4.87	23.573	0.25	2.127	0.25	2.017	116.103	300.676	301.39	77.792	52.736	78.522	87.824	1380.299	1353.712	1781.026	1748.985
20160506:22:04:11	23.936	12.896	4.874	23.577	0.25	2.124	0.25	2.019	116.107	300.646	301.366	77.773	52.754	78.502	87.785	1381.677	1355.03	1782.807	1750.69
20160506:22:09:11	23.934	12.911	4.85	23.578	0.25	2.127	0.25	2.02	116.144	300.736	301.426	77.732	52.741	78.461	87.747	1383.026	1356.398	1784.55	1752.461
20160506:22:14:11	23.94	12.909	4.902	23.579	0.25	2.131	0.25	2.016	116.147	300.705	301.432	77.69	52.727	78.419	87.706	1384.417	1357.714	1786.348	1754.164
20160506:22:19:11	23.943	12.892	4.962	23.579	0.25	2.133	0.25	2.022	116.106	300.666	301.387	77.655	52.736	78.39	87.665	1385.784	1359.093	1788.115	1755.947
20160506:22:24:11	23.941	12.781	4.903	23.58	0.25	2.117	0.25	2.019	115.793	300.706	301.427	77.565	52.699	78.329	87.621	1387.132	1360.402	1789.856	1757.641
20160506:22:29:11	23.94	12.171	4.863	23.582	0.25	2.112	0.25	2.008	114.067	300.632	301.379	77.517	52.711	78.271	87.573	1388.533	1361.762	1791.665	1759.4
20160506:22:34:11	23.935	12.064	4.767	23.584	0.25	2.103	0.25	1.998	113.748	300.554	301.346	77.465	52.701	78.223	87.528	1389.895	1363.125	1793.424	1761.164
20160506:22:39:11	23.936	12.048	4.7	23.59	0.25	2.111	0.25	2.009	113.697	300.605	301.358	77.41	52.697	78.143	87.482	1391.238	1364.443	1795.157	1762.867
20160506:22:44:11	23.932	12.734	4.6	23.593	0.25	2.117	0.25	2.018	115.653	300.671	301.395	77.364	52.694	78.101	87.433	1392.642	1365.817	1796.97	1764.643
20160506:22:49:11	23.926	12.776	4.571	23.59	0.25	2.124	0.25	2.014	115.758	300.684	301.357	77.321	52.7	78.06	87.379	1393.998	1367.135	1798.72	1766.346
20160506:22:54:11	23.922	12.781	4.522	23.589	0.25	2.124	0.25	2.012	115.768	300.703	301.39	77.271	52.691	78.015	87.326	1395.35	1368.515	1800.465	1768.13
20160506:22:59:11	23.918	12.853	4.488	23.588	0.25	2.122	0.25	2.025	115.962	300.711	301.375	77.176	52.699	77.967	87.274	1396.758	1369.824	1802.281	1769.821
20160506:23:04:11	23.917	12.9	4.608	23.578	0.25	2.12	0.25	2.014	116.091	300.67	301.385	77.126	52.695	77.867	87.23	1398.102	1371.186	1804.017	1771.583
20160506:23:09:11	23.918	12.906	4.645	23.576	0.25	2.13	0.25	2.029	116.107	300.685	301.373	77.1	52.704	77.829	87.185	1399.463	1372.55	1805.774	1773.346
20160506:23:14:11	23.912	12.905	4.573	23.576	0.25	2.127	0.25	2.011	116.096	300.65	301.35	77.044	52.713	77.783	87.127	1400.865	1373.868	1807.583	1775.049
20160506:23:19:11	23.913	12.905	4.579	23.576	0.25	2.133	0.25	2.011	116.095	300.651	301.377	76.948	52.709	77.734	87.066	1402.206	1375.239	1809.315	1776.821
20160506:23:24:11	23.916	12.898	4.611	23.577	0.25	2.133	0.25	2.023	116.083	300.581	301.331	76.892	52.698	77.679	87.005	1403.581	1376.559	1811.089	1778.526
20160506:23:29:11	23.919	12.789	4.692	23.574	0.25	2.122	0.25	2.025	115.782	300.619	301.336	76.84	52.681	77.627	86.945	1404.972	1377.94	1812.883	1780.312
20160506:23:34:11	23.918	12.177	4.64	23.576	0.25	2.117	0.25	2.015	114.051	300.643	301.347	76.795	52.681	77.548	86.889	1406.32	1379.25	1814.622	1782.004
20160506:23:39:11	23.905	12.096	4.497	23.575	0.25	2.12	0.25	2.017	113.796	300.589	301.341	76.748	52.673	77.497	86.828	1407.702	1380.616	1816.406	1783.769
20160506:23:44:11	23.906	12.123	4.471	23.577	0.25	2.103	0.25	2.008	113.874	300.545	301.325	76.674	52.684	77.458	86.77	1409.076	1381.985	1818.178	1785.538
20160506:23:49:11	23.904	12.826	4.479	23.574	0.25	2.115	0.25	2.017	115.866	300.63	301.345	76.601	52.676	77.416	86.713	1410.425	1383.301	1819.919	1787.237
20160506:23:54:11	23.904	12.912	4.586	23.567	0.25	2.116	0.25	2.028	116.102	300.626	301.396	76.558	52.677	77.373	86.656	1411.831	1384.675	1821.731	1789.013
20160506:23:59:11	23.908	12.974	4.564	23.573	0.25	2.126	0.25	2.031	116.278	300.67	301.388	76.515	52.657	77.334	86.603	1413.203	1385.994	1823.502	1790.716
20160507:00:04:11	23.908	13.01	4.561	23.573	0.25	2.127	0.25	2.024	116.378	300.641	301.324	76.475	52.658	77.286	86.551	1414.539	1387.376	1825.224	1792.502
20160507:00:09:11	23.909	13.024	4.635	23.568	0.25	2.133	0.25	2.028	116.418	300.662	301.371	76.443	52.658	77.219	86.496	1415.941	1388.686	1827.033	1794.194
20160507:00:14:11	23.904	13.048	4.589	23.566	0.25	2.13	0.25	2.021	116.473	300.722	301.388	76.41	52.661	77.155	86.442	1417.295	1390.047	1828.78	1795.951
20160507:00:19:11	23.901	13.115	4.586	23.564	0.25	2.127	0.25	2.016	116.654	300.669	301.359	76.373	52.656	77.114	86.389	1418.639	1391.413	1830.513	1797.716
20160507:00:24:11	23.893	13.097	4.515	23.561	0.25	2.128	0.25	2.021	116.592	300.593	301.312	76.277	52.661	77.067	86.338	1420.052	1392.73	1832.335	1799.417
20160507:00:29:11	23.889	13.054	4.513	23.557	0.25	2.121	0.25	2.014	116.469	300.607	301.362	76.238	52.661	76.998	86.291	1421.393	1394.105	1834.065	1801.194
20160507:00:34:11	23.89	12.497	4.598	23.552	0.25	2.104	0.25	1.999	114.917	300.608	301.34	76.202	52.672	76.962	86.24	1422.752	1395.425	1835.819	1802.898
20160507:00:39:11	23.891	12.245	4.614	23.552	0.25	2.099	0.25	1.991	114.207	300.625	301.371	76.167	52.673	76.922	86.192	1424.155	1396.807	1837.628	1804.684
20160507:00:44:11	23.894	12.069	4.715	23.547	0.25	2.083	0.25	1.983	113.703	300.588	301.327	76.119	52.65	76.885	86.144	1425.491	1398.118	1839.352	1806.378
20160507:00:49:11	23.901	12.646	4.821	23.547	0.25	2.096	0.25	1.991	115.352	300.564	301.298	76.103	52.661	76.868	86.102	1426.866	1399.473	1841.126	1808.128
20160507:00:54:11	23.902	12.925	4.842	23.546	0.25	2.107	0.25	1.997	116.137	300.561	301.317	76.079	52.639	76.835	86.06	1428.257	1400.834	1842.92	1809.887
20160507:00:59:11	23.897	12.936	4.782	23.546	0.25	2.105	0.25	2.017	116.16	300.687	301.359	76.049	52.629	76.796	86.021	1429.602	1402.151	1844.656	1811.588
20160507:01:04:11	23.895	12.976	4.813	23.541	0.25	2.109	0.25	1.993	116.265	300.675	301.326	76.047	52.643	76.785	85.985	1430.987	1403.523	1846.443	1813.361
20160507:01:09:11	23.897	13.001	4.789	23.545	0.25	2.118	0.25	2.003	116.337	300.615	301.287	75.95	52.631	76.74	85.951	1432.358	1404.841	1848.211	1815.064
20160507:01:14:11	23.893	13.041	4.753	23.544	0.25	2.116	0.25	2.021	116.439	300.631	301.298	75.944	52.645	76.747	85.918	1433.709	1406.215	1849.954	1816.838
20160507:01:19:11	23.897	13.009	4.812	23.543	0.25	2.112	0.25	2.014	116.357	300.673	301.322	75.912	52.648	76.699	85.886	1435.104	1407.523	1851.754	1818.528
20160507:01:24:11	23.892	12.988	4.74	23.543	0.25	2.112	0.25	2.019	116.292	300.695	301.393	75.906	52.651	76.7	85.856	1436.47	1408.891	1853.515	1820.295
20160507:01:29:11	23.884	12.968	4.693	23.539	0.25	2.114	0.25	2.013	116.227	300.699	301.366	75.901	52.659	76.667	85.828	1437.807	1410.241	1855.241	1822.039
20160507:01:34:11	23.882	12.93	4.785	23.53	0.25	2.111	0.25	2.005	116.12	300.684	301.364	75.882	52.644	76.613	85.803	1439.209	1411.562	1857.05	1823.746
20160507:01:39:11	23.88	12.945	4.766	23.529	0.25	2.114	0.25	2.001	116.158	300.665	301.379	75.882	52.666	76.614	85.779	1440.562	1412.932	1858.796	1825.517
20160507:01:44:11	23.878	12.231	4.767	23.528	0.25	2.101	0.25	1.997	114.148	300.605	301.313	75.844	52.649	76.577	85.756	1441.914	1414.252	1860.541	1827.224
20160507:01:49:11	23.872	12.647	4.679	23.528	0.25	2.102	0.25	1.995	115.309	300.606	301.348	75.812	52.638	76.553	85.732	1443.313	1415.639	1862.346	1829.015
20160507:01:54:11	23.873	12.898	4.666	23.53	0.25	2.121	0.25	2.001	116.02	300.684	301.395	75.789	52.655	76.541	85.71	1444.652	1416.951	1864.074	1830.711
20160507:01:59:11	23.875	12.884	4.708	23.529	0.25	2.126	0.25	2.004	115.982	300.66	301.385	75.738	52.647	76.49	85.683	1446.024	1418.315	1865.844	1832.474
20160507:02:04:11	23.876	12.859	4.795	23.524	0.25	2.128	0.25	2.017	115.916	300.624	301.35	75.717	52.642	76.457	85.656	1447.426	1419.665	1867.654	1834.218
20160507:02:09:11	23.854	12.854	4.503	23.523	0.25	2.119	0.25	2.015	115.87	300.62	301.35	75.67	52.656	76.426	85.624	1448.772	1420.986	1869.391	1835.925
20160507:02:14:11	23.853	12.844	4.532	23.519	0.25	2.119	0.25	2.005	115.839	300.684	301.355	75.601	52.649	76.39	85.59	1450.144	1422.359	1871.161	1837.699
20160507:02:19:11	23.857	12.829	4.62	23.517	0.25	2.128	0.25	2.01	115.802	300.675	301.355	75.557	52.658	76.329	85.554	1451.533	1423.683	1872.954	1839.41
20160507:02:24:11	23.861	12.815	4.68	23.517	0.25	2.121	0.25	2.016	115.771	300.588	301.303	75.51	52.638	76.267	85.519	1452.877	1425.069	1874.687	1841.201
20160507:02:29:11	23.859	12.812	4.621	23.519	0.25	2.126	0.25	2.027	115.761	300.645	301.327	75.462	52.637	76.213	85.478	1454.267	1426.38	1876.481	1842.895
20160507:02:34:11	23.85	12.82	4.535	23.517	0.25	2.119	0.25	2.037	115.77	300.692	301.365	75.44	52.655	76.196	85.437	1455.638	1427.749	1878.25	1844.664
20160507:02:39:11	23.849	12.808	4.491	23.519	0.25	2.122	0.25	2.015	115.736	300.728	301.343	75.389	52.645	76.142	85.399	1456.993	1429.1	1879.998	1846.41
20160507:02:44:11	23.851	12.099	4.536	23.517	0.25	2.103	0.25	2.004	113.725	300.667	301.328	75.34	52.66	76.115	85.355	1458.389	1430.417	1881.798	1848.111
20160507:02:49:11	23.852	12.502	4.508	23.52	0.25	2.113	0.25	2.006	114.871	300.629	301.294	75.27	52.643	76.077	85.313	1459.757	1431.788	1883.563	1849.882
20160507:02:54:11	23.848	12.749	4.426	23.523	0.25	2.119	0.25	2.029	114.569	300.708	301.33	75.223	52.639	76.009	85.268	1461.097	1433.112	1885.291	1851.59
20160507:02:59:11	23.851	12.765	4.457	23.524	0.25	2.126	0.25	2.031	115.618	300.69	301.329	75.205	52.636	75.992	85.224	1462.499	1434.493	1887.098	1853.374
20160507:03:04:11	23.843	12.773	4.342	23.524	0.25	2.122	0.25	2.044	115.629	300.668	301.289	75.162	52.64	75.921	85.183	1463.852	1435.809	1888.843	1855.073
20160507:03:09:11	23.84	12.773	4.283	23.525	0.25	2.127	0.25	2.031	115.623	300.673	301.314	75.125	52.633	75.89	85.142	1465.203	1437.175	1890.583	1856.836
20160507:03:14:11	23.838	12.82	4.246	23.525	0.25	2.135	0.25	2.029	115.75	300.699	301.342	75.107	52.656	75.869	85.106	1466.605	1438.521	1892.391	1858.573
20160507:03:19:11	23.833	12.863	4.159	23.527	0.25	2.13	0.25	2.025	115.862	300.697	301.328	75.055	52.64	75.815	85.065	1467.94	1439.845	1894.111	1860.282
20160507:03:24:11	23.836	12.902	4.18	23.529	0.25	2.138	0.25	2.019	115.974	300.655	301.316	75.024	52.663	75.79	85.025	1469.31	1441.213	1895.876	1862.047
20160507:03:29:11	23.831	12.939	4.121	23.528	0.25	2.135	0.25	2.025	116.07	300.678	301.3	74.936	52.644	75.749	84.981	1470.713	1442.537	1897.683	1863.756
20160507:03:34:11	23.828	12.932	4.092	23.527	0.25	2.131	0.25	2.015	116.045	300.677	301.314	74.901	52.661	75.696	84.94	1472.064	1443.915	1899.424	1865.534
20160507:03:39:11	23.83	12.903	4.11	23.528	0.25	2.138	0.25	2.029	115.968	300.697	301.323	74.878	52.657	75.668	84.9	1473.438	1445.234	1901.194	1867.235
20160507:03:44:11	23.833	12.164	4.15	23.527	0.25	2.12	0.25	2.026	113.887	300.621	301.268	74.827	52.639	75.579	84.859	1474.815	1446.608	1902.969	1869.008
20160507:03:49:11	23.828	12.57	4.087	23.527	0.25	2.11	0.25	2.014	115.028	300.628	301.277	74.812	52.651	75.55	84.822	1476.164	1447.941	1904.706	1870.727
20160507:03:54:11	23.82	12.823	3.915	23.532	0.25	2.131	0.25	2.027	115.731	300.708	301.312	74.765	52.647	75.501	84.779	1477.561	1449.272	1906.506	1872.444
20160507:03:59:11	23.818	12.836	3.89	23.532	0.25	2.135	0.25	2.041	115.767	300.718	301.361	74.737	52.651	75.471	84.737	1478.933	1450.633	1908.272	1874.199
20160507:04:04:11	23.817	12.93	3.91	23.53	0.25	2.133	0.25	2.043	116.022	300.73	301.306	74.705	52.666	75.44	84.696	1480.272	1451.956	1909.996	1875.904
20160507:04:09:11	23.815	12.998	3.839	23.533	0.25	2.143	0.25	2.038	116.206	300.663	301.28	74.602	52.641	75.388	84.655	1481.675	1453.338	1911.802	1877.686
20160507:04:14:11	23.818	13.018	3.833	23.536	0.25	2.139	0.25	2.029	116.264	300.737	301.339	74.547	52.641	75.34	84.612	1483.03	1454.655	1913.546	1879.383
20160507:04:19:11	23.811	13.099	3.759	23.534	0.25	2.141	0.25	2.038	116.474	300.7	301.313	74.49	52.644	75.248	84.566	1484.376	1456.039	1915.278	1881.167
20160507:04:24:11	23.811	13.092	3.758	23.535	0.25	2.142	0.25	2.038	116.456	300.69	301.3	74.391	52.637	75.175	84.521	1485.786	1457.355	1917.093	1882.863
20160507:04:29:11	23.811	13.123	3.74	23.536	0.25	2.147	0.25	2.047	116.539	300.76	301.325	74.342	52.632	75.135	84.469	1487.13	1458.707	1918.822	1884.605
20160507:04:34:11	23.809	13.126	3.755	23.533	0.25	2.141	0.25	2.034	116.545	300.706	301.3	74.267	52.613	75.078	84.413	1488.496	1460.078	1920.58	1886.372
20160507:04:39:11	23.809	13.111	3.749	23.533	0.25	2.141	0.25	2.033	116.505	300.72	301.298	74.202	52.613	75.013	84.354	1489.899	1461.394	1922.383	1888.068
20160507:04:44:11	23.811	12.342	3.76	23.534	0.25	2.129	0.25	2.039	114.364	300.711	301.342	74.145	52.602	74.914	84.293	1491.249	1462.775	1924.12	1889.846
20160507:04:49:11	23.812	12.054	3.734	23.537	0.25	2.126	0.25	2.023	113.536	300.612	301.277	74.04	52.602	74.862	84.233	1492.623	1464.096	1925.887	1891.547
20160507:04:54:11	23.811	12.694	3.766	23.534	0.25	2.121	0.25	2.032	115.355	300.609	301.265	73.991	52.591	74.817	84.17	1494.003	1465.478	1927.661	1893.327
20160507:04:59:11	23.81	12.878	3.752	23.534	0.25	2.139	0.25	2.035	115.87	300.703	301.344	73.942	52.609	74.769	84.108	1495.351	1466.786	1929.394	1895.011
20160507:05:04:11	23.806	12.891	3.731	23.532	0.25	2.133	0.25	2.025	115.898	300.648	301.333	73.903	52.594	74.717	84.046	1496.751	1468.154	1931.194	1896.773
20160507:05:09:11	23.802	12.917	3.684	23.531	0.25	2.136	0.25	2.029	115.965	300.604	301.245	73.863	52.584	74.606	83.983	1498.124	1469.511	1932.959	1898.519
20160507:05:14:11	23.802	12.955	3.639	23.534	0.25	2.133	0.25	2.03	116.068	300.672	301.287	73.82	52.577	74.565	83.928	1499.465	1470.831	1934.683	1900.218
20160507:05:19:11	23.798	12.965	3.608	23.532	0.25	2.128	0.25	2.03	116.089	300.695	301.305	73.753	52.588	74.528	83.872	1500.866	1472.201	1936.483	1901.981
20160507:05:24:11	23.798	12.965	3.597	23.533	0.25	2.134	0.25	2.028	116.09	300.684	301.303	73.681	52.581	74.484	83.815	1502.218	1473.527	1938.22	1903.688
20160507:05:29:11	23.799	12.943	3.583	23.535	0.25	2.132	0.25	2.033	116.032	300.693	301.263	73.637	52.569	74.424	83.76	1503.572	1474.91	1939.961	1905.468
20160507:05:34:11	23.799	12.958	3.534	23.539	0.25	2.138	0.25	2.042	116.074	300.711	301.311	73.589	52.55	74.352	83.704	1504.978	1476.228	1941.767	1907.164
20160507:05:39:11	23.801	12.952	3.564	23.539	0.25	2.148	0.25	2.037	116.059	300.717	301.319	73.538	52.54	74.297	83.652	1506.325	1477.602	1943.496	1908.93
20160507:05:44:11	23.797	12.933	3.503	23.54	0.25	2.14	0.25	2.039	116	300.691	301.309	73.5	52.539	74.26	83.597

Time: day:hh:mm:ss	Stack Pressure: in-Hg	Sat% H2O: Percent	Static: in-H2O	Barometric: in-Hg	Flowmeter1: l/min	Vacuum1: in-Hg	Flowmeter2: l/min	Vacuum2: in-Hg	Stack Temp: degF	Sorbent Temp: degF	Probe Temp: degF	DGM#1 Temp: degF	Condenser Temp: degF	DGM#2 Temp: degF	DAQ Temp: degF	DGM1*: liters STP	DGM2*: liters STP	DGM1: liters nominal	DGM2: liters nominal
2016\0507:09:34:11	23.842	12.577	4.155	23.536	0.25	2.101	0.25	2.001	115.079	300.673	301.241	73.029	52.399	73.703	82.632	1570.653	1540.877	2026.007	1990.203
2016\0507:09:39:11	23.844	12.584	4.19	23.536	0.25	2.098	0.25	1.995	115.102	300.652	301.228	73.121	52.41	73.795	82.663	1572.028	1542.241	2027.772	1991.957
2016\0507:09:44:11	23.841	12.583	4.116	23.538	0.25	2.101	0.25	1.979	115.095	300.685	301.259	73.141	52.406	73.815	82.692	1573.373	1543.556	2029.498	1993.647
2016\0507:09:49:11	23.836	12.6	4.048	23.538	0.25	2.101	0.25	1.987	115.134	300.706	301.317	73.168	52.396	73.842	82.723	1574.773	1544.934	2031.294	1995.417
2016\0507:09:54:11	23.838	12.61	4.071	23.539	0.25	2.091	0.25	1.992	115.168	300.714	301.324	73.198	52.412	73.871	82.754	1576.124	1546.249	2033.03	1997.107
2016\0507:09:59:11	23.837	12.609	4.063	23.538	0.25	2.092	0.25	2.002	115.162	300.672	301.275	73.212	52.39	73.886	82.785	1577.47	1547.625	2034.757	1998.876
2016\0507:10:04:11	23.839	12.651	4.061	23.54	0.25	2.097	0.25	2	115.283	300.692	301.309	73.253	52.408	73.925	82.814	1578.87	1548.941	2036.554	2000.568
2016\0507:10:09:11	23.834	12.735	3.994	23.54	0.25	2.104	0.25	1.998	115.509	300.644	301.256	73.262	52.394	73.936	82.848	1580.208	1550.309	2038.272	2002.325
2016\0507:10:14:11	23.839	12.745	4.071	23.54	0.25	2.099	0.25	2.002	115.545	300.662	301.263	73.297	52.419	73.978	82.879	1581.582	1551.642	2040.035	2004.039
2016\0507:10:19:11	23.834	12.652	3.735	23.56	0.25	2.123	0.25	2.014	115.272	300.628	301.252	73.286	52.407	73.975	82.906	1582.963	1552.977	2041.807	2005.754
2016\0507:10:24:11	23.828	11.828	3.534	23.568	0.25	2.12	0.25	2.012	112.897	300.648	301.294	73.315	52.453	74.018	82.933	1584.312	1554.344	2043.537	2007.509
2016\0507:10:29:11	23.828	11.817	3.467	23.573	0.25	2.116	0.25	2.008	112.863	300.625	301.276	73.314	52.44	74.019	82.957	1585.715	1555.664	2045.335	2009.203
2016\0507:10:34:11	23.828	12.142	3.486	23.571	0.25	2.122	0.25	2.005	113.8	300.606	301.252	73.31	52.433	74.014	82.981	1587.074	1557.04	2047.078	2010.97
2016\0507:10:39:11	23.828	12.748	3.452	23.574	0.25	2.124	0.25	2.028	115.536	300.726	301.278	73.351	52.454	74.054	83.006	1588.411	1558.359	2048.793	2012.664
2016\0507:10:44:11	23.829	12.778	3.502	23.572	0.25	2.122	0.25	2.023	115.622	300.743	301.299	73.359	52.456	74.046	83.029	1589.821	1559.743	2050.6	2014.44
2016\0507:10:49:11	23.83	12.771	3.477	23.574	0.25	2.134	0.25	2.025	115.604	300.715	301.317	73.338	52.423	74.046	83.051	1591.154	1561.058	2052.309	2016.128
2016\0507:10:54:11	23.835	12.771	3.553	23.574	0.25	2.133	0.25	2.024	115.612	300.757	301.36	73.369	52.459	74.126	83.07	1592.528	1562.425	2054.07	2017.883
2016\0507:10:59:11	23.842	12.724	3.644	23.574	0.25	2.131	0.25	2.041	115.49	300.732	301.319	73.366	52.426	74.095	83.085	1593.917	1563.753	2055.852	2019.588
2016\0507:11:04:11	23.841	12.705	3.678	23.57	0.25	2.133	0.25	2.033	115.435	300.734	301.33	73.36	52.409	74.06	83.098	1595.263	1565.096	2057.578	2021.312
2016\0507:11:09:11	23.849	12.688	3.784	23.57	0.25	2.127	0.25	2.027	115.401	300.708	301.273	73.352	52.406	74.053	83.109	1596.666	1566.466	2059.376	2023.071
2016\0507:11:14:11	23.848	12.691	3.836	23.566	0.25	2.127	0.25	2.044	115.409	300.706	301.298	73.341	52.366	74.042	83.116	1598.036	1567.786	2061.133	2024.767
2016\0507:11:19:11	23.843	12.687	3.816	23.563	0.25	2.124	0.25	2.037	115.389	300.72	301.309	73.342	52.374	74.044	83.125	1599.373	1569.161	2062.848	2026.532
2016\0507:11:24:11	23.85	12.678	3.887	23.564	0.25	2.136	0.25	2.026	115.375	300.72	301.382	73.408	52.4	74.121	83.131	1600.779	1570.479	2064.652	2028.226
2016\0507:11:29:11	23.849	12.66	3.87	23.564	0.25	2.133	0.25	2.031	115.322	300.703	301.33	73.423	52.418	74.152	83.136	1602.119	1571.862	2066.37	2030.002
2016\0507:11:34:11	23.852	12.6	4.012	23.557	0.25	2.122	0.25	2.023	115.16	300.653	301.314	73.448	52.409	74.16	83.143	1603.48	1573.18	2068.117	2031.695
2016\0507:11:39:11	23.848	12.572	3.951	23.558	0.25	2.127	0.25	2.015	115.075	300.669	301.299	73.467	52.411	74.174	83.151	1604.878	1574.545	2069.911	2033.449
2016\0507:11:44:11	23.848	12.554	3.89	23.562	0.25	2.123	0.25	2.026	115.025	300.673	301.316	73.476	52.405	74.188	83.157	1606.222	1575.873	2071.635	2035.156
2016\0507:11:49:11	23.843	12.546	3.867	23.559	0.25	2.118	0.25	2.029	114.995	300.624	301.246	73.478	52.407	74.192	83.165	1607.604	1577.213	2073.409	2036.878
2016\0507:11:54:11	23.847	12.511	4.01	23.552	0.25	2.113	0.25	2.016	114.902	300.615	301.265	73.479	52.403	74.202	83.175	1608.972	1578.582	2075.165	2038.637
2016\0507:11:59:11	23.851	12.485	4.022	23.555	0.25	2.12	0.25	2.012	114.833	300.652	301.278	73.495	52.396	74.207	83.188	1610.32	1579.9	2076.894	2040.331
2016\0507:12:04:11	23.851	12.479	4.067	23.552	0.25	2.114	0.25	2.002	114.818	300.715	301.278	73.554	52.411	74.255	83.201	1611.723	1581.275	2078.696	2042.098
2016\0507:12:09:11	23.852	12.461	4.019	23.556	0.25	2.113	0.25	2.005	114.768	300.72	301.349	73.574	52.409	74.263	83.216	1613.075	1582.591	2080.431	2043.789
2016\0507:12:14:11	23.849	12.457	3.96	23.558	0.25	2.11	0.25	2.014	114.751	300.746	301.341	73.581	52.398	74.264	83.233	1614.423	1583.976	2082.161	2045.57
2016\0507:12:19:11	23.848	12.499	3.905	23.561	0.25	2.126	0.25	2.022	114.868	300.758	301.358	73.584	52.394	74.264	83.251	1615.824	1585.293	2083.959	2047.261
2016\0507:12:24:11	23.845	12.501	3.824	23.564	0.25	2.124	0.25	2.023	114.87	300.649	301.265	73.609	52.401	74.286	83.265	1617.165	1586.658	2085.68	2049.015
2016\0507:12:29:11	23.844	12.507	3.784	23.566	0.25	2.115	0.25	2.007	114.884	300.673	301.259	73.643	52.427	74.329	83.283	1618.539	1587.984	2087.443	2050.72
2016\0507:12:34:11	23.845	12.529	3.797	23.565	0.25	2.118	0.25	2.014	114.948	300.615	301.234	73.644	52.42	74.338	83.301	1619.921	1589.324	2089.217	2052.442
2016\0507:12:39:11	23.854	12.52	3.942	23.564	0.25	2.117	0.25	2.015	114.937	300.63	301.255	73.647	52.411	74.347	83.319	1621.27	1590.694	2090.948	2054.201
2016\0507:12:44:11	23.859	12.528	4.012	23.564	0.25	2.117	0.25	2	114.967	300.676	301.317	73.698	52.447	74.433	83.343	1622.667	1592.006	2092.741	2055.887
2016\0507:12:49:11	23.862	12.506	4.069	23.563	0.25	2.123	0.25	2.011	114.91	300.706	301.376	73.708	52.416	74.459	83.363	1624.028	1593.376	2094.487	2057.648
2016\0507:12:54:11	23.861	12.484	3.971	23.569	0.25	2.113	0.25	2.023	114.847	300.649	301.317	73.712	52.405	74.463	83.385	1625.363	1594.694	2096.2	2059.342
2016\0507:12:59:11	23.855	12.498	4.01	23.561	0.25	2.112	0.25	2.014	114.877	300.675	301.312	73.803	52.417	74.521	83.408	1626.769	1596.071	2098.006	2061.113
2016\0507:13:04:11	23.856	12.486	3.963	23.565	0.25	2.109	0.25	2.007	114.845	300.697	301.325	73.821	52.41	74.531	83.435	1628.099	1597.386	2099.713	2062.803
2016\0507:13:09:11	23.856	12.475	3.912	23.568	0.25	2.115	0.25	2.011	114.811	300.638	301.261	73.829	52.39	74.538	83.463	1629.47	1598.761	2101.472	2064.57
2016\0507:13:14:11	23.853	12.475	3.861	23.57	0.25	2.126	0.25	2.025	114.809	300.687	301.305	73.872	52.412	74.576	83.488	1630.86	1600.08	2103.257	2066.265
2016\0507:13:19:11	23.852	12.482	3.836	23.57	0.25	2.125	0.25	2.02	114.825	300.693	301.318	73.871	52.406	74.575	83.512	1632.204	1601.428	2104.981	2067.998
2016\0507:13:24:11	23.853	12.493	3.852	23.57	0.25	2.124	0.25	2.022	114.861	300.693	301.328	73.891	52.412	74.604	83.533	1633.599	1602.796	2106.772	2069.756
2016\0507:13:29:11	23.854	12.495	3.878	23.569	0.25	2.125	0.25	2.026	114.867	300.69	301.373	73.925	52.417	74.643	83.555	1634.974	1604.107	2108.537	2071.442
2016\0507:13:34:11	23.858	12.465	3.929	23.569	0.25	2.123	0.25	2.015	114.788	300.717	301.372	73.925	52.409	74.638	83.572	1636.312	1605.482	2110.256	2073.209
2016\0507:13:39:11	23.856	12.458	3.867	23.571	0.25	2.115	0.25	2.022	114.763	300.715	301.35	73.925	52.4	74.632	83.592	1637.71	1606.803	2112.05	2074.906
2016\0507:13:44:11	23.861	12.47	4.063	23.563	0.25	2.106	0.25	2.016	114.807	300.747	301.398	73.974	52.441	74.715	83.611	1639.053	1608.184	2113.774	2076.682
2016\0507:13:49:11	23.868	12.453	4.158	23.562	0.25	2.117	0.25	2.02	114.769	300.708	301.4	73.979	52.409	74.726	83.628	1640.404	1609.504	2115.509	2078.38
2016\0507:13:54:11	23.865	12.456	4.044	23.568	0.25	2.129	0.25	2.035	114.773	300.683	301.288	73.98	52.404	74.728	83.647	1641.806	1610.874	2117.309	2080.141
2016\0507:13:59:11	23.862	12.226	4.008	23.567	0.25	2.111	0.25	2.024	114.101	300.671	301.32	73.981	52.369	74.723	83.664	1643.153	1612.2	2119.039	2081.846
2016\0507:14:04:11	23.864	12.472	4.074	23.564	0.25	2.11	0.25	2.017	114.814	300.698	301.383	74.028	52.405	74.776	83.677	1644.526	1613.54	2120.802	2083.57
2016\0507:14:09:11	23.866	12.588	4.083	23.565	0.25	2.122	0.25	2.012	115.145	300.698	301.315	74.039	52.407	74.797	83.696	1645.9	1614.911	2122.567	2085.333
2016\0507:14:14:11	23.871	12.626	4.2	23.563	0.25	2.119	0.25	2.028	115.259	300.695	301.329	74.042	52.401	74.806	83.716	1647.248	1616.226	2124.298	2087.024
2016\0507:14:19:11	23.872	12.598	4.224	23.562	0.25	2.113	0.25	2.013	115.183	300.721	301.332	74.07	52.367	74.818	83.734	1648.65	1617.597	2126.098	2088.788
2016\0507:14:24:11	23.874	12.627	4.185	23.567	0.25	2.115	0.25	2.025	115.267	300.722	301.359	74.176	52.408	74.874	83.755	1650.006	1618.914	2127.841	2090.481
2016\0507:14:29:11	23.867	12.698	4.072	23.568	0.25	2.125	0.25	2.027	115.454	300.681	301.332	74.188	52.403	74.877	83.777	1651.347	1620.298	2129.563	2092.261
2016\0507:14:34:11	23.866	12.699	4.156	23.56	0.25	2.125	0.25	2.023	115.458	300.681	301.287	74.206	52.4	74.888	83.799	1652.752	1621.615	2131.369	2093.955
2016\0507:14:39:11	23.871	12.675	4.288	23.556	0.25	2.123	0.25	2.019	115.399	300.693	301.306	74.258	52.411	74.937	83.826	1654.092	1622.979	2133.091	2095.711
2016\0507:14:44:11	23.875	12.695	4.382	23.552	0.25	2.121	0.25	2.03	115.457	300.69	301.326	74.26	52.407	74.944	83.848	1655.462	1624.306	2134.852	2097.419
2016\0507:14:49:11	23.871	12.636	4.373	23.549	0.25	2.119	0.25	2.016	115.288	300.717	301.344	74.287	52.396	75.011	83.874	1656.858	1625.645	2136.646	2099.143
2016\0507:14:54:11	23.874	12.345	4.288	23.558	0.25	2.125	0.25	2.015	114.458	300.735	301.376	74.32	52.41	75.076	83.9	1658.195	1627.009	2138.365	2100.898
2016\0507:14:59:11	23.875	11.621	4.326	23.557	0.25	2.107	0.25	1.993	112.349	300.625	301.298	74.325	52.389	75.087	83.929	1659.587	1628.325	2140.154	2102.592
2016\0507:15:04:11	23.872	11.569	4.423	23.547	0.25	2.095	0.25	1.979	112.187	300.678	301.323	74.406	52.417	75.148	83.958	1660.961	1629.704	2141.92	2104.368
2016\0507:15:09:11	23.876	11.965	4.415	23.551	0.25	2.104	0.25	1.994	113.354	300.644	301.283	74.418	52.394	75.147	83.989	1662.302	1631.017	2143.644	2106.058
2016\0507:15:14:11	23.881	12.442	4.568	23.545	0.25	2.112	0.25	2.006	114.756	300.732	301.33	74.494	52.405	75.189	84.022	1663.701	1632.393	2145.444	2107.831
2016\0507:15:19:11	23.883	12.536	4.622	23.544	0.25	2.119	0.25	1.998	115.025	300.72	301.281	74.551	52.416	75.229	84.058	1665.051	1633.706	2147.181	2109.523
2016\0507:15:24:11	23.883	12.553	4.574	23.547	0.25	2.122	0.25	2.003	115.074	300.712	301.308	74.596	52.426	75.27	84.091	1666.403	1635.073	2148.92	2111.284
2016\0507:15:29:11	23.882	12.617	4.495	23.551	0.25	2.124	0.25	2.013	115.252	300.751	301.324	74.65	52.413	75.322	84.129	1667.802	1636.42	2150.72	2113.019
2016\0507:15:34:11	23.881	12.653	4.53	23.548	0.25	2.121	0.25	2.014	115.352	300.761	301.368	74.71	52.422	75.384	84.166	1669.139	1637.744	2152.441	2114.724
2016\0507:15:39:11	23.882	12.661	4.565	23.546	0.25	2.117	0.25	2.031	115.375	300.779	301.344	74.751	52.437	75.427	84.205	1670.51	1639.112	2154.206	2116.487
2016\0507:15:44:11	23.886	12.668	4.638	23.545	0.25	2.124	0.25	2.017	115.4	300.732	301.35	74.766	52.42	75.442	84.244	1671.896	1640.434	2155.989	2118.19
2016\0507:15:49:11	23.88	12.74	4.541	23.546	0.25	2.127	0.25	2.03	115.592	300.685	301.284	74.814	52.43	75.49	84.281	1673.241	1641.81	2157.72	2119.964
2016\0507:15:54:11	23.881	12.71	4.607	23.542	0.25	2.127	0.25	2.034	115.509	300.666	301.286	74.833	52.425	75.508	84.323	1674.632	1643.129	2159.511	2121.664
2016\0507:15:59:11	23.88	12.704	4.557	23.545	0.25	2.135	0.25	2.035	115.492	300.733	301.33	74.878	52.448	75.553	84.363	1676.007	1644.51	2161.281	2123.444
2016\0507:16:04:11	23.876	12.732	4.501	23.545	0.25	2.123	0.25	2.024	115.565	300.738	301.32	74.903	52.45	75.579	84.402	1677.345	1645.827	2163.004	2125.141
2016\0507:16:09:11	23.874	12.769	4.478	23.545	0.25	2.115	0.25	2.016	115.663	300.696	301.332	74.933	52.449	75.605	84.444	1678.745	1647.174	2164.806	2126.878
2016\0507:16:14:11	23.877	12.743	4.493	23.546	0.25	2.124	0.25	2.021	115.595	300.684	301.351	75.03	52.487	75.707	84.481	1680.092	1648.54	2166.541	2128.639
2016\0507:16:19:11	23.878	12.688	4.437	23.552	0.25	2.127	0.25	2.016	115.445	300.663	301.289	75.016	52.442	75.706	84.518	1681.447	1649.854	2168.285	2130.333
2016\0507:16:24:11	23.878	12.67	4.495	23.547	0.25	2.115	0.25	2.012	115.393	300.645	301.273	75.069	52.472	75.761	84.549	1682.847	1651.226	2170.087	2132.102
2016\0507:16:29:11	23.877	12.628	4.452	23.549	0.25	2.122	0.25	2.013	115.275	300.694	301.285	75.066	52.446	75.764	84.584	1684.182	1652.541	2171.806	2133.797
2016\0507:16:34:11	23.877	12.612	4.453	23.549	0.25	2.125	0.25	2.021	115.229	300.669	301.343	75.105	52.468	75.804	84.616	1685.558	1653.922	2173.578	2135.577
2016\0507:16:39:11	23.878	12.586	4.466	23.55	0.25	2.131	0.25	2.03	115.159	300.677	301.334	75.105	52.444	75.8	84.648	1686.953	1655.234	2175.374	2137.269
2016\0507:16:44:11	23.877	12.595	4.467	23.549	0.25	2.121	0.25	2.027	115.182	300.685	301.378	75.146	52.456	75.83	84.681	1688.292	1656.601	2177.098	2139.032
2016\0507:16:49:11	23.872	12.578	4.414	23.548	0.25	2.121	0.25	2.038	115.127	300.723	301.37	75.158	52.454	75.833	84.709	1689.681	1657.947	2178.887	2140.767
2016\0507:16:54:11	23.873	12.573	4.396	23.55	0.25	2.128	0.25	2.023	115.114	300.75	301.407	75.182	52.459	75.859	84.738	1691.05	1659.269	2180.65	2142.472
2016\0507:16:59:11	23.873	12.583	4.374	23.551	0.25	2.133	0.25	2.04	115.144	300.785	301.392	75.201	52.462	75.882	84.765	1692.393	1660.635	2182.38	2144.233
2016\0507:17:04:11	23.873	12.492	4.363	23.552	0.25	2.131	0.25	2.022	114.881	300.703	301.329	75.187	52.445	75.874	84.79	1693.797	1661.956	2184.187	2145.936
2016\0507:17:09:11	23.873	11.704	4.359	23.553	0.25	2.12	0.25	2.007	112.592	300.697	301.382	75.219	52.465	75.907	84.815	1695.153	1663.332	2185.933	2147.711
2016\0507:17:14:11	23.873	11.655	4.39	23.55	0.25	2.108	0.25	2.004	112.447	300.67	301.36	75.227	52.468	75.913	84.836	1696.496	1664.646	2187.663	2149.404
2016\0507:17:19:11	23.872	11.563	4.363	23.551	0.25	2.1	0.25	2	112.166	300.659	301.352	75.219	52.461	75.915	84.855	1697.911	1666.025	2189.485	2151.182
2016\0507:17:24:11	23.869	12.379	4.312	23.551	0.25	2.119	0.25	2.012	114.559	300.73	301.38	75.246	52.481	75.946	84.875	1699.247	1667.339	2191.206	2152.878
2016\0507:17:29:11	23.869	12.459	4.318	23.551	0.25	2.121	0.25	2.023	114.785	300.756	301.434	75.277	52.489	75.986	84.895	1700.613	1668.689	2192.965	2154.618
2016\0507:17:34:11	23.867	12.475	4.32	23.55	0.25	2.122	0.25	2.021	114.828	300.823	301.441	75.274	52.465	75.966	84.916	1702.007	1670.055	2194.761	2156.38
2016\0507:17:39:11	23.87	12.463	4.342	23.551	0.25	2.123	0.25	2.021	114.799	300.803	301.418	75.274	52.452	75.952	84.935	1703.349	1671.371	2196.489	2158.077
2016\0507:17:44:12	23.869	12.489	4.293	23.553	0.25	2.123	0.25	2.021	114.872	300.774	301.37	75.376	52.484	76.049	84.951	1704.729	1672.745	2198.267	2159.85
2016\0507:17:49:12	23.872	12.474	4.369	23.551	0.25	2.127	0.25	2.025	114.832	300.754	301.379	75.382	52.472	76.053	84.97	1706.103	1674.061	2200.037	2161.547
2016\0507:17:54:12	23.874	12.462	4.359	23.554	0.25	2.123	0.25	2.014	114.804	300.741	301.352	75.379	52.451	76.054	84.987	1707.45	1675.436	2201.772	2163.32
2016\0507:17:59:12	23.875	12.564	4.349	23.555	0.25	2.126	0.25	2.023	115.092	300.758	301.338	75.383	52.442	76.057	85.006	1708.846	1676.749	2203.57	2165.013
2016\0507:18:04:12	23.875	12.575	4.389	23.552	0.25	2.131	0.25	2.025	115.123	300.805	301.375	75.436	52.468	76.107	85.022	1710.215	1678.115	2205.333	2166.774
2016\0507:18:09:12	23.876	12.612	4.396	23.552	0.25	2.138	0.25	2.031	115.227	300.744	301.339	75.438	52.466	76.111	85.033	1711.553	1679.46	2207.057	2168.509
2016\0507:18:14:12	23.875	12.595	4.416	23.551	0.25	2.138	0.25	2.025	115.177	300.746	301.335	75.438	52.46	76.111	85.05	1712.95	1680.781	2208.857	2170.214
2016\0507:18:19:12	23.873	11.91	4.403	23.55	0.25	2.122	0.25	2.018	113.205	300.674	301.315	75.439	52.451	76.114	85.065	1714.301	1682.147	2210.598	2171.976
2016\0507:18:24:12	23.873	11.81	4.407	23.549	0.25	2.114	0.25	2.013	112.908	300.724	301.389	75.476	52.466	76.152	85.082	1715.658	1683.467	2212.346	2173.679
2016\0507:18:29:12	23.869	11.698	4.345	23.549	0.25	2.106	0.25	2	112.565	300.744	301.382	75.52	52.492	76.179	85.101	1717.059	1684.843	2214.152	2175.455
2016\0507:18:34:12	23.865	12.571	4.235	23.553	0.25	2.121	0.25	2.009	115.096	300.726	301.344	75.531	52.47	76.187	85.119	1718.393	1686.156	2215.87	2177.148
2016\0507:18:39:12	23.864	12.612	4.223	23.554	0.25	2.114	0.25	2.033	115.212	300.739	301.342	75.534	52.468	76.188	85.136	1719.763	1687.539	2217.635	2178.932
2016\0507:18:44:12	23.865	12.656	4.232	23.553	0.25	2.109	0.25	2.029	115.335	300.779	301.37	75.581	52.552	76.236	85.157	1721.15	1688.853	2219.422	2180.628
2016\0507:18:49:12	23.868	12.679	4.241	23.556	0.25	2.119	0.25	2.026	115.405	300.784	301.36	75.588	52.552	76.239	85.179	1722.492	1690.2	2221.152	2182.365
2016\0507:18:54:12	23.868	12.691	4.213	23.559	0.25	2.126	0.25	2.029	115.437	300.664	301.27	75.593	52.504	76.239	85.202	1723.882	1691.567	2222.943	2184.128
2016\0507:18:59:12	23.869	12.689	4.193	23.561	0.25	2.123	0.25	2.016	115.434	300.755	301.352	75.678	52.577	76.302	85.223	1725.251	1692.881	2224.706	2185.823
2016\0507:19:04:12	23.866	12.667	4.124	23.563	0.25	2.118	0.25	2.018	115.368	300.735	301.34	75.66	52.553	76.294	85.247	1726.592	1694.253	2226.433	2187.592
2016\0507:19:09:12	23.863	12.714	4.055	23.565	0.25	2.117	0.25	2.012	115.493	300.748	301.376	75.645	52.499	76.285	85.27	1727.994	1695.569	2228.239	2189.289
2016\0507:19:14:12	23.859	12.798	3.996	23.565	0.25	2.119	0.25	2.016	115.721	300.777	301.393	75.719	52.577	76.384	85.298	1729.346	1696.944	2229.981	2191.064
2

Time: day:hh:mm:ss	Stack Pressure: in-Hg	Sat% H2O: Percent	Static: in-H2O	Barometric: in-Hg	Flowmeter1: l/min	Vacuum1: in-Hg	Flowmeter2: l/min	Vacuum2: in-Hg	Stack Temp: degF	Sorbent Temp: degF	Probe Temp: degF	DGM#1 Temp: degF	Condenser Temp: degF	DGM#2 Temp: degF	DAQ Temp: degF	DGM1*: liters STP	DGM2*: liters STP	DGM1: liters nominal	DGM2: liters nominal
20160507:23:14:12	23.793	12.692	3.001	23.572	0.25	2.137	0.25	2.03	115.328	300.669	301.32	74.372	52.565	75.135	84.365	1795.042	1761.527	2314.493	2274.25
20160507:23:19:12	23.792	12.666	2.982	23.573	0.25	2.133	0.25	2.025	115.254	300.718	301.354	74.339	52.538	75.093	84.332	1796.443	1762.842	2316.293	2275.942
20160507:23:24:12	23.79	12.639	2.944	23.574	0.25	2.134	0.25	2.027	115.176	300.766	301.382	74.316	52.545	75.063	84.299	1797.781	1764.228	2318.011	2277.724
20160507:23:29:12	23.789	12.622	2.912	23.575	0.25	2.134	0.25	2.02	115.126	300.702	301.34	74.281	52.52	74.999	84.263	1799.155	1765.537	2319.776	2279.408
20160507:23:34:12	23.788	12.657	2.901	23.575	0.25	2.133	0.25	2.034	115.224	300.702	301.354	74.258	52.53	74.945	84.232	1800.55	1766.898	2321.567	2281.158
20160507:23:39:12	23.787	12.657	2.889	23.574	0.25	2.125	0.25	2.014	115.222	300.756	301.341	74.224	52.529	74.918	84.197	1801.894	1768.261	2323.293	2282.91
20160507:23:44:12	23.784	12.664	2.873	23.573	0.25	2.126	0.25	2.024	115.237	300.826	301.408	74.182	52.504	74.878	84.16	1803.285	1769.581	2325.08	2284.607
20160507:23:49:12	23.784	12.712	2.888	23.572	0.25	2.126	0.25	2.028	115.372	300.764	301.349	74.111	52.5	74.839	84.123	1804.657	1770.954	2326.841	2286.372
20160507:23:54:12	23.785	12.724	2.907	23.571	0.25	2.122	0.25	2.028	115.406	300.806	301.365	74.061	52.502	74.82	84.082	1806.001	1772.28	2328.567	2288.077
20160507:23:59:12	23.785	12.716	2.925	23.57	0.25	2.118	0.25	2.027	115.383	300.763	301.293	73.987	52.468	74.763	84.04	1807.399	1773.664	2330.361	2289.857
20160508:00:04:12	23.784	12.726	2.9	23.571	0.25	2.119	0.25	2.025	115.411	300.766	301.391	73.931	52.438	74.706	83.995	1808.752	1774.979	2332.098	2291.547
20160508:00:09:12	23.779	12.732	2.848	23.57	0.25	2.129	0.25	2.031	115.418	300.752	301.357	73.91	52.457	74.666	83.953	1810.105	1776.353	2333.835	2293.314
20160508:00:14:12	23.781	12.696	2.877	23.569	0.25	2.122	0.25	2.022	115.322	300.714	301.293	73.872	52.462	74.595	83.908	1811.508	1777.681	2335.635	2295.021
20160508:00:19:12	23.777	12.658	2.84	23.568	0.25	2.122	0.25	2.011	115.211	300.686	301.315	73.83	52.44	74.554	83.863	1812.847	1779.022	2337.354	2296.744
20160508:00:24:12	23.774	12.622	2.862	23.564	0.25	2.113	0.25	2.013	115.105	300.715	301.349	73.785	52.452	74.523	83.818	1814.222	1780.393	2339.119	2298.506
20160508:00:29:12	23.778	12.604	2.895	23.565	0.25	2.115	0.25	2.017	115.06	300.741	301.355	73.705	52.426	74.478	83.769	1815.604	1781.71	2340.893	2300.199
20160508:00:34:12	23.777	12.562	2.909	23.563	0.25	2.116	0.25	2.01	114.941	300.667	301.29	73.654	52.412	74.379	83.721	1816.95	1783.085	2342.62	2301.966
20160508:00:39:12	23.775	12.518	2.866	23.564	0.25	2.117	0.25	2.013	114.813	300.715	301.354	73.622	52.414	74.344	83.674	1818.347	1784.406	2344.413	2303.664
20160508:00:44:12	23.77	12.498	2.8	23.564	0.25	2.126	0.25	2.019	114.749	300.684	301.28	73.597	52.436	74.318	83.629	1819.711	1785.786	2346.163	2305.436
20160508:00:49:12	23.77	12.472	2.828	23.562	0.25	2.121	0.25	2.011	114.676	300.742	301.365	73.558	52.42	74.272	83.584	1821.043	1787.102	2347.872	2307.128
20160508:00:54:12	23.771	12.42	2.869	23.56	0.25	2.121	0.25	2.012	114.531	300.678	301.311	73.536	52.433	74.243	83.539	1822.45	1788.469	2349.678	2308.883
20160508:00:59:12	23.77	12.358	2.86	23.56	0.25	2.124	0.25	2.015	114.354	300.689	301.305	73.523	52.435	74.232	83.497	1823.783	1789.798	2351.389	2310.592
20160508:01:04:12	23.765	12.293	2.746	23.563	0.25	2.117	0.25	2.017	114.16	300.654	301.262	73.481	52.42	74.199	83.456	1825.15	1791.133	2353.143	2312.306
20160508:01:09:12	23.758	12.285	2.659	23.562	0.25	2.117	0.25	2.012	114.125	300.604	301.3	73.467	52.446	74.193	83.414	1826.54	1792.501	2354.926	2314.064
20160508:01:14:12	23.757	12.275	2.712	23.558	0.25	2.115	0.25	2.015	114.097	300.665	301.29	73.366	52.43	74.14	83.38	1827.878	1793.816	2356.643	2315.754
20160508:01:19:12	23.755	12.343	2.771	23.552	0.25	2.111	0.25	2.014	114.288	300.697	301.352	73.36	52.458	74.131	83.347	1829.274	1795.182	2358.433	2317.509
20160508:01:24:12	23.755	12.316	2.72	23.555	0.25	2.124	0.25	2.014	114.21	300.703	301.307	73.31	52.439	74.033	83.31	1830.633	1796.502	2360.178	2319.205
20160508:01:29:12	23.749	12.325	2.694	23.551	0.25	2.127	0.25	2.024	114.228	300.667	301.303	73.297	52.453	74.01	83.277	1831.965	1797.88	2361.887	2320.976
20160508:01:34:12	23.746	12.314	2.656	23.551	0.25	2.125	0.25	2.035	114.193	300.646	301.256	73.253	52.438	73.969	83.243	1833.373	1799.192	2363.693	2322.662
20160508:01:39:12	23.742	12.281	2.604	23.551	0.25	2.126	0.25	2.024	114.091	300.698	301.314	73.24	52.46	73.95	83.206	1834.703	1800.569	2365.4	2324.43
20160508:01:44:12	23.74	12.365	2.598	23.549	0.25	2.126	0.25	2.025	114.328	300.72	301.313	73.189	52.439	73.89	83.171	1836.076	1801.877	2367.161	2326.111
20160508:01:49:12	23.741	12.403	2.634	23.548	0.25	2.125	0.25	2.022	114.437	300.629	301.206	73.151	52.452	73.861	83.136	1837.466	1803.235	2368.944	2327.855
20160508:01:54:12	23.739	12.33	2.631	23.545	0.25	2.113	0.25	2.016	114.225	300.622	301.181	73.081	52.434	73.815	83.1	1838.81	1804.59	2370.669	2329.596
20160508:01:59:12	23.736	12.309	2.647	23.542	0.25	2.116	0.25	2.008	114.163	300.661	301.187	73.035	52.452	73.768	83.064	1840.204	1805.908	2372.457	2331.289
20160508:02:04:12	23.737	12.316	2.713	23.537	0.25	2.115	0.25	2.003	114.184	300.557	301.145	72.982	52.451	73.702	83.026	1841.565	1807.273	2374.204	2333.043
20160508:02:09:12	23.742	12.149	2.792	23.537	0.25	2.109	0.25	2.011	113.702	300.543	301.159	72.931	52.422	73.654	82.985	1842.897	1808.592	2375.913	2334.739
20160508:02:14:12	23.74	11.311	2.766	23.537	0.25	2.096	0.25	1.999	111.207	300.543	301.195	72.92	52.447	73.642	82.946	1844.302	1809.968	2377.715	2336.506
20160508:02:19:12	23.744	11.195	2.779	23.539	0.25	2.082	0.25	1.995	110.851	300.568	301.229	72.868	52.422	73.59	82.906	1845.63	1811.28	2379.419	2338.192
20160508:02:24:12	23.742	11.422	2.74	23.54	0.25	2.085	0.25	1.986	111.53	300.604	301.293	72.833	52.412	73.572	82.867	1847.003	1812.654	2381.18	2339.957
20160508:02:29:12	23.738	11.964	2.694	23.54	0.25	2.098	0.25	1.997	113.164	300.669	301.279	72.752	52.41	73.53	82.824	1848.385	1813.967	2382.952	2341.643
20160508:02:34:12	23.732	12.035	2.594	23.541	0.25	2.108	0.25	2.016	113.364	300.655	301.252	72.717	52.396	73.494	82.787	1849.722	1815.336	2384.667	2343.4
20160508:02:39:12	23.728	12.117	2.582	23.538	0.25	2.106	0.25	2.014	113.596	300.7	301.277	72.694	52.423	73.472	82.748	1851.117	1816.662	2386.456	2345.103
20160508:02:44:12	23.728	12.162	2.563	23.54	0.25	2.113	0.25	2.026	113.727	300.696	301.288	72.643	52.4	73.375	82.709	1852.47	1818.001	2388.191	2346.823
20160508:02:49:12	23.723	12.174	2.488	23.54	0.25	2.107	0.25	2.012	113.753	300.697	301.307	72.632	52.434	73.355	82.67	1853.81	1819.37	2389.909	2348.581
20160508:02:54:12	23.726	12.212	2.551	23.538	0.25	2.112	0.25	2.018	113.868	300.651	301.23	72.581	52.412	73.304	82.627	1855.208	1820.68	2391.702	2350.263
20160508:02:59:12	23.725	12.184	2.563	23.537	0.25	2.118	0.25	2.014	113.786	300.662	301.272	72.547	52.426	73.272	82.585	1856.552	1822.045	2393.424	2352.015
20160508:03:04:12	23.73	12.203	2.638	23.536	0.25	2.117	0.25	2.017	113.849	300.633	301.352	72.517	52.412	73.241	82.543	1857.925	1823.363	2395.185	2353.707
20160508:03:09:12	23.726	12.234	2.562	23.538	0.25	2.12	0.25	2.011	113.933	300.634	301.258	72.413	52.401	73.184	82.502	1859.291	1824.735	2396.935	2355.468
20160508:03:14:12	23.726	12.185	2.534	23.54	0.25	2.121	0.25	2.018	113.786	300.645	301.256	72.387	52.399	73.155	82.457	1860.634	1826.046	2398.657	2357.15
20160508:03:19:12	23.724	11.265	2.503	23.54	0.25	2.105	0.25	2.005	111.04	300.618	301.274	72.354	52.409	73.118	82.413	1862.03	1827.424	2400.446	2358.919
20160508:03:24:12	23.72	11.2	2.431	23.541	0.25	2.104	0.25	1.999	110.835	300.637	301.277	72.303	52.382	73.03	82.369	1863.37	1828.731	2402.163	2360.596
20160508:03:29:12	23.715	11.085	2.395	23.539	0.25	2.103	0.25	1.995	110.465	300.619	301.292	72.268	52.389	72.986	82.323	1864.721	1830.1	2403.894	2362.353
20160508:03:34:12	23.715	12.002	2.414	23.538	0.25	2.11	0.25	2.002	113.242	300.626	301.217	72.228	52.391	72.941	82.279	1866.116	1831.431	2405.681	2364.06
20160508:03:39:12	23.711	12.062	2.353	23.538	0.25	2.111	0.25	2.013	113.413	300.683	301.245	72.143	52.375	72.886	82.235	1867.455	1832.765	2407.396	2365.773
20160508:03:44:12	23.713	12.087	2.391	23.537	0.25	2.114	0.25	2.012	113.487	300.73	301.307	72.075	52.379	72.826	82.185	1868.842	1834.135	2409.174	2367.53
20160508:03:49:12	23.711	12.088	2.37	23.537	0.25	2.112	0.25	2.01	113.488	300.657	301.256	72.018	52.378	72.746	82.135	1870.21	1835.449	2410.926	2369.214
20160508:03:54:12	23.708	12.114	2.357	23.535	0.25	2.118	0.25	2.023	113.558	300.679	301.264	71.965	52.369	72.692	82.081	1871.542	1836.817	2412.631	2370.97
20160508:03:59:12	23.709	12.237	2.378	23.534	0.25	2.127	0.25	2.044	113.915	300.72	301.279	71.914	52.362	72.642	82.025	1872.949	1838.135	2414.433	2372.66
20160508:04:04:12	23.707	12.219	2.39	23.532	0.25	2.13	0.25	2.032	113.863	300.645	301.216	71.875	52.368	72.603	81.968	1874.279	1839.511	2416.137	2374.425
20160508:04:09:12	23.705	12.26	2.355	23.532	0.25	2.125	0.25	2.031	113.975	300.617	301.251	71.788	52.362	72.548	81.908	1875.648	1840.823	2417.891	2376.107
20160508:04:14:12	23.701	12.267	2.326	23.53	0.25	2.122	0.25	2.015	113.991	300.685	301.294	71.717	52.363	72.48	81.85	1877.032	1842.201	2419.663	2377.874
20160508:04:19:12	23.702	12.216	2.367	23.528	0.25	2.117	0.25	2.009	113.845	300.627	301.248	71.67	52.362	72.406	81.789	1878.374	1843.506	2421.381	2379.547
20160508:04:24:12	23.702	12.214	2.39	23.527	0.25	2.106	0.25	2.004	113.841	300.574	301.214	71.623	52.358	72.361	81.732	1879.767	1844.875	2423.165	2381.303
20160508:04:29:12	23.697	11.767	2.314	23.527	0.25	2.102	0.25	2.007	112.503	300.603	301.24	71.586	52.347	72.329	81.675	1881.111	1846.201	2424.885	2383.004
20160508:04:34:12	23.699	11.733	2.376	23.524	0.25	2.098	0.25	1.995	112.401	300.61	301.266	71.559	52.337	72.298	81.623	1882.451	1847.537	2426.602	2384.716
20160508:04:39:12	23.698	12.181	2.413	23.521	0.25	2.121	0.25	2.008	113.738	300.652	301.272	71.532	52.339	72.265	81.572	1883.844	1848.894	2428.385	2386.457
20160508:04:44:12	23.7	12.186	2.448	23.52	0.25	2.115	0.25	2.025	113.754	300.675	301.244	71.511	52.353	72.239	81.524	1885.179	1850.206	2430.094	2388.139
20160508:04:49:12	23.7	12.182	2.462	23.519	0.25	2.124	0.25	2.02	113.744	300.592	301.215	71.406	52.347	72.184	81.475	1886.566	1851.568	2431.87	2389.885
20160508:04:54:12	23.699	12.18	2.456	23.518	0.25	2.121	0.25	2.016	113.737	300.628	301.223	71.365	52.326	72.111	81.428	1887.925	1852.879	2433.611	2391.566
20160508:04:59:12	23.693	12.191	2.351	23.52	0.25	2.127	0.25	2.021	113.759	300.66	301.293	71.341	52.343	72.068	81.381	1889.249	1854.256	2435.306	2393.331
20160508:05:04:12	23.69	12.181	2.346	23.518	0.25	2.125	0.25	2.028	113.726	300.636	301.286	71.292	52.329	72.019	81.337	1890.656	1855.568	2437.107	2395.013
20160508:05:09:12	23.689	12.175	2.369	23.515	0.25	2.119	0.25	2.023	113.708	300.621	301.211	71.212	52.318	71.98	81.288	1891.992	1856.942	2438.817	2396.774
20160508:05:14:12	23.685	12.206	2.325	23.514	0.25	2.122	0.25	2.031	113.789	300.676	301.245	71.165	52.336	71.947	81.241	1893.365	1858.251	2440.574	2398.453
20160508:05:19:12	23.687	12.261	2.364	23.513	0.25	2.124	0.25	2.041	113.953	300.661	301.242	71.123	52.33	71.905	81.191	1894.736	1859.63	2442.33	2400.22
20160508:05:24:12	23.689	12.258	2.413	23.512	0.25	2.131	0.25	2.043	113.945	300.662	301.267	71.071	52.313	71.848	81.142	1896.082	1860.929	2444.052	2401.885
20160508:05:29:12	23.692	12.315	2.453	23.511	0.25	2.134	0.25	2.03	114.112	300.617	301.218	71.031	52.31	71.776	81.092	1897.478	1862.299	2445.839	2403.641
20160508:05:34:12	23.691	11.3	2.469	23.509	0.25	2.114	0.25	2.015	111.095	300.595	301.192	71.001	52.317	71.725	81.043	1898.822	1863.639	2447.559	2405.359
20160508:05:39:12	23.69	11.166	2.431	23.511	0.25	2.098	0.25	2.005	110.683	300.548	301.158	70.955	52.306	71.684	80.988	1900.171	1864.967	2449.285	2407.06
20160508:05:44:12	23.689	11.041	2.389	23.514	0.25	2.105	0.25	2.002	110.291	300.6	301.225	70.865	52.296	71.645	80.935	1901.563	1866.337	2451.067	2408.816
20160508:05:49:12	23.683	12.011	2.347	23.511	0.25	2.105	0.25	2.002	113.216	300.601	301.171	70.828	52.296	71.617	80.883	1902.898	1867.647	2452.774	2410.494
20160508:05:54:12	23.685	12.219	2.319	23.514	0.25	2.124	0.25	2.023	113.828	300.591	301.139	70.822	52.31	71.606	80.836	1904.287	1869.014	2454.552	2412.246
20160508:05:59:12	23.682	12.239	2.306	23.513	0.25	2.121	0.25	2.021	113.883	300.582	301.138	70.785	52.301	71.57	80.795	1905.641	1870.331	2456.283	2413.932
20160508:06:04:12	23.687	12.24	2.369	23.513	0.25	2.125	0.25	2.029	113.892	300.579	301.131	70.75	52.292	71.533	80.752	1906.98	1871.704	2457.996	2415.692
20160508:06:09:12	23.684	12.241	2.321	23.513	0.25	2.126	0.25	2.026	113.89	300.605	301.178	70.733	52.3	71.517	80.714	1908.373	1873.017	2459.778	2417.374
20160508:06:14:12	23.683	12.236	2.28	23.515	0.25	2.133	0.25	2.033	113.875	300.591	301.135	70.692	52.281	71.434	80.678	1909.711	1874.391	2461.489	2419.133
20160508:06:19:12	23.684	12.293	2.302	23.515	0.25	2.124	0.25	2.022	114.041	300.563	301.187	70.692	52.302	71.423	80.644	1911.085	1875.706	2463.246	2420.818
20160508:06:24:12	23.684	12.302	2.293	23.516	0.25	2.132	0.25	2.033	114.064	300.49	301.137	70.66	52.279	71.377	80.611	1912.458	1877.073	2465.002	2422.568
20160508:06:29:12	23.686	12.34	2.296	23.517	0.25	2.124	0.25	2.025	114.175	300.466	301.12	70.666	52.297	71.374	80.58	1913.783	1878.384	2466.696	2424.246
20160508:06:34:12	23.687	12.405	2.531	23.501	0.25	2.111	0.25	2.012	114.362	300.535	301.158	70.63	52.264	71.346	80.548	1915.183	1879.738	2468.487	2425.981
20160508:06:39:12	23.696	12.378	2.723	23.495	0.25	2.111	0.25	2.003	114.298	300.584	301.165	70.612	52.266	71.329	80.52	1916.507	1881.083	2470.181	2427.705
20160508:06:44:12	23.697	12.461	2.739	23.496	0.25	2.12	0.25	2.025	114.537	300.545	301.166	70.584	52.258	71.305	80.492	1917.883	1882.405	2471.943	2429.398
20160508:06:49:12	23.7	12.529	2.803	23.494	0.25	2.127	0.25	2.042	114.735	300.581	301.253	70.506	52.242	71.251	80.464	1919.255	1883.771	2473.698	2431.148
20160508:06:54:12	23.701	12.601	2.846	23.492	0.25	2.138	0.25	2.042	114.937	300.581	301.248	70.507	52.262	71.274	80.436	1920.602	1885.092	2475.422	2432.842
20160508:06:59:12	23.704	12.643	2.861	23.493	0.25	2.142	0.25	2.04	115.059	300.54	301.233	70.462	52.247	71.197	80.409	1922	1886.461	2477.211	2434.596
20160508:07:04:12	23.701	12.644	2.845	23.492	0.25	2.119	0.25	2.023	115.059	300.564	301.247	70.473	52.244	71.191	80.383	1923.345	1887.778	2478.931	2436.284
20160508:07:09:12	23.705	12.579	2.952	23.488	0.25	2.1	0.25	1.999	114.882	300.593	301.173	70.5	52.25	71.222	80.36	1924.693	1889.154	2480.657	2438.047
20160508:07:14:12	23.707	12.516	2.862	23.489	0.25	2.093	0.25	1.999	114.708	300.519	301.155	70.459	52.151	71.182	80.34	1926.09	1890.467	2482.444	2439.729
20160508:07:19:12	23.706	12.504	2.966	23.488	0.25	2.097	0.25	2	114.67	300.534	301.173	70.468	52.176	71.181	80.322	1927.427	1891.846	2484.156	2441.496
20160508:07:24:12	23.704	12.463	2.948	23.487	0.25	2.093	0.25	1.999	114.551	300.534	301.035	70.496	52.168	71.199	80.308	1928.814	1893.147	2485.931	2443.164
20160508:07:29:12	23.71	12.398	3.03	23.487	0.25	2.095	0.25	1.991	114.378	300.57	301.109	70.506	52.216	71.239	80.298	1930.18	1894.518	2487.68	2444.921
20160508:07:34:12	23.709	12.36	3.02	23.487	0.25	2.109	0.25	1.997	114.267	300.596	301.168	70.512	52.17	71.27	80.29	1931.507	1895.852	2489.378	2446.632
20160508:07:39:12	23.705	12.289	2.977	23.486	0.25	2.101	0.25	1.992	114.058	300.513	301.084	70.528	52.193	71.26	80.284	1932.903	1897.181	2491.165	2448.335
20160508:07:44:12	23.706	12.302	2.99	23.486	0.25	2.093	0.25	2.004	114.097	300.483	301.06	70.527	52.141	71.223	80.281	1934.237	1898.542	2492.872	2450.079
20160508:07:49:12	23.706	12.313	2.989	23.486	0.25	2.091	0.25	1.999	114.128	300.511	301.114	70.532	52.154	71.253	80.281	1935.608	1899.85	2494.628	2451.756
20160508:07:54:12	23.706	12.248	3.046	23.483	0.25	2.086	0.25	1.985	113.944	300.611	301.128	70.585	52.16	71.318	80.285	1936.978	1901.209	2496.381	2453.498
20160508:07:59:12	23.704	12.165	3.027	23.481	0.25	2.07	0.25	1.969	113.699	300.654	301.195	70.627	52.173	71.342	80.291	1938.303	1902.521	2498.078	2455.18
20160508:08:04:12	23.704	12.158	3.029	23.481	0.25	2.073	0.25	1.969	113.681	300.647	301.196	70.655	52.131	71.348	80.299	1939.691	1903.887	2499.856	2456.932
20160508:08:09:12	23.703	12.133	3.021	23.48	0.25	2.076	0.25	1.985	113.607	300.576	301.15	70.673	52.133	71.358	80.309	1941.018	1905.193	2501.556	2458.607
20160508:08:14:12	23.706	12.058	3.094	23.479	0.25	2.092	0.25	1.991	113.393	300.584	301.18	70.675	52.124	71.369	80.324	1942.388	1906.556	2503.309	2460.355
20160508:08:19:12	23.707	11.996	3.119	23.477	0.25	2.08	0.25	1.986	113.213	300.618	301.164	70.683	52.112	71.386	80.34	1943.755	1907.859	2505.061	2462.026
20160508:08:24:12	23.707	11.988	3.135	23.477	0.25	2.087	0.25	2.006	113.19	300.668	301.234	70.732	52.136	71.464	80.359	1945.068	1909.225	2506.743	2463.778
20160508:08:29:12	23.708	11.927	3.14	23.477	0.25	2.081	0.25	1.995	113.013	300.58	301.192	70.734	52.136	71.466	80.377	1946.457	1910.523	2508.522	2465.444
20160508:08:34:12	23.711	11.937	3.214	23.474	0.25	2.077	0.25	1.986	113.046	300.574	301.148	70.736	52.113	71.475	80.398	1947.78	1911.884	2510.217	2467.19
20160508:08:39:12	23.711	11.902	3.262	23.471	0.25	2.079	0.25	1.999	112.944	300.613	301.201	70.767	52.155	71.528	80.419	1949.148	1913.191	2511.97	2468.867
20160508:08:44:12	23.709	11.878	3.256	23.47	0.25	2.083	0.25	1.993	112.87	300.587	301.219	70.798	52.132	71.558	80.443	1950.496	1914.551	2513.698	2470.613
20160508:08:49:12	23.71	11.856	3.298	23.468	0.25	2.082	0.25	2.003	112.805	300.573	301.159	70.802	52.127	71.56	80.467	1951.82	1915.84	2515.394	2472.267
20160508:08:54:12	23.71	11.702	3.279	23.469	0.25	2.091	0.25	1.989	112.342	300.615	301.235	70.855	52.177	71.601	80.491	1953.202	1917.204	2517.167	2474.017
20160508:08:59:12	23.709	10.734	3.269	23.468	0.25	2.074	0.25	1.975	109.343	300.624	301.248	70.9	52.187	71.619	80.516	1954.526	1918.507	2518.863	2475.69
20160508:09:04:12	23.709	11.113	3.308	23.466	0.25	2.064	0.25	1.972	110.525	300.586	301.184	70.904	52.141	71.625	80.54

Time: day:hh:mm:ss	Stack Pressure: in-Hg	Sat% H2O: Percent	Static: in-H2O	Barometric: in-Hg	Flowmeter1: l/min	Vacuum1: in-Hg	Flowmeter2: l/min	Vacuum2: in-Hg	Stack Temp: degF	Sorbent Temp: degF	Probe Temp: degF	DGM#1 Temp: degF	Condenser Temp: degF	DGM#2 Temp: degF	DAQ Temp: degF	DGM1*: liters STP	DGM2*: liters STP	DGM1: liters nominal	DGM2: liters nominal
20160508:12:54:12	23.737	11.509	4.056	23.439	0.25	2.09	0.25	2.001	111.806	300.634	301.262	71.995	52.201	72.691	81.594	2018.196	1981.188	2600.593	2556.256
20160508:12:59:12	23.741	11.548	4.11	23.439	0.25	2.093	0.25	1.991	111.931	300.649	301.276	72.001	52.146	72.692	81.623	2019.522	1982.519	2602.298	2557.97
20160508:13:04:12	23.744	11.552	4.136	23.44	0.25	2.094	0.25	1.996	111.948	300.713	301.328	72.055	52.199	72.736	81.649	2020.907	1983.866	2604.08	2559.705
20160508:13:09:12	23.746	11.564	4.136	23.442	0.25	2.092	0.25	1.994	111.987	300.651	301.261	72.069	52.176	72.752	81.673	2022.252	1985.173	2605.809	2561.387
20160508:13:14:12	23.744	11.574	4.125	23.441	0.25	2.091	0.25	1.992	112.016	300.653	301.267	72.096	52.15	72.773	81.7	2023.588	1986.524	2607.528	2563.128
20160508:13:19:12	23.742	10.898	4.082	23.441	0.25	2.072	0.25	1.993	109.896	300.63	301.25	72.186	52.217	72.865	81.731	2024.977	1987.838	2609.315	2564.82
20160508:13:24:12	23.742	11.169	4.073	23.442	0.25	2.066	0.25	1.979	110.755	300.569	301.221	72.189	52.143	72.87	81.76	2026.307	1989.199	2611.026	2566.573
20160508:13:29:12	23.744	11.449	4.112	23.442	0.25	2.079	0.25	1.997	111.635	300.668	301.268	72.24	52.235	72.923	81.789	2027.679	1990.508	2612.791	2568.259
20160508:13:34:12	23.749	11.444	4.17	23.442	0.25	2.086	0.25	1.983	111.627	300.612	301.203	72.245	52.172	72.938	81.818	2029.042	1991.871	2614.544	2570.015
20160508:13:39:12	23.748	11.45	4.153	23.443	0.25	2.084	0.25	1.985	111.643	300.664	301.259	72.284	52.206	72.986	81.851	2030.363	1993.174	2616.244	2571.694
20160508:13:44:12	23.745	11.443	4.111	23.443	0.25	2.079	0.25	1.989	111.618	300.573	301.233	72.308	52.19	73.012	81.882	2031.752	1994.541	2618.031	2573.455
20160508:13:49:12	23.746	11.434	4.112	23.444	0.25	2.073	0.25	1.974	111.593	300.6	301.233	72.346	52.209	73.065	81.915	2033.073	1995.843	2619.731	2575.133
20160508:13:54:12	23.748	11.416	4.082	23.448	0.25	2.076	0.25	1.974	111.541	300.651	301.273	72.374	52.226	73.112	81.951	2034.441	1997.2	2621.491	2576.882
20160508:13:59:12	23.745	11.418	4.01	23.45	0.25	2.069	0.25	1.984	111.542	300.624	301.287	72.447	52.258	73.177	81.985	2035.805	1998.505	2623.246	2578.562
20160508:14:04:12	23.742	11.438	3.958	23.451	0.25	2.071	0.25	1.987	111.597	300.633	301.255	72.473	52.24	73.191	82.019	2037.142	1999.848	2624.967	2580.293
20160508:14:09:12	23.739	11.475	3.894	23.452	0.25	2.076	0.25	1.992	111.706	300.53	301.132	72.537	52.267	73.234	82.054	2038.527	2001.187	2626.748	2582.019
20160508:14:14:12	23.738	11.475	3.893	23.452	0.25	2.077	0.25	1.987	111.707	300.608	301.221	72.558	52.25	73.248	82.093	2039.858	2002.499	2628.461	2583.709
20160508:14:19:12	23.739	11.524	3.868	23.454	0.25	2.085	0.25	1.99	111.856	300.653	301.287	72.603	52.279	73.296	82.128	2041.204	2003.856	2630.193	2585.457
20160508:14:24:12	23.735	11.517	3.766	23.458	0.25	2.083	0.25	1.998	111.828	300.642	301.282	72.603	52.253	73.298	82.164	2042.585	2005.162	2631.97	2587.139
20160508:14:29:12	23.732	11.573	3.741	23.457	0.25	2.074	0.25	1.997	111.991	300.658	301.281	72.646	52.286	73.342	82.2	2043.912	2006.515	2633.678	2588.883
20160508:14:34:12	23.73	11.616	3.786	23.452	0.25	2.087	0.25	1.992	112.12	300.619	301.238	72.641	52.271	73.342	82.235	2045.298	2007.821	2635.461	2590.566
20160508:14:39:12	23.73	11.595	3.817	23.45	0.25	2.077	0.25	1.981	112.058	300.697	301.3	72.691	52.296	73.378	82.267	2046.643	2009.183	2637.193	2592.321
20160508:14:44:12	23.727	11.58	3.8	23.448	0.25	2.077	0.25	1.992	112.008	300.58	301.238	72.685	52.281	73.368	82.3	2047.974	2010.49	2638.906	2594.006
20160508:14:49:12	23.721	11.559	3.792	23.444	0.25	2.078	0.25	1.985	111.939	300.542	301.204	72.701	52.292	73.452	82.33	2049.357	2011.86	2640.687	2595.773
20160508:14:54:12	23.719	11.534	3.743	23.444	0.25	2.081	0.25	1.976	111.858	300.587	301.245	72.694	52.292	73.449	82.361	2050.695	2013.16	2642.409	2597.449
20160508:14:59:12	23.716	11.538	3.723	23.443	0.25	2.075	0.25	1.987	111.864	300.617	301.24	72.726	52.306	73.462	82.389	2052.062	2014.525	2644.17	2599.209
20160508:15:04:12	23.719	11.517	3.742	23.444	0.25	2.089	0.25	1.972	111.804	300.599	301.221	72.725	52.303	73.477	82.413	2053.427	2015.822	2645.928	2600.882
20160508:15:09:12	23.723	11.487	3.781	23.445	0.25	2.091	0.25	1.986	111.721	300.678	301.295	72.696	52.277	73.464	82.432	2054.753	2017.174	2647.635	2602.624
20160508:15:14:12	23.724	11.468	3.803	23.444	0.25	2.085	0.25	1.985	111.663	300.651	301.247	72.708	52.287	73.449	82.449	2056.148	2018.51	2649.431	2604.348
20160508:15:19:12	23.724	11.471	3.906	23.437	0.25	2.081	0.25	1.973	111.672	300.652	301.251	72.735	52.299	73.485	82.463	2057.465	2019.823	2651.128	2606.041
20160508:15:24:12	23.724	11.498	3.887	23.438	0.25	2.092	0.25	1.989	111.754	300.656	301.26	72.713	52.3	73.48	82.472	2058.824	2021.18	2652.878	2607.791
20160508:15:29:12	23.728	11.497	3.945	23.438	0.25	2.093	0.25	1.989	111.757	300.662	301.273	72.703	52.294	73.476	82.479	2060.202	2022.492	2654.652	2609.483
20160508:15:34:12	23.724	11.556	3.863	23.44	0.25	2.09	0.25	1.971	111.93	300.637	301.193	72.7	52.293	73.475	82.488	2061.536	2023.847	2656.37	2611.231
20160508:15:39:12	23.725	11.575	3.877	23.44	0.25	2.087	0.25	1.978	111.989	300.566	301.174	72.698	52.287	73.474	82.496	2062.922	2025.156	2658.156	2612.919
20160508:15:44:12	23.721	11.598	3.848	23.438	0.25	2.088	0.25	1.993	112.052	300.589	301.207	72.696	52.279	73.474	82.501	2064.269	2026.519	2659.891	2614.677
20160508:15:49:12	23.719	11.604	3.832	23.437	0.25	2.095	0.25	2.001	112.069	300.54	301.186	72.694	52.268	73.469	82.506	2065.608	2027.822	2661.615	2616.357
20160508:15:54:12	23.72	11.585	3.904	23.433	0.25	2.082	0.25	1.993	112.013	300.569	301.22	72.693	52.258	73.466	82.51	2066.997	2029.188	2663.404	2618.12
20160508:15:59:12	23.717	11.572	3.883	23.432	0.25	2.086	0.25	1.994	111.968	300.627	301.251	72.693	52.263	73.464	82.511	2068.331	2030.489	2665.122	2619.799
20160508:16:04:12	23.716	11.559	3.894	23.43	0.25	2.087	0.25	1.982	111.929	300.637	301.208	72.692	52.255	73.451	82.511	2069.693	2031.849	2666.878	2621.553
20160508:16:09:12	23.717	11.547	3.92	23.429	0.25	2.086	0.25	1.982	111.894	300.706	301.325	72.69	52.254	73.444	82.51	2071.053	2033.163	2668.63	2623.248
20160508:16:14:12	23.713	11.515	3.868	23.429	0.25	2.088	0.25	1.981	111.791	300.648	301.276	72.686	52.247	73.429	82.508	2072.391	2034.497	2670.354	2624.97
20160508:16:19:12	23.716	11.485	3.923	23.428	0.25	2.088	0.25	1.988	111.705	300.598	301.243	72.684	52.262	73.423	82.505	2073.781	2035.849	2672.144	2626.714
20160508:16:24:12	23.714	11.478	3.851	23.431	0.25	2.093	0.25	1.983	111.677	300.713	301.321	72.68	52.25	73.4	82.499	2075.111	2037.155	2673.857	2628.398
20160508:16:29:12	23.722	11.468	3.938	23.432	0.25	2.1	0.25	1.986	111.662	300.634	301.254	72.667	52.257	73.398	82.492	2076.459	2038.513	2675.594	2630.15
20160508:16:34:12	23.726	11.506	4.009	23.431	0.25	2.089	0.25	1.993	111.781	300.616	301.211	72.665	52.253	73.379	82.483	2077.845	2039.819	2677.38	2631.835
20160508:16:39:12	23.726	11.58	3.995	23.432	0.25	2.085	0.25	2.006	112.006	300.611	301.219	72.669	52.271	73.392	82.475	2079.172	2041.185	2679.089	2633.598
20160508:16:44:12	23.723	11.547	3.968	23.431	0.25	2.095	0.25	2.002	111.901	300.683	301.319	72.672	52.266	73.385	82.471	2080.559	2042.493	2680.876	2635.284
20160508:16:49:12	23.723	11.584	4.058	23.425	0.25	2.091	0.25	1.997	112.013	300.695	301.321	72.679	52.291	73.401	82.463	2081.911	2043.863	2682.619	2637.053
20160508:16:54:12	23.727	11.593	4.117	23.424	0.25	2.096	0.25	1.995	112.046	300.66	301.284	72.664	52.271	73.377	82.453	2083.234	2045.169	2684.322	2638.737
20160508:16:59:12	23.727	11.59	4.161	23.421	0.25	2.085	0.25	1.991	112.037	300.614	301.253	72.634	52.244	73.348	82.446	2084.632	2046.528	2686.124	2640.491
20160508:17:04:12	23.727	11.615	4.131	23.423	0.25	2.097	0.25	1.988	112.113	300.612	301.252	72.635	52.243	73.356	82.437	2085.957	2047.831	2687.831	2642.173
20160508:17:09:12	23.723	11.582	4.072	23.424	0.25	2.086	0.25	1.988	112.008	300.523	301.177	72.637	52.251	73.361	82.43	2087.323	2049.176	2689.593	2643.908
20160508:17:14:12	23.723	11.558	4.082	23.423	0.25	2.084	0.25	1.978	111.935	300.587	301.195	72.641	52.254	73.365	82.428	2088.692	2050.522	2691.356	2645.645
20160508:17:19:12	23.72	11.557	4.035	23.423	0.25	2.089	0.25	1.986	111.926	300.678	301.323	72.656	52.27	73.376	82.428	2090.024	2051.832	2693.072	2647.335
20160508:17:24:12	23.724	11.553	4.101	23.422	0.25	2.083	0.25	1.983	111.92	300.648	301.212	72.677	52.274	73.391	82.428	2091.416	2053.185	2694.867	2649.081
20160508:17:29:12	23.721	11.553	4.105	23.419	0.25	2.079	0.25	1.982	111.916	300.613	301.234	72.686	52.265	73.408	82.43	2092.754	2054.491	2696.591	2650.767
20160508:17:34:12	23.72	11.538	4.087	23.42	0.25	2.074	0.25	1.992	111.872	300.598	301.214	72.691	52.262	73.411	82.438	2094.09	2055.86	2698.313	2652.534
20160508:17:39:12	23.724	11.495	4.177	23.417	0.25	2.081	0.25	1.979	111.745	300.6	301.141	72.693	52.249	73.416	82.446	2095.476	2057.165	2700.1	2654.218
20160508:17:44:12	23.722	11.503	4.166	23.416	0.25	2.083	0.25	1.99	111.766	300.62	301.191	72.723	52.275	73.47	82.452	2096.806	2058.534	2701.815	2655.985
20160508:17:49:12	23.727	11.5	4.176	23.42	0.25	2.083	0.25	1.992	111.767	300.629	301.236	72.747	52.291	73.498	82.462	2098.178	2059.831	2703.583	2657.66
20160508:17:54:12	23.734	11.522	4.32	23.416	0.25	2.079	0.25	1.973	111.842	300.617	301.229	72.747	52.285	73.485	82.471	2099.542	2061.2	2705.341	2659.427
20160508:17:59:12	23.735	11.522	4.347	23.416	0.25	2.081	0.25	1.977	111.844	300.608	301.192	72.744	52.257	73.483	82.475	2100.869	2062.497	2707.052	2661.102
20160508:18:04:12	23.737	11.487	4.343	23.418	0.25	2.083	0.25	1.984	111.741	300.662	301.311	72.744	52.253	73.483	82.482	2102.264	2063.853	2708.85	2662.852
20160508:18:09:12	23.738	11.5	4.343	23.418	0.25	2.08	0.25	1.984	111.781	300.648	301.23	72.74	52.241	73.482	82.488	2103.587	2065.195	2710.556	2664.585
20160508:18:14:12	23.737	11.503	4.394	23.414	0.25	2.074	0.25	1.977	111.79	300.625	301.266	72.74	52.244	73.483	82.496	2104.94	2066.505	2712.3	2666.276
20160508:18:19:12	23.739	11.527	4.403	23.416	0.25	2.072	0.25	1.975	111.865	300.619	301.229	72.74	52.237	73.489	82.499	2106.321	2067.857	2714.081	2668.021
20160508:18:24:12	23.743	11.613	4.437	23.416	0.25	2.077	0.25	1.992	112.131	300.587	301.23	72.747	52.241	73.498	82.505	2107.646	2069.168	2715.789	2669.714
20160508:18:29:12	23.745	11.646	4.44	23.419	0.25	2.092	0.25	2.003	112.232	300.571	301.187	72.749	52.242	73.513	82.51	2109.032	2070.534	2717.576	2671.477
20160508:18:34:12	23.741	11.702	4.385	23.419	0.25	2.106	0.25	2.013	112.394	300.598	301.181	72.762	52.253	73.527	82.516	2110.38	2071.84	2719.313	2673.164
20160508:18:39:12	23.739	11.807	4.315	23.422	0.25	2.112	0.25	2.014	112.705	300.613	301.248	72.831	52.286	73.557	82.522	2111.71	2073.212	2721.028	2674.934
20160508:18:44:12	23.74	11.828	4.335	23.421	0.25	2.103	0.25	2.013	112.768	300.596	301.19	72.908	52.323	73.589	82.532	2113.103	2074.516	2722.824	2676.618
20160508:18:49:12	23.742	11.895	4.316	23.424	0.25	2.104	0.25	2.005	112.967	300.603	301.16	72.916	52.303	73.599	82.546	2114.429	2075.884	2724.533	2678.383
20160508:18:54:12	23.741	11.916	4.314	23.424	0.25	2.092	0.25	2	113.031	300.624	301.205	72.917	52.299	73.606	82.562	2115.799	2077.193	2726.3	2680.073
20160508:18:59:12	23.74	11.902	4.303	23.423	0.25	2.096	0.25	2.011	112.985	300.613	301.191	72.928	52.307	73.623	82.582	2117.175	2078.54	2728.074	2681.812
20160508:19:04:12	23.74	11.919	4.385	23.418	0.25	2.089	0.25	1.997	113.037	300.666	301.243	72.975	52.34	73.672	82.601	2118.516	2079.901	2729.804	2683.57
20160508:19:09:12	23.74	11.947	4.392	23.417	0.25	2.097	0.25	1.998	113.118	300.646	301.213	72.976	52.312	73.677	82.625	2119.912	2081.211	2731.604	2685.261
20160508:19:14:12	23.74	11.975	4.341	23.42	0.25	2.096	0.25	1.998	113.199	300.651	301.182	73	52.32	73.717	82.648	2121.272	2082.576	2733.357	2687.024
20160508:19:19:12	23.74	12.036	4.367	23.419	0.25	2.102	0.25	1.996	113.378	300.697	301.241	73.038	52.342	73.772	82.674	2122.604	2083.893	2735.076	2688.726
20160508:19:24:12	23.739	12.175	4.3	23.422	0.25	2.105	0.25	2.013	113.782	300.704	301.283	73.036	52.304	73.765	82.699	2124.009	2085.273	2736.887	2690.508
20160508:19:29:12	23.74	12.138	4.35	23.42	0.25	2.104	0.25	2.011	113.676	300.633	301.17	73.078	52.321	73.793	82.722	2125.339	2086.586	2738.604	2692.203
20160508:19:34:12	23.737	12.135	4.345	23.417	0.25	2.094	0.25	2.011	113.663	300.624	301.211	73.142	52.329	73.844	82.748	2126.693	2087.946	2740.35	2693.961
20160508:19:39:12	23.737	12.136	4.352	23.417	0.25	2.093	0.25	1.993	113.664	300.609	301.235	73.142	52.304	73.833	82.771	2128.085	2089.278	2742.146	2695.68
20160508:19:44:12	23.729	12.175	4.199	23.42	0.25	2.104	0.25	2.01	113.766	300.671	301.241	73.176	52.329	73.866	82.796	2129.429	2090.606	2743.88	2697.397
20160508:19:49:12	23.723	12.181	4.138	23.419	0.25	2.105	0.25	2.008	113.777	300.707	301.306	73.197	52.344	73.882	82.817	2130.803	2091.962	2745.652	2699.148
20160508:19:54:12	23.718	12.154	4.1	23.417	0.25	2.1	0.25	2.001	113.688	300.7	301.309	73.2	52.315	73.882	82.846	2132.166	2093.278	2747.411	2700.848
20160508:19:59:12	23.716	12.183	4.089	23.415	0.25	2.097	0.25	1.993	113.769	300.744	301.332	73.238	52.362	73.925	82.871	2133.509	2094.652	2749.144	2702.624
20160508:20:04:12	23.711	12.25	3.974	23.419	0.25	2.101	0.25	2.007	113.955	300.768	301.332	73.215	52.345	73.925	82.893	2134.906	2095.966	2750.946	2704.321
20160508:20:09:12	23.71	12.286	3.931	23.421	0.25	2.1	0.25	2.018	114.057	300.74	301.348	73.199	52.319	73.915	82.914	2136.259	2097.344	2752.693	2706.102
20160508:20:14:12	23.711	12.317	3.867	23.427	0.25	2.11	0.25	2.006	114.147	300.758	301.364	73.245	52.352	73.936	82.931	2137.593	2098.645	2754.413	2707.782
20160508:20:19:12	23.712	11.598	3.861	23.428	0.25	2.098	0.25	2.008	112.035	300.697	301.334	73.214	52.35	73.923	82.945	2138.996	2100.012	2756.222	2709.547
20160508:20:24:12	23.708	11.466	3.773	23.431	0.25	2.101	0.25	1.993	111.634	300.681	301.285	73.197	52.349	73.91	82.954	2140.326	2101.364	2757.937	2711.293
20160508:20:29:12	23.705	11.359	3.672	23.435	0.25	2.087	0.25	1.984	111.301	300.645	301.254	73.182	52.346	73.888	82.96	2141.689	2102.682	2759.694	2712.994
20160508:20:34:12	23.7	12.061	3.592	23.436	0.25	2.093	0.25	2	113.39	300.642	301.314	73.151	52.351	73.871	82.962	2143.08	2104.049	2761.487	2714.759
20160508:20:39:12	23.703	12.183	3.615	23.437	0.25	2.104	0.25	2.011	113.752	300.753	301.321	73.14	52.34	73.865	82.96	2144.418	2105.367	2763.213	2716.461
20160508:20:44:12	23.698	12.22	3.533	23.438	0.25	2.1	0.25	1.998	113.85	300.724	301.303	73.117	52.352	73.847	82.955	2145.802	2106.744	2764.996	2718.237
20160508:20:49:12	23.698	12.25	3.589	23.435	0.25	2.101	0.25	2.001	113.937	300.758	301.307	73.054	52.353	73.826	82.947	2147.17	2108.054	2766.759	2719.929
20160508:20:54:12	23.694	12.271	3.544	23.433	0.25	2.104	0.25	2.001	113.99	300.708	301.253	73.028	52.365	73.813	82.935	2148.504	2109.426	2768.48	2721.699
20160508:20:59:12	23.692	12.265	3.496	23.435	0.25	2.107	0.25	2.005	113.971	300.671	301.231	72.99	52.33	73.738	82.922	2149.902	2110.747	2770.281	2723.404
20160508:21:04:12	23.69	12.274	3.497	23.433	0.25	2.102	0.25	2.011	113.993	300.684	301.253	72.956	52.344	73.695	82.905	2151.246	2112.087	2772.013	2725.133
20160508:21:09:12	23.689	12.28	3.499	23.432	0.25	2.099	0.25	2.003	114.009	300.679	301.239	72.928	52.35	73.677	82.886	2152.594	2113.45	2773.75	2726.893
20160508:21:14:12	23.687	12.291	3.467	23.432	0.25	2.095	0.25	2.005	114.036	300.632	301.213	72.907	52.353	73.65	82.865	2153.99	2114.764	2775.55	2728.588
20160508:21:19:12	23.688	12.287	3.514	23.43	0.25	2.099	0.25	2.008	114.027	300.614	301.118	72.86	52.327	73.595	82.84	2155.327	2116.14	2777.272	2730.365
20160508:21:24:12	23.692	12.287	3.577	23.429	0.25	2.101	0.25	2.005	114.034	300.643	301.275	72.85	52.352	73.589	82.812	2156.699	2117.454	2779.041	2732.06
20160508:21:29:12	23.686	12.285	3.498	23.429	0.25	2.098	0.25	1.998	114.019	300.65	301.212	72.775	52.321	73.551	82.788	2158.076	2118.827	2780.815	2733.833
20160508:21:34:12	23.685	12.279	3.495	23.428	0.25	2.092	0.25	1.988	113.999	300.631	301.199	72.725	52.339	73.527	82.76	2159.417	2120.137	2782.543	2735.523
20160508:21:39:12	23.681	12.249	3.463	23.427	0.25	2.095	0.25	1.989	113.909	300.6	301.2	72.693	52.338	73.508	82.731	2160.816	2121.503	2784.346	2737.286
20160508:21:44:12	23.684	12.209	3.495	23.427	0.25	2.092	0.25	2.003	113.799	300.693	301.243	72.642	52.319	73.429	82.702	2162.173	2122.851	2786.094	2739.024
20160508:21:49:12	23.697	12.172	3.694	23.425	0.25	2.087	0.25	1.993	113.71	300.624	301.234	72.633	52.335	73.409	82.668	2163.51	2124.169	2787.817	2740.726
20160508:21:54:12	23.685	12.126	3.453	23.432	0.25	2.08	0.25	1.983	113.559	300.668	301.31	72.584	52.3	73.33	82.631	2164.919	2125.536	2789.631	2742.489
20160508:21:59:12	23.682	12.172	3.369	23.435	0.25	2.089	0.25	1.997	113.688	300.649	301.265	72.566	52.314	73.322	82.597	2166.249	2126.849	2791.344	2744.182
20160508:22:04:12	23.682	12.238	3.307	23.438	0.25	2.107	0.25	2.017	113.878	300.594	301.192	72.53	52.298	73.281	82.563	2167.603	2128.224	2793.087	2745.955
20160508:22:09:12	23.682	12.35	3.344	23.436	0.25	2.111	0.25	2.016	114.198	300.697	301.27	72.511	52.318	73.268	82.531	2168.992	2129.538	2794.876	2747.648
20160508:22:14:12	23.678	12.351	3.29	23.436	0.25	2.114	0.25	2.017	114.196	300.606	301.238	72.431	52.302	73.226	82.501	2170.33	2130.917	2796.598	2749.427
20160508:22:19:12	23.675	12.336	3.282	23.434	0.25	2.101	0.25	2.01	114.149	300.605	301.213	72.418	52.332	73.223	82.465	2171.71	2132.217	2798.376	2751.103
20160508:22:24:12	23.672	12.31	3.256	23.433	0.25	2.106	0.25	2.007	114.07	300.596	301.234	72.365	52.3	73.168	82.431	2173.078	2133.579	2800.137	2752.859
20160508:22:29:12	23.671	12.306	3.207	23.435	0.25	2.104	0.25	2.009	114.056	300.631	301.25	72.348	52.326	73.146	82.396	2174.411	2134.928	2801.852	2754.598
20160508:22:34:12	23.67	12.289	3.208	23.434	0.25	2.106	0.25	1.996	114.007	300.657	301.244	72.303	52.301	73.072	82.36	2175.803	2136.244	2803.644	2756.295
20160508:22:39:12	23.667	12.305	3.245	23.429	0.25	2.112	0.25	2.005	114.049	300.624	301.24	72.275	52.304	73.02	82.321	2177.145	2137.608	2805.372	2758.053
20160508:22:44:12	23.668	12.306	3.207	23.432	0.25	2.115	0.25	2.013	114.053	300.666	301.227	72.243	52.297	72.975	82.285

Time:	Stack Pressure:	Sat% H2O:	Static:	Barometric:	Flowmeter1:	Vacuum1:	Flowmeter2:	Vacuum2:	Stack Temp:	Sorbent Temp:	Probe Temp:	DGM#1 Temp:	Condenser Temp:	DGM#2 Temp:	DAQ Temp:	DGM1*:	DGM2*:	DGM1:	DGM2:
day:hh:mm:ss	in-Hg	Percent	in-H2O	in-Hg	l/min	in-Hg	l/min	in-Hg	degF	degF	degF	degF	degF	degF	degF	liters STP	liters STP	liters nominal	liters nominal
20160509:02:34:13	23.683	11.502	3.503	23.425	0.25	2.076	0.25	1.995	111.707	300.54	301.136	71.834	52.232	72.562	81.552	2240.912	2200.372	2887.365	2838.868
20160509:02:39:13	23.681	11.499	3.442	23.428	0.25	2.081	0.25	1.991	111.696	300.522	301.12	71.782	52.194	72.534	81.564	2242.3	2201.733	2889.15	2840.622
20160509:02:44:13	23.677	11.499	3.373	23.429	0.25	2.088	0.25	1.993	111.69	300.522	301.147	71.752	52.189	72.526	81.569	2243.652	2203.044	2890.889	2842.31
20160509:02:49:13	23.679	11.494	3.402	23.429	0.25	2.088	0.25	1.991	111.676	300.53	301.073	71.792	52.194	72.539	81.573	2244.977	2204.413	2892.593	2844.073
20160509:02:54:13	23.68	11.486	3.405	23.43	0.25	2.088	0.25	1.978	111.654	300.547	301.171	71.789	52.224	72.53	81.575	2246.375	2205.721	2894.391	2845.758
20160509:02:59:13	23.68	11.489	3.423	23.428	0.25	2.089	0.25	1.981	111.661	300.577	301.184	71.73	52.199	72.494	81.573	2247.702	2207.088	2896.098	2847.519
20160509:03:04:13	23.681	11.493	3.463	23.427	0.25	2.085	0.25	1.981	111.676	300.555	301.185	71.696	52.186	72.437	81.57	2249.07	2208.4	2897.857	2849.209
20160509:03:09:13	23.681	11.494	3.407	23.43	0.25	2.079	0.25	1.981	111.68	300.628	301.228	71.689	52.159	72.42	81.567	2250.436	2209.761	2899.613	2850.961
20160509:03:14:13	23.676	11.483	3.337	23.43	0.25	2.086	0.25	1.98	111.638	300.582	301.189	71.686	52.224	72.415	81.564	2251.772	2211.07	2901.331	2852.647
20160509:03:19:13	23.677	11.486	3.303	23.435	0.25	2.089	0.25	1.99	111.648	300.547	301.176	71.684	52.2	72.413	81.557	2253.168	2212.413	2903.126	2854.376
20160509:03:24:13	23.676	11.495	3.288	23.434	0.25	2.08	0.25	1.992	111.674	300.67	301.297	71.684	52.225	72.41	81.551	2254.502	2213.765	2904.841	2856.117
20160509:03:29:13	23.673	11.505	3.309	23.43	0.25	2.083	0.25	1.98	111.702	300.665	301.285	71.684	52.215	72.41	81.546	2255.844	2215.072	2906.567	2857.799
20160509:03:34:13	23.675	11.513	3.302	23.432	0.25	2.082	0.25	1.985	111.726	300.665	301.281	71.684	52.238	72.403	81.54	2257.228	2216.428	2908.346	2859.545
20160509:03:39:13	23.676	11.498	3.273	23.435	0.25	2.088	0.25	1.986	111.685	300.673	301.296	71.678	52.227	72.396	81.534	2258.556	2217.736	2910.054	2861.229
20160509:03:44:13	23.67	11.492	3.21	23.434	0.25	2.095	0.25	1.983	111.658	300.616	301.238	71.665	52.24	72.374	81.526	2259.944	2219.106	2911.839	2862.992
20160509:03:49:13	23.671	11.503	3.198	23.436	0.25	2.083	0.25	1.989	111.69	300.642	301.242	71.647	52.242	72.362	81.516	2261.299	2220.414	2913.58	2864.677
20160509:03:54:13	23.672	11.505	3.2	23.437	0.25	2.086	0.25	1.987	111.699	300.638	301.305	71.61	52.205	72.334	81.502	2262.623	2221.786	2915.281	2866.442
20160509:03:59:13	23.672	11.519	3.163	23.44	0.25	2.093	0.25	1.998	111.742	300.599	301.24	71.572	52.142	72.296	81.485	2264.019	2223.092	2917.076	2868.122
20160509:04:04:13	23.673	11.557	3.161	23.441	0.25	2.091	0.25	1.997	111.857	300.59	301.22	71.569	52.208	72.285	81.465	2265.348	2224.465	2918.783	2869.889
20160509:04:09:13	23.674	11.539	3.201	23.439	0.25	2.094	0.25	2.007	111.806	300.583	301.157	71.548	52.218	72.269	81.442	2266.714	2225.759	2920.539	2871.555
20160509:04:14:13	23.675	11.518	3.172	23.442	0.25	2.094	0.25	1.999	111.745	300.577	301.192	71.478	52.14	72.219	81.419	2268.077	2227.122	2922.291	2873.308
20160509:04:19:13	23.68	11.53	3.255	23.441	0.25	2.094	0.25	2.013	111.787	300.574	301.217	71.466	52.142	72.214	81.392	2269.422	2228.459	2924.019	2875.028
20160509:04:24:13	23.678	11.53	3.213	23.442	0.25	2.084	0.25	2.006	111.785	300.618	301.259	71.421	52.18	72.187	81.368	2270.816	2229.783	2925.809	2876.731
20160509:04:29:13	23.675	11.53	3.164	23.442	0.25	2.086	0.25	1.985	111.779	300.566	301.218	71.373	52.127	72.144	81.341	2272.153	2231.146	2927.526	2878.485
20160509:04:34:13	23.677	10.647	3.111	23.448	0.25	2.065	0.25	1.978	109.006	300.563	301.223	71.373	52.167	72.149	81.313	2273.499	2232.457	2929.256	2880.171
20160509:04:39:13	23.677	10.72	3.097	23.449	0.25	2.058	0.25	1.976	109.226	300.5	301.163	71.331	52.118	72.061	81.284	2274.891	2233.821	2931.043	2881.925
20160509:04:44:13	23.673	11.418	3.087	23.447	0.25	2.082	0.25	1.984	111.435	300.513	301.181	71.333	52.134	72.063	81.257	2276.225	2235.135	2932.756	2883.615
20160509:04:49:13	23.674	11.502	3.062	23.449	0.25	2.098	0.25	2.001	111.693	300.51	301.159	71.304	52.133	72.041	81.229	2277.618	2236.502	2934.544	2885.372
20160509:04:54:13	23.67	11.546	3.041	23.447	0.25	2.098	0.25	2.003	111.82	300.602	301.199	71.282	52.134	72.018	81.2	2278.975	2237.81	2936.287	2887.055
20160509:04:59:13	23.668	11.631	2.967	23.449	0.25	2.105	0.25	2.008	112.074	300.68	301.3	71.275	52.162	72.011	81.174	2280.304	2239.186	2937.993	2888.823
20160509:05:04:13	23.667	11.685	2.973	23.448	0.25	2.114	0.25	2.019	112.234	300.663	301.282	71.178	52.132	71.964	81.148	2281.7	2240.486	2939.785	2890.494
20160509:05:09:13	23.666	11.717	2.902	23.453	0.25	2.114	0.25	2.033	112.33	300.714	301.336	71.178	52.17	71.964	81.122	2283.029	2241.853	2941.491	2892.252
20160509:05:14:13	23.663	11.755	2.851	23.454	0.25	2.106	0.25	2.023	112.437	300.683	301.281	71.144	52.174	71.929	81.096	2284.402	2243.186	2943.252	2893.964
20160509:05:19:13	23.666	11.8	2.834	23.457	0.25	2.105	0.25	2.03	112.574	300.569	301.25	71.123	52.148	71.908	81.072	2285.77	2244.516	2945.007	2895.673
20160509:05:24:13	23.667	11.829	2.818	23.46	0.25	2.098	0.25	2.009	112.663	300.597	301.244	71.121	52.228	71.907	81.046	2287.111	2245.885	2946.728	2897.432
20160509:05:29:13	23.669	11.845	2.818	23.461	0.25	2.1	0.25	2.018	112.711	300.628	301.247	71.075	52.152	71.86	81.016	2288.511	2247.199	2948.524	2899.12
20160509:05:34:13	23.669	11.879	2.787	23.464	0.25	2.097	0.25	2.022	112.814	300.665	301.26	71.065	52.189	71.85	80.988	2289.854	2248.564	2950.246	2900.874
20160509:05:39:13	23.671	11.903	2.812	23.465	0.25	2.101	0.25	1.999	112.889	300.623	301.216	71.039	52.176	71.799	80.961	2291.2	2249.885	2951.972	2902.57
20160509:05:44:13	23.67	11.935	2.833	23.462	0.25	2.089	0.25	2.006	112.978	300.705	301.256	71.009	52.139	71.74	80.926	2292.593	2251.259	2953.759	2904.335
20160509:05:49:13	23.674	11.956	2.81	23.467	0.25	2.098	0.25	1.997	113.047	300.678	301.273	70.987	52.15	71.718	80.897	2293.934	2252.574	2955.478	2906.023
20160509:05:54:13	23.67	11.992	2.803	23.464	0.25	2.097	0.25	2.005	113.147	300.637	301.209	70.955	52.13	71.689	80.87	2295.314	2253.952	2957.248	2907.793
20160509:05:59:13	23.674	11.995	2.878	23.462	0.25	2.103	0.25	2.006	113.162	300.655	301.219	70.96	52.159	71.704	80.845	2296.685	2255.258	2959.006	2909.47
20160509:06:04:13	23.677	11.948	2.868	23.466	0.25	2.082	0.25	2	113.029	300.65	301.238	70.925	52.151	71.685	80.823	2298.023	2256.62	2960.722	2911.218
20160509:06:09:13	23.681	11.9	2.891	23.469	0.25	2.079	0.25	1.979	112.893	300.618	301.185	70.929	52.114	71.672	80.806	2299.419	2257.967	2962.511	2912.947
20160509:06:14:13	23.684	11.913	2.896	23.471	0.25	2.084	0.25	1.99	112.935	300.65	301.233	70.943	52.121	71.675	80.789	2300.757	2259.286	2964.226	2914.641
20160509:06:19:13	23.688	11.928	2.933	23.472	0.25	2.099	0.25	2	112.985	300.666	301.269	70.951	52.113	71.68	80.771	2302.11	2260.645	2965.961	2916.385
20160509:06:24:13	23.692	11.947	3.008	23.471	0.25	2.095	0.25	2	113.048	300.607	301.199	70.885	52.09	71.649	80.757	2303.5	2261.965	2967.743	2918.079
20160509:06:29:13	23.694	11.978	3.044	23.47	0.25	2.104	0.25	2.019	113.142	300.6	301.161	70.846	52.069	71.629	80.744	2304.834	2263.335	2969.452	2919.838
20160509:06:34:13	23.7	11.965	3.121	23.471	0.25	2.103	0.25	2.023	113.113	300.612	301.17	70.85	52.073	71.629	80.731	2306.227	2264.649	2971.237	2921.524
20160509:06:39:13	23.708	11.954	3.228	23.471	0.25	2.1	0.25	2.001	113.092	300.583	301.225	70.855	52.072	71.632	80.72	2307.582	2266.024	2972.974	2923.289
20160509:06:44:13	23.712	11.913	3.296	23.469	0.25	2.083	0.25	1.995	112.978	300.601	301.184	70.905	52.076	71.644	80.71	2308.917	2267.332	2974.685	2924.968
20160509:06:49:13	23.718	11.851	3.349	23.471	0.25	2.074	0.25	1.982	112.803	300.612	301.267	70.948	52.072	71.668	80.701	2310.315	2268.707	2976.478	2926.733
20160509:06:54:13	23.727	11.794	3.441	23.473	0.25	2.085	0.25	1.981	112.647	300.67	301.298	70.955	52.066	71.681	80.697	2311.652	2270.006	2978.191	2928.4
20160509:06:59:13	23.733	11.726	3.463	23.478	0.25	2.088	0.25	1.988	112.454	300.623	301.253	70.997	52.031	71.695	80.696	2313.021	2271.372	2979.946	2930.154
20160509:07:04:13	23.732	11.704	3.432	23.48	0.25	2.087	0.25	1.981	112.388	300.575	301.186	71.012	52.032	71.728	80.699	2314.386	2272.704	2981.694	2931.863
20160509:07:09:13	23.738	11.706	3.466	23.483	0.25	2.091	0.25	1.98	112.401	300.559	301.188	71.04	52.017	71.741	80.707	2315.725	2274.035	2983.411	2933.571
20160509:07:14:13	23.737	11.117	3.452	23.484	0.25	2.086	0.25	1.985	110.583	300.626	301.261	71.066	52.019	71.775	80.719	2317.123	2275.399	2985.202	2935.321
20160509:07:19:13	23.74	10.694	3.505	23.482	0.25	2.067	0.25	1.968	109.259	300.541	301.227	71.086	52.018	71.837	80.737	2318.446	2276.706	2986.898	2936.998
20160509:07:24:13	23.744	10.608	3.536	23.484	0.25	2.067	0.25	1.965	108.986	300.465	301.124	71.149	52.036	71.882	80.758	2319.806	2278.066	2988.641	2938.744
20160509:07:29:13	23.746	11.035	3.561	23.484	0.25	2.064	0.25	1.966	110.331	300.553	301.181	71.202	52.024	71.939	80.787	2321.181	2279.377	2990.404	2940.427
20160509:07:34:13	23.754	11.508	3.622	23.487	0.25	2.076	0.25	1.984	111.828	300.637	301.182	71.288	52.022	71.971	80.818	2322.518	2280.751	2992.117	2942.19
20160509:07:39:13	23.754	11.518	3.615	23.488	0.25	2.063	0.25	1.985	111.86	300.585	301.152	71.35	52.023	72.021	80.852	2323.909	2282.06	2993.9	2943.87
20160509:07:44:13	23.759	11.502	3.672	23.489	0.25	2.06	0.25	1.968	111.817	300.582	301.181	71.415	52.007	72.071	80.891	2325.242	2283.431	2995.609	2945.63
20160509:07:49:13	23.762	11.492	3.689	23.491	0.25	2.051	0.25	1.979	111.793	300.536	301.136	71.521	52.014	72.171	80.938	2326.582	2284.734	2997.328	2947.303
20160509:07:54:13	23.763	11.52	3.724	23.489	0.25	2.065	0.25	1.989	111.88	300.581	301.15	71.575	52.015	72.241	80.988	2327.974	2286.104	2999.113	2949.062
20160509:07:59:13	23.766	11.607	3.705	23.494	0.25	2.077	0.25	1.985	112.144	300.541	301.177	71.645	52.013	72.288	81.043	2329.297	2287.401	3000.809	2950.727
20160509:08:04:13	23.767	11.704	3.74	23.492	0.25	2.104	0.25	2.012	112.438	300.531	301.139	71.702	52.016	72.332	81.095	2330.685	2288.764	3002.589	2952.477
20160509:08:09:13	23.767	11.803	3.727	23.493	0.25	2.105	0.25	2.011	112.732	300.527	301.147	71.769	52.034	72.401	81.151	2332.023	2290.074	3004.306	2954.16
20160509:08:14:13	23.771	11.925	3.739	23.496	0.25	2.109	0.25	1.998	113.101	300.504	301.13	71.861	52.039	72.495	81.209	2333.361	2291.419	3006.022	2955.887
20160509:08:19:13	23.773	11.944	3.797	23.494	0.25	2.099	0.25	1.994	113.157	300.472	301.116	71.913	52.044	72.567	81.269	2334.751	2292.762	3007.806	2957.613
20160509:08:24:13	23.774	12.02	3.787	23.495	0.25	2.103	0.25	1.995	113.382	300.523	301.183	71.968	52.05	72.627	81.333	2336.079	2294.078	3009.509	2959.303
20160509:08:29:13	23.776	12.063	3.84	23.494	0.25	2.092	0.25	1.997	113.511	300.519	301.117	72.026	52.059	72.681	81.394	2337.466	2295.44	3011.289	2961.053
20160509:08:34:13	23.774	12.026	3.825	23.493	0.25	2.098	0.25	2.001	113.4	300.48	301.166	72.098	52.057	72.731	81.458	2338.824	2296.746	3013.031	2962.731
20160509:08:39:13	23.775	12.036	3.924	23.487	0.25	2.09	0.25	2.007	113.43	300.531	301.161	72.205	52.079	72.838	81.528	2340.156	2298.11	3014.743	2964.485
20160509:08:44:13	23.78	11.986	3.966	23.489	0.25	2.081	0.25	1.975	113.292	300.517	301.112	72.262	52.064	72.894	81.595	2341.549	2299.419	3016.531	2966.167
20160509:08:49:13	23.785	11.974	3.99	23.491	0.25	2.07	0.25	1.975	113.264	300.557	301.169	72.311	52.06	72.952	81.662	2342.882	2300.786	3018.243	2967.925
20160509:08:54:13	23.783	11.963	4.006	23.489	0.25	2.069	0.25	1.965	113.23	300.618	301.187	72.358	52.053	73.01	81.73	2344.25	2302.094	3020	2969.607
20160509:08:59:13	23.786	11.917	4.005	23.492	0.25	2.075	0.25	1.974	113.099	300.567	301.144	72.409	52.048	73.084	81.797	2345.61	2303.465	3021.746	2971.37
20160509:09:04:13	23.79	11.914	4.018	23.495	0.25	2.072	0.25	1.998	113.096	300.572	301.147	72.504	52.037	73.156	81.866	2346.944	2304.769	3023.459	2973.047
20160509:09:09:13	23.792	11.858	4.017	23.497	0.25	2.071	0.25	1.976	112.933	300.656	301.216	72.568	52.03	73.2	81.932	2348.34	2306.133	3025.252	2974.801
20160509:09:14:13	23.796	11.819	4.031	23.5	0.25	2.074	0.25	1.975	112.822	300.615	301.19	72.624	52.022	73.252	81.995	2349.656	2307.428	3026.943	2976.466
20160509:09:19:13	23.801	11.792	4.057	23.503	0.25	2.077	0.25	1.983	112.75	300.586	301.206	72.663	52.014	73.293	82.057	2351.019	2308.786	3028.693	2978.212
20160509:09:24:13	23.796	11.895	3.957	23.505	0.25	2.084	0.25	1.991	113.047	300.633	301.17	72.712	52.014	73.345	82.119	2352.381	2310.115	3030.443	2979.921
20160509:09:29:13	23.797	11.899	3.979	23.505	0.25	2.081	0.25	1.994	113.062	300.656	301.224	72.775	52.018	73.416	82.178	2353.715	2311.438	3032.156	2981.622
20160509:09:34:13	23.8	11.908	4.065	23.501	0.25	2.083	0.25	1.99	113.093	300.673	301.241	72.834	52.027	73.492	82.236	2355.103	2312.793	3033.939	2983.365
20160509:09:39:13	23.796	11.928	3.972	23.504	0.25	2.095	0.25	1.994	113.146	300.732	301.297	72.903	52.024	73.54	82.291	2356.433	2314.096	3035.648	2985.041
20160509:09:44:13	23.797	11.935	3.987	23.504	0.25	2.095	0.25	1.999	113.168	300.668	301.21	72.954	52.042	73.598	82.349	2357.784	2315.449	3037.383	2986.782
20160509:09:49:13	23.801	11.962	4.071	23.501	0.25	2.092	0.25	1.987	113.251	300.642	301.244	73.012	52.05	73.656	82.409	2359.165	2316.758	3039.159	2988.466
05/09/2016:09:49:13	Sampling	complete	6 Days	0 Hrs	0 Minutes	sampled													

Hg-324K-1099								
HgK_324 Data	huntington2wk4	5/9/2016	16:05:27					
DGM1 ID	DGM2 ID	Trap1 ID	Trap2 ID					
3605445	3605446	312537	283989					
Time:	Leak 1	Status	Leak 2	Status	Vacuum1	Vacuum2	DGM 1	DGM 2
Day:hh:mm	ccpermin	P-F	ccpermin	P-F	in-Hg	in-Hg	liter	liter
05/09/2016:16:05:41	1236.537	Fail	1386.718	Fail	2.642	2.671	0.369	0.444
05/09/2016:16:05:56	1474.074	Fail	1484.962	Fail	6.478	6.525	0.737	0.742
05/09/2016:16:06:11	1137.037	Fail	1157.895	Fail	9.131	9.193	0.937	1.023
05/09/2016:16:06:26	777.778	Fail	977.444	Fail	11.05	11.051	1.126	1.231
05/09/2016:16:06:41	744.444	Fail	650.376	Fail	12.572	12.466	1.309	1.348
05/09/2016:16:06:56	640.741	Fail	533.835	Fail	13.724	13.649	1.446	1.498
05/09/2016:16:07:11	429.63	Fail	552.632	Fail	14.571	14.569	1.524	1.624
05/09/2016:16:07:26	296.296	Fail	432.331	Fail	15.369	15.306	1.594	1.714
05/09/2016:16:07:41	303.704	Fail	357.143	Fail	16.018	15.935	1.676	1.803
05/09/2016:16:07:56	307.407	Fail	323.308	Fail	16.537	16.459	1.748	1.876
05/09/2016:16:08:11	255.556	Fail	233.083	Fail	16.958	16.894	1.804	1.919
05/09/2016:16:08:26	248.148	Fail	146.617	Fail	17.304	17.253	1.872	1.949
05/09/2016:16:08:41	248.148	Fail	131.579	Fail	17.578	17.546	1.928	1.985
05/09/2016:16:08:56	148.148	Fail	142.857	Fail	17.797	17.779	1.946	2.021
05/09/2016:16:09:11	118.519	Fail	135.338	Fail	17.973	17.959	1.987	2.053
05/09/2016:16:09:26	140.741	Fail	127.82	Fail	18.113	18.113	2.017	2.085
05/09/2016:16:09:41	107.407	Fail	116.541	Fail	18.225	18.243	2.041	2.111
05/09/2016:16:09:56	96.296	Fail	97.744	Fail	18.32	18.356	2.065	2.133
05/09/2016:16:10:11	92.593	Fail	93.985	Fail	18.398	18.453	2.087	2.158
05/09/2016:16:10:26	88.889	Fail	97.744	Fail	18.464	18.541	2.109	2.182
05/09/2016:16:10:41	62.963	Fail	60.15	Fail	18.52	18.617	2.119	2.188
05/09/2016:16:10:56	55.556	Fail	48.872	Fail	18.568	18.685	2.137	2.207
05/09/2016:16:11:11	62.963	Fail	90.226	Fail	18.61	18.75	2.15	2.233
05/09/2016:16:11:26	48.148	Fail	101.504	Fail	18.648	18.806	2.161	2.258
05/09/2016:16:11:41	40.741	Fail	90.226	Fail	18.679	18.852	2.17	2.278
05/09/2016:16:11:56	29.63	Fail	82.707	Fail	18.709	18.896	2.176	2.299
05/09/2016:16:12:11	25.926	Fail	75.188	Fail	18.73	18.932	2.183	2.316
05/09/2016:16:12:26	25.926	Fail	63.91	Fail	18.751	18.966	2.189	2.331
05/09/2016:16:12:41	22.222	Fail	60.15	Fail	18.771	19	2.194	2.346
05/09/2016:16:12:56	25.926	Fail	52.632	Fail	18.782	19.03	2.202	2.357
05/09/2016:16:13:11	25.926	Fail	22.556	Fail	18.803	19.065	2.207	2.357
05/09/2016:16:13:26	22.222	Fail	0	Pass	18.818	19.101	2.213	2.357
05/09/2016:16:13:41	22.222	Fail	15.038	Fail	18.837	19.132	2.219	2.365
05/09/2016:16:13:56	25.926	Fail	33.835	Fail	18.844	19.162	2.226	2.374
05/09/2016:16:14:11	29.63	Fail	37.594	Fail	18.853	19.183	2.233	2.383
05/09/2016:16:14:26	25.926	Fail	30.075	Fail	18.874	19.202	2.239	2.389
05/09/2016:16:14:41	25.926	Fail	26.316	Fail	18.881	19.219	2.246	2.397
05/09/2016:16:14:56	37.037	Fail	26.316	Fail	18.885	19.232	2.257	2.402
05/09/2016:16:15:11	40.741	Fail	22.556	Fail	18.898	19.245	2.267	2.408
05/09/2016:16:15:26	25.926	Fail	26.316	Fail	18.896	19.258	2.27	2.415
05/09/2016:16:15:41	11.111	Fail	22.556	Fail	18.899	19.264	2.272	2.419
05/09/2016:16:15:56	22.222	Fail	15.038	Fail	18.907	19.269	2.281	2.423
05/09/2016:16:16:11	40.741	Fail	15.038	Fail	18.924	19.275	2.293	2.427
05/09/2016:16:16:26	40.741	Fail	18.797	Fail	18.939	19.281	2.302	2.432
05/09/2016:16:16:41	37.037	Fail	15.038	Fail	18.967	19.294	2.311	2.434
05/09/2016:16:16:56	33.333	Fail	11.278	Fail	18.982	19.294	2.319	2.438
05/09/2016:16:17:11	25.926	Fail	11.278	Fail	19	19.3	2.324	2.44
05/09/2016:16:17:26	18.519	Fail	7.519	Pass	19.012	19.302	2.328	2.442
05/09/2016:16:17:41	14.815	Fail	7.519	Pass	19.023	19.307	2.331	2.444
05/09/2016:16:17:56	14.815	Fail	3.759	Pass	19.036	19.312	2.335	2.444
05/09/2016:16:18:11	18.519	Fail	3.759	Pass	19.037	19.306	2.341	2.445
05/09/2016:16:18:26	18.519	Fail	3.759	Pass	19.046	19.311	2.344	2.445
05/09/2016:16:18:41	14.815	Fail	3.759	Pass	19.052	19.312	2.348	2.447
05/09/2016:16:18:56	14.815	Fail	7.519	Pass	19.059	19.316	2.352	2.449
05/09/2016:16:19:11	14.815	Fail	3.759	Pass	19.064	19.318	2.356	2.449
05/09/2016:16:19:26	14.815	Fail	3.759	Pass	19.067	19.319	2.359	2.451
05/09/2016:16:19:41	7.407	Pass	3.759	Pass	19.072	19.323	2.359	2.451

Hg-324K-1099								
HgK_324 Data	huntington2wk5	5/9/2016	16:37:39					
DGM1 ID	DGM2 ID	Trap1 ID	Trap2 ID					
3605445	3605446	312666	283917					
Time:	Leak 1	Status	Leak 2	Status	Vacuum1	Vacuum2	DGM 1	DGM 2
Day:hh:mm	ccpermin	P-F	ccpermin	P-F	in-Hg	in-Hg	liter	liter
05/09/2016:16:37:53	1366.167	Fail	1255.139	Fail	2.14	2.249	0.433	0.378
05/09/2016:16:38:08	1566.667	Fail	1563.91	Fail	5.532	5.728	0.783	0.782
05/09/2016:16:38:23	1266.667	Fail	1263.158	Fail	8.335	8.42	1.067	1.009
05/09/2016:16:38:38	896.296	Fail	958.647	Fail	10.596	10.523	1.231	1.261
05/09/2016:16:38:53	666.667	Fail	849.624	Fail	12.368	12.203	1.4	1.434
05/09/2016:16:39:08	614.815	Fail	548.872	Fail	13.699	13.504	1.539	1.536
05/09/2016:16:39:23	496.296	Fail	383.459	Fail	14.67	14.515	1.648	1.626
05/09/2016:16:39:38	392.593	Fail	345.865	Fail	15.509	15.284	1.735	1.709
05/09/2016:16:39:53	266.667	Fail	293.233	Fail	16.256	15.993	1.781	1.773
05/09/2016:16:40:08	174.074	Fail	319.549	Fail	16.832	16.656	1.822	1.868
05/09/2016:16:40:23	174.074	Fail	327.068	Fail	17.291	17.183	1.869	1.936
05/09/2016:16:40:38	185.185	Fail	195.489	Fail	17.662	17.613	1.915	1.966
05/09/2016:16:40:53	151.852	Fail	131.579	Fail	17.955	17.94	1.944	2.002
05/09/2016:16:41:08	111.111	Fail	124.06	Fail	18.185	18.184	1.97	2.028
05/09/2016:16:41:23	100	Fail	97.744	Fail	18.361	18.371	1.994	2.051
05/09/2016:16:41:38	92.593	Fail	82.707	Fail	18.498	18.529	2.017	2.07
05/09/2016:16:41:53	51.852	Fail	78.947	Fail	18.61	18.681	2.02	2.09
05/09/2016:16:42:08	14.815	Fail	63.91	Fail	18.695	18.812	2.024	2.102
05/09/2016:16:42:23	29.63	Fail	33.835	Fail	18.77	18.913	2.035	2.107
05/09/2016:16:42:38	44.444	Fail	41.353	Fail	18.83	19.001	2.046	2.122
05/09/2016:16:42:53	44.444	Fail	48.872	Fail	18.877	19.071	2.057	2.132
05/09/2016:16:43:08	37.037	Fail	33.835	Fail	18.919	19.126	2.065	2.139
05/09/2016:16:43:23	29.63	Fail	22.556	Fail	18.948	19.166	2.072	2.143
05/09/2016:16:43:38	29.63	Fail	15.038	Fail	18.972	19.197	2.08	2.147
05/09/2016:16:43:53	22.222	Fail	11.278	Fail	18.986	19.216	2.083	2.148
05/09/2016:16:44:08	18.519	Fail	7.519	Pass	18.998	19.234	2.089	2.15
05/09/2016:16:44:23	18.519	Fail	3.759	Pass	19.01	19.246	2.093	2.15
05/09/2016:16:44:38	14.815	Fail	3.759	Pass	19.022	19.259	2.096	2.152
05/09/2016:16:44:53	11.111	Fail	3.759	Pass	19.034	19.269	2.098	2.152
05/09/2016:16:45:08	11.111	Fail	0	Pass	19.038	19.274	2.102	2.152
05/09/2016:16:45:23	11.111	Fail	0	Pass	19.043	19.279	2.104	2.152
05/09/2016:16:45:38	7.407	Pass	3.759	Pass	19.045	19.278	2.106	2.154

Time: day:hh:mm:ss	Stack Pressure: in-Hg	Sat% H2O: Percent	Static: in-H2O	Barometric: in-Hg	Flowmeter1: l/min	Vacuum1: in-Hg	Flowmeter2: l/min	Vacuum2: in-Hg	Stack Temp: degF	Sorbent Temp: degF	Probe Temp: degF	DGM#1 Temp: degF	Condenser Temp: degF	DGM#2 Temp: degF	DAQ Temp: degF	DGM1*: liters STP	DGM2*: liters STP	DGM1: liters nominal	DGM2: liters nominal
20160509:16:55:21	24.074	11.836	8.757	23.43	0.239	1.724	0.24	1.691	113.282	301.185	302.978	78.502	60.396	79.184	87.793	1.271	1.212	1.656	1.581
20160509:17:00:21	24.076	11.796	8.792	23.43	0.25	2.055	0.25	1.999	113.165	301.093	303.112	78.619	56.454	79.315	87.945	2.57	2.529	3.348	3.299
20160509:17:05:21	24.07	11.762	8.732	23.428	0.25	2.1	0.25	2.026	113.056	300.983	302.985	78.735	52.199	79.403	88.097	3.869	3.791	5.041	4.945
20160509:17:10:21	24.071	11.74	8.774	23.426	0.25	2.117	0.25	2.042	112.993	300.921	302.771	78.824	50.668	79.49	88.243	5.213	5.118	6.793	6.677
20160509:17:15:21	24.075	11.722	8.806	23.427	0.25	2.117	0.25	2.035	112.944	300.844	302.535	78.971	50.617	79.616	88.387	6.517	6.387	8.493	8.333
20160509:17:20:21	24.077	11.283	8.763	23.432	0.25	2.091	0.25	2.005	111.592	300.809	302.395	79.054	49.544	79.707	88.52	7.88	7.718	10.269	10.07
20160509:17:25:21	24.076	10.67	8.835	23.427	0.25	2.012	0.25	1.952	109.668	300.808	302.305	79.135	49.07	79.779	88.646	9.171	8.993	11.952	11.735
20160509:17:30:21	24.075	10.666	8.79	23.428	0.25	1.978	0.25	1.915	109.654	300.831	302.239	79.213	48.462	79.858	88.755	10.515	10.335	13.706	13.487
20160509:17:35:21	24.074	10.94	8.858	23.423	0.25	1.965	0.25	1.907	110.512	300.803	302.049	79.322	47.932	79.947	88.855	11.876	11.628	15.481	15.177
20160509:17:40:21	24.074	11.53	8.875	23.421	0.25	1.978	0.25	1.922	112.362	300.857	301.879	79.366	47.627	79.991	88.951	13.199	12.971	17.207	16.93
20160509:17:45:21	24.068	11.621	8.755	23.424	0.25	1.967	0.25	1.927	112.628	300.856	301.75	79.431	47.117	80.049	89.038	14.582	14.274	19.013	18.633
20160509:17:50:21	24.067	11.668	8.723	23.425	0.25	1.982	0.25	1.927	112.769	300.889	301.745	79.467	46.718	80.086	89.113	15.928	15.596	20.769	20.361
20160509:17:55:21	24.07	11.754	8.839	23.42	0.25	1.985	0.25	1.943	113.033	300.861	301.688	79.497	46.403	80.118	89.181	17.248	16.943	22.493	22.12
20160509:18:00:21	24.07	11.84	8.848	23.419	0.25	2	0.25	1.954	113.286	300.812	301.577	79.557	46.122	80.172	89.244	18.633	18.24	24.3	23.816
20160509:18:05:21	24.07	11.865	8.867	23.418	0.25	1.989	0.25	1.954	113.363	300.76	301.58	79.592	45.853	80.221	89.302	19.969	19.599	26.044	25.592
20160509:18:10:21	24.068	11.876	8.865	23.416	0.25	1.989	0.25	1.957	113.391	300.732	301.504	79.644	45.595	80.276	89.352	21.305	20.898	27.789	27.291
20160509:18:15:21	24.067	11.865	8.884	23.414	0.25	1.989	0.25	1.944	113.357	300.737	301.465	79.669	45.392	80.305	89.394	22.69	22.263	29.598	29.075
20160509:18:20:21	24.066	11.863	8.827	23.417	0.25	1.984	0.25	1.936	113.348	300.792	301.525	79.699	45.116	80.333	89.438	24.013	23.552	31.326	30.761
20160509:18:25:21	24.065	11.879	8.844	23.415	0.25	2.003	0.25	1.939	113.397	300.779	301.473	79.758	45.007	80.387	89.48	25.367	24.897	33.094	32.521
20160509:18:30:21	24.064	11.895	8.868	23.412	0.25	1.996	0.25	1.955	113.442	300.814	301.481	79.789	44.879	80.414	89.522	26.753	26.238	34.906	34.274
20160509:18:35:21	24.062	11.95	8.909	23.407	0.25	1.999	0.25	1.95	113.601	300.802	301.446	79.837	44.688	80.455	89.565	28.078	27.543	36.637	35.981
20160509:18:40:21	24.06	12.05	8.879	23.408	0.25	2.004	0.25	1.964	113.891	300.795	301.452	79.928	44.57	80.543	89.609	29.441	28.902	38.419	37.759
20160509:18:45:21	24.062	12.18	8.87	23.41	0.25	1.997	0.25	1.969	114.271	300.744	301.366	79.96	44.469	80.588	89.65	30.821	30.206	40.222	39.466
20160509:18:50:21	24.062	12.207	8.813	23.414	0.25	2.002	0.25	1.986	114.35	300.81	301.423	80.009	44.318	80.64	89.692	32.157	31.571	41.969	41.252
20160509:18:55:21	24.061	12.28	8.763	23.416	0.25	2.004	0.25	1.956	114.558	300.853	301.471	80.052	44.2	80.682	89.733	33.517	32.866	43.746	42.947
20160509:19:00:21	24.06	12.274	8.724	23.419	0.25	2.012	0.25	1.956	114.539	300.794	301.422	80.084	44.016	80.704	89.777	34.896	34.213	45.548	44.709
20160509:19:05:21	24.062	12.342	8.701	23.422	0.25	2.006	0.25	1.965	114.737	300.829	301.393	80.138	43.907	80.755	89.819	36.231	35.565	47.293	46.477
20160509:19:10:21	24.061	12.429	8.657	23.424	0.25	2.001	0.25	1.951	114.984	300.769	301.393	80.182	43.738	80.781	89.862	37.6	36.862	49.081	48.175
20160509:19:15:21	24.053	12.22	8.538	23.425	0.25	1.997	0.25	1.959	114.364	300.786	301.415	80.222	43.628	80.807	89.906	38.974	38.233	50.878	49.968
20160509:19:20:21	24.043	11.71	8.377	23.427	0.25	1.981	0.25	1.939	112.861	300.835	301.504	80.282	43.552	80.898	89.947	40.312	39.539	52.626	51.677
20160509:19:25:21	24.032	11.659	8.106	23.436	0.25	1.976	0.25	1.953	112.692	300.736	301.408	80.293	43.435	80.916	89.988	41.68	40.907	54.413	53.466
20160509:19:30:21	24.032	11.905	7.997	23.444	0.25	1.976	0.25	1.922	113.412	300.804	301.462	80.319	43.408	80.958	90.025	43.055	42.215	56.209	55.177
20160509:19:35:21	24.038	12.528	8.194	23.436	0.25	1.974	0.25	1.942	115.232	300.875	301.508	80.344	43.347	80.976	90.065	44.396	43.544	57.961	56.915
20160509:19:40:21	24.039	12.6	8.114	23.442	0.25	1.991	0.25	1.945	115.436	300.91	301.495	80.348	43.287	80.986	90.1	45.771	44.897	59.757	58.684
20160509:19:45:21	24.038	12.638	7.975	23.452	0.25	2.003	0.25	1.953	115.539	300.901	301.528	80.352	43.218	81.015	90.134	47.15	46.215	61.557	60.408
20160509:19:50:21	24.033	12.665	7.823	23.457	0.25	1.998	0.25	1.959	115.609	300.875	301.502	80.349	43.156	81.005	90.165	48.489	47.593	63.306	62.209
20160509:19:55:21	24.024	12.694	7.6	23.465	0.25	2	0.25	1.967	115.677	300.86	301.478	80.33	43.084	81	90.193	49.863	48.895	65.098	63.91
20160509:20:00:21	24.025	12.713	7.541	23.471	0.25	1.991	0.25	1.983	115.731	300.886	301.481	80.354	43.1	81.021	90.213	51.241	50.251	66.896	65.68
20160509:20:05:21	24.014	12.713	7.504	23.462	0.25	1.983	0.25	1.959	115.715	300.909	301.599	80.316	43.037	80.993	90.231	52.585	51.6	68.65	67.444
20160509:20:10:21	24.015	12.74	7.526	23.461	0.25	1.989	0.25	1.954	115.791	300.892	301.487	80.307	43.033	80.985	90.242	53.959	52.912	70.443	69.158
20160509:20:15:21	24.016	12.765	7.483	23.466	0.25	1.993	0.25	1.962	115.862	300.881	301.514	80.276	42.938	80.974	90.247	55.34	54.281	72.244	70.945
20160509:20:20:21	24.008	12.761	7.352	23.467	0.25	1.994	0.25	1.967	115.838	300.815	301.476	80.256	42.958	80.954	90.249	56.683	55.595	73.996	72.662
20160509:20:25:21	24.002	12.737	7.232	23.47	0.25	2	0.25	1.954	115.764	300.836	301.444	80.233	42.884	80.932	90.248	58.051	56.963	75.781	74.449
20160509:20:30:21	24.002	12.723	7.135	23.477	0.25	2.003	0.25	1.955	115.723	300.814	301.543	80.165	42.892	80.92	90.246	59.436	58.278	77.587	76.165
20160509:20:35:21	24.003	12.712	7.135	23.479	0.25	1.991	0.25	1.956	115.697	300.852	301.517	80.145	42.849	80.888	90.238	60.783	59.605	79.343	77.898
20160509:20:40:21	24	12.746	7.203	23.47	0.25	1.984	0.25	1.955	115.787	300.903	301.532	80.123	42.878	80.833	90.222	62.152	60.963	81.128	79.671
20160509:20:45:21	23.989	12.761	6.984	23.475	0.25	2.001	0.25	1.967	115.813	300.894	301.521	80.089	42.859	80.811	90.206	63.537	62.282	82.933	81.393
20160509:20:50:21	23.983	12.718	7.028	23.466	0.25	1.992	0.25	1.965	115.683	300.867	301.473	80.028	42.864	80.733	90.186	64.879	63.659	84.683	83.192
20160509:20:55:21	23.979	12.712	6.943	23.469	0.25	1.997	0.25	1.974	115.661	300.938	301.56	79.998	42.834	80.714	90.158	66.246	64.959	86.467	84.889
20160509:21:00:21	23.976	12.73	6.773	23.478	0.25	2.006	0.25	1.973	115.708	300.93	301.44	79.954	42.864	80.679	90.13	67.633	66.318	88.274	86.662
20160509:21:05:21	23.979	12.719	6.552	23.497	0.25	2.008	0.25	1.975	115.681	300.887	301.459	79.895	42.799	80.632	90.097	68.979	67.671	90.026	88.427
20160509:21:10:21	23.977	12.68	6.592	23.493	0.25	1.983	0.25	1.965	115.569	300.869	301.428	79.802	42.854	80.561	90.064	70.346	68.982	91.806	90.135
20160509:21:15:21	23.981	12.63	6.746	23.485	0.25	1.992	0.25	1.947	115.435	300.887	301.537	79.75	42.787	80.481	90.024	71.733	70.348	93.613	91.917
20160509:21:20:21	23.982	12.653	6.849	23.478	0.25	1.989	0.25	1.945	115.501	300.871	301.462	79.683	42.801	80.426	89.985	73.084	71.663	95.372	93.632
20160509:21:25:21	23.978	12.707	6.663	23.488	0.25	2.003	0.25	1.963	115.645	300.878	301.488	79.607	42.768	80.371	89.938	74.452	73.038	97.154	95.425
20160509:21:30:21	23.973	12.694	6.599	23.488	0.25	1.999	0.25	1.956	115.601	300.928	301.525	79.524	42.812	80.314	89.887	75.835	74.357	98.954	97.145
20160509:21:35:21	23.979	12.657	6.633	23.491	0.25	1.995	0.25	1.959	115.506	300.885	301.483	79.457	42.766	80.253	89.833	77.181	75.687	100.706	98.878
20160509:21:40:21	23.982	12.614	6.664	23.492	0.25	1.989	0.25	1.956	115.391	300.875	301.509	79.387	42.786	80.156	89.775	78.552	77.045	102.489	100.647
20160509:21:45:21	23.986	12.624	6.659	23.496	0.25	1.983	0.25	1.966	115.423	300.892	301.441	79.327	42.75	80.092	89.715	79.936	78.365	104.289	102.367
20160509:21:50:21	23.989	12.586	6.752	23.493	0.25	1.976	0.25	1.962	115.323	300.891	301.465	79.248	42.76	80.042	89.652	81.279	79.742	106.035	104.16
20160509:21:55:21	23.993	11.81	6.735	23.497	0.25	1.989	0.25	1.942	113.083	300.841	301.476	79.186	42.729	79.99	89.591	82.656	81.051	107.826	105.865
20160509:22:00:21	23.986	11.7	6.575	23.503	0.25	1.978	0.25	1.945	112.746	300.831	301.478	79.144	42.723	79.94	89.528	84.03	82.408	109.613	107.632
20160509:22:05:21	23.975	11.562	6.43	23.503	0.25	1.971	0.25	1.94	112.315	300.796	301.494	79.112	42.735	79.883	89.469	85.371	83.751	111.356	109.38
20160509:22:10:21	23.977	12.439	6.496	23.499	0.25	1.987	0.25	1.94	114.887	300.859	301.51	79.07	42.75	79.802	89.413	86.757	85.065	113.157	111.09
20160509:22:15:21	23.982	12.527	6.507	23.503	0.25	1.99	0.25	1.958	115.146	300.897	301.462	79.024	42.731	79.755	89.36	88.124	86.429	114.933	112.865
20160509:22:20:21	23.977	12.584	6.478	23.5	0.25	1.996	0.25	1.961	115.299	300.943	301.528	78.975	42.738	79.706	89.305	89.47	87.743	116.683	114.575
20160509:22:25:21	23.972	12.637	6.358	23.504	0.25	1.995	0.25	1.96	115.439	300.913	301.494	78.897	42.712	79.661	89.247	90.86	89.114	118.489	116.359
20160509:22:30:21	23.972	12.661	6.375	23.503	0.25	1.991	0.25	1.972	115.507	300.874	301.498	78.828	42.719	79.584	89.188	92.221	90.419	120.257	118.056
20160509:22:35:21	23.97	12.714	6.334	23.505	0.25	1.992	0.25	1.987	115.653	300.944	301.521	78.776	42.716	79.505	89.13	93.571	91.78	122.011	119.827
20160509:22:40:21	23.972	12.697	6.344	23.506	0.25	1.999	0.25	1.973	115.608	300.904	301.521	78.726	42.723	79.457	89.07	94.964	93.138	123.82	121.592
20160509:22:45:21	23.977	12.654	6.355	23.51	0.25	2.007	0.25	1.976	115.497	300.915	301.503	78.666	42.7	79.4	89.009	96.328	94.45	125.591	123.299
20160509:22:50:21	23.968	12.676	6.196	23.512	0.25	1.995	0.25	1.968	115.544	300.917	301.53	78.589	42.69	79.342	88.943	97.668	95.818	127.33	125.077
20160509:22:55:21	23.965	12.702	6.133	23.514	0.25	2	0.25	1.969	115.612	300.85	301.434	78.494	42.679	79.277	88.875	99.068	97.13	129.146	126.782
20160509:23:00:21	23.968	12.648	6.165	23.515	0.25	1.995	0.25	1.967	115.464	300.851	301.481	78.438	42.686	79.18	88.808	100.433	98.509	130.919	128.573
20160509:23:05:21	23.968	12.676	6.122	23.518	0.25	1.996	0.25	1.954	115.542	300.902	301.501	78.386	42.662	79.127	88.743	101.772	99.814	132.656	130.269
20160509:23:10:21	23.963	12.666	6.018	23.521	0.25	2.01	0.25	1.971	115.509	300.872	301.473	78.336	42.698	79.072	88.676	103.173	101.161	134.472	132.019
20160509:23:15:21	23.964	12.147	5.996	23.523	0.25	2.014	0.25	1.962	114.013	300.836	301.501	78.271	42.672	79.016	88.608	104.527	102.524	136.228	133.788
20160509:23:20:21	23.961	11.596	5.948	23.523	0.25	1.986	0.25	1.949	112.398	300.825	301.464	78.173	42.75	78.955	88.537	105.87	103.83	137.969	135.483
20160509:23:25:21	23.967	11.57	5.963	23.528	0.25	1.974	0.25	1.944	112.327	300.785	301.453	78.116	42.7	78.872	88.47	107.276	105.204	139.791	137.267
20160509:23:30:21	23.965	11.962	5.932	23.528	0.25	1.969	0.25	1.939	113.471	300.779	301.439	78.062	42.725	78.818	88.403	108.623	106.515	141.537	138.968
20160509:23:35:21	23.969	12.234	5.979	23.53	0.25	1.994	0.25	1.968	115.147	300.858	301.497	78.018	42.673	78.778	88.339	109.971	107.891	143.283	140.754
20160509:23:40:21	23.972	12.532	5.982	23.532	0.25	1.978	0.25	1.977	115.144	300.856	301.488	77.978	42.732	78.733	88.273	111.372	109.197	145.098	142.447
20160509:23:45:21	23.97	12.56	5.944	23.533	0.25	1.987	0.25	1.956	115.221	300.891	301.467	77.935	42.674	78.687	88.212	112.711	110.546	146.833	144.197
20160509:23:50:21	23.968	12.632	5.869	23.536	0.25	2	0.25	1.96	115.419	300.901	301.485	77.853	42.706	78.636	88.154	114.071	111.907	148.594	145.962
20160509:23:55:21	23.958	12.611	5.699	23.539	0.25	1.998	0.25	1.966	115.347	300.914	301.492	77.807	42.662	78.554	88.1	115.467	113.217	150.402	147.662
20160510:00:00:21	23.96	12.58	5.697	23.541	0.25	1.992	0.25	1.962	115.262	300.847	301.454	77.757	42.733	78.486	88.042	116.811	114.586	152.141	149.436
20160510:00:05:21	23.959	12.593	5.69	23.541	0.25	2.001	0.25	1.959	115.299	300.808	301.471	77.708	42.686	78.438	87.983	118.177	115.9	153.909	151.139
20160510:00:10:21	23.955	12.555	5.64	23.541	0.25	1.995	0.25	1.968	115.185	300.715	301.439	77.662	42.732	78.391	87.925	119.558	117.275	155.696	152.921
20160510:00:15:21	23.953	12.531	5.604	23.541	0.25	2.004	0.25	1.968	115.115	300.795	301.409	77.592	42.706	78.338	87.863	120.899	118.575	157.431	154.605
20160510:00:20:21	23.951	12.505	5.539	23.543	0.25	2.003	0.25	1.972	115.038	300.769	301.419	77.498	42.758	78.276	87.802	122.286	119.937	159.226	156.37
20160510:00:25:21	23.947	12.459	5.412	23.549	0.25	1.995	0.25	1.975	114.901	300.803	301.388	77.439	42.759	78.174	87.741	123.647	121.29	160.987	158.122
20160510:00:30:21	23.944	12.425	5.358	23.55	0.25	2	0.25	1.964	114.801	300.811	301.417	77.378	42.757	78.12	87.678	124.999	122.605	162.735	159.825
20160510:00:35:21	23.946	12.368	5.36	23.552	0.25	1.996	0.25	1.953	114.642	300.823	301.442	77.317	42.761	78.06	87.614	126.396	123.972	164.541	161.594
20160510:00:40:21	23.948	12.297	5.348	23.555	0.25	1.989	0.25	1.949	114.442	300.804	301.441	77.231	42.717	78.002	87.547	127.762	125.292	166.306	163.303
20160510:00:45:21	23.943	12.24	5.349	23.55	0.25	1.971	0.25	1.953	114.269	300.801	301.418	77.141	42.761	77.925	87.484	129.098	126.667	168.033	165.083
20160510:00:50:21	23.941	12.187	5.333	23.549	0.25	1.977	0.25	1.953	114.114	300.798	301.461	77.073	42.7	77.837	87.417	130.501	127.974	169.846	166.774
20160510:00:55:21	23.936	12.152	5.299	23.546	0.25	1.97	0.25	1.929	114.004	300.805	301.376	76.97	42.728	77.777	87.345	131.855	129.339	171.596	168.541
20160510:01:00:21	23.934	12.154	5.245	23.548	0.25	1.973	0.25	1.941	114.006	300.765	301.424	76.905	42.705	77.719	87.277	133.198	130.684	173.331	170.282
20160510:01:05:21	23.93	12.129	5.158	23.551	0.25	1.972	0.25	1.942	113.931	300.817	301.433	76.847	42.687	77.664	87.223	134.602	132.001	175.144	171.985
20160510:01:10:21	23.929	12.165	5.097	23.555	0.25	1.987	0.25	1.942	114.033	300.843	301.407	76.802	42.735	77.607	87.161	135.936	133.366	176.867	173.75
20160510:01:15:21	23.928	12.086	5.057	23.556	0.25	1.989	0.25	1.936	113.8	300.862	301.471	76.744	42.707	77.509	87.09	137.295	134.686	178.622	175.457
20160510:01:20:21	23.93	12.023	5.05	23.559	0.25	1.972	0.25	1.94	113.621	300.819	301.432	76.642	42.736	77.442	87.017	138.69	136.06	180.422	177.233
20160510:01:25:21	23.927	11.969	5.062	23.554	0.25	1.968	0.25	1.952	113.458	300.846	301.452	76.567	42.707	77.375	86.947	140.03	137.371	182.152	178.929
20160510:01:30:21	23.924	11.934	5.057	23.552	0.25	1.974	0.25	1.928	113.353	300.859	301.465	76.51	42.687	77.313	86.879	141.405	138.741	183.928	180.699
20160510:01:35:21	23.923	11.354	5.021	23.554	0.25	1.97	0.25	1.926	111.581	300.824	301.443	76.45	42.728	77.214	86.805	142.778	140.057	185.7	182.4
20160510:01:40:21	23.921	10.655	4.983	23.555	0.25	1.94	0.25	1.907	109.398	300.794	301.442	76.377	42.687	77.133	86.733	144.12	141.395	187.431	184.13
20160510:01:45:21	23.921	10.646	4.951	23.557	0.25	1.931	0.25	1.899	109.366	300.76	301.428	76.271	42.663	77.072	86.662	145.516	142.757	189.231	185.889
20160510:01:50:21	23.914	10.962	4.807	23.561	0.25	1.953	0.25	1.912	110.345	300.734	301.425	76.218	42.697	77.009	86.595	146.873	144.065	190.981	187.579
20160510:01:55:21	23.914	11.562	4.796	23.561	0.25	1.974	0.25	1.945	112.226	300.788	301.438	76.167	42.714	76.934	86.53	148.204	145.428	192.698	189.338
20160510:02:00:21	23.913	11.613	4.763	23.563	0.25	1.982	0.25	1.936	112.379	300.88	301.428	76.121	42.732	76.883	86.462	149.611	146.741	194.513	191.034
20160510:02:05:21	23.914	11.64	4.731	23.567	0.25	1.984	0.25	1.944	112.464	300.798	301.413	76.079	42.773	76.83	86.396	150.939	148.113	196.224	192.805
20160510:02:10:21	23.914	11.652	4.736	23.565	0.25	1.981	0.25	1.949	112.499	300.84	301.47	76.003	42.804	76.776	86.334	152.298	149.419	197.976	194.491
20160510:02:15:21	23.908	11.636	4.613	23.568	0.25	1.975	0.25	1.94	112.44	300.884	301.437	75.928	42.793	76.722	86.273	153.688	150.788	199.767	196.258
20160510:02:20:21	23.909	11.626	4.598	23.571	0.25	1.972	0.25	1.939	112.413	300.818	301.32	75.878	42.805	76.627	86.209	155.023	152.095	201.487	197.944
20160510:02:25:21	23.91	11.641	4.632	23.57	0.25	1.976	0.25	1.949	112.459	300.812	301.445	75.829	42.789	76.57	86.147	156.402	153.443	203.263	199.682
20160510:02:30:21	23.911	11.651	4.614	23.572	0.25	1.971	0.25	1.935	112.49	300.808	301.392	75.777	42.776	76.518	86.088	157.768	154.794	205.022	201.425
20160510:02:35:21	23.907	11.618	4.523	23.575	0.25	1.969	0.25	1.941	112.387	300.805	301.364	75.705	42.81	76.466	86.025	159.106	156.106	206.746	203.117
20160510:02:40:21	23.903	11.62	4.491	23.572	0.25	1.958	0.25	1.931	112.386	300.807	301.352	75.627	42.818	76.408	85.964	160.502	157.469	208.543	204.874
20160510:02:45:21	23.905	11.617	4.5	23.574	0.25	1.967	0.25	1.942	112.38	300.783	301.473	75.57	42.807	76.344	85.902	161.842	158.783	210.269	206.568
20160510:02:50:21	23.902	10.743	4.462	23.574	0.25	1.959	0.25	1.933	109.65	300.722	301.414	75.52	42.825	76.253	85.838	163.189	160.153	212.002	208.335
20160510:02:55:21	23.903	11.501	4.435	23.577	0.25	1.952	0.25	1.924	112.026	300.756	301.375	75.464	42.84	76.2	85.775	164.583	161.46	213.796	210.019
20160510:03:00:21	23.902	11.522	4.365	23.581	0.25	1.97	0.25	1.931	112.088	300.765	301.358	75.418	42.844	76.153	85.714	165.926	162.834	215.524	211.789
20160510:03:05:21	23.904	11.48	4.498	23.573	0.25	1.954	0.25	1.911	111.964	300.762

Time: day:hh:mm:ss	Stack Pressure: Percent	Sat% H2O: Percent	Static: in-H2O	Barometric: in-Hg	Flowmeter1: l/min	Vacuum1: in-Hg	Flowmeter2: l/min	Vacuum2: in-Hg	Stack Temp: degF	Sorbent Temp: degF	Probe Temp: degF	DGM#1 Temp: degF	Condenser Temp: degF	DGM#2 Temp: degF	DAQ Temp: degF	DGM1*: liters STP	DGM2*: liters STP	DGM1: liters nominal	DGM2: liters nominal
20160510:06:35:21	23.875	12.825	3.13	23.644	0.25	2.105	0.25	1.978	115.819	300.679	301.276	72.875	42.267	73.587	83.171	224.612	220.535	290.765	285.868
20160510:06:40:21	23.871	12.861	3.128	23.641	0.246	3.111	0.25	1.985	115.913	300.718	301.305	72.821	42.275	73.549	83.12	225.991	221.905	292.526	287.62
20160510:06:45:21	23.869	12.852	3.066	23.644	0.253	3.429	0.25	1.93	115.886	300.666	301.383	72.8	42.267	73.515	83.071	227.351	223.226	294.263	289.31
20160510:06:50:21	23.869	12.857	3.019	23.647	0.25	2.667	0.25	1.925	115.899	300.599	301.36	72.735	42.324	73.464	83.019	228.741	224.579	296.037	291.039
20160510:06:55:21	23.869	12.282	3.062	23.644	0.25	2.335	0.25	1.932	114.279	300.634	301.355	72.687	42.268	73.37	82.967	230.116	225.939	297.793	292.778
20160510:07:00:21	23.867	12.19	3.148	23.635	0.25	2.231	0.25	1.933	114.012	300.691	301.325	72.652	42.294	73.331	82.916	231.451	227.259	299.498	294.466
20160510:07:05:21	23.862	12.109	3.016	23.64	0.25	2.166	0.25	1.931	113.771	300.675	301.347	72.613	42.354	73.295	82.866	232.858	228.628	301.294	296.216
20160510:07:10:21	23.864	12.77	3.047	23.64	0.25	2.787	0.25	1.957	115.65	300.712	301.347	72.573	42.268	73.252	82.812	234.185	229.947	302.989	297.902
20160510:07:15:21	23.862	12.895	2.928	23.647	0.25	2.895	0.25	1.96	115.995	300.72	301.293	72.521	42.332	73.208	82.763	235.561	231.332	304.744	299.671
20160510:07:20:21	23.862	12.924	2.927	23.647	0.25	2.873	0.25	1.966	116.075	300.721	301.314	72.447	42.34	73.177	82.716	236.946	232.651	306.511	301.357
20160510:07:25:21	23.862	12.981	2.894	23.649	0.25	2.833	0.25	1.964	116.231	300.736	301.311	72.403	42.299	73.155	82.668	238.294	234.037	308.231	303.128
20160510:07:30:21	23.865	12.995	2.948	23.648	0.25	2.851	0.25	1.949	116.271	300.742	301.315	72.359	42.386	73.098	82.62	239.695	235.348	310.019	304.803
20160510:07:35:21	23.866	13.016	3.013	23.644	0.25	2.603	0.25	1.955	116.331	300.696	301.355	72.324	42.324	73.039	82.577	241.052	236.727	311.75	306.564
20160510:07:40:21	23.867	13.016	2.983	23.648	0.25	2.287	0.25	1.944	116.332	300.659	301.27	72.318	42.317	73.018	82.536	242.402	238.038	313.472	308.239
20160510:07:45:21	23.864	13.011	2.88	23.652	0.25	2.179	0.25	1.943	116.316	300.661	301.295	72.284	42.375	72.969	82.501	243.798	239.403	315.252	309.981
20160510:07:50:21	23.866	13.025	2.867	23.656	0.25	2.262	0.25	1.951	116.357	300.747	301.334	72.281	42.323	72.959	82.463	245.139	240.753	316.961	311.705
20160510:07:55:21	23.874	12.399	3.001	23.654	0.25	2.712	0.25	1.935	114.623	300.659	301.294	72.242	42.344	72.916	82.428	246.524	242.081	318.728	313.4
20160510:08:00:21	23.874	12.328	3.009	23.653	0.25	2.566	0.25	1.936	114.421	300.703	301.335	72.226	42.332	72.899	82.394	247.897	243.45	320.478	315.148
20160510:08:05:21	23.872	12.322	2.944	23.655	0.25	2.255	0.25	1.947	114.399	300.626	301.287	72.188	42.25	72.86	82.36	249.229	244.767	322.176	316.829
20160510:08:10:22	23.874	13.084	2.933	23.658	0.25	2.182	0.25	1.979	116.525	300.652	301.271	72.144	42.355	72.821	82.323	250.639	246.14	323.974	318.581
20160510:08:15:22	23.883	13.216	2.984	23.663	0.25	2.155	0.25	1.978	116.898	300.671	301.264	72.118	42.261	72.78	82.293	251.971	247.46	325.67	320.265
20160510:08:20:22	23.886	13.289	3.021	23.664	0.249	2.581	0.25	1.971	117.101	300.756	301.308	72.18	42.292	72.835	82.266	253.348	248.837	327.426	322.023
20160510:08:25:22	23.886	13.266	3.096	23.658	0.25	3.175	0.25	1.974	117.038	300.767	301.305	72.131	42.271	72.776	82.242	254.718	250.155	329.172	323.705
20160510:08:30:22	23.888	13.227	3.07	23.663	0.25	2.871	0.25	1.959	116.937	300.675	301.285	72.187	42.208	72.83	82.226	256.068	251.537	330.893	325.468
20160510:08:35:22	23.89	13.214	3.027	23.667	0.25	2.434	0.25	1.974	116.905	300.69	301.31	72.229	42.245	72.863	82.211	257.472	252.85	332.681	327.143
20160510:08:40:22	23.889	13.194	3.046	23.665	0.25	2.247	0.25	1.946	116.85	300.704	301.36	72.264	42.257	72.906	82.2	258.813	254.227	334.391	328.9
20160510:08:45:22	23.898	13.179	3.149	23.666	0.25	2.187	0.25	1.957	116.82	300.73	301.352	72.304	42.207	72.93	82.2	260.176	255.537	336.128	330.571
20160510:08:50:22	23.901	13.151	3.265	23.661	0.25	2.161	0.25	1.952	116.751	300.705	301.329	72.348	42.247	72.968	82.203	261.567	256.903	337.902	332.316
20160510:08:55:22	23.906	12.513	3.35	23.66	0.25	2.15	0.25	1.958	114.994	300.638	301.281	72.372	42.217	72.983	82.217	262.906	258.251	339.609	334.036
20160510:09:00:22	23.906	12.364	3.356	23.66	0.25	2.14	0.25	1.959	114.572	300.694	301.299	72.411	42.166	73.017	82.233	264.306	259.579	341.394	335.731
20160510:09:05:22	23.907	12.254	3.334	23.662	0.25	2.135	0.25	1.948	114.257	300.662	301.312	72.491	42.238	73.098	82.253	265.648	260.951	343.106	337.483
20160510:09:10:22	23.909	12.94	3.444	23.656	0.249	4.016	0.25	1.944	116.185	300.646	301.311	72.557	42.196	73.148	82.281	266.997	262.267	344.826	339.164
20160510:09:15:22	23.909	13.038	3.413	23.658	0.25	3.104	0.25	1.943	116.456	300.624	301.3	72.588	42.152	73.18	82.311	268.398	263.636	346.613	340.912
20160510:09:20:22	23.913	13.055	3.437	23.661	0.25	2.939	0.25	1.942	116.509	300.687	301.355	72.634	42.21	73.233	82.348	269.74	264.953	348.326	342.594
20160510:09:25:22	23.92	13.092	3.534	23.66	0.25	2.547	0.25	1.964	116.618	300.77	301.343	72.667	42.182	73.27	82.387	271.137	266.329	350.107	344.352
20160510:09:30:22	23.915	13.096	3.503	23.658	0.25	2.317	0.25	1.954	116.623	300.698	301.294	72.694	42.141	73.303	82.425	272.513	267.646	351.863	346.034
20160510:09:35:22	23.911	13.072	3.937	23.622	0.25	2.185	0.25	1.915	116.552	300.724	301.337	72.736	42.152	73.348	82.462	273.846	269.026	353.567	347.799
20160510:09:40:22	23.911	13.055	3.406	23.661	0.25	2.207	0.25	1.948	116.504	300.729	301.363	72.751	42.128	73.365	82.504	275.251	270.343	355.359	349.481
20160510:09:45:22	23.917	13.023	3.371	23.669	0.25	2.199	0.25	1.962	116.426	300.782	301.44	72.858	42.141	73.465	82.54	276.58	271.717	357.056	351.237
20160510:09:50:22	23.915	13.015	3.386	23.666	0.249	2.48	0.25	1.975	116.4	300.719	301.357	72.873	42.114	73.483	82.577	277.958	273.031	358.813	352.915
20160510:09:55:22	23.917	12.583	3.382	23.668	0.25	3.518	0.25	1.951	115.205	300.684	301.385	72.916	42.12	73.527	82.616	279.334	274.39	360.569	354.65
20160510:10:00:22	23.921	12.484	3.425	23.669	0.25	2.926	0.25	1.946	114.932	300.617	301.339	72.946	42.13	73.558	82.654	280.682	275.743	362.289	356.38
20160510:10:05:22	23.925	12.334	3.439	23.672	0.25	2.787	0.25	1.959	114.512	300.609	301.358	72.97	42.125	73.576	82.692	282.084	277.066	364.078	358.07
20160510:10:10:22	23.923	13.042	3.394	23.674	0.25	2.482	0.25	1.962	116.486	300.681	301.375	73.001	42.124	73.61	82.728	283.433	278.435	365.798	359.818
20160510:10:15:22	23.921	13.18	3.366	23.674	0.25	2.363	0.25	1.966	116.859	300.742	301.402	73.027	42.106	73.634	82.762	284.784	279.752	367.522	361.5
20160510:10:20:22	23.919	13.203	3.37	23.672	0.249	2.894	0.25	1.975	116.919	300.757	301.38	73.102	42.102	73.67	82.798	286.18	281.122	369.304	363.25
20160510:10:25:22	23.926	13.172	3.453	23.672	0.25	3.253	0.25	1.979	116.845	300.769	301.376	73.136	42.076	73.68	82.834	287.521	282.443	371.015	364.938
20160510:10:30:22	23.926	13.169	3.391	23.677	0.25	2.949	0.25	1.962	116.837	300.79	301.431	73.184	42.098	73.751	82.872	288.917	283.82	372.796	366.697
20160510:10:35:22	23.924	13.213	3.34	23.678	0.25	2.616	0.25	1.967	116.952	300.757	301.438	73.191	42.098	73.763	82.907	290.288	285.136	374.546	368.378
20160510:10:40:22	23.924	13.215	3.37	23.676	0.25	2.362	0.25	1.97	116.957	300.836	301.408	73.241	42.126	73.841	82.942	291.62	286.514	376.246	370.139
20160510:10:45:22	23.925	13.18	3.393	23.676	0.25	2.287	0.25	1.976	116.865	300.732	301.361	73.246	42.103	73.843	82.978	293.026	287.834	378.041	371.825
20160510:10:50:22	23.925	13.206	3.369	23.679	0.25	2.275	0.25	1.982	116.937	300.734	301.394	73.298	42.123	73.894	83.015	294.359	289.202	379.743	373.573
20160510:10:55:22	23.923	12.626	3.406	23.673	0.25	2.252	0.25	1.967	115.336	300.714	301.401	73.323	42.122	73.924	83.054	295.738	290.521	381.502	375.259
20160510:11:00:22	23.922	12.468	3.405	23.672	0.25	2.248	0.25	1.968	114.889	300.762	301.427	73.364	42.14	73.962	83.09	297.108	291.876	383.252	376.991
20160510:11:05:22	23.919	12.325	3.32	23.675	0.25	2.236	0.25	1.975	114.479	300.697	301.372	73.411	42.127	73.988	83.125	298.456	293.229	384.972	378.72
20160510:11:10:22	23.923	12.949	3.391	23.674	0.25	2.248	0.25	1.964	116.232	300.653	301.318	73.476	42.136	74.019	83.164	299.855	294.549	386.759	380.408
20160510:11:15:22	23.919	13.044	3.27	23.678	0.25	2.252	0.25	1.982	116.486	300.761	301.339	73.518	42.142	74.068	83.205	301.192	295.916	388.467	382.154
20160510:11:20:22	23.92	13.028	3.268	23.68	0.249	2.55	0.25	1.971	116.445	300.739	301.372	73.535	42.123	74.082	83.249	302.548	297.241	390.198	383.848
20160510:11:25:22	23.931	13.037	3.431	23.679	0.251	3.483	0.25	1.969	116.484	300.826	301.471	73.582	42.15	74.158	83.288	303.944	298.608	391.98	385.596
20160510:11:30:22	23.935	13.052	3.438	23.683	0.25	3.171	0.25	1.954	116.534	300.771	301.436	73.597	42.128	74.181	83.328	305.285	299.929	393.693	387.284
20160510:11:35:22	23.931	13.081	3.415	23.68	0.25	2.898	0.25	1.958	116.605	300.778	301.423	73.625	42.128	74.212	83.366	306.689	301.304	395.485	389.041
20160510:11:40:22	23.926	13.107	3.529	23.667	0.25	2.475	0.25	1.963	116.669	300.758	301.419	73.647	42.126	74.243	83.399	308.057	302.619	397.233	390.724
20160510:11:45:22	23.925	13.156	3.405	23.675	0.25	2.364	0.25	1.967	116.8	300.849	301.417	73.669	42.122	74.275	83.436	309.392	303.999	398.939	392.489
20160510:11:50:22	23.927	13.127	3.463	23.673	0.249	3.085	0.25	1.97	116.723	300.831	301.459	73.696	42.129	74.314	83.471	310.794	305.309	400.73	394.164
20160510:11:55:22	23.933	12.504	3.444	23.68	0.25	3.126	0.25	1.965	115.008	300.772	301.421	73.737	42.117	74.343	83.506	312.129	306.683	402.435	395.921
20160510:12:00:22	23.934	12.384	3.567	23.672	0.25	2.895	0.25	1.961	114.669	300.712	301.415	73.79	42.13	74.409	83.538	313.508	308.013	404.196	397.622
20160510:12:05:22	23.924	12.381	3.436	23.671	0.25	2.493	0.25	1.961	114.646	300.721	301.339	73.843	42.124	74.447	83.572	314.887	309.354	405.959	399.338
20160510:12:10:22	23.925	12.239	3.451	23.671	0.25	2.36	0.25	1.961	114.24	300.728	301.327	73.883	42.145	74.499	83.605	316.233	310.725	407.68	401.092
20160510:12:15:22	23.924	12.801	3.546	23.664	0.25	2.379	0.25	1.972	115.821	300.73	301.342	73.917	42.157	74.536	83.64	317.632	312.04	409.469	402.776
20160510:12:20:22	23.935	13.048	3.656	23.666	0.25	3.302	0.25	1.95	116.522	300.746	301.401	73.948	42.157	74.569	83.673	318.984	313.408	411.196	404.526
20160510:12:25:22	23.933	13.063	3.572	23.671	0.25	2.678	0.25	1.962	116.56	300.694	301.327	73.977	42.157	74.595	83.713	320.337	314.729	412.926	406.218
20160510:12:30:22	23.933	13.102	3.544	23.673	0.25	2.459	0.25	1.968	116.665	300.739	301.414	74.021	42.179	74.678	83.751	321.735	316.106	414.713	407.979
20160510:12:35:22	23.94	13.129	3.705	23.667	0.249	3.124	0.25	1.969	116.749	300.78	301.401	74.054	42.171	74.719	83.791	323.07	317.42	416.42	409.662
20160510:12:40:22	23.937	12.627	3.664	23.668	0.25	3.032	0.25	1.958	115.357	300.804	301.419	74.149	42.2	74.767	83.834	324.456	318.794	418.193	411.421
20160510:12:45:22	23.941	12.452	3.684	23.67	0.25	2.562	0.25	1.954	114.873	300.794	301.416	74.18	42.197	74.795	83.876	325.827	320.114	419.946	413.111
20160510:12:50:22	23.94	12.299	3.717	23.667	0.25	2.398	0.25	1.947	114.435	300.695	301.334	74.211	42.201	74.824	83.919	327.169	321.482	421.663	414.863
20160510:12:55:22	23.936	12.795	3.663	23.667	0.25	2.333	0.25	1.958	115.822	300.735	301.466	74.264	42.21	74.874	83.961	328.572	322.8	423.457	416.551
20160510:13:00:22	23.933	12.915	3.639	23.665	0.25	2.321	0.25	1.969	116.156	300.718	301.428	74.287	42.188	74.897	84.004	329.909	324.15	425.169	418.28
20160510:13:05:22	23.938	12.888	3.693	23.666	0.249	3.103	0.25	1.95	116.086	300.734	301.353	74.351	42.209	74.975	84.051	331.266	325.503	426.904	420.013
20160510:13:10:22	23.94	12.858	3.776	23.662	0.25	3.381	0.25	1.95	116.008	300.792	301.416	74.448	42.215	75.059	84.094	332.655	326.82	428.681	421.701
20160510:13:15:22	23.94	12.917	3.792	23.661	0.25	3.315	0.25	1.956	116.169	300.821	301.46	74.506	42.221	75.1	84.14	333.991	328.18	430.393	423.444
20160510:13:20:22	23.937	12.884	3.751	23.661	0.25	3.272	0.25	1.955	116.074	300.797	301.409	74.548	42.229	75.137	84.187	335.392	329.498	432.185	425.133
20160510:13:25:22	23.928	12.885	4.027	23.632	0.25	3.075	0.25	1.916	116.065	300.797	301.396	74.596	42.245	75.191	84.233	336.75	330.871	433.926	426.895
20160510:13:30:22	23.94	12.846	3.779	23.662	0.25	2.628	0.25	1.948	115.974	300.794	301.404	74.677	42.251	75.233	84.28	338.084	332.182	435.635	428.575
20160510:13:35:22	23.946	12.84	3.906	23.659	0.25	2.488	0.25	1.951	115.966	300.83	301.447	74.728	42.253	75.272	84.332	339.488	333.551	437.433	430.331
20160510:13:40:22	23.947	12.403	3.964	23.655	0.25	2.412	0.25	1.944	114.739	300.785	301.382	74.763	42.273	75.331	84.38	340.82	334.859	439.139	432.008
20160510:13:45:22	23.948	12.202	4.011	23.653	0.25	2.341	0.25	1.95	114.169	300.737	301.391	74.811	42.326	75.408	84.431	342.191	336.229	440.896	433.765
20160510:13:50:22	23.947	12.062	3.945	23.657	0.25	2.332	0.25	1.934	113.761	300.723	301.422	74.851	42.366	75.453	84.48	343.556	337.541	442.644	435.447
20160510:13:55:22	23.942	12.537	3.903	23.655	0.248	2.621	0.25	1.937	115.111	300.77	301.464	74.87	42.386	75.466	84.528	344.887	338.902	444.35	437.194
20160510:14:00:22	23.944	12.665	3.928	23.655	0.252	4.579	0.25	1.93	115.479	300.744	301.473	74.904	42.413	75.506	84.572	346.296	340.213	446.156	438.876
20160510:14:05:22	23.94	12.254	3.873	23.655	0.25	2.527	0.25	1.917	114.299	300.667	301.454	74.953	42.435	75.547	84.618	347.636	341.561	447.872	440.605
20160510:14:10:22	23.946	12.049	3.87	23.661	0.25	2.428	0.25	1.923	113.72	300.678	301.408	74.995	42.457	75.58	84.665	348.993	342.907	449.611	442.331
20160510:14:15:22	23.944	11.906	3.811	23.663	0.25	2.377	0.25	1.937	113.298	300.793	301.427	75.057	42.48	75.617	84.708	350.382	344.223	451.391	444.019
20160510:14:20:22	23.942	12.375	3.815	23.662	0.25	2.356	0.25	1.944	114.65	300.787	301.436	75.101	42.496	75.705	84.755	351.714	345.588	453.098	445.771
20160510:14:25:22	23.952	12.613	4.047	23.655	0.25	2.363	0.25	1.944	115.344	300.836	301.392	75.123	42.51	75.737	84.801	353.108	346.896	454.885	447.449
20160510:14:30:22	23.946	12.651	3.958	23.655	0.25	2.361	0.25	1.95	115.441	300.83	301.392	75.16	42.543	75.775	84.844	354.454	348.257	456.611	449.195
20160510:14:35:22	23.954	12.647	4.046	23.657	0.25	2.36	0.25	1.96	115.441	300.826	301.38	75.204	42.574	75.815	84.887	355.791	349.567	458.324	450.878
20160510:14:40:22	23.956	12.66	4.037	23.659	0.25	2.353	0.25	1.964	115.48	300.86	301.42	75.231	42.573	75.841	84.932	357.18	350.934	460.106	452.632
20160510:14:45:22	23.955	12.667	4.009	23.661	0.25	2.368	0.25	1.989	115.501	300.842	301.38	75.283	42.584	75.886	84.977	358.519	352.246	461.822	454.316
20160510:14:50:22	23.948	12.673	3.961	23.656	0.25	2.357	0.25	1.988	115.504	300.874	301.368	75.365	42.636	75.93	85.025	359.895	353.621	463.587	456.081
20160510:14:55:22	23.951	12.703	4.001	23.657	0.25	2.363	0.25	1.975	115.593	300.893	301.433	75.414	42.598	75.974	85.07	361.263	354.923	465.341	457.752
20160510:15:00:22	23.955	12.747	4.008	23.66	0.25	2.358	0.25	1.966	115.722	300.897	301.413	75.463	42.654	76.057	85.116	362.596	356.293	467.05	459.511
20160510:15:05:22	23.951	12.355	3.982	23.659	0.25	2.355	0.25	1.966	114.608	300.815	301.385	75.512	42.669	76.097	85.158	363.998	357.586	468.848	461.171
20160510:15:10:22	23.961	12.19	4.126	23.657	0.25	2.355	0.25	1.941	114.152	300.787	301.347	75.54	42.645	76.138	85.206	365.323	358.951	470.548	462.925
20160510:15:15:22	23.964	12.067	4.097	23.663	0.25	2.344	0.25	1.948	113.799	300.804	301.427	75.567	42.664	76.17	85.251	366.683	360.279	472.293	464.63
20160510:15:20:22	23.954	12.532	3.97	23.663	0.25	2.343	0.25	1.951	115.114	300.765	301.445	75.62	42.633	76.217	85.3	368.069	361.614	474.07	466.344
20160510:15:25:22	23.962	12.753	4.066	23.663	0.25	2.354	0.25	1.959	115.75	300.805	301.436	75.682	42.619	76.254	85.343	369.407	362.978	475.787	468.096
20160510:15:30:22	23.96	12.769	4.073	23.661	0.249	2.563	0.25	1.959	115.792	300.805	301.396	75.735	42.681	76.288	85.389	370.8	364.285	477.574	469.774
20160510:15:35:22	23.962	12.79	4.051	23.664	0.25	3.195	0.25	1.96	115.852	300.852	301.456	75.779	42.663	76.384	85.43	372.148	365.648	479.304	471.524
20160510:15:40:22	23.97	12.344	4.146	23.665	0.25	3.288	0.25	1.954	114.602	300.866	301.467	75.786	42.661	76.402	85.473	373.49	366.96	481.026	473.211
20160510:15:45:22	23.965	12.167	4.092	23.664	0.25	3.154	0.25	1.931	114.092	300.824	301.455	75.831	42.671	76.449	85.516	374.889	368.331	482.82	474.972
20160510:15:50:22	23.965	12.014	4.072	23.665	0.246	4.367	0.25	1.936	113.647	300.736	301.418	75.856	42.619	76.473	85.554	376.208	369.644	484.513	476.658
20160510:15:55:22	23.959	12.507	4.018	23.664	0.254	3.379	0.25	1.924	115.05	300.667	301.425	75.886	42.666	76.503	85.593	377.598	371.016	486.296	478.421
20160510:16:00:22	23.961	12.754	3.993	23.667	0.25	3.288	0.25	1.93	115.749	300.764	301.516	75.926	42.635	76.546	85.631	378.977	372.329	488.067	480.107
20160510:16:05:22	23.964	12.78	4.068	23.665	0.25	2.782	0.25	1.942	115.828	300.844	301.446	75.941	42.66	76.561	85.667	380.324	373.692	489.794	481.859
20160510:16:10:22	23.964	12.213	4.045	23.667	0.25	2.545	0.25	1.957	114.223	300.909	301.509	76.038	42.652	76.613	85.703	381.723	375.003	491.591	483.543
20160510:16:15:22	23.962	12.114	4.007	23.668	0.25	2.465	0.25	1.951	113.934	300.896	301.467	76.048	42.564	76.628	85.737	383.075	376.354	493.326	485.278
20160510:16:20:22	23.96	12.026	3.983	23.667	0.25	2.433	0.25	1.943	113.674	300.862	301.453	76.101	42.678	76.718	85.773	384.416	377.708	495.046	487.019
20160510:16:25:22	23.962	12.688	3.993	23.669	0.25	2.423	0.25	1.954	115.569	300.862	301.439	76.11	42.559	76.733	85.81	385.809	379.025	496.835	488.711
20160510:16:30:22	23.965	12.76	4.05	23.668	0.25	2.434	0.25	1.964	115.775	300.923	301.532	76.164	42.661	76.793	85.845	387.144	380.389	498.548	490.464
20160510:16:35:22	23.966	12.737	4.104	23.665	0.25	2.433	0.25	1.953	115.71	300.853	301.393	76.177	42.623	76.807	85.881	388.514	381.704	500.307	492.154
20160510:16:40:22	23.961	12.163	3.993	23.667	0.247	3.25	0.25	1.95	114.073	300.872	301.47	76.22	42.59	76.848	85.917	389.876	383.077	502.056	493.919
20160510:16:45:22	23.966	12.065	4.008	23.671	0.252	3.386	0.25	1.938

Time: day:hh:mm:ss	Stack Pressure: in-Hg	Sat% H2O: Percent	Static: in-H2O	Barometric: in-Hg	Flowmeter1: l/min	Vacuum1: in-Hg	Flowmeter2: l/min	Vacuum2: in-Hg	Stack Temp: degF	Sorbent Temp: degF	Probe Temp: degF	DGM#1 Temp: degF	Condenser Temp: degF	DGM#2 Temp: degF	DAQ Temp: degF	DGM1*: liters STP	DGM2*: liters STP	DGM1: liters nominal	DGM2: liters nominal
20160510:20:15:22	23.912	12.589	2.589	23.722	0.25	2.593	0.25	1.933	115.216	300.882	301.533	77.398	42.698	78.032	87.276	448.529	440.637	577.385	567.932
20160510:20:20:22	23.912	12.565	2.567	23.723	0.25	2.585	0.25	1.948	115.148	300.872	301.488	77.398	42.719	78.025	87.287	449.882	442.007	579.122	569.694
20160510:20:25:22	23.911	12.541	2.525	23.725	0.25	2.591	0.25	1.948	115.081	300.865	301.504	77.393	42.674	78.017	87.299	451.273	443.321	580.907	571.382
20160510:20:30:22	23.91	12.548	2.438	23.73	0.25	2.595	0.25	1.949	115.098	300.902	301.523	77.408	42.704	78.049	87.309	452.612	444.693	582.626	573.145
20160510:20:35:22	23.912	12.555	2.444	23.732	0.249	4.453	0.25	1.947	115.122	300.872	301.521	77.409	42.752	78.064	87.314	453.993	446.001	584.398	574.825
20160510:20:40:22	23.911	12.574	2.418	23.733	0.251	2.962	0.25	1.913	115.173	300.772	301.505	77.401	42.716	78.056	87.319	455.373	447.376	586.169	576.592
20160510:20:45:22	23.909	12.624	2.334	23.737	0.25	2.784	0.25	1.926	115.311	300.812	301.504	77.4	42.744	78.053	87.322	456.707	448.671	587.88	578.256
20160510:20:50:22	23.908	12.641	2.317	23.738	0.249	2.722	0.25	1.938	115.356	300.859	301.491	77.399	42.761	78.043	87.323	458.109	450.037	589.678	580.009
20160510:20:55:22	23.907	12.6	2.278	23.739	0.25	2.711	0.25	1.959	115.238	300.898	301.466	77.398	42.745	78.045	87.323	459.438	451.366	591.383	581.716
20160510:21:00:22	23.904	11.911	2.219	23.741	0.25	2.699	0.25	1.964	113.253	300.88	301.462	77.398	42.786	78.047	87.324	460.8	452.696	593.13	583.425
20160510:21:05:22	23.899	11.808	2.115	23.744	0.25	2.685	0.25	1.956	112.942	300.86	301.46	77.398	42.776	78.047	87.325	462.184	454.056	594.906	585.171
20160510:21:10:22	23.899	11.703	2.082	23.745	0.25	2.672	0.25	1.944	112.629	300.825	301.447	77.399	42.782	78.045	87.329	463.518	455.365	596.617	586.852
20160510:21:15:22	23.9	12.452	2.1	23.745	0.25	2.683	0.25	1.956	114.811	300.884	301.493	77.399	42.818	78.036	87.334	464.915	456.726	598.407	588.6
20160510:21:20:22	23.9	12.574	2.062	23.749	0.25	2.691	0.25	1.959	115.159	300.899	301.469	77.399	42.778	78.025	87.339	466.264	458.035	600.137	590.28
20160510:21:25:22	23.9	12.589	2.067	23.748	0.25	2.692	0.25	1.947	115.199	300.864	301.439	77.395	42.778	78.017	87.341	467.604	459.406	601.856	592.039
20160510:21:30:22	23.9	12.621	2.032	23.751	0.25	2.689	0.25	1.938	115.288	300.835	301.431	77.384	42.804	78.016	87.344	469.002	460.715	603.648	593.72
20160510:21:35:22	23.904	12.687	2.079	23.751	0.25	2.701	0.25	1.958	115.479	300.814	301.405	77.369	42.802	78.012	87.346	470.339	462.086	605.363	595.479
20160510:21:40:22	23.904	12.655	2.083	23.751	0.25	2.696	0.25	1.953	115.391	300.854	301.463	77.351	42.793	78.003	87.346	471.713	463.39	607.124	597.154
20160510:21:45:22	23.904	12.617	2.087	23.75	0.248	4.971	0.25	1.958	115.284	300.828	301.48	77.343	42.821	77.979	87.345	473.077	464.765	608.872	598.919
20160510:21:50:22	23.901	12.579	2.048	23.751	0.253	3.132	0.25	1.94	115.173	300.771	301.562	77.34	42.825	77.966	87.341	474.436	466.061	610.615	600.583
20160510:21:55:22	23.9	12.541	2.054	23.749	0.25	2.773	0.25	1.928	115.064	300.808	301.551	77.316	42.82	77.959	87.337	475.841	467.431	612.417	602.34
20160510:22:00:22	23.899	12.162	2.029	23.75	0.25	2.708	0.25	1.946	113.972	300.848	301.544	77.295	42.834	77.943	87.327	477.188	468.759	614.143	604.045
20160510:22:05:22	23.9	11.871	1.993	23.753	0.25	2.671	0.25	1.926	113.129	300.854	301.514	77.282	42.832	77.914	87.314	478.534	470.092	615.869	605.756
20160510:22:10:22	23.896	11.743	1.959	23.752	0.25	2.664	0.25	1.929	112.744	300.798	301.463	77.183	42.817	77.814	87.3	479.927	471.457	617.654	607.508
20160510:22:15:22	23.894	12.148	1.931	23.752	0.25	2.672	0.25	1.935	113.925	300.796	301.503	77.164	42.83	77.795	87.284	481.268	472.765	619.372	609.186
20160510:22:20:22	23.893	12.442	1.924	23.751	0.25	2.671	0.25	1.949	114.773	300.912	301.558	77.153	42.861	77.793	87.265	482.647	474.128	621.139	610.934
20160510:22:25:22	23.893	12.456	1.892	23.754	0.25	2.677	0.25	1.937	114.812	300.932	301.512	77.118	42.853	77.77	87.245	484.02	475.441	622.898	612.618
20160510:22:30:22	23.889	12.512	1.827	23.755	0.249	2.679	0.25	1.949	114.967	300.91	301.491	77.067	42.831	77.734	87.231	485.351	476.812	624.604	614.378
20160510:22:35:22	23.89	12.537	1.877	23.752	0.25	2.68	0.25	1.942	115.037	300.954	301.517	77.064	42.862	77.731	87.222	486.757	478.125	626.406	616.062
20160510:22:40:22	23.887	12.559	1.794	23.755	0.25	2.677	0.25	1.931	115.097	300.985	301.557	77.061	42.881	77.726	87.199	488.088	479.501	628.111	617.827
20160510:22:45:22	23.876	12.605	1.614	23.757	0.25	2.682	0.25	1.943	115.209	300.953	301.555	77.002	42.866	77.685	87.175	489.45	480.804	629.856	619.498
20160510:22:50:22	23.874	12.616	1.581	23.758	0.25	2.69	0.25	1.952	115.236	300.997	301.59	76.945	42.872	77.642	87.149	490.84	482.176	631.635	621.258
20160510:22:55:22	23.878	12.719	1.604	23.76	0.25	2.693	0.25	1.942	115.53	300.961	301.584	76.929	42.887	77.617	87.121	492.176	483.473	633.346	622.921
20160510:23:00:22	23.877	12.781	1.565	23.762	0.25	2.698	0.25	1.949	115.701	300.875	301.472	76.851	42.862	77.511	87.09	493.572	484.84	635.133	624.673
20160510:23:05:22	23.879	12.338	1.555	23.764	0.25	2.689	0.25	1.954	114.446	300.94	301.484	76.839	42.879	77.501	87.054	494.926	486.173	636.867	626.382
20160510:23:10:22	23.873	11.946	1.442	23.767	0.25	2.674	0.25	1.937	113.312	300.911	301.562	76.784	42.84	77.445	87.018	496.269	487.505	638.585	628.088
20160510:23:15:22	23.874	11.771	1.477	23.765	0.25	2.669	0.25	1.933	112.796	300.894	301.516	76.763	42.856	77.417	86.98	497.666	488.866	640.374	629.833
20160510:23:20:22	23.874	12.211	1.441	23.768	0.25	2.664	0.25	1.946	114.073	300.876	301.522	76.719	42.829	77.369	86.94	499.008	490.178	642.091	631.513
20160510:23:25:22	23.872	12.573	1.375	23.771	0.25	2.683	0.25	1.958	115.113	300.94	301.542	76.648	42.817	77.327	86.902	500.386	491.54	643.854	633.258
20160510:23:30:22	23.87	12.589	1.356	23.771	0.249	5.008	0.25	1.956	115.155	300.918	301.544	76.593	42.811	77.291	86.858	501.751	492.849	645.6	634.934
20160510:23:35:22	23.871	12.601	1.376	23.77	0.251	2.975	0.25	1.924	115.189	300.757	301.488	76.519	42.776	77.186	86.811	503.103	494.226	647.33	636.697
20160510:23:40:22	23.863	12.665	1.244	23.772	0.25	2.784	0.25	1.94	115.359	300.858	301.532	76.481	42.78	77.144	86.765	504.508	495.54	649.126	638.38
20160510:23:45:22	23.86	12.703	1.194	23.772	0.25	2.727	0.25	1.947	115.457	300.967	301.551	76.438	42.762	77.108	86.718	505.855	496.914	650.848	640.139
20160510:23:50:22	23.86	12.747	1.199	23.772	0.25	2.711	0.25	1.966	115.582	300.958	301.5	76.396	42.748	77.065	86.671	507.205	498.222	652.574	641.814
20160510:23:55:22	23.862	12.784	1.246	23.77	0.25	2.702	0.25	1.955	115.686	300.912	301.475	76.31	42.72	76.978	86.626	508.601	499.598	654.359	643.575
20160511:00:00:22	23.86	12.789	1.167	23.774	0.25	2.715	0.25	1.962	115.698	300.961	301.529	76.27	42.704	76.941	86.583	509.938	500.901	656.069	645.242
20160511:00:05:22	23.857	12.801	1.112	23.776	0.25	2.716	0.25	1.969	115.727	300.975	301.565	76.224	42.67	76.894	86.537	511.331	502.273	657.848	646.998
20160511:00:10:22	23.856	12.795	1.076	23.777	0.25	2.72	0.25	1.959	115.708	300.916	301.54	76.183	42.666	76.853	86.49	512.694	503.598	659.591	648.694
20160511:00:15:22	23.857	12.16	1.095	23.777	0.25	2.705	0.25	1.952	113.905	300.896	301.484	76.151	42.629	76.82	86.442	514.023	504.941	661.289	650.412
20160511:00:20:22	23.865	11.914	1.18	23.778	0.25	2.692	0.25	1.947	113.206	300.896	301.552	76.11	42.566	76.779	86.394	515.428	506.297	663.083	652.147
20160511:00:25:22	23.865	11.713	1.196	23.777	0.25	2.684	0.25	1.939	112.609	300.875	301.525	76.058	42.53	76.726	86.345	516.763	507.612	664.789	653.829
20160511:00:30:22	23.867	12.339	1.225	23.776	0.25	2.69	0.25	1.944	114.433	300.867	301.492	75.999	42.518	76.668	86.302	518.14	508.972	666.548	655.568
20160511:00:35:22	23.866	12.564	1.193	23.778	0.25	2.708	0.25	1.956	115.079	300.882	301.516	75.943	42.495	76.605	86.255	519.509	510.294	668.296	657.259
20160511:00:40:22	23.864	12.566	1.188	23.777	0.25	2.707	0.25	1.948	115.083	300.889	301.543	75.887	42.48	76.547	86.207	520.857	511.663	670.019	659.009
20160511:00:45:22	23.868	12.569	1.258	23.776	0.25	2.696	0.25	1.952	115.097	300.89	301.512	75.854	42.466	76.505	86.159	522.256	512.977	671.806	660.69
20160511:00:50:22	23.864	12.581	1.175	23.778	0.25	2.704	0.25	1.943	115.124	300.869	301.484	75.822	42.47	76.47	86.112	523.595	514.35	673.515	662.445
20160511:00:55:22	23.864	12.59	1.162	23.778	0.25	2.699	0.25	1.955	115.15	300.906	301.526	75.774	42.447	76.417	86.063	524.954	515.662	675.25	664.122
20160511:01:00:22	23.852	12.591	1.003	23.779	0.25	2.703	0.25	1.976	115.135	300.916	301.534	75.728	42.446	76.345	86.015	526.339	517.038	677.019	665.882
20160511:01:05:22	23.843	12.597	0.889	23.778	0.25	2.707	0.25	1.946	115.136	300.899	301.503	75.661	42.431	76.27	85.966	527.684	518.353	678.735	667.562
20160511:01:10:22	23.843	12.612	0.867	23.779	0.25	2.709	0.25	1.94	115.178	300.871	301.52	75.604	42.443	76.228	85.917	529.084	519.724	680.522	669.314
20160511:01:15:22	23.844	12.613	0.88	23.779	0.25	2.706	0.25	1.945	115.183	300.884	301.493	75.548	42.438	76.169	85.863	530.432	521.032	682.243	670.985
20160511:01:20:22	23.839	12.593	0.808	23.78	0.25	2.712	0.25	1.951	115.119	300.868	301.514	75.49	42.459	76.119	85.807	531.777	522.396	683.959	672.727
20160511:01:25:22	23.839	12.123	0.822	23.779	0.25	2.693	0.25	1.95	113.767	300.867	301.521	75.433	42.434	76.07	85.749	533.172	523.739	685.739	674.444
20160511:01:30:22	23.84	12.691	0.791	23.782	0.25	2.698	0.25	1.969	115.396	300.883	301.478	75.362	42.487	76.001	85.692	534.518	525.07	687.456	676.143
20160511:01:35:22	23.841	12.746	0.836	23.78	0.25	2.698	0.25	1.953	115.55	300.824	301.464	75.274	42.473	75.919	85.634	535.904	526.439	689.224	677.891
20160511:01:40:22	23.842	12.753	0.845	23.78	0.25	2.705	0.25	1.968	115.572	300.901	301.5	75.21	42.447	75.864	85.571	537.272	527.75	690.969	679.566
20160511:01:45:22	23.846	12.772	0.931	23.777	0.25	2.708	0.25	1.962	115.63	300.837	301.497	75.16	42.495	75.816	85.511	538.604	529.118	692.667	681.312
20160511:01:50:22	23.846	12.735	0.887	23.781	0.25	2.713	0.25	1.963	115.526	300.825	301.471	75.108	42.44	75.763	85.447	540.009	530.433	694.459	682.991
20160511:01:55:22	23.847	12.724	0.936	23.778	0.25	2.714	0.25	1.956	115.497	300.876	301.548	75.053	42.467	75.699	85.388	541.346	531.812	696.163	684.752
20160511:02:00:22	23.848	12.546	0.927	23.78	0.25	2.717	0.25	1.959	114.994	300.823	301.462	74.951	42.45	75.603	85.323	542.723	533.129	697.919	686.432
20160511:02:05:22	23.849	11.805	0.914	23.781	0.25	2.694	0.25	1.945	112.859	300.748	301.408	74.886	42.424	75.545	85.257	544.094	534.503	699.667	688.186
20160511:02:10:22	23.849	11.777	0.969	23.778	0.25	2.688	0.25	1.934	112.771	300.8	301.51	74.839	42.49	75.499	85.193	545.444	535.813	701.387	689.857
20160511:02:15:22	23.852	12.494	0.999	23.778	0.25	2.691	0.25	1.95	114.859	300.823	301.448	74.786	42.44	75.447	85.131	546.845	537.188	703.172	691.613
20160511:02:20:22	23.847	12.535	0.903	23.78	0.25	2.706	0.25	1.966	114.969	300.844	301.454	74.742	42.435	75.4	85.07	548.179	538.504	704.872	693.291
20160511:02:25:22	23.847	12.543	0.88	23.782	0.25	2.709	0.25	1.948	114.99	300.844	301.437	74.678	42.458	75.317	85.008	549.544	539.875	706.611	695.039
20160511:02:30:22	23.848	12.608	0.879	23.783	0.25	2.709	0.25	1.954	115.176	300.801	301.498	74.607	42.418	75.242	84.943	550.928	541.189	708.374	696.716
20160511:02:35:22	23.844	12.718	0.845	23.782	0.25	2.714	0.25	1.959	115.476	300.856	301.455	74.552	42.464	75.194	84.883	552.276	542.547	710.091	698.447
20160511:02:40:22	23.838	12.726	0.731	23.785	0.25	2.712	0.25	1.967	115.492	300.862	301.479	74.512	42.424	75.149	84.826	553.677	543.896	711.876	700.167
20160511:02:45:22	23.83	12.714	0.598	23.786	0.25	2.712	0.25	1.953	115.447	300.879	301.485	74.45	42.447	75.102	84.764	555.02	545.225	713.585	701.861
20160511:02:50:22	23.828	12.752	0.53	23.789	0.25	2.718	0.25	1.958	115.547	300.87	301.48	74.363	42.439	75.049	84.704	556.373	546.596	715.307	703.609
20160511:02:55:22	23.824	12.744	0.506	23.787	0.25	2.706	0.25	1.96	115.519	300.841	301.476	74.309	42.416	74.951	84.645	557.771	547.91	717.087	705.284
20160511:03:00:22	23.824	12.742	0.484	23.788	0.25	2.714	0.25	1.973	115.515	300.854	301.483	74.261	42.465	74.896	84.587	559.107	549.275	718.787	707.023
20160511:03:05:22	23.827	12.463	0.526	23.789	0.25	2.716	0.25	1.955	114.725	300.827	301.509	74.219	42.417	74.85	84.53	560.507	550.588	720.569	708.695
20160511:03:10:22	23.828	11.914	0.509	23.79	0.25	2.699	0.25	1.953	113.151	300.729	301.47	74.178	42.485	74.81	84.472	561.859	551.965	722.289	710.449
20160511:03:15:22	23.827	12.079	0.478	23.791	0.245	4.065	0.25	1.938	113.623	300.721	301.466	74.104	42.46	74.758	84.412	563.182	553.283	723.972	712.128
20160511:03:20:22	23.825	12.689	0.414	23.794	0.254	3.916	0.25	1.927	115.367	300.636	301.535	74.025	42.481	74.708	84.353	564.599	554.657	725.774	713.878
20160511:03:25:22	23.825	12.724	0.393	23.796	0.25	2.859	0.25	1.944	115.465	300.648	301.461	73.979	42.495	74.648	84.295	565.94	555.972	727.48	715.553
20160511:03:30:22	23.827	12.705	0.407	23.797	0.25	2.773	0.25	1.937	115.416	300.767	301.432	73.926	42.471	74.573	84.24	567.338	557.354	729.257	717.312
20160511:03:35:22	23.826	12.707	0.401	23.797	0.25	2.735	0.25	1.95	115.42	300.815	301.442	73.886	42.509	74.535	84.186	568.697	558.664	730.985	718.979
20160511:03:40:22	23.822	12.701	0.338	23.797	0.25	2.718	0.25	1.954	115.396	300.91	301.476	73.843	42.457	74.475	84.132	570.035	560.041	732.685	720.731
20160511:03:45:22	23.822	12.694	0.298	23.8	0.25	2.73	0.25	1.974	115.376	300.9	301.429	73.792	42.522	74.409	84.079	571.429	561.345	734.457	722.391
20160511:03:50:22	23.827	12.671	0.389	23.798	0.25	2.72	0.25	1.989	115.32	300.862	301.448	73.681	42.451	74.31	84.024	572.763	562.721	736.152	724.141
20160511:03:55:22	23.83	12.683	0.448	23.797	0.25	2.722	0.25	1.95	115.358	300.879	301.468	73.64	42.511	74.265	83.968	574.16	564.039	737.928	725.818
20160511:04:00:22	23.828	12.776	0.428	23.797	0.25	2.722	0.25	1.962	115.614	300.838	301.456	73.585	42.458	74.211	83.915	575.514	565.399	739.648	727.549
20160511:04:05:22	23.829	12.595	0.436	23.797	0.25	2.72	0.25	1.959	115.104	300.79	301.407	73.539	42.492	74.168	83.859	576.858	566.744	741.356	729.259
20160511:04:10:22	23.826	12.008	0.439	23.794	0.247	4.619	0.25	1.943	113.424	300.748	301.398	73.49	42.471	74.099	83.802	578.234	568.074	743.104	730.951
20160511:04:15:22	23.821	12.003	0.316	23.798	0.253	3.373	0.25	1.911	113.397	300.595	301.417	73.416	42.47	74.032	83.745	579.59	569.437	744.826	732.684
20160511:04:20:22	23.826	12.607	0.387	23.797	0.25	2.844	0.25	1.915	115.139	300.646	301.43	73.352	42.479	73.999	83.689	580.988	570.753	746.602	734.357
20160511:04:25:22	23.827	12.608	0.422	23.796	0.25	2.782	0.25	1.941	115.144	300.734	301.396	73.309	42.442	73.966	83.64	582.335	572.122	748.313	736.098
20160511:04:30:22	23.831	12.593	0.484	23.795	0.25	2.763	0.25	1.959	115.109	300.838	301.416	73.271	42.467	73.935	83.592	583.68	573.439	750.02	737.773
20160511:04:35:22	23.832	12.582	0.487	23.796	0.25	2.748	0.25	1.962	115.08	300.81	301.402	73.249	42.436	73.906	83.547	585.074	574.802	751.791	739.506
20160511:04:40:22	23.828	12.573	0.41	23.798	0.25	2.753	0.25	1.958	115.043	300.796	301.325	73.216	42.485	73.869	83.505	586.413	576.118	753.491	741.179
20160511:04:45:22	23.83	12.569	0.426	23.799	0.25	2.754	0.25	1.957	115.039	300.741	301.338	73.19	42.419	73.833	83.464	587.813	577.489	755.269	742.921
20160511:04:50:22	23.826	12.566	0.314	23.803	0.25	2.745	0.25	1.97	115.025	300.773	301.368	73.181	42.484	73.81	83.422	589.153	578.805	756.969	744.594
20160511:04:55:22	23.823	12.559	0.295	23.801	0.25	2.748	0.25	1.954	115.001	300.777	301.373	73.129	42.415	73.72	83.387	590.508	580.177	758.689	746.336
20160511:05:00:22	23.828	12.568	0.377	23.8	0.25	2.753	0.25	1.939	115.032	300.843	301.394	73.111	42.486	73.7	83.351	591.893	581.489	760.446	748.004
20160511:05:05:22	23.827	12.438	0.347	23.802	0.25	2.752	0.25	1.95	114.659	300.79	301.399	73.013	42.425	73.646	83.311	593.234	582.862	762.148	749.748
20160511:05:10:22	23.822	11.833	0.295	23.8	0.25	2.737	0.25	1.941	112.903	300.731	301.389	72.984	42.467	73.624	83.274	594.632	584.174	763.922	751.415
20160511:05:15:22	23.822	11.785	0.286	23.801	0.25	2.726	0.25	1.947	112.757	300.711	301.358	72.933	42.444	73.587	83.235	595.969	585.553	765.619	753.167
20160511:05:20:22	23.819	12.441	0.251	23.8	0.25	2.74	0.25	1.956	114.662	300.763	301.429	72.897	42.464	73.555	83.193	597.338	586.859	767.356	754.827
20160511:05:25:22	23.815	12.488	0.201	23.8	0.25	2.747	0.25	1.963	114.788	300.765	301.451	72.871	42.469	73.528	83.153	598.714	588.234	769.102	756.573
20160511:05:30:22	23.814	12.496	0.158	23.802	0.249	3.944	0.25	1.966	114.81	300.707	301.345	72.786	42.444	73.481	83.115	600.053	589.55	770.8	758.244
20160511:05:35:22	23.814	12.517	0.157	23.802	0.251	3.391	0.25	1.966	114.868	300.699	301.398	72.768	42.491	73.464	83.078	601.462	590.925	772.587	759.991
20160511:05:40:22	23.813	12.514	0.1	23.806	0.25	2.925	0.25	1.946	114.858	300.696	301.381	72.701	42.452	73.361	83.041	602.786	592.226	774.267	761.643
20160511:05:45:22	23.813	12.535	0.097	23.806	0.25	2.815	0.25	1.95	114.918	300.795	301.386	72.669	42.497	73.324	83	604.167	593.602	776.017	763.389
20160511:05:50:22	23.805	12.553	0.433	23.773	0.25	2.752	0.25	1.923	114.957	300.772	301.342	72.638	42.46	73.286	82.96	605.542	594.915	777.763	765.058
20160511:05:55:22	23.812	12.559	0.001	23.811	0.25	2.775	0.25	1.953	114.985	300.787	301.365	72.601	42.505	73.239	82.919	606.879	596.28	779.457	766.791
20160511:06:00:22	23.815	12.566	-0.011	23.815	0.25	2.794	0.25	1.964	115.007	300.797	301.422	72.574	42.474	73.214	82.877	608.28	597.612	781.233	768.481
20160511:06:05:22	23.817	12.496	0.006	23.817	0.248	4.122	0.25	1.957	114.812	300.774	301.392	72.521	42.498	73.162	82.831	609.606	598.959	782.913	770.19
20160511:06:10:22	23.82	11.896	0.074	23.815	0.251	3.488	0.25	1.934	113.086	300.702	301.419	72.462	42.465	73.128	82.789	610.999	600.306	784.678	771.898
20160511:06:15:22	23.82	11.83	0.03	23.818	0.25	2.958	0.25	1.924	112.891	300.629	301.388	72.413	42.524	73.097	82.747	612.375	601.637	786.42	773.586
20160511:06:20:22	23.825	12.436	0.078	23.819	0.246	4.825	0.25	1.929	114.656	300.615	301.323	72.361	42.447	73.02	82.706	613.689	602.999	788.085	775.314
20160511:06:25:22	23.827	12.546	0.085	23.821	0.253	3.618	0.25	1.902

Time: day:hh:mm:ss	Stack Pressure: in-Hg	Sat% H2O: Percent	Static: in-H2O	Barometric: in-Hg	Flowmeter1: l/min	Vacuum1: in-Hg	Flowmeter2: l/min	Vacuum2: in-Hg	Stack Temp: degF	Sorbent Temp: degF	Probe Temp: degF	DGM#1 Temp: degF	Condenser Temp: degF	DGM#2 Temp: degF	DAQ Temp: degF	DGM1*: liters STP	DGM2*: liters STP	DGM1: liters nominal	DGM2: liters nominal
20160511:09:55:23	23.942	12.815	1.593	23.825	0.25	3.319	0.25	1.938	115.892	300.584	301.366	72.554	42.27	73.213	82.315	672.347	660.717	862.331	848.459
20160511:10:00:23	23.939	12.828	1.573	23.824	0.25	3.143	0.25	1.955	115.924	300.648	301.257	72.602	42.262	73.252	82.347	673.724	662.041	864.076	850.137
20160511:10:05:23	23.944	12.811	1.546	23.83	0.25	3.087	0.25	1.959	115.884	300.626	301.243	72.635	42.305	73.273	82.38	675.091	663.405	865.807	851.867
20160511:10:10:23	23.938	12.81	1.562	23.824	0.25	3.066	0.25	1.949	115.872	300.667	301.261	72.687	42.288	73.314	82.415	676.424	664.714	867.496	853.528
20160511:10:15:23	23.946	12.803	1.56	23.832	0.25	3.067	0.25	1.956	115.864	300.747	301.349	72.716	42.251	73.354	82.45	677.82	666.088	869.265	855.271
20160511:10:20:23	23.948	12.862	1.615	23.829	0.25	3.061	0.25	1.948	116.03	300.796	301.341	72.749	42.27	73.401	82.489	679.153	667.398	870.954	856.932
20160511:10:25:23	23.952	12.946	1.648	23.831	0.25	3.068	0.25	1.955	116.267	300.733	301.325	72.819	42.241	73.465	82.527	680.551	668.772	872.724	858.675
20160511:10:30:23	23.95	12.911	1.641	23.829	0.25	3.066	0.25	1.946	116.168	300.787	301.353	72.86	42.211	73.495	82.565	681.895	670.082	874.428	860.336
20160511:10:35:23	23.95	12.713	1.631	23.83	0.25	3.07	0.25	1.961	115.614	300.752	301.364	72.91	42.229	73.532	82.603	683.245	671.452	876.139	862.075
20160511:10:40:23	23.951	12.225	1.613	23.833	0.25	3.045	0.25	1.956	114.238	300.759	301.373	72.927	42.208	73.552	82.641	684.631	672.765	877.894	863.741
20160511:10:45:23	23.952	12.161	1.692	23.828	0.25	3.028	0.25	1.935	114.055	300.726	301.354	72.968	42.215	73.591	82.678	685.971	674.138	879.593	865.483
20160511:10:50:23	23.959	12.38	1.793	23.827	0.25	3.028	0.25	1.931	114.686	300.665	301.289	72.97	42.202	73.596	82.712	687.366	675.449	881.361	867.147
20160511:10:55:23	23.964	12.898	1.879	23.826	0.25	3.055	0.25	1.953	116.154	300.72	301.303	73.016	42.215	73.651	82.744	688.697	676.823	883.048	868.891
20160511:11:00:23	23.964	12.716	1.83	23.829	0.25	3.061	0.25	1.963	115.644	300.685	301.264	73.023	42.203	73.66	82.776	690.067	678.131	884.785	870.551
20160511:11:05:23	23.963	12.337	1.864	23.826	0.25	3.057	0.25	1.944	114.578	300.776	301.386	73.127	42.216	73.738	82.807	691.438	679.511	886.524	872.303
20160511:11:10:23	23.961	12.207	1.888	23.822	0.25	3.034	0.25	1.942	114.2	300.705	301.331	73.146	42.211	73.769	82.844	692.782	680.817	888.228	873.961
20160511:11:15:23	23.964	12.52	1.95	23.821	0.25	3.031	0.25	1.947	115.091	300.735	301.42	73.196	42.216	73.851	82.88	694.178	682.191	889.998	875.705
20160511:11:20:23	23.971	12.886	1.995	23.824	0.25	3.051	0.25	1.962	116.132	300.752	301.297	73.213	42.196	73.866	82.916	695.515	683.504	891.694	877.372
20160511:11:25:23	23.97	12.47	2.026	23.821	0.25	3.068	0.25	1.955	114.958	300.861	301.425	73.254	42.21	73.911	82.952	696.893	684.874	893.443	879.113
20160511:11:30:23	23.969	12.174	2.017	23.82	0.25	3.111	0.25	1.946	114.116	300.78	301.424	73.271	42.189	73.928	82.988	698.265	686.173	895.183	880.763
20160511:11:35:23	23.971	12.062	2.085	23.818	0.245	4.939	0.25	1.944	113.796	300.696	301.392	73.311	42.209	73.972	83.028	699.577	687.55	896.848	882.511
20160511:11:40:23	23.97	12.518	2.037	23.82	0.254	4.005	0.25	1.9	115.095	300.509	301.412	73.351	42.21	74.013	83.064	700.996	688.86	898.648	884.177
20160511:11:45:23	23.972	12.747	2.086	23.818	0.25	3.157	0.25	1.925	115.748	300.617	301.46	73.375	42.209	74.034	83.099	702.331	690.225	900.343	885.91
20160511:11:50:23	23.977	12.707	2.157	23.818	0.25	3.06	0.25	1.934	115.643	300.805	301.425	73.441	42.2	74.103	83.133	703.723	691.551	902.109	887.596
20160511:11:55:23	23.977	12.682	2.126	23.821	0.25	3.039	0.25	1.954	115.574	300.826	301.401	73.491	42.177	74.148	83.171	705.077	692.898	903.828	889.306
20160511:12:00:23	23.974	12.747	2.101	23.82	0.25	3.035	0.25	1.948	115.751	300.857	301.407	73.539	42.202	74.196	83.21	706.414	694.244	905.524	891.017
20160511:12:05:23	23.978	12.805	2.214	23.815	0.25	3.027	0.25	1.945	115.918	300.857	301.417	73.559	42.186	74.21	83.25	707.807	695.573	907.293	892.707
20160511:12:10:23	23.978	12.801	2.226	23.814	0.25	3.038	0.25	1.958	115.906	300.909	301.477	73.623	42.213	74.264	83.29	709.14	696.93	908.985	894.432
20160511:12:15:23	23.984	12.778	2.258	23.818	0.25	3.04	0.25	1.965	115.852	300.882	301.422	73.666	42.218	74.297	83.333	710.534	698.246	910.756	896.105
20160511:12:20:23	23.985	12.76	2.312	23.815	0.25	3.03	0.25	1.948	115.805	300.779	301.373	73.701	42.213	74.336	83.375	711.87	699.612	912.452	897.842
20160511:12:25:23	23.985	12.377	2.316	23.815	0.25	3.021	0.25	1.956	114.72	300.804	301.42	73.802	42.237	74.444	83.417	713.222	700.921	914.169	899.506
20160511:12:30:23	23.985	12.099	2.289	23.817	0.25	3.013	0.25	1.952	113.923	300.759	301.405	73.839	42.234	74.49	83.467	714.601	702.283	915.92	901.239
20160511:12:35:23	23.989	11.943	2.288	23.821	0.25	2.999	0.25	1.955	113.473	300.733	301.37	73.889	42.232	74.538	83.515	715.941	703.599	917.622	902.912
20160511:12:40:23	23.991	12.404	2.3	23.822	0.25	3.006	0.25	1.933	114.804	300.717	301.38	73.963	42.262	74.594	83.565	717.34	704.956	919.4	904.637
20160511:12:45:23	23.999	12.704	2.43	23.821	0.25	3.021	0.25	1.953	115.667	300.769	301.438	74.017	42.27	74.679	83.617	718.663	706.276	921.08	906.316
20160511:12:50:23	24.001	12.724	2.468	23.82	0.25	3.035	0.25	1.946	115.727	300.797	301.363	74.073	42.278	74.728	83.668	720.04	707.635	922.83	908.045
20160511:12:55:23	23.995	12.737	2.432	23.816	0.25	3.032	0.25	1.948	115.755	300.758	301.395	74.151	42.291	74.773	83.721	721.41	708.938	924.57	909.703
20160511:13:00:23	24.003	12.752	2.487	23.82	0.25	3.028	0.25	1.964	115.808	300.817	301.408	74.206	42.343	74.825	83.776	722.744	710.311	926.267	911.449
20160511:13:05:23	24.003	12.765	2.5	23.819	0.25	3.032	0.25	1.953	115.842	300.811	301.392	74.259	42.378	74.882	83.834	724.14	711.621	928.041	913.117
20160511:13:10:23	23.994	12.782	2.746	23.792	0.25	2.995	0.25	1.922	115.877	300.786	301.393	74.306	42.411	74.939	83.889	725.475	712.988	929.739	914.859
20160511:13:15:23	23.991	12.825	3.358	23.744	0.25	2.95	0.25	1.865	115.992	300.851	301.424	74.349	42.42	74.999	83.944	726.848	714.297	931.491	916.53
20160511:13:20:23	24.001	12.875	3.506	23.743	0.25	2.962	0.25	1.876	116.143	300.815	301.353	74.408	42.442	75.068	83.998	728.222	715.666	933.243	918.278
20160511:13:25:23	23.999	12.529	3.488	23.743	0.25	2.959	0.25	1.879	115.168	300.762	301.419	74.516	42.482	75.136	84.059	729.547	716.972	934.933	919.945
20160511:13:30:23	24.005	12.263	3.617	23.739	0.245	3.984	0.25	1.874	114.427	300.778	301.48	74.57	42.51	75.196	84.117	730.913	718.346	936.676	921.701
20160511:13:35:23	24.011	12.12	3.756	23.734	0.254	4.754	0.25	1.843	114.022	300.561	301.389	74.641	42.529	75.251	84.174	732.275	719.649	938.415	923.367
20160511:13:40:23	24.01	12.584	3.765	23.733	0.25	3.156	0.25	1.851	115.341	300.536	301.407	74.744	42.55	75.354	84.232	733.65	721.022	940.17	925.122
20160511:13:45:23	24.008	12.906	3.68	23.738	0.25	3.062	0.25	1.855	116.24	300.704	301.392	74.808	42.61	75.424	84.291	735.025	722.322	941.926	926.784
20160511:13:50:23	24.013	12.508	3.733	23.738	0.25	3.014	0.25	1.874	115.132	300.764	301.351	74.865	42.631	75.481	84.354	736.358	723.69	943.628	928.532
20160511:13:55:23	24.016	12.261	3.756	23.74	0.25	2.984	0.25	1.856	114.437	300.849	301.433	74.92	42.661	75.537	84.421	737.759	725.006	945.417	930.214
20160511:14:00:23	24.014	12.141	3.716	23.741	0.249	3.479	0.25	1.874	114.088	300.825	301.431	75.03	42.641	75.6	84.489	739.079	726.356	947.102	931.94
20160511:14:05:23	24.015	12.615	3.754	23.739	0.251	3.933	0.25	1.877	115.433	300.762	301.361	75.088	42.671	75.692	84.553	740.456	727.704	948.861	933.664
20160511:14:10:23	24.022	12.878	3.829	23.741	0.25	3.232	0.25	1.878	116.183	300.793	301.428	75.145	42.659	75.764	84.619	741.824	729.025	950.609	935.353
20160511:14:15:23	24.024	12.301	3.907	23.737	0.25	3.062	0.25	1.864	114.566	300.721	301.3	75.201	42.635	75.821	84.685	743.168	730.393	952.326	937.103
20160511:14:20:23	24.017	12.249	3.464	23.763	0.25	3.038	0.25	1.894	114.404	300.824	301.444	75.281	42.694	75.887	84.753	744.567	731.705	954.111	938.78
20160511:14:25:23	24.024	12.254	2.935	23.808	0.25	3.066	0.25	1.938	114.429	300.764	301.433	75.381	42.653	75.977	84.824	745.899	733.067	955.809	940.517
20160511:14:30:23	24.028	12.955	2.981	23.809	0.25	3.077	0.25	1.946	116.404	300.813	301.434	75.463	42.674	76.065	84.893	747.265	734.375	957.55	942.186
20160511:14:35:23	24.029	13.04	2.978	23.81	0.25	3.088	0.25	1.961	116.639	300.863	301.443	75.523	42.668	76.135	84.965	748.648	735.747	959.313	943.936
20160511:14:40:23	24.03	13.083	2.955	23.812	0.25	3.092	0.25	1.98	116.758	300.834	301.402	75.591	42.654	76.196	85.041	749.989	737.059	961.022	945.611
20160511:14:45:23	24.036	13.091	2.978	23.817	0.25	3.101	0.25	1.947	116.789	300.85	301.441	75.694	42.703	76.251	85.113	751.384	738.428	962.8	947.357
20160511:14:50:23	24.042	13.09	3.005	23.821	0.25	3.104	0.25	1.96	116.793	300.859	301.385	75.77	42.633	76.349	85.183	752.721	739.738	964.504	949.028
20160511:14:55:23	24.042	13.086	2.98	23.823	0.25	3.108	0.25	1.963	116.784	300.815	301.419	75.831	42.677	76.429	85.255	754.081	741.112	966.237	950.782
20160511:15:00:23	24.029	13.094	2.826	23.821	0.25	3.108	0.25	1.967	116.787	300.809	301.43	75.896	42.656	76.498	85.33	755.46	742.417	967.994	952.447
20160511:15:05:23	24.038	13.083	3.005	23.817	0.25	3.102	0.25	1.961	116.769	300.822	301.381	75.976	42.672	76.561	85.402	756.801	743.789	969.706	954.199
20160511:15:10:23	24.034	13.047	2.968	23.816	0.25	3.104	0.25	1.966	116.666	300.868	301.447	76.064	42.689	76.63	85.471	758.201	745.101	971.491	955.874
20160511:15:15:23	24.033	12.432	2.928	23.817	0.247	5.231	0.25	1.968	114.952	300.766	301.441	76.125	42.602	76.73	85.544	759.513	746.468	973.165	957.62
20160511:15:20:23	24.04	12.346	2.989	23.82	0.253	3.692	0.25	1.918	114.718	300.643	301.425	76.188	42.681	76.8	85.617	760.89	747.764	974.92	959.274
20160511:15:25:23	24.036	12.324	2.916	23.822	0.25	3.22	0.25	1.919	114.648	300.649	301.452	76.247	42.626	76.857	85.687	762.286	749.134	976.702	961.024
20160511:15:30:23	24.037	12.997	2.91	23.823	0.25	3.158	0.25	1.94	116.534	300.696	301.365	76.329	42.677	76.914	85.756	763.616	750.456	978.398	962.712
20160511:15:35:23	24.036	13.05	2.884	23.824	0.25	3.161	0.25	1.957	116.676	300.808	301.441	76.417	42.623	77.004	85.828	765.012	751.801	980.18	964.43
20160511:15:40:23	24.037	13.071	2.914	23.822	0.25	3.16	0.25	1.959	116.734	300.846	301.438	76.479	42.637	77.088	85.9	766.356	753.15	981.894	966.154
20160511:15:45:23	24.046	13.081	3.04	23.823	0.25	3.155	0.25	1.969	116.776	300.854	301.433	76.524	42.639	77.14	85.969	767.698	754.468	983.607	967.838
20160511:15:50:23	24.047	13.073	3.064	23.822	0.25	3.151	0.25	1.971	116.756	300.899	301.437	76.576	42.618	77.207	86.037	769.097	755.835	985.393	969.585
20160511:15:55:23	24.055	13.09	3.178	23.822	0.25	3.153	0.25	1.974	116.815	300.881	301.451	76.624	42.658	77.295	86.104	770.43	757.139	987.094	971.252
20160511:16:00:23	24.048	13.106	3.038	23.824	0.25	3.144	0.25	1.972	116.847	300.821	301.351	76.699	42.608	77.351	86.17	771.823	758.5	988.872	972.991
20160511:16:05:23	24.05	13.138	3.088	23.823	0.25	3.141	0.25	1.966	116.937	300.821	301.372	76.762	42.662	77.396	86.237	773.177	759.813	990.602	974.669
20160511:16:10:23	24.049	13.142	3.068	23.823	0.25	3.143	0.25	1.975	116.944	300.851	301.385	76.815	42.597	77.45	86.302	774.519	761.182	992.315	976.419
20160511:16:15:23	24.048	12.727	3.053	23.824	0.251	3.141	0.25	1.947	115.796	300.844	301.428	76.866	42.667	77.517	86.364	775.916	762.495	994.098	978.098
20160511:16:20:23	24.047	12.42	3.005	23.826	0.25	3.12	0.25	1.941	114.939	300.785	301.401	76.921	42.594	77.6	86.428	777.261	763.862	995.817	979.846
20160511:16:25:23	24.051	12.246	3.067	23.825	0.25	3.106	0.25	1.946	114.447	300.837	301.444	76.996	42.665	77.665	86.492	778.634	765.173	997.57	981.523
20160511:16:30:23	24.052	12.744	3.076	23.826	0.25	3.112	0.25	1.964	115.847	300.779	301.375	77.078	42.58	77.71	86.556	780.009	766.546	999.326	983.278
20160511:16:35:23	24.062	13.095	3.203	23.827	0.247	4.576	0.25	1.976	116.838	300.778	301.409	77.124	42.664	77.747	86.613	781.322	767.849	1001.004	984.945
20160511:16:40:23	24.067	13.118	3.255	23.827	0.252	3.915	0.25	1.967	116.907	300.765	301.393	77.176	42.595	77.797	86.674	782.74	769.222	1002.815	986.701
20160511:16:45:23	24.072	13.113	3.342	23.826	0.25	3.307	0.25	1.955	116.9	300.758	301.491	77.286	42.661	77.861	86.735	784.07	770.525	1004.515	988.368
20160511:16:50:23	24.075	13.103	3.368	23.827	0.25	3.206	0.25	1.958	116.877	300.779	301.442	77.339	42.613	77.957	86.796	785.447	771.893	1006.274	990.118
20160511:16:55:23	24.078	13.085	3.431	23.826	0.25	3.179	0.25	1.963	116.835	300.855	301.407	77.392	42.651	78.018	86.86	786.823	773.207	1008.033	991.799
20160511:17:00:23	24.084	13.034	3.508	23.826	0.25	3.171	0.25	1.965	116.705	300.847	301.439	77.441	42.606	78.071	86.918	788.166	774.556	1009.75	993.526
20160511:17:05:23	24.081	13.055	3.496	23.824	0.25	3.169	0.25	1.978	116.756	300.91	301.488	77.49	42.617	78.13	86.978	789.561	775.899	1011.533	995.244
20160511:17:10:23	24.083	13.147	3.534	23.823	0.25	3.169	0.25	1.955	117.01	300.903	301.426	77.577	42.567	78.219	87.04	790.899	777.22	1013.244	996.936
20160511:17:15:23	24.085	13.201	3.531	23.826	0.25	3.18	0.25	1.968	117.158	300.848	301.425	77.656	42.606	78.301	87.106	792.252	778.586	1014.974	998.684
20160511:17:20:23	24.086	12.722	3.556	23.825	0.25	3.17	0.25	1.967	115.836	300.87	301.447	77.72	42.561	78.368	87.17	793.645	779.892	1016.756	1000.357
20160511:17:25:23	24.087	12.372	3.521	23.828	0.249	5.032	0.25	1.94	114.859	300.715	301.37	77.772	42.618	78.407	87.226	794.973	781.254	1018.454	1002.102
20160511:17:30:23	24.086	12.189	3.518	23.827	0.251	3.525	0.25	1.935	114.333	300.7	301.424	77.845	42.554	78.468	87.278	796.374	782.564	1020.246	1003.778
20160511:17:35:23	24.084	12.738	3.499	23.827	0.25	3.264	0.25	1.934	115.875	300.708	301.428	77.962	42.633	78.538	87.345	797.735	783.936	1021.987	1005.536
20160511:17:40:23	24.086	13.246	3.532	23.827	0.25	3.23	0.25	1.968	117.283	300.805	301.388	78.022	42.577	78.649	87.417	799.073	785.245	1023.7	1007.212
20160511:17:45:23	24.088	13.233	3.55	23.827	0.25	3.21	0.25	1.974	117.251	300.851	301.446	78.08	42.663	78.712	87.487	800.47	786.616	1025.487	1008.97
20160511:17:50:23	24.084	13.156	3.508	23.826	0.249	5.193	0.25	1.966	117.037	300.785	301.38	78.138	42.554	78.779	87.553	801.801	787.922	1027.191	1010.643
20160511:17:55:23	24.082	13.103	3.5	23.825	0.251	3.602	0.25	1.948	116.89	300.757	301.458	78.211	42.607	78.85	87.627	803.183	789.292	1028.959	1012.398
20160511:18:00:23	24.083	13.111	3.505	23.825	0.25	3.337	0.25	1.95	116.913	300.819	301.425	78.315	42.545	78.94	87.699	804.555	790.604	1030.717	1014.081
20160511:18:05:23	24.082	13.084	3.501	23.825	0.25	3.263	0.25	1.97	116.838	300.786	301.378	78.377	42.645	79.023	87.772	805.9	791.968	1032.439	1015.829
20160511:18:10:23	24.08	13.046	3.476	23.825	0.25	3.244	0.25	1.959	116.731	300.857	301.45	78.44	42.551	79.087	87.844	807.297	793.277	1034.228	1017.508
20160511:18:15:23	24.078	13.009	3.437	23.825	0.25	3.243	0.25	1.964	116.626	300.814	301.398	78.525	42.671	79.159	87.92	808.633	794.63	1035.939	1019.242
20160511:18:20:23	24.078	13.004	3.413	23.827	0.25	3.239	0.25	1.968	116.612	300.848	301.421	78.634	42.592	79.255	87.996	809.986	795.974	1037.672	1020.966
20160511:18:25:23	24.074	12.573	3.354	23.827	0.25	3.229	0.25	1.975	115.403	300.813	301.405	78.718	42.683	79.343	88.076	811.374	797.293	1039.45	1022.658
20160511:18:30:23	24.07	12.257	3.282	23.828	0.247	3.674	0.25	1.967	114.505	300.776	301.397	78.787	42.601	79.407	88.152	812.69	798.657	1041.137	1024.408
20160511:18:35:23	24.067	12.096	3.225	23.83	0.252	4.879	0.25	1.936	114.035	300.788	301.473	78.831	42.679	79.458	88.231	814.098	799.967	1042.941	1026.088
20160511:18:40:23	24.062	12.612	3.15	23.831	0.25	3.477	0.25	1.94	115.492	300.693	301.409	78.91	42.613	79.511	88.311	815.456	801.327	1044.681	1027.833
20160511:18:45:23	24.061	13.003	3.113	23.832	0.25	3.321	0.25	1.948	116.586	300.74	301.436	78.999	42.688	79.596	88.389	816.793	802.638	1046.394	1029.515
20160511:18:50:23	24.063	13.059	3.122	23.833	0.25	3.28	0.25	1.967	116.742	300.825	301.459	79.032	42.637	79.671	88.463	818.193	804.008	1048.189	1031.273
20160511:18:55:23	24.058	13.06	3.027	23.835	0.25	3.268	0.25	1.954	116.73	300.897	301.5	79.071	42.698	79.715	88.534	819.528	805.317	1049.9	1032.953
20160511:19:00:23	24.057	12.488	2.952	23.84	0.25	3.256	0.25	1.956	115.146	300.882	301.495	79.124	42.668	79.749	88.607	820.901	806.693	1051.659	1034.718
20160511:19:05:23	24.055	12.413	2.885	23.843	0.249	5.194	0.25	1.961	114.93	300.846	301.476	79.155	42.7	79.796	88.674	822.264	807.996	1053.406	1036.389
20160511:19:10:23	24.054	12.513	2.843	23.845	0.251	3.745	0.25	1.932	115.208	300.745	301.446	79.187	42.681	79.873	88.736	823.614	809.368	1055.135	1038.15
20160511:19:15:23	24.054	13.101	2.779	23.849	0.25	3.419	0.25	1.942	116.842	300.791	301.46	79.262	42.704	79.909	88.794	825.013	810.664	1056.928	1039.812
20160511:19:20:23	24.052	13.115	2.744	23.85	0.25	3.356	0.25	1.966	116.876	300.872	301.507	79.328	42.697	79.953	88.854	826.361	812.031	1058.656	1041.566
20160511:19:25:23	24.049	13.145	2.692	23.851	0.25	3.345	0.25	1.961	116.954	300.922	301.514	79.36	42.706	79.998	88.915	827.711	813.357	1060.385	1043.267
20160511:19:30:23	24.048	13.108	2.638	23.854	0.25	3.346	0.25	1.973	116.852	300.915	301.42	79.381	42.702	80.036	88.972	829.105	814.69	1062.172	1044.977
20160511:19:35:23	24.044	13.062	2.562	23.855	0.248	5.388	0.25	1.972	116.72	300.899	301.424	79.416	42.712	80.058	89.028	830.434	816.05	1063.874	1046.722
20160511:19:40:23	24.039	13.013	2.496	23.856	0.251	3.845	0.25	1.962	116.579	300.869	301.472	79.457	42.726	80.09	89.079	831.828	817.36	1065.661	1048.402
20160511:19:45:23	24.042	12.979	2.537	23.856	0.25	3.505	0.25	1.954	116.491	300.808	301.451	79.457	42.71	80.117	89.129	833.195	818.718	1067.413	1050.145
20160511:19:50:23	24.041	12.959	2.499	23.858	0.25	3.432	0.25	1.968	116.435	300.865	301.52	79.483	42.717	80.144	89.174	834.529	820.028	1069.122	1051.825
20160511:19:55:23	24.039	12.956	2.44	23.859	0.25	3.416	0.25	1.976	116.422	300.903	301.536	79.507	42.724	80.162	89.218	835.933	821.402	1070.92	1053.588
20160511:20:00:23	24.036	12.432	2.399	23.86	0.25	3.389	0.25	1.97	114.952	300.91	301.531	79.513	42.743	80.205	89.26	837.262	822.

Time: day:hh:mm:ss	Stack Pressure: in-Hg	Sat% H2O: Percent	Static: in-H2O	Barometric: in-Hg	Flowmeter1: l/min	Vacuum1: in-Hg	Flowmeter2: l/min	Vacuum2: in-Hg	Stack Temp: degF	Sorbent Temp: degF	Probe Temp: degF	DGM#1 Temp: degF	Condenser Temp: degF	DGM#2 Temp: degF	DAQ Temp: degF	DGM1*: liters STP	DGM2*: liters STP	DGM1: liters nominal	DGM2: liters nominal
20160511:23:35:23	23.991	12.72	1.47	23.883	0.25	3.837	0.25	1.954	115.691	300.91	301.465	79.097	42.882	79.758	89.301	895.999	880.327	1147.826	1129.13
20160511:23:40:23	23.992	12.442	1.448	23.886	0.25	3.803	0.25	1.949	114.921	300.899	301.537	79.086	42.915	79.753	89.284	897.39	881.695	1149.606	1130.882
20160511:23:45:23	23.999	12.227	1.541	23.885	0.247	4.334	0.25	1.955	114.314	300.878	301.525	79.063	42.907	79.734	89.259	898.711	883.001	1151.294	1132.553
20160511:23:50:23	23.992	12.768	1.415	23.888	0.252	5.869	0.25	1.944	115.826	300.789	301.508	79.024	42.911	79.694	89.234	900.123	884.36	1153.1	1134.293
20160511:23:55:23	23.984	13.016	1.28	23.89	0.25	4.01	0.25	1.96	116.507	300.805	301.563	79.024	42.929	79.693	89.211	901.49	885.702	1154.848	1136.011
20160512:00:00:23	23.981	12.98	1.263	23.888	0.25	3.831	0.25	1.95	116.404	300.858	301.567	78.99	42.988	79.651	89.187	902.83	887.025	1156.561	1137.705
20160512:00:05:23	23.975	12.978	1.176	23.888	0.25	3.794	0.25	1.958	116.39	300.916	301.528	78.942	42.912	79.595	89.161	904.241	888.395	1158.365	1139.459
20160512:00:10:23	23.968	12.989	1.053	23.891	0.25	3.783	0.25	1.97	116.409	300.976	301.575	78.891	43.035	79.548	89.135	905.566	889.705	1160.059	1141.135
20160512:00:15:23	23.969	12.901	1.091	23.889	0.25	3.752	0.25	1.967	116.17	300.977	301.558	78.803	42.963	79.475	89.106	906.944	891.067	1161.82	1142.878
20160512:00:20:23	23.976	12.885	1.205	23.888	0.25	3.75	0.25	1.941	116.134	300.969	301.563	78.799	42.996	79.468	89.077	908.322	892.382	1163.581	1144.56
20160512:00:25:23	23.974	12.932	1.206	23.885	0.25	3.753	0.25	1.945	116.262	300.944	301.574	78.733	42.968	79.413	89.045	909.671	893.756	1165.306	1146.32
20160512:00:30:23	23.98	12.942	1.289	23.885	0.25	3.742	0.25	1.955	116.299	301.035	301.598	78.691	42.948	79.37	89.008	911.071	895.07	1167.094	1148
20160512:00:35:23	23.973	12.917	1.141	23.889	0.25	3.745	0.25	1.949	116.219	300.962	301.563	78.632	42.995	79.306	88.966	912.414	896.449	1168.811	1149.765
20160512:00:40:23	23.962	12.383	0.993	23.889	0.25	3.746	0.25	1.954	114.699	300.953	301.563	78.572	42.973	79.246	88.924	913.762	897.753	1170.533	1151.432
20160512:00:45:23	23.955	12.096	0.877	23.89	0.25	3.72	0.25	1.944	113.87	300.972	301.599	78.48	42.996	79.167	88.875	915.16	899.13	1172.319	1153.194
20160512:00:50:23	23.963	11.911	0.993	23.89	0.25	3.717	0.25	1.936	113.34	300.882	301.585	78.41	43.024	79.091	88.825	916.501	900.431	1174.031	1154.857
20160512:00:55:23	23.962	12.462	0.993	23.889	0.25	3.715	0.25	1.952	114.924	300.947	301.576	78.362	43.01	79.038	88.773	917.898	901.804	1175.815	1156.613
20160512:01:00:23	23.953	12.769	0.863	23.889	0.249	4.049	0.25	1.968	115.781	300.922	301.548	78.278	43.031	78.978	88.719	919.263	903.124	1177.557	1158.301
20160512:01:05:23	23.955	12.786	0.872	23.891	0.25	4.562	0.25	1.963	115.83	300.97	301.574	78.17	43.061	78.889	88.658	920.596	904.47	1179.259	1160.021
20160512:01:10:23	23.953	12.801	0.84	23.892	0.25	4.471	0.25	1.967	115.869	300.95	301.545	78.106	43.035	78.789	88.592	922.009	905.825	1181.063	1161.752
20160512:01:15:23	23.956	12.805	0.869	23.892	0.25	4.037	0.25	1.962	115.883	300.999	301.618	78.041	43.049	78.723	88.523	923.346	907.141	1182.769	1163.434
20160512:01:20:23	23.95	12.793	0.846	23.887	0.25	3.841	0.25	1.962	115.843	300.955	301.583	77.936	43.058	78.656	88.453	924.726	908.508	1184.53	1165.18
20160512:01:25:23	23.951	12.795	0.834	23.89	0.25	3.804	0.25	1.973	115.849	300.969	301.57	77.823	43.059	78.552	88.379	926.106	909.831	1186.291	1166.87
20160512:01:30:23	23.959	12.792	0.946	23.889	0.25	3.796	0.25	1.96	115.854	300.933	301.546	77.753	43.065	78.45	88.3	927.455	911.198	1188.011	1168.617
20160512:01:35:23	23.956	12.8	0.917	23.889	0.25	3.782	0.25	1.972	115.87	300.94	301.548	77.685	43.063	78.369	88.218	928.856	912.518	1189.798	1170.303
20160512:01:40:23	23.958	12.805	0.959	23.887	0.246	4.598	0.25	1.979	115.887	300.914	301.511	77.6	43.069	78.295	88.137	930.173	913.892	1191.478	1172.056
20160512:01:45:23	23.966	12.285	1.146	23.882	0.254	6.27	0.25	1.953	114.425	300.791	301.556	77.482	43.056	78.179	88.054	931.557	915.206	1193.243	1173.735
20160512:01:50:23	23.97	12.062	1.207	23.881	0.25	3.93	0.25	1.941	113.788	300.72	301.529	77.414	43.052	78.112	87.969	932.96	916.587	1195.031	1175.498
20160512:01:55:23	23.967	12.709	1.161	23.882	0.25	3.787	0.25	1.938	115.636	300.878	301.55	77.346	43.046	78.049	87.883	934.306	917.9	1196.748	1177.175
20160512:02:00:23	23.963	12.767	1.101	23.882	0.25	3.783	0.25	1.955	115.791	300.943	301.561	77.257	43.034	77.977	87.799	935.701	919.276	1198.526	1178.93
20160512:02:05:23	23.964	12.795	1.132	23.881	0.25	3.78	0.25	1.959	115.87	300.925	301.531	77.15	43.033	77.885	87.714	937.074	920.582	1200.276	1180.598
20160512:02:10:23	23.953	12.812	0.977	23.882	0.25	3.774	0.25	1.967	115.901	300.989	301.555	77.09	43.034	77.808	87.63	938.406	921.949	1201.974	1182.342
20160512:02:15:23	23.956	12.819	1.032	23.88	0.25	3.772	0.25	1.966	115.924	300.967	301.5	77.003	43.027	77.742	87.545	939.814	923.292	1203.769	1184.056
20160512:02:20:23	23.946	12.811	0.891	23.88	0.25	3.756	0.25	1.97	115.887	300.922	301.522	76.925	43.037	77.669	87.466	941.144	924.626	1205.463	1185.758
20160512:02:25:23	23.944	12.806	0.849	23.881	0.25	3.763	0.25	1.964	115.869	300.937	301.52	76.867	43.044	77.587	87.383	942.525	926	1207.222	1187.511
20160512:02:30:23	23.941	12.793	0.79	23.883	0.25	3.759	0.25	1.958	115.829	300.881	301.429	76.804	43.04	77.503	87.299	943.901	927.315	1208.974	1189.188
20160512:02:35:23	23.942	12.796	0.768	23.885	0.25	3.769	0.25	1.975	115.837	300.87	301.478	76.739	43.039	77.449	87.231	945.252	928.682	1210.694	1190.93
20160512:02:40:23	23.943	12.699	0.81	23.883	0.25	3.764	0.25	1.981	115.565	300.959	301.572	76.658	43.052	77.407	87.162	946.654	929.998	1212.48	1192.609
20160512:02:45:23	23.942	12.083	0.798	23.883	0.25	3.742	0.25	1.964	113.813	300.848	301.485	76.58	43.043	77.35	87.082	947.995	931.378	1214.187	1194.368
20160512:02:50:23	23.944	12.053	0.834	23.882	0.25	3.721	0.25	1.952	113.729	300.798	301.481	76.527	43.034	77.285	87.004	949.355	932.695	1215.919	1196.047
20160512:02:55:23	23.951	12.211	0.926	23.883	0.25	3.722	0.25	1.949	114.191	300.841	301.504	76.49	43.021	77.184	86.931	950.744	934.072	1217.687	1197.803
20160512:03:00:23	23.953	12.89	0.945	23.884	0.25	3.729	0.25	1.949	116.116	300.87	301.47	76.439	43.007	77.137	86.862	952.09	935.385	1219.4	1199.476
20160512:03:05:23	23.948	12.996	0.832	23.887	0.247	6.791	0.25	1.953	116.398	300.781	301.49	76.374	42.979	77.093	86.792	953.48	936.763	1221.169	1201.231
20160512:03:10:23	23.948	12.991	0.83	23.887	0.252	4.292	0.25	1.934	116.386	300.692	301.44	76.288	42.958	77.035	86.727	954.84	938.078	1222.898	1202.906
20160512:03:15:23	23.945	13.023	0.811	23.886	0.25	3.885	0.25	1.942	116.468	300.813	301.513	76.254	42.948	76.95	86.665	956.196	939.45	1224.624	1204.654
20160512:03:20:23	23.945	13.049	0.796	23.886	0.25	3.828	0.25	1.965	116.539	300.925	301.487	76.214	42.911	76.896	86.606	957.595	940.763	1226.404	1206.327
20160512:03:25:23	23.944	13.035	0.761	23.888	0.25	3.823	0.25	1.961	116.499	300.957	301.469	76.174	42.895	76.855	86.551	958.938	942.124	1228.111	1208.06
20160512:03:30:23	23.944	12.984	0.74	23.89	0.25	3.815	0.25	1.958	116.359	300.928	301.458	76.131	42.878	76.815	86.493	960.333	943.467	1229.885	1209.771
20160512:03:35:23	23.948	12.933	0.805	23.889	0.25	3.809	0.25	1.961	116.226	300.928	301.484	76.086	42.875	76.774	86.436	961.693	944.801	1231.615	1211.468
20160512:03:40:23	23.943	12.882	0.741	23.889	0.25	3.799	0.25	1.973	116.079	300.915	301.521	76.024	42.86	76.726	86.379	963.034	946.168	1233.32	1213.209
20160512:03:45:23	23.935	12.708	0.611	23.89	0.25	3.806	0.25	1.971	115.579	300.918	301.471	75.942	42.847	76.66	86.326	964.437	947.483	1235.104	1214.883
20160512:03:50:23	23.935	12.047	0.606	23.891	0.25	3.782	0.25	1.945	113.699	300.79	301.438	75.889	42.831	76.584	86.271	965.783	948.849	1236.815	1216.622
20160512:03:55:23	23.928	11.932	0.436	23.896	0.25	3.761	0.25	1.95	113.35	300.818	301.468	75.84	42.83	76.545	86.214	967.17	950.175	1238.578	1218.308
20160512:04:00:23	23.924	11.984	0.42	23.893	0.25	3.744	0.25	1.945	113.491	300.825	301.483	75.804	42.823	76.513	86.156	968.54	951.544	1240.319	1220.051
20160512:04:05:23	23.926	12.669	0.446	23.893	0.25	3.759	0.25	1.961	115.462	300.84	301.464	75.766	42.808	76.474	86.104	969.874	952.859	1242.013	1221.724
20160512:04:10:23	23.925	12.754	0.429	23.894	0.25	3.79	0.25	1.966	115.697	300.904	301.506	75.73	42.788	76.426	86.051	971.276	954.234	1243.794	1223.474
20160512:04:15:23	23.923	12.762	0.381	23.895	0.25	3.8	0.25	1.958	115.716	300.933	301.521	75.653	42.758	76.364	86	972.619	955.548	1245.5	1225.145
20160512:04:20:23	23.927	12.76	0.441	23.895	0.25	3.787	0.25	1.969	115.718	300.868	301.439	75.597	42.726	76.287	85.95	974.002	956.927	1247.257	1226.898
20160512:04:25:23	23.931	12.776	0.447	23.898	0.25	3.783	0.25	1.97	115.767	300.892	301.434	75.553	42.7	76.242	85.899	975.373	958.237	1248.998	1228.564
20160512:04:30:23	23.927	12.796	0.387	23.898	0.25	3.779	0.25	1.959	115.818	300.881	301.423	75.507	42.664	76.196	85.848	976.7	959.618	1250.683	1230.32
20160512:04:35:23	23.933	12.926	0.496	23.897	0.25	3.786	0.25	1.952	116.184	300.798	301.447	75.451	42.646	76.142	85.795	978.103	960.928	1252.465	1231.985
20160512:04:40:23	23.929	13.042	0.454	23.895	0.25	3.89	0.25	1.964	116.495	300.841	301.426	75.401	42.593	76.096	85.742	979.445	962.306	1254.169	1233.737
20160512:04:45:23	23.929	13.056	0.457	23.895	0.25	4.342	0.25	1.967	116.535	300.794	301.429	75.343	42.601	76.051	85.692	980.826	963.61	1255.922	1235.395
20160512:04:50:23	23.931	13.052	0.427	23.9	0.25	4.205	0.25	1.976	116.527	300.797	301.458	75.291	42.611	76.014	85.641	982.197	964.987	1257.661	1237.145
20160512:04:55:23	23.925	12.721	0.334	23.901	0.246	6.221	0.25	1.978	115.596	300.712	301.423	75.24	42.556	75.929	85.588	983.516	966.302	1259.335	1238.816
20160512:05:00:23	23.926	12.14	0.355	23.899	0.253	4.859	0.25	1.938	113.956	300.568	301.462	75.209	42.56	75.885	85.537	984.934	967.664	1261.135	1240.547
20160512:05:05:23	23.927	11.984	0.375	23.899	0.25	3.969	0.25	1.912	113.5	300.594	301.45	75.178	42.559	75.856	85.486	986.281	969.002	1262.844	1242.246
20160512:05:10:23	23.924	12.318	0.315	23.901	0.25	3.847	0.25	1.927	114.453	300.836	301.538	75.156	42.563	75.826	85.437	987.665	970.341	1264.6	1243.947
20160512:05:15:23	23.925	12.89	0.358	23.899	0.249	4.946	0.25	1.954	116.074	300.887	301.481	75.103	42.54	75.775	85.392	989.024	971.698	1266.324	1245.671
20160512:05:20:23	23.924	12.898	0.321	23.901	0.251	4.595	0.25	1.942	116.095	300.875	301.424	75.067	42.523	75.739	85.344	990.368	973.018	1268.03	1247.348
20160512:05:25:23	23.919	12.918	0.297	23.897	0.25	4.047	0.25	1.955	116.142	300.944	301.392	75.024	42.538	75.697	85.299	991.769	974.388	1269.807	1249.088
20160512:05:30:23	23.918	12.895	0.294	23.897	0.25	3.915	0.25	1.967	116.076	300.908	301.459	74.938	42.513	75.615	85.25	993.108	975.702	1271.506	1250.758
20160512:05:35:23	23.923	12.888	0.31	23.9	0.25	3.882	0.25	1.959	116.065	300.925	301.48	74.904	42.51	75.582	85.206	994.498	977.066	1273.269	1252.489
20160512:05:40:23	23.917	12.906	0.267	23.898	0.25	3.862	0.25	1.956	116.106	300.862	301.448	74.872	42.526	75.544	85.161	995.859	978.393	1274.994	1254.175
20160512:05:45:23	23.915	12.864	0.204	23.9	0.25	3.845	0.25	1.96	115.987	300.864	301.401	74.827	42.498	75.501	85.12	997.197	979.758	1276.691	1255.908
20160512:05:50:23	23.912	12.822	0.134	23.902	0.25	3.858	0.25	1.964	115.866	300.869	301.45	74.793	42.503	75.466	85.077	998.599	981.069	1278.469	1257.571
20160512:05:55:23	23.916	12.8	0.189	23.902	0.25	3.849	0.25	1.957	115.811	300.9	301.512	74.764	42.514	75.436	85.032	999.938	982.446	1280.167	1259.32
20160512:06:00:23	23.918	12.788	0.229	23.901	0.25	3.847	0.25	1.965	115.782	300.835	301.442	74.712	42.495	75.384	84.985	1001.339	983.762	1281.943	1260.991
20160512:06:05:23	23.922	12.322	0.249	23.903	0.25	3.851	0.25	1.963	114.462	300.771	301.35	74.636	42.517	75.312	84.937	1002.696	985.137	1283.663	1262.735
20160512:06:10:23	23.921	11.931	0.237	23.903	0.25	3.819	0.25	1.954	113.338	300.735	301.421	74.585	42.506	75.264	84.889	1004.042	986.455	1285.369	1264.408
20160512:06:15:23	23.923	11.79	0.235	23.906	0.25	3.796	0.25	1.954	112.924	300.798	301.469	74.543	42.514	75.217	84.844	1005.441	987.83	1287.141	1266.152
20160512:06:20:23	23.921	12.309	0.184	23.908	0.25	3.807	0.25	1.956	114.424	300.803	301.422	74.503	42.54	75.178	84.797	1006.775	989.143	1288.831	1267.818
20160512:06:25:23	23.922	12.716	0.163	23.91	0.25	3.858	0.25	1.961	115.586	300.795	301.434	74.454	42.52	75.149	84.748	1008.178	990.527	1290.607	1269.573
20160512:06:30:23	23.921	12.744	0.132	23.911	0.25	3.856	0.25	1.966	115.664	300.834	301.443	74.379	42.556	75.108	84.699	1009.523	991.835	1292.311	1271.231
20160512:06:35:23	23.921	12.751	0.118	23.913	0.25	3.85	0.25	1.964	115.683	300.833	301.472	74.328	42.518	75.062	84.652	1010.877	993.213	1294.026	1272.979
20160512:06:40:23	23.921	12.793	0.08	23.915	0.25	3.857	0.25	1.97	115.799	300.897	301.456	74.296	42.49	75.009	84.606	1012.271	994.531	1295.791	1274.65
20160512:06:45:23	23.923	12.808	0.083	23.916	0.25	3.854	0.25	1.972	115.844	300.847	301.421	74.267	42.555	74.948	84.559	1013.614	995.906	1297.491	1276.393
20160512:06:50:23	23.922	12.864	0.085	23.916	0.25	3.849	0.25	1.982	115.997	300.814	301.402	74.213	42.495	74.885	84.516	1015.011	997.21	1299.259	1278.045
20160512:06:55:23	23.922	12.888	0.06	23.918	0.25	3.858	0.25	1.964	116.065	300.844	301.438	74.193	42.517	74.863	84.468	1016.352	998.588	1300.956	1279.791
20160512:07:00:23	23.921	12.901	-0.005	23.921	0.25	3.868	0.25	1.961	116.099	300.843	301.464	74.132	42.541	74.814	84.415	1017.723	999.907	1302.691	1281.462
20160512:07:05:23	23.92	12.898	-0.06	23.924	0.25	3.869	0.25	1.974	116.089	300.828	301.437	74.066	42.499	74.784	84.364	1019.102	1001.269	1304.435	1283.188
20160512:07:10:23	23.922	12.868	-0.047	23.925	0.25	3.865	0.25	1.97	116.007	300.757	301.368	74.017	42.527	74.749	84.314	1020.45	1002.603	1306.141	1284.878
20160512:07:15:23	23.923	12.943	-0.062	23.928	0.246	6.53	0.25	1.959	116.217	300.668	301.401	73.993	42.519	74.72	84.261	1021.831	1003.951	1307.887	1286.585
20160512:07:20:23	23.93	12.942	0.042	23.927	0.253	4.821	0.25	1.922	116.225	300.59	301.454	73.973	42.505	74.691	84.214	1023.184	1005.304	1309.598	1288.297
20160512:07:25:23	23.931	12.894	0.04	23.928	0.25	4.032	0.25	1.933	116.094	300.753	301.479	73.925	42.543	74.597	84.167	1024.571	1006.635	1311.352	1289.983
20160512:07:30:23	23.936	12.87	0.083	23.93	0.25	3.955	0.25	1.961	116.035	300.863	301.479	73.888	42.5	74.561	84.121	1025.957	1008	1313.104	1291.711
20160512:07:35:23	23.936	12.874	0.048	23.932	0.25	3.945	0.25	1.966	116.046	300.896	301.408	73.859	42.5	74.533	84.075	1027.286	1009.323	1314.783	1293.385
20160512:07:40:23	23.942	12.88	0.127	23.932	0.25	3.934	0.25	1.975	116.071	300.889	301.293	73.801	42.485	74.468	84.027	1028.688	1010.699	1316.556	1295.126
20160512:07:45:23	23.949	12.883	0.181	23.935	0.25	3.926	0.25	1.967	116.088	300.886	301.369	73.768	42.434	74.413	83.979	1030.026	1012.012	1318.246	1296.788
20160512:07:50:23	23.954	12.895	0.244	23.936	0.25	3.932	0.25	1.964	116.129	300.852	301.472	73.73	42.487	74.379	83.936	1031.415	1013.379	1320.002	1298.517
20160512:07:55:23	23.958	12.904	0.329	23.934	0.25	3.942	0.25	1.97	116.161	300.828	301.434	73.694	42.475	74.362	83.891	1032.772	1014.704	1321.717	1300.194
20160512:08:00:23	23.969	12.944	0.523	23.93	0.25	3.935	0.25	1.981	116.288	300.845	301.431	73.649	42.434	74.318	83.847	1034.115	1016.074	1323.413	1301.927
20160512:08:05:23	23.979	13.042	0.687	23.929	0.25	3.924	0.25	1.977	116.569	300.826	301.476	73.648	42.466	74.297	83.803	1035.514	1017.393	1325.181	1303.596
20160512:08:10:23	23.983	13.095	0.762	23.927	0.25	3.928	0.25	1.96	116.721	300.844	301.48	73.642	42.439	74.3	83.763	1036.852	1018.767	1326.872	1305.335
20160512:08:15:23	23.985	13.084	0.774	23.928	0.25	3.913	0.25	1.971	116.695	300.811	301.395	73.599	42.381	74.264	83.723	1038.253	1020.08	1328.643	1306.996
20160512:08:20:23	23.99	13.087	0.843	23.928	0.25	3.922	0.25	1.961	116.709	300.825	301.443	73.63	42.418	74.281	83.685	1039.592	1021.458	1330.335	1308.739
20160512:08:25:23	23.998	13.035	0.955	23.928	0.25	3.928	0.25	1.961	116.579	300.827	301.435	73.591	42.379	74.256	83.657	1040.954	1022.775	1332.056	1310.406
20160512:08:30:23	24.007	13.085	1.087	23.927	0.25	3.932	0.25	1.966	116.728	300.869	301.51	73.622	42.375	74.27	83.628	1042.338	1024.15	1333.806	1312.145
20160512:08:35:23	24.014	13.088	1.196	23.926	0.25	3.928	0.25	1.962	116.747	300.791	301.388	73.618	42.328	74.281	83.604	1043.689	1025.464	1335.513	1313.808
20160512:08:40:23	24.012	13.062	1.162	23.926	0.25	3.931	0.25	1.953	116.674	300.753	301.444	73.612	42.288	74.267	83.583	1045.093	1026.838	1337.287	1315.547
20160512:08:45:23	24.021	13.014	1.307	23.925	0.25	3.923	0.25	1.965	116.558	300.795	301.449	73.642	42.299	74.301	83.566	1046.42	1028.151	1338.965	1317.209
20160512:08:50:23	24.023	12.96	1.355	23.924	0.25	3.934	0.25	1.952	116.412	300.797	301.353	73.659	42.316	74.318	83.556	1047.806	1029.527	1340.717	1318.949
20160512:08:55:23	24.027	12.89	1.408	23.924	0.25	3.933	0.25	1.955	116.225	300.82	301.431	73.692	42.306	74.342	83.545	1049.189	1030.841	1342.465	1320.613
20160512:09:00:23	24.032	12.891	1.486	23.923	0.25	3.913	0.25	1.954	116.236	300.838	301.445	73.703	42.28	74.365	83.54	1050.513	1032.221	1344.139	1322.359
20160512:09:05:23	24.037	12.892	1.573	23.921	0.25	3.92	0.25	1.96	116.244	300.794	301.42	73.735	42.264	74.365	83.538	1051.914	1033.527	1345.909	1324.013
20160512:09:10:23	24.039	12.881	1.621	23.92	0.25	3.921	0.25	1.965	116.217	300.791	301.436	73.798	42.286	74.455	83.54	1053.254	1034.903	1347.604	1325.756
20160512:09:15:23	24.042	12.856	1.649	23.92	0.25	3.92	0.25	1.953	116.153	300.783	301.431	73.841	42.276	74.487	83.545	1054.649	1036.219	1349.369	1327.421
20160512:09:20:23	24.048	12.804	1.721	23.922	0.25	3.9	0.25	1.962	116.017	300.792	301.431	73.868	42.263	74.516	83.557	1056.001	1037.592	1351.078	1329.16
20160512:09:25:23	24.048	12.745	1.761	23.919	0.25	3.888	0.25	1.957	115.856	300.857	301.44	73.883	42.26	74.54	83.568	1057.343	1038.906	1352.776	1330.823
20160512:09:30:23	24.056	12.744	1.843	23.92	0.25	3.899	0.25	1.947	115.863	300.788	301.391	73.913	42.231	74.546	83.587	1058.734	1040.279	1354.535	1332.562
20160512:09:

Time: day:hh:mm:ss	Stack Pressure: in-Hg	Sat% H2O: Percent	Static: in-H2O	Barometric: in-Hg	Flowmeter1: l/min	Vacuum1: in-Hg	Flowmeter2: l/min	Vacuum2: in-Hg	Stack Temp: degF	Sorbent Temp: degF	Probe Temp: degF	DGM#1 Temp: degF	Condenser Temp: degF	DGM#2 Temp: degF	DAQ Temp: degF	DGM1*: liters STP	DGM2*: liters STP	DGM1: liters nominal	DGM2: liters nominal
20160512:13:15:23	24.122	11.832	3.218	23.885	0.25	3.782	0.25	1.931	113.339	300.782	301.432	76.967	42.632	77.668	86.272	1119.887	1100.431	1432.143	1408.991
20160512:13:20:23	24.122	11.851	3.284	23.88	0.25	3.771	0.25	1.93	113.396	300.806	301.41	77.08	42.622	77.734	86.347	1121.252	1101.729	1433.881	1410.647
20160512:13:25:23	24.129	11.856	3.392	23.879	0.25	3.786	0.25	1.912	113.42	300.795	301.357	77.15	42.63	77.805	86.425	1122.577	1103.096	1435.57	1412.391
20160512:13:30:23	24.124	11.865	3.313	23.88	0.25	3.775	0.25	1.934	113.441	300.761	301.392	77.256	42.628	77.903	86.504	1123.968	1104.407	1437.344	1414.064
20160512:13:35:23	24.13	11.861	3.445	23.877	0.25	3.769	0.25	1.917	113.438	300.787	301.417	77.362	42.624	77.998	86.582	1125.298	1105.773	1439.041	1415.808
20160512:13:40:23	24.133	11.868	3.578	23.87	0.25	3.782	0.25	1.917	113.463	300.795	301.395	77.438	42.644	78.061	86.66	1126.681	1107.071	1440.806	1417.466
20160512:13:45:23	24.136	11.88	3.596	23.871	0.25	3.776	0.25	1.925	113.502	300.778	301.409	77.532	42.636	78.154	86.744	1128.034	1108.436	1442.531	1419.211
20160512:13:50:23	24.135	11.881	3.591	23.871	0.25	3.77	0.25	1.924	113.502	300.815	301.465	77.663	42.656	78.279	86.835	1129.366	1109.732	1444.231	1420.867
20160512:13:55:23	24.139	11.889	3.684	23.868	0.25	3.761	0.25	1.93	113.533	300.785	301.35	77.747	42.625	78.38	86.926	1130.751	1111.094	1446	1422.607
20160512:14:00:23	24.14	11.422	3.746	23.864	0.25	3.754	0.25	1.921	112.11	300.798	301.387	77.854	42.667	78.471	87.018	1132.082	1112.407	1447.7	1424.286
20160512:14:05:23	24.143	10.984	3.801	23.863	0.25	3.731	0.25	1.909	110.771	300.707	301.363	77.978	42.621	78.571	87.115	1133.471	1113.751	1449.474	1426.006
20160512:14:10:23	24.139	10.953	3.762	23.862	0.25	3.731	0.25	1.903	110.666	300.711	301.436	78.055	42.662	78.675	87.206	1134.814	1115.084	1451.191	1427.711
20160512:14:15:23	24.143	11.747	3.817	23.863	0.25	3.756	0.25	1.913	113.107	300.699	301.392	78.131	42.612	78.751	87.285	1136.153	1116.409	1452.902	1429.406
20160512:14:20:23	24.141	12.001	3.767	23.864	0.25	3.804	0.25	1.934	113.865	300.754	301.445	78.226	42.663	78.825	87.382	1137.542	1117.762	1454.676	1431.137
20160512:14:25:23	24.141	12.145	3.789	23.862	0.25	3.802	0.25	1.931	114.287	300.78	301.399	78.334	42.606	78.951	87.477	1138.874	1119.073	1456.38	1432.814
20160512:14:30:23	24.143	12.162	3.823	23.862	0.25	3.805	0.25	1.94	114.338	300.845	301.404	78.402	42.671	79.034	87.567	1140.266	1120.434	1458.159	1434.556
20160512:14:35:23	24.147	12.194	3.958	23.855	0.25	3.78	0.25	1.925	114.437	300.775	301.314	78.463	42.573	79.104	87.661	1141.62	1121.745	1459.891	1436.235
20160512:14:40:23	24.151	12.245	3.981	23.859	0.25	3.789	0.25	1.928	114.589	300.793	301.398	78.558	42.676	79.192	87.751	1142.956	1123.104	1461.6	1437.976
20160512:14:45:23	24.146	12.214	3.879	23.861	0.25	3.797	0.25	1.93	114.492	300.823	301.414	78.668	42.585	79.306	87.842	1144.347	1124.41	1463.38	1439.648
20160512:14:50:23	24.148	12.186	4.002	23.854	0.25	3.79	0.25	1.917	114.416	300.792	301.354	78.741	42.655	79.389	87.936	1145.686	1125.782	1465.093	1441.406
20160512:14:55:23	24.153	12.172	4.102	23.852	0.25	3.793	0.25	1.924	114.381	300.784	301.384	78.825	42.584	79.472	88.027	1147.064	1127.091	1466.857	1443.085
20160512:15:00:23	24.151	12.162	4.076	23.851	0.25	3.789	0.25	1.929	114.35	300.789	301.431	78.93	42.648	79.563	88.118	1148.432	1128.458	1468.609	1444.836
20160512:15:05:23	24.152	12.154	4.101	23.85	0.25	3.786	0.25	1.932	114.328	300.722	301.351	79.02	42.578	79.664	88.206	1149.757	1129.763	1470.306	1446.509
20160512:15:10:23	24.153	11.47	4.142	23.848	0.25	3.776	0.25	1.925	112.289	300.759	301.433	79.102	42.661	79.755	88.296	1151.152	1131.13	1472.093	1448.263
20160512:15:15:23	24.157	11.368	4.184	23.849	0.25	3.769	0.25	1.92	111.989	300.712	301.393	79.169	42.618	79.849	88.387	1152.476	1132.446	1473.789	1449.951
20160512:15:20:23	24.159	11.361	4.206	23.85	0.25	3.784	0.25	1.915	111.962	300.726	301.38	79.286	42.668	79.952	88.476	1153.845	1133.806	1475.543	1451.695
20160512:15:25:23	24.157	12.108	4.254	23.844	0.25	3.786	0.25	1.911	114.201	300.733	301.396	79.381	42.671	80.041	88.567	1155.217	1135.108	1477.302	1453.367
20160512:15:30:23	24.157	12.205	4.229	23.846	0.25	4.064	0.25	1.92	114.481	300.786	301.388	79.453	42.634	80.109	88.661	1156.558	1136.461	1479.02	1455.103
20160512:15:35:23	24.156	12.229	4.227	23.845	0.25	4.566	0.25	1.922	114.549	300.79	301.416	79.536	42.643	80.231	88.75	1157.953	1137.799	1480.809	1456.821
20160512:15:40:23	24.16	12.3	4.31	23.843	0.249	5.226	0.25	1.94	114.761	300.792	301.459	79.667	42.638	80.326	88.839	1159.283	1139.122	1482.515	1458.521
20160512:15:45:23	24.157	12.382	4.23	23.846	0.25	5.737	0.25	1.939	114.991	300.751	301.423	79.747	42.647	80.402	88.935	1160.636	1140.486	1484.25	1460.273
20160512:15:50:23	24.155	12.419	4.2	23.847	0.25	5.771	0.25	1.933	115.096	300.781	301.466	79.875	42.666	80.505	89.032	1162.033	1141.792	1486.043	1461.949
20160512:15:55:23	24.162	12.376	4.263	23.848	0.25	5.511	0.25	1.927	114.98	300.784	301.445	79.98	42.656	80.618	89.125	1163.379	1143.151	1487.77	1463.695
20160512:16:00:23	24.165	12.452	4.387	23.842	0.25	5.007	0.25	1.924	115.201	300.826	301.471	80.072	42.669	80.704	89.223	1164.762	1144.46	1489.544	1465.378
20160512:16:05:23	24.162	12.51	4.345	23.843	0.251	4.39	0.25	1.931	115.362	300.842	301.448	80.171	42.663	80.785	89.324	1166.135	1145.828	1491.307	1467.135
20160512:16:10:23	24.164	12.451	4.357	23.843	0.25	4.085	0.25	1.917	115.194	300.851	301.459	80.275	42.644	80.899	89.418	1167.482	1147.138	1493.037	1468.82
20160512:16:15:23	24.165	11.949	4.344	23.845	0.25	3.975	0.25	1.921	113.748	300.783	301.406	80.358	42.643	80.999	89.516	1168.876	1148.511	1494.828	1470.585
20160512:16:20:23	24.159	11.895	4.282	23.845	0.25	3.939	0.25	1.926	113.58	300.783	301.357	80.433	42.657	81.075	89.615	1170.216	1149.812	1496.548	1472.258
20160512:16:25:23	24.161	12.308	4.335	23.842	0.25	3.922	0.25	1.939	114.773	300.729	301.413	80.543	42.648	81.174	89.713	1171.564	1151.184	1498.28	1474.023
20160512:16:30:23	24.166	12.809	4.409	23.842	0.25	3.939	0.25	1.961	116.206	300.807	301.45	80.646	42.68	81.273	89.81	1172.954	1152.481	1500.067	1475.692
20160512:16:35:23	24.167	12.862	4.464	23.838	0.25	3.939	0.25	1.953	116.353	300.785	301.416	80.728	42.665	81.365	89.906	1174.291	1153.84	1501.785	1477.44
20160512:16:40:23	24.167	12.924	4.448	23.84	0.25	3.938	0.25	1.953	116.524	300.825	301.458	80.8	42.678	81.441	90.002	1175.676	1155.178	1503.565	1479.162
20160512:16:45:23	24.168	12.95	4.448	23.841	0.248	4.223	0.25	1.953	116.597	300.817	301.373	80.93	42.658	81.552	90.098	1177.04	1156.499	1505.319	1480.863
20160512:16:50:23	24.171	12.95	4.443	23.844	0.251	6.312	0.25	1.937	116.601	300.772	301.4	81.015	42.702	81.652	90.199	1178.378	1157.856	1507.039	1482.609
20160512:16:55:23	24.169	12.955	4.444	23.842	0.251	4.403	0.25	1.934	116.612	300.74	301.42	81.098	42.649	81.725	90.298	1179.779	1159.173	1508.841	1484.305
20160512:17:00:23	24.171	12.961	4.49	23.841	0.25	4.074	0.25	1.944	116.633	300.792	301.434	81.201	42.709	81.828	90.393	1181.123	1160.536	1510.57	1486.06
20160512:17:05:23	24.172	12.976	4.536	23.839	0.25	4.009	0.25	1.94	116.675	300.805	301.382	81.308	42.66	81.929	90.49	1182.478	1161.848	1512.313	1487.75
20160512:17:10:23	24.176	12.986	4.602	23.837	0.25	3.987	0.25	1.946	116.709	300.856	301.45	81.396	42.719	82.015	90.586	1183.875	1163.216	1514.111	1489.513
20160512:17:15:23	24.177	12.64	4.595	23.839	0.25	3.983	0.25	1.948	115.739	300.82	301.38	81.462	42.636	82.082	90.679	1185.216	1164.52	1515.837	1491.194
20160512:17:20:23	24.174	12.221	4.566	23.838	0.25	3.96	0.25	1.926	114.554	300.814	301.449	81.582	42.684	82.21	90.777	1186.588	1165.897	1517.604	1492.968
20160512:17:25:23	24.173	12.154	4.544	23.839	0.246	5.201	0.25	1.929	114.358	300.8	301.43	81.668	42.655	82.292	90.873	1187.944	1167.192	1519.35	1494.637
20160512:17:30:23	24.169	12.798	4.517	23.837	0.253	5.638	0.25	1.922	116.171	300.701	301.369	81.731	42.663	82.359	90.964	1189.294	1168.552	1521.089	1496.391
20160512:17:35:23	24.173	13.047	4.564	23.837	0.251	4.355	0.25	1.919	116.871	300.8	301.491	81.834	42.692	82.453	91.059	1190.695	1169.89	1522.893	1498.117
20160512:17:40:23	24.174	13.071	4.588	23.837	0.25	4.151	0.25	1.926	116.937	300.854	301.517	81.923	42.651	82.551	91.152	1192.049	1171.208	1524.637	1499.816
20160512:17:45:23	24.177	13.118	4.647	23.835	0.25	4.107	0.25	1.937	117.069	300.912	301.503	81.999	42.706	82.633	91.242	1193.385	1172.561	1526.359	1501.562
20160512:17:50:23	24.179	13.101	4.662	23.836	0.248	4.445	0.25	1.936	117.025	300.89	301.48	82.071	42.65	82.693	91.329	1194.773	1173.875	1528.148	1503.258
20160512:17:55:23	24.178	13.081	4.65	23.836	0.251	6.737	0.25	1.933	116.969	300.844	301.526	82.179	42.7	82.762	91.421	1196.114	1175.246	1529.876	1505.026
20160512:18:00:23	24.176	13.077	4.604	23.838	0.251	4.721	0.25	1.91	116.957	300.797	301.424	82.273	42.686	82.884	91.51	1197.489	1176.556	1531.648	1506.716
20160512:18:05:23	24.18	13.07	4.647	23.838	0.25	4.351	0.25	1.929	116.944	300.858	301.473	82.349	42.681	82.967	91.597	1198.878	1177.929	1533.439	1508.489
20160512:18:10:23	24.182	13.076	4.672	23.838	0.25	4.285	0.25	1.934	116.962	300.869	301.444	82.418	42.698	83.036	91.685	1200.213	1179.234	1535.161	1510.173
20160512:18:15:23	24.183	13.091	4.707	23.837	0.25	4.273	0.25	1.947	117.007	300.915	301.503	82.546	42.657	83.123	91.775	1201.599	1180.598	1536.948	1511.934
20160512:18:20:23	24.184	12.578	4.717	23.837	0.25	4.265	0.25	1.948	115.58	300.875	301.492	82.631	42.725	83.246	91.867	1202.967	1181.906	1538.713	1513.624
20160512:18:25:23	24.183	12.351	4.687	23.839	0.25	4.238	0.25	1.927	114.941	300.86	301.496	82.703	42.683	83.317	91.957	1204.301	1183.248	1540.433	1515.357
20160512:18:30:23	24.178	12.388	4.574	23.842	0.25	4.267	0.25	1.924	115.035	300.868	301.469	82.791	42.675	83.391	92.05	1205.694	1184.599	1542.231	1517.102
20160512:18:35:23	24.177	13.14	4.528	23.845	0.249	6.276	0.25	1.944	117.13	300.86	301.457	82.907	42.712	83.478	92.141	1207.028	1185.907	1543.952	1518.791
20160512:18:40:23	24.178	13.199	4.541	23.844	0.251	4.907	0.25	1.933	117.291	300.87	301.501	82.965	42.672	83.566	92.229	1208.388	1187.266	1545.707	1520.547
20160512:18:45:23	24.178	13.264	4.549	23.843	0.25	4.455	0.25	1.949	117.465	300.891	301.517	83.023	42.7	83.637	92.316	1209.787	1188.577	1547.513	1522.241
20160512:18:50:23	24.179	13.272	4.575	23.842	0.25	4.368	0.25	1.959	117.487	300.912	301.496	83.081	42.672	83.7	92.404	1211.12	1189.946	1549.233	1524.009
20160512:18:55:23	24.175	13.237	4.522	23.843	0.25	4.338	0.25	1.959	117.39	300.983	301.571	83.172	42.69	83.759	92.488	1212.489	1191.252	1551	1525.697
20160512:19:00:23	24.173	13.211	4.486	23.843	0.25	4.331	0.25	1.943	117.316	301.012	301.542	83.232	42.671	83.832	92.568	1213.874	1192.625	1552.789	1527.472
20160512:19:05:23	24.172	13.222	4.416	23.847	0.246	5.214	0.25	1.958	117.343	300.961	301.527	83.276	42.68	83.9	92.648	1215.191	1193.923	1554.489	1529.15
20160512:19:10:23	24.168	13.216	4.377	23.847	0.252	7.609	0.25	1.947	117.323	300.874	301.497	83.337	42.694	83.958	92.723	1216.595	1195.283	1556.302	1530.908
20160512:19:15:23	24.161	13.254	4.267	23.848	0.251	5.775	0.25	1.941	117.415	300.902	301.583	83.378	42.688	84.017	92.794	1217.968	1196.625	1558.074	1532.643
20160512:19:20:23	24.158	12.676	4.204	23.849	0.25	5.259	0.25	1.954	115.82	300.886	301.535	83.414	42.706	84.076	92.865	1219.315	1197.941	1559.813	1534.344
20160512:19:25:23	24.153	12.472	4.145	23.848	0.25	5.125	0.25	1.935	115.242	300.855	301.489	83.469	42.708	84.147	92.927	1220.716	1199.298	1561.622	1536.098
20160512:19:30:23	24.148	12.525	4.016	23.853	0.25	5.089	0.25	1.937	115.38	300.891	301.47	83.57	42.717	84.206	92.994	1222.069	1200.61	1563.37	1537.795
20160512:19:35:23	24.142	13.154	3.94	23.852	0.233	8.636	0.25	1.94	117.115	300.931	301.597	83.611	42.715	84.244	93.061	1223.341	1201.98	1565.013	1539.566
20160512:19:40:23	24.141	13.194	3.877	23.856	0.225	14.877	0.25	1.939	117.223	300.948	301.637	83.642	42.719	84.29	93.124	1224.573	1203.288	1566.604	1541.258
20160512:19:45:23	24.135	13.167	3.781	23.857	0.242	15.186	0.25	1.94	117.141	301.01	301.677	83.676	42.752	84.344	93.188	1225.94	1204.661	1568.369	1543.032
20160512:19:50:23	24.132	13.134	3.728	23.858	0.245	15.034	0.25	1.942	117.047	301.073	301.665	83.726	42.733	84.396	93.253	1227.336	1205.958	1570.172	1544.709
20160512:19:55:23	24.128	13.187	3.655	23.86	0.245	14.976	0.25	1.953	117.186	301.135	301.676	83.779	42.761	84.507	93.322	1228.671	1207.321	1571.896	1546.472
20160512:20:00:23	24.127	13.219	3.653	23.858	0.246	14.934	0.25	1.955	117.269	301.165	301.734	83.868	42.758	84.568	93.391	1230.049	1208.662	1573.676	1548.207
20160512:20:05:23	24.123	13.237	3.587	23.859	0.245	14.894	0.25	1.956	117.311	301.207	301.781	83.932	42.809	84.63	93.459	1231.401	1209.977	1575.422	1549.908
20160512:20:10:23	24.124	13.325	3.587	23.86	0.247	14.874	0.25	1.955	117.551	301.148	301.711	83.976	42.762	84.687	93.529	1232.725	1211.335	1577.133	1551.664
20160512:20:15:23	24.123	13.203	3.566	23.861	0.246	14.993	0.25	1.962	117.217	301.217	301.791	84.02	42.83	84.75	93.595	1234.11	1212.649	1578.922	1553.365
20160512:20:20:23	24.119	12.56	3.489	23.863	0.28	10.587	0.25	1.934	115.441	301.164	301.793	84.083	42.811	84.856	93.663	1235.622	1214.019	1580.876	1555.137
20160512:20:25:23	24.116	12.379	3.454	23.862	0.253	6.762	0.25	1.934	114.922	301.094	301.772	84.182	42.819	84.908	93.728	1236.97	1215.33	1582.619	1556.833
20160512:20:30:23	24.118	12.498	3.457	23.864	0.251	5.987	0.25	1.936	115.261	301.095	301.752	84.234	42.844	84.953	93.789	1238.333	1216.707	1584.38	1558.615
20160512:20:35:23	24.116	12.375	3.382	23.868	0.25	5.842	0.25	1.941	114.911	301.095	301.717	84.278	42.819	84.976	93.846	1239.686	1218.006	1586.128	1560.295
20160512:20:40:23	24.117	12.276	3.338	23.871	0.25	5.765	0.25	1.939	114.629	301.029	301.658	84.264	42.832	84.973	93.897	1241.02	1219.36	1587.852	1562.047
20160512:20:45:23	24.108	12.417	3.186	23.874	0.25	5.664	0.25	1.947	115.013	301.075	301.666	84.289	42.799	84.988	93.947	1242.409	1220.713	1589.646	1563.797
20160512:20:50:23	24.104	13.014	3.146	23.872	0.25	5.632	0.25	1.964	116.677	301.126	301.724	84.286	42.861	84.994	93.986	1243.755	1222.026	1591.385	1565.496
20160512:20:55:23	24.107	13.06	3.192	23.873	0.25	5.613	0.25	1.964	116.809	301.095	301.65	84.28	42.817	84.972	94.02	1245.104	1223.393	1593.128	1567.265
20160512:21:00:23	24.111	13.138	3.249	23.872	0.249	5.655	0.25	1.964	117.026	301.123	301.652	84.267	42.844	84.963	94.047	1246.497	1224.71	1594.928	1568.968
20160512:21:05:23	24.111	13.164	3.273	23.87	0.242	10.308	0.25	1.964	117.097	301.081	301.701	84.26	42.847	84.952	94.07	1247.793	1226.092	1596.602	1570.756
20160512:21:10:23	24.114	13.169	3.323	23.87	0.254	9.187	0.25	1.951	117.115	300.999	301.654	84.23	42.825	84.916	94.085	1249.205	1227.404	1598.426	1572.453
20160512:21:15:23	24.119	12.735	3.346	23.873	0.252	7.776	0.25	1.949	115.921	301.029	301.653	84.194	42.836	84.904	94.094	1250.613	1228.764	1600.244	1574.212
20160512:21:20:23	24.111	12.407	3.221	23.874	0.25	7.287	0.25	1.932	114.994	301.025	301.688	84.177	42.792	84.882	94.098	1251.97	1230.097	1601.998	1575.936
20160512:21:25:23	24.102	12.232	3.105	23.873	0.25	7.142	0.25	1.923	114.48	301.028	301.654	84.164	42.833	84.861	94.094	1253.341	1231.419	1603.769	1577.647
20160512:21:30:23	24.099	12.72	3.032	23.876	0.25	7.081	0.25	1.942	115.849	301.019	301.631	84.112	42.8	84.85	94.097	1254.722	1232.779	1605.552	1579.404
20160512:21:35:23	24.101	13.057	3.055	23.876	0.249	7.178	0.25	1.952	116.791	301.087	301.647	84.072	42.867	84.832	94.095	1256.057	1234.096	1607.276	1581.107
20160512:21:40:23	24.101	13.064	3.09	23.874	0.188	14.647	0.25	1.946	116.812	301.049	301.631	84.066	42.831	84.82	94.087	1257.098	1235.469	1608.62	1582.883
20160512:21:45:23	24.1	13.064	3.08	23.873	0.142	17.537	0.25	1.953	116.81	301.091	301.774	84.064	42.884	84.801	94.08	1257.951	1236.782	1609.722	1584.581
20160512:21:50:23	24.103	13.066	3.121	23.874	0.164	17.169	0.25	1.942	116.82	301.215	301.839	84.052	42.846	84.8	94.074	1258.894	1238.16	1610.939	1586.363
20160512:21:55:23	24.1	13.066	3.057	23.876	0.167	17.068	0.25	1.955	116.815	301.229	301.781	84.042	42.896	84.794	94.073	1259.852	1239.462	1612.176	1588.047
20160512:22:00:23	24.097	13.073	2.995	23.877	0.167	17.059	0.25	1.949	116.828	301.227	301.803	84.034	42.845	84.795	94.073	1260.793	1240.817	1613.391	1589.799
20160512:22:05:23	24.101	13.079	3.075	23.875	0.169	17.052	0.25	1.947	116.852	301.302	301.867	84.042	42.918	84.815	94.075	1261.742	1242.175	1614.617	1591.555
20160512:22:10:23	24.101	13.122	3.054	23.876	0.169	17.047	0.25	1.955	116.97	301.266	301.83	84.057	42.851	84.841	94.078	1262.694	1243.485	1615.846	1593.248
20160512:22:15:23	24.095	13.022	3.006	23.874	0.171	17.04	0.25	1.955	116.683	301.257	301.834	84.067	42.897	84.851	94.082	1263.671	1244.851	1617.107	1595.015
20160512:22:20:23	24.101	12.468	3.083	23.875	0.172	17.016	0.25	1.955	115.154	301.213	301.86	84.069	42.857	84.864	94.088	1264.652	1246.168	1618.374	1596.718
20160512:22:25:23	24.103	12.349	3.08	23.876	0.173	16.995	0.25	1.948	114.816	301.272	301.877	84.077	42.889	84.884	94.096	1265.612	1247.541	1619.615	1598.494
20160512:22:30:23	24.1	12.432	3.087	23.873	0.105	17.979	0.25	1.955	115.044	301.22	301.827	84.089	42.847	84.892	94.093	1266.232	1248.855	1620.415	1600.194
20160512:22:35:23	24.092	13.031	2.976	23.874	0.05	18.728	0.25	1.942	116.708	301.176	301.852	84.102	42.873	84.9	94.103	1266.575	1250.215	1620.857	1601.953
20160512:22:40:23	24.085	13.077	2.864	23.875	0.087	18.248	0.25	1.948	116.823	301.226	301.874	84.158	42.91	84.937	94.115	1267.099	1251.542	1621.535	1603.669
20160512:22:45:23	24.082	13.089	2.827	23.874	0.103	18.04	0.25	1.952	116.85	301.26	301.862	84.183	42.955	84.952	94.123	1267.733	1252.872	1622.354	1605.389
20160512:22:50:23	24.077	13.104	2.706	23.878	0.108	17.971	0.25	1.956	116.886	301.258	301.849	84.18	42.962	84.943	94.13	1268.343	1254.228	1623.141	1607.143
20160512:22:55:23	24.083	13.093	2.826	23.875	0.11	17.93	0.25	1.964	116.863	301.311	301.889	84.175	42.954	84.923	94.137	1268.991	1255.546	1623.978	1608.848
20160512:23:00:23	24.08	13.102	2.776	23.876	0.113	17.895	0.25	1.985	116.884	301.361	301.931	84.141	42.942	84.907	94.144	1269.685	1256.923	1624.874	1610.628
20160512:23:05:23	24.076	13.129	2.702	23.878	0.114	17.883	0.25	1.985	116.951	301.314	301.919	84.081	42.953	84.903	94.144

Time: day:hh:mm:ss	Stack Pressure: in-Hg	Sat% H2O: Percent	Static: in-H2O	Barometric: in-Hg	Flowmeter1: l/min	Vacuum1: in-Hg	Flowmeter2: l/min	Vacuum2: in-Hg	Stack Temp: degF	Sorbent Temp: degF	Probe Temp: degF	DGM#1 Temp: degF	Condenser Temp: degF	DGM#2 Temp: degF	DAQ Temp: degF	DGM1*: liters STP	DGM2*: liters STP	DGM1: liters nominal	DGM2: liters nominal
20160513:02:55:24	24.024	12.714	2.26	23.858	0.01	19.357	0.25	1.924	115.729	301.182	301.866	81.98	43.069	82.744	92.313	1286.201	1319.953	1646.185	1692.034
20160513:03:00:24	24.022	12.856	2.258	23.858	0.017	19.223	0.25	1.943	116.126	301.216	301.828	81.938	43.062	82.695	92.256	1286.388	1321.314	1646.426	1693.788
20160513:03:05:24	24.02	12.93	2.165	23.861	0.024	19.139	0.25	1.945	116.325	301.215	301.776	81.892	43.065	82.652	92.201	1286.558	1322.632	1646.644	1695.487
20160513:03:10:24	24.019	12.975	2.121	23.863	0.026	19.109	0.25	1.948	116.447	301.211	301.797	81.823	43.075	82.609	92.146	1286.795	1324.008	1646.95	1697.259
20160513:03:15:24	24.023	13.009	2.138	23.866	0.028	19.082	0.25	1.977	116.547	301.219	301.851	81.751	43.056	82.565	92.09	1287.014	1325.324	1647.231	1698.955
20160513:03:20:24	24.02	13.065	2.082	23.867	0.03	19.051	0.25	1.957	116.695	301.266	301.827	81.707	43.075	82.502	92.034	1287.219	1326.702	1647.494	1700.729
20160513:03:25:24	24.015	13.074	2.051	23.864	0.032	19.019	0.25	1.961	116.712	301.213	301.84	81.658	43.063	82.43	91.977	1287.496	1328.004	1647.852	1702.406
20160513:03:30:24	24.011	13.111	2.001	23.864	0.032	18.998	0.25	1.967	116.805	301.122	301.776	81.611	43.075	82.386	91.922	1287.707	1329.37	1648.122	1704.165
20160513:03:35:24	24.01	13.07	1.994	23.864	0.033	18.985	0.25	1.966	116.693	301.214	301.805	81.553	43.064	82.348	91.869	1287.988	1330.714	1648.483	1705.897
20160513:03:40:24	24.018	13.015	2.038	23.868	0.018	19.254	0.25	1.961	116.555	301.215	301.783	81.507	43.08	82.31	91.819	1288.101	1332.034	1648.63	1707.596
20160513:03:45:24	24.022	12.281	2.071	23.87	0	19.611	0.25	1.946	114.503	301.184	301.862	81.474	43.077	82.274	91.769	1288.107	1333.393	1648.637	1709.346
20160513:03:50:24	24.02	12.111	2.028	23.871	0	19.604	0.25	1.93	114.009	301.071	301.785	81.426	43.06	82.223	91.721	1288.114	1334.709	1648.646	1711.039
20160513:03:55:24	24.012	12.084	1.968	23.868	0.001	19.505	0.25	1.923	113.914	301.088	301.78	81.392	43.065	82.161	91.671	1288.175	1336.087	1648.724	1712.814
20160513:04:00:24	24.013	12.779	1.974	23.867	0.01	19.382	0.25	1.945	115.897	301.185	301.835	81.36	43.063	82.103	91.626	1288.306	1337.4	1648.893	1714.504
20160513:04:05:24	24.013	12.852	1.992	23.866	0.018	19.263	0.25	1.959	116.098	301.22	301.829	81.311	43.081	82.052	91.579	1288.492	1338.773	1649.131	1716.271
20160513:04:10:24	24.014	12.862	2.008	23.866	0.022	19.181	0.25	1.954	116.129	301.178	301.754	81.26	43.049	82.012	91.533	1288.65	1340.088	1649.335	1717.962
20160513:04:15:24	24.013	12.875	2.014	23.865	0.025	19.128	0.25	1.96	116.162	301.249	301.747	81.2	43.077	81.976	91.486	1288.885	1341.453	1649.637	1719.72
20160513:04:20:24	24.007	12.971	1.879	23.868	0.026	19.098	0.25	1.965	116.416	301.263	301.78	81.136	43.058	81.939	91.438	1289.101	1342.781	1649.915	1721.429
20160513:04:25:24	24.003	12.982	1.828	23.869	0.029	19.068	0.25	1.964	116.444	301.236	301.831	81.087	43.074	81.89	91.388	1289.308	1344.114	1650.18	1723.143
20160513:04:30:24	24.005	12.986	1.812	23.872	0.03	19.044	0.25	1.969	116.455	301.194	301.804	81.045	43.044	81.822	91.336	1289.57	1345.482	1650.517	1724.902
20160513:04:35:24	24.001	12.991	1.782	23.869	0.031	19.025	0.25	1.961	116.464	301.181	301.807	81.005	43.09	81.762	91.287	1289.772	1346.797	1650.776	1726.594
20160513:04:40:24	24.001	12.988	1.814	23.868	0.021	19.188	0.25	1.962	116.456	301.194	301.81	80.962	43.046	81.715	91.238	1289.968	1348.164	1651.028	1728.352
20160513:04:45:24	24	12.936	1.84	23.865	0	19.597	0.25	1.957	116.306	301.204	301.82	80.902	43.099	81.67	91.187	1289.971	1349.48	1651.031	1730.045
20160513:04:50:24	23.997	12.52	1.794	23.865	0	19.612	0.25	1.945	115.139	301.094	301.803	80.834	43.053	81.634	91.137	1289.972	1350.857	1651.033	1731.816
20160513:04:55:24	23.995	12.967	1.73	23.868	0	19.607	0.25	1.947	116.39	301.173	301.843	80.776	43.1	81.583	91.085	1289.974	1352.172	1651.035	1733.506
20160513:05:00:24	24.005	12.931	1.832	23.87	0	19.564	0.25	1.944	116.304	301.145	301.817	80.717	43.054	81.487	91.032	1289.995	1353.546	1651.063	1735.273
20160513:05:05:24	23.999	12.913	1.764	23.869	0.003	19.472	0.25	1.953	116.246	301.114	301.771	80.655	43.073	81.432	90.977	1290.088	1354.862	1651.181	1736.964
20160513:05:10:24	24	12.896	1.773	23.869	0.011	19.371	0.25	1.959	116.2	301.212	301.818	80.609	43.061	81.388	90.926	1290.184	1356.212	1651.306	1738.699
20160513:05:15:24	24.002	12.894	1.78	23.871	0.017	19.276	0.25	1.958	116.199	301.213	301.841	80.544	43.07	81.349	90.872	1290.343	1357.577	1651.509	1740.453
20160513:05:20:24	23.999	12.912	1.697	23.874	0.02	19.219	0.25	1.977	116.243	301.228	301.811	80.474	43.073	81.306	90.817	1290.544	1358.892	1651.767	1742.143
20160513:05:25:24	23.998	12.886	1.692	23.873	0.022	19.182	0.25	1.984	116.172	301.182	301.736	80.425	43.062	81.255	90.762	1290.71	1360.261	1651.98	1743.902
20160513:05:30:24	23.995	12.9	1.672	23.873	0.024	19.153	0.25	1.966	116.207	301.209	301.819	80.378	43.075	81.156	90.705	1290.903	1361.581	1652.228	1745.598
20160513:05:35:24	23.996	12.939	1.693	23.871	0.026	19.122	0.25	1.979	116.314	301.205	301.855	80.338	43.045	81.108	90.65	1291.15	1362.96	1652.544	1747.368
20160513:05:40:24	24	12.752	1.74	23.872	0.027	19.099	0.25	1.964	115.796	301.211	301.733	80.308	43.084	81.081	90.598	1291.323	1364.276	1652.767	1749.058
20160513:05:45:24	24	12.197	1.709	23.874	0.028	19.084	0.25	1.959	114.228	301.09	301.737	80.257	43.058	81.038	90.545	1291.567	1365.654	1653.08	1750.829
20160513:05:50:24	23.999	12.135	1.673	23.876	0.028	19.071	0.25	1.969	114.047	301.165	301.786	80.206	43.096	81	90.49	1291.767	1366.96	1653.335	1752.506
20160513:05:55:24	23.996	12.308	1.616	23.878	0.029	19.064	0.25	1.947	114.535	301.148	301.783	80.132	43.044	80.96	90.437	1292.011	1368.322	1653.648	1754.254
20160513:06:00:24	23.994	12.913	1.58	23.878	0.019	19.224	0.25	1.959	116.238	301.196	301.834	80.092	43.065	80.911	90.383	1292.196	1369.671	1653.885	1755.985
20160513:06:05:24	23.998	12.975	1.656	23.876	0	19.609	0.25	1.961	116.415	301.058	301.79	80.059	43.073	80.865	90.332	1292.196	1370.99	1653.885	1757.679
20160513:06:10:24	24.003	12.985	1.677	23.88	0	19.621	0.25	1.952	116.451	301.133	301.774	80.025	43.076	80.804	90.284	1292.196	1372.352	1653.885	1759.427
20160513:06:15:24	23.999	12.97	1.593	23.882	0	19.611	0.25	1.951	116.404	301.114	301.806	79.976	43.072	80.756	90.232	1292.196	1373.669	1653.885	1761.117
20160513:06:20:24	23.996	12.937	1.583	23.88	0	19.612	0.25	1.953	116.307	301.141	301.806	79.928	43.038	80.71	90.179	1292.196	1375.048	1653.885	1762.885
20160513:06:25:24	24.003	12.915	1.67	23.88	0	19.598	0.25	1.957	116.259	301.088	301.762	79.86	43.079	80.671	90.127	1292.202	1376.363	1653.893	1764.573
20160513:06:30:24	23.997	12.899	1.591	23.88	0	19.528	0.25	1.952	116.204	301.171	301.786	79.798	43.046	80.636	90.076	1292.248	1377.746	1653.952	1766.348
20160513:06:35:24	23.997	12.921	1.611	23.879	0.004	19.456	0.25	1.954	116.265	301.155	301.717	79.756	43.08	80.593	90.026	1292.313	1379.056	1654.035	1768.028
20160513:06:40:24	23.992	12.961	1.5	23.881	0.01	19.375	0.25	1.962	116.367	301.144	301.718	79.711	43.032	80.499	89.981	1292.442	1380.428	1654.2	1769.788
20160513:06:45:24	23.994	12.797	1.527	23.882	0.014	19.316	0.25	1.969	115.912	301.147	301.772	79.688	43.056	80.462	89.933	1292.601	1381.74	1654.404	1771.47
20160513:06:50:24	23.996	12.262	1.575	23.88	0.017	19.283	0.25	1.958	114.41	301.098	301.745	79.665	43.084	80.428	89.883	1292.766	1383.096	1654.615	1773.209
20160513:06:55:24	24	12.164	1.631	23.88	0.013	19.339	0.25	1.958	114.133	301.115	301.756	79.594	43.043	80.382	89.837	1292.868	1384.453	1654.746	1774.949
20160513:07:00:24	23.998	12.391	1.565	23.883	0	19.553	0.25	1.959	114.773	301.072	301.753	79.549	43.087	80.356	89.789	1292.903	1385.77	1654.791	1776.637
20160513:07:05:24	23.994	13.018	1.554	23.88	0.001	19.492	0.25	1.981	116.528	301.095	301.751	79.509	43.05	80.344	89.742	1292.977	1387.136	1654.885	1778.389
20160513:07:10:24	23.999	13.063	1.602	23.882	0.007	19.426	0.25	1.978	116.658	301.096	301.727	79.471	43.067	80.307	89.696	1293.108	1388.454	1655.054	1780.079
20160513:07:15:24	24	13.051	1.617	23.881	0.012	19.357	0.25	1.976	116.625	301.146	301.808	79.433	43.079	80.269	89.651	1293.244	1389.832	1655.228	1781.846
20160513:07:20:24	24.003	13.039	1.654	23.881	0.015	19.306	0.25	1.968	116.596	301.176	301.737	79.406	43.045	80.228	89.607	1293.362	1391.149	1655.378	1783.534
20160513:07:25:24	24.005	13.022	1.673	23.882	0.017	19.286	0.25	1.968	116.554	301.203	301.791	79.364	43.076	80.143	89.562	1293.521	1392.528	1655.581	1785.301
20160513:07:30:24	24.008	13.008	1.696	23.884	0.018	19.271	0.25	1.963	116.52	301.176	301.74	79.333	43.03	80.103	89.518	1293.716	1393.847	1655.831	1786.991
20160513:07:35:24	24.014	13.002	1.77	23.884	0.019	19.262	0.25	1.973	116.513	301.164	301.762	79.326	43.047	80.085	89.475	1293.855	1395.214	1656.009	1788.742
20160513:07:40:24	24.02	13.025	1.85	23.884	0.019	19.25	0.25	1.976	116.584	301.13	301.706	79.285	43.047	80.044	89.432	1294.029	1396.535	1656.231	1790.436
20160513:07:45:24	24.026	13.089	1.924	23.885	0.02	19.237	0.25	1.976	116.769	301.146	301.713	79.235	43.011	80.033	89.39	1294.231	1397.882	1656.491	1792.162
20160513:07:50:24	24.03	12.922	2	23.883	0.021	19.22	0.25	1.968	116.31	301.127	301.718	79.193	43.066	80.027	89.353	1294.383	1399.245	1656.685	1793.908
20160513:07:55:24	24.044	12.325	2.146	23.886	0.021	19.209	0.25	1.947	114.662	301.093	301.737	79.156	42.994	79.991	89.312	1294.564	1400.561	1656.917	1795.594
20160513:08:00:24	24.051	12.233	2.223	23.887	0.022	19.197	0.25	1.957	114.407	301.167	301.801	79.178	43.032	80.004	89.277	1294.789	1401.93	1657.204	1797.348
20160513:08:05:24	24.056	12.41	2.314	23.886	0.022	19.187	0.25	1.953	114.91	301.098	301.777	79.139	42.957	79.974	89.238	1294.949	1403.248	1657.409	1799.036
20160513:08:10:24	24.068	13.1	2.513	23.884	0.023	19.181	0.25	1.948	116.862	301.042	301.671	79.156	42.986	79.989	89.206	1295.165	1404.626	1657.685	1800.801
20160513:08:15:24	24.078	13.11	2.641	23.884	0.023	19.183	0.25	1.953	116.903	301.051	301.671	79.139	42.935	79.973	89.176	1295.368	1405.94	1657.944	1802.485
20160513:08:20:24	24.086	13.094	2.763	23.883	0.023	19.18	0.25	1.963	116.871	301.094	301.699	79.171	42.922	79.99	89.154	1295.527	1407.321	1658.148	1804.254
20160513:08:25:24	24.089	13.072	2.828	23.881	0.023	19.178	0.25	1.948	116.816	301.209	301.813	79.226	42.963	80.03	89.135	1295.738	1408.625	1658.419	1805.925
20160513:08:30:24	24.095	13.034	2.905	23.881	0.023	19.176	0.25	1.955	116.718	301.147	301.705	79.255	42.868	80.036	89.123	1295.934	1409.999	1658.669	1807.686
20160513:08:35:24	24.099	12.994	2.965	23.881	0.023	19.174	0.25	1.954	116.617	301.098	301.676	79.28	42.878	80.035	89.12	1296.116	1411.3	1658.902	1809.353
20160513:08:40:24	24.104	12.978	3.045	23.88	0.023	19.173	0.25	1.947	116.582	301.08	301.694	79.32	42.824	80.069	89.12	1296.336	1412.663	1659.183	1811.1
20160513:08:45:24	24.112	12.986	3.114	23.883	0.024	19.174	0.25	1.962	116.614	301.138	301.729	79.403	42.929	80.142	89.126	1296.5	1414.002	1659.393	1812.816
20160513:08:50:24	24.113	12.973	3.14	23.882	0.024	19.172	0.25	1.96	116.579	301.098	301.693	79.447	42.832	80.221	89.139	1296.715	1415.328	1659.669	1814.515
20160513:08:55:24	24.115	12.97	3.176	23.881	0.023	19.169	0.25	1.957	116.574	301.024	301.713	79.476	42.873	80.26	89.156	1296.928	1416.69	1659.941	1816.261
20160513:09:00:24	24.117	12.614	3.238	23.879	0.024	19.168	0.25	1.955	115.579	301.098	301.705	79.52	42.802	80.301	89.176	1297.093	1417.998	1660.152	1817.938
20160513:09:05:24	24.119	12.196	3.272	23.879	0.024	19.163	0.25	1.948	114.402	301.116	301.809	79.643	42.874	80.369	89.206	1297.305	1419.361	1660.424	1819.686
20160513:09:10:24	24.121	12.039	3.317	23.877	0.025	19.159	0.25	1.934	113.946	301.088	301.753	79.686	42.797	80.402	89.239	1297.505	1420.671	1660.68	1821.367
20160513:09:15:24	24.125	12.449	3.376	23.876	0.024	19.155	0.25	1.939	115.121	301.07	301.651	79.753	42.864	80.476	89.281	1297.696	1422.043	1660.924	1823.126
20160513:09:20:24	24.126	12.937	3.375	23.878	0.007	19.454	0.25	1.956	116.5	301.13	301.74	79.799	42.799	80.528	89.32	1297.791	1423.353	1661.046	1824.806
20160513:09:25:24	24.13	12.969	3.443	23.877	0	19.621	0.25	1.942	116.595	301.106	301.736	79.906	42.837	80.619	89.365	1297.798	1424.724	1661.056	1826.566
20160513:09:30:24	24.132	12.981	3.507	23.874	0	19.615	0.25	1.943	116.632	301.076	301.691	79.967	42.803	80.686	89.411	1297.801	1426.034	1661.059	1828.246
20160513:09:35:24	24.136	13.006	3.601	23.871	0	19.596	0.25	1.935	116.704	301.107	301.769	80.01	42.815	80.733	89.459	1297.805	1427.409	1661.065	1830.011
20160513:09:40:24	24.137	13.052	3.554	23.876	0	19.597	0.25	1.947	116.832	301.077	301.724	80.058	42.788	80.78	89.513	1297.808	1428.702	1661.069	1831.671
20160513:09:45:24	24.138	13.073	3.602	23.873	0	19.592	0.25	1.957	116.889	301.07	301.725	80.121	42.808	80.844	89.57	1297.811	1430.069	1661.072	1833.427
20160513:09:50:24	24.141	13.06	3.688	23.87	0	19.611	0.25	1.935	116.861	301.106	301.724	80.228	42.781	80.949	89.629	1297.816	1431.397	1661.078	1835.132
20160513:09:55:24	24.141	13.061	3.669	23.871	0	19.564	0.25	1.94	116.86	301.106	301.725	80.305	42.8	81.013	89.688	1297.82	1432.729	1661.083	1836.842
20160513:10:00:24	24.142	13.051	3.663	23.872	0	19.508	0.25	1.952	116.834	301.153	301.713	80.356	42.794	81.071	89.747	1297.86	1434.088	1661.135	1838.588
20160513:10:05:24	24.147	13.065	3.762	23.871	0.004	19.461	0.25	1.96	116.882	301.189	301.707	80.409	42.776	81.133	89.808	1297.963	1435.397	1661.267	1840.269
20160513:10:10:24	24.148	12.548	3.795	23.869	0.01	19.378	0.25	1.948	115.44	301.12	301.697	80.46	42.786	81.214	89.87	1298.048	1436.762	1661.376	1842.023
20160513:10:15:24	24.145	12.285	3.774	23.868	0.014	19.323	0.25	1.935	114.695	301.116	301.68	80.548	42.764	81.296	89.934	1298.189	1438.072	1661.557	1843.707
20160513:10:20:24	24.147	12.643	3.803	23.867	0.016	19.285	0.25	1.939	115.7	301.081	301.697	80.628	42.796	81.35	89.997	1298.36	1439.442	1661.776	1845.468
20160513:10:25:24	24.146	13.044	3.797	23.867	0.018	19.261	0.25	1.952	116.822	301.15	301.747	80.69	42.75	81.409	90.061	1298.531	1440.758	1661.996	1847.16
20160513:10:30:24	24.147	13.082	3.877	23.862	0.019	19.235	0.25	1.945	116.928	301.118	301.7	80.76	42.793	81.472	90.129	1298.673	1442.131	1662.178	1848.925
20160513:10:35:24	24.151	13.091	3.921	23.863	0.02	19.213	0.25	1.95	116.957	301.155	301.744	80.843	42.748	81.574	90.201	1298.877	1443.444	1662.441	1850.613
20160513:10:40:24	24.152	13.088	3.977	23.86	0.021	19.193	0.25	1.96	116.951	301.139	301.69	80.929	42.787	81.666	90.273	1299.059	1444.805	1662.674	1852.365
20160513:10:45:24	24.158	13.139	4.031	23.861	0.021	19.183	0.25	1.976	117.099	301.07	301.677	80.997	42.725	81.725	90.338	1299.218	1446.12	1662.878	1854.056
20160513:10:50:24	24.154	13.197	3.986	23.861	0.022	19.175	0.25	1.958	117.249	301.135	301.753	81.065	42.784	81.815	90.405	1299.428	1447.463	1663.148	1855.784
20160513:10:55:24	24.159	13.198	4.079	23.859	0.023	19.169	0.25	1.963	117.26	301.113	301.709	81.128	42.73	81.905	90.473	1299.609	1448.818	1663.381	1857.528
20160513:11:00:24	24.164	13.185	4.16	23.858	0.022	19.165	0.25	1.956	117.233	301.159	301.763	81.226	42.777	81.971	90.543	1299.794	1450.132	1663.619	1859.22
20160513:11:05:24	24.161	13.179	4.16	23.856	0.023	19.159	0.25	1.956	117.213	301.118	301.703	81.304	42.721	82.032	90.613	1300.006	1451.496	1663.891	1860.976
20160513:11:10:24	24.163	13.177	4.19	23.855	0.023	19.156	0.25	1.958	117.21	301.156	301.638	81.36	42.766	82.089	90.683	1300.168	1452.81	1664.1	1862.667
20160513:11:15:24	24.164	13.186	4.242	23.852	0.023	19.149	0.25	1.952	117.235	301.142	301.745	81.421	42.711	82.193	90.757	1300.379	1454.184	1664.37	1864.438
20160513:11:20:24	24.169	13.211	4.306	23.852	0.023	19.147	0.25	1.959	117.311	301.132	301.691	81.484	42.753	82.271	90.83	1300.586	1455.494	1664.637	1866.126
20160513:11:25:24	24.176	13.207	4.371	23.855	0.023	19.148	0.25	1.977	117.31	301.158	301.729	81.597	42.716	82.344	90.903	1300.75	1456.87	1664.848	1867.898
20160513:11:30:24	24.173	13.197	4.367	23.852	0.023	19.148	0.25	1.948	117.279	301.157	301.751	81.662	42.748	82.415	90.974	1300.977	1458.168	1665.141	1869.571
20160513:11:35:24	24.175	13.193	4.428	23.849	0.023	19.147	0.25	1.949	117.271	301.159	301.764	81.733	42.713	82.536	91.05	1301.164	1459.535	1665.381	1871.333
20160513:11:40:24	24.176	13.222	4.5	23.845	0.023	19.142	0.25	1.948	117.351	301.128	301.702	81.839	42.76	82.619	91.125	1301.334	1460.87	1665.6	1873.055
20160513:11:45:24	24.174	13.246	4.488	23.844	0.019	19.213	0.25	1.956	117.412	301.178	301.755	81.958	42.712	82.688	91.201	1301.525	1462.192	1665.846	1874.759
20160513:11:50:24	24.177	13.252	4.521	23.844	0	19.579	0.25	1.956	117.431	301.093	301.785	82.024	42.746	82.754	91.277	1301.541	1463.549	1665.867	1876.509
20160513:11:55:24	24.181	13.289	4.646	23.839	0	19.596	0.25	1.961	117.538	301.116	301.747	82.089	42.704	82.859	91.357	1301.544	1464.861	1665.87	1878.203
20160513:12:00:24	24.181	13.274	4.642	23.839	0	19.6	0.25	1.935	117.497	301.086	301.749	82.211	42.755	82.949	91.441	1301.545	1466.233	1665.872	1879.974
20160513:12:05:24	24.182	13.27	4.658	23.839	0	19.598	0.25	1.945	117.488	301.1	301.785	82.289	42.705	83.023	91.524	1301.545	1467.547	1665.872	1881.669
20160513:12:10:24	24.184	13.303	4.758	23.834	0	19.593	0.25	1.94	117.58	301.087	301.748	82.354	42.761	83.09	91.604	1301.547	1468.919	1665.874	1883.442
20160513:12:15:24	24.186	13.301	4.754	23.836	0	19.593	0.25	1.939	117.577	301.078	301.726	82.421	42.701	83.191	91.686	1301.547	1470.229	1665.874	1885.133
20160513:12:20:24	24.185	13.348	4.774	23.834	0	19.585	0.25	1.947	117.702	301.096	301.75	82.54	42.749	83.286	91.769	1301.548	1471.586	1665.876	1886.885
20160513:12:25:24	24.192	13.336	4.849	23.836	0	19.547	0.25	1.959	117.681	301.106	301.719	82.633	42.714	83.377	91.854	1301.568	1472.904	1665.902	1888.588
20160513:12:30:24	24.189	13.331	4.849	23.832	0	19.49	0.25	1.96	117.661	301.193	301.759	82.72	42.746	83.469	91.938	1301.633	1474.238	1665.985	1890.312
20160513:12:35:24	24.192	13.349	4.894	23.832	0.003	19.434	0.25	1.969	117.713	301.119	301.732	82.834	42.709	83.58	92.028	1301.695	1475.601	1666.065	1892.073
20160513:12:40:24	24.192	13.397	4.972	23.826	0.004	19.426	0.25	1.95	117.842	301.168	301.801	82.949	42.728	83.667	92.117	1301.762	1476.909	1666.152	1893.765
20160513:12:45:24	24.187	13.39	4.946	23.823	0.003	19.429	0.25	1.96	117.817	301.157	301.743	83.025	42.738	83.748	92.206	1301.839	1478.271	1666.252	1895.526
20160513:12:50:24	24.193	13.352	5.016	23.824	0.003

Time: day:hh:mm:ss	Stack Pressure: in-Hg	Sat% H2O: Percent	Static: in-H2O	Barometric: in-Hg	Flowmeter1: l/min	Vacuum1: in-Hg	Flowmeter2: l/min	Vacuum2: in-Hg	Stack Temp: degF	Sorbent Temp: degF	Probe Temp: degF	DGM#1 Temp: degF	Condenser Temp: degF	DGM#2 Temp: degF	DAQ Temp: degF	DGM1*: liters STP	DGM2*: liters STP	DGM1: liters nominal	DGM2: liters nominal
20160513:16:35:24	24.224	13.456	6.232	23.766	0	19.536	0.25	1.949	118.048	301.187	301.671	87.228	42.877	87.955	96.525	1302.812	1539.779	1667.509	1975.506
20160513:16:40:24	24.224	13.444	6.227	23.766	0	19.575	0.25	1.952	118.016	301.159	301.758	87.285	42.913	88.012	96.601	1302.813	1541.081	1667.511	1977.207
20160513:16:45:24	24.227	13.44	6.202	23.771	0	19.579	0.25	1.95	118.011	301.207	301.779	87.35	42.944	88.109	96.68	1302.813	1542.433	1667.511	1978.974
20160513:16:50:24	24.225	13.063	6.18	23.771	0	19.626	0.25	1.958	116.984	301.151	301.769	87.409	42.985	88.195	96.757	1302.817	1543.788	1667.517	1980.744
20160513:16:55:24	24.226	12.721	6.228	23.768	0	19.871	0.25	1.925	116.048	301.16	301.801	87.496	43.01	88.258	96.83	1302.84	1545.098	1667.546	1982.457
20160513:17:00:24	24.228	12.57	6.283	23.766	0	19.904	0.25	1.926	115.628	301.205	301.87	87.568	43.041	88.309	96.904	1302.842	1546.475	1667.548	1984.258
20160513:17:05:24	24.229	13.04	6.275	23.767	0	19.895	0.25	1.943	116.924	301.141	301.766	87.643	43.046	88.36	96.974	1302.842	1547.792	1667.548	1985.979
20160513:17:10:24	24.229	13.411	6.336	23.763	0	19.884	0.25	1.958	117.936	301.145	301.754	87.701	43.083	88.43	97.047	1302.842	1549.149	1667.548	1987.754
20160513:17:15:24	24.231	13.419	6.354	23.763	0	19.88	0.25	1.973	117.96	301.211	301.8	87.778	43.064	88.514	97.119	1302.842	1550.49	1667.548	1989.508
20160513:17:20:24	24.232	13.42	6.369	23.764	0	19.874	0.25	1.967	117.963	301.231	301.808	87.839	43.074	88.569	97.189	1302.842	1551.805	1667.548	1991.227
20160513:17:25:24	24.233	13.412	6.366	23.765	0	19.868	0.25	1.96	117.944	301.214	301.838	87.893	43.096	88.62	97.257	1302.842	1553.174	1667.548	1993.019
20160513:17:30:24	24.234	13.407	6.378	23.765	0	19.864	0.25	1.955	117.931	301.235	301.816	87.944	43.071	88.673	97.322	1302.842	1554.486	1667.548	1994.735
20160513:17:35:24	24.233	13.394	6.393	23.763	0	19.858	0.25	1.946	117.894	301.26	301.815	88.003	43.077	88.748	97.394	1302.842	1555.859	1667.548	1996.532
20160513:17:40:24	24.232	13.384	6.353	23.764	0	19.856	0.25	1.946	117.866	301.222	301.784	88.062	43.104	88.836	97.461	1302.842	1557.179	1667.548	1998.259
20160513:17:45:24	24.233	13.444	6.424	23.761	0	19.849	0.25	1.949	118.028	301.239	301.805	88.139	43.062	88.892	97.529	1302.842	1558.506	1667.548	1999.996
20160513:17:50:24	24.234	13.534	6.442	23.76	0	19.847	0.25	1.952	118.268	301.225	301.781	88.201	43.084	88.942	97.594	1302.842	1559.868	1667.548	2001.78
20160513:17:55:24	24.235	13.109	6.439	23.761	0	19.846	0.25	1.953	117.122	301.181	301.738	88.244	43.105	88.989	97.657	1302.842	1561.188	1667.548	2003.508
20160513:18:00:24	24.231	12.795	6.385	23.762	0	19.842	0.25	1.936	116.261	301.179	301.802	88.293	43.047	89.038	97.722	1302.842	1562.564	1667.548	2005.31
20160513:18:05:24	24.23	12.633	6.383	23.76	0	19.837	0.25	1.947	115.807	301.209	301.852	88.339	43.069	89.104	97.785	1302.842	1563.873	1667.548	2007.024
20160513:18:10:24	24.23	13.082	6.388	23.761	0	19.834	0.25	1.956	117.042	301.106	301.776	88.397	43.121	89.18	97.846	1302.842	1565.218	1667.548	2008.786
20160513:18:15:24	24.233	13.485	6.413	23.761	0	19.832	0.25	1.968	118.137	301.165	301.792	88.494	43.071	89.23	97.91	1302.842	1566.582	1667.548	2010.571
20160513:18:20:24	24.23	13.517	6.366	23.762	0	19.828	0.25	1.962	118.218	301.248	301.879	88.547	43.103	89.282	97.973	1302.842	1567.902	1667.548	2012.301
20160513:18:25:24	24.229	13.521	6.363	23.761	0	19.825	0.25	1.96	118.228	301.214	301.853	88.594	43.131	89.327	98.03	1302.842	1569.278	1667.548	2014.103
20160513:18:30:24	24.228	13.534	6.378	23.759	0	19.821	0.25	1.957	118.261	301.221	301.827	88.644	43.08	89.377	98.093	1302.842	1570.59	1667.548	2015.823
20160513:18:35:24	24.23	13.504	6.395	23.76	0	19.822	0.25	1.961	118.185	301.218	301.857	88.69	43.106	89.466	98.157	1302.842	1571.936	1667.548	2017.586
20160513:18:40:24	24.229	13.503	6.395	23.759	0	19.82	0.25	1.962	118.181	301.244	301.877	88.753	43.133	89.531	98.216	1302.842	1573.297	1667.548	2019.37
20160513:18:45:24	24.226	13.503	6.334	23.76	0	19.821	0.25	1.964	118.176	301.235	301.794	88.808	43.085	89.577	98.274	1302.842	1574.623	1667.548	2021.109
20160513:18:50:24	24.226	13.505	6.337	23.76	0	19.819	0.25	1.961	118.181	301.172	301.834	88.867	43.139	89.617	98.332	1302.842	1576.001	1667.548	2022.915
20160513:18:55:24	24.224	13.403	6.287	23.762	0	19.821	0.25	1.958	117.902	301.113	301.865	88.894	43.115	89.652	98.386	1302.842	1577.313	1667.548	2024.635
20160513:19:00:24	24.223	12.873	6.279	23.761	0	19.832	0.25	1.956	116.465	301.222	301.93	88.943	43.108	89.728	98.442	1302.842	1578.657	1667.548	2026.397
20160513:19:05:24	24.218	12.785	6.198	23.763	0	19.834	0.25	1.948	116.215	301.217	301.871	88.987	43.165	89.778	98.497	1302.842	1580.02	1667.548	2028.184
20160513:19:10:24	24.221	12.87	6.248	23.761	0	19.828	0.25	1.944	116.45	301.14	301.826	89.027	43.1	89.817	98.55	1302.842	1581.341	1667.548	2029.915
20160513:19:15:24	24.218	13.53	6.203	23.762	0	19.819	0.25	1.959	118.236	301.156	301.805	89.079	43.122	89.854	98.602	1302.842	1582.723	1667.548	2031.727
20160513:19:20:24	24.214	13.558	6.113	23.765	0	19.815	0.25	1.971	118.305	301.207	301.873	89.155	43.15	89.894	98.651	1302.842	1584.039	1667.548	2033.453
20160513:19:25:24	24.212	13.646	6.071	23.765	0	19.811	0.25	1.983	118.531	301.281	301.886	89.198	43.104	89.944	98.703	1302.842	1585.379	1667.548	2035.211
20160513:19:30:24	24.208	13.645	6.007	23.766	0	19.808	0.25	1.967	118.523	301.238	301.761	89.215	43.146	89.97	98.75	1302.842	1586.745	1667.548	2037.002
20160513:19:35:24	24.206	13.615	5.962	23.768	0	19.808	0.25	1.967	118.442	301.26	301.849	89.232	43.145	89.994	98.8	1302.842	1588.067	1667.548	2038.735
20160513:19:40:24	24.201	13.605	5.881	23.768	0	19.806	0.25	1.973	118.408	301.214	301.812	89.278	43.109	90.048	98.847	1302.842	1589.448	1667.548	2040.547
20160513:19:45:24	24.195	13.598	5.789	23.77	0	19.805	0.25	1.978	118.381	301.242	301.843	89.32	43.182	90.103	98.898	1302.842	1590.767	1667.548	2042.276
20160513:19:50:24	24.19	13.596	5.701	23.77	0	19.804	0.25	1.975	118.366	301.25	301.86	89.341	43.166	90.136	98.943	1302.842	1592.101	1667.548	2044.026
20160513:19:55:24	24.187	13.487	5.643	23.772	0	19.804	0.25	1.986	118.071	301.275	301.871	89.353	43.147	90.171	98.983	1302.842	1593.47	1667.548	2045.821
20160513:20:00:24	24.183	12.935	5.596	23.772	0	19.801	0.25	1.98	116.578	301.269	301.9	89.382	43.245	90.205	99.027	1302.842	1594.789	1667.548	2047.551
20160513:20:05:24	24.181	12.872	5.573	23.771	0	19.799	0.25	1.958	116.4	301.163	301.766	89.391	43.186	90.209	99.067	1302.842	1596.166	1667.548	2049.357
20160513:20:10:24	24.18	12.972	5.547	23.772	0	19.797	0.25	1.962	116.669	301.232	301.911	89.497	43.198	90.249	99.103	1302.842	1597.487	1667.548	2051.09
20160513:20:15:24	24.178	13.394	5.534	23.771	0	19.795	0.25	1.959	117.808	301.25	301.875	89.522	43.276	90.259	99.146	1302.842	1598.816	1667.548	2052.833
20160513:20:20:24	24.173	12.919	5.451	23.773	0	19.795	0.25	1.96	116.52	301.176	301.795	89.557	43.227	90.29	99.187	1302.842	1600.183	1667.548	2054.626
20160513:20:25:24	24.171	12.82	5.397	23.774	0	19.795	0.25	1.967	116.244	301.216	301.85	89.589	43.233	90.323	99.227	1302.842	1601.498	1667.548	2056.352
20160513:20:30:24	24.169	13.06	5.367	23.774	0	19.794	0.25	1.958	116.891	301.199	301.848	89.584	43.274	90.331	99.269	1302.842	1602.878	1667.548	2058.162
20160513:20:35:24	24.173	13.571	5.409	23.775	0	19.794	0.25	1.956	118.276	301.278	301.894	89.616	43.276	90.36	99.308	1302.842	1604.196	1667.548	2059.891
20160513:20:40:24	24.163	13.569	5.279	23.775	0	19.793	0.25	1.964	118.256	301.272	301.873	89.619	43.18	90.349	99.342	1302.842	1605.526	1667.548	2061.635
20160513:20:45:24	24.163	13.571	5.279	23.775	0	19.792	0.25	1.969	118.261	301.315	301.872	89.655	43.295	90.394	99.379	1302.842	1606.896	1667.548	2063.432
20160513:20:50:24	24.168	13.58	5.348	23.775	0	19.792	0.25	1.97	118.292	301.293	301.87	89.637	43.299	90.394	99.413	1302.842	1608.213	1667.548	2065.16
20160513:20:55:24	24.159	13.447	5.176	23.778	0	19.795	0.25	1.97	117.923	301.329	301.913	89.675	43.272	90.429	99.444	1302.842	1609.594	1667.548	2066.972
20160513:21:00:24	24.152	12.892	5.063	23.78	0	19.795	0.25	1.955	116.413	301.265	301.918	89.669	43.276	90.402	99.471	1302.842	1610.919	1667.548	2068.709
20160513:21:05:24	24.147	12.889	4.996	23.78	0	19.795	0.25	1.965	116.4	301.295	301.923	89.749	43.333	90.483	99.503	1302.842	1612.244	1667.548	2070.447
20160513:21:10:24	24.138	12.667	4.85	23.781	0	19.796	0.25	1.953	115.768	301.246	301.949	89.713	43.32	90.47	99.531	1302.842	1613.614	1667.548	2072.244
20160513:21:15:24	24.136	12.607	4.836	23.78	0	19.794	0.25	1.948	115.598	301.236	301.959	89.749	43.32	90.484	99.559	1302.842	1614.927	1667.548	2073.966
20160513:21:20:24	24.136	13.07	4.847	23.779	0	19.793	0.25	1.951	116.861	301.258	301.93	89.762	43.353	90.501	99.583	1302.842	1616.302	1667.548	2075.771
20160513:21:25:24	24.136	13.572	4.87	23.778	0	19.791	0.25	1.974	118.226	301.282	301.882	89.683	43.369	90.454	99.601	1302.842	1617.626	1667.548	2077.508
20160513:21:30:24	24.137	13.554	4.887	23.778	0	19.79	0.25	1.958	118.178	301.289	301.88	89.702	43.39	90.439	99.619	1302.842	1618.952	1667.548	2079.246
20160513:21:35:24	24.129	13.552	4.766	23.779	0	19.791	0.25	1.962	118.161	301.312	301.903	89.716	43.426	90.482	99.633	1302.842	1620.321	1667.548	2081.043
20160513:21:40:24	24.121	13.122	4.658	23.779	0	19.79	0.25	1.96	116.991	301.301	301.921	89.671	43.436	90.414	99.643	1302.842	1621.637	1667.548	2082.769
20160513:21:45:24	24.116	12.78	4.604	23.777	0	19.789	0.25	1.952	116.05	301.244	301.91	89.657	43.43	90.393	99.652	1302.842	1623.018	1667.548	2084.581
20160513:21:50:24	24.125	12.602	4.783	23.774	0	19.786	0.25	1.955	115.568	301.331	301.94	89.62	43.434	90.363	99.658	1302.842	1624.344	1667.548	2086.32
20160513:21:55:24	24.133	13.054	4.902	23.773	0	19.784	0.25	1.956	116.823	301.263	301.911	89.613	43.433	90.344	99.657	1302.842	1625.669	1667.548	2088.058
20160513:22:00:24	24.135	13.413	4.924	23.773	0	19.784	0.25	1.953	117.8	301.289	301.887	89.587	43.413	90.331	99.649	1302.842	1627.042	1667.548	2089.859
20160513:22:05:24	24.135	13.467	4.944	23.771	0	19.782	0.25	1.967	117.945	301.307	301.864	89.562	43.417	90.302	99.643	1302.842	1628.356	1667.548	2091.583
20160513:22:10:24	24.131	13.521	4.879	23.773	0	19.782	0.25	1.969	118.084	301.351	301.928	89.558	43.428	90.29	99.634	1302.842	1629.73	1667.548	2093.385
20160513:22:15:24	24.139	13.535	4.701	23.774	0	19.783	0.25	1.973	118.101	301.323	301.948	89.532	43.418	90.264	99.624	1302.842	1631.064	1667.548	2095.135
20160513:22:20:24	24.118	13.525	4.705	23.772	0	19.78	0.25	1.98	118.073	301.331	301.899	89.476	43.389	90.227	99.61	1302.842	1632.389	1667.548	2096.872
20160513:22:25:24	24.118	13.552	4.682	23.773	0	19.781	0.25	1.985	118.146	301.358	301.987	89.421	43.39	90.214	99.599	1302.842	1633.762	1667.548	2098.673
20160513:22:30:24	24.124	13.562	4.797	23.771	0	19.779	0.25	1.97	118.18	301.378	301.918	89.393	43.395	90.196	99.584	1302.842	1635.08	1667.548	2100.402
20160513:22:35:24	24.124	13.575	4.772	23.773	0	19.78	0.25	1.974	118.215	301.345	301.927	89.389	43.398	90.181	99.566	1302.842	1636.448	1667.548	2102.195
20160513:22:40:24	24.115	13.472	4.637	23.774	0	19.78	0.25	1.966	117.924	301.329	301.938	89.332	43.365	90.122	99.543	1302.842	1637.794	1667.548	2103.961
20160513:22:45:24	24.109	12.889	4.552	23.774	0	19.78	0.25	1.96	116.344	301.338	301.981	89.318	43.382	90.113	99.52	1302.842	1639.113	1667.548	2105.69
20160513:22:50:24	24.103	12.763	4.48	23.773	0	19.779	0.25	1.96	115.984	301.346	301.985	89.276	43.373	90.067	99.495	1302.842	1640.486	1667.548	2107.491
20160513:22:55:24	24.101	12.842	4.473	23.772	0	19.778	0.25	1.96	116.194	301.269	301.896	89.227	43.344	89.992	99.468	1302.842	1641.805	1667.548	2109.22
20160513:23:00:24	24.104	13.507	4.507	23.772	0	19.778	0.25	1.972	118.005	301.35	301.949	89.222	43.362	89.976	99.444	1302.842	1643.171	1667.548	2111.011
20160513:23:05:24	24.106	13.504	4.53	23.773	0	19.778	0.25	1.985	118	301.319	301.939	89.175	43.329	89.919	99.415	1302.842	1644.517	1667.548	2112.774
20160513:23:10:24	24.105	13.499	4.536	23.771	0	19.776	0.25	1.976	117.985	301.417	302.024	89.153	43.331	89.896	99.385	1302.842	1645.831	1667.548	2114.498
20160513:23:15:24	24.101	13.468	4.502	23.77	0	19.774	0.25	1.983	117.899	301.366	301.937	89.069	43.298	89.855	99.35	1302.842	1647.209	1667.548	2116.305
20160513:23:20:24	24.1	13.448	4.492	23.769	0	19.773	0.25	1.976	117.841	301.366	301.864	89.017	43.283	89.834	99.32	1302.842	1648.53	1667.548	2118.036
20160513:23:25:24	24.095	13.462	4.458	23.767	0	19.77	0.25	1.985	117.873	301.369	301.805	88.971	43.238	89.785	99.284	1302.842	1649.888	1667.548	2119.816
20160513:23:30:24	24.098	13.541	4.507	23.766	0	19.769	0.25	1.989	118.086	301.423	301.895	88.942	43.248	89.709	99.246	1302.842	1651.243	1667.548	2121.592
20160513:23:35:24	24.1	12.794	4.547	23.765	0	19.768	0.25	1.963	116.065	301.331	301.846	88.889	43.167	89.632	99.207	1302.842	1652.553	1667.548	2123.308
20160513:23:40:24	24.096	12.686	4.51	23.764	0	19.767	0.25	1.942	115.761	301.326	301.874	88.853	43.152	89.604	99.165	1302.842	1653.934	1667.548	2125.118
20160513:23:45:24	24.087	12.51	4.417	23.762	0	19.765	0.25	1.944	115.253	301.319	301.838	88.741	43.113	89.556	99.12	1302.842	1655.249	1667.548	2126.842
20160513:23:50:24	24.078	13.339	4.315	23.761	0	19.763	0.25	1.951	117.515	301.359	301.867	88.677	43.096	89.498	99.075	1302.842	1656.603	1667.548	2128.617
20160513:23:55:24	24.075	13.502	4.265	23.761	0	19.763	0.25	1.952	117.95	301.341	301.849	88.647	43.094	89.439	99.029	1302.842	1657.962	1667.548	2130.397
20160514:00:00:24	24.084	13.495	4.39	23.762	0	19.763	0.25	1.961	117.944	301.427	301.905	88.603	43.059	89.361	98.976	1302.842	1659.272	1667.548	2132.113
20160514:00:05:24	24.083	13.465	4.358	23.762	0	19.762	0.25	1.962	117.862	301.386	301.853	88.537	43.051	89.289	98.924	1302.842	1660.651	1667.548	2133.919
20160514:00:10:24	24.081	13.457	4.366	23.76	0	19.761	0.25	1.974	117.839	301.37	301.824	88.421	43.033	89.233	98.863	1302.842	1661.967	1667.548	2135.643
20160514:00:15:24	24.079	13.423	4.315	23.762	0	19.762	0.25	1.972	117.744	301.324	301.877	88.341	43.04	89.175	98.803	1302.842	1663.323	1667.548	2137.419
20160514:00:20:24	24.077	13.404	4.292	23.761	0	19.76	0.25	1.967	117.691	301.326	301.819	88.287	43.038	89.08	98.739	1302.842	1664.684	1667.548	2139.201
20160514:00:25:24	24.08	13.367	4.302	23.763	0	19.762	0.25	1.98	117.598	301.333	301.855	88.235	43.032	89.013	98.677	1302.842	1665.999	1667.548	2140.923
20160514:00:30:24	24.076	13.339	4.256	23.763	0	19.761	0.25	1.97	117.516	301.303	301.856	88.167	43.027	88.955	98.611	1302.842	1667.383	1667.548	2142.735
20160514:00:35:24	24.077	13.295	4.297	23.761	0	19.758	0.25	1.974	117.4	301.324	301.766	88.085	43.026	88.898	98.545	1302.842	1668.69	1667.548	2144.445
20160514:00:40:24	24.077	13.169	4.282	23.762	0	19.759	0.25	1.97	117.056	301.341	301.883	87.998	43.014	88.838	98.476	1302.842	1670.053	1667.548	2146.229
20160514:00:45:24	24.071	12.432	4.192	23.762	0	19.758	0.25	1.947	115.008	301.287	301.831	87.944	43.017	88.753	98.407	1302.842	1671.407	1667.548	2148.002
20160514:00:50:24	24.068	12.358	4.184	23.761	0	19.757	0.25	1.943	114.792	301.239	301.805	87.899	43.021	88.681	98.34	1302.842	1672.728	1667.548	2149.729
20160514:00:55:24	24.07	12.361	4.174	23.763	0	19.759	0.25	1.941	114.798	301.271	301.816	87.84	43.015	88.621	98.272	1302.842	1674.113	1667.548	2151.541
20160514:01:00:24	24.071	13.141	4.232	23.76	0	19.754	0.25	1.955	116.976	301.315	301.823	87.787	43.011	88.57	98.205	1302.842	1675.416	1667.548	2153.246
20160514:01:05:24	24.068	13.201	4.184	23.761	0	19.755	0.25	1.965	117.133	301.337	301.844	87.7	43.013	88.517	98.139	1302.842	1676.778	1667.548	2155.028
20160514:01:10:24	24.07	13.232	4.23	23.759	0	19.753	0.25	1.969	117.22	301.351	301.867	87.62	43.009	88.429	98.069	1302.842	1678.133	1667.548	2156.801
20160514:01:15:24	24.067	13.219	4.202	23.758	0	19.751	0.25	1.96	117.179	301.331	301.847	87.566	42.989	88.351	98.006	1302.842	1679.451	1667.548	2158.524
20160514:01:20:24	24.058	13.225	4.087	23.758	0	19.75	0.25	1.957	117.184	301.338	301.794	87.502	42.984	88.304	97.945	1302.842	1680.834	1667.548	2160.333
20160514:01:25:24	24.063	13.266	4.189	23.755	0	19.746	0.25	1.973	117.301	301.352	301.844	87.426	42.988	88.259	97.884	1302.842	1682.143	1667.548	2162.045
20160514:01:30:24	24.065	13.285	4.223	23.754	0	19.746	0.25	1.98	117.356	301.388	301.828	87.369	43.029	88.203	97.823	1302.842	1683.503	1667.548	2163.823
20160514:01:35:24	24.06	13.248	4.17	23.753	0	19.744	0.25	1.958	117.249	301.331	301.806	87.321	43.006	88.152	97.765	1302.842	1684.861	1667.548	2165.6
20160514:01:40:24	24.06	13.21	4.181	23.753	0	19.743	0.25	1.956	117.145	301.357	301.857	87.274	43.037	88.052	97.703	1302.842	1686.172	1667.548	2167.314
20160514:01:45:24	24.059	13.224	4.177	23.752	0	19.742	0.25	1.968	117.182	301.352	301.846	87.217	42.958	87.992	97.643	1302.842	1687.552	1667.548	2169.118
20160514:01:50:24	24.052	13.104	4.073	23.753	0	19.743	0.25	1.963	116.844	301.301	301.768	87.162	43.03	87.943	97.581	1302.842	1688.871	1667.548	2170.842
20160514:01:55:24	24.049	12.251	4.059	23.751	0	19.74	0.25	1.953	114.457	301.317	301.848	87.088	42.967	87.889	97.517	1302.842	1690.228	1667.548	2172.617
20160514:02:00:24	24.05	12.216	4.112	23.748	0	19.737	0.25	1.938	114.357	301.302	301.839	87.029	43.031	87.851	97.453	1302.842	1691.586	1667.548	2174.391
20160514:02:05:24	24.047	12.222	4.107	23.745	0	19.735	0.25	1.949	114.366	301.237	301.836	86.972	42.981	87.808	97.391	1302.842	1692.896	1667.548	2176.103
20160514:02:10:24	24.042	13.051	4.029	23.746	0	19.736	0.25	1.958	116.687	301.299	301.842	86.93	43.033	87.747	97.328	1302.842	1694.275	1667.548	2177.906
20160514:02:15:24	24.04	13.092	4.032	23.744	0	19.734	0.25	1.957	116.796	301.327	301.853	86.893	42.986	87.676	97.272	1302.842	1695.594	1667.548	2179.63
20160514:02:20:24	24.041	13.057	3.998	23.747	0	19.735	0.25	1.969	116.704	301.37	301.875	86.844	43.042	87.622	97.219	1302.842	1696.959	1667.548	2181.414
20160514:02:25:24	24.038	13.028	3.984	23.745	0	19.733	0.25	1.969	116.618	301.292	301.796	86.786	42.993	87.557	97.162	1302.842	1698.305	1667.548	2183.173
20160514:02:30:24	24.036	13.023	3.943	23.747	0	19.734	0.25	1.967	116.604	301.324	301.816	86.689	43.042	87.467	97.104	1302.842	1699.626	1667.548	2184.898
20160514:02:35:24	24.036	12.991	3.931	23.747	0	19.734	0.25	1.97	116.515	301.352	301.855

Time: day:hh:mm:ss	Stack Pressure: in-Hg	Sat% H2O: Percent	Static: in-H2O	Barometric: in-Hg	Flowmeter1: l/min	Vacuum1: in-Hg	Flowmeter2: l/min	Vacuum2: in-Hg	Stack Temp: degF	Sorbent Temp: degF	Probe Temp: degF	DGM#1 Temp: degF	Condenser Temp: degF	DGM#2 Temp: degF	DAQ Temp: degF	DGM1*: liters STP	DGM2*: liters STP	DGM1: liters nominal	DGM2: liters nominal
20160514:06:15:24	23.982	12.477	3.1	23.754	0.019	19.116	0.25	1.954	115.004	301.13	301.679	84.232	43.025	85.014	94.403	1308.096	1760.132	1674.381	2263.761
20160514:06:20:24	23.981	12.411	3.121	23.752	0.02	19.153	0.25	1.96	114.815	301.201	301.733	84.183	43.054	84.964	94.36	1308.293	1761.451	1674.637	2265.476
20160514:06:25:24	23.98	12.363	3.026	23.757	0.019	19.154	0.25	1.964	114.677	301.248	301.759	84.128	43.019	84.936	94.316	1308.454	1762.827	1674.846	2267.265
20160514:06:30:24	23.985	12.359	3.116	23.755	0.019	19.151	0.25	1.964	114.673	301.302	301.799	84.066	43.057	84.903	94.273	1308.613	1764.142	1675.052	2268.974
20160514:06:35:24	23.986	12.37	3.111	23.758	0.019	19.151	0.25	1.971	114.707	301.262	301.737	84.012	43.01	84.839	94.231	1308.804	1765.51	1675.3	2270.752
20160514:06:40:24	23.99	12.385	3.165	23.758	0.019	19.149	0.25	1.966	114.756	301.238	301.726	83.996	43.042	84.807	94.191	1308.972	1766.838	1675.519	2272.477
20160514:06:45:24	23.989	11.826	3.163	23.756	0.019	19.148	0.25	1.958	113.097	301.248	301.747	83.953	43.039	84.73	94.146	1309.126	1768.165	1675.719	2274.201
20160514:06:50:24	23.989	11.249	3.195	23.754	0.019	19.136	0.25	1.945	111.376	301.183	301.779	83.912	43.039	84.689	94.105	1309.319	1769.527	1675.969	2275.972
20160514:06:55:24	23.989	12.223	3.207	23.753	0.019	19.134	0.25	1.957	114.288	301.21	301.759	83.897	43.059	84.671	94.07	1309.489	1770.85	1676.189	2277.69
20160514:07:00:24	23.992	12.353	3.241	23.754	0.019	19.141	0.25	1.963	114.665	301.201	301.711	83.786	43.015	84.613	94.024	1309.649	1772.225	1676.396	2279.477
20160514:07:05:24	23.996	12.369	3.29	23.754	0.019	19.144	0.25	1.98	114.718	301.228	301.731	83.754	43.051	84.576	93.978	1309.844	1773.539	1676.65	2281.184
20160514:07:10:24	24.003	12.4	3.423	23.751	0.019	19.14	0.25	1.969	114.816	301.241	301.729	83.714	43.002	84.532	93.93	1310.01	1774.898	1676.865	2282.949
20160514:07:15:24	24.012	12.446	3.56	23.75	0.019	19.14	0.25	1.964	114.961	301.278	301.769	83.668	43.04	84.472	93.878	1310.168	1776.246	1677.07	2284.701
20160514:07:20:24	24.019	12.455	3.672	23.749	0.019	19.138	0.25	1.964	114.997	301.269	301.766	83.64	42.995	84.437	93.829	1310.367	1777.566	1677.328	2286.415
20160514:07:25:24	24.023	12.487	3.805	23.743	0.019	19.137	0.25	1.96	115.093	301.223	301.758	83.608	43.048	84.389	93.779	1310.531	1778.939	1677.541	2288.199
20160514:07:30:24	24.029	12.49	3.89	23.743	0.019	19.134	0.25	1.96	115.112	301.202	301.724	83.563	42.985	84.347	93.728	1310.689	1780.257	1677.746	2289.912
20160514:07:35:24	24.034	12.497	4.025	23.738	0.02	19.125	0.25	1.969	115.138	301.205	301.691	83.495	43.023	84.316	93.678	1310.886	1781.636	1678.002	2291.703
20160514:07:40:24	24.041	12.501	4.089	23.74	0.019	19.133	0.25	1.975	115.16	301.169	301.642	83.498	42.947	84.308	93.63	1311.048	1782.944	1678.211	2293.402
20160514:07:45:24	24.051	12.529	4.704	23.705	0.02	19.077	0.25	1.933	115.254	301.177	301.68	83.453	43.015	84.293	93.583	1311.21	1784.293	1678.422	2295.158
20160514:07:50:24	24.069	12.56	5.388	23.673	0.019	19.074	0.25	1.914	115.366	301.14	301.685	83.428	42.924	84.262	93.542	1311.408	1785.651	1678.68	2296.927
20160514:07:55:24	24.077	12.541	5.673	23.66	0.02	19.052	0.25	1.905	115.325	301.17	301.713	83.442	43.003	84.275	93.501	1311.575	1786.973	1678.896	2298.65
20160514:08:00:24	24.082	12.541	5.792	23.656	0.019	19.068	0.25	1.895	115.332	301.176	301.759	83.418	42.866	84.247	93.462	1311.734	1788.353	1679.104	2300.449
20160514:08:05:24	24.088	12.573	5.886	23.655	0.019	19.066	0.25	1.894	115.431	301.2	301.781	83.427	42.92	84.263	93.427	1311.93	1789.67	1679.359	2302.167
20160514:08:10:24	24.095	12.596	6.126	23.645	0.02	19.038	0.25	1.888	115.506	301.229	301.748	83.44	42.824	84.263	93.4	1312.091	1791.027	1679.569	2303.936
20160514:08:15:24	24.1	12.611	6.259	23.64	0.019	19.037	0.25	1.884	115.557	301.265	301.824	83.483	42.877	84.299	93.374	1312.25	1792.379	1679.776	2305.701
20160514:08:20:24	24.1	12.602	6.241	23.641	0.019	19.049	0.25	1.871	115.532	301.178	301.741	83.489	42.79	84.303	93.353	1312.45	1793.698	1680.037	2307.421
20160514:08:25:24	24.101	12.588	6.254	23.641	0.019	19.059	0.25	1.88	115.492	301.193	301.732	83.542	42.826	84.326	93.34	1312.61	1795.068	1680.244	2309.209
20160514:08:30:24	24.102	12.589	6.272	23.641	0.019	19.057	0.25	1.886	115.496	301.227	301.762	83.59	42.773	84.363	93.33	1312.777	1796.383	1680.463	2310.925
20160514:08:35:24	24.102	12.584	6.306	23.638	0.019	19.047	0.25	1.875	115.483	301.161	301.707	83.623	42.806	84.404	93.326	1312.976	1797.756	1680.722	2312.716
20160514:08:40:24	24.104	12.576	6.333	23.638	0.019	19.044	0.25	1.87	115.462	301.127	301.7	83.67	42.762	84.491	93.327	1313.131	1799.079	1680.924	2314.444
20160514:08:45:24	24.105	12.55	6.354	23.638	0.019	19.04	0.25	1.885	115.39	301.208	301.754	83.71	42.76	84.543	93.335	1313.302	1800.407	1681.146	2316.177
20160514:08:50:24	24.105	12.566	6.293	23.642	0.019	19.055	0.25	1.879	115.436	301.085	301.686	83.757	42.753	84.582	93.348	1313.495	1801.769	1681.398	2317.955
20160514:08:55:24	24.106	12.579	6.274	23.644	0.019	19.036	0.25	1.877	115.476	301.184	301.752	83.903	42.771	84.674	93.37	1313.648	1803.086	1681.598	2319.675
20160514:09:00:24	24.106	12.552	6.355	23.638	0.02	19.021	0.25	1.879	115.397	301.189	301.707	83.952	42.77	84.705	93.399	1313.817	1804.454	1681.819	2321.461
20160514:09:05:24	24.107	12.542	6.383	23.638	0.02	19.024	0.25	1.871	115.371	301.242	301.769	84.03	42.739	84.815	93.432	1314.013	1805.758	1682.074	2323.164
20160514:09:10:24	24.112	11.854	6.447	23.638	0.02	19.059	0.25	1.87	113.36	301.167	301.723	84.1	42.772	84.889	93.477	1314.165	1807.113	1682.272	2324.934
20160514:09:15:24	24.115	11.358	6.482	23.638	0.02	19.05	0.25	1.865	111.892	301.162	301.763	84.218	42.735	84.957	93.526	1314.338	1808.469	1682.498	2326.705
20160514:09:20:24	24.117	12.266	6.492	23.639	0.02	19.044	0.25	1.868	114.598	301.166	301.761	84.285	42.751	85.018	93.577	1314.537	1809.772	1682.757	2328.408
20160514:09:25:24	24.119	12.355	6.584	23.635	0.019	19.024	0.25	1.863	114.859	301.179	301.751	84.335	42.742	85.095	93.635	1314.685	1811.147	1682.95	2330.205
20160514:09:30:24	24.119	12.394	6.622	23.632	0.019	19.015	0.25	1.869	114.969	301.224	301.736	84.43	42.728	85.195	93.697	1314.856	1812.459	1683.174	2331.919
20160514:09:35:24	24.122	12.42	6.674	23.631	0.02	19.012	0.25	1.873	115.048	301.184	301.73	84.535	42.76	85.268	93.761	1315.056	1813.823	1683.435	2333.703
20160514:09:40:24	24.124	12.464	6.709	23.631	0.019	19.012	0.25	1.89	115.176	301.26	301.784	84.601	42.726	85.329	93.829	1315.204	1815.153	1683.628	2335.442
20160514:09:45:24	24.124	12.461	6.728	23.629	0.019	19.009	0.25	1.872	115.167	301.192	301.705	84.65	42.695	85.379	93.9	1315.374	1816.472	1683.85	2337.167
20160514:09:50:24	24.123	12.498	6.758	23.626	0.02	19.008	0.25	1.866	115.271	301.226	301.772	84.732	42.706	85.483	93.975	1315.582	1817.835	1684.122	2338.951
20160514:09:55:24	24.126	12.521	5.438	23.727	0.018	19.098	0.25	1.977	115.34	301.218	301.657	84.837	42.697	85.588	94.051	1315.725	1819.151	1684.307	2340.665
20160514:10:00:24	24.111	12.539	5.542	23.703	0.02	19.109	0.25	1.958	115.368	301.194	301.607	84.913	42.696	85.648	94.116	1315.899	1820.521	1684.535	2342.453
20160514:10:05:24	24.113	12.562	6.178	23.659	0.02	19.075	0.25	1.919	115.438	301.264	301.652	84.968	42.703	85.705	94.19	1316.114	1821.827	1684.815	2344.16
20160514:10:10:24	24.122	12.557	6.619	23.635	0.02	19.049	0.25	1.892	115.435	301.188	301.658	85.01	42.723	85.757	94.26	1316.257	1823.176	1685.002	2345.925
20160514:10:15:24	24.129	12.577	6.771	23.631	0.019	19.05	0.25	1.883	115.502	301.146	301.654	85.072	42.697	85.851	94.334	1316.432	1824.527	1685.231	2347.694
20160514:10:20:24	24.132	12.56	6.854	23.628	0.019	19.047	0.25	1.886	115.461	301.253	301.783	85.178	42.698	85.913	94.407	1316.636	1825.838	1685.498	2349.41
20160514:10:25:24	24.136	12.515	6.846	23.632	0.019	19.046	0.25	1.893	115.338	301.189	301.733	85.236	42.679	85.966	94.48	1316.778	1827.214	1685.683	2351.211
20160514:10:30:24	24.141	12.476	6.981	23.627	0.02	19.036	0.25	1.877	115.235	301.224	301.739	85.295	42.689	86.025	94.553	1316.952	1828.53	1685.911	2352.934
20160514:10:35:24	24.139	12.437	6.981	23.626	0.02	19.033	0.25	1.884	115.121	301.223	301.769	85.351	42.675	86.14	94.623	1317.16	1829.882	1686.183	2354.705
20160514:10:40:24	24.139	12.418	7.069	23.619	0.02	19.031	0.25	1.881	115.067	301.183	301.735	85.41	42.663	86.199	94.693	1317.303	1831.233	1686.37	2356.476
20160514:10:45:24	24.14	12.245	7.133	23.615	0.019	19.024	0.25	1.882	114.562	301.211	301.74	85.488	42.651	86.254	94.759	1317.489	1832.541	1686.613	2358.19
20160514:10:50:24	24.139	11.319	7.129	23.614	0.019	19.019	0.25	1.879	111.812	301.122	301.736	85.568	42.654	86.315	94.826	1317.691	1833.918	1686.878	2359.996
20160514:10:55:24	24.138	12.163	7.121	23.614	0.02	19.007	0.25	1.874	114.333	301.124	301.741	85.62	42.654	86.376	94.891	1317.834	1835.237	1687.065	2361.726
20160514:11:00:24	24.142	12.279	7.173	23.615	0.02	19.03	0.25	1.887	114.675	301.18	301.687	85.682	42.662	86.477	94.956	1318.019	1836.593	1687.307	2363.504
20160514:11:05:24	24.148	12.294	7.297	23.612	0.02	19.031	0.25	1.888	114.727	301.18	301.654	85.751	42.668	86.549	95.023	1318.218	1837.942	1687.569	2365.273
20160514:11:10:24	24.147	12.299	7.282	23.611	0.02	19.032	0.25	1.879	114.739	301.233	301.675	85.867	42.684	86.628	95.093	1318.348	1839.252	1687.739	2366.991
20160514:11:15:24	24.148	12.312	7.383	23.605	0.02	19.025	0.25	1.878	114.778	301.15	301.651	85.93	42.69	86.705	95.161	1318.548	1840.625	1688	2368.793
20160514:11:20:24	24.147	12.373	7.412	23.602	0.019	19.021	0.25	1.877	114.951	301.178	301.65	86.023	42.717	86.818	95.233	1318.738	1841.937	1688.25	2370.515
20160514:11:25:24	24.15	12.386	7.461	23.601	0.019	19.02	0.25	1.874	114.991	301.157	301.692	86.154	42.738	86.893	95.311	1318.877	1843.295	1688.431	2372.299
20160514:11:30:24	24.152	12.389	7.534	23.598	0.02	19.018	0.25	1.88	115.004	301.202	301.729	86.224	42.761	86.975	95.386	1319.073	1844.636	1688.689	2374.06
20160514:11:35:24	24.149	12.375	7.492	23.598	0.019	19.021	0.25	1.879	114.96	301.188	301.679	86.307	42.785	87.091	95.469	1319.261	1845.948	1688.935	2375.784
20160514:11:40:24	24.148	12.362	7.615	23.588	0.02	19.011	0.25	1.864	114.922	301.165	301.721	86.445	42.813	87.191	95.553	1319.405	1847.316	1689.124	2377.583
20160514:11:45:24	24.149	11.803	7.72	23.581	0.02	19.009	0.25	1.863	113.271	301.184	301.655	86.545	42.842	87.275	95.637	1319.602	1848.627	1689.383	2379.306
20160514:11:50:24	24.147	11.62	7.745	23.577	0.02	18.998	0.25	1.843	112.726	301.137	301.677	86.617	42.863	87.351	95.73	1319.79	1849.992	1689.63	2381.102
20160514:11:55:24	24.147	12.326	7.729	23.579	0.02	19.009	0.25	1.866	114.818	301.143	301.687	86.702	42.894	87.442	95.822	1319.935	1851.33	1689.82	2382.863
20160514:12:00:24	24.147	12.447	7.791	23.574	0.02	19.005	0.25	1.852	115.161	301.212	301.757	86.836	42.948	87.572	95.914	1320.143	1852.644	1690.094	2384.592
20160514:12:05:24	24.147	12.468	7.787	23.574	0.02	18.998	0.25	1.869	115.222	301.137	301.661	86.909	42.995	87.653	96.011	1320.319	1854.014	1690.326	2386.395
20160514:12:10:24	24.144	12.481	7.726	23.576	0.02	19.003	0.25	1.866	115.255	301.225	301.779	86.995	43.029	87.784	96.107	1320.463	1855.326	1690.515	2388.122
20160514:12:15:24	24.143	12.493	7.722	23.575	0.02	19	0.25	1.877	115.288	301.182	301.715	87.098	43.059	87.859	96.201	1320.669	1856.682	1690.785	2389.908
20160514:12:20:24	24.141	12.518	7.814	23.567	0.02	19.012	0.25	1.882	115.356	301.256	301.716	87.205	43.052	87.945	96.295	1320.843	1858.023	1691.015	2391.675
20160514:12:25:24	24.143	12.512	7.845	23.567	0.02	19.018	0.25	1.891	115.342	301.239	301.705	87.286	43.043	88.018	96.393	1320.991	1859.329	1691.209	2393.397
20160514:12:30:24	24.141	12.512	7.808	23.567	0.019	19.02	0.25	1.875	115.337	301.242	301.668	87.356	43.057	88.126	96.486	1321.185	1860.7	1691.465	2395.203
20160514:12:35:24	24.139	12.524	7.686	23.574	0.019	19.019	0.25	1.869	115.368	301.225	301.697	87.423	43.053	88.223	96.58	1321.368	1862.017	1691.706	2396.938
20160514:12:40:24	24.141	12.528	7.676	23.577	0.02	19.016	0.25	1.874	115.384	301.249	301.696	87.512	43.026	88.287	96.674	1321.516	1863.364	1691.9	2398.714
20160514:12:45:24	24.141	11.513	7.738	23.572	0.019	19.007	0.25	1.869	112.405	301.228	301.72	87.598	43.066	88.355	96.764	1321.711	1864.718	1692.157	2400.498
20160514:12:50:24	24.142	12.174	7.791	23.569	0.02	18.985	0.25	1.871	114.353	301.26	301.731	87.678	43.051	88.426	96.848	1321.89	1866.028	1692.393	2402.226
20160514:12:55:24	24.145	12.558	7.889	23.565	0.02	19.004	0.25	1.888	115.474	301.225	301.695	87.765	43.008	88.524	96.932	1322.049	1867.409	1692.602	2404.047
20160514:13:00:24	24.147	12.64	7.916	23.565	0.019	19.004	0.25	1.892	115.708	301.249	301.743	87.83	43.057	88.585	97.016	1322.248	1868.704	1692.865	2405.756
20160514:13:05:24	24.144	12.677	7.924	23.561	0.02	19.007	0.25	1.897	115.805	301.248	301.74	87.879	43.059	88.651	97.098	1322.413	1870.054	1693.081	2407.538
20160514:13:10:24	24.144	12.739	8.025	23.554	0.019	19.006	0.25	1.893	115.979	301.255	301.714	87.951	43.036	88.731	97.18	1322.58	1871.41	1693.302	2409.327
20160514:13:15:24	24.146	12.776	8.105	23.55	0.019	18.997	0.25	1.896	116.085	301.295	301.739	88.006	43.085	88.835	97.257	1322.779	1872.726	1693.565	2411.066
20160514:13:20:24	24.145	12.774	8.161	23.545	0.02	18.993	0.25	1.897	116.078	301.232	301.735	88.086	43.053	88.884	97.332	1322.935	1874.105	1693.77	2412.887
20160514:13:25:24	24.147	12.779	8.177	23.546	0.019	18.992	0.25	1.887	116.093	301.252	301.749	88.181	43.044	88.939	97.412	1323.109	1875.42	1694	2414.624
20160514:13:30:24	24.149	12.779	8.279	23.54	0.019	18.982	0.25	1.88	116.098	301.256	301.731	88.242	43.109	88.996	97.487	1323.308	1876.745	1694.263	2416.376
20160514:13:35:24	24.146	12.767	8.272	23.538	0.019	18.975	0.25	1.881	116.06	301.196	301.674	88.286	43.04	89.06	97.561	1323.457	1878.113	1694.459	2418.184
20160514:13:40:24	24.147	12.378	8.26	23.539	0.02	18.97	0.25	1.888	114.94	301.235	301.728	88.346	43.073	89.165	97.633	1323.627	1879.427	1694.683	2419.921
20160514:13:45:24	24.149	11.657	8.294	23.54	0.02	18.968	0.25	1.865	112.847	301.188	301.676	88.423	43.081	89.228	97.703	1323.832	1880.791	1694.954	2421.724
20160514:13:50:24	24.151	12.575	8.338	23.538	0.02	18.963	0.25	1.884	115.531	301.176	301.74	88.52	43.051	89.291	97.774	1323.979	1882.132	1695.148	2423.498
20160514:13:55:24	24.157	12.643	8.442	23.536	0.02	18.964	0.25	1.889	115.728	301.267	301.734	88.587	43.101	89.35	97.843	1324.153	1883.437	1695.378	2425.224
20160514:14:00:24	24.154	12.685	8.478	23.531	0.019	18.962	0.25	1.884	115.842	301.221	301.692	88.655	43.055	89.443	97.915	1324.363	1884.817	1695.656	2427.049
20160514:14:05:24	24.152	12.763	8.444	23.531	0.019	18.962	0.25	1.896	116.057	301.229	301.712	88.722	43.094	89.537	97.987	1324.506	1886.115	1695.844	2428.767
20160514:14:10:24	24.151	12.765	8.424	23.531	0.02	18.989	0.25	1.881	116.062	301.262	301.789	88.838	43.085	89.607	98.058	1324.692	1887.467	1696.091	2430.556
20160514:14:15:24	24.151	12.76	8.433	23.531	0.019	18.997	0.25	1.871	114.353	301.216	301.673	88.907	43.067	89.696	98.135	1324.891	1888.823	1696.354	2432.352
20160514:14:20:24	24.154	12.756	8.446	23.533	0.019	18.999	0.25	1.889	116.041	301.14	301.754	88.969	43.111	89.795	98.21	1325.033	1890.139	1696.541	2434.094
20160514:14:25:24	24.149	12.79	8.438	23.529	0.02	18.997	0.25	1.886	116.127	301.107	301.718	89.04	43.047	89.867	98.286	1325.22	1891.512	1696.789	2435.912
20160514:14:30:24	24.148	12.832	8.426	23.529	0.02	19.003	0.25	1.897	116.243	301.151	301.745	89.154	43.113	89.933	98.362	1325.423	1892.831	1697.057	2437.66
20160514:14:35:24	24.15	12.824	8.541	23.522	0.019	18.999	0.25	1.884	116.224	301.12	301.71	89.232	43.06	89.998	98.44	1325.555	1894.154	1697.231	2439.412
20160514:14:40:24	24.15	11.924	8.579	23.519	0.019	18.988	0.25	1.876	113.626	301.143	301.724	89.309	43.102	90.125	98.52	1325.752	1895.518	1697.493	2441.22
20160514:14:45:24	24.149	12.066	8.65	23.513	0.019	18.971	0.25	1.861	114.047	301.188	301.747	89.374	43.092	90.19	98.599	1325.938	1896.838	1697.739	2442.97
20160514:14:50:24	24.15	12.583	8.545	23.522	0.02	18.971	0.25	1.889	115.55	301.17	301.712	89.474	43.077	90.255	98.679	1326.082	1898.185	1697.93	2444.756
20160514:14:55:24	24.15	12.586	8.639	23.514	0.019	18.962	0.25	1.896	115.56	301.197	301.776	89.557	43.114	90.318	98.756	1326.282	1899.526	1698.194	2446.534
20160514:15:00:24	24.153	12.563	8.654	23.517	0.02	18.965	0.25	1.889	115.499	301.132	301.702	89.621	43.056	90.382	98.838	1326.467	1900.845	1698.439	2448.284
20160514:15:05:24	24.15	12.551	8.657	23.514	0.02	18.981	0.25	1.874	115.461	301.171	301.735	89.717	43.128	90.512	98.924	1326.611	1902.214	1698.63	2450.1
20160514:15:10:24	24.149	12.395	8.643	23.514	0.02	18.986	0.25	1.884	115.008	301.184	301.778	89.808	43.057	90.576	99.005	1326.815	1903.53	1698.9	2451.846
20160514:15:15:24	24.147	11.454	8.643	23.512	0.019	18.983	0.25	1.866	110.237	301.05	301.761	89.865	43.12	90.635	99.084	1326.994	1904.859	1699.137	2453.609
20160514:15:20:24	24.148	12.422	8.686	23.509	0.02	18.978	0.25	1.884	115.086	301.143	301.779	89.929	43.068	90.685	99.164	1327.141	1906.228	1699.331	2455.427
20160514:15:25:24	24.147	12.594	8.705	23.507	0.02	18.982	0.25	1.885	115.578	301.228	301.798	89.981	43.102	90.74	99.24	1327.335	1907.546	1699.589	2457.177
20160514:15:30:24	24.147	12.647	8.745	23.504	0.02	18.979	0.25	1.889	115.726	301.161	301.764	90.028	43.076	90.838	99.315	1327.515	1908.896	1699.828	2458.97
20160514:15:35:24	24.146	12.65	8.718	23.505	0.02	18.981	0.25	1.889	115.732	301.148	301.758	90.111	43.098	90.897	99.387	1327.663	1910.239	1700.024	2460.754
20160514:15:40:24	24.149	12.671	8.735	23.507	0.02	18.981	0.25	1.896	115.795	301.226	301.807	90.174	43.092	90.954	99.455	1327.854	1911.561	1700.278	2462.509
20160514:15:45:24	24.147	12.683	8.756	23.503	0.019	18.963	0.25	1.889	115.826	301.119	301.768	90.226	43.097	91.007	99.521	1328.027	1912.938	1700.507	2464.338
20160514:15:50:24	24.144	12.658	8.718	23.503	0.02	18.958	0.25	1.887	115.754	301.081	301.733	90.284	43.095	91.112	99.588	1328.182	1914.259	1700.713	2466.094
20160514:15:55:24	24.142	12.646	8.682	23.503	0.019	18.96	0.25	1.889	115.716	301.178	301.776	90.341	43.09	91.175	99.655	1328.378	1915.585	1700.972	2467.855
20160514:16:00:24	24.141	12.627	8.764	23.497	0.02	18.98	0.25	1.884	115.662	301.217	301.847	90.402	43.122	91.236	99.724	1328.545	1916.953	1701.194	2469.675
20160514:16:05:24	24.141	12.603	8.758	23.497	0.019	18.968	0.25	1.887	115.593	301.213	301.744	90.51	43.091	91.288	99.788

Time: day:hh:mm:ss	Stack Pressure: in-Hg	Sat% H2O: Percent	Static: in-H2O	Barometric: in-Hg	Flowmeter1: l/min	Vacuum1: in-Hg	Flowmeter2: l/min	Vacuum2: in-Hg	Stack Temp: degF	Sorbent Temp: degF	Probe Temp: degF	DGM#1 Temp: degF	Condenser Temp: degF	DGM#2 Temp: degF	DAQ Temp: degF	DGM1*: liters STP	DGM2*: liters STP	DGM1: liters nominal	DGM2: liters nominal
20160514:19:55:25	24.101	12.974	8.356	23.486	0	19.25	0.25	1.905	116.565	301.045	301.638	92.96	43.225	93.755	102.435	1336.357	1979.956	1711.594	2553.677
20160514:20:00:25	24.097	12.982	8.3	23.487	0	19.258	0.25	1.905	116.581	301.059	301.64	93.012	43.207	93.775	102.483	1336.402	1981.274	1711.654	2555.438
20160514:20:05:25	24.094	12.996	8.215	23.49	0	19.255	0.25	1.912	116.616	301.106	301.698	93.037	43.242	93.81	102.529	1336.463	1982.605	1711.735	2557.216
20160514:20:10:25	24.089	13.018	8.145	23.49	0	19.249	0.25	1.892	116.667	301.145	301.687	93.054	43.194	93.833	102.576	1336.499	1983.976	1711.783	2559.047
20160514:20:15:25	24.094	13.048	8.219	23.49	0	19.241	0.25	1.898	116.756	301.139	301.735	93.088	43.25	93.861	102.618	1336.553	1985.288	1711.856	2560.801
20160514:20:20:25	24.09	13.074	8.173	23.49	0	19.226	0.25	1.91	116.822	301.152	301.804	93.129	43.223	93.882	102.659	1336.616	1986.634	1711.939	2562.6
20160514:20:25:25	24.084	13.081	8.097	23.489	0	19.22	0.25	1.922	116.831	301.088	301.715	93.149	43.254	93.894	102.704	1336.663	1988.004	1712.002	2564.43
20160514:20:30:25	24.079	13.075	8.037	23.488	0	19.231	0.25	1.919	116.809	301.136	301.731	93.175	43.226	93.93	102.745	1336.692	1989.327	1712.041	2566.197
20160514:20:35:25	24.077	13.055	8.003	23.489	0	19.243	0.25	1.919	116.752	301.172	301.772	93.177	43.27	93.949	102.782	1336.732	1990.671	1712.094	2567.994
20160514:20:40:25	24.07	13.04	7.871	23.491	0	19.246	0.25	1.905	116.699	301.148	301.785	93.201	43.23	93.967	102.819	1336.775	1992.03	1712.152	2569.81
20160514:20:45:25	24.071	13.06	7.884	23.492	0	19.243	0.25	1.912	116.756	301.177	301.771	93.235	43.281	93.99	102.858	1336.82	1993.352	1712.211	2571.577
20160514:20:50:25	24.07	13.061	7.875	23.491	0	19.224	0.25	1.904	116.758	301.107	301.748	93.22	43.225	93.986	102.892	1336.869	1994.707	1712.278	2573.387
20160514:20:55:25	24.068	13.082	7.856	23.49	0.001	19.184	0.25	1.899	116.811	301.105	301.703	93.247	43.291	94.062	102.925	1336.969	1996.057	1712.411	2575.192
20160514:21:00:25	24.064	13.131	7.831	23.488	0.004	19.151	0.25	1.906	116.938	301.138	301.762	93.251	43.237	94.044	102.956	1337.06	1997.382	1712.531	2576.962
20160514:21:05:25	24.064	13.167	7.858	23.487	0.005	19.135	0.25	1.912	117.036	301.158	301.746	93.269	43.282	94.073	102.988	1337.158	1998.748	1712.663	2578.789
20160514:21:10:25	24.06	13.229	7.818	23.485	0.003	19.159	0.25	1.92	117.198	301.159	301.676	93.26	43.254	94.087	103.016	1337.211	2000.091	1712.733	2580.585
20160514:21:15:25	24.058	13.288	7.803	23.484	0.002	19.163	0.25	1.917	117.352	301.148	301.703	93.263	43.283	94.083	103.041	1337.287	2001.415	1712.835	2582.355
20160514:21:20:25	24.059	13.324	7.829	23.484	0.004	19.144	0.25	1.91	117.453	301.164	301.776	93.299	43.297	94.116	103.062	1337.373	2002.79	1712.95	2584.194
20160514:21:25:25	24.052	13.286	7.741	23.482	0.006	19.121	0.25	1.909	117.338	301.142	301.732	93.271	43.295	94.103	103.082	1337.499	2004.133	1713.119	2585.989
20160514:21:30:25	24.05	13.24	7.713	23.483	0.007	19.11	0.25	1.91	117.211	301.129	301.662	93.259	43.259	94.093	103.098	1337.603	2005.449	1713.257	2587.748
20160514:21:35:25	24.056	13.205	7.791	23.483	0.005	19.128	0.25	1.929	117.126	301.121	301.768	93.271	43.284	94.089	103.114	1337.687	2006.828	1713.369	2589.592
20160514:21:40:25	24.047	13.184	7.65	23.484	0.006	19.118	0.25	1.915	117.057	301.171	301.746	93.304	43.311	94.121	103.131	1337.764	2008.161	1713.472	2591.374
20160514:21:45:25	24.044	13.135	7.625	23.484	0.005	19.141	0.25	1.913	116.921	301.14	301.768	93.284	43.31	94.105	103.14	1337.863	2009.483	1713.604	2593.143
20160514:21:50:25	24.039	13.111	7.544	23.484	0.002	19.173	0.25	1.919	116.846	301.161	301.759	93.264	43.303	94.097	103.151	1337.951	2010.868	1713.722	2594.994
20160514:21:55:25	24.037	13.091	7.526	23.483	0.002	19.165	0.25	1.909	116.789	301.186	301.794	93.256	43.296	94.084	103.158	1338.037	2012.2	1713.837	2596.774
20160514:22:00:25	24.036	13.12	7.522	23.483	0	19.227	0.25	1.912	116.868	301.142	301.804	93.245	43.272	94.053	103.162	1338.092	2013.518	1713.909	2598.538
20160514:22:05:25	24.033	13.207	7.473	23.484	0	19.286	0.25	1.922	117.099	301.136	301.771	93.21	43.269	94.002	103.166	1338.118	2014.905	1713.944	2600.391
20160514:22:10:25	24.033	13.211	7.451	23.485	0	19.32	0.25	1.914	117.108	301.157	301.788	93.199	43.301	93.983	103.165	1338.135	2016.238	1713.967	2602.173
20160514:22:15:25	24.026	13.214	7.34	23.486	0	19.327	0.25	1.909	117.107	301.151	301.823	93.186	43.277	93.964	103.158	1338.139	2017.564	1713.972	2603.945
20160514:22:20:25	24.024	13.19	7.309	23.487	0	19.391	0.25	1.918	117.038	301.13	301.827	93.154	43.32	93.941	103.153	1338.139	2018.954	1713.972	2605.803
20160514:22:25:25	24.02	13.128	7.252	23.487	0	19.392	0.25	1.923	116.865	301.139	301.796	93.143	43.301	93.929	103.139	1338.143	2020.283	1713.978	2607.579
20160514:22:30:25	24.017	13.09	7.193	23.488	0	19.358	0.25	1.918	116.756	301.214	301.837	93.109	43.336	93.907	103.122	1338.161	2021.616	1714.002	2609.361
20160514:22:35:25	24.014	13.044	7.139	23.489	0	19.316	0.25	1.908	116.628	301.192	301.824	93.038	43.254	93.852	103.101	1338.185	2023.002	1714.033	2611.212
20160514:22:40:25	24.012	13.03	7.113	23.489	0	19.301	0.25	1.903	116.586	301.172	301.794	93.032	43.348	93.827	103.078	1338.205	2024.32	1714.061	2612.974
20160514:22:45:25	24.012	12.735	7.105	23.489	0	19.327	0.25	1.915	115.763	301.178	301.76	92.971	43.286	93.794	103.052	1338.222	2025.658	1714.083	2614.761
20160514:22:50:25	24.01	12.305	7.078	23.489	0	19.35	0.25	1.893	114.555	301.123	301.799	92.885	43.344	93.756	103.022	1338.24	2027.037	1714.107	2616.603
20160514:22:55:25	24.006	12.168	7.023	23.49	0	19.332	0.25	1.901	114.155	301.173	301.864	92.851	43.306	93.712	102.987	1338.261	2028.356	1714.135	2618.365
20160514:23:00:25	24.007	12.465	7.02	23.491	0	19.295	0.25	1.905	114.995	301.12	301.813	92.809	43.341	93.63	102.951	1338.3	2029.701	1714.187	2620.162
20160514:23:05:25	24.006	12.925	6.992	23.491	0	19.296	0.25	1.9	116.289	301.13	301.772	92.778	43.318	93.591	102.914	1338.329	2031.081	1714.226	2622.004
20160514:23:10:25	24.005	12.2	7.006	23.49	0	19.366	0.25	1.907	114.229	301.13	301.831	92.748	43.334	93.557	102.878	1338.34	2032.397	1714.241	2623.761
20160514:23:15:25	24	12.497	6.936	23.49	0	19.398	0.25	1.889	115.07	301.197	301.799	92.702	43.334	93.507	102.84	1338.344	2033.745	1714.246	2625.562
20160514:23:20:25	23.996	12.949	6.91	23.488	0	19.404	0.25	1.909	116.343	301.225	301.804	92.669	43.321	93.48	102.8	1338.351	2035.121	1714.256	2627.398
20160514:23:25:25	23.992	12.968	6.867	23.487	0	19.413	0.25	1.9	116.387	301.233	301.804	92.564	43.359	93.372	102.766	1338.358	2036.44	1714.265	2629.16
20160514:23:30:25	23.987	13.001	6.833	23.485	0	19.403	0.25	1.915	116.472	301.228	301.841	92.539	43.316	93.36	102.726	1338.373	2037.793	1714.285	2630.966
20160514:23:35:25	23.986	13.011	6.83	23.484	0	19.363	0.25	1.925	116.496	301.203	301.798	92.457	43.363	93.312	102.686	1338.387	2039.168	1714.304	2632.803
20160514:23:40:25	23.99	13.008	6.87	23.485	0	19.327	0.25	1.922	116.494	301.17	301.82	92.402	43.328	93.275	102.645	1338.416	2040.495	1714.343	2634.573
20160514:23:45:25	23.986	13.022	6.832	23.484	0	19.339	0.25	1.914	116.526	301.209	301.799	92.374	43.343	93.252	102.606	1338.459	2041.841	1714.4	2636.37
20160514:23:50:25	23.987	13.011	6.836	23.484	0	19.347	0.25	1.924	116.496	301.209	301.793	92.321	43.359	93.194	102.566	1338.494	2043.211	1714.446	2638.199
20160514:23:55:25	23.988	13.023	6.868	23.483	0	19.358	0.25	1.912	116.532	301.226	301.795	92.306	43.328	93.181	102.524	1338.515	2044.541	1714.474	2639.976
20160515:00:00:25	23.982	13.049	6.807	23.481	0	19.359	0.25	1.91	116.595	301.179	301.749	92.265	43.372	93.135	102.486	1338.523	2045.892	1714.485	2641.778
20160515:00:05:25	23.978	13.111	6.745	23.482	0	19.351	0.25	1.913	116.756	301.116	301.689	92.252	43.353	93.113	102.447	1338.55	2047.252	1714.52	2643.594
20160515:00:10:25	23.975	13.125	6.727	23.481	0	19.333	0.25	1.905	116.79	301.112	301.704	92.227	43.355	93.081	102.406	1338.58	2048.58	1714.561	2645.367
20160515:00:15:25	23.98	13.127	6.776	23.481	0	19.322	0.25	1.916	116.801	301.11	301.73	92.189	43.393	93.034	102.372	1338.611	2049.941	1714.602	2647.182
20160515:00:20:25	23.977	13.135	6.752	23.481	0	19.34	0.25	1.925	116.822	301.155	301.765	92.164	43.338	92.998	102.335	1338.644	2051.29	1714.646	2648.983
20160515:00:25:25	23.978	13.144	6.775	23.48	0	19.351	0.25	1.915	116.847	301.103	301.698	92.08	43.378	92.924	102.297	1338.658	2052.617	1714.665	2650.754
20160515:00:30:25	23.974	13.159	6.777	23.476	0	19.345	0.25	1.92	116.882	301.088	301.697	92.056	43.382	92.902	102.259	1338.683	2053.987	1714.698	2652.583
20160515:00:35:25	23.97	13.159	6.749	23.474	0	19.332	0.25	1.92	116.876	301.085	301.68	92.008	43.331	92.845	102.223	1338.701	2055.333	1714.722	2654.378
20160515:00:40:25	23.972	13.173	6.77	23.474	0	19.328	0.25	1.917	116.915	301.085	301.725	91.986	43.399	92.817	102.186	1338.719	2056.658	1714.746	2656.147
20160515:00:45:25	23.972	12.745	6.801	23.472	0	19.331	0.25	1.912	115.73	301.069	301.628	91.943	43.344	92.774	102.146	1338.742	2058.038	1714.776	2657.989
20160515:00:50:25	23.969	12.358	6.785	23.47	0	19.333	0.25	1.898	114.646	301.028	301.686	91.908	43.352	92.739	102.108	1338.767	2059.378	1714.809	2659.776
20160515:00:55:25	23.968	12.271	6.765	23.47	0	19.331	0.25	1.894	114.394	301.022	301.669	91.887	43.4	92.718	102.072	1338.789	2060.695	1714.839	2661.534
20160515:01:00:25	23.97	12.724	6.814	23.469	0	19.328	0.25	1.9	115.667	301.131	301.822	91.845	43.318	92.637	102.034	1338.814	2062.078	1714.872	2663.38
20160515:01:05:25	23.969	13.241	6.807	23.469	0	19.327	0.25	1.91	117.094	301.277	301.911	91.829	43.382	92.609	102.002	1338.835	2063.409	1714.9	2665.156
20160515:01:10:25	23.969	12.432	6.793	23.469	0	19.328	0.25	1.919	114.837	301.279	301.928	91.761	43.379	92.561	101.966	1338.86	2064.728	1714.933	2666.915
20160515:01:15:25	23.972	12.533	6.871	23.467	0	19.323	0.25	1.892	115.123	301.25	301.887	91.734	43.349	92.538	101.927	1338.893	2066.119	1714.978	2668.771
20160515:01:20:25	23.967	13.278	6.853	23.463	0	19.321	0.25	1.923	117.19	301.256	301.829	91.656	43.383	92.437	101.89	1338.906	2067.433	1714.994	2670.524
20160515:01:25:25	23.966	13.311	6.831	23.464	0	19.336	0.25	1.931	117.279	301.281	301.885	91.645	43.341	92.425	101.853	1338.94	2068.769	1715.041	2672.306
20160515:01:30:25	23.967	13.322	6.841	23.464	0	19.351	0.25	1.934	117.308	301.303	301.921	91.61	43.339	92.376	101.814	1338.967	2070.144	1715.076	2674.141
20160515:01:35:25	23.963	13.333	6.835	23.461	0	19.347	0.25	1.921	117.332	301.317	301.945	91.591	43.401	92.364	101.779	1338.99	2071.453	1715.107	2675.887
20160515:01:40:25	23.965	13.324	6.851	23.461	0	19.35	0.25	1.927	117.312	301.343	301.905	91.558	43.329	92.327	101.741	1339.008	2072.808	1715.131	2677.695
20160515:01:45:25	23.967	13.326	6.834	23.464	0	19.342	0.25	1.933	117.321	301.294	301.898	91.524	43.34	92.291	101.702	1339.021	2074.178	1715.148	2679.523
20160515:01:50:25	23.963	13.326	6.759	23.466	0	19.326	0.25	1.914	117.316	301.254	301.817	91.505	43.389	92.275	101.666	1339.024	2075.502	1715.152	2681.288
20160515:01:55:25	23.957	13.335	6.673	23.467	0	19.329	0.25	1.931	117.33	301.252	301.806	91.461	43.334	92.244	101.634	1339.04	2076.853	1715.174	2683.09
20160515:02:00:25	23.959	13.381	6.716	23.465	0	19.314	0.25	1.913	117.456	301.286	301.892	91.446	43.356	92.231	101.597	1339.063	2078.209	1715.204	2684.898
20160515:02:05:25	23.959	13.408	6.732	23.464	0	19.308	0.25	1.914	117.527	301.266	301.85	91.365	43.384	92.181	101.562	1339.081	2079.527	1715.228	2686.656
20160515:02:10:25	23.965	13.434	6.798	23.465	0	19.293	0.25	1.925	117.604	301.309	301.898	91.348	43.347	92.162	101.524	1339.103	2080.896	1715.257	2688.481
20160515:02:15:25	23.969	13.451	6.848	23.465	0	19.263	0.25	1.924	117.654	301.24	301.863	91.294	43.332	92.074	101.489	1339.139	2082.245	1715.306	2690.28
20160515:02:20:25	23.962	13.461	6.767	23.465	0	19.216	0.25	1.927	117.673	301.253	301.854	91.292	43.408	92.07	101.452	1339.193	2083.559	1715.378	2692.032
20160515:02:25:25	23.958	13.471	6.708	23.465	0.004	19.159	0.25	1.923	117.693	301.279	301.852	91.239	43.338	92.02	101.417	1339.245	2084.941	1715.446	2693.874
20160515:02:30:25	23.958	13.544	6.732	23.463	0.006	19.121	0.25	1.925	117.886	301.349	301.888	91.233	43.358	92.015	101.383	1339.341	2086.275	1715.574	2695.652
20160515:02:35:25	23.96	13.553	6.752	23.464	0.007	19.105	0.25	1.922	117.912	301.323	301.871	91.182	43.378	91.963	101.347	1339.445	2087.6	1715.713	2697.419
20160515:02:40:25	23.967	13.545	6.814	23.466	0.008	19.098	0.25	1.934	117.902	301.392	301.96	91.171	43.351	91.949	101.313	1339.568	2088.987	1715.876	2699.267
20160515:02:45:25	23.97	13.549	6.799	23.47	0.008	19.095	0.25	1.907	117.917	301.299	301.884	91.118	43.335	91.903	101.272	1339.682	2090.321	1716.028	2701.045
20160515:02:50:25	23.972	13.647	6.715	23.478	0.008	19.098	0.25	1.918	118.178	301.269	301.857	91.064	43.377	91.878	101.236	1339.757	2091.649	1716.128	2702.814
20160515:02:55:25	23.97	13.151	6.658	23.48	0.009	19.096	0.25	1.922	116.835	301.281	301.897	91.002	43.334	91.849	101.195	1339.87	2093.041	1716.278	2704.667
20160515:03:00:25	23.97	12.638	6.893	23.463	0.009	19.078	0.25	1.908	115.439	301.244	301.877	90.95	43.326	91.798	101.152	1340.008	2094.368	1716.461	2706.436
20160515:03:05:25	23.97	12.62	6.958	23.458	0.009	19.071	0.25	1.923	115.388	301.229	301.877	90.927	43.366	91.76	101.109	1340.127	2095.709	1716.62	2708.224
20160515:03:10:25	23.965	13.1	6.992	23.451	0.009	19.063	0.25	1.943	116.688	301.279	301.91	90.902	43.317	91.708	101.066	1340.23	2097.092	1716.757	2710.068
20160515:03:15:25	23.963	13.728	7.002	23.448	0.009	19.061	0.25	1.968	118.376	301.28	301.871	90.857	43.336	91.667	101.022	1340.329	2098.415	1716.889	2711.831
20160515:03:20:25	23.964	13.769	7.055	23.445	0.009	19.059	0.25	1.98	118.483	301.296	301.859	90.841	43.36	91.666	100.983	1340.44	2099.758	1717.037	2713.622
20160515:03:25:25	23.961	13.778	7.083	23.441	0.009	19.055	0.25	1.94	118.503	301.252	301.88	90.801	43.293	91.627	100.944	1340.578	2101.14	1717.22	2715.464
20160515:03:30:25	23.959	13.792	7.054	23.44	0.01	19.051	0.25	1.927	118.537	301.265	301.89	90.838	43.358	91.631	100.911	1340.704	2102.455	1717.389	2717.218
20160515:03:35:25	23.959	13.765	7.103	23.437	0.01	19.045	0.25	1.939	118.467	301.217	301.801	90.735	43.348	91.579	100.882	1340.791	2103.806	1717.504	2719.021
20160515:03:40:25	23.958	13.753	7.12	23.435	0.01	19.039	0.25	1.939	118.435	301.249	301.848	90.74	43.326	91.589	100.85	1340.914	2105.185	1717.669	2720.859
20160515:03:45:25	23.959	13.71	7.054	23.44	0.01	19.04	0.25	1.952	118.322	301.246	301.807	90.689	43.332	91.552	100.819	1341.06	2106.504	1717.863	2722.618
20160515:03:50:25	23.959	13.686	7.072	23.439	0.01	19.036	0.25	1.952	118.261	301.278	301.871	90.691	43.376	91.557	100.787	1341.19	2107.862	1718.035	2724.429
20160515:03:55:25	23.96	13.69	7.105	23.438	0.011	19.031	0.25	1.952	118.274	301.219	301.798	90.667	43.301	91.52	100.758	1341.282	2109.235	1718.157	2726.259
20160515:04:00:25	23.96	13.756	7.094	23.438	0.011	19.027	0.25	1.947	118.444	301.344	301.928	90.667	43.347	91.515	100.73	1341.411	2110.561	1718.33	2728.028
20160515:04:05:25	23.961	13.837	7.131	23.436	0.011	19.022	0.25	1.924	118.657	301.323	301.894	90.658	43.376	91.502	100.704	1341.567	2111.913	1718.537	2729.831
20160515:04:10:25	23.962	13.816	7.141	23.437	0.012	19.019	0.25	1.932	118.604	301.317	301.893	90.622	43.314	91.465	100.679	1341.696	2113.286	1718.709	2731.662
20160515:04:15:25	23.962	13.821	7.126	23.438	0.012	19.019	0.25	1.942	118.616	301.316	301.864	90.623	43.373	91.468	100.654	1341.796	2114.618	1718.843	2733.438
20160515:04:20:25	23.961	13.821	7.134	23.437	0.012	19.012	0.25	1.939	118.616	301.314	301.859	90.605	43.351	91.446	100.633	1341.938	2115.969	1719.031	2735.239
20160515:04:25:25	23.96	13.454	7.134	23.436	0.013	19.004	0.25	1.942	117.636	301.256	301.877	90.585	43.297	91.407	100.614	1341.091	2117.335	1719.235	2737.06
20160515:04:30:25	23.961	12.578	7.11	23.438	0.013	18.996	0.25	1.928	115.258	301.251	301.886	90.601	43.363	91.427	100.593	1342.246	2118.663	1719.441	2738.831
20160515:04:35:25	23.96	12.613	7.059	23.441	0.014	18.986	0.25	1.913	115.354	301.259	301.91	90.61	43.355	91.441	100.581	1342.36	2120.023	1719.593	2740.643
20160515:04:40:25	23.96	12.796	7.057	23.441	0.015	18.978	0.25	1.907	115.851	301.238	301.838	90.586	43.322	91.403	100.566	1342.522	2121.382	1719.809	2742.455
20160515:04:45:25	23.961	13.64	7.076	23.44	0.015	18.973	0.25	1.925	118.142	301.237	301.824	90.556	43.345	91.342	100.55	1342.694	2122.709	1720.037	2744.224
20160515:04:50:25	23.958	13.727	7.081	23.437	0.015	18.972	0.25	1.941	118.366	301.275	301.857	90.557	43.343	91.342	100.534	1342.812	2124.075	1720.194	2746.045
20160515:04:55:25	23.952	13.747	6.961	23.44	0.015	18.974	0.25	1.931	118.41	301.334	301.912	90.552	43.326	91.344	100.522	1342.966	2125.422	1720.4	2747.84
20160515:05:00:25	23.947	13.739	6.907	23.439	0.015	18.972	0.25	1.931	118.38	301.34	301.922	90.544	43.383	91.342	100.506	1343.144	2126.753	1720.637	2749.615
20160515:05:05:25	23.941	13.707	6.835	23.438	0.015	18.97	0.25	1.936	118.29	301.303	301.883	90.459	43.345	91.289	100.49	1343.286	2128.131	1720.826	2751.451
20160515:05:10:25	23.936	13.698	6.776	23.438	0.015	18.97	0.25	1.928	118.258	301.34	301.913	90.432	43.317	91.281	100.468	1343.425	2129.481	1721.011	2753.25
20160515:05:15:25	23.931	13.693	6.677	23.44	0.016	18.973	0.25	1.937	118.237	301.32	301.929	90.411	43.369	91.278	100.447	1343.605	2130.804	1721.25	2755.013
20160515:05:20:25	23.929	13.687	6.645	23.441	0.015	18.973	0.25	1.937	118.22	301.271	301.891	90.359	43.368	91.232	100.426	1343.764	2132.186	1721.461	2756.855
20160515:05:25:25	23.924	13.701	6.548	23.443	0.015	18.974	0.25	1.934	118.247	301.239	301.881	90.343	43.335	91.207	100.401	1343.882	2133.535	1721.619	2758.652
20160515:05:30:25	23.923	13.703	6.526	23.443	0.016	18.973	0.25	1.941	118.25	301.307	301.915	90.341	43.376	91.2	100.379	1344.052	2134.861	1721.844	2760.419
20160515:05:35:25	23.923	13.711	6.558	23.441	0.016	18.971	0.25	1.953	118.273	301.238	301.863	90.3	43.385	91.155	100.353	1344.226	2136.248	1722.076	2762.267
20160515:05:40:25	23.923	13.719	6.525	23.443	0.015	18.971	0.25	1.95	118.294	301.257	301.899	90.285	43.385	91.135	100.331	1344.344	2137.584	1722.233	2764.047
20160515:05:45:25	23.925	13.387	6.537	23.444	0.015	18.972	0.25	1.966	117.402	301.322	301.894	90.282	43.388	91.131	100.308	1344.497	2138.908	1722.437	2765.81
20160515:05:50:25	23.922	13.038	6.496	23.445	0.016	18.971	0.25	1.941	116.458	301.217	301.803	90.229	43.385	91.028

Time:	Stack Pressure:	Sat% H2O:	Static:	Barometric:	Flowmeter1:	Vacuum1:	Flowmeter2:	Vacuum2:	Stack Temp:	Sorbent Temp:	Probe Temp:	DGM#1 Temp:	Condenser Temp:	DGM#2 Temp:	DAQ Temp:	DGM1*:	DGM2*:	DGM1:	DGM2:
day:hh:mm:ss	in-Hg	Percent	in-H2O	in-Hg	l/min	in-Hg	l/min	in-Hg	degF	degF	degF	degF	degF	degF	degF	liters STP	liters STP	liters nominal	liters nominal
20160515:09:35:25	23.915	13.261	6.621	23.429	0.016	18.943	0.25	1.939	117.068	301.323	301.885	89.168	43.416	89.97	99.162	1351.697	2200.874	1732.006	2848.282
20160515:09:40:25	23.913	13.235	6.601	23.428	0.016	18.942	0.25	1.941	116.994	301.227	301.839	89.065	43.386	89.918	99.137	1351.876	2202.218	1732.243	2850.07
20160515:09:45:25	23.914	13.211	6.602	23.428	0.016	18.942	0.25	1.938	116.932	301.285	301.89	89.061	43.396	89.921	99.108	1352.001	2203.535	1732.409	2851.821
20160515:09:50:25	23.912	13.189	6.614	23.425	0.016	18.94	0.25	1.936	116.87	301.254	301.853	89.026	43.396	89.893	99.081	1352.156	2204.915	1732.615	2853.658
20160515:09:55:25	23.912	13.181	6.64	23.424	0.016	18.943	0.25	1.942	116.848	301.234	301.847	89.006	43.394	89.881	99.058	1352.342	2206.241	1732.861	2855.421
20160515:10:00:25	23.914	13.162	6.661	23.424	0.016	18.944	0.25	1.959	116.8	301.242	301.88	89.004	43.417	89.884	99.031	1352.475	2207.57	1733.039	2857.19
20160515:10:05:25	23.91	13.109	6.651	23.421	0.016	18.939	0.25	1.926	116.651	301.189	301.782	88.965	43.387	89.837	99.003	1352.632	2208.945	1733.246	2859.019
20160515:10:10:25	23.911	13.111	6.667	23.421	0.016	18.938	0.25	1.938	116.658	301.201	301.864	88.978	43.397	89.839	98.976	1352.807	2210.254	1733.48	2860.759
20160515:10:15:25	23.909	13.093	6.618	23.422	0.016	18.939	0.25	1.943	116.604	301.203	301.775	88.978	43.412	89.827	98.955	1352.961	2211.603	1733.683	2862.555
20160515:10:20:25	23.909	13.071	6.593	23.425	0.016	18.941	0.25	1.921	116.547	301.172	301.773	88.942	43.389	89.804	98.931	1353.096	2212.971	1733.863	2864.374
20160515:10:25:25	23.908	13.058	6.481	23.432	0.016	18.946	0.25	1.929	116.51	301.168	301.802	88.95	43.404	89.818	98.912	1353.284	2214.289	1734.113	2866.126
20160515:10:30:25	23.907	13.026	6.468	23.432	0.016	18.946	0.25	1.932	116.421	301.2	301.815	88.97	43.412	89.826	98.896	1353.446	2215.646	1734.328	2867.93
20160515:10:35:25	23.908	12.642	6.42	23.436	0.016	18.95	0.25	1.926	115.342	301.191	301.826	88.951	43.396	89.795	98.882	1353.572	2216.989	1734.494	2869.716
20160515:10:40:25	23.902	11.986	6.37	23.434	0.017	18.946	0.25	1.912	113.47	301.172	301.779	88.936	43.386	89.773	98.867	1353.747	2218.311	1734.728	2871.474
20160515:10:45:25	23.889	12.443	6.217	23.432	0.016	18.941	0.25	1.911	114.751	301.157	301.847	88.941	43.398	89.779	98.855	1353.929	2219.691	1734.969	2873.308
20160515:10:50:25	23.888	12.965	6.187	23.433	0.016	18.943	0.25	1.912	116.224	301.247	301.862	88.941	43.408	89.777	98.846	1354.05	2221.017	1735.13	2875.071
20160515:10:55:25	23.892	13.027	6.18	23.437	0.016	18.95	0.25	1.922	116.399	301.193	301.852	88.941	43.423	89.78	98.841	1354.208	2222.339	1735.339	2876.829
20160515:11:00:25	23.891	13.044	6.153	23.439	0.016	18.952	0.25	1.933	116.445	301.217	301.857	88.941	43.428	89.779	98.834	1354.395	2223.713	1735.587	2878.654
20160515:11:05:25	23.895	13.021	6.191	23.439	0.016	18.952	0.25	1.924	116.387	301.326	301.919	88.941	43.424	89.778	98.828	1354.527	2225.019	1735.763	2880.391
20160515:11:10:25	23.893	12.989	6.16	23.44	0.016	18.953	0.25	1.933	116.298	301.305	301.891	88.924	43.417	89.744	98.822	1354.693	2226.37	1735.983	2882.186
20160515:11:15:25	23.89	13.001	6.134	23.439	0.016	18.951	0.25	1.926	116.325	301.268	301.878	88.886	43.38	89.668	98.815	1354.873	2227.734	1736.222	2883.998
20160515:11:20:25	23.892	12.994	6.176	23.437	0.016	18.95	0.25	1.935	116.309	301.232	301.86	88.882	43.376	89.663	98.811	1355.021	2229.049	1736.419	2885.746
20160515:11:25:25	23.891	13.007	6.14	23.439	0.016	18.953	0.25	1.931	116.342	301.25	301.819	88.875	43.38	89.654	98.806	1355.162	2230.413	1736.606	2887.558
20160515:11:30:25	23.892	13.036	6.2	23.436	0.016	18.948	0.25	1.942	116.425	301.233	301.813	88.864	43.382	89.646	98.802	1355.341	2231.762	1736.843	2889.352
20160515:11:35:25	23.894	12.832	6.239	23.435	0.016	18.948	0.25	1.948	115.856	301.199	301.804	88.849	43.363	89.629	98.797	1355.51	2233.077	1737.067	2891.1
20160515:11:40:25	23.894	12.026	6.253	23.434	0.016	18.945	0.25	1.936	113.576	301.176	301.84	88.835	43.363	89.622	98.792	1355.638	2234.456	1737.237	2892.932
20160515:11:45:25	23.895	12.89	6.281	23.433	0.016	18.941	0.25	1.914	116.028	301.218	301.844	88.831	43.349	89.617	98.786	1355.817	2235.78	1737.474	2894.692
20160515:11:50:25	23.894	12.97	6.273	23.433	0.016	18.942	0.25	1.931	116.248	301.241	301.857	88.829	43.34	89.613	98.78	1355.98	2237.105	1737.691	2896.453
20160515:11:55:25	23.895	12.966	6.318	23.43	0.016	18.941	0.25	1.937	116.237	301.27	301.868	88.83	43.337	89.613	98.772	1356.104	2238.475	1737.856	2898.274
20160515:12:00:25	23.895	12.957	6.364	23.427	0.016	18.938	0.25	1.921	116.214	301.263	301.871	88.827	43.343	89.608	98.764	1356.276	2239.785	1738.083	2900.015
20160515:12:05:25	23.895	12.927	6.396	23.425	0.016	18.937	0.25	1.928	116.13	301.255	301.863	88.807	43.332	89.596	98.751	1356.46	2241.138	1738.328	2901.814
20160515:12:10:25	23.896	12.891	6.424	23.423	0.016	18.935	0.25	1.93	116.032	301.223	301.865	88.71	43.279	89.541	98.741	1356.588	2242.498	1738.498	2903.622
20160515:12:15:25	23.895	12.913	6.415	23.424	0.016	18.935	0.25	1.93	116.093	301.276	301.88	88.709	43.28	89.543	98.733	1356.747	2243.818	1738.709	2905.378
20160515:12:20:25	23.901	12.942	6.497	23.423	0.016	18.935	0.25	1.928	116.181	301.278	301.861	88.705	43.281	89.537	98.721	1356.93	2245.184	1738.952	2907.194
20160515:12:25:25	23.902	12.945	6.549	23.42	0.016	18.933	0.25	1.937	116.192	301.282	301.911	88.701	43.28	89.54	98.711	1357.071	2246.53	1739.139	2908.983
20160515:12:30:25	23.901	12.943	6.602	23.416	0.016	18.929	0.25	1.917	116.185	301.315	301.908	88.697	43.278	89.54	98.696	1357.213	2247.843	1739.328	2910.729
20160515:12:35:25	23.905	12.922	6.648	23.416	0.016	18.929	0.25	1.93	116.131	301.256	301.837	88.659	43.219	89.479	98.68	1357.389	2249.221	1739.561	2912.562
20160515:12:40:25	23.906	12.552	6.537	23.425	0.016	18.936	0.25	1.921	115.085	301.216	301.803	88.617	43.178	89.441	98.665	1357.555	2250.545	1739.781	2914.321
20160515:12:45:25	23.905	12.061	6.449	23.431	0.016	18.939	0.25	1.903	113.688	301.162	301.818	88.615	43.176	89.431	98.647	1357.683	2251.875	1739.952	2916.088
20160515:12:50:25	23.902	12.865	6.339	23.436	0.017	18.94	0.25	1.917	115.969	301.205	301.837	88.617	43.201	89.431	98.628	1357.866	2253.249	1740.194	2917.914
20160515:12:55:25	23.891	12.893	6.167	23.437	0.017	18.945	0.25	1.932	116.03	301.225	301.891	88.581	43.172	89.394	98.61	1358.03	2254.561	1740.411	2919.656
20160515:13:00:25	23.884	12.906	6.046	23.44	0.016	18.947	0.25	1.912	116.058	301.248	301.867	88.572	43.164	89.372	98.593	1358.151	2255.912	1740.572	2921.451
20160515:13:05:25	23.884	12.932	5.991	23.444	0.017	18.951	0.25	1.924	116.129	301.254	301.868	88.573	43.174	89.375	98.573	1358.323	2257.271	1740.8	2923.256
20160515:13:10:25	23.891	12.958	6.138	23.439	0.017	18.946	0.25	1.926	116.208	301.273	301.878	88.563	43.174	89.364	98.553	1358.503	2258.59	1741.039	2925.008
20160515:13:15:25	23.885	12.977	6.146	23.433	0.016	18.94	0.25	1.929	116.251	301.26	301.862	88.504	43.138	89.316	98.537	1358.629	2259.961	1741.206	2926.829
20160515:13:20:25	23.881	13.035	6.143	23.429	0.016	18.937	0.25	1.94	116.405	301.275	301.873	88.499	43.152	89.304	98.517	1358.782	2261.307	1741.409	2928.617
20160515:13:25:25	23.879	13.047	6.113	23.43	0.017	18.939	0.25	1.92	116.436	301.262	301.869	88.495	43.154	89.294	98.496	1358.966	2262.618	1741.654	2930.359
20160515:13:30:25	23.875	13.034	6.07	23.429	0.017	18.937	0.25	1.929	116.395	301.2	301.804	88.406	43.116	89.244	98.475	1359.107	2263.998	1741.841	2932.192
20160515:13:35:25	23.877	13.015	6.037	23.433	0.016	18.941	0.25	1.931	116.344	301.231	301.84	88.379	43.101	89.23	98.449	1359.258	2265.323	1742.041	2933.951
20160515:13:40:25	23.877	12.184	5.945	23.44	0.016	18.947	0.25	1.923	113.996	301.221	301.867	88.379	43.107	89.225	98.427	1359.438	2266.655	1742.28	2935.72
20160515:13:45:25	23.878	12.365	5.866	23.447	0.017	18.95	0.25	1.927	114.517	301.191	301.82	88.323	43.057	89.171	98.401	1359.605	2268.029	1742.5	2937.543
20160515:13:50:25	23.878	12.807	5.717	23.458	0.016	18.959	0.25	1.919	115.776	301.215	301.894	88.313	43.054	89.165	98.373	1359.74	2269.343	1742.68	2939.288
20160515:13:55:25	23.881	12.815	5.732	23.459	0.016	18.96	0.25	1.913	115.802	301.276	301.757	88.293	43.047	89.134	98.35	1359.928	2270.695	1742.928	2941.081
20160515:14:00:25	23.88	12.802	5.898	23.447	0.017	18.949	0.25	1.919	115.765	301.127	301.734	88.253	43.015	89.053	98.324	1360.09	2272.054	1743.143	2942.883
20160515:14:05:25	23.879	12.798	5.899	23.445	0.016	18.948	0.25	1.924	115.752	301.246	301.87	88.242	43.009	89.051	98.297	1360.216	2273.378	1743.309	2944.641
20160515:14:10:25	23.875	12.777	5.857	23.445	0.016	18.947	0.25	1.918	115.688	301.236	301.806	88.185	42.976	88.999	98.268	1360.389	2274.751	1743.539	2946.462
20160515:14:15:25	23.871	12.799	5.773	23.447	0.016	18.946	0.25	1.92	115.743	301.274	301.889	88.172	42.986	88.993	98.243	1360.572	2276.092	1743.781	2948.242
20160515:14:20:25	23.871	12.802	5.798	23.445	0.017	18.946	0.25	1.94	115.749	301.241	301.877	88.114	42.945	88.966	98.212	1360.699	2277.403	1743.95	2949.981
20160515:14:25:25	23.868	12.88	5.751	23.445	0.016	18.947	0.25	1.957	115.962	301.2	301.803	88.068	42.961	88.937	98.181	1360.856	2278.78	1744.157	2951.808
20160515:14:30:25	23.863	12.908	5.703	23.443	0.016	18.948	0.25	1.946	116.031	301.21	301.892	88.062	42.985	88.925	98.154	1361.043	2280.099	1744.406	2953.558
20160515:14:35:25	23.865	12.889	5.643	23.45	0.017	18.954	0.25	1.939	115.982	301.218	301.797	88.005	42.973	88.874	98.124	1361.179	2281.435	1744.585	2955.331
20160515:14:40:25	23.867	12.888	5.593	23.455	0.017	18.957	0.25	1.941	115.981	301.267	301.934	88.004	42.991	88.873	98.092	1361.335	2282.806	1744.793	2957.148
20160515:14:45:25	23.868	11.924	5.663	23.451	0.016	18.953	0.25	1.901	113.237	301.195	301.793	87.945	42.932	88.797	98.066	1361.513	2284.126	1745.028	2958.898
20160515:14:50:25	23.871	12.487	5.594	23.459	0.017	18.957	0.25	1.908	114.856	301.157	301.836	87.936	42.933	88.783	98.037	1361.67	2285.481	1745.235	2960.695
20160515:14:55:25	23.869	12.718	5.51	23.464	0.017	18.962	0.25	1.907	115.514	301.126	301.757	87.903	42.933	88.716	98.008	1361.807	2286.829	1745.417	2962.481
20160515:15:00:25	23.869	12.77	5.433	23.469	0.017	18.969	0.25	1.922	115.659	301.234	301.818	87.877	42.945	88.675	97.986	1361.989	2288.155	1745.657	2964.239
20160515:15:05:25	23.864	12.825	5.486	23.461	0.016	18.963	0.25	1.933	115.805	301.298	301.902	87.874	42.994	88.666	97.956	1362.151	2289.536	1745.872	2966.068
20160515:15:10:25	23.857	12.927	5.438	23.457	0.017	18.962	0.25	1.936	116.073	301.236	301.841	87.819	42.905	88.608	97.927	1362.281	2290.86	1746.044	2967.823
20160515:15:15:25	23.855	13.005	5.622	23.442	0.017	18.955	0.25	1.937	116.286	301.212	301.832	87.81	42.978	88.604	97.897	1362.459	2292.19	1746.28	2969.586
20160515:15:20:25	23.854	12.997	5.709	23.435	0.016	18.949	0.25	1.938	116.263	301.195	301.797	87.737	42.935	88.551	97.866	1362.631	2293.564	1746.507	2971.41
20160515:15:25:25	23.855	13.008	5.725	23.434	0.016	18.946	0.25	1.943	116.295	301.218	301.835	87.704	42.974	88.541	97.834	1362.753	2294.872	1746.669	2973.145
20160515:15:30:25	23.85	13.011	5.675	23.432	0.016	18.945	0.25	1.952	116.294	301.241	301.869	87.632	42.942	88.483	97.805	1362.912	2296.224	1746.88	2974.938
20160515:15:35:25	23.849	13.04	5.659	23.433	0.016	18.945	0.25	1.959	116.371	301.176	301.874	87.604	42.982	88.434	97.773	1363.095	2297.591	1747.122	2976.75
20160515:15:40:25	23.85	13.038	5.668	23.434	0.016	18.945	0.25	1.951	116.369	301.169	301.78	87.573	42.968	88.377	97.741	1363.227	2298.914	1747.296	2978.506
20160515:15:45:25	23.851	12.352	5.706	23.431	0.016	18.94	0.25	1.939	114.444	301.186	301.855	87.54	42.983	88.337	97.705	1363.386	2300.281	1747.507	2980.318
20160515:15:50:25	23.849	12.564	5.688	23.43	0.016	18.944	0.25	1.938	115.039	301.164	301.868	87.477	42.97	88.3	97.671	1363.564	2301.63	1747.743	2982.107
20160515:15:55:25	23.845	12.996	5.664	23.428	0.016	18.952	0.25	1.951	116.244	301.222	301.89	87.428	42.968	88.273	97.638	1363.713	2302.95	1747.941	2983.857
20160515:16:00:25	23.848	13.01	5.732	23.426	0.015	18.961	0.25	1.941	116.287	301.202	301.884	87.395	42.958	88.239	97.604	1363.843	2304.332	1748.113	2985.69
20160515:16:05:25	23.847	12.978	5.684	23.429	0.015	18.967	0.25	1.94	116.198	301.22	301.851	87.355	42.948	88.209	97.568	1364.015	2305.66	1748.341	2987.451
20160515:16:10:25	23.843	12.945	5.582	23.433	0.014	18.971	0.25	1.946	116.104	301.189	301.818	87.303	42.944	88.146	97.53	1364.169	2306.99	1748.544	2989.214
20160515:16:15:25	23.842	12.941	5.564	23.433	0.015	18.972	0.25	1.94	116.091	301.283	301.893	87.28	42.964	88.114	97.491	1364.29	2308.367	1748.704	2991.039
20160515:16:20:25	23.845	12.925	5.639	23.431	0.015	18.97	0.25	1.946	116.052	301.221	301.837	87.221	42.92	88.021	97.452	1364.431	2309.682	1748.891	2992.782
20160515:16:25:25	23.845	12.945	5.6	23.433	0.015	18.97	0.25	1.943	116.106	301.211	301.844	87.19	42.945	87.983	97.408	1364.614	2311.037	1749.133	2994.577
20160515:16:30:25	23.846	12.979	5.643	23.431	0.015	18.969	0.25	1.951	116.2	301.23	301.866	87.15	42.944	87.948	97.365	1364.751	2312.413	1749.315	2996.4
20160515:16:35:25	23.846	12.994	5.651	23.43	0.015	18.967	0.25	1.953	116.241	301.194	301.797	87.041	42.915	87.884	97.316	1364.884	2313.738	1749.491	2998.156
20160515:16:40:25	23.843	13	5.676	23.426	0.015	18.963	0.25	1.958	116.254	301.165	301.836	87	42.954	87.859	97.271	1365.065	2315.098	1749.73	2999.959
20160515:16:45:25	23.845	12.557	5.743	23.423	0.015	18.96	0.25	1.94	115.016	301.138	301.782	86.97	42.99	87.832	97.226	1365.216	2316.449	1749.93	3001.75
20160515:16:50:25	23.846	12.156	5.736	23.424	0.015	18.96	0.25	1.935	113.885	301.142	301.811	86.923	42.926	87.79	97.175	1365.325	2317.779	1750.074	3003.511
05/15/2016:16:50:25	Sampling	complete	6 Days	0 Hrs	0 Minutes	sampled													

Hg-324K-1099								
HgK_324 Data	huntington2wk5	5/16/2016	13:56:21					
DGM1 ID	DGM2 ID	Trap1 ID	Trap2 ID					
3605445	3605446	312666	283917					
Time:	Leak 1	Status	Leak 2	Status	Vacuum1	Vacuum2	DGM 1	DGM 2
Day:hh:mm	ccpermin	P-F	ccpermin	P-F	in-Hg	in-Hg	liter	liter
05/16/2016:13:56:35	1347.648	Fail	1416.793	Fail	3.054	2.748	0.424	0.459
05/16/2016:13:56:50	1377.778	Fail	1515.038	Fail	7.461	6.551	0.689	0.758
05/16/2016:13:57:05	1025.926	Fail	1199.248	Fail	10.382	8.833	0.937	1.058
05/16/2016:13:57:20	848.148	Fail	954.887	Fail	12.49	10.338	1.113	1.235
05/16/2016:13:57:35	581.481	Fail	748.12	Fail	14	11.564	1.228	1.432
05/16/2016:13:57:50	340.741	Fail	759.398	Fail	15.09	12.336	1.283	1.615
05/16/2016:13:58:05	266.667	Fail	699.248	Fail	16.022	12.82	1.361	1.782
05/16/2016:13:58:20	285.185	Fail	545.113	Fail	16.761	13.171	1.426	1.887
05/16/2016:13:58:35	240.741	Fail	481.203	Fail	17.326	13.442	1.481	2.023
05/16/2016:13:58:50	162.963	Fail	541.353	Fail	17.762	13.656	1.507	2.158
05/16/2016:13:59:05	140.741	Fail	556.391	Fail	18.095	13.849	1.552	2.301
05/16/2016:13:59:20	155.556	Fail	567.669	Fail	18.341	14.043	1.585	2.442
05/16/2016:13:59:35	114.815	Fail	451.128	Fail	18.525	14.256	1.609	2.526
05/16/2016:13:59:50	88.889	Fail	327.068	Fail	18.679	14.482	1.63	2.605
05/16/2016:14:00:05	74.074	Fail	353.383	Fail	18.807	14.704	1.646	2.703
05/16/2016:14:00:20	59.259	Fail	368.421	Fail	18.914	14.991	1.659	2.789
05/16/2016:14:00:35	33.333	Fail	398.496	Fail	18.999	15.336	1.663	2.902
05/16/2016:14:00:50	7.407	Pass	390.977	Fail	19.065	15.712	1.663	2.985
05/16/2016:14:01:05	7.407	Pass	334.586	Fail	19.115	16.07	1.667	3.07
05/16/2016:14:01:20	7.407	Pass	319.549	Fail	19.151	16.391	1.667	3.145
05/16/2016:14:01:35	7.407	Pass	251.88	Fail	19.177	16.684	1.67	3.195
05/16/2016:14:01:50	14.815	Fail	172.932	Fail	19.196	16.946	1.674	3.231
05/16/2016:14:02:05	11.111	Fail	165.414	Fail	19.205	17.219	1.676	3.278
05/16/2016:14:02:20	7.407	Pass	176.692	Fail	19.221	17.481	1.678	3.32
05/16/2016:14:02:35	3.704	Pass	180.451	Fail	19.223	17.7	1.678	3.368
05/16/2016:14:02:50	3.704	Pass	169.173	Fail	19.23	17.894	1.68	3.404
05/16/2016:14:03:05	3.704	Pass	142.857	Fail	19.229	18.055	1.68	3.44
05/16/2016:14:03:20	3.704	Pass	116.541	Fail	19.234	18.192	1.681	3.462
05/16/2016:14:03:35	3.704	Pass	90.226	Fail	19.234	18.304	1.681	3.485
05/16/2016:14:03:50	0	Pass	112.782	Fail	19.233	18.399	1.681	3.519
05/16/2016:14:04:05	0	Pass	127.82	Fail	19.233	18.517	1.681	3.549
05/16/2016:14:04:20	0	Pass	116.541	Fail	19.233	18.641	1.681	3.577
05/16/2016:14:04:35	0	Pass	97.744	Fail	19.235	18.752	1.681	3.598
05/16/2016:14:04:50	0	Pass	82.707	Fail	19.233	18.847	1.681	3.618
05/16/2016:14:05:05	3.704	Pass	71.429	Fail	19.232	18.932	1.683	3.633
05/16/2016:14:05:20	3.704	Pass	30.075	Fail	19.232	19.008	1.683	3.633
05/16/2016:14:05:35	0	Pass	7.519	Pass	19.231	19.071	1.683	3.637

EMCO
EMISSIONS MEASUREMENT COMPANY

Project PC16-21

Appendix C: CEMS Data

CEMS Data Logs

Average Data

Plant: HUNTINGTON PLANT
Interval: 1 Hour
Type: Block
Report Period: 04/13/2016 08:00 Through 04/19/2016 08:42
Time Online Criteria: 1 minute(s)

Source		UNIT2					
Parameter Unit		CO2 (PCT)	FLOWSCFH (SCFH)	HEATIN (MMBTU/HR)	HGOZ/HR (OZ/HR)	HGT (UG/SCM)	UNITLOAD (MW)
04/13/16	08:00	10.1 SC	28,078,247.4	1,575.5 S	0.011	0.390	150
04/13/16	09:00	10.1 SC	28,169,354.6	1,580.6 S	0.011	0.381	150
04/13/16	10:00	9.5 C	28,048,647.4	1,480.4	0.011	0.400	150
04/13/16	11:00	9.4 M	28,100,868.8	1,467.5	0.011	0.407	150
04/13/16	12:00	9.4 MC	27,958,299.3	1,460.0	0.010	0.374	150
04/13/16	13:00	9.9 SC	28,928,130.0	1,591.0 S	0.012	0.414	167
04/13/16	14:00	10.4 C	29,582,934.8	1,709.2	0.012	0.390	180
04/13/16	15:00	10.4	29,456,888.8	1,702.0	0.012	0.407	180
04/13/16	16:00	10.3	29,442,158.4	1,684.7	0.012	0.397	180
04/13/16	17:00	10.4	29,353,582.2	1,696.0	0.011	0.387	180
04/13/16	18:00	10.4	31,326,731.0	1,810.0	0.012	0.380	193
04/13/16	19:00	10.7	42,799,281.1	2,544.2	0.016	0.373	274
04/13/16	20:00	10.7	43,235,347.1	2,570.1	0.018	0.413	279
04/13/16	21:00	10.6	41,300,744.1	2,432.2	0.018	0.427	265
04/13/16	22:00	10.5	35,835,526.7	2,090.4	0.015	0.411	225
04/13/16	23:00	10.5	35,573,135.1	2,075.1	0.015	0.409	225
04/14/16	00:00	10.5	35,423,394.0	2,066.3	0.014	0.408	225
04/14/16	01:00	10.5	35,774,867.8	2,086.9	0.014	0.392	225
04/14/16	02:00	10.7	34,939,592.3	2,077.0	0.014	0.398	225
04/14/16	03:00	10.8	34,723,995.2	2,083.4	0.014	0.391	225
04/14/16	04:00	11.0	34,179,454.5	2,088.7	0.012	0.360	225
04/14/16	05:00	11.1 C	34,078,099.8 C	2,101.5	0.018	0.516 C	225
04/14/16	06:00	11.2	43,364,904.0	2,698.3	0.021	0.495 M	292
04/14/16	07:00	11.2	58,694,773.9	3,652.1	0.010	0.172 M	391
04/14/16	08:00	10.9	64,195,641.4	3,887.4	0.019	0.295 C	422
04/14/16	09:00	11.1	62,398,997.7	3,847.9	0.009	0.145	419
04/14/16	10:00	11.0	53,438,274.8	3,265.7	0.005	0.094	365
04/14/16	11:00	10.7	44,741,888.7	2,659.7	0.002	0.043	301
04/14/16	12:00	10.2	34,986,645.2	1,982.6	0.002	0.062	220
04/14/16	13:00	10.1	35,037,611.2	1,966.0	0.002	0.049	220
04/14/16	14:00	10.1	35,073,504.2	1,968.0	0.003	0.081	220
04/14/16	15:00	10.1	34,920,037.9	1,959.4	0.002	0.067	220
04/14/16	16:00	10.2	34,982,948.0	1,982.4	0.001	0.034	220
04/14/16	17:00	10.2	34,951,643.4	1,980.6	0.001	0.025	220
04/14/16	18:00	10.2	35,154,637.1	1,992.1	0.001	0.021	220
04/14/16	19:00	10.5	38,127,909.7	2,224.1	0.001	0.033	247
04/14/16	20:00	11.1	52,798,314.8	3,255.9	0.001	0.019	358
04/14/16	21:00	11.2	53,752,164.9	3,344.6	0.002	0.036	368
04/14/16	22:00	11.2	51,772,118.3	3,221.4	0.001	0.027	355
04/14/16	23:00	10.8	40,706,927.0	2,442.4	0.001	0.024	268
04/15/16	00:00	10.7	38,966,203.4	2,316.3	0.001	0.016	255
04/15/16	01:00	10.6	35,693,664.6	2,102.0	0.001	0.024	231
04/15/16	02:00	10.5	36,009,378.2	2,100.5	0.001	0.031	230
04/15/16	03:00	10.6	35,973,174.0	2,118.4	0.001	0.037	230
04/15/16	04:00	10.6	35,853,243.5	2,111.3	0.001	0.026	230

F = Unit Offline
E = Exceedance
M = Maintenance
T = Out Of Control

C = Calibration
S = Substituted
*** = Suspect**
U = Startup

Report Version 4.0
HTNDAHS

Average Data

Plant: HUNTINGTON PLANT
Interval: 1 Hour
Type: Block
Report Period: 04/13/2016 08:00 Through 04/19/2016 08:42
Time Online Criteria: 1 minute(s)

Source		UNIT2					
Parameter		CO2	FLOWSCFH	HEATIN	HGOZ/HR	HGT	UNITLOAD
Unit		(PCT)	(SCFH)	(MMBTU/HR)	(OZ/HR)	(UG/SCM)	(MW)
04/15/16	05:00	10.6 C	35,881,193.7 C	2,113.0	0.006	0.163 C	230
04/15/16	06:00	10.5	36,552,884.4	2,132.3	0.003	0.086	234
04/15/16	07:00	10.7	40,014,503.6	2,378.7	0.002	0.050	262
04/15/16	08:00	10.5	40,080,897.7	2,338.1	0.001	0.029	261
04/15/16	09:00	10.6 MC	39,747,149.5	2,340.7	0.001	0.031	261
04/15/16	10:00	10.7 C	36,073,280.3	2,144.3	0.001	0.029	227
04/15/16	11:00	10.8	34,818,411.8	2,089.1	0.001	0.029	220
04/15/16	12:00	10.9	34,842,470.4	2,109.9	0.001	0.033	220
04/15/16	13:00	10.6	33,390,350.0	1,966.3	0.001	0.029	206
04/15/16	14:00	10.5	32,378,244.4	1,888.7	0.002	0.053	196
04/15/16	15:00	10.4	31,726,738.8	1,833.1	0.001	0.036	189
04/15/16	16:00	10.4	31,627,968.4	1,827.4	0.001	0.026	189
04/15/16	17:00	10.4	32,087,694.1	1,854.0	0.001	0.033	192
04/15/16	18:00	10.4	32,358,012.4	1,869.6	0.001	0.025	195
04/15/16	19:00	10.6	34,759,199.1	2,046.9	0.001	0.032	215
04/15/16	20:00	10.6	36,119,329.6	2,127.0	0.001	0.015	225
04/15/16	21:00	11.1	42,761,136.3	2,636.9	0.001	0.018	280
04/15/16	22:00	11.3	49,746,149.1	3,122.9	0.001	0.019	330
04/15/16	23:00	11.5	53,850,906.0	3,440.5	0.001	0.019	366
04/16/16	00:00	11.5	53,648,004.6	3,427.5	0.001	0.012	366
04/16/16	01:00	11.5	53,758,904.5	3,434.6	0.001	0.018	368
04/16/16	02:00	11.3	46,076,083.9	2,892.5	0.001	0.029	309
04/16/16	03:00	11.2	41,916,320.1	2,608.1	0.001	0.017	277
04/16/16	04:00	11.3	42,216,474.9	2,650.2	0.001	0.019	279
04/16/16	05:00	11.4 C	43,983,160.9 C	2,785.6	0.006	0.148 C	289
04/16/16	06:00	11.7	53,493,013.4	3,477.0	0.003	0.053	361
04/16/16	07:00	11.5	58,089,279.2	3,711.2	0.002	0.042	389
04/16/16	08:00	11.5	55,215,058.7	3,527.6	0.002	0.044	372
04/16/16	09:00	11.0	41,217,436.3	2,518.8	0.001	0.032	272
04/16/16	10:00	10.9	35,937,122.4	2,176.2	0.002	0.051	225
04/16/16	11:00	10.8	36,040,505.7	2,162.5	0.001	0.039	225
04/16/16	12:00	10.8	36,162,818.6	2,169.8	0.001	0.032	227
04/16/16	13:00	10.8	35,504,342.2	2,130.2	0.002	0.063	224
04/16/16	14:00	10.8	35,371,338.5	2,122.3	0.002	0.059	223
04/16/16	15:00	10.8	35,259,326.0	2,115.5	0.002	0.048	224
04/16/16	16:00	10.8	35,476,004.9	2,128.6	0.002	0.050	226
04/16/16	17:00	10.9	35,562,675.8	2,153.5	0.001	0.035	226
04/16/16	18:00	11.1	38,676,754.8	2,385.1	0.002	0.049	252
04/16/16	19:00	11.4	41,749,410.6	2,644.1	0.002	0.044	276
04/16/16	20:00	11.5	43,208,080.0	2,760.5	0.002	0.044	287
04/16/16	21:00	11.6	54,029,046.5	3,481.9	0.003	0.057	364
04/16/16	22:00	11.5	54,277,819.9	3,467.8	0.003	0.049	366
04/16/16	23:00	11.4	47,211,883.5	2,990.1	0.002	0.047	314
04/17/16	00:00	11.1	36,780,949.8	2,268.2	0.001	0.040	237
04/17/16	01:00	11.1	36,053,435.7	2,223.3	0.001	0.032	230

F = Unit Offline
E = Exceedance
M = Maintenance
T = Out Of Control

C = Calibration
S = Substituted
*** = Suspect**
U = Startup

Report Version 4.0
HTNDAHS

Average Data

Plant: HUNTINGTON PLANT
Interval: 1 Hour
Type: Block
Report Period: 04/13/2016 08:00 Through 04/19/2016 08:42
Time Online Criteria: 1 minute(s)

Source		UNIT2					
Parameter Unit		CO2 (PCT)	FLOWSCFH (SCFH)	HEATIN (MMBTU/HR)	HGOZ/HR (OZ/HR)	HGT (UG/SCM)	UNITLOAD (MW)
04/17/16	02:00	11.3	37,861,607.7	2,376.9	0.001	0.039	245
04/17/16	03:00	11.4	41,929,692.1	2,655.6	0.003	0.062	275
04/17/16	04:00	11.3	39,943,697.2	2,507.6	0.002	0.046	262
04/17/16	05:00	11.5 C	38,992,716.0 C	2,491.2	0.009	0.232 C	253
04/17/16	06:00	11.4	41,458,475.9	2,625.7	0.005	0.126	273
04/17/16	07:00	10.9	33,752,587.1	2,043.9	0.003	0.075	211
04/17/16	08:00	11.0	33,450,447.5	2,044.2	0.003	0.077	210
04/17/16	09:00	11.1	31,988,928.1	1,972.7	0.002	0.070	201
04/17/16	10:00	11.1	31,649,617.3	1,951.8	0.003	0.094	199
04/17/16	11:00	11.1	31,574,907.1	1,947.1	0.002	0.061	199
04/17/16	12:00	11.1	31,517,186.4	1,943.5	0.002	0.079	198
04/17/16	13:00	11.1	31,454,134.1	1,939.7	0.002	0.065	198
04/17/16	14:00	11.1	31,400,258.4	1,936.3	0.002	0.072	198
04/17/16	15:00	11.1	31,360,107.8	1,933.9	0.001	0.032	198
04/17/16	16:00	11.1	31,325,974.0	1,931.8	0.001	0.034	199
04/17/16	17:00	11.3	34,101,009.6	2,140.8	0.002	0.047	218
04/17/16	18:00	11.4	40,271,133.3	2,550.5	0.001	0.024	262
04/17/16	19:00	11.7	47,940,152.1	3,116.1	0.001	0.024	322
04/17/16	20:00	11.8	47,820,492.0	3,134.9	0.002	0.044	324
04/17/16	21:00	11.8	47,614,278.5	3,121.4	0.003	0.066	324
04/17/16	22:00	11.9	47,767,040.5	3,157.9	0.003	0.053	327
04/17/16	23:00	11.9	47,641,053.5	3,149.6	0.002	0.046	327
04/18/16	00:00	11.8	44,737,021.0	2,932.8	0.002	0.049	305
04/18/16	01:00	11.7	38,796,574.9	2,521.8	0.002	0.063	260
04/18/16	02:00	11.9	40,917,936.9	2,705.1	0.002	0.048	279
04/18/16	03:00	11.4	38,872,260.8	2,461.9	0.002	0.053	254
04/18/16	04:00	11.1	39,992,770.0	2,466.2	0.002	0.050	253
04/18/16	05:00	11.3 C	49,017,653.4 C	3,077.2	0.014	0.281 C	314
04/18/16	06:00	11.4	57,977,238.6	3,671.9	0.007	0.128	379
04/18/16	07:00	11.5	57,176,753.4	3,653.0	0.006	0.108	379
04/18/16	08:00	11.7	56,008,428.6	3,640.5	0.006	0.110	379
04/18/16	09:00	11.6	52,226,262.7	3,365.7	0.005	0.100	352
04/18/16	10:00	11.2	44,793,595.6	2,787.2	0.004	0.099	289
04/18/16	11:00	11.1	42,621,767.8	2,628.4	0.006	0.151	270
04/18/16	12:00	11.2	42,426,966.1	2,639.9	0.005	0.112	270
04/18/16	13:00	11.5	41,266,560.8	2,636.5	0.003	0.072	271
04/18/16	14:00	11.4	40,896,461.8	2,590.1	0.003	0.081	269
04/18/16	15:00	11.6	42,092,115.1	2,712.6	0.002	0.046	281
04/18/16	16:00	11.8	47,474,592.7	3,112.3	0.002	0.046	325
04/18/16	17:00	11.4	57,053,754.9	3,613.4	0.003	0.055	378
04/18/16	18:00	11.5	56,557,317.5	3,613.4	0.005	0.085	380
04/18/16	19:00	11.5	56,311,251.9	3,597.6	0.005	0.085	380
04/18/16	20:00	11.6	56,382,325.0	3,633.5	0.002	0.031	380
04/18/16	21:00	11.6	55,953,724.6	3,605.9	0.004	0.079	380
04/18/16	22:00	11.7	55,850,220.1	3,630.3	0.004	0.077	380

F = Unit Offline
E = Exceedance
M = Maintenance
T = Out Of Control

C = Calibration
S = Substituted
*** = Suspect**
U = Startup

Average Data

Plant: HUNTINGTON PLANT
Interval: 1 Hour
Type: Block
Report Period: 04/13/2016 08:00 Through 04/19/2016 08:42
Time Online Criteria: 1 minute(s)

Source		UNIT2					
Parameter Unit		CO2 (PCT)	FLOWSCFH (SCFH)	HEATIN (MMBTU/HR)	HGOZ/HR (OZ/HR)	HGT (UG/SCM)	UNITLOAD (MW)
04/18/16	23:00	11.6	55,972,495.4	3,607.1	0.003	0.058	380
04/19/16	00:00	11.7	55,778,978.8	3,625.6	0.003	0.048	380
04/19/16	01:00	11.5	46,725,374.8	2,985.2	0.002	0.052	313
04/19/16	02:00	10.8	36,017,428.8	2,161.0	0.002	0.044	224
04/19/16	03:00	11.1	34,215,537.0	2,110.0	0.001	0.036	217
04/19/16	04:00	11.3	36,261,589.6	2,276.4	0.001	0.036	233
04/19/16	05:00	11.5 C	50,183,270.8 C	3,206.1	0.012	0.234 C	327
04/19/16	06:00	11.9	69,364,757.5	4,585.8	0.014	0.199	468
04/19/16	07:00	11.6	71,406,090.7	4,601.7	0.004	0.053 C	473
04/19/16	08:00	11.7	62,729,949.5	4,077.5	0.000 IT	5.230 ITC	422
Average		11.0	41,520,759.9	2,558.1	0.005	0.117	270
Minimum		9.4	27,958,299.3	1,460.0	0.001	0.012	150
Maximum		11.9	71,406,090.7	4,601.7	0.021	0.516	473
Summation		1,595.8	6,020,510,180.6	370,930.6	0.651	16.826	39,123
Included Data Points		145	145	145	144	144	145
Total number of Data Points		145	145	145	145	145	145

F = Unit Offline
E = Exceedance
M = Maintenance
T = Out Of Control

C = Calibration
S = Substituted
*** = Suspect**
U = Startup

Average Data

Plant: HUNTINGTON PLANT
Interval: 1 Hour
Type: Block
Report Period: 04/19/2016 11:00 Through 04/25/2016 11:59
Time Online Criteria: 1 minute(s)

Source		UNIT2					
Parameter Unit		CO2 (PCT)	FLOWSCFH (SCFH)	HEATIN (MMBTU/HR)	HGLB/T (LB/TBTU)	HGOUNCES (OZ)	UNITLOAD (MW)
04/19/16	11:00	11.5	70,856,145.6	4,526.9	0.000000000 I	0.000 I	470
04/19/16	12:00	11.7	59,291,132.2	3,853.9	0.000000000 I	0.000 I	402
04/19/16	13:00	11.7	61,827,810.2	4,018.8	0.000000000 I	0.000 I	415
04/19/16	14:00	11.7	68,820,417.3	4,473.3	0.000000000 I	0.000 I	464
04/19/16	15:00	11.7	65,823,589.9	4,278.6	0.000000000 I	0.000 I	444
04/19/16	16:00	11.7	57,384,564.3	3,730.0	0.690571846	0.041	393
04/19/16	17:00	11.7	63,115,138.3	4,102.5	0.531135231	0.035	427
04/19/16	18:00	11.6	62,975,490.0	4,058.4	0.359403052	0.023	426
04/19/16	19:00	11.7	55,885,775.4	3,632.6	0.363054462	0.021	383
04/19/16	20:00	11.5	55,190,478.9	3,526.0	0.359596800	0.020	372
04/19/16	21:00	11.6	62,102,757.5	4,002.2	0.281903741	0.018	417
04/19/16	22:00	11.6	54,335,614.7	3,501.7	0.261560172	0.015	371
04/19/16	23:00	11.5	48,315,284.8	3,086.8	0.269697600	0.013	327
04/20/16	00:00	11.2	40,523,159.9	2,521.4	0.309028500	0.012	268
04/20/16	01:00	11.3	40,164,544.0	2,521.5	0.290382372	0.012	265
04/20/16	02:00	11.3	40,433,638.5	2,538.4	0.238670442	0.010	267
04/20/16	03:00	11.6	46,960,637.7	3,026.4	0.166623517	0.008	315
04/20/16	04:00	11.7	51,122,140.6	3,322.9	0.193052769	0.010	347
04/20/16	05:00	11.8 C	53,941,253.0 C	3,536.1	0.568536254	0.032	371
04/20/16	06:00	11.7	67,357,253.1	4,378.2	0.252601385	0.018	451
04/20/16	07:00	11.7	67,478,918.2	4,386.1	0.181527231	0.013	457
04/20/16	08:00	11.6	58,581,194.0	3,775.2	0.167592259	0.010	393
04/20/16	09:00	11.3	45,349,613.2	2,847.0	0.124307522	0.006	307
04/20/16	10:00	10.8	31,051,007.7	1,863.1	0.196654500	0.006	195
04/20/16	11:00	9.8	29,450,446.1	1,603.4	0.345148714	0.009	165
04/20/16	12:00	9.1	27,991,549.6	1,415.2	0.293901231	0.007	140
04/20/16	13:00	11.1	32,849,449.8	2,025.7	0.267267892	0.009	201
04/20/16	14:00	11.7	51,074,810.9	3,319.9	0.168080769	0.009	339
04/20/16	15:00	11.7	59,994,043.8	3,899.6	0.159436615	0.010	405
04/20/16	16:00	11.8	68,542,817.2	4,493.4	0.148562237	0.011	464
04/20/16	17:00	11.7	61,856,118.1	4,020.6	0.173843538	0.011	419
04/20/16	18:00	11.7	62,353,650.1	4,053.0	0.150792462	0.010	424
04/20/16	19:00	11.8	60,197,147.2	3,946.2	0.120944898	0.008	412
04/20/16	20:00	11.8	59,959,253.3	3,930.6	0.117135610	0.007	410
04/20/16	21:00	11.8	57,953,303.1	3,799.1	0.113326322	0.007	398
04/20/16	22:00	11.8	51,944,774.3	3,405.3	0.124754186	0.007	360
04/20/16	23:00	11.9	54,609,342.8	3,610.3	0.104819445	0.006	381
04/21/16	00:00	11.9	50,311,988.8	3,326.2	0.099153529	0.005	350
04/21/16	01:00	11.8	45,255,591.6	2,966.8	0.122849542	0.006	312
04/21/16	02:00	11.5	39,307,747.3	2,511.3	0.107488174	0.004	262
04/21/16	03:00	11.5	39,096,993.0	2,497.9	0.086088256	0.003	261
04/21/16	04:00	11.9	44,735,340.9	2,957.5	0.119928555	0.006	306
04/21/16	05:00	12.2 C	55,319,190.7 C	3,749.4	0.246854361	0.015	385
04/21/16	06:00	11.7	69,760,353.7	4,534.4	0.181527231	0.013	468
04/21/16	07:00	11.6	70,366,127.8	4,534.7	0.100749103	0.007	470

F = Unit Offline
E = Exceedance
M = Maintenance
T = Out Of Control

C = Calibration
S = Substituted
*** = Suspect**
U = Startup

Average Data

Plant: HUNTINGTON PLANT
Interval: 1 Hour
Type: Block
Report Period: 04/19/2016 11:00 Through 04/25/2016 11:59
Time Online Criteria: 1 minute(s)

Source		UNIT2					
Parameter		CO2	FLOWSCFH	HEATIN	HGLB/T	HGOUNCES	UNITLOAD
Unit		(PCT)	(SCFH)	(MMBTU/HR)	(LB/TBTU)	(OZ)	(MW)
04/21/16	08:00	11.6	70,437,168.3	4,539.3	0.076046198	0.005	470
04/21/16	09:00	11.6	70,673,768.3	4,554.5	0.112374000	0.008	471
04/21/16	10:00	11.5	70,676,789.1	4,515.5	0.108465339	0.008	470
04/21/16	11:00	11.5	70,814,368.6	4,524.2	0.106511009	0.008	470
04/21/16	12:00	11.5	70,510,110.3	4,504.8	0.134848800	0.010	470
04/21/16	13:00	11.5	70,026,807.6	4,473.9	0.113351165	0.008	470
04/21/16	14:00	11.5	65,601,494.7	4,191.2	0.144620452	0.010	441
04/21/16	15:00	11.6	58,813,180.6	3,790.2	0.130780086	0.008	403
04/21/16	16:00	11.5	64,315,352.0	4,109.0	0.149506278	0.010	433
04/21/16	17:00	11.5	68,187,097.0	4,356.4	0.145597617	0.010	458
04/21/16	18:00	11.6	59,297,166.2	3,821.4	0.150154914	0.009	405
04/21/16	19:00	11.7	60,237,724.0	3,915.5	0.133504154	0.008	411
04/21/16	20:00	11.3	71,763,041.5	4,505.1	0.116351841	0.008	473
04/21/16	21:00	11.4	69,240,073.2	4,385.2	0.118288421	0.008	459
04/21/16	22:00	11.6	62,693,576.5	4,040.3	0.123030155	0.008	424
04/21/16	23:00	11.6	56,188,973.1	3,621.1	0.110436517	0.006	386
04/22/16	00:00	11.7	53,963,210.7	3,507.6	0.092780585	0.005	374
04/22/16	01:00	11.7	54,993,310.2	3,574.5	0.076164600	0.004	379
04/22/16	02:00	11.7	52,737,838.9	3,428.0	0.099888000	0.005	363
04/22/16	03:00	11.8	53,167,413.7	3,485.4	0.099993814	0.006	372
04/22/16	04:00	11.7	53,104,990.0	3,451.8	0.050712369	0.003	370
04/22/16	05:00	11.7 C	53,447,213.8 C	3,474.1	0.396670615	0.022	371
04/22/16	06:00	11.7	50,326,504.0	3,271.3	0.190171385	0.010	349
04/22/16	07:00	11.6	46,361,877.7	2,987.8	0.080018038	0.004	318
04/22/16	08:00	11.0	42,502,768.9	2,597.4	0.099604227	0.004	277
04/22/16	09:00	10.8	41,237,618.1	2,474.3	0.091772100	0.004	262
04/22/16	10:00	10.8	41,388,319.1	2,483.3	0.096974600	0.004	263
04/22/16	11:00	10.9	41,926,052.4	2,538.9	0.127838312	0.005	268
04/22/16	12:00	10.8	41,809,333.7	2,508.5	0.138386500	0.006	267
04/22/16	13:00	10.8	41,143,485.2	2,468.6	0.104050000	0.004	263
04/22/16	14:00	10.8	41,025,563.6	2,461.6	0.125900500	0.005	262
04/22/16	15:00	10.7	39,444,611.9	2,344.8	0.124976692	0.005	250
04/22/16	16:00	10.6	38,782,065.2	2,283.8	0.133576642	0.005	245
04/22/16	17:00	10.6	38,840,210.1	2,287.2	0.160079943	0.006	245
04/22/16	18:00	10.6	38,863,786.9	2,288.7	0.152659019	0.006	245
04/22/16	19:00	10.6	38,833,019.4	2,286.8	0.162200208	0.006	245
04/22/16	20:00	10.6	38,829,494.8	2,286.6	0.126155717	0.005	245
04/22/16	21:00	10.6	38,741,891.6	2,281.5	0.135696906	0.005	245
04/22/16	22:00	10.6	38,716,302.7	2,279.9	0.148418491	0.005	245
04/22/16	23:00	10.4	34,272,924.1	1,980.2	0.146950615	0.005	209
04/23/16	00:00	10.4	33,189,969.8	1,917.6	0.114535038	0.004	202
04/23/16	01:00	10.3	33,180,505.4	1,898.7	0.121102078	0.004	202
04/23/16	02:00	10.4	33,130,677.0	1,914.2	0.146950615	0.004	202
04/23/16	03:00	10.3	33,037,757.9	1,890.5	0.154923379	0.005	202
04/23/16	04:00	10.3	33,304,204.2	1,905.7	0.108009961	0.003	201

F = Unit Offline
E = Exceedance
M = Maintenance
T = Out Of Control

C = Calibration
S = Substituted
*** = Suspect**
U = Startup

Average Data

Plant: HUNTINGTON PLANT
Interval: 1 Hour
Type: Block
Report Period: 04/19/2016 11:00 Through 04/25/2016 11:59
Time Online Criteria: 1 minute(s)

Source		UNIT2					
Parameter		CO2	FLOWSCFH	HEATIN	HGLB/T	HGOUNCES	UNITLOAD
Unit		(PCT)	(SCFH)	(MMBTU/HR)	(LB/TBTU)	(OZ)	(MW)
04/23/16	05:00	10.4 C	33,266,500.8 C	1,922.1	0.440851846	0.014	203
04/23/16	06:00	10.3	33,210,072.4	1,900.4	0.232385068	0.007	202
04/23/16	07:00	10.3	33,289,633.1	1,904.9	0.097318066	0.003	202
04/23/16	08:00	10.3	33,305,812.2	1,905.8	0.068733612	0.002	202
04/23/16	09:00	10.4	33,209,008.7	1,918.7	0.067532452	0.002	202
04/23/16	10:00	9.0	29,616,333.4	1,480.8	0.070545900	0.002	157
04/23/16	11:00	10.5	33,587,011.3	1,959.2	0.075879206	0.002	205
04/23/16	12:00	10.4	33,493,428.1	1,935.2	0.046786483	0.001	205
04/23/16	13:00	10.5	33,431,196.1	1,950.1	0.055972954	0.002	205
04/23/16	14:00	10.5	33,424,921.1	1,949.8	0.087865766	0.003	205
04/23/16	15:00	10.6	33,345,731.8	1,963.7	0.089475147	0.003	205
04/23/16	16:00	10.6	32,946,044.8	1,940.2	0.066046228	0.002	205
04/23/16	17:00	10.7	32,775,745.5	1,948.4	0.065954086	0.002	205
04/23/16	18:00	10.8	34,633,434.1	2,078.0	0.060661150	0.002	219
04/23/16	19:00	11.2	48,254,039.5	3,002.5	0.052675313	0.003	317
04/23/16	20:00	11.2	55,974,797.3	3,482.9	0.112374000	0.006	372
04/23/16	21:00	11.2	55,514,830.3	3,454.3	0.072742098	0.004	372
04/23/16	22:00	11.1	52,127,339.8	3,214.5	0.052643676	0.003	350
04/23/16	23:00	10.8	40,627,814.9	2,437.7	0.025700350	0.001	266
04/24/16	00:00	10.4	34,589,692.2	1,998.5	0.058888298	0.002	211
04/24/16	01:00	10.5	34,641,152.1	2,020.7	0.031678766	0.001	212
04/24/16	02:00	10.5	34,568,890.8	2,016.5	0.036494794	0.001	212
04/24/16	03:00	10.4	34,719,105.5	2,006.0	0.046030119	0.001	212
04/24/16	04:00	10.5	34,690,567.9	2,023.6	0.053511429	0.002	212
04/24/16	05:00	10.5 C	34,771,572.4 C	2,028.4	0.221537314	0.007	212
04/24/16	06:00	10.5	34,695,871.3	2,023.9	0.153042686	0.005	212
04/24/16	07:00	10.5	34,605,736.2	2,018.7	0.053725474	0.002	212
04/24/16	08:00	10.5	34,621,356.5	2,019.6	0.054474634	0.002	212
04/24/16	09:00	10.5	34,820,642.2	2,031.2	0.022474800	0.001	212
04/24/16	10:00	10.5	34,812,963.7	2,030.8	0.058434480	0.002	212
04/24/16	11:00	10.5	34,777,650.1	2,028.7	0.059290663	0.002	212
04/24/16	12:00	10.5	34,862,580.7	2,033.7	0.080802257	0.003	212
04/24/16	13:00	10.5	34,931,698.9	2,037.7	0.072668520	0.002	212
04/24/16	14:00	10.4	34,905,769.1	2,016.8	0.081795306	0.003	212
04/24/16	15:00	10.5	34,657,287.1	2,021.7	0.119865600	0.004	212
04/24/16	16:00	10.5	34,793,896.5	2,029.7	0.136989257	0.004	212
04/24/16	17:00	10.5	34,625,512.8	2,019.9	0.108093086	0.003	212
04/24/16	18:00	10.5	34,451,434.8	2,009.6	0.102099806	0.003	212
04/24/16	19:00	10.7	37,750,082.2	2,244.0	0.047365116	0.002	237
04/24/16	20:00	11.2	54,722,376.7	3,404.9	0.069130077	0.004	361
04/24/16	21:00	11.1	56,251,744.8	3,468.9	0.106299730	0.006	373
04/24/16	22:00	11.0	49,885,867.6	3,048.6	0.043825860	0.002	332
04/24/16	23:00	10.9	45,090,450.3	2,730.5	0.033506009	0.001	297
04/25/16	00:00	10.8	40,567,135.1	2,434.0	0.062013800	0.002	261
04/25/16	01:00	10.7	39,017,538.9	2,319.4	0.039908523	0.001	251

F = Unit Offline
E = Exceedance
M = Maintenance
T = Out Of Control

C = Calibration
S = Substituted
*** = Suspect**
U = Startup

Report Version 4.0
HTNDAHS

Average Data

Plant: HUNTINGTON PLANT
Interval: 1 Hour
Type: Block
Report Period: 04/19/2016 11:00 Through 04/25/2016 11:59
Time Online Criteria: 1 minute(s)

Source		UNIT2					
Parameter Unit		CO2 (PCT)	FLOWSCFH (SCFH)	HEATIN (MMBTU/HR)	HGLB/T (LB/TBTU)	HGOUNCES (OZ)	UNITLOAD (MW)
04/25/16	02:00	10.4	33,634,031.4	1,943.3	0.042788562	0.001	203
04/25/16	03:00	10.4	33,762,653.0	1,950.8	0.086117383	0.003	203
04/25/16	04:00	10.4	33,801,274.2	1,952.9	0.039655056	0.001	203
04/25/16	05:00	10.4 C	33,817,955.6 C	1,953.9	0.259324615	0.008	203
04/25/16	06:00	10.6	35,833,015.2	2,110.2	0.081842196	0.003	223
04/25/16	07:00	11.0	49,791,214.5	3,042.8	0.061805700	0.003	327
04/25/16	08:00	11.1	55,637,078.1	3,430.9	0.029156497	0.002	373
04/25/16	09:00	10.8	44,415,803.9	2,665.0	0.044013150	0.002	294
04/25/16	10:00	10.8	42,595,063.0	2,555.7	0.061493550	0.003	280
04/25/16	11:00	10.5	36,764,629.7	2,144.6	0.033926246	0.001	235
Average		11.1	46,900,084.1	2,915.0	0.139112807	0.007	307
Minimum		9.0	27,991,549.6	1,415.2	0.022474800	0.001	140
Maximum		12.2	71,763,041.5	4,554.5	0.690571846	0.041	473
Summation		1,602.8	6,800,512,201.3	422,680.7	19.475792980	0.943	44,516
Included Data Points		145	145	145	140	140	145
Total number of Data Points		145	145	145	145	145	145

F = Unit Offline
E = Exceedance
M = Maintenance
T = Out Of Control

C = Calibration
S = Substituted
*** = Suspect**
U = Startup

Average Data

Plant: HUNTINGTON PLANT
Interval: 1 Hour
Type: Block
Report Period: 04/26/2016 10:00 Through 05/02/2016 10:59
Time Online Criteria: 1 minute(s)

Source		UNIT2					
Parameter		CO2	FLOWSCFH	HEATIN	HGLB/T	HGOUNCES	UNITLOAD
Unit		(PCT)	(SCFH)	(MMBTU/HR)	(LB/TBTU)	(OZ)	(MW)
04/26/16	10:00	10.3	34,362,831.9	1,966.3	0.000000000 I	0.000 I	208
04/26/16	11:00	10.9	39,071,668.5	2,366.0	0.000000000 I	0.000 I	256
04/26/16	12:00	10.8	34,689,623.3	2,081.4	0.884425000	0.029	221
04/26/16	13:00	10.8	33,979,543.4	2,038.8	0.595166000	0.019	218
04/26/16	14:00	10.8	33,931,064.4	2,035.9	0.431807500	0.014	218
04/26/16	15:00	10.9	34,106,801.8	2,065.4	0.351555358	0.012	220
04/26/16	16:00	11.0	38,018,595.6	2,323.4	0.258460200	0.010	252
04/26/16	17:00	11.1	40,121,382.3	2,474.1	0.218673730	0.009	268
04/26/16	18:00	11.4	48,355,505.9	3,062.5	0.118288421	0.006	332
04/26/16	19:00	11.4	45,921,332.7	2,908.3	0.136031684	0.006	314
04/26/16	20:00	11.7	53,290,136.2	3,463.9	0.123899538	0.007	373
04/26/16	21:00	11.6	52,757,988.7	3,400.0	0.123998897	0.007	367
04/26/16	22:00	11.6	51,726,707.4	3,333.5	0.120123931	0.006	361
04/26/16	23:00	11.6	49,870,035.4	3,213.8	0.128842603	0.007	348
04/27/16	00:00	11.0	38,957,681.8	2,380.8	0.056493475	0.002	257
04/27/16	01:00	10.8	37,091,399.9	2,225.5	0.093853100	0.003	238
04/27/16	02:00	10.8	37,304,704.2	2,238.3	0.073563350	0.003	241
04/27/16	03:00	10.8	38,571,186.4	2,314.3	0.107171500	0.004	252
04/27/16	04:00	11.1	39,852,538.3	2,457.6	0.071271438	0.003	266
04/27/16	05:00	11.5 C	44,224,131.2 C	2,825.4	0.363505461	0.016	295
04/27/16	06:00	11.7	52,561,541.5	3,416.5	0.199776000	0.011	370
04/27/16	07:00	11.8 MC	53,294,204.0	3,493.7	0.095041739	0.005	375
04/27/16	08:00	11.8 C	52,182,876.9	3,420.9	0.089518271	0.005	359
04/27/16	09:00	11.2 C	41,049,929.4	2,554.2	0.060501359	0.002	271
04/27/16	10:00	11.0	37,498,072.1	2,291.5	0.059456062	0.002	244
04/27/16	11:00	11.0	36,525,908.4	2,232.1	0.062622965	0.002	232
04/27/16	12:00	11.2	39,092,055.6	2,432.4	0.084180166	0.003	256
04/27/16	13:00	11.1	38,827,707.7	2,394.4	0.076130854	0.003	255
04/27/16	14:00	11.1	38,220,612.1	2,357.0	0.102250216	0.004	252
04/27/16	15:00	11.2	38,875,432.6	2,418.9	0.142474179	0.006	256
04/27/16	16:00	11.1	38,360,491.8	2,365.5	0.098099465	0.004	252
04/27/16	17:00	11.3	41,755,977.0	2,621.3	0.087015265	0.004	279
04/27/16	18:00	11.4	48,165,351.0	3,050.5	0.104488105	0.005	326
04/27/16	19:00	11.6	53,274,582.9	3,433.3	0.112374000	0.006	367
04/27/16	20:00	11.8	55,137,251.9	3,614.5	0.062758022	0.004	387
04/27/16	21:00	11.9	52,044,782.6	3,440.8	0.093676477	0.005	368
04/27/16	22:00	11.9	52,511,248.9	3,471.6	0.091410111	0.005	376
04/27/16	23:00	11.9	52,197,108.4	3,450.8	0.086688514	0.005	374
04/28/16	00:00	12.0	51,392,963.4	3,426.2	0.122674950	0.007	373
04/28/16	01:00	12.0	51,119,494.2	3,407.9	0.162942300	0.009	372
04/28/16	02:00	11.4	54,316,601.4	3,440.1	0.138003158	0.008	371
04/28/16	03:00	11.4	54,078,573.1	3,425.0	0.125188579	0.007	370
04/28/16	04:00	11.5	54,251,918.6	3,466.1	0.135825965	0.008	373
04/28/16	05:00	11.4 C	54,311,798.4 C	3,439.8	0.374580000	0.021	372
04/28/16	06:00	11.5	53,982,333.8	3,448.9	0.221816504	0.012	372

F = Unit Offline
E = Exceedance
M = Maintenance
T = Out Of Control

C = Calibration
S = Substituted
*** = Suspect**
U = Startup

Average Data

Plant: HUNTINGTON PLANT
Interval: 1 Hour
Type: Block
Report Period: 04/26/2016 10:00 Through 05/02/2016 10:59
Time Online Criteria: 1 minute(s)

Source		UNIT2					
Parameter Unit		CO2 (PCT)	FLOWSCFH (SCFH)	HEATIN (MMBTU/HR)	HGLB/T (LB/TBTU)	HGOUNCES (OZ)	UNITLOAD (MW)
04/28/16	07:00	11.6	58,795,069.1	3,789.0	0.183092121	0.011	405
04/28/16	08:00	11.5	53,657,163.9	3,428.1	0.199341704	0.011	370
04/28/16	09:00	11.5 M	55,508,913.7	3,546.4	0.136803130	0.008	380
04/28/16	10:00	11.0	48,720,101.4	2,977.3	0.162431509	0.008	321
04/28/16	11:00	10.7	40,428,328.9	2,403.2	0.115524673	0.004	260
04/28/16	12:00	10.7	39,309,416.8	2,336.7	0.162784766	0.006	250
04/28/16	13:00	10.7	40,211,150.6	2,390.3	0.143880729	0.005	258
04/28/16	14:00	10.7	39,870,280.8	2,370.1	0.148081626	0.006	256
04/28/16	15:00	10.7	40,024,576.2	2,379.3	0.104287273	0.004	257
04/28/16	16:00	10.7	40,519,772.2	2,408.7	0.119725570	0.005	260
04/28/16	17:00	10.8	40,545,206.6	2,432.7	0.110293000	0.004	260
04/28/16	18:00	10.8	40,522,179.1	2,431.3	0.102489250	0.004	261
04/28/16	19:00	10.8	40,105,603.7	2,406.4	0.099263700	0.004	257
04/28/16	20:00	10.8	40,055,203.5	2,403.3	0.090523500	0.003	258
04/28/16	21:00	11.0	42,988,222.5	2,627.0	0.078559642	0.003	283
04/28/16	22:00	11.1	42,601,960.1	2,627.1	0.124522541	0.005	279
04/28/16	23:00	11.0	40,466,545.8	2,473.0	0.123611400	0.005	263
04/29/16	00:00	10.7	37,405,004.2	2,223.5	0.152282523	0.005	238
04/29/16	01:00	10.7	36,703,425.1	2,181.8	0.154382972	0.005	230
04/29/16	02:00	10.7	36,657,284.5	2,179.1	0.113424224	0.004	230
04/29/16	03:00	10.7	36,600,353.8	2,175.7	0.114474449	0.004	230
04/29/16	04:00	10.7	36,730,764.8	2,183.5	0.133378486	0.005	230
04/29/16	05:00	10.9 C	38,174,845.2 C	2,311.7	0.317533872	0.012	245
04/29/16	06:00	10.9	41,353,771.5	2,504.2	0.250521853	0.010	266
04/29/16	07:00	10.9	40,050,472.2	2,425.3	0.117528771	0.005	260
04/29/16	08:00	11.0	40,170,036.1	2,454.8	0.114417164	0.004	260
04/29/16	09:00	10.7	37,468,202.7	2,227.3	0.131278037	0.005	239
04/29/16	10:00	10.3	33,269,033.8	1,903.7	0.148377320	0.005	198
04/29/16	11:00	10.3	33,032,936.4	1,890.2	0.142922272	0.004	198
04/29/16	12:00	10.3	32,798,396.8	1,876.8	0.140740252	0.004	196
04/29/16	13:00	10.3	32,634,613.8	1,867.4	0.136376214	0.004	196
04/29/16	14:00	10.4	32,316,308.7	1,867.1	0.110212962	0.003	196
04/29/16	15:00	10.3	32,363,023.6	1,851.9	0.096881662	0.003	196
04/29/16	16:00	10.3	32,312,619.8	1,849.0	0.078443598	0.002	196
04/29/16	17:00	10.6	36,686,015.6	2,160.4	0.103150851	0.004	230
04/29/16	18:00	11.0	45,836,601.9	2,801.2	0.126676145	0.006	299
04/29/16	19:00	11.0	55,472,358.5	3,390.0	0.145064618	0.008	364
04/29/16	20:00	11.2	55,124,653.2	3,430.0	0.125417411	0.007	370
04/29/16	21:00	11.2	55,142,218.1	3,431.1	0.128427429	0.007	370
04/29/16	22:00	11.2	55,305,307.0	3,441.2	0.120400714	0.007	370
04/29/16	23:00	11.3	55,276,940.4	3,470.2	0.085523575	0.005	370
04/30/16	00:00	11.3	55,043,440.8	3,455.5	0.093976487	0.005	370
04/30/16	01:00	11.3	54,714,119.5	3,434.8	0.108396159	0.006	370
04/30/16	02:00	11.3	54,927,894.0	3,448.3	0.117346301	0.006	370
04/30/16	03:00	11.3	55,049,428.8	3,455.9	0.094175379	0.005	370

F = Unit Offline
E = Exceedance
M = Maintenance
T = Out Of Control

C = Calibration
S = Substituted
*** = Suspect**
U = Startup

Average Data

Plant: HUNTINGTON PLANT
Interval: 1 Hour
Type: Block
Report Period: 04/26/2016 10:00 Through 05/02/2016 10:59
Time Online Criteria: 1 minute(s)

Source		UNIT2					
Parameter		CO2	FLOWSCFH	HEATIN	HGLB/T	HGOUNCES	UNITLOAD
Unit		(PCT)	(SCFH)	(MMBTU/HR)	(LB/TBTU)	(OZ)	(MW)
04/30/16	04:00	11.3	54,861,275.3	3,444.1	0.110385080	0.006	370
04/30/16	05:00	11.3 C	54,699,820.3 C	3,433.9	0.377894867	0.021	370
04/30/16	06:00	10.8	41,249,376.1	2,474.9	0.209140500	0.008	268
04/30/16	07:00	10.4	31,924,850.9	1,844.6	0.137225942	0.004	193
04/30/16	08:00	10.8	36,593,488.2	2,195.6	0.139427000	0.005	230
04/30/16	09:00	11.1	44,614,273.8	2,751.2	0.181215730	0.008	292
04/30/16	10:00	11.4	53,375,826.0	3,380.5	0.142931842	0.008	362
04/30/16	11:00	11.4	52,547,845.9	3,328.0	0.163632316	0.009	358
04/30/16	12:00	11.4	53,745,435.0	3,403.9	0.128145789	0.007	368
04/30/16	13:00	11.0	44,874,515.6	2,742.4	0.148129364	0.006	298
04/30/16	14:00	10.7	37,864,803.7	2,250.9	0.132328262	0.005	237
04/30/16	15:00	10.8	37,199,396.6	2,231.9	0.118617000	0.004	232
04/30/16	16:00	11.1	43,496,329.9	2,682.3	0.126547297	0.005	280
04/30/16	17:00	11.2	54,811,420.5	3,410.5	0.101337268	0.006	354
04/30/16	18:00	11.1	57,254,670.4	3,530.7	0.133633946	0.008	369
04/30/16	19:00	11.3	57,045,181.3	3,581.2	0.152152407	0.009	372
04/30/16	20:00	11.2	54,897,520.1	3,415.9	0.094514561	0.005	357
04/30/16	21:00	11.2	55,317,146.7	3,441.9	0.131437446	0.007	359
04/30/16	22:00	11.2	57,484,856.3	3,576.8	0.124414071	0.007	374
04/30/16	23:00	11.2	58,276,254.8	3,626.1	0.124414071	0.007	378
05/01/16	00:00	11.2	58,011,473.6	3,609.6	0.100333929	0.006	377
05/01/16	01:00	11.3	57,078,289.4	3,583.2	0.099446018	0.006	372
05/01/16	02:00	11.3	57,331,616.8	3,599.2	0.138229965	0.008	374
05/01/16	03:00	11.5	56,847,408.7	3,631.9	0.126054313	0.007	376
05/01/16	04:00	11.5	57,095,614.9	3,647.8	0.114328330	0.007	383
05/01/16	05:00	11.6 C	54,999,412.9 C	3,544.4	0.251872759	0.014	371
05/01/16	06:00	11.7	54,285,414.0	3,528.5	0.212262000	0.012	368
05/01/16	07:00	11.5	52,923,512.3	3,381.3	0.143643287	0.008	356
05/01/16	08:00	11.1	48,560,515.7	2,994.6	0.165017676	0.008	317
05/01/16	09:00	11.1	51,530,594.2	3,177.7	0.133633946	0.007	335
05/01/16	10:00	11.0	53,533,667.0	3,271.5	0.121568236	0.006	348
05/01/16	11:00	11.2	55,665,871.6	3,463.7	0.160534286	0.009	367
05/01/16	12:00	11.5	55,168,868.8	3,524.7	0.141688957	0.008	373
05/01/16	13:00	11.6	55,563,809.4	3,580.8	0.149186172	0.009	376
05/01/16	14:00	11.6	55,164,724.3	3,555.1	0.151123655	0.009	374
05/01/16	15:00	11.6	53,583,197.1	3,453.1	0.135623793	0.007	365
05/01/16	16:00	11.6	54,445,756.4	3,508.7	0.103655328	0.006	369
05/01/16	17:00	11.6	54,481,820.5	3,511.1	0.124967638	0.007	370
05/01/16	18:00	11.6	53,760,715.4	3,464.6	0.150154914	0.008	366
05/01/16	19:00	11.7	52,705,276.4	3,425.8	0.145029692	0.008	361
05/01/16	20:00	11.7	54,012,779.5	3,510.8	0.140227385	0.008	367
05/01/16	21:00	11.6	52,134,285.8	3,359.7	0.145311207	0.008	352
05/01/16	22:00	11.7	56,034,106.0	3,642.2	0.150792462	0.009	374
05/01/16	23:00	11.6	50,105,049.8	3,229.0	0.167592259	0.009	337
05/02/16	00:00	10.6	39,841,488.4	2,346.2	0.154779283	0.006	245

F = Unit Offline
E = Exceedance
M = Maintenance
T = Out Of Control

C = Calibration
S = Substituted
*** = Suspect**
U = Startup

Report Version 4.0
HTNDAHS

Average Data

Plant: HUNTINGTON PLANT
Interval: 1 Hour
Type: Block
Report Period: 04/26/2016 10:00 Through 05/02/2016 10:59
Time Online Criteria: 1 minute(s)

Source		UNIT2					
Parameter Unit		CO2 (PCT)	FLOWSCFH (SCFH)	HEATIN (MMBTU/HR)	HGLB/T (LB/TBTU)	HGOUNCES (OZ)	UNITLOAD (MW)
05/02/16	01:00	10.5	37,021,019.6	2,159.6	0.125216743	0.004	221
05/02/16	02:00	10.8	36,345,389.4	2,180.7	0.118617000	0.004	221
05/02/16	03:00	10.9	36,057,394.4	2,183.5	0.115466862	0.004	221
05/02/16	04:00	10.9	35,860,909.0	2,171.6	0.129900220	0.005	221
05/02/16	05:00	10.9 C	36,812,333.6 C	2,229.2	0.379391119	0.014	225
05/02/16	06:00	11.0	41,609,992.9	2,542.8	0.219640091	0.009	260
05/02/16	07:00	11.2	40,572,853.3	2,524.5	0.140467500	0.006	260
05/02/16	08:00	11.1	44,162,230.6	2,723.3	0.135658703	0.006	278
05/02/16	09:00	11.5	54,101,731.3	3,456.5	0.136803130	0.008	355
05/02/16	10:00	11.6	53,775,944.4	3,465.6	0.054443266	0.003	360
Average		11.1	46,189,674.5	2,875.5	0.149047267	0.007	305
Minimum		10.3	31,924,850.9	1,844.6	0.054443266	0.002	193
Maximum		12.0	58,795,069.1	3,789.0	0.884425000	0.029	405
Summation		1,616.3	6,697,502,797.5	416,940.4	21.313759129	0.970	44,258
Included Data Points		145	145	145	143	143	145
Total number of Data Points		145	145	145	145	145	145

F = Unit Offline
E = Exceedance
M = Maintenance
T = Out Of Control

C = Calibration
S = Substituted
*** = Suspect**
U = Startup

Report Version 4.0
HTNDAHS

Average Data

Plant: HUNTINGTON PLANT
Interval: 1 Hour
Type: Block
Report Period: 05/03/2016 09:00 Through 05/09/2016 09:59
Time Online Criteria: 1 minute(s)

Source		UNIT2					
Parameter Unit		CO2 (PCT)	FLOWSCFH (SCFH)	HEATIN (MMBTU/HR)	HGLB/T (LB/TBTU)	HGOUNCES (OZ)	UNITLOAD (MW)
05/03/16	09:00	12.0	51,767,136.3	3,451.1	2.472228000	0.136	359
05/03/16	10:00	12.0	53,148,082.6	3,543.2	0.725748750	0.041	369
05/03/16	11:00	12.0	53,459,991.7	3,564.0	0.377389350	0.021	370
05/03/16	12:00	12.0	53,466,792.8	3,564.5	0.279062100	0.016	374
05/03/16	13:00	11.9	54,743,848.1	3,619.2	0.206805933	0.012	379
05/03/16	14:00	11.9	54,073,398.7	3,574.8	0.000000000	0.000	374
05/03/16	15:00	11.9	57,550,946.8	3,804.8	0.028612876	0.002	397
05/03/16	16:00	11.8	61,586,097.3	4,037.3	0.153323847	0.010	419
05/03/16	17:00	11.8	61,636,667.8	4,040.6	0.017998886	0.001	419
05/03/16	18:00	11.8	55,549,825.8	3,641.6	0.118087932	0.007	384
05/03/16	19:00	12.0	52,056,290.2	3,470.4	0.155450700	0.009	363
05/03/16	20:00	12.0	54,805,917.6	3,653.7	0.110501100	0.006	378
05/03/16	21:00	12.1	52,699,268.1	3,542.5	0.142092744	0.008	367
05/03/16	22:00	11.9	52,843,647.6	3,493.6	0.174699076	0.010	364
05/03/16	23:00	12.1	52,444,643.2	3,525.5	0.126304661	0.007	362
05/04/16	00:00	12.1	53,021,169.8	3,564.2	0.101229471	0.006	371
05/04/16	01:00	12.1	52,357,750.3	3,519.6	0.118874975	0.007	366
05/04/16	02:00	12.1	52,877,610.8	3,554.6	0.084977033	0.005	371
05/04/16	03:00	12.1	51,797,523.1	3,482.0	0.101229471	0.006	362
05/04/16	04:00	12.0	51,751,608.8	3,450.1	0.042514830	0.002	361
05/04/16	05:00	12.2 C	54,857,453.1 C	3,718.1	0.677007295	0.040	378
05/04/16	06:00	12.0	56,172,388.4	3,744.8	0.433576350	0.026	384
05/04/16	07:00	11.9	62,735,820.1	4,147.5	0.577923429	0.038	416
05/04/16	08:00	11.7	56,618,834.2	3,680.2	0.010180892	0.001	373
05/04/16	09:00	11.7	59,247,619.8	3,851.1	0.618537231	0.038	389
05/04/16	10:00	11.7	64,864,877.3	4,216.2	0.500400462	0.034	422
05/04/16	11:00	11.7	61,163,611.0	3,975.7	0.226668923	0.014	403
05/04/16	12:00	11.6	54,988,391.7	3,543.7	0.238310379	0.013	369
05/04/16	13:00	11.6	54,600,030.2	3,518.7	0.278028776	0.016	367
05/04/16	14:00	11.7	55,971,212.6	3,638.1	0.312150000	0.018	375
05/04/16	15:00	11.7	56,830,327.9	3,694.0	0.270850154	0.016	380
05/04/16	16:00	11.7	63,778,303.1	4,145.6	0.271810615	0.018	425
05/04/16	17:00	11.6	64,372,965.8	4,148.5	0.222810517	0.015	427
05/04/16	18:00	11.6	63,748,270.3	4,108.2	0.238310379	0.016	421
05/04/16	19:00	11.5	62,339,628.0	3,982.8	0.221816504	0.014	413
05/04/16	20:00	11.5	67,178,131.2	4,291.9	0.252108626	0.017	441
05/04/16	21:00	11.6	62,660,769.2	4,038.2	0.252841500	0.016	415
05/04/16	22:00	11.7	60,317,296.9	3,920.6	0.193052769	0.012	402
05/04/16	23:00	11.6	56,783,148.5	3,659.3	0.211185621	0.012	381
05/05/16	00:00	11.7	52,152,945.7	3,389.9	0.196894615	0.011	352
05/05/16	01:00	11.7	52,747,616.9	3,428.6	0.236273538	0.013	356
05/05/16	02:00	11.7	52,549,166.6	3,415.7	0.222827077	0.012	353
05/05/16	03:00	11.7	55,229,595.6	3,590.0	0.133504154	0.008	372
05/05/16	04:00	11.7	54,218,935.4	3,524.2	0.167120308	0.009	364
05/05/16	05:00	11.7 C	59,147,925.0 C	3,844.6	0.424524000	0.026	389

F = Unit Offline
E = Exceedance
M = Maintenance
T = Out Of Control

C = Calibration
S = Substituted
*** = Suspect**
U = Startup

Average Data

Plant: HUNTINGTON PLANT
Interval: 1 Hour
Type: Block
Report Period: 05/03/2016 09:00 Through 05/09/2016 09:59
Time Online Criteria: 1 minute(s)

Source		UNIT2					
Parameter Unit		CO2 (PCT)	FLOWSCFH (SCFH)	HEATIN (MMBTU/HR)	HGLB/T (LB/TBTU)	HGOUNCES (OZ)	UNITLOAD (MW)
05/05/16	06:00	11.7	56,160,604.0	3,650.5	0.343845231	0.020	379
05/05/16	07:00	11.8	56,803,217.9	3,723.8	0.063234183	0.004	387
05/05/16	08:00	11.6	68,805,753.4	4,434.2	0.121092672	0.009	454
05/05/16	09:00	11.5	73,148,987.0	4,673.4	0.150483443	0.011	475
05/05/16	10:00	11.5	72,911,185.2	4,658.2	0.211067687	0.016	475
05/05/16	11:00	11.5	72,543,629.1	4,634.8	0.235496817	0.017	475
05/05/16	12:00	11.5	73,123,368.1	4,671.7	0.223770835	0.017	475
05/05/16	13:00	11.4	72,889,838.9	4,616.4	0.228690947	0.017	475
05/05/16	14:00	11.5	72,927,674.2	4,659.3	0.242336974	0.018	477
05/05/16	15:00	11.4	73,036,059.2	4,625.6	0.227705211	0.017	477
05/05/16	16:00	11.4	72,979,131.6	4,622.0	0.276992053	0.020	477
05/05/16	17:00	11.4	72,994,085.8	4,623.0	0.265163211	0.020	477
05/05/16	18:00	11.4	72,541,531.6	4,594.3	0.281920737	0.021	475
05/05/16	19:00	11.3	71,073,412.0	4,461.8	0.179997292	0.013	464
05/05/16	20:00	11.3	72,426,912.0	4,546.8	0.207842177	0.015	468
05/05/16	21:00	11.3	69,158,943.0	4,341.6	0.246626124	0.017	450
05/05/16	22:00	11.3	71,855,765.3	4,511.0	0.225742460	0.016	464
05/05/16	23:00	11.5	56,258,315.9	3,594.3	0.230610991	0.013	378
05/06/16	00:00	11.5	55,664,949.8	3,556.4	0.234519652	0.013	374
05/06/16	01:00	11.5	52,785,212.5	3,372.4	0.247222800	0.013	355
05/06/16	02:00	11.5	55,448,522.6	3,542.6	0.248199965	0.014	371
05/06/16	03:00	11.6	54,526,316.1	3,513.9	0.123030155	0.007	369
05/06/16	04:00	11.4	55,896,885.0	3,540.1	0.157717895	0.009	372
05/06/16	05:00	11.3 C	61,645,465.0 C	3,869.9	0.475351965	0.029	396
05/06/16	06:00	11.5	65,443,039.7	4,181.1	0.309761374	0.021	431
05/06/16	07:00	11.5	63,216,792.9	4,038.9	0.251131461	0.016	417
05/06/16	08:00	11.6	54,889,202.4	3,537.3	0.236372897	0.013	371
05/06/16	09:00	11.6 M	55,960,197.7	3,606.3	0.259622690	0.015	379
05/06/16	10:00	11.6 C	56,547,072.6	3,644.1	0.246060310	0.014	382
05/06/16	11:00	11.5	56,561,594.7	3,613.7	0.166118087	0.010	382
05/06/16	12:00	11.5	56,172,863.0	3,588.8	0.231588157	0.013	380
05/06/16	13:00	11.5	55,328,701.5	3,534.9	0.204227530	0.012	376
05/06/16	14:00	11.5	57,280,744.3	3,659.6	0.219862174	0.013	386
05/06/16	15:00	11.5	56,395,562.5	3,603.1	0.210090522	0.012	382
05/06/16	16:00	11.5	54,386,229.5	3,474.7	0.221816504	0.012	370
05/06/16	17:00	11.5	56,248,196.2	3,593.6	0.191524383	0.011	381
05/06/16	18:00	11.5	59,539,617.3	3,803.9	0.216930678	0.013	399
05/06/16	19:00	11.5	56,452,832.7	3,606.7	0.176866904	0.010	382
05/06/16	20:00	11.5	59,584,461.7	3,806.8	0.184684226	0.011	398
05/06/16	21:00	11.6	52,628,928.1	3,391.6	0.196654500	0.011	358
05/06/16	22:00	11.7	55,227,584.1	3,589.8	0.182487692	0.010	376
05/06/16	23:00	11.7	57,126,558.3	3,713.3	0.183448154	0.011	386
05/07/16	00:00	11.6	60,188,532.7	3,878.8	0.128842603	0.008	403
05/07/16	01:00	11.6	51,732,180.2	3,333.8	0.176310931	0.009	352
05/07/16	02:00	11.6	51,189,895.8	3,298.9	0.177279672	0.009	350

F = Unit Offline
E = Exceedance
M = Maintenance
T = Out Of Control

C = Calibration
S = Substituted
*** = Suspect**
U = Startup

Average Data

Plant: HUNTINGTON PLANT
Interval: 1 Hour
Type: Block
Report Period: 05/03/2016 09:00 Through 05/09/2016 09:59
Time Online Criteria: 1 minute(s)

Source		UNIT2					
Parameter		CO2	FLOWSCFH	HEATIN	HGLB/T	HGOUNCES	UNITLOAD
Unit		(PCT)	(SCFH)	(MMBTU/HR)	(LB/TBTU)	(OZ)	(MW)
05/07/16	03:00	11.6	51,555,825.8	3,322.5	0.170498483	0.009	350
05/07/16	04:00	11.6	51,409,180.2	3,313.0	0.174373448	0.009	350
05/07/16	05:00	11.5 C	51,322,728.6 C	3,279.0	0.274583426	0.014	350
05/07/16	06:00	11.6	51,026,286.6	3,288.3	0.257685207	0.014	349
05/07/16	07:00	11.4	40,324,358.5	2,553.9	0.195175895	0.008	273
05/07/16	08:00	11.5	38,837,503.6	2,481.3	0.199341704	0.008	261
05/07/16	09:00	11.5	38,486,993.5	2,458.9	0.203250365	0.008	260
05/07/16	10:00	11.5	38,489,515.4	2,459.1	0.191524383	0.008	260
05/07/16	11:00	11.6	42,971,130.5	2,769.2	0.186967086	0.008	291
05/07/16	12:00	11.6	48,397,499.7	3,118.9	0.193748276	0.010	330
05/07/16	13:00	11.6	48,373,530.6	3,117.4	0.217966810	0.011	330
05/07/16	14:00	11.6	48,423,629.0	3,120.7	0.186967086	0.009	330
05/07/16	15:00	11.6	41,052,042.6	2,645.6	0.219904293	0.009	277
05/07/16	16:00	11.6	43,953,207.4	2,832.5	0.200529466	0.009	299
05/07/16	17:00	11.6	44,170,126.1	2,846.5	0.210216879	0.010	300
05/07/16	18:00	11.5	40,329,792.4	2,576.6	0.210090522	0.009	271
05/07/16	19:00	11.6	41,249,054.6	2,658.3	0.203435690	0.009	278
05/07/16	20:00	11.5	43,143,858.4	2,756.4	0.201296035	0.009	291
05/07/16	21:00	11.7	49,788,401.9	3,236.2	0.185369077	0.010	340
05/07/16	22:00	11.6	48,817,347.8	3,146.0	0.185998345	0.009	333
05/07/16	23:00	11.7	51,393,853.1	3,340.6	0.116215846	0.006	354
05/08/16	00:00	11.1	42,102,268.2	2,596.3	0.151856757	0.006	277
05/08/16	01:00	10.9	42,063,861.3	2,547.2	0.160828844	0.007	270
05/08/16	02:00	10.7	38,634,611.5	2,296.6	0.191140822	0.007	245
05/08/16	03:00	10.6	33,629,224.5	1,980.4	0.202485226	0.006	208
05/08/16	04:00	10.2	29,076,811.1	1,647.7	0.239070176	0.006	167
05/08/16	05:00	10.4 C	27,549,750.2 C	1,591.8	0.398711596	0.010	155
05/08/16	06:00	10.4	27,893,214.2	1,611.6	0.301464865	0.008	158
05/08/16	07:00	10.2	33,644,328.4	1,906.5	0.232459941	0.007	198
05/08/16	08:00	9.0	28,279,658.8	1,414.0	0.208516200	0.005	141
05/08/16	09:00	9.2	27,995,088.6	1,430.9	0.186882848	0.004	140
05/08/16	10:00	9.2	27,983,227.6	1,430.2	0.247955674	0.006	140
05/08/16	11:00	9.3	27,943,606.9	1,443.8	0.256164387	0.006	142
05/08/16	12:00	9.6	28,884,156.1	1,540.5	0.250500375	0.006	159
05/08/16	13:00	9.5	27,887,081.0	1,471.8	0.218833579	0.005	145
05/08/16	14:00	9.5	27,876,324.5	1,471.2	0.234211074	0.006	145
05/08/16	15:00	9.4	27,770,146.1	1,450.2	0.223552532	0.005	145
05/08/16	16:00	9.4	27,786,277.6	1,451.0	0.161388191	0.004	145
05/08/16	17:00	9.5	27,674,625.6	1,460.6	0.190444358	0.004	146
05/08/16	18:00	10.1	29,013,634.4	1,628.0	0.271477782	0.007	163
05/08/16	19:00	10.9	39,655,538.8	2,401.4	0.172169339	0.007	251
05/08/16	20:00	10.8	48,851,729.4	2,931.1	0.187290000	0.009	312
05/08/16	21:00	10.6	47,044,516.1	2,770.4	0.343482792	0.015	299
05/08/16	22:00	10.4	34,157,813.6	1,973.6	0.374940173	0.012	209
05/08/16	23:00	9.1	28,110,127.7	1,421.1	0.418624022	0.010	145

F = Unit Offline
E = Exceedance
M = Maintenance
T = Out Of Control

C = Calibration
S = Substituted
*** = Suspect**
U = Startup

Report Version 4.0
HTNDAHS

Average Data

Plant: HUNTINGTON PLANT
Interval: 1 Hour
Type: Block
Report Period: 05/03/2016 09:00 Through 05/09/2016 09:59
Time Online Criteria: 1 minute(s)

Source		UNIT2					
Parameter Unit		CO2 (PCT)	FLOWSCFH (SCFH)	HEATIN (MMBTU/HR)	HGLB/T (LB/TBTU)	HGOUNCES (OZ)	UNITLOAD (MW)
05/09/16	00:00	9.5	27,848,522.6	1,469.8	0.435301389	0.010	143
05/09/16	01:00	9.6	27,555,864.1	1,469.7	0.176754938	0.004	146
05/09/16	02:00	9.7	27,567,474.1	1,485.6	0.454129979	0.011	150
05/09/16	03:00	9.7	27,680,622.8	1,491.7	0.474982887	0.011	150
05/09/16	04:00	9.8	27,876,729.6	1,517.7	0.477016163	0.012	153
05/09/16	05:00	10.6 C	28,681,349.6 C	1,689.0	0.537486962	0.015	173
05/09/16	06:00	10.4	29,847,722.6	1,724.6	0.296062269	0.008	178
05/09/16	07:00	10.0	32,500,997.3	1,805.6	0.189912060	0.005	188
05/09/16	08:00	10.4	35,109,980.6	2,028.6	0.292820712	0.009	207
05/09/16	09:00	9.6	28,611,113.8	1,525.9	0.218895188	0.005	154
Average		11.3	50,737,406.2	3,215.5	0.250407870	0.013	334
Minimum		9.0	27,549,750.2	1,414.0	0.000000000	0.000	140
Maximum		12.2	73,148,987.0	4,673.4	2.472228000	0.136	477
Summation		1,632.1	7,356,923,900.6	466,248.2	36.309141197	1.839	48,380
Included Data Points		145	145	145	145	145	145
Total number of Data Points		145	145	145	145	145	145

F = Unit Offline
E = Exceedance
M = Maintenance
T = Out Of Control

C = Calibration
S = Substituted
*** = Suspect**
U = Startup

Report Version 4.0
HTNDAHS

Average Data

Plant: HUNTINGTON PLANT
Interval: 1 Hour
Type: Block
Report Period: 05/09/2016 16:00 Through 05/15/2016 16:59
Time Online Criteria: 1 minute(s)

Source		UNIT2					
Parameter		CO2	FLOWSCFH	HEATIN	HGLB/T	HGOUNCES	UNITLOAD
Unit		(PCT)	(SCFH)	(MMBTU/HR)	(LB/TBTU)	(OZ)	(MW)
05/09/16	16:00	10.1	32,291,951.2	1,811.9	0.330446317	0.010	187
05/09/16	17:00	10.1	32,243,748.2	1,809.2	0.103473089	0.003	189
05/09/16	18:00	10.7	36,824,708.3	2,189.0	0.577623364	0.020	229
05/09/16	19:00	11.5	46,309,200.3	2,958.6	0.567732991	0.027	318
05/09/16	20:00	11.2	49,913,300.5	3,105.7	0.565883357	0.028	331
05/09/16	21:00	11.0	47,087,549.3	2,877.6	0.572085818	0.026	308
05/09/16	22:00	10.9	43,208,251.9	2,616.5	0.591767670	0.025	277
05/09/16	23:00	10.9	37,460,781.8	2,268.5	0.624758202	0.023	238
05/10/16	00:00	11.3	39,957,531.5	2,508.5	0.614576389	0.025	261
05/10/16	01:00	10.6	33,477,659.9	1,971.5	0.545968019	0.017	205
05/10/16	02:00	10.7	29,582,534.1	1,758.5	0.580774037	0.016	171
05/10/16	03:00	10.3	29,454,005.8	1,685.4	0.489863359	0.013	167
05/10/16	04:00	11.3	38,312,574.5	2,405.2	0.480324265	0.018	247
05/10/16	05:00	11.6 C	61,291,323.6 C	3,949.9	0.731399741	0.046	399
05/10/16	06:00	11.8	72,021,865.2	4,721.4	0.580916441	0.044	480
05/10/16	07:00	11.8	71,434,263.1	4,682.9	0.543775881	0.041	482
05/10/16	08:00	12.0	69,973,869.5	4,664.9	0.000000000 IT	0.000 IT	480
05/10/16	09:00	12.0	70,079,688.3	4,672.0	0.000000000 IT	0.000 IT	480
05/10/16	10:00	11.9	70,766,063.1	4,678.4	0.000000000 IT	0.000 IT	477
05/10/16	11:00	11.9	70,431,678.4	4,656.3	0.000000000 IT	0.000 IT	480
05/10/16	12:00	11.9	70,832,262.8	4,682.8	0.000000000 I	0.000 I	480
05/10/16	13:00	11.1	75,271,740.6	4,641.8	0.000000000 I	0.000 I	477
05/10/16	14:00	11.0	76,071,632.0	4,648.8	0.599668527	0.045	479
05/10/16	15:00	11.3	74,410,338.2	4,671.3	0.000000000 I	0.000 I	480
05/10/16	16:00	11.4	72,661,905.4	4,601.9	0.179404105	0.013	475
05/10/16	17:00	11.2	64,332,774.7	4,002.9	0.154514250	0.010	422
05/10/16	18:00	11.3	56,622,900.1	3,554.7	0.121324142	0.007	370
05/10/16	19:00	11.2	58,031,664.0	3,610.9	0.111370661	0.006	376
05/10/16	20:00	11.1	66,416,329.1	4,095.7	0.026321838	0.002	421
05/10/16	21:00	11.3	60,051,954.1	3,769.9	0.029833805	0.002	389
05/10/16	22:00	11.2	65,949,823.5	4,103.6	0.025083482	0.002	419
05/10/16	23:00	11.3	55,633,479.4	3,492.5	0.019889204	0.001	362
05/11/16	00:00	11.3	50,512,922.2	3,171.1	0.010939062	0.001	330
05/11/16	01:00	11.3	48,695,397.2	3,057.0	0.001988920	0.000	319
05/11/16	02:00	11.3	48,108,084.6	3,020.1	0.007955681	0.000	313
05/11/16	03:00	11.5 C	57,091,578.7 C	3,647.5	0.801275478	0.047	363
05/11/16	04:00	11.5 MC	60,734,603.2	3,880.3	0.086967704	0.005	395
05/11/16	05:00	11.3 C	60,852,101.5	3,820.2	0.013922442	0.001	391
05/11/16	06:00	11.3	68,667,054.4	4,310.8	0.008950142	0.001	438
05/11/16	07:00	11.4	72,558,913.4	4,595.4	0.013800316	0.001	470
05/11/16	08:00	11.5	71,401,818.0	4,561.8	0.016611809	0.001	463
05/11/16	09:00	11.4	71,727,270.1	4,542.7	0.005914421	0.000	463
05/11/16	10:00	11.4	71,715,146.7	4,542.0	0.005914421	0.000	463
05/11/16	11:00	11.3	72,224,337.8	4,534.1	0.012927982	0.001	463
05/11/16	12:00	11.2	73,148,403.1	4,551.4	0.006020036	0.000	466

F = Unit Offline
E = Exceedance
M = Maintenance
T = Out Of Control

C = Calibration
S = Substituted
*** = Suspect**
U = Startup

Average Data

Plant: HUNTINGTON PLANT
Interval: 1 Hour
Type: Block
Report Period: 05/09/2016 16:00 Through 05/15/2016 16:59
Time Online Criteria: 1 minute(s)

Source		UNIT2					
Parameter		CO2	FLOWSCFH	HEATIN	HGLB/T	HGOUNCES	UNITLOAD
Unit		(PCT)	(SCFH)	(MMBTU/HR)	(LB/TBTU)	(OZ)	(MW)
05/11/16	13:00	11.4	72,134,012.2	4,568.5	0.018729000	0.001	470
05/11/16	14:00	11.6	71,089,440.2	4,581.3	0.013562379	0.001	470
05/11/16	15:00	11.5	70,971,063.5	4,534.3	0.002931496	0.000	470
05/11/16	16:00	11.5	60,551,788.6	3,868.6	0.000000000	0.000	403
05/11/16	17:00	11.5	58,046,147.4	3,708.5	0.004885826	0.000	387
05/11/16	18:00	11.5	65,235,740.5	4,167.9	0.005862991	0.000	425
05/11/16	19:00	11.5	66,231,549.0	4,231.5	0.034200783	0.002	435
05/11/16	20:00	11.6	66,188,436.9	4,265.4	0.006781190	0.000	435
05/11/16	21:00	11.6	63,416,503.6	4,086.9	0.067811897	0.004	421
05/11/16	22:00	11.8	65,037,739.2	4,263.6	0.045711458	0.003	436
05/11/16	23:00	11.8	57,562,743.0	3,773.6	0.043806814	0.003	386
05/12/16	00:00	11.8	59,452,456.8	3,897.4	0.041902169	0.003	399
05/12/16	01:00	11.8	55,988,111.7	3,670.3	0.043806814	0.003	377
05/12/16	02:00	11.8	55,543,259.8	3,641.2	0.000000000	0.000	377
05/12/16	03:00	11.7 C	55,909,596.8 C	3,634.2	0.000000000	0.000	376
05/12/16	04:00	11.7	52,807,482.9	3,432.5	0.091243846	0.005	357
05/12/16	05:00	11.8	54,670,833.8	3,584.0	0.375214881	0.021	371
05/12/16	06:00	11.7	52,614,426.6	3,419.9	0.389947385	0.021	357
05/12/16	07:00	11.6	49,762,390.5	3,206.9	0.480495724	0.025	333
05/12/16	08:00	11.7	50,877,510.3	3,307.1	0.296782615	0.016	339
05/12/16	09:00	11.4	44,713,985.6	2,831.9	0.000000000 I	0.000 I	292
05/12/16	10:00	10.8	33,512,756.4	2,010.8	0.000000000 I	0.000 I	207
05/12/16	11:00	10.8	31,024,191.7	1,861.4	0.550424500	0.016	191
05/12/16	12:00	11.0	32,049,812.1	1,958.6	0.628272818	0.020	197
05/12/16	13:00	10.9	31,987,642.3	1,937.1	0.658779688	0.020	197
05/12/16	14:00	11.3	37,929,830.6	2,381.2	0.605626248	0.023	242
05/12/16	15:00	11.6	46,682,217.7	3,008.4	0.567682448	0.027	306
05/12/16	16:00	11.7	55,650,496.6	3,617.3	0.461982000	0.027	372
05/12/16	17:00	11.7	57,238,588.7	3,720.5	0.560909538	0.033	383
05/12/16	18:00	11.7	59,459,977.0	3,864.9	0.553225846	0.034	398
05/12/16	19:00	11.9	64,006,493.4	4,231.5	0.426832336	0.029	432
05/12/16	20:00	11.9	65,366,638.8	4,321.5	0.407945950	0.028	440
05/12/16	21:00	11.9	63,129,669.1	4,173.6	0.350342471	0.023	427
05/12/16	22:00	12.0	63,346,957.7	4,223.1	0.153577800	0.010	427
05/12/16	23:00	11.8	56,538,848.1	3,706.4	0.359025407	0.021	382
05/13/16	00:00	11.7	52,684,931.9	3,424.5	0.360173077	0.020	353
05/13/16	01:00	11.6	49,853,869.3	3,212.8	0.335184517	0.017	333
05/13/16	02:00	11.6	51,814,406.7	3,339.1	0.367152983	0.020	345
05/13/16	03:00	11.7 C	54,985,902.7 C	3,574.1	0.445654154	0.025	371
05/13/16	04:00	11.7	54,680,898.1	3,554.3	0.439891385	0.025	370
05/13/16	05:00	11.7	55,042,789.9	3,577.8	0.386105538	0.022	371
05/13/16	06:00	11.8	54,556,884.3	3,576.5	0.125706508	0.007	371
05/13/16	07:00	11.8	55,696,414.6	3,651.2	0.257126949	0.015	378
05/13/16	08:00	11.6	50,283,931.4	3,240.5	0.527964052	0.027	337
05/13/16	09:00	11.7	51,500,326.1	3,347.5	0.340003385	0.018	345

F = Unit Offline
E = Exceedance
M = Maintenance
T = Out Of Control

C = Calibration
S = Substituted
*** = Suspect**
U = Startup

Average Data

Plant: HUNTINGTON PLANT
Interval: 1 Hour
Type: Block
Report Period: 05/09/2016 16:00 Through 05/15/2016 16:59
Time Online Criteria: 1 minute(s)

Source		UNIT2					
Parameter		CO2	FLOWSCFH	HEATIN	HGLB/T	HGOUNCES	UNITLOAD
Unit		(PCT)	(SCFH)	(MMBTU/HR)	(LB/TBTU)	(OZ)	(MW)
05/13/16	10:00	11.8	55,062,539.5	3,609.7	0.594248949	0.034	371
05/13/16	11:00	11.6	51,041,044.5	3,289.3	0.642275534	0.034	341
05/13/16	12:00	11.7	54,948,187.6	3,571.6	0.644469692	0.037	369
05/13/16	13:00	11.7	55,285,038.3	3,593.5	0.615655846	0.035	370
05/13/16	14:00	11.9	59,817,765.8	3,954.6	0.576034790	0.036	406
05/13/16	15:00	11.7	53,049,129.7	3,448.2	0.515767846	0.028	358
05/13/16	16:00	11.9	62,146,303.8	4,108.5	0.483491496	0.032	419
05/13/16	17:00	11.8	59,628,226.4	3,908.9	0.453305288	0.028	404
05/13/16	18:00	11.9	62,613,812.4	4,139.5	0.266298050	0.018	422
05/13/16	19:00	11.9	67,935,762.4	4,491.3	0.386226605	0.028	458
05/13/16	20:00	11.9	64,288,738.9	4,250.2	0.370173176	0.025	435
05/13/16	21:00	11.9	64,907,672.2	4,291.1	0.379616370	0.026	437
05/13/16	22:00	12.0	66,184,186.1	4,412.3	0.330566850	0.023	448
05/13/16	23:00	11.9	56,843,832.3	3,758.0	0.303126504	0.018	388
05/14/16	00:00	11.7	50,124,543.0	3,258.1	0.317912769	0.017	340
05/14/16	01:00	11.6	45,379,741.2	2,924.5	0.299341086	0.014	309
05/14/16	02:00	11.6	40,476,301.2	2,608.5	0.283841224	0.012	270
05/14/16	03:00	11.6 C	40,043,701.2 C	2,580.6	0.547338879	0.023	269
05/14/16	04:00	11.1	33,321,718.6	2,054.9	0.431273189	0.014	213
05/14/16	05:00	11.2	31,290,270.4	1,946.9	0.327088607	0.010	200
05/14/16	06:00	11.2	31,281,179.4	1,946.4	0.332105304	0.010	200
05/14/16	07:00	11.3	31,559,550.2	1,981.3	0.333144159	0.011	200
05/14/16	08:00	11.2	31,257,509.7	1,944.9	0.262874893	0.008	200
05/14/16	09:00	11.3	32,492,483.7	2,039.8	0.289387912	0.009	208
05/14/16	10:00	11.4	35,048,673.6	2,219.8	0.296706789	0.011	230
05/14/16	11:00	11.5	37,304,581.4	2,383.4	0.307807043	0.012	247
05/14/16	12:00	11.5	36,623,537.6	2,339.9	0.298035391	0.011	243
05/14/16	13:00	11.2	31,357,157.2	1,951.1	0.195651161	0.006	200
05/14/16	14:00	11.2	31,262,500.8	1,945.3	0.240801429	0.007	200
05/14/16	15:00	11.3	31,391,719.0	1,970.7	0.277454389	0.009	205
05/14/16	16:00	11.6	35,253,424.6	2,271.9	0.275122552	0.010	236
05/14/16	17:00	11.4	31,480,611.2	1,993.8	0.222776526	0.007	206
05/14/16	18:00	11.5	32,569,852.5	2,080.9	0.258948783	0.009	214
05/14/16	19:00	12.1	44,615,079.7	2,999.1	0.282328066	0.014	310
05/14/16	20:00	12.1	51,536,973.8	3,464.4	0.190385702	0.011	366
05/14/16	21:00	12.1	48,370,189.0	3,251.5	0.166239223	0.009	344
05/14/16	22:00	12.2	54,007,633.3	3,660.5	0.212773721	0.012	383
05/14/16	23:00	12.3	52,421,687.5	3,582.2	0.227488829	0.013	378
05/15/16	00:00	12.3	51,418,259.5	3,513.6	0.249415463	0.014	375
05/15/16	01:00	12.2	45,209,027.0	3,064.2	0.269881820	0.013	325
05/15/16	02:00	12.2	42,625,575.4	2,889.1	0.262513033	0.012	305
05/15/16	03:00	12.2 C	36,547,337.6 C	2,477.1	0.671480705	0.027	260
05/15/16	04:00	12.0	33,839,330.8	2,255.9	0.407355750	0.015	237
05/15/16	05:00	12.0	31,923,674.0	2,128.3	0.321202350	0.011	221
05/15/16	06:00	11.8	32,157,326.1	2,108.1	0.292362864	0.010	219

F = Unit Offline
E = Exceedance
M = Maintenance
T = Out Of Control

C = Calibration
S = Substituted
*** = Suspect**
U = Startup

Average Data

Plant: HUNTINGTON PLANT
Interval: 1 Hour
Type: Block
Report Period: 05/09/2016 16:00 Through 05/15/2016 16:59
Time Online Criteria: 1 minute(s)

Source		UNIT2					
Parameter Unit		CO2 (PCT)	FLOWSCFH (SCFH)	HEATIN (MMBTU/HR)	HGLB/T (LB/TBTU)	HGOUNCES (OZ)	UNITLOAD (MW)
05/15/16	07:00	11.3	34,144,116.8	2,143.5	0.331155239	0.011	224
05/15/16	08:00	11.5	37,841,705.9	2,417.7	0.253085791	0.010	253
05/15/16	09:00	11.1	35,934,156.7	2,215.9	0.272329784	0.010	232
05/15/16	10:00	11.0	34,637,669.8	2,116.8	0.307496127	0.010	220
05/15/16	11:00	10.9	34,685,505.5	2,100.4	0.305162422	0.010	220
05/15/16	12:00	10.9	34,652,812.5	2,098.4	0.339183908	0.011	220
05/15/16	13:00	11.0	34,294,375.2	2,095.7	0.288086073	0.010	220
05/15/16	14:00	10.9	34,122,240.9	2,066.3	0.337122000	0.011	216
05/15/16	15:00	11.4	39,965,525.0	2,531.2	0.291778105	0.012	264
05/15/16	16:00	11.6	45,918,700.0	2,959.2	0.304184793	0.014	314
Average		11.5	51,571,150.9	3,308.3	0.305419964	0.015	341
Minimum		10.1	29,454,005.8	1,685.4	0.000000000	0.000	167
Maximum		12.3	76,071,632.0	4,721.4	0.801275478	0.047	482
Summation		1,667.9	7,477,816,875.8	479,701.7	41.537115083	2.025	49,506
Included Data Points		145	145	145	136	136	145
Total number of Data Points		145	145	145	145	145	145

F = Unit Offline
E = Exceedance
M = Maintenance
T = Out Of Control

C = Calibration
S = Substituted
*** = Suspect**
U = Startup

Project PC16-21

Appendix D: Laboratory Data

Laboratory Analysis

PC16-21
PacifiCorp
Huntington Unit 2
Analysis Date: 4/21/16

EPA Method 30B §11.1: Calibration

Hg Mass (ng)	Area Counts	Calculated Hg Mass (ng)	% Difference
5	1480	4.6	**8.1%**
10	2780	10.4	**4.4%**
50	11600	50.0	**0.0%**
100	22800	100.0	**0.0%**
500	115000	500.0	**0.0%**

Polynomial Regression

Curve: y = -1.19E-09x^2 + 0.0045x + -2.0681

A_2 = -1.19E-09

A_1 = 0.0045

B = -2.0681

R^2 = 1.00

Low-Level Response Factor

Hg Mass (ng) =	2.5
Area Counts =	868
Response Factor =	347.2

EPA Method 30B §11.1: Independent Calibration Standard

Expected Value (ng)	500
Area Counts	122000
Measured Value (ng)	529.5
% Difference	**5.9%**
Limit	**10%**

EPA Method 30B §11.4: Continuing Calibration Verification Standard

Run #	Expected Value (ng)	Area Counts	Measured Value (ng)	% Difference
1	500	113000	491.5	1.7%

EPA Method 30B Sample Analysis

Sample ID	20099	285623
Inputs		
Area Counts (Section 1)	52300	6850
Area Counts (Section 2)	210	57
Spike Mass (ng)	200	0
Calculations		
Section 1 Hg Mass (ng)	230.2	28.7
Section 2 Hg Mass (ng)	0.6	0.2
Total Hg Mass less Spike (ng)	30.8	28.9
Breakthrough (%)	0.3%	0.6%
Volume of Sample (Std L)	2351.431	2314.615
Volume of Sample (dscm)	2.351	2.315
Hg Concentration (µg/dscm)	0.01	0.01
Relative Deviation (%)	2.4%	
Measured Spike Concentration (µg/dscm)	0.09	
Spike Recovery (%)	101%	n/a

Average Hg Concentration =	**0.01**	
Breakthrough Limit =	**20%**	
Relative Deviation Limit =	**20%**	**or +/- 0.2 ug/dscm**

PC16-21
PacifiCorp
Huntington Unit 2
Analysis Date: 4/28/16

EPA Method 30B §11.1: Calibration

Hg Mass (ng)	Area Counts	Calculated Hg Mass (ng)	% Difference
5	1450	5.1	**1.3%**
10	2540	10.0	**0.2%**
50	11300	49.8	**0.4%**
100	22400	100.1	**0.1%**
500	112000	500.0	**0.0%**

Polynomial Regression

Curve: y = -6.59E-10x^2 + 0.0046x + -1.5330

A_2 = -6.59E-10

A_1 = 0.0046

B = -1.5330

R^2 = 1.00

Low-Level Response Factor

Hg Mass (ng) =	2.5
Area Counts =	795
Response Factor =	318

EPA Method 30B §11.1: Independent Calibration Standard

Expected Value (ng)	500
Area Counts	118000
Measured Value (ng)	526.4
% Difference	**5.3%**
Limit	**10%**

EPA Method 30B §11.4: Continuing Calibration Verification Standard

Run #	Expected Value (ng)	Area Counts	Measured Value (ng)	% Difference
1	500	108000	482.4	3.5%

EPA Method 30B Sample Analysis

Sample ID	20077	285673
Inputs		
Area Counts (Section 1)	49233	6070
Area Counts (Section 2)	7	204
Spike Mass (ng)	200	0
Calculations		
Section 1 Hg Mass (ng)	221.0	26.1
Section 2 Hg Mass (ng)	0.0	0.6
Total Hg Mass less Spike (ng)	21.0	26.7
Breakthrough (%)	0.0%	2.5%
Volume of Sample (Std L)	2356.446	2313.319
Volume of Sample (dscm)	2.356	2.313
Hg Concentration (µg/dscm)	0.01	0.01
Relative Deviation (%)	12.9%	
Measured Spike Concentration (µg/dscm)	0.08	
Spike Recovery (%)	97%	n/a

Average Hg Concentration =	**0.01**	
Breakthrough Limit =	**20%**	
Relative Deviation Limit =	**20%**	**or +/- 0.2 ug/dscm**

PC16-21
PacifiCorp
Huntington Unit 2
Analysis Date: 5/10/16

EPA Method 30B §11.1: Calibration

Hg Mass (ng)	Area Counts	Calculated Hg Mass (ng)	% Difference
5	1460	4.7	**5.3%**
10	2610	9.7	**2.9%**
50	12200	51.2	**2.3%**
100	23400	99.4	**0.6%**
500	118000	500.0	**0.0%**

Polynomial Regression

Curve: y = -6.80E-10x^2 + 0.0043x + -1.5863

A_2 = -6.80E-10

A_1 = 0.0043

B = -1.5863

R^2 = 1.00

Low-Level Response Factor

Hg Mass (ng) =	2.5
Area Counts =	701
Response Factor =	280.4

EPA Method 30B §11.1: Independent Calibration Standard

Expected Value (ng)	500
Area Counts	127000
Measured Value (ng)	537.5
% Difference	**7.5%**
Limit	**10%**

EPA Method 30B §11.4: Continuing Calibration Verification Standard

Run #	Expected Value (ng)	Area Counts	Measured Value (ng)	% Difference
1	500	109000	462.4	7.5%

EPA Method 30B Sample Analysis

Sample ID	312610	285580
Inputs		
Area Counts (Section 1)	50800	5290
Area Counts (Section 2)	159	137
Spike Mass (ng)	200	0
Calculations		
Section 1 Hg Mass (ng)	216.7	21.3
Section 2 Hg Mass (ng)	0.6	0.5
Total Hg Mass less Spike (ng)	17.2	21.8
Breakthrough (%)	0.3%	2.3%
Volume of Sample (Std L)	2357.504	2323.475
Volume of Sample (dscm)	2.358	2.323
Hg Concentration (µg/dscm)	0.01	0.01
Relative Deviation (%)	12.4%	
Measured Spike Concentration (µg/dscm)	0.08	
Spike Recovery (%)	98%	n/a

Average Hg Concentration =	**0.01**	
Breakthrough Limit =	**20%**	
Relative Deviation Limit =	**20%**	**or +/- 0.2 ug/dscm**

PC16-21
PacifiCorp
Huntington Unit 2
Analysis Date: 5/10/16

EPA Method 30B §11.1: Calibration

Hg Mass (ng)	Area Counts	Calculated Hg Mass (ng)	% Difference
5	1460	4.7	**5.3%**
10	2610	9.7	**2.9%**
50	12200	51.2	**2.3%**
100	23400	99.4	**0.6%**
500	118000	500.0	**0.0%**

Polynomial Regression

Curve: y = -6.80E-10x^2 + 0.0043x + -1.5863

A_2 = -6.80E-10

A_1 = 0.0043

B = -1.5863

R^2 = 1.00

Low-Level Response Factor

Hg Mass (ng) =	2.5
Area Counts =	701
Response Factor =	280.4

EPA Method 30B §11.1: Independent Calibration Standard

Expected Value (ng)	500
Area Counts	127000
Measured Value (ng)	537.5
% Difference	**7.5%**
Limit	**10%**

EPA Method 30B §11.4: Continuing Calibration Verification Standard

Run #	Expected Value (ng)	Area Counts	Measured Value (ng)	% Difference
1	500	113000	479.1	4.2%

EPA Method 30B Sample Analysis

Sample ID	312537	283989
Inputs		
Area Counts (Section 1)	52700	8390
Area Counts (Section 2)	316	106
Spike Mass (ng)	200	0
Calculations		
Section 1 Hg Mass (ng)	224.8	34.7
Section 2 Hg Mass (ng)	1.1	0.4
Total Hg Mass less Spike (ng)	25.9	35.1
Breakthrough (%)	0.5%	1.1%
Volume of Sample (Std L)	2359.165	2316.758
Volume of Sample (dscm)	2.359	2.317
Hg Concentration (µg/dscm)	0.01	0.02
Relative Deviation (%)	15.9%	
Measured Spike Concentration (µg/dscm)	0.08	
Spike Recovery (%)	95%	n/a

Average Hg Concentration =	**0.01**	
Breakthrough Limit =	**20%**	
Relative Deviation Limit =	**20%**	**or +/- 0.2 ug/dscm**

PC16-21
PacifiCorp
Huntington Unit 2
Analysis Date: 5/18/16

EPA Method 30B §11.1: Calibration

Hg Mass (ng)	Area Counts	Calculated Hg Mass (ng)	% Difference
5	1030	5.3	**5.4%**
10	2030	10.8	**7.5%**
50	8840	48.1	**3.9%**
100	18500	100.9	**0.9%**
500	92000	500.0	**0.0%**

Polynomial Regression

Curve: y = -5.04E-10x^2 + 0.0055x + -0.3777

A_2 = -5.04E-10

A_1 = 0.0055

B = -0.3777

R^2 = 1.00

Low-Level Response Factor

Hg Mass (ng) =	2.5
Area Counts =	503
Response Factor =	201.2

EPA Method 30B §11.1: Independent Calibration Standard

Expected Value (ng)	500
Area Counts	89900
Measured Value (ng)	488.7
% Difference	**2.3%**
Limit	**10%**

EPA Method 30B §11.4: Continuing Calibration Verification Standard

Run #	Expected Value (ng)	Area Counts	Measured Value (ng)	% Difference
1	500	89800	488.1	2.4%

EPA Method 30B Sample Analysis

Sample ID	312666	283917
Inputs		
Area Counts (Section 1)	58600	11480
Area Counts (Section 2)	252	258
Spike Mass (ng)	200	0
Calculations		
Section 1 Hg Mass (ng)	319.3	62.5
Section 2 Hg Mass (ng)	1.3	1.3
Total Hg Mass less Spike (ng)	120.6	63.8
Breakthrough (%)	0.4%	2.1%
Volume of Sample (Std L)	1365.325	2317.779
Volume of Sample (dscm)	1.365	2.318
Hg Concentration (µg/dscm)	0.09	0.03
Relative Deviation (%)	52.5%	
Measured Spike Concentration (µg/dscm)	0.21	
Spike Recovery (%)	141%	n/a

Average Hg Concentration =	**0.06**	
Breakthrough Limit =	**20%**	
Relative Deviation Limit =	**20%**	**or +/- 0.2 ug/dscm**

30-Day Mercury Test

Unit ID HUNTINGTON U2

Week #	Start Date	Start Time	A Trap ID	B Trap ID	Pre-Test Impinger Weights	Post-Test Impinger Weights	Tech Initial	H_2O GAIN (g)
1	4.13.16	8:42 A Lems	Spk 20099	285623	A 890.3 513.0	918.8 756.6	JZ	272.1
					B 906.7 522.4	934.8 ~~512.~~ 730.3	JZ	236.0
2	4.19.16	11:13 A	Spk 20077	285673	A 928.4 512.9	~~930~~ 957.8 ~~512.9~~ 735.1	JZ	251.6
					B 918.2 522.8	946.7 737.6	JZ	243.3
3	4.26.16	10:02 A sd	Spk 312610	285580	A 901.8 513.6	932.3 735.3	JZ	252.2
					B 920.2 523.2	950.2 739.6	JZ	246.4
4	5.3.16	9:49 A sd	Spk 312537	283989	A 916.0 514.2	946.4 743.4	JZ	259.6
					B 938.1 523.1	968.0 746.1	WS	252.9
5	5-9-16 5/15/16	16:55 ~~17:30~~ 16:50	Spk 312666	283917	A 904.9 513.3	~~945.5~~ 927.1 809.5	WS	313.4
					B 887.0 523.0	910.5 759.1	WS	259.6

WK 1

EMCO
EMISSIONS MEASUREMENT COMPANY

EPA Method 30B Analysis Datasheet

Client _____

Facility / Unit Huntington 2

Initial Calibration

Date	4/21/16	
Hg (ng)	Area Counts	Area Counts
2.5	868	
5	1480	
10	2780	
50	11600	
100	22800	
500	115000	
500	122000	

CCVS

Following Run #	Hg (ng)	Area Counts
1	500	113000

Run Analyses

Run ID	Start Time	Tube #	Area Counts: Section A	Area Counts: Section B	Results: µg/wscm	Results: lb/Tbtu
1A		OL C020099 ~~285623~~ 200ng	52300	210		
1B		285623	6850	57		

Trap ID

OL285623

OHIO LUMEX

Sorbent Trap Chain of Custody

Plant/Source: _____ Test Location: _____

Boiler ID: _____ Trap **A** **B** (Circle One)

☒ **Unspiked** ☐ **Spiked At:** _____ QA/QC Signature (Trap Maker) _____

Certified Accuracy ± 10%, Traceable to NIST

Lot Number: U-507

QA/QC Signature (Spiker) _____

Spike Date: _____ Spike Time: _____

☐ High Flow ☐ Coil Pre-filter ☒ 240 mm

☐ Static Pre-filter ☐ AGS ☐ 300 mm

☐ Fluffy Pre-filter ☐ 185 mm ☐ 450 mm

Estimated Hg in Section 1: _____ ng

Sampled By: _____ Type of Trap: 30B LEE

Test Start (Date/Time) _____ Leak Check Pass/Fail _____ Test End (Date/Time) _____ Leak Check Pass/Fail _____

Date	Time	Duct Temp (°F or °C)	Sorbent Trap Temp (°F or °C)	Flow Rate (cc/min)	Dry Gas Meter Liters Initial	Dry Gas Meter Liters Final	Total Volume Pulled
Total/Average							

Chain of Custody

Relinquished by Tech.: _____ Date: _____

Received by: _____ Date: _____

Relinquished by: _____ Date: _____

Received for Laboratory by: _____ Date: _____

Make sure all of your sampling conditions prevent moisture condensation in the trap media. Moisture condensation is a major cause of breakthrough and spike loss in sorbent traps and should be prevented at all costs.

For Analysis contact us:

Ohio Lumex Co., Inc. 9263 Ravenna Road Unit A-3, Twinsburg, OH 44087 USA

Phone 330-405-0837 Fax 330-405-0847 US Toll Free: 888-876-2611

Impregnated Activated Carbon – Refer to MSDS

Deactivated glass and glass wool

Best Before: July 2018

Trap ID

OLC020099

OHIO LUMEX

Sorbent Trap Chain of Custody Form

☐ **Unspiked** ☒ **Spiked At:** 200ng

Certified Accuracy ± 10%, Traceable to NIST

QA/QC Signature (Trap Maker) _____

QA/QC Signature (Spiker) _____

Production Lot: S-11E5 Carbon Lot: NC

☐High Flow ☐Coil Pre-filter ☒240 mm
☐Static Pre-filter ☐AGS ☐300 mm
☐Fluffy Pre-filter ☐185 mm ☐450 mm

Spike Date: 3/24/2016 Spike Time: 1452

Type of Trap: 30B LEE

Plant/Stack		Notes	
STMMS ID (check box)	Primary STMMS ☐	Backup STMMS ☐	Tester ☐
Trap A or B (check box)	Trap A ☐ Trap B ☐	Sampling System Manufacturer (check box)	Altech ☐
RATA Run Number (For RATA only)		Apex ☐ Clean Air ☐ Environmental Supply ☐ M&C ☐ Ohio Lumex ☐	
Trap Inserted/Pre-Leak Check (CEMS Date/Time)		Pre-Leak Check (check box)	
Date	Time	Pass ☐ Fail ☐	
Sample Collection Start (CEMS Date/Time)		Duct Temp. (°F)	
Date	Time	Sorbent Trap Temp. (°F)	
Sample Collection End (CEMS Date/Time)		Average Flow Rate (cc/min)	
Date	Time	Total Volume (L)	
Post-Leak Check/Trap Removed (CEMS Date/Time)		Post-Leak Check (check box)	
Date	Time	Pass ☐ Fail ☐	
Startup Event and/or Shutdown Event occurred (check box)		Startup Event ☐	Shutdown Event ☐
Estimated Hg Concentration (µg/dscm)		**Estimated Hg in Section 1**	

If thermal desorption is used for analysis, an estimated Hg mass is required for sample acceptance.
If no estimated mass is provided, the spike mass will be used as the estimate. Results are guaranteed between 20% and 300% of the estimate.

For Cement Kilns	Indicate number of Raw Mill Off events during this sample run:

Chain Of Custody

Signatures along with Date/Time required for insertion, removal, lab receiving and lab analysis of trap.

	Signature	Date	Time	Security Seal
Trap inserted by				**If Applicable** Place Chain of Custody seal here (See Security Seal Instruction Sheet)
Trap removed and sealed by				
Trap received by lab				Seal intact as received Yes ☐ No ☐
Trap analyzed by				Seal intact as received Yes ☐ No ☐

Make sure all of your sampling conditions prevent moisture condensation in the trap media. Moisture condensation is a major cause of breakthrough and spike loss in sorbent traps and should be prevented at all costs.

For Analysis contact us:

Ohio Lumex Co., Inc. 9263 Ravenna Road Unit A-3, Twinsburg, OH 44087 USA
Phone 330-405-0837 Fax 330-405-0847 US Toll Free: 888-876-2611

Impregnated Activated Carbon – Refer to MSDS
Deactivated glass and glass wool

Best Before: March 2019

WK2

EMCO
EMISSIONS MEASUREMENT COMPANY

EPA Method 30B Analysis Datasheet

Client _____ Facility / Unit Huntington unit 2

Initial Calibration

Date	4/28/16	
Hg (ng)	Area Counts	Area Counts
2.5	795	
5	1450	
10	2540	
50	11300	
100	22400	
500	112000	
500	118000	

CCVS

Following Run #	Hg (ng)	Area Counts
2	500	108000

Run Analyses

Run ID	Start Time	Tube #	Area Counts		Results	
			Section A	Section B	µg/wscm	lb/Tbtu
2A		OLC020077 200ng	49233	7		
2B		OL285673	6070	204		

Trap ID

OLC020077

OHIO LUMEX

Sorbent Trap Chain of Custody Form

☐ **Unspiked** ☒ **Spiked At:** 200ng
Certified Accuracy ± 10%, Traceable to NIST

QA/QC Signature (Trap Maker) _____

QA/QC Signature (Spiker) _____

Production Lot: S-11E5 Carbon Lot: NC

☐High Flow ☐Coil Pre-filter ☒240 mm
☐Static Pre-filter ☐AGS ☐300 mm
☐Fluffy Pre-filter ☐185 mm ☐450 mm

Spike Date: 3/24/2016 Spike Time: 1452

Type of Trap: 30B LEE

Plant/Stack				Notes	
STMMS ID (check box)	Primary STMMS ☐			Backup STMMS ☐	Tester ☐
Trap A or B (check box)	Trap A ☐	Trap B ☐		Sampling System Manufacturer (check box) Altech ☐ Apex ☐ Clean Air ☐ Environmental Supply ☐ M&C ☐ Ohio Lumex ☐	
RATA Run Number (For RATA only)					
Trap Inserted/Pre-Leak Check (CEMS Date/Time)				Pre-Leak Check (check box) Pass ☐ Fail ☐	
Date		Time			
Sample Collection Start (CEMS Date/Time)				Duct Temp. (°F)	
Date		Time		Sorbent Trap Temp. (°F)	
Sample Collection End (CEMS Date/Time)				Average Flow Rate (cc/min)	
Date		Time		Total Volume (L)	
Post-Leak Check/Trap Removed (CEMS Date/Time)				Post-Leak Check (check box) Pass ☐ Fail ☐	
Date		Time			
Startup Event and/or Shutdown Event occurred (check box)				Startup Event ☐	Shutdown Event ☐
Estimated Hg Concentration (µg/dscm)				**Estimated Hg in Section 1**	

If thermal desorption is used for analysis, an estimated Hg mass is required for sample acceptance.
If no estimated mass is provided, the spike mass will be used as the estimate. Results are guaranteed between 20% and 300% of the estimate.

For Cement Kilns Indicate number of Raw Mill Off events during this sample run: _____

Chain Of Custody

Signatures along with Date/Time required for insertion, removal, lab receiving and lab analysis of trap.

	Signature	Date	Time	Security Seal
Trap inserted by				**If Applicable** Place Chain of Custody seal here (See Security Seal Instruction Sheet)
Trap removed and sealed by				
Trap received by lab				Seal intact as received Yes ☐ No ☐
Trap analyzed by				Seal intact as received Yes ☐ No ☐

Make sure all of your sampling conditions prevent moisture condensation in the trap media. Moisture condensation is a major cause of breakthrough and spike loss in sorbent traps and should be prevented at all costs.

For Analysis contact us:

Ohio Lumex Co., Inc. 9263 Ravenna Road Unit A-3, Twinsburg, OH 44087 USA
Phone 330-405-0837 Fax 330-405-0847 US Toll Free: 888-876-2611

Impregnated Activated Carbon – Refer to MSDS
Deactivated glass and glass wool

Best Before: March 2019

Trap ID

OL285673

OHIO LUMEX

Sorbent Trap Chain of Custody

Plant/Source: _____ Test Location: _____

Boiler ID: _____ Trap **A** **B** (Circle One)

☒ **Unspiked** ☐ **Spiked At:** _____ QA/QC Signature (Trap Maker) _____

Certified Accuracy ± 10%, Traceable to NIST

Lot Number: U-50F

QA/QC Signature (Spiker) _____

Spike Date: _____ Spike Time: _____

☐ High Flow ☐ Coil Pre-filter ☒ 240 mm

☐ Static Pre-filter ☐ AGS ☐ 300 mm

☐ Fluffy Pre-filter ☐ 185 mm ☐ 450 mm

Estimated Hg in Section 1: _____ ng

Sampled By: _____ Type of Trap: 30B LEE

Test Start (Date/Time) _____ Leak Check Pass/Fail _____ Test End (Date/Time) _____ Leak Check Pass/Fail _____

Date	Time	Duct Temp (°F or °C)	Sorbent Trap Temp (°F or °C)	Flow Rate (cc/min)	Dry Gas Meter Liters Initial	Dry Gas Meter Liters Final	Total Volume Pulled
Total/Average							

Chain of Custody

Relinquished by Tech.: _____ Date: _____

Received by: _____ Date: _____

Relinquished by: _____ Date: _____

Received for Laboratory by: _____ Date: _____

Make sure all of your sampling conditions prevent moisture condensation in the trap media. Moisture condensation is a major cause of breakthrough and spike loss in sorbent traps and should be prevented at all costs.

For Analysis contact us:

Ohio Lumex Co., Inc. 9263 Ravenna Road Unit A-3, Twinsburg, OH 44087 USA

Phone 330-405-0837 Fax 330-405-0847 US Toll Free: 888-876-2611

Impregnated Activated Carbon – Refer to MSDS

Deactivated glass and glass wool

Best Before: July 2018

WKS 3&4

EMCO
EMISSIONS MEASUREMENT COMPANY

EPA Method 30B Analysis Datasheet

Client

Facility / Unit Huntington 2

LEE

Initial Calibration

Date	5/10/16	
Hg (ng)	Area Counts	Area Counts
2.5	701	
5	1466	
10	2610	
50	12200	
100	23400	
500	118000	
2nd 500	127000	

CCVS

Following Run #	Hg (ng)	Area Counts
3	500	109000
4	1	113000

Run Analyses

Run ID	Start Time	Tube #	Area Counts: Section A	Area Counts: Section B	Results: µg/wscm	Results: lb/Tbtu
3A		OL312610 200ng	50800	159		
3B		OL285580	5290	137		
4A		OL312537 200ng	52700	316		
4B		OL283989	8390	106		

Trap ID

OL312610

OHIO LUMEX

Sorbent Trap Chain of Custody Form

☐ **Unspiked** ☒ **Spiked At:** 200ng

Certified Accuracy ± 10%, Traceable to NIST

QA/QC Signature (Trap Maker) _____

QA/QC Signature (Spiker) _____

Production Lot: S-11E5 Carbon Lot: NC

☐High Flow ☐Coil Pre-filter ☒240 mm
☐Static Pre-filter ☐AGS ☐300 mm
☐Fluffy Pre-filter ☐185 mm ☐450 mm

Spike Date: 3/24/2016 Spike Time: 1452

Type of Trap: 30B LEE

Plant/Stack		Notes	
STMMS ID (check box)	Primary STMMS ☐	Backup STMMS ☐	Tester ☐
Trap A or B (check box)	Trap A ☐ Trap B ☐	Sampling System Manufacturer (check box) Altech ☐ Apex ☐ Clean Air ☐ Environmental Supply ☐ M&C ☐ Ohio Lumex ☐	
RATA Run Number (For RATA only)			
Trap Inserted/Pre-Leak Check (CEMS Date/Time)		Pre-Leak Check (check box)	
Date	Time	Pass ☐ Fail ☐	
Sample Collection Start (CEMS Date/Time)		Duct Temp. (°F)	
Date	Time	Sorbent Trap Temp. (°F)	
Sample Collection End (CEMS Date/Time)		Average Flow Rate (cc/min)	
Date	Time	Total Volume (L)	
Post-Leak Check/Trap Removed (CEMS Date/Time)		Post-Leak Check (check box)	
Date	Time	Pass ☐ Fail ☐	
Startup Event and/or Shutdown Event occurred (check box)		Startup Event ☐	Shutdown Event ☐
Estimated Hg Concentration (µg/dscm)		**Estimated Hg in Section 1**	

If thermal desorption is used for analysis, an estimated Hg mass is required for sample acceptance.
If no estimated mass is provided, the spike mass will be used as the estimate. Results are guaranteed between 20% and 300% of the estimate.

For Cement Kilns	Indicate number of Raw Mill Off events during this sample run: _____

Chain Of Custody

Signatures along with Date/Time required for insertion, removal, lab receiving and lab analysis of trap.

	Signature	Date	Time	Security Seal
Trap inserted by				**If Applicable** Place Chain of Custody seal here (See Security Seal Instruction Sheet)
Trap removed and sealed by				
Trap received by lab				Seal intact as received Yes ☐ No ☐
Trap analyzed by				Seal intact as received Yes ☐ No ☐

Make sure all of your sampling conditions prevent moisture condensation in the trap media. Moisture condensation is a major cause of breakthrough and spike loss in sorbent traps and should be prevented at all costs.

For Analysis contact us:

Ohio Lumex Co., Inc. 9263 Ravenna Road Unit A-3, Twinsburg, OH 44087 USA
Phone 330-405-0837 Fax 330-405-0847 US Toll Free: 888-876-2611

Impregnated Activated Carbon – Refer to MSDS
Deactivated glass and glass wool

Best Before: March 2019

Trap ID

OL285580

OHIO LUMEX

Sorbent Trap Chain of Custody

Plant/Source: _____ Test Location: _____

Boiler ID: _____ Trap **A** **B** (Circle One)

☒ **Unspiked** ☐ **Spiked At**: _____ QA/QC Signature (Trap Maker) _____

Certified Accuracy ± 10%, Traceable to NIST

Lot Number: U-50F

QA/QC Signature (Spiker) _____

Spike Date: _____ Spike Time: _____

☐ High Flow ☐ Coil Pre-filter ☒ 240 mm

☐ Static Pre-filter ☐ AGS ☐ 300 mm

☐ Fluffy Pre-filter ☐ 185 mm ☐ 450 mm

Estimated Hg in Section 1: _____ ng

Sampled By: _____ Type of Trap: 30B LEE

Test Start (Date/Time) _____ Leak Check Pass/Fail _____ Test End (Date/Time) _____ Leak Check Pass/Fail _____

Date	Time	Duct Temp (°F or °C)	Sorbent Trap Temp (°F or °C)	Flow Rate (cc/min)	Dry Gas Meter Liters Initial	Dry Gas Meter Liters Final	Total Volume Pulled
Total/Average							

Chain of Custody

Relinquished by Tech.: _____ Date: _____

Received by: _____ Date: _____

Relinquished by: _____ Date: _____

Received for Laboratory by: _____ Date: _____

Make sure all of your sampling conditions prevent moisture condensation in the trap media. Moisture condensation is a major cause of breakthrough and spike loss in sorbent traps and should be prevented at all costs.

For Analysis contact us:

Ohio Lumex Co., Inc. 9263 Ravenna Road Unit A-3, Twinsburg, OH 44087 USA

Phone 330-405-0837 Fax 330-405-0847 US Toll Free: 888-876-2611

Impregnated Activated Carbon – Refer to MSDS

Deactivated glass and glass wool

Best Before: July 2018

Trap ID

OL312537

OHIO LUMEX

Sorbent Trap Chain of Custody Form

☐ **Unspiked** ☒ **Spiked At:** 200ng

Certified Accuracy ± 10%, Traceable to NIST

QA/QC Signature (Trap Maker) _____

QA/QC Signature (Spiker) _____

Production Lot: S-11E5 Carbon Lot: NC

☐High Flow ☐Coil Pre-filter ☒240 mm
☐Static Pre-filter ☐AGS ☐300 mm
☐Fluffy Pre-filter ☐185 mm ☐450 mm

Spike Date: 3/24/2016 Spike Time: 1452

Type of Trap: 30B LEE

Plant/Stack		Notes	
STMMS ID (check box)	Primary STMMS ☐	Backup STMMS ☐	Tester ☐
Trap A or B (check box)	Trap A ☐ Trap B ☐	Sampling System Manufacturer (check box) Altech ☐ Apex ☐ Clean Air ☐ Environmental Supply ☐ M&C ☐ Ohio Lumex ☐	
RATA Run Number (For RATA only)			
Trap Inserted/Pre-Leak Check (CEMS Date/Time)		Pre-Leak Check (check box)	
Date	Time	Pass ☐ Fail ☐	
Sample Collection Start (CEMS Date/Time)		Duct Temp. (°F)	
Date	Time	Sorbent Trap Temp. (°F)	
Sample Collection End (CEMS Date/Time)		Average Flow Rate (cc/min)	
Date	Time	Total Volume (L)	
Post-Leak Check/Trap Removed (CEMS Date/Time)		Post-Leak Check (check box)	
Date	Time	Pass ☐ Fail ☐	
Startup Event and/or Shutdown Event occurred (check box)		Startup Event ☐	Shutdown Event ☐
Estimated Hg Concentration (µg/dscm)		**Estimated Hg in Section 1**	

If thermal desorption is used for analysis, an estimated Hg mass is required for sample acceptance.
If no estimated mass is provided, the spike mass will be used as the estimate. Results are guaranteed between 20% and 300% of the estimate.

For Cement Kilns	Indicate number of Raw Mill Off events during this sample run: _____

Chain Of Custody

Signatures along with Date/Time required for insertion, removal, lab receiving and lab analysis of trap.

	Signature	Date	Time	Security Seal
Trap inserted by				**If Applicable** Place Chain of Custody seal here (See Security Seal Instruction Sheet)
Trap removed and sealed by				
Trap received by lab				Seal intact as received Yes ☐ No ☐
Trap analyzed by				Seal intact as received Yes ☐ No ☐

Make sure all of your sampling conditions prevent moisture condensation in the trap media. Moisture condensation is a major cause of breakthrough and spike loss in sorbent traps and should be prevented at all costs.

For Analysis contact us:

Ohio Lumex Co., Inc. 9263 Ravenna Road Unit A-3, Twinsburg, OH 44087 USA
Phone 330-405-0837 Fax 330-405-0847 US Toll Free: 888-876-2611

Best Before: March 2019

Impregnated Activated Carbon – Refer to MSDS
Deactivated glass and glass wool

Trap ID

OL283989

OHIO LUMEX

Sorbent Trap Chain of Custody

Plant/Source: _____ Test Location: _____

Boiler ID: _____ Trap **A** **B** (Circle One)

☒ **Unspiked** ☐ **Spiked At**: _____ QA/QC Signature (Trap Maker) _____

Certified Accuracy ± 10%, Traceable to NIST

Lot Number: U-507

QA/QC Signature (Spiker) _____

Spike Date: _____ Spike Time: _____

☐ High Flow ☐ Coil Pre-filter ☒ 240 mm

☐ Static Pre-filter ☐ AGS ☐ 300 mm

☐ Fluffy Pre-filter ☐ 185 mm ☐ 450 mm

Estimated Hg in Section 1: _____ ng

Sampled By: _____ Type of Trap: 30B LEE

Test Start (Date/Time) _____ Leak Check Pass/Fail _____ Test End (Date/Time) _____ Leak Check Pass/Fail _____

Date	Time	Duct Temp (°F or °C)	Sorbent Trap Temp (°F or °C)	Flow Rate (cc/min)	Dry Gas Meter Liters Initial	Dry Gas Meter Liters Final	Total Volume Pulled
Total/Average							

Chain of Custody

Relinquished by Tech.: _____ Date: _____

Received by: _____ Date: _____

Relinquished by: _____ Date: _____

Received for Laboratory by: _____ Date: _____

Make sure all of your sampling conditions prevent moisture condensation in the trap media. Moisture condensation is a major cause of breakthrough and spike loss in sorbent traps and should be prevented at all costs.

For Analysis contact us:

Ohio Lumex Co., Inc. 9263 Ravenna Road Unit A-3, Twinsburg, OH 44087 USA

Phone 330-405-0837 Fax 330-405-0847 US Toll Free: 888-876-2611

Impregnated Activated Carbon – Refer to MSDS

Deactivated glass and glass wool

Best Before: July 2018

1365.325
2317.779

WK 5

EMCO
EMISSIONS MEASUREMENT COMPANY

EPA Method 30B Analysis Datasheet

Client

Facility / Unit Huntington 2

Initial Calibration

Date	5/18/16	
Hg (ng)	Area Counts	Area Counts
2.5	503	
5	1030	
10	2030	
50	8840	
100	18500	
500	92000	
200 500	89900	

CCVS

Following Run #	Hg (ng)	Area Counts
5	500	89800

Run Analyses

Run ID	Start Time	Tube #	Area Counts Section A	Area Counts Section B	Results µg/wscm	Results lb/Tbtu
5A		OL312666 200ng	58600	252		
5B		OL283917	~~10300~~ 11480			
			11480	258		

Trap ID

OL312666

OHIO LUMEX

Sorbent Trap Chain of Custody Form

☐ **Unspiked** ☒ **Spiked At:** 200ng

Certified Accuracy ± 10%, Traceable to NIST

QA/QC Signature (Trap Maker) _____

QA/QC Signature (Spiker) _____

Production Lot: S-11E5 Carbon Lot: NC

☐High Flow ☐Coil Pre-filter ☒240 mm
☐Static Pre-filter ☐AGS ☐300 mm
☐Fluffy Pre-filter ☐185 mm ☐450 mm

Spike Date: 3/24/2016 Spike Time: 1452

Type of Trap: 30B LEE

Plant/Stack		Notes	
STMMS ID (check box)	Primary STMMS ☐	Backup STMMS ☐	Tester ☐
Trap A or B (check box)	Trap A ☐ Trap B ☐	Sampling System Manufacturer (check box) Altech ☐ Apex ☐ Clean Air ☐ Environmental Supply ☐ M&C ☐ Ohio Lumex ☐	
RATA Run Number (For RATA only)			
Trap Inserted/Pre-Leak Check (CEMS Date/Time)		Pre-Leak Check (check box)	
Date	Time	Pass ☐ Fail ☐	
Sample Collection Start (CEMS Date/Time)		Duct Temp. (°F)	
Date	Time	Sorbent Trap Temp. (°F)	
Sample Collection End (CEMS Date/Time)		Average Flow Rate (cc/min)	
Date	Time	Total Volume (L)	
Post-Leak Check/Trap Removed (CEMS Date/Time)		Post-Leak Check (check box)	
Date	Time	Pass ☐ Fail ☐	
Startup Event and/or Shutdown Event occurred (check box)		Startup Event ☐	Shutdown Event ☐
Estimated Hg Concentration (µg/dscm)		**Estimated Hg in Section 1**	

If thermal desorption is used for analysis, an estimated Hg mass is required for sample acceptance.
If no estimated mass is provided, the spike mass will be used as the estimate. Results are guaranteed between 20% and 300% of the estimate.

For Cement Kilns	Indicate number of Raw Mill Off events during this sample run: _____

Chain Of Custody

Signatures along with Date/Time required for insertion, removal, lab receiving and lab analysis of trap.

	Signature	Date	Time	Security Seal
Trap inserted by				**If Applicable** Place Chain of Custody seal here (See Security Seal Instruction Sheet)
Trap removed and sealed by				
Trap received by lab				Seal intact as received Yes ☐ No ☐
Trap analyzed by				Seal intact as received Yes ☐ No ☐

Make sure all of your sampling conditions prevent moisture condensation in the trap media. Moisture condensation is a major cause of breakthrough and spike loss in sorbent traps and should be prevented at all costs.

For Analysis contact us:

Ohio Lumex Co., Inc. 9263 Ravenna Road Unit A-3, Twinsburg, OH 44087 USA
Phone 330-405-0837 Fax 330-405-0847 US Toll Free: 888-876-2611

Impregnated Activated Carbon – Refer to MSDS
Deactivated glass and glass wool

Best Before: March 2019

Trap ID

OL283917

OHIO LUMEX

Sorbent Trap Chain of Custody

Plant/Source: _____ Test Location: _____

Boiler ID: _____ Trap **A** **B** (Circle One)

☒ **Unspiked** ☐ **Spiked At**: _____ QA/QC Signature (Trap Maker) _____

Certified Accuracy ± 10%, Traceable to NIST

Lot Number: U-507

QA/QC Signature (Spiker) _____

Spike Date: _____ Spike Time: _____

☐ High Flow ☐ Coil Pre-filter ☒ 240 mm

☐ Static Pre-filter ☐ AGS ☐ 300 mm

☐ Fluffy Pre-filter ☐ 185 mm ☐ 450 mm

Estimated Hg in Section 1: _____ ng

Sampled By: _____ Type of Trap: 30B LEE

Test Start (Date/Time) _____ Leak Check Pass/Fail _____ Test End (Date/Time) _____ Leak Check Pass/Fail _____

Date	Time	Duct Temp (°F or °C)	Sorbent Trap Temp (°F or °C)	Flow Rate (cc/min)	Dry Gas Meter Liters Initial	Dry Gas Meter Liters Final	Total Volume Pulled
Total/Average							

Chain of Custody

Relinquished by Tech.: _____ Date: _____

Received by: _____ Date: _____

Relinquished by: _____ Date: _____

Received for Laboratory by: _____ Date: _____

Make sure all of your sampling conditions prevent moisture condensation in the trap media. Moisture condensation is a major cause of breakthrough and spike loss in sorbent traps and should be prevented at all costs.

For Analysis contact us:

Ohio Lumex Co., Inc. 9263 Ravenna Road Unit A-3, Twinsburg, OH 44087 USA

Phone 330-405-0837 Fax 330-405-0847 US Toll Free: 888-876-2611

Impregnated Activated Carbon – Refer to MSDS

Deactivated glass and glass wool

Best Before: July 2018

EMCO

EMISSIONS MEASUREMENT COMPANY

Project PC16-21

Appendix E: Calibration Information

Dry Gas Meter Pre-Test and Post-Test Calibrations

Reference Meter Calibration Certificate

Hg-324K THERMOCOUPLE CALIBRATION

Date: April 27, 2015

Console S/N: **Hg-324K- 1099**

Reference Thermocouple: PIE Thermocouple
Serial Number: 104547 (NIST Traceable)
Model: 520

TC Simulator Output (°F)	Stack TC (°F)	Sorbent TC (°F)	Probe TC (°F)	Condenser TC (°F)	Pr Box TC (°F)	Ht Line TC (°F)	Max % Difference	Min % Difference
30	31.15	31.17	31.17	31.22	31.00	31.06	0.25	0.20
60	61.13	61.16	61.16	61.20	60.96	61.01	0.23	0.18
120	121.04	121.09	121.08	121.13	120.93	120.99	0.19	0.16
250	251.02	251.05	251.04	251.09	250.85	250.92	0.15	0.12
500	500.99	501.04	501.02	501.11	500.86	500.98	0.12	0.09

Hg-324K BAROMETER CALIBRATION

Reference Barometer: Compact Digital Barometer from Control Company
Serial Number: 72402089 (NIST Traceable)
Model: 61161-396
ES Elevation: 379' above sea level

Date	Time	Reference (in Hg)	HG-324K (in Hg)	Difference (in Hg)	% Diff.
04/27/15	9:45	29.47	29.512	0.042	0.14

Hg-324K FLOWMETER CALIBRATION

Reference Flowmeter TSI Inc.
Serial Number: 1214006 (NIST Traceable)
Model: MFM 41211

Flowmeter 1	
Sensor Voltage	Reference Meter Flow (lpm)
0.0316	0.000
0.6407	0.311
1.2242	0.605
1.8333	0.911

SLOPE 0.5055

INTERCEPT -0.0146

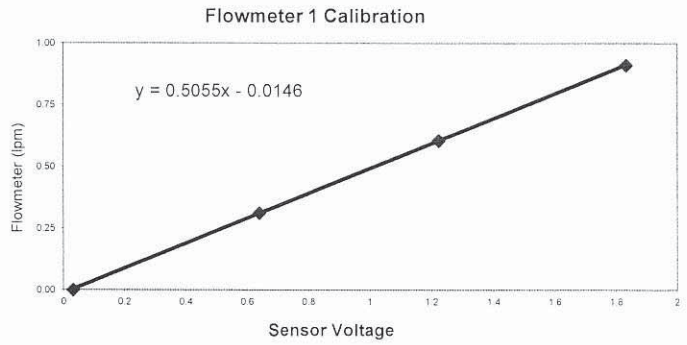

Flowmeter 2	
Sensor Voltage	Reference Meter Flow (lpm)
0.0437	0.000
0.6384	0.305
1.2398	0.604
1.8661	0.919

SLOPE 0.5036

INTERCEPT -0.0199

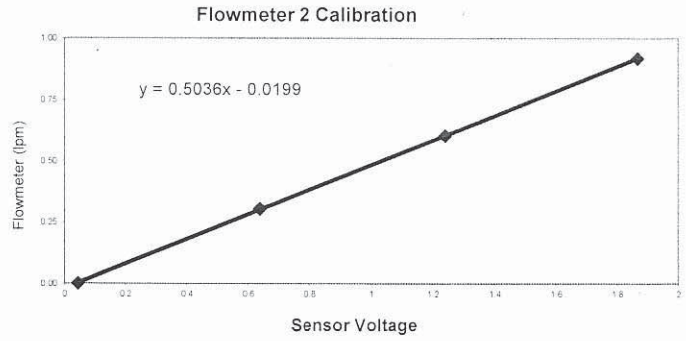

DGM Reference Calibration

Date: April 27, 2015

Reference Meter: Shinagawa Wet Test Meter
Model: W-NK-1A
S/N: 538787

Pbar: 29.46 in. Hg

Dry Gas Meter: Actaris ACD G1.6
S/N: 3605445

AVG γ: 1.000

Counts Per Liter (CPL): 540

Counter Scale Factor: 1.8519 at dP 1.000

RUN #	Flow (lpm)	DGM (liters)	DGM (°F)	WTM initial	WTM final	WTM (liters)	WTM (°F)	DGM Gamma (γ)	Diff (%)
1	0.300	9.433	73.9	205.360	214.752	9.392	72.0	0.999	-0.08
2	0.600	18.613	74.2	214.752	233.307	18.555	72.2	1.001	0.07
3	0.900	27.883	74.6	233.307	261.088	27.781	72.6	1.000	0.01

Assigned To: Hg-324K-1099 Ch-1

Signature

04/27/15
Date

DGM Reference Calibration

Date: April 27, 2015

Reference Meter: Shinagawa Wet Test Meter
Model: W-NK-1A
S/N: 538789

Pbar: 29.46 in. Hg

Dry Gas Meter: Actaris ACD G1.6
S/N: 3605446

AVG γ: 1.000

Counts Per Liter (CPL): 532

Counter Scale Factor: 1.8797 at dP 1.000

RUN #	Flow (lpm)	DGM (liters)	DGM (°F)	WTM initial	WTM final	WTM (liters)	WTM (°F)	DGM Gamma (γ)	Diff (%)
1	0.300	9.421	74.3	607.614	617.021	9.407	71.8	1.003	0.30
2	0.600	18.613	74.7	617.021	635.516	18.495	72.1	0.999	-0.16
3	0.900	27.795	75.0	635.516	663.145	27.629	72.4	0.999	-0.14

Assigned To: Hg-324K-1099 Ch-2

Signature

04/27/15
Date

METHOD 30B DRY GAS METER POST-CALIBRATION USING METRIC REFERENCE METER

EMCO
EMISSIONS MEASUREMENT COMPANY

1) Connect meterbox to Reference Meter.
2) Record barometric pressure before and after calibration procedure.
3) Run at maximum tested sample rate for a period of 20 minutes.
4) Record data and information in the **GREEN** cells; YELLOW cells are calculated.
5) If the Post-Cal Y differs from the Pre-Cal by less than 5%, no adjustments are necessary.

DATE: 5/23/2016 | METER ID #: 1099-A | INITIAL | FINAL
OPERATOR: JK | REFERENCE METER Y: 0.9965 | BAROMETRIC PRESSURE (in Hg): 24.45 | 24.45

RUN #	REFERENCE METER DGM TEMP. (°F)	REFERENCE METER DGM READINGS (m^3) INITIAL	FINAL	NET (V_{cr})	30B DRY GAS METER FLOW RATE (LPM)	DGM TEMP. (°F)	DGM READINGS (L) INITIAL	FINAL	NET (V_m)	ELAPSED TIME (MIN) θ	(1) V_{cr} (STD) (m^3)	(2) V_m (STD) (m^3)	(3) Y (unitless)
1	66	11.8888	11.8956	0.0068	1	64	0.000	7.069	7.069	6.00	0.0055	0.0058	0.952
2	66	11.8956	11.9031	0.0075	1	65	0.000	7.093	7.093	6.00	0.0061	0.0058	1.052
3	66	11.9031	11.9105	0.0074	1	65	0.000	7.189	7.189	6.00	0.0060	0.0059	1.024

AVERAGE DRY GAS METER CALIBRATION FACTOR, Y = **1.009**
PRE-TEST CALIBRATION FACTOR, Y = 1.000
DIFFERENCE = 0.92% (<5%)

DATE: 5/23/2016 | METER ID #: 1099-B | INITIAL | FINAL
OPERATOR: JK | REFERENCE METER Y: 0.9965 | BAROMETRIC PRESSURE (in Hg): 24.45 | 24.45

RUN #	REFERENCE METER DGM TEMP. (°F)	REFERENCE METER DGM READINGS (m^3) INITIAL	FINAL	NET (V_{cr})	30B DRY GAS METER FLOW RATE (LPM)	DGM TEMP. (°F)	DGM READINGS (L) INITIAL	FINAL	NET (V_m)	ELAPSED TIME (MIN) θ	(1) V_{cr} (STD) (m^3)	(2) V_m (STD) (m^3)	(3) Y (unitless)
1	66	11.9105	11.9178	0.0073	1	67	0.000	7.139	7.139	6.00	0.0060	0.0058	1.021
2	66	11.9178	11.9250	0.0072	1	68	0.000	7.039	7.039	6.00	0.0059	0.0057	1.023
3	66	11.9250	11.9324	0.0074	1	69	0.000	7.117	7.117	6.00	0.0060	0.0058	1.042

AVERAGE DRY GAS METER CALIBRATION FACTOR, Y = **1.029**
PRE-TEST CALIBRATION FACTOR, Y = 1.000
DIFFERENCE = 2.87% (<5%)

APEX INSTRUMENTS REFERENCE METER VERIFICATION
USING SHINAGAWA WET-TEST METER W-NK-1A
2-POINT METRIC UNITS

Calibration Meter Information	
WTM Model #	W-NK-1A
WTM Serial #	541008
WTM Gamma	1.0006
Original 15Pt Gamma	0.9965

Calibration Conditions			
Date	Time	6-Jan-16	11:45
Barometric Pressure		764	mm Hg
Calibration Technician		EW	
DGM Serial Number		SK25-8005211	

Factors/Conversions		
Std Temp	293	K
Std Press	760	mm Hg
K_1	0.3858	K/mm Hg

Calibration Data													Results		
Run Time	Dry Gas Meter						Calibration Meter						Dry Gas Meter		
													Calibration Factor		Flowrate
Elapsed	Meter Pressure	Volume Initial	Volume Final	Sample Volume	Temp Initial	Temp Final	Meter Pressure	Volume Initial	Volume Final	Sample Volume	Temp Initial	Temp Final	From 15 Pt	Current	Std & Corr
(Θ)	(P_m)	(V_{mi})	(V_{mf})	V	(t_{mi})	(t_{mf})	(P_w)	(Vw_i)	(Vw_f)	V	(t_{wi})	(t_{wf})	(Y)	(Y)	($Q_{m(std)(corr)}$)
min	mm H_2O	L	L	m^3	°C	°C	Pascals	L	L	m^3	°C	°C			Lpm
6	-73	249.2	275.2	0.026	22	22	220	700.093	725.681	0.025588	22	22	0.9909	0.9939	4.27
												Variation	0.30%	must be < 1.5%	
24	-30	275.2	288.3	0.0131	22	22	200	725.681	738.662	0.012981	22	22	1.0014	0.9963	0.54
												Variation	0.51%	must be < 1.5%	

I certify that the above Dry Gas Meter was calibrated in accordance with USEPA Methods, CFR 40 Part 60, using a Wet Test Meter, which in turn was calibrated using the American Bell Prover #3785, certificate #F107, which is traceable to the National Bureau of Standards (N.I.S.T.).

Signature [illegible] Date 1/6/16