ARCS

Remedial Planning Activities at Selected Uncontrolled Hazardous Substance Disposal Sites in Region I

Environmental Protection Agency
Region I

ARCS Work Assignment No. 08-1JZZ

Jard Company
Bennington, VT
VTD048141741
TDD# 9107-05-ATS

Site Inspection
Final Report

April 1993

SDMS Doc ID 564828

TRC Companies, Inc.

TAMS Consultants, Inc.
PEI Associates, Inc.
Jordan Communications, Inc.

APR 12 1993

TRC

Environmental Solutions through Technology

TRC Environmental Corporation
Boott Mills South, Foot of John Street
Lowell, MA 01852
☎ (508) 970-5600

April 9, 1993

Mr. Chuck Schwer
Site Management Section
Department of Environmental Conservation
Vermont Agency of Natural Resources
103 South Main Street, West Building
Waterbury, VT 05671-0404

Subject: Final Site Inspection Report
Jard Company
Bennington, Vermont
W.A. No. 08-1JZZ
Reference No. 1-636-009-0-1J37, TDD No. 9107-05-ATS
CERCLIS No. VTD048141741

Dear Mr. Schwer:

Enclosed is one copy of the Final Site Inspection Report for Jard Company in Bennington, VT. The final report has been revised in accordance with comments received from the EPA and the State.

If you have any questions, please do not hesitate to call.

Sincerely,

Paul A. Hughes
ARCS Program Manager

Enclosure

cc: S. Hayes (w/o enclosure)
D. Smith (w/o enclosure)

SITE INSPECTION
JARD COMPANY
BENNINGTON, VERMONT

VTD048141741

FINAL REPORT

Prepared for

U.S. ENVIRONMENTAL PROTECTION AGENCY
Region I
90 Canal Street
Boston, Massachusetts 02203-2211

Work Assignment:	08-1JZZ
EPA Region:	1
Contract No.:	68-W9-0033 (ARCS)
TRCC Document No.:	L93-257
TRCC Project No.:	1-636-009-0-1J37
TDD No.:	9107-05-ATS
TRCC Work Assignment Manager:	Diane Stallings
TRCC Task Manager:	Michael S. Clark
Telephone No.:	(508) 970-5600
EPA Work Assignment Manager:	Sharon Hayes
Telephone No.:	(617) 573-5709
Date Prepared:	April 9, 1993
Revision:	0

TRC COMPANIES, INC.
Boott Mills South
Foot of John Street
Lowell, Massachusetts 01852
(508) 970-5600

TABLE OF CONTENTS

Section	Page
INTRODUCTION	1
SITE DESCRIPTION	1
SITE ACTIVITY/HISTORY	6
ENVIRONMENTAL SETTING	10
RESULTS	13
SUMMARY	22
REFERENCES	25

Appendices		Page
A	Analytical Results from Wehran Engineering Phase I Investigation	A-1
B	Analytical Results from Wehran Engineering Phase II Investigation	B-1
C	Analytical Results from Weston TAT Investigation	C-1
D	Analytical Results from TRCC Sampling	D-1

TABLES

Number		Page
1	Source Evaluation	5
2	Hazardous Waste Quantity	7
3	Private Well Users Within a Four-Mile Radius of Jard Company	11
4	Estimated Residential Population Within a Four-Mile Radius of Jard Company	12
5	Sample Summary: Jard Company	16
6	Sample Results Summary - Jard Company	17

FIGURES

Number		Page
1	Location Map	2
2	Site Sketch	4

INTRODUCTION

TRC Companies, Inc. (TRCC) was contracted by Region I U.S. Environmental Protection Agency (EPA) to perform a Site Inspection (SI) of the Jard Company located in Bennington, Vermont. All tasks were conducted in accordance with Work Assignment No. 08-1JZZ under EPA Contract No. 68-W9-0033. A Preliminary Assessment of this property was completed by the Vermont Agency of Natural Resources in July 1991 (VTANR, 1991). A Site Inspection was initiated based on the information provided in the Preliminary Assessment.

Background information used in the preparation of this report was obtained through file searches conducted at the EPA, the Vermont Agency of Natural Resources and the town offices of Bennington, Vermont. Information was also collected during TRCC's fieldwork including on-site reconnaissance and environmental sampling conducted on July 21 and August 18, 1992, respectively.

This Site Inspection report follows the guidelines developed under the Comprehensive Environmental Response, Compensation, and Liability Act of 1980, as amended, commonly referred to as Superfund. However, this document does not necessarily fulfill the requirements of other EPA regulations such as those under the Resource Conservation and Recovery Act (RCRA) or other federal, state, or local regulations. Site Inspections are intended to provide a preliminary screening of sites to facilitate EPA's assignment of site priorities. They are limited efforts and are not intended to supersede more detailed investigations.

SITE DESCRIPTION

The Jard Company (Jard) is located on a 34 acre parcel on Bowen Road in Bennington, Vermont (Figure 1). The property was purchased by Jard in three separate parcels. The original nine acres, on which the facility building is located, was purchased in 1969. Prior to its purchase, this parcel was vacant and wooded. An additional 2.15 acres was purchased in

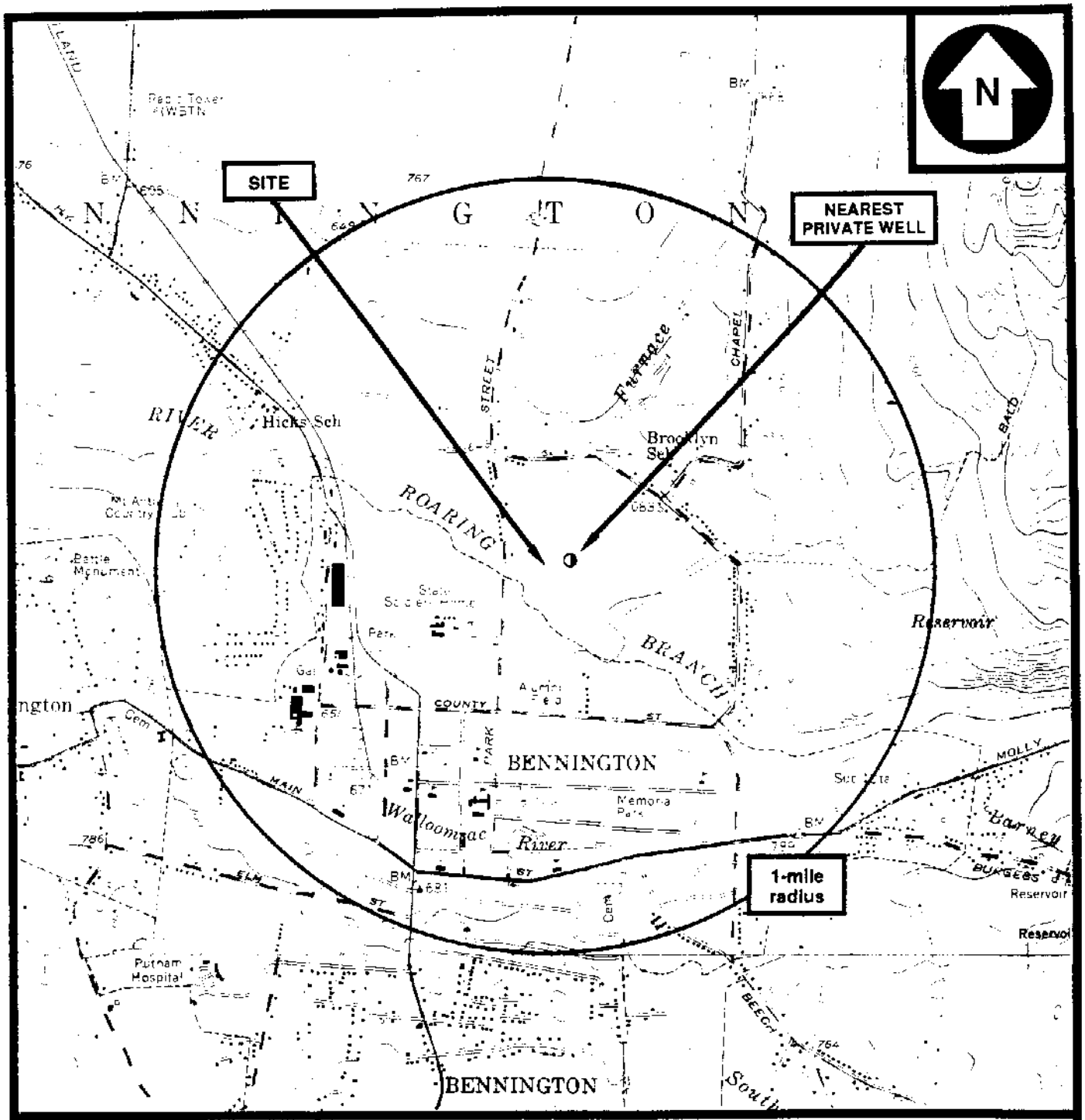

BASE MAP IS A PORTION OF THE FOLLOWING U.S.G.S. 7.5' SERIES QUADRANGLES:
BENNINGTON, VT, 1954; POWNAL, VT, 1954

0 1000 2000 3000

SCALE = feet

QUADRANGLE LOCATION

LOCATION MAP

JARD COMPANY
BENNINGTON, VERMONT

TRC Companies, Inc.

Figure 1.

1977 and the final 22.9 acres in 1979, for a total area of 34 acres. The facility is located at 42°53′21″ north latitude and 73°11′24″ west longitude (VTANR, 1991: TRCC, 1992).

The property is bounded to the north by Bowen Road industrial properties and residential homes, to the east by woodlands and a Vermont Agency of Transportation District Garage, to the south by the Roaring Branch of the Walloomsac River, Mt. Anthony High School and the business district of Bennington, and to the west by little league baseball fields, residences and a shopping center (VTANR, 1991; TRCC, 1992).

The facility is inactive and the building occupies the majority of the original nine acres (Figure 2). Site features inspected include the exterior of the building and the remainder of the original 9 acre parcel. The 9 acre parcel is almost entirely enclosed by a fence (TRCC, 1992). The north (front) sector of the property contains no significant features except for an on site supply well (no longer in use) and several pipes extending from the building near Heating, Ventilation and Air Conditioning (HVAC) units. No soil staining or stressed vegetation was observed beneath these pipes. This section of the property does not lie within the fenced area (TRCC, 1992).

A paved parking area is located on the eastern side of the facility, within the fenced area. A concrete dry well is located adjacent to the eastern side of the building. Stained soil was observed within the fence on the north side of this dry well. A caged drum storage area, which contains approximately 130 empty drums staged for removal under EPA Emergency Planning and Response Branch (EPRB) authority, was noted in the southeast corner of the property. Stained soil was observed on the south side (outside) of the fence adjacent to this storage area. Several significant structures, including an air hopper and a 2,000 gallon above ground storage tank (AST), were noted on the south side of the building. Along the southwest side of the building is a circular concrete structure which is the cover to an open deep well (Clark, 1992a). A concrete dry well, approximately six feet in diameter and four feet deep, was noted adjacent to the deep well cover. The dry well is perforated by many one-inch-diameter slots and has three pipes leading out from the well. The dry well appears

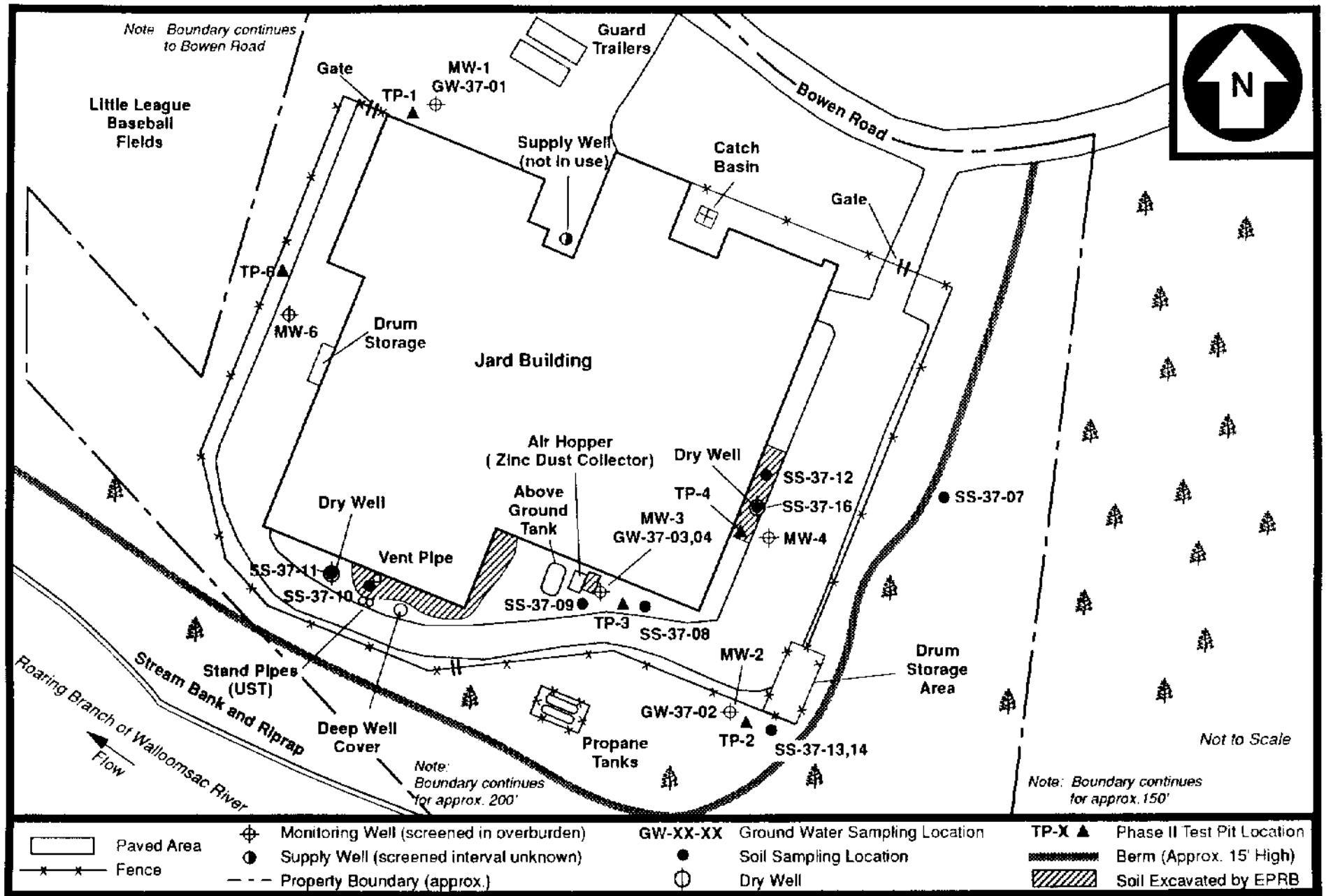

SITE SKETCH

JARD COMPANY
BENNINGTON, VERMONT

TRC Companies, Inc.

Figure 2.

MS4941/G

to be fed by a ten inch diameter pipe leading from the building. Between the concrete dry well and the deep well cover are two stand pipes, which are connected to a 14,000 gallon underground storage tank (UST) (Clark, 1992g). Stained soil was noted adjacent to the building in this area, particularly below a vent pipe which extends from the building approximately one foot above the ground (TRCC, 1992).

The west side of the building displays no significant features and is almost entirely paved. One empty drum was observed in what appeared to be an area used for either drum or compressed gas storage (TRCC, 1992).

The following table presents all areas on the Jard Company property that are potential sources of contamination, the containment factors associated with each source, and the relative location of each source.

TABLE 1. SOURCE EVALUATION

Potential Source Area	Containment Factors	Spatial Location
Contaminated Soil	None	East side of building north of dry well.
Contaminated Soil	None	Southeast corner of fence, adjacent to drum storage area.
Contaminated Soil	None	South side, adjacent to building, below vent pipe and near above-ground storage tank.
Dry Well	None	South side of building, to the west.
Dry Well	None	East side of building.
Underground Storage Tank (UST)	Unknown	South side of building, between dry well and covered deep well.
Above-ground Storage Tank (AST)	None	South side of building, west of the Air Hopper.

There are several other CERCLA sites located in Bennington, VT. Several are within one mile of the Jard Company, including the following: Catamount Dyers, at 290 Belmont Ave (VTD057019796); Eveready Battery Company, Inc., at 401 Gage Street (VTD002065597): The Schmelzer Corp. Property (Former), at 1 Shields Drive (VTD988367017), and: the Kocher Drive Dump (VTD982542797), located on Kocher Drive (EPA, 1992). In addition, there are 26 RCRA notifiers located in Bennington (EPA, 1991).

SITE ACTIVITY/HISTORY

Jard Company manufactured capacitors, non-fluid transformers and motors used in household appliances at the site from 1969 to 1989 (VTANR, 1991). Prior to 1969, the property was undeveloped woodlands (TRCC, 1992).

Hazardous wastes generated during the manufacturing process included polychlorinated biphenyls (PCBs), di-octyl phthalate (DOP), also known as bis(2-ethylhexyl)phthalate, waste hydraulic and lubricating oils, waste paints and paint solvents, waste zinc oxide, waste varnish and varnish solids, methylene chloride, trichloroethylene (TCE), 1,1,1-trichloroethane (1,1,1-TCA), rejected capacitors and DOP wastewater. DOP was used as a dielectric impregnating fluid for the foil windings of capacitors and transformers from January 1978 until the facility closed in 1989. Prior to the use of DOP, PCBs were used as impregnating fluids. From 1969 to 1971, Aroclor-1242 was used, and from 1971 to 1978 Aroclor-1016 was used (VTANR, 1991).

Table 2 summarizes the types of hazardous substances which may have been disposed on the Jard Company property.

During a routine industrial waste survey performed in October 1979 (agency unknown) inspectors noted a dark, oil stained area of soil located near a vent pipe in the rear of the building. This stained area measured approximately 100 square feet and was two to three inches deep. Analysis of the soil indicated the presence of Aroclor-1016 at a concentration of 330 milligrams per kilogram (mg/kg). This soil was not excavated or removed, but Jard

TABLE 2. HAZARDOUS WASTE QUANTITY			
Substance	**Quantity**	**Years of Disposal**	**Source Area**
Polychlorinated biphenyls (PCBs)	Unknown	1969 to 1989	Contaminated Soil
Di-octyl phthalate (DOP)	Unknown	1969 to 1989	Dry wells Contaminated Soil
Paint Solvents	Unknown	1969 to 1989	Contaminated Soil
Chlorinated Solvents	Unknown	1969 to 1989	Contaminated Soil
Unknown	2,000 gal.	Unknown	Above-ground Storage Tank

agreed to cover the area with six inches of soil that contained 30 percent clay (Nichols, 1980).

During a similar inspection in January 1987, inspectors noted zinc oxide in the vicinity of a dust collector, and a dry well containing DOP wastewater. Some concern was expressed that this dry well may have also received PCB-contaminated wastewater (Rota, 1987).

The VTANR conducted a final RCRA inspection in September 1989, when Jard announced that it was in bankruptcy. During this inspection, a grayish sludge was noted around a concrete tank (presumably the dry well) along the east side of the building. The inspector noted that the sludge had the appearance of waste paint, but had an odor similar to that of DOP. Several drums of hazardous waste were observed in the enclosed storage area located southeast of the concrete tank. This area contained seven fiber drums, fifteen 55-gallon drums and one 30-gallon drum (marked corrosive) (VTANR, 1989).

During the same inspection, thirty-five 55-gallon drums and approximately 30 to 40 assorted containers as large as 10 gallons in volume were noted stacked outside the enclosure. Markings indicated that the materials in the containers included oil, methyl alcohol, toluene, TCE, hydrochloric acid, asbestos roof coating, paint enamel, methanol, acetone, and "plastic remover". Along the back of the building (south side), a zinc dust collector and a partially

filled fiber drum was noted. Adjacent to the collector were two fiber drums filled with fine dust and a 2,000-gallon above ground storage tank (AST) which was full of an unidentified substance. This tank was supported, but had no secondary containment. The inspector noted that the concrete boxes and stand pipes along the rear of the building indicated the presence of a leachfield, however, this was not confirmed (VTANR, 1989).

In addition, a small fenced enclosure that contained two 55-gallon drums which bore partly legible labels reading "Dimethyl..." was noted on the west side of the building. The interior of the building had one waste storage area in which 138 55-gallon drums were stored. The drums contained various hazardous wastes and were allegedly intended for disposal by "C.M. Laboratories". Approximately 21 cubic yards of rejected capacitors were also stored in the building, some of which were leaking through cardboard containers. The capacitors were not scheduled for removal (VTANR, 1989).

A Phase I Environmental Site Assessment was conducted by Wehran Engineering in September and October 1989. The assessment was performed for Laurence H. Levy, Trustee for Jard, as part of an initial environmental audit evaluating the property prior to a possible sale. Several soil and water samples were collected during this assessment. In general, soil samples contained levels of PCBs above the Toxic Substances Control Act (TSCA) advisory level of 50 ppm. Water samples from the eastern dry well and one of the UST stand pipes south of the building contained PCB concentrations above TSCA standards. Further investigation was recommended to determine the vertical and horizontal extent of contamination on the property. Test pits and boreholes were scheduled to be excavated and further information regarding the man-made passageways (pipes and plumbing) beneath and near the site building was collected (Wehran, 1989).

Wehran Engineering performed a Phase II Environmental Site Assessment during the latter half of 1990. The work performed during this investigation included a ground-penetrating radar (GPR) survey of the site, off-site surficial soil sampling, on-site excavation and sampling of test pits, installation of ground water monitoring wells, and evaluation of the

results of the above tasks. Figure 2 depicts locations of monitoring wells and test pits. The objectives of these tasks were to:

- determine the vertical extent of contamination at known areas of surficial soil contamination;
- better define the horizontal extent of soil contamination; and
- provide initial data on the extent, if any, of ground water contamination. This task included defining the direction of ground water flow from the site (Wehran, 1991).

A Removal Program Preliminary Assessment/Site Investigation (PA/SI) was performed for the Jard property during March and April 1991 by the Roy F. Weston Technical Assistance Team (Weston TAT). The objective of this survey was to obtain sufficient analytical data to determine whether further action by the U.S. EPA EPRB was necessary (Weston, 1991a,b).

During December 1991, pipes burst within the Jard facility building which prompted the EPA EPRB to obtain site access.

Between January 20 and 24, 1992, approximately 60 surficial soil samples were collected and analyzed on site for PCBs. At that time, all on-site wastes were staged and sampled for removal action. As of March 19, 1992, analysis of five surface soil samples confirmed the presence of PCBs at concentrations as high as 3200 ppm. On-site analysis of soils in January 1992 revealed concentrations as high as 4700 ppm PCBs. The following non-empty bulk containers were present at the site in May 1992: 261 drums, 6 storage tanks, and 1 underground concrete tank/vault. The underground tank/vault was found to have a capacity of 14,000 gallons and contained approximately 10,000 gallons of liquid (EPRB, 1992). This tank was sampled for volatile organic compounds (VOCs) and was found to contain chloroform (4.0 ppb), 1,2,4-trichlorobenzene (4.1 ppb) and 1,2,3-trichlorobenzene (2.8 ppb) (Weston, 1991b). A removal action was conducted during October 1992. Contaminated soil was excavated to a depth of 2 feet. Excavated areas are indicated on Figure 2. All drums and tanks were removed from the property. The contents of the UST were not removed. The

EPRB surmised that ground water is more contaminated than the UST water. The UST is below the water table and would likely fill again with water more contaminated than that which it first contained (Clark, 1992g).

TRCC performed site reconnaissance at the Jard property on July 21, 1992 to identify potential sample locations and to assess current site conditions. At that time, the existence/location of the two dry wells, stand pipes, stained soil, and other relevant site features were confirmed. TRCC collected sixteen environmental samples from the Jard property on August 18, 1992 (TRCC, 1992).

ENVIRONMENTAL SETTING

Land in the vicinity of the Jard property is used for industrial, residential and recreational (baseball fields adjacent to the west) purposes. The nearest occupied residence, located approximately 300 feet northeast from the Jard property, is 111 Bowen Road (TRCC, 1992). The nearest private well is located approximately 660 feet northeast of the Jard facility. This well is identified as well #8 in the Bennington Basic Well Data inventory (VTANR, undated).

Overburden beneath the Jard property has been mapped as glacial outwash, mantled by thick deposits of course grained, stratified drift (VTANR, 1991). Test pit logs identify this material as sand, gravel, boulders, cobbles and some silt (Wehran, 1991). Bedrock is identified as Dunham Dolomite (cd), a thick bedded siliceous buff of gray dolomite containing irregularly distributed, well rounded sand grains (VTANR, 1991).

Ground water levels measured during the Phase II investigation in June 1990 varied from 2.9 to 8 feet below the ground surface. Ground water flow is believed to be to the southeast in overburden material (VTANR, 1991; Wehran, 1991). Bedrock hydrogeology is not known.

A total of approximately 1,083 persons obtain ground water from private wells within four miles of the Jard property (VTANR, Undated; Clark, 1992a,b,c; Clark, 1993b; U.S. Census, 1990). Approximately 11,907 Bennington residents receive municipal drinking water from

Bolles Brook, a surface water supply located approximately 3.5 miles northeast of the site. Morgan Spring, located approximately 0.7 miles southeast of the site, is used as a backup water supply when pressure drops, and on a daily basis when storage tanks are being filled. Morgan Spring contributes approximately 10% to the system, which amounts to approximately 1,191 persons served by public ground water supply within 0.5 to 1.0 miles of the site (Clark, 1993a,c). There are no other public ground water supplies within a four-mile radius of the site. Three trailer parks are served by private wells within four miles of the site. These residents are included in calculations presented in Table 3. Table 3 summarizes private well use by distance ring. This information was derived from the Vermont Basic Well Inventory, local topographic maps, and 1990 U.S. Census Bureau data.

TABLE 3. PRIVATE WELL USERS WITHIN A FOUR-MILE RADIUS OF JARD COMPANY

Radial Distance from Jard Company (Miles)	**Approximate Population Served by Private Wells**
Onsite	0
0.00 - 0.25	2
0.25 - 0.50	5
0.50 - 1.00	12
1.00 - 2.00	228
2.00 - 3.00	457
3.00 - 4.00	379
TOTAL	**1,083**

References: VTANR, undated; Clark, 1992a,b,c; Clark, 1993b; U.S. Census, 1990.

All or portions of the towns of Bennington, Woodford, Pownal, and Shaftsbury lie within four miles of the Jard Company. A total of approximately 15,624 persons reside within four miles of the site (Clark, 1992d; USGS, 1954a,b,c; USGS, 1980; U.S. Census, 1990). Table 4 summarizes this information by distance ring. This information was derived from town area

TABLE 4. ESTIMATED RESIDENTIAL POPULATION WITHIN A FOUR-MILE RADIUS OF JARD COMPANY	
Radial Distance from Jard Company (Miles)	**Approximate Population**
Onsite	0
0.00 - 0.25	76
0.25 - 0.50	229
0.50 - 1.00	1,804
1.00 - 2.00	3,647
2.00 - 3.00	5,178
3.00 - 4.00	4,690
TOTAL	**15,624**

References: Clark, 1992d; USGS, 1954a,b,c; USGS, 1980; U.S. Census, 1990.

percentages (in square miles) calculated from U.S. Geological Survey (USGS) topographic maps and from 1990 U.S. Census Bureau data (persons per square mile). On-site run-off from potential source areas is prevented due to a 10 to 15 foot high berm which surrounds the property to the east and south (TRCC, 1992). One catch basin was noted on site, however, this was on the north side of the building, approximately 200 feet from source areas (TRCC, 1992). Topography in source areas was relatively flat and soils were sandy, leading to the conclusion that rainfall infiltrates to the ground water (TRCC, 1992). In addition, the Jard property is located in an area of minimal flooding (FEMA, 1986). Ground water flow direction and local topography suggest that ground water migrating through the site property discharges to the Roaring Branch of the Walloomsac River approximately 500 feet south of the property (Wehran, 1991, USGS, 1954a). The Roaring Branch of the Walloomsac River flows at a rate of 222 cubic feet per second (cfs) (Clark, 1992j). The 15-mile surface water pathway consists entirely of the Walloomsac River which flows into New York State at a point approximately eight miles downstream of the site. The 15-mile terminus is at a point approximately one-half mile west of North Hoosick, New York. There are no drinking water intakes along the 15-mile pathway (Clark, 1992b, c, e, h).

Wehran Engineering conducted the Phase II investigation during May and June of 1990. Six test pits were excavated, from which two to three samples were collected from varying depths. Water samples were collected from four of the test pits, however, all were high in sediments. In addition, off-site surficial soil samples were collected from an adjacent properties to the west (little league fields) and south (between Jard and the River). Five monitoring wells were installed and sampled. Off-site soils were analyzed for PCBs only and were found to be free of contamination. Test Pits 3, 4 and 6 (see Figure 2) were found to contain PCB-1242 at concentrations as high as 77 ppm (Test Pit 3). Test Pit 3 also contained 3,000 ppm of DOP. Ground water was found to be contaminated with high levels of process chemicals near Test Pit 3. An oil phase was observed in samples from MW-3. The oil phase was found to contain 3100 ppm (Note: Analytical data sheet is not available for this sample) of PCBs, along with high levels of chlorinated solvents and other VOCs. Complete analytical results of the Phase II investigation are included in Appendix B (Wehran, 1991).

Wehran formed the following conclusions, based on the results of the Phase II investigation:

- Surficial soils (the upper 12 inches) at the site are locally contaminated with variable levels of PCBs and phthalates. The most significant contamination exists near the two dry wells adjacent to the southwest and eastern walls of the building; the drum storage area; and the assumed leachfield on the southwest side of the building (Wehran, 1991).
- Deeper soils (down to 8 feet in depth), except in the vicinity of Test Pit 3 and possibly Test Pit 6, are generally free of contamination (Wehran, 1991).
- Significant levels of VOCs and semivolatile compounds seem to be present only in surficial soils near the drum storage area and possibly near Test Pit 6 (Wehran, 1991).
- Ground water is contaminated near Test Pit 3 with high levels of process chemicals. Ground water from MW-6 contained elevated levels of TCE. Low concentrations of PCBs and phthalates were present in all water samples collected on site, however, these contaminants may be present in the sediments suspended in the ground water (Wehran, 1991).

On March 19, 1991 environmental sampling was conducted at the Jard property as part of the Removal Program Preliminary Assessment/Site Investigation by Weston TAT. Media sampled during this event included drums, soils, and one sample from the UST located on the

The Walloomsac River is a stocked fishery. The river was stocked most recently on May 5, 1992 with 800 brook trout in the Bennington-Woodford stretch (Clark, 1992i). Wetlands are scattered intermittently along the surface water pathway and comprise a total frontage of 4.5 miles. The first one-half mile of the pathway consists of intermittently flooded, temporary riverine wetlands which support upper perennial vegetation (R3BBW) (USDI, 1977a,b). Wetlands located approximately three quarters of a mile from the site along the surface water pathway support habitats used by two species of concern, the hairy honeysuckle (*Lonicera hirsuta*) and the handsome sedge (*Carex formosa*). The hairy honeysuckle is thought to be very vulnerable to extirpation in the state (S2), however, it is demonstratably secure globally (G5). The handsome sedge is uncommon in the state (S3) and is threatened globally (G3). These rankings have placed the handsome sedge in Category C2, meaning that the species is currently under review for Federal Status under the Endangered Species Law (P.L. 93-205) (VTANR, 1992). No terrestrial sensitive environments are located within a one-mile radius of the Jard property (VTANR, 1992, VTANR 1991).

RESULTS

During September and October 1989, a Phase I Environmental Site Assessment was conducted for the Jard property by Wehran Engineering. A total of fifteen surface soil samples, standing water samples from the dry wells and sediment samples from the dry wells were collected. One field blank for water samples was also collected. Primary contaminants detected included PCB-1242 (4,900 parts per million [ppm]), DOP (36,000 ppm) and zinc (466,000 ppm). Several purgeable organic compounds were also detected, including chloroform (40 ppb); 1,1,1-TCA (1,380 ppb) (Note: Analytical data sheets indicate only 550 ppb); TCE (4,300 ppb); dichloroethene (150 ppb); methylene chloride (220 ppb); chlorobenzene (6.6 ppb) (Note: Analytical data sheets indicate 9.9 ppb); dichlorobenzene (300 ppb); and bromodichloromethane (1.3 ppb). The Phase I investigation concluded that high levels of surficial contamination were present at the site and recommended a Phase II study to further characterize the extent of contamination (Wehran, 1989). Complete analytical results of the Phase I investigation are included in Appendix A (Wehran, 1989).

south side of the building. Surficial soil contamination was again noted on the east, and more so, on the south side of the building. DOP was detected at concentrations of 1000 ppm and PCBs (Aroclor-1248) as high as 44 ppm (Weston, 1991a). Drums sampled contained toluene, 1-pentanol, 2-methyl acetate, 1-cyclopropylethanone and hexylester acetic acid. The UST contained chloroform, 1,2,4-trichlorobenzene and 1,2,3-trichlorobenzene. Complete analytical results of this event are included in Appendix C.

On August 18, 1992, TRCC collected ground water and soil samples from the Jard property. A total of sixteen samples were collected, including a duplicate and rinsate blank for each matrix, one trip blank for ground water samples and one matrix spike/matrix spike duplicate sample for each matrix. Fourteen samples were analyzed through the Contract Laboratory Program (CLP) for Full Target Compound List (TCL) organic compounds (including VOCs, semivolatile organic compounds (SVOCs), which include base neutral acid extractables (BNAs), pesticides and PCBs (pest./PCBs); and Target Analyte List (TAL) metals and cyanide. Samples collected from MW-3 (GW-37-03 and GW-37-04) contained a ten-percent (by volume) dense oil layer and a lighter, one-percent layer. The organic and aqueous phases of these samples were analyzed for high concentration full TCL organics, TAL inorganics and cyanide by the EPA Region I laboratory in Lexington, Massachusetts.

Ground water samples were collected with dedicated stainless steel bailers. Soil samples were collected using dedicated stainless steel sampling equipment (i.e., trowels, spoons, bowls, etc.) Soil samples varied in composition from a grayish-silver claylike material (noted in stained areas) to fine to medium grained brown or orange sand mixed with cobbles and pebbles (TRCC, 1992). Table 5 summaries the locations and times at which all samples were collected.

Table 6 is a summary of compounds and elements detected in samples collected by TRCC. Listing of a compound or element is based on its detection at a concentration which is at least three times greater than the concentration of the same compound or element detected in the reference sample. If the compound or element was not detected in the reference sample, the sample quantitation limit (SQL) or sample detection limit (SDL) is used as the reference

TABLE 5. SAMPLE SUMMARY: JARD COMPANY

Sample Collected by TRCC on August 18, 1992

Sample Location	Matrix	Traffic Report Numbers	Collection Time	Sample Type	Sample Depth	Source
GW-37-01	water	ADC65 MAAX01	1515	Grab	N/A	Collected from MW-1, in an upgradient location.
GW-37-02	water	ADC66 MAAX02	1415	Grab	N/A	Collected from MW-2, at the southeast corner of the property. The well is adjacent to the drum storage area and an area of stained soil.
GW-37-03	water	N/A*	1230	Grab	N/A	Collected from MW-3, south of the facility. Sample contained a heavy product layer (10 percent) and a light layer (1 percent).
GW-37-04	water	N/A*	1230	Grab	N/A	Duplicate of GW-37-03.
RB-37-05	water	ADC69 MAAX05	1030	Grab	N/A	Rinsate Blank for ground water samples.
TB-37-06	water	ADC70	1040	Grab	N/A	Trip Blank for ground water samples.
SS-37-07	soil	ADC71 MAAX07	1215	Grab	0-2'	Shallow soil collected on the eastern edge of the property, from an apparently undisturbed location.
SS-37-08	soil	ADC72 MAAX08	1135	Grab	0-2'	Shallow soil collected from the vicinity of Test Pit 3, in an area of stained soil.
SS-37-09	soil	ADC73 MAAX09	1145	Grab	0-2'	Shallow soil sample collected from the vicinity of the air hopper, in an area of heavily stained soil.
SS-37-10	soil	ADC74 MAAX10	1215	Grab	0-2'	Shallow soil collected from vicinity of vent pipes, in soils scheduled for removal (MS/MSD).
SS-37-11	soil	ADC75 MAAX11	1210	Grab	0-2'	Soil sample collected from the dry well south of the building.
SS-37-12	soil	ADC76 MAAX12	1125	Grab	0-2'	Shallow soil collected near Test Pit 4, adjacent to a dry well.
SS-37-13	soil	ADC77 MAAX13	1230	Grab	0-2'	Shallow soil collected from an area of heavily stained soil, adjacent to the drum storage area.
SS-37-14	soil	ADC78 MAAX14	1235	Grab	0-2'	Duplicate of SS-37-13.
RB-37-15	water	ADC79 MAAX15	1040	Grab	N/A	Rinsate Blank for soil samples.
SS-37-16	soil	ADC80 MAAX16	1120	Grab	0-2'	Soil sample collected from the dry well on the east side of the building, adjacent to Test Pit 4, in an area of stained soil.

N/A - Not applicable

* - Samples were analyzed for high concentration at the EPA Region I Laboratory in Lexington, MA.

TABLE 6. SAMPLE RESULTS SUMMARY - JARD COMPANY

Samples Collected by TRCC on August 18, 1992

Sample Location	Compound/Element	Sample Concentration			Reference Concentration			
GW-37-03 (water phase)	Dichlorobenzene Isomers	260		µg/l	40		µg/l	(PQL)
	bis(2-Ethylhexyl)phthalate (DOP)	19,000		µg/l	60		µg/l	(PQL)
	Aroclor-1232 or 1016	13,000		µg/l	8,000		µg/l	(PQL)
(organic phase)	bis(2-Ethylhexyl)phthalate	640,000		mg/kg	20,000		mg/kg	(PQL)
	Aroclor-1232 or -1016	150,000		mg/kg	5,000		mg/kg	(PQL)
GW-37-04 (water phase)	1,2-Dichloroethylene isomers	41		µg/l	20		µg/l	(PQL)
	1,1,1-Trichloroethane	85		µg/l	20		µg/l	(PQL)
	Trichloroethylene	31		µg/l	20		µg/l	(PQL)
	Benzene	25		µg/l	20		µg/l	(PQL)
	Toluene	77		µg/l	20		µg/l	(PQL)
	Chlorobenzene	25		µg/l	20		µg/l	(PQL)
	Ethylbenzene	46		µg/l	20		µg/l	(PQL)
	Dichlorobenzene isomers	2200		µg/l	40		µg/l	(PQL)
	Xylenes (total)	180		µg/l	40		µg/l	(PQL)
	bis(2-Ethylhexyl)phthalate	17,000		µg/l	60		µg/l	(PQL)
	Aroclor-1232 or 1016	9,400		µg/l	8,000		µg/l	(PQL)
(organic phase)	bis(2-Ethylhexyl)phthalate	690,000		mg/kg	20,000		mg/kg	(PQL)
	Aroclor-1232 or 1016	150,000		mg/kg	5,000		mg/kg	(PQL)
SS-37-08	bis(2-Ethylhexyl)phthalate	1,300,000	J*	µg/kg	940,000	*	µg/kg	(SQL)
	Aroclor-1242	120,000	J*	µg/kg	340	*	µg/kg	(SS-37-07)
	Calcium	61,200		mg/kg	1,520		mg/kg	(SS-37-07)
	Magnesium	20,400		mg/kg	2,120		mg/kg	(SS-37-07)
	Zinc	25,600		mg/kg	1,260		mg/kg	(SS-37-07)
SS-37-09	bis(2-Ethylhexyl)phthalate	11,000,000	J*	µg/kg	1,500,000	*	µg/kg	(SQL)
	Di-n-octyl phthalate	840	J	µg/kg	370		µg/kg	(SQL)
	Aldrin	28,000	J	µg/kg	4,700		µg/kg	(SQL)
	Aroclor-1242	470,000	J	µg/kg	340		µg/kg	(SS-37-07)
	Calcium	53,300		mg/kg	1,520		mg/kg	(SS-37-07)
	Magnesium	18,000		mg/kg	2,120		mg/kg	(SS-37-07)
	Thallium	0.88		mg/kg	0.87		mg/kg	(SDL)
	Zinc	47,600		mg/kg	1,260		mg/kg	(SS-37-07)

TABLE 6. SAMPLE RESULTS SUMMARY - JARD COMPANY

Samples Collected by TRCC on August 18, 1992

Sample Location	Compound/Element	Sample Concentration			Reference Concentration			
SS-37-10	bis(2-Ethylhexyl)phthalate	23,000,000	J*	µg/kg	3,100,000	*	µg/kg	(SQL)
	Aldrin	8,400	J*	µg/kg	2,000	*	µg/kg	(SQL)
	Aroclor-1242	190,000	J*	µg/kg	340	*	µg/kg	(SS-37-07)
	Cadmium	7.2	J	mg/kg	0.32		mg/kg	(SDL)
	Calcium	25,500		mg/kg	1,520		mg/kg	(SS-37-07)
	Chromium	11.0		mg/kg	1.06		mg/kg	(SDL)
	Copper	68.7		mg/kg	11.1		mg/kg	(SS-37-07)
	Lead	1,410	J	mg/kg	24.8	J	mg/kg	(SS-37-07)
	Magnesium	12,200		mg/kg	2,120		mg/kg	(SS-37-07)
	Mercury	0.78		mg/kg	0.06		mg/kg	(SDL)
	Nickel	21.6		mg/kg	6.6		mg/kg	(SS-37-07)
	Silver	1.2		mg/kg	1.04		mg/kg	(SDL)
	Zinc	65,200		mg/kg	1,260		mg/kg	(SS-37-07)
SS-37-11	bis(2-Ethylhexyl)phthalate	50,000	J	µg/kg	21,000	*	µg/kg	(SQL)
	Aroclor-1242	23,000	J*	µg/kg	340	*	µg/kg	(SS-37-07)
	Calcium	11,100		mg/kg	1,520		mg/kg	(SS-37-07)
	Chromium	14.5		mg/kg	1.24		mg/kg	(SDL)
	Copper	297		mg/kg	11.1		mg/kg	(SS-37-07)
	Lead	179J		mg/kg	24.8	J	mg/kg	(SS-37-07)
	Magnesium	7,310		mg/kg	2,120		mg/kg	(SS-37-07)
	Zinc	18,200		mg/kg	1,260		mg/kg	(SS-37-07)
SS-37-12	Dimethylphthalate	1,200		µg/kg	450		µg/kg	(SQL)
	Butylbenzylphthalate	3,600		µg/kg	450		µg/kg	(SQL)
	Aldrin	4,000	J*	µg/kg	460	*	µg/kg	(SQL)
	Aroclor-1242	100,000	*	µg/kg	8,900	*	µg/kg	(SQL)
	Cadmium	10.6	J	mg/kg	0.36		mg/kg	(SDL)
	Calcium	7,030		mg/kg	1,520		mg/kg	(SS-37-07)
	Chromium	18.8		mg/kg	1.18		mg/kg	(SDL)
	Copper	43.2		mg/kg	11.1		mg/kg	(SS-37-07)
	Lead	86.3	J	mg/kg	24.8	J	mg/kg	(SS-37-07)
	Mercury	1.3	J	mg/kg	0.06		mg/kg	(SDL)
	Nickel	80.5		mg/kg	6.6		mg/kg	(SS-37-07)
	Silver	4.3		mg/kg	1.16		mg/kg	(SDL)
	Zinc	505,000		mg/kg	1,260		mg/kg	(SS-37-07)
SS-37-13	Aldrin	1,900	J	µg/kg	200		µg/kg	(SQL)
	Aroclor-1242	68,000	J*	µg/kg	340	*	µg/kg	(SS-37-07)
	Arsenic	7.8		mg/kg	1.7		mg/kg	(SS-37-07)
	bis(2-Ethylhexyl)phthalate	21,000,000	J*	µg/kg	7,900		µg/kg	(SQL)
	Calcium	8,230		mg/kg	1,520		mg/kg	(SS-37-07)
	Mercury	0.05	J	mg/kg	0.05		mg/kg	(SDL)

TABLE 6. SAMPLE RESULTS SUMMARY - JARD COMPANY

Samples Collected by TRCC on August 18, 1992

Sample Location	Compound/Element	Sample Concentration			Reference Concentration			
SS-37-14	Aldrin	2,700	J	µg/kg	420		µg/kg*	(SQL)
	Aroclor-1242	93,000	J*	µg/kg	340	*	µg/kg	(SS-37-07)
	bis(2-Ethylhexyl)phthalate	22,000,000	J	µg/kg	8,200		µg/kg	(SQL)
	Calcium	11,800		mg/kg	1,520		mg/kg	(SS-37-07)
	Magnesium	7,270		mg/kg	2,120		mg/kg	(SS-37-07)
SS-37-16	4-Methyl-2-pentanone	5,400		µg/kg	2,600		µg/kg	(SQL)
	bis(2-Ethylhexyl)phthalate	130,000	J	µg/kg	68,000		µg/kg	(SQL)
	Aldrin	2800	J	µg/kg	350		µg/kg	(SQL)
	Aroclor-1242	130,000	J*	µg/kg	340	*	µg/kg	(SS-37-07)
	Calcium	8460		mg/kg	1,520		mg/kg	(SS-37-07)
	Copper	86.7		mg/kg	11.1		mg/kg	(SS-37-07)
	Xylenes (total)	17,000		µg/kg	2,600		µg/kg	(SQL)
	Zinc	23,400		mg/kg	1,260		mg/kg	(SS-37-07)

µg/l - micrograms per liter
mg/kg - milligrams per kilogram
µg/kg - micrograms per kilogram
PQL - Practical Quantitation Limit
SQL - Sample Quantitation Limit
SDL - Sample Detection Limit
* - results obtained through dilution.

value; the compound or element is listed on the table if its concentration is greater than or equal to the SQL/SDL. EPA guidance was followed in selecting the reference sample from analytical results or SQLs/SDLs. Ground water sample GW-37-01, the hydraulically upgradient ground water sample, was selected as the reference sample for the organics and inorganic fractions. Soil sample SS-37-07, collected from an apparently undisturbed location was selected as the soil reference sample for all fractions. Ground water samples GW-37-03 and -04 were compared with Practical Quantitation Limits (PQLs) due to the lack of SQLs or SDLs. Complete analytical results are included in Appendix B.

Ground water contamination was confirmed in the vicinity of Test Pit 3 and MW-3 (GW-37-03, 04). Several VOCs were detected in the aqueous phase at elevated levels, the highest being dichlorobenzene isomers at 2200 ppb. PCB's (Aroclor-1232 or -1016) were detected in the aqueous phase at 13,000 ppb. The oil phase from MW-3 contained PCBs at

concentrations as high as 150,000 ppm. DOP was detected at 19,000 ppb in the aqueous phase and 690,000 ppm in the organic phase. No inorganics were detected at concentrations greater than three times the reference criteria, however, several inorganic compounds were detected at concentrations exceeding 5,000 ppb in sample GW-37-01, collected from the hydraulically upgradient well (MW-1). None of the concentrations are above Federal Maximum Contaminant Levels (MCLs) (EPA, 1992). Higher concentrations in MW-1 may be attributed to differences in screening depth and possibly different media at that depth. Soil boring data is not available to confirm this hypothesis (Wehran, 1991). A site plan drafted by Wehran Engineering indicates sanitary sewer lines in the vicinity of MW-1 (Wehran, 1991). Backfill (different media) from construction and/or leaking pipes may also account for elevated inorganic concentrations detected in samples from MW-1.

The only VOC detected in soil samples was xylene (total) which was present at 17,000 ppb in soils collected from the east dry well (SS-37-16).

DOP was detected at concentrations as high as 23,000,000 ppb in surface soils on the Jard property. High concentrations were again detected in soil collected from the southeast side of the building, in the vicinity of Test Pit 3 and the air hopper (11,000,000 ppb), however, the highest concentrations of DOP were detected in soils collected from beneath the vent pipe (23,000,000 ppb) (SS-39-10) and near the drum storage area (SS-37-14) (22,000,000 ppb). Soils collected from the east dry well (SS-37-16) displayed somewhat lower levels of DOP (130,000 ppb).

PCBs (Aroclor-1242) were detected in all soil samples collected from the Jard property. Concentrations ranged from 340 ppb (reference sample, SS-37-07) to 470,000 ppb. The highest concentrations were detected on the southeast side of the building in the vicinity of Test Pit 3 (SS-37-08) and the air hopper (SS-37-09). Soils from the east side of the building near TP-4 and the dry well also contained high levels of PCBs, including soils sampled from within the dry well (130,000 ppb) (SS-37-16). Similarly, soils within the southern dry well (SS-37-11) displayed PCB contamination, however, concentrations were considerably lower (23,000 ppb). Soils nearby, however, sampled from beneath the vent pipe,

again displayed very high concentrations of PCBs (190,000 ppb) (SS-37-10). This is presumably the area which was covered with a clay layer in 1979. Significant concentrations of PCBs (68,000 ppb) were also detected in soil sampled from the vicinity of the drum storage area (SS-37-13, -14).

One pesticide was detected in various locations on the property. Aldrin was detected beneath the vent pipe (SS-37-10), around the air hopper (SS-37-09) near the drum storage area (SS-37-13, 14), and in and around the east dry well (SS-37-12, -16). Soils around the air hopper displayed the highest concentrations of aldrin at 28,000 ppb.

Several inorganics were detected in soils collected from across the property. Zinc has historically been a contaminant of concern on the property, as noted during RCRA inspections by the presence of zinc dust around the air hopper (Rota, 1987). Zinc was detected in this area at 47,600 ppm (SS-37-09), but was found at a much higher concentration near the east dry well (505,000 ppm) (SS-37-12). Other inorganics above reference criteria include cadmium, detected at 10.6 ppm adjacent to the east dry well (SS-37-12), mercury, also detected in this area at 1.3 ppm, arsenic (7.8 ppm) found adjacent to the drum storage area (SS-37-13, 14), and silver, detected beneath the vent pipe (SS-37-10) at 1.2 ppm. Complete analytical results are found in Appendix D.

These results support the conclusions drawn from the Phase II investigation; the Jard property contains significant PCB and DOP contamination in both surface soils and ground water. Ground water contamination appears to be localized in the vicinity of Test Pit 3 where free product was observed. Surface soils are heavily contaminated in the southwestern sector of the property where a drywell is located, however, no monitoring well exists in this area to evaluate ground water quality. Surface soils are also heavily contaminated against the east side of the building where a second dry well exists, however, Phase II data indicates that ground water here is relatively free of contamination. Similarly, surface soils in the vicinity of the drum storage area display significant PCB contamination, however, Phase II data again indicate no significant ground water contamination in this area. Finally, Phase II data indicates that PCB contamination exists as far west as Test Pit 6 at 13 and 35 mg/kg. MW-6

contained elevated levels of VOCs but was free of PCB contamination. TRCC obtained no sampling data from the area of Test Pit 6.

The high concentrations of PCBs and DOP found in ground water and high concentrations of PCBs, DOP and zinc found in surface soils on the Jard property may be attributed to the processes which took place at the facility from 1969 to 1989. It is reasonable to conclude that the dry wells to the east and southwest of the building received PCB- and DOP-contaminated wastewater. Additionally, surficial soil contamination indicates that process wastes were disposed on site via the vent pipe on the south side of the building, as a result of waste handling at the air hopper, and perhaps through direct land disposal means other than the dry wells. The presence of free product in MW-3 has not yet been traced to a direct source, however, the existence of a leachfield was proposed by VTANR inspectors early in the site investigation process. This theory is supported by information obtained during EPRB activities. Within the facility building is a pipe which extends into the area of MW-3 and Test Pit 3. Excavation in this area revealed a large number of boulders. These observations, along with conversations with a former Jard employee led the EPA On-Scene Coordinator (OSC) to conclude that a leachfield existed in the area of MW-3 which could account for higher ground water contamination (free product) relative to surface soil contamination (Clark, 1992g).

SUMMARY

The Jard Company (Jard) is located on a 34-acre parcel on Bowen Road in Bennington, Vermont. The property was purchased by Jard in three separate parcels. The original nine acres, on which the facility building is located, was purchased in 1969. An additional 2.15 acres was purchased in 1977 and the final 22.9 acres in 1979, for a total area of 34 acres. The facility is inactive and occupies the majority of the original nine acres. Jard manufactured capacitors, non-fluid transformers and motors used in household appliances, at the facility from 1969 to 1989. Prior to 1969, the property was undeveloped woodlands.

Hazardous wastes generated during the manufacturing process [illegible] hlorinated biphenyls (PCBs), di-octyl phthalate (DOP, also known as bis (2-ethylhexyl) phthalate), waste hydraulic and lubricating oils, waste paints and paint solvents, waste varnish and varnish solids, methylene chloride, trichloroethylene (TCE), 1,1,1,-trichloroethane (1,1,1-TCA), rejected capacitors, and DOP wastewater.

Two dry wells exist on the property; one to the east of the building and the other to the south. These dry wells, along with other structures, including a 14,000 gallon underground storage tank (UST) and two stand pipes, suggest that process waters may have been disposed on site.

A Phase I Environmental Site Assessment was conducted during September and October, 1989. Several soil and water samples were collected which contained elevated levels of PCBs. A Phase II Environmental Site Assessment was performed during the latter half of 1990. This work included a ground-penetrating radar (GPR) survey of the site, off-site surficial soil sampling, on-site excavation and sampling of test pits, installation of ground water monitoring wells, and evaluation of the results of the above tasks. It was concluded that on-site contamination appeared restricted to "hot spots" of concentrated chemicals associated with former process stream disposal areas south and east of the facility. Ground water was shown to be contaminated locally in the vicinity of Test Pit 3 where free product was observed.

During December 1991, the U.S. Environmental Protection Agency's Emergency Planning and Response Branch (EPA EPRB), Region I obtained site access for the Jard property. Approximately sixty surficial soil samples were collected and analyzed on site for PCBs. Analysis revealed levels as high as 4700 parts per million (ppm). At that time, all on-site wastes were staged and sampled for removal action. Removal action was conducted during October 1992. Contaminated soil was excavated to a depth of 2 feet. Areas excavated are indicated on Figure 2. All drums and tanks were removed from the property. The contents of the UST were not removed. The EPRB surmised that ground water is more contaminated than the UST water. The UST is below the water table and would likely fill again with water more contaminated than that which it first contained.

On August 18, 1992, TRCC collected ground water and soil samples from the Jard property. Samples collected from MW-3 (south side of the building) contained a ten percent dense oil layer and a lighter one percent layer. Contaminants detected in samples collected from the Jard include PCBs, DOP, varying amounts of VOCs, and zinc. The oil phase from MW-3 contained PCBs at concentrations as high as 150,000 ppm, and DOP concentrations as high as 690,000 ppm (lighter layer). Ground water from the well contained PCBs, DOP and several VOCs, including dichlorobenzene isomers. Surface soils contained PCBs at concentrations as high as 470,000 ppb, DOP as high as 23,000,000 ppb, xylenes at 17,000 ppb, aldrin at 28,000 ppb and zinc at a concentration of 505,000 ppm.

The closest potential receptors of contamination from the property include:

- the nearest occupied residence, located approximately 300 feet northeast of the Jard facility at 111 Bowen Road, and

- the nearest private drinking water well located approximately 660 feet northeast of the Jard facility, identified as well #8 in the Bennington Basic Well Data inventory.

Approximately 1,083 people consume drinking water from private water supply wells located within a four mile radius of the property and approximately 15,624 people reside within a four mile radius of the property.

REFERENCES

Clark, 1992a. Distance Ring Calculations for Private Wells in the towns of Bennington, Woodford, Pownal, and Shaftsbury, Vermont.

Clark, 1992b. Telecon Memo with Karen Burrington, Pownal Town Clerk, regarding Pownal Water Supplies. October 21, 1992.

Clark, 1992c. Telecon Memo with Joe Sokul, Director of Public Works, Bennington, VT, re: Bennington Town Water Supply, and Rob Hanke, Chairman of Woodford, VT Planning Commission, re: Woodford Water Supply. October 20, 1992.

Clark, 1992d. Distance Ring Calculations for population in the towns of Bennington, Skaftsbury, Woodford, and Pownal, Vermont.

Clark, 1992e. Telecon Memo with Joe Herman. Head of Water Department, Shaftsbury, VT. Re: Shaftsbury Water Supply. October 29, 1992.

Clark, 1992f. Telecon Memo with Jack Griffin or Ravenwood Estates, re: Persons served by wells at Gorham heights and UnaBella Trailer park, October 20, 1992.

Clark, 1992g. Telecon Memo with Dean Tagliaferro, On-Scene Coordinator for EPA-EPRB activities at Jard Company. December 3, 1992.

Clark, 1992h. Telecon Memo with Brian Lampman, Chief Operator, Hoosick Falls, NY Water Department, re: Hoosick Falls Water Supply. December 10, 1992.

Clark, 1992i. Telecon memo with Tom Wiggins, U.S. Fish and Wildlife Service, re: Fisheries information, Roaring Branch of the Walloomsac River. December 10, 1992.

Clark 1992j. Telecon memo with Ken McKenna, U.S. Geological Survey, Bow, New Hampshire. RE: Flow Data for the Walloomsac River. December 31, 1992.

Clark, 1993a. Telecon memo with Joe Sokul, Director of Public Works. Bennington, VT, re: Bennington Town Water Supply. March 4, 1993.

Clark, 1993b. Telecon memo with Herb Gall, owner - Chapel Hill Trailer Park. Re: Private Well Supply for Chapel Hill. March 8, 1993.

Clark, 1993c. Telecon memo with Joe Sokul, Director of Public Works, Bennington, Vermont. Re: Morgan Spring. March 9, 1993.

EPA, 1991. U.S Environmental Protection Agency, Region I Hazardous Waste Data Management System (HWDMS) May 13, 1991.

EPA, 1992a. U.S. Environmental Protection Agency, Region I Comprehensive Environmental Response, Compensation and Liability Information System (CERCLIS) Data base. October 16, 1992.

EPA, 1992b. Drinking Water Regulations and Health Advisories by the Office of Water. U.S. Environmental Protection Agency. December 1992.

EPRB, 1992. U.S. EPA, Region I Emergency Planning and Response Branch (EPRB). Pollution Reports (POL REPS) for Activities at Jard Company, Bennington, Vermont. January 2, 1992 to May 10, 1992.

FEMA, 1986. Flood Insurance Rate Map, Town of Bennington, Vermont Community Panel Number S000130005C. Federal Emergency Management Agency, June 17, 1986.

Nichols, 1980. Letter to John A. Malter, re: Meeting with Jard, Inc. on March 28, 1980.

Rota, 1987. Kenneth Rota, VTDEC Memorandum to Jard File, January 22, 1987.

TRCC, 1992. Field logbook for Site Reconnaissance and Environmental Sampling conducted at Jard Company. July 21 and August 18, 1992.

USGS, 1954a. Bennington Quadrangle, Vermont. U.S. Geological Survey, 7.5 x 15′ Series Topographic Map. 1954.

USGS, 1954b. Woodford Quadrangle, Vermont. U.S. Geological Survey, 7.5 x 15′ Series Topographic Map. 1954.

USGS, 1954c. Pownal Quadrangle, Vermont. U.S. Geological Survey, 7.5 x 15′ Series Topographic Map. 1954.

USGS, 1980. North Pownal Quadrangle, Vermont-New York. U.S. Geological Survey, 7.5 x 15′ Series Topographic Map. Photorevised, 1980.

U.S. Census, 1990. 1990 Census of Population and Housing. Summary Population and Housing Characteristics - Vermont. 1990 CPH-1-47.

USDI, 1977a. National Wetlands Inventory Map, Bennington, Vermont. U.S. Department of the Interior, Fish and Wildlife Service. October, 1977.

USDI, 1977b. National Wetlands Inventory Map. Hoosick Falls, New York - Vermont. U.S. Department of the Interior, Fish and Wildlife Service. October 1977.

VTANR, undated. Basic Well Data for Ground Water Supply Wells in Vermont, by town.

VTANR, 1991. Preliminary Assessment for Jard Company, Inc. Bowen Road. Bennington, Vermont. Vermont Agency of National Resources. Department of Environmental Conservation, Hazardous Materials Management Division. July 13, 1991.

VTANR, 1992. Endangered Species Response Request for the Jard Company, Bennington, Vermont. Vermont Agency of National Resources, Department of Fish and Wildlife. December 15, 1992.

Wagner, 1985. Morgan Spring Contamination Study, Bennington, Vermont. Wagner, Heindel and Noyes, Inc. July 31, 1985.

Wehran, 1989. Draft Environment Site Assessment of the Jard Company Property in Bennington, Vermont. Wehran Engineering Corporation. November 1989.

Wehran, 1991. Phase II Environmental Site Assessment. Jard Company Property, Bennington, Vermont. Wehran Engineering Corporation. February 1991.

Weston, 1991a. Sampling Quality Assurance/Quality Control Plan. Jard Company, Inc. site, Bennington, Vermont. Roy F. Weston, Inc. Technical Assistance Team, Region I. March 1991.

Weston, 1991b. Removal Program Preliminary Assessment/Site Investigation for Jard Co., Inc. Site, Bennington, Vermont. Roy F. Weston. Inc. Technical Assistance Team, Region I. April 1991.

APPENDIX A

ANALYTICAL RESULTS FROM WEHRAN ENGINEERING PHASE I INVESTIGATION

Industrial & Environmental Analysts, Inc.
P.O. Box 626 • Essex Junction, Vermont 05453 • 802-878-5138

LAB RESULTS

11/14/89

Wehran Engineering
1 Mill Street, Chace Mill
Burlington, VT 05401-1532

IEA#: 237300
Date Received: 10/27/89 Date Collected: 10/25/89
Total Samples Received: 16 Total Parameters Requested: 11

Attention: **Bernie Franks**

Reviewed & Approved by: Bradley J. Pelkey

Sa#	Sample I.D.	Parameter Studied	Results	Comments
2	JC02	EPA #606 - Phthalates	-	see attached sheets.
3	JC03	EPA #606 - Phthalates	-	see attached sheets.
4	JC04	EPA #606 - Phthalates	-	see attached sheets.
5	JC05	EPA #606 - Phthalates	-	see attached sheets.
7	JC07	EPA #606 - Phthalates	-	see attached sheets.
8	JC08	EPA #606 - Phthalates	-	see attached sheets.
9	JC09	EPA #606 - Phthalates	-	see attached sheets.
10	JC10	EPA #606 - Phthalates	-	see attached sheets.
11	JC11	EPA #606 - Phthalates	-	see attached sheets.
13	JC13	EPA #606 - Phthalates	-	see attached sheets.
15	JC15	EPA #606 - Phthalates	-	see attached sheets.
16	JC16	EPA #606 - Phthalates	-	see attached sheets.
1	JC01	Antimony, total	<20.1 mg/Kg	dry weight
6	JC06	Antimony, total	<58.8 mg/Kg	dry weight
12	JC12	Antimony, total	<0.20 mg/L	
14	JC14	Antimony, total	<25.3 mg/Kg	dry weight
1	JC01	Arsenic, total by graphite furnace	<0.51 mg/Kg	dry weight
6	JC06	Arsenic, total by graphite furnace	<1.5 mg/Kg	dry weight
12	JC12	Arsenic, total by graphite furnace	<0.005 mg/L	
14	JC14	Arsenic, total by graphite furnace	0.73 mg/Kg	dry weight
1	JC01	Beryllium, hydrolyzable	<2.4 mg/Kg	dry weight
6	JC06	Beryllium, hydrolyzable	<2.8 mg/Kg	dry weight
12	JC12	Beryllium, hydrolyzable	<0.01 mg/L	
14	JC14	Beryllium, hydrolyzable	<2.9 mg/Kg	dry weight
1	JC01	Cadmium, total	<1.00 mg/Kg	dry weight

Comment:

Industrial & Environmental Analysts, Inc.
P.O. Box 626 • Essex Junction, Vermont 05453 • 802-878-5138

LAB RESULTS

11/14/89

Wehran Engineering
1 Mill Street, Chace Mill
Burlington, VT 05401-1532

IEA#: 237300
Date Received: 10/27/89 Date Collected: 10/25/89
Total Samples Received: 16 Total Parameters Requested: 11

Attention: **Bernie Franks**

Reviewed & Approved by: Bradley J. Pelkey

Sa#	Sample I.D.	Parameter Studied	Results	Comments
6	JC06	Cadmium, total	<2.94 mg/Kg	dry weight
12	JC12	Cadmium, total	<0.010 mg/L	
14	JC14	Cadmium, total	7.70 mg/Kg	dry weight
1	JC01	Chromium, total	<2.51 mg/Kg	dry weight
6	JC06	Chromium, total	<7.35 mg/Kg	dry weight
12	JC12	Chromium, total	<0.025 mg/L	
14	JC14	Chromium, total	9.22 mg/Kg	dry weight
1	JC01	Copper, total	9.03 mg/Kg	dry weight
6	JC06	Copper, total	82.9 mg/Kg	dry weight
12	JC12	Copper, total	1.27 mg/L	
14	JC14	Copper, total	282 mg/Kg	dry weight
1	JC01	GC Method 608 (special)	-	see attached sheets.
2	JC02	GC Method 608 (special)	-	see attached sheets.
3	JC03	GC Method 608 (special)	-	see attached sheets.
4	JC04	GC Method 608 (special)	-	see attached sheets.
6	JC06	GC Method 608 (special)	-	see attached sheets.
7	JC07	GC Method 608 (special)	-	see attached sheets.
8	JC08	GC Method 608 (special)	-	see attached sheets.
9	JC09	GC Method 608 (special)	-	see attached sheets.
10	JC10	GC Method 608 (special)	-	see attached sheets.
13	JC13	GC Method 608 (special)	-	see attached sheets.
14	JC14	GC Method 608 (special)	-	see attached sheets.
15	JC15	GC Method 608 (special)	-	see attached sheets.
5	JC05	GC Method 608 (water)	-	see attached sheets.
11	JC11	GC Method 608 (water)	-	see attached sheets.

Comment:

Industrial & Environmental Analysts, Inc.
P.O. Box 626 • Essex Junction, Vermont 05453 • 802-878-5138

LAB RESULTS

11/14/89

Webran Engineering
1 Mill Street, Chace Mill
Burlington, VT 05401-1532

IEA#: 237300
Date Received: 10/27/89 Date Collected: 10/25/89
Total Samples Received: 16 Total Parameters Requested: 1

Attention: **Bernie Franks**

Reviewed & Approved by: Bradley A. Eldred

Sa#	Sample I.D.	Parameter Studied	Results	Comments
12	JC12	GC Method 608 (water)	-	see attached sheets.
16	JC16	GC Method 608 (water)	-	see attached sheets.
1	JC01	GC Methods601/602	-	see attached sheets.
2	JC02	GC Methods601/602	-	see attached sheets.
3	JC03	GC Methods601/602	-	see attached sheets.
4	JC04	GC Methods601/602	-	see attached sheets.
5	JC05	GC Methods601/602	-	see attached sheets.
6	JC06	GC Methods601/602	-	see attached sheets.
7	JC07	GC Methods601/602	-	see attached sheets.
8	JC08	GC Methods601/602	-	see attached sheets.
9	JC09	GC Methods601/602	-	see attached sheets.
10	JC10	GC Methods601/602	-	see attached sheets.
11	JC11	GC Methods601/602	-	see attached sheets.
12	JC12	GC Methods601/602	-	see attached sheets.
13	JC13	GC Methods601/602	-	see attached sheets.
14	JC14	GC Methods601/602	-	see attached sheets.
15	JC15	GC Methods601/602	-	see attached sheets.
16	JC16	GC Methods601/602	-	see attached sheets.
1	JC01	GC/MS Method 625 analysis (BNAP)	-	see attached sheets.
6	JC06	GC/MS Method 625 analysis (BNAP)	-	see attached sheets.
12	JC12	GC/MS Method 625 analysis (BNAP)	-	see attached sheets.
14	JC14	GC/MS Method 625 analysis (BNAP)	-	see attached sheets.
1	JC01	Lead, total by graphite furnace	<0.51 mg/Kg	dry weight
6	JC06	Lead, total by graphite furnace	6.97 mg/Kg	dry weight
12	JC12	Lead, total by graphite furnace	0.331 mg/L	

Comment:

Industrial & Environmental Analysts, Inc.
P.O. Box 626 • Essex Junction, Vermont 05453 • 802-878-5138

LAB RESULTS

11/14/89

Wehran Engineering
1 Mill Street, Chace Mill
Burlington, VT 05401-1532

IEA#: 237300
Date Received: 10/27/89 Date Collected: 10/25/89
Total Samples Received: 16 Total Parameters Requested: 1

Attention: **Bernie Franks**

Reviewed & Approved by: Bradley J. Pehrl

Sa#	Sample I.D.	Parameter Studied	Results	Comments
14	JC14	Lead, total by graphite furnace	3.07 mg/Kg	dry weight
1	JC01	Mercury, total	0.25 mg/Kg	dry weight
6	JC06	Mercury, total	1.41 mg/Kg	dry weight
12	JC12	Mercury, total	0.0004 mg/L	
14	JC14	Mercury, total	2.43 mg/Kg	dry weight
1	JC01	Nickel, total	9.43 mg/Kg	dry weight
6	JC06	Nickel, total	<7.35 mg/Kg	dry weight
12	JC12	Nickel, total	<0.025 mg/L	
14	JC14	Nickel, total	15.4 mg/Kg	dry weight
1	JC01	Selenium, total by graphite furnace	<2.51 mg/Kg	dry weight
6	JC06	Selenium, total by graphite furnace	<1.47 mg/Kg	dry weight
12	JC12	Selenium, total by graphite furnace	<0.025 mg/L	
14	JC14	Selenium, total by graphite furnace	<6.31 mg/Kg	dry weight
1	JC01	Silver, total	2.40 mg/Kg	dry weight
6	JC06	Silver, total	<2.94 mg/Kg	dry weight
12	JC12	Silver, total	<0.010 mg/L	
14	JC14	Silver, total	<1.26 mg/Kg	dry weight
1	JC01	Thallium, hydrolyzable	<1.2 mg/Kg	dry weight
6	JC06	Thallium, hydrolyzable	<1.4 mg/Kg	dry weight
12	JC12	Thallium, hydrolyzable	<0.005 mg/L	
14	JC14	Thallium, hydrolyzable	<1.4 mg/Kg	dry weight
1	JC01	Zinc, total	2960 mg/Kg	dry weight
2	JC02	Zinc, total	614 mg/Kg	dry weight
3	JC03	Zinc, total	64900 mg/Kg	dry weight
4	JC04	Zinc, total	466000 mg/Kg	dry weight

Comment:

Industrial & Environmental Analysts, Inc.
P.O. Box 626 • Essex Junction, Vermont 05453 • 802-878-5138

LAB RESULTS

11/14/89

Wehran Engineering
1 Mill Street, Chace Mill
Burlington, VT 05401-1532

IEA#: 237300
Date Received: 10/27/89 Date Collected: 10/25/89
Total Samples Received: 16 Total Parameters Requested: 11

Attention: **Bernie Franks**

Reviewed & Approved by: Bradley J. Pldrel

Sa#	Sample I.D.	Parameter Studied	Results	Comments
5	JC05	Zinc, total	5.55 mg/L	
6	JC06	Zinc, total	11500 mg/Kg	dry weight
7	JC07	Zinc, total	36700 mg/Kg	dry weight
8	JC08	Zinc, total	112000 mg/Kg	dry weight
9	JC09	Zinc, total	78500 mg/Kg	dry weight
10	JC10	Zinc, total	18100 mg/Kg	dry weight
11	JC11	Zinc, total	0.146 mg/L	
12	JC12	Zinc, total	5.00 mg/L	
13	JC13	Zinc, total	753 mg/Kg	dry weight
14	JC14	Zinc, total	191000 mg/Kg	dry weight
15	JC15	Zinc, total	1480 mg/Kg	dry weight
16	JC16	Zinc, total	0.054 mg/L	

Comment:

Industrial & Environmental Analysts, Inc.
P.O. Box 626 • Essex Junction, Vermont 05453 • 802-878-5138

Comments

BQL - BELOW QUANTITATION LIMIT
Quantitation limit elevated due to sample dilution prior to analysis.
Sample diluted due to high concentration of target compounds present.
Target compound concentration adjusted for % moisture.

EPA METHOD 608 : PCB/Pesticides

IEA Sample No. 237300 1
Sample Identification JC01
Date Analyzed 11/10/89 **By** K. Hinshaw

Number	Compound	Quantitation Limit µg/Kg	Concentration µg/Kg
1	alpha - BHC	400	BQL
2	beta - BHC	400	BQL
3	delta - BHC	400	BQL
4	gamma - BHC (Lindane)	400	BQL
5	Heptachlor	400	BQL
6	Aldrin	400	BQL
7	Heptachlor epoxide	400	BQL
8	Endosulfan I	400	BQL
9	Dieldrin	800	BQL
10	4,4'-DDE	800	BQL
11	Endrin	800	BQL
12	Endosulfan II	800	BQL
13	4,4'-DDD	800	BQL
14	Endosulfan sulfate	800	BQL
15	4,4'-DDT	800	BQL
16	Endrin Ketone	800	BQL
17	Methoxychlor	4000	BQL
18	alpha-Chlordane	4000	BQL
19	gamma-Chlordane	4000	BQL
20	Toxaphene	8000	BQL
21	PCB 1016	4000	BQL
22	PCB 1221	4000	BQL
23	PCB 1232	4000	BQL
24	PCB 1242	4000	11,000
25	PCB 1248	4000	BQL
26	PCB 1254	8000	BQL
27	PCB 1260	8000	BQL
28	Tech. Chlordane	4000	BQL
29	Endrin aldehyde	800	BQL

Industrial & Environmental Analysts, Inc.
P.O. Box 626 • Essex Junction, Vermont 05453 • 802-878-5138

Comments

BQL - BELOW QUANTITATION LIMIT

Quantitation limit elevated due to sample dilution prior to analysis.
Sample diluted due to high concentration of target compounds present.
Target compound concentration adjusted for % moisture.

EPA METHOD 608 : PCB/Pesticides

IEA Sample No. 237300 2
Sample Identification JC02
Date Analyzed 11/10/89 **By** K. Hinshaw

Number	Compound	Quantitation Limit µg/Kg	Concentration µg/Kg
1	alpha - BHC	160	BQL
2	beta - BHC	160	BQL
3	delta - BHC	160	BQL
4	gamma - BHC (Lindane)	160	BQL
5	Heptachlor	160	BQL
6	Aldrin	160	BQL
7	Heptachlor epoxide	160	BQL
8	Endosulfan I	160	BQL
9	Dieldrin	320	BQL
10	4,4'-DDE	320	BQL
11	Endrin	320	BQL
12	Endosulfan II	320	BQL
13	4,4'-DDD	320	BQL
14	Endosulfan sulfate	320	BQL
15	4,4'-DDT	320	BQL
16	Endrin Ketone	320	BQL
17	Methoxychlor	1600	BQL
18	alpha-Chlordane	1600	BQL
19	gamma-Chlordane	1600	BQL
20	Toxaphene	3200	BQL
21	PCB 1016	1600	BQL
22	PCB 1221	1600	BQL
23	PCB 1232	1600	BQL
24	PCB 1242	1600	5100
25	PCB 1248	1600	BQL
26	PCB 1254	3200	BQL
27	PCB 1260	3200	BQL
28	Tech. Chlordane	1600	BQL
29	Endrin aldehyde	320	BQL

Industrial & Environmental Analysts, Inc.
P.O. Box 626 • Essex Junction, Vermont 05453 • 802-878-5138

Comments

BQL - BELOW QUANTITATION LIMIT
Quantitation limit elevated due to smaller amount of sample extracted.
Quantitation limit elevated due to sample dilution prior to analysis.
Sample diluted due to high concentration of target compounds present.
Target compound concentration adjusted for % moisture.

EPA METHOD 608 : PCB/Pesticides

IEA Sample No. 237300 3
Sample Identification JC03
Date Analyzed 11/10/89 **By** K. Hinshaw

Number	Compound	Quantitation Limit µg/Kg	Concentration µg/Kg
1	alpha - BHC	12,000	BQL
2	beta - BHC	12,000	BQL
3	delta - BHC	12,000	BQL
4	gamma - BHC (Lindane)	12,000	BQL
5	Heptachlor	12,000	BQL
6	Aldrin	12,000	BQL
7	Heptachlor epoxide	12,000	BQL
8	Endosulfan I	12,000	BQL
9	Dieldrin	24,000	BQL
10	4,4'-DDE	24,000	BQL
11	Endrin	24,000	BQL
12	Endosulfan II	24,000	BQL
13	4,4'-DDD	24,000	BQL
14	Endosulfan sulfate	24,000	BQL
15	4,4'-DDT	24,000	BQL
16	Endrin Ketone	24,000	BQL
17	Methoxychlor	120,000	BQL
18	alpha-Chlordane	120,000	BQL
19	gamma-Chlordane	120,000	BQL
20	Toxaphene	240,000	BQL
21	PCB 1016	120,000	BQL
22	PCB 1221	120,000	BQL
23	PCB 1232	120,000	BQL
24	PCB 1242	120,000	270,000
25	PCB 1248	120,000	BQL
26	PCB 1254	240,000	BQL
27	PCB 1260	240,000	BQL
28	Tech. Chlordane	120,000	BQL
29	Endrin aldehyde	24,000	BQL

Industrial & Environmental Analysts, Inc.
P.O. Box 626 • Essex Junction, Vermont 05453 • 802-878-5138

Comments

BQL - BELOW QUANTITATION LIMIT
Quantitation limit elevated due to smaller amount of sample extracted.
Quantitation limit elevated due to sample dilution prior to analysis.
Sample diluted due to high concentration of target compounds present.
Target compound concentration adjusted for % moisture.

EPA METHOD 608 : PCB/Pesticides

IEA Sample No. 237300 4
Sample Identification JC04
Date Analyzed 11/10/89 **By** K. Hinshaw

Number	Compound	Quantitation Limit µg/Kg	Concentration µg/Kg
1	alpha - BHC	6000	BQL
2	beta - BHC	6000	BQL
3	delta - BHC	6000	BQL
4	gamma - BHC (Lindane)	6000	BQL
5	Heptachlor	6000	BQL
6	Aldrin	6000	BQL
7	Heptachlor epoxide	6000	BQL
8	Endosulfan I	6000	BQL
9	Dieldrin	12,000	BQL
10	4,4'-DDE	12,000	BQL
11	Endrin	12,000	BQL
12	Endosulfan II	12,000	BQL
13	4,4'-DDD	12,000	BQL
14	Endosulfan sulfate	12,000	BQL
15	4,4'-DDT	12,000	BQL
16	Endrin Ketone	12,000	BQL
17	Methoxychlor	60,000	BQL
18	alpha-Chlordane	60,000	BQL
19	gamma-Chlordane	60,000	BQL
20	Toxaphene	120,000	BQL
21	PCB 1016	60,000	BQL
22	PCB 1221	60,000	BQL
23	PCB 1232	60,000	BQL
24	PCB 1242	60,000	180,000
25	PCB 1248	60,000	BQL
26	PCB 1254	120,000	BQL
27	PCB 1260	120,000	BQL
28	Tech. Chlordane	60,000	BQL
29	Endrin aldehyde	12,000	BQL

Industrial & Environmental Analysts, Inc.
P.O. Box 626 • Essex Junction, Vermont 05453 • 802-878-5138

Comments

BQL - BELOW QUANTITATION LIMIT
Quantitation limit elevated due to sample dilution prior to analysis.
Sample diluted due to high concentration of target compounds present.

EPA METHOD 608 : PCB/Pesticides

IEA Sample No. 237300 5
Sample Identification JC05
Date Analyzed 11/3/89 **By** K. Hinshaw

Number	Compound	Quantitation Limit µg/L	Concentration µg/L
1	alpha - BHC	0.50	BQL
2	beta - BHC	0.50	BQL
3	delta - BHC	0.50	BQL
4	gamma - BHC (Lindane)	0.50	BQL
5	Heptachlor	0.50	BQL
6	Aldrin	0.50	BQL
7	Heptachlor epoxide	0.50	BQL
8	Endosulfan I	0.50	BQL
9	Dieldrin	1.0	BQL
10	4,4'-DDE	1.0	BQL
11	Endrin	1.0	BQL
12	Endosulfan II	1.0	BQL
13	4,4'-DDD	1.0	BQL
14	Endosulfan sulfate	1.0	BQL
15	4,4'-DDT	1.0	BQL
16	Endrin Ketone	1.0	BQL
17	Methoxychlor	5.0	BQL
18	alpha-Chlordane	5.0	BQL
19	gamma-Chlordane	5.0	BQL
20	Toxaphene	10	BQL
21	PCB 1016	5.0	BQL
22	PCB 1221	5.0	BQL
23	PCB 1232	5.0	BQL
24	PCB 1242	5.0	160
25	PCB 1248	5.0	BQL
26	PCB 1254	10	BQL
27	PCB 1260	10	BQL
28	Tech. Chlordane	5.0	BQL
29	Endrin aldehyde	1.0	BQL

Industrial & Environmental Analysts, Inc.
P.O. Box 626 • Essex Junction, Vermont 05453 • 802-878-5138

Comments

BQL - BELOW QUANTITATION LIMIT
Quantitation limit elevated due to smaller amount of sample extracted.
Quantitation limit elevated due to sample dilution prior to analysis.
Sample diluted due to high concentration of target compounds present.
Target compound concentration adjusted for % moisture.

EPA METHOD 608 : PCB/Pesticides

IEA Sample No. 237300 6
Sample Identification JC06
Date Analyzed 11/10/89 **By** K. Hinshaw

Number	Compound	Quantitation Limit µg/Kg	Concentration µg/Kg
1	alpha - BHC	12,000	BQL
2	beta - BHC	12,000	BQL
3	delta - BHC	12,000	BQL
4	gamma - BHC (Lindane)	12,000	BQL
5	Heptachlor	12,000	BQL
6	Aldrin	12,000	BQL
7	Heptachlor epoxide	12,000	BQL
8	Endosulfan I	12,000	BQL
9	Dieldrin	24,000	BQL
10	4,4'-DDE	24,000	BQL
11	Endrin	24,000	BQL
12	Endosulfan II	24,000	BQL
13	4,4'-DDD	24,000	BQL
14	Endosulfan sulfate	24,000	BQL
15	4,4'-DDT	24,000	BQL
16	Endrin Ketone	24,000	BQL
17	Methoxychlor	120,000	BQL
18	alpha-Chlordane	120,000	BQL
19	gamma-Chlordane	120,000	BQL
20	Toxaphene	240,000	BQL
21	PCB 1016	120,000	BQL
22	PCB 1221	120,000	BQL
23	PCB 1232	120,000	BQL
24	PCB 1242	120,000	280,000
25	PCB 1248	120,000	BQL
26	PCB 1254	240,000	BQL
27	PCB 1260	240,000	BQL
28	Tech. Chlordane	120,000	BQL
29	Endrin aldehyde	24,000	BQL

Industrial & Environmental Analysts, Inc.
P.O. Box 626 • Essex Junction, Vermont 05453 • 802-878-5138

Comments

BQL - BELOW QUANTITATION LIMIT
Quantitation limit elevated due to sample dilution prior to analysis.
Sample diluted due to high concentration of target compounds present.
Target compound concentration adjusted for % moisture.

EPA METHOD 608 : PCB/Pesticides

IEA Sample No. 237300 7
Sample Identification JC07
Date Analyzed 11/10/89 **By** K. Hinshaw

Number	Compound	Quantitation Limit µg/Kg	Concentration µg/Kg
1	alpha - BHC	80,000	BQL
2	beta - BHC	80,000	BQL
3	delta - BHC	80,000	BQL
4	gamma - BHC (Lindane)	80,000	BQL
5	Heptachlor	80,000	BQL
6	Aldrin	80,000	BQL
7	Heptachlor epoxide	80,000	BQL
8	Endosulfan I	80,000	BQL
9	Dieldrin	160,000	BQL
10	4,4'-DDE	160,000	BQL
11	Endrin	160,000	BQL
12	Endosulfan II	160,000	BQL
13	4,4'-DDD	160,000	BQL
14	Endosulfan sulfate	160,000	BQL
15	4,4'-DDT	160,000	BQL
16	Endrin Ketone	160,000	BQL
17	Methoxychlor	800,000	BQL
18	alpha-Chlordane	800,000	BQL
19	gamma-Chlordane	800,000	BQL
20	Toxaphene	1,600,000	BQL
21	PCB 1016	800,000	BQL
22	PCB 1221	800,000	BQL
23	PCB 1232	800,000	BQL
24	PCB 1242	800,000	820,000
25	PCB 1248	800,000	BQL
26	PCB 1254	1,600,000	BQL
27	PCB 1260	1,600,000	BQL
28	Tech. Chlordane	800,000	BQL
29	Endrin aldehyde	160,000	BQL

Industrial & Environmental Analysts, Inc.
P.O. Box 626 • Essex Junction, Vermont 05453 • 802-878-5138

Comments

BQL - BELOW QUANTITATION LIMIT
Quantitation limit elevated due to sample dilution prior to analysis.
Sample diluted due to high concentration of target compounds present.
Target compound concentration adjusted for % moisture.

EPA METHOD 608 : PCB/Pesticides

IEA Sample No. 237300 8
Sample Identification JC08
Date Analyzed 11/10/89 **By** K. Hinshaw

Number	Compound	Quantitation Limit µg/Kg	Concentration µg/Kg
1	alpha - BHC	800	BQL
2	beta - BHC	800	BQL
3	delta - BHC	800	BQL
4	gamma - BHC (Lindane)	800	BQL
5	Heptachlor	800	BQL
6	Aldrin	800	BQL
7	Heptachlor epoxide	800	BQL
8	Endosulfan I	800	BQL
9	Dieldrin	1600	BQL
10	4,4'-DDE	1600	BQL
11	Endrin	1600	BQL
12	Endosulfan II	1600	BQL
13	4,4'-DDD	1600	BQL
14	Endosulfan sulfate	1600	BQL
15	4,4'-DDT	1600	BQL
16	Endrin Ketone	1600	BQL
17	Methoxychlor	8000	BQL
18	alpha-Chlordane	8000	BQL
19	gamma-Chlordane	8000	BQL
20	Toxaphene	16,000	BQL
21	PCB 1016	8000	BQL
22	PCB 1221	8000	BQL
23	PCB 1232	8000	BQL
24	PCB 1242	8000	35,000
25	PCB 1248	8000	BQL
26	PCB 1254	16,000	BQL
27	PCB 1260	16,000	BQL
28	Tech. Chlordane	8000	BQL
29	Endrin aldehyde	1600	BQL

Industrial & Environmental Analysts, Inc.
P.O. Box 626 • Essex Junction, Vermont 05453 • 802-878-5138

Comments

BQL - BELOW QUANTITATION LIMIT
Quantitation limit elevated due to sample dilution prior to analysis.
Sample diluted due to high concentration of target compounds present.
Target compound concentration adjusted for % moisture.

EPA METHOD 608 : PCB/Pesticides

IEA Sample No. 237300 9
Sample Identification JC09
Date Analyzed 11/10/89 **By** K. Hinshaw

Number	Compound	Quantitation Limit µg/Kg	Concentration µg/Kg
1	alpha - BHC	800	BQL
2	beta - BHC	800	BQL
3	delta - BHC	800	BQL
4	gamma - BHC (Lindane)	800	BQL
5	Heptachlor	800	BQL
6	Aldrin	800	BQL
7	Heptachlor epoxide	800	BQL
8	Endosulfan I	800	BQL
9	Dieldrin	1600	BQL
10	4,4'-DDE	1600	BQL
11	Endrin	1600	BQL
12	Endosulfan II	1600	BQL
13	4,4'-DDD	1600	BQL
14	Endosulfan sulfate	1600	BQL
15	4,4'-DDT	1600	BQL
16	Endrin Ketone	1600	BQL
17	Methoxychlor	8000	BQL
18	alpha-Chlordane	8000	BQL
19	gamma-Chlordane	8000	BQL
20	Toxaphene	16,000	BQL
21	PCB 1016	8000	BQL
22	PCB 1221	8000	BQL
23	PCB 1232	8000	BQL
24	PCB 1242	8000	32,000
25	PCB 1248	8000	BQL
26	PCB 1254	16,000	BQL
27	PCB 1260	16,000	BQL
28	Tech. Chlordane	8000	BQL
29	Endrin aldehyde	1600	BQL

Industrial & Environmental Analysts, Inc.
P.O. Box 626 • Essex Junction, Vermont 05453 • 802-878-5138

Comments

BQL - BELOW QUANTITATION LIMIT
Quantitation limit elevated due to sample dilution prior to analysis.
Sample diluted due to high concentration of target compounds present.
Target compound concentration adjusted for % moisture.

EPA METHOD 608 : PCB/Pesticides

IEA Sample No. 237300 10
Sample Identification JC10
Date Analyzed 11/10/89 **By** K. Hinshaw

Number	Compound	Quantitation Limit µg/Kg	Concentration µg/Kg
1	alpha - BHC	800	BQL
2	beta - BHC	800	BQL
3	delta - BHC	800	BQL
4	gamma - BHC (Lindane)	800	BQL
5	Heptachlor	800	BQL
6	Aldrin	800	BQL
7	Heptachlor epoxide	800	BQL
8	Endosulfan I	800	BQL
9	Dieldrin	1600	BQL
10	4,4'-DDE	1600	BQL
11	Endrin	1600	BQL
12	Endosulfan II	1600	BQL
13	4,4'-DDD	1600	BQL
14	Endosulfan sulfate	1600	BQL
15	4,4'-DDT	1600	BQL
16	Endrin Ketone	1600	BQL
17	Methoxychlor	8000	BQL
18	alpha-Chlordane	8000	BQL
19	gamma-Chlordane	8000	BQL
20	Toxaphene	16,000	BQL
21	PCB 1016	8000	BQL
22	PCB 1221	8000	BQL
23	PCB 1232	8000	BQL
24	PCB 1242	8000	28,000
25	PCB 1248	8000	BQL
26	PCB 1254	16,000	BQL
27	PCB 1260	16,000	BQL
28	Tech. Chlordane	8000	BQL
29	Endrin aldehyde	1600	BQL

Industrial & Environmental Analysts, Inc.
P.O. Box 626 • Essex Junction, Vermont 05453 • 802-878-5138

Comments BQL - BELOW QUANTITATION LIMIT

EPA METHOD 608 : PCB/Pesticides

IEA Sample No. 237300 11
Sample Identification JC11
Date Analyzed 11/3/89 **By** K. Honshew

Number	Compound	Quantitation Limit µg/L	Concentration µg/L
1	alpha - BHC	0.05	BQL
2	beta - BHC	0.05	BQL
3	delta - BHC	0.05	BQL
4	gamma - BHC (Lindane)	0.05	BQL
5	Heptachlor	0.05	BQL
6	Aldrin	0.05	BQL
7	Heptachlor epoxide	0.05	BQL
8	Endosulfan I	0.05	BQL
9	Dieldrin	0.10	BQL
10	4,4'-DDE	0.10	BQL
11	Endrin	0.10	BQL
12	Endosulfan II	0.10	BQL
13	4,4'-DDD	0.10	BQL
14	Endosulfan sulfate	0.10	BQL
15	4,4'-DDT	0.10	BQL
16	Endrin Ketone	0.10	BQL
17	Methoxychlor	0.50	BQL
18	alpha-Chlordane	0.50	BQL
19	gamma-Chlordane	0.50	BQL
20	Toxaphene	1.0	BQL
21	PCB 1016	0.50	BQL
22	PCB 1221	0.50	BQL
23	PCB 1232	0.50	BQL
24	PCB 1242	0.50	BQL
25	PCB 1248	0.50	BQL
26	PCB 1254	1.0	BQL
27	PCB 1260	1.0	BQL
28	Tech. Chlordane	0.50	BQL
29	Endrin aldehyde	0.10	BQL

Offices and laboratories located in: Essex Junction, Vermont
Research Triangle Park, North Carolina

Industrial & Environmental Analysts, Inc.
P.O. Box 626 • Essex Junction, Vermont 05453 • 802-878-5138

Comments

BQL - BELOW QUANTITATION LIMIT
Quantitation limit elevated due to sample dilution prior to analysis.
Sample diluted due to high concentration of target compounds present.
This sample had a large oily layer which was extracted with the water layer.
The high level of AR1242 would most likely come from the oily layer.

EPA METHOD 608 : PCB/Pesticides

IEA Sample No. 237300 12
Sample Identification JC12
Date Analyzed 11/4/89 **By** K. Honshaw

Number	Compound	Quantitation Limit µg/L	Concentration µg/L
1	alpha - BHC	500	BQL
2	beta - BHC	500	BQL
3	delta - BHC	500	BQL
4	gamma - BHC (Lindane)	500	BQL
5	Heptachlor	500	BQL
6	Aldrin	500	BQL
7	Heptachlor epoxide	500	BQL
8	Endosulfan I	500	BQL
9	Dieldrin	1000	BQL
10	4,4'-DDE	1000	BQL
11	Endrin	1000	BQL
12	Endosulfan II	1000	BQL
13	4,4'-DDD	1000	BQL
14	Endosulfan sulfate	1000	BQL
15	4,4'-DDT	1000	BQL
16	Endrin Ketone	1000	BQL
17	Methoxychlor	5000	BQL
18	alpha-Chlordane	5000	BQL
19	gamma-Chlordane	5000	BQL
20	Toxaphene	10,000	BQL
21	PCB 1016	5000	BQL
22	PCB 1221	5000	BQL
23	PCB 1232	5000	BQL
24	PCB 1242	5000	690,000
25	PCB 1248	5000	BQL
26	PCB 1254	10,000	BQL
27	PCB 1260	10,000	BQL
28	Tech. Chlordane	5000	BQL
29	Endrin aldehyde	1000	BQL

Industrial & Environmental Analysts, Inc.
P.O. Box 626 • Essex Junction, Vermont 05453 • 802-878-5138

Comments

BQL - BELOW QUANTITATION LIMIT
Quantitation limit elevated due to sample dilution prior to analysis.
Sample diluted due to high concentration of target compounds present.
Target compound concentration adjusted for % moisture.
Quantitation limit adjusted for % moisture

EPA METHOD 608 : PCB/Pesticides

IEA Sample No. 237300 13
Sample Identification JC13
Date Analyzed 11/10/89 **By** K. Hinshaw

Number	Compound	Quantitation Limit µg/Kg	Concentration µg/Kg
1	alpha - BHC	100,000	BQL
2	beta - BHC	100,000	BQL
3	delta - BHC	100,000	BQL
4	gamma - BHC (Lindane)	100,000	BQL
5	Heptachlor	100,000	BQL
6	Aldrin	100,000	BQL
7	Heptachlor epoxide	100,000	BQL
8	Endosulfan I	100,000	BQL
9	Dieldrin	200,000	BQL
10	4,4'-DDE	200,000	BQL
11	Endrin	200,000	BQL
12	Endosulfan II	200,000	BQL
13	4,4'-DDD	200,000	BQL
14	Endosulfan sulfate	200,000	BQL
15	4,4'-DDT	200,000	BQL
16	Endrin Ketone	200,000	BQL
17	Methoxychlor	1,000,000	BQL
18	alpha-Chlordane	1,000,000	BQL
19	gamma-Chlordane	1,000,000	BQL
20	Toxaphene	2,000,000	BQL
21	PCB 1016	1,000,000	BQL
22	PCB 1221	1,000,000	BQL
23	PCB 1232	1,000,000	BQL
24	PCB 1242	1,000,000	4,900,000
25	PCB 1248	1,000,000	BQL
26	PCB 1254	2,000,000	BQL
27	PCB 1260	2,000,000	BQL
28	Tech. Chlordane	1,000,000	BQL
29	Endrin aldehyde	200,000	BQL

Industrial & Environmental Analysts, Inc.
P.O. Box 626 • Essex Junction, Vermont 05453 • 802-878-5138

Comments

BQL - BELOW QUANTITATION LIMIT
Quantitation limit elevated due to sample dilution prior to analysis.
Sample diluted due to high concentration of target compounds present.
Target compound concentration adjusted for % moisture.
Quantitation limit adjusted for % moisture

EPA METHOD 608 : PCB/Pesticides

IEA Sample No. 237300 14
Sample Identification JC14
Date Analyzed 11/10/89 **By** K. Hinshaw

Number	Compound	Quantitation Limit µg/Kg	Concentration µg/Kg
1	alpha - BHC	2300	BQL
2	beta - BHC	2300	BQL
3	delta - BHC	2300	BQL
4	gamma - BHC (Lindane)	2300	BQL
5	Heptachlor	2300	BQL
6	Aldrin	2300	BQL
7	Heptachlor epoxide	2300	BQL
8	Endosulfan I	2300	BQL
9	Dieldrin	4600	BQL
10	4,4'-DDE	4600	BQL
11	Endrin	4600	BQL
12	Endosulfan II	4600	BQL
13	4,4'-DDD	4600	BQL
14	Endosulfan sulfate	4600	BQL
15	4,4'-DDT	4600	BQL
16	Endrin Ketone	4600	BQL
17	Methoxychlor	23,000	BQL
18	alpha-Chlordane	23,000	BQL
19	gamma-Chlordane	23,000	BQL
20	Toxaphene	46,000	BQL
21	PCB 1016	23,000	BQL
22	PCB 1221	23,000	BQL
23	PCB 1232	23,000	BQL
24	PCB 1242	23,000	98,000
25	PCB 1248	23,000	BQL
26	PCB 1254	46,000	BQL
27	PCB 1260	46,000	BQL
28	Tech. Chlordane	23,000	BQL
29	Endrin aldehyde	4600	BQL

Industrial & Environmental Analysts, Inc.
P.O. Box 626 • Essex Junction, Vermont 05453 • 802-878-5138

Comments

BQL - BELOW QUANTITATION LIMIT
Quantitation limit elevated due to sample dilution prior to analysis.
Sample diluted due to high concentration of target compounds present.
Target compound concentration adjusted for % moisture.

EPA METHOD 608 : PCB/Pesticides

IEA Sample No. 237300 15
Sample Identification JC15
Date Analyzed 11/10/89 **By** K. Hinshaw

Number	Compound	Quantitation Limit µg/Kg	Concentration µg/Kg
1	alpha - BHC	160	BQL
2	beta - BHC	160	BQL
3	delta - BHC	160	BQL
4	gamma - BHC (Lindane)	160	BQL
5	Heptachlor	160	BQL
6	Aldrin	160	BQL
7	Heptachlor epoxide	160	BQL
8	Endosulfan I	160	BQL
9	Dieldrin	320	BQL
10	4,4'-DDE	320	BQL
11	Endrin	320	BQL
12	Endosulfan II	320	BQL
13	4,4'-DDD	320	BQL
14	Endosulfan sulfate	320	BQL
15	4,4'-DDT	320	BQL
16	Endrin Ketone	320	BQL
17	Methoxychlor	1600	BQL
18	alpha-Chlordane	1600	BQL
19	gamma-Chlordane	1600	BQL
20	Toxaphene	3200	BQL
21	PCB 1016	1600	BQL
22	PCB 1221	1600	BQL
23	PCB 1232	1600	BQL
24	PCB 1242	1600	6700
25	PCB 1248	1600	BQL
26	PCB 1254	3200	BQL
27	PCB 1260	3200	BQL
28	Tech. Chlordane	1600	BQL
29	Endrin aldehyde	320	BQL

Industrial & Environmental Analysts, Inc.
P.O. Box 626 • Essex Junction, Vermont 05453 • 802-878-5138

Comments BQL - BELOW QUANTITATION LIMIT

EPA METHOD 608 : PCB/Pesticides

IEA Sample No. 237300 16
Sample Identification JC16
Date Analyzed 11/3/89 **By** K. Honshaw

Number	Compound	Quantitation Limit µg/L	Concentration µg/L
1	alpha - BHC	0.05	BQL
2	beta - BHC	0.05	BQL
3	delta - BHC	0.05	BQL
4	gamma - BHC (Lindane)	0.05	BQL
5	Heptachlor	0.05	BQL
6	Aldrin	0.05	BQL
7	Heptachlor epoxide	0.05	BQL
8	Endosulfan I	0.05	BQL
9	Dieldrin	0.10	BQL
10	4,4'-DDE	0.10	BQL
11	Endrin	0.10	BQL
12	Endosulfan II	0.10	BQL
13	4,4'-DDD	0.10	BQL
14	Endosulfan sulfate	0.10	BQL
15	4,4'-DDT	0.10	BQL
16	Endrin Ketone	0.10	BQL
17	Methoxychlor	0.50	BQL
18	alpha-Chlordane	0.50	BQL
19	gamma-Chlordane	0.50	BQL
20	Toxaphene	1.0	BQL
21	PCB 1016	0.50	BQL
22	PCB 1221	0.50	BQL
23	PCB 1232	0.50	BQL
24	PCB 1242	0.50	BQL
25	PCB 1248	0.50	BQL
26	PCB 1254	1.0	BQL
27	PCB 1260	1.0	BQL
28	Tech. Chlordane	0.50	BQL
29	Endrin aldehyde	0.10	BQL

Industrial & Environmental Analysts, Inc.
P.O. Box 626 • Essex Junction, Vermont 05453 • 802-878-5138

PHTHALATES
EPA METHOD 606 COMPOUNDS

Sample Identification: 237300-2

Date Extracted: 10/31/89

Date Analyzed: 11/9/89 By: Rich

Number	Compound	Quantitation Limit (µg/Kg)	Results Concentration (µg/Kg)
1	Dimethylphthalate	350,000	BQL
2	Diethylphthalate	350,000	BQL
3	Di-n-butyl phthalate	350,000	BQL
4	Benzyl butyl phthalate	350,000	BQL
5	bis (2-Ethylhexyl) phthalate	350,000	1,500,000
6	Di-n-octylphthalate	350,000	BQL

Comments:

BQL = Below Quantitation Limit
Quantitation limit elevated due to extract dilution prior to analysis.
Extract diluted due to high concentration of base/neutral target compounds present.
Quantitation limit adjusted for % moisture.

Industrial & Environmental Analysts, Inc.
P.O. Box 626 • Essex Junction, Vermont 05453 • 802-878-5138

PHTHALATES
EPA METHOD 606 COMPOUNDS

Sample Identification: 237300-3

Date Extracted: 10/31/89

Date Analyzed: 11/9/89 By: Rich

Number	Compound	Quantitation Limit (µg/Kg)	Results Concentration (µg/Kg)
1	Dimethylphthalate	100,000	BQL
2	Diethylphthalate	100,000	BQL
3	Di-n-butyl phthalate	100,000	BQL
4	Benzyl butyl phthalate	100,000	BQL
5	bis (2-Ethylhexyl) phthalate	100,000	180,000
6	Di-n-octylphthalate	100,000	BQL

Comments:

BQL = Below Quantitation Limit
Quantitation limit elevated due to extract dilution prior to analysis.
Extract diluted due to high concentration of base/neutral target compounds present.
Quantitation limit adjusted for % moisture.

Industrial & Environmental Analysts, Inc.
P.O. Box 626 • Essex Junction, Vermont 05453 • 802-878-5138

PHTHALATES
EPA METHOD 606 COMPOUNDS

Sample Identification: 237300-4

Date Extracted: 10/31/89

Date Analyzed: 11/9/89 By: Rich

Number	Compound	Quantitation Limit (µg/Kg)	Results Concentration (µg/Kg)
1	Dimethylphthalate	250,000	BQL
2	Diethylphthalate	250,000	BQL
3	Di-n-butyl phthalate	250,000	BQL
4	Benzyl butyl phthalate	250,000	BQL
5	bis (2-Ethylhexyl) phthalate	250,000	BQL
6	Di-n-octylphthalate	250,000	BQL

Comments:

BQL = Below Quantitation Limit
Quantitation limit elevated due to sample dilution prior to analysis.
Sample diluted due to presence of non-target compounds.
Quantitation limit adjusted for % moisture.

Industrial & Environmental Analysts, Inc.
P.O. Box 626 • Essex Junction, Vermont 05453 • 802-878-5138

PHTHALATES
EPA METHOD 606 COMPOUNDS

Sample Identification: 237300-5

Date Extracted: 10/31/89

Date Analyzed: 11/8/89 By: Rich

Number	Compound	Quantitation Limit (µg/L)	Results Concentration (µg/L)
1	Dimethylphthalate	100	BQL
2	Diethylphthalate	100	BQL
3	Di-n-butyl phthalate	100	BQL
4	Benzyl butyl phthalate	100	BQL
5	bis (2-Ethylhexyl) phthalate	100	BQL
6	Di-n-octylphthalate	100	BQL

Comments:

BQL = Below Quantitation Limit
Quantitation limit elevated due to sample dilution prior to analysis.
Sample diluted due to presence of non-target compounds.
Quantitation limit adjusted for % moisture.

Industrial & Environmental Analysts, Inc.
P.O. Box 626 • Essex Junction, Vermont 05453 • 802-878-5138

PHTHALATES
EPA METHOD 606 COMPOUNDS

Sample Identification: 237300-7

Date Extracted: 10/31/89

Date Analyzed: 11/9/89 By: Rich

Number	Compound	Quantitation Limit (µg/Kg)	Results Concentration (µg/Kg)
1	Dimethylphthalate	350,000	BQL
2	Diethylphthalate	350,000	660,000
3	Di-n-butyl phthalate	350,000	BQL
4	Benzyl butyl phthalate	350,000	BQL
5	bis (2-Ethylhexyl) phthalate	350,000	30,000,000
6	Di-n-octylphthalate	350,000	BQL

Comments:

BQL = Below Quantitation Limit
Quantitation limit elevated due to extract dilution prior to analysis.
Extract diluted due to high concentration of base/neutral target compounds present.
Quantitation limit adjusted for % moisture.
Concentration must be verified by reanalysis.

Industrial & Environmental Analysts, Inc.
P.O. Box 626 • Essex Junction, Vermont 05453 • 802-878-5138

PHTHALATES
EPA METHOD 606 COMPOUNDS

Sample Identification: 237300-8

Date Extracted: 10/31/89

Date Analyzed: 11/9/89 By: Rich

Number	Compound	Quantitation Limit (µg/kg)	Results Concentration (µg/kg)
1	Dimethylphthalate	1500	BQL
2	Diethylphthalate	1500	BQL
3	Di-n-butyl phthalate	1500	2000
4	Benzyl butyl phthalate	1500	BQL
5	bis (2-Ethylhexyl) phthalate	1500	2000
6	Di-n-octylphthalate	1500	BQL

Comments:

BQL = Below Quantitation Limit
Quantitation limit elevated due to extract dilution prior to analysis.
Extract diluted due to high concentration of base/neutral target compounds present.
Quantitation limit adjusted for % moisture.

Industrial & Environmental Analysts, Inc.
P.O. Box 626 • Essex Junction, Vermont 05453 • 802-878-5138

PHTHALATES
EPA METHOD 606 COMPOUNDS

Sample Identification: 237300-9

Date Extracted: 10/31/89

Date Analyzed: 11/09/89 By: Rich

Number	Compound	Quantitation Limit (µg/kg)	Results Concentration (µg/kg)
1	Dimethylphthalate	1,800,000	BQL
2	Diethylphthalate	1,800,000	BQL
3	Di-n-butyl phthalate	1,800,000	BQL
4	Benzyl butyl phthalate	1,800,000	BQL
5	bis (2-Ethylhexyl) phthalate	1,800,000	20,000,000
6	Di-n-octylphthalate	1,800,000	BQL

Comments:

BQL = Below Quantitation Limit
Quantitation limit elevated due to extract dilution prior to analysis.
Extract diluted due to high concentration of base/neutral target compounds.
Quantitation limit adjusted for % moisture.

Industrial & Environmental Analysts, Inc.
P.O. Box 626 • Essex Junction, Vermont 05453 • 802-878-5138

PHTHALATES
EPA METHOD 606 COMPOUNDS

Sample Identification: 237300-10

Date Extracted: 10/31/89

Date Analyzed: 11/09/89 By: Rich

Number	Compound	Quantitation Limit (µg/kg)	Results Concentration (µg/kg)
1	Dimethylphthalate	180,000	BQL
2	Diethylphthalate	180,000	BQL
3	Di-n-butyl phthalate	180,000	BQL
4	Benzyl butyl phthalate	180,000	BQL
5	bis (2-Ethylhexyl) phthalate	180,000	3,000,000
6	Di-n-octylphthalate	180,000	BQL

Comments:

BQL = Below Quantitation Limit
Quantitation limit elevated due to extract dilution prior to analysis.
Extract diluted due to high concentration of base/neutral target compounds.
Quantitation limit adjusted for % moisture.

Industrial & Environmental Analysts, Inc.
P.O. Box 626 • Essex Junction, Vermont 05453 • 802-878-5138

PHTHALATES
EPA METHOD 606 COMPOUNDS

Sample Identification: 237300-11

Date Extracted: 11/01/89

Date Analyzed: 11/08/89 By: Rich

Number	Compound	Quantitation Limit (µg/L)	Results Concentration (µg/L)
1	Dimethylphthalate	10	BQL
2	Diethylphthalate	10	BQL
3	Di-n-butyl phthalate	10	BQL
4	Benzyl butyl phthalate	10	BQL
5	bis (2-Ethylhexyl) phthalate	10	BQL
6	Di-n-octylphthalate	10	BQL

Comments:

BQL = Below Quantitation Limit
Quantitation limit adjusted for % moisture.

Industrial & Environmental Analysts, Inc.
P.O. Box 626 • Essex Junction, Vermont 05453 • 802-878-5138

PHTHALATES
EPA METHOD 606 COMPOUNDS

Sample Identification: 237300-12

Date Extracted: 10/31/89

Date Analyzed: 11/9/89 By: Rich

Number	Compound	Quantitation Limit (µg/kg)	Results Concentration (µg/kg)
1	Dimethylphthalate	3500	BQL
2	Diethylphthalate	3500	BQL
3	Di-n-butyl phthalate	3500	BQL
4	Benzyl butyl phthalate	3500	BQL
5	bis (2-Ethylhexyl) phthalate	3500	15,000
6	Di-n-octylphthalate	3500	BQL

Comments:

BQL = Below Quantitation Limit
Quantitation limit elevated due to extract dilution prior to analysis.
Extract diluted due to high concentration of base/neutral target compounds present.
Quantitation limit adjusted for % moisture.

Industrial & Environmental Analysts, Inc.
P.O. Box 626 • Essex Junction, Vermont 05453 • 802-878-5138

PHTHALATES
EPA METHOD 606 COMPOUNDS

Sample Identification: 237300-13

Date Extracted: 10/31/89

Date Analyzed: 11/09/89 By: Rich

Number	Compound	Quantitation Limit (µg/kg)	Results Concentration (µg/kg)
1	Dimethylphthalate	1,000,000	BQL
2	Diethylphthalate	1,000,000	BQL
3	Di-n-butyl phthalate	1,000,000	BQL
4	Benzyl butyl phthalate	1,000,000	BQL
5	bis (2-Ethylhexyl) phthalate	1,000,000	36,000,000
6	Di-n-octylphthalate	1,000,000	BQL

Comments:

BQL = Below Quantitation Limit
Quantitation limit elevated due to extract dilution prior to analysis.
Extract diluted due to high concentration of base/neutral target compounds.
Quantitation limit adjusted for % moisture.

Concentration must be confirmed by reanalysis.

Industrial & Environmental Analysts, Inc.
P.O. Box 626 • Essex Junction, Vermont 05453 • 802-878-5138

PHTHALATES
EPA METHOD 606 COMPOUNDS

NOV 17 1989

Sample Identification: 237300-15

Date Extracted: 10/31/89

Date Analyzed: 11/09/89 By: Rich

Number	Compound	Quantitation Limit (µg/kg)	Results Concentration (µg/kg)
1	Dimethylphthalate	3500	BQL
2	Diethylphthalate	3500	BQL
3	Di-n-butyl phthalate	3500	BQL
4	Benzyl butyl phthalate	3500	BQL
5	bis (2-Ethylhexyl) phthalate	3500	15,000
6	Di-n-octylphthalate	3500	BQL

Comments:

BQL = Below Quantitation Limit
Quantitation limit elevated due to extract dilution prior to analysis.
Extract diluted due to high concentration of base/neutral target compounds.
Quantitation limit adjusted for % moisture.

Industrial & Environmental Analysts, Inc.
P.O. Box 626 • Essex Junction, Vermont 05453 • 802-878-5138

PHTHALATES
EPA METHOD 606 COMPOUNDS

Sample Identification: 237300-16

Date Extracted: 11/01/89

Date Analyzed: 11/08/89 By: Rich

Number	Compound	Quantitation Limit (µg/L)	Results Concentration (µg/L)
1	Dimethylphthalate	10	BQL
2	Diethylphthalate	10	BQL
3	Di-n-butyl phthalate	10	BQL
4	Benzyl butyl phthalate	10	BQL
5	bis (2-Ethylhexyl) phthalate	10	BQL
6	Di-n-octylphthalate	10	BQL

Comments:

BQL = Below Quantitation Limit
Quantitation limit adjusted for % moisture.

Industrial & Environmental Analysts, Inc.
P.O. Box 626 • Essex Junction, Vermont 05453 • 802-878-5138

EPA Method 601:
Purgeable Halocarbons

IEA Sample No.: 237300 1
Sample Identification: JC01
Date Collected: 10/25/89
Date Analyzed: 11/9/89 By: Lewis

Number	Compound	Quantitation Limit µg/Kg	Results Concentration µg/Kg
1	Bromodichloromethane	60	BQL
2	Bromoform	60	BQL
3	Bromomethane	60	BQL
4	Carbon tetrachloride	60	BQL
5	Chlorobenzene	60	BQL
6	Chloroethane	60	BQL
7	2-Chloroethylvinyl ether	60	BQL
8	Chloroform	60	BQL
9	Chloromethane	60	BQL
10	Dibromochloromethane	60	BQL
11	1,2-Dichlorobenzene	60	BQL
12	1,3-Dichlorobenzene	60	BQL
13	1,4-Dichlorobenzene	60	BQL
14	Dichlorodifluoromethane	60	BQL
15	1,1-Dichloroethane	60	BQL
16	1,2-Dichloroethane	60	BQL
17	1,1-Dichloroethene	60	BQL
18	trans-1,2-Dichloroethene	60	BQL
19	1,2-Dichloropropane	60	BQL
20	cis-1,3-Dichloropropene	60	BQL
21	trans-1,3-Dichloropropene	60	BQL
22	Methylene chloride	60	220
23	1,1,2,2-Tetrachloroethane	60	BQL
24	1,1,1-Trichloroethane	60	180
25	1,1,2-Trichloroethane	60	BQL
26	Tetrachloroethene	60	BQL
27	Trichlorofluoromethane	60	BQL
28	Vinyl Chloride	60	BQL
29	Trichloroethene	60	4300

Comments BQL - BELOW QUANTITATION LIMIT
Quantitation limit elevated due to sample dilution prior to analysis.
Sample diluted due to high concentration of target compounds present.
Please note values are reported as dry weight.

Industrial & Environmental Analysts, Inc.
P.O. Box 626 • Essex Junction, Vermont 05453 • 802-878-5138

EPA Method 601:
Purgeable Halocarbons

IEA Sample No.: 237300 2
Sample Identification: JC02
Date Collected: 10/25/89
Date Analyzed: 11/8/89 By: Hendricks

Number	Compound	Quantitation Limit µg/Kg	Results Concentration µg/Kg
1	Bromodichloromethane	1.1	BQL
2	Bromoform	1.1	BQL
3	Bromomethane	1.1	BQL
4	Carbon tetrachloride	1.1	BQL
5	Chlorobenzene	1.1	6.6
6	Chloroethane	1.1	BQL
7	2-Chloroethylvinyl ether	1.1	BQL
8	Chloroform	1.1	BQL
9	Chloromethane	1.1	BQL
10	Dibromochloromethane	1.1	BQL
11	1,2-Dichlorobenzene	1.1	BQL
12	1,3-Dichlorobenzene	1.1	BQL
13	1,4-Dichlorobenzene	1.1	BQL
14	Dichlorodifluoromethane	1.1	BQL
15	1,1-Dichloroethane	1.1	BQL
16	1,2-Dichloroethane	1.1	BQL
17	1,1-Dichloroethene	1.1	8.8
18	trans-1,2-Dichloroethene	1.1	BQL
19	1,2-Dichloropropane	1.1	BQL
20	cis-1,3-Dichloropropene	1.1	BQL
21	trans-1,3-Dichloropropene	1.1	BQL
22	Methylene chloride	1.1	BQL
23	1,1,2,2-Tetrachloroethane	1.1	BQL
24	1,1,1-Trichloroethane	1.1	12
25	1,1,2-Trichloroethane	1.1	BQL
26	Tetrachloroethene	1.1	BQL
27	Trichlorofluoromethane	1.1	BQL
28	Vinyl Chloride	1.1	BQL
29	Trichloroethene	1.1	36

Comments BQL - BELOW QUANTITATION LIMIT
Please note values are reported as dry weight.

Industrial & Environmental Analysts, Inc.
P.O. Box 626 • Essex Junction, Vermont 05453 • 802-878-5138

EPA Method 601:
Purgeable Halocarbons

IEA Sample No.: 237300 3
Sample Identification: JC03
Date Collected: 10/25/89
Date Analyzed: 11/9/89 By: Lewis

Number	Compound	Quantitation Limit µg/Kg	Results Concentration µg/Kg
1	Bromodichloromethane	5.6	BQL
2	Bromoform	5.6	BQL
3	Bromomethane	5.6	BQL
4	Carbon tetrachloride	5.6	BQL
5	Chlorobenzene	5.6	BQL
6	Chloroethane	5.6	BQL
7	2-Chloroethylvinyl ether	5.6	BQL
8	Chloroform	5.6	10
9	Chloromethane	5.6	BQL
10	Dibromochloromethane	5.6	BQL
11	1,2-Dichlorobenzene	5.6	BQL
12	1,3-Dichlorobenzene	5.6	BQL
13	1,4-Dichlorobenzene	5.6	BQL
14	Dichlorodifluoromethane	5.6	BQL
15	1,1-Dichloroethane	5.6	BQL
16	1,2-Dichloroethane	5.6	BQL
17	1,1-Dichloroethene	5.6	BQL
18	trans-1,2-Dichloroethene	5.6	BQL
19	1,2-Dichloropropane	5.6	BQL
20	cis-1,3-Dichloropropene	5.6	BQL
21	trans-1,3-Dichloropropene	5.6	BQL
22	Methylene chloride	5.6	BQL
23	1,1,2,2-Tetrachloroethane	5.6	BQL
24	1,1,1-Trichloroethane	5.6	BQL
25	1,1,2-Trichloroethane	5.6	BQL
26	Tetrachloroethene	5.6	BQL
27	Trichlorofluoromethane	5.6	BQL
28	Vinyl Chloride	5.6	BQL
29	Trichloroethene	5.6	BQL

Comments BQL - BELOW QUANTITATION LIMIT
Please note values are reported as dry weight.
Quantitation limit elevated due to sample dilution prior to analysis.
Sample diluted based on screening data. Protocol time ran out before sample could be rerun.

Industrial & Environmental Analysts, Inc.
P.O. Box 626 • Essex Junction, Vermont 05453 • 802-878-5138

EPA Method 601:
Purgeable Halocarbons

IEA Sample No.: 237300 4
Sample Identification: JC04
Date Collected: 10/25/89
Date Analyzed: 11/8/89 By: Lewis

Number	Compound	Quantitation Limit µg/Kg	Results Concentration µg/Kg
1	Bromodichloromethane	62	BQL
2	Bromoform	62	BQL
3	Bromomethane	62	BQL
4	Carbon tetrachloride	62	BQL
5	Chlorobenzene	62	BQL
6	Chloroethane	62	BQL
7	2-Chloroethylvinyl ether	62	BQL
8	Chloroform	62	BQL
9	Chloromethane	62	BQL
10	Dibromochloromethane	62	BQL
11	1,2-Dichlorobenzene	62	BQL
12	1,3-Dichlorobenzene	62	BQL
13	1,4-Dichlorobenzene	62	BQL
14	Dichlorodifluoromethane	62	BQL
15	1,1-Dichloroethane	62	BQL
16	1,2-Dichloroethane	62	BQL
17	1,1-Dichloroethene	62	BQL
18	trans-1,2-Dichloroethene	62	BQL
19	1,2-Dichloropropane	62	BQL
20	cis-1,3-Dichloropropene	62	BQL
21	trans-1,3-Dichloropropene	62	BQL
22	Methylene chloride	62	BQL
23	1,1,2,2-Tetrachloroethane	62	BQL
24	1,1,1-Trichloroethane	62	BQL
25	1,1,2-Trichloroethane	62	BQL
26	Tetrachloroethene	62	BQL
27	Trichlorofluoromethane	62	BQL
28	Vinyl Chloride	62	BQL
29	Trichloroethene	62	BQL

Comments BQL - BELOW QUANTITATION LIMIT
Please note values are reported as dry weight.
Quantitation limit elevated due to sample dilution prior to analysis.
Sample diluted based on screening data. Protocol time ran out before sample could be rerun. When analyzed undiluted 10 hours out of protocol - Trichlorofluoromethane = 2.4 µg/Kg and Chloroform = 2.4 µg/Kg.

Industrial & Environmental Analysts, Inc.
P.O. Box 626 • Essex Junction, Vermont 05453 • 802-878-5138

EPA Method 601:
Purgeable Halocarbons

IEA Sample No.: 237300 8
Sample Identification: JC08
Date Collected: 10/25/89
Date Analyzed: 11/8/89 By: Hendricks

Number	Compound	Quantitation Limit µg/Kg	Results Concentration µg/Kg
1	Bromodichloromethane	1.0	BQL
2	Bromoform	1.0	BQL
3	Bromomethane	1.0	BQL
4	Carbon tetrachloride	1.0	BQL
5	Chlorobenzene	1.0	BQL
6	Chloroethane	1.0	BQL
7	2-Chloroethylvinyl ether	1.0	BQL
8	Chloroform	1.0	BQL
9	Chloromethane	1.0	BQL
10	Dibromochloromethane	1.0	BQL
11	1,2-Dichlorobenzene	1.0	BQL
12	1,3-Dichlorobenzene	1.0	BQL
13	1,4-Dichlorobenzene	1.0	BQL
14	Dichlorodifluoromethane	1.0	BQL
15	1,1-Dichloroethane	1.0	BQL
16	1,2-Dichloroethane	1.0	BQL
17	1,1-Dichloroethene	1.0	BQL
18	trans-1,2-Dichloroethene	1.0	BQL
19	1,2-Dichloropropane	1.0	BQL
20	cis-1,3-Dichloropropene	1.0	BQL
21	trans-1,3-Dichloropropene	1.0	BQL
22	Methylene chloride	1.0	BQL
23	1,1,2,2-Tetrachloroethane	1.0	BQL
24	1,1,1-Trichloroethane	1.0	BQL
25	1,1,2-Trichloroethane	1.0	BQL
26	Tetrachloroethene	1.0	BQL
27	Trichlorofluoromethane	1.0	BQL
28	Vinyl Chloride	1.0	BQL
29	Trichloroethene	1.0	BQL

Comments BQL - BELOW QUANTITATION LIMIT
Please note values are reported as dry weight.

Industrial & Environmental Analysts, Inc.
P.O. Box 626 • Essex Junction, Vermont 05453 • 802-878-5138

EPA Method 601:
Purgeable Halocarbons

IEA Sample No.: 237300 5
Sample Identification: JC05
Date Collected: 10/25/89
Date Analyzed: 11/6/89 By: CEB

Number	Compound	Quantitation Limit µg/L	Results Concentration µg/L
1	Bromodichloromethane	1.0	BQL
2	Bromoform	1.0	BQL
3	Bromomethane	1.0	BQL
4	Carbon tetrachloride	1.0	BQL
5	Chlorobenzene	1.0	BQL
6	Chloroethane	1.0	BQL
7	2-Chloroethylvinyl ether	1.0	BQL
8	Chloroform	1.0	1.6
9	Chloromethane	1.0	BQL
10	Dibromochloromethane	1.0	BQL
11	1,2-Dichlorobenzene	1.0	BQL
12	1,3-Dichlorobenzene	1.0	BQL
13	1,4-Dichlorobenzene	1.0	BQL
14	Dichlorodifluoromethane	1.0	BQL
15	1,1-Dichloroethane	1.0	BQL
16	1,2-Dichloroethane	1.0	BQL
17	1,1-Dichloroethene	1.0	BQL
18	trans-1,2-Dichloroethene	1.0	BQL
19	1,2-Dichloropropane	1.0	BQL
20	cis-1,3-Dichloropropene	1.0	BQL
21	trans-1,3-Dichloropropene	1.0	BQL
22	Methylene chloride	1.0	BQL
23	1,1,2,2-Tetrachloroethane	1.0	BQL
24	1,1,1-Trichloroethane	1.0	BQL
25	1,1,2-Trichloroethane	1.0	BQL
26	Tetrachloroethene	1.0	BQL
27	Trichlorofluoromethane	1.0	BQL
28	Vinyl Chloride	1.0	BQL
29	Trichloroethene	1.0	BQL

Comments BQL - BELOW QUANTITATION LIMIT
Trichlorotriflouroethane - 1.1 µg/L

Industrial & Environmental Analysts, Inc.
P.O. Box 626 • Essex Junction, Vermont 05453 • 802-878-5138

EPA Method 601:
Purgeable Halocarbons

IEA Sample No.: 237300 6
Sample Identification: JC06
Date Collected: 10/25/89
Date Analyzed: 11/8/89 By: Hendricks

Number	Compound	Quantitation Limit µg/Kg	Results Concentration µg/Kg
1	Bromodichloromethane	140	BQL
2	Bromoform	140	BQL
3	Bromomethane	140	BQL
4	Carbon tetrachloride	140	BQL
5	Chlorobenzene	140	BQL
6	Chloroethane	140	BQL
7	2-Chloroethylvinyl ether	140	BQL
8	Chloroform	140	BQL
9	Chloromethane	140	BQL
10	Dibromochloromethane	140	BQL
11	1,2-Dichlorobenzene	140	BQL
12	1,3-Dichlorobenzene	140	BQL
13	1,4-Dichlorobenzene	140	BQL
14	Dichlorodifluoromethane	140	BQL
15	1,1-Dichloroethane	140	BQL
16	1,2-Dichloroethane	140	BQL
17	1,1-Dichloroethene	140	BQL
18	trans-1,2-Dichloroethene	140	150
19	1,2-Dichloropropane	140	BQL
20	cis-1,3-Dichloropropene	140	BQL
21	trans-1,3-Dichloropropene	140	BQL
22	Methylene chloride	140	BQL
23	1,1,2,2-Tetrachloroethane	140	BQL
24	1,1,1-Trichloroethane	140	BQL
25	1,1,2-Trichloroethane	140	BQL
26	Tetrachloroethene	140	BQL
27	Trichlorofluoromethane	140	BQL
28	Vinyl Chloride	140	BQL
29	Trichloroethene	140	BQL

Comments BQL - BELOW QUANTITATION LIMIT
Quantitation limit elevated due to sample dilution prior to analysis.
Sample diluted due to presence of non-target compounds.
Please note values are reported as dry weight.

Industrial & Environmental Analysts, Inc.
P.O. Box 626 • Essex Junction, Vermont 05453 • 802-878-5138

EPA Method 601:
Purgeable Halocarbons

IEA Sample No.: 237300 7
Sample Identification: JC07
Date Collected: 10/25/89
Date Analyzed: 11/10/89 By: Lewis

Number	Compound	Quantitation Limit µg/Kg	Results Concentration µg/Kg
1	Bromodichloromethane	1.1	BQL
2	Bromoform	1.1	BQL
3	Bromomethane	1.1	BQL
4	Carbon tetrachloride	1.1	BQL
5	Chlorobenzene	1.1	3.3
6	Chloroethane	1.1	BQL
7	2-Chloroethylvinyl ether	1.1	BQL
8	Chloroform	1.1	3.3
9	Chloromethane	1.1	BQL
10	Dibromochloromethane	1.1	BQL
11	1,2-Dichlorobenzene	1.1	BQL
12	1,3-Dichlorobenzene	1.1	BQL
13	1,4-Dichlorobenzene	1.1	BQL
14	Dichlorodifluoromethane	1.1	BQL
15	1,1-Dichloroethane	1.1	BQL
16	1,2-Dichloroethane	1.1	BQL
17	1,1-Dichloroethene	1.1	BQL
18	trans-1,2-Dichloroethene	1.1	BQL
19	1,2-Dichloropropane	1.1	BQL
20	cis-1,3-Dichloropropene	1.1	BQL
21	trans-1,3-Dichloropropene	1.1	BQL
22	Methylene chloride	1.1	BQL
23	1,1,2,2-Tetrachloroethane	1.1	BQL
24	1,1,1-Trichloroethane	1.1	BQL
25	1,1,2-Trichloroethane	1.1	BQL
26	Tetrachloroethene	1.1	BQL
27	Trichlorofluoromethane	1.1	BQL
28	Vinyl Chloride	1.1	BQL
29	Trichloroethene	1.1	2.2

Comments BQL - BELOW QUANTITATION LIMIT
Low surrogate recovery. Confirmed by second analysis.
Please note values are reported as dry weight.

Industrial & Environmental Analysts, Inc.
P.O. Box 626 • Essex Junction, Vermont 05453 • 802-878-5138

EPA Method 601:
Purgeable Halocarbons

IEA Sample No.: 237300 9
Sample Identification: JC09
Date Collected: 10/25/89
Date Analyzed: 11/9/89 By: Lewis

Number	Compound	Quantitation Limit µg/Kg	Results Concentration µg/Kg
1	Bromodichloromethane	1.1	BQL
2	Bromoform	1.1	BQL
3	Bromomethane	1.1	BQL
4	Carbon tetrachloride	1.1	BQL
5	Chlorobenzene	1.1	BQL
6	Chloroethane	1.1	BQL
7	2-Chloroethylvinyl ether	1.1	BQL
8	Chloroform	1.1	8.0
9	Chloromethane	1.1	BQL
10	Dibromochloromethane	1.1	BQL
11	1,2-Dichlorobenzene	1.1	BQL
12	1,3-Dichlorobenzene	1.1	BQL
13	1,4-Dichlorobenzene	1.1	BQL
14	Dichlorodifluoromethane	1.1	BQL
15	1,1-Dichloroethane	1.1	BQL
16	1,2-Dichloroethane	1.1	BQL
17	1,1-Dichloroethene	1.1	BQL
18	trans-1,2-Dichloroethene	1.1	BQL
19	1,2-Dichloropropane	1.1	BQL
20	cis-1,3-Dichloropropene	1.1	BQL
21	trans-1,3-Dichloropropene	1.1	BQL
22	Methylene chloride	1.1	BQL
23	1,1,2,2-Tetrachloroethane	1.1	BQL
24	1,1,1-Trichloroethane	1.1	BQL
25	1,1,2-Trichloroethane	1.1	BQL
26	Tetrachloroethene	1.1	BQL
27	Trichlorofluoromethane	1.1	BQL
28	Vinyl Chloride	1.1	BQL
29	Trichloroethene	1.1	11

Comments BQL - BELOW QUANTITATION LIMIT
Please note values are reported as dry weight.

Industrial & Environmental Analysts, Inc.
P.O. Box 626 • Essex Junction, Vermont 05453 • 802-878-5138

EPA Method 601:
Purgeable Halocarbons

IEA Sample No.: 237300 10
Sample Identification: JC10
Date Collected: 10/25/89
Date Analyzed: 11/9/89 By: Lewis

Number	Compound	Quantitation Limit µg/Kg	Results Concentration µg/Kg
1	Bromodichloromethane	1.1	BQL
2	Bromoform	1.1	BQL
3	Bromomethane	1.1	BQL
4	Carbon tetrachloride	1.1	BQL
5	Chlorobenzene	1.1	BQL
6	Chloroethane	1.1	BQL
7	2-Chloroethylvinyl ether	1.1	BQL
8	Chloroform	1.1	3.3
9	Chloromethane	1.1	BQL
10	Dibromochloromethane	1.1	BQL
11	1,2-Dichlorobenzene	1.1	BQL
12	1,3-Dichlorobenzene	1.1	BQL
13	1,4-Dichlorobenzene	1.1	BQL
14	Dichlorodifluoromethane	1.1	BQL
15	1,1-Dichloroethane	1.1	BQL
16	1,2-Dichloroethane	1.1	BQL
17	1,1-Dichloroethene	1.1	BQL
18	trans-1,2-Dichloroethene	1.1	BQL
19	1,2-Dichloropropane	1.1	BQL
20	cis-1,3-Dichloropropene	1.1	BQL
21	trans-1,3-Dichloropropene	1.1	BQL
22	Methylene chloride	1.1	BQL
23	1,1,2,2-Tetrachloroethane	1.1	BQL
24	1,1,1-Trichloroethane	1.1	BQL
25	1,1,2-Trichloroethane	1.1	BQL
26	Tetrachloroethene	1.1	BQL
27	Trichlorofluoromethane	1.1	BQL
28	Vinyl Chloride	1.1	BQL
29	Trichloroethene	1.1	BQL

Comments BQL - BELOW QUANTITATION LIMIT
Please note values are reported as dry weight.

Industrial & Environmental Analysts, Inc.
P.O. Box 626 • Essex Junction, Vermont 05453 • 802-878-5138

EPA Method 601:
Purgeable Halocarbons

IEA Sample No.: 237300 11
Sample Identification: JC11
Date Collected: 10/25/89
Date Analyzed: 11/6/89 By: CEB

Number	Compound	Quantitation Limit µg/L	Results Concentration µg/L
1	Bromodichloromethane	1.0	1.3
2	Bromoform	1.0	BQL
3	Bromomethane	1.0	BQL
4	Carbon tetrachloride	1.0	BQL
5	Chlorobenzene	1.0	BQL
6	Chloroethane	1.0	BQL
7	2-Chloroethylvinyl ether	1.0	BQL
8	Chloroform	1.0	40
9	Chloromethane	1.0	BQL
10	Dibromochloromethane	1.0	BQL
11	1,2-Dichlorobenzene	1.0	BQL
12	1,3-Dichlorobenzene	1.0	BQL
13	1,4-Dichlorobenzene	1.0	BQL
14	Dichlorodifluoromethane	1.0	BQL
15	1,1-Dichloroethane	1.0	BQL
16	1,2-Dichloroethane	1.0	BQL
17	1,1-Dichloroethene	1.0	BQL
18	trans-1,2-Dichloroethene	1.0	BQL
19	1,2-Dichloropropane	1.0	BQL
20	cis-1,3-Dichloropropene	1.0	BQL
21	trans-1,3-Dichloropropene	1.0	BQL
22	Methylene chloride	1.0	1.6
23	1,1,2,2-Tetrachloroethane	1.0	BQL
24	1,1,1-Trichloroethane	1.0	BQL
25	1,1,2-Trichloroethane	1.0	BQL
26	Tetrachloroethene	1.0	BQL
27	Trichlorofluoromethane	1.0	BQL
28	Vinyl Chloride	1.0	BQL
29	Trichloroethene	1.0	2.2

Comments BQL - BELOW QUANTITATION LIMIT
Trichlorotriflouroethane - 1.0 µg/L

Industrial & Environmental Analysts, Inc.
P.O. Box 626 • Essex Junction, Vermont 05453 • 802-878-5138

EPA Method 601:
Purgeable Halocarbons

IEA Sample No.: 237300 12
Sample Identification: JC12
Date Collected: 10/25/89
Date Analyzed: 11/6/89 By: CEB

Number	Compound	Quantitation Limit µg/L	Results Concentration µg/L
1	Bromodichloromethane	1.0	1.2
2	Bromoform	1.0	BQL
3	Bromomethane	1.0	BQL
4	Carbon tetrachloride	1.0	BQL
5	Chlorobenzene	1.0	1.2
6	Chloroethane	1.0	BQL
7	2-Chloroethylvinyl ether	1.0	BQL
8	Chloroform	1.0	BQL
9	Chloromethane	1.0	BQL
10	Dibromochloromethane	1.0	BQL
11	1,2-Dichlorobenzene	1.0	(A)
12	1,3-Dichlorobenzene	1.0	(A)
13	1,4-Dichlorobenzene	1.0	(A)
14	Dichlorodifluoromethane	1.0	BQL
15	1,1-Dichloroethane	1.0	BQL
16	1,2-Dichloroethane	1.0	BQL
17	1,1-Dichloroethene	1.0	BQL
18	trans-1,2-Dichloroethene	1.0	BQL
19	1,2-Dichloropropane	1.0	BQL
20	cis-1,3-Dichloropropene	1.0	BQL
21	trans-1,3-Dichloropropene	1.0	BQL
22	Methylene chloride	1.0	1.6
23	1,1,2,2-Tetrachloroethane	1.0	BQL
24	1,1,1-Trichloroethane	1.0	36
25	1,1,2-Trichloroethane	1.0	BQL
26	Tetrachloroethene	1.0	BQL
27	Trichlorofluoromethane	1.0	BQL
28	Vinyl Chloride	1.0	BQL
29	Trichloroethene	1.0	23

Comments BQL - BELOW QUANTITATION LIMIT
(A) 1,2 - Dichlorobenzene, 1,3 dichlorobenzene and 1,4 dichlorobenezene present collectively at 300 µg/L.

Industrial & Environmental Analysts, Inc.
P.O. Box 626 • Essex Junction, Vermont 05453 • 802-878-5138

EPA Method 601:
Purgeable Halocarbons

IEA Sample No.: 237300 13
Sample Identification: JC13
Date Collected: 10/25/89
Date Analyzed: 11/8/89 By: Hendricks

Number	Compound	Quantitation Limit µg/Kg	Results Concentration µg/Kg
1	Bromodichloromethane	250	BQL
2	Bromoform	250	BQL
3	Bromomethane	250	BQL
4	Carbon tetrachloride	250	BQL
5	Chlorobenzene	250	BQL
6	Chloroethane	250	BQL
7	2-Chloroethylvinyl ether	250	BQL
8	Chloroform	250	BQL
9	Chloromethane	250	BQL
10	Dibromochloromethane	250	BQL
11	1,2-Dichlorobenzene	250	BQL
12	1,3-Dichlorobenzene	250	BQL
13	1,4-Dichlorobenzene	250	BQL
14	Dichlorodifluoromethane	250	BQL
15	1,1-Dichloroethane	250	BQL
16	1,2-Dichloroethane	250	BQL
17	1,1-Dichloroethene	250	BQL
18	trans-1,2-Dichloroethene	250	BQL
19	1,2-Dichloropropane	250	BQL
20	cis-1,3-Dichloropropene	250	BQL
21	trans-1,3-Dichloropropene	250	BQL
22	Methylene chloride	250	BQL
23	1,1,2,2-Tetrachloroethane	250	BQL
24	1,1,1-Trichloroethane	250	560
25	1,1,2-Trichloroethane	250	820
26	Tetrachloroethene	250	BQL
27	Trichlorofluoromethane	250	BQL
28	Vinyl Chloride	250	BQL
29	Trichloroethene	250	2000

Comments BQL - BELOW QUANTITATION LIMIT
Please note values are reported as dry weight.
Quantitation limit elevated due to sample dilution prior to analysis.
Sample diluted due to high concentration of target compounds present.
1,1,2-trichloroethane,trans-1,3-dichloropropene and dibromochloromethane coelute.
GC/MS analysis is recommended for confirmation.

Industrial & Environmental Analysts, Inc.
P.O. Box 626 • Essex Junction, Vermont 05453 • 802-878-5138

EPA Method 601:
Purgeable Halocarbons

IEA Sample No.: 237300 14
Sample Identification: JC14
Date Collected: 10/25/89
Date Analyzed: 11/9/89 By: Lewis

Number	Compound	Quantitation Limit µg/Kg	Results Concentration µg/Kg
1	Bromodichloromethane	1.4	BQL
2	Bromoform	1.4	BQL
3	Bromomethane	1.4	BQL
4	Carbon tetrachloride	1.4	BQL
5	Chlorobenzene	1.4	BQL
6	Chloroethane	1.4	BQL
7	2-Chloroethylvinyl ether	1.4	BQL
8	Chloroform	1.4	BQL
9	Chloromethane	1.4	BQL
10	Dibromochloromethane	1.4	BQL
11	1,2-Dichlorobenzene	1.4	BQL
12	1,3-Dichlorobenzene	1.4	BQL
13	1,4-Dichlorobenzene	1.4	BQL
14	Dichlorodifluoromethane	1.4	BQL
15	1,1-Dichloroethane	1.4	BQL
16	1,2-Dichloroethane	1.4	BQL
17	1,1-Dichloroethene	1.4	BQL
18	trans-1,2-Dichloroethene	1.4	BQL
19	1,2-Dichloropropane	1.4	BQL
20	cis-1,3-Dichloropropene	1.4	BQL
21	trans-1,3-Dichloropropene	1.4	BQL
22	Methylene chloride	1.4	22
23	1,1,2,2-Tetrachloroethane	1.4	BQL
24	1,1,1-Trichloroethane	1.4	BQL
25	1,1,2-Trichloroethane	1.4	BQL
26	Tetrachloroethene	1.4	BQL
27	Trichlorofluoromethane	1.4	BQL
28	Vinyl Chloride	1.4	BQL
29	Trichloroethene	1.4	BQL

Comments BQL - BELOW QUANTITATION LIMIT
Please note values are reported as dry weight.
Methylene chloride not in blank.

Industrial & Environmental Analysts, Inc.
P.O. Box 626 • Essex Junction, Vermont 05453 • 802-878-5138

EPA Method 601:
Purgeable Halocarbons

IEA Sample No.: 237300 15
Sample Identification: JC15
Date Collected: 10/25/89
Date Analyzed: 11/10/89 By: Lewis

Number	Compound	Quantitation Limit µg/Kg	Results Concentration µg/Kg
1	Bromodichloromethane	1.2	BQL
2	Bromoform	1.2	BQL
3	Bromomethane	1.2	BQL
4	Carbon tetrachloride	1.2	BQL
5	Chlorobenzene	1.2	BQL
6	Chloroethane	1.2	BQL
7	2-Chloroethylvinyl ether	1.2	BQL
8	Chloroform	1.2	1.2
9	Chloromethane	1.2	BQL
10	Dibromochloromethane	1.2	BQL
11	1,2-Dichlorobenzene	1.2	BQL
12	1,3-Dichlorobenzene	1.2	BQL
13	1,4-Dichlorobenzene	1.2	BQL
14	Dichlorodifluoromethane	1.2	BQL
15	1,1-Dichloroethane	1.2	BQL
16	1,2-Dichloroethane	1.2	BQL
17	1,1-Dichloroethene	1.2	BQL
18	trans-1,2-Dichloroethene	1.2	BQL
19	1,2-Dichloropropane	1.2	BQL
20	cis-1,3-Dichloropropene	1.2	BQL
21	trans-1,3-Dichloropropene	1.2	BQL
22	Methylene chloride	1.2	BQL
23	1,1,2,2-Tetrachloroethane	1.2	BQL
24	1,1,1-Trichloroethane	1.2	BQL
25	1,1,2-Trichloroethane	1.2	BQL
26	Tetrachloroethene	1.2	BQL
27	Trichlorofluoromethane	1.2	BQL
28	Vinyl Chloride	1.2	BQL
29	Trichloroethene	1.2	BQL

Comments BQL - BELOW QUANTITATION LIMIT
Please note values are reported as dry weight.

Industrial & Environmental Analysts, Inc.
P.O. Box 626 • Essex Junction, Vermont 05453 • 802-878-5138

EPA Method 601:
Purgeable Halocarbons

IEA Sample No.: 237300 16
Sample Identification: JC16
Date Collected: 10/25/89
Date Analyzed: 11/6/89 By: CEB

Number	Compound	Quantitation Limit µg/L	Results Concentration µg/L
1	Bromodichloromethane	1.0	BQL
2	Bromoform	1.0	BQL
3	Bromomethane	1.0	BQL
4	Carbon tetrachloride	1.0	BQL
5	Chlorobenzene	1.0	BQL
6	Chloroethane	1.0	BQL
7	2-Chloroethylvinyl ether	1.0	BQL
8	Chloroform	1.0	2.8
9	Chloromethane	1.0	BQL
10	Dibromochloromethane	1.0	BQL
11	1,2-Dichlorobenzene	1.0	BQL
12	1,3-Dichlorobenzene	1.0	BQL
13	1,4-Dichlorobenzene	1.0	BQL
14	Dichlorodifluoromethane	1.0	BQL
15	1,1-Dichloroethane	1.0	BQL
16	1,2-Dichloroethane	1.0	BQL
17	1,1-Dichloroethene	1.0	BQL
18	trans-1,2-Dichloroethene	1.0	BQL
19	1,2-Dichloropropane	1.0	BQL
20	cis-1,3-Dichloropropene	1.0	BQL
21	trans-1,3-Dichloropropene	1.0	BQL
22	Methylene chloride	1.0	2.7
23	1,1,2,2-Tetrachloroethane	1.0	BQL
24	1,1,1-Trichloroethane	1.0	BQL
25	1,1,2-Trichloroethane	1.0	BQL
26	Tetrachloroethene	1.0	BQL
27	Trichlorofluoromethane	1.0	BQL
28	Vinyl Chloride	1.0	BQL
29	Trichloroethene	1.0	BQL

Comments BQL - BELOW QUANTITATION LIMIT
Trichlorotriflouroethane - 1.2 µg/L

Industrial & Environmental Analysts, Inc.
P.O. Box 626 • Essex Junction, Vermont 05453 • 802-878-5138

EPA Method 602:
Purgeable Aromatics

IEA Sample No. 237300 1
Sample Identification JC01

Date Collected: 10/25/89
Date Analyzed: 11/9/89 **By:** Lewis

Number	Compound	Quantitation Limit µg/Kg	Results Concentration µg/Kg
1	Benzene	60	BQL
2	Chlorobenzene	60	BQL
3	1,2-Dichlorobenzene	60	BQL
4	1,3-Dichlorobenzene	60	BQL
5	1,4-Dichlorobenzene	60	BQL
6	Ethylbenzene	60	BQL
7	Toluene	60	BQL
8	Xylenes	60	BQL

Comments BQL - BELOW QUANTITATION LIMIT
Quantitation limit elevated due to sample dilution prior to analysis.
Sample diluted due to presence of non-target compounds.
Please note values are reported as dry weight.

Industrial & Environmental Analysts, Inc.
P.O. Box 626 • Essex Junction, Vermont 05453 • 802-878-5138

EPA Method 602:
Purgeable Aromatics

IEA Sample No. 237300 2
Sample Identification JC02

Date Collected: 10/25/89
Date Analyzed: 11/8/89 **By:** Hendricks

Number	Compound	Quantitation Limit µg/Kg	Results Concentration µg/Kg
1	Benzene	1.1	15
2	Chlorobenzene	1.1	9.9
3	1,2-Dichlorobenzene	1.1	BQL
4	1,3-Dichlorobenzene	1.1	BQL
5	1,4-Dichlorobenzene	1.1	BQL
6	Ethylbenzene	1.1	BQL
7	Toluene	1.1	20
8	Xylenes	1.1	BQL

Comments BQL - BELOW QUANTITATION LIMIT
Please note values are reported as dry weight.

Industrial & Environmental Analysts, Inc.
P.O. Box 626 • Essex Junction, Vermont 05453 • 802-878-5138

EPA Method 602:
Purgeable Aromatics

IEA Sample No. 237300 3
Sample Identification JC03

Date Collected: 10/25/89
Date Analyzed: 11/9/89 **By:** Lewis

Number	Compound	Quantitation Limit µg/Kg	Results Concentration µg/Kg
1	Benzene	5.6	BQL
2	Chlorobenzene	5.6	BQL
3	1,2-Dichlorobenzene	5.6	BQL
4	1,3-Dichlorobenzene	5.6	BQL
5	1,4-Dichlorobenzene	5.6	BQL
6	Ethylbenzene	5.6	BQL
7	Toluene	5.6	BQL
8	Xylenes	5.6	BQL

Comments BQL - BELOW QUANTITATION LIMIT
Please note values are reported as dry weight.
Quantitation limit elevated due to sample dilution prior to analysis.
Sample diluted based on screening data. Protocol time ran out before sample could be rerun.

Industrial & Environmental Analysts, Inc.
P.O. Box 626 • Essex Junction, Vermont 05453 • 802-878-5138

EPA Method 602:
Purgeable Aromatics

IEA Sample No. 237300 4
Sample Identification JC04

Date Collected: 10/25/89
Date Analyzed: 11/8/89 **By:** Lewis

Number	Compound	Quantitation Limit µg/Kg	Results Concentration µg/Kg
1	Benzene	62	BQL
2	Chlorobenzene	62	BQL
3	1,2-Dichlorobenzene	62	BQL
4	1,3-Dichlorobenzene	62	BQL
5	1,4-Dichlorobenzene	62	BQL
6	Ethylbenzene	62	BQL
7	Toluene	62	BQL
8	Xylenes	62	BQL

Comments BQL - BELOW QUANTITATION LIMIT
Please note values are reported as dry weight.
Quantitation limit elevated due to sample dilution prior to analysis.
Sample diluted based on screening data.
When analyzed undiluted 10 hours out of protocol, all 602 target compounds <1 µg/kg.

Industrial & Environmental Analysts, Inc.
P.O. Box 626 • Essex Junction, Vermont 05453 • 802-878-5138

EPA Method 602:
Purgeable Aromatics

IEA Sample No. 237300 5
Sample Identification JC05

Date Collected: 10/25/89
Date Analyzed: 11/6/89 **By:** CEB

Number	Compound	Quantitation Limit µg/L	Results Concentration µg/L
1	Benzene	1.0	BQL
2	Chlorobenzene	1.0	BQL
3	1,2-Dichlorobenzene	1.0	BQL
4	1,3-Dichlorobenzene	1.0	BQL
5	1,4-Dichlorobenzene	1.0	BQL
6	Ethylbenzene	1.0	BQL
7	Toluene	1.0	BQL
8	Xylenes	1.0	BQL

Comments BQL - BELOW QUANTITATION LIMIT

Industrial & Environmental Analysts, Inc.
P.O. Box 626 • Essex Junction, Vermont 05453 • 802-878-5138

EPA Method 602:
Purgeable Aromatics

IEA Sample No. 237300 7
Sample Identification JC07

Date Collected: 10/25/89
Date Analyzed: 11/10/89 **By:** Lewis

Number	Compound	Quantitation Limit µg/Kg	Results Concentration µg/Kg
1	Benzene	1.1	16
2	Chlorobenzene	1.1	6.6
3	1,2-Dichlorobenzene	1.1	BQL
4	1,3-Dichlorobenzene	1.1	BQL
5	1,4-Dichlorobenzene	1.1	BQL
6	Ethylbenzene	1.1	7.7
7	Toluene	1.1	16
8	Xylenes	1.1	23

Comments BQL - BELOW QUANTITATION LIMIT
Please note values are reported as dry weight.
Low IS recovery. Confirmed by second analysis.

Industrial & Environmental Analysts, Inc.
P.O. Box 626 • Essex Junction, Vermont 05453 • 802-878-5138

EPA Method 602:
Purgeable Aromatics

IEA Sample No. 237300 6
Sample Identification JC06

Date Collected: 10/25/89
Date Analyzed: 11/8/89 **By:** Hendricks

Number	Compound	Quantitation Limit µg/Kg	Results Concentration µg/Kg
1	Benzene	140	BQL
2	Chlorobenzene	140	BQL
3	1,2-Dichlorobenzene	140	BQL
4	1,3-Dichlorobenzene	140	BQL
5	1,4-Dichlorobenzene	140	BQL
6	Ethylbenzene	140	1300
7	Toluene	140	12000
8	Xylenes	140	10000

Comments BQL - BELOW QUANTITATION LIMIT
Please note values are reported as dry weight.
Quantitation limit elevated due to sample dilution prior to analysis.
Sample diluted due to high concentration of target compounds present.

Industrial & Environmental Analysts, Inc.
P.O. Box 626 • Essex Junction, Vermont 05453 • 802-878-5138

EPA Method 602:
Purgeable Aromatics

IEA Sample No. 237300 8
Sample Identification JC08

Date Collected: 10/25/89
Date Analyzed: 11/8/89 **By:** Hendricks

Number	Compound	Quantitation Limit µg/Kg	Results Concentration µg/Kg
1	Benzene	1.0	BQL
2	Chlorobenzene	1.0	BQL
3	1,2-Dichlorobenzene	1.0	BQL
4	1,3-Dichlorobenzene	1.0	BQL
5	1,4-Dichlorobenzene	1.0	BQL
6	Ethylbenzene	1.0	BQL
7	Toluene	1.0	5.2
8	Xylenes	1.0	BQL

Comments BQL - BELOW QUANTITATION LIMIT
Please note all values are reported as dry weight.

Industrial & Environmental Analysts, Inc.
P.O. Box 626 • Essex Junction, Vermont 05453 • 802-878-5138

EPA Method 602:
Purgeable Aromatics

IEA Sample No. 237300 9
Sample Identification JC09

Date Collected: 10/25/89
Date Analyzed: 11/9/89 **By:** Lewis

Number	Compound	Quantitation Limit µg/Kg	Results Concentration µg/Kg
1	Benzene	1.1	BQL
2	Chlorobenzene	1.1	BQL
3	1,2-Dichlorobenzene	1.1	BQL
4	1,3-Dichlorobenzene	1.1	BQL
5	1,4-Dichlorobenzene	1.1	BQL
6	Ethylbenzene	1.1	BQL
7	Toluene	1.1	2.3
8	Xylenes	1.1	BQL

Comments BQL - BELOW QUANTITATION LIMIT
Please note all values are reported as dry weight.

Industrial & Environmental Analysts, Inc.
P.O. Box 626 • Essex Junction, Vermont 05453 • 802-878-5138

EPA Method 602:
Purgeable Aromatics

IEA Sample No. 237300 10
Sample Identification JC10

Date Collected: 10/25/89
Date Analyzed: 11/9/89 **By:** Lewis

Number	Compound	Quantitation Limit µg/Kg	Results Concentration µg/Kg
1	Benzene	1.1	BQL
2	Chlorobenzene	1.1	BQL
3	1,2-Dichlorobenzene	1.1	BQL
4	1,3-Dichlorobenzene	1.1	BQL
5	1,4-Dichlorobenzene	1.1	BQL
6	Ethylbenzene	1.1	BQL
7	Toluene	1.1	BQL
8	Xylenes	1.1	BQL

Comments BQL - BELOW QUANTITATION LIMIT
Please note all values are reported as dry weight.

Offices and laboratories located in: Essex Junction, Vermont
Research Triangle Park, North Carolina

Industrial & Environmental Analysts, Inc.
P.O. Box 626 • Essex Junction, Vermont 05453 • 802-878-5138

EPA Method 602:
Purgeable Aromatics

IEA Sample No. 237300 11
Sample Identification JC11

Date Collected: 10/25/89
Date Analyzed: 11/6/89 **By:** CEB

Number	Compound	Quantitation Limit µg/L	Results Concentration µg/L
1	Benzene	1.0	BQL
2	Chlorobenzene	1.0	BQL
3	1,2-Dichlorobenzene	1.0	BQL
4	1,3-Dichlorobenzene	1.0	BQL
5	1,4-Dichlorobenzene	1.0	BQL
6	Ethylbenzene	1.0	BQL
7	Toluene	1.0	BQL
8	Xylenes	1.0	BQL

Comments BQL - BELOW QUANTITATION LIMIT

Offices and laboratories located in: Essex Junction, Vermont
Research Triangle Park, North Carolina

Industrial & Environmental Analysts, Inc.
P.O. Box 626 • Essex Junction, Vermont 05453 • 802-878-5138

EPA Method 602:
Purgeable Aromatics

IEA Sample No. 237300 12
Sample Identification JC12

Date Collected: 10/25/89
Date Analyzed: 11/6/89 **By:** CEB

Number	Compound	Quantitation Limit µg/L	Results Concentration µg/L
1	Benzene	1.0	BQL
2	Chlorobenzene	1.0	1.2
3	1,2-Dichlorobenzene	1.0	(a)
4	1,3-Dichlorobenzene	1.0	(a)
5	1,4-Dichlorobenzene	1.0	(a)
6	Ethylbenzene	1.0	BQL
7	Toluene	1.0	BQL
8	Xylenes	1.0	4.5

Comments BQL - BELOW QUANTITATION LIMIT
(a) 1,2-Dichlorobenzene, 1,3-Dichlorobenzene, 1,4-Dichlorobenzene present collectively at 300µg/L.

Industrial & Environmental Analysts, Inc.
P.O. Box 626 • Essex Junction, Vermont 05453 • 802-878-5138

EPA Method 602:
Purgeable Aromatics

IEA Sample No. 237300 13
Sample Identification JC13

Date Collected: 10/25/89
Date Analyzed: 11/8/89 **By:** Hendricks

Number	Compound	Quantitation Limit µg/Kg	Results Concentration µg/Kg
1	Benzene	250	BQL
2	Chlorobenzene	250	BQL
3	1,2-Dichlorobenzene	250	BQL
4	1,3-Dichlorobenzene	250	BQL
5	1,4-Dichlorobenzene	250	BQL
6	Ethylbenzene	250	BQL
7	Toluene	250	BQL
8	Xylenes	250	BQL

Comments BQL - BELOW QUANTITATION LIMIT
Please note values are reported as dry weight.
Quantitation limit elevated due to sample dilution prior to analysis.
Sample diluted due to presence of non- target compounds.

Industrial & Environmental Analysts, Inc.
P.O. Box 626 • Essex Junction, Vermont 05453 • 802-878-5138

EPA Method 602:
Purgeable Aromatics

IEA Sample No. 237300 14
Sample Identification JC14

Date Collected: 10/25/89
Date Analyzed: 11/9/89 **By:** Lewis

Number	Compound	Quantitation Limit µg/Kg	Results Concentration µg/Kg
1	Benzene	1.4	BQL
2	Chlorobenzene	1.4	BQL
3	1,2-Dichlorobenzene	1.4	BQL
4	1,3-Dichlorobenzene	1.4	BQL
5	1,4-Dichlorobenzene	1.4	BQL
6	Ethylbenzene	1.4	BQL
7	Toluene	1.4	BQL
8	Xylenes	1.4	BQL

Comments BQL - BELOW QUANTITATION LIMIT
Please note all values are reported as dry weight.

Industrial & Environmental Analysts, Inc.
P.O. Box 626 • Essex Junction, Vermont 05453 • 802-878-5138

EPA Method 602:
Purgeable Aromatics

IEA Sample No. 237300 15
Sample Identification JC15

Date Collected: 10/25/89
Date Analyzed: 11/10/89 **By:** Lewis

Number	Compound	Quantitation Limit µg/Kg	Results Concentration µg/Kg
1	Benzene	1.2	BQL
2	Chlorobenzene	1.2	BQL
3	1,2-Dichlorobenzene	1.2	BQL
4	1,3-Dichlorobenzene	1.2	BQL
5	1,4-Dichlorobenzene	1.2	BQL
6	Ethylbenzene	1.2	BQL
7	Toluene	1.2	BQL
8	Xylenes	1.2	BQL

Comments BQL - BELOW QUANTITATION LIMIT
Please note all values are reported as dry weight.

Offices and laboratories located in: Essex Junction, Vermont
Research Triangle Park, North Carolina

Industrial & Environmental Analysts, Inc.
P.O. Box 626 • Essex Junction, Vermont 05453 • 802-878-5138

EPA Method 602:
Purgeable Aromatics

IEA Sample No. 237300 16
Sample Identification JC16

Date Collected: 10/25/89
Date Analyzed: 11/6/89 **By:** CEB

Number	Compound	Quantitation Limit µg/L	Results Concentration µg/L
1	Benzene	1.0	BQL
2	Chlorobenzene	1.0	BQL
3	1,2-Dichlorobenzene	1.0	BQL
4	1,3-Dichlorobenzene	1.0	BQL
5	1,4-Dichlorobenzene	1.0	BQL
6	Ethylbenzene	1.0	BQL
7	Toluene	1.0	BQL
8	Xylenes	1.0	BQL

Comments BQL - BELOW QUANTITATION LIMIT

dustrial & Environmental Analysts, Inc.
. Box 626 • Essex Junction, Vermont 05453 • 802-878-5138

EPA M d 625 Compounds: GC/MS Base/Neutral Extractables

IEA Sample No.: 2373 1 **Sample Identification:** JC01
Date Collected: 10/25 **Date Extracted:** November 3, 1989
Date Analyzed: 11/12 **By:** O'Toole

Number	Compound	Quantitation Limit µg/Kg	Concentration µg/Kg
1	ACENAPHTHENE	240,000	BQL
2	ACENAPHTHYLENE	240,000	BQL
3	ANTHRACENE	240,000	BQL
4	BENZO (a) ANTHRACENE	240,000	BQL
5	BENZO (a) PYRENE	240,000	BQL
6	BENZO (b) FLUORANTHENE	240,000	BQL
7	BENZO (g,h,i) PERYLENE	240,000	BQL
8	BENZO (k) FLUORANTHENE	240,000	BQL
9	BIS (2-CHLOROETHOXY) METHANE	240,000	BQL
10	BIS (2-CHLOROETHYL) ETHER	240,000	BQL
11	BIS (2-CHLOROISOPROPYL) ETHER	240,000	BQL
12	BIS (2-ETHYLHEXYL) PHTHALATE	240,000	4,200,000
13	4-BROMOPHENYL PHENYL ETHER	240,000	BQL
14	BENZYL BUTYL PHTHALATE	240,000	BQL
15	2-CHLORONAPHTHALENE	240,000	BQL
16	4-CHLOROPHENYL PHENYL ETHER	240,000	BQL
17	CHRYSENE	240,000	BQL
18	DIBENZO (a,h) ANTHRACENE	240,000	BQL
19	1,2-DICHLOROBENZENE	240,000	BQL
20	1,3-DICHLOROBENZENE	240,000	BQL
21	1,4-DICHLOROBENZENE	240,000	BQL
22	3,3'-DICHLOROBENZIDINE	240,000	BQL
23	DIETHYL PHTHALATE	240,000	BQL
24	DIMETHYL PHTHALATE	240,000	BQL
25	DI-N-BUTYL PHTHALATE	240,000	BQL
26	2,4-DINITROTOLUENE	240,000	BQL
27	2,6-DINITROTOLUENE	240,000	BQL
28	DI-N-OCTYLPHTHALATE	240,000	BQL
29	FLUORANTHENE	240,000	BQL
30	FLUORENE	240,000	BQL
31	HEXACHLOROBENZENE	240,000	BQL
32	HEXACHLOROBUTADIENE	240,000	BQL
33	HEXACHLOROCYCLOPENTADIENE	240,000	BQL
34	HEXACHLOROETHANE	240,000	BQL
35	INDENO (1,2,3-cd) PYRENE	240,000	BQL
36	ISOPHORONE	240,000	BQL
37	NAPHTHALENE	240,000	BQL
38	NITROBENZENE	240,000	BQL
39	N-NITROSO-DI-N-PROPYLAMINE	240,000	BQL
40	N-NITROSODIPHENYLAMINE	240,000	BQL
41	PHENANTHRENE	240,000	BQL
42	PYRENE	240,000	BQL
43	1,2,4-TRICHLOROBENZENE	240,000	BQL
44	BENZIDINE	1,200,000	BQL
45	N-NITROSODIMETHYLAMINE	240,000	BQL

Comments: BQL - BELOW QUANTITATION LIMIT

Quantitation limit elevated due to extract dilution prior to analysis. Extract diluted due to high concentration of base/neutral target compounds present. All values reported as dry weight.

Offices and laboratories located in: Essex Junction, Vermont
Research Triangle Park, North Carolina

Industrial & Environmental Analysts, Inc.
P.O. Box 626 • Essex Junction, Vermont 05453 • 802-878-5138

EPA Method 625 Coumpounds:
GC/MS Acid Extractables

IEA Sample No.: 237300 1
Sample Identification: JC01
Date Extracted: November 3, 1989

Date Collected: 10/25/89
Date Analyzed: 11/12/89
By: O'Toole

Number	Compound	Quantitation Limit µg/Kg	Results Concentration µg/Kg
1	4-CHLORO-3-METHYLPHENOL	239,000	BQL
2	2-CHLOROPHENOL	239,000	BQL
3	2,4-DICHLOROPHENOL	239,000	BQL
4	2,4-DIMETHYLPHENOL	239,000	BQL
5	2,4-DINITROPHENOL	1,200,000	BQL
6	2-METHYL-4,6-DINITROPHENOL	1,200,000	BQL
7	2-NITROPHENOL	239,000	BQL
8	4-NITROPHENOL	1,200,000	BQL
9	PENTACHLOROPHENOL	1,200,000	BQL
10	PHENOL	239,000	BQL
11	2,4,6-TRICHLOROPHENOL	239,000	BQL

Comments: BQL - BELOW QUANTITATION LIMIT
Quantitation limit elevated due to extract dilution prior to analysis.
Extract diluted due to high concentration of base/neutral target compounds present.
Please note values are reported as dry weight.

Offices and laboratories located in: Essex Junction, Vermont
Research Triangle Park, North Carolina

Industrial & Environmental Analysts, Inc.
P.O. Box 626 • Essex Junction, Vermont 05453 • 802-878-5138

EPA Method 625 Compounds: GC/MS Base/Neutral Extractables

IEA Sample No.: 237300 6 **Sample Identification:** JC06
Date Collected: 10/25/89 **Date Extracted:** November 3, 1989
Date Analyzed: 11/10/89 **By:** O'Toole

Number	Compound	Quantitation Limit µg/Kg	Concentration µg/Kg
1	ACENAPHTHENE	130,000	BQL
2	ACENAPHTHYLENE	130,000	BQL
3	ANTHRACENE	130,000	BQL
4	BENZO (a) ANTHRACENE	130,000	BQL
5	BENZO (a) PYRENE	130,000	BQL
6	BENZO (b) FLUORANTHENE	130,000	BQL
7	BENZO (g,h,i) PERYLENE	130,000	BQL
8	BENZO (k) FLUORANTHENE	130,000	BQL
9	BIS (2-CHLOROETHOXY) METHANE	130,000	BQL
10	BIS (2-CHLOROETHYL) ETHER	130,000	BQL
11	BIS (2-CHLOROISOPROPYL) ETHER	130,000	BQL
12	BIS (2-ETHYLHEXYL) PHTHALATE	130,000	810,000
13	4-BROMOPHENYL PHENYL ETHER	130,000	BQL
14	BENZYL BUTYL PHTHALATE	130,000	BQL
15	2-CHLORONAPHTHALENE	130,000	BQL
16	4-CHLOROPHENYL PHENYL ETHER	130,000	BQL
17	CHRYSENE	130,000	BQL
18	DIBENZO (a,h) ANTHRACENE	130,000	BQL
19	1,2-DICHLOROBENZENE	130,000	BQL
20	1,3-DICHLOROBENZENE	130,000	BQL
21	1,4-DICHLOROBENZENE	130,000	BQL
22	3,3'-DICHLOROBENZIDINE	130,000	BQL
23	DIETHYL PHTHALATE	130,000	BQL
24	DIMETHYL PHTHALATE	130,000	BQL
25	DI-N-BUTYL PHTHALATE	130,000	BQL
26	2,4-DINITROTOLUENE	130,000	BQL
27	2,6-DINITROTOLUENE	130,000	BQL
28	DI-N-OCTYLPHTHALATE	130,000	BQL
29	FLUORANTHENE	130,000	BQL
30	FLUORENE	130,000	BQL
31	HEXACHLOROBENZENE	130,000	BQL
32	HEXACHLOROBUTADIENE	130,000	BQL
33	HEXACHLOROCYCLOPENTADIENE	130,000	BQL
34	HEXACHLOROETHANE	130,000	BQL
35	INDENO (1,2,3-cd) PYRENE	130,000	BQL
36	ISOPHORONE	130,000	BQL
37	NAPHTHALENE	130,000	BQL
38	NITROBENZENE	130,000	BQL
39	N-NITROSO-DI-N-PROPYLAMINE	130,000	BQL
40	N-NITROSODIPHENYLAMINE	130,000	BQL
41	PHENANTHRENE	130,000	BQL
42	PYRENE	130,000	BQL
43	1,2,4-TRICHLOROBENZENE	130,000	BQL
44	BENZIDINE	670,000	BQL
45	N-NITROSODIMETHYLAMINE	130,000	BQL

Comments: BQL - BELOW QUANTITATION LIMIT
Quantitation limit elevated due to extract dilution prior to analysis and smaller amount of sample extracted. Extract diluted due to presence of non-target compounds. All values reported as dry we

Industrial & Environmental Analysts, Inc.
P.O. Box 626 • Essex Junction, Vermont 05453 • 802-878-5138

EPA Method 625 Coumpounds:
GC/MS Acid Extractables

IEA Sample No.: 237300 6
Sample Identification: JC06
Date Collected: 10/25/89
Date Extracted: November 3, 1989
Date Analyzed: 11/10/89
By: O'Toole

Number	Compound	Quantitation Limit µg/Kg	Results Concentration µg/Kg
1	4-CHLORO-3-METHYLPHENOL	130,000	BQL
2	2-CHLOROPHENOL	130,000	BQL
3	2,4-DICHLOROPHENOL	130,000	BQL
4	2,4-DIMETHYLPHENOL	130,000	BQL
5	2,4-DINITROPHENOL	670,000	BQL
6	2-METHYL-4,6-DINITROPHENOL	670,000	BQL
7	2-NITROPHENOL	130,000	BQL
8	4-NITROPHENOL	670,000	BQL
9	PENTACHLOROPHENOL	670,000	BQL
10	PHENOL	130,000	BQL
11	2,4,6-TRICHLOROPHENOL	130,000	BQL

Comments: BQL - BELOW QUANTITATION LIMIT
Quantitation limit elevated due to extract dilution prior to analysis. Quantitation limit elevated due to a smaller amount of sample extracted
Extract diluted due to presence of non-target compounds.
Please note values are reported as dry weight.

Industrial & Environmental Analysts, Inc.
P.O. Box 626 • Essex Junction, Vermont 05453 • 802-878-5138

EPA Method 625 Compounds: GC/MS Base/Neutral Extractables

IEA Sample No.: 237300 12 **Sample Identification:** JC12
Date Collected: 10/25/89 **Date Extracted:** October 31, 1989
Date Analyzed: 11/12/89 **By:** O'Toole

Number	Compound	Quantitation Limit µg/L	Concentration µg/L
1	ACENAPHTHENE	10,000	BQL
2	ACENAPHTHYLENE	10,000	BQL
3	ANTHRACENE	10,000	BQL
4	BENZO (a) ANTHRACENE	10,000	BQL
5	BENZO (a) PYRENE	10,000	BQL
6	BENZO (b) FLUORANTHENE	10,000	BQL
7	BENZO (g,h,i) PERYLENE	10,000	BQL
8	BENZO (k) FLUORANTHENE	10,000	BQL
9	BIS (2-CHLOROETHOXY) METHANE	10,000	BQL
10	BIS (2-CHLOROETHYL) ETHER	10,000	BQL
11	BIS (2-CHLOROISOPROPYL) ETHER	10,000	BQL
12	BIS (2-ETHYLHEXYL) PHTHALATE	10,000	BQL
13	4-BROMOPHENYL PHENYL ETHER	10,000	BQL
14	BENZYL BUTYL PHTHALATE	10,000	BQL
15	2-CHLORONAPHTHALENE	10,000	BQL
16	4-CHLOROPHENYL PHENYL ETHER	10,000	BQL
17	CHRYSENE	10,000	BQL
18	DIBENZO (a,h) ANTHRACENE	10,000	BQL
19	1,2-DICHLOROBENZENE	10,000	BQL
20	1,3-DICHLOROBENZENE	10,000	BQL
21	1,4-DICHLOROBENZENE	10,000	BQL
22	3,3'-DICHLOROBENZIDINE	10,000	BQL
23	DIETHYL PHTHALATE	10,000	BQL
24	DIMETHYL PHTHALATE	10,000	BQL
25	DI-N-BUTYL PHTHALATE	10,000	BQL
26	2,4-DINITROTOLUENE	10,000	BQL
27	2,6-DINITROTOLUENE	10,000	BQL
28	DI-N-OCTYLPHTHALATE	10,000	BQL
29	FLUORANTHENE	10,000	BQL
30	FLUORENE	10,000	BQL
31	HEXACHLOROBENZENE	10,000	BQL
32	HEXACHLOROBUTADIENE	10,000	BQL
33	HEXACHLOROCYCLOPENTADIENE	10,000	BQL
34	HEXACHLOROETHANE	10,000	BQL
35	INDENO (1,2,3-cd) PYRENE	10,000	BQL
36	ISOPHORONE	10,000	BQL
37	NAPHTHALENE	10,000	BQL
38	NITROBENZENE	10,000	BQL
39	N-NITROSO-DI-N-PROPYLAMINE	10,000	BQL
40	N-NITROSODIPHENYLAMINE	10,000	BQL
41	PHENANTHRENE	10,000	BQL
42	PYRENE	10,000	BQL
43	1,2,4-TRICHLOROBENZENE	10,000	BQL
44	BENZIDINE	50,000	BQL
45	N-NITROSODIMETHYLAMINE	10,000	BQL

Comments: BQL - BELOW QUANTITATION LIMIT
Quantitation limit elevated due to extract dilution prior to analysis. Extract diluted due to high concentration of base/neutral compounds present.

Offices and laboratories located in: Essex Junction, Vermont
Research Triangle Park, North Carolina

Industrial & Environmental Analysts, Inc.
P.O. Box 626 • Essex Junction, Vermont 05453 • 802-878-5138

EPA Method 625 Coumpounds:
GC/MS Acid Extractables

IEA Sample No.: 237300 12
Sample Identification: JC12
Date Extracted: October 31, 1989

Date Collected: 10/25/89
Date Analyzed: 11/12/89
By: O'Toole

Number	Compound	Quantitation Limit µg/L	Results Concentration µg/L
1	4-CHLORO-3-METHYLPHENOL	10,000	BQL
2	2-CHLOROPHENOL	10,000	BQL
3	2,4-DICHLOROPHENOL	10,000	BQL
4	2,4-DIMETHYLPHENOL	10,000	BQL
5	2,4-DINITROPHENOL	50,000	BQL
6	2-METHYL-4,6-DINITROPHENOL	50,000	BQL
7	2-NITROPHENOL	10,000	BQL
8	4-NITROPHENOL	50,000	BQL
9	PENTACHLOROPHENOL	50,000	BQL
10	PHENOL	10,000	BQL
11	2,4,6-TRICHLOROPHENOL	10,000	BQL

Comments: BQL - BELOW QUANTITATION LIMIT
Quantitation limit elevated due to extract dilution prior to analysis.
Extract diluted due to high concentration of base/neutral target compounds present.

Industrial & Environmental Analysts, Inc.
P.O. Box 626 • Essex Junction, Vermont 05453 • 802-878-5138

EPA Method 625 Compounds: GC/MS Base/Neutral Extractables

IEA Sample No.: 237300 14 **Sample Identification:** JC14
Date Collected: 10/25/89 **Date Extracted:** November 3, 1989
Date Analyzed: 11/12/89 **By:** O'Toole

Number	Compound	Quantitation Limit µg/Kg	Concentration µg/Kg
1	ACENAPHTHENE	86,000	BQL
2	ACENAPHTHYLENE	86,000	BQL
3	ANTHRACENE	86,000	BQL
4	BENZO (a) ANTHRACENE	86,000	BQL
5	BENZO (a) PYRENE	86,000	BQL
6	BENZO (b) FLUORANTHENE	86,000	BQL
7	BENZO (g,h,i) PERYLENE	86,000	BQL
8	BENZO (k) FLUORANTHENE	86,000	BQL
9	BIS (2-CHLOROETHOXY) METHANE	86,000	BQL
10	BIS (2-CHLOROETHYL) ETHER	86,000	BQL
11	BIS (2-CHLOROISOPROPYL) ETHER	86,000	BQL
12	BIS (2-ETHYLHEXYL) PHTHALATE	86,000	1,400,000
13	4-BROMOPHENYL PHENYL ETHER	86,000	BQL
14	BENZYL BUTYL PHTHALATE	86,000	BQL
15	2-CHLORONAPHTHALENE	86,000	BQL
16	4-CHLOROPHENYL PHENYL ETHER	86,000	BQL
17	CHRYSENE	86,000	BQL
18	DIBENZO (a,h) ANTHRACENE	86,000	BQL
19	1,2-DICHLOROBENZENE	86,000	BQL
20	1,3-DICHLOROBENZENE	86,000	BQL
21	1,4-DICHLOROBENZENE	86,000	BQL
22	3,3'-DICHLOROBENZIDINE	86,000	BQL
23	DIETHYL PHTHALATE	86,000	BQL
24	DIMETHYL PHTHALATE	86,000	BQL
25	DI-N-BUTYL PHTHALATE	86,000	BQL
26	2,4-DINITROTOLUENE	86,000	BQL
27	2,6-DINITROTOLUENE	86,000	BQL
28	DI-N-OCTYLPHTHALATE	86,000	BQL
29	FLUORANTHENE	86,000	BQL
30	FLUORENE	86,000	BQL
31	HEXACHLOROBENZENE	86,000	BQL
32	HEXACHLOROBUTADIENE	86,000	BQL
33	HEXACHLOROCYCLOPENTADIENE	86,000	BQL
34	HEXACHLOROETHANE	86,000	BQL
35	INDENO (1,2,3-cd) PYRENE	86,000	BQL
36	ISOPHORONE	86,000	BQL
37	NAPHTHALENE	86,000	BQL
38	NITROBENZENE	86,000	BQL
39	N-NITROSO-DI-N-PROPYLAMINE	86,000	BQL
40	N-NITROSODIPHENYLAMINE	86,000	BQL
41	PHENANTHRENE	86,000	BQL
42	PYRENE	86,000	BQL
43	1,2,4-TRICHLOROBENZENE	86.000	BQL
44	BENZIDINE	430,000	BQL
45	N-NITROSODIMETHYLAMINE	86,000	BQL

Comments: BQL - BELOW QUANTITATION LIMIT

Quantitation limit elevated due to extract dilution prior to analysis. Extract diluted due to high concentration of base/neutral compounds present. All values reported as dry weight.

Offices and laboratories located in: Essex Junction, Vermont
Research Triangle Park, North Carolina

Industrial & Environmental Analysts, Inc.
P.O. Box 626 • Essex Junction, Vermont 05453 • 802-878-5138

EPA Method 625 Coumpounds:
GC/MS Acid Extractables

IEA Sample No.: 237300 14
Sample Identification: JC14 **Date Collected:** 10/25/89
Date Extracted: November 3, 1989 **Date Analyzed:** 11/12/89
By: O'Toole

Number	Compound	Quantitation Limit µg/Kg	Results Concentration µg/Kg
1	4-CHLORO-3-METHYLPHENOL	86,000	BQL
2	2-CHLOROPHENOL	86,000	BQL
3	2,4-DICHLOROPHENOL	86,000	BQL
4	2,4-DIMETHYLPHENOL	86,000	BQL
5	2,4-DINITROPHENOL	430,000	BQL
6	2-METHYL-4,6-DINITROPHENOL	430,000	BQL
7	2-NITROPHENOL	86,000	BQL
8	4-NITROPHENOL	430,000	BQL
9	PENTACHLOROPHENOL	430,000	BQL
10	PHENOL	86,000	BQL
11	2,4,6-TRICHLOROPHENOL	86,000	BQL

Comments: BQL - BELOW QUANTITATION LIMIT
Quantitation limit elevated due to extract dilution prior to analysis.
Extract diluted due to high concentration of base/neutral target compounds present.
Please note values are reported as dry weight.

APPENDIX B

ANALYTICAL RESULTS FROM WEHRAN ENGINEERING PHASE II INVESTIGATION

INDUSTRIAL & ENVIRONMENTAL ANALYSTS, INC.
1901 NORTH HARRISON AVE.
CARY, N.C. 27513

CHAIN OF CUSTODY RECORD

NO: 4[illegible]

PROJECT #: 00272.01

PROJECT NAME: SARD

SAMPLERS: (SIGNATURE) Cynthia Spragm

SAMPLE I.D.	DATE	TIME	COMP	GRAB	STATION LOCATION	# OF CONTAINERS	MATRIX SOIL	MATRIX WATER	8010/8020 (Soil)	PCB/606 (Soil)	PCB only (Soil)	Zinc (total) (Soil)	601/602 (Ground water)	PCB (Ground water)	606 (Ground water)	Zinc (total) (Ground water)
TP1A	5-9-90	10:30		X	Test pit 1 0-3'	2	X		X	X		X				
TP1B	5-9-90	10:30		X	Test pit 1 3-6'	2	X		X	X		X				
TP1C	5-9-90	10:30		X	Test pit 1 7.5'	2	X		X	X		X				
TP2A	5-9-90	12:00		X	Test pit 2 0-2.5'	2	X		X	X		X				
TP2GW	5-9-90	12:00			Test pit 2 groundwater	6		X					X	X	X	X
TP1GW	5-9-90	10:30			Test pit 1 groundwater	6		X					X	X	X	X
TP3A	5-9-90	12:30		X	Test pit 3 0-2.5'	2	X		X	X		X				
TP3GW	5-9-90	12:30			Test pit 3 groundwater	6		X					X	X	X	X
TP4A	5-9-90	11:30		X	Test pit 4 0-2.5'	2	X		X	X		X				
TP5A	5-9-90	2:00		X	Test pit 5 0-3'	2	X		X	X		X				
TP5C	5-9-90	2:00		X	Test pit 5 6-6.5'	2	X		X	X		X				
TP5GW	5-9-90	2:00			Test pit 5 groundwater	6		X					X	X	X	X

RELINQUISHED BY (SIGNATURE)	DATE	TIME	RECEIVED BY	DATE	TIME
Cynthia Spragm	5-10-90	3:20	Tracy J Hutchins	5/10	3:20
RELINQUISHED BY (SIGNATURE)	DATE	TIME	RECEIVED FOR LAB BY	DATE	TIME

IEA QUOTE NO.:

IEA RUSH NO.:

PROJECT MANAGER (PLEASE PRINT):

P.O. NO.: 39950

IEA REMARKS

FIELD REMARKS

1691 North Harrison Ave.
CA I.C.:

PROJECT #	PROJECT NAME
0272.01	JARD

SAMPLERS: (SIGNATURE) Cynthia Spragen

SAMPLE I.D.	DATE	TIME	COMP	GRAB	STATION LOCATION	# OF CONTAINERS	MATRIX SOIL	MATRIX WATER	TPH/8020	PCB/608	PCB only	Pint Total	601/602	PCB	608						
6A	5-9-90	3:30		X	Test pit 6 0-3'	2	X		X	X		X									
6C	5-9-90	3.30		X	Test pit 6 6-8'	2	X		X	X		X									
F 1-4	5-9-90	4:00	X		Composit of BF1-BF4	1	X				X										
uth -4	5-9-90	5:00	X		Composit of South 1 - South 4	1	X				X										
reet rain	5-9-90	5:30		X	Street Drain	1	X				X										

RELINQUISHED BY (SIGNATURE)	DATE	TIME	RECEIVED BY	DATE	TIME
Cynthia Spragen	5-10-90	3:20	Tracy J Hutchins	5/10	3:20
RELINQUISHED BY (SIGNATURE)	**DATE**	**TIME**	**RECEIVED FOR LAB BY**	**DATE**	**TIME**

IEA QUOTE NO.:

IEA RUSH NO.:

PROJECT MANAGER (PLEASE PRINT):

P.O. NO.: 39950

IEA REMARKS:

FIELD REMARKS:

Industrial & Environmental Analysts, Inc.
P.O. Box 626 • Essex Junction, Vermont 05453 • 802-878-5138

Date: May 24, 1990

Cindy Sprague
Wehran Engineering
1 Mill Street, Chace Mill
Burlington, VT 05401-1532

Reference: IEA Report No. 237130
PO #

Dear Cindy:

Transmitted herewith are the results of analyses on 17 samples submitted to our laboratory on 5/10/90.
Please see the enclosed reports for your results.

Very truly yours,

INDUSTRIAL & ENVIRONMENTAL ANALYSTS, INC.

Paul

Paul S. Warden
Staff Scientist

Offices and laboratories located in: Essex Junction, Vermont
Research Triangle Park, North Carolina

Industrial & Environmental Analysts, Inc.
P.O. Box 626 • Essex Junction, Vermont 05453 • 802-878-5138

LAB RESULTS

5/25/90

Wehran Engineering
1 Mill Street, Chace Mill
Burlington, VT 05401-1532

IEA # 237130 JARD
Date Received: 5/10/90
Date Collected: 5/9/90
Total Samples Received: 17
Total Parameters Requested: 69
Reviewed & Approved by

Attention: Cindy Sprague

Sa#	Sample I.D.	Parameter Studied	Results	Comments
1	TP-1A	CX606	-	See attached sheets.
2	TP-1B	CX606	-	See attached sheets.
3	TP-1C	CX606	-	See attached sheets.
4	TP1-GW	CW606	-	See attached sheets.
5	TP-2GW	CW606	-	See attached sheets.
6	TP-3GW	CW606	-	See attached sheets.
9	TP-5GW	CW606	-	See attached sheets.
10	TP-2A	CX606	-	See attached sheets.
11	TP-3A	CX606	-	See attached sheets.
12	TP-4A	CX606	-	See attached sheets.
13	TP-5A	CX606	-	See attached sheets.
14	TP-6A	CX606	-	See attached sheets.
15	TP-5C	CX606	-	See attached sheets.
16	TP-6C	CX606	-	See attached sheets.
4	TP1-GW	GC Methods601/602	-	See attached sheets.
5	TP-2GW	GC Methods601/602	-	See attached sheets.
6	TP-3GW	GC Methods601/602	-	See attached sheets.
9	TP-5GW	GC Methods601/602	-	See attached sheets.
1	TP-1A	PCB in soil	-	See attached sheets.
2	TP-1B	PCB in soil	-	See attached sheets.
3	TP-1C	PCB in soil	-	See attached sheets.
7	BF1-4	PCB in soil	-	See attached sheets.
8	1-4 South composite	PCB in soil	-	See attached sheets.
10	TP-2A	PCB in soil	-	See attached sheets.
11	TP-3A	PCB in soil	-	See attached sheets.

Comments:

Offices and laboratories located in: Essex Junction, Vermont
Research Triangle Park, North Carolina

Industrial & Environmental Analysts, Inc.
P.O. Box 626 • Essex Junction, Vermont 05453 • 802-878-5138

LAB RESULTS

5/25/90

Wehran Engineering
1 Mill Street, Chace Mill
Burlington, VT 05401-1532

IEA # 237130 JARD
Date Received: 5/10/90
Date Collected: 5/9/90
Total Samples Received: 17
Total Parameters Requested: 69
Reviewed & Approved by

Attention: Cindy Sprague

Sa#	Sample I.D.	Parameter Studied	Results	Comments
12	TP-4A	PCB in soil	-	See attached sheets.
13	TP-5A	PCB in soil	-	See attached sheets.
14	TP-6A	PCB in soil	-	See attached sheets.
15	TP-5C	PCB in soil	-	See attached sheets.
16	TP-6C	PCB in soil	-	See attached sheets.
17	Street Drain	PCB in soil	-	See attached sheets.
4	TP1-GW	PCB in water	-	See attached sheets.
5	TP-2GW	PCB in water	-	See attached sheets.
6	TP-3GW	PCB in water	-	See attached sheets.
9	TP-5GW	PCB in water	-	See attached sheets.
1	TP-1A	SW-846 Method 8010 (special)	-	See attached sheets.
2	TP-1B	SW-846 Method 8010 (special)	-	See attached sheets.
3	TP-1C	SW-846 Method 8010 (special)	-	See attached sheets.
10	TP-2A	SW-846 Method 8010 (special)	-	See attached sheets.
11	TP-3A	SW-846 Method 8010 (special)	-	See attached sheets.
12	TP-4A	SW-846 Method 8010 (special)	-	See attached sheets.
13	TP-5A	SW-846 Method 8010 (special)	-	See attached sheets.
14	TP-6A	SW-846 Method 8010 (special)	-	See attached sheets.
15	TP-5C	SW-846 Method 8010 (special)	-	See attached sheets.
16	TP-6C	SW-846 Method 8010 (special)	-	See attached sheets.
1	TP-1A	SW-846 Method 8020 (special)	-	See attached sheets.
2	TP-1B	SW-846 Method 8020 (special)	-	See attached sheets.
3	TP-1C	SW-846 Method 8020 (special)	-	See attached sheets.
10	TP-2A	SW-846 Method 8020 (special)	-	See attached sheets.
11	TP-3A	SW-846 Method 8020 (special)	-	See attached sheets.

Comments:

Industrial & Environmental Analysts, Inc.
P.O. Box 626 • Essex Junction, Vermont 05453 • 802-878-5138

LAB RESULTS

5/25/90

Wehran Engineering
1 Mill Street, Chace Mill
Burlington, VT 05401-1532

IEA # 237130 JARD
Date Received: 5/10/90
Date Collected: 5/9/90
Total Samples Received: 17
Total Parameters Requested: 69
Reviewed & Approved by _____

Attention: Cindy Sprague

Sa#	Sample I.D.	Parameter Studied	Results	Comments
12	TP-4A	SW-846 Method 8020 (special)	-	See attached sheets.
13	TP-5A	SW-846 Method 8020 (special)	-	See attached sheets.
14	TP-6A	SW-846 Method 8020 (special)	-	See attached sheets.
15	TP-5C	SW-846 Method 8020 (special)	-	See attached sheets.
16	TP-6C	SW-846 Method 8020 (special)	-	See attached sheets.
1	TP-1A	Zinc, total	25.8 mg/Kg	wet weight
2	TP-1B	Zinc, total	18.9 mg/Kg	wet weight
3	TP-1C	Zinc, total	20.4 mg/Kg	wet weight
4	TP1-GW	Zinc, total	0.924 mg/L	
5	TP-2GW	Zinc, total	4.87 mg/L	
6	TP-3GW	Zinc, total	32.0 mg/L	
9	TP-5GW	Zinc, total	3.04 mg/L	
10	TP-2A	Zinc, total	93.7 mg/Kg	wet weight
11	TP-3A	Zinc, total	2560 mg/Kg	wet weight
12	TP-4A	Zinc, total	942 mg/Kg	wet weight
13	TP-5A	Zinc, total	43.3 mg/Kg	wet weight
14	TP-6A	Zinc, total	55.6 mg/Kg	wet weight
15	TP-5C	Zinc, total	82.3 mg/Kg	wet weight
16	TP-6C	Zinc, total	120 mg/Kg	wet weight

Comments:

Industrial & Environmental Analysts, Inc.
P.O. Box 626 • Essex Junction, Vermont 05453 • 802-878-5138

Purgeable Halocarbons
SW-846 Method 8010 Compounds

IEA Sample No.: 237130 1
Sample Identification: TP-1A
Date Collected: May 9, 1990

Date Analyzed: May 15, 1990
By: Averill

Number	Compound	Soil Quantitation Limit µg/Kg	Results Concentration µg/Kg
1	Chloromethane	1.0	BQL
2	Bromomethane	1.0	BQL
3	Vinyl Chloride	1.0	BQL
4	Chloroethane	1.0	BQL
5	Methylene chloride	1.0	BQL
6	Trichlorofluoromethane	1.0	BQL
7	1,1-Dichloroethene	1.0	BQL
8	1,1-Dichloroethane	1.0	BQL
9	trans-1,2-Dichloroethene	1.0	BQL
10	Chloroform	1.0	BQL
11	1,2-Dichloroethane	1.0	BQL
12	1,1,1-Trichloroethane	1.0	BQL
13	Carbon tetrachloride	1.0	BQL
14	Bromodichloromethane	1.0	BQL
15	1,2-Dichloropropane	1.0	BQL
16	trans-1,3-Dichloropropene	1.0	BQL
17	Trichloroethene	1.0	BQL
18	cis-1,3-Dichloropropene	1.0	BQL
19	1,1,2-Trichloroethane	1.0	BQL
20	Chlorodibromomethane	1.0	BQL
21	2-Chloroethylvinyl ether	1.0	BQL
22	Bromoform	1.0	BQL
23	Tetrachloroethene	1.0	BQL
24	1,1,2,2-Tetrachloroethane	1.0	BQL
25	Chlorobenzene	1.0	BQL
26	1,3-Dichlorobenzene	1.0	BQL
27	1,2-Dichlorobenzene	1.0	BQL
28	1,4-Dichlorobenzene	1.0	BQL

Comments: BQL - BELOW QUANTITATION LIMIT

Industrial & Environmental Analysts, Inc.
P.O. Box 626 • Essex Junction, Vermont 05453 • 802-878-5138

Purgeable Aromatics
SW-846 Method 8020 Compounds

IEA Sample No.: 237130 1
Sample Identification: TP-1A
Date Collected: May 9, 1990

Date Analyzed: May 15, 1990
By: Averill

Number	Compound	Soil Quantitation Limit µg/Kg	Results Concentration µg/Kg
1	Benzene	1.0	BQL
2	Chlorobenzene	1.0	BQL
3	1,2-Dichlorobenzene	1.0	BQL
4	1,3-Dichlorobenzene	1.0	BQL
5	1,4-Dichlorobenzene	1.0	BQL
6	Ethylbenzene	1.0	BQL
7	Toluene	1.0	BQL
8	Total Xylenes	1.0	BQL

Comments BQL - BELOW QUANTITATION LIMIT

Industrial & Environmental Analysts, Inc.
P.O. Box 626 • Essex Junction, Vermont 05453 • 802-878-5138

Phthalates
EPA Method 606 Compounds

IEA Sample Number: 237130 1
Sample Identification: TP-1A
Date Collected: May 9, 1990
Date Extracted: May 17, 1990 By: Rich
Date Analyzed: May 21, 1990

Number	Compound	Soil Quantitation Limit µg/Kg	Results Concentration µg/Kg
1	Dimethylphthalate	350	BQL
2	Diethylphthalate	350	BQL
3	Di-n-butyl phthalate	350	380
4	Benzyl butyl phthalate	350	BQL
5	bis(2-Ethylhexyl)phthalate	350	BQL
6	Di-n-octylphthalate	350	BQL

Comments: BQL = Below Quantitation Limit

Industrial & Environmental Analysts, Inc.
P.O. Box 626 • Essex Junction, Vermont 05453 • 802-878-5138

PCB Summary Sheet

IEA Sample No. 237130 1

Sample Identification TP-1A

Date Extracted May 16, 1990

Date Analyzed May 17, 1990

By Hedrick

Compound	SOIL Quantitation Limit	Results Concentration mg/Kg
Aroclor 1016	2.0	BQL
Aroclor 1221	2.0	BQL
Aroclor 1232	2.0	BQL
Aroclor 1242	2.0	7.5
Aroclor 1248	2.0	BQL
Aroclor 1254	2.0	BQL
Aroclor 1260	2.0	BQL
Total Aroclor Concentration	2.0	BQL

Comments

BQL - BELOW QUANTITATION LIMIT
(a) Target compound concentration adjusted for % moisture.
(b) Quantitation limit elevated due to sample dilution prior to analysis. (c) Sample diluted due to high concentration of target compounds present.

Industrial & Environmental Analysts, Inc.
P.O. Box 626 • Essex Junction, Vermont 05453 • 802-878-5138

Purgeable Halocarbons
SW-846 Method 8010 Compounds

IEA Sample No.: 237130 2
Sample Identification: TP-1B
Date Collected: May 9, 1990

Date Analyzed: May 15, 1990
By: Averill

Number	Compound	Soil Quantitation Limit µg/Kg	Results Concentration µg/Kg
1	Chloromethane	1.0	BQL
2	Bromomethane	1.0	BQL
3	Vinyl Chloride	1.0	BQL
4	Chloroethane	1.0	BQL
5	Methylene chloride	1.0	BQL
6	Trichlorofluoromethane	1.0	BQL
7	1,1-Dichloroethene	1.0	BQL
8	1,1-Dichloroethane	1.0	BQL
9	trans-1,2-Dichloroethene	1.0	BQL
10	Chloroform	1.0	BQL
11	1,2-Dichloroethane	1.0	BQL
12	1,1,1-Trichloroethane	1.0	BQL
13	Carbon tetrachloride	1.0	BQL
14	Bromodichloromethane	1.0	BQL
15	1,2-Dichloropropane	1.0	BQL
16	trans-1,3-Dichloropropene	1.0	BQL
17	Trichloroethene	1.0	BQL
18	cis-1,3-Dichloropropene	1.0	BQL
19	1,1,2-Trichloroethane	1.0	BQL
20	Chlorodibromomethane	1.0	BQL
21	2-Chloroethylvinyl ether	1.0	BQL
22	Bromoform	1.0	BQL
23	Tetrachloroethene	1.0	BQL
24	1,1,2,2-Tetrachloroethane	1.0	BQL
25	Chlorobenzene	1.0	BQL
26	1,3-Dichlorobenzene	1.0	BQL
27	1,2-Dichlorobenzene	1.0	BQL
28	1,4-Dichlorobenzene	1.0	BQL

Comments: BQL - BELOW QUANTITATION LIMIT

Industrial & Environmental Analysts, Inc.
P.O. Box 626 • Essex Junction, Vermont 05453 • 802-878-5138

Purgeable Aromatics
SW-846 Method 8020 Compounds

IEA Sample No.: 237130 2
Sample Identification: TP-1B
Date Collected: May 9, 1990

Date Analyzed: May 15, 1990
By: Averill

Number	Compound	Soil Quantitation Limit µg/Kg	Results Concentration µg/Kg
1	Benzene	1.0	BQL
2	Chlorobenzene	1.0	BQL
3	1,2-Dichlorobenzene	1.0	BQL
4	1,3-Dichlorobenzene	1.0	BQL
5	1,4-Dichlorobenzene	1.0	BQL
6	Ethylbenzene	1.0	BQL
7	Toluene	1.0	BQL
8	Total Xylenes	1.0	BQL

Comments BQL - BELOW QUANTITATION LIMIT

Industrial & Environmental Analysts, Inc.
P.O. Box 626 • Essex Junction, Vermont 05453 • 802-878-5138

Phthalates
EPA Method 606 Compounds

IEA Sample Number: 237130 2
Sample Identification: TP-1B
Date Collected: May 9, 1990
Date Extracted: May 17, 1990 By: Rich
Date Analyzed: May 21, 1990

Number	Compound	Soil Quantitation Limit µg/Kg	Results Concentration µg/Kg
1	Dimethylphthalate	350	BQL
2	Diethylphthalate	350	BQL
3	Di-n-butyl phthalate	350	BQL
4	Benzyl butyl phthalate	350	BQL
5	bis(2-Ethylhexyl)phthalate	350	BQL
6	Di-n-octylphthalate	350	BQL

Comments: BQL - Below Quantitation Limit

Industrial & Environmental Analysts, Inc.
P.O. Box 626 • Essex Junction, Vermont 05453 • 802-878-5138

PCB Summary Sheet

IEA Sample No. 237130 2

Sample Identification TP-1B

Date Extracted May 17, 1990

Date Analyzed May 18, 1990

By Hedrick

Compound	SOIL Quantitation Limit	Results Concentration mg/Kg
Aroclor 1016	0.2	BQL
Aroclor 1221	0.2	BQL
Aroclor 1232	0.2	BQL
Aroclor 1242	0.2	2.1
Aroclor 1248	0.2	BQL
Aroclor 1254	0.2	BQL
Aroclor 1260	0.2	BQL
Total Aroclor Concentration	0.2	BQL

Comments

BQL - BELOW QUANTITATION LIMIT
(a) Target compound concentration adjusted for % moisture.

Industrial & Environmental Analysts, Inc.
P.O. Box 626 • Essex Junction, Vermont 05453 • 802-878-5138

Purgeable Halocarbons
SW-846 Method 8010 Compounds

IEA Sample No.: 237130 3
Sample Identification: TP-1C
Date Collected: May 9, 1990

Date Analyzed: May 15, 1990
By: Averill

Number	Compound	Soil Quantitation Limit µg/Kg	Results Concentration µg/Kg
1	Chloromethane	1.0	BQL
2	Bromomethane	1.0	BQL
3	Vinyl Chloride	1.0	BQL
4	Chloroethane	1.0	BQL
5	Methylene chloride	1.0	BQL
6	Trichlorofluoromethane	1.0	BQL
7	1,1-Dichloroethene	1.0	BQL
8	1,1-Dichloroethane	1.0	BQL
9	trans-1,2-Dichloroethene	1.0	BQL
10	Chloroform	1.0	BQL
11	1,2-Dichloroethane	1.0	BQL
12	1,1,1-Trichloroethane	1.0	BQL
13	Carbon tetrachloride	1.0	BQL
14	Bromodichloromethane	1.0	BQL
15	1,2-Dichloropropane	1.0	BQL
16	trans-1,3-Dichloropropene	1.0	BQL
17	Trichloroethene	1.0	BQL
18	cis-1,3-Dichloropropene	1.0	BQL
19	1,1,2-Trichloroethane	1.0	BQL
20	Chlorodibromomethane	1.0	BQL
21	2-Chloroethylvinyl ether	1.0	BQL
22	Bromoform	1.0	BQL
23	Tetrachloroethene	1.0	BQL
24	1,1,2,2-Tetrachloroethane	1.0	BQL
25	Chlorobenzene	1.0	BQL
26	1,3-Dichlorobenzene	1.0	BQL
27	1,2-Dichlorobenzene	1.0	BQL
28	1,4-Dichlorobenzene	1.0	BQL

Comments: BQL - BELOW QUANTITATION LIMIT

Industrial & Environmental Analysts, Inc.
P.O. Box 626 • Essex Junction, Vermont 05453 • 802-878-5138

Purgeable Aromatics
SW-846 Method 8020 Compounds

IEA Sample No.: 237130 3
Sample Identification: TP-1C
Date Collected: May 9, 1990

Date Analyzed: May 15, 1990
By: Averill

Number	Compound	Soil Quantitation Limit µg/Kg	Results Concentration µg/Kg
1	Benzene	1.0	BQL
2	Chlorobenzene	1.0	BQL
3	1,2-Dichlorobenzene	1.0	BQL
4	1,3-Dichlorobenzene	1.0	BQL
5	1,4-Dichlorobenzene	1.0	BQL
6	Ethylbenzene	1.0	BQL
7	Toluene	1.0	BQL
8	Total Xylenes	1.0	BQL

Comments BQL - BELOW QUANTITATION LIMIT

Industrial & Environmental Analysts, Inc.
P.O. Box 626 • Essex Junction, Vermont 05453 • 802-878-5138

Phthalates
EPA Method 606 Compounds

IEA Sample Number: 237130 3
Sample Identification: TP-1C
Date Collected: May 9, 1990
Date Extracted: May 17, 1990 By: Rich
Date Analyzed: May 21, 1990

Number	Compound	Soil Quantitation Limit µg/Kg	Results Concentration µg/Kg
1	Dimethylphthalate	350	BQL
2	Diethylphthalate	350	BQL
3	Di-n-butyl phthalate	350	BQL
4	Benzyl butyl phthalate	350	BQL
5	bis(2-Ethylhexyl)phthalate	350	BQL
6	Di-n-octylphthalate	350	BQL

Comments: BQL = Below Quantitation Limit

Industrial & Environmental Analysts, Inc.
P.O. Box 626 • Essex Junction, Vermont 05453 • 802-878-5138

PCB Summary Sheet

IEA Sample No. 237130 3
Sample Identification TP-1C
Date Extracted May 17, 1990
Date Analyzed May 18, 1990
By Hedrick

Compound	SOIL Quantitation Limit	Results Concentration mg/Kg
Aroclor 1016	0.2	BQL
Aroclor 1221	0.2	BQL
Aroclor 1232	0.2	BQL
Aroclor 1242	0.2	1.1
Aroclor 1248	0.2	BQL
Aroclor 1254	0.2	BQL
Aroclor 1260	0.2	BQL
Total Aroclor Concentration	0.2	BQL

Comments

BQL - BELOW QUANTITATION LIMIT
(a) Target compound concentration adjusted for % moisture.

Industrial & Environmental Analysts, Inc.
P.O. Box 626 • Essex Junction, Vermont 05453 • 802-878-5138

Purgeable Halocarbons
SW-846 Method 8010 Compounds

IEA Sample No.: 237130 10
Sample Identification: TP-2A
Date Collected: May 9, 1990

Date Analyzed: May 15, 1990
By: Averill

Number	Compound	Soil Quantitation Limit µg/Kg	Results Concentration µg/Kg
1	Chloromethane	1.0	BQL
2	Bromomethane	1.0	BQL
3	Vinyl Chloride	1.0	BQL
4	Chloroethane	1.0	BQL
5	Methylene chloride	1.0	BQL
6	Trichlorofluoromethane	1.0	BQL
7	1,1-Dichloroethene	1.0	BQL
8	1,1-Dichloroethane	1.0	BQL
9	trans-1,2-Dichloroethene	1.0	BQL
10	Chloroform	1.0	BQL
11	1,2-Dichloroethane	1.0	BQL
12	1,1,1-Trichloroethane	1.0	BQL
13	Carbon tetrachloride	1.0	BQL
14	Bromodichloromethane	1.0	BQL
15	1,2-Dichloropropane	1.0	BQL
16	trans-1,3-Dichloropropene	1.0	BQL
17	Trichloroethene	1.0	BQL
18	cis-1,3-Dichloropropene	1.0	BQL
19	1,1,2-Trichloroethane	1.0	BQL
20	Chlorodibromomethane	1.0	BQL
21	2-Chloroethylvinyl ether	1.0	BQL
22	Bromoform	1.0	BQL
23	Tetrachloroethene	1.0	BQL
24	1,1,2,2-Tetrachloroethane	1.0	BQL
25	Chlorobenzene	1.0	BQL
26	1,3-Dichlorobenzene	1.0	BQL
27	1,2-Dichlorobenzene	1.0	BQL
28	1,4-Dichlorobenzene	1.0	BQL

Comments: BQL - BELOW QUANTITATION LIMIT

Industrial & Environmental Analysts, Inc.
P.O. Box 626 • Essex Junction, Vermont 05453 • 802-878-5138

Purgeable Aromatics
SW-846 Method 8020 Compounds

IEA Sample No.: 237130 10
Sample Identification: TP-2A
Date Collected: May 9, 1990

Date Analyzed: May 15, 1990
By: Averill

Number	Compound	Soil Quantitation Limit µg/Kg	Results Concentration µg/Kg
1	Benzene	1.0	BQL
2	Chlorobenzene	1.0	BQL
3	1,2-Dichlorobenzene	1.0	BQL
4	1,3-Dichlorobenzene	1.0	BQL
5	1,4-Dichlorobenzene	1.0	BQL
6	Ethylbenzene	1.0	BQL
7	Toluene	1.0	BQL
8	Total Xylenes	1.0	BQL

Comments BQL - BELOW QUANTITATION LIMIT

Industrial & Environmental Analysts, Inc.
P.O. Box 626 • Essex Junction, Vermont 05453 • 802-878-5138

Phthalates
EPA Method 606 Compounds

IEA Sample Number: 237130 10
Sample Identification: TP-2A
Date Collected: May 9, 1990
Date Extracted: May 17, 1990 By: Rich
Date Analyzed: May 22, 1990

Number	Compound	Soil Quantitation Limit µg/Kg	Results Concentration µg/Kg
1	Dimethylphthalate	350	BQL
2	Diethylphthalate	350	1100
3	Di-n-butyl phthalate	350	BQL
4	Benzyl butyl phthalate	350	BQL
5	bis(2-Ethylhexyl)phthalate	350	33000
6	Di-n-octylphthalate	350	BQL

Comments: BQL = Below Quantitation Limit

Industrial & Environmental Analysts, Inc.
P.O. Box 626 • Essex Junction, Vermont 05453 • 802-878-5138

PCB Summary Sheet

IEA Sample No. 237130 10
Sample Identification TP-2A
Date Extracted May 17, 1990 **Date Analyzed** May 18, 1990
By Hedrick

Compound	SOIL Quantitation Limit	Results Concentration mg/Kg
Aroclor 1016	0.2	BQL
Aroclor 1221	0.2	BQL
Aroclor 1232	0.2	BQL
Aroclor 1242	0.2	0.60
Aroclor 1248	0.2	BQL
Aroclor 1254	0.2	BQL
Aroclor 1260	0.2	BQL
Total Aroclor Concentration	0.2	BQL

Comments

BQL - BELOW QUANTITATION LIMIT
(a) Target compound concentration adjusted for % moisture.

Industrial & Environmental Analysts, Inc.
P.O. Box 626 • Essex Junction, Vermont 05453 • 802-878-5138

Purgeable Halocarbons
SW-846 Method 8010 Compounds

IEA Sample No.: 237130 11
Sample Identification: TP-3A
Date Collected: May 9, 1990

Date Analyzed: May 16, 1990
By: Averill

Number	Compound	Soil Quantitation Limit µg/Kg	Results Concentration µg/Kg
1	Chloromethane	1.0	BQL
2	Bromomethane	1.0	BQL
3	Vinyl Chloride	1.0	BQL
4	Chloroethane	1.0	BQL
5	Methylene chloride	1.0	BQL
6	Trichlorofluoromethane	1.0	BQL
7	1,1-Dichloroethene	1.0	BQL
8	1,1-Dichloroethane	1.0	BQL
9	trans-1,2-Dichloroethene	1.0	BQL
10	Chloroform	1.0	BQL
11	1,2-Dichloroethane	1.0	BQL
12	1,1,1-Trichloroethane	1.0	BQL
13	Carbon tetrachloride	1.0	BQL
14	Bromodichloromethane	1.0	BQL
15	1,2-Dichloropropene	1.0	BQL
16	trans-1,3-Dichloropropene	1.0	BQL
17	Trichloroethene	1.0	BQL
18	cis-1,3-Dichloropropene	1.0	BQL
19	1,1,2-Trichloroethane	1.0	BQL
20	Chlorodibromomethane	1.0	BQL
21	2-Chloroethylvinyl ether	1.0	BQL
22	Bromoform	1.0	BQL
23	Tetrachloroethene	1.0	BQL
24	1,1,2,2-Tetrachloroethane	1.0	BQL
25	Chlorobenzene	1.0	BQL
26	1,3-Dichlorobenzene	1.0	BQL
27	1,2-Dichlorobenzene	1.0	BQL
28	1,4-Dichlorobenzene	1.0	BQL

Comments: BQL - BELOW QUANTITATION LIMIT

Industrial & Environmental Analysts, Inc.
P.O. Box 626 • Essex Junction, Vermont 05453 • 802-878-5138

Purgeable Aromatics
SW-846 Method 8020 Compounds

IEA Sample No.: 237130 11
Sample Identification: TP-3A
Date Collected: May 9, 1990

Date Analyzed: May 15, 1990
By: Averill

Number	Compound	Soil Quantitation Limit µg/Kg	Results Concentration µg/Kg
1	Benzene	1.0	BQL
2	Chlorobenzene	1.0	BQL
3	1,2-Dichlorobenzene	1.0	BQL
4	1,3-Dichlorobenzene	1.0	BQL
5	1,4-Dichlorobenzene	1.0	BQL
6	Ethylbenzene	1.0	BQL
7	Toluene	1.0	BQL
8	Total Xylenes	1.0	3

Comments BQL - BELOW QUANTITATION LIMIT

Industrial & Environmental Analysts, Inc.
P.O. Box 626 • Essex Junction, Vermont 05453 • 802-878-5138

Phthalates
EPA Method 606 Compounds

IEA Sample Number: 237130 11
Sample Identification: TP-3A
Date Collected: May 9, 1990
Date Extracted: May 17, 1990 By: Rich
Date Analyzed: May 23, 1990

Number	Compound	Soil Quantitation Limit µg/Kg	Results Concentration µg/Kg
1	Dimethylphthalate	18000	BQL
2	Diethylphthalate	18000	BQL
3	Di-n-butyl phthalate	18000	BQL
4	Benzyl butyl phthalate	18000	BQL
5	bis(2-Ethylhexyl)phthalate	18000	3000000
6	Di-n-octylphthalate	18000	BQL

Comments: BQL = Below Quantitation Limit
(a) Quantitation limit elevated due to sample dilution prior to analysis.
(b) Sample diluted due to high concentration of target compounds present.

Industrial & Environmental Analysts, Inc.
P.O. Box 626 • Essex Junction, Vermont 05453 • 802-878-5138

PCB Summary Sheet

IEA Sample No. 237130 11

Sample Identification TP-3A

Date Extracted May 17, 1990

Date Analyzed May 18, 1990

By Hedrick

Compound	SOIL Quantitation Limit	Results Concentration mg/Kg
Aroclor 1016	20	BQL
Aroclor 1221	20	BQL
Aroclor 1232	20	BQL
Aroclor 1242	20	77
Aroclor 1248	20	BQL
Aroclor 1254	20	BQL
Aroclor 1260	20	BQL
Total Aroclor Concentration	20	BQL

Comments

BQL - BELOW QUANTITATION LIMIT
(a) Target compound concentration adjusted for % moisture.
(b) Quantitation limit elevated due to sample dilution prior to analysis. (c) Sample diluted due to high concentration of target compounds present.

Industrial & Environmental Analysts, Inc.
P.O. Box 626 • Essex Junction, Vermont 05453 • 802-878-5138

Purgeable Halocarbons
SW-846 Method 8010 Compounds

IEA Sample No.: 237130 12
Sample Identification: TP-4A
Date Collected: May 9, 1990

Date Analyzed: May 16, 1990
By: Averill

Number	Compound	Soil Quantitation Limit µg/Kg	Results Concentration µg/Kg
1	Chloromethane	1.0	BQL
2	Bromomethane	1.0	BQL
3	Vinyl Chloride	1.0	BQL
4	Chloroethane	1.0	BQL
5	Methylene chloride	1.0	BQL
6	Trichlorofluoromethane	1.0	BQL
7	1,1-Dichloroethene	1.0	BQL
8	1,1-Dichloroethane	1.0	BQL
9	trans-1,2-Dichloroethene	1.0	BQL
10	Chloroform	1.0	BQL
11	1,2-Dichloroethane	1.0	BQL
12	1,1,1-Trichloroethane	1.0	BQL
13	Carbon tetrachloride	1.0	BQL
14	Bromodichloromethane	1.0	BQL
15	1,2-Dichloropropene	1.0	BQL
16	trans-1,3-Dichloropropene	1.0	BQL
17	Trichloroethene	1.0	BQL
18	cis-1,3-Dichloropropene	1.0	BQL
19	1,1,2-Trichloroethane	1.0	BQL
20	Chlorodibromomethane	1.0	BQL
21	2-Chloroethylvinyl ether	1.0	BQL
22	Bromoform	1.0	BQL
23	Tetrachloroethene	1.0	BQL
24	1,1,2,2-Tetrachloroethane	1.0	BQL
25	Chlorobenzene	1.0	BQL
26	1,3-Dichlorobenzene	1.0	BQL
27	1,2-Dichlorobenzene	1.0	BQL
28	1,4-Dichlorobenzene	1.0	BQL
		1.0	BQL

Comments: BQL - BELOW QUANTITATION LIMIT

Industrial & Environmental Analysts, Inc.
P.O. Box 626 • Essex Junction, Vermont 05453 • 802-878-5138

Purgeable Aromatics
SW-846 Method 8020 Compounds

IEA Sample No.: 237130 12
Sample Identification: TP-4A
Date Collected: May 9, 1990

Date Analyzed: May 16, 1990
By: Averill

Number	Compound	Soil Quantitation Limit µg/Kg	Results Concentration µg/Kg
1	Benzene	1.0	BQL
2	Chlorobenzene	1.0	BQL
3	1,2-Dichlorobenzene	1.0	BQL
4	1,3-Dichlorobenzene	1.0	BQL
5	1,4-Dichlorobenzene	1.0	BQL
6	Ethylbenzene	1.0	BQL
7	Toluene	1.0	BQL
8	Total Xylenes	1.0	BQL

Comments BQL - BELOW QUANTITATION LIMIT

Industrial & Environmental Analysts, Inc.
P.O. Box 626 • Essex Junction, Vermont 05453 • 802-878-5138

Phthalates
EPA Method 606 Compounds

IEA Sample Number: 237130 12
Sample Identification: TP-4A
Date Collected: May 9, 1990
Date Extracted: May 17, 1990 By: Rich
Date Analyzed: May 22, 1990

Number	Compound	Soil Quantitation Limit µg/Kg	Results Concentration µg/Kg
1	Dimethylphthalate	350	BQL
2	Diethylphthalate	350	750
3	Di-n-butyl phthalate	350	1000
4	Benzyl butyl phthalate	350	BQL
5	bis(2-Ethylhexyl)phthalate	350	130000
6	Di-n-octylphthalate	350	BQL

Comments: BQL = Below Quantitation Limit

Industrial & Environmental Analysts, Inc.
P.O. Box 626 • Essex Junction, Vermont 05453 • 802-878-5138

BURLINGTON
RECEIVED
JUN 4 1990

PCB Summary Sheet

IEA Sample No. 237130 12

Sample Identification TP-4A

Date Extracted May 17, 1990

Date Analyzed May 18, 1990

By Hedrick

Compound	Soil Quantitation Limit	Results Concentration mg/Kg
Aroclor 1016	20	BQL
Aroclor 1221	20	BQL
Aroclor 1232	20	BQL
Aroclor 1242	20	37
Aroclor 1248	20	BQL
Aroclor 1254	20	BQL
Aroclor 1260	20	BQL
Total Aroclor Concentration	20	BQL

Comments

BQL - BELOW QUANTITATION LIMIT
(a) Quantitation limit elevated due to sample dilution prior to analysis. (b) Sample diluted due to high concentration of target compounds present.
(c) Target compound concentration adjusted for % moisture.

Industrial & Environmental Analysts, Inc.
P.O. Box 626 • Essex Junction, Vermont 05453 • 802-878-5138

Purgeable Halocarbons
SW-846 Method 8010 Compounds

IEA Sample No.: 237130 13
Sample Identification: TP-5A
Date Collected: May 9, 1990

Date Analyzed: May 16, 1990
By: Averill

Number	Compound	Soil Quantitation Limit µg/Kg	Results Concentration µg/Kg
1	Chloromethane	1.0	BQL
2	Bromomethane	1.0	BQL
3	Vinyl Chloride	1.0	BQL
4	Chloroethane	1.0	BQL
5	Methylene chloride	1.0	BQL
6	Trichlorofluoromethane	1.0	BQL
7	1,1-Dichloroethene	1.0	BQL
8	1,1-Dichloroethane	1.0	BQL
9	trans-1,2-Dichloroethene	1.0	BQL
10	Chloroform	1.0	BQL
11	1,2-Dichloroethane	1.0	BQL
12	1,1,1-Trichloroethane	1.0	BQL
13	Carbon tetrachloride	1.0	BQL
14	Bromodichloromethane	1.0	BQL
15	1,2-Dichloropropane	1.0	BQL
16	trans-1,3-Dichloropropene	1.0	BQL
17	Trichloroethene	1.0	BQL
18	cis-1,3-Dichloropropene	1.0	BQL
19	1,1,2-Trichloroethane	1.0	BQL
20	Chlorodibromomethane	1.0	BQL
21	2-Chloroethylvinyl ether	1.0	BQL
22	Bromoform	1.0	BQL
23	Tetrachloroethene	1.0	BQL
24	1,1,2,2-Tetrachloroethane	1.0	BQL
25	Chlorobenzene	1.0	BQL
26	1,3-Dichlorobenzene	1.0	BQL
27	1,2-Dichlorobenzene	1.0	BQL
28	1,4-Dichlorobenzene	1.0	BQL

Comments BQL - BELOW QUANTITATION LIMIT

Industrial & Environmental Analysts, Inc.
P.O. Box 626 • Essex Junction, Vermont 05453 • 802-878-5138

Purgeable Aromatics
SW-846 Method 8020 Compounds

IEA Sample No.: 237130 13
Sample Identification: TP-5A
Date Collected: May 9, 1990

Date Analyzed: May 15, 1990
By: Averill

Number	Compound	Soil Quantitation Limit µg/Kg	Results Concentration µg/Kg
1	Benzene	1.0	BQL
2	Chlorobenzene	1.0	BQL
3	1,2-Dichlorobenzene	1.0	BQL
4	1,3-Dichlorobenzene	1.0	BQL
5	1,4-Dichlorobenzene	1.0	BQL
6	Ethylbenzene	1.0	BQL
7	Toluene	1.0	BQL
8	Total Xylenes	1.0	BQL

Comments BQL - BELOW QUANTITATION LIMIT

Industrial & Environmental Analysts, Inc.
P.O. Box 626 • Essex Junction, Vermont 05453 • 802-878-5138

Phthalates
EPA Method 606 Compounds

IEA Sample Number: 237130 13
Sample Identification: TP-5A
Date Collected: May 9, 1990
Date Extracted: May 17, 1990 By: Rich
Date Analyzed: May 22, 1990

Number	Compound	Soil Quantitation Limit µg/Kg	Results Concentration µg/Kg
1	Dimethylphthalate	350	BQL
2	Diethylphthalate	350	BQL
3	Di-n-butyl phthalate	350	930
4	Benzyl butyl phthalate	350	BQL
5	bis(2-Ethylhexyl)phthalate	350	4100
6	Di-n-octylphthalate	350	1100

Comments: BQL = Below Quantitation Limit

Industrial & Environmental Analysts, Inc.
P.O. Box 626 • Essex Junction, Vermont 05453 • 802-878-5138

PCB Summary Sheet

IEA Sample No. 237130 13

Sample Identification TP-5A

Date Extracted May 17, 1990

Date Analyzed May 18, 1990

By Hedrick

Compound	SOIL Quantitation Limit	Results Concentration mg/Kg
Aroclor 1016	2.0	BQL
Aroclor 1221	2.0	BQL
Aroclor 1232	2.0	BQL
Aroclor 1242	2.0	10
Aroclor 1248	2.0	BQL
Aroclor 1254	2.0	BQL
Aroclor 1260	2.0	BQL
Total Aroclor Concentration	2.0	BQL

Comments

BQL - BELOW QUANTITATION LIMIT
(a) Target compound concentration adjusted for % moisture.
(b) Quantitation limit elevated due to sample dilution prior to analysis. (c) Sample diluted due to high concentration of target compounds present.

Industrial & Environmental Analysts, Inc.
P.O. Box 626 • Essex Junction, Vermont 05453 • 802-878-5138

Purgeable Halocarbons
SW-846 Method 8010 Compounds

IEA Sample No.: 237130 15
Sample Identification: TP-5C
Date Collected: May 9, 1990

Date Analyzed: May 15, 1990
By: Averill

Number	Compound	Soil Quantitation Limit µg/Kg	Results Concentration µg/Kg
1	Chloromethane	1.0	BQL
2	Bromomethane	1.0	BQL
3	Vinyl Chloride	1.0	BQL
4	Chloroethane	1.0	BQL
5	Methylene chloride	1.0	BQL
6	Trichlorofluoromethane	1.0	BQL
7	1,1-Dichloroethene	1.0	BQL
8	1,1-Dichloroethane	1.0	BQL
9	trans-1,2-Dichloroethene	1.0	BQL
10	Chloroform	1.0	BQL
11	1,2-Dichloroethane	1.0	BQL
12	1,1,1-Trichloroethane	1.0	BQL
13	Carbon tetrachloride	1.0	BQL
14	Bromodichloromethane	1.0	BQL
15	1,2-Dichloropropane	1.0	BQL
16	trans-1,3-Dichloropropene	1.0	BQL
17	Trichloroethene	1.0	BQL
18	cis-1,3-Dichloropropene	1.0	BQL
19	1,1,2-Trichloroethane	1.0	BQL
20	Chlorodibromomethane	1.0	BQL
21	2-Chloroethylvinyl ether	1.0	BQL
22	Bromoform	1.0	BQL
23	Tetrachloroethene	1.0	BQL
24	1,1,2,2-Tetrachloroethane	1.0	BQL
25	Chlorobenzene	1.0	BQL
26	1,3-Dichlorobenzene	1.0	BQL
27	1,2-Dichlorobenzene	1.0	BQL
28	1,4-Dichlorobenzene	1.0	BQL
		1.0	BQL

Comments: BQL - BELOW QUANTITATION LIMIT

Industrial & Environmental Analysts, Inc.
P.O. Box 626 • Essex Junction, Vermont 05453 • 802-878-5138

Purgeable Aromatics
SW-846 Method 8020 Compounds

IEA Sample No.: 237130 15
Sample Identification: TP-5C
Date Collected: May 9, 1990

Date Analyzed: May 15, 1990
By: Averill

Number	Compound	Soil Quantitation Limit µg/Kg	Results Concentration µg/Kg
1	Benzene	1.0	BQL
2	Chlorobenzene	1.0	BQL
3	1,2-Dichlorobenzene	1.0	BQL
4	1,3-Dichlorobenzene	1.0	BQL
5	1,4-Dichlorobenzene	1.0	BQL
6	Ethylbenzene	1.0	BQL
7	Toluene	1.0	BQL
8	Total Xylenes	1.0	BQL

Comments BQL - BELOW QUANTITATION LIMIT

Industrial & Environmental Analysts, Inc.
P.O. Box 626 • Essex Junction, Vermont 05453 • 802-878-5138

Phthalates
EPA Method 606 Compounds

IEA Sample Number: 237130 15
Sample Identification: TP-5C
Date Collected: May 9, 1990
Date Extracted: May 17, 1990 By: Rich
Date Analyzed: May 23, 1990

Number	Compound	Soil Quantitation Limit µg/Kg	Results Concentration µg/Kg
1	Dimethylphthalate	350	BQL
2	Diethylphthalate	350	BQL
3	Di-n-butyl phthalate	350	BQL
4	Benzyl butyl phthalate	350	BQL
5	bis(2-Ethylhexyl)phthalate	350	BQL
6	Di-n-octylphthalate	350	BQL

Comments: BQL = Below Quantitation Limit

Industrial & Environmental Analysts, Inc.
P.O. Box 626 • Essex Junction, Vermont 05453 • 802-878-5138

PCB Summary Sheet

IEA Sample No. 237130 15

Sample Identification TP-5C

Date Extracted May 17, 1990

Date Analyzed May 18, 1990

By Hedrick

Compound	SOIL Quantitation Limit	Results Concentration mg/Kg
Aroclor 1016	0.2	BQL
Aroclor 1221	0.2	BQL
Aroclor 1232	0.2	BQL
Aroclor 1242	0.2	0.3
Aroclor 1248	0.2	BQL
Aroclor 1254	0.2	BQL
Aroclor 1260	0.2	BQL
Total Aroclor Concentration	0.2	BQL

Comments

BQL - BELOW QUANTITATION LIMIT
(a) Target compound concentration adjusted for % moisture.

Industrial & Environmental Analysts, Inc.
P.O. Box 626 • Essex Junction, Vermont 05453 • 802-878-5138

Purgeable Halocarbons
SW-846 Method 8010 Compounds

IEA Sample No.: 237130 14
Sample Identification: TP-6A
Date Collected: May 9, 1990

Date Analyzed: May 16, 1990
By: Averill

Number	Compound	Soil Quantitation Limit µg/Kg	Results Concentration µg/Kg
1	Chloromethane	1.0	BQL
2	Bromomethane	1.0	BQL
3	Vinyl Chloride	1.0	BQL
4	Chloroethane	1.0	BQL
5	Methylene chloride	1.0	BQL
6	Trichlorofluoromethane	1.0	BQL
7	1,1-Dichloroethene	1.0	BQL
8	1,1-Dichloroethane	1.0	BQL
9	trans-1,2-Dichloroethene	1.0	BQL
10	Chloroform	1.0	BQL
11	1,2-Dichloroethane	1.0	BQL
12	1,1,1-Trichloroethane	1.0	BQL
13	Carbon tetrachloride	1.0	BQL
14	Bromodichloromethane	1.0	BQL
15	1,2-Dichloropropene	1.0	BQL
16	trans-1,3-Dichloropropene	1.0	BQL
17	Trichloroethene	1.0	BQL
18	cis-1,3-Dichloropropene	1.0	BQL
19	1,1,2-Trichloroethane	1.0	BQL
20	Chlorodibromomethane	1.0	BQL
21	2-Chloroethylvinyl ether	1.0	BQL
22	Bromoform	1.0	BQL
23	Tetrachloroethene	1.0	BQL
24	1,1,2,2-Tetrachloroethane	1.0	BQL
25	Chlorobenzene	1.0	BQL
26	1,3-Dichlorobenzene	1.0	BQL
27	1,2-Dichlorobenzene	1.0	BQL
28	1,4-Dichlorobenzene	1.0	BQL

Comments: BQL - BELOW QUANTITATION LIMIT

Industrial & Environmental Analysts, Inc.
P.O. Box 626 • Essex Junction, Vermont 05453 • 802-878-5138

Purgeable Aromatics
SW-846 Method 8020 Compounds

IEA Sample No.: 237130 14
Sample Identification: TP-6A
Date Collected: May 9, 1990

Date Analyzed: May 16, 1990
By: Averill

Number	Compound	Soil Quantitation Limit µg/Kg	Results Concentration µg/Kg
1	Benzene	1.0	BQL
2	Chlorobenzene	1.0	BQL
3	1,2-Dichlorobenzene	1.0	BQL
4	1,3-Dichlorobenzene	1.0	BQL
5	1,4-Dichlorobenzene	1.0	BQL
6	Ethylbenzene	1.0	BQL
7	Toluene	1.0	BQL
8	Total Xylenes	1.0	BQL

Comments BQL - BELOW QUANTITATION LIMIT

Industrial & Environmental Analysts, Inc.
P.O. Box 626 • Essex Junction, Vermont 05453 • 802-878-5138

Phthalates
EPA Method 606 Compounds

IEA Sample Number: 237130 14
Sample Identification: TP-6A
Date Collected: May 9, 1990
Date Extracted: May 17, 1990 By: Rich
Date Analyzed: May 23, 1990

Number	Compound	Soil Quantitation Limit µg/Kg	Results Concentration µg/Kg
1	Dimethylphthalate	350	BQL
2	Diethylphthalate	350	BQL
3	Di-n-butyl phthalate	350	BQL
4	Benzyl butyl phthalate	350	BQL
5	bis(2-Ethylhexyl)phthalate	350	4100
6	Di-n-octylphthalate	350	BQL

Comments: BQL = Below Quantitation Limit

Offices and laboratories located in: Essex Junction, Vermont
Research Triangle Park, North Carolina

Industrial & Environmental Analysts, Inc.
P.O. Box 626 • Essex Junction, Vermont 05453 • 802-878-5138

PCB Summary Sheet

IEA Sample No. 237130 14

Sample Identification TP-6A

Date Extracted May 17, 1990

Date Analyzed May 18, 1990

By Hedrick

Compound	SOIL Quantitation Limit	Results Concentration mg/Kg
Aroclor 1016	2.0	BQL
Aroclor 1221	2.0	BQL
Aroclor 1232	2.0	BQL
Aroclor 1242	2.0	13
Aroclor 1248	2.0	BQL
Aroclor 1254	2.0	BQL
Aroclor 1260	2.0	BQL
Total Aroclor Concentration	2.0	BQL

Comments

BQL - BELOW QUANTITATION LIMIT
(a) Target compound concentration adjusted for % moisture.
(b) Quantitation limit elevated due to sample dilution prior to analysis. (c) Sample diluted due to high concentration of target compounds present.

Industrial & Environmental Analysts, Inc.
P.O. Box 626 • Essex Junction, Vermont 05453 • 802-878-5138

Purgeable Halocarbons
SW-846 Method 8010 Compounds

IEA Sample No.: 237130 16
Sample Identification: TP-6C
Date Collected: May 9, 1990

Date Analyzed: May 16, 1990
By: Averill

Number	Compound	Soil Quantitation Limit µg/Kg	Results Concentration µg/Kg
1	Chloromethane	1.0	BQL
2	Bromomethane	1.0	BQL
3	Vinyl Chloride	1.0	BQL
4	Chloroethane	1.0	BQL
5	Methylene chloride	1.0	BQL
6	Trichlorofluoromethane	1.0	BQL
7	1,1-Dichloroethene	1.0	BQL
8	1,1-Dichloroethane	1.0	BQL
9	trans-1,2-Dichloroethene	1.0	BQL
10	Chloroform	1.0	BQL
11	1,2-Dichloroethane	1.0	BQL
12	1,1,1-Trichloroethane	1.0	BQL
13	Carbon tetrachloride	1.0	BQL
14	Bromodichloromethane	1.0	BQL
15	1,2-Dichloropropane	1.0	BQL
16	trans-1,3-Dichloropropene	1.0	BQL
17	Trichloroethene	1.0	BQL
18	cis-1,3-Dichloropropene	1.0	BQL
19	1,1,2-Trichloroethane	1.0	BQL
20	Chlorodibromomethane	1.0	BQL
21	2-Chloroethylvinyl ether	1.0	BQL
22	Bromoform	1.0	BQL
23	Tetrachloroethene	1.0	BQL
24	1,1,2,2-Tetrachloroethane	1.0	BQL
25	Chlorobenzene	1.0	BQL
26	1,3-Dichlorobenzene	1.0	BQL
27	1,2-Dichlorobenzene	1.0	BQL
28	1,4-Dichlorobenzene	1.0	BQL

Comments: BQL - BELOW QUANTITATION LIMIT

Industrial & Environmental Analysts, Inc.
P.O. Box 626 • Essex Junction, Vermont 05453 • 802-878-5138

Purgeable Aromatics
SW-846 Method 8020 Compounds

IEA Sample No.: 237130 16
Sample Identification: TP-6C
Date Collected: May 9, 1990

Date Analyzed: May 16, 1990
By: Averill

Number	Compound	Soil Quantitation Limit µg/Kg	Results Concentration µg/Kg
1	Benzene	1.0	BQL
2	Chlorobenzene	1.0	BQL
3	1,2-Dichlorobenzene	1.0	BQL
4	1,3-Dichlorobenzene	1.0	BQL
5	1,4-Dichlorobenzene	1.0	BQL
6	Ethylbenzene	1.0	BQL
7	Toluene	1.0	BQL
8	Total Xylenes	1.0	BQL

Comments: BQL - BELOW QUANTITATION LIMIT

Industrial & Environmental Analysts, Inc.
P.O. Box 626 • Essex Junction, Vermont 05453 • 802-878-5138

PCB Summary Sheet

IEA Sample No. 237165 7

Sample Identification MW 9A

Date Extracted June 20, 1990

Date Analyzed June 20, 1990

By Hedrick

Compound	Water Quantitation Limit	Results Concentration µg/L
Aroclor 1016	1.0	BQL
Aroclor 1221	1.0	BQL
Aroclor 1232	1.0	BQL
Aroclor 1242	1.0	BQL
Aroclor 1248	1.0	BQL
Aroclor 1254	1.0	BQL
Aroclor 1260	1.0	BQL
Total Aroclor Concentration	1.0	BQL

Comments

BQL - BELOW QUANTITATION LIMIT
Water phase

Industrial & Environmental Analysts, Inc.
P.O. Box 626 • Essex Junction, Vermont 05453 • 802-878-5138

Purgeable Halocarbons
EPA Method 601 Compounds

IEA Sample No.: 237165 2
Sample Identification: MW 2A
Date Collected: June 13, 1990

Date Analyzed: June 21, 1990
By: Averill

Number	Compound	Water Quantitation Limit µg/L	Results Concentration µg/L
1	Chloromethane	1	BQL
2	Bromomethane	1	BQL
3	Vinyl Chloride	1	BQL
4	Dichlorodifluoromethane	1	BQL
5	Chloroethane	1	BQL
6	Methylene chloride	1	BQL
7	Trichlorofluoromethane	1	BQL
8	1,1-Dichloroethene	1	BQL
9	1,1-Dichloroethane	1	BQL
10	trans-1,2-Dichloroethene	1	BQL
11	Chloroform	1	BQL
12	1,2-Dichloroethane	1	BQL
13	1,1,1-Trichloroethane	1	BQL
14	Carbon tetrachloride	1	BQL
15	Bromodichloromethane	1	BQL
16	1,2-Dichloropropane	1	BQL
17	trans-1,3-Dichloropropene	1	BQL
18	Trichloroethene	1	BQL
19	cis-1,3-Dichloropropene	1	BQL
20	1,1,2-Trichloroethane	1	BQL
21	Chlorodibromomethane	1	BQL
22	2-Chloroethylvinyl ether	1	BQL
23	Bromoform	1	BQL
24	Tetrachloroethene	1	BQL
25	1,1,2,2-Tetrachloroethane	1	BQL
26	Chlorobenzene	1	BQL
27	1,3-Dichlorobenzene	1	BQL
28	1,2-Dichlorobenzene	1	BQL
29	1,4-Dichlorobenzene	1	BQL

Comments: BQL - BELOW QUANTITATION LIMIT

Industrial & Environmental Analysts, Inc.
P.O. Box 626 • Essex Junction, Vermont 05453 • 802-878-5138

Purgeable Aromatics
EPA Method 602 Compounds

IEA Sample No.: 237165 2
Sample Identification: MW 2A
Date Collected: June 13, 1990

Date Analyzed: June 21, 1990
By: Averill

Number	Compound	Water Quantitation Limit µg/L	Results Concentration µg/L
1	Benzene	1.0	BQL
2	Chlorobenzene	1.0	BQL
3	1,2-Dichlorobenzene	1.0	BQL
4	1,3-Dichlorobenzene	1.0	BQL
5	1,4-Dichlorobenzene	1.0	BQL
6	Ethylbenzene	1.0	BQL
7	Toluene	1.0	BQL
8	Total Xylenes	1.0	BQL

Comments: BQL - BELOW QUANTITATION LIMIT

Industrial & Environmental Analysts, Inc.
P.O. Box 626 • Essex Junction, Vermont 05453 • 802-878-5138

Phthalates
EPA Method 606 Compounds

IEA Sample Number: 237165 2
Sample Identification: MW 2A
Date Collected: June 13, 1990
Date Extracted: June 20, 1990 By: Joquin
Date Analyzed: June 26, 1990

Number	Compound	Water Quantitation Limit µg/L	Results Concentration µg/L
1	Dimethylphthalate	10	BQL
2	Diethylphthalate	10	BQL
3	Di-n-butyl phthalate	10	BQL
4	Benzyl butyl phthalate	10	BQL
5	bis(2-Ethylhexyl)phthalate	10	52
6	Di-n-octylphthalate	10	BQL

Comments: BQL = Below Quantitation Limit

Industrial & Environmental Analysts, Inc.
P.O. Box 626 • Essex Junction, Vermont 05453 • 802-878-5138

PCB Summary Sheet

IEA Sample No. 237165 2

Sample Identification MW 2A

Date Extracted June 20, 1990

Date Analyzed June 20, 1990

By Hedrick/Travis

Compound	Water Quantitation Limit	Results Concentration µg/L
Aroclor 1016	1.0	BQL
Aroclor 1221	1.0	BQL
Aroclor 1232	1.0	BQL
Aroclor 1242	1.0	9.3
Aroclor 1248	1.0	BQL
Aroclor 1254	1.0	BQL
Aroclor 1260	1.0	BQL
Total Aroclor Concentration	1.0	9.3

Comments

BQL - BELOW QUANTITATION LIMIT
Water phase

Industrial & Environmental Analysts, Inc.
P.O. Box 626 • Essex Junction, Vermont 05453 • 802-878-5138

Purgeable Halocarbons

EPA Method 601 Compounds

IEA Sample No.: 237165 3
Sample Identification: MW 3A
Date Collected: June 13, 1990

Date Analyzed: June 26, 1990
By: Averill

Number	Compound	Water Quantitation Limit µg/L	Results Concentration µg/L
1	Chloromethane	1.0	BQL
2	Bromomethane	1.0	BQL
3	Vinyl Chloride	1.0	3
4	Dichlorodifluoromethane	1.0	BQL
5	Chloroethane	1.0	1
6	Methylene chloride	1.0	BQL
7	Trichlorofluoromethane	1.0	BQL
8	1,1-Dichloroethene	1.0	BQL
9	1,1-Dichloroethane	1.0	24
10	trans-1,2-Dichloroethene	1.0	14
11	Chloroform	1.0	BQL
12	1,2-Dichloroethane	1.0	BQL
13	1,1,1-Trichloroethane	1.0	6
14	Carbon tetrachloride	1.0	BQL
15	Bromodichloromethane	1.0	BQL
16	1,2-Dichloropropane	1.0	BQL
17	trans-1,3-Dichloropropene	1.0	BQL
18	Trichloroethene	1.0	BQL
19	cis-1,3-Dichloropropene	1.0	BQL
20	1,1,2-Trichloroethane	1.0	BQL
21	Chlorodibromomethane	1.0	BQL
22	2-Chloroethylvinyl ether	1.0	BQL
23	Bromoform	1.0	BQL
24	Tetrachloroethene	1.0	BQL
25	1,1,2,2-Tetrachloroethane	1.0	BQL
26	Chlorobenzene	1.0	BQL
27	1,3-Dichlorobenzene	1.0	1
28	1,2-Dichlorobenzene	1.0	BQL
29	1,4-Dichlorobenzene	1.0	12

Comments
BQL - BELOW QUANTITATION LIMIT
Water phase

Industrial & Environmental Analysts, Inc.
P.O. Box 626 • Essex Junction, Vermont 05453 • 802-878-5138

Purgeable Aromatics
EPA Method 602 Compounds

IEA Sample No.: 237165 3
Sample Identification: MW 3A
Date Collected: June 13, 1990

Date Analyzed: June 26, 1990
By: Averill

Number	Compound	Water Quantitation Limit µg/L	Results Concentration µg/L
1	Benzene	1.0	BQL
2	Chlorobenzene	1.0	BQL
3	1,2-Dichlorobenzene	1.0	BQL
4	1,3-Dichlorobenzene	1.0	4
5	1,4-Dichlorobenzene	1.0	17
6	Ethylbenzene	1.0	1
7	Toluene	1.0	11
8	Total Xylenes	1.0	3

Comments
BQL - BELOW QUANTITATION LIMIT
Water phase

Industrial & Environmental Analysts, Inc.
P.O. Box 626 • Essex Junction, Vermont 05453 • 802-878-5138

Phthalates
EPA Method 606 Compounds

IEA Sample Number: 237165 3
Sample Identification: MW 3A
Date Collected: June 13, 1990
Date Extracted: June 20, 1990 By: Joquin
Date Analyzed: June 26, 1990

Number	Compound	Water Quantitation Limit µg/L	Results Concentration µg/L
1	Dimethylphthalate	880,000	BQL
2	Diethylphthalate	880,000	BQL
3	Di-n-butyl phthalate	880,000	BQL
4	Benzyl butyl phthalate	880,000	BQL
5	bis(2-Ethylhexyl)phthalate	880,000	110,000,000
6	Di-n-octylphthalate	880,000	BQL

Comments: BQL = Below Quantitation Limit
(a) Quantitation limit elevated due to sample dilution prior to analysis.
(b) Sample diluted due to high concentration of target compounds present.

Industrial & Environmental Analysts, Inc.
P.O. Box 626 • Essex Junction, Vermont 05453 • 802-878-5138

PCB Summary Sheet

IEA Sample No. 237165 3

Sample Identification MW 3A

Date Extracted June 20, 1990

Date Analyzed June 26, 1990

By Travis

Compound	Water Quantitation Limit	Results Concentration µg/L
Aroclor 1016	75,000	BQL
Aroclor 1221	75,000	BQL
Aroclor 1232	75,000	BQL
Aroclor 1242	75,000	390,000
Aroclor 1248	75,000	BQL
Aroclor 1254	75,000	BQL
Aroclor 1260	75,000	BQL
Total Aroclor Concentration	75,000	390,000

Comments

BQL - BELOW QUANTITATION LIMIT
Water phase
Quantitation limit elevated due to sample dilution prior to analysis.
Sample diluted due to high concentration of target compounds present.

Industrial & Environmental Analysts, Inc.
P.O. Box 626 • Essex Junction, Vermont 05453 • 802-878-5138

Purgeable Halocarbons
EPA Method 601 Compounds

IEA Sample No.: 237165 3
Sample Identification: MW 3A
Date Collected: June 13, 1990

Date Analyzed: June 26, 1990
By: Averill

Number	Compound	Quantitation Limit µg/L	Results Concentration µg/L
1	Chloromethane	500	BQL
2	Bromomethane	500	BQL
3	Vinyl Chloride	500	BQL
4	Dichlorodifluoromethane	500	BQL
5	Chloroethane	500	BQL
6	Methylene chloride	500	BQL
7	Trichlorofluoromethane	500	BQL
8	1,1-Dichloroethene	500	BQL
9	1,1-Dichloroethane	500	2200
10	trans-1,2-Dichloroethene	500	1400
11	Chloroform	500	BQL
12	1,2-Dichloroethane	500	BQL
13	1,1,1-Trichloroethane	500	2500
14	Carbon tetrachloride	500	BQL
15	Bromodichloromethane	500	BQL
16	1,2-Dichloropropane	500	BQL
17	trans-1,3-Dichloropropene	500	BQL
18	Trichloroethene	500	BQL
19	cis-1,3-Dichloropropene	500	BQL
20	1,1,2-Trichloroethane	500	BQL
21	Chlorodibromomethane	500	BQL
22	2-Chloroethylvinyl ether	500	BQL
23	Bromoform	500	BQL
24	Tetrachloroethene	500	BQL
25	1,1,2,2-Tetrachloroethane	500	BQL
26	Chlorobenzene	500	550
27	1,3-Dichlorobenzene	500	1500
28	1,2-Dichlorobenzene	500	BQL
29	1,4-Dichlorobenzene	500	14,000

Comments

BQL - BELOW QUANTITATION LIMIT
Oil Phase.
Quantitation limit elevated due to sample dilution prior to analysis.
Sample diluted due to high concentration of target compounds present.

Industrial & Environmental Analysts, Inc.
P.O. Box 626 • Essex Junction, Vermont 05453 • 802-878-5138

Purgeable Aromatics
EPA Method 602

IEA Sample No.: 237165 3
Sample Identification: MW 3A
Date Collected: June 13, 1990

Date Analyzed: June 26, 1990
By: Averill

Number	Compound	Quantitation Limit µg/L	Results Concentration µg/L
1	Benzene	500	BQL
2	Chlorobenzene	500	550
3	1,2-Dichlorobenzene	500	BQL
4	1,3-Dichlorobenzene	500	1500
5	1,4-Dichlorobenzene	500	14,000
6	Ethylbenzene	500	BQL
7	Toluene	500	BQL
8	Total Xylenes	500	BQL

Comments

BQL - BELOW QUANTITATION LIMIT
Oil Phase.
Quantitation limit elevated due to sample dilution prior to analysis.
Sample diluted due to presence of non-target compounds.

Industrial & Environmental Analysts, Inc.
P.O. Box 626 • Essex Junction, Vermont 05453 • 802-878-5138

PCB Summary Sheet

IEA Sample No. 237165 3

Sample Identification MW 3A

Date Extracted June 20, 1990

Date Analyzed June 26, 1990

By Travis

Compound	Oil Quantitation Limit	Results Concentration mg/Kg
Aroclor 1016	100	BQL
Aroclor 1221	100	BQL
Aroclor 1232	100	BQL
Aroclor 1242	100	2500
Aroclor 1248	100	BQL
Aroclor 1254	100	BQL
Aroclor 1260	100	BQL
Total Aroclor Concentration	100	2500

Comments

BQL - BELOW QUANTITATION LIMIT
Oil phase
Quantitation limit elevated due to sample dilution prior to analysis.
Sample diluted due to high concentration of target compounds present.

Industrial & Environmental Analysts, Inc.
P.O. Box 626 • Essex Junction, Vermont 05453 • 802-878-5138

Purgeable Halocarbons

EPA Method 601 Compounds

IEA Sample No.: 237165 4
Sample Identification: MW 3B
Date Collected: June 13, 1990

Date Analyzed: June 26, 1990
By: Averill

Number	Compound	Water Quantitation Limit µg/L	Results Concentration µg/L
1	Chloromethane	1.0	BQL
2	Bromomethane	1.0	BQL
3	Vinyl Chloride	1.0	3
4	Dichlorodifluoromethane	1.0	BQL
5	Chloroethane	1.0	1
6	Methylene chloride	1.0	BQL
7	Trichlorofluoromethane	1.0	BQL
8	1,1-Dichloroethene	1.0	BQL
9	1,1-Dichloroethane	1.0	24
10	trans-1,2-Dichloroethene	1.0	15
11	Chloroform	1.0	1
12	1,2-Dichloroethane	1.0	BQL
13	1,1,1-Trichloroethane	1.0	7
14	Carbon tetrachloride	1.0	BQL
15	Bromodichloromethane	1.0	BQL
16	1,2-Dichloropropane	1.0	BQL
17	trans-1,3-Dichloropropene	1.0	BQL
18	Trichloroethene	1.0	BQL
19	cis-1,3-Dichloropropene	1.0	BQL
20	1,1,2-Trichloroethane	1.0	BQL
21	Chlorodibromomethane	1.0	BQL
22	2-Chloroethylvinyl ether	1.0	BQL
23	Bromoform	1.0	BQL
24	Tetrachloroethene	1.0	BQL
25	1,1,2,2-Tetrachloroethane	1.0	BQL
26	Chlorobenzene	1.0	BQL
27	1,3-Dichlorobenzene	1.0	2
28	1,2-Dichlorobenzene	1.0	BQL
29	1,4-Dichlorobenzene	1.0	16

Comments
BQL - BELOW QUANTITATION LIMIT
Water phase

Industrial & Environmental Analysts, Inc.
P.O. Box 626 • Essex Junction, Vermont 05453 • 802-878-5138

Purgeable Aromatics
EPA Method 602 Compounds

IEA Sample No.: 237165 4
Sample Identification: MW 38
Date Collected: June 13, 1990

Date Analyzed: June 26, 1990
By: Averill

Number	Compound	Water Quantitation Limit µg/L	Results Concentration µg/L
1	Benzene	1.0	BQL
2	Chlorobenzene	1.0	BQL
3	1,2-Dichlorobenzene	1.0	BQL
4	1,3-Dichlorobenzene	1.0	7
5	1,4-Dichlorobenzene	1.0	24
6	Ethylbenzene	1.0	2
7	Toluene	1.0	13
8	Total Xylenes	1.0	17

Comments
BQL - BELOW QUANTITATION LIMIT
Water phase

Industrial & Environmental Analysts, Inc.
P.O. Box 626 • Essex Junction, Vermont 05453 • 802-878-5138

Phthalates
EPA Method 606 Compounds

IEA Sample Number: 237165 4
Sample Identification: MW 3B
Date Collected: June 13, 1990
Date Extracted: June 20, 1990 By: Joquin
Date Analyzed: June 26, 1990

Number	Compound	Water Quantitation Limit µg/L	Results Concentration µg/L
1	Dimethylphthalate	940,000	BQL
2	Diethylphthalate	940,000	BQL
3	Di-n-butyl phthalate	940,000	BQL
4	Benzyl butyl phthalate	940,000	BQL
5	bis(2-Ethylhexyl)phthalate	940,000	98,000,000
6	Di-n-octylphthalate	940,000	BQL

Comments: BQL = Below Quantitation Limit

Industrial & Environmental Analysts, Inc.
P.O. Box 626 • Essex Junction, Vermont 05453 • 802-878-5138

PCB Summary Sheet

IEA Sample No. 237165 4

Sample Identification MW 38

Date Extracted June 20, 1990

Date Analyzed June 26, 1990

By Travis

Compound	Water Quantitation Limit	Results Concentration µg/L
Aroclor 1016	58,000	BQL
Aroclor 1221	58,000	BQL
Aroclor 1232	58,000	BQL
Aroclor 1242	58,000	280,000
Aroclor 1248	58,000	BQL
Aroclor 1254	58,000	BQL
Aroclor 1260	58,000	BQL
Total Aroclor Concentration	58,000	280,000

Comments

BQL - BELOW QUANTITATION LIMIT
Water phase
Quantitation limit elevated due to sample dilution prior to analysis.
Sample diluted due to high concentration of target compounds present.

Industrial & Environmental Analysts, Inc.
P.O. Box 626 • Essex Junction, Vermont 05453 • 802-878-5138

Purgeable Halocarbons
EPA Method 601 Compounds

IEA Sample No.: 237165 4
Sample Identification: MW 3B
Date Collected: June 13, 1990

Date Analyzed: June 26, 1990
By: Averill

Number	Compound	Oil Quantitation Limit µg/L	Results Concentration µg/L
1	Chloromethane	500	BQL
2	Bromomethane	500	BQL
3	Vinyl Chloride	500	BQL
4	Dichlorodifluoromethane	500	BQL
5	Chloroethane	500	BQL
6	Methylene chloride	500	BQL
7	Trichlorofluoromethane	500	BQL
8	1,1-Dichloroethene	500	BQL
9	1,1-Dichloroethane	500	2100
10	trans-1,2-Dichloroethene	500	1500
11	Chloroform	500	BQL
12	1,2-Dichloroethane	500	BQL
13	1,1,1-Trichloroethane	500	2400
14	Carbon tetrachloride	500	BQL
15	Bromodichloromethane	500	BQL
16	1,2-Dichloropropane	500	BQL
17	trans-1,3-Dichloropropene	500	BQL
18	Trichloroethene	500	BQL
19	cis-1,3-Dichloropropene	500	BQL
20	1,1,2-Trichloroethane	500	BQL
21	Chlorodibromomethane	800	BQL
22	2-Chloroethylvinyl ether	500	BQL
23	Bromoform	500	BQL
24	Tetrachloroethene	500	BQL
25	1,1,2,2-Tetrachloroethane	500	BQL
26	Chlorobenzene	500	570
27	1,3-Dichlorobenzene	500	1500
28	1,2-Dichlorobenzene	500	BQL
29	1,4-Dichlorobenzene	500	14,000

Comments

BQL - BELOW QUANTITATION LIMIT
(a) Oil Phase
(b) Quantitation limit elevated due to sample dilution prior to analysis.
(c) Sample diluted due to high concentration of target compounds present.

Industrial & Environmental Analysts, Inc.
P.O. Box 626 • Essex Junction, Vermont 05453 • 802-878-5138

Purgeable Aromatics
EPA Method 602 Compounds

IEA Sample No.: 237165 4
Sample Identification: MW 3B
Date Collected: June 13, 1990

Date Analyzed: June 26, 1990
By: Averill

Number	Compound	Oil Quantitation Limit µg/L	Results Concentration µg/L
1	Benzene	500	BQL
2	Chlorobenzene	500	720
3	1,2-Dichlorobenzene	500	BQL
4	1,3-Dichlorobenzene	500	10,000
5	1,4-Dichlorobenzene	500	30,000
6	Ethylbenzene	500	1,800
7	Toluene	500	8,400
8	Total Xylenes	500	16,000

Comments

BQL - BELOW QUANTITATION LIMIT
Oil phase
Quantitation limit elevated due to sample dilution prior to analysis.
Sample diluted due to high concentration of target compounds present.

Industrial & Environmental Analysts, Inc.
P.O. Box 626 • Essex Junction, Vermont 05453 • 802-878-5138

PCB Summary Sheet

IEA Sample No. 237165 4

Sample Identification MW 3B

Date Extracted June 26, 1990

Date Analyzed June 26, 1990

By Travis

Compound	Oil Quantitation Limit	Results Concentration mg/Kg
Aroclor 1016	100	BQL
Aroclor 1221	100	BQL
Aroclor 1232	100	BQL
Aroclor 1242	100	3100
Aroclor 1248	100	BQL
Aroclor 1254	100	BQL
Aroclor 1260	100	BQL
Total Aroclor Concentration	100	3100

Comments

BQL - BELOW QUANTITATION LIMIT
Oil phase
Quantitation limit elevated due to sample dilution prior to analysis.
Sample diluted due to high concentration of target compounds present.

Industrial & Environmental Analysts, Inc.
P.O. Box 626 • Essex Junction, Vermont 05453 • 802-878-5138

Purgeable Halocarbons
EPA Method 601 Compounds

IEA Sample No.: 237165 5
Sample Identification: MW 4A
Date Collected: June 13, 1990

Date Analyzed: June 22, 1990
By: Averill

Number	Compound	Water Quantitation Limit µg/L	Results Concentration µg/L
1	Chloromethane	1	BQL
2	Bromomethane	1	BQL
3	Vinyl Chloride	1	BQL
4	Dichlorodifluoromethane	1	BQL
5	Chloroethane	1	BQL
6	Methylene chloride	1	BQL
7	Trichlorofluoromethane	1	BQL
8	1,1-Dichloroethene	1	BQL
9	1,1-Dichloroethane	1	BQL
10	trans-1,2-Dichloroethene	1	BQL
11	Chloroform	1	BQL
12	1,2-Dichloroethane	1	BQL
13	1,1,1-Trichloroethane	1	4
14	Carbon tetrachloride	1	BQL
15	Bromodichloromethane	1	BQL
16	1,2-Dichloropropane	1	BQL
17	trans-1,3-Dichloropropene	1	BQL
18	Trichloroethene	1	BQL
19	cis-1,3-Dichloropropene	1	BQL
20	1,1,2-Trichloroethane	1	BQL
21	Chlorodibromomethane	1	BQL
22	2-Chloroethylvinyl ether	1	BQL
23	Bromoform	1	BQL
24	Tetrachloroethene	1	BQL
25	1,1,2,2-Tetrachloroethane	1	BQL
26	Chlorobenzene	1	BQL
27	1,3-Dichlorobenzene	1	BQL
28	1,2-Dichlorobenzene	1	BQL
29	1,4-Dichlorobenzene	1	BQL

Comments: BQL - BELOW QUANTITATION LIMIT

Industrial & Environmental Analysts, Inc.
P.O. Box 626 • Essex Junction, Vermont 05453 • 802-878-5138

Purgeable Aromatics
EPA Method 602 Compounds

IEA Sample No.: 237165 5
Sample Identification: MW 4A
Date Collected: June 13, 1990

Date Analyzed: June 22, 1990
By: Averill

Number	Compound	Water Quantitation Limit µg/L	Results Concentration µg/L
1	Benzene	1.0	BQL
2	Chlorobenzene	1.0	BQL
3	1,2-Dichlorobenzene	1.0	BQL
4	1,3-Dichlorobenzene	1.0	BQL
5	1,4-Dichlorobenzene	1.0	BQL
6	Ethylbenzene	1.0	BQL
7	Toluene	1.0	BQL
8	Total Xylenes	1.0	BQL

Comments

BQL - BELOW QUANTITATION LIMIT
Water phase

Industrial & Environmental Analysts, Inc.
P.O. Box 626 • Essex Junction, Vermont 05453 • 802-878-5138

Phthalates
EPA Method 606 Compounds

IEA Sample Number: 237165 5
Sample Identification: MW 4R
Date Collected: June 13, 1990
Date Extracted: June 20, 1990 By: Joquin
Date Analyzed: June 26, 1990

Number	Compound	Water Quantitation Limit µg/L	Results Concentration µg/L
1	Dimethylphthalate	10	BQL
2	Diethylphthalate	10	BQL
3	Di-n-butyl phthalate	10	BQL
4	Benzyl butyl phthalate	10	BQL
5	bis(2-Ethylhexyl)phthalate	10	38
6	Di-n-octylphthalate	10	BQL

Comments: BQL = Below Quantitation Limit

Industrial & Environmental Analysts, Inc.
P.O. Box 626 • Essex Junction, Vermont 05453 • 802-878-5138

PCB Summary Sheet

IEA Sample No. 237165 5

Sample Identification MW 4A

Date Extracted June 20, 1990

Date Analyzed June 20, 1990

By Hedrick/Travis

Compound	Water Quantitation Limit	Results Concentration µg/L
Aroclor 1016	1.0	BQL
Aroclor 1221	1.0	BQL
Aroclor 1232	1.0	BQL
Aroclor 1242	1.0	23
Aroclor 1248	1.0	BQL
Aroclor 1254	1.0	BQL
Aroclor 1260	1.0	BQL
Total Aroclor Concentration	1.0	23

Comments

BQL - BELOW QUANTITATION LIMIT
Water phase

Industrial & Environmental Analysts, Inc.
P.O. Box 626 • Essex Junction, Vermont 05453 • 802-878-5138

Purgeable Halocarbons
EPA Method 601 Compounds

IEA Sample No.: 237165 6
Sample Identification: MW 6A
Date Collected: June 13, 1990

Date Analyzed: June 22, 1990
By: Averill

Number	Compound	Water Quantitation Limit µg/L	Results Concentration µg/L
1	Chloromethane	1	BQL
2	Bromomethane	1	BQL
3	Vinyl Chloride	1	BQL
4	Dichlorodifluoromethane	1	BQL
5	Chloroethane	1	BQL
6	Methylene chloride	1	BQL
7	Trichlorofluoromethane	1	BQL
8	1,1-Dichloroethene	1	BQL
9	1,1-Dichloroethane	1	11
10	trans-1,2-Dichloroethene	1	1
11	Chloroform	1	BQL
12	1,2-Dichloroethane	1	BQL
13	1,1,1-Trichloroethane	1	6
14	Carbon tetrachloride	1	BQL
15	Bromodichloromethane	1	BQL
16	1,2-Dichloropropane	1	BQL
17	trans-1,3-Dichloropropene	1	BQL
18	Trichloroethene	1	6
19	cis-1,3-Dichloropropene	1	BQL
20	1,1,2-Trichloroethane	1	BQL
21	Chlorodibromomethane	1	BQL
22	2-Chloroethylvinyl ether	1	BQL
23	Bromoform	1	BQL
24	Tetrachloroethene	1	BQL
25	1,1,2,2-Tetrachloroethane	1	BQL
26	Chlorobenzene	1	BQL
27	1,3-Dichlorobenzene	1	BQL
28	1,2-Dichlorobenzene	1	BQL
29	1,4-Dichlorobenzene	1	7

Comments: BQL - BELOW QUANTITATION LIMIT

Industrial & Environmental Analysts, Inc.
P.O. Box 626 • Essex Junction, Vermont 05453 • 802-878-5138

Purgeable Aromatics
EPA Method 602 Compounds

IEA Sample No.: 237165 6
Sample Identification: MW 6A
Date Collected: June 13, 1990

Date Analyzed: June 22, 1990
By: Averill

Number	Compound	Water Quantitation Limit µg/L	Results Concentration µg/L
1	Benzene	1.0	BQL
2	Chlorobenzene	1.0	BQL
3	1,2-Dichlorobenzene	1.0	BQL
4	1,3-Dichlorobenzene	1.0	BQL
5	1,4-Dichlorobenzene	1.0	7
6	Ethylbenzene	1.0	BQL
7	Toluene	1.0	BQL
8	Total Xylenes	1.0	BQL

Comments

BQL - BELOW QUANTITATION LIMIT
Water phase

Industrial & Environmental Analysts, Inc.
P.O. Box 626 • Essex Junction, Vermont 05453 • 802-878-5138

Phthalates
EPA Method 606 Compounds

IEA Sample Number: 237165 6
Sample Identification: MW 6A
Date Collected: June 13, 1990
Date Extracted: June 20, 1990 By: Joquin
Date Analyzed: June 26, 1990

Number	Compound	Water Quantitation Limit µg/L	Results Concentration µg/L
1	Dimethylphthalate	100	BQL
2	Diethylphthalate	100	BQL
3	Di-n-butyl phthalate	100	BQL
4	Benzyl butyl phthalate	100	BQL
5	bis(2-Ethylhexyl)phthalate	100	2800
6	Di-n-octylphthalate	100	BQL

Comments: BQL - Below Quantitation Limit

Industrial & Environmental Analysts, Inc.
P.O. Box 626 • Essex Junction, Vermont 05453 • 802-878-5138

PCB Summary Sheet

IEA Sample No. 237165 6

Sample Identification MW 6A

Date Extracted June 20, 1990

Date Analyzed June 20, 1990

By Hedrick

Compound	Water Quantitation Limit	Results Concentration µg/L
Aroclor 1016	10.0	BQL
Aroclor 1221	10.0	BQL
Aroclor 1232	10.0	BQL
Aroclor 1242	10.0	160
Aroclor 1248	10.0	BQL
Aroclor 1254	10.0	BQL
Aroclor 1260	10.0	BQL
Total Aroclor Concentration	10.0	160

Comments

BQL - BELOW QUANTITATION LIMIT
Water phase
Quantitation limit elevated due to sample dilution prior to analysis.
Sample diluted due to high concentration of target compounds present.

Industrial & Environmental Analysts, Inc.
P.O. Box 626 • Essex Junction, Vermont 05453 • 802-878-5138

Purgeable Halocarbons
EPA Method 601 Compounds

IEA Sample No.: 237165 7
Sample Identification: MW 9A
Date Collected: June 13, 1990

Date Analyzed: June 22, 1990
By: Averill

Number	Compound	Water Quantitation Limit µg/L	Results Concentration µg/L
1	Chloromethane	1	BQL
2	Bromomethane	1	BQL
3	Vinyl Chloride	1	BQL
4	Dichlorodifluoromethane	1	BQL
5	Chloroethane	1	BQL
6	Methylene chloride	1	BQL
7	Trichlorofluoromethane	1	BQL
8	1,1-Dichloroethene	1	BQL
9	1,1-Dichloroethane	1	BQL
10	trans-1,2-Dichloroethene	1	BQL
11	Chloroform	1	BQL
12	1,2-Dichloroethane	1	BQL
13	1,1,1-Trichloroethane	1	BQL
14	Carbon tetrachloride	1	BQL
15	Bromodichloromethane	1	BQL
16	1,2-Dichloropropane	1	BQL
17	trans-1,3-Dichloropropene	1	BQL
18	Trichloroethene	1	BQL
19	cis-1,3-Dichloropropene	1	BQL
20	1,1,2-Trichloroethane	1	BQL
21	Chlorodibromomethane	1	BQL
22	2-Chloroethylvinyl ether	1	BQL
23	Bromoform	1	BQL
24	Tetrachloroethene	1	BQL
25	1,1,2,2-Tetrachloroethane	1	BQL
26	Chlorobenzene	1	BQL
27	1,3-Dichlorobenzene	1	BQL
28	1,2-Dichlorobenzene	1	BQL
29	1,4-Dichlorobenzene	1	BQL

Comments: BQL - BELOW QUANTITATION LIMIT

Industrial & Environmental Analysts, Inc.
P.O. Box 626 • Essex Junction, Vermont 05453 • 802-878-5138

Purgeable Aromatics
EPA Method 602 Compounds

IEA Sample No.: 237165 7
Sample Identification: MW 9A
Date Collected: June 13, 1990

Date Analyzed: June 22, 1990
By: Averill

Number	Compound	Water Quantitation Limit µg/L	Results Concentration µg/L
1	Benzene	1.0	BQL
2	Chlorobenzene	1.0	BQL
3	1,2-Dichlorobenzene	1.0	BQL
4	1,3-Dichlorobenzene	1.0	BQL
5	1,4-Dichlorobenzene	1.0	BQL
6	Ethylbenzene	1.0	BQL
7	Toluene	1.0	BQL
8	Total Xylenes	1.0	BQL

Comments
BQL - BELOW QUANTITATION LIMIT
Water phase

Industrial & Environmental Analysts, Inc.
P.O. Box 626 • Essex Junction, Vermont 05453 • 802-878-5138

PCB Summary Sheet

IEA Sample No. 237130 7

Sample Identification BF1-4

Date Extracted May 17, 1990 **Date Analyzed** May 18, 1990

By Hedrick

Compound	SOIL Quantitation Limit	Results Concentration mg/Kg
Aroclor 1016	0.2	BQL
Aroclor 1221	0.2	BQL
Aroclor 1232	0.2	BQL
Aroclor 1242	0.2	BQL
Aroclor 1248	0.2	BQL
Aroclor 1254	0.2	BQL
Aroclor 1260	0.2	BQL
Total Aroclor Concentration	0.2	BQL

Comments BQL - BELOW QUANTITATION LIMIT

Industrial & Environmental Analysts, Inc.
P.O. Box 626 • Essex Junction, Vermont 05453 • 802-878-5138

PCB Summary Sheet

IEA Sample No. 237130 8

Sample Identification 1-4 South composite

Date Extracted May 17, 1990 **Date Analyzed** May 18, 1990

By Hedrick

Compound	SOIL Quantitation Limit	Results Concentration mg/Kg
Aroclor 1016	20	BQL
Aroclor 1221	20	BQL
Aroclor 1232	20	BQL
Aroclor 1242	20	20
Aroclor 1248	20	BQL
Aroclor 1254	20	BQL
Aroclor 1260	20	BQL
Total Aroclor Concentration	20	BQL

Comments

BQL - BELOW QUANTITATION LIMIT
(a) Target compound concentration adjusted for % moisture.
(b) Quantitation limit elevated due to sample dilution prior to analysis. (c) Sample diluted due to high concentration of target compounds present.

Industrial & Environmental Analysts, Inc.
P.O. Box 626 • Essex Junction, Vermont 05453 • 802-878-5138

Phthalates
EPA Method 606 Compounds

IEA Sample Number: 237130 4
Sample Identification: TP1-GW
Date Collected: May 9, 1990
Date Extracted: May 15, 1990 By: Rich
Date Analyzed: May 21, 1990

Number	Compound	Water Quantitation Limit µg/L	Results Concentration µg/L
1	Dimethylphthalate	20	BQL
2	Diethylphthalate	20	BQL
3	Di-n-butyl phthalate	20	BQL
4	Benzyl butyl phthalate	20	BQL
5	bis(2-Ethylhexyl)phthalate	20	130
6	Di-n-octylphthalate	20	BQL

Comments: BQL = Below Quantitation Limit

Industrial & Environmental Analysts, Inc.
P.O. Box 626 • Essex Junction, Vermont 05453 • 802-878-5138

PCB Summary Sheet

IEA Sample No. 237130 4

Sample Identification TP1-GW

Date Extracted May 16, 1990 **Date Analyzed** May 17, 1990

By Hedrick

Compound	Water Quantitation Limit	Results Concentration µg/L
Aroclor 1016	2.0	BQL
Aroclor 1221	2.0	BQL
Aroclor 1232	2.0	BQL
Aroclor 1242	2.0	30
Aroclor 1248	2.0	BQL
Aroclor 1254	2.0	BQL
Aroclor 1260	2.0	BQL
Total Aroclor Concentration	2.0	BQL

Comments

BQL - BELOW QUANTITATION LIMIT
(a) Quantitation limit elevated due to a smaller amount of sample extracted.

Industrial & Environmental Analysts, Inc.
P.O. Box 626 • Essex Junction, Vermont 05453 • 802-878-5138

Purgeable Halocarbons
EPA Method 601 Compounds

IEA Sample No.: 237130 5
Sample Identification: TP-2GW
Date Collected: May 9, 1990
Date Analyzed: May 24, 1990
By: Hendricks

Number	Compound	Water Quantitation Limit µg/L	Results Concentration µg/L
1	Chloromethane	1.0	BQL
2	Bromomethane	1.0	BQL
3	Vinyl Chloride	1.0	BQL
4	Dichlorodifluoromethane	1.0	BQL
5	Chloroethane	1.0	BQL
6	Methylene chloride	1.0	BQL
7	Trichlorofluoromethane	1.0	BQL
8	1,1-Dichloroethene	1.0	BQL
9	1,1-Dichloroethane	1.0	BQL
10	trans-1,2-Dichloroethene	1.0	BQL
11	Chloroform	1.0	BQL
12	1,2-Dichloroethane	1.0	BQL
13	1,1,1-Trichloroethane	1.0	19
14	Carbon tetrachloride	1.0	BQL
15	Bromodichloromethane	1.0	BQL
16	1,2-Dichloropropene	1.0	BQL
17	trans-1,3-Dichloropropene	1.0	BQL
18	Trichloroethene	1.0	23
19	cis-1,3-Dichloropropene	1.0	BQL
20	1,1,2-Trichloroethane	1.0	BQL
21	Chlorodibromomethane	1.0	BQL
22	2-Chloroethylvinyl ether	1.0	BQL
23	Bromoform	1.0	BQL
24	Tetrachloroethene	1.0	BQL
25	1,1,2,2-Tetrachloroethene	1.0	BQL
26	Chlorobenzene	1.0	BQL
27	1,3-Dichlorobenzene	1.0	BQL
28	1,2-Dichlorobenzene	1.0	BQL
29	1,4-Dichlorobenzene	1.0	BQL

Comments: BQL - BELOW QUANTITATION LIMIT

Industrial & Environmental Analysts, Inc.
P.O. Box 626 • Essex Junction, Vermont 05453 • 802-878-5138

PCB Summary Sheet

IEA Sample No. 237130 17

Sample Identification Street Drain

Date Extracted May 17, 1990 **Date Analyzed** May 18, 1990

By Hedrick

Compound	Soil Quantitation Limit	Results Concentration mg/Kg
Aroclor 1016	0.2	BQL
Aroclor 1221	0.2	BQL
Aroclor 1232	0.2	BQL
Aroclor 1242	0.2	BQL
Aroclor 1248	0.2	BQL
Aroclor 1254	0.2	BQL
Aroclor 1260	0.2	BQL
Total Aroclor Concentration	0.2	BQL

Comments

BQL - BELOW QUANTITATION LIMIT
(a) Target compound concentration adjusted for % moisture.

~~APPENDIX D~~

TEST PIT WATER QUALITY DATA

Industrial & Environmental Analysts, Inc.
P.O. Box 626 • Essex Junction, Vermont 05453 • 802-878-5138

Purgeable Halocarbons
EPA Method 601 Compounds

IEA Sample No.: 237130 4
Sample Identification: TP1-GW
Date Collected: May 9, 1990
Date Analyzed: May 24, 1990
By: Hendricks

Number	Compound	Water Quantitation Limit µg/L	Results Concentration µg/L
1	Chloromethane	1.0	BQL
2	Bromomethane	1.0	BQL
3	Vinyl Chloride	1.0	BQL
4	Dichlorodifluoromethane	1.0	BQL
5	Chloroethane	1.0	BQL
6	Methylene chloride	1.0	BQL
7	Trichlorofluoromethane	1.0	BQL
8	1,1-Dichloroethene	1.0	BQL
9	1,1-Dichloroethane	1.0	BQL
10	trans-1,2-Dichloroethene	1.0	BQL
11	Chloroform	1.0	BQL
12	1,2-Dichloroethane	1.0	BQL
13	1,1,1-Trichloroethane	1.0	BQL
14	Carbon tetrachloride	1.0	BQL
15	Bromodichloromethane	1.0	BQL
16	1,2-Dichloropropane	1.0	BQL
17	trans-1,3-Dichloropropene	1.0	BQL
18	Trichloroethene	1.0	BQL
19	cis-1,3-Dichloropropene	1.0	BQL
20	1,1,2-Trichloroethane	1.0	BQL
21	Chlorodibromomethane	1.0	BQL
22	2-Chloroethylvinyl ether	1.0	BQL
23	Bromoform	1.0	BQL
24	Tetrachloroethene	1.0	BQL
25	1,1,2,2-Tetrachloroethane	1.0	BQL
26	Chlorobenzene	1.0	BQL
27	1,3-Dichlorobenzene	1.0	BQL
28	1,2-Dichlorobenzene	1.0	BQL
29	1,4-Dichlorobenzene	1.0	BQL

Comments: BQL - BELOW QUANTITATION LIMIT

Industrial & Environmental Analysts, Inc.
P.O. Box 626 • Essex Junction, Vermont 05453 • 802-878-5138

Purgeable Aromatics
EPA Method 602 Compounds

IEA Sample No.: 237130 4
Sample Identification: TP1-GW
Date Collected: May 9, 1990

Date Analyzed: May 25, 1990
By: Hendricks

Number	Compound	Water Quantitation Limit µg/L	Results Concentration µg/L
1	Benzene	1.0	BQL
2	Chlorobenzene	1.0	BQL
3	1,2-Dichlorobenzene	1.0	BQL
4	1,3-Dichlorobenzene	1.0	BQL
5	1,4-Dichlorobenzene	1.0	BQL
6	Ethylbenzene	1.0	BQL
7	Toluene	1.0	BQL
8	Total Xylenes	1.0	BQL

Comments BQL - BELOW QUANTITATION LIMIT

Offices and laboratories located in: Essex Junction, Vermont
Research Triangle Park, North Carolina

Industrial & Environmental Analysts, Inc.
P.O. Box 626 • Essex Junction, Vermont 05453 • 802-878-5138

Purgeable Aromatics
EPA Method 602 Compounds

IEA Sample No.: 237130 5
Sample Identification: TP-2GW
Date Collected: May 9, 1990

Date Analyzed: May 25, 1990
By: Hendricks

Number	Compound	Water Quantitation Limit µg/L	Results Concentration µg/L
1	Benzene	1.0	BQL
2	Chlorobenzene	1.0	BQL
3	1,2-Dichlorobenzene	1.0	BQL
4	1,3-Dichlorobenzene	1.0	BQL
5	1,4-Dichlorobenzene	1.0	BQL
6	Ethylbenzene	1.0	BQL
7	Toluene	1.0	BQL
8	Total Xylenes	1.0	BQL

Comments BQL - BELOW QUANTITATION LIMIT

Offices and laboratories located in: Essex Junction, Vermont
Research Triangle Park, North Carolina

Industrial & Environmental Analysts, Inc.
P.O. Box 626 • Essex Junction, Vermont 05453 • 802-878-5138

Phthalates
EPA Method 606 Compounds

IEA Sample Number: 237130 5
Sample Identification: TP-26W
Date Collected: May 9, 1990
Date Extracted: May 17, 1990 By: Rich
Date Analyzed: May 21, 1990

Number	Compound	Water Quantitation Limit µg/L	Results Concentration µg/L
1	Dimethylphthalate	20	BQL
2	Diethylphthalate	20	BQL
3	Di-n-butyl phthalate	20	BQL
4	Benzyl butyl phthalate	20	BQL
5	bis(2-Ethylhexyl)phthalate	20	230
6	Di-n-octylphthalate	20	BQL

Comments: BQL = Below Quantitation Limit

Industrial & Environmental Analysts, Inc.
P.O. Box 626 • Essex Junction, Vermont 05453 • 802-878-5138

PCB Summary Sheet

IEA Sample No. 237130 . 5

Sample Identification TP-2GW

Date Extracted May 16, 1990 **Date Analyzed** May 17, 1990

By Hedrick

Compound	Water Quantitation Limit	Results Concentration µg/L
Aroclor 1016	1.0	BQL
Aroclor 1221	1.0	BQL
Aroclor 1232	1.0	BQL
Aroclor 1242	1.0	5.5
Aroclor 1248	1.0	BQL
Aroclor 1254	1.0	BQL
Aroclor 1260	1.0	BQL
Total Aroclor Concentration	1.0	BQL

Comments BQL - BELOW QUANTITATION LIMIT

Industrial & Environmental Analysts, Inc.
P.O. Box 626 • Essex Junction, Vermont 05453 • 802-878-5138

Purgeable Halocarbons
EPA Method 601 Compounds

IEA Sample No.: 237130 6
Sample Identification: TP-3GW
Date Collected: May 9, 1990
Date Analyzed: May 24, 1990
By: Hendricks

Number	Compound	Water Quantitation Limit µg/L	Results Concentration µg/L
1	Chloromethane	1.0	BQL
2	Bromomethane	1.0	BQL
3	Vinyl Chloride	1.0	BQL
4	Dichlorodifluoromethane	1.0	BQL
5	Chloroethane	1.0	BQL
6	Methylene chloride	1.0	BQL
7	Trichlorofluoromethane	1.0	BQL
8	1,1-Dichloroethene	1.0	BQL
9	1,1-Dichloroethane	1.0	22
10	trans-1,2-Dichloroethene	1.0	7
11	Chloroform	1.0	BQL
12	1,2-Dichloroethane	1.0	BQL
13	1,1,1-Trichloroethane	1.0	8
14	Carbon tetrachloride	1.0	BQL
15	Bromodichloromethane	1.0	BQL
16	1,2-Dichloropropane	1.0	BQL
17	trans-1,3-Dichloropropene	1.0	BQL
18	Trichloroethene	1.0	BQL
19	cis-1,3-Dichloropropene	1.0	BQL
20	1,1,2-Trichloroethane	1.0	BQL
21	Chlorodibromomethane	1.0	BQL
22	2-Chloroethylvinyl ether	1.0	BQL
23	Bromoform	1.0	BQL
24	Tetrachloroethene	1.0	BQL
25	1,1,2,2-Tetrachloroethane	1.0	BQL
26	Chlorobenzene	1.0	8
27	1,3-Dichlorobenzene	1.0	BQL
28	1,2-Dichlorobenzene	1.0	BQL
29	1,4-Dichlorobenzene	1.0	23

Comments: BQL - BELOW QUANTITATION LIMIT

Offices and laboratories located in: Essex Junction, Vermont
Research Triangle Park, North Carolina

Industrial & Environmental Analysts, Inc.
P.O. Box 626 • Essex Junction, Vermont 05453 • 802-878-5138

Purgeable Aromatics
EPA Method 602 Compounds

IEA Sample No.: 237130 6
Sample Identification: TP-3GW
Date Collected: May 9, 1990

Date Analyzed: May 25, 1990
By: Hendricks

Number	Compound	Water Quantitation Limit µg/L	Results Concentration µg/L
1	Benzene	1.0	BQL
2	Chlorobenzene	1.0	6
3	1,2-Dichlorobenzene	1.0	BQL
4	1,3-Dichlorobenzene	1.0	BQL
5	1,4-Dichlorobenzene	1.0	36
6	Ethylbenzene	1.0	10
7	Toluene	1.0	48
8	Total Xylenes	1.0	79

Comments BQL - BELOW QUANTITATION LIMIT

Offices and laboratories located in: Essex Junction, Vermont
Research Triangle Park, North Carolina

Industrial & Environmental Analysts, Inc.
P.O. Box 626 • Essex Junction, Vermont 05453 • 802-878-5138

Phthalates
EPA Method 606 Compounds

IEA Sample Number: 237130 6
Sample Identification: TP-36W
Date Collected: May 9, 1990
Date Extracted: May 17, 1990 By: Rich
Date Analyzed: May 23, 1990

Number	Compound	Water Quantitation Limit µg/L	Results Concentration µg/L
1	Dimethylphthalate	20000	BQL
2	Diethylphthalate	20000	23000
3	Di-n-butyl phthalate	20000	BQL
4	Benzyl butyl phthalate	20000	BQL
5	bis(2-Ethylhexyl)phthalate	20000	5500000
6	Di-n-octylphthalate	20000	BQL

Comments: BQL = Below Quantitation Limit
(a) Quantitation limit elevated due to sample dilution prior to analysis.
(b) Sample diluted due to high concentration of target compounds present.

Industrial & Environmental Analysts, Inc.
P.O. Box 626 • Essex Junction, Vermont 05453 • 802-878-5138

PCB Summary Sheet

IEA Sample No. 237130 6

Sample Identification TP-3GW

Date Extracted May 16, 1990 **Date Analyzed** May 17, 1990

By Hedrick

Compound	Water Quantitation Limit	Results Concentration µg/L
Aroclor 1016	20	BQL
Aroclor 1221	20	BQL
Aroclor 1232	20	BQL
Aroclor 1242	20	3000
Aroclor 1248	20	BQL
Aroclor 1254	20	BQL
Aroclor 1260	20	BQL
Total Aroclor Concentration	20	BQL

Comments

BQL - BELOW QUANTITATION LIMIT

(a) Quantitation limit elevated due to a smaller amount of sample extracted. (b) Quantitation limit elevated due to sample dilution prior to analysis. (c) Sample diluted due to high concentration of target compounds present.

Industrial & Environmental Analysts, Inc.
P.O. Box 626 • Essex Junction, Vermont 05453 • 802-878-5138

Purgeable Halocarbons
EPA Method 601 Compounds

IEA Sample No.: 237130 9
Sample Identification: TP-5GW
Date Collected: May 9, 1990
Date Analyzed: May 24, 1990
By: Hendricks

Number	Compound	Water Quantitation Limit µg/L	Results Concentration µg/L
1	Chloromethane	1.0	BQL
2	Bromomethane	1.0	BQL
3	Vinyl Chloride	1.0	BQL
4	Dichlorodifluoromethane	1.0	BQL
5	Chloroethane	1.0	BQL
6	Methylene chloride	1.0	BQL
7	Trichlorofluoromethane	1.0	BQL
8	1,1-Dichloroethene	1.0	BQL
9	1,1-Dichloroethane	1.0	BQL
10	trans-1,2-Dichloroethene	1.0	BQL
11	Chloroform	1.0	1
12	1,2-Dichloroethane	1.0	BQL
13	1,1,1-Trichloroethane	1.0	BQL
14	Carbon tetrachloride	1.0	BQL
15	Bromodichloromethane	1.0	BQL
16	1,2-Dichloropropane	1.0	BQL
17	trans-1,3-Dichloropropene	1.0	BQL
18	Trichloroethene	1.0	BQL
19	cis-1,3-Dichloropropene	1.0	BQL
20	1,1,2-Trichloroethane	1.0	BQL
21	Chlorodibromomethane	1.0	BQL
22	2-Chloroethylvinyl ether	1.0	BQL
23	Bromoform	1.0	BQL
24	Tetrachloroethene	1.0	BQL
25	1,1,2,2-Tetrachloroethane	1.0	BQL
26	Chlorobenzene	1.0	BQL
27	1,3-Dichlorobenzene	1.0	BQL
28	1,2-Dichlorobenzene	1.0	BQL
29	1,4-Dichlorobenzene	1.0	BQL

Comments: BQL - BELOW QUANTITATION LIMIT

Industrial & Environmental Analysts, Inc.
P.O. Box 626 • Essex Junction, Vermont 05453 • 802-878-5138

Purgeable Aromatics
EPA Method 602 Compounds

IEA Sample No.: 237130 9
Sample Identification: TP-5GW
Date Collected: May 9, 1990

Date Analyzed: May 25, 1990
By: Hendricks

Number	Compound	Water Quantitation Limit µg/L	Results Concentration µg/L
1	Benzene	1.0	BQL
2	Chlorobenzene	1.0	BQL
3	1,2-Dichlorobenzene	1.0	BQL
4	1,3-Dichlorobenzene	1.0	BQL
5	1,4-Dichlorobenzene	1.0	BQL
6	Ethylbenzene	1.0	BQL
7	Toluene	1.0	BQL
8	Total Xylenes	1.0	BQL

Comments: BQL - BELOW QUANTITATION LIMIT

Offices and laboratories located in: Essex Junction, Vermont
Research Triangle Park, North Carolina

Industrial & Environmental Analysts, Inc.
P.O. Box 626 • Essex Junction, Vermont 05453 • 802-878-5138

Phthalates
EPA Method 606 Compounds

IEA Sample Number: 237130 9
Sample Identification: TP-5GW
Date Collected: May 9, 1990
Date Extracted: May 17, 1990 By: Rich
Date Analyzed: May 23, 1990

Number	Compound	Water Quantitation Limit µg/L	Results Concentration µg/L
1	Dimethylphthalate	20	BQL
2	Diethylphthalate	20	BQL
3	Di-n-butyl phthalate	20	BQL
4	Benzyl butyl phthalate	20	BQL
5	bis(2-Ethylhexyl)phthalate	20	150
6	Di-n-octylphthalate	20	BQL

Comments: BQL = Below Quantitation Limit

Offices and laboratories located in: Essex Junction, Vermont
Research Triangle Park, North Carolina

Industrial & Environmental Analysts, Inc.
P.O. Box 626 • Essex Junction, Vermont 05453 • 802-878-5138

PCB Summary Sheet

IEA Sample No. 237130 9

Sample Identification TP-5GW

Date Extracted May 16, 1990 **Date Analyzed** May 17, 1990

By Hedrick

Compound	Water Quantitation Limit	Results Concentration µg/L
Aroclor 1016	20	BQL
Aroclor 1221	20	BQL
Aroclor 1232	20	BQL
Aroclor 1242	20	6.6
Aroclor 1248	20	BQL
Aroclor 1254	20	BQL
Aroclor 1260	20	BQL
Total Aroclor Concentration	20	BQL

Comments BQL - BELOW QUANTITATION LIMIT

~~APPENDIX E~~

GROUNDWATER CHEMICAL DATA

CHAIN OF CUSTODY RECORD

ATLANTIC ENVIRONMENTAL SERVICES, INC.
1901 NORTH HARRISON AVE.
CARY, N.C. 27513

NO. 4471

PROJECT #	PROJECT NAME
00272.01	[redacted]

SAMPLERS: (SIGNATURE) [redacted]

SAMPLE I.D.	DATE	TIME	GRAB	COMP	STATION LOCATION	# OF CONTAINERS	MATRIX SOIL	MATRIX WATER	601/602	601/602	N										
MW 1A	6/14	12:30		✓		7		✓	3	3	1										126 198 20 350
MW 2A	6/14	9:30		✓		7		✓	3	3	1										2450
MW 3A	6/14	11:30		✓	10% separate phase	7		✓	3	3	1										
MW 3B	6/13	17:00		✓		7		✓	3	3	1										
MW 4A	6/13	19:15		✓		7		✓	3	3	1										
MW 6A	6/13	18:00		✓		7		✓	3	3	1										
MW 9A	6/13	17:30		✓	field blank	7		✓	3	3	1										

REQUESTED PARAMETERS

* Note to lab: MW 1A, 2A, 3B may have higher volatile readings

RELINQUISHED BY (SIGNATURE)	DATE	TIME	RECEIVED BY	DATE	TIME
Christie E Ward	6/13	1900	B J Franks	6/13/9	1900
RELINQUISHED BY (SIGNATURE)	DATE	TIME	RECEIVED FOR LAB BY	DATE	TIME
B J Franks	6/14/9	0745	Brad Elbert		

IEA QUOTE NO.	IEA RUSH NO.
PROJECT MANAGER (PLEASE PRINT)	P.O. NO.
B. FRANKS	39950

IEA REMARKS

FIELD REMARKS

Note: Dates are off. Samples labeled 6/13 were collected 6/12 and those labeled 6/14 were collected 6/13. Chris Ward

Industrial & Environmental Analysts, Inc.
P.O. Box 626 • Essex Junction, Vermont 05453 • 802-878-5138

July 2, 1990

RECEIVED
BURLINGTON
JUL 2 1990

Bernie Franks
Wehran Envirotech
1 Mill Street/Chace Mill
Burlington, VT 05401-1532

Dear Bernie:

Transmitted herewith are the results of analyses performed on samples delivered to IEA on June 14, 1990.

Please note that the samples numbered 3 and 4 (MW-3A and MW-3B, respectively) separated into distinct oil and water phases. These phases were analyzed separately by EPA Method 601/602 and EPA Method 608 (PCBs).

If I may be of any further service, please do not hesitate to contact me.

Sincerely,

INDUSTRIAL & ENVIRONMENTAL ANALYSTS, INC.

Paul

Paul S. Warden
Staff Scientist

PSW/skb

Reference: 237-165

Industrial & Environmental Analysts, Inc.
P.O. Box 626 • Essex Junction, Vermont 05453 • 802-878-5138

LAB RESULTS

7/2/90

Wehran Engineering
1 Mill Street, Chace Mill
Burlington, VT 05401-1532

IEA # 237165
Date Received: 6/14/90
Date Collected: 6/13/90
Total Samples Received: 7
Total Parameters Requested: 28
Reviewed & Approved by

Attention: Bernie Franks/C. Sprague

#	Sample I.D.	Parameter Studied	Results	Comments
1	MW 1A	EPA METHOD 606 COMPOUNDS	-	See attached sheets.
2	MW 2A	EPA METHOD 606 COMPOUNDS	-	See attached sheets.
3	MW 3A	EPA METHOD 606 COMPOUNDS	-	See attached sheets.
4	MW 3B	EPA METHOD 606 COMPOUNDS	-	See attached sheets.
5	MW 4A	EPA METHOD 606 COMPOUNDS	-	See attached sheets.
6	MW 6A	EPA METHOD 606 COMPOUNDS	-	See attached sheets.
7	MW 9A	EPA METHOD 606 COMPOUNDS	-	See attached sheets.
1	MW 1A	GC Methods601/602	-	See attached sheets.
2	MW 2A	GC Methods601/602	-	See attached sheets.
3	MW 3A	GC Methods601/602	-	See attached sheets.
4	MW 3B	GC Methods601/602	-	See attached sheets.
5	MW 4A	GC Methods601/602	-	See attached sheets.
6	MW 6A	GC Methods601/602	-	See attached sheets.
7	MW 9A	GC Methods601/602	-	See attached sheets.
1	MW 1A	PCB in water	-	See attached sheets.
2	MW 2A	PCB in water	-	See attached sheets.
3	MW 3A	PCB in water	-	See attached sheets.
4	MW 3B	PCB in water	-	See attached sheets.
5	MW 4A	PCB in water	-	See attached sheets.
6	MW 6A	PCB in water	-	See attached sheets.
7	MW 9A	PCB in water	-	See attached sheets.
1	MW 1A	Zinc, total	0.214 mg/L	
2	MW 2A	Zinc, total	0.032 mg/L	
3	MW 3A	Zinc, total	3.19 mg/L	
4	MW 3B	Zinc, total	5.90 mg/L	

Comments:

Industrial & Environmental Analysts, Inc.
P.O. Box 626 • Essex Junction, Vermont 05453 • 802-878-5138

LAB RESULTS

7/2/90

Wehran Engineering
1 Mill Street, Chace Mill
Burlington, VT 05401-1532

IEA # 237165
Date Received: 6/14/90
Date Collected: 6/13/90
Total Samples Received: 7
Total Parameters Requested: 28
Reviewed & Approved by _____

Attention: Bernie Franks/C. Sprague

#	Sample I.D.	Parameter Studied	Results	Comments
5	MW 4A	Zinc, total	0.073 mg/L	
6	MW 6A	Zinc, total	0.065 mg/L	
7	MW 9A	Zinc, total	<0.005 mg/L	

Comments:

Industrial & Environmental Analysts, Inc.
P.O. Box 626 • Essex Junction, Vermont 05453 • 802-878-5138

Purgeable Halocarbons
EPA Method 601 Compounds

IEA Sample No.: 237165 1
Sample Identification: MW 1A
Date Collected: June 13, 1990

Date Analyzed: June 21, 1990
By: Averill

Number	Compound	Water Quantitation Limit µg/L	Results Concentration µg/L
1	Chloromethane	1	BQL
2	Bromomethane	1	BQL
3	Vinyl Chloride	1	BQL
4	Dichlorodifluoromethane	1	BQL
5	Chloroethane	1	BQL
6	Methylene chloride	1	BQL
7	Trichlorofluoromethane	1	BQL
8	1,1-Dichloroethene	1	BQL
9	1,1-Dichloroethane	1	BQL
10	trans-1,2-Dichloroethene	1	BQL
11	Chloroform	1	BQL
12	1,2-Dichloroethane	1	BQL
13	1,1,1-Trichloroethane	1	BQL
14	Carbon tetrachloride	1	BQL
15	Bromodichloromethane	1	BQL
16	1,2-Dichloropropane	1	BQL
17	trans-1,3-Dichloropropene	1	BQL
18	Trichloroethene	1	BQL
19	cis-1,3-Dichloropropene	1	BQL
20	1,1,2-Trichloroethane	1	BQL
21	Chlorodibromomethane	1	BQL
22	2-Chloroethylvinyl ether	1	BQL
23	Bromoform	1	BQL
24	Tetrachloroethene	1	BQL
25	1,1,2,2-Tetrachloroethane	1	BQL
26	Chlorobenzene	1	BQL
27	1,3-Dichlorobenzene	1	BQL
28	1,2-Dichlorobenzene	1	BQL
29	1,4-Dichlorobenzene	1	BQL

Comments: BQL - BELOW QUANTITATION LIMIT

Industrial & Environmental Analysts, Inc.
P.O. Box 626 • Essex Junction, Vermont 05453 • 802-878-5138

Purgeable Aromatics
EPA Method 602 Compounds

IEA Sample No.: 237165 1
Sample Identification: MW 1A
Date Collected: June 13, 1990

Date Analyzed: June 21, 1990
By: Averill

Number	Compound	Water Quantitation Limit µg/L	Results Concentration µg/L
1	Benzene	1.0	BQL
2	Chlorobenzene	1.0	BQL
3	1,2-Dichlorobenzene	1.0	BQL
4	1,3-Dichlorobenzene	1.0	BQL
5	1,4-Dichlorobenzene	1.0	BQL
6	Ethylbenzene	1.0	BQL
7	Toluene	1.0	BQL
8	Total Xylenes	1.0	BQL

Comments BQL - BELOW QUANTITATION LIMIT

Industrial & Environmental Analysts, Inc.
P.O. Box 626 • Essex Junction, Vermont 05453 • 802-878-5138

Phthalates
EPA Method 606 Compounds

IEA Sample Number: 237165 1
Sample Identification: MW 1A
Date Collected: June 13, 1990
Date Extracted: June 20, 1990 By: Joquin
Date Analyzed: June 26, 1990

Number	Compound	Water Quantitation Limit µg/L	Results Concentration µg/L
1	Dimethylphthalate	10	BQL
2	Diethylphthalate	10	BQL
3	Di-n-butyl phthalate	10	BQL
4	Benzyl butyl phthalate	10	BQL
5	bis(2-Ethylhexyl)phthalate	10	33
6	Di-n-octylphthalate	10	BQL

Comments: BQL = Below Quantitation Limit

Industrial & Environmental Analysts, Inc.
P.O. Box 626 • Essex Junction, Vermont 05453 • 802-878-5138

PCB Summary Sheet

IEA Sample No. 237165 1

Sample Identification MW 1A

Date Extracted June 20, 1990

Date Analyzed June 20, 1990

By Hedrick/Travis

Compound	Water Quantitation Limit	Results Concentration µg/L
Aroclor 1016	1.0	BQL
Aroclor 1221	1.0	BQL
Aroclor 1232	1.0	BQL
Aroclor 1242	1.0	2.2
Aroclor 1248	1.0	BQL
Aroclor 1254	1.0	BQL
Aroclor 1260	1.0	BQL
Total Aroclor Concentration	1.0	2.2

Comments

BQL - BELOW QUANTITATION LIMIT
Water phase

Industrial & Environmental Analysts, Inc.
P.O. Box 626 • Essex Junction, Vermont 05453 • 802-878-5138

Phthalates
EPA Method 606 Compounds

IEA Sample Number: 237165 7
Sample Identification: MW 9A
Date Collected: June 13, 1990
Date Extracted: June 20, 1990 By: Joquin
Date Analyzed: June 26, 1990

Number	Compound	Water Quantitation Limit µg/L	Results Concentration µg/L
1	Dimethylphthalate	100	BQL
2	Diethylphthalate	100	BQL
3	Di-n-butyl phthalate	100	BQL
4	Benzyl butyl phthalate	100	BQL
5	bis(2-Ethylhexyl)phthalate	100	26
6	Di-n-octylphthalate	100	BQL

Comments: BQL = Below Quantitation Limit

Industrial & Environmental Analysts, Inc.
P.O. Box 626 • Essex Junction, Vermont 05453 • 802-878-5138

Phthalates
EPA Method 606 Compounds

IEA Sample Number: 237130 16
Sample Identification: TP-6C
Date Collected: May 9, 1990
Date Extracted: May 17, 1990 By: Rich
Date Analyzed: May 23, 1990

Number	Compound	Soil Quantitation Limit µg/Kg	Results Concentration µg/Kg
1	Dimethylphthalate	350	BQL
2	Diethylphthalate	350	BQL
3	Di-n-butyl phthalate	350	660
4	Benzyl butyl phthalate	350	BQL
5	bis(2-Ethylhexyl)phthalate	350	BQL
6	Di-n-octylphthalate	350	BQL

Comments: BQL - Below Quantitation Limit

Industrial & Environmental Analysts, Inc.
P.O. Box 626 • Essex Junction, Vermont 05453 • 802-878-5138

PCB Summary Sheet

IEA Sample No. 237130 16

Sample Identification TP-6C

Date Extracted May 17, 1990 **Date Analyzed** May 18, 1990

By Hedrick

Compound	SOIL Quantitation Limit	Results Concentration mg/Kg
Aroclor 1016	20	BQL
Aroclor 1221	20	BQL
Aroclor 1232	20	BQL
Aroclor 1242	20	35
Aroclor 1248	20	BQL
Aroclor 1254	20	BQL
Aroclor 1260	20	BQL
Total Aroclor Concentration	20	BQL

Comments

BQL - BELOW QUANTITATION LIMIT
(a) Target compound concentration adjusted for % moisture.
(b) Quantitation limit elevated due to sample dilution prior to analysis. (c) Sample diluted due to high concentration of target compounds present.

APPENDIX C

ANALYTICAL RESULTS FROM WESTON TAT INVESTIGATION

Office of Enforcement

CHAIN OF CUSTODY RECORD

Boston, Massachusetts 02203

PROJ NO.: 1.

PROJECT NAME: JARO CO, INC.

SAMPLERS: (Signature)

STA. NO.	DATE	TIME	COMP	GRAB	STATION LOCATION	NO OF CONTAINERS	VOC 8240	BNA 8270	METALS INF SCREEN	PCB 8080			REMARKS
S000	3/17/91	0910		X	US EPA NERL	3	X						#63763 3-40ML VOA TRIP BLANKS
S001		1310		X	DRUM STORAGE AREA	2	X	X					#63764 2-40ML VOA
S002		1320		X	DRUM STORAGE AREA	2	X	X					#63765 2-40ML VOA
S003		1321		X	E SIDE OF BLDG/NEAR MW4	4	X	X	X	X			#63766 1-40ML, 2-4oz, 1-8oz
S004		1531		X	S SIDE OF BLDG/BESIDE DRM E TANK	4	X	X	X	X			#63767 1-40ML, 2-4oz, 1-8oz
S005		1536		X	S SIDE OF BLDG/NEAR UST	4	X	X	X	X			#63768 1-40ML, 2-4oz, 1-8oz
S006		1544		X	S SIDE OF BLDG/NEAR UST (CLOSER TO BLDG)	4	X	X	X	X			#63769 1-40ML, 2-4oz, 1-8oz
S007		1550		X	S SIDE OF BLDG/BETWEEN FILLPIPE AND ROAD	4	X	X	X	X			#63770 1-40ML, 2-4oz, 1-8oz
S008		1556		X	W SIDE OF BLDG/NEAR SMALL DRAIN	4	X	X	X	X			#63771 1-40ML, 2-4oz, 1-8oz
S009	↓	1544		X	S SIDE OF BLDG/UST	2	X						#63772 2-40ML

all samples Rec'd cold with seals intact.

Relinquished by: (Signature)	Date / Time	Received by: (Signature)	Relinquished by: (Signature)	Date / Time	Received by: (Signature)
	3/18/91 1010				
Relinquished by: (Signature)	Date / Time	Received by: (Signature)	Relinquished by: (Signature)	Date / Time	Received by: (Signature)
Relinquished by: (Signature)	Date / Time	Received for Laboratory by: (Signature)	Date / Time	Remarks	
			3/21/91 1070		

Distribution: Original Accompanies Shipment; Copy to Coordinator Field Files

1— 3888

~~APPENDIX C~~

SOIL SAMPLE LOCATION MAP

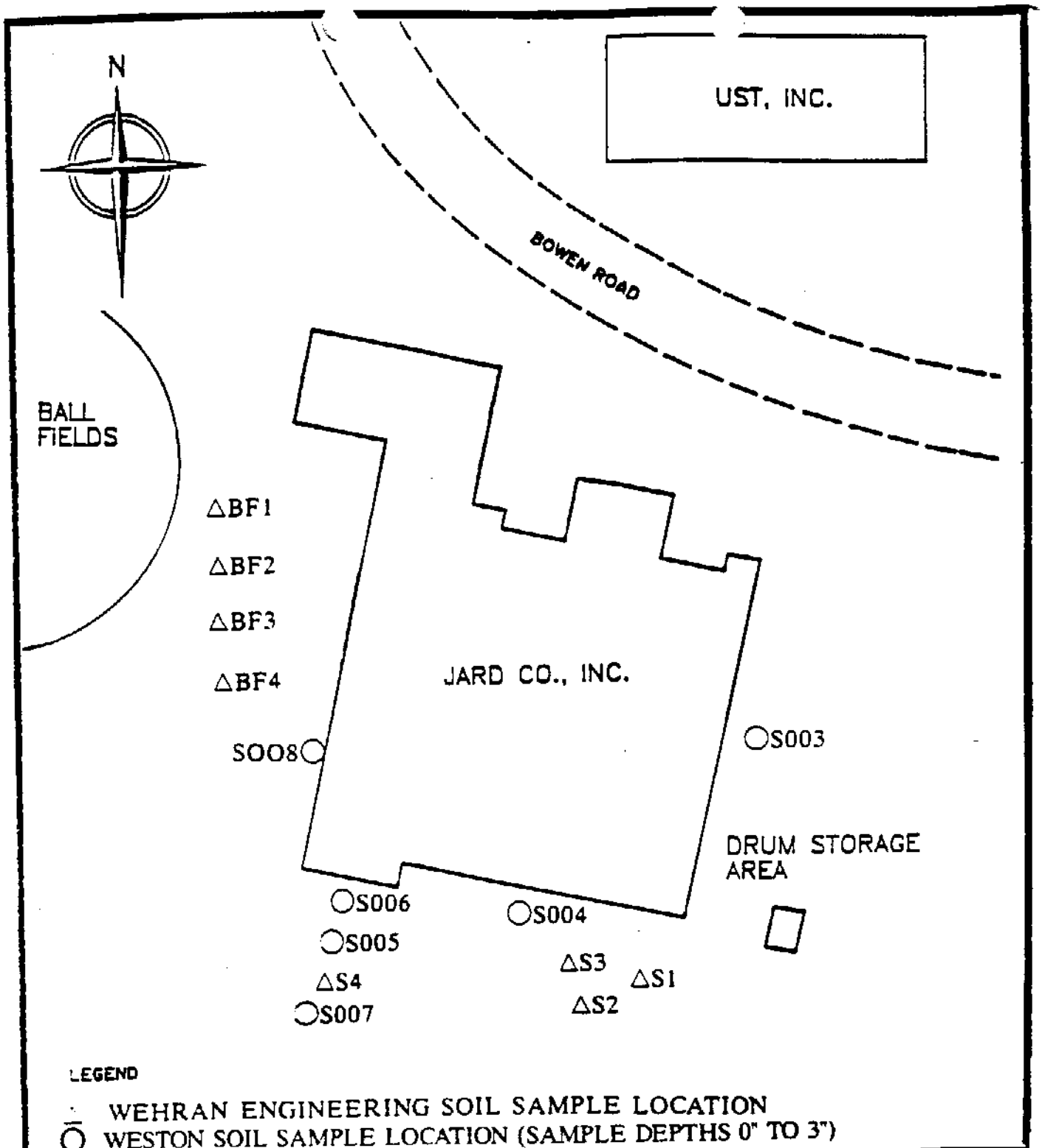

NOT TO SCALE

FIGURE 3

SOIL SAMPLE LOCATIONS
JARD CO. ,INC.
BENNINGTON, VERMONT

WESTON

DRAWN	DATE	PCS #
LWL	3/91	1211
APPROVED	DATE	TDD #
	3/91	01-9103-07

~~APPENDIX H~~

DRUM LOG

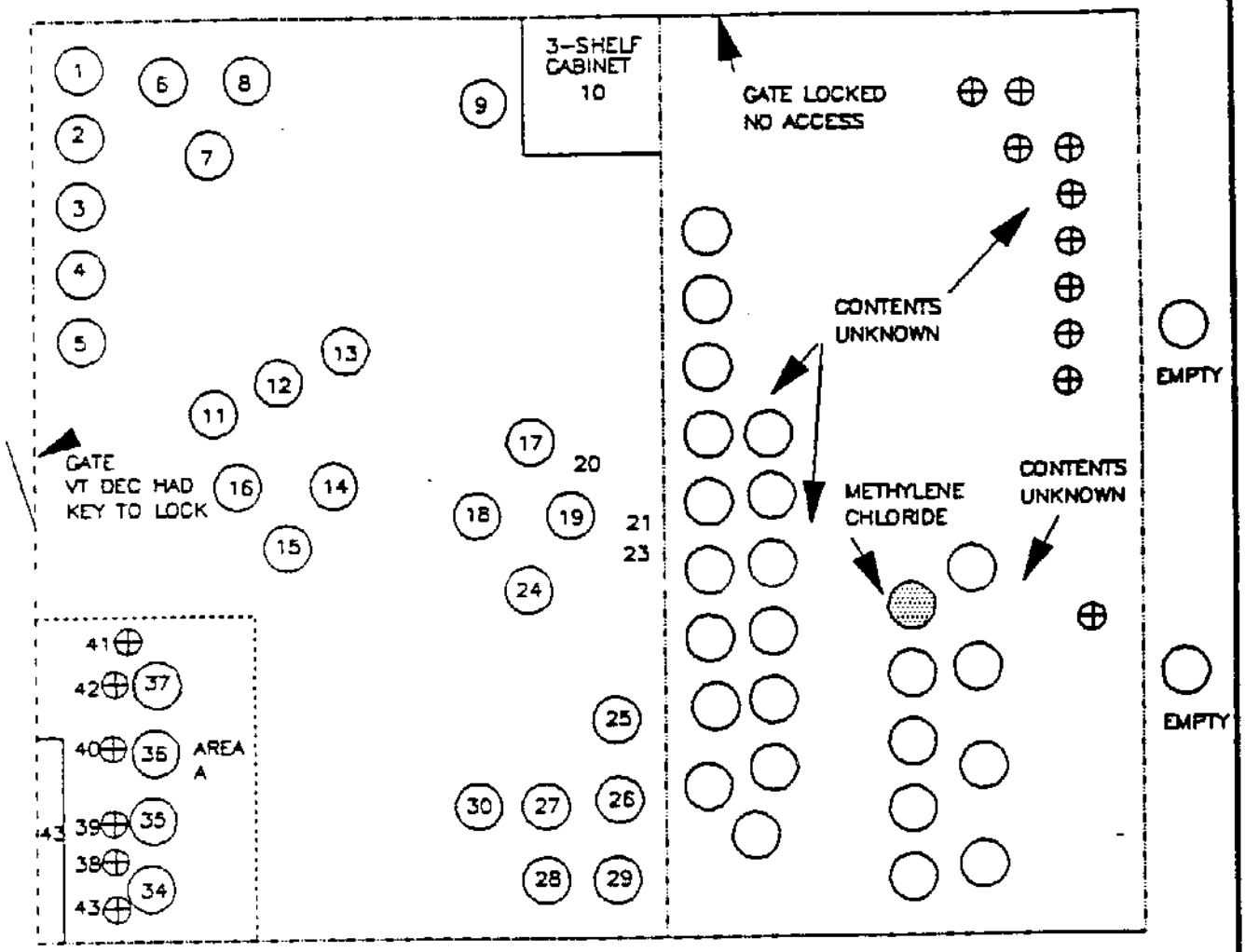

APPROXIMATELY 85 55 GALL DRUMS LOCATED IN THIS AREA
VERMONT DEPARTMENT OF ENVIRONMENTAL CONSERVATION
HAS DETERMINED DRUMS TO BE EMPTY

KEY

55 GALL DRUM

5 GALL PAIL

FENCE

REFER TO KEY TO FIGURE 4 ON FOLLOWING PAGE

AREA A ENLARGED

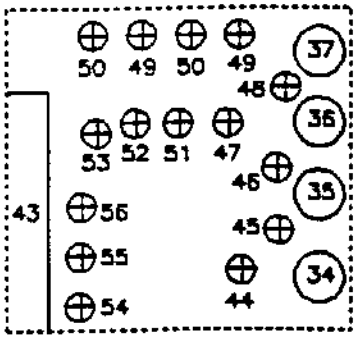

NOT TO SCALE

FIGURE4

DIAGRAM OF DRUM STORAGE AREA
JARD CO. ,INC.
BENNINGTON, VERMONT

WESTON
REGION I TECHNICAL ASSISTANCE TEAM

DRAWN	DATE	PCS #
MWL	3/91	1211
APPROVED	DATE	TDD #
	3/91	01-9103-07

KEY TO FIGURE 4

1. methyl isoamyl ketone
2. trichlorethane
3. exxate 600
4. toluene - DRUM EPA 001
5. MeOH
6. MeOH
7. toluene
8. methyl isoamyl ketone
9. hydraulic oil
10. cabinet - paints (12-32 oz. or less) and varnishes [TOP]
    4 small aerosol paint cans [TOP]
    12-1-gal containers paint [middle]
    1-gal refrigeration oil; 1-gal cutting oil [BOTTOM]
    2 5-gal "Northern Plastics" [BOTTOM]
11. Mobil therm 603 heat transfer oil
12. MeOH
13. MeOH
14. paraplex G-60 (CP Hall Co.) (epoxidized soybean oil)
15. trichlorethylene
16. mas vinyl 27-3000-001 "paint enamel flammable"
17. exxate 600 - DRUM EPA 002
18. MeOH
19. MeOH
20. roof coating
21. paint can
22. paint waste
23. roof seal
24. grey enamel
25. _____ *oil*
26. mas unmarked
27. grey enamel
28. unmarked
29. "oakite 202"
30. Mobiltherm 603
31-33. "ice foe" w/isotrol 100 lb ea.
34. PD George?
35. PD George #1500
36. synthetic resin
37. unmarked
38. 2 5-gal ethylene glycol
39. 1 5-gal MeOH
40. asphalt roof coating
41. 1 5-gal MeOH
    1 5-gal "Sea-lac"
42. 2 ½-gal "dirty chemicals - please dispose"
43. shelving - [TOP] "sea-lac" 5-gal, polybutene polymer 5-gal,
    "oakite 31" 1-gal, unmarked 5-gal

    [MIDDLE] unmarked 5-gal, MeOH 5-gal,
    "Paraplex G-62 expoxidized soybean oil" 5-gal

    [BOTTOM] "NIAX POLYOL 16-46" 5-gal, "Paraplex G-62" 5-gal,
    "Bestine solvent and thinner 1-gal

44. Paraplex G-62
45. unmarked: Essex, United Technologies
46. MeOH
47. Hydrochloric acid 164 lbs
48. 1-gal vinyl phenolic adhesive
49. paint enamel
50. unmarked
51. 2 5-gal "Paint related material"
52. 2 boxes 4-gal each vinyl phenolic adhesive
53. 1 5-gal corroded can - "Penwalt" stored on tope of
    1 5-gal can "Centimark Plastic Remover"
54. MeOH
55. unmarked
56. unmarked

Soil Sampling Results/VOCs

US ENVIRONMENTAL PROTECTION AGENCY
60 Westview Street
Lexington, MA. 02173

ATE: April 9, 1991

UBJECT: Jard Co., Inc. - Bennington, VT - Purgeable Organic Analysis
Samples Received: 63766, 63767, 63768, 63769, 63770
63771, 63772, 63763 - Trip Blank
Samples Analyzed by GC/MS:Same

ROM: Steven Heller, ESAT Chemist, Joe Montanaro, EPA Chemist

TO: Mary Ellen Stanton, EER

THRU: Dr. William Andrade
Chief, Chemistry Section WJA 4/9/91

PROJECT NUMBER: 910104

DATE(S) SAMPLES RECEIVED BY THE LABORATORY: 3/20/91

ANALYTICAL PROCEDURE: SW-846, 8240 Modified

Soil: Approximately 4 grams (wet weight) of sample is tared in a 40ml VOA vial. Nine mls of pesticide grade methanol and one ml of fluorobenzene surrogate spiking solution is added to the vial. The sample is then shaken for approximately 2 minutes. A portion of the methanol extract is diluted in organic-free water and then analyzed as per SW-846 3rd revision, Method 8240 Modified. Concentration is based on dry weight analyzed.

QUALITY CONTROL:

1. A method blank was analyzed prior to sample analysis.
2. Each sample was spiked with three surrogate compounds at approximately 30 ppb concentration. The results for the surrogate recoveries are reported for each sample.
3. Sample 63768 was analyzed in duplicate to determine laboratory precision and accuracy.

DATA FILE: D:\LABRPTS\910104SO.VOA

cc: Suresh Srivastava

P. 1

ANALYTICAL PARAMETERS
PURGEABLE ORGANIC ANALYSIS

NSTRUMENTS:	Tekmar ALS 2016 Tekmar LSC-2000 Finnigan INCOS-50
URGE CONDITIONS:	
Gas:	Helium
Purge Time and Flow:	11 min.,40 ml/min
Trap:	25 cm stainles steel (1/8 in.OD) packed with 15 cm 60/80 mesh Tenax-GC plus 8 cm 35/80 mesh Davison type 15 Silica Gel
Desorption Time,Flow, Temperature:	4 min, 20ml/min.,180C
Bake out cycle:	12 min.
HROMATOGRAPHIC CONDITIONS:	
Column:	30 meter long x 0.5 mm ID DB 624 mega-bore column
Program:	Initial 5 C ramped at 2 C/min to 10 C. Hold at 10 C for 5 minutes, then programmed at 6 C/min to 160 C and held for 1 minute.
Injector, Separator,and Transfer Temperatures:	220 C,220 C,220 C
Carrier Gas and Flow:	Helium, 30 ml/min
MASS SPECTROMETER CONDITIONS:	
Electron Energy:	70 V
Mass Range:	35,300
Scan Rate:	1.5 seconds

MATRIX SPIKE DUPLICATE ANALYSIS

ırvey: Jard Co.
mple Number: 63768
_te: 3/27/91

ACCURACY

COMPOUND.	AVERAGE % RECOVERY	ACCEPTABLE RANGE *
1 Dichloroethylene	116	D-234
ınzene	87	37-151
richloroethylene	91	71-157
oluene	90	47-150
ılorobenzene	90	37-160

PRECISION

Compound	#1 RECOVERY	#2 RECOVERY	RPD
,1 Dichloroethylene	110	122	10
enzene	86	88	2
:richloroethylene	88	91	6
Toluene	87	90	5
hlorobenzene	89	90	1

* Acceptance limit from Federal Register Table 5, Method 624

p. 2a

FACILITY SAMPLED: Jard Co.

US ENVIRONMENTAL PROTECTION AGENCY
REGION I LABORATORY
GC/MS PURGEABLE ORGANIC ANALYSIS - SOIL

MPLE NO.: 63766
AMPLE LOCATION:
ERCENT DRY WEIGHT: 78%
STRUMENT: INCOS-50

DATE OF ANALYSIS: 3/27/91
REFERENCE BOOK: 100
PRESERVATIVE: Cool to 4 C

AMPLE RESULTS:

CAS NO.	STORET NO.	Compound	ppm Conc. (ug/gm)	Det. Limit (ug/gm)	Comments
		TARGET COMPOUNDS			
4-87-3	34418	Chloromethane	ND	0.20	
4-83-9	34413	Bromomethane	ND	0.10	
5-01-4	39175	Vinyl Chloride	ND	0.10	
5-00-3	34311	Chloroethane	ND	0.10	
5-09-2	34423	Methylene Chloride	ND	0.20	
5-69-4	34488	Trichlorofluoromethane	2.3	0.10	
5-35-4	34501	1,1-Dichloroethylene	ND	0.10	
5-34-3	34496	1,1-Dichloroethane	ND	0.10	
156-60-5	34546	1,2-Dichloroethylene isomers	ND	0.10	
7-66-3	32106	Chloroform	ND	0.10	
07-06-2	34531	1,2-Dichloroethane	ND	0.10	
71-55-6	34506	1,1,1-Trichloroethane	ND	0.10	
6-23-5	32102	Carbon Tetrachloride	ND	0.10	
5-27-4	32101	Bromodichloromethane	ND	0.10	
8-87-5	34541	1,2-Dichloropropane	ND	0.10	
10061-02-6	34699	t-1,3-Dichloropropene	ND	0.10	
9-01-6	39180	Trichloroethylene	ND	0.10	
24-48-1	32105	Dibromochloromethane	ND	0.10	
10061-01-5	34704	c-1,3-Dichloropropene and/or 1,1-Dichloropropene	ND	0.10	
9-00-5	34511	1,1,2-Trichloroethane	ND	0.10	
1-43-2	34030	Benzene	ND	0.10	
110-75-8	34576	2-Chloroethylvinyl ether	ND	0.40	
75-25-2	32104	Bromoform	ND	0.10	
127-18-4	34475	Tetrachloroethylene	ND	0.10	
79-34-5	34516	1,1,2,2-Tetrachloroethane	ND	0.10	
108-88-3	34010	Toluene	ND	0.10	
108-90-7	34301	Chlorobenzene	ND	0.10	
100-41-4	34371	Ethylbenzene	ND	0.10	
107-02-8	34210	Acrolein	ND	3.00	
107-13-1	34215	Acrylonitrile	ND	3.00	
		Dichlorobenzene isomers	ND	0.20	
		1,1,2-Trichloro-1,2,2-trifluoroethane	ND	0.10	
67-64-1	81552	Acetone	ND	4.00	
75-15-0	77041	Carbon Disulfide	ND	0.30	

(con't)

p. 3

US ENVIRONMENTAL PROTECTION AGENCY
REGION I LABORATORY
GC/MS PURGEABLE ORGANIC ANALYSIS -SOIL

MPLE NO.: 63766
ample Results Continued:

CAS NO.	STORET NO.	Compound	Conc. (ug/gm)	Det. Limit (ug/gm)	Comments
-93-3	81595	2-Butanone (MEK)	ND	10.00	
8-05-4	77057	Vinyl Acetate	ND	1.00	
91-10-6	77103	2-Hexanone	ND	0.10	
08-10-1	81596	4-Methyl-2-Pentanone(MIBK)	0.66	0.30	
0-42-5	81708	Styrene	ND	0.10	
3-02-7	81551	Xylenes (total)	0.28	0.20	
		1,2-Dibromoethane	ND	0.10	
		Tetrahydrofuran	ND	1.00	
		Ethyl ether	ND	0.30	

Other Compounds
Tentatively Identified

Unidentified hydrocarbons were found totaling approximately 40 ug/g.

Other Compounds Quantitated

ample Recoveries for Surrogate Compounds:	Observed Recoveries	95%Confidence Limits
1,2-Dichloroethane,d4	101	70-133
Toluene,d8	82	88-98
1,4-Bromofluorobenzene	102	80-107
Fluorobenzene	60	67-130

Notes:
ND=none detected
~=approximate
<=less than
>=greater than

p. 4

FACILITY SAMPLED: Jard Co.

US ENVIRONMENTAL PROTECTION AGENCY
REGION I LABORATORY
GC/MS PURGEABLE ORGANIC ANALYSIS - SOIL

AMPLE NO.: 63767
AMPLE LOCATION:
ERCENT DRY WEIGHT: 88%
NSTRUMENT: INCOS-50

DATE OF ANALYSIS: 3/20/91
REFERENCE BOOK: 100
PRESERVATIVE: Cool to 4 C

AMPLE RESULTS:

CAS NO.	STORET NO.	Compound	ppm Conc. (ug/gm)	Det. Limit (ug/gm)	Comments
		TARGET COMPOUNDS			
4-87-3	34418	Chloromethane	ND	0.18	
74-83-9	34413	Bromomethane	ND	0.09	
75-01-4	39175	Vinyl Chloride	ND	0.09	
5-00-3	34311	Chloroethane	ND	0.09	
75-09-2	34423	Methylene Chloride	ND	0.09	
75-69-4	34488	Trichlorofluoromethane	ND	0.09	
5-35-4	34501	1,1-Dichloroethylene	ND	0.09	
5-34-3	34496	1,1-Dichloroethane	ND	0.09	
156-60-5	34546	1,2-Dichloroethylene isomers	ND	0.09	
67-66-3	32106	Chloroform	ND	0.09	
07-06-2	34531	1,2-Dichloroethane	ND	0.09	
1-55-6	34506	1,1,1-Trichloroethane	ND	0.09	
56-23-5	32102	Carbon Tetrachloride	ND	0.09	
75-27-4	32101	Bromodichloromethane	ND	0.09	
78-87-5	34541	1,2-Dichloropropane	ND	0.09	
10061-02-6	34699	t-1,3-Dichloropropene	ND	0.09	
79-01-6	39180	Trichloroethylene	ND	0.09	
124-48-1	32105	Dibromochloromethane	ND	0.09	
10061-01-5	34704	c-1,3-Dichloropropene and/or 1,1-Dichloropropene	ND	0.09	
79-00-5	34511	1,1,2-Trichloroethane	ND	0.09	
71-43-2	34030	Benzene	ND	0.09	
110-75-8	34576	2-Chloroethylvinyl ether	ND	0.36	
75-25-2	32104	Bromoform	ND	0.09	
127-18-4	34475	Tetrachloroethylene	ND	0.09	
79-34-5	34516	1,1,2,2-Tetrachloroethane	ND	0.09	
108-88-3	34010	Toluene	ND	0.09	
108-90-7	34301	Chlorobenzene	ND	0.09	
100-41-4	34371	Ethylbenzene	ND	2.70	
107-02-8	34210	Acrolein	ND	2.70	
107-13-1	34215	Acrylonitrile	ND	0.18	
		Dichlorobenzene isomers	ND	0.09	
		1,1,2-Trichloro-1,2,2-trifluoroethane	ND	3.60	
67-64-1	81552	Acetone	ND	0.27	
75-15-0	77041	Carbon Disulfide			

(con't)

p. 5

US ENVIRONMENTAL PROTECTION AGENCY
REGION I LABORATORY
GC/MS PURGEABLE ORGANIC ANALYSIS -SOIL

MPLE NO.: 63767
ample Results Continued:

CAS NO.	STORET NO.	Compound	Conc. (ug/gm)	Det. Limit (ug/gm)	Comments
-93-3	81595	2-Butanone (MEK)	ND	9.00	
8-05-4	77057	Vinyl Acetate	ND	0.90	
91-10-6	77103	2-Hexanone	ND	0.09	
08-10-1	81596	4-Methyl-2-Pentanone(MIBK)	ND	0.27	
0-42-5	81708	Styrene	ND	0.09	
3-02-7	81551	Xylenes (total)	ND	0.18	
		1,2-Dibromoethane	ND	0.09	
		Tetrahydrofuran	ND	0.90	
		Ethyl ether	ND	0.27	

Other Compounds
Tentatively Identified

Other Compounds Quantitated

ample Recoveries for Surrogate Compounds:	Observed Recoveries	95% Confidence Limits
1,2-Dichloroethane,d4	102	70-133
Toluene,d8	91	88-98
1,4-Bromofluorobenzene	101	80-107
Fluorobenzene	89	67-130

Notes:
ND=none detected
~=approximate
<=less than
>=greater than

p. 6

FACILITY SAMPLED: Jard Co.

US ENVIRONMENTAL PROTECTION AGENCY
REGION I LABORATORY
GC/MS PURGEABLE ORGANIC ANALYSIS - SOIL

MPLE NO.: 63768
MPLE LOCATION:
RCENT DRY WEIGHT: 88%
NSTRUMENT: INCOS-50

DATE OF ANALYSIS: 3/20/91
REFERENCE BOOK: 100
PRESERVATIVE: Cool to 4 C

MPLE RESULTS:

CAS NO.	STORET NO.	Compound	ppm Conc. (ug/gm)	Det. Limit (ug/gm)	Comments
		TARGET COMPOUNDS			
-87-3	34418	Chloromethane	ND	0.18	
4-83-9	34413	Bromomethane	ND	0.09	
5-01-4	39175	Vinyl Chloride	ND	0.09	
-00-3	34311	Chloroethane	ND	0.09	
-09-2	34423	Methylene Chloride	ND	0.09	
5-69-4	34488	Trichlorofluoromethane	ND	0.09	
5-35-4	34501	1,1-Dichloroethylene	ND	0.09	
-34-3	34496	1,1-Dichloroethane	ND	0.09	
56-60-5	34546	1,2-Dichloroethylene isomers	ND	0.09	
7-66-3	32106	Chloroform	ND	0.09	
7-06-2	34531	1,2-Dichloroethane	ND	0.09	
1-55-6	34506	1,1,1-Trichloroethane	ND	0.09	
56-23-5	32102	Carbon Tetrachloride	ND	0.09	
75-27-4	32101	Bromodichloromethane	ND	0.09	
8-87-5	34541	1,2-Dichloropropane	ND	0.09	
0061-02-6	34699	t-1,3-Dichloropropene	ND	0.09	
79-01-6	39180	Trichloroethylene	ND	0.09	
24-48-1	32105	Dibromochloromethane	ND	0.09	
0061-01-5	34704	c-1,3-Dichloropropene and/or 1,1-Dichloropropene	ND	0.09	
79-00-5	34511	1,1,2-Trichloroethane	ND	0.09	
1-43-2	34030	Benzene	ND	0.09	
10-75-8	34576	2-Chloroethylvinyl ether	ND	0.36	
75-25-2	32104	Bromoform	ND	0.09	
127-18-4	34475	Tetrachloroethylene	ND	0.09	
9-34-5	34516	1,1,2,2-Tetrachloroethane	ND	0.09	
08-88-3	34010	Toluene	ND	0.09	
108-90-7	34301	Chlorobenzene	ND	0.09	
00-41-4	34371	Ethylbenzene	ND	0.09	
07-02-8	34210	Acrolein	ND	2.70	
07-13-1	34215	Acrylonitrile	ND	2.70	
		Dichlorobenzene isomers	ND	0.18	
		1,1,2-Trichloro-1,2,2-trifluoroethane	ND	0.09	
67-64-1	81552	Acetone	ND	3.60	
75-15-0	77041	Carbon Disulfide	ND	0.27	

(con't)

US ENVIRONMENTAL PROTECTION AGENCY
REGION I LABORATORY
GC/MS PURGEABLE ORGANIC ANALYSIS -SOIL

MPLE NO.: 63768
ample Results Continued:

CAS NO.	STORET NO.	Compound	Conc. (ug/gm)	Det. Limit (ug/gm)	Comments
-93-3	81595	2-Butanone (MEK)	ND	9.00	
8-05-4	77057	Vinyl Acetate	ND	0.90	
91-10-6	77103	2-Hexanone	ND	0.09	
08-10-1	81596	4-Methyl-2-Pentanone(MIBK)	ND	0.27	
0-42-5	81708	Styrene	ND	0.09	
3-02-7	81551	Xylenes (total)	ND	0.18	
		1,2-Dibromoethane	ND	0.09	
		Tetrahydrofuran	ND	0.90	
		Ethyl ether	ND	0.27	

Other Compounds
Tentatively Identified

Other Compounds Quantitated

Sample Recoveries for Surrogate Compounds:	Observed Recoveries	95%Confidence Limits
1,2-Dichloroethane,d4	96	70-133
Toluene,d8	99	88-98
1,4-Bromofluorobenzene	96	80-107
Fluorobenzene	82	67-130

Notes:
ND=none detected
~=approximate
<=less than
>=greater than

p. 8

FACILITY SAMPLED: Jard Co.

US ENVIRONMENTAL PROTECTION AGENCY
REGION I LABORATORY
GC/MS PURGEABLE ORGANIC ANALYSIS - SOIL

AMPLE NO.: 63769
MPLE LOCATION:
RCENT DRY WEIGHT: 88%
NSTRUMENT: INCOS-50

DATE OF ANALYSIS: 3/20/91
REFERENCE BOOK: 100
PRESERVATIVE: Cool to 4 C

MPLE RESULTS:

CAS NO.	STORET NO.	Compound	ppm Conc. (ug/gm)	Det. Limit (ug/gm)	Comments
		TARGET COMPOUNDS			
1-87-3	34418	Chloromethane	ND	0.22	
4-83-9	34413	Bromomethane	ND	0.11	
5-01-4	39175	Vinyl Chloride	ND	0.11	
5-00-3	34311	Chloroethane	ND	0.11	
5-09-2	34423	Methylene Chloride	ND	0.11	
75-69-4	34488	Trichlorofluoromethane	ND	0.11	
5-35-4	34501	1,1-Dichloroethylene	ND	0.11	
5-34-3	34496	1,1-Dichloroethane	ND	0.11	
156-60-5	34546	1,2-Dichloroethylene isomers	ND	0.11	
57-66-3	32106	Chloroform	ND	0.11	
07-06-2	34531	1,2-Dichloroethane	ND	0.11	
1-55-6	34506	1,1,1-Trichloroethane	ND	0.11	
56-23-5	32102	Carbon Tetrachloride	ND	0.11	
75-27-4	32101	Bromodichloromethane	ND	0.11	
8-87-5	34541	1,2-Dichloropropane	ND	0.11	
0061-02-6	34699	t-1,3-Dichloropropene	ND	0.11	
79-01-6	39180	Trichloroethylene	ND	0.11	
124-48-1	32105	Dibromochloromethane	ND	0.11	
0061-01-5	34704	c-1,3-Dichloropropene and/or 1,1-Dichloropropene	ND	0.11	
79-00-5	34511	1,1,2-Trichloroethane	ND	0.11	
71-43-2	34030	Benzene	ND	0.11	
110-75-8	34576	2-Chloroethylvinyl ether	ND	0.44	
75-25-2	32104	Bromoform	ND	0.11	
127-18-4	34475	Tetrachloroethylene	ND	0.11	
79-34-5	34516	1,1,2,2-Tetrachloroethane	ND	0.11	
108-88-3	34010	Toluene	ND	0.11	
108-90-7	34301	Chlorobenzene	ND	0.11	
100-41-4	34371	Ethylbenzene	ND	0.11	
107-02-8	34210	Acrolein	ND	3.30	
107-13-1	34215	Acrylonitrile	ND	3.30	
		Dichlorobenzene isomers	ND	0.22	
		1,1,2-Trichloro-1,2,2-trifluoroethane	ND	0.11	
67-64-1	81552	Acetone	ND	4.40	
75-15-0	77041	Carbon Disulfide	ND	0.33	

(con't)

p. 9

US ENVIRONMENTAL PROTECTION AGENCY
REGION I LABORATORY
GC/MS PURGEABLE ORGANIC ANALYSIS -SOIL

PLE NO.: 63769
ple Results Continued:

CAS NO.	STORET NO.	Compound	Conc. (ug/gm)	Det. Limit (ug/gm)	Comments
-93-3	81595	2-Butanone (MEK)	ND	11.00	
3-05-4	77057	Vinyl Acetate	ND	1.10	
1-10-6	77103	2-Hexanone	ND	0.11	
8-10-1	81596	4-Methyl-2-Pentanone(MIBK)	ND	0.33	
0-42-5	81708	Styrene	ND	0.11	
3-02-7	81551	Xylenes (total)	ND	0.22	
		1,2-Dibromoethane	ND	0.11	
		Tetrahydrofuran	ND	1.10	
		Ethyl ether	ND	0.33	

Other Compounds
Tentatively Identified

Other Compounds Quantitated

ample Recoveries for urrogate Compounds:	Observed Recoveries	95% Confidence Limits
1,2-Dichloroethane,d4	110	70-133
Toluene,d8	100	88-98
1,4-Bromofluorobenzene	102	80-107
Fluorobenzene	94	67-130

Notes:
ND=none detected
~=approximate
<=less than
>=greater than

p. 10

FACILITY SAMPLED: Jard Co.

US ENVIRONMENTAL PROTECTION AGENCY
REGION I LABORATORY
GC/MS PURGEABLE ORGANIC ANALYSIS - SOIL

MPLE NO.: 63770
MPLE LOCATION:
ERCENT DRY WEIGHT: 89%
NSTRUMENT: INCOS-50

DATE OF ANALYSIS: 3/20/91
REFERENCE BOOK: 100
PRESERVATIVE: Cool to 4 C

MPLE RESULTS:

CAS NO.	STORET NO.	Compound	ppm Conc. (ug/gm)	Det. Limit (ug/gm)	Comments
		TARGET COMPOUNDS			
4-87-3	34418	Chloromethane	ND	0.22	
74-83-9	34413	Bromomethane	ND	0.11	
5-01-4	39175	Vinyl Chloride	ND	0.11	
5-00-3	34311	Chloroethane	ND	0.11	
5-09-2	34423	Methylene Chloride	ND	0.11	
75-69-4	34488	Trichlorofluoromethane	ND	0.11	
5-35-4	34501	1,1-Dichloroethylene	ND	0.11	
5-34-3	34496	1,1-Dichloroethane	ND	0.11	
156-60-5	34546	1,2-Dichloroethylene isomers	ND	0.11	
67-66-3	32106	Chloroform	ND	0.11	
07-06-2	34531	1,2-Dichloroethane	ND	0.11	
1-55-6	34506	1,1,1-Trichloroethane	ND	0.11	
56-23-5	32102	Carbon Tetrachloride	ND	0.11	
75-27-4	32101	Bromodichloromethane	ND	0.11	
8-87-5	34541	1,2-Dichloropropane	ND	0.11	
10061-02-6	34699	t-1,3-Dichloropropene	ND	0.11	
79-01-6	39180	Trichloroethylene	ND	0.11	
124-48-1	32105	Dibromochloromethane	ND	0.11	
10061-01-5	34704	c-1,3-Dichloropropene and/or 1,1-Dichloropropene	ND	0.11	
79-00-5	34511	1,1,2-Trichloroethane	ND	0.11	
71-43-2	34030	Benzene	ND	0.11	
110-75-8	34576	2-Chloroethylvinyl ether	ND	0.44	
75-25-2	32104	Bromoform	ND	0.11	
127-18-4	34475	Tetrachloroethylene	ND	0.11	
79-34-5	34516	1,1,2,2-Tetrachloroethane	ND	0.11	
108-88-3	34010	Toluene	ND	0.11	
108-90-7	34301	Chlorobenzene	ND	0.11	
100-41-4	34371	Ethylbenzene	ND	0.11	
107-02-8	34210	Acrolein	ND	3.30	
107-13-1	34215	Acrylonitrile	ND	3.30	
		Dichlorobenzene isomers	ND	0.22	
		1,1,2-Trichloro-1,2,2-trifluoroethane	ND	0.11	
67-64-1	81552	Acetone	ND	4.40	
75-15-0	77041	Carbon Disulfide	ND	0.33	

(con't)

p. 11

US ENVIRONMENTAL PROTECTION AGENCY
REGION I LABORATORY
GC/MS PURGEABLE ORGANIC ANALYSIS -SOIL

TPLE NO.: 63770
ample Results Continued:

CAS NO.	STORET NO.	Compound	Conc. (ug/gm)	Det. Limit (ug/gm)	Comments
-93-3 →	81595	2-Butanone (MEK)	ND	11.00	
8-05-4	77057	Vinyl Acetate	ND	1.10	
1-10-6	77103	2-Hexanone	ND	0.11	
08-10-1	81596	4-Methyl-2-Pentanone(MIBK)	ND	0.33	
0-42-5	81708	Styrene	ND	0.11	
3-02-7	81551	Xylenes (total)	ND	0.22	
		1,2-Dibromoethane	ND	0.11	
		Tetrahydrofuran	ND	1.10	
		Ethyl ether	ND	0.33	

Other Compounds Tentatively Identified

Other Compounds Quantitated

ample Recoveries for urrogate Compounds:	Observed Recoveries	95%Confidence Limits
1,2-Dichloroethane,d4	97	70-133
Toluene,d8	76	88-98
1,4-Bromofluorobenzene	101	80-107
Fluorobenzene	79	67-130

lotes:
ND=none detected
~=approximate
<=less than
>=greater than

p. 12

FACILITY SAMPLED: Jard Co.

US ENVIRONMENTAL PROTECTION AGENCY
REGION I LABORATORY
GC/MS PURGEABLE ORGANIC ANALYSIS - WATER

MPLE NO.: 63771
MPLE LOCATION:
RCENT DRY WEIGHT: 87%
NSTRUMENT: INCOS-50

DATE OF ANALYSIS: 3/20/91
REFERENCE BOOK: 100
PRESERVATIVE: Cool to 4 C

MPLE RESULTS:

CAS NO.	STORET NO.	Compound	ppm Conc. (ug/L)	Det. Limit (ug/L)	Comments
		TARGET COMPOUNDS			
4-87-3	34418	Chloromethane	ND	0.22	
74-83-9	34413	Bromomethane	ND	0.11	
75-01-4	39175	Vinyl Chloride	ND	0.11	
5-00-3	34311	Chloroethane	ND	0.11	
5-09-2	34423	Methylene Chloride	ND	0.11	
75-69-4	34488	Trichlorofluoromethane	ND	0.11	
5-35-4	34501	1,1-Dichloroethylene	ND	0.11	
5-34-3	34496	1,1-Dichloroethane	ND	0.11	
156-60-5	34546	1,2-Dichloroethylene isomers	ND	0.11	
67-66-3	32106	Chloroform	ND	0.11	
07-06-2	34531	1,2-Dichloroethane	ND	0.11	
1-55-6	34506	1,1,1-Trichloroethane	ND	0.11	
56-23-5	32102	Carbon Tetrachloride	ND	0.11	
75-27-4	32101	Bromodichloromethane	ND	0.11	
8-87-5	34541	1,2-Dichloropropane	ND	0.11	
0061-02-6	34699	t-1,3-Dichloropropene	ND	0.11	
79-01-6	39180	Trichloroethylene	ND	0.11	
124-48-1	32105	Dibromochloromethane	ND	0.11	
10061-01-5	34704	c-1,3-Dichloropropene and/or 1,1-Dichloropropene	ND	0.11	
79-00-5	34511	1,1,2-Trichloroethane	ND	0.11	
71-43-2	34030	Benzene	ND	0.11	
110-75-8	34576	2-Chloroethylvinyl ether	ND	0.44	
75-25-2	32104	Bromoform	ND	0.11	
127-18-4	34475	Tetrachloroethylene	ND	0.11	
79-34-5	34516	1,1,2,2-Tetrachloroethane	ND	0.11	
108-88-3	34010	Toluene	ND	0.11	
108-90-7	34301	Chlorobenzene	ND	0.11	
100-41-4	34371	Ethylbenzene	ND	0.11	
107-02-8	34210	Acrolein	ND	3.30	
107-13-1	34215	Acrylonitrile	ND	3.30	
		Dichlorobenzene isomers	ND	0.22	
		1,1,2-Trichloro-1,2,2-trifluoroethane	ND	0.11	
67-64-1	81552	Acetone	ND	4.40	
75-15-0	77041	Carbon Disulfide	ND	0.33	
		(con't)			

p. 13

US ENVIRONMENTAL PROTECTION AGENCY
REGION I LABORATORY
GC/MS PURGEABLE ORGANIC ANALYSIS -SOIL

MPLE NO.: 63771
mple Results Continued:

CAS NO.	STORET NO.	Compound	Conc. (ug/gm)	Det. Limit (ug/gm)	Comments
8-93-3	81595	2-Butanone (MEK)	ND	11.00	
8-05-4	77057	Vinyl Acetate	ND	1.10	
1-10-6	77103	2-Hexanone	ND	0.11	
08-10-1	81596	4-Methyl-2-Pentanone(MIBK)	ND	0.33	
00-42-5	81708	Styrene	ND	0.11	
3-02-7	81551	Xylenes (total)	ND	0.22	
		1,2-Dibromoethane	ND	0.11	
		Tetrahydrofuran	ND	1.10	
		Ethyl ether	ND	0.33	

Other Compounds
Tentatively Identified

Other Compounds Quantitated

Sample Recoveries for Surrogate Compounds:	Observed Recoveries	95%Confidence Limits
1,2-Dichloroethane,d4	93	70-133
Toluene,d8	81	88-98
1,4-Bromofluorobenzene	98	80-107
Fluorobenzene	78	67-130

Notes:
ND=none detected
~=approximate
<=less than
>=greater than

p. 14

FACILITY SAMPLED: Jard Co.

US ENVIRONMENTAL PROTECTION AGENCY
REGION I LABORATORY
GC/MS PURGEABLE ORGANIC ANALYSIS - WATER

AMPLE NO.: 63763
MPLE LOCATION:

NSTRUMENT: INCOS-50

DATE OF ANALYSIS: 3/20/91
REFERENCE BOOK: 100
PRESERVATIVE: Cool to 4 C

MPLE RESULTS:

CAS NO.	STORET NO.	Compound	ppm Conc. (ug/L)	Det. Limit (ug/L)	Comments
		TARGET COMPOUNDS			
4-87-3	34418	Chloromethane	ND	2.00	
4-83-9	34413	Bromomethane	ND	1.00	
5-01-4	39175	Vinyl Chloride	ND	1.00	
5-00-3	34311	Chloroethane	ND	1.00	
5-09-2	34423	Methylene Chloride	ND	1.00	
5-69-4	34488	Trichlorofluoromethane	ND	1.00	
5-35-4	34501	1,1-Dichloroethylene	ND	1.00	
5-34-3	34496	1,1-Dichloroethane	ND	1.00	
56-60-5	34546	1,2-Dichloroethylene isomers	ND	1.00	
7-66-3	32106	Chloroform	ND	1.00	
07-06-2	34531	1,2-Dichloroethane	ND	1.00	
1-55-6	34506	1,1,1-Trichloroethane	ND	1.00	
6-23-5	32102	Carbon Tetrachloride	ND	1.00	
5-27-4	32101	Bromodichloromethane	ND	1.00	
8-87-5	34541	1,2-Dichloropropane	ND	1.00	
0061-02-6	34699	t-1,3-Dichloropropene	ND	1.00	
9-01-6	39180	Trichloroethylene	ND	1.00	
124-48-1	32105	Dibromochloromethane	ND	1.00	
0061-01-5	34704	c-1,3-Dichloropropene and/or 1,1-Dichloropropene	ND	1.00	
79-00-5	34511	1,1,2-Trichloroethane	ND	1.00	
71-43-2	34030	Benzene	ND	1.00	
10-75-8	34576	2-Chloroethylvinyl ether	ND	4.00	
5-25-2	32104	Bromoform	ND	1.00	
127-18-4	34475	Tetrachloroethylene	ND	1.00	
9-34-5	34516	1,1,2,2-Tetrachloroethane	ND	1.00	
08-88-3	34010	Toluene	ND	1.00	
108-90-7	34301	Chlorobenzene	ND	1.00	
100-41-4	34371	Ethylbenzene	ND	1.00	
107-02-8	34210	Acrolein	ND	30.00	
07-13-1	34215	Acrylonitrile	ND	30.00	
		Dichlorobenzene isomers	ND	2.00	
		1,1,2-Trichloro-1,2,2-trifluoroethane	ND	1.00	
67-64-1	81552	Acetone	ND	40.00	
75-15-0	77041	Carbon Disulfide	ND	3.00	

(con't)

p. 15

US ENVIRONMENTAL PROTECTION AGENCY
REGION I LABORATORY
GC/MS PURGEABLE ORGANIC ANALYSIS -WATER

TPLE NO.: 63763
ample Results Continued:

CAS NO.	STORET NO.	Compound	Conc. (ug/gm)	Det. Limit (ug/gm)	Comments
-93-3	81595	2-Butanone (MEK)	ND	100.00	
8-05-4	77057	Vinyl Acetate	ND	10.00	
1-10-6	77103	2-Hexanone	ND	1.00	
08-10-1	81596	4-Methyl-2-Pentanone(MIBK)	ND	3.00	
0-42-5	81708	Styrene	ND	1.00	
3-02-7	81551	Xylenes (total)	ND	2.00	
		1,2-Dibromoethane	ND	1.00	
		Tetrahydrofuran	ND	10.00	
		Ethyl ether	ND	3.00	

Other Compounds
Tentatively Identified

Other Compounds Quantitated

Sample Recoveries for Surrogate Compounds:	Observed Recoveries	95% Confidence Limits
1,2-Dichloroethane,d4	96	70-133
Toluene,d8	104	88-98
1,4-Bromofluorobenzene	92	80-107

Notes:
ND=none detected
~=approximate
<=less than
>=greater than

p. 16

Soil Sampling Results/BNAs

Mary Ellen Stanton

UNITED STATES ENVIRONMENTAL PROTECTION AGENCY
REGION I
60 WESTVIEW STREET, LEXINGTON, MASSACHUSETTS 02173

DATE: April 8, 1991

SUBJ: Gas Chromatography-Mass Spectrometry Analysis of Extractable Organics in Soils and Sediments - Jard Co.

FROM: Elayne Lee, Delon Maas, ESAT, and Dick Siscanaw, Chemistry Section

THRU: Dr. William J. Andrade, Chief, Chemistry Section WJA 4/11/91

TO: Mary Ellen Stanton

PROJECT NUMBER: 910104

ANALYTICAL PROCEDURE:

EPA Consensus Protocol, Organic Analysis, Multi-Media, Multi-Concentration, Medium Level Preparation for Screening and Analysis of Semivolatiles (BNA), 1/87 (IFB WA 84-A266). All samples were screened on a gas chromatograph prior to the gas chromatograph-mass spectrometer analysis. All values are reported out on a dry weight basis.

Date(s) Samples Received by the Laboratory: 3/20/91

Date Samples Analyzed: 3/20/91 - 4/5/91

File: K:\CHEMSTRY\REPORTS\FINAL\910104SO.BNA

US ENVIRONMENTAL PROTECTION AGENCY
60 Westview Street
Lexington, MA 02173

QUALITY CONTROL:

1. A laboratory blank was analyzed before the sample analysis.

2. Each sample was spiked with several surrogate compounds at approximately 75 mg/kg concentration. The results for the surrogate recoveries are reported out for each sample.

3. One sample, 63770 was spiked twice as a matrix spike duplicate with the following compounds at approximately 75 mg/kg concentration.

Compound	Rec. (%)	Rec. (%)	QC Range (%)	Comments
Acenaphthene	86	82	31-137	
4-Chloro-3-methylphenol	91	89	26-103	
2-Chlorophenol	93	89	25-102	
1,4-Dichlorobenzene	79	74	28-104	
2,4-Dinitrotoluene	81	81	28-89	
4-Nitrophenol	91	89	11-114	
N-Nitrosodipropylamine	82	78	41-126	
Pentachlorophenol	54	55	17-109	
Phenol	88	85	26-90	
Pyrene	92	93	35-142	
1,2,4-Trichlorobenzene	88	84	38-107	

(Cont.)

US ENVIRONMENTAL PROTECTION AGENCY
60 Westview Street
Lexington, MA 02173

COMPOUNDS NOT IN THE SPIKING SOLUTION:

Target Compounds	Conc. (mg/kg)	Conc. (mg/kg)
Bis(2-ethylhexyl)phthalate	34	28

Tentatively Identified Compounds	Conc. (mg/kg)	Conc. (mg/kg)
None		

SAMPLE(S) ANALYZED: 63766 63767 63768 63769 63770 63771

US ENVIRONMENTAL PROTECTION AGENCY
60 Westview Street
Lexington, MA 02173

ANALYTICAL PARAMETERS

INSTRUMENTS:

Hewlett Packard 5880 Gas Chromatograph
Hewlett Packard 5987 or 5988 Gas Chromatograph-Mass Spectrometer

GC/FID Screening Conditions:

Gas:	Hydrogen
Capillary Column:	DB-1, 30m, 0.32mm ID, 0.10 micron film thickness
Injection Mode:	Splitless
Temperature Program:	Isothermal for 3 min at 40°C, programmed at 20°C/min to 350°C

GC-MS Conditions:

Gas:	Helium
Capillary Column:	DB-5, 60m, 0.25mm ID, 0.25 micron film thickness
Injection Mode:	Splitless
Temperature Program:	Isothermal for 4 min at 40°C, programmed at 7°C/min to 300°C
Injector, Transfer Temperatures:	300°C, 290°C
Electron Energy:	70 V
Mass Range:	35-550
Scan Rate:	~0.9 seconds

FACILITY SAMPLED: JARD CO

US ENVIRONMENTAL PROTECTION AGENCY
REGION I LABORATORY
GC/MS EXTRACTABLE ORGANIC ANALYSIS

SAMPLE NO.: 63766
SAMPLE LOCATION:
DATE OF COLLECTION:
TIME OF COLLECTION:
SAMPLE RESULTS:

Dilution Factor: 0.336
Percent Moisture: 21
Sample pH: 5.9

CAS NO.	STORET NO.	Compound	Conc. (mg/kg)	Det. Limit (mg/kg)	Comments
		Priority Pollutants			
83-32-9	34205	Acenaphthene	ND	3.36	
208-96-8	34200	Acenaphthylene	ND	3.36	
120-12-7	34220	Anthracene	ND	3.36	
309-00-2	39330	Aldrin	ND	3.36	
56-55-3	34526	Benzo(a)anthracene	ND	3.36	
205-99-2	34230	Benzo(b)fluoranthene	ND	3.36	
207-08-9	34242	Benzo(k)fluoranthene	ND	3.36	
50-32-8	34247	Benzo(a)pyrene	ND	3.36	
191-24-2	34521	Benzo(ghi)perylene	ND	3.36	
85-68-7	34292	Benzyl butyl phthalate	ND	3.36	
319-85-7	39338	beta-BHC	ND	3.36	
319-86-8	34259	delta-BHC	ND	3.36	
111-44-4	34273	Bis(2-chloroethyl)ether	ND	3.36	
111-91-1	34278	Bis(2-chloroethoxy)methane	ND	3.36	
117-81-7	39100	Bis(2-ethylhexyl)phthalate	45	3.36	
108-60-1	34283	Bis(2-chloroisopropyl)ether	ND	3.36	
101-55-3	34636	4-Bromophenylphenyl ether	ND	3.36	
59-50-7	34452	4-Chloro-3-methylphenol	ND	3.36	
91-58-7	34581	2-Chloronaphthalene	ND	3.36	
95-57-8	34586	2-Chlorophenol	ND	3.36	
7005-72-3	34641	4-Chlorophenylphenyl ether	ND	3.36	
218-01-9	34320	Chrysene	ND	3.36	
72-54-8	39310	4,4'-DDD	ND	3.36	
72-55-9	39320	4,4'-DDE	ND	3.36	
50-29-3	39300	4,4'-DDT	ND	3.36	
53-70-3	34556	Dibenzo(a,h)anthracene	ND	3.36	
84-74-2	39110	Di-n-butylphtalate	ND	3.36	
541-73-1	34566	1,3-Dichlorobenzene	ND	3.36	

(con't)

US ENVIRONMENTAL PROTECTION AGENCY
REGION I LABORATORY
GC/MS EXTRACTABLE ORGANIC ANALYSIS

SAMPLE NO.: 63766
Sample Results Continued:

CAS NO.	STORET NO.	Compound	Conc. (mg/kg)	Det. Limit (mg/kg)	Comments
95-50-1	34536	1,2-Dichlorobenzene	ND	3.36	
106-46-7	34571	1,4-Dichlorobenzene	ND	3.36	
91-94-1	34631	3,3'-Dichlorobenzidine	ND	6.72	
120-83-2	34601	2,4-Dichlorophenol	ND	3.36	
60-57-1	39380	Dieldrin	ND	3.36	
84-66-2	34336	Diethylphtalate	ND	3.36	
105-67-9	34606	2-4-Dimethylphenol	ND	3.36	
131-11-3	34341	Dimethylphthalate	-1	3.36	
51-28-5	34616	2,4-Dinitrophenol	ND	16.8	
121-14-2	34611	2,4-Dinitrotoluene	ND	3.36	
606-20-2	34626	2,6-Dinitrotoluene	ND	3.36	
117-84-0	34596	Di-n-octylphthalate	ND	3.36	
206-44-0	34376	Fluoranthene	ND	3.36	
86-73-7	34381	Fluorene	ND	3.36	
76-44-8	39410	Heptachlor	ND	3.36	
1024-57-3	39420	Heptachlor epoxide	ND	3.36	
118-74-1	39700	Hexachlorobenzene	ND	3.36	
87-68-3	34391	Hexachlorobutadiene	ND	3.36	
77-47-4	34386	Hexachlorocyclopentadiene	ND	3.36	
67-72-1	34396	Hexachloroethane	ND	3.36	
193-39-5	34403	Indeno(1,2,3-cd)pyrene	ND	3.36	
78-59-1	34408	Isophorone	-1	3.36	
534-52-1	34657	2-methyl-4,6-dinitrophenol	ND	16.8	
91-20-3	34696	Naphthalene	ND	3.36	
98-95-3	34447	Nitrobenzene	ND	3.36	
88-75-5	34591	2-Nitrophenol	ND	3.36	
100-02-7	34646	4-Nitrophenol	ND	16.8	
86-30-3	34433	N-nitrosodiphenylamine	ND	3.36	
621-64-7	34428	N-Nitrosodi-n-propylamine	ND	3.36	
87-86-5	39032	Pentachlorophenol	ND	16.8	
85-01-8	34461	Phenanthrene	ND	3.36	
108-95-2	34694	Phenol	ND	3.36	
129-00-0	34469	Pyrene	ND	3.36	

(con't)

US ENVIRONMENTAL PROTECTION AGENCY
REGION I LABORATORY
GC/MS EXTRACTABLE ORGANIC ANALYSIS

SAMPLE NO.: 63766
Sample Results Continued:

CAS NO.	STORET NO.	Compound	Conc. (mg/kg)	Det. Limit (mg/kg)	Comments
120-82-1	34551	1,2,4--Trichlorobenzene	ND	3.36	
88-06-2	34621	2,4,6-Trichlorophenol	ND	3.36	
		Hazardous Substances			
65-53-3	77089	Aniline	ND	3.36	
65-85-0	77247	Benzoic Acid	ND	16.8	
100-51-6	77147	Benzyl Alcohol	ND	3.36	
106-47-8		4-Chloroaniline	ND	3.36	
132-64-9	81302	Dibenzofuran	ND	3.36	
534-52-1		4,6-Dinitro-2-methylphenol	ND	16.8	
91-57-6		2-Methylnaphthalene	ND	3.36	
95-48-7		2-Methylphenol	ND	3.36	
106-44-5		4-Methylphenol	ND	3.36	
88-74-4		2-Nitroaniline	ND	16.8	
99-09-2		3-Nitroaniline	ND	16.8	
100-01-6		4-Nitroaniline	ND	16.8	
95-95-4	34621	2,4,5-Trichlorophenol	ND	16.8	
		Other Compounds Quantitated			
		None			

Tentatively Identified Compounds	Est. Conc. (mg/kg)	Det. Limit (mg/kg)
Unknown	30	3

US ENVIRONMENTAL PROTECTION AGENCY
REGION I LABORATORY
GC/MS EXTRACTABLE ORGANIC ANALYSIS

SAMPLE NO.: 63766
Sample Results Continued:

Sample Recoveries For Surrogate Compounds:	Recoveries (%)	QC Range (%)
2-Fluorophenol	93	30-115
Phenol,d5	84	24-113
Nitrobenzene,d5	70	23-120
Fluorobiphenyl	80	30-115
2,4,6-Tribromophenol	80	19-122
p-Terphenyl,d14	79	18-137

Notes:

ND = none detected
~ = approximate
< = less than
> = greater than
NA = not available, due to sample dilution or interference

FACILITY SAMPLED: JARD CO

US ENVIRONMENTAL PROTECTION AGENCY
REGION I LABORATORY
GC/MS EXTRACTABLE ORGANIC ANALYSIS

SAMPLE NO.: 63767
SAMPLE LOCATION:
DATE OF COLLECTION:
TIME OF COLLECTION:
SAMPLE RESULTS:

Dilution Factor: 0.298
Percent Moisture: 11
Sample pH: 6.2

CAS NO.	STORET NO.	Compound	Conc. (mg/kg)	Det. Limit (mg/kg)	Comments
		Priority Pollutants			
83-32-9	34205	Acenaphthene	ND	2.98	
208-96-8	34200	Acenaphthylene	ND	2.98	
120-12-7	34220	Anthracene	ND	2.98	
309-00-2	39330	Aldrin	ND	2.98	
56-55-3	34526	Benzo(a)anthracene	ND	2.98	
205-99-2	34230	Benzo(b)fluoranthene	ND	2.98	
207-08-9	34242	Benzo(k)fluoranthene	ND	2.98	
50-32-8	34247	Benzo(a)pyrene	ND	2.98	
191-24-2	34521	Benzo(ghi)perylene	ND	2.98	
85-68-7	34292	Benzyl butyl phthalate	ND	2.98	
319-85-7	39338	beta-BHC	ND	2.98	
319-86-8	34259	delta-BHC	ND	2.98	
111-44-4	34273	Bis(2-chloroethyl)ether	ND	2.98	
111-91-1	34278	Bis(2-chloroethoxy)methane	ND	2.98	
117-81-7	39100	Bis(2-ethylhexyl)phthalate	-2	2.98	
108-60-1	34283	Bis(2-chloroisopropyl)ether	ND	2.98	
101-55-3	34636	4-Bromophenylphenyl ether	ND	2.98	
59-50-7	34452	4-Chloro-3-methylphenol	ND	2.98	
91-58-7	34581	2-Chloronaphthalene	ND	2.98	
95-57-8	34586	2-Chlorophenol	ND	2.98	
7005-72-3	34641	4-Chlorophenylphenyl ether	ND	2.98	
218-01-9	34320	Chrysene	ND	2.98	
72-54-8	39310	4,4'-DDD	ND	2.98	
72-55-9	39320	4,4'-DDE	ND	2.98	
50-29-3	39300	4,4'-DDT	ND	2.98	
53-70-3	34556	Dibenzo(a,h)anthracene	ND	2.98	
84-74-2	39110	Di-n-butylphtalate	ND	2.98	
541-73-1	34566	1,3-Dichlorobenzene	ND	2.98	

(con't)

US ENVIRONMENTAL PROTECTION AGENCY
REGION I LABORATORY
GC/MS EXTRACTABLE ORGANIC ANALYSIS

SAMPLE NO.: 63767
Sample Results Continued:

CAS NO.	STORET NO.	Compound	Conc. (mg/kg)	Det. Limit (mg/kg)	Comments
95-50-1	34536	1,2-Dichlorobenzene	ND	2.98	
106-46-7	34571	1,4-Dichlorobenzene	ND	2.98	
91-94-1	34631	3,3'-Dichlorobenzidine	ND	5.96	
120-83-2	34601	2,4-Dichlorophenol	ND	2.98	
60-57-1	39380	Dieldrin	ND	2.98	
84-66-2	34336	Diethylphtalate	ND	2.98	
105-67-9	34606	2-4-Dimethylphenol	ND	2.98	
131-11-3	34341	Dimethylphthalate	ND	2.98	
51-28-5	34616	2,4-Dinitrophenol	ND	14.9	
121-14-2	34611	2,4-Dinitrotoluene	ND	2.98	
606-20-2	34626	2,6-Dinitrotoluene	ND	2.98	
117-84-0	34596	Di-n-octylphthalate	ND	2.98	
206-44-0	34376	Fluoranthene	ND	2.98	
86-73-7	34381	Fluorene	ND	2.98	
76-44-8	39410	Heptachlor	ND	2.98	
1024-57-3	39420	Heptachlor epoxide	ND	2.98	
118-74-1	39700	Hexachlorobenzene	ND	2.98	
87-68-3	34391	Hexachlorobutadiene	ND	2.98	
77-47-4	34386	Hexachlorocyclopentadiene	ND	2.98	
67-72-1	34396	Hexachloroethane	ND	2.98	
193-39-5	34403	Indeno(1,2,3-cd)pyrene	ND	2.98	
78-59-1	34408	Isophorone	ND	2.98	
534-52-1	34657	2-methyl-4,6-dinitrophenol	ND	14.9	
91-20-3	34696	Naphthalene	ND	2.98	
98-95-3	34447	Nitrobenzene	ND	2.98	
88-75-5	34591	2-Nitrophenol	ND	2.98	
100-02-7	34646	4-Nitrophenol	ND	14.9	
86-30-3	34433	N-nitrosodiphenylamine	ND	2.98	
621-64-7	34428	N-Nitrosodi-n-propylamine	ND	2.98	
87-86-5	39032	Pentachlorophenol	ND	14.9	
85-01-8	34461	Phenanthrene	ND	2.98	
108-95-2	34694	Phenol	ND	2.98	
129-00-0	34469	Pyrene	ND	2.98	

(cont't)

US ENVIRONMENTAL PROTECTION AGENCY
REGION I LABORATORY
GC/MS EXTRACTABLE ORGANIC ANALYSIS

SAMPLE NO.: 63767
Sample Results Continued:

CAS NO.	STORET NO.	Compound	Conc. (mg/kg)	Det. Limit (mg/kg)	Comments
120-82-1	34551	1,2,4--Trichlorobenzene	ND	2.98	
88-06-2	34621	2,4,6-Trichlorophenol	ND	2.98	
		Hazardous Substances			
65-53-3	77089	Aniline	ND	2.98	
65-85-0	77247	Benzoic Acid	ND	14.9	
100-51-6	77147	Benzyl Alcohol	ND	2.98	
106-47-8		4-Chloroaniline	ND	2.98	
132-64-9	81302	Dibenzofuran	ND	2.98	
534-52-1		4,6-Dinitro-2-methylphenol	ND	14.9	
91-57-6		2-Methylnaphthalene	ND	2.98	
95-48-7		2-Methylphenol	ND	2.98	
106-44-5		4-Methylphenol	ND	2.98	
88-74-4		2-Nitroaniline	ND	14.9	
99-09-2		3-Nitroaniline	ND	14.9	
100-01-6		4-Nitroaniline	ND	14.9	
95-95-4	34621	2,4,5-Trichlorophenol	ND	14.9	
		Other Compounds Quantitated			
		None			

Tentatively Identified Compounds	Est. Conc. (mg/kg)	Det. Limit (mg/kg)
None		3

US ENVIRONMENTAL PROTECTION AGENCY
REGION I LABORATORY
GC/MS EXTRACTABLE ORGANIC ANALYSIS

SAMPLE NO.: 63767
Sample Results Continued:

Sample Recoveries For Surrogate Compounds:	Recoveries (%)	QC Range (%)
2-Fluorophenol	122	30-115
Phenol,d5	115	24-113
Nitrobenzene,d5	90	23-120
Fluorobiphenyl	101	30-115
2,4,6-Tribromophenol	120	19-122
p-Terphenyl,d14	114	18-137

Notes:

ND = none detected
~ = approximate
< = less than
> = greater than
NA = not available, due to sample dilution or interference

FACILITY SAMPLED: JARD CO

US ENVIRONMENTAL PROTECTION AGENCY
REGION I LABORATORY
GC/MS EXTRACTABLE ORGANIC ANALYSIS

SAMPLE NO.: 63768
SAMPLE LOCATION:
DATE OF COLLECTION:
TIME OF COLLECTION:
SAMPLE RESULTS:

Dilution Factor: 0.602
Percent Moisture: 12
Sample pH: 6.5

CAS NO.	STORET NO.	Compound	Conc. (mg/kg)	Det. Limit (mg/kg)	Comments
		Priority Pollutants			
83-32-9	34205	Acenaphthene	ND	6.02	
208-96-8	34200	Acenaphthylene	ND	6.02	
120-12-7	34220	Anthracene	ND	6.02	
309-00-2	39330	Aldrin	ND	6.02	
56-55-3	34526	Benzo(a)anthracene	ND	6.02	
205-99-2	34230	Benzo(b)fluoranthene	ND	6.02	
207-08-9	34242	Benzo(k)fluoranthene	ND	6.02	
50-32-8	34247	Benzo(a)pyrene	ND	6.02	
191-24-2	34521	Benzo(ghi)perylene	ND	6.02	
85-68-7	34292	Benzyl butyl phthalate	ND	6.02	
319-85-7	39338	beta-BHC	ND	6.02	
319-86-8	34259	delta-BHC	ND	6.02	
111-44-4	34273	Bis(2-chloroethyl)ether	ND	6.02	
111-91-1	34278	Bis(2-chloroethoxy)methane	ND	6.02	
117-81-7	**39100**	**Bis(2-ethylhexyl)phthalate**	**240**	**6.02**	
108-60-1	34283	Bis(2-chloroisopropyl)ether	ND	6.02	
101-55-3	34636	4-Bromophenylphenyl ether	ND	6.02	
59-50-7	34452	4-Chloro-3-methylphenol	ND	6.02	
91-58-7	34581	2-Chloronaphthalene	ND	6.02	
95-57-8	34586	2-Chlorophenol	ND	6.02	
7005-72-3	34641	4-Chlorophenylphenyl ether	ND	6.02	
218-01-9	34320	Chrysene	ND	6.02	
72-54-8	39310	4,4'-DDD	ND	6.02	
72-55-9	39320	4,4'-DDE	ND	6.02	
50-29-3	39300	4,4'-DDT	ND	6.02	
53-70-3	34556	Dibenzo(a,h)anthracene	ND	6.02	
84-74-2	39110	Di-n-butylphtalate	ND	6.02	
541-73-1	34566	1,3-Dichlorobenzene	ND	6.02	

(con't)

US ENVIRONMENTAL PROTECTION AGENCY
REGION I LABORATORY
GC/MS EXTRACTABLE ORGANIC ANALYSIS

SAMPLE NO.: 63768
Sample Results Continued:

CAS NO.	STORET NO.	Compound	Conc. (mg/kg)	Det. Limit (mg/kg)	Comments
95-50-1	34536	1,2-Dichlorobenzene	ND	6.02	
106-46-7	34571	1,4-Dichlorobenzene	ND	6.02	
91-94-1	34631	3,3'-Dichlorobenzidine	ND	12.04	
120-83-2	34601	2,4-Dichlorophenol	ND	6.02	
60-57-1	39380	Dieldrin	ND	6.02	
84-66-2	34336	Diethylphtalate	ND	6.02	
105-67-9	34606	2-4-Dimethylphenol	ND	6.02	
131-11-3	34341	Dimethylphthalate	ND	30.1	
51-28-5	34616	2,4-Dinitrophenol	ND	6.02	
121-14-2	34611	2,4-Dinitrotoluene	ND	6.02	
606-20-2	34626	2,6-Dinitrotoluene	ND	6.02	
117-84-0	34596	Di-n-octylphthalate	ND	6.02	
206-44-0	34376	Fluoranthene	ND	6.02	
86-73-7	34381	Fluorene	ND	6.02	
76-44-8	39410	Heptachlor	ND	6.02	
1024-57-3	39420	Heptachlor epoxide	ND	6.02	
118-74-1	39700	Hexachlorobenzene	ND	6.02	
87-68-3	34391	Hexachlorobutadiene	ND	6.02	
77-47-4	34386	Hexachlorocyclopentadiene	ND	6.02	
67-72-1	34396	Hexachloroethane	ND	6.02	
193-39-5	34403	Indeno(1,2,3-cd)pyrene	ND	6.02	
78-59-1	34408	Isophorone	ND	30.1	
534-52-1	34657	2-methyl-4,6-dinitrophenol	ND	6.02	
91-20-3	34696	Naphthalene	ND	6.02	
98-95-3	34447	Nitrobenzene	ND	6.02	
88-75-5	34591	2-Nitrophenol	ND	30.1	
100-02-7	34646	4-Nitrophenol	ND	6.02	
86-30-3	34433	N-nitrosodiphenylamine	ND	6.02	
621-64-7	34428	N-Nitrosodi-n-propylamine	ND	30.1	
87-86-5	39032	Pentachlorophenol	ND	6.02	
85-01-8	34461	Phenanthrene	ND	6.02	
108-95-2	34694	Phenol	ND	6.02	
129-00-0	34469	Pyrene			

(cont't)

US ENVIRONMENTAL PROTECTION AGENCY
REGION I LABORATORY
GC/MS EXTRACTABLE ORGANIC ANALYSIS

SAMPLE NO.: 63768
Sample Results Continued:

CAS NO.	STORET NO.	Compound	Conc. (mg/kg)	Det. Limit (mg/kg)	Comments
120-82-1	34551	1,2,4--Trichlorobenzene	ND	6.02	
88-06-2	34621	2,4,6-Trichlorophenol	ND	6.02	
		Hazardous Substances			
65-53-3	77089	Aniline	ND	6.02	
65-85-0	77247	Benzoic Acid	ND	30.1	
100-51-6	77147	Benzyl Alcohol	ND	6.02	
106-47-8		4-Chloroaniline	ND	6.02	
132-64-9	81302	Dibenzofuran	ND	6.02	
534-52-1		4,6-Dinitro-2-methylphenol	ND	30.1	
91-57-6		2-Methylnaphthalene	ND	6.02	
95-48-7		2-Methylphenol	ND	6.02	
106-44-5		4-Methylphenol	ND	6.02	
88-74-4		2-Nitroaniline	ND	30.1	
99-09-2		3-Nitroaniline	ND	30.1	
100-01-6		4-Nitroaniline	ND	30.1	
95-95-4	34621	2,4,5-Trichlorophenol	ND	30.1	
		Other Compounds Quantitated			
		None			

Tentatively Identified Compounds	Est. Conc. (mg/kg)	Det. Limit (mg/kg)
None		6

US ENVIRONMENTAL PROTECTION AGENCY
REGION I LABORATORY
GC/MS EXTRACTABLE ORGANIC ANALYSIS

SAMPLE NO.: 63768
Sample Results Continued:

Sample Recoveries For Surrogate Compounds:	Recoveries (%)	QC Range (%)
2-Fluorophenol	96	30-115
Phenol,d5	90	24-113
Nitrobenzene,d5	76	23-120
Fluorobiphenyl	82	30-115
2,4,6-Tribromophenol	91	19-122
p-Terphenyl,d14	90	18-137

Notes:

ND = none detected
\- = approximate
< = less than
> = greater than
NA = not available, due to sample dilution or interference

FACILITY SAMPLED: JARD CO

US ENVIRONMENTAL PROTECTION AGENCY
REGION I LABORATORY
GC/MS EXTRACTABLE ORGANIC ANALYSIS

SAMPLE NO.: 63769
SAMPLE LOCATION:
DATE OF COLLECTION:
TIME OF COLLECTION:
SAMPLE RESULTS:

Dilution Factor: 1.53
Percent Moisture: 13
Sample pH: 6.3

CAS NO.	STORET NO.	Compound	Conc. (mg/kg)	Det. Limit (mg/kg)	Comments
		Priority Pollutants			
83-32-9	34205	Acenaphthene	ND	15.3	
208-96-8	34200	Acenaphthylene	ND	15.3	
120-12-7	34220	Anthracene	ND	15.3	
309-00-2	39330	Aldrin	ND	15.3	
56-55-3	34526	Benzo(a)anthracene	ND	15.3	
205-99-2	34230	Benzo(b)fluoranthene	ND	15.3	
207-08-9	34242	Benzo(k)fluoranthene	ND	15.3	
50-32-8	34247	Benzo(a)pyrene	ND	15.3	
191-24-2	34521	Benzo(ghi)perylene	ND	15.3	
85-68-7	34292	Benzyl butyl phthalate	ND	15.3	
319-85-7	39338	beta-BHC	ND	15.3	
319-86-8	34259	delta-BHC	ND	15.3	
111-44-4	34273	Bis(2-chloroethyl)ether	ND	15.3	
111-91-1	34278	Bis(2-chloroethoxy)methane	ND	15.3	
117-81-7	39100	Bis(2-ethylhexyl)phthalate	-1000	15.3	> standard
108-60-1	34283	Bis(2-chloroisopropyl)ether	ND	15.3	
101-55-3	34636	4-Bromophenylphenyl ether	ND	15.3	
59-50-7	34452	4-Chloro-3-methylphenol	ND	15.3	
91-58-7	34581	2-Chloronaphthalene	ND	15.3	
95-57-8	34586	2-Chlorophenol	ND	15.3	
7005-72-3	34641	4-Chlorophenylphenyl ether	ND	15.3	
218-01-9	34320	Chrysene	ND	15.3	
72-54-8	39310	4,4'-DDD	ND	15.3	
72-55-9	39320	4,4'-DDE	ND	15.3	
50-29-3	39300	4,4'-DDT	ND	15.3	
53-70-3	34556	Dibenzo(a,h)anthracene	ND	15.3	
84-74-2	39110	Di-n-butylphtalate	ND	15.3	
541-73-1	34566	1,3-Dichlorobenzene	ND	15.3	

(con't)

US ENVIRONMENTAL PROTECTION AGENCY
REGION I LABORATORY
GC/MS EXTRACTABLE ORGANIC ANALYSIS

SAMPLE NO.: 63769
Sample Results Continued:

CAS NO.	STORET NO.	Compound	Conc. (mg/kg)	Det. Limit (mg/kg)	Comments
95-50-1	34536	1,2-Dichlorobenzene	ND	15.3	
106-46-7	34571	1,4-Dichlorobenzene	ND	15.3	
91-94-1	34631	3,3'-Dichlorobenzidine	ND	30.6	
120-83-2	34601	2,4-Dichlorophenol	ND	15.3	
60-57-1	39380	Dieldrin	ND	15.3	
84-66-2	34336	Diethylphtalate	ND	15.3	
105-67-9	34606	2-4-Dimethylphenol	ND	15.3	
131-11-3	34341	Dimethylphthalate	ND	15.3	
51-28-5	34616	2,4-Dinitrophenol	ND	76.5	
121-14-2	34611	2,4-Dinitrotoluene	ND	15.3	
606-20-2	34626	2,6-Dinitrotoluene	ND	15.3	
117-84-0	34596	Di-n-octylphthalate	ND	15.3	
206-44-0	34376	Fluoranthene	ND	15.3	
86-73-7	34381	Fluorene	ND	15.3	
76-44-8	39410	Heptachlor	ND	15.3	
1024-57-3	39420	Heptachlor epoxide	ND	15.3	
118-74-1	39700	Hexachlorobenzene	ND	15.3	
87-68-3	34391	Hexachlorobutadiene	ND	15.3	
77-47-4	34386	Hexachlorocyclopentadiene	ND	15.3	
67-72-1	34396	Hexachloroethane	ND	15.3	
193-39-5	34403	Indeno(1,2,3-cd)pyrene	ND	15.3	
78-59-1	34408	Isophorone	ND	15.3	
534-52-1	34657	2-methyl-4,6-dinitrophenol	ND	76.5	
91-20-3	34696	Naphthalene	ND	15.3	
98-95-3	34447	Nitrobenzene	ND	15.3	
88-75-5	34591	2-Nitrophenol	ND	15.3	
100-02-7	34646	4-Nitrophenol	ND	76.5	
86-30-3	34433	N-nitrosodiphenylamine	ND	15.3	
621-64-7	34428	N-Nitrosodi-n-propylamine	ND	15.3	
87-86-5	39032	Pentachlorophenol	ND	76.5	
85-01-8	34461	Phenanthrene	ND	15.3	
108-95-2	34694	Phenol	ND	15.3	
129-00-0	34469	Pyrene	ND	15.3	

(cont't)

US ENVIRONMENTAL PROTECTION AGENCY
REGION I LABORATORY
GC/MS EXTRACTABLE ORGANIC ANALYSIS

SAMPLE NO.: 63769
Sample Results Continued:

CAS NO.	STORET NO.	Compound	Conc. (mg/kg)	Det. Limit (mg/kg)	Comments
120-82-1	34551	1,2,4--Trichlorobenzene	ND	15.3	
88-06-2	34621	2,4,6-Trichlorophenol	ND	15.3	
		Hazardous Substances			
65-53-3	77089	Aniline	ND	15.3	
65-85-0	77247	Benzoic Acid	ND	76.5	
100-51-6	77147	Benzyl Alcohol	ND	15.3	
106-47-8		4-Chloroaniline	ND	15.3	
132-64-9	81302	Dibenzofuran	ND	15.3	
534-52-1		4,6-Dinitro-2-methylphenol	ND	76.5	
91-57-6		2-Methylnaphthalene	ND	15.3	
95-48-7		2-Methylphenol	ND	15.3	
106-44-5		4-Methylphenol	ND	15.3	
88-74-4		2-Nitroaniline	ND	76.5	
99-09-2		3-Nitroaniline	ND	76.5	
100-01-6		4-Nitroaniline	ND	76.5	
95-95-4	34621	2,4,5-Trichlorophenol	ND	76.5	
		Other Compounds Quantitated			
		None			

Tentatively Identified Compounds	Est. Conc. (mg/kg)	Det. Limit (mg/kg)
None		15

US ENVIRONMENTAL PROTECTION AGENCY
REGION I LABORATORY
GC/MS EXTRACTABLE ORGANIC ANALYSIS

SAMPLE NO.: 63769
Sample Results Continued:

Sample Recoveries For Surrogate Compounds:	Recoveries (%)	QC Range (%)
2-Fluorophenol	96	30-115
Phenol,d5	91	24-113
Nitrobenzene,d5	78	23-120
Fluorobiphenyl	83	30-115
2,4,6-Tribromophenol	91	19-122
p-Terphenyl,d14	85	18-137

Notes:

ND = none detected
~ = approximate
< = less than
> = greater than
NA = not available, due to sample dilution or interference

FACILITY SAMPLED: JARD CO

US ENVIRONMENTAL PROTECTION AGENCY
REGION I LABORATORY
GC/MS EXTRACTABLE ORGANIC ANALYSIS

SAMPLE NO.: 63770
SAMPLE LOCATION:
DATE OF COLLECTION:
TIME OF COLLECTION:
SAMPLE RESULTS:

Dilution Factor: 0.298
Percent Moisture: 11
Sample pH: 7

CAS NO.	STORET NO.	Compound	Conc. (mg/kg)	Det. Limit (mg/kg)	Comments
		Priority Pollutants			
83-32-9	34205	Acenaphthene	ND	2.98	
208-96-8	34200	Acenaphthylene	ND	2.98	
120-12-7	34220	Anthracene	ND	2.98	
309-00-2	39330	Aldrin	ND	2.98	
56-55-3	34526	Benzo(a)anthracene	ND	2.98	
205-99-2	34230	Benzo(b)fluoranthene	ND	2.98	
207-08-9	34242	Benzo(k)fluoranthene	ND	2.98	
50-32-8	34247	Benzo(a)pyrene	ND	2.98	
191-24-2	34521	Benzo(ghi)perylene	ND	2.98	
85-68-7	34292	Benzyl butyl phthalate	ND	2.98	
319-85-7	39338	beta-BHC	ND	2.98	
319-86-8	34259	delta-BHC	ND	2.98	
111-44-4	34273	Bis(2-chloroethyl)ether	ND	2.98	
111-91-1	34278	Bis(2-chloroethoxy)methane	ND	2.98	
117-81-7	39100	Bis(2-ethylhexyl)phthalate	25	2.98	
108-60-1	34283	Bis(2-chloroisopropyl)ether	ND	2.98	
101-55-3	34636	4-Bromophenylphenyl ether	ND	2.98	
59-50-7	34452	4-Chloro-3-methylphenol	ND	2.98	
91-58-7	34581	2-Chloronaphthalene	ND	2.98	
95-57-8	34586	2-Chlorophenol	ND	2.98	
7005-72-3	34641	4-Chlorophenylphenyl ether	ND	2.98	
218-01-9	34320	Chrysene	ND	2.98	
72-54-8	39310	4,4'-DDD	ND	2.98	
72-55-9	39320	4,4'-DDE	ND	2.98	
50-29-3	39300	4,4'-DDT	ND	2.98	
53-70-3	34556	Dibenzo(a,h)anthracene	ND	2.98	
84-74-2	39110	Di-n-butylphtalate	ND	2.98	
541-73-1	34566	1,3-Dichlorobenzene	ND	2.98	

(con't)

US ENVIRONMENTAL PROTECTION AGENCY
REGION I LABORATORY
GC/MS EXTRACTABLE ORGANIC ANALYSIS

SAMPLE NO.: 63770
Sample Results Continued:

CAS NO.	STORET NO.	Compound	Conc. (mg/kg)	Det. Limit (mg/kg)	Comments
95-50-1	34536	1,2-Dichlorobenzene	ND	2.98	
106-46-7	34571	1,4-Dichlorobenzene	ND	2.98	
91-94-1	34631	3,3'-Dichlorobenzidine	ND	5.96	
120-83-2	34601	2,4-Dichlorophenol	ND	2.98	
60-57-1	39380	Dieldrin	ND	2.98	
84-66-2	34336	Diethylphtalate	ND	2.98	
105-67-9	34606	2-4-Dimethylphenol	ND	2.98	
131-11-3	34341	Dimethylphthalate	ND	14.9	
51-28-5	34616	2,4-Dinitrophenol	ND	2.98	
121-14-2	34611	2,4-Dinitrotoluene	ND	2.98	
606-20-2	34626	2,6-Dinitrotoluene	ND	2.98	
117-84-0	34596	Di-n-octylphthalate	ND	2.98	
206-44-0	34376	Fluoranthene	ND	2.98	
86-73-7	34381	Fluorene	ND	2.98	
76-44-8	39410	Heptachlor	ND	2.98	
1024-57-3	39420	Heptachlor epoxide	ND	2.98	
118-74-1	39700	Hexachlorobenzene	ND	2.98	
87-68-3	34391	Hexachlorobutadiene	ND	2.98	
77-47-4	34386	Hexachlorocyclopentadiene	ND	2.98	
67-72-1	34396	Hexachloroethane	ND	2.98	
193-39-5	34403	Indeno(1,2,3-cd)pyrene	ND	2.98	
78-59-1	34408	Isophorone	ND	14.9	
534-52-1	34657	2-methyl-4,6-dinitrophenol	ND	2.98	
91-20-3	34696	Naphthalene	ND	2.98	
98-95-3	34447	Nitrobenzene	ND	2.98	
88-75-5	34591	2-Nitrophenol	ND	14.9	
100-02-7	34646	4-Nitrophenol	ND	2.98	
86-30-3	34433	N-nitrosodiphenylamine	ND	2.98	
621-64-7	34428	N-Nitrosodi-n-propylamine	ND	14.9	
87-86-5	39032	Pentachlorophenol	ND	2.98	
85-01-8	34461	Phenanthrene	ND	2.98	
108-95-2	34694	Phenol	ND	2.98	
129-00-0	34469	Pyrene			

(cont't)

US ENVIRONMENTAL PROTECTION AGENCY
REGION I LABORATORY
GC/MS EXTRACTABLE ORGANIC ANALYSIS

SAMPLE NO.: 63770
Sample Results Continued:

CAS NO.	STORET NO.	Compound	Conc. (mg/kg)	Det. Limit (mg/kg)	Comments
120-82-1	34551	1,2,4--Trichlorobenzene	ND	2.98	
88-06-2	34621	2,4,6-Trichlorophenol	ND	2.98	
		Hazardous Substances			
65-53-3	77089	Aniline	ND	2.98	
65-85-0	77247	Benzoic Acid	ND	14.9	
100-51-6	77147	Benzyl Alcohol	ND	2.98	
106-47-8		4-Chloroaniline	ND	2.98	
132-64-9	81302	Dibenzofuran	ND	2.98	
534-52-1		4,6-Dinitro-2-methylphenol	ND	14.9	
91-57-6		2-Methylnaphthalene	ND	2.98	
95-48-7		2-Methylphenol	ND	2.98	
106-44-5		4-Methylphenol	ND	2.98	
88-74-4		2-Nitroaniline	ND	14.9	
99-09-2		3-Nitroaniline	ND	14.9	
100-01-6		4-Nitroaniline	ND	14.9	
95-95-4	34621	2,4,5-Trichlorophenol	ND	14.9	
		Other Compounds Quantitated			
		None			

Tentatively Identified Compounds	Est. Conc. (mg/kg)	Det. Limit (mg/kg)
None		3

US ENVIRONMENTAL PROTECTION AGENCY
REGION I LABORATORY
GC/MS EXTRACTABLE ORGANIC ANALYSIS

SAMPLE NO.: 63770
Sample Results Continued:

Sample Recoveries For Surrogate Compounds:	Recoveries (%)	QC Range (%)
2-Fluorophenol	125	30-115
Phenol,d5	117	24-113
Nitrobenzene,d5	90	23-120
Fluorobiphenyl	107	30-115
2,4,6-Tribromophenol	129	19-122
p-Terphenyl,d14	116	18-137

Notes:

ND = none detected
~ = approximate
< = less than
> = greater than
NA = not available, due to sample dilution or interference

FACILITY SAMPLED: JARD CO

US ENVIRONMENTAL PROTECTION AGENCY
REGION I LABORATORY
GC/MS EXTRACTABLE ORGANIC ANALYSIS

SAMPLE NO.: 63771
SAMPLE LOCATION:
DATE OF COLLECTION:
TIME OF COLLECTION:
SAMPLE RESULTS:

Dilution Factor: 0.311
Percent Moisture: 15
Sample pH: 6.1

CAS NO.	STORET NO.	Compound	Conc. (mg/kg)	Det. Limit (mg/kg)	Comments
		Priority Pollutants			
83-32-9	34205	Acenaphthene	ND	3.11	
208-96-8	34200	Acenaphthylene	ND	3.11	
120-12-7	34220	Anthracene	ND	3.11	
309-00-2	39330	Aldrin	ND	3.11	
56-55-3	34526	Benzo(a)anthracene	ND	3.11	
205-99-2	34230	Benzo(b)fluoranthene	ND	3.11	
207-08-9	34242	Benzo(k)fluoranthene	ND	3.11	
50-32-8	34247	Benzo(a)pyrene	ND	3.11	
191-24-2	34521	Benzo(ghi)perylene	ND	3.11	
85-68-7	34292	Benzyl butyl phthalate	ND	3.11	
319-85-7	39338	beta-BHC	ND	3.11	
319-86-8	34259	delta-BHC	ND	3.11	
111-44-4	34273	Bis(2-chloroethyl)ether	ND	3.11	
111-91-1	34278	Bis(2-chloroethoxy)methane	ND	3.11	
117-81-7	39100	Bis(2-ethylhexyl)phthalate	7.4	3.11	
108-60-1	34283	Bis(2-chloroisopropyl)ether	ND	3.11	
101-55-3	34636	4-Bromophenylphenyl ether	ND	3.11	
59-50-7	34452	4-Chloro-3-methylphenol	ND	3.11	
91-58-7	34581	2-Chloronaphthalene	ND	3.11	
95-57-8	34586	2-Chlorophenol	ND	3.11	
7005-72-3	34641	4-Chlorophenylphenyl ether	ND	3.11	
218-01-9	34320	Chrysene	ND	3.11	
72-54-8	39310	4,4'-DDD	ND	3.11	
72-55-9	39320	4,4'-DDE	ND	3.11	
50-29-3	39300	4,4'-DDT	ND	3.11	
53-70-3	34556	Dibenzo(a,h)anthracene	ND	3.11	
84-74-2	39110	Di-n-butylphtalate	ND	3.11	
541-73-1	34566	1,3-Dichlorobenzene	ND	3.11	

(con't)

US ENVIRONMENTAL PROTECTION AGENCY
REGION I LABORATORY
GC/MS EXTRACTABLE ORGANIC ANALYSIS

SAMPLE NO.: 63771
Sample Results Continued:

CAS NO.	STORET NO.	Compound	Conc. (mg/kg)	Det. Limit (mg/kg)	Comments
95-50-1	34536	1,2-Dichlorobenzene	ND	3.11	
106-46-7	34571	1,4-Dichlorobenzene	ND	3.11	
91-94-1	34631	3,3'-Dichlorobenzidine	ND	6.22	
120-83-2	34601	2,4-Dichlorophenol	ND	3.11	
60-57-1	39380	Dieldrin	ND	3.11	
84-66-2	34336	Diethylphtalate	ND	3.11	
105-67-9	34606	2-4-Dimethylphenol	ND	3.11	
131-11-3	34341	Dimethylphthalate	ND	3.11	
51-28-5	34616	2,4-Dinitrophenol	ND	15.55	
121-14-2	34611	2,4-Dinitrotoluene	ND	3.11	
606-20-2	34626	2,6-Dinitrotoluene	ND	3.11	
117-84-0	34596	Di-n-octylphthalate	ND	3.11	
206-44-0	34376	Fluoranthene	ND	3.11	
86-73-7	34381	Fluorene	ND	3.11	
76-44-8	39410	Heptachlor	ND	3.11	
1024-57-3	39420	Heptachlor epoxide	ND	3.11	
118-74-1	39700	Hexachlorobenzene	ND	3.11	
87-68-3	34391	Hexachlorobutadiene	ND	3.11	
77-47-4	34386	Hexachlorocyclopentadiene	ND	3.11	
67-72-1	34396	Hexachloroethane	ND	3.11	
193-39-5	34403	Indeno(1,2,3-cd)pyrene	ND	3.11	
78-59-1	34408	Isophorone	ND	3.11	
534-52-1	34657	2-methyl-4,6-dinitrophenol	ND	15.55	
91-20-3	34696	Naphthalene	ND	3.11	
98-95-3	34447	Nitrobenzene	ND	3.11	
88-75-5	34591	2-Nitrophenol	ND	3.11	
100-02-7	34646	4-Nitrophenol	ND	15.55	
86-30-3	34433	N-nitrosodiphenylamine	ND	3.11	
621-64-7	34428	N-Nitrosodi-n-propylamine	ND	3.11	
87-86-5	39032	Pentachlorophenol	ND	15.55	
85-01-8	34461	Phenanthrene	ND	3.11	
108-95-2	34694	Phenol	ND	3.11	
129-00-0	34469	Pyrene	ND	3.11	

(cont't)

US ENVIRONMENTAL PROTECTION AGENCY
REGION I LABORATORY
GC/MS EXTRACTABLE ORGANIC ANALYSIS

SAMPLE NO.: 63771
Sample Results Continued:

CAS NO.	STORET NO.	Compound	Conc. (mg/kg)	Det. Limit (mg/kg)	Comments
120-82-1	34551	1,2,4--Trichlorobenzene	ND	3.11	
88-06-2	34621	2,4,6-Trichlorophenol	ND	3.11	
		Hazardous Substances			
65-53-3	77089	Aniline	ND	3.11	
65-85-0	77247	Benzoic Acid	ND	15.55	
100-51-6	77147	Benzyl Alcohol	ND	3.11	
106-47-8		4-Chloroaniline	ND	3.11	
132-64-9	81302	Dibenzofuran	ND	3.11	
534-52-1		4,6-Dinitro-2-methylphenol	ND	15.55	
91-57-6		2-Methylnaphthalene	ND	3.11	
95-48-7		2-Methylphenol	ND	3.11	
106-44-5		4-Methylphenol	ND	3.11	
88-74-4		2-Nitroaniline	ND	15.55	
99-09-2		3-Nitroaniline	ND	15.55	
100-01-6		4-Nitroaniline	ND	15.55	
95-95-4	34621	2,4,5-Trichlorophenol	ND	15.55	
		Other Compounds Quantitated			
		None			

Tentatively Identified Compounds	Est. Conc. (mg/kg)	Det. Limit (mg/kg)
None		3

US ENVIRONMENTAL PROTECTION AGENCY
REGION I LABORATORY
GC/MS EXTRACTABLE ORGANIC ANALYSIS

SAMPLE NO.: 63771
Sample Results Continued:

Sample Recoveries For Surrogate Compounds:	Recoveries (%)	QC Range (%)
2-Fluorophenol	116	30-115
Phenol,d5	109	24-113
Nitrobenzene,d5	84	23-120
Fluorobiphenyl	99	30-115
2,4,6-Tribromophenol	119	19-122
p-Terphenyl,d14	110	18-137

Notes:

ND = none detected
~ = approximate
< = less than
> = greater than
NA = not available, due to sample dilution or interference

Soil Sampling Results/PCBs

UNITED STATES ENVIRONMENTAL PROTECTION AGENCY
REGION I
60 WESTVIEW STREET, LEXINGTON, MASSACHUSETTS 02173

DATE: April 9, 1991

SUBJ: Analysis of PCBs in Soils - Jard Co.

FROM: Elayne Lee, ESAT, Deb Thiem and Dick Siscanaw, Chemistry Section

THRU: Dr. William J. Andrade, Chief, Chemistry Section

TO: Mary Ellen Stanton

PROJECT NUMBER: 910104

ANALYTICAL PROCEDURE:

The method used for this analysis was the RCRA Method 3550 for the extraction, (medium-high concentration), Method 8081 for the capillary column GC technique, and CLP Quick Turn Around Methods-Analytical Method for Polychlorinated Biphenyls (PCBs) as Arochlors, 5/31/90 for cleanups. The analysis was carried out using high resolution capillary chromatography. The 30-m dual capillary system consists of a J&W DB - 1701 and DB-5, both with a 0.25mm ID and a 0.25 micron film thickness. Results are reported out in dry weight.

Date Samples Received by the Laboratory: 3/20/91

Date Samples Analyzed: 3/26/91 - 4/8/91

File: K:\CHEMSTRY\REPORTS\FINAL\910104SO.PCB

US ENVIRONMENTAL PROTECTION AGENCY
60 Westview Street
Lexington, MA 02173

QUALITY CONTROL:

1. One method blank was included in the analysis.

2. Each sample was spiked with a surrogate compound, decachlorobiphenyl, approximately at 10 mg/kg. The results for the surrogate recoveries are reported out with each sample.

3. One sample 63770, was spiked twice with Aroclor-1260 at approximately 10 mg/kg. The recovery is listed below.

	PCB	Recovery (%)
Matrix	Aroclor-1260	93
Matrix Duplicate	Aroclor-1260	93

SAMPLE ANALYZED: 63766 63767 63768 63769 63770 63771

FACILITY SAMPLED: JARD CO

US ENVIRONMENTAL PROTECTION AGENCY
REGION I LABORATORY
Polychlorinated Biphenyls

SAMPLE NO.: 63766
SAMPLE LOCATION:
DATE OF COLLECTIONECTION:
TIME OF COLLECTION:

Dilution Factor: 1.10
Percent Moisture: 22
Sample pH: 5.90

SAMPLE RESULTS:

CAS NO.	Compound	Conc. (mg/kg)	Det. Limit (mg/kg)	Comments
12674-11-2	Aroclor-1016	32	0.55	
11104-28-2	Aroclor-1221	ND	0.66	
11141-16-5	Aroclor-1232	ND	0.55	
53469-21-9	Aroclor-1242	ND	0.55	
12672-29-6	Aroclor-1248	ND	0.55	
11097-69-1	Aroclor-1254	ND	0.33	
11096-82-5	Aroclor-1260	ND	0.33	
11100-14-4	Aroclor-1262	ND	0.33	
37324-23-5	Aroclor-1268	ND	0.33	

Sample Recovery for Surrogate Compound:	Observed Recoveries (%)
Decachlorobiphenyl	62

Notes:

ND = none detected
~ = approximate
< = less than
> = greater than
NA = not applicable due to high sample dilutions or sample interferences

FACILITY SAMPLED: JARD CO

US ENVIRONMENTAL PROTECTION AGENCY
REGION I LABORATORY
Polychlorinated Biphenyls

SAMPLE NO.: 63767
SAMPLE LOCATION:
DATE OF COLLECTIONECTION:
TIME OF COLLECTION:

Dilution Factor: 0.98
Percent Moisture: 13
Sample pH: 6.20

SAMPLE RESULTS:

CAS NO.	Compound	Conc. (mg/kg)	Det. Limit (mg/kg)	Comments
12674-11-2	Aroclor-1016	ND	0.49	
11104-28-2	Aroclor-1221	ND	0.59	
11141-16-5	Aroclor-1232	ND	0.49	
53469-21-9	Aroclor-1242	ND	0.49	
12672-29-6	Aroclor-1248	4.8	0.49	
11097-69-1	Aroclor-1254	ND	0.29	
11096-82-5	Aroclor-1260	ND	0.29	
11100-14-4	Aroclor-1262	ND	0.29	
37324-23-5	Aroclor-1268	ND	0.29	

Sample Recovery for Surrogate Compound:	Observed Recoveries %
Decachlorobiphenyl	68

Notes:

ND = none detected
~ = approximate
< = less than
> = greater than
NA = not applicable due to high sample dilutions or sample interferences

FACILITY SAMPLED: JARD CO

US ENVIRONMENTAL PROTECTION AGENCY
REGION I LABORATORY
Polychlorinated Biphenyls

SAMPLE NO.: 63768
SAMPLE LOCATION:
DATE OF COLLECTIONECTION:
TIME OF COLLECTION:

Dilution Factor: 0.95
Percent Moisture: 11
Sample pH: 6.60

SAMPLE RESULTS:

CAS NO.	Compound	Conc. (mg/kg)	Det. Limit (mg/kg)	Comments
12674-11-2	Aroclor-1016	ND	0.48	
11104-28-2	Aroclor-1221	ND	0.57	
11141-16-5	Aroclor-1232	ND	0.48	
53469-21-9	Aroclor-1242	ND	0.48	
12672-29-6	Aroclor-1248	26	0.48	
11097-69-1	Aroclor-1254	ND	0.29	
11096-82-5	Aroclor-1260	ND	0.29	
11100-14-4	Aroclor-1262	ND	0.29	
37324-23-5	Aroclor-1268	ND	0.29	

Sample Recovery for Surrogate Compound:	Observed Recoveries %
Decachlorobiphenyl	75

Notes:

ND = none detected
~ = approximate
< = less than
> = greater than
NA = not applicable due to high sample dilutions or sample interferences

FACILITY SAMPLED: JARD CO

US ENVIRONMENTAL PROTECTION AGENCY
REGION I LABORATORY
Polychlorinated Biphenyls

SAMPLE NO.: 63769
SAMPLE LOCATION:
DATE OF COLLECTIONECTION:
TIME OF COLLECTION:

Dilution Factor: 0.95
Percent Moisture: 11
Sample pH: 6.20

SAMPLE RESULTS:

CAS NO.	Compound	Conc. (mg/kg)	Det. Limit (mg/kg)	Comments
12674-11-2	Aroclor-1016	ND	0.48	
11104-28-2	Aroclor-1221	ND	0.57	
11141-16-5	Aroclor-1232	ND	0.48	
53469-21-9	Aroclor-1242	ND	0.48	
12672-29-6	Aroclor-1248	43	0.48	
11097-69-1	Aroclor-1254	ND	0.29	
11096-82-5	Aroclor-1260	ND	0.29	
11100-14-4	Aroclor-1262	ND	0.29	
37324-23-5	Aroclor-1268	ND	0.29	

Sample Recovery for Surrogate Compound:	Observed Recoveries %
Decachlorobiphenyl	67

Notes:

ND = none detected
~ = approximate
< = less than
> = greater than
NA = not applicable due to high sample dilutions or sample interferences

FACILITY SAMPLED: JARD CO

US ENVIRONMENTAL PROTECTION AGENCY
REGION I LABORATORY
Polychlorinated Biphenyls

SAMPLE NO.: 63770
SAMPLE LOCATION:
DATE OF COLLECTIONECTION:
TIME OF COLLECTION:

Dilution Factor: 0.95
Percent Moisture: 11
Sample pH: 7.20

SAMPLE RESULTS:

CAS NO.	Compound	Conc. (mg/kg)	Det. Limit (mg/kg)	Comments
12674-11-2	Aroclor-1016	ND	0.48	
11104-28-2	Aroclor-1221	ND	0.57	
11141-16-5	Aroclor-1232	ND	0.48	
53469-21-9	Aroclor-1242	ND	0.48	
12672-29-6	Aroclor-1248	ND	0.48	
11097-69-1	Aroclor-1254	ND	0.29	
11096-82-5	Aroclor-1260	ND	0.29	
11100-14-4	Aroclor-1262	ND	0.29	
37324-23-5	Aroclor-1268	ND	0.29	

Sample Recovery for Surrogate Compound:	Observed Recoveries %
Decachlorobiphenyl	77

Notes:

ND = none detected
\- = approximate
< = less than
> = greater than
NA = not applicable due to high sample dilutions or sample interferences

FACILITY SAMPLED: JARD CO

US ENVIRONMENTAL PROTECTION AGENCY
REGION I LABORATORY
Polychlorinated Biphenyls

SAMPLE NO.: 63771
SAMPLE LOCATION:
DATE OF COLLECTIONECTION:
TIME OF COLLECTION:

Dilution Factor: 1.00
Percent Moisture: 16
Sample pH: 6.10

SAMPLE RESULTS:

CAS NO.	Compound	Conc. (mg/kg)	Det. Limit (mg/kg)	Comments
12674-11-2	Aroclor-1016	ND	0.50	
11104-28-2	Aroclor-1221	ND	0.60	
11141-16-5	Aroclor-1232	ND	0.50	
53469-21-9	Aroclor-1242	ND	0.50	
12672-29-6	Aroclor-1248	44	0.50	
11097-69-1	Aroclor-1254	ND	0.30	
11096-82-5	Aroclor-1260	ND	0.30	
11100-14-4	Aroclor-1262	ND	0.30	
37324-23-5	Aroclor-1268	ND	0.30	

Sample Recovery for Surrogate Compound:	Observed Recoveries %
Decachlorobiphenyl	73

Notes:

ND = none detected
~ = approximate
< = less than
> = greater than
NA = not applicable due to high sample dilutions or sample interferences

Soil Sampling Results/Metals

XRF-80A

date: 4/26/91

re: XRF Screening Report of Jard Site
Project # 910104

from: Dr. T. M. Spittler

to: Dr. William Andrade and Site Manager

Samples were rerun on the Kevex after repairs. The data has been modified as shown below.

6 samples were submitted for screening for heavy metals using the Kevex XRF analyser. Samples were homogenized and an aliquot was analysed using the HNu XRF instrument. All samples were found to contain no elements above normal background in soil except for the following:

Sample #	Field ID	Zn(ppm)	Zn (revised)
13689	63766	c. 25%	40%
13690	63767	c. 4%	5.5%
13691	63768		
13692	63769	5000	4,200
13693	63770	1200	
13694	63771	c. 7%	6,000

cc

Dorrie Guten

File

Drum and Water Sampling Results/VOCs

US ENVIRONMENTAL PROTECTION AGENCY
60 Westview Street
Lexington, MA. 02173

DATE: April 9, 1991

SUBJECT: Jard CO, INC., Bennington, VT - Organic Headspace Analysis
Samples Analyzed: 63764, 63765, 63772

FROM: Joseph Montanaro, EPA Chemist and Steven Heller, ESAT Chemist

TO: Mary Ellen Stanton, EER

THRU: Dr. William Andrade
Chief, Chemistry Section WJA 4/9/91

PROJECT NUMBER: 910104

DATE(S) SAMPLES RECEIVED BY THE LABORATORY: 3/20/91

DATE(S) SAMPLES ANALYZED: 3/25/91 - 3/27/91

ANALYTICAL PROCEDURE:
An aliquot (~0.1 grams) of the liquid samples were weighed out. It was diluted in methanol and diluted again in organic-free water. The aqueous dilution was then analyzed using the EPA Region I headspace technique on a Photovac Model 10A10 gas chromatograph equipped with a photoionization detector and a 4' x 1/8" SE-30 column. Sample 63772 was an aqueous sample and was analyzed by direct headspace analysis technique. No dilution was required for this sample.

METHOD OF QUANTITATION:
Concentration of volatile organics in samples was calculated using the external standard technique. Cofirmation of late eluting compounds was performed using GC/MS, SW-846, 8240 Modified.

QUALITY CONTROL
1. Field Blank sample was analyzed with GC/MS soil samples.
2. Syringe checks are run routinely to check for cross-over contamination from one sample to the next.

DATA FILE: D:\LABRPTS\910104HS.VOA

cc: Suresh Srivastava - EPA Chemist, Steven Heller - ESAT Chemist

pg. 1

ANALYTICAL PARAMETERS
VOLATILE ORGANIC ANALYSIS
HEADSPACE TECHNIQUE

NSTRUMENTATION: PHOTOVAC 10A10 GAS CHROMATOGRAPH

:TECTOR: PHOTOIONIZATION DETECTOR

HROMATOGRAPH

Column:	4' x 1/8" SE-30
Gas:	Air--zero grade
Program:	Isothermal at amb approximately 15 minutes
Gas flow:	Approximately 40

INSTRUMENTATION FOR CONFIRMATION: TEKMAR ALS - LSC-4000
FINNIGAN INCOS-50

pg. 2

US ENVIRONMENTAL PROTECTION AGENCY
REGION I LABORATORY

VOLATILE ORGANIC ANALYSIS--HEADSPACE TECHNIQUE

Aqueous

AMPLE NO.: 63772
AMPLE LOCATION:
ATE OF COLLECTION:

REFERENCE BOOK: Screen #3 & 100

TENTATIVE IDENTIFICATION AND QUANTITATION

Target Compound	ppb Conc. (ug/l)	Det. Limit (ug/l)	Comments
1,1 Dichloroethylene	ND	1	
Trans 1,2 Dichloroethylene	ND	1	
Cis 1,2 Dichloroethylene	ND	1	
1,1,1 Trichloroethane	ND	50	
Benzene	ND	1	
Trichloroethylene	ND	1	
Tetrachloroethylene	ND	1	
Chlorobenzene	ND	2	
Ethyl benzene	ND	2	
Total Xylenes/styrene	ND	1	
Toluene	ND	1	

Other Compounds identified and quantitated using GC/MS: See Next Page.

<=Less than
>=Greater than
~=Approximately
ND=Not detected

US ENVIRONMENTAL PROTECTION AGENCY
REGION I LABORATORY

VOLATILE ORGANIC ANALYSIS--CONFIRMATION-- GC/MC

Aqueous

SAMPLE NO.: 63772
SAMPLE LOCATION:
DATE OF COLLECTION:

REFERENCE BOOK: Screen #3 & 100

IDENTIFICATION AND QUANTITATION

Target Compound	ppb Conc. (ug/L)	Det. Limit (ug/L)	Comments
Chloroform	4.6	1	
1,2,4-Trichlorobenzene	4.1	1	
1,2,3-Trichlorobenzene	2.8	1	

Other Compounds Tentatively identified: None

<=Less than
>=Greater than
~=Approximately
ND=Not detected

pg. 4

US ENVIRONMENTAL PROTECTION AGENCY
REGION I LABORATORY

VOLATILE ORGANIC ANALYSIS--HEADSPACE TECHNIQUE

Liquid

AMPLE NO.: 63764
AMPLE LOCATION:
ATE OF COLLECTION:

REFERENCE BOOK: Screen #3 & 100

TENTATIVE IDENTIFICATION AND QUANTITATION

Target Compound	ppm Conc. (mg/g)	Det. Limit (mg/g)	Comments
1,1 Dichloroethylene	ND	59	
Trans 1,2 Dichloroethylene	ND	59	
Cis 1,2 Dichloroethylene	ND	59	
1,1,1 Trichloroethane	ND	2950	
Benzene	ND	59	
Trichloroethylene	ND	59	
Tetrachloroethylene	ND	59	
Chlorobenzene	ND	118	
Ethyl benzene	ND	118	
Total Xylenes/styrene	ND	59	
Toluene	770	59	

Other Compounds identified and quantitated using GC/MS: See Next Page

<=Less than
>=Greater than
~=Approximately
ND=Not detected

pg. 5

US ENVIRONMENTAL PROTECTION AGENCY
REGION I LABORATORY

VOLATILE ORGANIC ANALYSIS--CONFIMATION-- GC/MS

Liquid

SAMPLE NO.: 63764
SAMPLE LOCATION:
DATE OF COLLECTION:

REFERENCE BOOK: Screen #3 & 100

IDENTIFICATION AND QUANTITATION

Target Compound	ppm Conc. (mg/g)	Det. Limit (mg/g)	Comments
Toluene	820	59	

Other Compounds Tentatively identified: None

<=Less than
>=Greater than
~=Approximately
ND=Not detected

pg. 6

US ENVIRONMENTAL PROTECTION AGENCY
REGION I LABORATORY

VOLATILE ORGANIC ANALYSIS--HEADSPACE TECHNIQUE

Liquid

AMPLE NO.: 63765
AMPLE LOCATION:
DATE OF COLLECTION:

REFERENCE BOOK: Screen #3 & 100

TENTATIVE IDENTIFICATION AND QUANTITATION

Target Compound	ppm Conc. (ug/g)	Det. Limit (ug/g)	Comments
1,1 Dichloroethylene	ND	6.1	
Trans 1,2 Dichloroethylene	ND	6.1	
Cis 1,2 Dichloroethylene	ND	6.1	
1,1,1 Trichloroethane	ND	305	
Benzene	ND	6.1	
Trichloroethylene	ND	6.1	
Tetrachloroethylene	ND	6.1	
Chlorobenzene	ND	12.2	
Ethyl benzene	ND	12.2	
Total Xylenes/styrene	ND	6.1	
Toluene	ND	6.1	

Other Compounds identified and quantitated using GC/MS: See Next Page.

<=Less than
>=Greater than
~=Approximately
ND=Not detected

pg. 7

US ENVIRONMENTAL PROTECTION AGENCY
REGION I LABORATORY

VOLATILE ORGANIC ANALYSIS--CONFIRMATION-- GC/MS

Liquid

MPLE NO.: 63765
AMPLE LOCATION:
ATE OF COLLECTION:

REFERENCE BOOK: Screen #3 & 100

IDENTIFICATION AND QUANTITATION

Tentative Compound List	ppm Conc. (mg/g)	Det. Limit (mg/g)	Comments
1-Pentanol,2-Methyl Acetate	<170	6.1	
1-Cyclopropylehanone	<440	6.1	
Hexylester Acetic Acid	<390	6.1	

Other Compounds Tentatively identified: None

<=Less than
>=Greater than
~=Approximately
ND=Not detected

pg. 8

Drum Sampling Results/BNAs

UNITED STATES ENVIRONMENTAL PROTECTION AGENCY

REGION I

60 WESTVIEW STREET, LEXINGTON, MASSACHUSETTS 02173

ATE: April 9, 1991

UBJ: Gas Chromatography-Mass Spectrometry Analysis of Extractable Organics in Drum Samples - Jard Co.

ROM: Delon Maas, ESAT, Deb Thiem and Dick Siscanaw, Chemistry Section

HRU: Dr. William J. Andrade, Chief, Chemistry Section

TO: Mary Ellen Stanton

PROJECT NUMBER: 910104

ANALYTICAL PROCEDURE:

EPA Consensus Protocol, Organic Analysis, Multi-Media, Multi-Concentration, High Level Preparation for Screening and Analysis of Semivolatiles (BNA), 1/87 (IFB WA 84-A266). All samples were screened on a gas chromatograph prior to the gas chromatograph-mass spectrometer analysis. All values are reported out on a dry weight basis.

Date(s) Samples Received by the Laboratory: 3/20/91

Date Samples Analyzed: 3/28/91 - 4/5/91

File: K:\CHEMSTRY\REPORTS\FINAL\910104DR.BNA

US ENVIRONMENTAL PROTECTION AGENCY
60 Westview Street
Lexington, MA 02173

QUALITY CONTROL:

1. A laboratory blank was analyzed before the sample analysis.

2. Each sample was spiked with several surrogate compounds at approximately 750 mg/kg concentration. The results for the surrogate recoveries are reported out for each sample.

3. One sample, 63764, was spiked twice as a matrix spike duplicate with the following compounds at approximately 750 mg/kg concentration.

Compound	Rec. (%)	Rec. (%)	QC Range (%)	Comments
Acenaphthene	79	79	31-137	
4-Chloro-3-methylphenol	78	79	26-103	
2-Chlorophenol	84	80	25-102	
1,4-Dichlorobenzene	82	79	28-104	
2,4-Dinitrotoluene	63	65	28-89	
4-Nitrophenol	55	50	11-114	
N-Nitrosodipropylamine	80	76	41-126	
Pentachlorophenol	41	40	17-109	
Phenol	82	78	26-90	
Pyrene	86	82	35-142	
1,2,4-Trichlorobenzene	84	81	38-107	

(Cont.)

US ENVIRONMENTAL PROTECTION AGENCY
60 Westview Street
Lexington, MA 02173

COMPOUNDS NOT IN THE SPIKING SOLUTION:

Target Compounds	Conc. (ug/L)	Conc. (ug/L)
None		

Tentatively Identified Compounds	Conc. (ug/L)	Conc. (ug/L)
None		

SAMPLE(S) ANALYZED: 63764 63765

US ENVIRONMENTAL PROTECTION AGENCY
60 Westview Street
Lexington, MA 02173

ANALYTICAL PARAMETERS

INSTRUMENTS:

Hewlett Packard 5880 Gas Chromatograph
Hewlett Packard 5987 Gas Chromatograph-Mass Spectrometer

GC/FID Screening Conditions:

Gas:	Hydrogen
Capillary Column:	DB-1, 30m, .32mm ID, 0.10 micron film thickness
Injection Mode:	Splitless
Temperature Program:	Isothermal for 3 min at 40°C, programmed at 20°C/min to 350°C

GC-MS Conditions:

Gas:	Helium
Capillary Column:	DB-5, 60m, .25mm ID, 0.25 micron film thickness
Injection Mode:	Splitless
Temperature Program:	Isothermal for 4 min at 40°C, programmed at 7°C/min to 300°C
Injector, Transfer Temperatures:	300°C, 290°C
Electron Energy:	70 V
Mass Range:	35-550
Scan Rate:	0.9 seconds

FACILITY SAMPLED: JARD CO

US ENVIRONMENTAL PROTECTION AGENCY
REGION I LABORATORY
GC/MS EXTRACTABLE ORGANIC ANALYSIS

SAMPLE NO.: 63764
SAMPLE LOCATION:
DATE OF COLLECTION:
TIME OF COLLECTION:
PERCENT MOISTURE:

Dilution Factor: 0.726
Density: 0.862 gm/ml

RESULTS:

CAS NO.	Compound	Conc. (mg/kg)	Det. Limit (mg/kg)	Comments
	Priority Pollutants			
83-32-9	Acenaphthene	ND	363	
208-96-8	Acenaphthylene	ND	363	
120-12-7	Anthracene	ND	363	
309-00-2	Aldrin	ND	363	
56-55-3	Benzo(a)anthracene	ND	363	
205-99-2	Benzo(b)fluoranthene	ND	363	
207-08-9	Benzo(k)fluoranthene	ND	363	
50-32-8	Benzo(a)pyrene	ND	363	
191-24-2	Benzo(ghi)perylene	ND	363	
85-68-7	Benzyl butyl phthalate	ND	363	
319-85-7	beta-BHC	ND	363	
319-86-8	delta-BHC	ND	363	
111-44-4	Bis(2-chloroethyl)ether	ND	363	
111-91-1	Bis(2-chloroethoxy)methane	ND	363	
117-81-7	Bis(2-ethylhexyl)phthalate	ND	363	
108-60-1	Bis(2-chloroisopropyl)ether	ND	363	
101-55-3	4-Bromophenylphenyl ether	ND	363	
59-50-7	4-Chloro-3-methylphenol	ND	363	
91-58-7	2-Chloronaphthalene	ND	363	
95-57-8	2-Chlorophenol	ND	363	
7005-72-3	4-Chlorophenylphenyl ether	ND	363	
218-01-9	Chrysene	ND	363	
72-54-8	4,4'-DDD	ND	363	
72-55-9	4,4'-DDE	ND	363	
50-29-3	4,4'-DDT	ND	363	
53-70-3	Dibenzo(a,h)anthracene	ND	363	

(con't)

US ENVIRONMENTAL PROTECTION AGENCY
REGION I LABORATORY
GC/MS EXTRACTABLE ORGANIC ANALYSIS

SAMPLE NO.: 63764
Results Continued:

CAS NO.	Compound	Conc. (mg/kg)	Det. Limit (mg/kg)	Comments
84-74-2	Di-n-butylphtalate	ND	363	
541-73-1	1,3-Dichlorobenzene	ND	363	
95-50-1	1,2-Dichlorobenzene	ND	363	
106-46-7	1,4-Dichlorobenzene	ND	363	
91-94-1	3,3'-Dichlorobenzidine	ND	726	
120-83-2	2,4-Dichlorophenol	ND	363	
60-57-1	Dieldrin	ND	363	
84-66-2	Diethylphtalate	ND	363	
105-67-9	2-4-Dimethylphenol	ND	363	
131-11-3	Dimethylphthalate	ND	363	
51-28-5	2,4-Dinitrophenol	ND	1815	
121-14-2	2,4-Dinitrotoluene	ND	363	
606-20-2	2,6-Dinitrotoluene	ND	363	
86-73-7	Fluorene	ND	363	
76-44-8	Heptachlor	ND	363	
1024-57-3	Heptachlor epoxide	ND	363	
118-74-1	Hexachlorobenzene	ND	363	
87-68-3	Hexachlorobutadiene	ND	363	
77-47-4	Hexachlorocyclopentadiene	ND	363	
67-72-1	Hexachloroethane	ND	363	
193-39-5	Indeno(1,2,3-cd)pyrene	ND	363	
78-59-1	Isophorone	ND	363	
534-52-1	2-methyl-4,6-dinitrophenol	ND	1815	
91-20-3	Naphthalene	ND	363	
98-95-3	Nitrobenzene	ND	363	
88-75-5	2-Nitrophenol	ND	363	
100-02-7	4-Nitrophenol	ND	1815	
86-30-3	N-nitrosodiphenylamine	ND	363	
621-64-7	N-Nitrosodi-n-propylamine	ND	363	
87-86-5	Pentachlorophenol	ND	1815	
85-01-8	Phenanthrene	ND	363	
108-95-2	Phenol	ND	363	
129-00-0	Pyrene	ND	363	

(con't)

US ENVIRONMENTAL PROTECTION AGENCY
REGION I LABORATORY
GC/MS EXTRACTABLE ORGANIC ANALYSIS

SAMPLE NO.: 63764
Results Continued:

CAS NO.	Compound	Conc. (mg/kg)	Det. Limit (mg/kg)	Comments
120-82-1	1,2,4--Trichlorobenzene	ND	363	
88-06-2	2,4,6-Trichlorophenol	ND	363	
	Hazardous Substances			
65-53-3	Aniline	ND	363	
65-85-0	Benzoic Acid	ND	1815	
100-51-6	Benzyl Alcohol	ND	363	
106-47-8	4-Chloroaniline	ND	363	
132-64-9	Dibenzofuran	ND	363	
534-52-1	4,6-Dinitro-2-methylphenol	ND	1815	
91-57-6	2-Methylnaphthalene	ND	363	
95-48-7	2-Methylphenol	ND	363	
106-44-5	4-Methylphenol	ND	363	
88-74-4	2-Nitroaniline	ND	1815	
99-09-2	3-Nitroaniline	ND	1815	
100-01-6	4-Nitroaniline	ND	1815	
95-95-4	2,4,5-Trichlorophenol	ND	1815	
	Other Compounds Quantitated			
	None			

Tentatively Identified Compounds	PQL (mg/kg)
None detected	400

US ENVIRONMENTAL PROTECTION AGENCY
REGION I LABORATORY
GC/MS EXTRACTABLE ORGANIC ANALYSIS

SAMPLE NO.: 63764
Sample Results Continued:

Sample Recoveries For Surrogate Compounds:	Recoveries (%)	QC Range (%)
2-Fluorophenol	90	30-115
Phenol,d5	83	24-113
Nitrobenzene,d5	82	23-120
Fluorobiphenyl	81	30-115
2,4,6-Tribromophenol	77	19-122
p-Terphenyl,d14	88	18-137

Notes:

ND = none detected
\- = approximate
< = less than
> = greater than
NA = not available, due to sample dilution or interference

FACILITY SAMPLED: JARD CO

US ENVIRONMENTAL PROTECTION AGENCY
REGION I LABORATORY
GC/MS EXTRACTABLE ORGANIC ANALYSIS

SAMPLE NO.: 63765
SAMPLE LOCATION:
DATE OF COLLECTION:
TIME OF COLLECTION:
PERCENT MOISTURE:
RESULTS:

Dilution Factor: 29
Density 0.878 gm/ml

CAS NO.	Compound	Conc. (mg/kg)	Det. Limit (mg/kg)	Comments
	Priority Pollutants			
83-32-9	Acenaphthene	ND	14500	
208-96-8	Acenaphthylene	ND	14500	
120-12-7	Anthracene	ND	14500	
309-00-2	Aldrin	ND	14500	
56-55-3	Benzo(a)anthracene	ND	14500	
205-99-2	Benzo(b)fluoranthene	ND	14500	
207-08-9	Benzo(k)fluoranthene	ND	14500	
50-32-8	Benzo(a)pyrene	ND	14500	
191-24-2	Benzo(ghi)perylene	ND	14500	
85-68-7	Benzyl butyl phthalate	ND	14500	
319-85-7	beta-BHC	ND	14500	
319-86-8	delta-BHC	ND	14500	
111-44-4	Bis(2-chloroethyl)ether	ND	14500	
111-91-1	Bis(2-chloroethoxy)methane	ND	14500	
117-81-7	Bis(2-ethylhexyl)phthalate	ND	14500	
108-60-1	Bis(2-chloroisopropyl)ether	ND	14500	
101-55-3	4-Bromophenylphenyl ether	ND	14500	
59-50-7	4-Chloro-3-methylphenol	ND	14500	
91-58-7	2-Chloronaphthalene	ND	14500	
95-57-8	2-Chlorophenol	ND	14500	
7005-72-3	4-Chlorophenylphenyl ether	ND	14500	
218-01-9	Chrysene	ND	14500	
72-54-8	4,4'-DDD	ND	14500	
72-55-9	4,4'-DDE	ND	14500	
50-29-3	4,4'-DDT	ND	14500	
53-70-3	Dibenzo(a,h)anthracene	ND	14500	

(con't)

US ENVIRONMENTAL PROTECTION AGENCY
REGION I LABORATORY
GC/MS EXTRACTABLE ORGANIC ANALYSIS

SAMPLE NO.: 63765
Results Continued:

CAS NO.	Compound	Conc. (mg/kg)	Det. Limit (mg/kg)	Comments
84-74-2	Di-n-butylphtalate	ND	14500	
541-73-1	1,3-Dichlorobenzene	ND	14500	
95-50-1	1,2-Dichlorobenzene	ND	14500	
106-46-7	1,4-Dichlorobenzene	ND	14500	
91-94-1	3,3'-Dichlorobenzidine	ND	29000	
120-83-2	2,4-Dichlorophenol	ND	14500	
60-57-1	Dieldrin	ND	14500	
84-66-2	Diethylphtalate	ND	14500	
105-67-9	2-4-Dimethylphenol	ND	14500	
131-11-3	Dimethylphthalate	ND	14500	
51-28-5	2,4-Dinitrophenol	ND	72500	
121-14-2	2,4-Dinitrotoluene	ND	14500	
606-20-2	2,6-Dinitrotoluene	ND	14500	
86-73-7	Fluorene	ND	14500	
76-44-8	Heptachlor	ND	14500	
1024-57-3	Heptachlor epoxide	ND	14500	
118-74-1	Hexachlorobenzene	ND	14500	
87-68-3	Hexachlorobutadiene	ND	14500	
77-47-4	Hexachlorocyclopentadiene	ND	14500	
67-72-1	Hexachloroethane	ND	14500	
193-39-5	Indeno(1,2,3-cd)pyrene	ND	14500	
78-59-1	Isophorone	ND	14500	
534-52-1	2-methyl-4,6-dinitrophenol	ND	72500	
91-20-3	Naphthalene	ND	14500	
98-95-3	Nitrobenzene	ND	14500	
88-75-5	2-Nitrophenol	ND	14500	
100-02-7	4-Nitrophenol	ND	72500	
86-30-3	N-nitrosodiphenylamine	ND	14500	
621-64-7	N-Nitrosodi-n-propylamine	ND	14500	
87-86-5	Pentachlorophenol	ND	72500	
85-01-8	Phenanthrene	ND	14500	
108-95-2	Phenol	ND	14500	
129-00-0	Pyrene	ND	14500	

(con't)

US ENVIRONMENTAL PROTECTION AGENCY
REGION I LABORATORY
GC/MS EXTRACTABLE ORGANIC ANALYSIS

SAMPLE NO.: 63765
Sample Results Continued:

CAS NO.	Compound	Conc. (mg/kg)	Det. Limit (mg/kg)	Comments
120-82-1	1,2,4--Trichlorobenzene	ND	14500	
88-06-2	2,4,6-Trichlorophenol	ND	14500	
	Hazardous Substances			
65-53-3	Aniline	ND	14500	
65-85-0	Benzoic Acid	ND	72500	
100-51-6	Benzyl Alcohol	ND	14500	
106-47-8	4-Chloroaniline	ND	14500	
132-64-9	Dibenzofuran	ND	14500	
534-52-1	4,6-Dinitro-2-methylphenol	ND	72500	
91-57-6	2-Methylnaphthalene	ND	14500	
95-48-7	2-Methylphenol	ND	14500	
106-44-5	4-Methylphenol	ND	14500	
88-74-4	2-Nitroaniline	ND	72500	
99-09-2	3-Nitroaniline	ND	72500	
100-01-6	4-Nitroaniline	ND	72500	
95-95-4	2,4,5-Trichlorophenol	ND	72500	
	Other Compounds Quantitated			
	None			

Tentatively Identified Compounds	Est. Conc. (mg/kg)	PQL (mg/kg)	Recov. (%)
C-10 Hydrocarbon	200000	14500	
C-10 Hydrocarbon	200000	14500	
C-10 Hydrocarbon	500000	14500	
Decane mixture			90%

US ENVIRONMENTAL PROTECTION AGENCY
REGION I LABORATORY
GC/MS EXTRACTABLE ORGANIC ANALYSIS

SAMPLE NO.: 63765
Sample Results Continued:

Sample Recoveries For Surrogate Compounds:	Recoveries (%)	QC Range (%)
2-Fluorophenol	84	30-115
Phenol,d5	95	24-113
Nitrobenzene,d5	82	23-120
Fluorobiphenyl	81	30-115
2,4,6-Tribromophenol	60	19-122
p-Terphenyl,d14	86	18-137

Notes:

ND = none detected
~ = approximate
< = less than
> = greater than
NA = not available, due to sample dilution or interference

APPENDIX D

ANALYTICAL RESULTS FROM TRCC SAMPLING

AUGUST 1992

CLP VOLATILE ORGANIC ANALYSIS

CASE NO. 18627 SDG NO. ADC65

ANALYTICAL RESULTS

Sample Location	Jard Company	Jard Company	Jard Company	Jard Company	Jard Company	Jard Company	Jard Company	Jard Company
Sample Number	GW-37-01	GW-37-02	RB-37-05	TB-37-06	SS-37-07	SS-37-08	SS-37-09	SS-37-10
Traffic Report Number	ADC65	ADC66	ADC69	ADC70	ADC71	ADC72	ADC73	ADC74
Remarks	Reference Sample		Rinsate Blank	Trip Blank	Reference Sample			
Sampling Date	8/18/92	8/18/92	8/18/92	8/18/92	8/18/92	8/18/92	8/18/92	8/18/92
Analysis Date	8/28/92	8/28/92	8/28/92	8/28/92	8/28/92	8/28/92	8/27/92	8/27/92
VOLATILE ORGANIC COMPOUND	ug/L	ug/L	ug/L	ug/L	ug/Kg	ug/Kg	ug/Kg	ug/Kg
Chloromethane								
Bromomethane								
Vinyl Chloride								
Chloroethane								
Methylene Chloride								
Acetone				13 J				
Carbon Disulfide								
1,1-Dichloroethene								
1,1-Dichloroethane								
1,2-Dichloroethene (Total)								
Chloroform			25	28				
1,2-Dichloroethane								
2-Butanone								
1,1,1-Trichloroethane								
Carbon Tetrachloride								
Bromodichloromethane								
1,2-Dichloropropane								
cis-1,3-Dichloropropene								
Trichloroethene								
Dibromochloromethane								
1,1,2-Trichloroethane								
Benzene								
trans-1,3-Dichloropropene								
Bromoform								
4-Methyl-2-pentanone								
2-Hexanone								
Tetrachloroethene								
1,1,2,2-Tetrachloroethane								
Toluene								
Chlorobenzene								
Ethylbenzene								
Styrene								
Xylene (Total)								

A blank space indicates the compound was not detected.

J Quantitation is approximate due to limitations identified during the quality control review.

CLP VOLATILE ORGANIC ANALYSIS

CASE NO. 18627 SDG NO ADC65

ANALYTICAL RESULTS

Sample Location	Jard Company	Jard Company	Jard Company	Jard Company	Jard Company	Jard Company
Sample Number	SS-37-11	SS-37-12	SS-37-13	SS-37-14	RB-37-15	SS-37-16
Traffic Report Number	ADC75	ADC76	ADC77	ADC78	ADC79	ADC80
Remarks				Dup. of SS-37-13	Rinsate Blank	Medium
Sampling Date	8/18/92	8/18/92	8/18/92	8/18/92	8/18/92	8/18/92
Analysis Date	8/27/92	8/28/92	8/27/92	8/27/92	8/28/92	8/28/92
VOLATILE ORGANIC COMPOUND	ug/Kg	ug/Kg	ug/Kg	ug/Kg	ug/L	ug/Kg
Chloromethane						
Bromomethane						
Vinyl Chloride						
Chloroethane						
Methylene Chloride					6 J	
Acetone					20 J	
Carbon Disulfide						
1,1-Dichloroethene						
1,1-Dichloroethane						
1,2-Dichloroethene (Total)						
Chloroform					27	
1,2-Dichloroethane						
2-Butanone						
1,1,1-Trichloroethane						
Carbon Tetrachloride						
Bromodichloromethane						
1,2-Dichloropropane						
cis-1,3-Dichloropropene						
Trichloroethene						
Dibromochloromethane						
1,1,2-Trichloroethane						
Benzene						
trans-1,3-Dichloropropene						
Bromoform						
4-Methyl-2-pentanone						5400
2-Hexanone						
Tetrachloroethene						
1,1,2,2-Tetrachloroethane						
Toluene			8 J	7 J		
Chlorobenzene						
Ethylbenzene						1500 J
Styrene						
Xylene (Total)						17000

A blank space indicates the compound was not detected

J Quantitation is approximate due to limitations identified during the quality control review.

TABLE 2 Page 1 of 2

CLP VOLATILE ORGANIC ANALYSIS

CASE NO. 18627 SDG NO. ADC65

SAMPLE QUANTITATION LIMITS

Sample Location	Jard Company	Jard Company	Jard Company	Jard Company	Jard Company	Jard Company	Jard Company	Jard Company
Sample Number	GW-37-01	GW-37-02	RB-37-05	TB-37-06	SS-37-07	SS-37-08	SS-37-09	SS-37-10
Traffic Report Number	ADC65	ADC66	ADC69	ADC70	ADC71	ADC72	ADC73	ADC74
Remarks	Reference Sample		Rinsate Blank	Trip Blank	Reference Sample			
Percent Solids	0	0	0	0	82	88	90	86
VOLATILE ORGANIC COMPOUND	ug/L	ug/L	ug/L	ug/L	ug/Kg	ug/Kg	ug/Kg	ug/Kg
Chloromethane	10	10	10	10	12	11	11	12 UJ
Bromomethane	10	10	10	10	12	11	11	12 UJ
Vinyl Chloride	10	10	10	10	12	11	11	12 UJ
Chloroethane	10 UJ	10 UJ	10 UJ	10 UJ	12	11	11	12 UJ
Methylene Chloride	10	17	10	10	12	11	16	16 UJ
Acetone	10 UJ	10 UJ	10 UJ	10	12 UJ	11 UJ	11	12 UJ
Carbon Disulfide	10	10	10	10	12	11	11	12 UJ
1,1-Dichloroethene	10	10	10	10	12	11	11	12 UJ
1,1-Dichloroethane	10	10	10	10	12	11	11	12 UJ
1,2-Dichloroethene (Total)	10	10	10	10	12	11	11	12 UJ
Chloroform	10	10	10	10	12	11	11	12 UJ
1,2-Dichloroethane	10	10	10	10	12	11	11	12 UJ
2-Butanone	10	10	10	10	12	11	11	12 UJ
1,1,1-Trichloroethane	10	10	10	10	12	11	11	12 UJ
Carbon Tetrachloride	10	10	10	10	12	11	11	12 UJ
Bromodichloromethane	10	10	10	10	12	11	11	12 UJ
1,2-Dichloropropane	10	10	10	10	12	11	11	12 UJ
cis-1,3-Dichloropropene	10	10	10	10	12	11	11	12 UJ
Trichloroethene	10	10	10	10	12	11	11	12 UJ
Dibromochloromethane	10	10	10	10	12	11	11	12 UJ
1,1,2 Trichloroethane	10	10	10	10	12	11	11	12 UJ
Benzene	10	10	10	10	12	11	11	12 UJ
trans-1,3-Dichloropropene	10	10	10	10	12	11	11	12 UJ
Bromoform	10	10	10	10	12	11	11	12 UJ
4-Methyl-2-pentanone	10	10	10	10	12	11	11	12 UJ
2-Hexanone	10	10	10	10	12 UJ	11 UJ	11	12 UJ
Tetrachloroethene	10	10	10	10	12	11	11	12 UJ
1,1,2,2-Tetrachloroethane	10	10	10	10	12	11	11	12 UJ
Toluene	10	10	10	10	12	11	11	12 UJ
Chlorobenzene	10	10	10	10	12	11	11	12 UJ
Ethylbenzene	10	10	10	10	12	11	11	12 UJ
Styrene	10	10	10	10	12	11	11	12 UJ
Xylene (Total)	10	10	10	10	12	11	11	12 UJ

UJ Quantitation limit is approximate due to limitations identified during the quality control review.

TABLE 2 Page 2 of 2

CLP VOLATILE ORGANIC ANALYSIS

CASE NO. 18627 SDG NO. ADC65

SAMPLE QUANTITATION LIMITS

Sample Location	Jard Company	Jard Company	Jard Company	Jard Company	Jard Company	Jard Company
Sample Number	SS-37-11	SS-37-12	SS-37-13	SS-37-14	RB-37-15	SS-37-16
Traffic Report Number	ADC75	ADC76	ADC77	ADC78	ADC79	ADC80
Remarks				Dup. of SS-37-13	Rinsate Blank	
Percent Solids	80	74	84	81	0	49
VOLATILE ORGANIC COMPOUND	ug/Kg	ug/Kg	ug/Kg	ug/Kg	ug/L	ug/Kg
Chloromethane	12	14	12	12	10	2600
Bromomethane	12	14	12	12	10	2600
Vinyl Chloride	12	14	12	12	10	2600
Chloroethane	12	14	12	12	10 UJ	2600 UJ
Methylene Chloride	16	14	18	15	10	3000
Acetone	12	14 UJ	12	12	10	2600 UJ
Carbon Disulfide	12	14	12	12	10	2600
1,1-Dichloroethene	12	14	12	12	10	2600
1,1-Dichloroethane	12	14	12	12	10	2600
1,2-Dichloroethene (Total)	12	14	12	12	10	2600
Chloroform	12	14	12	12	10	2600
1,2-Dichloroethane	12	14	12	12	10	2600
2-Butanone	12	14	12	12	10	3400
1,1,1-Trichloroethane	12	14	12	12	10	2600
Carbon Tetrachloride	12	14	12	12	10	2600
Bromodichloromethane	12	14	12	12	10	2600
1,2-Dichloropropane	12	14	12	12	10	2600
cis-1,3-Dichloropropene	12	14	12	12	10	2600
Trichloroethene	12	14	12	12	10	2600
Dibromochloromethane	12	14	12	12	10	2600
1,1,2-Trichloroethane	12	14	12	12	10	2600
Benzene	12	14	12	12	10	2600
trans-1,3-Dichloropropene	12	14	12	12	10	2600
Bromoform	12	14	12	12	10	2600
4-Methyl-2-pentanone	12	14	12	12	10	2600
2-Hexanone	12	14 UJ	12	12	10	2600
Tetrachloroethene	12	14	12	12	10	2600
1,1,2,2-Tetrachloroethane	12	14	12	12	10	2600
Toluene	12	14	12	12	10	2600
Chlorobenzene	12	14	12	12	10	2600
Ethylbenzene	12	14	12	12	10	2600
Styrene	12	14	12	12	10	2600
Xylene (Total)	12	14	12	12	10	2600

UJ Quantitation limit is approximate due to limitations identified during the quality control review.

CLP EXTRACTABLE ORGANIC ANALYSIS

CASE NO. 18627 SDG NO. ADC65

ANALYTICAL RESULTS

Sample Location	Jard Company	Jard Company	Jard Company	Jard Company	Jard Company	Jard Company	Jard Company	Jard Company
Sample Number	GW-37-01	GW-37-02	RB-37-05	SS-37-07	SS-37-08	SS-37-09	SS-37-10	SS-37-11
Traffic Report Number	ADC65	ADC66	ADC69	ADC71	ADC72	ADC73	ADC74	ADC75
Remarks	Reference Sample		Rinsate Blank	Reference Sample				
Sampling Date	8/18/92	8/18/92	8/18/92	8/18/92	8/18/92	8/18/92	8/18/92	8/18/92
Extraction Date	8/24/92	8/24/92	8/24/92	8/25/92	8/25/92	8/25/92	8/25/92	8/25/92
Analysis Date	8/27/92	8/27/92	8/27/92	9/14/92	9/14/92	9/14/92	9/14/92	9/14/92
SEMI-VOLATILE COMPOUND	ug/L	ug/L	ug/L	ug/Kg	ug/Kg	ug/Kg	ug/Kg	ug/Kg
Phenol								
bis (2-Chloroethyl) ether								
2-Chlorophenol								
1,3-Dichlorobenzene								
1,4-Dichlorobenzene								
1,2-Dichlorobenzene								
2,2'-Oxybis(1-Chloropropane)								
2-Methylphenol								
4-Methylphenol								
N-Nitroso-di-n-propylamine								
Hexachloroethane								
Nitrobenzene								
Isophorone								
2-Nitrophenol								
2,4-Dimethylphenol								
bis (2-Chloroethoxy) methane								
2,4-Dichlorophenol								
1,2,4-Trichlorobenzene								
Naphthalene								
4-Chloroaniline								
Hexachlorobutadiene								
4-Chloro-3-methylphenol								
2-Methylnaphthalene								
Hexachlorocyclopentadiene								
2,4,6-Trichlorophenol								
2,4,5-Trichlorophenol								
2-Chloronaphthalene								
2-Nitroaniline								
Dimethylphthalate								
Acenaphthylene								
2,6-Dinitrotoluene								

CLP EXTRACTABLE ORGANIC ANALYSIS

CASE NO. 18627 SDG NO. ADC65

ANALYTICAL RESULTS

Sample Location	Jard Company	Jard Company	Jard Company	Jard Company	Jard Company	Jard Company	Jard Company	Jard Company
Sample Number	GW-37-01	GW-37-02	RB-37-05	SS-37-07	SS-37-08	SS-37-09	SS-37-10	SS-37-11
Traffic Report Number	ADC65	ADC66	ADC69	ADC71	ADC72	ADC73	ADC74	ADC75
Remarks	Reference Sample		Rinsate Blank	Reference Sample				
SEMI-VOLATILE COMPOUND	ug/L	ug/L	ug/L	ug/Kg	ug/Kg	ug/Kg	ug/Kg	ug/Kg
3-Nitroaniline								
Acenaphthene								
2,4-Dinitrophenol								
4-Nitrophenol								
Dibenzofuran								
2,4-Dinitrotoluene								
Diethylphthalate								
4-Chlorophenyl-phenylether								
Fluorene								
4-Nitroaniline								
4,6-Dinitro-2-methylphenol								
N-Nitrosodiphenylamine								
4-Bromophenyl-phenylether								
Hexachlorobenzene								
Pentachlorophenol								
Phenanthrene								110 J
Anthracene								
Carbazole								
Di-n-butylphthalate								
Fluoranthene								180 J
Pyrene					59 J			180 J
Butylbenzylphthalate								140 J
3,3'-Dichlorobenzidine								
Benzo(a)anthracene								70 J
Chrysene								100 J
bis(2-Ethylhexyl)phthalate			6 J		1300000 *	11000000 *	23000000 *	50000 *
Di-n-octyl phthalate					320 J	840 J		
Benzo(b)fluoranthene								110 J
Benzo(k)fluoranthene								110 J
Benzo(a)pyrene								70 J
Indeno (1,2,3-cd)pyrene								
Dibenz(a,h)anthracene								
Benzo(g,h,i)perylene								

A blank space indicates the compound was not detected.

J Quantitation is approximate due to limitations identified during the quality control review.

* Value obtained through dilution.

CLP EXTRACTABLE ORGANIC ANALYSIS

CASE NO. 18627 SDG NO. ADC65

ANALYTICAL RESULTS

Sample Location	Jard Company	Jard Company	Jard Company	Jard Company	Jard Company
Sample Number	SS-37-12	SS-37-13	SS-37-14	RB 37-15	SS-37-16
Traffic Report Number	ADC76	ADC77	ADC78	ADC79	ADC80
Remarks			Dup. of SS-37-13	Rinsate Blank	
Sampling Date	8/18/92	8/18/92	8/18/92	8/18/92	8/18/92
Extraction Date	8/25/92	8/25/92	8/25/92	8/24/92	8/25/92
Analysis Date	9/14/92	9/18/92	9/18/92	8/27/92	9/18/92
SEMI-VOLATILE COMPOUND	ug/Kg	ug/Kg	ug/Kg	ug/L	ug/Kg
Phenol					
bis (2-Chloroethyl) ether					
2-Chlorophenol					
1,3-Dichlorobenzene					
1,4-Dichlorobenzene					
1,2-Dichlorobenzene					
2,2'-Oxybis(1-Chloropropane)					
2-Methylphenol					
4-Methylphenol					
N-Nitroso-di-n-propylamine					
Hexachloroethane					
Nitrobenzene					
Isophorone					
2-Nitrophenol					
2,4-Dimethylphenol					
bis (2-Chloroethoxy) methane					
2,4-Dichlorophenol					
1,2,4-Trichlorobenzene					
Naphthalene					
4-Chloroaniline					
Hexachlorobutadiene					
4-Chloro-3-methylphenol					
2-Methylnaphthalene					
Hexachlorocyclopentadiene					
2,4,6-Trichlorophenol					
2,4,5-Trichlorophenol					
2-Chloronaphthalene					
2-Nitroaniline					
Dimethylphthalate	1200				
Acenaphthylene					
2,6-Dinitrotoluene					

CLP EXTRACTABLE ORGANIC ANALYSIS

CASE NO. 18627 SDG NO ADC65

ANALYTICAL RESULTS

Sample Location	Jard Company	Jard Company	Jard Company	Jard Company	Jard Company
Sample Number	SS-37-12	SS-37-13	SS-37-14	RB-37-15	SS-37-16
Traffic Report Number	ADC76	ADC77	ADC78	ADC79	ADC80
Remarks			Dup. of SS-37 13	Rinsate Blank	
SEMI-VOLATILE COMPOUND	ug/Kg	ug/Kg	ug/Kg	ug/L	ug/Kg
3-Nitroaniline					
Acenaphthene					
2,4-Dinitrophenol					
4-Nitrophenol					
Dibenzofuran					
2,4-Dinitrotoluene					
Diethylphthalate					
4-Chlorophenyl-phenylether					
Fluorene	76 J				
4-Nitroaniline					
4,6-Dinitro-2-methylphenol					
N-Nitrosodiphenylamine					
4-Bromophenyl-phenylether					
Hexachlorobenzene					
Pentachlorophenol					
Phenanthrene					
Anthracene					
Carbazole					
Di-n-butylphthalate					
Fluoranthene	100 J				
Pyrene	240 J				
Butylbenzylphthalate	3600				
3,3'-Dichlorobenzidine					
Benzo(a)anthracene	47 J				
Chrysene	110 J				
bis(2-Ethylhexyl)phthalate	9600 *	21000000 J	22000000 J	25	130000 J
Di-n-octyl phthalate				2 J	
Benzo(b)fluoranthene	130 J				
Benzo(k)fluoranthene	78 J				
Benzo(a)pyrene					
Indeno (1,2,3-cd)pyrene					
Dibenz(a,h)anthracene					
Benzo(g,h,i)perylene					

A blank space indicates the compound was not detected.

J Quantitation is approximate due to limitations identified during the quality control review.

* Value obtained through dilution

TABLE 4 Page 1 of 4

CLP EXTRACTABLE ORGANIC ANALYSIS

CASE NO 18627 SDG NO. ADC65

SAMPLE QUANTITATION LIMITS

Sample Location	Jard Company	Jard Company	Jard Company	Jard Company	Jard Company	Jard Company	Jard Company	Jard Company
Sample Number	GW-37-01	GW-37-02	RB-37-05	SS-37-07	SS-37-08	SS-37-09	SS-37 10	SS-37-11
Traffic Report Number	ADC65	ADC66	ADC69	ADC71	ADC72	ADC73	ADC74	ADC75
Remarks	Reference Sample		Rinsate Blank	Reference Sample			4x Dil	
Percent Solids	0	0	0	82	88	90	86	80
SEMI-VOLATILE COMPOUND	ug/L	ug/L	ug/L	ug/Kg	ug/Kg	ug/Kg	ug/Kg	ug/Kg
Phenol	11	10	10	410	380	370	1600	420
bis (2-Chloroethyl) ether	11	10	10	410	380	370	1600	420
2-Chlorophenol	11	10	10	410	380	370	1600	420
1,3-Dichlorobenzene	11	10	10	410	380	370	1600	420
1,4 Dichlorobenzene	11	10	10	410	380	370	1600	420
1,2-Dichlorobenzene	11	10	10	410	380	370	1600	420
2,2'-Oxybis(1-Chloropropane)	11	10	10	410	380	370	1600	420
2-Methylphenol	11	10	10	410	380	370	1600	420
4-Methylphenol	11	10	10	410	380	370	1600	420
N-Nitroso-di-n-propylamine	11	10	10	410	380	370	1600	420
Hexachloroethane	11	10	10	410	380	370	1600	420
Nitrobenzene	11	10	10	410	380	370	1600	420
Isophorone	11	10	10	410	380	370	1600	420
2-Nitrophenol	11	10	10	410	380	370	1600	420
2,4-Dimethylphenol	11	10	10	410	380	370	1600	420
bis (2-Chloroethoxy) methane	11	10	10	410	380	370	1600	420
2,4-Dichlorophenol	11	10	10	410	380	370	1600	420
1,2,4-Trichlorobenzene	11	10	10	410	380	370	1600	420
Naphthalene	11	10	10	410	380	370	1600	420
4-Chloroaniline	11	10	10	410	380	370	1600	420
Hexachlorobutadiene	11	10	10	410	380	370	1600	420
4-Chloro-3-methylphenol	11	10	10	410	380	370	1600	420
2-Methylnaphthalene	11	10	10	410	380	370	1600	420
Hexachlorocyclopentadiene	11	10	10	410	380	370	1600	420
2,4,6-Trichlorophenol	11	10	10	410	380	370	1600	420
2,4,5-Trichlorophenol	27	26	25	1000	940	920	3900	1000
2-Chloronaphthalene	11	10	10	410	380	370	1600	420
2-Nitroaniline	27	26	25	1000	940	920	3900	1000
Dimethylphthalate	11	10	10	410	380	370	1600	420
Acenaphthylene	11	10	10	410	380	370	1600	420
2,6-Dinitrotoluene	11	10	10	410	380	370	1600	420

CLP EXTRACTABLE ORGANIC ANALYSIS

CASE NO. 18627 SDG NO. ADC65

SAMPLE QUANTITATION LIMITS

Sample Location	Jard Company	Jard Company	Jard Company	Jard Company	Jard Company	Jard Company	Jard Company	Jard Company
Sample Number	GW-37-01	GW-37-02	RB-37-05	SS-37-07	SS-37-08	SS-37-09	SS-37-10	SS-37-11
Traffic Report Number	ADC65	ADC66	ADC69	ADC71	ADC72	ADC73	ADC74	ADC75
Remarks	Reference Sample		Rinsate Blank	Reference Sample			4x Dil.	
Percent Solids	0	0	0	82	88	90	86	80
SEMI-VOLATILE COMPOUND	ug/L	ug/L	ug/L	ug/Kg	ug/Kg	ug/Kg	ug/Kg	ug/Kg
3-Nitroaniline	27	26	25	1000	940	920	3900	1000
Acenaphthene	11	10	10	410	380	370	1600	420
2,4-Dinitrophenol	27	26	25	1000	940	920	3900	1000
4-Nitrophenol	27	26	25	1000	940	920	3900	1000
Dibenzofuran	11	10	10	410	380	370	1600	420
2,4-Dinitrotoluene	11	10	10	410	380	370	1600	420
Diethylphthalate	11	10	10	410	380	370	1600	420
4-Chlorophenyl-phenylether	11	10	10	410	380	370	1600	420
Fluorene	11	10	10	410	380	370	1600	420
4-Nitroaniline	27	26	25	1000	940	920	3900	1000
4,6-Dinitro-2-methylphenol	27	26	25	1000	940	920	3900	1000
N-Nitrosodiphenylamine	11	10	10	410	380	370	1600	420
4-Bromophenyl-phenylether	11	10	10	410	380	370	1600	420
Hexachlorobenzene	11	10	10	410	380	370	1600	420
Pentachlorophenol	27	26	25	1000	940	920	3900	1000
Phenanthrene	11	10	10	410	380	370	1600	420
Anthracene	11	10	10	410	380	370	1600	420
Carbazole	11	10	10	410	380	370	1600	420
Di-n-butylphthalate	11	10	10	410	380	370	1600	420
Fluoranthene	11	10	10	410	380	370	1600	420
Pyrene	11	10	10	410	380	370 R	1600 R	420
Butylbenzylphthalate	11	10	10	410	380 UJ	370 R	1600 R	420
3,3'-Dichlorobenzidine	11	10	10	410	380 UJ	370 R	1600 R	420
Benzo(a)anthracene	11	10	10	410	380 UJ	370 R	1600 R	420
Chrysene	11	10	10	410	380 UJ	370 R	1600 R	420
bis(2-Ethylhexyl)phthalate	11	10	10	1700	940000 *	1500000 *	3100000 *	21000 *
Di-n-octyl phthalate	11	10	10	410	380	370	2300 R	420
Benzo(b)fluoranthene	11	10	10	410	380 R	370 R	1600 R	420
Benzo(k)fluoranthene	11	10	10	410	380 R	370 R	1600 R	420
Benzo(a)pyrene	11	10	10	410	380 R	370 R	1600 R	420
Indeno (1,2,3-cd)pyrene	11	10	10	410	380 R	370 R	1600 R	420
Dibenz(a,h)anthracene	11	10	10	410	380 R	370 R	1600 R	420
Benzo(g,h,i)perylene	11	10	10	410	380 R	370 R	1600 R	420

UJ Quantitation limit is approximate due to limitations identified during the quality control review

* Quantitation limit obtained through dilution

R Value is rejected.

TABLE 4 Page 3 of 4

CLP EXTRACTABLE ORGANIC ANALYSIS

CASE NO. 18627 SDG NO. ADC65

SAMPLE QUANTITATION LIMITS

Sample Location	Jard Company	Jard Company	Jard Company	Jard Company	Jard Company
Sample Number	SS 37 12	SS-37-13	SS-37-14 Dup. of SS-37-13	RB-37-15	SS-37-16
Traffic Report Number	ADC76	ADC77	ADC78	ADC79	ADC80
Remarks		20000x Dilution	20000x Dilution	Rinsate Blank	100x Dilution
Percent Solids	74	84	81	0	49
SEMI VOLATILE COMPOUND	ug/Kg	mg/Kg	mg/Kg	ug/L	ug/Kg
Phenol	450	7900 UJ	8200 UJ	10	68000 UJ
bis (2-Chloroethyl) ether	450	7900 UJ	8200 UJ	10	68000 UJ
2-Chlorophenol	450	7900 UJ	8200 UJ	10	68000 UJ
1,3 Dichlorobenzene	450	7900 UJ	8200 UJ	10	68000 UJ
1,4-Dichlorobenzene	450	7900 UJ	8200 UJ	10	68000 UJ
1,2-Dichlorobenzene	450	7900 UJ	8200 UJ	10	68000 UJ
2,2'-Oxybis(1-Chloropropane)	450	7900 UJ	8200 UJ	10	68000 UJ
2-Methylphenol	450	7900 UJ	8200 UJ	10	68000 UJ
4-Methylphenol	450	7900 UJ	8200 UJ	10	68000 UJ
N-Nitroso-di-n-propylamine	450	7900 UJ	8200 UJ	10	68000 UJ
Hexachloroethane	450	7900 UJ	8200 UJ	10	68000 UJ
Nitrobenzene	450	7900 UJ	8200 UJ	10	68000 UJ
Isophorone	450	7900 UJ	8200 UJ	10	68000 UJ
2-Nitrophenol	450	7900 UJ	8200 UJ	10	68000 UJ
2,4-Dimethylphenol	450	7900 UJ	8200 UJ	10	68000 UJ
bis (2-Chloroethoxy) methane	450	7900 UJ	8200 UJ	10	68000 UJ
2,4-Dichlorophenol	450	7900 UJ	8200 UJ	10	68000 UJ
1,2,4-Trichlorobenzene	450	7900 UJ	8200 UJ	10	68000 UJ
Naphthalene	450	7900 UJ	8200 UJ	10	68000 UJ
4-Chloroaniline	450	7900 UJ	8200 UJ	10	68000 UJ
Hexachlorobutadiene	450	7900 UJ	8200 UJ	10	68000 UJ
4-Chloro-3-methylphenol	450	7900 UJ	8200 UJ	10	68000 UJ
2-Methylnaphthalene	450	7900 UJ	8200 UJ	10	68000 UJ
Hexachlorocyclopentadiene	450	7900 UJ	8200 UJ	10	68000 UJ
2,4,6-Trichlorophenol	450	7900 UJ	8200 UJ	10	68000 UJ
2,4,5-Trichlorophenol	1100	20000 UJ	20000 UJ	25	170000 UJ
2-Chloronaphthalene	450	7900 UJ	8200 UJ	10	68000 UJ
2-Nitroaniline	1100	20000 UJ	20000 UJ	25	170000 UJ
Dimethylphthalate	450	7900 UJ	8200 UJ	10	68000 UJ
Acenaphthylene	450	7900 UJ	8200 UJ	10	68000 UJ
2,6-Dinitrotoluene	450	7900 UJ	8200 UJ	10	68000 UJ

UJ Quantitation limit is approximate due to limitations identified during the quality control review

TABLE 4 Page 4 of 4

CLP EXTRACTABLE ORGANIC ANALYSIS

CASE NO. 18627 SDG NO. ADC65

SAMPLE QUANTITATION LIMITS

Sample Location	Jard Company	Jard Company	Jard Company	Jard Company	Jard Company
Sample Number	SS 37-12	SS-37-13	SS-37-14 Dup. of SS-37-13	RB-37-15	SS-37-16
Traffic Report Number	ADC76	ADC77	ADC78	ADC79	ADC80
Remarks		20000x Dilution	20000x Dilution	Rinsate Blank	100x Dilution
Percent Solids	74	84	81	0	49
SEMI-VOLATILE COMPOUND	ug/Kg	mg/Kg	mg/Kg	ug/L	ug/Kg
3-Nitroaniline	1100	20000 UJ	20000 UJ	25	170000 UJ
Acenaphthene	450	7900 UJ	8200 UJ	10	68000 UJ
2,4-Dinitrophenol	1100	20000 UJ	20000 UJ	25	170000 UJ
4-Nitrophenol	1100	20000 UJ	20000 UJ	25	170000 UJ
Dibenzofuran	450	7900 UJ	8200 UJ	10	68000 UJ
2,4-Dinitrotoluene	450	7900 UJ	8200 UJ	10	68000 UJ
Diethylphthalate	450	7900 UJ	8200 UJ	10	68000 UJ
4-Chlorophenyl-phenylether	450	7900 UJ	8200 UJ	10	68000 UJ
Fluorene	450	7900 UJ	8200 UJ	10	68000 UJ
4-Nitroaniline	1100	20000 UJ	20000 UJ	25	170000 UJ
4,6-Dinitro-2-methylphenol	1100	20000 UJ	20000 UJ	25	170000 UJ
N-Nitrosodiphenylamine	450	7900 UJ	8200 UJ	10	68000 UJ
4-Bromophenyl-phenylether	450	7900 UJ	8200 UJ	10	68000 UJ
Hexachlorobenzene	450	7900 UJ	8200 UJ	10	68000 UJ
Pentachlorophenol	1100	20000 UJ	20000 UJ	25	170000 UJ
Phenanthrene	450	7900 UJ	8200 UJ	10	68000 UJ
Anthracene	450	7900 UJ	8200 UJ	10	68000 UJ
Carbazole	450	7900 UJ	8200 UJ	10	68000 UJ
Di-n-butylphthalate	450	7900 UJ	8200 UJ	10	68000 UJ
Fluoranthene	450	7900 UJ	8200 UJ	10	68000 UJ
Pyrene	450	7900 UJ	8200 UJ	10	68000 UJ
Butylbenzylphthalate	450	7900 UJ	8200 UJ	10	68000 UJ
3,3'-Dichlorobenzidine	450	7900 UJ	8200 UJ	10	68000 UJ
Benzo(a)anthracene	450	7900 UJ	8200 UJ	10	68000 UJ
Chrysene	450	7900 UJ	8200 UJ	10	68000 UJ
bis(2-Ethylhexyl)phthalate	45000 *	7900	8200	10	68000
Di-n-octyl phthalate	450	7900 UJ	8200 UJ	10	68000 UJ
Benzo(b)fluoranthene	450	7900 UJ	8200 UJ	10	68000 UJ
Benzo(k)fluoranthene	450	7900 UJ	8200 UJ	10	68000 UJ
Benzo(a)pyrene	450	7900 UJ	8200 UJ	10	68000 UJ
Indeno (1,2,3-cd)pyrene	450	7900 UJ	8200 UJ	10	68000 UJ
Dibenz(a,h)anthracene	450	7900 UJ	8200 UJ	10	68000 UJ
Benzo(g,h,i)perylene	450	7900 UJ	8200 UJ	10	68000 UJ

UJ Quantitation limit is approximate due to limitations identified during the quality control review.

* Quantitation limit obtained through dilution.

CLP EXTRACTABLE ORGANIC ANALYSIS

CASE NO. 18627 SDG NO. ADC65

ANALYTICAL RESULTS

Sample Location	Jard Company	Jard Company	Jard Company	Jard Company	Jard Company	Jard Company	Jard Company	Jard Company
Sample Number	GW 37-01	GW-37-02	RB-37-05	SS-37-07	SS-37-08	SS-37-09	SS 37-10	SS-37-11
Traffic Report Number	ADC65	ADC66	ADC69	ADC71	ADC72	ADC73	ADC74	ADC75
Remarks	Reference Sample		Rinsate Blank	Reference Sample				
Sampling Date	8/18/92	8/18/92	8/18/92	8/18/92	8/18/92	8/18/92	8/18/92	8/18/92
Extraction Date	8/24/92	8/24/92	8/24/92	8/25/92	8/25/92	8/25/92	8/25/92	8/25/92
Analysis Date	9/22/92	9/22/92	9/22/92	9/22/92	9/22/92	9/22/92	9/22/92	9/22/92
PESTICIDE/PCB COMPOUND	ug/L	ug/L	ug/L	ug/Kg	ug/Kg	ug/Kg	ug/Kg	ug/Kg
alpha-BHC								
beta-BHC								
delta-BHC								
gamma-BHC (Lindane)								
Heptachlor								
Aldrin						28000 J*	8400 J*	
Heptachlor epoxide								
Endosulfan I								
Dieldrin								
4,4'-DDE				3.0 J				
Endrin				3.6 J				
Endosulfan II								
4,4'-DDD				2.7 J				
Endosulfan sulfate								
4,4'-DDT								
Methoxychlor								
Endrin ketone								
Endrin aldehyde								
alpha-Chlordane								
gamma-Chlordane								
Toxaphene								
Aroclor-1016								
Aroclor-1221								
Aroclor-1232								
Aroclor-1242				340	120000 J*	470000 J*	190000 J*	23000 J*
Aroclor-1248								
Aroclor-1254								
Aroclor-1260								

A blank space indicates the compound was not detected

J Quantitation is approximate due to limitations identified during the quality control review.

* Value obtained through dilution

CLP EXTRACTABLE ORGANIC ANALYSIS

CASE NO. 18627 SDG NO. ADC65

ANALYTICAL RESULTS

Sample Location	Jard Company	Jard Company	Jard Company	Jard Company	Jard Company
Sample Number	SS-37-12	SS-37-13	SS-37-14	RB-37-15	SS-37-16
Traffic Report Number	ADC76	ADC77	ADC78	ADC79	ADC80
Remarks			Dup. of SS-37-13	Rinsate Blank	
Sampling Date	8/18/92	8/18/92	8/18/92	8/18/92	8/18/92
Extraction Date	8/25/92	8/25/92	8/25/92	8/24/92	8/25/92
Analysis Date	9/24/92	9/22/92	9/24/92	9/22/92	9/23/92
PESTICIDE/PCB COMPOUND	ug/Kg	ug/Kg	ug/Kg	ug/L	ug/Kg
alpha-BHC					
beta-BHC					
delta-BHC					
gamma-BHC (Lindane)					
Heptachlor					
Aldrin	4000 J*	1900 J	2700 J*		2800 J
Heptachlor epoxide					
Endosulfan I					
Dieldrin					
4,4'-DDE					
Endrin					
Endosulfan II					
4,4'-DDD					
Endosulfan sulfate					
4,4'-DDT					
Methoxychlor					
Endrin ketone					
Endrin aldehyde					
alpha-Chlordane					
gamma-Chlordane					
Toxaphene					
Aroclor-1016					
Aroclor-1221					
Aroclor-1232					
Aroclor-1242	100000 J*	68000 J*	93000 J*		130000 J*
Aroclor-1248					
Aroclor-1254					
Aroclor-1260					

A blank space indicates the compound was not detected

J Quantitation is approximate due to limitations identified during the quality control review.

* Value obtained through dilution

TABLE 6 Page 1 of 2

CLP EXTRACTABLE ORGANIC ANALYSIS

CASE NO. 18627 SDG NO. ADC65

SAMPLE QUANTITATION LIMITS

Sample Location	Jard Company	Jard Company	Jard Company	Jard Company	Jard Company	Jard Company	Jard Company	Jard Company
Sample Number	GW-37-01	GW-37-02	RB-37-05	SS-37-07	SS-37-08	SS-37-09	SS 37 10	SS-37-11
Traffic Report Number	ADC65	ADC66	ADC69	ADC71	ADC72	ADC73	ADC74	ADC75
Remarks	Reference Sample		Rinsate Blank	Reference Sample	100x Dilution	250x Dilution	100x Dilution	25x Dilution
Percent Solids	0	0	0	82	88	90	86	80
PESTICIDE/PCB COMPOUND	ug/L	ug/L	ug/L	ug/Kg	ug/Kg	ug/Kg	ug/Kg	ug/Kg
alpha-BHC	0.050	0.050	0.050	2.1	190 UJ	470 UJ	200 UJ	53 UJ
beta-BHC	0.050	0.050	0.050	2.1	190 UJ	470 UJ	200 UJ	53 UJ
delta-BHC	0.050	0.050	0.050	2.1	190 UJ	470 UJ	200 UJ	53 UJ
gamma-BHC (Lindane)	0.050	0.050 R	0.050	2.1	190 UJ	470 UJ	200 UJ	53 UJ
Heptachlor	0.050	0.050	0.050	2.1	190 UJ	470 UJ	200 UJ	53 UJ
Aldrin	0.050	0.050	0.050	2.1	190 UJ	4700 *	2000 *	53 UJ
Heptachlor epoxide	0.050	0.050	0.050	2.1	190 UJ	470 UJ	200 UJ	53 UJ
Endosulfan I	0.050	0.050	0.050	2.1	190 UJ	470 UJ	200 UJ	53 UJ
Dieldrin	0.10	0.10 R	0.10	4.0	380 UJ	920 UJ	380 UJ	100 UJ
4,4'-DDE	0.10	0.10	0.10	4.0	380 UJ	920 UJ	380 UJ	100 UJ
Endrin	0.10	0.10 R	0.10	4.0	380 UJ	920 UJ	380 UJ	100 UJ
Endosulfan II	0.10	0.10	0.10	4.0	380 UJ	920 UJ	380 UJ	100 UJ
4,4'-DDD	0.10	0.10	0.10	4.0	380 UJ	920 UJ	380 UJ	100 UJ
Endosulfan sulfate	0.10	0.10	0.10	4.0	380 UJ	920 UJ	380 UJ	100 UJ
4,4'-DDT	0.10	0.10	0.10	4.0	380 UJ	920 UJ	380 UJ	100 UJ
Methoxychlor	0.50	0.50	0.50	21	1900 UJ	4700 UJ	2000 UJ	530 UJ
Endrin ketone	0.10	0.10	0.10	4.0	380 UJ	920 UJ	380 UJ	100 UJ
Endrin aldehyde	0.10	0.10	0.10	4.0	380 UJ	920 UJ	380 UJ	100 UJ
alpha-Chlordane	0.050	0.050	0.050	2.1	190 UJ	470 UJ	200 UJ	53 UJ
gamma-Chlordane	0.050	0.050	0.050	2.1	190 UJ	470 UJ	200 UJ	53 UJ
Toxaphene	5.0	5.0	5.0	210	19000 UJ	47000 UJ	20000 UJ	5300 UJ
Aroclor-1016	1.0	1.0	1.0	40	3800 UJ	9200 UJ	3800 UJ	1000 UJ
Aroclor-1221	2.0	2.0	2.0	82	7600 UJ	19000 UJ	7800 UJ	2100 UJ
Aroclor-1232	1.0	1.0	1.0	40	3800 UJ	9200 UJ	3800 UJ	1000 UJ
Aroclor-1242	1.0	1.0	1.0	40	38000 *	92000 *	38000 *	10000 *
Aroclor-1248	1.0	1.0	1.0	40	3800 UJ	9200 UJ	3800 UJ	1000 UJ
Aroclor-1254	1.0	1.0	1.0	40	3800 UJ	9200 UJ	3800 UJ	1000 UJ
Aroclor-1260	1.0	1.0	1.0	40	3800 UJ	9200 UJ	3800 UJ	1000 UJ

UJ Quantitation limit is approximate due to limitations identified during the quality control review.

R Value is rejected.

* Quantitation limit obtained through dilution.

TABLE 6 Page 2 of 2

CLP EXTRACTABLE ORGANIC ANALYSIS

CASE NO. 18627 SDG NO. ADC65

SAMPLE QUANTITATION LIMITS

Sample Location	Jard Company	Jard Company	Jard Company	Jard Company	Jard Company
Sample Number	SS-37-12	SS-37-13	SS-37-14 Dup. of SS-37-13	RB-37-15	SS-37-16
Traffic Report Number	ADC76	ADC77	ADC78	ADC79	ADC80
Remarks	20x Dilution	100x Dilution	20x Dilution	Rinsate Blank	100x Dilution
Percent Solids	74	84	81	0	49
PESTICIDE/PCB COMPOUND	ug/Kg	ug/Kg	ug/Kg	ug/L	ug/Kg
alpha-BHC	46 UJ	200 UJ	42 UJ	0.050 UJ	350 UJ
beta-BHC	46 UJ	200 UJ	42 UJ	0.050 UJ	350 UJ
delta-BHC	46 UJ	200 UJ	42 UJ	0.050 UJ	350 UJ
gamma-BHC (Lindane)	46 UJ	200 UJ	42 UJ	0.050 UJ	350 UJ
Heptachlor	46 UJ	200 UJ	42 UJ	0.050 UJ	350 UJ
Aldrin	460 *	200	420 *	0.050 UJ	350
Heptachlor epoxide	46 UJ	200 UJ	42 UJ	0.050 UJ	350 UJ
Endosulfan I	46 UJ	200 UJ	42 UJ	0.050 UJ	350 UJ
Dieldrin	89 UJ	390 UJ	82 UJ	0.10 UJ	670 UJ
4,4'-DDE	89 UJ	390 UJ	82 UJ	0.10 UJ	670 UJ
Endrin	89 UJ	390 UJ	82 UJ	0.10 UJ	670 UJ
Endosulfan II	89 UJ	390 UJ	82 UJ	0.10 UJ	670 UJ
4,4'-DDD	89 UJ	390 UJ	82 UJ	0.10 UJ	670 UJ
Endosulfan sulfate	89 UJ	390 UJ	82 UJ	0.10 UJ	670 UJ
4,4'-DDT	89 UJ	390 UJ	82 UJ	0.10 UJ	670 UJ
Methoxychlor	460 UJ	2000 UJ	420 UJ	0.50 UJ	3500 UJ
Endrin ketone	89 UJ	390 UJ	82 UJ	0.10 UJ	670 UJ
Endrin aldehyde	89 UJ	390 UJ	82 UJ	0.10 UJ	670 UJ
alpha-Chlordane	46 UJ	200 UJ	42 UJ	0.050 UJ	350 UJ
gamma-Chlordane	46 UJ	200 UJ	42 UJ	0.050 UJ	350 UJ
Toxaphene	4600 UJ	20000 UJ	4200 UJ	5.0 UJ	35000 UJ
Aroclor-1016	890 UJ	3900 UJ	820 UJ	1.0 UJ	6700 UJ
Aroclor-1221	1800 UJ	8000 UJ	1600 UJ	2.0 UJ	14000 UJ
Aroclor-1232	890 UJ	3900 UJ	820 UJ	1.0 UJ	6700 UJ
Aroclor-1242	8900 *	39000 *	8200 *	1.0 UJ	67000 *
Aroclor-1248	890 UJ	3900 UJ	820 UJ	1.0 UJ	6700 UJ
Aroclor-1254	890 UJ	3900 UJ	820 UJ	1.0 UJ	6700 UJ
Aroclor-1260	890 UJ	3900 UJ	820 UJ	1.0 UJ	6700 UJ

UJ Quantitation limit is approximate due to limitations identified during the quality control review.

* Quantitation limit obtained through dilution.

CLP INORGANIC ANALYSIS
CASE NO. 18627 SDG NO. MAAX01
ANALYTICAL RESULTS

Sample Location			Jard Company	Jard Company	Jard Company	Jard Company
Sample Number			GW-37-01	GW-37-02	RB-37-05	RB-37-15
Traffic Report Number			MAAX01	MAAX02	MAAX05	MAAX15
Remarks			Reference Sample		Rinsate Blank	Rinsate Blank
Sampling Date			8/18/92	8/18/92	8/18/92	8/18/92
Inorganic Elements		CRDL (ug/L)	ug/L	ug/L	ug/L	ug/L
Aluminum	P	200	7330 J	738 J		
Antimony	P	60				
Arsenic	F	10				
Barium	P	200	121	41.7		
Beryllium	P	5	0.50			
Cadmium	P	5				
Calcium	P	5000	16900	6770	27.1	
Chromium	P	10	42.8	4.5		
Cobalt	P	50	26.4	13.0		
Copper	P	25	22.9	29.3		
Iron	P	100	17600	2570		
Lead	F	3	12.6 J			1.7
Magnesium	P	5000	6310	2070		
Manganese	P	15	795	39.9		
Mercury	V	0.2				
Nickel	P	40	27.4			
Potassium	P	5000	2940	799		
Selenium	F	5				
Silver	P	10				
Sodium	P	5000	4240	3860	42.8	66.0
Thallium	F	10				
Vanadium	P	50	64.7			
Zinc	P	20	73.4	11.8		
Cyanide	C	10				

Analytical Method
F Furnace
P ICP/Flame AA
V Cold Vapor
C Colorimetric

A blank space indicates the element was not detected.
J Quantitation is approximate due to limitations identified in the quality control review.

Sample Detection Limits for the elements listed above are reported in Table 2

CLP INORGANIC ANALYSIS
CASE NO. 18627 SDG NO. MAAX01
SAMPLE DETECTION LIMITS

Sample Location			Jard Company	Jard Company	Jard Company	Jard Company
Sample Number			GW-37-01	GW-37-02	RB-37-05	RB-37-15
Traffic Report Number			MAAX01	MAAX02	MAAX05	MAAX15
Remarks			Reference Sample		Rinsate Blank	Rinsate Blank
Sampling Date			8/18/92	8/18/92	8/18/92	8/18/92
Percent Solids			0.0	0.0	0.0	0.0
Inorganic Elements		IDL (ug/L)	ug/L	ug/L	ug/L	ug/L
Aluminum	P	17.3	17.30	17.30	17.30	17.30
Antimony	P	16.5	16.50	16.50	16.50	16.50
Arsenic	F	2.4	3.50 UJ	2.40	2.40	2.40
Barium	P	1.0	1.00	1.00	1.00	1.00
Beryllium	P	0.4	0.40	0.40	0.40	0.40
Cadmium	P	1.4	1.40	1.40	1.40	1.40
Calcium	P	14.3	14.30	14.30	14.30	14.30
Chromium	P	3.7	3.70	3.70	3.70	3.70
Cobalt	P	2.3	2.30	2.30	2.30	2.30
Copper	P	2.4	2.40	2.40	2.40	2.40
Iron	P	16.3	16.30	16.30	16.30	16.30
Lead	F	1.0	1.00	5.30	1.00	1.00
Magnesium	P	16.6	16.60	16.60	16.60	16.60
Manganese	P	1.3	1.30	1.30	1.30	1.30
Mercury	V	0.2	0.20	0.20	0.20	0.20
Nickel	P	6.0	6.00	6.00	6.00	6.00
Potassium	P	77.1	77.10	77.10	77.10	77.10
Selenium	F	3.6	3.60 UJ	3.60	3.60	3.60
Silver	P	2.3	2.30	2.30	2.30	2.30
Sodium	P	29.7	29.70	29.70	29.70	29.70
Thallium	F	0.9	0.90	0.90	0.90	0.90
Vanadium	P	3.3	3.30	3.30	3.30	3.30
Zinc	P	10.1	10.10	10.10	10.10	10.10
Cyanide	C	10.0	10.00	10.00	10.00	10.00

Analytical Method

F Furnace AA P ICP/Flame AA V Cold Vapor C Colorimetric

Sample's wet weight (gms) digested
for Hg analysis
for ICP analysis
for furnace AA analysis
for Cyanide analysis

Volumes used preparing samples for analysis
for Hg analysis 100 mls
for ICP/AA analysis 200 mls
for Cyanide analysis 50 mls

UJ Value is undetected and the quantitation is approximate due to limitations identified in the quality control review.
R Value is rejected.

CLP INORGANIC ANALYSIS
CASE NO 18627 SDG NO MAAX07
ANALYTICAL RESULTS

Sample Location			Jard Company	Jard Company	Jard Company	Jard Company	Jard Company	Jard Company	Jard Company	Jard Company
Sample Number			SS-37-07	SS-37-08	SS-37-09	SS-37-10	SS-37-11	SS-37-12	SS-37-13	SS-37-14
Traffic Report Number			MAAX07	MAAX08	MAAX09	MAAX10	MAAX11	MAAX12	MAAX13	MAAX14
Remarks			Reference Sample							Duplicate of SS-37-13
Sampling Date			8/18/92	8/18/92	8/18/92	8/18/92	8/18/92	8/18/92	8/18/92	8/18/92
Inorganic Elements		CRDL (ug/L)	mg/Kg	mg/Kg	mg/Kg	mg/Kg	mg/Kg	mg/Kg	mg/Kg	mg/Kg
Aluminum	P	200	5190	2280	2120	4150	4910	6140	3610	3520
Antimony	P	60								
Arsenic	F	10	1.7	2.3	1.4	1.5 J	2.5	0.84	7.8	3.0
Barium	P	200	59.1	24.9	14.1 J	29.0	27.2	9.7 J	34.1	36.3
Beryllium	P	5								
Cadmium	P	5				7.2 J		10.6 J		
Calcium	P	5000	1520	61200	53300	25500	11100	7030	8230	11800
Chromium	P	10				11.0	14.5	18.8		
Cobalt	P	50	5.9	5.2					8.8	5.7
Copper	P	25	11.1	25.8	9.2	68.7	297	43.2	13.8	14.4
Iron	P	100	10500	8450	7600	13100	16200	31100	12900	11600
Lead	F	3	24.8 J	41.2 J	9.3 J	1410 J	179 J	86.3 J	34.4 J	27.4 J
Magnesium	P	5000	2120	20400	18000	12200	7310	4640	5110	7270
Manganese	P	15	325 J	280 J	235 J	186 J	308 J	148 J	272 J	177 J
Mercury	V	0.2				0.78 J		1.3 J	0.05 J	
Nickel	P	40	6.6	10.5	12.0	21.6	14.0	80.5	7.8	7.8
Potassium	P	5000	638	143	167	491	451	98.1	444	406
Selenium	F	5								
Silver	P	10				1.2		4.3		
Sodium	P	5000								
Thallium	F	10			0.88 J					
Vanadium	P	50	12.5	5.1	5.1	11.7	12.9	13.7	8.4	8.0
Zinc	P	20	1260	25600	47600	65200	18200	505000	3280	3610
Cyanide	C	10								

Analytical Method
F Furnace
P ICP/Flame AA
V Cold Vapor
C Colorimetric

A blank space indicates the element was not detected.
J Quantitation is approximate due to limitations identified in the quality control review.

Sample Detection Limits for the elements listed above are reported in Table 2.

CLP INORGANIC ANALYSIS
CASE NO. 18627 SDG NO. MAAX07
ANALYTICAL RESULTS

Sample Location			Jard Company
Sample Number			SS-37-16
Traffic Report Number			MAAX16
Remarks			
Sampling Date			8/18/92
Inorganic Elements		CRDL (ug/L)	mg/Kg
Aluminum	P	200	3380
Antimony	P	60	
Arsenic	F	10	
Barium	P	200	9.1
Beryllium	P	5	
Cadmium	P	5	
Calcium	P	5000	8460
Chromium	P	10	
Cobalt	P	50	
Copper	P	25	86.7
Iron	P	100	10100
Lead	F	3	36.8 J
Magnesium	P	5000	4900
Manganese	P	15	80.0 J
Mercury	V	0.2	
Nickel	P	40	9.7
Potassium	P	5000	
Selenium	F	5	
Silver	P	10	
Sodium	P	5000	
Thallium	F	10	
Vanadium	P	50	
Zinc	P	20	23400
Cyanide	C	10	

Analytical Method
F Furnace
P ICP/Flame AA
V Cold Vapor
C Colorimetric

A blank space indicates the element was not detected.
J Quantitation is approximate due to limitations identified in the quality control review.

Sample Detection Limits for the elements listed above are reported in Table 2.

CLP INORGANIC ANALYSIS
CASE NO. 18627 SDG NO MAAX07
SAMPLE DETECTION LIMITS

Sample Location			Jard Company	Jard Company	Jard Company	Jard Company	Jard Company	Jard Company	Jard Company	Jard Company
Sample Number			SS-37-07	SS-37-08	SS-37-09	SS-37-10	SS-37-11	SS-37-12	SS 37-13	SS 37-14
Traffic Report Number			MAAX07	MAAX08	MAAX09	MAAX10	MAAX11	MAAX12	MAAX13	MAAX14
Remarks			Reference Sample							Duplicate of SS-37-13
Sampling Date			8/18/92	8/18/92	8/18/92	8/18/92	8/18/92	8/18/92	8/18/92	8/18/92
Percent Solids			82.3	87.9	89.4	86.3	72.3	75.9	81.8	81.3
Inorganic Elements		IDL (ug/L)	mg/Kg	mg/Kg	mg/Kg	mg/Kg	mg/Kg	mg/Kg	mg/Kg	mg/Kg
Aluminum	P	23.9	5.75	5.18	4.82	5.18	6.07	5.78	5.41	5.82
Antimony	P	16.3	3.92 UJ	3.53 UJ	3.29 UJ	3.53 UJ	4.14 UJ	3.94 UJ	3.69 UJ	3.97 UJ
Arsenic	F	2.4	0.55	0.50	0.48	0.53	0.59	0.58	0.55	0.56
Barium	P	4.6	1.11	1.00	0.93	1.00	1.17	1.11	1.04	1.12
Beryllium	P	0.7	0.32 UJ	0.15	0.14	0.29 UJ	0.34 UJ	0.17	0.29 UJ	0.41
Cadmium	P	1.5	0.36 UJ	0.75	0.72	0.32	1.90	0.36	1.20	1.50
Calcium	P	15.5	3.73	3.36	3.12	3.36	3.93	3.75	3.51	3.78
Chromium	P	4.9	7.40	5.10	3.20	1.06	1.24	1.18	6.80	7.10
Cobalt	P	3.5	0.84	0.76	1.80	1.80	5.20	0.85	0.79	0.85
Copper	P	3.8	0.91	0.82	0.77	0.82	0.96	0.92	0.86	0.93
Iron	P	7.6	1.83	1.65	1.53	1.65	1.93	1.84	1.72	1.85
Lead	F	1.7	0.39	0.35	0.34	0.38	0.42	0.41	0.39	0.39
Magnesium	P	40.1	9.65	8.69	8.08	8.69	10.18	9.69	9.08	9.77
Manganese	P	4.4	1.06	0.95	0.89	0.95	1.12	1.06	1.00	1.07
Mercury	V	0.1	0.06 UJ	0.06 UJ	0.05 UJ	0.06	0.07 UJ	0.06	0.05	0.06 UJ
Nickel	P	3.9	0.94	0.85	0.79	0.84	0.99	0.94	0.88	0.95
Potassium	P	265.5	63.88	57.53	53.51	57.50	67.38	64.18	60.11	64.67
Selenium	F	3.1	1.10 UJ	1.00 UJ	1.00 UJ	1.10 UJ	1.20 UJ	1.20 UJ	1.10 UJ	1.20 UJ
Silver	P	4.8	1.15	1.04	0.97	1.04	1.22	1.16	1.09	1.17
Sodium	P	31.3	30.40	22.40	15.30	34.80	43.20	34.80	24.70	29.80
Thallium	F	4.3	0.98 UJ	0.90	0.87	0.96 UJ	1.05	1.04	0.98 UJ	1.00
Vanadium	P	2.4	0.58	0.52	0.48	0.52	0.61	0.58	0.54	0.58
Zinc	P	2.9	0.70	0.63	0.58	0.63	0.74	0.70	0.66	0.71
Cyanide	C	10.0	0.60	0.55	0.55	0.57	0.65	0.62	0.61	0.60

Analytical Method

F Furnace AA P ICP/Flame AA V Cold Vapor C Colorimetric

Sample's wet weight (gms) digested								
for Hg analysis	0.21	0.20	0.23	0.20	0.20	0.21	0.23	0.22
for ICP analysis	1.01	1.05	1.11	1.07	1.09	1.09	1.08	1.01
for furnace AA analysis	1.07	1.09	1.11	1.04	1.13	1.09	1.07	1.06
for Cyanide analysis	1.01	1.03	1.02	1.01	1.07	1.06	1.00	1.03

Volumes used preparing samples for analysis

for Hg analysis	100 mls
for ICP/AA analysis	200 mls
for Cyanide analysis	50 mls

UJ Value is undetected and the quantitation is approximate due to limitations identified in the quality control review.

CLP INORGANIC ANALYSIS
CASE NO. 18627 SDG NO MAAX07
SAMPLE DETECTION LIMITS

Sample Location	Jard Company
Sample Number	SS-37-16
Traffic Report Number	MAAX16
Remarks	
Sampling Date	8/18/92
Percent Solids	47.7

Inorganic Elements		IDL (ug/L)	mg/Kg
Aluminum	P	23.9	9.73
Antimony	P	16.3	6.64 UJ
Arsenic	F	2.4	0.98
Barium	P	4.6	1.87
Beryllium	P	0.7	0.28
Cadmium	P	1.5	1.00 UJ
Calcium	P	15.5	6.31
Chromium	P	4.9	13.40
Cobalt	P	3.5	3.90
Copper	P	3.8	1.55
Iron	P	7.6	3.09
Lead	F	1.7	0.69
Magnesium	P	40.1	16.32
Manganese	P	4.4	1.79
Mercury	V	0.1	0.09 UJ
Nickel	P	3.9	1.59
Potassium	P	265.5	108.08
Selenium	F	3.1	2.00 UJ
Silver	P	4.8	1.95
Sodium	P	31.3	176.00
Thallium	F	4.3	1.75
Vanadium	P	2.4	4.50
Zinc	P	2.9	1.18
Cyanide	C	10.0	1.00

Analytical Method

F Furnace AA P ICP/Flame AA V Cold Vapor C Colorimetric

Sample's wet weight (gms) digested	
for Hg analysis	0.24
for ICP analysis	1.03
for furnace AA analysis	1.03
for Cyanide analysis	1.05

Volumes used preparing samples for analysis	
for Hg analysis	100 mls
for ICP/AA analysis	200 mls
for Cyanide analysis	50 mls

UJ Value is undetected and the quantitation is approximate due to limitations identified in the quality control review.

FACILITY SAMPLED. Jard

US ENVIRONMENTAL PROTECTION AGENCY
REGION I LABORATORY
GC/MS PURGEABLE ORGANIC ANALYSIS – WATER

SAMPLE NO.: ~~GWL-87-03~~ ADC67
SAMPLE LOCATION:
DATE OF COLLECTION:
INSTRUMENT: INCOS–50

DATE OF ANALYSIS: 8/25/92
REFERENCE BOOK: 122
PRESERVATIVE: Cool to 4 C

SAMPLE RESULTS:

CAS NO.	STORET NO.	Compound	Conc. (ug/L)	Det. Limit (ug/L)	Comments
		TARGET COMPOUNDS			
74–87–3	34418	Chloromethane	ND	40	
74–83–9	34413	Bromomethane	ND	20	
75–01–4	39175	Vinyl Chloride	ND	20	
75–00–3	34311	Chloroethane	ND	20	
75–09–2	34423	Methylene Chloride	ND	20	
75–69–4	34488	Trichlorofluoromethane	ND	20	
75–35–4	34501	1,1–Dichloroethylene	ND	20	
75–34–3	34496	1,1–Dichloroethane	ND	20	
156–60–5	34546	1,2–Dichloroethylene isomers	ND	20	
67–66–3	32106	Chloroform	ND	20	
107–06–2	34531	1,2–Dichloroethane	ND	20	
71–55–6	34506	1,1,1–Trichloroethane	ND	20	
56–23–5	32102	Carbon Tetrachloride	ND	20	
75–27–4	32101	Bromodichloromethane	ND	20	
78–87–5	34541	1,2–Dichloropropane	ND	20	
10061–02–6	34699	t–1,3–Dichloropropene	ND	20	
79–01–6	39180	Trichloroethylene	ND	20	
124–48–1	32105	Dibromochloromethane	ND	20	
10061–01–5	34704	c–1,3–Dichloropropene and/or 1,1–Dichloropropene	ND	20	
79–00–5	34511	1,1,2–Trichloroethane	ND	20	
71–43–2	34030	Benzene	ND	20	
110–75–8	34576	2–Chloroethylvinyl ether	ND	80	
75–25–2	32104	Bromoform	ND	20	
127–18–4	34475	Tetrachloroethylene	ND	20	
630–20–6		1,1,1,2–Tetrachloroethane	ND	20	
79–34–5	34516	1,1,2,2–Tetrachloroethane	ND	20	
108–88–3	34010	Toluene	ND	20	
108–90–7	34301	Chlorobenzene	ND	20	
100–41–4	34371	Ethylbenzene	ND	20	
107–02–8	34210	Acrolein	ND	600	
107–13–1	34215	Acrylonitrile	ND	600	
		Dichlorobenzene isomers	**~260**	**40**	
		1,1,2–Trichloro–1,2,2–trifluoroethane	ND	20	
67–64–1	81552	Acetone	ND	800	
75–15–0	77041	Carbon Disulfide	ND	60	

(con't)

p. 4

US ENVIRONMENTAL PROTECTION AGENCY
REGION I LABORATORY
GC/MS PURGEABLE ORGANIC ANALYSIS – WATER

SAMPLE NO.: GW-~~37~~-03 ADC 47
Sample Results Continued:

CAS NO.	STORET NO.	Compound	Conc. (ug/L)	Det. Limit (ug/L)	Comments
78-93-3	81595	2-Butanone (MEK)	ND	2000	
108-05-4	77057	Vinyl Acetate	ND	200	
591-10-6	77103	2-Hexanone	ND	20	
108-10-1	81596	4-Methyl-2-Pentanone(MIBK)	ND	60	
100-42-5	81708	Styrene	ND	20	
133-02-7	81551	Xylenes (total)	ND	40	
		1,2-Dibromoethane	ND	20	
		Tetrahydrofuran	ND	200	
		Ethyl ether	ND	60	

Other Compounds
Tentatively Identified

Methyl heptanol
Methyl decene
Tetra decene isomers
Biphenyl

Other Compounds Quantitated

1,2,4-Trichlorobenzene	~25	20
1,3,5-Trichlorobenzene	~24	20

Sample Recoveries for Surrogate Compounds:	Observed Recoveries	95%Confonfidence Limits
1,2-Dichloroethane,d4	100%	77-117
Toluene,d8	99%	89-109
1,4-Bromofluorobenzene	92%	89-113

Notes:
ND=none detected
~ =approximate
<=less than
>=greater than

p. 5

US ENVIRONMENTAL PROTECTION AGENCY
REGION I LABORATORY
GC/MS PURGEABLE ORGANIC ANALYSIS – WATER

SAMPLE NO.: ~~GW-87-04~~ ADC.68
SAMPLE LOCATION:
DATE OF COLLECTION:
INSTRUMENT: INCOS-50

DATE OF ANALYSIS: 8/25/9
REFERENCE BOOK: 122
PRESERVATIVE: Cool to 4 C

SAMPLE RESULTS:

CAS NO.	STORET NO.	Compound	Conc. (ug/L)	Det. Limit (ug/L)	Cor
		TARGET COMPOUNDS			
74-87-3	34418	Chloromethane	ND	40	
74-83-9	34413	Bromomethane	ND	20	
75-01-4	39175	Vinyl Chloride	ND	20	
75-00-3	34311	Chloroethane	ND	20	
75-09-2	34423	Methylene Chloride	ND	20	
75-69-4	34488	Trichlorofluoromethane	ND	20	
75-35-4	34501	1,1-Dichloroethylene	ND	20	
75-34-3	34496	1,1-Dichloroethane	ND	20	
156-60-5	**34546**	**1,2-Dichloroethylene isomers**	**~41**	**20**	
67-66-3	32106	Chloroform	ND	20	
107-06-2	34531	1,2-Dichloroethane	ND	20	
71-55-6	**34506**	**1,1,1-Trichloroethane**	**~85**	**20**	
56-23-5	32102	Carbon Tetrachloride	ND	20	
75-27-4	32101	Bromodichloromethane	ND	20	
78-87-5	34541	1,2-Dichloropropane	ND	20	
10061-02-6	34699	t-1,3-Dichloropropene	ND	20	
79-01-6	**39180**	**Trichloroethylene**	**~31**	**20**	
124-48-1	32105	Dibromochloromethane	ND	20	
10061-01-5	34704	c-1,3-Dichloropropene and/or 1,1-Dichloropropene	ND	20	
79-00-5	34511	1,1,2-Trichloroethane	ND	20	
71-43-2	**34030**	**Benzene**	**~25**	**20**	
110-75-8	34576	2-Chloroethylvinyl ether	ND	80	
75-25-2	32104	Bromoform	ND	20	
127-18-4	34475	Tetrachloroethylene	ND	20	
630-20-6		1,1,1,2-Tetrachloroethane	ND	20	
79-34-5	34516	1,1,2,2-Tetrachloroethane	ND	20	
108-88-3	**34010**	**Toluene**	**~77**	**20**	
108-90-7	**34301**	**Chlorobenzene**	**~25**	**20**	
100-41-4	**34371**	**Ethylbenzene**	**~46**	**20**	
107-02-8	34210	Acrolein	ND	600	
107-13-1	34215	Acrylonitrile	ND	600	
		Dichlorobenzene isomers	**~2200**	**40**	
		1,2,2-Trichloro-1,2,2 trifluoroethane	ND	20	
67-64-1	81552	Acetone	ND	800	
75-15-0	77041	Carbon Disulfide	ND	60	

(con't)

p

US ENVIRONMENTAL PROTECTION AGENCY
REGION I LABORATORY
GC/MS PURGEABLE ORGANIC ANALYSIS – WATER

SAMPLE NO.: GW ~~37~~-04 ADC68
Sample Results Continued:

CAS NO.	STORET NO.	Compound	Conc. (ug/L)	Det. Limit (ug/L)	Comment
78-93-3	81595	2-Butanone (MEK)	ND	2000	
108-05-4	77057	Vinyl Acetate	ND	200	
591-10-6	77103	2-Hexanone	ND	20	
108-10-1	81596	4-Methyl-2-Pentanone(MIBK)	ND	60	
100-42-5	81708	Styrene	ND	20	
133-02-7	81551	Xylenes (total)	~180	40	
		1,2-Dibromoethane (EDB)	ND	20	
		Tetrahydrofuran	ND	200	
		Ethyl ether	ND	60	

Other Compounds Tentatively Identified

Dimethyl ethyl Benzene (isomers)
Methyl decene
Tetra decene isomers
Chlorobiphenyl

Other Compounds Quantitated

Isopropyl benzene	~33	20
1,2,4-Trimethylbenzene	~150	20
1,3,5-Trimethylbenzene	~240	20
1,2,3-Trichlorobenzene	~36	20
1,2,4-Trichlorobenzene	~200	20
Naphthalene	~24	20

Sample Recoveries for Surrogate Compounds:	Observed Recoveries	95% Confontidence Limits
1,2-Dichloroethane,d4	100%	77-117
Toluene,d8	101%	89-113
1,4-Bromofluorobenzene	86%	89-113

Notes:
ND=none detected
~ =approximate
< =less than
> =greater than

p. 7

FACILITY SAMPLED: JARD COMPANY

US ENVIRONMENTAL PROTECTION AGENCY
REGION I LABORATORY
GC/MS EXTRACTABLE ORGANIC ANALYSIS

SAMPLE NO.: ADC 67 AQUEOUS
SAMPLE LOCATION:
DATE OF COLLECTION:
TIME OF COLLECTION:

Matrix: Water
Sample pH: 5
Dilution Factors
Base:
Acid:

SAMPLE RESULTS:

CAS NO.	Compound	Conc. (ug/L)	PQL (ug/L)	Qualif or Com
	Priority Pollutants			
83-32-9	Acenaphthene	ND	6E+01	
208-96-8	Acenaphthylene	ND	6E+01	
120-12-7	Anthracene	ND	6E+01	
309-00-2	Aldrin	ND	6E+01	
56-55-3	Benzo(a)anthracene	ND	6E+01	
205-99-2	Benzo(b)fluoranthene	ND	6E+01	
207-08-9	Benzo(k)fluoranthene	ND	6E+01	
50-32-8	Benzo(a)pyrene	ND	6E+01	
191-24-2	Benzo(ghi)perylene	ND	6E+01	
85-68-7	Benzyl butyl phthalate	ND	6E+01	
319-85-7	beta-BHC	ND	6E+01	
319-86-8	delta-BHC	ND	6E+01	
111-44-4	Bis(2-chloroethyl)ether	ND	6E+01	
111-91-1	Bis(2-chloroethoxy)methane	ND	6E+01	
117-81-7	**Bis(2-ethylhexyl)phthalate**	**19000**	**6E+01**	
108-60-1	Bis(2-chloroisopropyl)ether	ND	6E+01	
101-55-3	4-Bromophenylphenyl ether	ND	6E+01	
59-50-7	4-Chloro-3-methylphenol	ND	1E+02	
91-58-7	2-Chloronaphthalene	ND	6E+01	
95-57-8	2-Chlorophenol	ND	1E+02	
7005-72-3	4-Chlorophenylphenyl ether	ND	6E+01	
218-01-9	Chrysene	ND	6E+01	
72-54-8	4,4'-DDD	ND	6E+01	
72-55-9	4,4'-DDE	ND	6E+01	
50-29-3	4,4'-DDT	ND	6E+01	
53-70-3	Dibenzo(a,h)anthracene	ND	6E+01	
84-74-2	Di-n-butylphthalate	ND	6E+01	
541-73-1	1,3-Dichlorobenzene	ND	6E+01	

(cont.)

US ENVIRONMENTAL PROTECTION AGENCY
REGION I LABORATORY
GC/MS EXTRACTABLE ORGANIC ANALYSIS

SAMPLE NO.: ADC 67 AQUEOUS
Sample Results Continued:

CAS NO.	Compound	Conc. (ug/L)	PQL (ug/L)	Qu or
95-50-1	1,2-Dichlorobenzene	ND	6E+01	
106-46-7	**1,4-Dichlorobenzene**	**~30**	**6E+01**	
91-94-1	3,3'-Dichlorobenzidine	ND	1E+02	
120-83-2	2,4-Dichlorophenol	ND	1E+02	
60-57-1	Dieldrin	ND	6E+01	
84-66-2	Diethylphthalate	ND	6E+01	
105-67-9	**2,4-Dimethylphenol**	**~10**	**1E+02**	
131-11-3	Dimethylphthalate	ND	6E+01	
51-28-5	2,4-Dinitrophenol	ND	2E+02	
121-14-2	2,4-Dinitrotoluene	ND	6E+01	
606-20-2	2,6-Dinitrotoluene	ND	6E+01	
117-84-0	Di-n-octylphthalate	ND	6E+01	
206-44-0	Fluoranthene	ND	6E+01	
86-73-7	**Fluorene**	**~20**	**6E+01**	
76-44-8	Heptachlor	ND	6E+01	
1024-57-3	Heptachlor epoxide	ND	6E+01	
118-74-1	Hexachlorobenzene	ND	6E+01	
87-68-3	Hexachlorobutadiene	ND	6E+01	
77-47-4	Hexachlorocyclopentadiene	ND	6E+01	
67-72-1	Hexachloroethane	ND	6E+01	
193-39-5	Indeno(1,2,3-cd)pyrene	ND	6E+01	
78-59-1	Isophorone	ND	6E+01	
86-74-8	Carbazole	ND	6E+01	
534-52-1	2-Methyl-4,6-dinitrophenol	ND	2E+02	
91-20-3	Naphthalene	ND	6E+01	
98-95-3	Nitrobenzene	ND	6E+01	
88-75-5	2-Nitrophenol	ND	1E+02	
100-02-7	4-Nitrophenol	ND	2E+02	
86-30-3	N-Nitrosodiphenylamine	ND	6E+01	
621-64-7	N-Nitrosodi-n-propylamine	ND	6E+01	
87-86-5	Pentachlorophenol	ND	2E+02	
85-01-8	Phenanthrene	ND	6E+01	
108-95-2	Phenol	ND	1E+02	
129-00-0	Pyrene	ND	6E+01	

(cont.)

US ENVIRONMENTAL PROTECTION AGENCY
REGION I LABORATORY
GC/MS EXTRACTABLE ORGANIC ANALYSIS

SAMPLE NO.: ADC 67 AQUEOUS
Sample Results Continued:

CAS NO.	Compound	Conc. (ug/L)	PQL (ug/L)	Quali or Co
120-82-1	1,2,4-Trichlorobenzene	ND	6E+01	
88-06-2	2,4,6-Trichlorophenol	ND	1E+02	
	Hazardous Substances			
65-53-3	Aniline	ND	1E+02	
65-85-0	Benzoic Acid	ND	2E+02	
100-51-6	Benzyl Alcohol	ND	1E+02	
106-47-8	4-Chloroaniline	ND	6E+01	
132-64-9	Dibenzofuran	ND	6E+01	
91-57-6	2-Methylnaphthalene	ND	6E+01	
95-48-7	2-Methylphenol	ND	6E+01	
106-44-5	4-Methylphenol	ND	6E+01	
88-74-4	2-Nitroaniline	ND	2E+02	
99-09-2	3-Nitroaniline	ND	2E+02	
100-01-6	4-Nitroaniline	ND	2E+02	
95-95-4	2,4,5-Trichlorophenol	ND	2E+02	
	Other Compounds Quantitated			
	Diphenylhydrazine (azobenzene)	ND	6E+01	

Tentatively Identified Compounds	Est. Conc. (ug/L)
C11 H16O Isomer	~400
Benzene,1,2-Dimethyl-4 (Phenyl Methyl)	~200
PCB's Present	

US ENVIRONMENTAL PROTECTION AGENCY
REGION I LABORATORY
GC/MS EXTRACTABLE ORGANIC ANALYSIS

SAMPLE NO.: ADC 67 AQUEOUS
Sample Results Continued:

Sample Recoveries For Surrogate Compounds:	Recoveries (%)	QC Range (%)
2-Fluorophenol	68	21-110
Phenol,d5	63	10-110
Nitrobenzene,d5	85	35-114
Fluorobiphenyl	90	43-116
2,4,6-Tribromophenol	91	10-123
p-Terphenyl,d14	93	33-141

Notes:

PQL = Practical quantitation level
(6E+00 = 6, 1E+01 = 10, 4E-01 = 0.4)
ND = None detected
~ = Approximate
< = Less than
> = Greater than
NA = Not available, due to sample dilution or interference
E = Estimated value exceeds the calibration range
L = Estimated value is below the calibration range
B = Analyte is associated with the lab blank or trip blank contamination. Values are reported when observed concentration is ten times higher than the common contaminants (phthalates and adipates) or is five times higher than the remaining contaminants.
C = This compound is confirmation for the pesticide analyses. See the pesticide report for the quantitation

FACILITY SAMPLED: JARD COMPANY

US ENVIRONMENTAL PROTECTION AGENCY
REGION I LABORATORY
GC/MS EXTRACTABLE ORGANIC ANALYSIS

SAMPLE NO.: ADC 68 AQUEOUS
SAMPLE LOCATION:
DATE OF COLLECTION:
TIME OF COLLECTION:

Matrix: Wate
Sample pH:
Dilution Factors
Base:
Acid:

SAMPLE RESULTS:

CAS NO.	Compound	Conc. (ug/L)	PQL (ug/L)	Qual or C
	Priority Pollutants			
83-32-9	Acenaphthene	ND	6E+01	
208-96-8	Acenaphthylene	ND	6E+01	
120-12-7	Anthracene	ND	6E+01	
309-00-2	Aldrin	ND	6E+01	
56-55-3	Benzo(a)anthracene	ND	6E+01	
205-99-2	Benzo(b)fluoranthene	ND	6E+01	
207-08-9	Benzo(k)fluoranthene	ND	6E+01	
50-32-8	Benzo(a)pyrene	ND	6E+01	
191-24-2	Benzo(ghi)perylene	ND	6E+01	
85-68-7	Benzyl butyl phthalate	ND	6E+01	
319-85-7	beta-BHC	ND	6E+01	
319-86-8	delta-BHC	ND	6E+01	
111-44-4	Bis(2-chloroethyl)ether	ND	6E+01	
111-91-1	Bis(2-chloroethoxy)methane	ND	6E+01	
117-81-7	**Bis(2-ethylhexyl)phthalate**	**17000**	**6E+01**	
108-60-1	Bis(2-chloroisopropyl)ether	ND	6E+01	
101-55-3	4-Bromophenylphenyl ether	ND	6E+01	
59-50-7	4-Chloro-3-methylphenol	ND	1E+02	
91-58-7	2-Chloronaphthalene	ND	6E+01	
95-57-8	2-Chlorophenol	ND	1E+02	
7005-72-3	4-Chlorophenylphenyl ether	ND	6E+01	
218-01-9	Chrysene	ND	6E+01	
72-54-8	4,4'-DDD	ND	6E+01	
72-55-9	4,4'-DDE	ND	6E+01	
50-29-3	4,4'-DDT	ND	6E+01	
53-70-3	Dibenzo(a,h)anthracene	ND	6E+01	
84-74-2	Di-n-butylphthalate	ND	6E+01	
541-73-1	1,3-Dichlorobenzene	ND	6E+01	

(cont.)

US ENVIRONMENTAL PROTECTION AGENCY
REGION I LABORATORY
GC/MS EXTRACTABLE ORGANIC ANALYSIS

SAMPLE NO.: ADC 68 AQUEOUS
Sample Results Continued:

CAS NO.	Compound	Conc. (ug/L)	PQL (ug/L)	Quali or Co
95-50-1	1,2-Dichlorobenzene	ND	6E+01	
106-46-7	**1,4-Dichlorobenzene**	**~30**	**6E+01**	**L**
91-94-1	3,3'-Dichlorobenzidine	ND	1E+02	
120-83-2	2,4-Dichlorophenol	ND	1E+02	
60-57-1	Dieldrin	ND	6E+01	
84-66-2	Diethylphthalate	ND	6E+01	
105-67-9	2,4-Dimethylphenol	ND	1E+02	
131-11-3	Dimethylphthalate	ND	6E+01	
51-28-5	2,4-Dinitrophenol	ND	2E+02	
121-14-2	2,4-Dinitrotoluene	ND	6E+01	
606-20-2	2,6-Dinitrotoluene	ND	6E+01	
117-84-0	Di-n-octylphthalate	ND	6E+01	
206-44-0	Fluoranthene	ND	6E+01	
86-73-7	**Fluorene**	**~20**	**6E+01**	**L**
76-44-8	Heptachlor	ND	6E+01	
1024-57-3	Heptachlor epoxide	ND	6E+01	
118-74-1	Hexachlorobenzene	ND	6E+01	
87-68-3	Hexachlorobutadiene	ND	6E+01	
77-47-4	Hexachlorocyclopentadiene	ND	6E+01	
67-72-1	Hexachloroethane	ND	6E+01	
193-39-5	Indeno(1,2,3-cd)pyrene	ND	6E+01	
78-59-1	Isophorone	ND	6E+01	
86-74-8	Carbazole	ND	6E+01	
534-52-1	2-Methyl-4,6-dinitrophenol	ND	2E+02	
91-20-3	Naphthalene	ND	6E+01	
98-95-3	Nitrobenzene	ND	6E+01	
88-75-5	2-Nitrophenol	ND	1E+02	
100-02-7	4-Nitrophenol	ND	2E+02	
86-30-3	N-Nitrosodiphenylamine	ND	6E+01	
621-64-7	N-Nitrosodi-n-propylamine	ND	6E+01	
87-86-5	Pentachlorophenol	ND	2E+02	
85-01-8	Phenanthrene	ND	6E+01	
108-95-2	Phenol	ND	1E+02	
129-00-0	Pyrene	ND	6E+01	

(cont.)

US ENVIRONMENTAL PROTECTION AGENCY
REGION I LABORATORY
GC/MS EXTRACTABLE ORGANIC ANALYSIS

SAMPLE NO.: ADC 68 AQUEOUS
Sample Results Continued:

CAS NO.	Compound	Conc. (ug/L)	PQL (ug/L)	Qual: or Co
120-82-1	1,2,4-Trichlorobenzene	ND	6E+01	
88-06-2	2,4,6-Trichlorophenol	ND	1E+02	
	Hazardous Substances			
65-53-3	Aniline	ND	1E+02	
65-85-0	Benzoic Acid	ND	2E+02	
100-51-6	Benzyl Alcohol	ND	1E+02	
106-47-8	4-Chloroaniline	ND	6E+01	
132-64-9	Dibenzofuran	ND	6E+01	
91-57-6	2-Methylnaphthalene	ND	6E+01	
95-48-7	2-Methylphenol	ND	6E+01	
106-44-5	4-Methylphenol	ND	6E+01	
88-74-4	2-Nitroaniline	ND	2E+02	
99-09-2	3-Nitroaniline	ND	2E+02	
100-01-6	4-Nitroaniline	ND	2E+02	
95-95-4	2,4,5-Trichlorophenol	ND	2E+02	
	Other Compounds Quantitated			
	Diphenylhydrazine (azobenzene)	ND	6E+01	

Tentatively Identified Compounds	Est. Conc. (ug/L)
C11 H160 Isomer	~400

PCB's Present

US ENVIRONMENTAL PROTECTION AGENCY
REGION I LABORATORY
GC/MS EXTRACTABLE ORGANIC ANALYSIS

SAMPLE NO.: ADC 68 AQUEOUS
Sample Results Continued:

Sample Recoveries For Surrogate Compounds:	Recoveries (%)	QC I (!
2-Fluorophenol	67	21-
Phenol,d5	64	10-
Nitrobenzene,d5	65	35-
Fluorobiphenyl	80	43-
2,4,6-Tribromophenol	85	10-
p-Terphenyl,d14	87	33-

Notes:

PQL = Practical quantitation level
(6E+00 = 6, 1E+01 = 10, 4E-01 = 0.4)
ND = None detected
~ = Approximate
< = Less than
> = Greater than
NA = Not available, due to sample dilution or interfer
E = Estimated value exceeds the calibration range
L = Estimated value is below the calibration range
B = Analyte is associated with the lab blank or trip l contamination. Values are reported when observed concentration is ten times higher than the common contaminants (phthalates and adipates) or is five higher than the remaining contaminants.
C = This compound is confirmation for the pesticide analyses. See the pesticide report for the quanti

FACILITY SAMPLED: JARD COMPANY

US ENVIRONMENTAL PROTECTION AGENCY
REGION I LABORATORY
GC/MS EXTRACTABLE ORGANIC ANALYSIS

SAMPLE NO.: ADC 67 ORGANIC PHASE
SAMPLE LOCATION:
DATE OF COLLECTION:
TIME OF COLLECTION:
PERCENT MOISTURE:

Matrix: Drum
Dilution Factors
Base: 3
Acid: 3

RESULTS:

CAS NO.	Compound	Conc. (mg/kg)	PQL (mg/kg)	Qualif or Com
	Priority Pollutants			
83-32-9	Acenaphthene	ND	2E+03	
208-96-8	Acenaphthylene	ND	2E+03	
120-12-7	Anthracene	ND	2E+03	
309-00-2	Aldrin	ND	2E+03	
56-55-3	Benzo(a)anthracene	ND	2E+03	
205-99-2	Benzo(b)fluoranthene	ND	2E+03	
207-08-9	Benzo(k)fluoranthene	ND	2E+03	
50-32-8	Benzo(a)pyrene	ND	2E+03	
191-24-2	Benzo(ghi)perylene	ND	2E+03	
85-68-7	Benzyl butyl phthalate	ND	2E+03	
319-85-7	beta-BHC	ND	2E+03	
319-86-8	delta-BHC	ND	2E+03	
111-44-4	Bis(2-chloroethyl)ether	ND	2E+03	
111-91-1	Bis(2-chloroethoxy)methane	ND	2E+03	
117-81-7	**Bis(2-ethylhexyl)phthalate**	**640000**	**2E+03**	
108-60-1	Bis(2-chloroisopropyl)ether	ND	2E+03	
101-55-3	4-Bromophenylphenyl ether	ND	2E+03	
59-50-7	4-Chloro-3-methylphenol	ND	3E+03	
91-58-7	2-Chloronaphthalene	ND	2E+03	
95-57-8	2-Chlorophenol	ND	3E+03	
7005-72-3	4-Chlorophenylphenyl ether	ND	2E+03	
218-01-9	Chrysene	ND	2E+03	
72-54-8	4,4'-DDD	ND	2E+03	
72-55-9	4,4'-DDE	ND	2E+03	
50-29-3	4,4'-DDT	ND	2E+03	
53-70-3	Dibenzo(a,h)anthracene	ND	2E+03	

(con't)

US ENVIRONMENTAL PROTECTION AGENCY
REGION I LABORATORY
GC/MS EXTRACTABLE ORGANIC ANALYSIS

SAMPLE NO.: ADC 67 ORGANIC PHASE
Results Continued:

CAS NO.	Compound	Conc. (mg/kg)	PQL (mg/kg)	Qualif or Com
84-74-2	Di-n-butylphtalate	ND	2E+03	
541-73-1	1,3-Dichlorobenzene	ND	2E+03	
95-50-1	1,2-Dichlorobenzene	ND	2E+03	
106-46-7	**1,4-Dichlorobenzene**	**-300**	**2E+03**	**L**
91-94-1	3,3'-Dichlorobenzidine	ND	3E+03	
120-83-2	2,4-Dichlorophenol	ND	3E+03	
60-57-1	Dieldrin	ND	2E+03	
84-66-2	Diethylphtalate	ND	2E+03	
105-67-9	2-4-Dimethylphenol	ND	3E+03	
131-11-3	Dimethylphthalate	ND	2E+03	
51-28-5	2,4-Dinitrophenol	ND	3E+03	
121-14-2	2,4-Dinitrotoluene	ND	2E+03	
606-20-2	2,6-Dinitrotoluene	ND	2E+03	
86-73-7	**Fluorene**	**-600**	**2E+03**	**L**
76-44-8	Heptachlor	ND	2E+03	
1024-57-3	Heptachlor epoxide	ND	2E+03	
118-74-1	Hexachlorobenzene	ND	2E+03	
87-68-3	Hexachlorobutadiene	ND	2E+03	
77-47-4	Hexachlorocyclopentadiene	ND	2E+03	
67-72-1	Hexachloroethane	ND	2E+03	
193-39-5	Indeno(1,2,3-cd)pyrene	ND	2E+03	
78-59-1	Isophorone	ND	2E+03	
86-74-8	Carbazole	ND	2E+03	
534-52-1	2-methyl-4,6-dinitrophenol	ND	3E+03	
91-20-3	Naphthalene	ND	2E+03	
98-95-3	Nitrobenzene	ND	2E+03	
88-75-5	2-Nitrophenol	ND	3E+03	
100-02-7	4-Nitrophenol	ND	3E+03	
86-30-3	N-nitrosodiphenylamine	ND	2E+03	
621-64-7	N-Nitrosodi-n-propylamine	ND	2E+03	
87-86-5	Pentachlorophenol	ND	3E+03	
85-01-8	Phenanthrene	ND	2E+03	
108-95-2	Phenol	ND	3E+03	
129-00-0	Pyrene	ND	2E+03	

(con't)

US ENVIRONMENTAL PROTECTION AGENCY
REGION I LABORATORY
GC/MS EXTRACTABLE ORGANIC ANALYSIS

SAMPLE NO.: ADC 67 ORGANIC PHASE
Results Continued:

CAS NO.	Compound	Conc. (mg/kg)	PQL (mg/kg)	Quali: or Co
120-82-1	1,2,4-Trichlorobenzene	ND	2E+03	
88-06-2	2,4,6-Trichlorophenol	ND	3E+03	
	Hazardous Substances			
65-53-3	Aniline	ND	2E+03	
65-85-0	Benzoic Acid	ND	3E+03	
100-51-6	Benzyl Alcohol	ND	2E+03	
106-47-8	4-Chloroaniline	ND	2E+03	
132-64-9	Dibenzofuran	ND	2E+03	
91-57-6	2-Methylnaphthalene	ND	2E+03	
95-48-7	2-Methylphenol	ND	2E+03	
106-44-5	4-Methylphenol	ND	2E+03	
88-74-4	2-Nitroaniline	ND	3E+03	
99-09-2	3-Nitroaniline	ND	3E+03	
100-01-6	4-Nitroaniline	ND	3E+03	
95-95-4	2,4,5-Trichlorophenol	ND	3E+03	
	Other Compounds Quantitated			
	None detected	ND	8E+03	

Tentatively Identified Compounds	Est. Conc. (mg/kg)
1,2-Dimethyl-4(Phenyl Methyl	~10000

PCB's Present

US ENVIRONMENTAL PROTECTION AGENCY
REGION I LABORATORY
GC/MS EXTRACTABLE ORGANIC ANALYSIS

SAMPLE NO.: ADC 67 ORGANIC PHASE
Results Continued:

Sample Recoveries For Surrogate Compounds:	Recoveries (%)	QC Ra (%)
2-Fluorophenol	NA	30-1
Phenol,d5	NA	24-1
Nitrobenzene,d5	NA	23-1
Fluorobiphenyl	NA	30-1
2,4,6-Tribromophenol	NA	19-1
p-Terphenyl,d14	NA	18-1

Notes:

PQL = Practical quantitation level
(6E+00 = 6, 1E+01 = 10, 4E-01 = 0.4)
ND = None detected
~ = Approximate
< = Less than
> = Greater than
NA = Not available, due to sample dilution or interferer
E = Estimated value exceeds the calibration range
L = Estimated value is below the calibration range
B = Analyte is associated with the lab blank or trip bl contamination. Values are reported when observed concentration is ten times higher than the common contaminants (phthalates and adipates) or is five t higher than the remaining contaminants.
C = This compound is confirmation for the pesticide analyses. See the pesticide report for the quantita

FACILITY SAMPLED: JARD COMPANY

US ENVIRONMENTAL PROTECTION AGENCY
REGION I LABORATORY
GC/MS EXTRACTABLE ORGANIC ANALYSIS

SAMPLE NO.: ADC 68 ORGANIC PHASE
SAMPLE LOCATION:
DATE OF COLLECTION:
TIME OF COLLECTION:
PERCENT MOISTURE:

Matrix: Drum
Dilution Factors
Base: 3
Acid: 3

RESULTS:

CAS NO.	Compound	Conc. (mg/kg)	PQL (mg/kg)	Qualif or Com
	Priority Pollutants			
83-32-9	Acenaphthene	ND	2E+03	
208-96-8	Acenaphthylene	ND	2E+03	
120-12-7	Anthracene	ND	2E+03	
309-00-2	Aldrin	ND	2E+03	
56-55-3	Benzo(a)anthracene	ND	2E+03	
205-99-2	Benzo(b)fluoranthene	ND	2E+03	
207-08-9	Benzo(k)fluoranthene	ND	2E+03	
50-32-8	Benzo(a)pyrene	ND	2E+03	
191-24-2	Benzo(ghi)perylene	ND	2E+03	
85-68-7	Benzyl butyl phthalate	ND	2E+03	
319-85-7	beta-BHC	ND	2E+03	
319-86-8	delta-BHC	ND	2E+03	
111-44-4	Bis(2-chloroethyl)ether	ND	2E+03	
111-91-1	Bis(2-chloroethoxy)methane	ND	2E+03	
117-81-7	Bis(2-ethylhexyl)phthalate	690000	2E+03	
108-60-1	Bis(2-chloroisopropyl)ether	ND	2E+03	
101-55-3	4-Bromophenylphenyl ether	ND	2E+03	
59-50-7	4-Chloro-3-methylphenol	ND	3E+03	
91-58-7	2-Chloronaphthalene	ND	2E+03	
95-57-8	2-Chlorophenol	ND	3E+03	
7005-72-3	4-Chlorophenylphenyl ether	ND	2E+03	
218-01-9	Chrysene	ND	2E+03	
72-54-8	4,4'-DDD	ND	2E+03	
72-55-9	4,4'-DDE	ND	2E+03	
50-29-3	4,4'-DDT	ND	2E+03	
53-70-3	Dibenzo(a,h)anthracene	ND	2E+03	

(con't)

US ENVIRONMENTAL PROTECTION AGENCY
REGION I LABORATORY
GC/MS EXTRACTABLE ORGANIC ANALYSIS

SAMPLE NO.: ADC 68 ORGANIC PHASE
Results Continued:

CAS. NO.	Compound	Conc. (mg/kg)	PQL (mg/kg)	Quali or Co
84-74-2	Di-n-butylphtalate	ND	2E+03	
541-73-1	1,3-Dichlorobenzene	ND	2E+03	
95-50-1	1,2-Dichlorobenzene	ND	2E+03	
106-46-7	**1,4-Dichlorobenzene**	**~300**	**2E+03**	**L**
91-94-1	3,3'-Dichlorobenzidine	ND	3E+03	
120-83-2	2,4-Dichlorophenol	ND	3E+03	
60-57-1	Dieldrin	ND	2E+03	
84-66-2	Diethylphtalate	ND	2E+03	
105-67-9	2-4-Dimethylphenol	ND	3E+03	
131-11-3	Dimethylphthalate	ND	2E+03	
51-28-5	2,4-Dinitrophenol	ND	3E+03	
121-14-2	2,4-Dinitrotoluene	ND	2E+03	
606-20-2	2,6-Dinitrotoluene	ND	2E+03	
86-73-7	**Fluorene**	**~600**	**2E+03**	**L**
76-44-8	Heptachlor	ND	2E+03	
1024-57-3	Heptachlor epoxide	ND	2E+03	
118-74-1	Hexachlorobenzene	ND	2E+03	
87-68-3	Hexachlorobutadiene	ND	2E+03	
77-47-4	Hexachlorocyclopentadiene	ND	2E+03	
67-72-1	Hexachloroethane	ND	2E+03	
193-39-5	Indeno(1,2,3-cd)pyrene	ND	2E+03	
78-59-1	Isophorone	ND	2E+03	
86-74-8	Carbazole	ND	2E+03	
534-52-1	2-methyl-4,6-dinitrophenol	ND	3E+03	
91-20-3	Naphthalene	ND	2E+03	
98-95-3	Nitrobenzene	ND	2E+03	
88-75-5	2-Nitrophenol	ND	3E+03	
100-02-7	4-Nitrophenol	ND	3E+03	
86-30-3	N-nitrosodiphenylamine	ND	2E+03	
621-64-7	N-Nitrosodi-n-propylamine	ND	2E+03	
87-86-5	Pentachlorophenol	ND	3E+03	
85-01-8	Phenanthrene	ND	2E+03	
108-95-2	Phenol	ND	3E+03	
129-00-0	Pyrene	ND	2E+03	

(con't)

US ENVIRONMENTAL PROTECTION AGENCY
REGION I LABORATORY
GC/MS EXTRACTABLE ORGANIC ANALYSIS

SAMPLE NO.: ADC 68 ORGANIC PHASE
Results Continued:

CAS NO.	Compound	Conc. (mg/kg)	PQL (mg/kg)	Quali or Co
120-82-1	1,2,4-Trichlorobenzene	ND	2E+03	
88-06-2	2,4,6-Trichlorophenol	ND	3E+03	
	Hazardous Substances			
65-53-3	Aniline	ND	2E+03	
65-85-0	Benzoic Acid	ND	3E+03	
100-51-6	Benzyl Alcohol	ND	2E+03	
106-47-8	4-Chloroaniline	ND	2E+03	
132-64-9	Dibenzofuran	ND	2E+03	
91-57-6	2-Methylnaphthalene	ND	2E+03	
95-48-7	2-Methylphenol	ND	2E+03	
106-44-5	4-Methylphenol	ND	2E+03	
88-74-4	2-Nitroaniline	ND	3E+03	
99-09-2	3-Nitroaniline	ND	3E+03	
100-01-6	4-Nitroaniline	ND	3E+03	
95-95-4	2,4,5-Trichlorophenol	ND	3E+03	
	Other Compounds Quantitated			
	None detected	ND	8E+03	

Tentatively Identified Compounds	Est. Conc. (mg/kg)
Benzene 1,2-Dimethyl-4-(Phenyl Methyl)	~10000
Substituted Benzene	~10000

US ENVIRONMENTAL PROTECTION AGENCY
REGION I LABORATORY
GC/MS EXTRACTABLE ORGANIC ANALYSIS

SAMPLE NO.: ADC 68 ORGANIC PHASE
Results Continued:

Sample Recoveries For Surrogate Compounds:	Recoveries (%)	QC Range (%)
2-Fluorophenol	NA	30-115
Phenol,d5	NA	24-113
Nitrobenzene,d5	NA	23-120
Fluorobiphenyl	NA	30-115
2,4,6-Tribromophenol	NA	19-122
p-Terphenyl,d14	NA	18-137

Notes:

PQL = Practical quantitation level
(6E+00 = 6, 1E+01 = 10, 4E-01 = 0.4)
ND = None detected
~ = Approximate
< = Less than
> = Greater than
NA = Not available, due to sample dilution or interference
E = Estimated value exceeds the calibration range
L = Estimated value is below the calibration range
B = Analyte is associated with the lab blank or trip blank contamination. Values are reported when observed concentration is ten times higher than the common contaminants (phthalates and adipates) or is five times higher than the remaining contaminants.
C = This compound is confirmation for the pesticide analyses. See the pesticide report for the quantitation

FACILITY SAMPLED: JARD COMPANY

US ENVIRONMENTAL PROTECTION AGENCY
REGION I LABORATORY
Polychlorinated Biphenyls

SAMPLE NO.: ADC-67 AQUEOUS PHASE
SAMPLE LOCATION:
DATE OF COLLECTION:
TIME OF COLLECTION:

Matrix: Water
Dilution Factor: 8330.00
pH: 5.98

SAMPLE RESULTS:

CAS NO.	STORET NO.	Compound	Conc. (ug/L)	PQL (ug/L)	Qualifier or Comment
11104-28-2	39488	Aroclor-1221	ND	8E+04	
11141-16-5	**39492**	**Aroclor-1232 or 1016**	**13,000**	**8E+04**	
53469-21-9	39496	Aroclor-1242	ND	8E+04	
12672-29-6	39500	Aroclor-1248	ND	8E+04	
11097-69-1	39504	Aroclor-1254	ND	8E+04	
11096-82-5	39508	Aroclor-1260	ND	8E+04	
11100-14-4	81650	Aroclor-1262	ND	8E+04	
37324-23-5	81650	Aroclor-1268	ND	8E+04	

Sample Recovery for Surrogate Compound:	Observed Recoveries (%)
Decachlorobiphenyl	NA
2,4,5,6-Tetrachloro-m-xylene	NA

FACILITY SAMPLED: JARD COMPANY

US ENVIRONMENTAL PROTECTION AGENCY
REGION I LABORATORY
Polychlorinated Biphenyls

SAMPLE NO.: ADC-68 AQUEOUS PHASE
SAMPLE LOCATION: Matrix: Water
DATE OF COLLECTION: Dilution Factor: 8330.
TIME OF COLLECTION: pH: 5.

SAMPLE RESULTS:

CAS NO.	STORET NO.	Compound	Conc. (ug/L)	PQL (ug/L)	Qualifi or Comm
11104-28-2	39488	Aroclor-1221	ND	8E+04	
11141-16-5	**39492**	**Aroclor-1232 or 1016**	**9,400**	**8E+04**	
53469-21-9	39496	Aroclor-1242	ND	8E+04	
12672-29-6	39500	Aroclor-1248	ND	8E+04	
11097-69-1	39504	Aroclor-1254	ND	8E+04	
11096-82-5	39508	Aroclor-1260	ND	8E+04	
11100-14-4	81650	Aroclor-1262	ND	8E+04	
37324-23-5	81650	Aroclor-1268	ND	8E+04	

Sample Recovery for Surrogate Compound:	Observed Recoveries (%)
Decachlorobiphenyl	NA
2,4,5,6-Tetrachloro-m-xylene	NA

US ENVIRONMENTAL PROTECTION AGENCY
REGION I LABORATORY
Polychlorinated Biphenyls

Notes:

PQL = Practical quantitation level
(6E+00 = 6, 1E+01 = 10, 4E-01 = 0.4)
ND = None detected
~ = Approximate
< = Less than
> = Greater than
NA = Not applicable due to high sample dilutions or sample interferences
E = Estimated value exceeds the calibration range
L = Estimated value is below the calibration range
B = Analyte is associated with the lab blank or trip b contamination. Values are reported when observed concentration is five times higher than the contamination.
P = The confirmation value exceeded 35% difference and less than 100%. The lower value is reported.
D = Detected but too low to quantitate.
C = The identification has been confirmed by GC/MS.

FACILITY SAMPLED: JARD COMPANY

US ENVIRONMENTAL PROTECTION AGENCY
REGION I LABORATORY
Polychlorinated Biphenyls

SAMPLE NO.: ADC-67
SAMPLE LOCATION: ORGANIC PHASE
DATE OF COLLECTION:
TIME OF COLLECTION:

Matrix: Oil
Dilution Factor: 5128.00

SAMPLE RESULTS:

CAS NO.	Compound	Amount (mg/kg)	PQL (mg/kg)	Qualifier orComment
11104-28-2	Aroclor-1221	ND	8E+04	
11141-16-5	Aroclor-1232 or 1016	150,000	5E+04	
53469-21-9	Aroclor-1242	ND	5E+04	
12672-29-6	Aroclor-1248	ND	5E+04	
11097-69-1	Aroclor-1254	ND	5E+04	
11096-82-5	Aroclor-1260	ND	5E+04	
11100-14-4	Aroclor-1262	ND	5E+04	
37324-23-5	Aroclor-1268	ND	5E+04	

Sample Recovery for Surrogate Compound:

	Observed Recoveries (%)
Decachlorobiphenyl	NA
2,4,5,6-Tetrachloro-m-xylene	NA

4

FACILITY SAMPLED: JARD COMPANY

US ENVIRONMENTAL PROTECTION AGENCY
REGION I LABORATORY
Polychlorinated Biphenyls

SAMPLE NO.: ADC-68
SAMPLE LOCATION: ORGANIC PHASE
DATE OF COLLECTION:
TIME OF COLLECTION:

Matrix: Oil
Dilution Factor: $128.00

SAMPLE RESULTS:

CAS NO.	Compound	Amount (mg/kg)	PQL (mg/kg)	Qualifier or Comment
11104-28-2	Aroclor-1221	ND	8E+04	
11141-16-5	Aroclor-1232 or 1016	150,000	5E+04	
53469-21-9	Aroclor-1242	ND	5E+04	
12672-29-6	Aroclor-1248	ND	5E+04	
11097-69-1	Aroclor-1254	ND	5E+04	
11096-82-5	Aroclor-1260	ND	5E+04	
11100-14-4	Aroclor-1262	ND	5E+04	
37324-23-5	Aroclor-1268	ND	5E+04	

Sample Recovery for Surrogate Compound:

	Observed Recoveries (%)
Decachlorobiphenyl	NA
2,4,5,6-Tetrachloro-m-xylene	NA

6

Results:

Sample #	Total Cyanide, mg/l
GW-37-03	K.02
GW-37-04	K.02

Quality Control:

Sample #	Total Cyanide, mg/l	%Recovery
GW-37-04	K.02	
GW-37-04 dup	K.02	
GW-37-03 + spk 1		90
GW-37-03 + spk 2		99
ICV-6		102
50 ug standard		87
100 ug standard		95