RECEIVED
FEB 20 1992
PRMT SECTION

Hydrocarbon Recyclers, Inc. of Wichita
2549 North New York Avenue
Wichita, Kansas 67219
Telephone: 316/268-9490 Fax: 316/268-9418

RECEIVED
BUREAU OF
FEB 18 1992
AIR and WASTE
MANAGEMENT

Hydrocarbon Recyclers, Inc. of Wichita d/b/a USPCI
RCRA Permit Application
Parts A & B

Volume 2 of 3

Submitted To:
State of Kansas Department of Health and Environment
and
United States Environmental Protection Agency - Region VII

February 18, 1992

RCRA
551111

Table of Contents

List of Appendices ii

Acronym Table ii

F-1 Introduction: 1

F-2 Inspection Requirements: 4
F-2a General Inspection Requirements: 4
F-2b Specific Process Inspection Requirements: . . 5
F-2b(1) Container/ Container Management Unit Inspection: 6
F-1b(2) Tank and Tank Systems Inspection: 7
F-2b(3) Miscellaneous Units: 9
F-2b(4) RCRA Air Emissions Monitoring: 10

F-3 Inspection Schedule: 11

List of Appendices

Appendix F-A, Example of Inspection Log
Appendix F-B, Example of Remedial Work Order
Appendix F-C, General Inspection Schedule
Appendix F-D, Inspection Schedule for Containers
Appendix F-E, Inspection Schedule for Tank Systems
Appendix F-F, Inspection Schedule for Miscellaneous Units
Appendix F-G, Inspection Schedule for RCRA Air Emissions Monitoring

Acronym Table

Hydrocarbon Recyclers, Inc. of Wichita (HRIW)
Remedial Work Order (RWO)
Emergency Response Coordinator (ERC)
Container Management Unit (CMU)

F-1 Introduction:

Hydrocarbon Recyclers, Inc. of Wichita (HRIW) has developed this Inspection Plan in compliance with 40 CFR 264.15 and 270.14. It is intended to provide a systematic method of identifying potential problems, malfunctions, or deterioration which may cause or lead to a release of hazardous constituents to the environment or a threat to human health. Inspections will be used to identify potential operational problems, and to identify required maintenance of in-service equipment and structures while the facility is operational or equipment is in service. The corrective program will include a Remedial Work Order (RWO) system to document and track the resolution of problems identified during inspections.

One or more inspectors will be designated to perform the inspections as scheduled. A record of the inspections and the schedule will be maintained at the facility. The results of the inspections will be recorded on an Inspection Log which will be maintained in the operating record. The Inspection Log will include the date, the time of the inspection, the name of the inspector, his/her initials, items examined, problems noted, and the identifying number of each RWO issued to address any problem

noted. The nature and date of any repairs are recorded on the RWO when the repairs are completed. The RWO is then filed by identifying number in the operating record.

Potential problems identified on the inspection sheet will be corrected or addressed as soon as possible or practicable. If repairs are required, they will be made as soon as they can be safely and practically performed. If the problem identified is a threat to human health or the environment, then actions to mitigate the situation will be undertaken immediately. All steps necessary to allow the repairs (e.g., minimizing the exposure of the workers to hazardous materials, hazardous waste, or hazardous situations) will be taken prior to beginning the repair work. The inspection logs and RWOs will be maintained as part of the operating record for at least three years from the date of inspection. Examples of the inspection log are provided in Appendix F-A, Example of Inspection Log, and an example of the RWO is provided in Appendix F-B, Example of Remedial Work Order.

The facility inspector will communicate the occurrence of problems to the Operations Manager (or designee) through the RWOs. The timing of this notification will depend on the nature of the potential problem. A problem threatening human health or

the environment would be reported immediately. If necessary, the inspector will notify the Emergency Response Coordinator (ERC) as required by Section H, Contingency/Emergency Plan.

F-2 Inspection Requirements:

F-2a General Inspection Requirements: 40 CFR 264.15(a) and (b), 264.33, 270.14(b)(5)

Appendix F-C, General Inspection Schedule, will include inspection of the facility perimeter, safety and emergency equipment, security devices, operating and structural equipment, general requirements of miscellaneous units, communication systems, alarm systems, fire protection equipment, and decontamination equipment.

F-2b **Specific Process Inspection Requirements:** **40 CFR 264.15(b)(4), 270.14(b)(5)**

Specific inspection schedules for container, tank systems, and miscellaneous units are provided in Appendix F-D, Inspection Schedule for Containers, Appendix F-E, Inspection Schedule for Tank Systems, and Appendix F-F, Inspection Schedule for Miscellaneous Units.

F-2b(1) **<u>Container/ Container Management Unit Inspection:</u>**
40 CFR 264.174

The Container Management Unit (CMU)s will be inspected for adequate aisle space, potential spills or accumulation of liquids into secondary containment systems and loading or unloading areas, and deterioration of secondary containment area structures.

The containers will be visually inspected in accordance with Section C, Waste Characterization, for their condition (e.g., open, deteriorated, damaged, corroded, leaking, bulging such as may be caused by internal pressure build-up, etc.), and identification markings.

Refer to Section D, Use and Management of Containers, for a description of the CMUs. The inspection schedule for containers and container management units at the facility is presented in Appendix F-D, Inspection Schedule for Containers.

F-1b(2) **<u>Tank and Tank Systems Inspection:</u>** **40 CFR 264.193(i), 264.195**

The items addressed by tank systems inspections include tanks, ancillary equipment, secondary containment systems, areas surrounding tank systems, tank overfilling control equipment, and other control or monitoring equipment. For example:

- The visible portions of the construction material of the tanks and their ancillary systems will be inspected for evidence of corrosion, deterioration, or erosion which could result in a leaking or unfit-for-use tank or tank system.

- The area immediately surrounding all tank systems including areas within the secondary containment systems will be inspected for obvious signs of deterioration, accumulated liquids, or potential releases of hazardous waste.

- Loading and unloading areas are inspected for obvious signs of deterioration, accumulated liquids, or potential releases of hazardous waste.

- Tank overfilling control and monitoring equipment is inspected visually or (periodically) for mechanical operation.

- The leak detection systems for the tanks are inspected for evidence of leakage, deterioration, or malfunction.

A list of the tanks and a description of the tank systems is provided in Section E, Tank Systems. Each of the tanks listed in Section E will be inspected for the applicable items listed above, according to Appendix F-E, Inspection Schedule for Tank Systems. Tank condition is assessed annually.

F-2b(3) **Miscellaneous Units:** **40 CFR 264.602**

Inspection requirements for miscellaneous units include checks for releases, deterioration, or malfunction of each unit, and, as applicable, the unit's controls to prevent releases to the environment. These units are described in Section M, Other Regulated Units. Specific inspection items are addressed in Appendix F-F, Inspection Schedule for Miscellaneous Units.

F-2b(4) **<u>RCRA Air Emissions Monitoring:</u> 40 CFR 264, Subparts AA and BB**

HRIW currently operates no units subject to the Subpart AA requirements. Air emissions monitoring requirements for Subpart BB are discussed in Section N, Air Emissions. Inspections required under Subpart BB are addressed in Appendix F-G, Inspection Schedule for RCRA Air Emissions Monitoring

F-3 <u>Inspection Schedule:</u> 40 CFR 264.15, 270.14(b)(5)

The inspection schedules presented in Appendices F-C through F-G indicate the inspection frequency for each item on the schedule. Inspection frequencies may range from daily to annually, depending upon the item. The frequencies have been based on the rate of probable deterioration of equipment, equipment manufacturers' recommendations, and operating experience at other USPCI facilities. For example, areas within the facility subject to spills, such as truck loading and unloading areas, will be inspected daily when in use.

APPENDIX F-A

SAMPLE INSPECTION LOG SHEET

Form May be Modified

USPCI[illegible]S - WICHITA
DAILY [illegible]ECTION LOG

FOR THE DAY OF :_____ _____, _____ TIME:_____

INSPECTION UNIT	PERIMETER AND GENERAL FACILITY		
INSPECTION ITEM	ELEMENT	STATUS	OBSERVATION/ REMEDIAL WORK ORDERS ISSUED
Facility Gates	Operate and make sure the warning signs are present and visible.	A / U	
Access Roads	Check for facility debris, deterioration, and spills.	A / U	
Perimeter and Yards	Note any evidence of stressed vegetation.	A / U	
Loud Speakers	Check for operability and clarity. Receive confirmation of both.	A / U	
Telephone System	Check for operability and verify contingency plan contact list is present.	A / U	

INSPECTION UNIT	BUILDING D: East Yard, Drier Grinder, Container Storage, Maintenance, Sparge/HotRoom, Electrical Storage Area, Compressor / Boiler Room		
INSPECTION ITEM	ELEMENT	STATUS	OBSERVATION/ REMEDIAL WORK ORDERS ISSUED
Telephone System	Check for operability and verify contingency plan contact list is present.	A / U	
Spill Control Equipment	Check inventory and availability of absorbent, shovel, broom, and drum.	A / U	
Dryer/ Grinder	Check for spills and deterioration.	A / U	
	Check gauges for proper flow/ pressure:	A / U	
Baghouse	Check for fugitive dust and emissions particles, bag integrity and fitting security.	A / U	

INSPECTION COMPLETED BY: _____

********** DEFICIENCIES AND CORRECTIONS ARE DETAILED IN THE ATTACHED WORK ORDERS **********

USPCI/ - WICHITA
WEEKLY ECTION LOG

FOR THE WEEK OF :_____ ___ TO ___, _____ DATE INSPECTED: _____ ___, TIME:____

INSPECTION UNIT/ AREA: A BUILDING: Laboratory			
INSPECTION ITEM	ELEMENT	STATUS	OBSERVATION/ REMEDIAL WORK ORDERS ISSUED
First Aid Kit	Check for inventory and note any reductions from previous inspections.	A / U	
Eye Wash Station	Check for cleanliness, accessibility, and operability.		
Emergency Shower	Check for cleanliness, accessibility, and operability.	A / U	

INSPECTION UNIT	BUILDINGS I & J		
INSPECTION ITEM	ELEMENT	STATUS	OBSERVATION/ REMEDIAL WORK ORDERS ISSUED
Security Fence	Check all sides of fence for damage, offsite sources of contamination, and erosion. Gates and doors should be locked unless in use.	A / U	
Warning Signs	Check for proper maintenance and clear visibility.	A / U	
No Smoking Signs	Check for proper maintenance and clear visibility.	A / U	

INSPECTION COMPLETED BY: _____

********** DEFICIENCIES AND CORRECTIONS ARE DETAILED IN THE ATTACHED WORK ORDERS **********

APPENDIX F-B

SAMPLE REMEDIAL WORK ORDER

Form May be Modified

February 18, 1992

WORK ORDER #0000

Date Found: _____
Location: _____
_____
Issue: _____
_____

Date to be Done: _____
Extended Until: _____
By: _____
Compliance Issue: ( )
Not Compliance: ( )

We Need To: _____
_____
Assigned To: _____ Supervisor: _____
Comments: _____
_____
_____ Inspector: _____

How Corrected: _____
_____
By Whom: _____ Date Corrected: _____

Accepted as Corrected By: _____ Date: _____
Comments: _____
_____

APPENDIX F-C

GENERAL FACILITY INSPECTION SCHEDULE

February 18, 1992

INSPECTION PARAMETER	INSPECTION PROCEDURE	INSPECTION FREQUENCY
General Facility and Perimeter	Visually check fences and gates for breaks or damage.	Monthly
	Visually check warning signs for clear visibility.	Monthly
	Visually check for erosion under fences.	Monthly
	Visually check access and intra-facility roads for spills.	Daily
	Visually check for vegetation obscuring warning signs along the fence.	Monthly
Safety and Emergency Equipment	Inspect tags of fire extinguishers for expiration dates and adequate pressure.	Monthly
	Test telephones for proper operation.	Monthly
	Test alarms for proper operation.	Monthly
	Test paging and loudspeaker systems for proper operation.	Monthly
	Inspect self-contained breathing apparatus (SCBA) for air pressure with a pressure gauge. Inspect regulators to verify that air passage is unobstructed. Visually check masks and hoses for serviceability.	Monthly
	Inspect first aid stations.	Monthly
	Inspect fire hydrants for adequate water supply, and leaks or evidence of corrosion.	Annually

INSPECTION PARAMETER	INSPECTION PROCEDURE	INSPECTION FREQUENCY
	Visually inspect sprinkler systems.	Monthly
	Inspect external condition of safety showers and operate to verify adequate water flow.	Monthly
	Inspect external condition of eye wash stations and operate to verify adequate water flow.	Monthly
	Inspect spill response and decontamination equipment for operable condition. Spill response equipment includes the following: Overpack drums Absorbents Portable pumps Hand tools Brooms Detergent Absorbent towels	Monthly
	Inspect inventory of Facility PPE for adequate supplies and operable condition. PPE includes the following: Cartridge respirators Supplied air respirators Protective clothing Specialized gloves Specialized footwear Hearing protection Eye protection Hard hats	Monthly

APPENDIX F-D

INSPECTION SCHEDULE FOR CONTAINERS

February 18, 1992

This schedule applies to active Container Management Units (CMUs) at HRIW, except as noted.

INSPECTION PARAMETER	INSPECTION PROCEDURE	INSPECTION FREQUENCY
Container Management System	Inspect containment system loading and unloading areas for evidence of spills or accumulated liquids.	Daily
	Inspect aisles in container storage areas for a minimum of two (2) feet of aisle space.	Daily
	Visually inspect containers for evidence of pressure build-up, structural damage, leaks, missing cap or bung, corrosion, or deterioration.	Weekly
	Visually inspect containers for legible markings or identification labels.	Weekly
	Inspect the container storage areas, concrete slab, and curbs for cracks, gaps, flaking, chips, gouges, and other signs of wear.	Weekly
	Inspect sumps for presence of liquids.	Daily
	Inspect container management areas to ensure incompatible wastes are properly segregated.	Monthly

APPENDIX F-E

INSPECTION SCHEDULE FOR TANK SYSTEMS

February 18, 1992

INSPECTION PARAMETER	INSPECTION PROCEDURE	INSPECTION FREQUENCY
Tank System:	Where appropriate, visually inspect the exterior condition of the tank (e.g. for evidence of leaks, stains, corrosion etc.) and the area immediately surrounding the externally accessible portion of the tank systems for erosion or evidence of releases of waste (e.g., wet spots, discolorations).	Daily
	Inspect tank containment system (concrete slab, sumps, and curbs) for cracks, gaps, flaking, chips, gouges, wet areas, puddles, and other signs of wear and leaking.	Daily
	Where appropriate, inspect monitoring equipment installed on the tanks for evidence of damage.	Weekly
	Inspect tank loading and unloading areas for evidence of spills. Inspect hoses for signs of wear, leakage or other damage. Inspect hose couplings for proper seals and leaks and other damage.	Daily
Overfill Control System	Check electronic indicator system for operability.	Weekly
	Manually check operability of relief/detection valves.	Quarterly
Containment for: Truck Docks and Unloading area	Visually inspect for evidence of spills.	Daily

INSPECTION PARAMETER	INSPECTION PROCEDURE	INSPECTION FREQUENCY
Sumps	Visually inspect for standing liquids.	Daily
	Visually inspect for cracks, gaps, or deterioration.	Weekly
Process Equipment (Conveyors, Valves, Feeders)	Visually inspect for corrosion, deterioration.	Daily
	Visually inspect to assure guards are in place.	Daily

APPENDIX F-F

INSPECTION SCHEDULE FOR MISCELLANEOUS UNITS

February 18, 1992

INSPECTION PARAMETER	INSPECTION PROCEDURE	INSPECTION FREQUENCY
Miscellaneous Units	Check surface of unit for evidence of leaks or structural damage.	Daily, when in service
	Inspect the secondary containment, concrete slab, and curbs for cracks, gaps, flaking, chips, gouges, and other signs of wear.	Daily, when in service

APPENDIX F-G

INSPECTION SCHEDULE FOR RCRA AIR EMISSIONS MONITORING

February 18, 1992

INSPECTION PARAMETER	INSPECTION PROCEDURE	INSPECTION FREQUENCY
Pumps and Ancillary Equipment	Monitor for volatile air emissions as required.	Monthly and Annually
	Visually monitor as required for evidence of leaks.	Daily when in use

Table of Contents

List of Figures . . . . . Page ii

List of Appendices . . . . . Page ii

List of Referenced Drawings . . . . . Page ii

G-1 Introduction . . . . . Page 1

G-2 Security: . . . . . Page 1
G-2a Security Procedures and Equipment: . . . . Page 1

G-3 Inspection Schedule: . . . . . Page 6

G-4 Preparedness and Prevention Requirements: . . . . . Page 9
G-4a Equipment Requirements: . . . . . Page 9
G-4a(1) Internal Communications: . . . . . Page 9
G-4a(2) External Communications: . . . . . Page 10
G-4a(3) Emergency Equipment: . . . . . Page 11
G-4a(4) Water for Fire Control: . . . . . Page 11
G-4b Aisle Space Requirement: . . . . . Page 12

G-5 Preventive Procedures, Structures, and Equipment: . Page 13
G-5a Loading and Unloading Operations: . . . . Page 14
G-5b Run-off and Run-on: . . . . . Page 18
G-5c Water Supplies: . . . . . Page 19
G-5d Equipment and Power Failure: . . . . . Page 20
G-5e Personal Protective Equipment: . . . . . Page 21

G-6 Prevention of Reaction of Ignitable, Reactive and Incompatible Wastes: . . . . . Page 23
G-6a Precautions to Prevent Ignition or Reaction of Ignitable or Reactive Waste and Mixing of Incompatible Wastes: . . . . . Page 23
G-6b Management of Ignitable or Reactive Wastes in Containers: . . . . . Page 25
G-6c Management of Incompatible Wastes in Containers: Page 27
G-6d Management of Ignitable or Reactive Wastes in Tanks: . . . . . Page 28
G-6e Management of Incompatible Wastes in Tanks: . . Page 30

G-7 Air Emission Standards for Equipment Leaks: . . . . Page 32

List of Figures

Figure G.1, Facility Layout

List of Appendices

Appendix G-A, Sample Inspection Log Sheet

List of Referenced Drawings

Drawings located in Section Y, Referenced Drawings

Drawing 50-01-01-002, Facility Layout

List of Acronyms

Hydrocarbon Recyclers, Inc. of Wichita (HRIW)
Public Address (PA)
Hazardous Waste Management Unit (HWMU)
Container Management Unit (CMU)
Personal Protective Equipment (PPE)
Self-Contained Breathing Apparatus (SCBA)
National Fire Protection Association (NFPA)

G-1 Introduction

Waste management processes at Hydrocarbon Recyclers, Inc. of Wichita (HRIW) are designed with safety features for protection of human health, the environment, and the general public. This section is a description of the measures used to prevent hazards during waste management at the facility. The hazardous waste units at the facility include storage tanks, container management units, loading and unloading facilities, and waste treatment equipment.

G-2 Security: 40 CFR 264.14, 270.14(b)(4)

G-2a Security Procedures and Equipment:

The HRIW facility will be secured to prevent the unknowing entry, and minimize the possibility for the unauthorized entry, of persons or livestock onto the active portion of the facility, to protect human health and the environment. (The active portion of the facility, hereinafter referred to in this section as "the facility," is as defined by 40 CFR 261.10.) This will be accomplished by provisions such as, fencing, gates, an electronically controlled security system, and warning signs. Presence of facility personnel during shift operations will

minimize or prevent incidents of trespassing and vandalism. Fencing is not provided where buildings and building entrances provide a barrier to unauthorized entry. In addition, employees are instructed to question and direct unauthorized visitors to the office should they try to enter the facility. These security provisions are further discussed below.

- Fence: where required for security, the facility is surrounded by a six (6) foot high chain link fence with gates at various locations. Figure G.1, Facility Layout, Drawing 50-01-01-002, Facility Layout gives the location of fencing and gates. Entry into the facility will be controlled by the fencing, gates, and buildings. Gates and doors which allow access to the facility are to remain closed and secured against entry unless in use. Personnel and vehicle access will be controlled by an electronic system or by designated facility personnel.

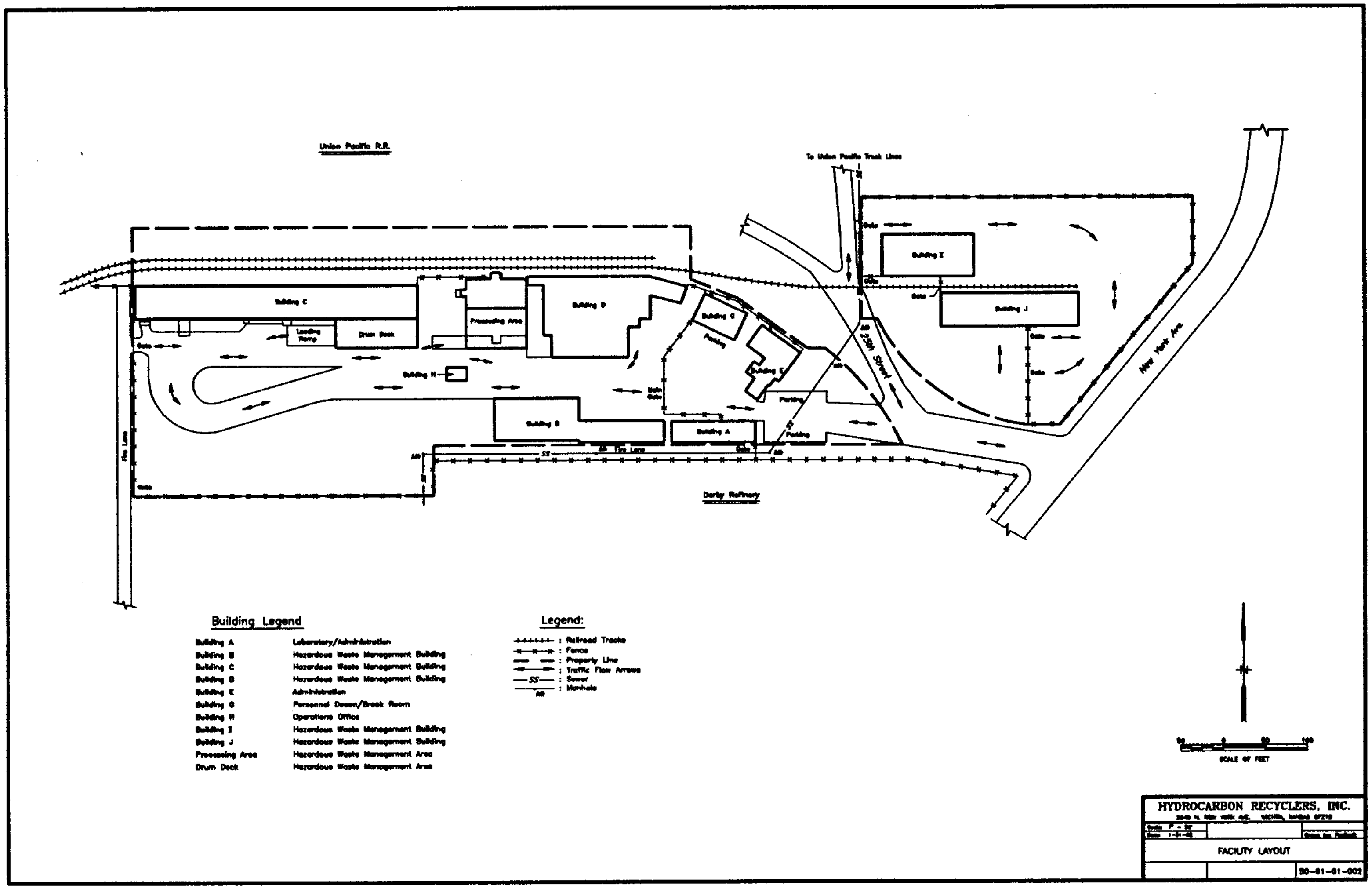

Figure G.1. Facility Layout

- Vehicle Access: Vehicles must be authorized to enter the facility. Normal vehicle access is through the main entrance; this entrance is provided with electronic controls. However, when attended by facility personnel, other gates may be used with prior authorization. These secondary gates may also be used while evacuating the facility. In the event of a failure or scheduled shutdown of the electronic gate system, the main entrance gate will be operated manually. The operation of the secondary gates will not be affected by a power failure, since these gates will not be electronically controlled.

- Personnel Access: These procedures are designed to control unauthorized entry into the facility. Access into the facility will be controlled by the fencing, gates, buildings, and facility personnel. Non-employee personnel including contractors, consultants, governmental agency personnel and visitors will be required to sign in prior to being granted entry into the facility. Entry to the facility will be monitored by facility personnel.

- Warning signs: Warning signs will be posted on or adjacent to all gates. The signs, written in English, will state at a minimum, "DANGER - UNAUTHORIZED PERSONNEL KEEP OUT." The lettering on warning signs will be at least two (2) inches high to be legible from a distance of twenty-five (25) feet. The lettering and the sign background will be contrasting colors. Warning signs will also be placed along the fence and, where appropriate, along building exterior walls so as to be seen from any approach to the facility.

  Signs are posted inside the facility to warn personnel about potential hazards. These signs may be required, for example, by OSHA regulations (e.g., NO SMOKING, EYE PROTECTION REQUIRED, HEARING PROTECTION REQUIRED, DANGER - HIGH VOLTAGE, etc.). The signs will be located as appropriate.

G-3 <u>Inspection Schedule:</u> 40 CFR 264.15, 264.33, 264.174, 270.14(b)(5)

Inspections will be used to identify potential problems, to identify problems associated with operation, or to identify required maintenance of in-service equipment and structures while the facility is operational or equipment is in service.

The general inspection schedule will include inspection of the facility perimeter, safety and emergency equipment, security devices, operating and structural equipment, communication systems, alarm systems, fire protection equipment, and decontamination equipment. Section F, Inspection Plan, provides specific information regarding facility inspection procedures.

The inspection schedules, presented as Appendices to Section F, Inspection Plan, indicate the frequency at which each item on the schedule is inspected. Inspection frequencies may range from daily to annually, depending upon the item. The frequencies have been based on the rate of probable deterioration of equipment, equipment manufacturers' recommendations, or operating experience at other USPCI facilities.

One or more inspectors will be designated to perform the inspections as scheduled. A record of the inspections and the schedule will be maintained at the facility. The results of the inspections will be recorded on an inspection log which will be maintained in the operating record. The inspection log will include the date, the time of the inspection, the name of the inspector, his/her initials, items examined, issues noted, and a record of the corrective actions taken.

Issues identified on the inspection sheet will be corrected or addressed as soon as possible or practicable. If repairs are required, they will be made as soon as they can be safely and practically performed. If the problem identified is a threat to human health or the environment, then actions to mitigate the situation will be undertaken immediately. All steps necessary to allow the repairs (e.g., minimizing the exposure of the workers to hazardous materials, hazardous waste, or hazardous situations) will be taken prior to beginning the repair work. The inspection logs will be maintained as part of the operating record for at least three years from the date of inspection. A typical inspection sheet is provided in Appendix G-A, Sample Inspection Log Sheet.

The facility inspector will communicate the occurrence of problems to facility operation management or appropriate designee. The timing of this notification will depend on the nature of the problem. A problem threatening human health or the environment would be reported immediately. If necessary, the inspector will notify the Emergency Response Coordinator as required by Section H, Contingency/Emergency Plan.

G-4 Preparedness and Prevention Requirements: 40 CFR 270.14(b)(6)

HRIW is operated and maintained to minimize the possibility of hazards such as fire, explosion, or unplanned release of hazardous waste, etc. to air, soil, or surface water which may threaten human health or the environment. The inspection schedule for facility safety and emergency equipment is provided in Section F, Inspection Plan.

G-4a Equipment Requirements: 40 CFR 264.32

G-4a(1) Internal Communications: 40 CFR 264.32(a)

Communications inside HRIW can be achieved through a telephone system and a Public Address (PA) system. Telephones will be located so that employees will have access to a phone. An employee will be able to call any other telephone in the facility, and can access the PA system for paging. The paging system will broadcast through a series of loudspeakers. Two way communication devices or paired work crews (i.e., the buddy system) will ensure that every employee has immediate access to communication in the event of an emergency.

The internal communication system will be tested monthly, as indicated in the Inspection Plan, Section F. However, use of the internal communication system during the course of normal operations will more quickly identify developing problems.

An alarm system will alert personnel to major emergencies. Alarms will consist of a siren (activated at manual pull stations) or a broadcast over the paging system loudspeakers (activated by dialing the appropriate code at any telephone). Emergency telephone numbers and instructions are posted at or nearby every telephone in the active portion of the facility; emergency telephone numbers are also available in office areas.

G-4a(2) **<u>External Communications:</u>** **40 CFR 264.32(b)**

External facility communications will be available through the local telephone company. Local (Wichita) or long distance telephone connections are available. Arrangements for emergency response have been made with appropriate outside agencies; see the Contingency/Emergency Plan, Section H.

G-4a(3) <u>Emergency Equipment:</u> 40 CFR 264.32(c)

Portable fire extinguishers, fire control equipment, spill control equipment, and decontamination equipment will be available at the facility. Descriptions, locations, and a list of emergency equipment for the facility are provided in Section H, Contingency Plan. Emergency equipment is inspected for availability and readiness according to the schedule given in Section F, Inspection Plan.

G-4a(4) <u>Water for Fire Control:</u> 40 CFR 264.32(d)

The facility has a supply of water available for fire fighting. Water for fire protection is supplied by a water main which is part of the City of Wichita public water system. Hazardous Waste Management Unit (HWMU)s are provided with appropriate fire protection systems meeting the applicable requirements of the City Building Code and NFPA. These systems are designed to extinguish or confine the spread and area of exposure of a fire. The systems may consist of fire hydrants, overhead sprinkler systems, or other types of fire protection systems.

A description of the fire protection equipment at HRIW is included in Section H, Contingency Plan.

G-4b <u>Aisle Space Requirement:</u> 40 CFR 264.35

Container Management Unit (CMU)s will have access aisles maintained to allow hand held and portable emergency response equipment to be moved. Adequate aisle space is maintained to allow unobstructed movement of personnel, fire protection equipment, or spill control equipment; and is ensured by regular inspections, per the inspection schedule in Section F, Inspection Plan. Container management areas will have a minimum aisle space of two (2) feet as described in Section D. Sufficient aisle space will be provided within the tank storage areas to allow access in an emergency situation.

G-5 Preventive Procedures, Structures, and Equipment: 40 CFR 270.14(b)(8)

Various structures have been constructed, safety features have been incorporated, and operating procedures have been developed, to minimize hazards to human health and the environment. Procedures, equipment, and structures utilized to prevent hazards are described in the following sections.

- A description of the Container Management Units is provided in Section D, Use and Management of Containers.

- A description of tank systems is provided in Section E, Tank Systems.

- A list of emergency equipment and a description of the emergency procedures are provided in the Contingency /Emergency Plan, Section H; a copy of this plan will be available at the facility at all times.

- Additional information regarding operating procedures are described in Section C, Waste Characterization, Section F, Inspection Plan, and Section I, Training Program.

Appropriate material handling equipment and devices will be employed in the waste management areas. Applicable safeguards will be observed during repairs performed near ignitable materials (e.g., no smoking, no sparks, no open flames, etc.). Special precautions will be taken to prevent accidental ignition of ignitable wastes or the uncontrolled mixing of incompatible wastes (Refer to G-6 of this section).

G-5a **Loading and Unloading Operations:** **40 CFR 270.14(b)(8)(i)**

Facility operations personnel receive training on proper loading and unloading procedures. This training will include instruction on machinery operation, safety equipment, waste identification, and processing procedures. A description of the personnel training plan (e.g., job-specific training) is provided in Section I, Training Program.

Various structures and equipment are utilized during loading and unloading operations to prevent environmental and health hazards. Container Management procedures are detailed in Section D, Use and Management of Containers.

Standard loading/unloading procedures are described below.

- Bulk Liquid Wastes: Prior to loading or unloading a bulk liquid container (e.g., a tanker truck) the operator will visually check valve position, that hoses are secured, and that any needed hose connection plugs and caps are in place. Following the loading or unloading of a bulk liquid container, the operator will visually check valve position, and that any needed hose connection plugs and caps are in place. Bulk metal containers holding ignitable liquid wastes will be grounded and bonded prior to loading or unloading.

- Bulk Solid Wastes: Many types of bulk solid and sludge containers will arrive by truck or rail. The containers may include sludge boxes, intermodal containers, end-dump trucks, etc. The contents of bulk containers of solids and sludge will be either directly unloaded into tanks or other containers, or the containers may be stored in CMUs prior to treatment or handling. At a minimum, two persons will be present during the waste loading/unloading operations.

- Containerized Wastes: Elevated docks are provided to facilitate loading and unloading of containerized wastes at the Drum Dock and at Building J. Trucks are loaded or unloaded using an industrial truck or a drum dolly. Containers are typically fifty-five (55) gallon drums, although larger and smaller containers may also be handled.

Manual handling of the containers will be minimized. Industrial trucks are capable of lifting and transporting one or more containers at a time. Drum grapplers (e.g., a semi-circular shaped arm attachment to the forks) or fork attachments for the forklift truck will be used for lifting and transporting individual containers. These drum grasping attachments are capable of securely holding a container during lifting and transporting without requiring additional straps or hooks. The operator is responsible for ensuring that the truck and the dock or ramp are properly aligned before any loading or unloading activities are initiated.

Drum dollies may be used to move individual containers (typically drums). The dollies have forks or a plate which can be inserted beneath the bottom of an individual container to support the container during lifting and transporting. The dollies either

have a clip to secure the top of the container, or are shaped in an arc to cradle the container during lifting and transport. These drum dollies have features capable of holding a container during lifting and transporting without requiring additional straps. Some manual handling of the containers may be necessary.

G-5b <u>Run-off and Run-on:</u> 40 CFR 270.14(b)(8)(ii)

Precipitation and spills in waste management areas will be contained by dedicated secondary containment structures. These structures will prevent run-off to the environment or other facility areas. Secondary containment systems may contain one or more sumps to allow collection and removal of any accumulated liquids. Accumulated liquids will be managed in accordance with Section C, Waste Characterization. Containment systems not protected from precipitation by a building have been designed to accommodate the intrusion of precipitation from a twenty-five (25) year, twenty-four (24) hour storm event. Drawings showing the design and dimensions of containment systems are provided in Sections D, Waste Characterization and E, Tank Systems of this permit application.

Precipitation falling outside of the containment areas is controlled to prevent run-on of storm water into a waste management unit. Storm water falling into the active areas of the site is managed through a storm water drainage system.

Spills of hazardous waste will be promptly controlled and removed, when discovered, to prevent the spread of contaminants. Spill response procedures are provided in Section H, Contingency/Emergency Plan. The spilled material and any absorbent used will be placed into appropriate containers. The waste will be managed in accordance with Section C, Waste Characterization.

G-5c <u>Water Supplies:</u> 40 CFR 270.14(b)(8)(iii)

Operations at HRIW will require water for potable and process usage. Water supplies include City of Wichita water as well as ground water available on site. City (potable) water will be used for personnel decontamination (e.g., eye-wash stations, safety showers, and sanitary needs).

Process water is used for waste treatment, equipment decontamination, fire fighting, etc. The process water will be supplied either from the City of Wichita distribution system or from ground water at the facility. Potable and process water are distributed, as needed, throughout the facility. Physical separation will be used to prevent contamination of the water in a delivery system by back-siphoning of contaminants.

G-5d <u>Equipment and Power Failure:</u> 40 CFR 270.14(b)(8)(iv)

Normally, the electrical requirements of HRIW will be met with power purchased from the local power utility. There are no processes involving high pressures or reactions which, as a result of a power outage, might "run away" and cause fires, explosions, or other sudden releases of hazardous waste.

In the event of a power outage, facility personnel will proceed as follows.

- Cease operations
- Switch off process equipment
- Close appropriate valves
- Report to their supervisor(s) for further instructions

G-5e <u>Personal Protective Equipment:</u> 40 CFR 270.14(b)(8)(v)

Personal Protective Equipment (PPE) available at the facility will include the following.

- Self-Contained Breathing Apparatus (SCBA): A portable device to supply breathing air will be available on-site.

- Cartridge respirator: Employees will be issued the appropriate mask and cartridges for the work area. Cartridges for the masks will be stocked at the facility.

- Protective clothing: Employees performing specific tasks in HWMUs will be issued hard hats, protective coveralls, safety glasses, chemical resistant steel toe boots, specialized gloves, and hearing protection as appropriate. A supply of the appropriate protective clothing will be maintained at the facility.

Minimum PPE for all personnel within the active portion of the facility is a hard hat and eye protection. This minimum protection level will not apply to personnel within passenger

USPCI/ HRS - WICHITA
DAILY INSPECTION LOG

FOR THE DAY OF :_____ _____, _____ TIME:_____

INSPECTION UNIT	PERIMETER AND GENERAL FACILITY		
INSPECTION ITEM	ELEMENT	STATUS	OBSERVATION/ REMEDIAL WORK ORDERS ISSUED
Facility Gates	Operate and make sure the warning signs are present and visible.	A / U	
Access Roads	Check for facility debris, deterioration, and spills.	A / U	
Perimeter and Yards	Note any evidence of stressed vegetation.	A / U	
Loud Speakers	Check for operability and clarity. Receive confirmation of both.	A / U	
Telephone System	Check for operability and verify contingency plan contact list is present.	A / U	

INSPECTION UNIT	BUILDING D: East Yard, Drier Grinder, Container Storage, Maintenance, Sparge/HotRoom, Electrical Storage Area, Compressor / Boiler Room		
INSPECTION ITEM	ELEMENT	STATUS	OBSERVATION/ REMEDIAL WORK ORDERS ISSUED
Telephone System	Check for operability and verify contingency plan contact list is present.	A / U	
Spill Control Equipment	Check inventory and availability of absorbent, shovel, broom, and drum.	A / U	
Dryer/ Grinder	Check for spills and deterioration.	A / U	
	Check gauges for proper flow/ pressure:	A / U	
Baghouse	Check for fugitive dust and emissions particles, bag integrity and fitting security.	A / U	

INSPECTION COMPLETED BY: _____

********** DEFICIENCIES AND CORRECTIONS ARE DETAILED IN THE ATTACHED WORK ORDERS **********

USPCI/ HRS - WICHITA
WEEKLY INSPECTION LOG

FOR THE WEEK OF :_____ ___ TO ___, _____ DATE INSPECTED: _____ ___, TIME:____

INSPECTION UNIT/ AREA: A BUILDING: Laboratory			
INSPECTION ITEM	ELEMENT	STATUS	OBSERVATION/ REMEDIAL WORK ORDERS ISSUED
First Aid Kit	Check for inventory and note any reductions from previous inspections.	A / U	
Eye Wash Station	Check for cleanliness, accessibility, and operability.		
Emergency Shower	Check for cleanliness, accessibility, and operability.	A / U	

INSPECTION UNIT	BUILDINGS I & J		
INSPECTION ITEM	ELEMENT	STATUS	OBSERVATION/ REMEDIAL WORK ORDERS ISSUED
Security Fence	Check all sides of fence for damage, offsite sources of contamination, and erosion. Gates and doors should be locked unless in use.	A / U	
Warning Signs	Check for proper maintenance and clear visibility.	A / U	
No Smoking Signs	Check for proper maintenance and clear visibility.	A / U	

INSPECTION COMPLETED BY: _____

********** DEFICIENCIES AND CORRECTIONS ARE DETAILED IN THE ATTACHED WORK ORDERS **********

vehicles, the administration building, control rooms, or any other office space within the facility in which the risk of a head or eye injury does not exceed normal office work risks. Personnel within specific waste management units will be provided with a hard hat, eye protection, and chemical resistant boots. Additional PPE will be provided as required for specific tasks.

Employees will be trained in proper PPE decontamination during their introductory training.

G-6 Prevention of Reaction of Ignitable, Reactive and Incompatible Wastes:

G-6a Precautions to Prevent Ignition or Reaction of Ignitable or Reactive Waste and Mixing of Incompatible Wastes: 40 CFR 264.17(a), 270.14(b)(9)

Precautions will be taken at the facility during storage, treatment, or handling to avoid the accidental ignition or reaction of waste and mixing of incompatible wastes. These precautions are intended to prevent generation of undesirable heat, pressure, fire, explosion, toxic gases, or fumes which could result in damage to the structural integrity of any portion of the facility or cause a threat to human health or the environment. The precautions will include the following.

- Ignitable waste will be protected from open ignition sources such as open flames, metal welding and cutting, hot surfaces, frictional heat, smoking, and sparks (static, electrical, or mechanical). Tanks storing ignitable wastes will be grounded to protect the contents from ignition by a spark. Bulk metal containers (tank trailers and transport tanks) of ignitable liquid wastes will also be grounded and bonded before and during transfer of material through pipes

or hoses. Signs prohibiting smoking will be conspicuously placed within and near the ignitable waste storage areas. Applicable safeguards (e.g., no smoking, no sparks) will be observed during repairs performed near ignitable materials.

- Buildings which enclose waste processing operations will be ventilated appropriately to avoid an accumulation of hazardous mists, vapors, dusts, or gases; or of flammable vapors or gases.

- Ignitable and reactive wastes are stored at least fifty (50) feet away from the facility boundary.

G-6b <u>Management of Ignitable or Reactive Wastes in Containers:</u>
40 CFR 264.176, 270.15(c)

Ignitable or reactive wastes in containers may be either solid, sludge, or liquid. Ignitable or reactive wastes in containers will be managed in accordance with the following guidelines.

- Ignitable or reactive wastes are protected from spontaneous ignition caused by heat-producing chemical reactions by segregating incompatible wastes in separate CMUs. Segregated secondary containment will prevent mixing of incompatible wastes.

- The buildings have been designed to comply with the City Building Code and the appropriate codes of the National Fire Protection Association (NFPA). Interior and exterior walls of the CMUs meet the requirements of the applicable Building Code and NFPA codes. Equipment and personnel access doors meet the applicable codes.

- Containerized ignitable or reactive liquid wastes may be decanted and transferred to a storage tank for blending or

processing through the Processing Area, re-containerized for shipment, or shipped off-site in their original containers.

Section G-6d provides information on the management of ignitable and reactive wastes in tanks.

G-6c <u>Management of Incompatible Wastes in Containers:</u> 40 CFR 264.177, 270.15(d)

Measures to prevent the inadvertent mixing or commingling of incompatible wastes in containers will include the following:

- Incompatibility between wastes or a waste and a container will be determined in accordance with Section C, Waste Characterization.

- Containers of waste received within one truck trailer will be unloaded and managed as described in Section C, Waste Characterization. If, during incoming load analysis, incompatible wastes in a common CMU are identified, the containers holding the incompatible waste will be removed and placed in an appropriate area or provided with a portable containment system. Section D, Use and Management of Containers provides a description of the container storage and processing procedures.

- Wastes found to be incompatible under the procedures in Section C will not be placed in the same container. Wastes added to containers must be compatible with the contents of the container and with the container itself.

G-6d <u>Management of Ignitable or Reactive Wastes in Tanks:</u> 40 CFR 264.198, 270.16(j)

Proper precautions are and will be taken (when managing ignitable or reactive wastes) to prevent reactions which: 1) generate extreme heat or pressure, fire or explosion, or violent reactions; and 2) produce uncontrolled toxic mists, fumes, dusts, gases in sufficient quantities to threaten human health or the environment. Wastes exhibiting the characteristics of ignitability or reactivity will not be placed in any of the tank systems located at the HRIW facility unless the waste is treated, otherwise managed, or mixed before or immediately after placement into a tank system.

Reactive wastes will be stored in tanks or containers in such a way that prevents contact with materials or conditions which might produce a dangerous or unacceptable reaction.

Liquid wastes which exhibit the characteristics of ignitability will be placed in appropriate tanks or containers for storage and/or treatment at the facility. Section E, Tank Systems, provides details regarding hazard management in tanks. All ignitable wastes will be stored more than fifty feet from the HRIW property boundary.

G-6e <u>Management of Incompatible Wastes in Tanks:</u> 40 CFR 264.199, 270.16(j)

Proper precautions are and will be taken (when managing incompatible wastes, or mixing incompatible wastes or incompatible wastes and other materials) to prevent reactions which: 1) generate extreme heat or pressure, fire or explosion, or violent reactions; and 2) produce uncontrolled toxic mists, fumes, dusts, gases in sufficient quantities to threaten human health or the environment. Measures to prevent the inadvertent mixing or commingling of incompatible wastes in tanks will include the following:

- Compatibility will be determined in accordance with Section C, Waste Characterization.

- Incompatible wastes will not be placed in the same tank unless the waste is treated, otherwise managed, or mixed before or immediately after placement into a tank system. The characterization of waste for compatibility is determined according to Section C, Waste Characterization. If waste is added to a contaminated, empty tank, the waste must be compatible with the previous contents of the tank.

If waste is to be placed in a tank which previously held a waste with which it would be incompatible, then the decontamination procedures in Section C, Waste Characterization will be followed.

G-7 Air Emission Standards for Equipment Leaks: 40 CFR 264.1050 - 264.1065, 270.25

Fugitive emissions from equipment associated with management of hazardous waste contacting or containing ten (10) percent by weight of organics are regulated under Subpart BB of Part 264. Details regarding these requirements are addressed in Section N, Air Emissions.

APPENDIX G-A

SAMPLE INSPECTION LOG SHEET

Form May be Modified

February 18, 1992

Table of Contents

List of Figures . . . . . Page iii

List of Tables . . . . . Page iii

List of Appendices . . . . . Page iii

List of Referenced Drawings . . . . . Page iii

Acronym Table . . . . . Page iii

H-1 Introduction: . . . . . Page 1

H-2 General Information: . . . . . Page 2
- H-2a Facility name: . . . . . Page 2
- H-2b Owner and Operator of Facility: . . . . . Page 2
  - H-2b(1) Facility Operator: . . . . . Page 2
  - H-1b(2) Facility Owner(s): . . . . . Page 2
  - H-1b(3) Facility Telephone Number: . . . . . Page 3
- H-2c Location: . . . . . Page 3
- H-2d Layout and Site Plan: . . . . . Page 3
- H-2e Description of Facility Operations: . . . . . Page 5

H-3 Emergency Response Coordinators: . . . . . Page 5

H-4 Implementation: . . . . . Page 8
- H-4a Fires and/or Explosions: . . . . . Page 8
- H-4b Material Releases: . . . . . Page 9

H-5 Emergency Response Procedures: . . . . . Page 10
- H-5a Notification Procedures: . . . . . Page 10
- H-5b Identification of Hazardous Materials: . . . . Page 13
- H-5c Hazard Assessment: . . . . . Page 13
- H-5d Control Procedures: . . . . . Page 14
- H-5e Emergency Response Procedures: . . . . . Page 17
  - H-5e(1) Injuries to Personnel: . . . . . Page 17
  - H-5e(2) Fires/Explosions: . . . . . Page 19
  - H-5e(3) Releases: . . . . . Page 21
- H-5f Post-Emergency Activities: . . . . . Page 24

H-6 Emergency Equipment: . . . . . Page 27
- H-6a Emergency Alarm and Communication Systems: . Page 27

H-6b Fire extinguishers: . . . . . Page 28
H-6c Fire hydrants: . . . . . Page 28
H-6d First Aid Stations: . . . . . Page 29
H-6e Personal Protective Equipment (PPE): . . . . . Page 29
H-6f Safety Showers and Eye Wash Stations: . . . . . Page 30
H-6g Self-Contained Breathing Apparatus (SCBA): . . Page 30
H-6h Other Emergency Response Equipment: . . . . . Page 31

H-7 Coordination Agreements: . . . . . Page 32
H-7a Emergency Authorities: . . . . . Page 32
H-7b Local Contractors: . . . . . Page 32

H-8 Evacuation Plan: . . . . . Page 33
H-8a Criteria for Evacuation: . . . . . Page 33

H-9 Required Reports: . . . . . Page 35
H-9a Reports to the Regional Administrator: . . . . Page 35
H-9b SARA Reporting: . . . . . Page 36

List of Figures

Figure H.1, Emergency Equipment/Evacuation Routes

List of Tables

Table H-1, Emergency Response Coordinators,

List of Appendices

Appendix H-A, List of EPA Waste Codes
Appendix H-B, Emergency Response Coordinator Authorization
Appendix H-C, Emergency Telephone List of Local Authorities
Appendix H-D, Coordination Agreement Letters

List of Referenced Drawings

Drawings Located in Section Y, Drawings

Drawing 50-01-03-002, Emergency Equipment/Evacuation Routes

Acronym Table

Hydrocarbon Recyclers, Inc. of Wichita (HRIW)
Emergency Response Coordinator (ERC)
City of Wichita Fire Department (CWFD)
Hazardous Materials Response Team (HMRT)
City of Wichita Police Department (CWPD)
National Response Center (NRC)
Reportable Quantity (RQ)
Local Emergency Planning Committee (LEPC)
Kansas Department of Health and Environment (KDHE)
National Fire Protection Association (NFPA)
Personal Protective Equipment (PPE)
Self-Contained Breathing Apparatus (SCBA)

H-1 Introduction: 40 CFR 264.51(a), 264.53 (a),(b), 264.54

This Contingency/Emergency plan, when implemented, will minimize hazards to human health and the environment due to events such as fires, explosions, and/or releases of hazardous waste. This plan contains provisions addressing the requirements of 40 CFR Part 270 and 40 CFR Part 264. It is presented in a format designed to be useful for employees and response personnel during an emergency and for employee training purposes.

Copies of the plan will be kept at the facility and provided to the appropriate local authorities and emergency response agencies that may be called upon to provide emergency services. The plan will be reviewed and may be amended, if necessary, whenever:

- the permit is revised;
- the plan may be improved by addressing shortcomings noted during practice or actual implementation;
- the list of Emergency Response Coordinators (ERC) changes, or the list of emergency equipment changes;
- the facility changes in a way that materially increases the potential for fires, explosions, releases of hazardous waste or hazardous waste constituents; or

- the facility changes in a way that affects the implementation of the plan.

H-2 General Information: 40 CFR 264.52, 264.53

H-2a Facility name:

Hydrocarbon Recyclers, Inc. of Wichita (HRIW)

H-2b Owner and Operator of Facility:

H-2b(1) Facility Operator:

Hydrocarbon Recyclers, Inc. of Wichita, owned by USPCI
2549 North New York Avenue
Wichita, Kansas 67219

H-1b(2) Facility Owner(s):

Charles P. Trombold and David G. Trombold
2549 North New York Avenue
Wichita, Kansas 67219

H-1b(3) Facility Telephone Number:

Office: 316/268-9490

Beeper: 316/261-2766 (Beeper)

Note: See Table H-1 for telephone numbers for Emergency Response Coordinators.

H-2c Location:

The facility is located at 2549 North New York Avenue in Wichita, Sedgwick County, Kansas, zip code 67219.

This address is in the Northeast quarter of the Southeast quarter of Section 4, Township 27 South, Range 1 East.

H-2d Layout and Site Plan:

See Figure H.1, Emergency Equipment/Evacuation Routes, Drawing 50-01-03-002, Emergency Equipment/Evacuation Routes. Note: Full size reference drawings are available for review from the facility, and are included in Section Y, Referenced Drawings.

Figure H.1. Emergency Equipment/Evacuation Routes

H-2e <u>Description of Facility Operations</u>:

Hydrocarbon Recyclers, Inc. of Wichita (HRIW) treats, recovers for recycling, and stores for subsequent off-site disposal, hazardous and nonhazardous wastes. Detailed operating and design descriptions are presented in the facility RCRA Permit Application (Parts A and B), which is available for review at the facility. Appendix H-A, List of EPA Waste Codes, identifies RCRA regulated wastes which may be present in the facility. All RCRA regulated storage areas and treatment equipment will have secondary containment structures, which provide adequate run-on and run-off controls.

H-3 <u>Emergency Response Coordinators:</u> 40 CFR 264.52(d), 264.55

The Emergency Response Coordinator (ERC) will be responsible for implementing the Contingency/Emergency plan as necessary in the event of an exigent situation. Each of the personnel listed in Table H-1, Emergency Response Coordinators, are qualified to assume the responsibilities of ERC. Each ERC will be familiar with all aspects of the facility's Contingency/Emergency Plan,

operations and activities at the facility, the location and nature of wastes handled, the location of records within the facility, and the facility layout. An attempt will be made to contact the primary ERC in the event of an exigency; if the primary ERC is not available, the alternate ERC(s) will be called until one is reached.

The personnel listed in Table H-1, Emergency Response Coordinators, have full authority to commit all facility resources necessary to carry out the Contingency/Emergency Plan. A letter providing authorization for action by an ERC is provided in Appendix H-B, Emergency Response Coordinator Authorization.

Table H-1

Emergency Response Coordinators

Primary Emergency Response Coordinator

Name: Steve Keiter

Ex. 6 PII this page

[redacted]
316/268-9490 (work)
[redacted]

Alternate Emergency Response Coordinators

Name: Cary Mans

[redacted]
316/268-9490 (work)
[redacted]

Name: James Hamilton

[redacted]
316/268-9490 (work)
[redacted]

Name: Ronald Robertson

[redacted]
316/268-9490 (work)
[redacted]

Name: Beth Justice

[redacted]
316/268-9490 (work)
[redacted]

H-4 Implementation: 40 CFR 264.52(a), 264.56(d)

This Plan will be implemented in response to fires, explosions, or any unplanned sudden or non-sudden release of hazardous waste or waste constituents which may threaten human health and the environment. The ERC will be contacted if a fire, explosion, or release of hazardous waste might warrant implementation of this Plan. The ERC will determine whether implementation of the Contingency/Emergency Plan is necessary. Minor events which do not meet these criteria may be resolved with due regard to personnel health and safety without implementation of this plan. The following types of situations may be justification for implementing this plan.

H-4a Fires and/or Explosions:

- Fire which may cause harm to human health.

- Fire which may cause release of toxic fumes.

- Fire which may spread and could possibly ignite other nearby materials, either on-site or off-site, or could cause heat-induced explosions.

- Use of fire suppressants which could result in contaminated run-off.

- Explosion which has or could:
  - result in danger from flying fragments or shock waves
  - ignite other hazardous waste at the facility
  - release toxic fumes.

H-4b <u>Material Releases</u>:

- A release of toxic vapors or a significant volume of flammable liquids or vapors that could present a fire or vapor explosion hazard.

- A release which could result in off-site soil contamination and/or surface water contamination.

- A release that could endanger human health or the environment for other reasons.

H-5 Emergency Response Procedures: 40 CFR 264.56

H-5a Notification Procedures: 40 CFR 264.56(a)(2), 264.56(d)

In the event of an emergency which may require notification of outside authorities, the ERC or person designated by the ERC, shall call the appropriate emergency authorities. A telephone listing of these authorities is provided in Appendix H-C, Emergency Telephone List of Local Authorities. This telephone list will be posted at or nearby every telephone in the active portion of the facility; emergency telephone numbers are also available in office areas. The person initiating the call will provide as much of the following information as is available.

- Name of caller
- Name of facility and telephone number
- Address and location of Facility
- Time and type of incident
- Type and quantity of material(s) involved
- Extent of injuries
- Possible hazards to health and environment outside the facility

The specific authorities to be notified are as follows.

- The Sedgwick County Emergency Medical Service (EMS) will be called to respond to injuries to personnel as needed. Arrangements to treat personnel injuries have been made with St. Francis Emergency Center.

- In the event of a fire, explosion, or major spill, the City of Wichita Fire Department (CWFD) will be notified as needed. Arrangements have been made with the CWFD Hazardous Materials Response Team (HMRT); the HMRT is prepared to respond to a fire, explosion, or major spill at the HRIW facility.

- Similarly, for situations which may require response from the local police (i.e., evacuation), the City of Wichita Police Department (CWPD) will be notified. If the CWPD officials determine that additional assistance is needed, they may contact the Sedgwick County Sheriff, and/or the Kansas Highway Patrol.

In the event that the ERC determines that the facility has had a release, fire, or explosion which could threaten human health or the environment outside the facility, the appropriate local emergency authorities will be notified. The ERC will be available to assist authorities in evaluating the situation regarding potential evacuation of an area outside of the facility. In addition, the National Response Center (NRC) will be notified in the event of a release of a Reportable Quantity (RQ) within a twenty-four (24) hour period.

If there is evidence of a Section 304 RQ release off site, the Local Emergency Planning Committee (LEPC) will be notified in accordance with said section of the Emergency Planning and Community Right-to-Know Act of 1986 (40 CFR 355).

The Kansas Department of Health and Environment (KDHE) will be notified of incidents through reporting as specified in Section H-9.

H-5b <u>Identification of Hazardous Materials:</u> 40 CFR 264.56(b)

Whenever there is a release, fire, or explosion that may threaten human health or the environment, the ERC will immediately attempt to determine the character, exact source, amount, and areal extent of any released materials. Facility records, manifests, truck placards, etc. may be reviewed or inspected in an effort to identify the waste which may be involved in an exigent situation. A chemical analysis may be performed as necessary.

H-5c <u>Hazard Assessment:</u> 40 CFR 264.56(c)

The ERC will assess possible hazards to human health or the environment that may result from the release, fire or explosion. This assessment will consider both direct and indirect effects of the release, fire, or explosion, including:

- the possible effects of any toxic, irritating, or asphyxiating gases that are generated,

- the possibility of fire spreading to other areas or causing a heat induced explosion,

- the risk to which facility personnel might be exposed by attempting to control a fire or release,

- the effects of any hazardous surface water run-off from water or chemical agents used to fight fires, and

- the potential of contaminating surface water or ground water from a spill or release of hazardous material.

The ERC will utilize available information to make this assessment, including the quantity of hazardous material involved, the rate of release, and the conditions surrounding the incident.

H-5d <u>Control Procedures:</u> 40 CFR 264.52(a), 264.56

In the event of an emergency, the necessary provisions of this Contingency/Emergency plan will be carried out as described below.

The person who first discovers the incident, if it is safe to do so, will:

- evacuate injured personnel,
- Notify the Emergency Response Coordinator,
- stop the spread of contamination (e.g., turn off a valve on a tank),
- begin primary containment of liquids (i.e., dikes, sumps),
- order the evacuation of other personnel from the area surrounding the incident, if necessary.

Once the ERC has been notified and is on the scene, he/she will then assess the situation further with the information that is available at this time. The ERC will immediately implement, as necessary, the following provisions of this Contingency/Emergency Plan (if not previously implemented).

- Activate internal facility alarms or communication systems to notify all facility personnel of the incident.

- Identify the character, exact source, amount, and areal extent of any released material, if possible.

- Assess the possible hazards to human health or the environment. If the assessment indicates that there is a threat to human health or the environment outside the facility, or if there is evidence of a release of a RQ of hazardous material outside the facility, the ERC will implement the notification provisions of this Contingency/Emergency Plan per 40 CFR 264.56(d).

- Coordinate the evacuation of personnel from immediate danger and coordinate first aid for injured personnel.

After the initial assessment is completed, the ERC will also, as necessary, implement the following procedures.

- Coordinate the appropriate response procedures according to the incident. These procedures are presented in H-5e.

- Initiate remedial actions to reduce the impact of the incident, as appropriate.

- Ensure that any waste generated during clean up is properly managed, and that no waste that may be incompatible with the

released material is managed at the affected unit until the cleanup procedures are completed.

Additional responses may be warranted depending on the type of incident. The response procedures outlined in H-5e include the items which the ERC will consider in determining additional responses. This Plan serves as a guide rather than an unyielding set of procedures. The ERC will consider all options presented in this Plan and implement them as appropriate.

H-5e <u>Emergency Response Procedures</u>: 40 CFR 264.56

H-5e(1) <u>Injuries to Personnel:</u>

The following response actions are to be considered in the event that an injury occurs at the facility.

- Based on the assessment of hazards to health which may be present, and if it is safe to do so, evacuate injured personnel from immediate danger using appropriate Personal Protective Equipment (PPE).

- Perform CPR or artificial respiration, if needed, on the injured.

- Notify Sedgwick County EMS according to notification procedures in Section H-5a.

- Wash eyes, skin, etc. of injured personnel with water, if needed.

- Treat injuries (see Figure H.2 for the location of first aid stations).

- Establish emergency operations center.

- Notify emergency operations center of incoming injured.

- Dispatch site personnel to meet and direct incoming emergency vehicles.

H-5e(2) **Fires/Explosions:**

During an emergency, the ERC will take all reasonable measures necessary to ensure that fires and explosions do not occur, recur, or spread to other hazardous waste at the facility. The following response actions are to be considered if a fire and/or explosion should occur at the facility.

- Establish an emergency operations center.
- Extinguish any fire with fire extinguishers, if appropriate.
- Call the Wichita Fire Department HMRT.
- Evacuate site according to evacuation procedures in H-8.
- Notify Derby refinery and Union Pacific in the event of an evacuation.
- Contact appropriate local agencies (see H-5 for notification procedures). The telephone list is posted at or near telephones or is available in office areas.

- Notify the KDHE.

- Notify the National Response Center (NRC).

- Dispatch site personnel to meet and direct incoming emergency vehicles.

- Use water spray to cool tanks and containers that are exposed to heat as a result of the fire and/or explosion.

- Protect other operations and vehicles from the incident. This includes, where applicable, stopping processes and operations, collecting and containing released wastes, removing or isolating containers, or moving vehicles.

- Monitor for leaks, pressure buildup, gas generation, or ruptures in valves, pipes, or other equipment.

- Stop the release of liquid by plugging, patching, or unloading any leaking tanks, pipes, or other equipment.

- Absorb liquid waste with absorbent materials and place in containers for management. Alternatively, larger spills can be pumped into containers or tanks.

H-5e(3) **Releases:**

During an emergency, the ERC will take all reasonable measures necessary to ensure that releases do not occur or recur. The following list contains response procedures to be considered in the event that a release of hazardous waste occurs.

- Evacuate immediate area around incident.

- Attempt to contain spills, if it is safe to do so.

- Transfer leaking or ruptured container(s) to an overpack.

- Establish emergency operations center.

- Determine the source of spill/release and shut down the affected unit to eliminate additional material release.

- Stop additional release of material to the environment and control surface leakage (e.g., pump the spilled material to tanks, transfer contents of tank to another tank, build containment dikes, transfer released materials to containers).

- Clean up the spill using on-site equipment. As appropriate, these procedures will include soaking up liquid with absorbants; removal of standing liquids and/or waste from sumps, trenches, or low points of the floor; removal of material adhering to the surface; and steam cleaning and/or a water rinse.

- If on-site personnel cannot contain/cleanup spill, contact appropriate state and local agencies (see Section H-5a for notification procedures).

- Contact the Wichita Fire Department Hazardous Materials Response Team (HMRT) for RQ spills. The telephone list is posted next to all phones or in all offices in the facility (see Appendix H-B for phone numbers).

- Evacuate the facility (see H-8 for evacuation procedures and routes).

- Within twenty-four (24) hours, or as soon as practicable after detection of the release, transfer sufficient waste from the tank or container, as necessary, to prevent further release of hazardous waste to the environment and to allow inspection of the unit.

- After the release is controlled, and it is deemed safe to do so, response personnel will enter the affected building or area to assess damage and to determine the condition of waste containers, and other affected equipment.

- Stop the release of liquid into an area by plugging, patching, or unloading any leaking tanks, pipes, or other equipment.

- Stop the release of liquid from its container by placing the leaking container into an overpack drum.

After an emergency, the ERC will initiate clean-up activities including the treatment, storage, and/or disposal of recovered waste, contaminated soil or surface water, or other material that results from a release, fire, or explosion at the facility.

H-5f <u>Post-Emergency Activities:</u> 40 CFR 264.56(h)(2), (i)

When operations of a waste management unit have been suspended due to an emergency resulting in implementation of this Plan, the unit and all equipment that was used in implementing the Plan will be assessed. Emergency equipment used in response to the emergency must be determined to be fit for reuse or replaced. The Regional Administrator (Region VII) and the KDHE will be notified (per 40 CFR 264.56) when the equipment is fit for use, prior to resuming operation of the affected unit.

The following actions will be considered when decontaminating emergency equipment.

- Provide adequate safety equipment and protective clothing for HRIW personnel involved in remedial actions.

- After a fire, explosion, or spill event is controlled and it is deemed safe to do so, enter the affected building or area to assess damage and determine the condition of waste containers, tanks, and other affected equipment.

- Utilize on-site equipment for remedial actions (see H-6 for list of on-site equipment).

- The Tanker Bay in the Processing Area may be used to decontaminate vehicles and equipment (i.e., trucks, portable pumps, etc.). The rinsate will be collected and managed as a hazardous waste.

- Reusable PPE will be decontaminated, as appropriate. PPE which is unsuitable for reuse will be managed for disposal.

- Inspect the affected unit(s) and ensure that no waste that is incompatible with the released material is managed in the unit(s) until cleanup procedures are completed.

- Note in the operating record the time, date, and details of any incident that required implementing the contingency plan.

- Submit, from HRIW or the ERC, a written report of the incident to the Regional Administrator within 15 days after the incident (see H-9 for the detailed reporting requirements).

- Submit, from HRIW or the ERC, a written report to the Regional Administrator certifying that any emergency equipment involved in the incident or in the response and remediation are fit for their intended use.

H-6 Emergency Equipment: 40 CFR 264.52(e)

Emergency equipment is available at the facility for response to emergency situations. This equipment will be accessible and will be regularly inspected and appropriately serviced. A description of this equipment is listed below.

H-6a Emergency Alarm and Communication Systems:

The facility is equipped with emergency alarm and communication systems to be used to notify and give emergency directions to both on-site and off-site personnel. These systems include:

- a facility-wide alarm system (siren), which is capable of alerting personnel of emergencies;

- a PA system which includes an intercom system accessible by telephones throughout the facility; and

- telephones, which are the primary means of communication within the facility and between the facility and the local emergency authorities.

H-6b <u>Fire extinguishers</u>:

There are fire extinguishers located throughout the facility as required by the appropriate local fire code as well as the National Fire Protection Association (NFPA) code. The facility employs Type ABC fire extinguishers which are multipurpose combinations of the extinguisher types listed below.

- Type A is capable of extinguishing fires involving ordinary combustible wastes such as wood, cloth, paper, rubber, and many plastics.

- Type B is capable of extinguishing fires involving flammable liquids, oils, greases, tars, oil base paints, lacquers, and flammable gases.

- Type C is capable of extinguishing fires involving energized electrical equipment.

H-6c <u>Fire hydrants</u>:

Fire hydrants are available for fire control. They receive their water supply from the City of Wichita Department of Water.

H-6d <u>First Aid Stations</u>:

Cabinets of first aid and medical supplies such as bandages, tape, antibacterial ointments, pain relievers, splints, local and topical anesthetics and eyewash bottles and solution are located throughout the facility (see Figure H.1 for first aid station locations).

H-6e <u>Personal Protective Equipment (PPE)</u>:

The PPE listed below is available to facility personnel; PPE is issued as appropriate.

- Chemically resistant garments
- Chemically resistant gloves
- Chemically resistant boots
- Coveralls
- Steel-toed boots
- Hard hats
- Face shields and protective eyeglasses
- Air purifying respirators
- Self-contained air supply (as described below)

H-6f <u>Safety Showers and Eye Wash Stations</u>:

There are two (2) stations located in the facility. They are designed to meet OSHA requirements. Locations for these stations are provided on Figure H.1, Emergency Equipment/Evacuation Routes.

H-6g <u>Self-Contained Breathing Apparatus (SCBA)</u>:

SCBAs are available to provide breathing air, which may be needed by some personnel in the event of an emergency situation.

H-6h <u>Other Emergency Response Equipment</u>:

- Portable Pumps - Pumps which handle liquids and sludges are available for recovering any released contaminants.

- Stabilizing agents - Stabilizing materials will be stored in Building B to assist in spill release containment and cleanup.

- Overpack drums - Overpack drums will be available in each Container Storage Building where containerized hazardous waste is stored. Leaking drums may be placed inside these overpack drums for containment.

- Site Equipment - Mobile equipment may be used to respond to hazardous waste releases. Facility equipment typically maintained includes industrial trucks (forklifts) and a multi-purpose vehicle (Bobcat).

H-7 Coordination Agreements: 40 CFR 264.52(c), 264.37

H-7a Emergency Authorities:

Coordination agreements with local emergency authorities have been negotiated; letters to these authorities are presented in Appendix H-D, Coordination Agreement Letters in compliance with 40 CFR 264.37. Copies of this plan will be submitted to the organizations identified in Appendix H-D; amendments to the plan will be forwarded to these authorities as required. Procedures for notification of emergency authorities are described in Section H-5a.

H-7b Local Contractors:

In the event that on-site cleanup of a spill or release is required, HRIW has limited equipment on-site to respond. Outside contractors may be used as needed to respond to a spill or release. In addition, USPCI has a Remedial Services Division which is capable of responding to hazardous waste spills and/or releases.

H-8 Evacuation Plan: 40 CFR 264.52(f)

In each exigent situation, the ERC will determine whether a facility evacuation is necessary to protect the health and safety of facility personnel. The following criteria will be considered in making this decision.

H-8a Criteria for Evacuation:

- Fire and/or explosion which releases vapors or fumes which will endanger the health of facility personnel.

- Fire and/or explosion which could ignite other hazardous wastes and, in turn, endanger facility personnel.

- Spill and/or release which releases vapors or fumes which will endanger the health of facility personnel.

If the ERC determines that a site evacuation is necessary, the following procedures will be followed to implement the evacuation.

- The ERC or person designated by the ERC shall activate the appropriate alarms/sirens indicating that a site evacuation is required. If the alarm/siren system is not functioning, the intercom system will be used.

- All facility personnel shall meet at the appropriate evacuation point(s).

- The ERC or person(s) designated by the ERC will perform a count of all personnel at the evacuation point(s).

- If any persons are not accounted for, the ERC will coordinate efforts to search the appropriate areas to locate the missing personnel.

- Personnel shall evacuate the site according to the evacuation routes shown on Figure H.1. All personnel will be informed of these procedures and routes in their initial training program.

Personnel may return to the site when allowed to do so by the ERC.

H-9 Required Reports: 40 CFR 264.56(j)

H-9a Reports to the Regional Administrator:

If the Contingency Plan is implemented per 40 CFR 264.51(b), HRIW will submit a written report to the Regional Administrator (Region VII) within 15 days after the incident in compliance with 40 CFR 264.56(j).

The report will include the following information.

- Name, address, and telephone number of the owner or operator
- Name, address, and telephone number of the facility
- Date, time, and type of incident (e.g., fire, explosion)
- Name and quantity of material(s) involved
- The extent of injuries, if any
- An assessment of actual or potential hazards to human health or the environment, where this is applicable
- Estimated quantity and disposition of recovered material that resulted from the incident
- Notification that the equipment used in response to the incident is fit for its intended use

H-9b <u>SARA Reporting</u>:

As soon as practicable after a release which requires notice under the Superfund Amendments and Reauthorization Act (SARA), HRIW or the ERC will provide a written report to the LEPC as required by regulations set forth under that Act.

Appendix H-A

List of EPA Waste Codes

February 18, 1992

Hydrocarbon Recyclers, Inc. of Wichita d/b/a USPCI
Waste List

EPA Hazardous Waste Number:	Hazardous Waste/Constituent:

Hazardous Waste by Characteristic:

D001 (I)	Ignitability
D002 (C)	Corrosivity
D003 (R)	Reactivity
D004 (E)	Arsenic
D005 (E)	Barium
D006 (E)	Cadmium
D007 (E)	Chromium
D008 (E)	Lead
D009 (E)	Mercury
D010 (E)	Selenium
D011 (E)	Silver
D012 (E)	Endrin (1,2,3,4,10,10-hexachloro-1,7 epoxy-1,4,4a,5,6,;7,8,8a-octahydro-1,4 endo,endo-5,8-dimeth-ano-naphthalene)
DO13 (E)	Lindane (1,2,3,4,5,6, hexa-chloro-cyclohexane, gamma isomer
D014 (E)	Methoxychlor (1,1,1-Trichloro- 2,2-bis [p-methoxyphenyl]ethane
D015 (E)	Toxaphene ($C_{10}H_{10}Cl_8$, technical chlorinated camphene, 67-69 percent chlorine)
D016 (E)	2,4-D (2,4 dichlorophenoxyacetic acid)
D017 (E)	2,4,5-TP Silvex (2,4,5-trichloro-phenoxypropionic acid)
D018 (E)	Benzene
D019 (E)	Carbon tetrachloride
D020 (E)	Chlordane
D021 (E)	Chlorobenzene
D022 (E)	Choroform
D023 (E)	o-Cresol
D024 (E)	m-Cresol
D025 (E)	p-Cresol
D026 (E)	Cresol

Basis for listing or class of hazardous waste:

(I)	Ignitable	Toxicity Characteristic Waste	(E)
(C)	Corrosive	Acute Hazardous Waste	(H)
(R)	Reactive	Toxic Waste	(T)

Hydrocarbon Recyclers, Inc. of Wichita d/b/a USPCI
Waste List

EPA Hazardous Waste Number:	Hazardous Waste/Constituent:
D027 (E)	1,4-Dichlorobenzene
D028 (E)	1,2-Dichloroethane
D029 (E)	1,1-Dichloroethylene
D030 (E)	2,4-Dinitrotoluene
D031 (E)	Heptachlor (and its hydroxide)
D032 (E)	Hexachlorobenzene
D033 (E)	Hexachloro-1,3-butadiene
D034 (E)	Hexachloroethane
D035 (E)	Methyl ethyl ketone
D036 (E)	Nitrobenzene
D037 (E)	Pentachlorophenol
D038 (E)	Pyridine
D039 (E)	Tetrachloroethylene
D040 (E)	Trichloroethylene
D041 (E)	2,4,5-Trichlorophenol
D042 (E)	2,4,6-Trichlorophenol
D043 (E)	Vinyl Chloride

Basis for listing or class of hazardous waste:

(I)	Ignitable	Toxicity Characteristic Waste	(E)
(C)	Corrosive	Acute Hazardous Waste	(H)
(R)	Reactive	Toxic Waste	(T)

EPA Hazardous Waste Number:	Hazardous Waste/Constituent:

Hazardous Wastes from Non-specific Sources:

F001 (T)	The following spent halogenated solvents used in degreasing: Tetrachloroethylene, trichloroethylene, methylene chloride, 1,1,1-trichloroethane, carbon tetrachloride, and chlorinated fluorocarbons; all spent solvent mixtures/blends used in degreasing containing, before use, a total of ten percent or more (by volume) of one or more of the above halogenated solvents or those solvents listed in F002, F004 and F005; and still bottoms from the recovery of these spent solvents and spent solvent mixtures.
F002 (T)	The following spent halogenated solvents: Tetrachloroethylene, methylene chloride, trichloroethylene, 1,1,1-trichloroethane, chlorobenzene, 1,1,2-trichloro-1,2,2-triflouroethane, ortho-dichlorobenzene, trichlorofluoromethane, and 1,1,2-trichloroethane; all spent solvent mixtures/blends containing, before use, a total of ten percent or more (by volume) of one or more of the above halogenated solvents or those listed in F001,F004, or F005; and still bottoms from the recovery of these spent solvents and spent solvent mixtures.
F003 (I)	The following spent non-halogenated solvents: Xylene, acetone, ethyl acetate, ethyl benzene, ethyl ether, methyl isobutyl ketone, n-butyl alcohol, cyclohexanone, and methanol; all spent solvent mixtures/blends containing, before use, only the above spent non-

Basis for listing or class of hazardous waste:

(I)	Ignitable	Toxicity Characteristic Waste	(E)
(C)	Corrosive	Acute Hazardous Waste	(H)
(R)	Reactive	Toxic Waste	(T)

EPA Hazardous Waste Number:	Hazardous Waste/Constituent:
	halogenated solvents; and all spent solvent mixtures/blends containing, before use, one or more of the above non-halogenated solvents, and, a total of ten percent or more (by volume) of one or more of those solvents listed in F001, F002, F004, and F005; and still bottoms from the recovery of these spent solvents and spent solvent mixtures.
F004 (T)	The following spent non-halogenated solvents: Cresols and cresylic acid, nitrobenzene; all spent solvent mixtures/blends containing, before use, a total of ten percent or more (by volume) of one or more of the above non-halogenated solvents or those solvents listed in F001, F002, and F005; and still bottoms from the recovery of these spent solvents and spent solvent mixtures.
F005 (I,T)	The following spent non-halogenated solvents: Toluene, methyl ethyl ketone, carbon disulfide, isobutanol, and pyridine; benzene, 2-ethoxyethanol, and 2-nitropropane; all spent solvent mixtures/blends containing, before use, a total of ten percent or more (by volume) of one or more of the above non-halogenated solvents or those solvents listed in F001, F002, or F004; and still bottoms from the recovery of these spent solvents and spent solvent mixtures.
F006 (T)	Wastewater treatment sludges from electroplating operations except from the following processes: (1) Sulfuric acid anodizing of aluminum; (2) tin plating on

Basis for listing or class of hazardous waste:

(I)	Ignitable	Toxicity Characteristic Waste	(E)
(C)	Corrosive	Acute Hazardous Waste	(H)
(R)	Reactive	Toxic Waste	(T)

EPA Hazardous Waste Number:	Hazardous Waste/Constituent:
	carbon steel; (3) zinc plating (segregated basis) on carbon steel; (4) aluminum or zinc-aluminum plating on carbon steel; (5) cleaning/stripping associated with tin, zinc and aluminum plating on carbon steel; and (6) chemical etching and milling of aluminum.
F007 (R,T)	Spent cyanide plating bath solutions from electroplating operations
F008 (R,T)	Plating bath residues from the bottom of plating baths from electroplating operations where cyanides are used in the process.
F009 (R,T)	Spent stripping and cleaning bath solutions from electroplating operations where cyanides are used in the process.
F010 (R,T)	Quenching bath residues from oil baths from metal heat treating operations where cyanides are used in the process.
F011 (R,T)	Spent cyanide solutions from salt bath pot cleaning from metal heat treating operations
F012 (T)	Quenching wastewater treatment sludges from metal heat treating operations where cyanides are used in the process.
F019 (T)	Wastewater treatment sludges from the chemical conversion coating of aluminum.
F024 (T)	Process wastes, including but not limited to distillation residues, heavy ends, tars, and reactor clean-out wastes from the production

Basis for listing or class of hazardous waste:

(I)	Ignitable	Toxicity Characteristic Waste	(E)
(C)	Corrosive	Acute Hazardous Waste	(H)
(R)	Reactive	Toxic Waste	(T)

EPA Hazardous Waste Number:	Hazardous Waste/Constituent:
	of chlorinated aliphatic hydrocarbons by free radical catalyzed processes. These chlorinated aliphatic hydrocarbons are those having carbon chain lengths ranging from one to and including five, with varying amounts and positions of chlorine substitution. (This listing does not include wastewaters, wastewater treatment sludges, spent catalysts, and wastes listed in 261.31 or 261.32).
F025 (T)	Condensed light ends, spent filters and filter aids and spent desiccant wastes from the production of certain chlorinated aliphatic hydrocarbons by free radical catalyzed processes. These chlorinated aliphatic hydrocarbons are those having carbon chain lengths ranging from one to and including five with varying amounts and positions of chlorine substitution.
F032 (T)	Wastewaters, process residuals, preservative drippage, and spent formulations from wood preserving processes generated at plants that currently use or have previously used chlorophenolic formulations except potentially cross-contaminated wastes that have had the F032 waste code deleted in accordance with § 261.35 of this chapter and where the generator does not resume or initiate use of chlorophenolic formulations). This listing does not include K001 bottom sediments sludge from the treatment of wastewater from wood preserving processes that use creosote and/or pentachlorophenol.

Basis for listing or class of hazardous waste:

(I)	Ignitable	Toxicity Characteristic Waste	(E)
(C)	Corrosive	Acute Hazardous Waste	(H)
(R)	Reactive	Toxic Waste	(T)

EPA Hazardous Waste Number:	Hazardous Waste/Constituent:
F034 (T)	Wastewaters, process residuals, preservative drippage, and spent formulations from wood preserving processes generated at plants that use creosote formulations. This listing does not include K001 bottom sediment sludge from the treatment of wastewater from wood preserving processes that use creosote and/or pentachlorophenol.
F035 (T)	Wastewaters, process residuals, preservative drippage, and spent formulations from wood preserving processes generated at plants that use inorganic preservatives containing arsenic or chromium. This listing does not include K001 bottom sediment sludge from the treatment of wastewater from wood preserving processes that use creosote and/or pentachlorophenol.
F037 (T)	Petroleum refinery primary oil/water/solids separation sludge--Any sludge generated from the gravitational separation of oil/water/solids during the storage or treatment of process wastewaters and oily cooling wastewaters from petroleum refineries. Such sludges include but are not limited to, those generated in: oil/water/solids separators; tanks and impoundments; ditches and other conveyances; sumps; and stormwater units receiving dry weather flow. Sludge generated in stormwater units that do not receive dry weather flow, sludges generated from non-contact once-through cooling waters segregated for treatment from other process or oily cooling

Basis for listing or class of hazardous waste:

(I)	Ignitable	Toxicity Characteristic Waste	(E)
(C)	Corrosive	Acute Hazardous Waste	(H)
(R)	Reactive	Toxic Waste	(T)

EPA Hazardous Waste Number:	Hazardous Waste/Constituent:
	waters, sludges generated in aggressive biological treatment units as defined in § 261.31(b)(2) (including sludges generated in one or more additional units after wastewaters have been treated in aggressive biological treatment units) and K051 wastes are not included in this listing.
F038 (T)	Petroleum refinery secondary (emulsified) oil/water/solids separation sludge--Any sludge and/or float generated from the physical and/or chemical separation of oil/water/solids in process wastewaters and oily cooling wastewaters from petroleum refineries. Such wastes include, but are not limited to, all sludges and floats generated in: induced air flotation (IAF) units, tanks and impoundments, and all sludges generated in DAF units. Sludges generated in stormwater units that do not receive dry weather flow, sludges generated from non-contact once-through cooling waters segregated for treatment from other process or oily cooling waters, sludges and floats generated in aggressive biological treatment units as defined in § 261.31(b)(2) (including sludges and floats generated in one or more additional units after wastewaters have been treated in aggressive biological treatment units) and F037, K048, and K051 wastes are not included in this listing.

Basis for listing or class of hazardous waste:

(I)	Ignitable	Toxicity Characteristic Waste	(E)
(C)	Corrosive	Acute Hazardous Waste	(H)
(R)	Reactive	Toxic Waste	(T)

EPA Hazardous Waste Number:	Hazardous Waste/Constituent:
F039 [1]	Leachate resulting from the treatment, storage, or disposal of wastes classified by more than one waste code under Subpart D, or from a mixture of wastes classified under Subparts C and D of this part. (Leachate resulting from the management of one or more of the following EPA Hazardous Wastes and no other hazardous wastes retains its hazardous waste code(s): F020, F021, F022, F023, F026, F027, and/or F028).

[1]All constituents for which treatment standards are specified for multi-source leachate (wastewaters and non-wastewaters) under 40 CFR 268.43(a), Table CCW.

Basis for listing or class of hazardous waste:

(I)	Ignitable	Toxicity Characteristic Waste	(E)
(C)	Corrosive	Acute Hazardous Waste	(H)
(R)	Reactive	Toxic Waste	(T)

EPA Hazardous Waste Number:	Hazardous Waste/Constituent:

Hazardous Wastes from Specific Sources:

K001 (T)	Bottom sediment sludge from the treatment of wastewaters from wood preserving processes that use creosote and/or pentachlorophenol.
K002 (T)	Wastewater treatment sludge from the production of chrome yellow and orange pigments.
K003 (T)	Wastewater treatment sludge from the production of molybdate orange pigments.
K004 (T)	Wastewater treatment sludge from the production of zinc yellow pigments.
K005 (T)	Wastewater treatment sludge from the production of chrome green pigments.
K006 (T)	Wastewater treatment sludge from the production of chrome oxide green pigments.
K007 (T)	Wastewater treatment sludge from the production of iron blue pigments.
K008 (T)	Oven residue from the production of chrome oxide green pigments.
K009 (T)	Distillation bottoms from the production of acetaldehyde from ethylene.
K010 (T)	Distillation side cuts from the production of acetaldehyde from ethylene.

Basis for listing or class of hazardous waste:

(I)	Ignitable	Toxicity Characteristic Waste	(E)
(C)	Corrosive	Acute Hazardous Waste	(H)
(R)	Reactive	Toxic Waste	(T)

EPA Hazardous Waste Number:	Hazardous Waste/Constituent:
K011 (R,T)	Bottom stream from the wastewater stripper in the production of acrylonitrile.
K013 (R,T)	Bottom stream from the acetonitrile column in the production of acrylonitrile.
K014 (T)	Bottoms from the acetonitrile purification column in the production of acrylonitrile.
K015 (T)	Still bottoms from the distillation of benzyl chloride.
K016 (T)	Heavy ends or distillation residues from the production of carbon tetrachloride.
K017 (T)	Heavy ends (still bottoms) from the purification column in the production of epichlorohydrin.
K018 (T)	Heavy ends from the fractionation column in ethyl chloride production.
K019 (T)	Heavy ends from the distillation of ethylene dichloride in ethylene dichloride production.
K020 (T)	Heavy ends from the distillation of vinyl chloride in vinyl chloride monomer production.
K021 (T)	Aqueous spent antimony catalyst waste from fluoromethanes production.
K022 (T)	Distillation bottom tars from the production of phenol/acetone from cumene.

Basis for listing or class of hazardous waste:

(I)	Ignitable	Toxicity Characteristic Waste	(E)
(C)	Corrosive	Acute Hazardous Waste	(H)
(R)	Reactive	Toxic Waste	(T)

EPA Hazardous Waste Number:	Hazardous Waste/Constituent:
K023 (T)	Distillation light ends from the production of phthalic anhydride from naphthalene.
K024 (T)	Distillation bottoms from the production of phthalic anhydride from naphthalene.
K025 (T)	Distillation bottoms from the production of nitrobenzene by the nitration of benzene.
K026 (T)	Stripping still tails from the production of methy ethyl pyridines.
K027 (R,T)	Centrifuge and distillation residues from toluene diisocyanate production.
K028 (T)	Spent catalyst from the hydrochlorinator reactor in the production of 1,1,1-trichloroethane.
K029 (T)	Waste from the product steam stripper in the production of 1,1,1-trichloroethane.
K030 (T)	Column bottoms or heavy ends from the combined production of trichloroethylene and perchloroethylene.
K031 (T)	By-product salts generated in the production of MSMA and cacodylic acid.
K032 (T)	Wastewater treatment sludge from the production of chlordane.
K033 (T)	Wastewater and scrub water from the chlorination of cyclopentadiene in the production of chlordane.

Basis for listing or class of hazardous waste:

(I)	Ignitable	Toxicity Characteristic Waste	(E)
(C)	Corrosive	Acute Hazardous Waste	(H)
(R)	Reactive	Toxic Waste	(T)

EPA Hazardous Waste Number:	Hazardous Waste/Constituent:
K034 (T)	Filter solids from the filtration of hexachlorocyclopentadiene in the production of chlordane.
K035 (T)	Wastewater treatment sludges generated in the production of creosote.
K036 (T)	Still bottoms from toluene reclamation distillation in the production of disulfoton.
K037 (T)	Wastewater treatment sludges from the production of disulfoton.
K038 (T)	Wastewater from the washing and stripping of phorate production.
K039 (T)	Filter cake from the filtration of diethylphosphorodithioic acid in the production of phorate.
K040 (T)	Wastewater treatment sludge from the production of phorate.
K041 (T)	Wastewater treatment sludge from the production of toxaphene.
K042 (T)	Heavy ends or distillation residues from the distillation of tetrachlorobenzene in the production of 2,4,5-T.
K043 (T)	2,6-Dichlorophenol waste from the production of 2,4-D.
K044 (R)	Wastewater treatment sludges from the manufacturing and processing of explosives.

Basis for listing or class of hazardous waste:

(I)	Ignitable	Toxicity Characteristic Waste	(E)
(C)	Corrosive	Acute Hazardous Waste	(H)
(R)	Reactive	Toxic Waste	(T)

EPA Hazardous Waste Number:	Hazardous Waste/Constituent:
K045 (R)	Spent carbon from the treatment of wastewater containing explosives.
K046 (T)	Wastewater treatment sludges from the manufacturing, formulation and loading of lead-based initiating compounds.
K047 (R)	Pink/red water from TNT operations.
K048 (T)	Dissolved air flotation (DAF) float from the petroleum refining industry.
K049 (T)	Slop oil emulsion solids from the petroleum refining industry.
K050 (T)	Heat exchanger bundle cleaning sludge from the petroleum refining industry.
K051 (T)	API separator sludge from the petroleum refining industry.
K052 (T)	Tank bottoms (leaded) from the petroleum refining industry.
K060 (T)	Ammonia still lime sludge from coking operations.
K061 (T)	Emission control dust/sludge from the primary production of steel in electric furnaces.
K062 (C,T)	Spent pickle liquor generated by steel finishing operations of facilities within the iron and steel industry (SIC Codes 331 and 332).

Basis for listing or class of hazardous waste:

(I)	Ignitable	Toxicity Characteristic Waste	(E)
(C)	Corrosive	Acute Hazardous Waste	(H)
(R)	Reactive	Toxic Waste	(T)

EPA Hazardous Waste Number:	Hazardous Waste/Constituent:
K064 (T)	Acid plant blowdown slurry/sludge resulting from the thickening of blowdown slurry from primary copper production.
K066 (T)	Sludge from treatment of process wastewater and/or acid plant blowdown from primary zinc production.
K069 (T)	Emission control dust/sludge from secondary lead smelting. (Note: This listing is stayed administratively for sludge generated from secondary acid scrubber systems. The stay will remain in effect until further administrative action is taken. If EPA takes further action effecting this stay, EPA will publish a notice of the action in the Federal Register.)
K071 (T)	Brine purification muds from the mercury cell process in chlorine production, where separately prepurified brine is not used.
K073 (T)	Chlorinated hydrocarbon waste from the purification step of the diaphragm cell process using graphite anodes in chlorine production.
K083 (T)	Distillation bottoms from aniline production.
K084 (T)	Wastewater treatment sludges generated during the production of veterinary pharmaceuticals from arsenic or organo-arsenic compounds.
K085 (T)	Distillation or fractionation column bottoms from the production of chlorobenzenes.

Basis for listing or class of hazardous waste:

(I)	Ignitable	Toxicity Characteristic Waste	(E)
(C)	Corrosive	Acute Hazardous Waste	(H)
(R)	Reactive	Toxic Waste	(T)

EPA Hazardous Waste Number:	Hazardous Waste/Constituent:
K086 (T)	Solvent washes and sludges, caustic washes and sludges, or water washes and sludges from cleaning tubs and equipment used in the formulation of ink from pigments, driers, soaps, and stabilizers containing chromium and lead.
K087 (T)	Decanter tank tar sludge from coking operations.
K088 (T)	Spent potliners from primary aluminum reduction.
K090 (T)	Emission control dust or sludge from ferrochromiumsilicon production.
K091 (T)	Emission control dust or sludge from ferrochromium production.
K093 (T)	Distillation light ends from the production of phthalic anhydride from ortho-xylene.
K094 (T)	Distillation bottoms from the production of phthalic anhydride from ortho-xylene.
K095 (T)	Distillation bottoms from the production of 1,1,1-trichloroethane.
K096 (T)	Heavy ends from the heavy ends column from the production of 1,1,1-trichloroethane.
K097 (T)	Vacuum stripper discharge from the chlordane chlorinator in the production of chlordane.

Basis for listing or class of hazardous waste:

(I)	Ignitable	Toxicity Characteristic Waste	(E)
(C)	Corrosive	Acute Hazardous Waste	(H)
(R)	Reactive	Toxic Waste	(T)

EPA Hazardous Waste Number:	Hazardous Waste/Constituent:
K098 (T)	Untreated process wastewater from the production of toxaphene.
K099 (T)	Untreated wastewater from the production of 2,4-D.
K100 (T)	Waste leaching solution from acid leaching of emission control dust/sludge from secondary lead smelting.
K101 (T)	Distillation tar residues from the distillation of aniline-based compounds in the production of veterinary pharmaceuticals from arsenic or organo-arsenic compounds.
K102 (T)	Residue from the use of activated carbon for decolorization in the production of veterinary pharmaceuticals from arsenic or organo-arsenic compounds.
K103 (T)	Process residues from aniline extraction from the production of aniline.
K104 (T)	Combined wastewater streams generated from nitrobenzene/aniline production.
K105 (T)	Separated aqueous stream from the reactor product washing step in the production of chlorobenzenes.
K106 (T)	Wastewater treatment sludge from the mercury cell process in chlorine production.

Basis for listing or class of hazardous waste:

(I)	Ignitable	Toxicity Characteristic Waste	(E)
(C)	Corrosive	Acute Hazardous Waste	(H)
(R)	Reactive	Toxic Waste	(T)

EPA Hazardous Waste Number:	Hazardous Waste/Constituent:
K107 (C,T)	Column bottoms from product seperation from the production of 1,1-dimethylhydrazine (UDMH) from carboxylic acid hydrazines.
K108 (I,T)	Condensed column overheads from product separation and condensed reactor vent gases from the production of 1,1-dimethylhydrazine (UDMH) from carboxylic acid hydrazides.
K109 (T)	Spent filter cartridges from product purification from the production of 1,1-dimethylhydrazine (UDMH) from carboxylic acid hydrazides.
K110 (T)	Condensed column overheads from intermediate separation from the production of 1,1-dimethylhydrazine (UDMH) from carboxylic acid hydrazides.
K111 (C,T)	Product washwaters from the production of dinitrotoluene via nitration of toluene.
K112 (T)	Reaction by-product water from the drying column in the production of toluenediamine via hydrogenation of dinitrotoluene.
K113 (T)	Condensed liquid light ends from the purification of toluenediamine in the production of toluenediamine via hydrogenation dinitrotoluene.
K114 (T)	Vicinals from the purification of toluenediamine in the production of toluenediamine via hydrogenation of dinitrotoluene.

Basis for listing or class of hazardous waste:

(I)	Ignitable	Toxicity Characteristic Waste	(E)
(C)	Corrosive	Acute Hazardous Waste	(H)
(R)	Reactive	Toxic Waste	(T)

EPA Hazardous Waste Number:	Hazardous Waste/Constituent:
K115 (T)	Heavy ends from the purification of toluenediamine in the production of toluenediamine via hydrogenation of dinitrotoluene.
K116 (T)	Organic condensate from the solvent recovery column in the production of toluene diisocyanate via phosgenation of toluenediamine.
K117 (T)	Wastewater from the reactor vent gas scrubber in the production of ethylene dibromide via bromination of ethene.
K118 (T)	Spent adsorbent solids from purification of ethylene dibromide in the production of ethylene dibromide via bromination of ethene.
K123 (T)	Process wastewater (including supernates, filtrates, and washwaters) from the production of ethylenebisdithiocarbamic acid and its salt.
K124 (T,C)	Reactor vent scrubber water from the production of ethylenebisdithiocarbamic acid and its salts.
K125 (T,C)	Filtration, evaporation, and centrifugation solids from the production of ethylenebisdithiocarbamic acid and its salts.
K126 (T)	Baghouse dust and floor sweepings in milling and packaging operations from production or formulation of ethylenebisdithiocarbamic acid and its salts.

Basis for listing or class of hazardous waste:

(I)	Ignitable	Toxicity Characteristic Waste	(E)
(C)	Corrosive	Acute Hazardous Waste	(H)
(R)	Reactive	Toxic Waste	(T)

EPA Hazardous Waste Number:	Hazardous Waste/Constituent:
K131 (C,T)	Wastewater from the reactor and spent sulfuric acid from the acid dryer from the production of methyl bromide.
K132 (T)	Spent absorbent and wastewater separator solids from the production of methyl bromide.
K136 (T)	Still bottoms from the purification of ethylene dibromide in the production of ethylene dibromide via bromination of ethene.

Basis for listing or class of hazardous waste:

(I)	Ignitable	Toxicity Characteristic Waste	(E)
(C)	Corrosive	Acute Hazardous Waste	(H)
(R)	Reactive	Toxic Waste	(T)

EPA Hazardous Waste Number:	Hazardous Waste/Constituent:

Discarded Commercial Chemical Products, Off-Specification Species, Container Residues, and Spill Residues Thereof:

P001	(H)	Warfarin, & salts, when present at concentrations greater than 0.3%.
P002	(H)	1-Acetyl-2-thiourea
P003	(H)	Acrolein
P004	(H)	Aldrin
P005	(H)	Allyl alcohol
P006	(R,T)	Aluminum phosphide
P007	(H)	5-(Aminomethyl)-3-isoxazolol
P008	(H)	4-Aminopyridine
P009	(R)	Ammonium picrate
P010	(T)	Arsenic acid H_3AsO_4
P011	(T)	Arsenic pentoxide
P012	(T)	Arsenic trioxide
P013	(H)	Barium cyanide
P014	(T)	Benzenethiol
P015	(H)	Beryllium
P016	(H)	Methane, oxybis[chloro-
P017	(T)	Bromoacetone
P018	(H)	Brucine
P020	(H)	Dinoseb
P021	(H)	Calcium cyanide
P022	(T)	Carbon disulfide
P023	(H)	Chloroacetaldehyde
P024	(H)	p-Chloroaniline
P026	(H)	1-(o-Chlorophenyl)thiourea
P027	(H)	3-Chloropropionitrile
P028	(H)	Benzyl chloride
P029	(H)	Copper cyanide
P030	(T)	Cyanides (soluble cyanide salts) not otherwise specified.

Basis for listing or class of hazardous waste:

(I)	Ignitable	Toxicity Characteristic Waste	(E)
(C)	Corrosive	Acute Hazardous Waste	(H)
(R)	Reactive	Toxic Waste	(T)

EPA Hazardous Waste Number:	Hazardous Waste/Constituent:
P031 (H)	Cyanogen
P033 (H)	Cyanaogen chloride
P034 (T)	2-Cyclohexyl-4,6-dinitrophenol
P036 (H)	Dichlorophenylarsine
P037 (H)	Dieldrin
P038 (T)	Diethylarsine
P039 (T)	Disulfoton
P040 (H)	O,O-Diethyl O-pyrazinyl phosphorothioate.
P041 (H)	Diethyl-p-nitrophenyl phosphate
P042 (H)	Epinephrine
P043 (H)	Diisopropylfluorophosphate (DFP)
P044 (T)	Dimethoate
P045 (H)	Thiofanox
P046 (T)	Benzeneethanamine, alpha,alpha-dimethyl-
P047 (H)	4,6-Dinitro-o-cresol, and salts
P048 (H)	2,4-Dinitrophenol
P049 (H)	Dithiobiuret
P050 (H)	Endosulfan
P051 (H)	Endrin
P054 (H)	Aziridine
P056 (H)	Fluorine
P057 (H)	Fluoroacetamide
P058 (H)	Fluoroacetic acid, sodium salt
P059 (H)	Heptachlor
P060 (H)	Isodrin
P062 (H)	Hexaethyl tetraphosphate
P063 (H)	Hydrogen cyanide
P064 (H)	Methyl isocyanate
P065 (R,T)	Mercury fulminate
P066 (H)	Methomyl
P067 (H)	1,2-Propylenimine
P068 (H)	Methyl hydrazine
P069 (H)	2-Methyllactonitrile
P070 (H)	Aldicarb
P071 (H)	Methyl parathion

Basis for listing or class of hazardous waste:

(I)	Ignitable	Toxicity Characteristic Waste	(E)
(C)	Corrosive	Acute Hazardous Waste	(H)
(R)	Reactive	Toxic Waste	(T)

EPA Hazardous Waste Number:	Hazardous Waste/Constituent:
P072 (H)	alpha-Naphthylthiourea
P073 (H)	Nickel carbonyl
P074 (H)	Nickel cyanide
P075 (T)	Nicotine, and salts
P076 (T)	Nitric oxide
P077 (T)	p-Nitroaniline
P078 (H)	Nitrogen dioxide
P081 (R,T)	Nitroglycerine (R)
P082 (H)	N-Nitrosodimethylamine
P084 (H)	N-Nitrosomethylvinylamine
P085 (H)	Octamethylpyrophosphoramide
P087 (H)	Osmium tetroxide
P088 (H)	Endothall
P089 (T)	Parathion
P092 (H)	Phenylmercury acetate
P093 (H)	Phenylthiourea
P094 (T)	Phorate
P095 (T)	Phosgene
P096 (H)	Phosphine
P097 (H)	Famphur
P098 (H)	Potassium cyanide
P099 (H)	Potassium silver cyanide
P101 (H)	Propanenitrile
P102 (H)	Propargyl alcohol
P103 (H)	Selenourea
P104 (H)	Silver cyanide
P105 (H)	Sodium azide
P106 (H)	Sodium cyanide
P107 (T)	Strontium sulfide S_rS
P108 (T)	Strychnine and salts
P109 (H)	Tetraethyldithiopyrophosphate
P110 (H)	Tetraethyl lead
P111 (H)	Tetraethyl pyrophosphate
P112 (R)	Tetranitromethane

Basis for listing or class of hazardous waste:

(I)	Ignitable	Toxicity Characteristic Waste	(E)
(C)	Corrosive	Acute Hazardous Waste	(H)
(R)	Reactive	Toxic Waste	(T)

EPA Hazardous Waste Number:	Hazardous Waste/Constituent:
P113 (H)	Thallic oxide
P114 (H)	Thallium(I) selenite
P115 (H)	Thallium(I) sulfate
P116 (H)	Thiosemicarbazide
P118 (H)	Trichloromethanethiol
P119 (H)	Vanadic acid, ammonium salt
P120 (H)	Vanadium pentoxide
P121 (H)	Zinc cyanide
P122 (R,T)	Zinc phosphide Zn_3P_2 when present at concentrations greater than 10%
P123 (H)	Toxaphene

Basis for listing or class of hazardous waste:

(I)	Ignitable	Toxicity Characteristic Waste	(E)
(C)	Corrosive	Acute Hazardous Waste	(H)
(R)	Reactive	Toxic Waste	(T)

EPA Hazardous Waste Number:		Hazardous Waste/Constituent:

Commercial Chemical Products, Manufacturing Chemical Intermediates, or Off-Specification Commercial Chemical Products:

U001	(I)	Ethanal
U002	(I)	Acetone
U003	(I,T)	Acetonitrile
U004	(T)	Acetophenone
U005	(T)	2-Acetylaminofluorene
U006	(C,R,T)	Acetyl chloride
U007	(T)	Acrylamide
U008	(I)	Acrylic acid
U009	(T)	Acrylonitrile
U010	(T)	Mitomycin C
U011	(T)	Amitrole
U012	(I,T)	Aniline
U014	(T)	Auramine
U015	(T)	Azaserine
U016	(T)	Benz[c]acridine
U017	(T)	Benzal chloride
U018	(T)	Benz[a]anthracene
U019	(I,T)	Benzene
U020	(C,R)	Benzenesulfonyl chloride
U021	(T)	Benzidine
U022	(T)	Benzo[a]pyrene
U023	(C,R,T)	Benzotrichloride
U024	(T)	Dichloromethoxy ethane
U025	(T)	Dichloroethyl ether
U026	(T)	Chlornaphazin
U027	(T)	Dichloroisopropyl ether
U028	(T)	Diethylhexyl phthalate
U029	(T)	Methyl bromide
U030	(T)	Benzene, 1-bromo-4-phenoxy-
U031	(I)	n-Butyl alcohol
U032	(T)	Calcium chromate

Basis for listing or class of hazardous waste:

(I)	Ignitable	Toxicity Characteristic Waste	(E)
(C)	Corrosive	Acute Hazardous Waste	(H)
(R)	Reactive	Toxic Waste	(T)

EPA Hazardous Waste Number:		Hazardous Waste/Constituent:
U033	(R,T)	Carbon oxyfluoride
U034	(T)	Chloral
U035	(T)	Chlorambucil
U036	(T)	Chlordane, alpha & gamma isomers
U037	(T)	Chlorobenzene
U038	(T)	Chlorobenzilate
U039	(T)	p-Chloro-m-cresol
U041	(T)	Epichlorohydrin
U042	(T)	2-Chloroethyl vinyl ether
U043	(T)	Vinyl chloride
U044	(T)	Chloroform
U045	(I,T)	Methyl chloride
U046	(T)	Chloromethyl methyl ether
U047	(T)	beta-Chloronaphthalene
U048	(T)	o-Chlorophenol
U049	(T)	Benzenamine, 4-chloro-2-methyl-, hydrochloride
U050	(T)	Chrysene
U051	(T)	Creosote
U052	(T)	Cresol (Cresylic Acid)
U053	(T)	Crotonaldehyde
U055	(I)	Cumene
U056	(I)	Cyclohexane
U057	(I)	Cyclohexanone
U058	(T)	Chclophosphamide
U059	(T)	Daunomycin
U060	(T)	DDD
U061	(T)	DDT
U062	(T)	Diallate
U063	(T)	Dibenz[a,h]anthracene
U064	(T)	Dibenzo[a,i]pyrene
U066	(T)	1,2-Dibromo-3-chloropropane
U067	(T)	Ethylene dibromide
U068	(T)	Methylene bromide
U069	(T)	Dibutyl phthalate
U070	(T)	o-Dichlorobenzene

Basis for listing or class of hazardous waste:

(I)	Ignitable	Toxicity Characteristic Waste	(E)
(C)	Corrosive	Acute Hazardous Waste	(H)
(R)	Reactive	Toxic Waste	(T)

EPA Hazardous Waste Number:		Hazardous Waste/Constituent:
U071	(T)	m-Dichlorobenzene
U072	(T)	p-Dichlorobenzene
U073	(T)	3,3'Dichlorobenzidine
U074	(I,T)	1,4-Dichloro-2-butene
U075	(T)	Dichlorodifluoromethane
U076	(T)	Ethylidene dichloride
U077	(T)	Ethylene dichloride
U078	(T)	1,1-Dichloroethylene
U079	(T)	1,2-Dichloroethylene
U080	(T)	Methylene chloride
U081	(T)	2,4-Dichlorophenol
U082	(T)	2,6-Dichlorophenol
U083	(T)	Propylene dichloride
U084	(T)	1,3-Dichloropropene
U085	(I,T)	1,2:3,4-Diepoxybutane
U086	(T)	N,N-Diethylhydrazine
U087	(T)	O,O-Diethyl S-methyl dithiophosphate
U088	(T)	Diethyl phthalate
U089	(T)	Diethylstilbesterol
U090	(T)	Dihydrosafrole
U091	(T)	3,3'-Dimethoxybenzidine
U092	(I)	Dimethylamine
U093	(T)	p-Dimethylaminoazobenzene
U094	(T)	7,12-Dimethylbenz[a]anthracene
U095	(T)	3,3'-Dimethylbenzidine
U096	(R)	alpha,alpha-Dimethylbenzylhydroperoxide
U097	(T)	Dimethylcarbamoyl chloride
U098	(T)	1,1-Dimethylhydrazine
U099	(T)	1,2-Dimethylhydrazine
U101	(T)	2,4-Dimethylphenol
U102	(T)	Dimethyl phthalate
U103	(T)	Dimethyl sulfate
U105	(T)	2,4-Dinitrotoluene
U106	(T)	2,6-Dinitrotoluene
U107	(T)	Di-n-octyl phthalate

Basis for listing or class of hazardous waste:

(I)	Ignitable	Toxicity Characteristic Waste	(E)
(C)	Corrosive	Acute Hazardous Waste	(H)
(R)	Reactive	Toxic Waste	(T)

EPA Hazardous Waste Number:		Hazardous Waste/Constituent:
U108	(T)	1,4-Dioxane
U109	(T)	1,2-Diphenylhydrazine
U110	(I)	Dipropylamine
U111	(T)	Di-n-propylnitrosamine
U112	(I)	Ethyl acetate
U113	(I)	Ethyl acrylate
U114	(T)	Ethylenebisdithiocarbamic acid, salts & esters
U115	(I,T)	Ethylene oxide
U116	(T)	Ethylenethiourea
U117	(I)	Ethyl ether
U118	(T)	Ethyl methacrylate
U119	(T)	Ethyl methanseulfonate
U120	(T)	Fluoranthene
U121	(T)	Methane, trichlorofluoro-
U122	(T)	Formaldehyde
U123	(C,T)	Formic acid
U124	(I)	Furan
U125	(I)	Furfural
U126	(T)	Glycidylaldehyde
U127	(T)	Hexachlorobenzene
U128	(T)	Hexachlorobutadiene
U129	(T)	Lindane
U130	(T)	Hexachlorocyclopentadiene
U131	(T)	Hexachloroethane
U132	(T)	Hexachlorophene
U133	(R,T)	Hydrazine
U134	(C,T)	Hydrogen fluoride
U135	(T)	Hydrogen sulfide
U136	(T)	Cacodylic acid
U137	(T)	Indeno[1,2,3-cd]pyrene
U138	(T)	Methyl iodide
U139	(T)	Iron dextran
U140	(I,T)	Isobutyl alcohol
U141	(T)	Isosafrole
U142	(T)	Kepone

Basis for listing or class of hazardous waste:

(I)	Ignitable	Toxicity Characteristic Waste	(E)
(C)	Corrosive	Acute Hazardous Waste	(H)
(R)	Reactive	Toxic Waste	(T)

EPA Hazardous Waste Number:		Hazardous Waste/Constituent:
U143	(T)	Lasiocarpine
U144	(T)	Lead acetate
U145	(T)	Lead phosphate
U146	(T)	Lead subacetate
U147	(T)	Maleic anhydride
U148	(T)	Maleic hydrazide
U149	(T)	Malononitrile
U150	(T)	Melphalan
U151	(T)	Mercury
U152	(I,T)	Methacrylonitrile
U153	(I,T)	Methanethiol
U154	(I)	Methanol
U155	(T)	Methapyrilene
U156	(I,T)	Methyl chlorocarbonate
U157	(T)	3-Methylcholanthrene
U158	(T)	4,4'-Methylenebis(2-chloroaniline)
U159	(I,T)	Methyl ethyl ketone (MEK)
U160	(R,T)	Methyl ethyl ketone peroxide
U161	(I)	Methyl isobutyl ketone
U162	(I,T)	Methyl methacrylate
U163	(T)	MNNG
U164	(T)	Methylthiouracil
U165	(T)	Naphthalene
U166	(T)	1,4-Naphthoquinone
U167	(T)	1-Naphthalenamine
U168	(T)	2-Naphthalenamine
U169	(I,T)	Nitrobenzene
U170	(T)	p-Nitrophenol
U171	(I,T)	2-Nitropropane
U172	(T)	N-Nitrosodi-n-butylamine
U173	(T)	N-Nitrosodiethanolamine
U174	(T)	N-Nitrosodiethylamine
U176	(T)	N-Nitroso-N-ethylurea
U177	(T)	N-Nitroso-N-methylurea
U178	(T)	N-Nitroso-N-methylurethane

Basis for listing or class of hazardous waste:

(I)	Ignitable	Toxicity Characteristic Waste	(E)
(C)	Corrosive	Acute Hazardous Waste	(H)
(R)	Reactive	Toxic Waste	(T)

EPA Hazardous Waste Number:	Hazardous Waste/Constituent:
U179 (T)	N-Nitrosopiperidine
U180 (T)	N-Nitrosopyrrolidine
U181 (T)	5-Nitro-o-toluidine
U182 (T)	Paraldehyde
U183 (T)	Pentachlorobenzene
U184 (T)	Pentachloroethane
U185 (T)	Pentachloronitrobenzene (PCNB)
U186 (I)	1,3-Pentadiene
U187 (T)	Phenacetin
U188 (T)	Phenol
U189 (R)	Phosphorous sulfide
U190 (T)	Phthalic anhydride
U191 (T)	Pyridine, 2-methyl-
U192 (T)	Pronamide
U193 (T)	1,3-Propane sultone
U194 (I,T)	1-Propanamine
U196 (T)	Pyridine
U197 (T)	p-Benzoquinone
U200 (T)	Reserpine
U201 (T)	Resorcinol
U202 (T)	Saccharin, and salts
U203 (T)	Safrole
U204 (T)	Selenium dioxide
U205 (R,T)	Selenium sulfide
U206 (T)	Streptozotocin
U207 (T)	1,2,4,5-Tetrachlorobenzene
U208 (T)	1,1,1,2-Tetrachloroethane
U209 (T)	1,1,2,2-Tetrachloroethane
U210 (T)	Tetrachloroethylene
U211 (T)	Carbon tetrachloride
U213 (I)	Tetrahydrofuran
U214 (T)	Thallium(I) acetate
U215 (T)	Thallium(I) carbonate
U216 (T)	Thallium(I) chloride
U217 (T)	Thallium(I) nitrate

Basis for listing or class of hazardous waste:

(I) Ignitable
(C) Corrosive
(R) Reactive
Toxicity Characteristic Waste (E)
Acute Hazardous Waste (H)
Toxic Waste (T)

EPA Hazardous Waste Number:	Hazardous Waste/Constituent:
U218 (T)	Thioacetamide
U219 (T)	Thiourea
U220 (T)	Toluene
U221 (T)	Toluenediamine
U222 (T)	o-Toluidine hydrochloride
U223 (R,T)	Toluene diisocyanate
U225 (T)	Bromoform
U226 (T)	Methyl chloroform
U227 (T)	1,1,2-Trichloroethane
U228 (T)	Trichloroethylene
U234 (R,T)	1,3,5-Trinitrobenzene
U235 (T)	Tris(2,3-dibromopropyl) phosphate
U236 (T)	Trypan blue
U237 (T)	Uracil mustard
U238 (T)	Ethyl carbamate (urethane)
U239 (I)	Xylene
U240 (T)	2,4-D, salts and esters
U243 (T)	Hexachloropropene
U244 (T)	Thiram
U246 (T)	Cyanogen bromide (CN)Br
U247 (T)	Methoxychlor
U248 (T)	Warfarin, and salts, when present at concentrations of 0.3% or less.
U249 (T)	Zinc phosphide, Zn_3P_2 when present at concentrations of 10% or less.
U328 (T)	o-Toluidine
U353 (T)	p-Toluidine
U359 (T)	Ethanol, 2-ethoxy-

Basis for listing or class of hazardous waste:

(I)	Ignitable	Toxicity Characteristic Waste	(E)
(C)	Corrosive	Acute Hazardous Waste	(H)
(R)	Reactive	Toxic Waste	(T)

Other Wastes

- Solid wastes as defined by 40 CFR 261.2
- Waste from a Hazardous Waste Facility or Site, or waste resulting from activities under the Comprehensive Environmental Response, Compensation, and Liability Act (CERCLA) including but not limited to personnel protective equipment, discarded containers of laboratory chemicals (lab packs), lab equipment, clothing, debris from spills or cleanup and floor sweepings.

Appendix H-B

Emergency Response Coordinator Authorization

February 18, 1992

9-23-91

To: File
Contingency Plan

From: Stephen Keiter, Facility Manager

Re: **Emergency Response Coordinator Authorization to Commit Resources**

Pursuant to 40 CFR 264.55, the Emergency Response Coordinator, as listed in the facility Contingency Plan and Emergency Procedure, (item 14 in the facility Part B Permit), who responds to an incident described therein, has the authority to commit all company resources necessary to carry out the Contingency Plan.

Stephen M Keiter

Stephen M. Keiter
Facility Manager

cc: C. Murphy
B. Apple
D. Trombold
listed ERCs

regnt073.rkr

Appendix H-C

Emergency Telephone Listing of Local Authorities

February 18, 1992

Emergency Telephone Listing of Local Authorities

Hydrocarbon Recyclers, Inc. of Wichita
2549 North New York Avenue
Wichita, Kansas, 67219

Agency	Office Telephone	Emergency Telephone
Sedgwick Co. EMS	316/383-7994	911
St. Francis Emergency Center	316/268-5052	316/268-5052
Wichita Fire Dept.	316/268-4451	911
WFD HazMat Team	316/683-7216	911
Wichita Police Dept.	316/268-4239	911
KDHE	913/296-1500	913/296-1500
EPA Region VII	913/551-7000	913/551-7000
National Response Center (NRC)	800/424-8802	800/424-8802
Derby Refinery After 5:00 PM	316/267-0301	316/267-0301 316/262-5974
Union Pacific	316/268-9424	316/268-9424

Note: Facility Telephone Numbers:
Office: 316/268-9490
Beeper: 316/261-2766
Beeper utilized when Emergency Response Coordinators are otherwise unavailable; see Table H-1 for list of ERCs.

February 18, 1992

Appendix H-D

Coordination Agreement Letters

February 18, 1992

USPCI
A Subsidiary of
Union Pacific Corporation

Hydrocarbon Recovery Services

February 14, 1992

Emergency Communications Department
525 N. Main
Wichita, Kansas 67202
Attn: Ken Duckworth, Director

Dear Mr. Duckworth:

Hydrocarbon Recyclers, Inc. of Wichita (HRIW) has applied to the Kansas Department of Health and Environment (KDHE) for a permit to operate a hazardous waste management facility in Sedgewick County. As part of this application, we are required to include a Contingency Plan which outlines response actions to be taken by HRIW in the event of an emergency situation.

We have enclosed a copy of the Contingency Plan for your information. Throughout the plan, response actions involving coordination with your service as well as other local emergency facilities are described. Specifically, Section H-5 includes notification procedures.

If you have any questions, please contact me at (316) 268-9490. HRIW looks forward to working with you on this plan.

Sincerely,

Stephen M Keiter

Steve Keiter
Facility Manager

2549 North New York • Wichita, Kansas 67219 • 316/268-9490 • Fax 316/268-9418

USPCI
A Subsidiary of
Union Pacific Corporation

Hydrocarbon Recovery Services

February 14, 1992

City of Wichita Police Department
455 N. Main
Wichita, Kansas 67202
Attn: Chief Rick Stone

Dear Chief Stone:

Hydrocarbon Recyclers, Inc. of Wichita (HRIW) has applied to the Kansas Department of Health and Environment (KDHE) for a permit to operate a hazardous waste management facility in Sedgewick County. As part of this application, we are required to include a Contingency Plan which outlines response actions to be taken by HRIW in the event of an emergency situation.

We have enclosed a copy of the Contingency Plan for your information. Throughout the plan, response actions involving coordination with your service as well as other local emergency facilities are described. Specifically, Section H-5 includes notification procedures.

If you have any questions, please contact me at (316) 268-9490. HRIW looks forward to working with you on this plan.

Sincerely,

Stephen M Keiter

Steve Keiter
Facility Manager

2549 North New York • Wichita, Kansas 67219 • 316/268-9490 • Fax 316/268-9418

USPCI
A Subsidiary of
Union Pacific Corporation

Hydrocarbon Recovery Services

February 14,1992

Saint Francis Emergency Center
929 North St. Francis St.
Wichita, Kansas 67214
Attn: Kathy Conley, Administrative Director, Emergency Services

Dear Ms. Conley:

Hydrocarbon Recyclers, Inc. of Wichita (HRIW) has applied to the Kansas Department of Health and Environment (KDHE) for a permit to operate a hazardous waste management facility in Sedgewick County. As part of this application, we are required to include a Contingency Plan which outlines response actions to be taken by HRIW in the event of an emergency situation.

We have enclosed a copy of the Contingency Plan for your information. Throughout the plan, response actions involving coordination with your service as well as other local emergency facilities are described. Specifically, Section H-5 includes notification procedures.

If you have any questions, please contact me at (316) 268-9490. HRIW looks forward to working with you on this plan.

Sincerely,

Stephen M Keiter

Steve Keiter
Facility Manager

2549 North New York • Wichita, Kansas 67219 • 316/268-9490 • Fax 316/268-9418

USPCI
A Subsidiary of
Union Pacific Corporation

Hydrocarbon Recovery Services

February 14, 1992

Wichita Fire Department
City Hall, Eleventh Floor
455 N. Main
Wichita, Kansas 67202
Attn: Chief Mullikan, Hazardous Materials Response Team

Dear Chief Mullikan:

Hydrocarbon Recyclers, Inc. of Wichita (HRIW) has applied to the Kansas Department of Health and Environment (KDHE) for a permit to operate a hazardous waste management facility in Sedgewick County. As part of this application, we are required to include a Contingency Plan which outlines response actions to be taken by HRIW in the event of an emergency situation.

We have enclosed a copy of the Contingency Plan for your information. Throughout the plan, response actions involving coordination with your fire department as well as other local emergency facilities are described. Specifically, Section H-5 includes notification procedures.

If you have any questions, please contact me at (316) 268-9490. HRIW looks forward to working with you on this plan.

Sincerely,

Stephen M Keiter

Steve Keiter
Facility Manager

2549 North New York • Wichita, Kansas 67219 • 316/268-9490 • Fax 316/268-9418

USPCI
A Subsidiary of
Union Pacific Corporation

Hydrocarbon Recovery Services

February 14,1992

Sedgewick County Emergency Medical Services
P. O. Box 607
Wichita, Kansas 67201-607
Attn: Dennis Mauk, Assistany Director of Operations

Dear Mr. Mauk:

Hydrocarbon Recyclers, Inc. of Wichita (HRIW) has applied to the Kansas Department of Health and Environment (KDHE) for a permit to operate a hazardous waste management facility in Sedgewick County. As part of this application, we are required to include a Contingency Plan which outlines response actions to be taken by HRIW in the event of an emergency situation.

We have enclosed a copy of the Contingency Plan for your information. Throughout the plan, response actions involving coordination with your service as well as other local emergency facilities are described. Specifically, Section H-5 includes notification procedures.

If you have any questions, please contact me at (316) 268-9490. HRIW looks forward to working with you on this plan.

Sincerely,

Stephen M Keiter

Steve Keiter
Facility Manager

2549 North New York • Wichita, Kansas 67219 • 316/268-9490 • Fax 316/268-9418

Table of Contents

List of Appendices ii

List of Acronyms ii

I-1 Outline of Training Program: 1
- I-1a Job Titles and Duties: 1
- I-1b Training Content, Frequency and Techniques: 4
- I-1c Director of the Training Program: 7
- I-1d Relevance of Training to Job Position: 8
- I-1e Training for Emergency Action/Response: 9

I-2 Implementation of Training Program: 11

List of Appendices

Appendix I-A, Typical Job Descriptions, Duties, and Training
Appendix I-B, Introductory Training Seminar Outline
Appendix I-C, Example Introductory Training Seminar Test
Appendix I-D, Typical Job-Specific Training Topics

List of Acronyms

Hydrocarbon Recyclers, Inc. of Wichita (HRIW)
Health, Safety and Training Manager (HSTM)
Material Safety Data Sheets (MSDS)

I-1 Outline of Training Program: 40 CFR 270.14(b)(12) and 270.16

This training program has been developed in accordance with the regulatory requirements of 40 CFR Parts 270 and 264. The program is designed to provide the information needed by Hydrocarbon Recyclers, Inc. of Wichita (HRIW) personnel to assist them in understanding the processes and materials with which they are working and the potential safety and health hazards associated with those processes and materials. The training program also facilitates instruction of facility personnel in the proper procedures for preventing and reacting effectively to emergency situations. Where appropriate, the training program provides information regarding inspection, repair, and replacement of facility emergency equipment.

The goal of the training program is to train personnel to perform their job functions in an efficient and safe manner, and in compliance with applicable regulations and permit requirements.

I-1a <u>Job Titles and Duties:</u> 40 CFR 264.16(d)(1), (2) and (3)

As required in 40 CFR 264.16, records at the facility will include:

- the job titles for positions at the facility related to hazardous waste management,
- the names of the employees filling these jobs,
- a description of these jobs including duties, and
- a description of the minimum qualifications for employees filling these jobs.

The following are job titles that are most relevant to the compliant operation of HRIW.

- Facility Manager
- Operations Manager
- Facility Engineer
- Laboratory Manager/Senior Chemist
- Laboratory Technician
- Facility Inspector
- Health, Safety and Training Manager
- Operator
- Operator Helper
- Secretary/clerk

Examples of typical job descriptions are contained in Appendix I-A, Typical Job Descriptions, Duties, and Training. These job descriptions include a summary of the duties, qualifications, and training for the job titles listed above.

I-1b <u>Training Content, Frequency and Techniques:</u> 40 CFR 264.16(a)(3), 264.16(c) and 264.16(d)(3)

Initial training of facility employees will consist of:

- 24 hours of safety training as described by 29 CFR 1910.120(p)(7), for operations personnel,
- an introductory training seminar, and
- job specific training.

Each employee must complete the introductory training seminar prior to working without direct supervision in any hazardous waste management area at the facility. The introductory training seminar will last approximately sixteen (16) hours. The topics covered during this seminar include facility specific items such as the Contingency/Emergency Plan, as well as basic training in general topics such as chemistry and occupational safety. An outline of the seminar is provided in Appendix I-B, Introductory Training Seminar Outline. After completion of the introductory training seminar, the employees will be tested to evaluate their comprehension of the information presented. An example of the

type of test employees may be given is provided in Appendix I-C, Example Introductory Training Seminar Test.

In addition to the introductory training seminar, employees will be provided with job-specific training such as on-the-job training. The type and content of the job-specific training will depend on the skills and level of expertise demanded by the job. Appendix I-D, Typical Job-Specific Training Topics includes a list of typical topics for job-specific training that will be provided to the appropriate employees. The job-specific training completes the employee's initial training. Employees will not be allowed to perform unsupervised, hazardous waste management duties prior to completion of initial training.

Continuing training will be provided for employees performing certain jobs after the employee completes the initial training. At a minimum, the continuing training will consist of an annual review of the introductory training seminar.

Training techniques will vary depending on the subject. Typically, training techniques may involve classroom lecture, on-

the-job, and audio/visual demonstration. Training instructors will include personnel who have experience and/or training in that area and outside instructors such as manufacturer's representatives. On-the-job training is conducted by qualified facility personnel.

I-1c <u>Director of the Training Program:</u> 40 CFR 264.16(a)(2)

The Health, Safety and Training Manager (HSTM) will administer the training program. The duties and qualifications of the HSTM are provided in Appendix I-A. The duties of the HSTM include maintaining records which demonstrate that personnel are receiving the appropriate training in accordance with the training program. The minimum qualifications for the HSTM will be a college degree and/or equivalent experience with a knowledge of regulatory and safety requirements. The HSTM will be trained in hazardous waste management procedures.

I-1d <u>Relevance of Training to Job Position:</u> 40 CFR 264.16(a)(2)

It is important that employees be trained and possess a knowledge of the concepts required to perform their duties. Each employee engaged in hazardous waste management activities must be able to act correctly and safely while fulfilling job responsibilities.

In addition to the introductory training seminar which all employees will attend, relevant job-specific training will be provided to appropriate employees. For example, if an employee is in a supervisory or management position requiring an understanding of the Kansas rules for the management of hazardous waste, then the employee is trained accordingly. The job descriptions contained in Appendix I-A include examples of job-specific training which are relevant to the position. Appendix I-D contains outlines of typical topics for job-specific training.

I-1e <u>Training for Emergency Action/Response:</u> 40 CFR 264.16(a)(3)

The introductory training seminar includes training on the Contingency/Emergency Plan. Emergency action procedures are included in the Contingency/Emergency Plan. In accordance with 29 CFR 1910.120(p)(8) and HRIW's Contingency/Emergency Plan, the facility may evacuate employees in the event of an emergency, and may not have a specially trained Emergency Response Team. The training topics provided during the seminar regarding the Contingency/Emergency Plan are provided in Appendix I-B. The seminar is designed to train employees to act appropriately during emergency situations.

In addition to the introductory training seminar, appropriate employees will receive job-specific training on emergency procedures, equipment, and systems. Where applicable, this job-specific training will include:

- waste identification;
- waste processing procedures;
- instruction on machinery operation;
- procedures for the shutdown of operations;
- instruction on safety equipment;
- procedures for using, inspecting, repairing, and replacing facility emergency equipment;
- procedures for using the communications or alarm systems;
- procedures for fires or explosions; and
- procedures for incidents of potential soil or ground-water contamination.

I-2 <u>Implementation of Training Program:</u> 40 CFR 264.16(b), 264.16(d)(4) and 264.16(e)

The HSTM will monitor the training program to ensure that all employees complete their initial training and an annual review of the introductory training seminar. The initial training must be completed within six (6) months of either:

- initial employment,
- assignment to HRIW if the individual is employed by USPCI at the time of the assignment (unless equivalent training was received in his/her previous assignment), or
- transfer to a new position within the facility, if the employee has not previously received the appropriate training.

In the last two (2) cases, the employee will only be required to receive instruction in those portions of the initial training for which the employee has not yet been trained. For example, an employee who transfers from one position to another within HRIW

will not be required to repeat the introductory training seminar or any job-specific training the employee has already completed.

Records of the training provided to employees as part of the training program will be maintained at the facility. These training records will include:

- date of training,
- training topics,
- instructor's name,
- employees in attendance, and
- any test results, if appropriate.

Training records for current employees will be maintained until closure of the facility. Training records for former employees will be maintained for at least three (3) years from the date the employee last worked at the facility. Employee training records may accompany personnel transferred to HRIW from another facility operated by USPCI.

APPENDIX I-A

TYPICAL JOB DESCRIPTIONS, DUTIES AND TRAINING

JOB TITLE: Facility Manager

JOB DESCRIPTION AND DUTIES:	Responsible for the safe and efficient management of operations at the facility. Approves the development of all records and manuals at the facility. Responsible for the enforcement of facility safety programs. Coordinates all facility operations with corporate office.
QUALIFICATIONS:	College degree and substantial experience in hazardous waste management. Knowledge of State and Federal Regulations dealing with hazardous waste management.
TRAINING:	Introductory training seminar, safety training, technical training, hazardous waste management training.

JOB TITLE: Operations Manager

JOB DESCRIPTION AND DUTIES:	Responsible for the management of facility operations. Coordinates all material handling operations in the facility. Responsible for the enforcement of all safety programs. Assists in formulating all records and manuals at the facility. Assumes management of the facility as required.
QUALIFICATIONS:	College degree and/or experience in hazardous waste management operations including regulations.
TRAINING:	Introductory training seminar, operations training, safety training, technical training, hazardous waste management training.

JOB TITLE: Facility Engineer

JOB DESCRIPTION AND DUTIES:	Responsible for engineering activities at the facility. Provides engineering support on special projects at the facility. Performs engineering analyses as required to optimize facility operations.
QUALIFICATIONS:	Degree in engineering and experience in hazardous waste management.
TRAINING:	Introductory training seminar, safety training.

JOB TITLE: Laboratory Manager/Senior Chemist

JOB DESCRIPTION AND DUTIES: Responsible for the routine operation of the laboratory including organizing and maintaining all laboratory records. Supervises technical employees to insure that all analyses are performed correctly and in a timely manner. Responsible for the analysis of incoming waste samples and designating the appropriate treatment and disposal for them. Participates in environmental monitoring as needed.

QUALIFICATIONS: Degree in Chemistry or Physical Science which included a minimum of sixteen (16) hours of chemistry. A knowledge of chemistry and general laboratory experience such as would be acquired by four (4) years of academic study in the field of chemistry supplemented by at least three (3) years experience performing hands-on analytical laboratory chemistry work.

TRAINING: Introductory training seminar, safety training, technical training, hazardous waste management training.

JOB TITLE: Laboratory Technician

JOB DESCRIPTION AND DUTIES:	Responsible for the routine operation of the laboratory under the direction of the Senior Chemist. Performs analysis on pre-shipment samples. Assists in determining the designation of treatment and disposal of customer waste. Responsible for assisting in maintaining all laboratory records and inventory. Responsible for the collection and analysis of environmental samples.
QUALIFICATIONS:	Two (2) years college including a minimum of thirteen (13) college credit hours of chemistry plus other science related courses or a minimum of two (2) years laboratory experience.
TRAINING:	Introductory Training, First Aid and CPR, Continued Safety Training, Technical Training.

JOB TITLE: Facility Inspector

JOB DESCRIPTION AND DUTIES:	Responsible for the timely and effective completion of all facility inspections. Maintains tank gauging records and all other regulatory inspection records for the facility.
QUALIFICATIONS:	One (1) year's experience in hazardous waste disposal operations.
TRAINING:	Introductory training seminar, operations training, safety training.

JOB TITLE: Health, Safety and Training Manager

JOB DESCRIPTION AND DUTIES:	Formulates and implements facility Health and Safety Programs. Ensures that personal protection equipment is available for facility employees. Responsible for routine inspections of facility safety equipment. Responsible for the formulation of the facility Training Program. Responsible for keeping records of Health, Safety, and Training Programs which demonstrate compliance with Federal and State regulations.
QUALIFICATIONS:	College degree and/or equivalent experience working with State and Federal regulations, including OSHA regulations.
TRAINING:	Introductory training seminar, operations training, safety training, technical training, hazardous waste management training.

JOB TITLE:	Operator
JOB DESCRIPTION AND DUTIES:	Responsible for the assignment and effective completion of all field activities during a shift. Coordinates operations with area supervisors. Assists in the enforcement of company policy and safety regulations.
QUALIFICATIONS:	A minimum of one (1) year experience in industrial waste operation, including a basic chemistry knowledge.
TRAINING:	Introductory training seminar, operations training, safety training.

JOB TITLE: Operator Helper

JOB DESCRIPTION AND DUTIES:	Responsible for the effective and safe completion of all assigned facility operations under the direction of the Operations Manager and/or Operator.
QUALIFICATIONS:	Equipment/process experience preferred.
TRAINING:	Introductory training seminar, operations training, safety training.

JOB TITLE: Secretary/clerk

JOB DESCRIPTION AND DUTIES:	Responsible for administrative support activities such as typing, answering the phone, filing and recordkeeping.
QUALIFICATIONS:	High school diploma or equivalent with office experience.
TRAINING:	Introductory training seminar.

APPENDIX I-B

INTRODUCTORY-TRAINING SEMINAR OUTLINE

INTRODUCTORY-TRAINING SEMINAR OUTLINE

I. ORIENTATION: (2 hours)

1. Introduction
2. New Employee Communication Checklist
3. Company History
4. Facility Tour

II. REVIEW OF OPERATIONS: (4 hours)

1. General Facility Description
2. Contingency Plan
   - Contingency plan implementation procedures
   - Access and use of communication and alarm systems
   - Response to fires, explosions, spills and/or releases
   - Site evacuation procedures

III. CHEMICAL TRAINING: (2 hours)

Basic understanding of the characteristics of acids, caustics, and solvents

1. Basic Chemistry
2. Incompatible Wastes

IV. SAFETY TRAINING: (4 hours)

Facility safety requirements and emergency equipment including location and capabilities

1. Facility Housekeeping
2. Job Specific Safety Equipment
3. Eye & Face Safety
   - Equipment location, inspection, repair and operation
4. Respiratory Protection
   - Equipment location, inspection, repair and operation

5. Emergency Equipment
   - Equipment location, inspection, repair and operation

V. INTRODUCTORY JOB-SPECIFIC TRAINING: (RCRA) (4 hours)

1. Office Procedures - (Clerical & Technical Personnel)
   - Telecommunication System
   - Load Arrival Procedures
   - Filing System
   - Log Maintenance

2. Technical Training - (Laboratory and Supervisory Personnel)
   - Office Procedures
   - Load Arrival Procedures
   - Truck Sampling Procedures

3. Operational Training - (Operations Personnel)
   - Review Job Description
   - Truck Unloading Procedures
   - Equipment Operation

VI. USPCI INITIAL TRAINING TEST: (RCRA) (30 minutes)
See Appendix I-C for example test

APPENDIX I-C

EXAMPLE INTRODUCTORY TRAINING SEMINAR TEST

EXAMPLE INTRODUCTORY TRAINING SEMINAR TEST

1) What safety gear is required for general facility activities?

2) Who is responsible for facility housekeeping and why?

3) When and where should you wear eye protection?

4) When is it necessary to wear a face shield?

5) What areas are designated for "SMOKING"?

6) How do you gain access to the loud speaker system?

7) What is the "EMERGENCY NOTIFICATION LIST"?

8) Where are the "EYEWASH STATIONS" in your work area and how do they operate?

9) When and why should you have respiratory protection?

10) What are some of the dangers associated with acids?

11) Can "fumes" be dangerous to your health?

12) What is a Contingency Plan and where is it located?

13) What are the two kinds of "EMERGENCY ALARMS"?

14) What is the proper procedure for reporting a fire?

15) Where are the gathering points in case of an evacuation?

16) Name the location of a fire extinguisher in your work area?

17) What is the "BUDDY SYSTEM" and why is it used?

18) What is the best defense against injury?

APPENDIX I-D

TYPICAL JOB-SPECIFIC TRAINING TOPICS

TYPICAL JOB-SPECIFIC TRAINING TOPICS

OPERATIONS TRAINING:

- Site Security
  - Security procedures and equipment
- Procedures for using, inspecting, repairing, and replacing facility emergency and monitoring equipment
- Preparedness and Prevention
  - Access to and use of internal communications and alarm systems
  - Access to and use of telephone for summoning off-site help
  - Access to and use of portable fire extinguishers, spill control equipment, and decontamination equipment
  - Access to and use of firewater system
  - Shut down of operations
- Contingency/Emergency Plan
  - Contingency/Emergency Plan implementation procedures
  - Access and use of communications and alarm systems
  - Response to fires, explosions, spills, groundwater contamination, and air emissions
  - Site evacuation procedures
  - Job-specific use and maintenance of emergency equipment
- Hazard Communication Manual
  - Right-to-Know
  - Material Safety Data Sheets (MSDS)
- Tank Operation and Controls
  - Site procedures and 40 CFR Part 264, Subpart J
- Use and Management of Containers
  - Site procedures and 40 CFR Part 264, Subpart I

SAFETY TRAINING:

- Industrial Hygiene and Decontamination Procedures and policies for decontamination
- Protective Equipment
  - Job-specific Protective Equipment
- First Aid - General Information
  - Wound and burn management
- Care in Handling Waste
  - Procedures for safety in handling and treating wastes
- Loading and Unloading of Trucks
  - Site procedures for trucks
- Specialized Equipment Operation
  - Procedures for operation and maintenance of heavy equipment
- Basic Chemistry
  - Safety in handling chemicals

TECHNICAL TRAINING:

- Updating of Waste Stream Approvals
  - Customer profile updates
- Manifest Systems
  - Proper manifest preparation
- Records
  - Site-specific records system
- Sampling and Approval Procedures
  - Procedure for sampling trucks properly and waste stream approval
- Waste Identification and Segregation
  - Procedures for identifying and handling incompatible materials

Table of Contents

List of Figures iii

List of Tables iii

List of Appendices iii

List of Referenced Drawings iii

Acronym Table iv

J-1 Introduction 1

J-2 Hazardous Waste Management Units to be Closed 2

J-3 Closure Performance Standard 3
J-3a Establishment of Cleanup Standards 4

J-4 Partial Closure and Final Closure Activities 9
J-4a Disposal or Decontamination of Equipment, Structure and Soils 12
J-4a(2)(a) HWMUs with no internal or complicated external parts . . 18
J-4a(2)(b) HWMUs with internal or complicated external parts . . 20
J-4a(3)(b) Decontamination of large miscellaneous handling equipment with no internal or complicated external parts . . 25
J-4a(3)(c) Decontamination of large miscellaneous handling equipment with internal or complicated external parts . . 26
J-4b Hazardous Waste Handling Procedures 28

J-5 Maximum Extent of Operations Unclosed 29

J-6 Maximum Waste Inventory 30

J-7 Schedule for Final Closure 31
J-7a Expected Year of Final Closure 31

J-8 Closure Plan Amendment 33

J-9 Individual Unit Closures 35

J-9a Container Management Unit (CMU) Closure 35
J-9a(1) Process and Unit Description 36
J-9a(2) Unit Closure Procedures 38
J-9a(3) Unit Closure Schedule 42
J-9b Tank System Closure 43
J-9b(1) Process and Unit Description 43
J-9b(2) Unit Closure Procedures 45
J-9b(3) Unit Closure Schedule 51
J-9c Miscellaneous Unit Closure 52
J-9c(1) Process and Unit Description 52
J-9c(2) Unit Closure Procedures 56
J-9c(3) Unit Closure Schedule 61

J-10 Financial Requirements 62

Endnote 63

List of Figures

Figure J.1, Material Containment Areas
Figure J.2, Tank Locations
Figure J.3, Miscellaneous Unit Locations

List of Tables

Table J.1, Maximum Extent of Operations Unclosed - HRIW - Hazardous Waste Management Units
Table J.3, Closure Activity Schedule - Final Facility Closure
Table J.2, Decontamination Rinsate Analysis
Table J.3, Closure Activity Schedule - Final Facility Closure
Table J.4, Closure Activity Schedule - Container Management Unit (CMU)
Table J.5, Closure Activity Schedule - Tanks and Tank Systems
Table J.6, Closure Activity Schedule - Miscellaneous Units

Note: Tables are presented in Appendix J-A

List of Appendices

Appendix J-A, Tables
Appendix J-B, Closure Cost Estimate

List of Referenced Drawings

Drawings Located in Section Y, Drawings

Drawing 50-01-10-002, Material Containment Areas
Drawing 50-01-03-001, Tank Locations
Drawing 50-57-10-001, Miscellaneous Unit Locations

Acronym Table

Hydrocarbon Recyclers, Inc. of Wichita (HRIW)
Treatment, Storage, or Disposal Facilities (TSDFs)
Title 40 of the Code of Federal Regulations (40 CFR)
Hazardous Waste Management Units (HWMUs)
National Priorities List (NPL)
Potentially Responsible Party (PRP)
Kansas Department of Health and Environment (KDHE)
Toxic Characteristic Leaching Procedure (TCLP)
Land Disposal Restrictions (LDR)
Container Management Unit (CMU)

J-1 Introduction

This plan describes the activities to be performed at Hydrocarbon Recyclers, Inc. of Wichita (HRIW) at the time of facility closure; it addresses both partial unit closures and final facility closure. This plan is contained in the RCRA/HSWA Part B permit application as Section J. When the permit is issued persuant to this application, this plan will supersede the existing plans covering current (1991) interim status operations.

HRIW is a wholly owned subsidiary of USPCI, Inc. The facility stores, treats, and recovers for recycling hazardous and nonhazardous wastes. HRIW blends BTU containing materials for beneficial use and energy recovery as cement kiln fuel and recovers solvents for further management. HRIW also stores, processes, and/or manages waste solvents, sludges, solids, and water for subsequent shipment to other permitted Treatment, Storage, or Disposal Facilities (TSDFs) for distillation, beneficial reuse, further treatment or disposal. HRIW also stores waste solvent, hydrocarbons, paint-related waste streams, solids, corrosive waste streams, and water-based waste streams. Storage and treatment occurs in both containers and tanks. (For

a more complete description of activities at HRIW, see Section B, Facility Description.) The facility operates under EPA I.D. No. KSD007246846.

The HRIW facility does not contain disposal units. Also, all tank systems are equipped with secondary containment meeting the requirements of Title 40 of the Code of Federal Regulations (40 CFR) 264.193 (b) through (f). Therefore, the facility is subject to neither the post-closure care requirements of 40 CFR 264.116 through 264.120, nor the contingent post-closure plan requirements of 40 CFR 264.197(c).

J-2 Hazardous Waste Management Units to be Closed

The HRIW facility's existing hazardous waste management units are summarized in Table J.1, Maximum Extent of Operations Unclosed - HRIW - Hazardous Waste Management Units, presented in Appendix J-A, Tables. Specific descriptions of container management units, tank systems, and miscellaneous units are located in Sections D (Container Management), E (Tank Management), and M (Miscellaneous Units), respectively.

J-3 Closure Performance Standard

HRIW will close each hazardous waste management unit and/or the entire facility in a manner that minimizes the need for further maintenance, and controls, minimizes, or eliminates (to the extent necessary to protect human health and the environment) post-closure escape of hazardous waste, hazardous constituents, contaminated run-off, or hazardous waste decomposition products to the ground or surface waters or to the atmosphere.

USPCI will meet this performance standard by removing all hazardous wastes and hazardous waste constituents to acceptable levels (see Section J-4a). All containers, tanks, miscellaneous units, piping, and other ancillary parts to the systems will be closed in one of the following ways:

1. They will be dismantled and disposed of as hazardous waste at a RCRA/HSWA permitted off-site disposal facility.

2. They will be decontaminated to an acceptable level and disposed of at a solid waste landfill.

3. They will be decontaminated sufficiently to be salvaged for future use.

4. They will be transferred for use at another RCRA facility.

All permanent structures (e.g., concrete containment systems) will be closed in one of the following ways.

1. They will be dismantled and disposed of as hazardous waste at a RCRA/HSWA permitted off-site disposal facility.

2. They will be decontaminated to an acceptable level and disposed of at a solid waste landfill.

3. They will be decontaminated to an acceptable level and maintained in place for future use.

J-3a <u>Establishment of Cleanup Standards</u>

HRIW will close the subject Hazardous Waste Management Units (HWMUs) by removal of the waste so that there will not be any need for post-closure monitoring and maintenance of the units.

Since all units at HRIW have secondary containment, any leaks, spills, drips, etc. will have been contained. Therefore, the surrounding soils and/or groundwater should not have been contaminated during facility operations under this permit application.

The property on which the HRIW facility is located is included within the boundaries of the 29th and Mead Comprehensive Environmental Response, Compensation, and Liability Act or "Superfund" Site in Wichita, Kansas. The 29th and Mead Superfund Site is listed on the National Priorities List (NPL). Reid Supply Company has been named a Potentially Responsible Party (PRP) in the 29th and Mead Superfund Site. In 1986, Conservation Services, Inc. purchased certain assets, including the permit (operating under EPA I.D. #KSD007246846), from Reid Supply Co., Inc. Subsequently, Hydrocarbon Recyclers, Inc. of Wichita acquired the capital stock of Conservation Services, Inc. in 1987. The Reid Supply Company property functioned as a storage, recycling, and collection point for hazardous waste material and as a bulk chemical repackaging and distribution center since the 1970s.[1]

The 29th and Mead Superfund Site, located in north Wichita, Kansas, is bounded by 37th Street on the north, I-135 on the east, 17th Street on the south, and Broadway Street on the west. Located in a heavy industrial area, the Site has evolved over a 95 year time span, approximately. Current industry includes, but is not limited to, chemical supply companies, grain elevators, railroad facilities, metal fabricating companies, foundries, refineries, meat processing companies, recyclers/salvage facilities, roofing companies, concrete companies, food processing companies, and gasoline retailers.[1]

Past investigations, including one performed by Groundwater Technology, Inc.[1], have indicated the presence of soil and groundwater contamination. In response to these investigations, several remedial actions have been implemented, including a hydraulic control system at the Reid Supply, Inc. property.[1]

Due to this investigation into potential contamination of the area, the HRIW facility currently does not plan to conduct soil or groundwater studies during closure. Dependant on the conclusions of this investigation and the actions taken as a result of the conclusions (e.g., remediation of soils and

groundwater), HRIW may amend this closure plan in the future to include soil and/or groundwater studies.

Because the scope and extent of future site remediation is unknown, this closure plan will address only potential contamination which resulted from HRIW processes under this permit, once approved. Consequently, all areas where evidence of visible contamination exists and areas beneath secondary containment will be evaluated and closed in accordance with J-4a of this closure plan.

During facility operations under this permit application, hazardous waste management areas are covered and have secondary containment which includes diking. These controls minimize precipitation run-on and run-off and will subsequently be maintained during closure. These structures will not be removed until after all associated hazardous waste management units are decontaminated; or, if demolition is required, other practical methods will be implemented to control run-on and run-off.

Because the HRIW facility does not contain waste piles or surface impoundments, and the facility is not a disposal facility, other

activities such as groundwater monitoring and leachate collection are not applicable during closure.

J-4 Partial Closure and Final Closure Activities

Partial facility closure (i.e., closure of individual hazardous waste management units) may be necessary during the active life of the facility. If partial closure is necessary, the individual hazardous waste management unit would be closed in accordance with Section J-9 of this closure plan. Currently, however, HRIW plans to close all existing hazardous waste management units during the final facility closure. HRIW will close the facility in accordance with the following procedures.

1. HRIW will notify the Kansas Department of Health and Environment (KDHE) or the United States Environmental Protection Agency (USEPA), Region 7, Administrator at least 45 days before HRIW intends to begin final closure (within 30 days after receiving the known final volume of hazardous waste into a hazardous waste management unit).

2. If modifications to this closure plan have not been previously approved, the plan will not be implemented until approval by KDHE or other authorized agencies has been received.

3. Within 90 days after receiving the final volume of hazardous wastes at a hazardous waste management unit or the facility, HRIW will either treat or remove from the unit or facility all hazardous wastes in accordance with this closure plan, unless an extension has been requested and approved in accordance with 40 CFR 264.113(a).

4. HRIW will complete final closure activities within 180 days after receiving either the final volume of hazardous wastes or final closure plan approval from the agency (whichever is later), unless an extension has been requested and approved in accordance with 40 CFR 264.113(b).

5. HRIW will close the facility in accordance with the schedule discussed in Section J-7 and outlined in Table J.3, Closure Activity Schedule - Final Facility Closure, of this closure plan.

6. The container management units will be closed in accordance with Section J-9a of this closure plan. The tank systems will be closed in accordance with Section J-9b of this plan. All miscellaneous units will be closed in accordance with Section J-9c of this plan.

7. All contaminated equipment and structures will be either properly disposed of as hazardous waste or decontaminated in accordance with Section J-4a of this closure plan. After decontamination, equipment (such as hand tools, forklifts, and conveyers) and structures may be salvaged for future use.

8. HRIW will visually inspect the surface soils at the facility. In accordance with Section J-4a of this closure plan, any visible evidence of contamination will be evaluated for hazardous constituents and (if contamination is present) subsequently removed for proper disposal.

9. All wastes generated from closure activities will be handled in accordance with Section J-4b of this closure plan.

10. The HRIW facility does not contain disposal units. All tank systems have secondary containment meeting the requirements of 40 CFR 264.193 (b) through (f). Also, all hazardous wastes and hazardous waste constituents will be removed from the facility during final closure and all structures will be decontaminated in accordance with this closure plan. Therefore, the facility is subject to neither the post-

closure care requirements of 40 CFR 264.116 through 264.120, nor the contingent post-closure plan requirements of 40 CFR 264.197(c).

11. Within 60 days of final closure completion, HRIW will submit, either by hand delivery or by registered mail, a certification of closure to KDHE or to the Regional Administrator of the USEPA, Region 7. The certification will be signed by HRIW, as the owner/operator of the facility, and by an independent registered professional engineer attesting that the units were closed in accordance with this closure plan.

J-4a Disposal or Decontamination of Equipment, Structure and Soils

During the partial and final closure periods, all contaminated equipment and structures will be either properly disposed of or decontaminated.

J-4a(1) Soils

As discussed in Section J-3a, HRIW does not currently plan to perform soil or groundwater studies because of a pending federal investigation into potential historical contamination of the surrounding area. However, HRIW will inspect the immediate area around all hazardous waste management units for indications of contamination. Any visible evidence of contamination (e.g., staining, discoloration) will be evaluated for hazardous constituents and, if contamination is present, subsequently removed for proper disposal in accordance with the following procedures.

1. Three representative background samples will be taken on-site but away from the visible contamination at a depth of 12-24 inches at each sample point using either USEPA SW-846 8260 and/or SW-846 8015, modified, or another equivalent, acceptable method. The facility "background" will be considered the mean plus three standard deviations.

2. All soil analysis procedures will be conducted in accordance with either USEPA method SW-846 numbers 6010, 7471, and/or 8260, modified (as appropriate) or other equivalent procedures.

3. Proper QA/QC procedures will be followed to control the potential loss of VOCs during sampling and transport.

4. All visibly contaminated soil will be removed.

5. All visibly contaminated soil which has been removed will be handled in accordance with Section J-4b of this closure plan.

6. After removal of the contaminated soil, one sample will be taken from inside the area of removed soil at a minimum depth of 0-6 inches. The sample will be taken using USEPA SW-846 8260 and SW-846 8015, modified. The sample will be analyzed in accordance with Step 2 above.

7. Soil will be considered clean for closure when results of sample analyses are either comparable to background

levels or below health risk based levels, or alternate standards as approved by KDHE.

8. If the soil does not meet the conditions specified in Step 7 above, an additional 6 inches of soil will be removed from the same area and Steps 6 through 8 will be repeated.

The soil beneath all hazardous waste management unit individually contained secondary containment systems will be clean closed as follows.

1. Divide the area beneath the containment unit into four quadrants and select one sample point in each quadrant. At the time of closure, if cracks or gaps are observed in the containment, the sample site will be located on or near the crack location. Otherwise, the sample location may be selected anywhere in the quadrant.

2. Collect samples at two depths, 0-6 inches and 12-18 inches, at each sample point using either USEPA SW-846 8260 and/or SW-846 8015, modified, or another

acceptable method. The samples from each horizon will be composited.

3. Collect three background samples from the same depths on-site for comparison analysis. Composite the samples from each depth.

4. Proper QA/QC procedures will be followed to control the potential loss of VOCs during sampling and transport.

5. Soil analysis procedures will be according to either USEPA method SW-846 numbers 6010, 7471 and/or 8260, modified (as appropriate) or other acceptable method.

6. Soil will be considered clean for closure when results of sample analysis are comparable to background levels or below health risk based levels, or alternate standards as approved by KDHE.

7. If large areas of soil contamination, in excess of closure standards, are identified, a project specific assessment and cleanup plan will be prepared and

submitted to the KDHE for approval and subsequent implementation.

J-4a(2) Hazardous Waste Management Units (HWMUs)

J-4a(2)(a) HWMUs with no internal or complicated external parts

All tank systems, container management units, and miscellaneous units and their associated secondary containment system components and ancillary equipment will be decontaminated as follows (unless the unit has internal parts and/or complicated external parts).

1. Surfaces will be scraped, sandblasted, brushed, or swept to remove all loose or caked residue. Surfaces will then be triple rinsed. The first wash will be performed with a high-pressure stream of steam or water with suitable detergents or other cleaning additives. The second wash will be performed using clean water with cleaning additives. Accumulated liquids from the two first washes will be collected and handled in accordance with Section J-4b of this closure plan. The third wash will be performed with clean (potable) water.

2. The equipment will be visually inspected after the triple wash/rinse to assess the presence of visible residue. If necessary, the facility will repeat all, or part, of the above procedures.

3. A representative sample will be taken of the rinse water from the final rinse of each hazardous waste management unit. These samples will be analyzed according to the Toxic Characteristic Leaching Procedure (TCLP) (40 CFR 261.24 as amended June 29, 1990).

4. A unit will be considered decontaminated when the rinsate sample analysis results are lower than the values/levels listed in Table J.2, Decontamination Rinsate Analysis, and when no visible residues remain on the unit.

5. If the unit is not decontaminated after performing Steps 1 through 4, the facility will either repeat the above procedures or dismantle the unit for further managment and/or disposal at an off-site permitted TSDF as a hazardous waste.

J-4a(2)(b) **HWMUs with internal or complicated external parts**

Any tank systems or miscellaneous units with external parts or complicated internal parts (such as the Shredding Unit) will be decontaminated as follows.

1. Exposed surfaces will be scraped, sandblasted, brushed, or swept to remove all loose or caked residue. Surfaces will then be triple rinsed. The first wash will be performed with a high-pressure stream of steam or water with suitable detergents or other cleaning additives. The second wash will be performed using clean water with cleaning additives. Accumulated solids and liquids from the two first washes will be handled in accordance with section J.4b of this closure plan. The third wash will be performed with clean water.

2. The equipment will be visually inspected after the triple wash/rinse to assess the presence of visual residue. If necessary the facility will repeat all, or part, of the above procedures.

3. If visible contamination remains, go to Step 5 below. If no visible contamination remains, the facility will take a representative sample of the rinse water from the final rinse of the hazardous waste management unit. These samples will be analyzed according to the TCLP (40 CFR 261.24 as amended June 29, 1990).

4. A unit will be considered decontaminated when the rinsate sample analysis results are lower than the values/levels listed in Table J.2, and when no visible residues remain on the unit.

5. If, after performing the above rinsing procedures, the equipment can not be decontaminated, the equipment will be transported by a licensed/permitted hauler to an off-site, permitted TSDF for further treatment or disposal. For the purposes of complying with 40 CFR 268, Land Disposal Restrictions, it is assumed that the equipment meets all Land Disposal Restrictions.

J-4a(3) Closure of Miscellaneous Handling Equipment

During operations, the facility utilizes miscellaneous equipment such as conveyers, forklifts, and hand tools which may come into contact with hazardous waste. During final facility closure, this equipment will be closed in one of the following ways:

- For closure of small equipment (such as hand tools), if visible contamination exists, the equipment will be dismantled and disposed of as hazardous waste at a RCRA/HSWA permitted off-site disposal facility,

- For closure of all equipment (including hand tools), if visible contamination exists, equipment will be decontaminated and disposed of at a solid waste landfill. If evidence of contamination exists after decontamination, the equipment will be transported by a permitted/licensed hauler to a permitted RCRA/HSWA off-site TSDF for further treatment or disposal, or

- For closure of all equipment (including hand tools), if visible contamination exists, equipment will be

decontaminated sufficiently to be salvaged for future use and potentially transferred for use at another RCRA facility.

J-4a(3)(a) **Decontamination of small miscellaneous handling equipment**

All hand tools and equipment without internal or complicated external parts will be decontaminated in accordance with the following procedures.

1. Surfaces will be scraped, sandblasted, brushed, or swept to remove all loose or caked residue. Surfaces will then be rinsed with a high-pressure stream of steam or water, possibly with suitable detergents or other cleaning additives, until either all visible contamination is removed, or until further removal is not feasible. All accumulated solids and liquids will be handled in accordance with section J-4b of this closure plan.

2. The equipment will be visually inspected for evidence of visible contamination.

3. The equipment will be considered decontaminated when no visible evidence of contamination exists.

J-4a(3)(b) **Decontamination of large miscellaneous handling equipment with no internal or complicated external parts**

All larger equipment with no internal parts or complicated external parts will be decontaminated as follows.

1. Surfaces will be scraped, sandblasted, brushed, or swept to remove all loose or caked residue. Surfaces will then be triple rinsed. The first wash will be performed with a high-pressure stream of steam or water with suitable detergents or other cleaning additives. The second wash will be performed using clean water with cleaning additives. Accumulated solids and liquids from the two first washes will be handled in accordance with section J.4b of this closure plan. The third wash will be performed with clean water.

2. The equipment will be visually inspected after the triple wash/rinse to assess the presence of visual residue. If necessary, the facility will repeat all, or part, of the above procedures.

3. A representative sample will be taken of the rinse water from the final rinse of each hazardous waste management unit. These samples will be analyzed according to the TCLP (40 CFR 261.24 as amended June 29, 1990).

4. The equipment will be considered decontaminated when the rinsate sample analysis results are lower than the values/levels listed in Table J.2, and when no visible residues remain on the unit.

5. If the unit is not decontaminated after performing Steps 1 through 4, the facility will either repeat the above procedures or dismantle the unit and transport it by a licensed/permitted hauler to an off-site, permitted TSDF for further treatment or disposal.

J-4a(3)(c) **<u>Decontamination of large miscellaneous handling equipment with internal or complicated external parts</u>**

All large equipment with internal parts and/or complicated external parts will be decontaminated in accordance with the following procedures.

1. Surfaces will be scraped, sandblasted, brushed, or swept to remove all loose or caked residue. Surfaces will then be triple rinsed. The first wash will be performed with a high-pressure stream of steam or water with suitable detergents or other cleaning additives. The second wash will be performed using clean water with cleaning additives. Accumulated solids and liquids from the two first washes will be handled in accordance with section J.4b of this closure plan. The third wash will be performed with clean water.

2. The equipment will be visually inspected after the triple wash/rinse to assess the presence of visual residue. If necessary the facility will repeat all, or part, of the above procedures

3. If visible contamination remains, go to Step 5 below. If no visible contamination remains, the facility will take a representative sample of the rinse water from the final rinse of the hazardous waste management unit. These samples will be analyzed according to the TCLP (40 CFR 261.24 as amended June 29, 1990).

4. A unit will be considered decontaminated when the rinsate sample analysis results are lower than the values/levels listed in Table J.2, and when no visible residues remain on the unit.

5. If after performing the above rinsing procedures, the equipment can not be decontaminated, the equipment will be transported by a licensed/permitted hauler to an off-site, permitted TSDF for further treatment or disposal. For the purposes of complying with 40 CFR 268, Land Disposal Restrictions, it is assumed that the equipment meets all Land Disposal Restrictions (LDR).

J-4b <u>Hazardous Waste Handling Procedures</u>

All contaminated solids, liquids, sludges, and soils generated by the closure process will be managed in accordance with applicable regulations as site generated solid waste (i.e., HRIW is the generator). Generated wastes meeting the definition of "hazardous waste" under 40 CFR 261.3 will be handled in the manner discussed below.

Generated hazardous wastes may be stored on-site in containers, existing tanks, or temporary portable tanks prior to treatment or removal from the facility. The wastes may be treated on-site in accordance with the facility's RCRA/HSWA permit. A temporary storage area may be developed for storage of these generated wastes, and if so, wastes will be stored in this area for less than ninety days. These wastes will then be transported to a permitted off-site Treatment, Storage, or Disposal Facility (TSDF) by a permitted hazardous waste hauler for appropriate disposal or further treatment (e.g. landfill, deep-well injection, incineration, cement kiln, recycling facility).

J-5 Maximum Extent of Operations Unclosed

Table J.1 lists all existing and proposed hazardous waste management units at the HRIW facility. This table represents the maximum extent of operations which are currently planned to exist at this facility.

J-6 Maximum Waste Inventory

The maximum inventory of wastes in storage exists when all hazardous waste management units contain their maximum permitted capacity of waste. HRIW's potential maximum waste inventory is 307,461 gallons.[a]

---

[a] The maximum waste inventory was calculated by adding S01 (storage in containers) and S02 (storage in tanks) in the Part A permit application.

170,000 gallons (S01) + 138,000 gallons (S02) = 308,000 gallons

J-7 Schedule for Final Closure

Table J.3, Closure Activity Schedule - Final Facility Closure outlines the anticipated schedule for closing the HRIW Wichita facility. The schedule assumes that all hazardous waste management units identified in this plan (See Table J.1) will be closed.

During final closure, hazardous waste management units may be closed simultaneously or sequentially. Also, a temporary storage area may be developed for storage of wastes which are generated by closure activities, and if so, wastes will be stored in this area for less than ninety days in appropriate containers or temporary tanks.

J-7a Expected Year of Final Closure

HRIW does not expect to close the facility prior to the permit expiration (i.e., ten years after the effective date of the permit). Since the facility does not consist of disposal units such as landfills or surface impoundments, capacity restraints (such as landfill capacity) do not exist to force facility

closure. Therefore, HRIW will not estimate the year of final closure [per 40 CFR 264.112(b)(7)].

J-8 Closure Plan Amendment

HRIW maintains a copy of the closure plan at the facility. HRIW will submit a written request for approval to change the closure plan, in accordance with 40 CFR 264.112(c) whenever one of the following occurs.

1. Changes in operating plans or facility design affect the closure plan.

2. Change in the estimated year of final closure (see section J-7a).

3. In conducting partial or final closure activities, unexpected events occur which affect the closure plan.

This notification will include a copy of the amended closure plan for review or approval by KDHE. It will be submitted at least 60 days prior to the proposed change in facility design or operation, or no later than sixty days after an unexpected event has occurred which has affected the closure plan. If an unexpected event occurs during the partial or final closure

period, HRIW will submit the notification or request no later than 30 days after the unexpected event's occurrence.

J-9 Individual Unit Closures

This section details the closure procedures of each individual hazardous waste management unit. During final facility closure and partial facility closure, each hazardous waste management unit will be closed in accordance with this section.

J-9a Container Management Unit (CMU) Closure

Partial facility closure (closure of an individual hazardous waste management unit), may be necessary during the active life of the facility. If a container management unit must be closed during the active life of the facility, it will be closed in accordance with this section (J-9a). At closure of a container management unit, all hazardous waste and hazardous waste residues will be removed from the containment system. Remaining containers, liners, bases, and soil containing or contaminated with hazardous waste or hazardous waste residues will be either decontaminated or removed.

J-9a(1) Process and Unit Description

The container management units at the HRIW facility are used for storing and staging containers of hazardous and non-hazardous wastes. The container management units may also be used for the treatment of hazardous waste in containers. The wastes managed in these areas include liquids, sludges, and solids and are managed in containers of varying sizes. The HRIW facility manages containerized waste in seven container management buildings, each roofed and constructed with concrete diking to minimize run-on and run-off. Several of these buildings are divided into exclusively contained sub-areas called Container Management Unit (CMU)s. The maximum total permitted storage capacity of container management units on site is approximately 170,000 gallons. Figure J.1, Material Containment Areas (Drawing 50-01-10-002, Material Containment Areas presented in Section Y) depicts the location of each CMU at the facility; Section D of this permit application describes each CMU in more detail.

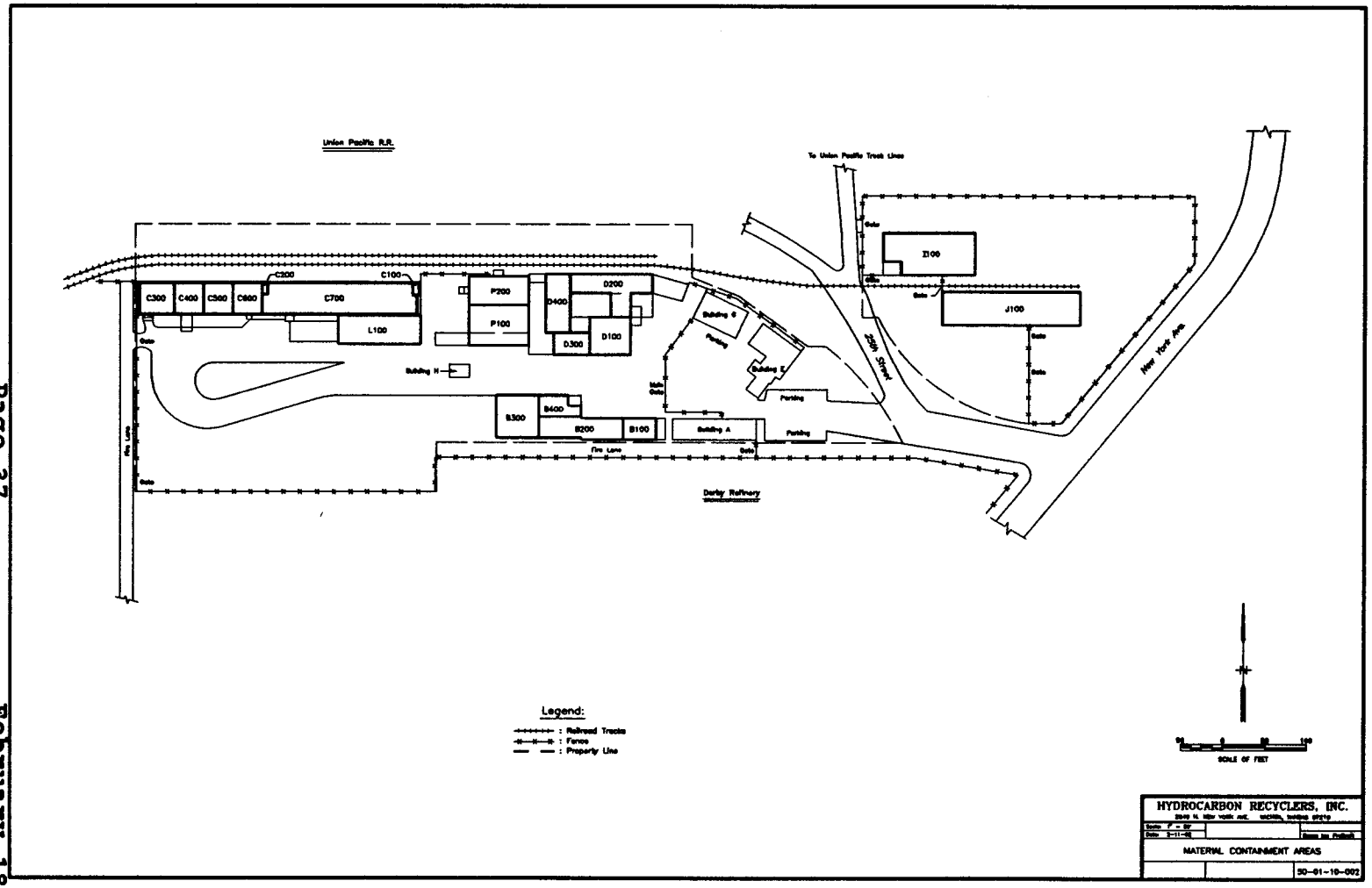

Figure J.1. Material Containment Areas

J-9a(2) **Unit Closure Procedures**

For the purposes of this closure plan, each container management unit includes the following structures/equipment:

- Containers, drums, pallets, marino bags, etc., and associated hazardous wastes, waste residues and constituents.

- All associated secondary containment structures (concrete pads, curbs, ramps, etc.).

- Underlying soil.

Buildings which enclose CMUs and which do not come into direct contact with hazardous waste or hazardous waste containers are not part of the container management unit. Therefore, the buildings associated with CMUs, including floors which are not part of the container management unit, will not be subject to the decontamination procedures of this closure plan and may be left in place. However, these walls and floors will be visually

inspected and, if evidence of contamination exists, these structures will be cleaned.

HRIW will close all CMUs at the facility as follows.

1. If modifications to the closure plan have not been previously approved, the plan will not be implemented until approval by KDHE or other authorized agencies has been received.

2. HRIW will close the CMU(s) in accordance with the schedule outlined in Table J.4, Closure Activity Schedule - Container Management Unit (CMU) and discussed in Section J-9a(3) of this closure plan.

3. Within ninety days after receiving the final volume of hazardous wastes at the CMU(s), HRIW will remove all waste inventory and portable equipment from the area unless an extension has been requested and approved in accordance with 40 CFR 264.113(a). All waste inventories will be either treated on-site in accordance with the facility's RCRA/HSWA permit or transported to a permitted TSDF for off-site treatment or disposal.

HRIW will attempt to empty all drums to the extent described by 40 CFR 261.7(b) to satisfy the requirements for the exemption as defined by 40 CFR 261.7(a)(1). The successfully emptied drums will be transported to an off-site industrial waste disposal facility or a permitted RCRA/HSWA TSDF for disposal. If a container cannot be emptied to meet the definition in 40 CFR 261.7(b), then the container will be transported by a licensed hazardous waste hauler to a permitted off-site RCRA/HSWA TSDF for treatment or disposal.

4. All contaminated equipment, structures, and secondary containment systems will be:

   A. Dismantled and disposed of as hazardous waste at a RCRA/HSWA permitted off-site disposal facility, or

   B. Decontaminated in accordance with Section J-4a and disposed of at a solid waste landfill, or

   C. Decontaminated in accordance with Section J-4a and either salvaged for future use or left in place.

D. Successfully decontaminated equipment may be transferred to another TSDF for use.

5. HRIW will visually inspect the surface soils around the CMU(s). Any visible evidence of contamination will be evaluated for hazardous constituents and (if contamination is present) subsequently removed for proper disposal in accordance with Section J-4a of this closure plan.

   The soil beneath the container management unit individually contained secondary containment systems will be clean closed in accordance with Section J-4a of this closure plan.

6. All wastes generated from closure activities will be handled in accordance with Section J-4b of this closure plan.

7. HRIW will complete closure activities within 180 days after receiving either the final volume of hazardous wastes or closure plan approval by the agency, unless an extension has been requested and approved in accordance with 40 CFR 264.113(b).

8. The CMUs are not disposal units. Also, all hazardous wastes and hazardous waste constituents will be removed from the CMU during closure and all structures will be decontaminated in accordance with this closure plan. Therefore, the CMUs are not subject to the post-closure care requirements of 40 CFR 264.116 through 264.120.

J-9a(3) **Unit Closure Schedule**

Table J.4 outlines the anticipated schedule for the individual closure of a container management unit at the HRIW facility. During final closure of the facility, all HWMUs may be closed simultaneously and in accordance with the schedule presented in Table J.3.

J-9b Tank System Closure

Partial facility closure (closure of an individual hazardous waste management unit) may be necessary during the active life of the facility. If a tank or tank system must be closed during the active life of the facility, it will be closed in accordance with this section (J-9b). At closure of a tank or tank system, all hazardous waste and hazardous waste residues will be removed from the tank/tank system. Tanks, ancillary equipment, liners, bases, and soil containing or contaminated with hazardous waste or hazardous waste residues will be either decontaminated or removed.

J-9b(1) Process and Unit Description

Tank systems at the HRIW facility include storage/treatment tanks; the maximum permitted storage capacity of tanks on site is 137,461 gallons. The storage/treatment tanks have several uses at the HRIW facility, some of which are discussed below.

- Solvent and solid waste streams are blended, accumulated, and stored in tanks prior to being transported to an off-site cement kiln to be burned as an alternative fuel.

- Other wastes are received from generators either in drums or bulk and are transferred to tanks to await transportation to an off-site reclamation facility, incinerator, deep-well injection facility, landfill or other permitted TSDF.

- Finally, the HRIW facility manages solvent laden cartridges (e.g., dry cleaning cartridges). Cartridges are shredded and/or dried to recover solvent or other material for energy recovery and/or reuse. Recovered vapors are condensed and accumulated in a vessel which is purged after each drier batch. The solvent and water are separated in a phase separation tank, and then stored separately in designated tanks prior to shipment off-site to a TSDF for further reclamation or for disposal.

The tanks used at HRIW vary in size. All tanks utilized for hazardous waste management are equipped with a manual gaging port and high level alarms to minimize the potential for overflow. All hazardous waste management tanks operating under this permit

have secondary containment designed, installed, and operated to prevent migration of wastes or accumulated liquid to the environment. These containment systems, consisting of concrete slabs surrounded by concrete walls or dikes of varying height, enable the detection of and collection of releases and accumulated liquids. The concrete containment liner is also maintained free from cracks and gaps.

These tanks are summarized in Table J.1. In addition, Figure J.2, Tank Locations (Drawing 50-01-03-001, Tank Locations presented in Section Y) shows the location of each tank system at the facility. Section E of this closure plan describes the tank systems in more detail.

J-9b(2) **Unit Closure Procedures**

For the purposes of this closure plan, each tank system includes:

- Tanks and associated hazardous wastes, waste residues and constituents;

- All ancillary equipment including, but not limited to, piping, fittings, flanges, valves, and pumps;

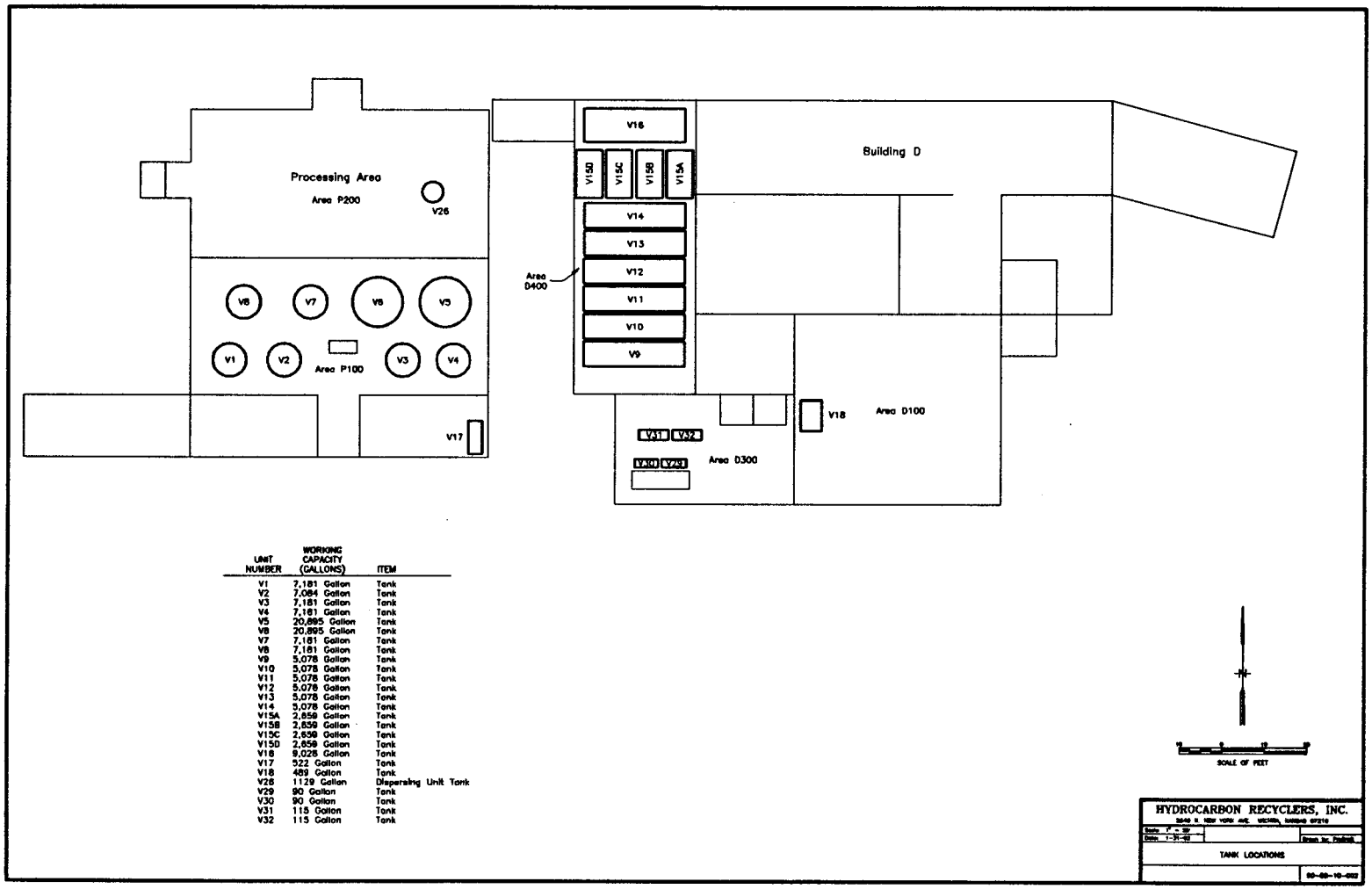

UNIT NUMBER	WORKING CAPACITY (GALLONS)	ITEM
V1	7,181 Gallon	Tank
V2	7,084 Gallon	Tank
V3	7,181 Gallon	Tank
V4	7,181 Gallon	Tank
V5	20,895 Gallon	Tank
V6	20,895 Gallon	Tank
V7	7,181 Gallon	Tank
V8	7,181 Gallon	Tank
V9	5,078 Gallon	Tank
V10	5,078 Gallon	Tank
V11	5,078 Gallon	Tank
V12	5,078 Gallon	Tank
V13	5,078 Gallon	Tank
V14	5,078 Gallon	Tank
V15A	2,859 Gallon	Tank
V15B	2,859 Gallon	Tank
V15C	2,859 Gallon	Tank
V15D	2,859 Gallon	Tank
V16	9,028 Gallon	Tank
V17	522 Gallon	Tank
V18	489 Gallon	Tank
V26	1129 Gallon	Dispensing Unit Tank
V29	90 Gallon	Tank
V30	90 Gallon	Tank
V31	115 Gallon	Tank
V32	115 Gallon	Tank

Figure J.2. Tank Locations

- All associated secondary containment structures (concrete pads, curbs, ramps, etc.); and

- Underlying soil.

The buildings which contain tank systems and which do not come into direct contact with hazardous waste or hazardous waste tank systems are not part of the tank system. Therefore, these buildings associated with the tank systems, including floors which are not part of the tank system, will not be subject to the decontamination procedures of this closure plan and may be left in place. However, these walls and floors will be visually inspected and, if evidence of contamination exists, these structures will be cleaned.

The tank units at the Wichita facility may undergo periodic changes and upgrading in order to accommodate required regulatory and capacity changes and improvements in technology. Also, HRIW will replace tanks if they become unfit for use. Since each secondary containment system contains several tanks, the HRIW facility could potentially close a single tank unit without closing the associated secondary containment system. However,

upon final facility closure all tank systems, including secondary containment, will be closed in accordance with this section.

HRIW will close all tanks and/or tank systems at the facility as follows.

1. If modifications to the closure plan have not been previously approved, the plan will not be implemented until approval by KDHE or other authorized agencies has been received.

2. HRIW will close the tanks and/or tank systems in accordance with the schedule outlined in Table J.5, Closure Activity Schedule - Tanks and Tank Systems and as discussed in Section J-9b(3) of this closure plan.

3. Within ninety days after receiving the final volume of hazardous wastes into the tank/tank system, HRIW will remove all waste inventory from the unit(s) unless an extension has been requested and approved in accordance with 40 CFR 264.113(a). All waste inventories will be either treated on-site in accordance with the facility's RCRA/HSWA permit

or transported to a permitted TSDF for off-site treatment or disposal.

4. All tanks, ancillary equipment, structures, and secondary containment systems (when applicable) will be:

   A. Dismantled and disposed of as hazardous waste at a RCRA/HSWA permitted off-site disposal facility, or

   B. Decontaminated in accordance with Section J-4a and disposed of at a solid waste landfill, or

   C. Decontaminated in accordance with Section J-4a and either salvaged for future use or left in place.

   D. Successfully decontaminated equipment may be transferred to another TSDF for use.

5. This step applies only when closing an entire tank system, including its secondary containment. If only closing a tank unit, go to Step 6 below. When closing a tank system, HRIW will visually inspect the surface soils around the tank system containment area. In accordance with Section J-4a of

this closure plan, any visible evidence of contamination will be evaluated for hazardous constituents and, if contamination is present, subsequently removed for proper disposal.

The soil beneath the tank systems' individually contained secondary containment systems will be clean closed in accordance with Section J-4a of this closure plan.

6. All wastes generated from closure activities will be handled in accordance with Section J-4b of this closure plan.

7. HRIW will complete closure activities within 180 days after receiving either the final volume of hazardous wastes into the tank unit(s) or closure plan approval from the agency, whichever is later, unless an extension has been requested and approved in accordance with 40 CFR 264.113(b).

8. The tank systems are not disposal units, and they have secondary containment meeting the requirements of 40 CFR 264.193(b) through (f). Also, all hazardous wastes and hazardous waste constituents will be removed from the tanks/tank systems during closure and all structures will be

decontaminated in accordance with this closure plan. Therefore, the tank/tank systems are subject to neither the post-closure care requirements of 40 CFR 264.116 through 264.120, nor the contingent post-closure plan requirements of 40 CFR 264.197(c).

J-9b(3) **Unit Closure Schedule**

Table J.5 outlines the anticipated schedule for the individual closure of a tank/tank system at the HRIW facility. During final closure of the facility, all HWMUs may be closed either sequentially or simultaneously and in accordance with the schedule presented in Table J.3.

J-9c Miscellaneous Unit Closure

Partial facility closure, closure of an individual hazardous waste management unit, may be necessary during the active life of the facility. If a miscellaneous unit must be closed during the active life of the facility, it will be closed in accordance with this section. At closure of a miscellaneous unit, all hazardous waste and, to the extent possible, hazardous waste residues will be removed from the unit. Furthermore, the miscellaneous unit, associated ancillary equipment, liners, bases, and soil containing or contaminated with hazardous waste or hazardous waste residues will be either decontaminated or removed.

J-9c(1) Process and Unit Description

"Miscellaneous Unit" is defined under 40 CFR 260.10 (as of July 1, 1990) as:

> A hazardous waste management unit where hazardous waste is treated, stored, or disposed of, and that is not a container, tank, surface impoundment, pile, land treatment unit, landfill, incinerator, boiler, industrial furnace, underground injection well with appropriate technical standards under 40 CFR Part 146, or unit eligible for a research, development, and demonstration permit under 40 CFR 270.65.

The HRIW facility has miscellaneous units as defined above. Table J.1 and Figure J.3, Miscellaneous Unit Locations (Drawing 50-57-10-001, Miscellaneous Unit Locations presented in Section Y) identify these units and their location at the Wichita facility. A brief description of each unit follows.

1. Shredder Unit - A toothed wheel shredder which reduces bulk objects into shreds.

2. Granulator Unit - A fixed knife shredder which reduces the size of solid objects.

3. Drier Unit - A unit which evaporates liquids from sludges and solids, and then recondenses the vapor.

4. Dispersing Unit - A unit which uses agitation to dissolve viscous liquids and solids removed from containers prior to transferring these materials into tanks.

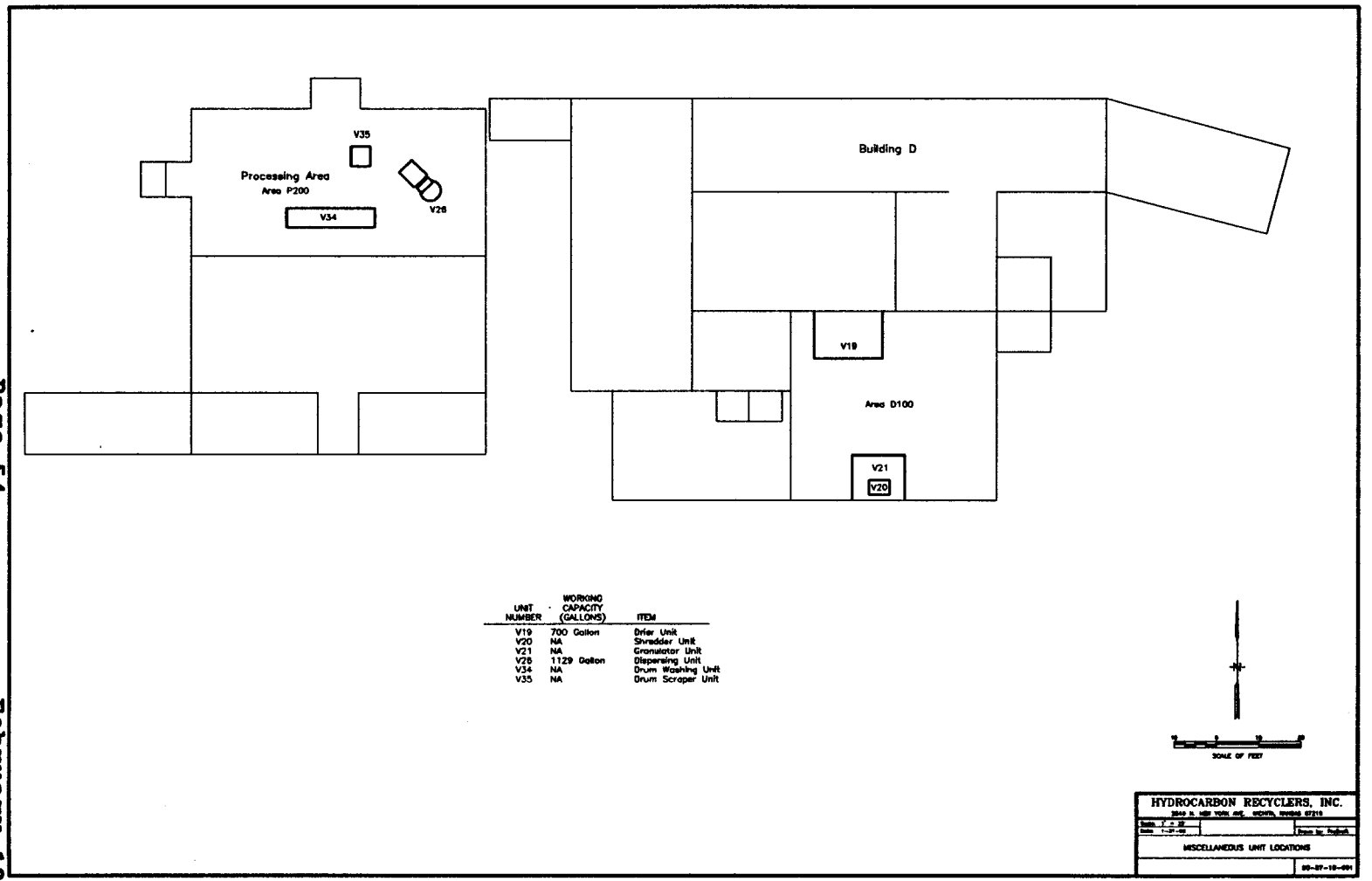

UNIT NUMBER	WORKING CAPACITY (GALLONS)	ITEM
V19	700 Gallon	Drier Unit
V20	NA	Shredder Unit
V21	NA	Granulator Unit
V26	1129 Gallon	Dispersing Unit
V34	NA	Drum Washing Unit
V35	NA	Drum Scraper Unit

Figure J.3. Miscellaneous Unit Locations

5. Drum Washing Unit - A unit which mechanically removes waste residue from emptied drums.

6. Drum Scraper Unit - A device which loosens solid and viscous material inside a container so the material may be removed from the container for further management (e.g., treatment, storage).

7. Treatment in Containers and Container Management Activities - The facility will treat hazardous waste in containers. These activities will be conducted in the container management areas. One treatment activity involves using portable filtration units to remove particulates from liquid streams. These filtration units will be closed in accordance with this section (J-9c) as a miscellaneous unit. All container management areas in which treatment in containers occurs will be closed in accordance with Section J-9a of this closure plan.

J-9c(2) **Unit Closure Procedures**

For the purposes of this closure plan, each miscellaneous unit includes the following structures/equipment:

- The unit and associated hazardous wastes, waste residues and constituents;
- Ancillary equipment including, but not limited to, piping, fittings, flanges, valves, and pumps;
- Associated secondary containment structures (concrete pads, curbs, ramps, etc.); and
- Underlying soil.

The buildings which contain miscellaneous units and which do not come into direct contact with hazardous waste or the unit are not part of the miscellaneous unit. Therefore, the buildings associated with the miscellaneous unit, including floors which are not part of the miscellaneous unit system, will not be subject to the decontamination procedures of this closure plan

and may be left in place. However, these walls and floors will be visually inspected and, if evidence of contamination exists, these structures will be cleaned.

The miscellaneous units at the HRIW facility may undergo periodic changes, upgrades, or partial closure in order to accommodate required regulatory and capacity changes and improvements in technology. Also, HRIW will periodically replace miscellaneous units if they become unfit for use and repair. Since some of the secondary containment systems contain miscellaneous units in addition to tanks and/or CMUs, the facility could potentially close or replace a single miscellaneous unit without closing the associated secondary containment system. However, upon final facility closure all miscellaneous units, including secondary containment, will be closed in accordance with this section.

HRIW will close all miscellaneous units at the Wichita facility as follows.

1. If modifications to the closure plan have not been previously approved, the plan will not be implemented until approval by KDHE or other authorized agencies has been received.

2. HRIW will close the miscellaneous unit(s) in accordance with the schedule outlined in Table J.6, Closure Activity Schedule - Miscellaneous Units and discussed in Section J-9c(3) of this closure plan.

3. Within ninety days after receiving the final volume of hazardous wastes into the miscellaneous unit(s), HRIW will remove all waste inventory from the unit(s) unless an extension has been requested and approved in accordance with 40 CFR 264.113(a). All waste inventories will be either treated on-site in accordance with the facility's RCRA/HSWA permit or transported to a permitted TSDF for off-site treatment or disposal.

4. The unit(s), ancillary equipment, structures, and secondary containment systems (when applicable) will be:

   A. Dismantled and disposed of as hazardous waste at a RCRA/HSWA permitted off-site disposal facility, or

   B. Decontaminated in accordance with Section J-4a and disposed of at a solid waste landfill, or

C. Decontaminated in accordance with Section J-4a and either salvaged for future use or left in place.

D. Successfully decontaminated equipment may be transferred to another TSDF for use.

5. This step applies only when closing an entire miscellaneous unit system, including its secondary containment. If only closing a miscellaneous unit, go to Step 6 below. When closing the miscellaneous unit(s) and its associated secondary containment, HRIW will visually inspect the surface soils around the unit's containment area. Any visible evidence of contamination will be evaluated for hazardous constituents and (if contamination is present) subsequently removed for proper disposal in accordance with Section J-4a of this closure plan.

The soil beneath the miscellaneous unit systems' individually contained secondary containment systems will be clean closed in accordance with Section J-4a of this closure plan.

6. All wastes generated from closure activities will be handled in accordance with Section J-4b of this closure plan.

7. HRIW will complete closure activities within 180 days after receiving either the final volume of hazardous wastes into the miscellaneous unit(s) or closure plan approval by the agency (whichever is later), unless an extension has been requested and approved in accordance with 40 CFR 264.113(b).

8. The miscellaneous units are not disposal units. Also, all hazardous wastes and hazardous waste constituents will be removed from the miscellaneous units during closure and all structures will be decontaminated in accordance with this closure plan. Therefore, the miscellaneous units are not subject to the post-closure care requirements of 40 CFR 264.116 through 264.120.

J-9c(3) **Unit Closure Schedule**

Table J.6 outlines the anticipated schedule for the individual closure of a miscellaneous unit at the HRIW facility. During final closure of the facility, all HWMUs may be closed either sequentially or simultaneously and in accordance with the schedule presented in Table J.3.

J-10 Financial Requirements

Closure costs are estimated in Appendix J-B, Closure Cost Estimate.

Financial requirements for hazardous waste TSDFs are addressed in Section K, Financial Requirements of this document.

Endnote

1. Groundwater Technology, Inc., Draft Remedial Investigation Report for the 29th and Mead RI/FS, August 27, 1991.

APPENDIX J-A

TABLES

February 18, 1992

TABLE J.1

MAXIMUM EXTENT OF OPERATIONS UNCLOSED

HRIW - HAZARDOUS WASTE MANAGEMENT UNITS

HWMU[b]	UNIT	Wastes Stored/Function
C	CMU C100[c]	Hazardous waste - Container Management
C	CMU C200	Hazardous waste - Container Management
C	CMU C300	Hazardous waste - Container Management
C	CMU C400	Hazardous waste - Container Management
C	CMU C500	Hazardous waste - Container Management
C	CMU C600	Hazardous waste - Container Management
C	CMU C700	Hazardous waste - Container Management
C	CMU B100	Hazardous waste - Container Management
C	CMU B200	Hazardous waste - Container Management
C	CMU B300	Hazardous waste - Container Management

---

[b] HWMU - Hazardous Waste Management Unit - All HWMUs at the HRI Wichita facility are either Container Management Areas (C), Tanks/Tank Systems (T), or Miscellaneous Units (M) as defined by 40 CFR 260.10. The unit closure procedures for these units are detailed in Section J-9a, Section J-9b, and Section J-9c respectively.

[c] Each section represents an individually contained area (i.e. CMU). See Figure J.1 for CMU locations.

Hydrocarbon Recyclers, Inc. of Wichita
RCRA Permit Application
Section J
Closure Plan
Appendix J-A - Tables

HWMU	UNIT	WASTES STORED/FUNCTION
C	CMU B400	Hazardous waste - Container Management
C	CMU D100	Hazardous waste - Container Management
C	CMU D200	Hazardous waste - Container Management
C	CMU D300	Hazardous waste - Container Management
C	CMU I100	Hazardous waste - Container Management
C	CMU J100	Hazardous waste - Container Management
C	CMU L100	Hazardous waste - Container Management
C	CMU P100	Hazardous waste - Container Management
C	CMU P200	Hazardous waste - Container Management
T	V-1	Hazardous Waste Liquid
T	V-2	Hazardous Waste Liquid
T	V-3	Hazardous Waste Liquid
T	V-4	Hazardous Waste Liquid
T	V-5	Hazardous Waste Liquid
T	V-6	Hazardous Waste Liquid
T	V-7	Hazardous Waste Liquid
T	V-8	Hazardous Waste Liquid
T	V-9	Hazardous Waste Liquid
T	V-10	Hazardous Waste Liquid

HWMU	UNIT	WASTES STORED/FUNCTION
T	V-11	Hazardous Waste Liquid
T	V-12	Hazardous Waste Liquid
T	V-13	Hazardous Waste Liquid
T	V-14	Hazardous Waste Liquid
T	V-15A	Hazardous Waste Liquid
T	V-15B	Hazardous Waste Liquid
T	V-15C	Hazardous Waste Liquid
T	V-15D	Hazardous Waste Liquid
T	V-16	Hazardous Waste Liquid
T	V-17	Hazardous Waste Liquid
T	V-18	Solids Dryer Water/Waste Water Accumulator and Separator
M	V-19	Drier Unit
M	V-20	Shredder Unit
M	V-21	Granulator Unit
M	V-26	Dispersing Unit
T	V-29	Hazardous Waste Liquid
T	V-30	Hazardous Waste Liquid

Hydrocarbon Recyclers, Inc. of Wichita
RCRA Permit Application
Section J
Closure Plan
Appendix J-A - Tables

HWMU	UNIT	WASTES STORED/FUNCTION
T	V-31	Hazardous Waste Liquid
T	V-32	Hazardous Waste Liquid
M	V-34	Drum Washing Unit
M	V-35	Drum Scraping Unit
M	All CMUs	Treatment in Containers
T	V-50	Proposed
T	Waste water treatment system	Proposed
C	Container Storage Adjacent to Shredder/Grinder	Proposed

TABLE J.2

DECONTAMINATION RINSATE ANALYSIS[d]

Contaminant	Max Concentration Increase (mg/L)[e]
Arsenic	5.00
Barium	100.00
Benzene	0.50
Cadmium	1.00
Carbon tetrachloride	0.50
Chlordane	0.03
Chlorobenzene	100.00
Chloroform	6.00
Chromium	5.00
o-Cresol	200.00[f]
m-Cresol	200.00[h]
p-Cresol	200.00[h]
Cresol	200.00[h]

---

[d]Reference: 40 CFR 261.24 - Table 1 (as amended June 29, 1990)

[e] The values given are the maximum allowable increase in a contaminant's concentration, over the level that exists in the final rinse water prior to use.

[f] If o-,m-,and p-Cresol concentration cannot be differentiated, the total Cresol concentration should be used. The regulatory level of total Cresol is 200 mg/L.

Contaminant	Max Concentration Increase (mg/L)
2,4-D	10.00
1,4-Dichlorobenzene	7.50
1,2-Dichloroethane	0.50
1,1-Dichloroethylene	0.70
2,4-Dinitrotoluene	0.13
Endrin	0.02
Heptachlor (and its epoxide)	0.008
Hexachlorobenzene	0.13
Hexachlorobutadiene	0.50
Hexachloroethane	3.00
Lead	5.00
Lindane	0.40
Mercury	0.20
Methoxychlor	10.00
Methyl ethyl ketone	200.00
Nitrobenzene	2.00
Pentrachlorophenol	100.00
Pyridine	5.00
Selenium	1.00
Silver	5.00
Tetrachloroethylene	0.70

Contaminant	Max Concentration Increase (mg/L)
Toxaphene	0.50
Trichloroethylene	0.70
2,4,5-Trichlorophenol	400.00
2,4,6-Trichlorophenol	2.00
2,4,5-TP(Silvex)	1.00
Vinyl Chloride	0.20

TABLE J.3

CLOSURE ACTIVITY SCHEDULE - FINAL FACILITY CLOSURE

Calendar Days Lapsed	Closure Activity
-15	Notification to KDHE or the EPA Region 6 Administrator.
0	Receipt of known final volume of hazardous waste or receipt of final closure plan approval from agency (whichever is later). Begin work-force mobilization.
30 - 90	Begin treatment and removal of tank waste inventory.
	Begin treatment and removal of container waste inventory.
	Complete treatment and removal of all hazardous waste inventories.
120	Complete decontamination of tanks, container management units and miscellaneous units.
150	Complete dismantling/removal of all generated wastes, temporary storage units, and decontaminated tanks, equipment, and structures (if removal is necessary).
	Visually inspect surface soils for contamination and begin remediation procedures if necessary.
180	Complete final closure activities.
200	Inspection of facility by a Professional Engineer.
240	Submit a certification of closure to KDHE or the EPA Region 6 Administrator.

TABLE J.4

CLOSURE ACTIVITY SCHEDULE - CONTAINER MANAGEMENT UNIT

Calendar Days Lapsed	Closure Activity
0	Receipt of known final volume of hazardous waste into the container management unit or receipt of closure plan approval from agency (whichever is later). Begin work-force mobilization.
30	Begin treatment and removal of waste inventory.
90	Complete treatment and removal of all hazardous waste inventories.
120	Complete emptying all drums and removal of drums from facility.
150	Complete decontamination of secondary containment structures and hazardous waste handling equipment. Visually inspect surface soils for contamination and begin remediation procedures if necessary.
180	Complete final closure activities.

TABLE J.5

CLOSURE ACTIVITY SCHEDULE - TANKS AND TANK SYSTEMS

Calendar Days Lapsed	Closure Activity
0	Receipt of known final volume of hazardous waste or receipt of closure plan approval from agency (whichever is later). Begin work-force mobilization.
30	Begin treatment and removal of tank waste inventory.
90	Complete treatment and removal of all hazardous waste inventories.
120	Complete decontamination of tanks, ancillary equipment, and secondary containment systems (when applicable).
150	Complete dismantling/removal of decontaminated tanks, equipment, and secondary containment structures (when removal is necessary). Visually inspect surface soils for contamination and begin remediation procedures if necessary.
180	Complete final closure activities.

TABLE J.6

CLOSURE ACTIVITY SCHEDULE - MISCELLANEOUS UNITS

Calendar Days Lapsed	Closure Activity
0	Receipt of known final volume of hazardous waste or receipt of closure plan approval from agency (whichever is later). Begin work-force mobilization.
120	Complete decontamination of miscellaneous unit(s), ancillary equipment, and secondary containment systems (when applicable).
150	Complete dismantling/removal of decontaminated miscellaneous unit(s), equipment, and secondary containment structures (when removal is necessary). Visually inspect surface soils for contamination and begin remediation procedures if necessary.
180	Complete final closure activities.

APPENDIX J-B

CLOSURE COST ESTIMATE

February 18, 1992

Summary - Closure Cost Estimate

Hydrocarbon Recyclers, Inc. of Wichita (HRIW)
Wichita, Kansas

The following table is a summary of the cost for closing the HRIW facility. The figures for closing the HRIW facility are set forth assuming the plant has the maximum storage of hazardous waste. It has been prepared in accordance with 40 CFR 264.142 (Cost Estimate For Closure). Cost estimate calculations are provided in seven sections attached. In the first section, the cost for transporting and disposing of the stored waste is calculated. The second section calculates the cost of decontaminating the concrete. The third section estimates the cost of decontaminating the existing hazardous waste management equipment in the plant. Transportation and disposal of the residues collected are calculated in the next three sections. An independent registered professional engineer's cost is figured into the last section as described in the federal register. Section VII calculates the contingency required by 40 CFR 264.142.

Cost	Section
$819,272.96	Waste Disposal of Maximum Inventory
$187,090.25	Assessment of soil and Concrete Decontamination
$19,851.75	Equipment Decontamination
$25,379.26	Management of Aqueous Decontamination Residue
$1,550.34	Management of Kiln Fuel Decontamination Residue
$1,350.57	Management of Incinerable Decontamination Residue
$3,640.00	Closure Certification
$1,058,135.13	Subtotal
$158,720.27	Contingency 15 %
$1,216,855.40	**Total Closure Cost Estimate**

I. WASTE DISPOSAL OF MAXIMUM INVENTORY

STORAGE SUMMARY

VESSEL	CAPACITY (GAL)
V-1	7,181
V-2	7,084
V-3	7,181
V-4	7,181
V-5	20,895
V-6	20,895
V-7	7,181
V-8	7,181
V-9	5,078
V-10	5,078
V-11	5,078
V-12	5,078
V-13	5,078
V-14	5,078
V-15A	2,659
V-15B	2,659
V-15C	2,659
V-15D	2,659
V-16	9,028
V-17	522
V-18	489
V-26	1,129
V-29	90
V-30	90
V-31	115
V-32	115
TOTAL	137,461

STORAGE BUILDING	STORAGE AREA (SQ.FT.)	STORAGE CAPACITY (GAL)	DRUM EQUIVALENTS (55 GAL)
BUILDING D	13,803	46,640	848
PROCESSING AREA	6,278	9,900	180
BUILDING C	13,520	99,110	1,802
DRUM DOCK	2,660	14,960	272
BUILDING B	7,304	55,000	1,000
BUILDING I	5,292	38,720	704
BUILDING J	6,318	58,080	1,056
TOTAL	55,175	322,410	5,862

ASSUMPTIONS

55 GALLONS/DRUM	$8.65 /HOUR MANUAL LABOR
80 DRUMS/LOAD	1,100 GALLONS/HOUR PUMPING
6000 GALLONS/TANKER	75 DRUMS/HOUR LOADING
$20.00 /HOUR LAB LABOR	$3.50 /MILE TRANSPORTATION

NOTE
****
WASTE TYPE PERCENTAGES ARE BASED ON CURRENT
MARKET AND INVENTORY.
****

ISPOSAL

CONTAINERS

DISPOSAL METHOD	PECENTAGES	DRUMS	UNIT COST	DISPOSAL LOCATION	DISPOSAL COST
LIQUID KILN FUEL	7	410	$0.21 /GAL	FREDONIA, KS	$4,739.43
SOLID KILN FUEL	40	2,345	$50.00 /DRUM	FREDONIA, KS	$117,240.00
INCINERATION	30	1,759	$3.00 /GAL	COFFEYVILLE, KS	$290,169.00
LAND FILL	13	762	$275.00 /DRUM	WYNOKA, OK	$209,566.50
DEEP WELL	3	176	$1.00 /GAL	DALLAS, TX	$9,672.30
RECYCLE OR KILN FUEL	7	410	$0.21 /GAL	TULSA, OK	$4,739.43
TOTAL	100	5862			$636,126.65

TANKS

DISPOSAL METHOD	PECENTAGES	GALLONS	COST	DISPOSAL LOCATION	DISPOSAL COST
LIQUID KILN FUEL	46	63,232	$0.21 /GAL	FREDONIA, KS	$13,278.73
INCINERATION	10	13,746	$3.00 /GAL	COFFEYVILLE, KS	$41,238.30
DEEP WELL	33	45,362	$1.00 /GAL	DALLAS, TX	$45,362.13
RECYCLE OR KILN FUEL	11	15,121	$0.21 /GAL	TULSA, OK	$3,175.35
TOTAL	100	137,461			$103,054.51

LABOR

3,107	DRUMS TO LOAD	$358.32 LOADING
2,755	DRUMS TO TANKERS	$1,191.60 PUMPING
137,461	GALLONS TO TANKERS	$1,080.94 PUMPING
		$2,630.87 TOTAL LABOR

RANSPORTATION

CONTAINERS

DISPOSAL METHOD	# OF LOADS	DRUMS	DISPOSAL LOCATION	MILAGE	COST
LIQUID KILN FUEL	4	410	FREDONIA, KS	100	$1,400.00
SOLID KILN FUEL	30	2,345	FREDONIA, KS	100	$10,500.00
INCINERATION	17	1,759	COFFEYVILLE, KS	150	$8,925.00
LAND FILL	10	762	WYNOKA, OK	150	$5,250.00
DEEP WELL	2	176	DALLAS, TX	364	$2,548.00
RECYCLE OR KILN FUEL	4	410	TULSA, OK	180	$2,520.00
TOTAL	67	5862			$31,143.00

BULK TANKERS

DISPOSAL METHOD	# OF LOADS	GALLONS	DISPOSAL LOCATION	MILAGE	COST
LIQUID KILN FUEL	11	63,232	FREDONIA, KS	100	$3,850.00
INCINERATION	3	13,746	COFFEYVILLE, KS	150	$1,575.00
DEEP WELL	8	45,362	DALLAS, TX	364	$10,192.00
RECYCLE OR KILN FUEL	3	15,121	TULSA, OK	180	$1,890.00
TOTAL	25	137,461			$17,507.00

NOTE
****
SOLIDS ARE SHIPPED IN DRUMS AT 80 DRUMS PER LOAD.
LIQUIDS ARE SHIPPED IN BULK AT 6000 GALLONS PER LOAD.
****

CONTAINER DISPOSAL

ACTIVITY	PARAMETER	UNIT VALUES	RESIDUE GENERATED	COST
DRUM WASHING				
	NO. OF DRUMS	2,755 DRUMS		
	LABOR	$8.65 PER HOUR		
	TIME	60 DRUMS/HOUR		$397.20 LABOR WASHING
	KILN FUEL GENERATED	2 GAL/DRUM	5,510 GALLONS KILN FUEL	

NOTE
****
THE DRUM WASHER CAN PROCESS 60 DRUMS/HOUR.
THE WASHER GENERATES 2 GALLONS ADDITIONAL SOLVENT WASTE
PER DRUM WASHED.
TRANSPORTATION AND DISPOSAL OF RESIDUE GENERATED IS CALCULATED IN LATER SECTIONS.
****

DRUM CRUSHING	LABOR	$8.65 PER HOUR		$794.40 LABOR CRUSHING
	TIME	30 DRUMS/HOUR		
	TRANS & DISP	$10.00 PER DRUM		$27,551.40 DRUM DISPOSAL

NOTE
****
THE DRUM CRUSHER CAN PROCESS 30 DRUMS/HOUR.
TRANSPORTATION AND DISPOSAL ARE INCLUDED IN THE
USPCI COST PER DRUM.
****

TANK DECONTAMINATION

TANK WASHING	LABOR	$8.65 PER HOUR		$2,698.80 LABOR WASHING
	TIME	4 HOURS/TANK		
	NO. OF TANKS	26 TANKS		
	CREW SIZE	3 MEN/TANK		
	WASTE WATER GENERATED	165 GAL/TANK	4,290 GALLONS WASTE WATER	

NOTE
****
3-MAN CREW, 4 HOURS/TANK.
THE RESIDUE VOLUME IS ESTIMATED BASED UPON PAST EXPERIENCE.
****

SECTION I SUBTOTAL $819,272.96

I. ASSESSMENT OF SOIL AND CONCRETE DECONTAMINATION

ACTIVITY	PARAMETER	UNIT VALUES	RESIDUE GENERATED	COST
CORE AND SAMPLE CONCRETE OR SOIL	LABOR	$20.00 PER HOUR		$2,020.00 LABOR SAMPLING
	EQUIPMENT	$15.00 PER SAMPLE		$1,515.00 CORING EQUIPMENT
	TIME	1 HOUR/SAMPLE		
	NO. OF SAMPLES	101 SAMPLES		
ANALYSIS	LABORATORY FEE	$1,500.00 FOR TCLP & F SCAN		$151,500.00 ANALYTICAL
	NOTE ********** ASSUME A 6 INCH CONCRETE SLAB. TRANSPORTATION AND DISPOSAL OF RESIDUE GENERATED IS CALCULATED IN LATER SECTIONS. **********			
DECONTAMINATE THE CONCRETE	LABOR AND EQUIPMENT	$45.00 PER HOUR		
	TIME	1,500 SQ.FT./HOUR		$1,655.25 DECONTAMINATION
	WASTE WASTER GENERATED	300 GAL/HOUR	11035 GALLONS WASTE WATER	
	AREA	55,175 SQ.FT.		
SAMPLE AND ANALYZE RINSE WATER	LABOR	$20.00 PER HOUR		$400.00 SAMPLING
	TIME	1 HOUR/SAMPLE		
	EQUIPMENT	$1,500.00 PER SAMPLE		$30,000.00 ANALYTICAL
	# OF SAMPLES	20 SAMPLES		
SECTION II SUBTOTAL				$187,090.25

II. EQUIPMENT DECONTAMINATION

ACTIVITY	PARAMETER	UNIT VALUES	RESIDUE GENERATED	COST
STEAM CLEAN THE EQUIPMENT (i.e. BOBCAT, FORKLIFT)	LABOR	$8.65 PER HOUR		
	TIME	3 HOURS/LOADER		
	EQUIPMENT	5 LOADERS (OR LESS)		$129.75 LABOR STEAMING
	WASTE WATER GENERATED	100 GAL/HOUR	1,500 GALLONS WASTE WATER	
STEAM CLEAN MISCELLANIOUS UNITS	LABOR	$8.65 PER HOUR		
	DISASSEMBLE UNITS	40 HOURS/UNIT		$8,304.00 LABOR STEAMING
	DECONTAMINATE UNITS	40 HOURS/UNIT		$8,304.00 LABOR DISSASSBLIN
	NO. OF UNITS	6 UNITS		
	CREW SIZE	4 MEN		
	WASTE WATER GENERATED	300 GAL/UNIT	1,800 GALLONS WASTE WATER	
	INCINERATION GENERATED	0.5 DRUMS/UNIT	3 DRUMS INCINERATION RESIDUE	
STEAM CLEAN DRUM HANDLING EQUIPMENT	LABOR	$8.65 PER HOUR		$3,114.00 LABOR STEAMING
	DISASSEMBLE UNITS	2 HOURS/UNIT		
	DECONTAMINATE UNITS	10 HOURS/UNIT		
	NO. OF UNITS	15 UNITS (OR LESS)		
	CREW SIZE	2 MEN		
	WASTE WATER GENERATED	100 GAL/UNIT	1,500 GALLONS WASTE WATER	
	INCINERATION GENERATED	2 DRUMS	2 DRUMS INCINERATION RESIDUE	

NOTE
****
TRANSPORTATION AND DISPOSAL OF RESIDUE GENERATED IS CALCULATED IN LATER SECTIONS.
****

SECTION III SUBTOTAL $19,851.75

IV. MANAGEMENT OF AQUEOUS DECONTAMINATION RESIDUE

ACTIVITY	PARAMETER	UNIT VALUES	RESIDUE GENERATED	COST
LOAD WASTE WATER	VOLUME OF WASTE WATER	20,125 GALLONS		
	LABOR	$8.65 PER HOUR		$158.26 LABOR LOADING
	TIME	1100 GALLONS/HOUR		
TRANSPORTATION & DISPOSAL	TRANSPORTATION	$3.50 PER MILE		
	DISTANCE TO DALLAS	364 MILES		$5,096.00 TRANSPORTATION
	DISPOSAL FEE	$1.00 PER GALLON		$20,125.00 DISPOSAL
	LOAD SIZE	6,000 GAL/LOAD		
	NUMBER OF LOADS	4 LOADS		
SECTION IV SUBTOTAL				$25,379.26

. MANAGEMENT OF KILN FUEL DECONTAMINATION REDSIDUE

ACTIVITY	PARAMETER	UNIT VALUES	RESIDUE GENERATED	COST
TOTAL KILN FUEL GENERATED		5,510 GALLONS		
LOADING KILN FUEL ON TRUCKS	LABOR	$8.62 PER HOUR		
	TIME	1,100 GAL/HOUR		$43.18 LABOR LOADING
TRANSPORTATION & DISPOSAL	TRANSPORTATION	$3.50 PER MILE		
	DISTANCE TO FREDONIA	100 MILES		$350.00 TRANSPORTATION
	DISPOSAL FEE	$0.21 PER GALLON		$1,157.16 DISPOSAL
	LOAD SIZE	6000 GALLONS/LOAD		
	NUMBER OF LOADS	1 LOADS		
SECTION V SUBTOTAL				$1,550.34

I. MANAGEMENT OF INCINERABLE DECONTAMINATION RESIDUE

ACTIVITY	PARAMETER	UNIT VALUES	RESIDUE GENERATED	COST
INCINERATION GENERATED		5 DRUMS		
LOADING ON TRUCKS	LABOR	$8.62 PER HOUR		
	TIME	75 DRUMS/HOUR		$0.57 LABOR LOADING
TRANSPORTATION & DISPOSAL	TRANSPORTATION	$3.50 PER MILE		
	DISTANCE TO COFFEYVILLE	150 MILES		$525.00 TRANSPORTATION
	DISPOSAL FEE	$3.00 PER GALLON		$825.00 DISPOSAL
	LOAD SIZE	6000 GALLONS/LOAD		
	NUMBER OF LOADS	1 LOADS		
SECTION VI SUBTOTAL				$1,350.57

/II. CLOSURE CERTIFICATION

ACTIVITY	PARAMETER	UNIT VALUES	RESIDUE GENERATED	COST
A. PROFESSIONAL ENGINEERING SERVICES CLOSURE CERTIFICATION	ENGINEER'S FEE	$45.50 PER HOUR		
	TIME	80 HOURS		$3,640.00
SECTION VII. SUBTOTAL				$3,640.00

NOTE
****
2 SITE INSPECTIONS/WEEK, 4 HOURS/INSPECTION, 8 WEEKS, 8 HOURS OF
OF CLOSURE PLAN REVIEW, 8 HOURS FOR CERTIFICATION PREPARATION.
****

VIII. CONTINGENCY & TOTALS

ACTIVITY	PARAMETER	UNIT VALUES	RESIDUE GENERATED	COST
********	*********	**********	**********	**********
TOTAL SECTIONS I-VII.				$1,058,135.13
CONTINGENCY		15.00%		$158,720.27
TOTAL CLOSURE COST ESTIMATE				$1,216,855.40

Table of Contents

List of Appendices i

List of Acronyms i

K-1 Financial Assurance: 1

K-2 Insurance Coverage: 3

K-3 Notice in Deed: 4

List of Appendices

Appendix K-A, Financial Guarantee Bond
Appendix K-B, Surety Rider for Financial Guarantee Bond
Appendix K-C, Hazardous Waste Certificate of Insurance
Appendix K-D, Notice in Deed

List of Acronyms

Hydrocarbon Recyclers, Inc. of Wichita (HRIW)
Treatment, Storage, and Disposal (TSD)
Kansas Administrative Regulations (KAR)

K-1 **Financial Assurance:** 40 CFR 264.143

Hydrocarbon Recyclers, Inc. of Wichita (HRIW) has chosen to use a standby trust to be funded by a bond to meet facility closure financial assurance requirements. This trust agreement is currently with Founders Bank and Trust Company in Oklahoma City.

The funding instrument is a financial guarantee bond (Surety Bond [redacted] dated September 1, 1988; a copy of this bond is Ex. 4 provided as Appendix K-A, Financial Guarantee Bond. This bond was amended annually for inflation as required by 40 CFR 265.142(b) for hazardous waste Treatment, Storage, and Disposal (TSD) facilities operating under interim status. The facility closure cost estimate and corresponding funding instrument will be adjusted on an annual basis for: 1) inflation; and 2) whenever facility changes affecting closure costs occur. A copy of the surety rider changing the penal sum of the bond is presented in Appendix K-B, Surety Rider for Financial Guarantee Bond.

One of the options specified in 40 CFR 264.143 paragraphs (a) through (f) must be established to provide financial assurance for closure of a TSD facility. HRIW may convert the financial instrument described above to an alternate option specified by federal regulations.

K-2 **Insurance Coverage:** 40 CFR 264.147

HRIW maintains insurance policies to cover general liability, automobile liability, workers compensation, employers' liability and environmental impairment liability (pollution legal liability). The environmental impairment liability includes both sudden and non-sudden pollution coverage. A copy of the Hazardous Waste Facility Certificate of Insurance for accidental occurrences is presented in Appendix K-C, Hazardous Waste Certificate of Insurance.

K-3 **Notice in Deed:** 40 CFR 119(b)(1)

In compliance with Kansas Administrative Regulations (KAR) 28-31-8(c) and in anticipation of Post-closure Notices required of TSDFs, HRIW has submitted correspondence dated April 16, 1991 regarding property use for hazardous waste management activities to the Registrar of Deeds for Sedgwick County. Copies of these documents are presented in Appendix K-D, Notice in Deed.

Appendix K-A

Financial Guarantee Bond

February 18, 1992

FINANCIAL GUARANTEE BOND

Date bond executed: 9/1/88

Effective date: 9/1/88

Principal: Hydrocarbon Recyclers, Inc. of Wichita

Type of Organization: Corporation

State of incorporation: Kansas

Surety(ies): Safeco Insurance Company of America

EPA Identification Number, KSD 007246846

Hydrocarbon Recyclers, Inc. of Wichita, 2549 N. New York, Wichita, Ks. 67219
Closure Bond $271,816.00

Total penal sum of bond: $ 271,816.00

Surety's bond number: [redacted] Ex. 4

Know All Persons By These Presents, That we, the Principal and Surety(ies) hereto are firmly bound to the Kansas Department of Health and Environment (hereinafter called KDHE), in the above penal sum for the payment of which we bind ourselves, our heirs, executors, administrators, successors, and assigns jointly and severally: provided that, where the Surety(ies) are corporations acting as co-sureties, we, the Sureties, bind ourselves in such sum "jointly and severally" only for the purpose of allowing a joint action or actions against any or all of us, and for all other purposes each Surety binds itself, jointly and severally with the Principal, for the payment of such sum only as is set forth opposite the name of such Surety, but if no limit of liability is indicated, the limit of liability shall be the full amount of the penal sum.

Whereas said Principal is required, under the Resource Conservation and Recovery Act as amended (RCRA), to have a permit or interim status in order to own or operate each hazardous waste management facility identified above, and

Whereas said Principal is required to provide financial assurance for closure, or closure and post-closure care, as a condition of the permit or interim status, and

Whereas said Principal shall establish a standby trust fund as is required when a surety bond is used to provide such financial assurance;

Now, Therefore, the conditions of the obligation are such that if the Principal shall faithfully, before the beginning of final closure of each facility identified above, fund the standby trust fund in the amount(s) identified above for the facility,

Or, if the Principal shall fund the standby trust fund in such amount(s) within 15 days after a final order to begin closure is issued by the Secretary of the KDHE or a U.S. district court or other court of competent jurisdiction.

Or, if the Principal shall provide alternate financial assurance, as specified in Subpart H of 40 CFR Parts 264 or 265, as applicable, and obtain the Secretary of the KDHE written approval of such assurance, within 90 days after the date notice of cancellation is received by both the Principal and the Secretary of the KDHE from the Surety(ies), then this obligation shall be null and void, otherwise it is to remain in full force and effect.

The Surety(ies) shall become liable on this bond obligation only when the Principal has failed to fulfill the conditions described above. Upon notification by the Secretary of the KDHE that the Principal has failed to perform as guaranteed by this bond, the Surety(ies) shall place funds in the amount guaranteed for the facility(ies) into the standby trust fund as directed by the Secretary of the KDHE.

The liability of the Surety(ies) shall not be discharged by any payment or succession of payments hereunder, unless and until such payment or payments shall amount in the aggregate to the penal sum of the bond, but in no event shall the obligation of the Surety(ies) hereunder exceed the amount of said penal sum.

The Surety(ies) may cancel the bond by sending notice of cancellation by certified mail to the Principal and to the Secretary of the KDHE, provided, however, that cancellation shall not occur during the 120 days beginning on the date of receipt of the notice of cancellation by both the Principal and the Secretary of the KDHE, as evidenced by the return receipts.

The Principal may terminate this bond by sending written notice to the Surety(ies), provided, however, that no such notice shall become effective until the Surety(ies) receive(s) written authorization for termination of the bond by the Secretary of the KDHE.

Principal and Surety(ies) hereby agree to adjust the penal sum of the bond yearly so that it guarantees a new closure and/or post-closure amount, provided that the penal sum does not increase by more than 20 percent in any one year, and no decrease in the penal sum takes place without the written permission of the Secretary of the KDHE.

In Witness Whereof, the Principal and Surety(ies) have executed this Financial Guarantee Bond and have affixed their seals on the date set forth above.

The persons whose signatures appear below hereby certify that they are authorized to execute this surety bond on behalf of the Principal and Surety(ies) and that the wording of this surety bond is identical to the wording specified in 40 CFR264.151(b) as such regulations were constituted on the date this bond was executed.

[redacted] Principal

Ex. 4

Ted Cowan
President

Corporate Seal

Corporate Surety(ies)

Safeco Insurance Company of America
Safeco Plaza
Seattle, Wa. 98185
State of incorporation: Washington

Liability limit: $ 271,816.00

Signature(s) Jane A. Walsh
Attorney in fact

COUNTERSIGNED
Gordon Claughton
Resident Agent
STATE OF KANSAS

Corporate Seal

Bond premium: $ 2,718.00

SURETY RIDER

To be attached to and form a part of Bond No. [redacted] Ex. 4

executed by HYDROCARBON RECYCLERS, INC. as

Principal and by SAFECO INSURANCE COMPANY OF AMERICA as Surety,

in favor of KANSAS DEPARTMENT OF HEALTH AND ENVIRONMENT

and effective as of SEPTEMBER 1, 1988

In consideration of the mutual agreements herein contained the Principal and the Surety hereby consent to changing the penal sum of the bond

FROM: THREE HUNDRED SEVENTY THREE THOUSAND SIX HUNDRED NINETY ONE & NO/100 ($373,691.00)

TO: THREE HUNDRED EIGHTY NINE THOUSAND EIGHTY SEVEN & NO/100 DOLLARS ($389,087.00)

Nothing herein contained shall vary, alter or extend any provision or condition of this bond except as herein expressly stated.

This rider is effective on the 1ST day of SEPTEMBER 1991.
Signed and sealed this 23RD day of JULY 1991.

HYDROCARBON RECYCLERS, INC.
Principal

BY: James W. Terry ASST. SECRETARY
Title

SAFECO INSURANCE COMPANY OF AMERICA
Surety

BY: David G. Jesse
David G. Jesse Attorney in Fact

SAFECO

POWER OF ATTORNEY

SAFECO INSURANCE COMPANY OF AMERICA
GENERAL INSURANCE COMPANY OF AMERICA
HOME OFFICE. SAFECO PLAZA
SEATTLE, WASHINGTON 98185

No. [redacted] Ex. 4

KNOW ALL BY THESE PRESENTS:

That **SAFECO INSURANCE COMPANY OF AMERICA** and **GENERAL INSURANCE COMPANY OF AMERICA**, each a Washington corporation, does each hereby appoint

------HARRY A. KOCH, JR.; DOUGLAS G. DURBIN; D.M. STOKES; HARRY D. KOCH; PEGGY SAPIENZA; DAVID G. JESSE, Omaha, Nebraska----------

its true and lawful attorney(s)-in-fact, with full authority to execute on its behalf fidelity and surety bonds or undertakings and other documents of a similar character issued in the course of its business, and to bind the respective company thereby

IN WITNESS WHEREOF, SAFECO INSURANCE COMPANY OF AMERICA and **GENERAL INSURANCE COMPANY OF AMERICA** have each executed and attested these presents

this 6th day of November, 19 89

CERTIFICATE

Extract from the By-Laws of **SAFECO INSURANCE COMPANY OF AMERICA** and of **GENERAL INSURANCE COMPANY OF AMERICA:**

"Article V, Section 13. — FIDELITY AND SURETY BONDS . . . the President, any Vice President, the Secretary, and any Assistant Vice President appointed for that purpose by the officer in charge of surety operations, shall each have authority to appoint individuals as attorneys-in-fact or under other appropriate titles with authority to execute on behalf of the company fidelity and surety bonds and other documents of similar character issued by the company in the course of its business . . . On any instrument making or evidencing such appointment, the signatures may be affixed by facsimile. On any instrument conferring such authority or on any bond or undertaking of the company, the seal, or a facsimile thereof, may be impressed or affixed or in any other manner reproduced; provided, however, that the seal shall not be necessary to the validity of any such instrument or undertaking."

Extract from a Resolution of the Board of Directors of **SAFECO INSURANCE COMPANY OF AMERICA** and of **GENERAL INSURANCE COMPANY OF AMERICA** adopted July 28, 1970.

"On any certificate executed by the Secretary or an assistant secretary of the Company setting out,

(i) The provisions of Article V, Section 13 of the By-Laws, and
(ii) A copy of the power-of-attorney appointment, executed pursuant thereto, and
(iii) Certifying that said power-of-attorney appointment is in full force and effect,

the signature of the certifying officer may be by facsimile, and the seal of the Company may be a facsimile thereof."

I, Boh A. Dickey, Secretary of **SAFECO INSURANCE COMPANY OF AMERICA** and of **GENERAL INSURANCE COMPANY OF AMERICA**, do hereby certify that the foregoing extracts of the By-Laws and of a Resolution of the Board of Directors of these corporations, and of a Power of Attorney issued pursuant thereto, are true and correct, and that both the By-Laws, the Resolution and the Power of Attorney are still in full force and effect.

IN WITNESS WHEREOF, I have hereunto set my hand and affixed the facsimile seal of said corporation

this 23rd day of July, 19 91

Appendix K-B

Surety Rider for Financial Guarantee Bond

February 18, 1992

SURETY RIDER

To be attached to and form a part of Bond No. [redacted] Ex. 4

executed by HYDROCARBON RECYCLERS, INC. as

Principal and by SAFECO INSURANCE COMPANY OF AMERICA as Surety,

in favor of KANSAS DEPARTMENT OF HEALTH AND ENVIRONMENT

and effective as of SEPTEMBER 1, 1988

In consideration of the mutual agreements herein contained the Principal and the Surety hereby consent to changing the penal sum of the bond

FROM: THREE HUNDRED SEVENTY THREE THOUSAND SIX HUNDRED NINETY ONE & NO/100 ($373,691.00)

TO: THREE HUNDRED EIGHTY NINE THOUSAND EIGHTY SEVEN & NO/100 DOLLARS ($389,087.00)

Nothing herein contained shall vary, alter or extend any provision or condition of this bond except as herein expressly stated.

This rider is effective on the 1ST day of SEPTEMBER 1991.
Signed and sealed this 23RD day of JULY 1991.

HYDROCARBON RECYCLERS, INC.
Principal

BY: [signature] ASST. SECRETARY
Title

SAFECO INSURANCE COMPANY OF AMERICA
Surety

BY: [signature]
David G. Jesse Attorney in Fact

SAFECO

POWER OF ATTORNEY

SAFECO INSURANCE COMPANY OF AMERICA
GENERAL INSURANCE COMPANY OF AMERICA
HOME OFFICE: SAFECO PLAZA
SEATTLE, WASHINGTON 98185

No. [redacted] Ex. 4

NOW ALL BY THESE PRESENTS:

That **SAFECO INSURANCE COMPANY OF AMERICA** and **GENERAL INSURANCE COMPANY OF AMERICA**, each a Washington corporation, does each hereby appoint

------HARRY A. KOCH, JR.; DOUGLAS G. DURBIN; D.M. STOKES; HARRY D. KOCH; PEGGY SAPIENZA; DAVID G. JESSE, Omaha, Nebraska----------

its true and lawful attorney(s)-in-fact, with full authority to execute on its behalf fidelity and surety bonds or undertakings and other documents of a similar character issued in the course of its business, and to bind the respective company thereby

IN WITNESS WHEREOF, SAFECO INSURANCE COMPANY OF AMERICA and **GENERAL INSURANCE COMPANY OF AMERICA** have each executed and attested these presents

this 6th day of November, 19 89

CERTIFICATE

Extract from the By-Laws of **SAFECO INSURANCE COMPANY OF AMERICA** and of **GENERAL INSURANCE COMPANY OF AMERICA**:

"Article V, Section 13. — FIDELITY AND SURETY BONDS . . . the President, any Vice President, the Secretary, and any Assistant Vice President appointed for that purpose by the officer in charge of surety operations, shall each have authority to appoint individuals as attorneys-in-fact or under other appropriate titles with authority to execute on behalf of the company fidelity and surety bonds and other documents of similar character issued by the company in the course of its business . . . On any instrument making or evidencing such appointment, the signatures may be affixed by facsimile. On any instrument conferring such authority or on any bond or undertaking of the company, the seal, or a facsimile thereof, may be impressed or affixed or in any other manner reproduced; provided, however, that the seal shall not be necessary to the validity of any such instrument or undertaking."

Extract from a Resolution of the Board of Directors of **SAFECO INSURANCE COMPANY OF AMERICA** and of **GENERAL INSURANCE COMPANY OF AMERICA** adopted July 28, 1970.

"On any certificate executed by the Secretary or an assistant secretary of the Company setting out,

(i) The provisions of Article V, Section 13 of the By-Laws, and
(ii) A copy of the power-of-attorney appointment, executed pursuant thereto, and
(iii) Certifying that said power-of-attorney appointment is in full force and effect,

the signature of the certifying officer may be by facsimile, and the seal of the Company may be a facsimile thereof."

I, Bob A. Dickey, Secretary of **SAFECO INSURANCE COMPANY OF AMERICA** and of **GENERAL INSURANCE COMPANY OF AMERICA**, do hereby certify that the foregoing extracts of the By-Laws and of a Resolution of the Board of Directors of these corporations, and of a Power of Attorney issued pursuant thereto, are true and correct, and that both the By-Laws, the Resolution and the Power of Attorney are still in full force and effect.

IN WITNESS WHEREOF, I have hereunto set my hand and affixed the facsimile seal of said corporation

this 23rd day of July, 19 91

Appendix K-C

Hazardous Waste Certificate of Insurance

February 18, 1992

December 20, 1990

Ms. Brenda Clark
Hazardous Waste Section
Bureau of Waste Management
Kansas Department of Health & Environment
Forbes Field
Topeka, Kansas 66620-0110

HYDROCARBON RECYCLERS, INC. OF WICHITA
2549 NORTH NEW YORK
WICHITA, KANSAS 67219
KSD 007246846

Dear Brenda:

Enclosed is the new Hazardous Waste Facility Certificate of Insurance for the captioned Named Insured issued under the National Union Fire Insurance Company of Pittsburgh, PA policy number [redacted] effective January 1, 1991. Ex. 4

Very truly yours,

Robert D. James
Assistant Vice President

BJ/lf1219

encls

cc: Jane Terrell - USPCI, Inc.

HAZARDOUS WASTE FACILITY CERTIFICATE OF LIABILITY INSURANCE

1. Name of Insurer: National Union Fire Insurance Company of Pittsburgh, PA

   Address of Insurer: 70 Pine Street, New York, NY 10270

   hereby certifies that it has issued liability insurance covering bodily injury and property damage to:

   Name of Insured: USPCI, Inc.

   Address of Insured: One Commerce Green, Suite 500
   515 West Greens Rd.
   Houston, Texas 77067

   in connection with the Insured's obligation to demonstrate financial responsibility under 40 CFR 264.147 or 265.147. The coverage applies at (see below) for SUDDEN AND NON-SUDDEN ACCIDENTAL OCCURRENCES. The limits of liability are $5,000,000 each occurrence and $10,000,000 annual aggregate, exclusive of legal defense costs. The coverage is provided under policy number [redacted] issued on January 1, 1991. The effective date of said policy is January 1, 1991.

   Ex. 4

2. The Insurer further certifies the following with respect to the insurance described in Paragraph 1:

   a. Bankruptcy or insolvency of the Insured shall not relieve the Insurer of its obligations under the policy.

   b. The Insurer is liable for the payment of amounts within any deductible applicable to the policy, with a right of reimbursement by the Insured for any such payment made by the Insurer. This provision does not apply with respect to that amount of any deductible for which coverage is demonstrated as specified in 40 CFR 264.147(f) or 265.147(f).

   c. Whenever requested by the Secretary of the Kansas Department of Health and Environment (KHDA), the Insurer agrees to furnish to the the Secretary a signed duplicate original of the policy and all endorsements.

   d. Cancellation of the insurance, whether by the Insurer, the Insured, a parent corporation providing insurance coverage for its subsidiary, or by a firm having an insurable interest in and obtaining liability insurance on behalf of the owner or operator of the hazardous waste management facility, will be effective only upon written notice and only after the expiration of sixty (60) days after a copy of such written notice is received by the Secretary.

e. Any other termination of the insurance will be effective only upon written notice and only after the expiration of thirty (30) days after a copy of such written notice is received by the Secretary.

SCHEDULE

NAME OF FACILITY	ADDRESS OF LOCATION	EPA INDEMNIFICATION NUMBER
HYDROCARBON RECYCLERS, INC. OF WICHITA	2549 NORTH NEW YORK WICHITA, KANSAS 67219	KSD 007246846

I hereby certify that the wording of this instrument is identical to the wording specified in 40 CFR 264.151(j) as such regulation was constituted on the date first above written, and that the Insurer is licensed to transact the business of insurance, or eligible to provide insurance as an excess surplus lines insurer, in one or more States.

Joseph Sander, Assistant Secretary
Authorized Representative of National Union
Fire Insurance Company of Pittsburgh, PA
70 Pine Street
New York, NY 10270

Appendix K-D

Notice in Deed

February 18, 1992

Sedgwick County Courthouse
4th Floor
Registrar of Deeds
525 N. Main
Wichita, Ks. 67203

4/16/91

Dear Registrar of Deeds

This letter serves as official owner notification for the property at 2549 N. New York Ave., HRI operated property.

North Industrial Park Fourth Addition,

	Key Number
block 2, lot 1	87-0- -B-1 3826-012583-6703

This is in accordance with Kansas environmental regulation K.A.R. 28-31-8c. This property has been used to manage hazardous waste and all records regarding permits, closure or both are available for review at the Kansas Department of Health and Environment offices in Topeka.

David Trombold

David Trombold
Vice President
Associated Chemical, Inc.

MONICA D. BORDEN
Notary Public - State of Kansas
My Appt. Expires 2-16-94

Monica D. Borden
9-13-91

For an acknowledgment in a reprsentative capacity:
State of Kansas
(County) of Sedgwick
This instrument was acknowledged before me on
September 13, 1991
by David Trombold
as Vice President
of Associated Chemical, Inc.

Monica D. Borden
(Signature of notarial officer)

Title (and Rank)

Sedgwick County Courthouse
4th Floor
Registrar of Deeds
525 N. Main
Wichita, Ks. 67203

4/16/91

Dear Registrar of Deeds

This letter serves as official owner notification for the property at 2549 N. New York Ave., HRI operated property.

North Industrial Park Fourth Addition,

		Key Number
block 1,	lot 2	89-0- -B-13819-060842-6703
	lot 3	89-0- -B-13820-026393-6703
	lot 4	89-0- -B-13821-026394-6703
	lot 5	89-0- -B-13822-026395-6703

This is in accordance with Kansas environmental regulation K.A.R. 28-31-8c This property has been used to manage hazardous waste and all records regarding permits, closure or both are available for review at the Kansas Department of Health and Environment offices in Topeka.

David Trombold

David Trombold

MONICA D. BORDEN
Notary Public - State of Kansas
My Appt. Expires 2-16-94

Monica D. Borden
9-13-91

For an acknowledgment in a representative capacity:
State of Kansas
(County) of Sedgwick
This instrument was acknowledged before me on
September 13, 1991
by David Trombold
as Vice President
of Associated Chemical, Inc.

Monica D. Borden
(Signature of notarial officer)

Title (and Rank)

Table of Contents

L-1 Information Requirements for Solid Waste Management Units: 1
L-1a Description of Solid Waste Management Units: . . . 1

L-2 Information Pertaining to Releases: 4

L-3 Superfund Activities 5

List of Appendices

Appendix L-A, Draft 29th and Mead RI/FS Report - Excerpts

Acronym Table

Solid Waste Management Unit (SWMU)
Hydrocarbon Recyclers, Inc. of Wichita (HRIW)
Kansas Administrative Regulations (KAR)
United States Environmental Protection Agency (USEPA)

L-1 Information Requirements for Solid Waste Management Units: 40 CFR 270.14(d)

The purpose of this section is to provide information regarding the Solid Waste Management Unit (SWMU)s at the Hydrocarbon Recyclers, Inc. of Wichita (HRIW) facility located in Wichita, Kansas. This section is provided to fulfill the requirements of the Kansas Administrative Regulations (KAR), Title 28, Article 31 and 40 CFR Part 270. Article 31, Hazardous Waste Management Standards and Regulations, of the KAR incorporates, with few additions, the RCRA regulations contained in 40 CFR Parts 260 through 270. Therefore, this section will refer only to the federal regulations.

L-1a Description of Solid Waste Management Units: 40 CFR 270.14(d)(1)

A description of the HRIW facility is presented in section B (Facility Description) of this RCRA permit application. Specific information regarding active SWMUs utilized for hazardous waste management is presented in Sections D (Use and Management of Containers), E (Tank Systems), and M (Other Regulated Units). These sections include the following information:

- Type, Location and Description of the SWMUs:

  Sections B, D, E, and M (Facility Description, Use and Management of Containers, Tank Systems, and Other Regulated Units) of the RCRA permit application contain descriptions of RCRA regulated SWMUs at the facility. These descriptions include the general dimensions of these units. In addition, the Facility Description, Section B also contains a topographic map illustrating the location of each SWMU within the facility as required by 40 CFR 270(b)(19).

- Dates of Operation:

  HRIW is an existing waste management facility. However, the site has been used for other business purposes by companies which have sequentially located at the site for some forty years. The industrial district of the area developed over the past 95 years. The history of hazardous waste operations under EPA ID No. KSD007246846 began in 1979 with Reid Supply Co., Inc. Conservation Services, Inc. purchased certain assets, including the permit (e.g., from Reid Supply Co. in 1986. Subsequently, Hydrocarbon Recyclers, Inc. of Wichita acquired the capital stock of Conservation Services, Inc. in 1987.

- Description of Wastes:

  The HRIW facility stores, treats, and recovers for recycling hazardous and nonhazardous wastes. The types of wastes managed in the RCRA regulated SWMUs are identified in Sections A (Part A Application) and C (Waste Characterization). The sampling and analysis provisions for managing these waste types are provided in Appendix C-A (Waste Analysis Plan) of Section C.

L-2 Information Pertaining to Releases: 40 CFR 270.14(d)(2)

HRIW is not aware of any releases of hazardous waste or hazardous waste constituents from regulated units within the facility. Therefore, the information required under 40 CFR 270.14(d)(2) is not available (i.e., 40 CFR 270.14(d)(2) is not applicable).

A site inspection for the purpose of identifying potential SWMUs was completed by B. & V. Waste Science and Technology Corporation under contract Number 68-W9-0006 to United States Environmental Protection Agency (USEPA) Region VII in 1990. The Draft Preliminary Assessment Report - RCRA Facility Assessment, Hydrocarbon Recyclers, Inc., Wichita, Kansas is presented as an appendix to Section M, Other Regulated Units.

L-3 Superfund Activities

The Hydrocarbon Recyclers, Inc. facility is located within the area identified as the 29th and Mead Comprehensive Environmental Response, Compensation, and Liability Act or "Superfund" site in the Wichita North Industrial District. Excerpts from the Draft Preliminary Assessment Report are presented as Appendix L-A, Draft 29th and Mead RI/FS Report - Excerpts.

Appendix L-A

Draft 29th and Mead RI/FS Report - Excerpts

Groundwater Technology, Inc., August 1991. *Draft Remedial Investigation Report of the 29th and Mead RI/FS.* Volume 1, prepared for Wichita North Industrial District, 60 pp.

Appendix L-A
Draft 29th and Mead RI/FS Report - Excerpts

Index of Included Material

Title Page	Page i
Table of Contents	Page ii to v
Executive Summary	Page x to xviii
Section 1.3 - Site Location and Description	Page 5
Section 2.4 - Reid Supply, Inc.	Page 11
Section 4.0 - Physical Characteristics of Study Area	Page 25 - 28
4.1 - Regional Geology	
4.2 - Regional Hydrogeology	
4.3 - Site Stratigraphy	
4.4 - Site Hydrogeology	

Excerpts from:

Groundwater Technology, Inc., August 1991. *Draft Remedial Investigation Report of the 29th and Mead RI/FS.* Volume 1, prepared for Wichita North Industrial District, 60 pp.

GROUNDWATER TECHNOLOGY, INC.

443 N. Maize Rd., Wichita, KS 67212 (316) 722-2266
FAX (316) 722-9327

DRAFT

VOLUME I

DRAFT REMEDIAL INVESTIGATION REPORT FOR THE 29TH AND MEAD RI/FS

PREPARED FOR:

WICHITA NORTH INDUSTRIAL DISTRICT

PREPARED BY:

GROUNDWATER TECHNOLOGY, INC.
443 N. MAIZE ROAD
WICHITA, KANSAS 67212

REVIEWED BY:

MR. DAVID DANIELS
DISTRICT MANAGER

MR. ALBERT STOUT
DISTRICT HYDROGEOLOGIST

MR. WILLIAM E. THOMPSON
SENIOR REGIONAL PROJECT MANAGER

FOR:

MR. MICHAEL BRENOEL
VICE PRESIDENT
REGIONAL MANAGER

(CM\WNID\WNID-RI2.WND)
AUGUST 27, 1991

DRAFT

TABLE OF CONTENTS

EXECUTIVE SUMMARY x

1.0 INTRODUCTION 1
1.1 SCOPING AND PRELIMINARY ACTIVITIES 1
1.2 SCOPE OF WORK 1
1.2.1 FIELD INVESTIGATION DATA ACQUISITION STUDY 2
1.2.2 LONG TERM MONITORING 3
1.2.3 COMPUTER MODELING 3
1.2 SITE BACKGROUND 3
1.3 SITE LOCATION AND DESCRIPTION 5
1.4 PROJECT HEALTH AND SAFETY 5
1.5 REPORT ORGANIZATION 6

2.0 PAST AND PRESENT REMEDIATION REVIEW 7
2.1 EVCON INDUSTRIES, INC. 7
2.1.1 SITE LOCATION/HISTORY 7
2.1.2 PAST REMEDIATION ACTIVITIES 7
2.1.2.1 Soil Vent System 8
2.1.2.2 Hydraulic Control 8
2.1.2.3 Underground Storage Tank Removal 9
2.2 COASTAL DERBY REFINING COMPANY 9
2.2.1 SITE LOCATION/HISTORY 9
2.2.2 PAST REMEDIATION ACTIVITIES 9
2.3 OHSE 10
2.3.1 SITE LOCATION/HISTORY 10
2.3.2 PAST REMEDIATION ACTIVITIES 10
2.4 REID SUPPLY, INC. 11
2.4.1 SITE LOCATION/HISTORY 11
2.5 WICHITA BRASS AND ALUMINUM FOUNDRY 11
2.5.1 SITE LOCATION/HISTORY 11
2.5.2 PAST REMEDIATION ACTIVITIES 12
2.6 GOLDEN RULE REFINERY 12
2.6.1 SITE LOCATION/HISTORY 12
2.6.2 PAST REMEDIATION ACTIVITIES 13
2.7 BARNSDAHL REFINERY 13
2.7.1 SITE LOCATION/HISTORY 13
2.7.2 PAST REMEDIATION ACTIVITIES 14
2.8 JOHNS' REFINERY 14
2.8.1 SITE LOCATION/HISTORY 14
2.8.2 PAST REMEDIATION ACTIVITIES 15
2.9 JOHNS' SLUDGE POND 15
2.9.1 SITE LOCATION/HISTORY 15
2.9.2 PAST REMEDIATION ACTIVITIES 15
2.10 UNIVERSAL QUIK MART 16
2.10.1 SITE LOCATION/HISTORY 16
2.10.2 PAST REMEDIATION ACTIVITIES 17

DRAFT

TABLE OF CONTENTS
(continued)

2.11 CITY OF WICHITA URBAN RENEWAL ACTIVITIES 17
2.11.1 SITE LOCATION/HISTORY 17
2.11.2 PAST REMEDIATION ACTIVITIES 17
2.12 USTs 17

3.0 STUDY AREA INVESTIGATION METHODOLOGY 19
3.1 DATA ACQUISITION STUDY 19
3.1.1 TEST BORINGS TO BEDROCK 19
3.1.2 BACKGROUND BORINGS 19
3.1.3 BORINGS AT REFINERY PITS 20
3.1.4 SURFACE SOIL SAMPLING 20
3.1.5 SURFACE WATER SAMPLING 21
3.1.6 STREAM SEDIMENT SAMPLING 21
3.1.7 GROUNDWATER SAMPLES - EXISTING WELLS 21
3.2 LONG TERM MONITORING 22
3.2.1 MONITOR WELL PLACEMENT 22
3.2.1.1 Well Screen Intervals 22
3.2.1.2 Well Installation 23
3.2.2 SAMPLING METHODOLOGY 23
3.2.2.1 Soil Sample Collection 23
3.2.2.2 Groundwater Sample Collection 23
3.2.3 SURVEY AND FLUID LEVEL MEASUREMENTS 24
3.2.4 ACCESS AGREEMENTS 24

4.0 PHYSICAL CHARACTERISTICS OF THE STUDY AREA 25
4.1 REGIONAL GEOLOGY 25
4.2 REGIONAL HYDROGEOLOGY 25
4.3 SITE STRATIGRAPHY 26
4.4 SITE HYDROGEOLOGY 26
4.4.1 GRAIN SIZE ANALYSIS 27
4.4.1.1 Shallow Part of the Aquifer 27
4.4.1.2 Deep Part of the Aquifer 28

5.0 RESULTS OF SITE INVESTIGATION 29
5.1 DATA ACQUISITION STUDY RESULTS 29
5.1.1 SOIL BORINGS 29
5.1.1.1 Soil VOC Analysis - PID Screening 29
5.1.1.2 Soil VOC Analysis - Field GC 29
5.1.1.3 Soil VOC Analysis - Laboratory 30
5.1.1.4 Field GC-Laboratory Results Comparison 30
5.1.2 BACKGROUND BORINGS 31
5.1.2.1 Soil VOC Analysis - PID Screening 31
5.1.2.2 Soil VOC Analysis - Laboratory 31
5.1.2.3 Soil BNA Analysis 31
5.1.2.4 Soil Metals Analysis 32

DRAFT

TABLE OF CONTENTS
(continued)

5.1.3 BORINGS AT REFINERY PITS 32
5.1.3.1 Soil VOC Analysis - PID Screening 32
5.1.3.2 Soil VOC Analysis - Laboratory 32
5.1.3.3 Soil BNA Analysis 32
5.1.3.4 Soil Metals Analysis 33
5.1.3.5 Groundwater VOC Analysis 33
5.1.3.6 Groundwater BNA Analysis 34
5.1.3.7 Groundwater Metals Analysis 34
5.1.4 SURFACE SOIL SAMPLES 35
5.1.4.1 Soil Metals Analysis 35
5.1.4.2 Soil PNA Analysis 35
5.1.4.3 Soil PCB Analysis 36
5.1.5 SURFACE WATER SAMPLES 36
5.1.5.1 VOC Analysis 36
5.1.5.2 BNA Analysis 36
5.1.5.3 Metals Analysis 36
5.1.5.4 TOC Analysis 37
5.1.5.5 TSS Analysis 37
5.1.6 STREAM SEDIMENT SAMPLES 37
5.1.6.1 VOC Analysis 37
5.1.6.2 Metals Analysis 37
5.1.6.3 TOC Analysis 38
5.1.7 GROUNDWATER SAMPLES - EXISTING WELLS 38
5.2 LONG-TERM MONITORING PROGRAM RESULTS 39
5.2.1 TRICHLOROETHENE (TCE) 39
5.2.1.1 Deep Wells 39
5.2.1.2 Shallow Wells 39
5.2.2 TRANS-1,2-DICHLOROETHENE (1,2-DCE) 40
5.2.2.1 Deep Wells 40
5.2.2.2 Shallow Wells 40
5.2.3 TETRACHLOROETHENE (PCE) 40
5.2.3.1 Deep Wells 41
5.2.3.2 Shallow Wells 41
5.2.4 VINYL CHLORIDE 41
5.2.4.1 Deep Wells 41
5.2.4.2 Shallow Wells 41
5.2.5 1,1,1-TRICHLOROETHANE (1,1,1-TCA) 42
5.2.5.1 Deep Wells 42
5.2.5.2 Shallow Wells 42
5.2.6 CARBON TETRACHLORIDE (CCl4) 42
5.2.6.1 Deep Wells 43
5.2.6.2 Shallow Wells 43
5.2.7 1,2-DICHLOROETHANE (1,2-DCA) 43
5.2.7.1 Deep Wells 43
5.2.7.2 Shallow Wells 43

DRAFT

TABLE OF CONTENTS
(continued)

5.2.8 1,1-DICHLOROETHANE (1,1-DCA) 44
5.2.8.2 Shallow Wells 44
5.2.9 1,1-DICHLOROETHENE (1,1-DCE) 44
5.2.9.1 Deep Wells 44
5.2.9.2 Shallow Wells 45
5.2.10 OTHER VOCS 45
5.2.11 BENZENE, TOLUENE, ETHYLBENZENE, AND XYLENES 45

6.0 SUMMARY AND CONCLUSIONS 47
6.1 SUMMARY 48
6.1.1 GROUNDWATER 48
6.1.1.1 VOCs in Groundwater 48
6.1.1.2 Metals in Groundwater 48
6.1.1.3 Separate-Phase Hydrocarbon 49
6.1.1.4 Soil Borings 49
6.1.2 SURFACE WATER 50
6.1.3 SOILS AND SEDIMENTS 50
6.1.3.1 Organics in Soils 50
6.1.3.3 Metals in Soils 51
6.1.3.4 PCBs in Soils 51
6.2 CONCLUSIONS 51
6.2.1 HORIZONTAL AND VERTICAL EXTENT OF CONTAMINATION 52
6.2.1.1 Soils and Sediment 52
6.2.1.2 Surface Water 52
6.2.1.3 Groundwater 52
6.2.2 MIGRATION PATHWAYS 55
6.2.2.1 Surface Water 55
6.2.2.2 Groundwater 56
6.2.3 SOURCE AREAS 56
6.2.3.1 Soils 56
6.2.3.2 Groundwater 57

7.0 REFERENCES 59

DRAFT

EXECUTIVE SUMMARY

INTRODUCTION

In November 1989, Groundwater Technology, Inc., was contracted by the Potentially Responsible Parties within the Wichita North Industrial District to perform a Remedial Investigation and Feasibility Study at the 29th and Mead Comprehensive Environmental Response, Compensation, and Liability Act or "Superfund" Site in Wichita, Kansas. The Remedial Investigation as outlined in the Work Plan (HWS Technologies, 1989a) approved by the Kansas Department of Health and Environment and the U.S. Environmental Protection Agency, involved the performance of four major activities: 1) Field Investigation Data Acquisition Study, 2) Computer Modeling of the site, 3) Long Term Monitoring program, and 4) Risk Assessment.

The Field Investigation Data Acquisition Study was initiated on June 20, 1990, with field activities completed on July 20, 1990. Activities performed during the study included collection of soils at 49 locations, surface water at three locations, and groundwater at 13 locations. Collected samples were analyzed for volatile organic compounds and/or metals. The results of this activity were summarized in a report entitled "Field Investigation Data Acquisition Study," prepared by Groundwater Technology, Inc., and approved by the Kansas Department of Health and Environment on November 20, 1990.

The first round of sampling under the Long Term Monitoring program was initiated on March 22, 1991, and was completed on July 25, 1991. Field work for the program included installing 40 groundwater monitor wells, sampling groundwater for contaminants from 75 wells, and measuring fluid levels in 88 wells.

Computer modeling techniques were employed to assist interpretation of results and to support the baseline risk assessment. The modeling program CPS-PC™ was used to construct a groundwater gradient map for the site. The contaminant transport model MOC was used for the baseline risk assessment which is presented under separate cover.

SITE CONDITIONS INCLUDING REMEDIAL ACTIONS

The 29th and Mead Site is located in north Wichita, Kansas in an area bounded by 37th Street on the north, I-135 on the west, 17th Street on the south, and Broadway Street on the west. The site is an industrial area that has developed over the past 95 years. Industries present in the area have changed over the years. Current businesses include chemical supply companies, grain elevators, railroad facilities, metal fabricating

companies, foundries, refineries, meat processing companies, recyclers/salvage facilities, roofing companies, concrete companies, food processing companies, gasoline retailers, and others.

Past investigations conducted throughout the site have shown the presence of soil and groundwater contamination.

Primary contaminants identified to be present include petroleum hydrocarbons including separate-phased liquids and chlorinated volatile organic compounds including trichloroethene, 1,1,1-trichloroethane and their degradation products.

Several remedial actions have been initiated or completed within or near the 29th and Mead Site. These include, but are not necessarily limited to:

- Soil vent system and hydraulic control and groundwater treatment systems at Evcon Industries, Inc. (formerly Coleman);
- Separate-phase hydrocarbon recovery at Coastal Derby Refining Company;
- Hydraulic control system at OHSE Meat Company;
- Hydraulic control system at Reid Supply, Inc.;
- Aboveground tank removal at the former Golden Rule Refinery, on property currently owned by Coastal Derby;
- Filling of sludge pit at the former Golden Rule Refinery, on property currently owned by Dolese Brothers Concrete;
- Drum removal at former solvent reclamation facility at the former Golden Rule Refinery site, on property currently owned by Wichita Brass and Aluminum;
- Pit cleanup at the former Barnsdahl Refinery, on property currently occupied by Kansas Metals, Inc.;

- Tank closure at the former Johns' Refinery, on property owned by Ava and Hazel Johns;

- Stabilization of Johns' Sludge Pond, on property currently owned by the City of Wichita;

- Tank pit cleanup or closures at Kansas Metals, Excel, Evcon, Dolese Brothers, and Universal Quik Mart.

STUDY AREA INVESTIGATION METHODOLOGY

The Remedial Investigation of the 29th and Mead Site involved the collection of soil, surface water, sediment, and groundwater samples. Collected samples were generally analyzed for volatile organic compounds, antimony, iron, and RCRA metals. Selected samples were analyzed for base/neutral and acid organic compounds, polynuclear aromatic hydrocarbons, and polychlorinated byphenyls.

The field investigation was completed in two stages. The first was the Field Investigation Data Acquisition Study which involved:

- Installation and sampling of 32 soil borings;

- Installation and sampling of two background soil borings;

- Installation and sampling of four borings at the locations of refinery pits;

- Collection of seven surface soil samples;

- Collection of three surface water samples;

- Collection of four stream sediment samples; and

- Collection of samples from 13 existing monitor wells.

The second part of the field investigation was the initial activities of the Long Term Monitoring program. These activities included:

- Installation of 40 monitor wells;
- Collection of samples from 75 monitor wells for analysis of volatile organic compounds; and
- Fluid level measurements.

Standard procedures outlined in the approved Work Plan and Field Sampling Plan were followed during completion of the sampling and analysis activities of the Remedial Investigation.

PHYSICAL CHARACTERISTICS OF THE SITE

The 29th and Mead Site is located in Central Sedgwick County, Kansas in the Arkansas River Lowlands section of the Central Lowland Physiographic Province. The site is underlain by Pleistocene and Recent-Age alluvial clay, sand, and gravel which overlies shale of the Wellington Formation.

Permeable alluvium of the Arkansas River Valley is the primary source of usable groundwater in Sedgwick County. Within the study area, groundwater is used primarily for industrial purposes. The aquifer has transmissivities that range to 250,000 gallons per day per foot. The aquifer is under water table conditions and is as much as 30 feet thick at the site.

Groundwater flows generally from the north/northeast to south/southwest at the site. Natural gradient is locally affected by pumping wells in the aquifer at Evcon, OHSE Meats, Coastal Derby Refining, and others. Natural groundwater flow rates are estimated to range between about 0.20 feet per day to 1.15 feet per day.

RESULTS OF INVESTIGATION

Soil Borings

Benzene, toluene, trichlorethene, tetrachloroethene, and 1,1,1-trichloroethane were detected by field gas chromatography in one or more soil samples collected from 32 soil borings. Additional analyses were made by field photoionization detector and laboratory methods.

DRAFT

Background Borings

Samples from two off-site background borings were analyzed. No volatile organic or base/neutral and acid extractable compounds were identified in these samples. Quantifiable concentrations of arsenic, barium, chromium, lead, and iron were detected. The detected concentrations did not exceed expected levels for native soils.

Borings Near Pits

Soil samples from four borings installed downgradient from pits at the former Golden Rule and Barnsdahl Refineries were analyzed. No sample contained any volatile organic compound. The metals antimony, arsenic, barium, cadmium, chromium, iron, lead, mercury, and silver were detected in samples from borings. Lead exceeded the maximum native soil range.

Chlorinated volatile organic compounds, including trichloroethene, dichloroethane, trans-1,2-dichloroethene, and vinyl chloride were quantified in groundwater samples from two borings. Only the vinyl chloride concentration in the groundwater sample from boring PB-1 exceeded the Kansas Action Level.

Benzene, toluene, ethylbenzene, or xylenes were quantified in groundwater samples from three borings. The benzene concentration at PB-1 exceeded the Kansas Action Level.

Groundwater samples collected from borings near pits contained antimony, arsenic, barium, iron, and lead. The concentrations of iron and barium exceeded Kansas Action Levels in one or more samples. Reported barium and iron concentrations reflect natural conditions for this part of Kansas.

Surface Soil Samples

Arsenic, barium, cadmium, chromium, iron, lead, selenium, and silver were detected in one or more of seven surface soil samples collected within the 29th and Mead Site. Only lead and selenium were detected at concentrations exceeding the maximum background concentrations. Base/neutral and acid extractable compounds were detected in one or more samples. Compounds detected were coal and petroleum constituents including anthracenes, fluoranthenes, pyrenes, and chrysene.

At location B4-SS-1, duplicate samples were collected for analysis for polychlorinated bipenyls. The average concentration, as Arochlor 1260, was below the limits for unrestricted areas.

Analytical results for surface soil samples collected during this investigation do not confirm higher concentrations identified at the same sampling locations during the preliminary site assessment.

Surface Water Samples

Water samples were collected at three locations in surface streams at the site. Volatile organic compounds detected include 1,1,1-trichloroethane, trichloroethene, tetrachloroethene, dichloroethane, trans-1,2-dichloroethene, benzene, toluene, ethylbenzene, and xylenes. No sample contained any volatile organic compound at concentrations which exceeded Kansas Action Levels.

Barium and iron were the only metals quantified to be present in surface water samples. Kansas Action Levels were not exceeded for either metal.

Surface water samples were also analyzed for total organic carbon and total suspended solids.

Stream Sediment Samples

No volatile organic compound was detected in stream sediment samples. Arsenic, barium, cadmium, chromium, lead, and iron were detected in one or more samples. The reported concentration of the detected metals do not exceed the natural range.

Existing Well Samples

During the Field Investigation Data Acquisition Study, groundwater samples were collected from 13 of 16 wells. Three wells were not sampled due to the presence of separate-phase hydrocarbons. The samples were analyzed for the RCRA metals, plus antimony, and iron.

Arsenic, antimony, barium, lead, and iron were detected in groundwater samples. Kansas Action Levels were exceeded for arsenic in two wells, for barium in one well, and for iron in 13 wells. The occurence of barium and iron above the Kansas Action Level is not unusual in the area. The high arsenic condition is localized to the area south of 21st Street.

Well Samples from Long Term Monitoring Program

The Long Term Monitoring program involves 40 new wells installed during this investigation and 42 existing wells. The wells of this program are screened to allow sampling of the shallow and deep portions of the aquifer. Groundwater samples were collected in 75 of these wells during April, May, and July 1991. Five wells were not sampled due to the presence of separate-phase hydrocarbons and two wells were not sampled because they were dry. Collected samples were analyzed for volatile organic compounds.

Several chlorinated volatile organic compounds and petroleum hydrocarbon compounds were detected in samples from the Long Term Monitoring Program wells. The results of the analysis are summarized on **Table E1** and are presented by aquifer depth (i.e., shallow and deep).

Deep Wells

Eleven of the 13 principal volatile organic compounds listed in **Table E1** were detected in one or more of the 13 deep wells. Ethylbenzene and xylenes were not detected. Applicable Kansas Action Levels were exceeded for 9 of the 11 detected compounds (all except toluene and 1,2-dichloroethane). The compound most frequently exceeding the Kansas Action Level was trichloroethene; vinyl chloride, and 1,1,-dichloroethene were next. Exceeding the Kansas Action Level does not necessarily indicate that an unacceptable risk is posed. Reference should be made to the Risk Assessment which is submitted under separate cover.

Shallow Wells

All 13 volatile organic compounds of interest were detected in one or more wells. Trichloroethene was the most frequently detected compound and the compound which had the greatest number of wells exceeding the Kansas Action Level. Action Levels were exceeded in shallow wells for all compounds except toluene and ethylbenzene.

CONCLUSIONS

Data collected during this investigation were used to assist determination of the extent of contamination, the pathways of contaminant migration, and sources of contaminants at the 29th and Mead Site.

The available data indicate the soil, sediment, and surface water contain metals, volatile organic compounds, polynuclear aromatic hydrocarbons, and polychlorinated biphenyls. The concentrations reported during this investigation do not confirm data generated during the preliminary assessment.

Groundwater at all depths investigated contain fuel components and chlorinated solvents and their degradation compounds at various locations at the Site. There are six identifiable plumes of the chlorinated solvents trichlorethene/tetrachloroethene and degradation compounds affecting all depths of the aquifer. At least 12 potential source areas of these compounds have been tentatively identified; two of these potential source areas are off site and upgradient of the Site. Three plumes of 1,1,1-trichloroethane and its degradation compounds affect all depths of the aquifer. Six potential source areas have been described; one is located off site.

Four fuel component plumes have been identified affecting the shallow zone of the aquifer. Three areas represent past or present petroleum refineries. The fourth plume is located south of 36th Street.

Three small carbon tetrachloride plumes have been identified affecting the shallow portions of the aquifer. Each plume has one potential source area.

1.3 SITE LOCATION AND DESCRIPTION

The 29th and Mead Site is located within the Central section of Sedgwick County, Kansas. The 29th and Mead Site is in the northern section of the City of Wichita and is generally bordered by 37th Street to the north, I-135 to the east, 17th Street to the south, and Broadway Street to the west (Figure 1). The 29th and Mead Site topography is generally flat with localized topographic relief created by scattered drainage pathways. The area, being industrialized, has developed such that surface water flows either to storm sewers, to canalways, to tributaries of Chisholm Creek, or to Chisholm Creek itself, and eventually to the Arkansas River.

The area geology consists of 10 to 15 feet of silt and clay underlain by non-cohesive deposits consisting of fine to very coarse gravel, fine to coarse sand and some silty clay. These alluvial deposits average 45 feet in thickness and form the primary aquifer in the area. A shale unit, the Wellington Formation, underlies the alluvial deposits and forms an aquitard under the area of investigation.

The groundwater depth in the area generally ranges from 10 to 18 feet below land surface. Seasonal fluctuations are expected to average 2 to 4 feet from a median groundwater depth of 14 feet. The general flow of groundwater is to the south.

1.4 PROJECT HEALTH AND SAFETY

An HSP was prepared by HWST in accordance with Occupational Safety and Health Administration (OSHA) Standards "Hazardous Waste Operations and Emergency Response" guidelines (29 CFR 1910.120). In addition, a comprehensive HSP incorporating safety requirements and environmental health and safety requirements was prepared for the project by Groundwater Technology. Both plans, presented in Deliverable Packet #3 (Groundwater Technology, 1990c), were employed during performance of the project field activities. The HSPs include the following:

1) Emergency first aid and routes of exposure;

2) Site history and description;

3) Site control and work zones;

DRAFT

2.4 REID SUPPLY, INC.

2.4.1 SITE LOCATION/HISTORY

Reid Supply, Inc. (Reid Supply) is located at 2525 New York (see **Figure 3**, Map Code D). The property has been utilized as a storage, recycling, and collection point for liquid and solid hazardous waste material as well as bulk chemical repackaging and distribution since the 1970s. Hydrocarbon Recyclers, Inc., a subsidiary of USPCI purchased Reid Supply, Inc. in 1988.

2.4.2 PAST REMEDIATION ACTIVITIES

In July 1990, a non-contact cooling water industrial well was installed at Reid Supply. Pumping from the well was initiated in early January 1991. The well operates intermittently at 30 gpm. The discharge from the system is to the Wichita Sanitary Sewer System. Analysis of the discharged water has indicated methylene chloride, tetrachlorethane, trichloroethene, 1,2-dichloroethene, xylenes and toluene at concentrations of less than 100 ug/L per constituent.

2.5 WICHITA BRASS AND ALUMINUM FOUNDRY

2.5.1 SITE LOCATION/HISTORY

The Wichita Brass and Aluminum Foundry (WBA) is located at 412 East 29th Street (see **Figure 3**, Map Code E). The site occupies the southwest quarter of property formerly owned by Golden Rule Refinery, a petroleum refinery which was reportedly in operation from the early 1900's to approximately 1940. Mr. Mike Carter, the current president of WBA, reported that a portion of the property was leased by WBA from 1944 to 1946, and then was purchased by WBA. The remainder of the current WBA property was purchased in 1965.

A former sludge pit used by the refinery to dispose of by products was located in the northwest corner of the WBA property. The pit location is evident in an aerial photograph taken in 1951 but is not identified in a 1960 photograph.

According to the report, "Narrative Report for the Site Investigation of Wichita Brass and Aluminum, Wichita, Kansas" (prepared by the United States Geological Survey in 1985) and interviews with Mr. Carter, a solvent

4.0 PHYSICAL CHARACTERISTICS OF THE STUDY AREA

4.1 REGIONAL GEOLOGY

The 29th and Mead Site is located in Central Sedgwick County. The majority of Sedgwick County occurs in the Arkansas River Lowlands section of the Central Lowland Physiographic Province (see **Figure 10**).

The geologic units which outcrop in Sedgwick County are of sedimentary origin and range in age from Permian to Recent (see **Figure 11**). The oldest formation present is the Wellington Formation (see **Figure 12**) of the Permian System which forms the bedrock under the eastern four-fifths of the county. The Wellington Formation consists of calcareous gray and blue shale containing several thin beds of argillaceous limestone, gypsum, and anhydride. The Ninnescah Shale, also of the Permian System, overlies the Wellington Formation and forms the bedrock surface in the western one-fifth of the county.

Unconsolidated deposits of clay, silt, sand, and gravel ranging from the Pliocene-Age Ogallala Formation to Recent Age unconformably overlie Permian-Age rocks (**Figure 11**). As shown on **Figure 12**, the contact between the Wellington Formation and the alluvium associated with the Arkansas River Valley generally trends north to south near the eastern edge of the 29th and Mead Site located east of the Arkansas River.

4.2 REGIONAL HYDROGEOLOGY

Permeable alluvium in the Arkansas River Valley is the primary source of usable groundwater in Sedgwick County. Domestic and stock wells in the Wellington Uplands Area, east of the Arkansas River Valley derive water from the Wellington Formation (see **Figure 13**). Groundwater from the Wellington Upland Area adjacent to the Arkansas River Valley discharges into the unconsolidated sediments of the Arkansas River Valley.

The distribution of transmissivity within the unconsolidated sediments of the Arkansas River Valley is illustrated in **Figure 14**. Values of transmissivity range from near zero at the boundaries of the Arkansas River Valley to 250,000 gallons per day per foot (gpd/ft) where the thickness of the unconsolidated sediments is at a maximum. The 29th and Mead Site lies within these alluvial sand deposits. Transmissivities between 40,000 and 100,000 gpd/ft are expected in the alluvium present on the Site.

4.3 SITE STRATIGRAPHY

The 29th and Mead Site stratigraphy was determined from drilling logs prepared during installation of soil borings and monitor wells performed as part of this project and from available literature for the area. The stratigraphy at the 29th and Mead Site is characterized by the following in ascending order from oldest to youngest (see **Figure 15** for east/west gelogic cross section).

- Medium to dark-gray, weathered shale bedrock of the Wellington Formation.
- Unconsolidated, light brown alluvial sand lies above the shale bedrock with a thickness of approximately 30 feet. This lithologic unit grades upward from a coarse-grained sand with traces of gravel to a fine to medium-grained sand.
- Alluvial clay with a fine sand lies above the sand unit and extends to the surface, approximate average thickness is 10 feet.

A top of bedrock contour map was constructed using CPS-PC™ computer modeling software (see **Figure 16**).

4.4 SITE HYDROGEOLOGY

The water bearing unit at the 29th and Mead Site consists of the unconsolidated alluvial sediments of the Arkansas River Valley which overlie shale of the Wellington Formation. This unit consists of sandy clay, clayey sand and sand. Water levels (see **Table 3**) measured in the on-site wells indicates that groundwater exists under unconfined conditions at the site.

The elevation survey data for the existing on-site monitor wells and new monitor wells screened at the water table (**Table 2**) were entered into CPS-PC™ model software to construct a groundwater gradient map (**Figure 17**). As depicted in **Figure 17**, depressions in the water table show the influence of Evcon recovery well RW-1 (near 37th Street and Santa Fe), the Evcon north and south industrial wells (between 33rd Street and 30th Street on Mead), and the OSHE Meat Company industrial well (between 25th Street and 21st Street near Broadway). The well with the greatest influence appears to be the OSHE Meat Company industrial well. The map suggests that there may be active pumping wells in the area around wells WND-5 (Block 10) and

GLM-14 (Block 7), however, the configuration shown is a function of measured water levels and the mathematical algorithms used by CPS modeling program.

The general groundwater flow across the site is from north/northeast to south/southwest. As described above, the pumping wells have an influence on the local groundwater flow direction and gradient within the 29th and Mead Site.

4.4.1 GRAIN SIZE ANALYSIS

4.4.1.1 Shallow Part of the Aquifer

Samples were collected during the drilling of the 32 soil borings as described in Section 3.1.1 at depths ranging from one to five feet below the water table for grain size analysis to represent the shallow part of the aquifer beneath the 29th and Mead Site. The samples were analyzed by Engineering Testing Company The reports of grain size testing are included in **Appendix G**.

During installation of monitor wells during the long term monitoring program, soil samples were collected from the shallow part of the aquifer in WND-24 (Block 2), WND-22 (Block 19), WND-26 (Block 8), and submitted to Layne Western for grain size analysis. Results of the grain size analysis are presented in **Appendix G**. The grain size analyses indicate that the predominant aquifer grain size in the upper portion of the aquifer is very fine to very coarse sand as defined by the Wentworth Scale.

Utilizing the plots of representative grain size analyses, hydraulic conductivity (k) was estimated based on the square of the grain size, in millimeters, at which 90 percent of the sample is retained on a screen. The hydraulic conductivity of the shallow part of the aquifer was estimated to range from 0.016 centimeters per second (cm/s) to 0.068 cm/s. This range is consistent with expected values based on aquifer transmissivity.

The velocity of groundwater flow for the shallow part of the aquifer can be determined by multiplying the hydraulic conductivity and hydraulic gradient, divided by the effective porosity of the formation (Freeze and Cherry, 1979). For this determination, 20 percent effective porosity was assumed and used (Freeze and Cherry, 1979). The hydraulic gradient was calculated from the groundwater gradient map (**Figure 17**) for the area bounded by 29th Street, 25th Street, Ohio Street, and I-135. This area appears least effected by the influence of pumping wells in the 29th and Mead area. The uneffected hydraulic gradient is calculated to be 0.0012 feet per foot. Based on the parameters outlined above, the groundwater flow velocity in the upper part of the aquifer ranges from 0.27 ft/day to 1.16 ft/day.

4.4.1.2 Deep Part of the Aquifer

Samples were collected at depths ranging from one to five feet above bedrock for grain size analysis during installation of monitor wells WND-22, WND-24, and WND-26 to represent the deep part of the aquifer beneath the 29th and Mead Site. Samples were submitted to Layne Western for analysis. Results of the grain size analysis are presented in Appendix G. These analyses identify the predominant aquifer grain size to be fine to very coarse sand as defined by the Wentworth Scale.

Utilizing the the grain-size plots, hydraulic conductivity (k) was estimated based on the square of the grain size, in millimeters, at which 90 percent of the sample is retained on a screen. The hydraulic conductivity of the deep part of the aquifer was estimated to range from 0.058 cm/s to 0.068 cm/s. This range is consistent with expected values based on aquifer transmissivity.

The velocity of groundwater flow for the deep part of the aquifer was determined by multiplying the hydraulic conductivity and hydraulic gradient, divided by the effective porosity of the formation (Freeze and Cherry, 1979). For this determination, 25 percent effective porosity was used as representative for sands (Freeze and Cherry, 1979) in the lower part of the aquifer. The unaffected hydraulic gradient was assumed to be the same as the water table gradient in the area bounded by 29th Street, 25th Street, Ohio Street, and I-135.

The hydraulic gradient for the deep part of the aquifer is assumed to be 0.0012 feet per foot. Based upon the parameters outlined above, the groundwater flow velocity in the lower part of the aquifer ranges from 0.79 ft/day to 0.93 ft/day.

TABLE OF CONTENTS

List of Figures iv

List of Appendices iv

List of Referenced Drawings v

M-1 Introduction 1

M-2 Unit Descriptions 3
M-2a Shredder and Granulator Units 3
M-2a(1) Purpose 3
M-2a(2) Shredder and Granulator Units compliance with standards for emissions or releases 5
M-2a(2)(a) Prevention of releases to the subsurface environment or groundwater 5
M-2a(2)(b) Prevention of releases to surface water, wetlands, or soil 8
M-2a(2)(c) Prevention of releases to the air 8
M-2a(2)(d) Monitoring and Inspections . . 11
M-2b Drum Scraper Unit 12
M-2b(1) Purpose 12
M-2b(2) Drum Scraper Unit compliance with standards for emissions or releases . . . 13
M-2b(2)(a) Prevention of releases to the subsurface environment or groundwater 13
M-2b(2)(b) Prevention of releases to surface water, wetlands or soil 15
M-2b(2)(c) Prevention of releases to the air 15
M-2b(2)(d) Monitoring and Inspections . . 18
M-2c Dryer 19
M-2c(1) Purpose 19
M-2c(2) Dryer Unit compliance with standards for emissions or releases 20

M-2c(2)(a) Prevention of releases to the subsurface environment or groundwater 20
M-2c(2)(b) Prevention of releases to surface water, wetlands or soil 22
M-2c(2)(c) Prevention of releases to the air 22
M-2c(2)(d) Monitoring and Inspections: 264.602 24
M-2d Dispersing Unit 26
M-2d(1) Purpose 26
M-2d(2) Dispersing Unit compliance with applicable hazardous waste treatment and storage standards 28
M-2d(2)(a) Description of Tank System . . 28
M-2d(2)(b) Operational Practices 30
M-2d(2)(b)(1) General Operating Requirements 30
M-2d(2)(b)(2) Description of Feed Systems, Safety Cutoff, Bypass Systems, and Pressure Controls 31
M-2d(2)(b)(3) Special Requirements for Handling Incompatible, Ignitable, or Reactive Waste 32
M-2d(2)(b)(4) Inspections 33
M-2d(2)(b)(5) Contingency Measures . . . 33
M-2d(2)(c) Containment and Detection of Releases 34
M-2d(3) Dispersing Unit compliance with standards for emissions or releases . . . 37
M-2d(3)(a) Prevention of releases to the subsurface environment or groundwater 37
M-2d(3)(b) Prevention of releases to surface water, wetlands or soil 38
M-2d(3)(c) Prevention of releases to the air 39
M-2d(3)(d) Monitoring and Inspections . . 40
M-2e Drum Washing Unit 41
M-2e(1) Purpose 41
M-2e(2) Drum Washing Unit compliance with standards for emissions or releases . . . 43

M-2e(2)(a) Prevention of releases to the subsurface environment or groundwater: 264.601 (a) . . . 43
M-2e(2)(b) Prevention of releases to surface water, wetlands or soil 44
M-2e(2)(c) Prevention of releases to the air 44
M-2e(2)(d) Monitoring and Inspections . . 46

M-3 Hydrologic, Geologic, and Meteorologic Assessments . . . 47

M-4 Potential Pathways for Exposure 48
M-4a Shredder and Granulator Units 48
M-4b Drum Scraper Unit 50
M-4c Dryer Unit 52
M-4d Dispersing Unit 54

M-5 Effectiveness of Treatment 57
M-5a Shredder and Granulator Units 57
M-5b Drum Scraper Unit 58
M-5c Drier Unit 59
M-5d Dispersing Unit 60
M-5e Drum Washing Unit 61

List of Figures

Figure M.1, Miscellaneous Unit Locations
Figure M.2, P&ID New Process/Condensate Separator
Figure M.3, Shredder/Granulator
Figure M.4, Shredder/Granulator
Motor Location and Specification
Figure M.5, 55 Gallon Drum Scraper
Figure M.6, Motor Location and Specification
Figure M.7, Model-FKM-3000-D-Mixer
Figure M.8, 1129 Gallon Dispersing Tank
Figure M.9, 40/50/60 VSM 18 Disperser
Figure M.10, Barrel Dump Assembly
Figure M.11. P&ID Process Areas
Figure M.12, Triple Rinse - HRI

Note: Figures M.2 through M.12 are presented in Appendix M-A

List of Appendices

Appendix M-A, Section M Figures M.2 Through M.12
Appendix M-B, Operating Manuals: Shredder and Granulator Units
Appendix M-C, USPCI Air Monitoring Data
Appendix M-D, Operating Manuals: Dryer Unit
Appendix M-E, Operating Manuals: Dispersing Unit
Appendix M-F, Draft Preliminary Assessment Report for HRIW

List of Referenced Drawings

Referenced drawings are presented in Section Y

Drawing 50-57-10-001, Miscellaneous Unit Locations
Drawing 665300-4-W404A, P&ID New Process/Condensate Separator
Shredder/Granulator Drawing (As Built)
Drawing 50-57-03-001, Shredder/Granulator
Drawing D-35-52-800, 55 Gallon Drum Scraper
Drawing D-43-10-6-100, Motor Location and Specification
Drawing 2106-P; Littleford, Model-FKM-3000-D-Mixer
Drawing PD 12/3/91, 1129 Gallon Dispersing Tank
Drawing DL34055, 40/50/60 VSM 18 Disperser; FCF-Bowers
Drawing Barrel Dump Assembly; PD 1/25/91
Drawing 665300-4-W404F, P&ID Process Areas, FD
Drawing D990043, Triple Rinse - HRI; BRI, Inc.

Acronym Table

Hydrocarbon Recyclers, Inc. of Wichita (HRIW)
Title 40 of the Code of Federal Regulations (40 CFR)
Occupational Safety and Health Administration (OSHA)
National Fire Protection Association (NFPA)
Waste Analysis Plan (WAP)
Occupational Safety and Health Administration (OSHA)

M-1 Introduction

This section describes several waste management units at Hydrocarbon Recyclers, Inc. of Wichita (HRIW) which have not been classified by state or federal regulatory agencies as tanks or containers for the purpose of regulation under Title 40 of the Code of Federal Regulations (40 CFR) Part 264. These units are the Dryer Unit, the Dispersing Unit, the Shredder Unit, the Granulator Unit, the Drum Scraper Unit, and the Drum Washing Unit. All of these units have been classified as miscellaneous units regulated under 40 CFR 264 Subpart X by Region 7 of the U.S. Environmental Protection Agency. Each of these units may be used to physically or chemically alter hazardous wastes managed at HRIW. Their specific locations are shown on Figure M.1, Miscellaneous Unit Locations (Drawing 50-57-10-001, Miscellaneous Unit Locations). This section will address the regulations for miscellaneous units as they apply to each unit listed above.

Figure M.1. Miscellaneous Unit Locations

M-2 Unit Descriptions

M-2a Shredder and Granulator Units

M-2a(1) Purpose

The Shredder and Granulator Units can be operated as stand alone units or as a connected, two stage unit. In either configuration, these units share a common vapor control system. When these two units are operated together, waste is normally fed first to the Shredder Unit, then it passes directly into the Granulator Unit.

The Shredder and Granulator Units reduce the size of various kinds of hazardous and nonhazardous waste materials. Waste processed through these units may include such items as paint filters, dry cleaning cartridges, wooden pallets, plastic containers, and used personal protective equipment. The materials fed to the Shredder Unit are shred into small pieces or strips by two counter-rotating shafts with teeth driven at low speed and high torque. The Granulator Unit cuts materials into smaller pieces with knives attached to a rotor blade until the pieces are small enough to fall through a screen in the bottom of the cutting chamber. The solids from these units are then pneumatically moved through a duct system to a cyclone separator

where heavier particles fall out of the separator into a container. Finer particles, air, and vapors go to a baghouse, which captures the remaining particles. Vapors and air are exhausted through a carbon filter which is designed to remove organic contaminants.

Solids which have been processed through the Shredder Unit or the Granulator Unit can also be removed using an auger instead of using the pneumatic conveyance system. Airborne contaminants generated during this operation are still captured inside the units and exhausted through the baghouse and carbon filter. Figure M.2, P&ID New Process/Condensate Separator in Appendix M-A (Drawing 665300-4-W404A, P&ID New Process/Condensate Separator) illustrates the process flow described above for the connected Granulator and Shredder Units.

When the Shredder Unit is disconnected from the Granulator Unit and is operated alone, the waste processed through the Shredder Unit falls through a chute into a container. Again, the airborne contaminants are captured by the unit's emission control system. More detailed information on the Shredder Unit, the Granulator Unit, and their exhaust system is contained in Appendix M-B, Operating Manuals: Shredder and Granulator Units.

The Shredder and Granulator Units are constructed primarily of carbon steel and are located in a containment area in Building D at HRIW. The dimensions of these units are shown in Figure M.3, Shredder/Granulator and Figure M.4, Shredder/Granulator in Appendix M-A (Shredder/Granulator Drawing (As Built) and Drawing 50-57-03-001, Shredder/Granulator).

The regulations in 40 CFR 264 Subparts I through O do not apply specifically to the Shredder and Granulator Units; however, these units have secondary containment which meets the requirements of 40 CFR 264 Subparts I and J, which pertain to tanks and containers.

M-2a(2) **Shredder and Granulator Units compliance with standards for emissions or releases: 264.601 and 264.602**

M-2a(2)(a) **Prevention of releases to the subsurface environment or groundwater: 264.601(a)**

Releases of waste from the Shredder Unit or the Granulator Unit to the subsurface or groundwater are extremely unlikely for the following reasons.

(1) The waste processed by the Shredder and Granulator Units is predominantly solid.

(2) The Shredder and Granulator Units are located in a secondary containment area which meets the requirements of 40 CFR 264 Subparts I and J. The containment has sufficient volume to contain a spill of the entire contents of these units, and is coated with a material that is compatible with the wastes processed in the unit. Secondary containment volume calculations are included in appendices of Sections D, Use and Management of Containers, and E, Tank Systems.

(3) Various aspects of the condition of these units and of the containment area are inspected each operating day or week, as described in Section F, Inspection Plan. Leaks or spills that might be associated with these units are cleaned up within 24 hours of their discovery, or as soon as it is safe and practicable.

(4) The unit is located inside a building, and is physically separated and removed from any surface water, wetlands, or soil. The location of the facility relative to nearby bodies of water is shown in the topographic map in Section B, Facility Description.

(5) HRIW maintains a Contingency/Emergency Plan for use in situations such as a major spill, a fire, or an explosion. This plan incorporates measures to mitigate releases to the environment from these units, and to protect human health

and the environment from such releases. The contingency plan is included in Section H of this application.

M-2a(2)(b) **Prevention of releases to surface water, wetlands, or soil: 264.601(b)**

Releases of waste from the Shredder and Granulator Units to surface water, wetlands, or soil are extremely unlikely for the reasons stated in M-2a(2)(a).

M-2a(2)(c) **Prevention of releases to the air: 264.601(c)**

The design and operation of the Shredder and Granulator Units control releases of waste constituents to the air from the units to prevent releases which may adversely affect human health or the environment. The wastes processed in these units are primarily solids such as paint filters, dry cleaning cartridges, wooden pallets, plastic containers, and used personal protective equipment. Some of the solids may be contaminated with organic solvents. Potential airborne contaminants which could be generated by this size reduction equipment may include organic vapors from the organic solvents, and particulates released from cutting up the solids. Vapors, gases, or airborne particles emitted during the shredding or granulating process are captured

and exhausted through a cyclone, a baghouse, and a carbon filter. The cyclone removes heavier particulates from the gas stream. The baghouse removes the smaller particulates from the stream, and the carbon filter removes organic vapors as well as airborne particles which may have passed through the baghouse. The exhaust system for the units also draws vapors, gases, or airborne particles released from the waste while being loaded into the units and exhausts them through the cyclone separator, the baghouse, and the carbon filter. When containers of shredded waste are removed from the unit, a lid is placed on the container to prevent airborne contaminants from escaping. Airborne contaminants released during the short time that the container has been disconnected from the unit and the lid has not been put on are drawn into the connecting duct between the container and the Shredder and Granulator Units, and are exhausted through the baghouse and the carbon filter.

The persons most likely to be exposed to potential air contaminants are the HRIW employees who work next to the equipment. The potential for contaminants reaching persons outside this room or outside the facility, if any such potential exists at all, is significantly reduced by the units' emission controls. An exposure study was performed in July of 1991 at

HRIW to determine the potential for exposure of workers to organic solvent vapors in the area of the Shredder and Granulator Units. This study concluded that the air surrounding the workers contained very small quantities (less than 100 parts per million) of dry cleaning solvent. A summary of the air monitoring data from this study is contained in Appendix M-C, USPCI Air Monitoring Data. Workers in the room containing the Shredder and Granulator Units wear cartridge respirators and other protective equipment to prevent exposure to airborne contaminants while the units are in operation.

M-2a(2)(d) **Monitoring and Inspections: 264.602**

The Shredder and Granulator Units, and the surrounding area will be visually inspected each operating day for evidence of leaks or spills in accordance with the facility inspection plan described in Section F, Inspection Plan. The secondary containment system will also be inspected each operating day for evidence of cracks or breaches of containment in accordance with this inspection plan. The operation of the carbon filter on the exhaust system will be monitored while the Shredder and/or Granulator Units are in operation.

M-2b Drum Scraper Unit

M-2b(1) Purpose

The Drum Scraper Unit is used to enhance the removal of solid, viscous, and/or sticky materials from containers such as 55 gallon drums. Before a container is placed in the Drum Scraper Unit, the top of the container is removed, and any free liquid standing on top of the drummed waste may be pumped out. When the container containing waste is placed in the unit, a cylinder extends down from the unit into the container. A rotating metal blade then extends down inside the cylinder and into the waste, where it cuts up the waste so it can be dumped out. Once the cutting is finished the cylinder and blade assembly is raised from the container, the container is immediately put into the dumper, and the contents are dumped into the Dispersing Unit; alternatively, the top is placed back on the container and the container is moved by conveyor to the Dispersing Unit or to another processing area.

The Drum Scraping Unit is constructed primarily of carbon steel and is located in the Process Area at HRIW as shown in Figure M.1. Motor Location and Specification, presented in Appendix M-

A. Figure M.5, 55 Gallon Drum Scraper (Drawing D-35-52-800, 55 Gallon Drum Scraper and M.6, Drawing D-43-10-6-100, Motor Location and Specification) shows the dimensions and configuration of the unit.

The regulations in 40 CFR 264 Subparts I through O do not apply specifically to the Drum Scraping Unit; however, this unit is located in a container management area and has secondary containment which meets the requirements of 40 CFR 264 Subpart I, Use and Management of Containers.

M-2b(2) <u>Drum Scraper Unit compliance with standards for emissions or releases</u>: 264.601 and 264.602

M-2b(2)(a) <u>Prevention of releases to the subsurface environment or groundwater</u>: 264.601 (a)

Releases of waste from the Drum Scraper Unit to the subsurface or groundwater are extremely unlikely for these reasons.

(1) The waste processed by the Drum Scraper Unit is predominantly solid, and has had most free liquids removed.

(2) The Drum Scraper Unit is located in a secondary containment area which meets the requirements of 40 CFR 264 Subparts I and J. The containment has sufficient volume to contain a

spill of the entire contents of a container within the unit (the unit has no waste holding capacity of its own), and is coated with a material that is sufficiently impervious to the wastes processed in the unit. Secondary containment volume calculations are included in appendices of Section D, Use and Management of Containers, and Section E, Tank Systems.

(3) Various aspects of the condition of this unit and of the containment area are inspected daily or weekly, as described in Section F, Inspection Plan. Leaks or spills that might be associated with this unit are cleaned up within 24 hours of their discovery, or as soon as it is safe and practicable.

(4) The unit is located inside a containment unit with a large area, and is physically separated and removed from any surface water, wetlands, or soil. The location of the facility relative to nearby bodies of water is shown in the topographic map in Section B, Facility Description.

(5) HRIW maintains a Contingency/Emergency Plan for use in situations such as a major spill, a fire, or an explosion. This plan incorporates measures to mitigate releases to the environment from the unit, and to protect human health and the environment from such releases.

M-2b(2)(b) **Prevention of releases to surface water, wetlands or soil: 264.601(b)**

Releases of waste from the Drum Scraper Unit to surface water, wetlands, or soil are extremely unlikely for the reasons stated in M-2b(2)(a).

M-2b(2)(c) **Prevention of releases to the air: 264.601(c)**

The design and operation of the Drum Scraper Unit controls releases of waste constituents to the air from the unit to prevent releases which may adversely affect human health or the environment. The wastes processed in this unit are generally thick, viscous liquids or solids contaminated with organic solvents. These solvents could potentially volatilize during the scraping process. While the container is being scraped a cylinder extends down into the container from the unit, and houses the metal boring and scraping assembly. The cylinder fits snugly inside the container and is closed at the top to minimize emissions. Vapors released from the containers during the time that they are opened and the cylinder is not inside them would be nominal since the containers are opened just before they are

processed in the scraper, and are reclosed or are dumped right after they are scraped.

The only people who could potentially be exposed to these very small quantities of vapors are the HRIW employees who work in the immediate area, and they are protected from exposure by the protective clothing and equipment that they wear. The potential for contaminants reaching persons outside the Processing Area or outside the facility, if any such potential exists at all, is much lower due to the emission controls discussed above. An exposure study was performed in August of 1991 at HRIW to determine the potential for exposure of workers in the Processing Area (where the Drum Scraper Unit is located) to organic solvent vapors. The air in this area was monitored for six different organic compounds. Of these six compounds only three were detected, and they were detected in trace quantities that were well below the Occupational Safety and Health Administration (OSHA) permissible exposure levels for unprotected workers. A summary of the results of this study is contained in Appendix M-C.

M-2b(2)(d) **Monitoring and Inspections: 264.602**

The Drum Scraper Unit, and the surrounding area will be visually inspected each operating day for evidence of leaks or spills in accordance with the facility inspection plan described in Section F, Inspection Plan. The secondary containment system will also be inspected each operating day for evidence of cracks or breaches of containment in accordance with this inspection plan.

M-2c Dryer

M-2c(1) Purpose

The Dryer Unit is used to evaporate water and other liquids from solid materials or sludges at HRIW. Waste is fed to the unit by a screw conveyor. Inside the Dryer Unit, the waste is mixed by a rotating shaft with metal plow blades. The wall of the Dryer Unit has coils through which a heating medium (currently steam) is conducted. A vacuum pump is used to reduce the pressure inside the unit to improve removal of evaporative materials, leaving nonvolatile materials behind. Vapors are drawn off by a vacuum pump and are cooled in a condenser. Condensed vapors are collected in the accumulation vessel and are later processed for recovery. Vapors that are not condensed in the condenser are collected and condensed in tank V-18. The processed solids are unloaded from the Dryer Unit into containers and are eventually blended for energy recovery, or are shipped off-site for further management. The location of this unit is shown in Figure M.1 in Appendix M-A. Figure M.7, Model-FKM-3000-D-Mixer in Appendix M-A (Drawing 2106-P; Littleford, Model-FKM-3000-D-Mixer) illustrates the process described above. Appendix M-D, Operating Manuals: Dryer Unit, provides additional information regarding this unit.

The Dryer Unit is constructed primarily of steel. The wastes processed through the Dryer Unit are typically solids contaminated with water and/or solvents that may have also been processed through the Shredder and/or Granulator Unit(s) to reduce their size.

M-2c(2) <u>Dryer Unit compliance with standards for emissions or releases</u>: 264.601 and 264.602

M-2c(2)(a) <u>Prevention of releases to the subsurface environment or groundwater</u>: 264.601 (a)

Releases of waste from the Dryer Unit to the subsurface or groundwater are extremely unlikely for these reasons.

(1) The waste processed by the Dryer Unit is predominantly solid, and contains little if any free liquid.

(2) The Dryer Unit is located in a secondary containment area which meets the requirements of 40 CFR 264 Subparts I and J. The containment has sufficient volume to contain a spill of the entire contents of the unit, and is coated with a material that is compatible with the wastes processed in the unit. Secondary containment volume calculations are included in appendices of Section D, Use and Management of Containers, and Section E, Tank Systems.

(3) Various aspects of the condition of this unit and of the containment area are inspected each operating day or week, as described in Section F, Inspection Plan. Leaks or spills that might be associated with this unit are cleaned up within 24 hours of their discovery, or as soon as it is safe and practicable.

(4) The unit is located inside a building, and is physically separated and removed from any surface water, wetlands, or soil. The location of the facility relative to nearby bodies of water is shown in the topographic map in Section B, Facility Description.

(5) HRIW maintains a Contingency/Emergency Plan for use in situations such as a major spill, a fire, or an explosion. This plan incorporates measures to mitigate releases to the environment from the unit, and to protect human health and the environment from such releases.

M-2c(2)(b) **Prevention of releases to surface water, wetlands or soil: 264.601 (b)**

Releases of waste from the Dryer Unit to surface water, wetlands, or soil are extremely unlikely for the reasons stated in M-2c(2)(a).

M-2c(2)(c) **Prevention of releases to the air: 264.601(c)**

The design and operation of the Dryer Unit controls releases of waste constituents to the air from the unit to prevent releases which may adversely affect human health or the environment. The wastes processed in the Dryer Unit are primarily shredded and granulated materials such as paint filters, dry cleaning cartridges, wooden pallets, plastic containers, and used personal protective equipment. Some of this material may be contaminated with organic solvents. Organic vapors released from these solvents during processing are removed from the Dryer Unit by a vacuum pump, and travel into a condenser which condenses some of the vapors to a liquid which is collected in an accumulation vessel. The uncondensed vapors go through the accumulation vessel into tank V-18, which is partially full of water. These

vapors enter the tank under the water level so the vapors condense in the water. The water in the tank is circulated through a venturi tube which pulls a vacuum on the accumulator tank, the Drier Unit's main chamber, and the condenser, and draws the vapors into V-18. Tank V-18 is vented through a water filled trap which condenses organic vapors that may pass through the tank. Neither the Drier Unit's chamber, the condenser, nor the accumulation vessel are vented, so no vapors can escape from them. A schematic showing the above process is contained in Figure M.2 in Appendix M-A.

The primary potential pathway for particulates and other airborne contaminants to enter the air occurs when the solids are fed to or removed from the Dryer Unit. The quantity of such pollutants that might be released to the air during loading would be very small since the solids are kept in a closed container until they are fed in to the Drier Unit, and there is a vapor recovery system at the loading point to remove airborne contaminants from ambient air.

The amount of contaminants that might be released to the air during unloading would also be very small since much of the

contaminants which could become airborne during a loading process are removed from the waste during the drying process.

The persons most likely to be exposed to potential air contaminants are the workers inside the room where the Dryer Unit is located. The potential for contaminants reaching persons outside this room or outside the facility, if any such potential exists at all, is significantly reduced by the unit's emission controls. A study was performed in July of 1991 at HRIW to determine the potential for exposure of workers in the vicinity of the Dryer Unit to organic solvent vapors. The results of this study showed that a worker dumping dry cleaning waste into the Dryer Unit could potentially be exposed to air containing very small quantities (less than 100 parts per million) of dry cleaning solvents. The study also monitored the area around the Dryer Unit while it was being unloaded and found trace quantities of dry cleaning solvents. These quantities were well below the OSHA permissible exposure levels for workers without respiratory protection. A summary of the monitoring data is contained in Appendix M-C, USPCI Air Monitoring Data.

M-2c(2)(d) **<u>Monitoring and Inspections</u>: 264.602**

The Dryer Unit and the surrounding area will be visually inspected each operating day for evidence of leaks or spills in accordance with the facility inspection plan described in Section F, Inspection Plan. The secondary containment system will also be inspected each operating day for evidence of cracks or breaches of containment in accordance with this inspection plan.

M-2d Dispersing Unit

M-2d(1) Purpose

The Dispersing Unit is used to blend various wastes and solvents into a fuel, to facilitate storage or transportation, or for other waste management purposes. It consists mainly of a tank with a mixing blade inside, attached to a container dumping assembly. These components are shown in Figure M.8, 1129 Gallon Dispersing Tank; Figure M.9, 40/50/60 VSM 18 Disperser; and Figure M.10, Barrel Dump Assembly; in Appendix M-A (Drawing PD 12/3/91, 1129 Gallon Dispersing Tank; Drawing DL34055, 40/50/60 VSM 18 Disperser; FCF-Bowers; and Drawing, Barrel Dump Assembly; PD 1/25/91). The operation of Dispersing Unit is described below.

Wastes and other materials are placed in the Dispersing Unit Tank by pumping from tanks, containers, or trucks; or by dumping from containers using the container dumper. The container dumper automatically tips the container so that the loose contents pour in a chute and into the Dispersing Unit Tank. The dumper also has the capability to spray high pressure solvent, (e.g. diesel fuel), into the container while it is tipped in order to enhance

removal of the waste. The material in the Dispersing Unit Tank is blended and mixed by a rotating mixing blade and, if necessary, by circulating the material through a gear pump, and/or a small shredding device. The blended material is then pumped to tanks or containers for further blending, for transportation, and/or for storage. Figure M.11. P&ID Process Areas (Drawing 665300-4-W404F, P&ID Process Areas, FD) schematically shows the Dispersing Unit and its associated piping. Further information on the Dispersing Unit hardware may be found in Appendix M-E, Operating Manuals: Dispersing Unit.

Among the materials processed in the Dispersing Unit are solids and liquids such as waste solvents and paint, ground paint filters, dry cleaning cartridges, pallets, and containers.

The Dispersing Unit is constructed primarily of carbon steel, and the dimensions of its components are shown in Figures M.8, M.9, and M.10. The unit is located in the Process Area at HRIW as illustrated in Figure M.1.

M-2d(2) Dispersing Unit compliance with applicable hazardous waste treatment and storage standards

The major component of the Dispersing Unit is a tank in which hazardous waste and other materials are mixed, so 40 CFR 264 Subpart J standards for treatment and storage of hazardous waste in tanks apply to the Dispersing Unit. The Dispersing Unit's compliance with hazardous waste tank regulations is discussed below.

M-2d(2)(a) Description of Tank System: 270.16(a), (b), and (e), 264.192 (a)

The purpose of the following discussion is to describe the operation of the Dispersing Unit Tank at HRIW. A certified assessment of this tank by an independent, qualified, registered, professional engineer as required by 40 CFR 264.192(a) is presented in Appendix E-A, Tank System Assessments, of Section E, Tank Systems. The tank system assessments include secondary containment calculations and certifications, compatibility statements, and tank assessment field notes. The Dispersing Unit Tank drawing is provided in Appendix E-B of Section E.

Piping and instrumentation diagrams, and process flow diagrams for the Dispersing Unit are presented in Section N, Air Emissions. Figure M-8 shows the dimensions of the Dispersing Unit Tank. The working capacity of the Dispersing Unit Tank, V-26, is 1,129 gallons.

The Dispersing Unit is located on top of a concrete secondary containment pad that is sloped to a collection area. This design ensures that the external shell of the tank and any external metal components of the tank system will not be in contact with soil or standing water; therefore, the requirements of 40 CFR 264.192 (a)(3) (corrosion expert assessment) are not applicable. As required by 40 CFR 264.193 (c)(4), any accumulated precipitation that gathers in the secondary containment system after a storm is removed within twenty-four (24) hours of detection, or in as timely a manner as possible.

M-2d(2)(b) **Operational Practices: 270.16(c), (i), (j), 264.194, 264.198, 264.199, 264.195**

The following information is supplied to meet the specific requirements of regulations promulgated under RCRA regarding tank operating practices.

M-2d(2)(b)(1) **General Operating Requirements: 270.16(i), 264.194**

Any material that could cause the Dispersing Unit Tank, or its ancillary equipment or secondary containment system to fail (i.e., rupture, leak, etc.) will not be designated for management in the Dispersing Unit tank system. Assessments for compatibilities of wastes with the Dispersing Unit tank system materials are presented in Appendix E-A of Section E, Tank Systems.

HRIW will use the appropriate controls and practices to prevent spills and overflows from the Dispersing Unit Tank. Spill prevention controls include check valves, dry disconnect couplings, and secondary containment around the unit. Overfill prevention controls include level sensing devices, high level alarms, automatic shutoff of the drum dumper, visual inspections

during transfer, and maintenance of adequate freeboard. The Dispersing Unit has a manual gauging port for overflow protection.

M-2d(2)(b)(2) **Description of Feed Systems, Safety Cutoff, Bypass Systems, and Pressure Controls: 270.16 (c)**

A description of the feed systems, safety cutoff, bypass systems, and pressure controls is provided below for the Dispersing Unit.

M-2d(2)(b)(2)(a) **Feed Systems and Safety Cutoff**

Level detection systems on the Dispersing Unit Tank are checked each operating day material transfer to or from this tank takes place. Check valves are present as needed within the system to prevent reversal of flow.

M-2d(2)(b)(2)(b) **Pressure Controls**

Pressure controls are not necessary for the Dispersing Unit tank since it is an atmospheric tank.

M-2d(2)(b)(3) **Special Requirements for Handling Incompatible, Ignitable, or Reactive Waste: 270.16 (j), 264.198, 264.199**

Wastes exhibiting the characteristic of reactivity will not be placed in the Dispersing Unit. The Dispersing Unit will comply with the requirements for the maintenance of protective distances between the waste management area and any adjoining property lines as outlined in the National Fire Protection Association (NFPA) "Flammable and Combustible Liquids Code". Smoking will not be permitted in the vicinity of the Dispersing Unit.

The procedures outlined in the Waste Analysis Plan (WAP), found in Section C, will be followed to ensure that no incompatible wastes or incompatible waste and materials are placed in the Dispersing Unit. Additionally, hazardous waste will not be placed in the unit if it previously held an incompatible waste or material unless compliance with 40 CFR 264.17(b) is demonstrated. Compliance with 40 CFR 264.17(b) will be documented as described in Section J, Closure Plan. More discussion on procedures for handling ignitable, incompatible, or reactive waste is contained in Section G, Procedures to Prevent Hazards.

M-2d(2)(b)(4) Inspections: 264.195

The inspection schedule for tank systems, including the Dispersing Unit tank system, is provided in Section F, Inspection Plan. HRIW will document the results of these inspections in the operating record to be kept at the facility.

M-2d(2)(b)(5) Contingency Measures: 264.196

The procedures for responding to a situation where leaking or unfit-for-use tank systems are discovered is discussed in the Section H, Contingency/Emergency Plan. If a leak or spill occurs from the Dispersing Unit Tank then HRIW will comply with the applicable requirements listed in 40 CFR 264.196.

M-2d(2)(c) **Containment and Detection of Releases: 264.193, 270.16(g)**

The secondary containment system for the Dispersing Unit Tank has been designed, installed, and is operated to prevent migration of wastes or accumulated liquid to the environment. The containment system provides for the detection of and collection of releases and accumulated liquids; accumulated liquids will be removed from containment systems within 24 hours or as soon as is practicable.

The secondary containment system for the Dispersing Unit Tank consists of a concrete slab surrounded with a concrete dike. The containment system for the Process Area is sloped toward the center to facilitate detection and removal of any potential released material or other liquid. Accumulated liquids will be removed and managed appropriately. The secondary containment system has been designed to have sufficient structural strength and thickness to minimize the potential of failure owing to pressure gradients, physical contact with waste, climatic conditions, or the stress of daily operations. Additionally, the foundations will provide resistance to pressure gradients above and below the system and will minimize the potential for failure due to settlement, compression, or uplift (see tank

certifications presented in Appendix E-A of Section E, Tank Systems).

The Dispersing Unit containment area is coated with a sealant to protect against chemical attack of the concrete surface. The containment area has been designed to completely underlay the tank, and to cover surrounding earth most likely to come into contact with a release of waste (i.e., capable of preventing lateral and vertical migration).

The Dispersing Unit containment area is inspected each operating day for the presence of liquids. Inspections will enable facility personnel to determine if failure of the tank or the containment structure has occurred. The Dispersing Unit Tank is elevated and is visually inspected for leaks.

Accumulated liquids collected in the secondary containment system will be removed within 24 hours or as soon as practical (e.g., by using vacuum truck, portable pump, etc.), and managed according to the procedures outlined in the Waste Analysis Plan in Section C, Waste Characteristization.

Ancillary equipment (e.g., pumps) associated with the Dispersing Unit tank system has been located within the tank systems' secondary containment areas, within secondary containment areas for pumps, or within the containment area of an associated loading or unloading area. Therefore, sufficient secondary containment is provided for the ancillary equipment. All piping utilized for transfer of hazardous waste to and from the Dispersing Unit is above ground, welded, and inspected each operating day for leaks or damage.

Drawings that provide details for the secondary containment areas are provided in Section D, Use and Management of Containers, Appendix D-A. The secondary containment system for the Processing Area has been designed to provide sufficient capacity to contain 100 percent of the capacity of the largest tank within its boundaries as well as enough containment volume to contain the amount of precipitation that would normally blow under the roof during a twenty-four hour, twenty-five year rainfall event. Also, each containment area has been designed and is operated in a manner to prevent run-on. The Dispersing Unit is located under a roof with attached walls that come partially to the ground to reduce precipitation ingress. The secondary containment capacity calculations for tanks in the Processing Area are provided in

Appendix E-A of Section E, Tank Systems; the results of these calculations show the secondary containment capacity in the Processing Area is greater than required for the tanks in the area, including the Dispersing Unit Tank.

M-2d(3) <u>Dispersing Unit compliance with standards for emissions or releases</u>: 264.601 and 264.602 standards

M-2d(3)(a) <u>Prevention of releases to the subsurface environment or groundwater</u>: 264.601 (a)

Releases of waste from the Dispersing Unit to the subsurface or groundwater are extremely unlikely for these reasons.

(1) The Dispersing Unit is located in a secondary containment area which meets the requirements of 40 CFR 264 Subparts I and J. The containment has sufficient volume to contain a spill of the entire contents of the unit, and is coated with a material that is compatible with the wastes processed in the unit. Secondary containment volume calculations are included in appendices of Section D, Use and Management of Containers, and Section E, Tank Systems.

(2) Various aspects of the condition of this unit and of the containment area are inspected each operating day or week, as described in Section F, Inspection Plan. Leaks or spills

that might be associated with this unit are cleaned up within 24 hours of their discovery, or as soon as it is safe and practicable.

(3) The unit is located inside a large containment area, and is physically separated and removed from any direct contact with surface water, wetlands, or soil. The location of the facility relative to nearby bodies of water is shown in the topographic map in Section B, Facility Description.

(4) HRIW maintains a Contingency/Emergency Plan for use in situations such as a major spill, a fire, or an explosion. This plan incorporates measures to mitigate releases to the environment, and to protect human health and the environment from such releases.

M-2d(3)(b) **<u>Prevention of releases to surface water, wetlands or soil</u>: 264.601(b)**

Releases of waste from the Dispersing Unit to surface water, wetlands, or soil are extremely unlikely for the reasons stated in M-2d(3)(a).

M-2d(3)(c) **Prevention of releases to the air: 264.601(c)**

The design and operation of the Dispersing Unit controls releases of waste constituents to the air from the unit to prevent releases which may adversely affect human health or the environment.

The wastes processed in the Dispersing Unit often contain organic solvents. These solvents could potentially volatilize while being mixed in the unit. The Dispersing Unit Tank is covered with the exception of two small openings to prevent vapors from escaping. An opening in the cover exists where the shaft for the mixing blade extends down into the tank. The distance from the edge of this opening to the shaft is less than one quarter of an inch. There is a second opening in the top of the tank through which the chute from the container dumper extends. Vapors that exit through these openings are collected by an exhaust fan located on top of the dumper, are condensed by a demister, and the resulting liquid flows back to the tank.

The persons most likely to be exposed to potential air contaminants from this unit are HRIW employees who work in the

vicinity of the Dispersing Unit. The potential for contaminants reaching persons outside this area or outside the facility, if any such potential exists at all, is significantly reduced by the unit's emission controls. An exposure study was performed in August of 1991 at HRIW to determine the potential for exposure of workers in the Processing Area (where the Dispersing Unit is located) to organic solvent vapors. The air in this area was monitored for six different organic compounds. Of these six compounds only three were detected, and they were detected in trace quantities that were well below the OSHA permissible exposure levels for unprotected workers. A summary of this study is contained in Appendix M-C, USPCI Air Monitoring Data.

M-2d(3)(d) **Monitoring and Inspections: 264.602**

The Dispersing Unit and the surrounding area will be visually inspected each operating day for evidence of leaks or spills in accordance with the facility inspection plan described in Section F, Inspection Plan. The secondary containment system will also be inspected each operating day for evidence of cracks or breaches of containment in accordance with this inspection plan.

M-2e Drum Washing Unit

M-2e(1) Purpose

The Drum Washing Unit is used to wash residues from emptied containers. Some of these containers will not meet the criterion for empty containers stated in 40 CFR 261.7. The operation of the Drum Washing Unit is described below.

Containers which have had their contents removed are placed right side up on a conveyor which leads to the Drum Washing Unit. When the containers enter the unit they are lifted up and placed on their side, and then inverted. A chain then pulls the container to the first wash station where a wash wand extends up into the container and sprays washing fluid at high pressure to remove residues in the container. The wash fluid and residues drain out of the container into the wash fluid reservoir. The wash wand then retracts and the container is pulled by a chain to a second station where the washing process is repeated. The container is then pulled to a third station where a wand extends in to the container and it is washed again, this time with the container tipped slightly to allow the fluid to more completely drain out.

The container is then set upright by the unit and it is placed on a conveyor which carries it away from the washer.

Containers of various shapes and sizes are processed through the Drum Washing Unit. Most of the hazardous waste containers entering the washer meet the definition of empty as defined in 40 CFR 261.7 with the possible exception of those containers which held acutely hazardous waste. The Drum Washing Unit is designed to further empty all containers so they will, if they do not already, meet the definition of empty as defined in 40 CFR 261.7. Thus, after they have been washed in the Drum Washing Unit nearly all of the containers are exempt from hazardous waste regulations. The drums which are washed are typically either disposed of, reused, or reconditioned for reuse. Drums may be crushed before they are shipped off-site for disposal.

The Drum Washing Unit is constructed primarily of carbon steel and is located in the Processing Area at HRIW as shown in Figure M.1 in Appendix M-A. Figure M.12, Triple Rinse - HRI (Drawing D990043, Triple Rinse - HRI; BRI, Inc.) shows the dimensions and the configuration of the unit.

M-2e(2) **Drum Washing Unit compliance with standards for emissions or releases: 264.601 and 264.602**

M-2e(2)(a) **Prevention of releases to the subsurface environment or groundwater: 264.601 (a)**

Releases of waste from the Drum Washing Unit to the subsurface or groundwater are extremely unlikely for these reasons.

(1) The Drum Washing Unit is located in a secondary containment area which meets the requirements of 40 CFR 264 Subparts I and J. The containment has sufficient volume to contain a spill of the entire contents of the unit, and is coated with a material that is compatible with the wastes processed in the unit. Secondary containment volume calculations are included in appendices of Section D, Use and Management of Containers, and Section E, Tank Systems.

(2) Various aspects of the condition of this unit and of the containment area are inspected each operating day or week, as described in Section F, Inspection Plan. Leaks or spills that might be associated with this unit are cleaned up within 24 hours of their discovery, or as soon as it is safe and practicable.

(3) The unit is located inside a large containment area, and is physically separated and removed from any surface water,

wetlands, or soil. The location of the facility relative to nearby bodies of water is shown in the topographic map in Section B, Facility Description.

(4) HRIW maintains a Contingency/Emergency Plan for use in situations such as a major spill, a fire, or an explosion. This plan incorporates measures to mitigate releases to the environment, and to protect human health and the environment from such releases.

M-2e(2)(b) **Prevention of releases to surface water, wetlands or soil: 264.601(b)**

Releases of waste from the Drum Washing Unit to surface water, wetlands, or soil are extremely unlikely for the reasons stated in M-2e(2)(a).

M-2e(2)(c) **Prevention of releases to the air: 264.601(c)**

The design and operation of the Drum Washer Unit controls releases of waste constituents to the air from the unit to prevent releases which may adversely affect human health or the environment. The containers processed in the Drum Washing Unit have been processed to remove the bulk of the waste they

contained. Thus, the containers have only small quantities of waste remaining in them that can volatilize into the air. Furthermore, the washing apparatus is enclosed except for openings on either end for the containers to enter and exit. Also, the washing solvent used is typically diesel which is relatively non-volatile and therefore is unlikely to emit significant quantities of vapors. HRIW is investigating methods to further reduce the potential for releases of airborne contaminants from the washer.

The persons most likely to be exposed to potential air contaminants from this unit are HRIW employees who work in the vicinity of the Drum Washing Unit (i.e., in the Processing Area). The potential for contaminants reaching persons outside this area or outside the facility, if any such potential exists at all, is much lower.

M-2e(2)(d) **Monitoring and Inspections: 264.602**

The Drum Washing Unit and the surrounding area will be visually inspected each operating day for evidence of leaks or spills in accordance with the facility inspection plan described in Section F, Inspection Plan. The secondary containment system will also be inspected each operating day for evidence of cracks or breaches of containment in accordance with this inspection plan.

M-3 Hydrologic, Geologic, and Meteorologic Assessments

Appendix M-F, Draft Preliminary Assessment Report for HRIW contains a preliminary meteorologic, hydrologic and geologic assessment of the site. This assessment was part of a draft preliminary assessment report done as part of a RCRA facility assessment at HRIW. Additional information on the meteorological conditions of the site is located in Section B, Facility Description.

Detailed hydrologic, geologic, and meteorologic assessments of the site are not appropriate for the types of miscellaneous units at HRIW. Furthermore, these miscellaneous units have been designed, constructed, and are operated in a manner to protect human health and the environment by controlling potential releases. In particular, these units are operated in such a manner to prevent releases that might have adverse effects on human health or the environment due to migration of waste constituents in ground water, the subsurface environment, surface water, wetlands, soil surface, or the air as detailed in section M-2 of this application.

M-4 Potential Pathways for Exposure

M-4a Shredder and Granulator Units

The primary potential pathway for exposure of humans or environmental receptors to hazardous constituents from the Shredder and Granulator Units is exposure of facility employees working in the vicinity of these units to organic vapors or other airborne contaminants associated with loading and unloading hazardous waste from the unit. The potential for this exposure is very small because the waste is kept in closed containers before it is loaded into and after it is unloaded from the units, and the units exhaust system is powerful enough to collect airborne contaminants from the loading and unloading areas and exhaust them through a baghouse and a carbon filter. Also, the employees in the room containing the Shredder and Granulator Units wear protective equipment and clothing to prevent such exposure. A study was performed at HRIW in July of 1991 to quantify the exposure of workers to organic vapors in the Shredder and Granulator Unit room. The results of this study are summarized in Appendix M-C. The emission controls discussed above prevent exposure of personnel or other receptors outside of the room.

The Shredder and Granulator Units have been located within secondary containment to significantly reduce the possibility of any migration of hazardous waste or constituents into the ground or to surface waters.

M-4b Drum Scraper Unit

The primary potential pathway for exposure of humans or environmental receptors to hazardous constituents from the Drum Scraper Unit is exposure to vapors released to the air during the period that the drums of hazardous waste are open before and after they are processed in the Drum Scraper Unit, and to vapors released from the container while it is being processed in this unit. The amount of vapors released during the first case is very small since the drums are open for only a short period before and after they are processed in the unit. The amount of organic vapors released during the second case is also very small since the cylinder sleeve that extends into the container fits snugly enough, although it does not make an airtight seal, to keep most of the vapors from escaping. Because of the small quantity of vapors released, the only potential receptors would be facility employees who might be working next to the unit. These employees wear protective equipment and clothing to prevent them from being exposed to vapors that may be present at hazardous levels. A study was performed in August of 1991 at HRIW to determine the potential for exposure of workers in the Processing Area (where the Drum Scraper Unit is located) to

organic solvent vapors. The air in this area was monitored for six different organic compounds. Of these six compounds only three were detected, and they were detected in trace quantities that were well below the Occupational Safety and Health Administration (OSHA) permissible exposure levels for unprotected workers. A summary of the results of this study is contained in Appendix M-C. The emission controls discussed above prevent the exposure of receptors outside the process area to significant amounts of hazardous constituents.

The Drum Scraper Unit has been located within secondary containment to significantly reduce the possibility of any migration of hazardous waste or constituents into the ground or to surface waters.

M-4c Dryer Unit

The primary potential pathway for exposure of humans or environmental receptors to hazardous constituents from the Dryer Unit is exposure of plant workers to organic vapors or other airborne contaminants such as particulates associated with loading and unloading hazardous waste into and from the unit. The potential for this exposure is very small because the waste is kept in closed containers before and after it is processed in the unit, and it is normally solid material which is not likely to emit significant amounts of vapor during simple handling. The employees in the building containing the Dryer Unit wear protective equipment and clothing to prevent exposure to airborne contaminants. Since the unit is located inside a room within a building the potential for exposure would be limited to personnel within that room. A study was performed at HRIW in July of 1991 to quantify the exposure of workers in the Dryer Unit room to organic vapors. The results of this study are summarized in Appendix M-C. The emission controls discussed above prevent the exposure of receptors outside of the room to significant amounts of hazardous constituents.

The Dryer Unit has been located within secondary containment to significantly reduce the possibility of any migration of hazardous waste or constituents into the ground or to surface waters.

M-4d <u>Dispersing Unit</u>

The primary potential pathway for exposure of humans or environmental receptors to hazardous constituents from the Dispersing Unit is exposure of facility employees working in the vicinity of the unit to organic vapors and other airborne contaminants released from the blending of materials in the unit. The potential for significant exposure is small since the Dispersing Unit Tank is covered except for two openings, and vapors that exit through these openings are collected by an exhaust fan, are condensed by a demister, and the resulting condensate flows back to the tank. Contaminant levels emitted to the air are very small, and do not present a potential for exposure to receptors outside the area of the unit. Data from air contaminant monitoring in the Processing Area is discussed in section M-2, and a summary of these data is presented in Appendix M-C, USPCI Air Monitoring Data. PPE is utilized by employees operating this unit to prevent potential exposure to hazardous emissions. The emission controls discussed above prevent the exposure of receptors outside the process area to significant amounts of hazardous constituents.

The Dispersing Unit has been located within secondary containment to significantly reduce the possibility of any migration of hazardous waste or constituents into the ground or to surface waters.

M-4e <u>Drum Washing Unit</u>

The primary potential pathway for exposure of humans or environmental receptors to hazardous emissions from the Drum Washing Unit is through exposure of facility employees to washing solvent vapors released during the washing operation. The potential for exposure to these vapors is small because the washing solvent (usually diesel) is not prone to vaporize and the washing operation is enclosed except for openings on either end of the unit for containers to enter and exit. The Drum Washing Unit is automated, which minimizes the need for an operator to stand next to the unit where the potential for exposure would be greatest. Workers in this area wear protective equipment and clothing to prevent potential exposure to hazardous emissions. The emissions controls discussed above prevent the exposure of receptors outside the Process Area to significant amounts of hazardous constituents.

The Drum Washing Unit has been located within secondary containment to significantly reduce the possibility of any migration of hazardous waste or constituents into the ground or to surface waters.

M-5 Effectiveness of Treatment

M-5a Shredder and Granulator Units

The Shredder and Granulator Units, in combination, are able to reduce large pieces of solid materials to particles less than one quarter of an inch in diameter. Size reduction performed by the Shredder and/or Granulator Unit(s) makes the material amenable for further treatment, storage, or recovery.

The technologies used by the Shredder and Granulator Units are well established and in common use in the recycling and waste disposal industries. No reports on demonstrations of the effectiveness of the same or similar treatment technologies demonstrated for a RCRA research and development permit are available.

M-5b <u>Drum Scraper Unit</u>

The Drum Scraper Unit is able to mobilize solidified, non-dumpable waste within a drum to the extent that the majority of the waste can be dumped out of the drum by turning it upside down.

The technology used by the Drum Scraper Unit is established and in use in many industries. No reports on demonstrations of the effectiveness of the same or a similar treatment technology gathered under a RCRA research and development permit have been located.

M-5c <u>Drier Unit</u>

The Drier Unit vaporizes liquids from solid materials and sludges. Chlorinated solvents, when present in the material, may be reduced to less than three (3) percent chlorides. The Drier Unit is also able to remove water to the extent necessary for management under specific recovery programs at HRIW.

The technology used by the Drier Unit is standard evaporation technology, which is used by many industries. No reports on demonstrations of the effectiveness of the same or a similar treatment gathered under a RCRA research and development permit have been located.

M-5d <u>Dispersing Unit</u>

The Dispersing Unit is capable of mixing solid and liquid materials to form a pumpable liquid, with no particulates generally no larger than one quarter of an inch in diameter, which is suitable as fuel for cement kilns.

The technology used in the Dispersing Unit is ordinary mixing and fluid transfer technology in common use throughout industry. No reports on demonstrations of the effectiveness of the same or a similar treatment gathered under a RCRA research and development permit are available.

M-5e <u>Drum Washing Unit</u>

The Drum Washing Unit is able to clean containers containing residues of waste to the extent that they meet the definition of empty as defined in 40 CFR 261.7, including containers which held acutely hazardous waste.

The technology used by the Drum Washing Unit is established container and liquid cleaning and handling technology. No reports on demonstrations of the effectiveness of the same or a similar treatment gathered under a RCRA research and development permit have been located.

APPENDIX M-A

SECTION M FIGURES M.2 Through M.12

Figure Description	Corresponding Drawing Number
M.2. P&ID New Process/Condensate Separator	Drawing 665300-4-W404A (FD)
M.3. Shredder/Granulator	Drawing (As built)
M.4. Shredder/Granulator	Drawing 50-57-03-001
M.5. 55 Gallon Drum Scraper	Drawing D-35-52-800
M.6. Motor Location and Specifications	Drawing D-43-10-6-100 (HRI, Inc.)
M.7. Model-FKM-3000-D-Mixer	Drawing 2106-P (Littleford)
M.8. 1129 Gallon Dispersing Tank	Drawing PD 12/3/91
M.9. 40/50/60 VSM 18 Disperser	Drawing DL34055 (FCF-Bowers)
M.10. Barrel Dump Assembly	Drawing PD 1/25/91
M.11. P&ID Process Areas	Drawing 665300-4-W404F (FD)
M.12. Triple Rinse, HRI	Drawing D990043 (BRI, Inc.)

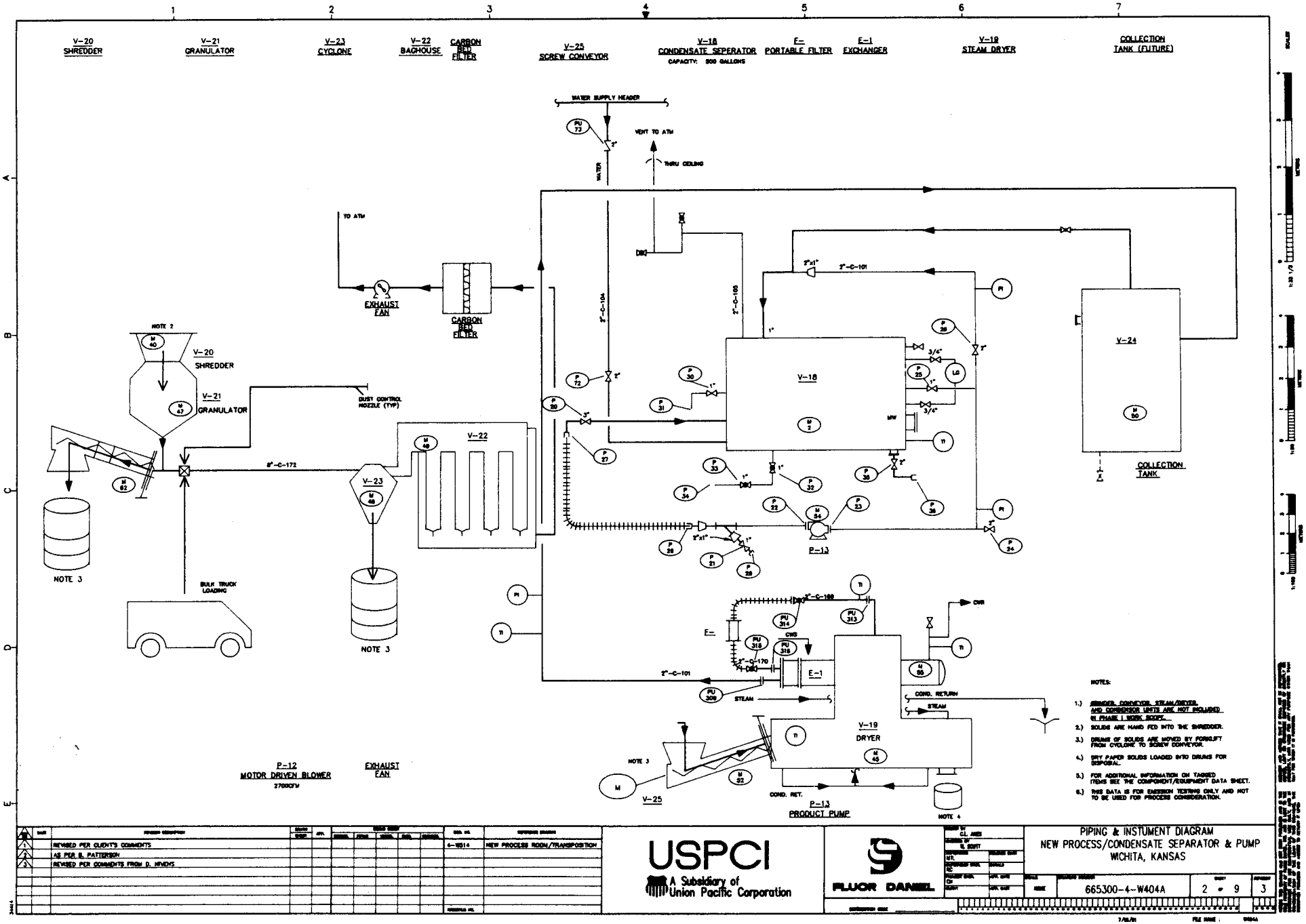

Figure M.2. P&ID New Process/Condensate Separator

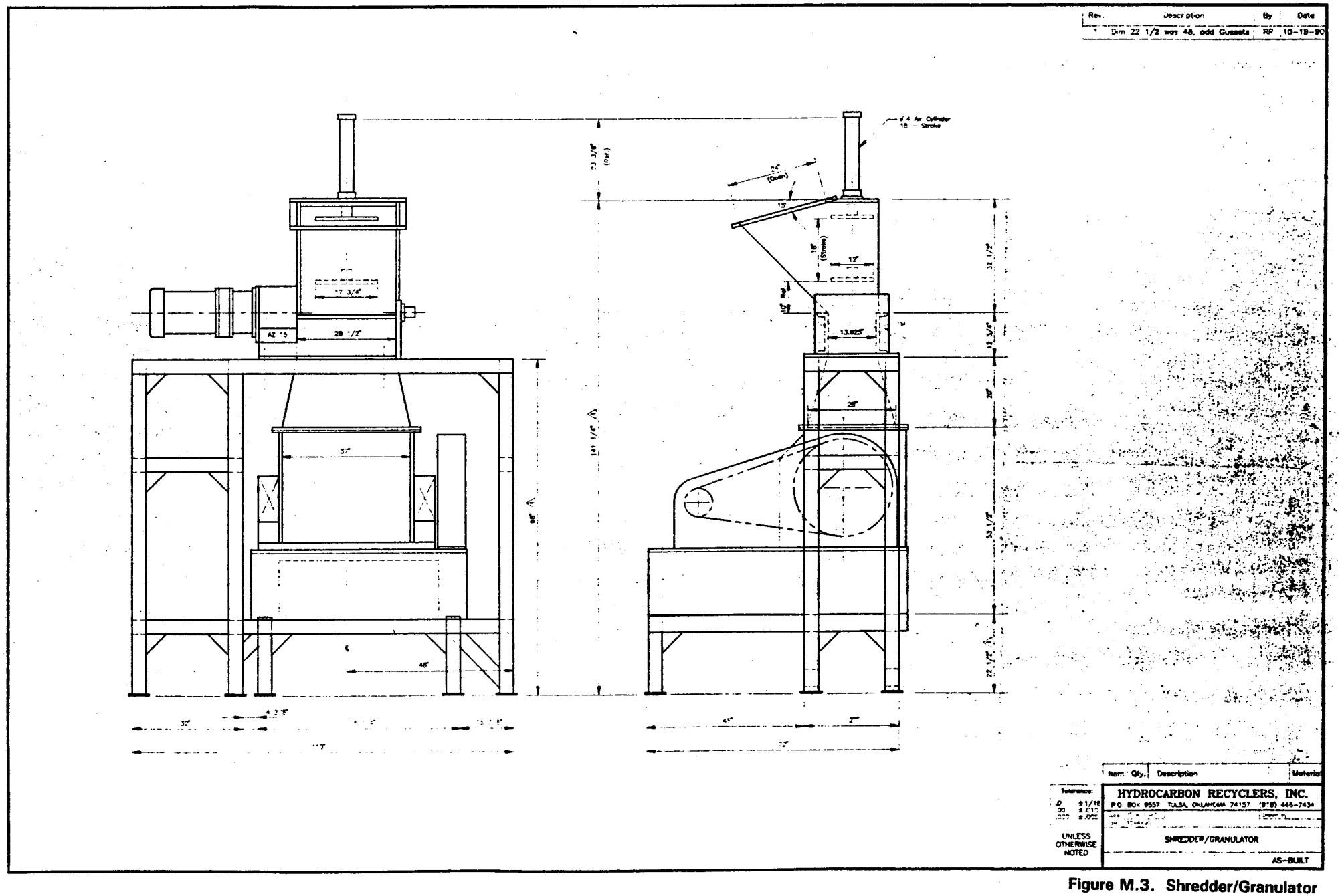

Figure M.3. Shredder/Granulator

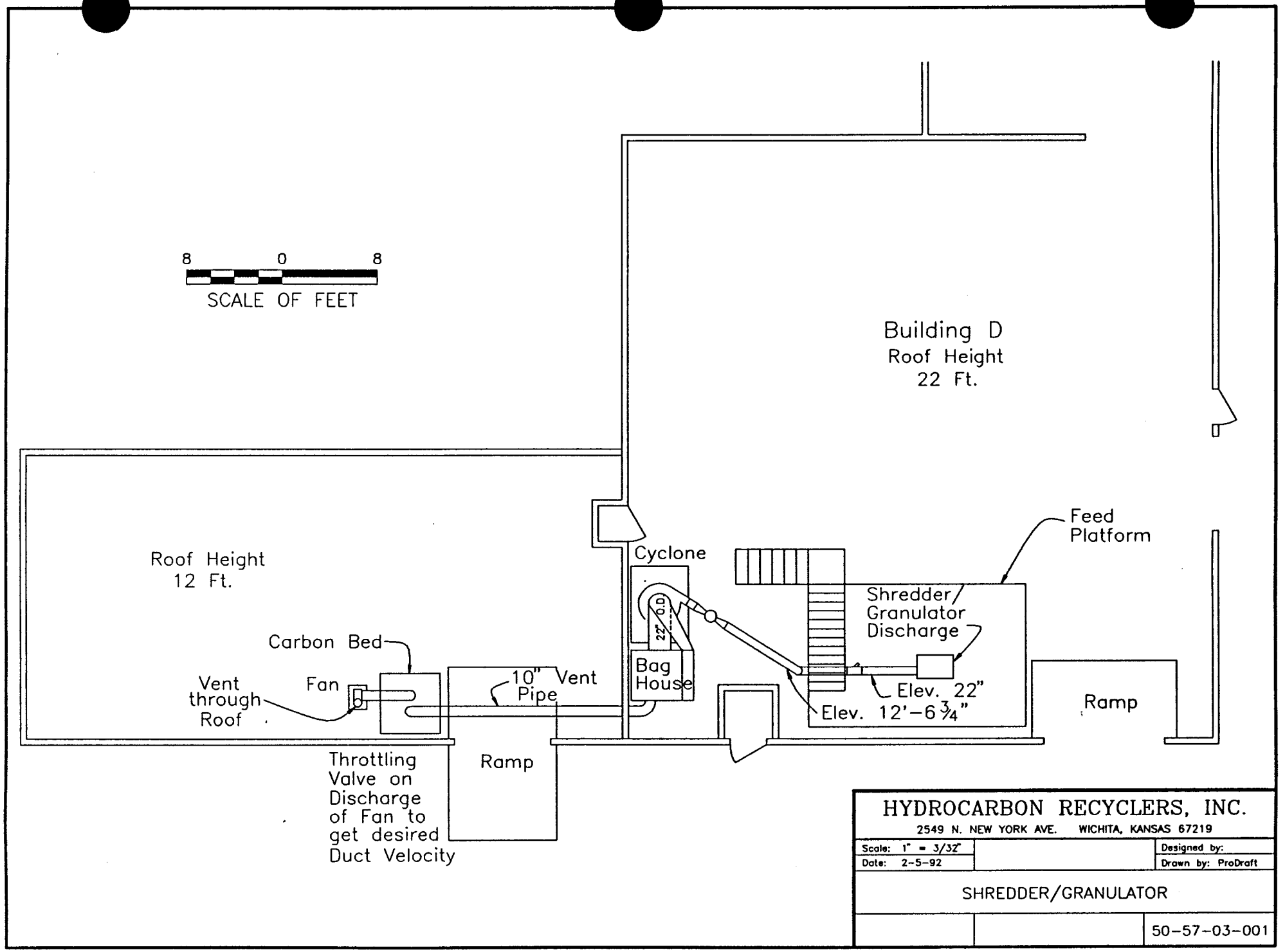

Figure M.4. Shredder/Granulator

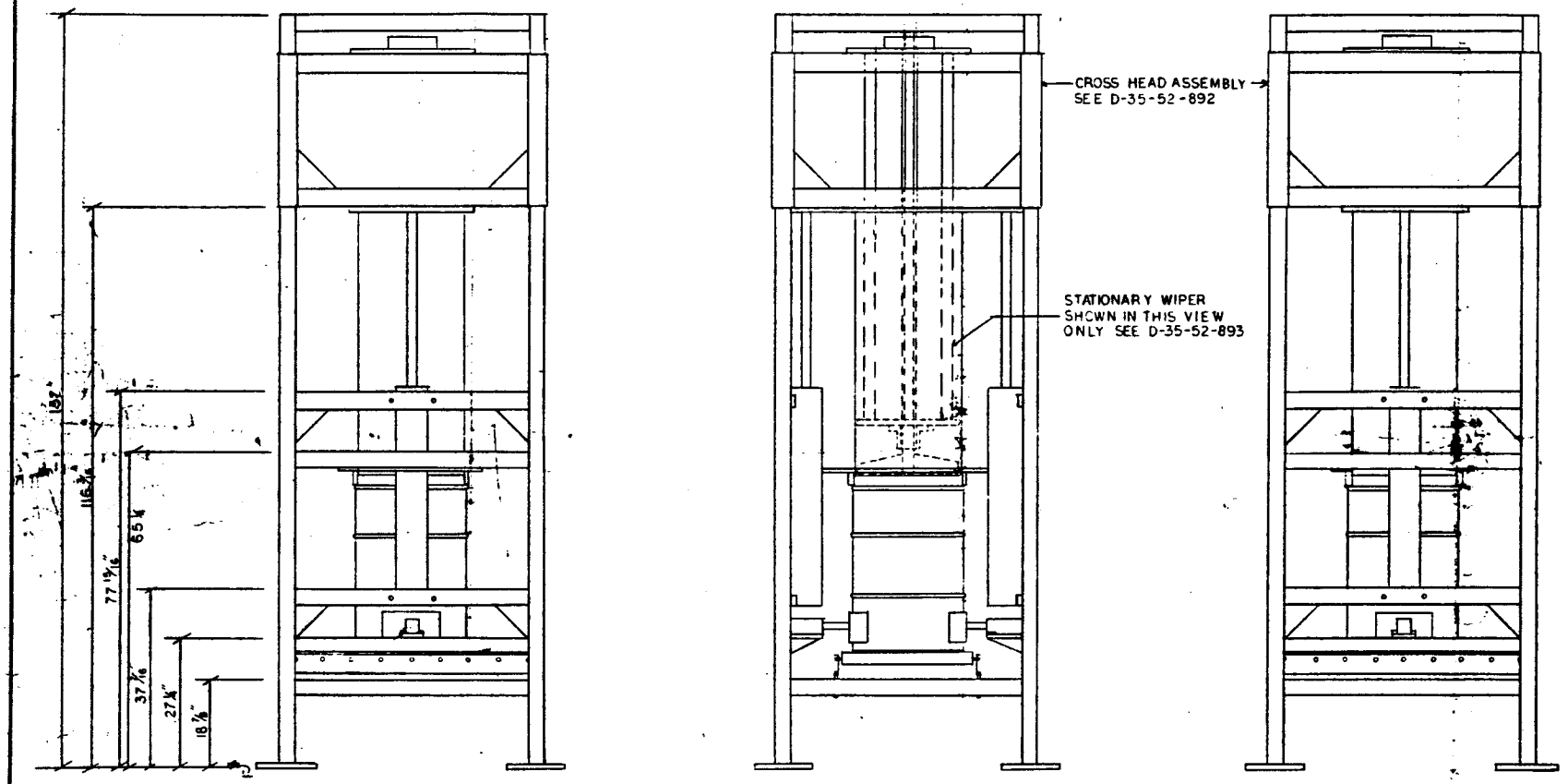

BILL OF MATERIAL SEE D-35-52-891

HYDROCARBON RECYCLERS INC.
WICHITA KANSAS

SCALE 1" = 1'		DRAWN BY DJR
DATE 2/26/89		

55 GALLON DRUM SCRAPER

D-35-52-890

Figure M.5. 55 Gallon Drum Scraper

Name	Note #1 Lincoln	Note #2 Leroy Somer	Note #3 Weg	Note #4 Baldor	Note #5 Teco	Note #6 U.S. Electric	Note #7 Teco	Note #8 Leeson	Note #9 Marathon
HP	10	10	60	10	15	20	7.5	3/4	15
Frame	215TC	215TC	364T	215TC	284T	256T	213T	F56C	254T
S.F.	1.15	1.15	1.15	1.00	1.15	1.00	1.15	1.00	1.15
RPM	1745	1720	1775	1750	1165	1755	1745	–	1760
Amps	26/13	29.4/13.5	143/71	27/13.5	40/20	50.6/25.3	19/9.5	3/1.5	40/20

Notes:

Drum scraper power unit located in front of M.C.C. room. See Note #6.

Drum dumper power unit located in front of M.C.C. room. See Note #7.

Cat Pump on dumper is to be located inside D-Building. See Note #9.

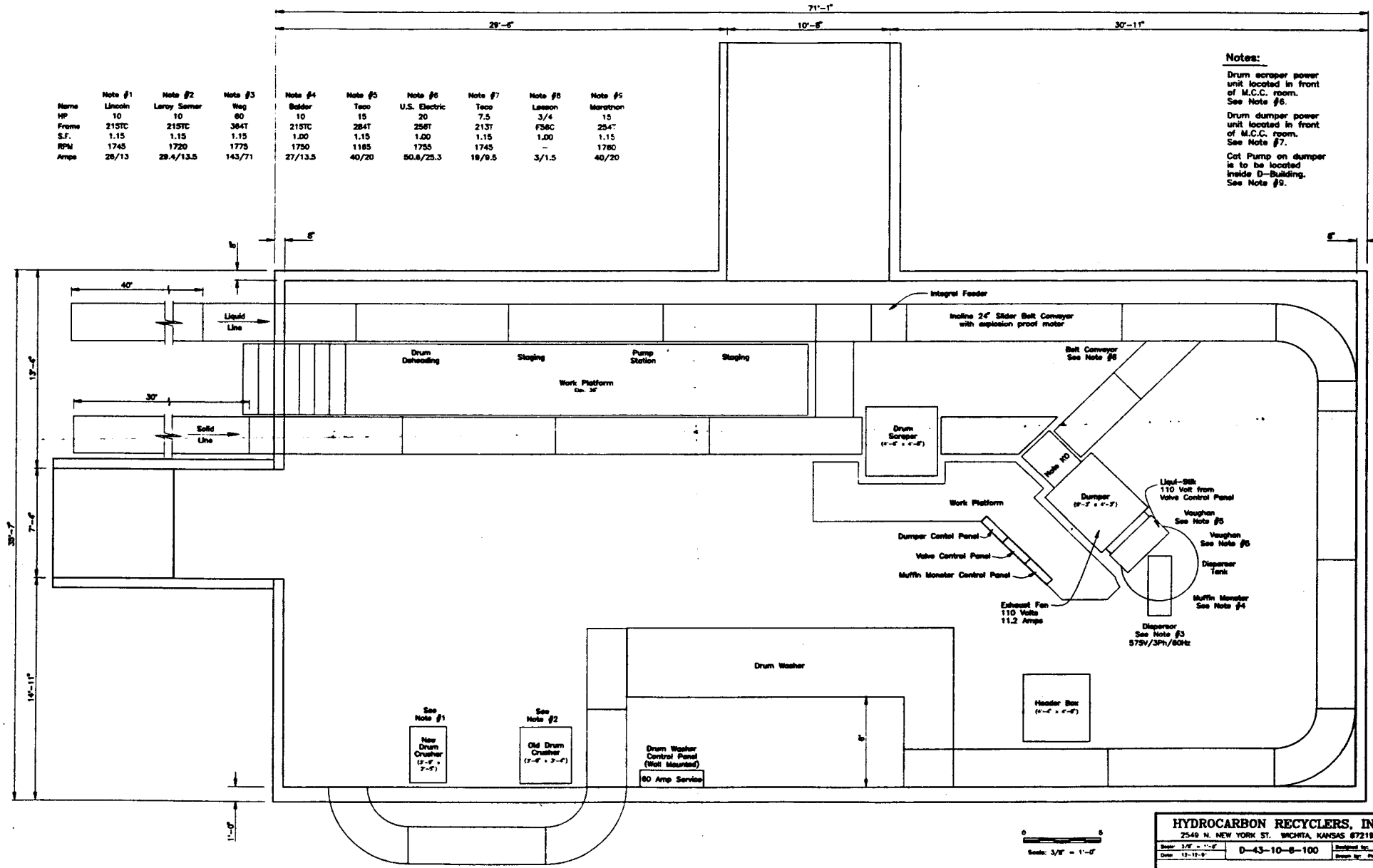

HYDROCARBON RECYCLERS, INC.
2549 N. NEW YORK ST. WICHITA, KANSAS 67219

Scale: 3/8" = 1'-0" | Date: 12-12-9' | D-43-10-6-100 | Designed by: BJR | Drawn by: ProDraft

Motor Location and Specifications

M.6. Motor Location and Specifications

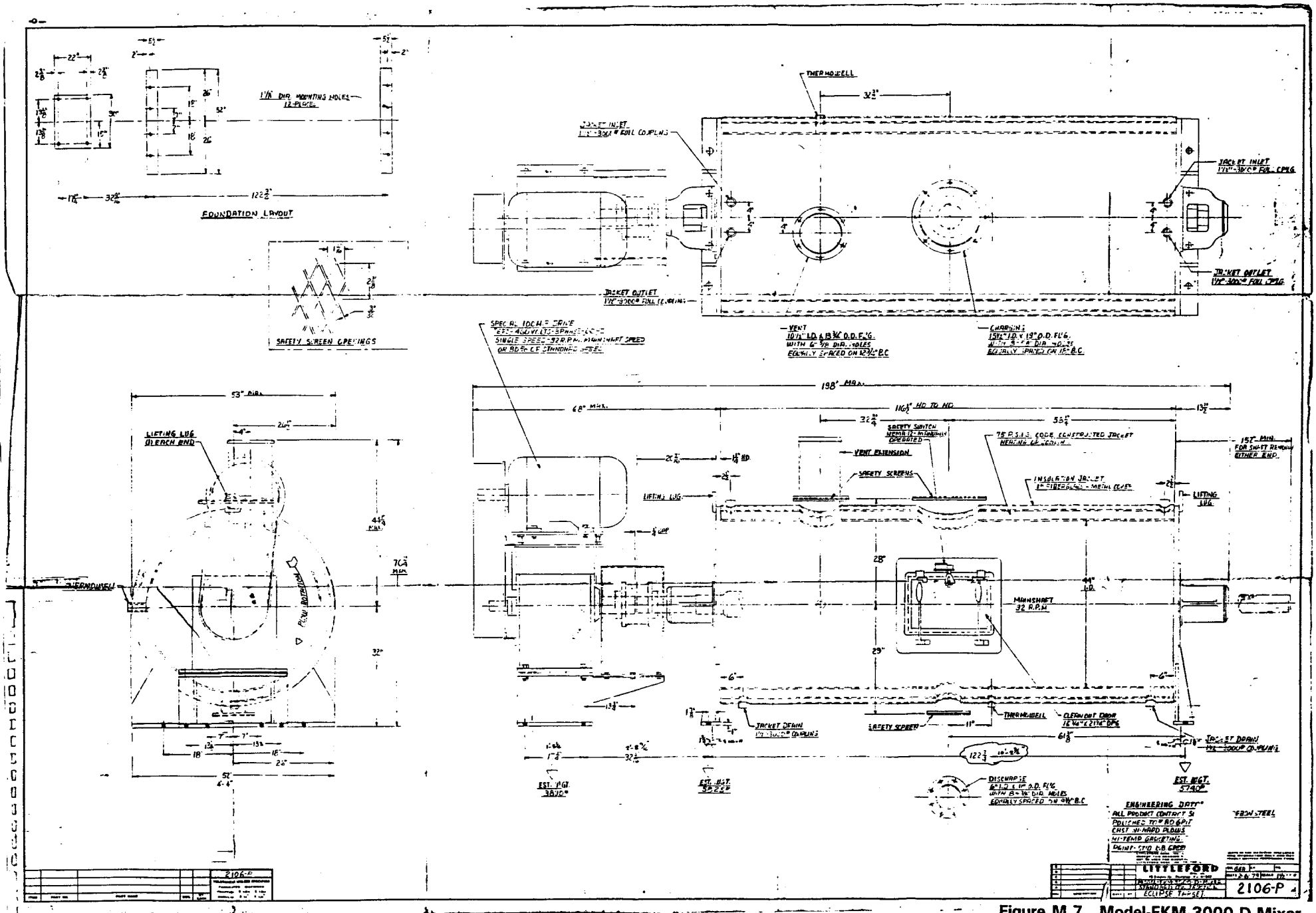

Figure M.7. Model-FKM-3000-D-Mixer

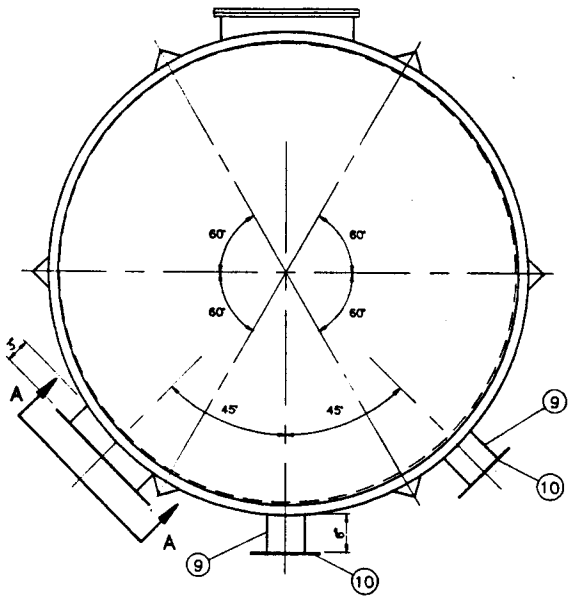

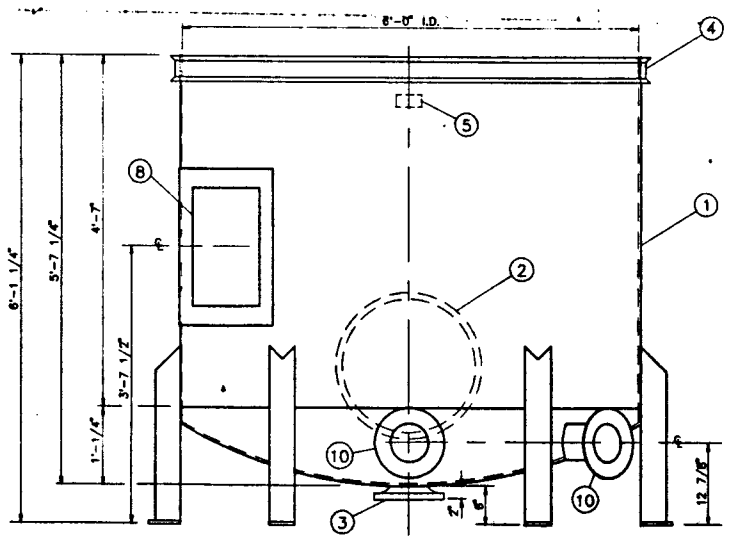

Specifications:

1.) Tank Head and Shell to be 5/16" C.S. L SA-36.
2.) Tank to be Built per API 620 and replace API 620 Sec. 2 on Materials with API 650 Appendix A
3.) Primer w/1-coat Red Oxide Primer.

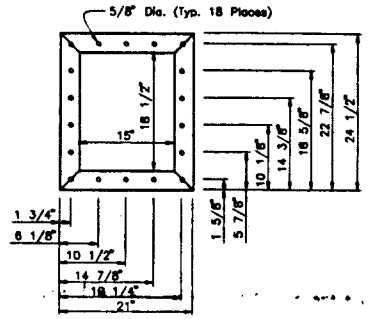

Section A-A

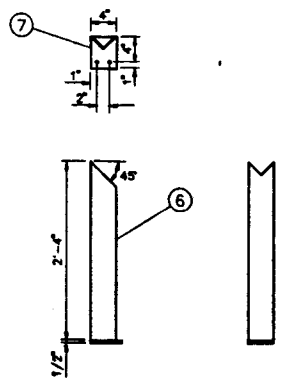

Leg Assembly

Typ. 6 Places

Item	Qty.	Description
10	2	6" 150 Lb. RFSO
9	2	6" Schedule 40 Pipe
8	1	5" x 3" x 1/4" Angle Section A-A
7	6	4" x 4" x 1/2" PL w/ 1-3/4" ø EYE BOLT
6	6	3" x 3" x 1/4" Angle 28" Long
5	1	API Name Plate
4	1	C4x5 4 Lbs.
3	1	6" 150 Lb. RFWN
2	1	Chandler Part No. 1010 21"ø Manway
1	1	5/16" Shell 6'-0" I.D. S.A. 36 4'-3" Long

HYDROCARBON RECYCLERS, INC.
2549 N. NEW YORK ST. WICHITA, KANSAS 67219

Scale: 1" = 1'-0" | Designed by:
Date: 12-3-91 | Drawn by: ProDraft

1,129 GALLON DISPERSOR TANK

V-26

W. DOUGLAS STEADMAN LICENSED 7187 KANSAS PROFESSIONAL ENGINEER
Dec. 10, 1991

Figure M.8. 1129 Gallon Dispersing Tank

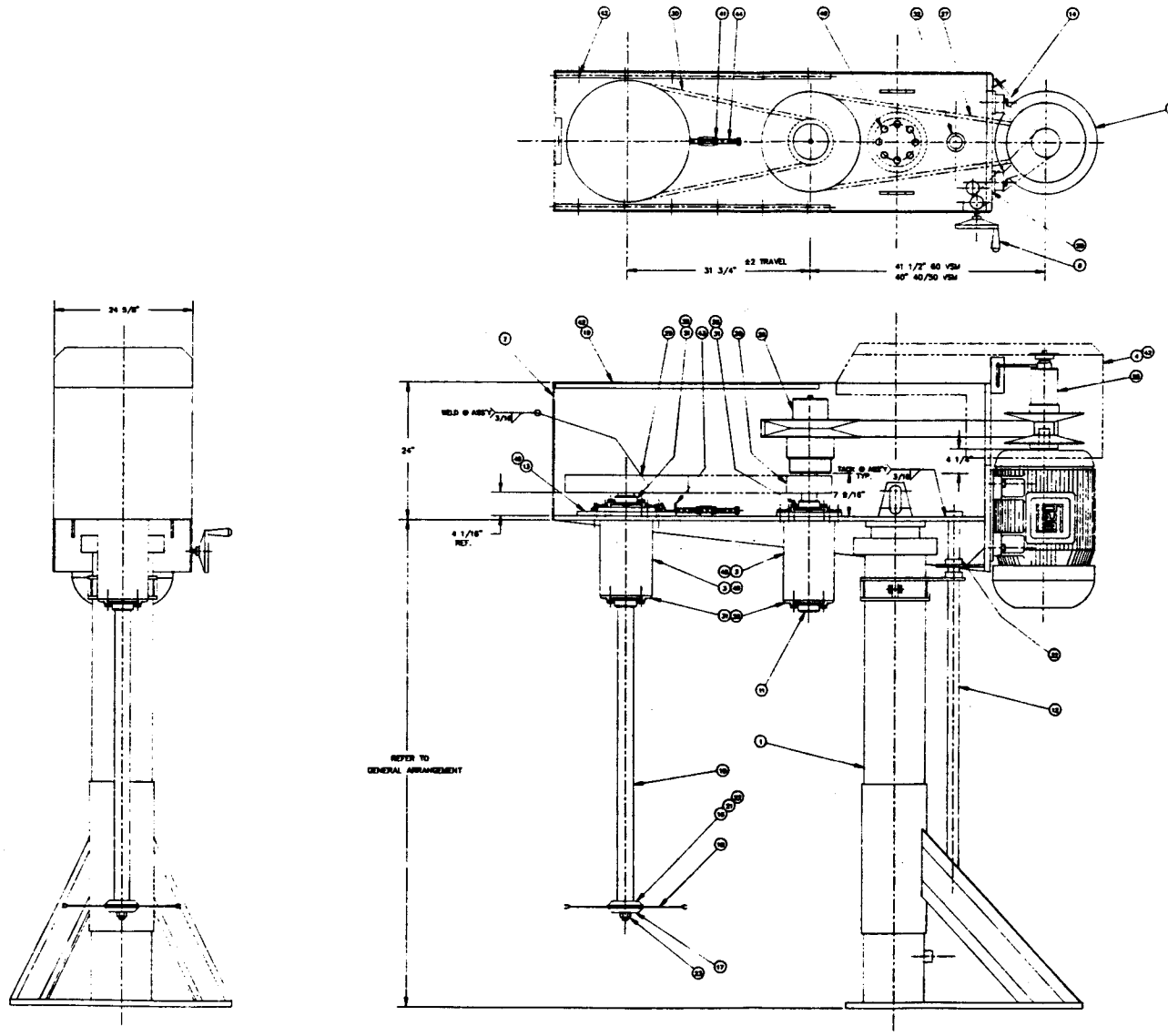

MARK	QTY	PART	DESCRIPTION
1			REFER TO REQ'N # DL34055 FOR PARTS LIST
2			
3			
4			
5			CUSTOMER REFER OF MANUAL FOR PARTS LIST
6			
7			
8			
9			
10			
11			
12			
13			
14			
15			
16			

NOTES:

1. ALL PARTS MUST BE DEBURRED BEFORE THEY REACH ASSEMBLY.
2. ALL C.S. PARTS MUST BE SANDBLASTED AND PRIMED GRAY BEFORE THEY REACH ASSEMBLY
3. ALL LABELS TO BE PUT ON AFTER PAINTING.
4. PAINT BOWERS' BLUE.
5. SEE GENERAL ARRANGEMENT FOR SPEED RANGE.
6. EST. WT.- 4600 #

REV.	DATE	DRAWN	APPVD	DESCRIPTION
1	2/88	GP		GENERAL UPDATES

PCF BOWERS PCF-BOWERS INC. STRATFORD ONTARIO CANADA

TOLERANCES-UNLESS OTHERWISE NOTED
MACHINING: X ±0.1" ; XX ±0.02" ; XXX ±0.005" ; ANGLE ±0.5°
MACHINED SURFACE ROUGHNESS 125 ✓ MICROINCHES
WELD FABRICATION ≤24" ±1/16" ; >24" ±1/8" ; ANGLE ±0.5°

THIS PRINT AND DESIGN ARE THE PROPERTY OF PCF/BOWERS AND MUST NOT BE USED TO PIO OTHERWISE

TITLE: FINAL ASSEMBLY
40 / 50 / 60 VSM 18 DISPERSER

SCALE 1/10	DRAWN GP	JOB NO.	DWG. NO. DL34055	REV. NO. 1
DATE 11/88	CHK'D			

Figure M.9. 40/50/60 VSM 18 Disperser

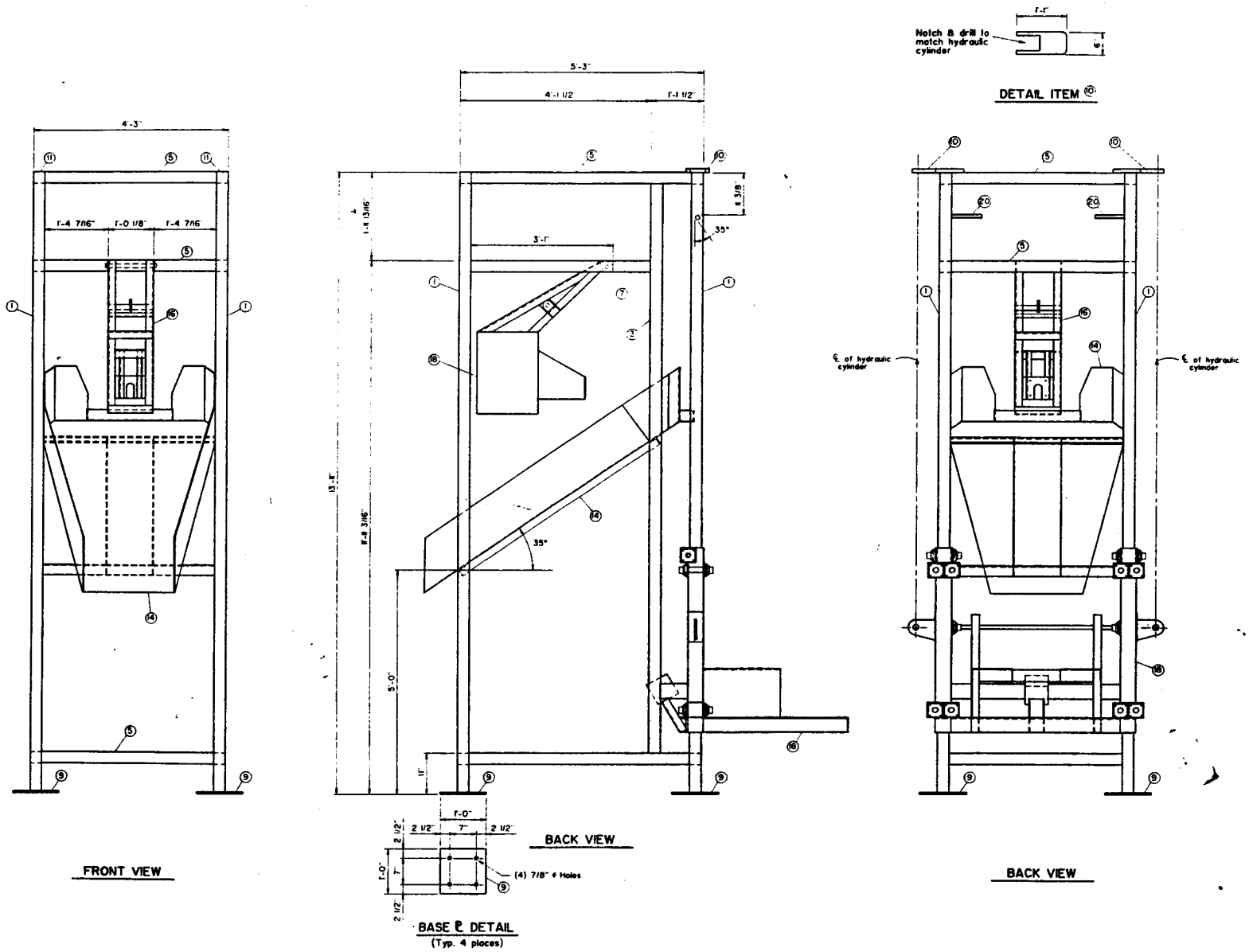

Item	Qty.	Description	Mat'l.	Length Ft.	Length In.
20	2	℄ 1" Thk. x 2"	A-36	0	7 3/4
18	1	Barrel Lift Table	A-36	-	-
16	1	Barrel Dump Guard	A-36	-	-
14	1	Dump Tray	A-36	-	-
11	2	℄ 1/4" Thk. x 2 1/2"	A-36	0	2 1/2
10	2	℄ 1" Thk. x 6"	A-36	1	1
9	4	℄ 1/2" Thk. x 2"	A-36	0	12
7	2	TS 3" x 3" x 1/4"	A-36	4	4 1/2
5	9	TS 3" x 3" x 1/4"	A-36	4	9
3	2	TS 3" x 3" x 1/4"	A-36	13	0
1	4	TS 3" x 3" x 1/4"	A-36	13	10 1/2

HYDROCARBON RECYCLERS, INC.
P.O. BOX 9557 TULSA, OKLAHOMA 74157 (918) 446-7434

Scale: 1" = 1'-0"
Date: 1-25-91
Designed by:
Drawn by: ProDraft

BARREL DUMP ASSEMBLY

Figure M.10. Barrel Dump Assembly

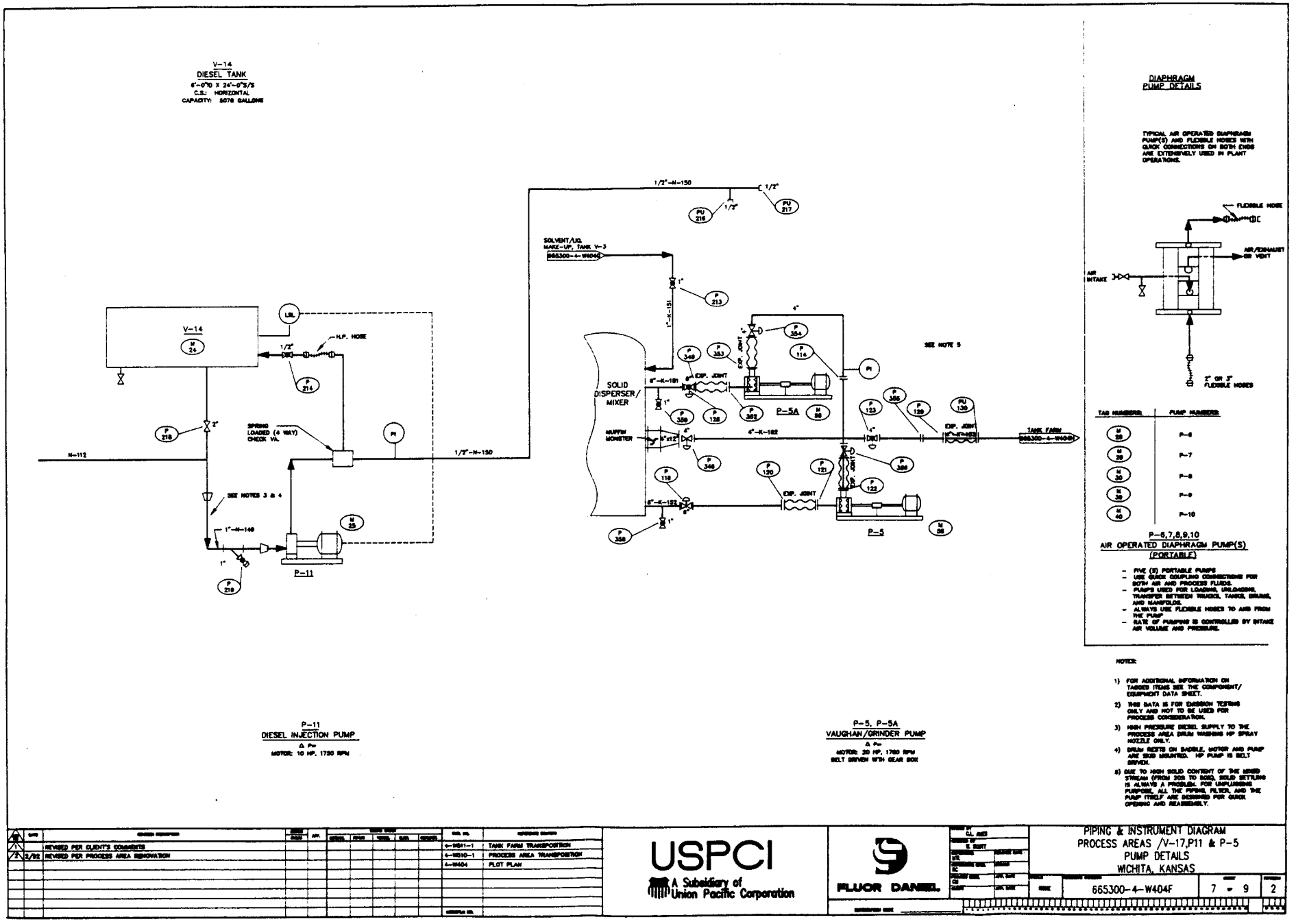

Figure M.11. P&ID Process Areas

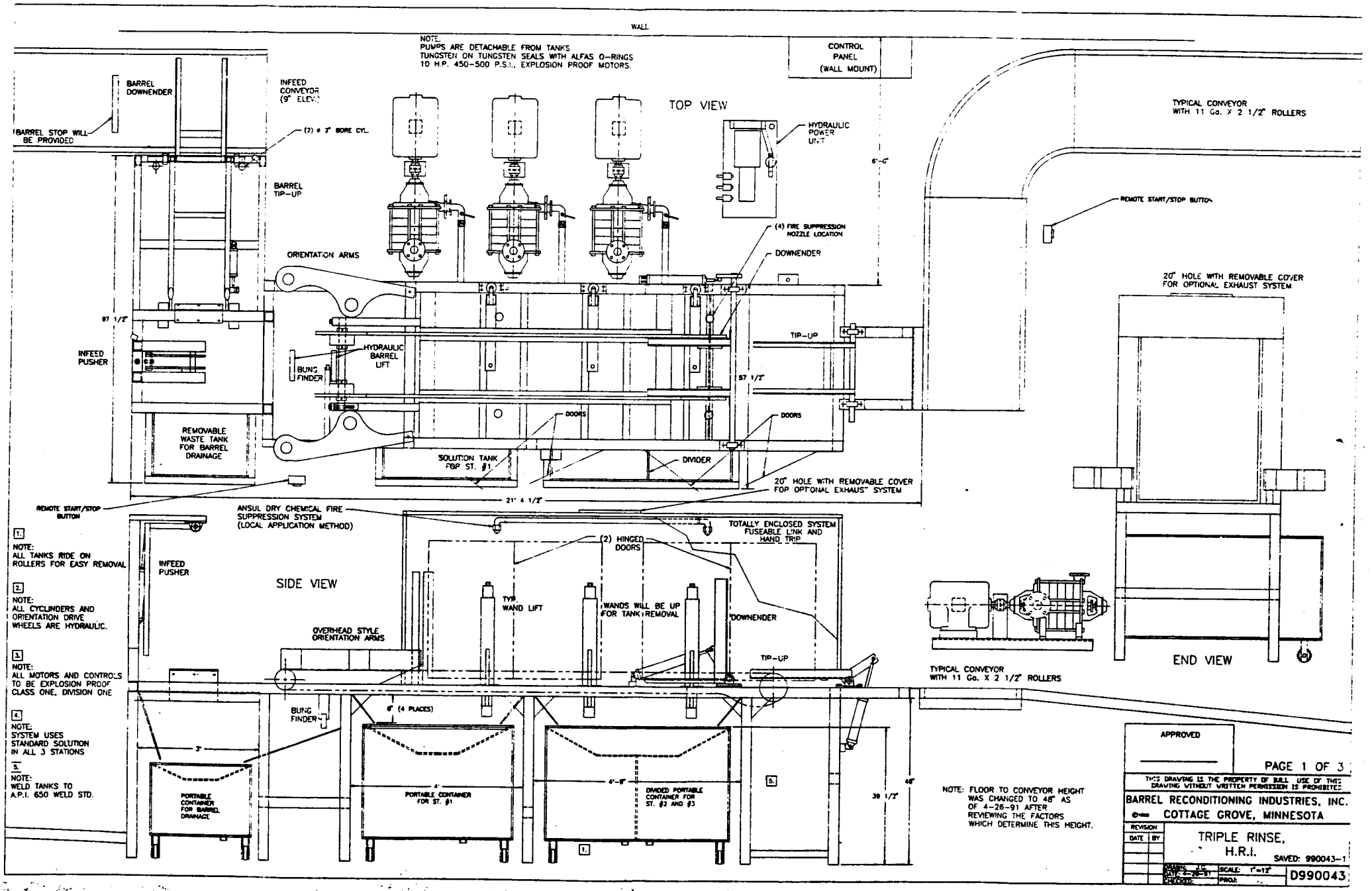

Figure M.12. Triple Rinse - HRI

APPENDIX M-B

OPERATING MANUALS: SHREDDER AND GRANULATOR UNITS

February 18, 1992

shred pax corporation

OPERATION MANUAL

FOR

AZ-7,15,20,40,45,80,160,200,300
SHRED-N-PAX SYSTEMS
AZ-7SNP, AZ-15SNP, AZ-45SNP,
AZ-80SNP, AZ-160SNP, AZ-200SNP, AZ-300SNP

MODEL NO. AZ 15

SERIAL NO. _____

Manufactured Under U.S. Patent Nos. 3845907, 3880361, 3981455, 4247056, and others pending.

TABLE OF CONTENTS

		PAGE
	FORWARD	1
I.	INSTALLATION	6
II.	ELECTRICAL	8
III.	START UP AND OPERATION	13
IV.	SCHEDULED MAINTENANCE	16
V.	TROUBLE SHOOTING	18
VI.	ELECTRICAL SCHEMATIC DRAWING	SEPARATE ITEM
VII.	PARTS LIST	SEPARATE ITEM
VIII.	SERVICE MANUALS FOR OTHER MANUFACTURERS ITEMS	SEPARATE ITEMS
IX.	WARRANTY	SEPARATE ITEMS

APPENDIX I.	KNIFE SHARPENING	20
APPENDIX II.	CHANGING KNIVES	21
APPENDIX III.	RECOMMENDED SERVICE TOOLS	25

FORWARD

Shred Pax shredders are built to shred most types of industrial and municipal waste, scrap and trash. Shred Pax Shredders are also used in industrial process applications.

CAUTION: THIS SHREDDER HAS BEEN BUILT TO SHRED THE MATERIALS THAT WERE SPECIFIED IN YOUR PURCHASE ORDER. DO NOT ATTEMPT TO SHRED ANY OTHER MATERIAL WITHOUT FIRST CONSULTING YOUR DISTRIBUTOR OR THE FACTORY TO AVOID VOIDING YOUR WARRANTY.

Shred Pax Corporation manufactures these shredders for ease of operation and has provided as many safeguards as possible. But since shredders may be used with other equipment, it is the responsibility of the user to meet all local, county, state and federal codes, including OSHA, to safeguard personnel working with or in proximity to these shredders.

All Shred Pax Shredders are manufactured to metric standards. American standard threads, USS, or SAE, will not interchange with metric threads used in this shredder.

The pictorials in this manual describe the different components of shredders.

SHRED PAX CORPORATION

MODEL AZ-7 SNP (AZ-15 SNP,AZ-45 SNP, AZ-80 SNP,AZ-160 SNP AND AZ-200 SNP HAVE SIMILAR ARRANGEMENT)

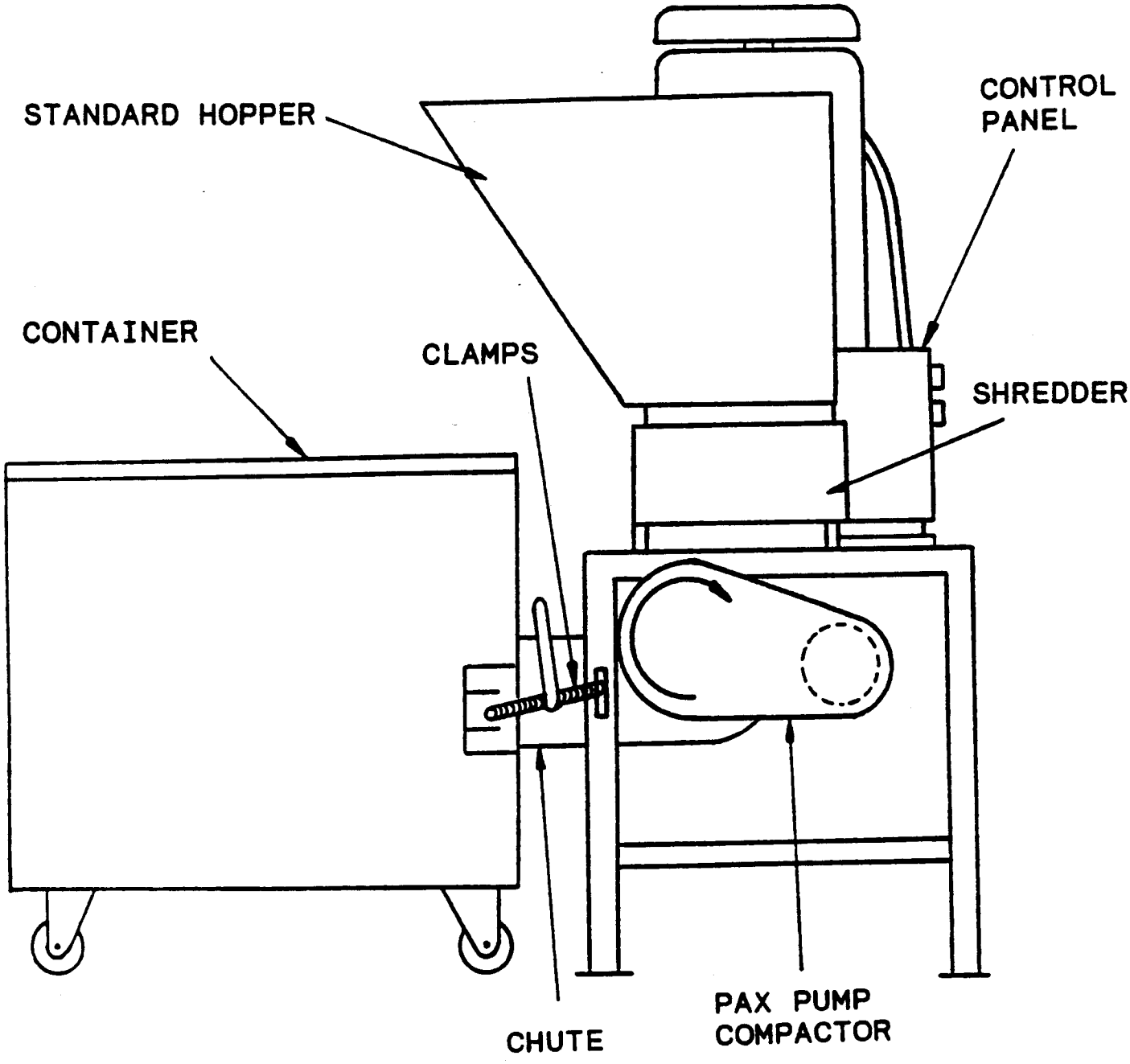

MODELS AZ-15*,20*,40,45,80,160,200,AND 300

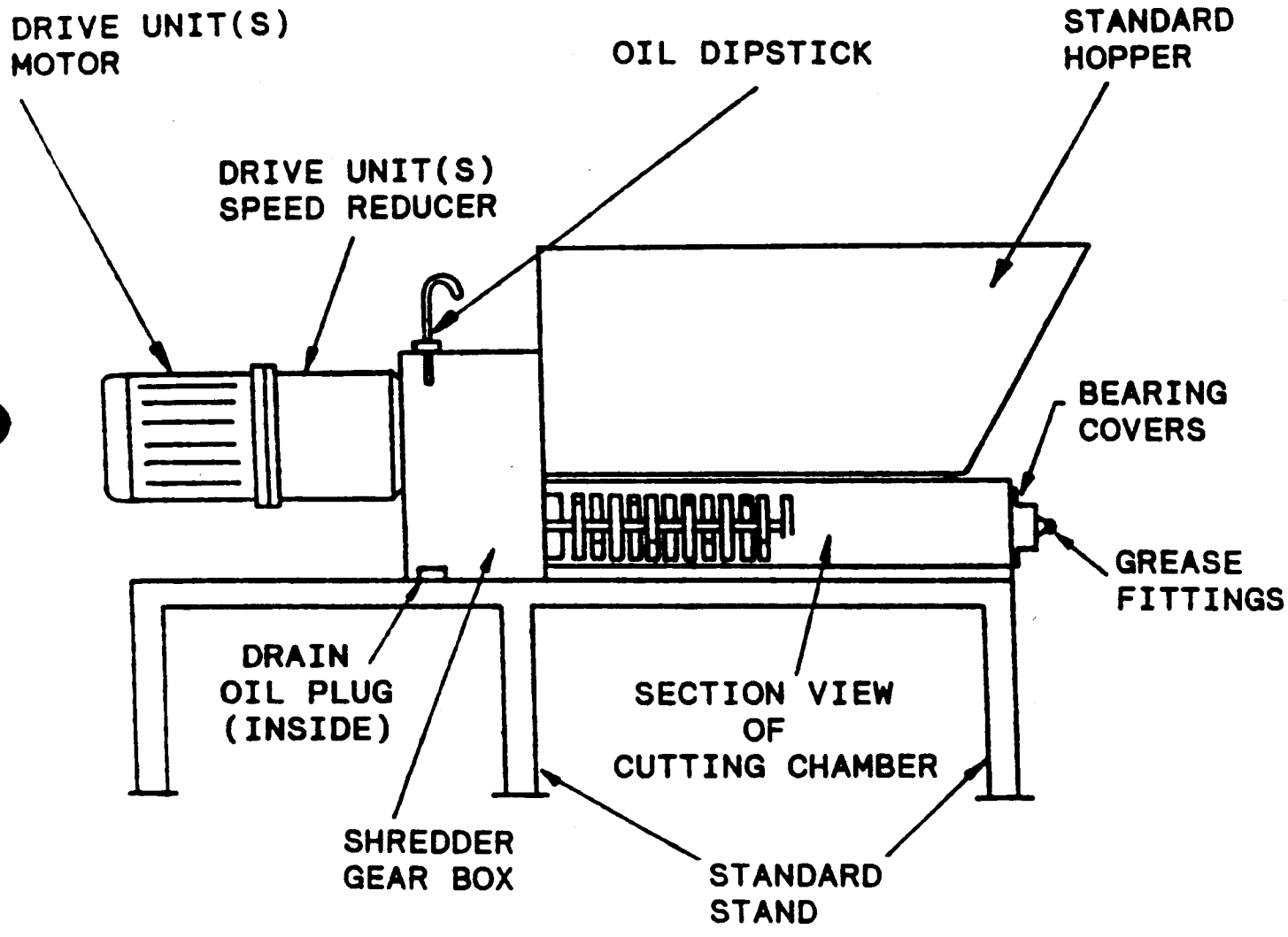

* SINGLE DRIVE UNIT SHREDDERS. ALL OTHER MODELS ARE TWIN MOTOR DRIVES.

ALL MODELS
TOP VIEW OF CUTTING CHAMBER

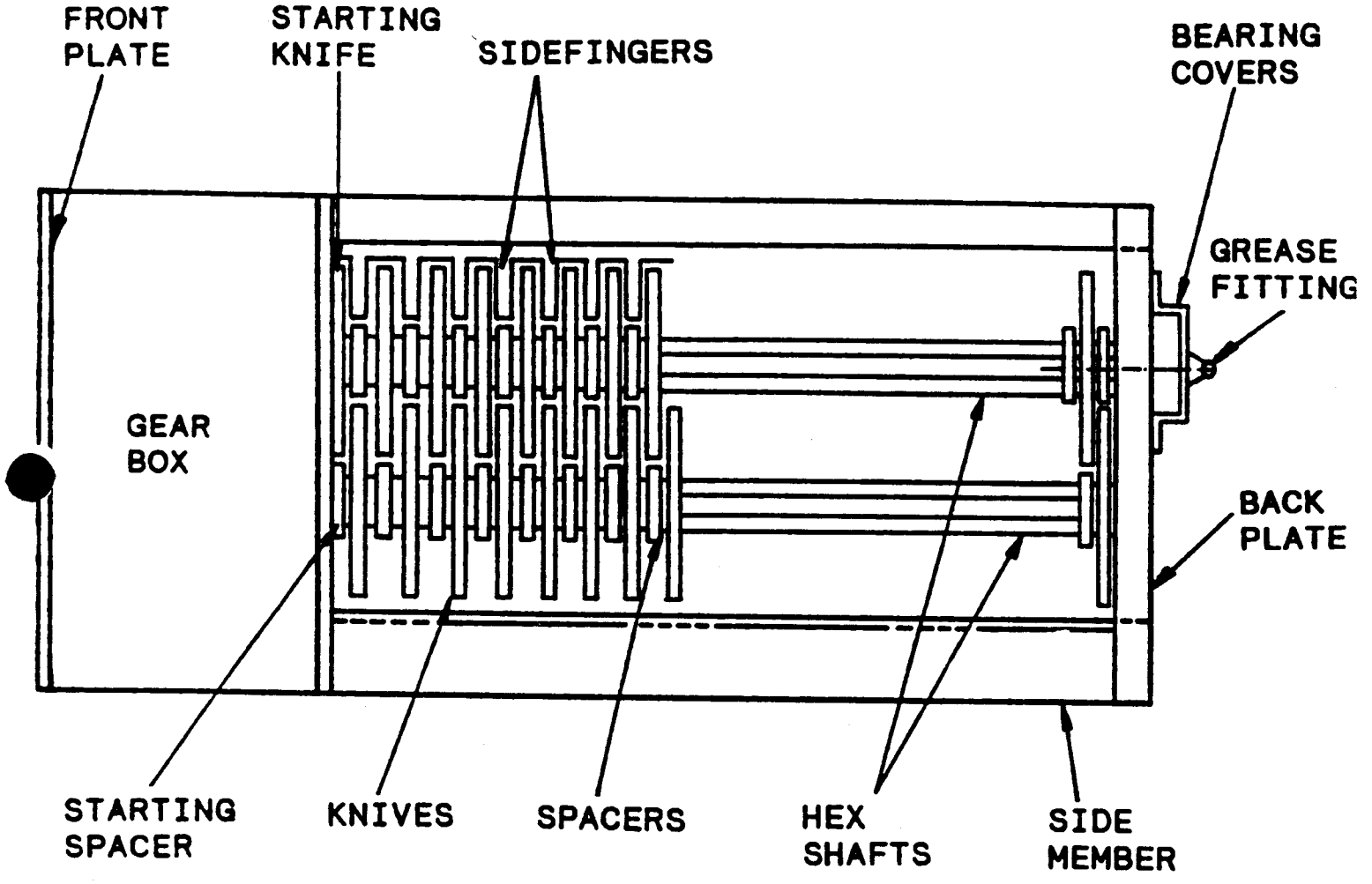

III. START-UP AND OPERATION

Before starting your shredder, check the following:

A. Be sure the cutting chamber is clear of any nuts, bolts, wrenches or any other foreign materials.

B. Check the lubricant level in the shredder gear box. There is a dip stick marked to measure the correct amount. (The gear box has been filled at the factory but may have lost some lubricant in transit). To add lubricant use MAG-00 Lubriplate or equivalent.

   Make sure no water has been introduced into the gear box by running the machine for a day and then partially removing the drain plug and inspecting the drippings for water. If there is water contamination, drain until no water is present and add new lubricant to proper level.

C. Check the oil level in the drive unit speed reducer(s). There is a separate page with this manual containing maintenance information on these unit(s).

D. Check carefully to see that no other damage has occurred in transit or during installation and all nuts, bolts and other fasteners are securely tightened.

E. If the shredder is installed in an unheated location and is going to be operated at below freezing temperatures (not recommended), the machine should be run under no load for several minutes before shredding.

   For operation below 10 degrees F (-12 degrees C) the winterizing option should be specified. This provides different seals, lubricants and heaters as required. Note: For shredding knife impacting materials at low temperatures, knife preheating is also required.

F. Make electrical connections and check motor phasing. (See Electrical Section II).

G. Start the shredder. A program timer will delay start of the shredder motor(s) for several seconds. The knives in the cutting chamber should first rotate in reverse, (See Diagram, Page 15) then stop and then rotate in the forward shredding mode. The knives are rotating forward when the knives are turning towards each other (the top of the knives are turning into the center of the cutting chamber). If the knives rotate in reverse of this sequence, the electrical phasing of the shredder motors is improper. (See Electrical Section II).

H. Begin feeding material into the hopper when the knives are rotating in the forward shredding mode or as soon as the infeed conveyor has started.

If your shredder stops and reverses frequently, you may have overlooked some solid object or you may be jamming the machine with choke overloads by feeding the materials too fast. If correcting the feed rate still does not prevent frequent stopping and reversing (the reversing is normal to prevent damage and clear obstructions), then call the Shred Pax Service Department for a factory inspection.

I. When connecting an infeed conveyor to the machine, it is recommended that the conveyor speed be variable or be selected after the proper feed rate is known or has been established. The conveyor motor starter should be interlocked through a timer started by auxiliary contacts on the shredder forward starter so the infeed conveyor only runs after the shredder is running in the forward mode.

CAUTION: SHRED PAX ENGINEERING PERSONNEL SHOULD BE CONSULTED ON ANY EQUIPMENT, MACHINERY OR SYSTEMS THAT YOU INTEND TO INTERFACE WITH THE SHREDDER.

J. For certain applications, including tires and aluminum, water spray is recommended or necessary for lubrication and cooling. Any water supply having 40 psi minimum water pressure is usually sufficient. The addition of anti-freeze is required below 32 degrees F (0 degrees C). Wetting agents, such as water soluble cutting fluids or detergent, will increase the efficiency of the water spray.

Spray nozzles should be directed to cover the knife surfaces. If design information on a spray system is desired, contact the Shred Pax Engineering Department.

CAUTION: PERSONNEL NOT DIRECTLY RESPONSIBLE FOR THE OPERATION OF THE SHREDDER MAY BE CURIOUS AS TO WHAT THE SHREDDER CAN SHRED. TO PREVENT UNAUTHORIZED FEEDING OF SOME KIND OF SOLID OBJECT THAT COULD RESULT IN SERIOUS DAMAGE TO THE MACHINE AND VOIDING OF THE WARRANTY, ADVISE ALL OF THE YOUR PERSONNEL OF THE CAPABILITIES AND ESPECIALLY THE LIMITATIONS OF THE SHREDDER.

Shred Pax and Shred Pax authorized distributors will conduct training sessions on the operation and maintenance of your shredder or shredding system.

ROTATION OF SHREDDER KNIVES

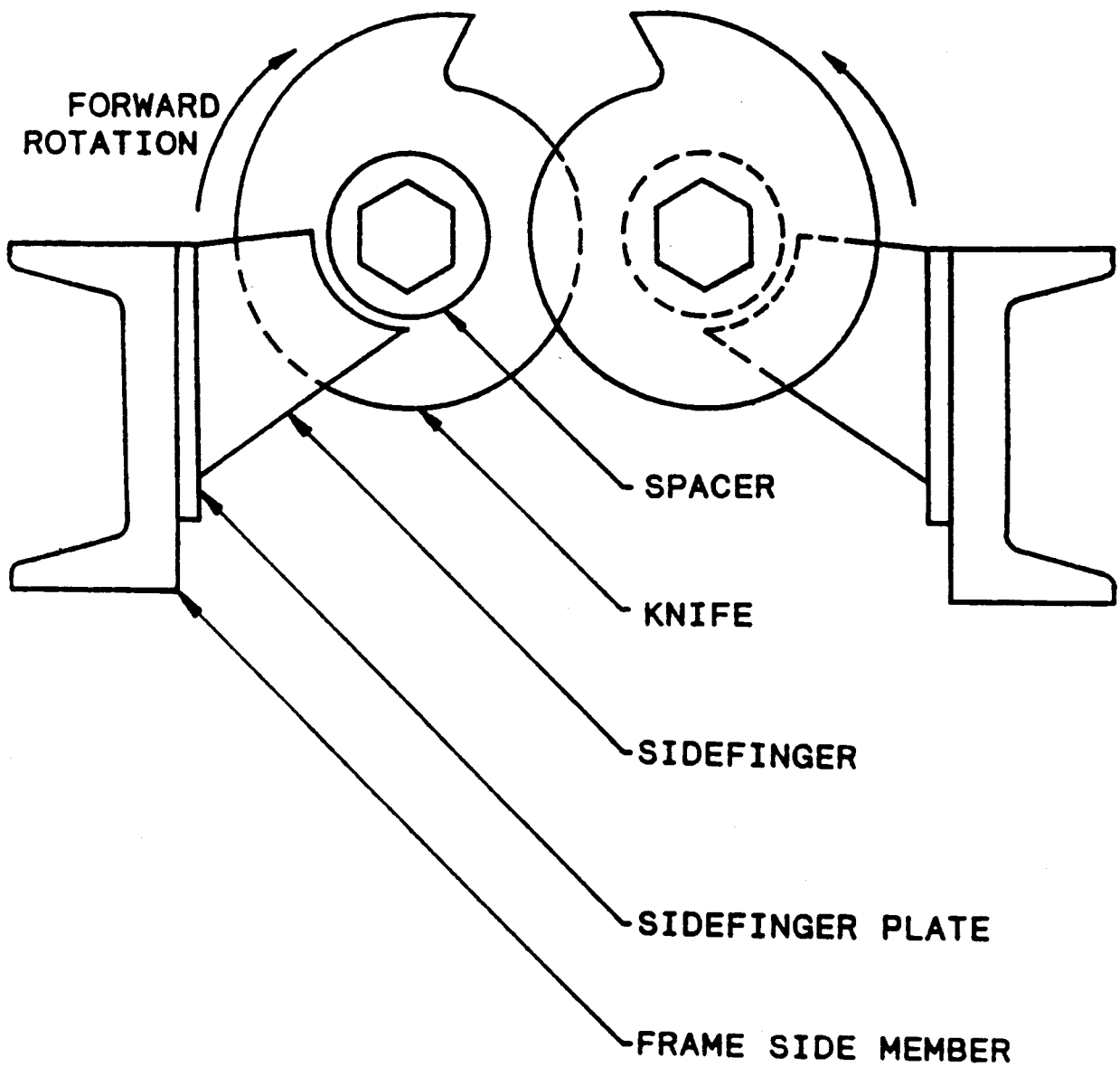

TABLE OF CONTENTS

SECTION	PAGE
I INTRODUCTION	1
A. General	1
B. Description	1
1. Cutting Chamber	1
2. Machine Base	1
3. Machine Drive	1
4. Transition	1
II LEADING PARTICULARS	2
A. Identification	2
B. Design Data	2
C. Arrangement	2
1. Cutting Chamber	2
2. Machine Drive	2
III PRINCIPLES OF OPERATION	4
A. General	4
B. Operation	4
IV INSTALLATION & OPER.	4
A. General	4
B. Pre-installation	4
1. Receiving	4
2. Uncrating	4
3. Inspection	5
IV C. Installation	5
1. Granulator	5
D. Preparation for Use	6
1. Start-Up Inspection	6
E. Operating Procedure	6
1. Initial Start-Up	6
2. Shutdown	7
3. Normal Start-Up	7
V PREVENTIVE MAINTENANCE	8
A. General	8
B. Inspection Schedule	8
1. Initial Inspection	8
2. Break-In Inspection	8
3. Normal Inspection	8
C. Service Access	9
1. Opening Granulator	9
D. Recommended Service procedures	10
1. Cleaning & Insp.	11
2. Changing Fly Knives	11
3. Changing Bed Knives	12
4. Knife Sharpening	13
5. Lubrication	13
VI TROUBLESHOOTING	14

I. INTRODUCTION

A. GENERAL

This manual provides installation, operation and maintenance instructions for the ALSTEELE Series 220 Granulator manufactured by Entoleter, Incorporated, a Subsidiary Corporation Safety Railway Service Corporation, P. O. Box 1919, New Haven, CT, USA 06509.

B. DESCRIPTION

The ALSTEELE Granulator [figure 1] consists of rugged, compactly designed heavy duty components with inherent features providing simplicity of operation and ease of maintenance. Refer to Appendix B, Functional Parts List, for configuration of the Granulator supplied on your order.

1- Cutting Chamber

The cutting chamber consists of a rugged, welded two part housing containing the rotor, knives and screen. The screen is held in place by removable sliding blocks.

2- Machine Base

The base accommodates the cutting chamber, drive and collection bin.

3- Machine Drive [supplied by USPCI].

The rotor is driven through a belt arrangement by an adequately sized motor.

4- Transition [supplied by USPCI].

II. LEADING PARTICULARS

A. IDENTIFICATION

Series 220
Model . . . . . 25 x 37

B. DESIGN DATA

Material . . . . . Sheet, foam, large hollow parts
Application . . . . . Heavy duty granulation
Evacuation . . . . . Gravity, blower, vacuum ¡optional¿
Screen Size . . . . . 1/4, 5/16, 3/8 in. dia holes

C. ARRANGEMENT

1- Cutting Chamber
Rotor Style . . . . . Closed
Number Rotor Fly Knives . . . 4 blade ¡matched¿
Number Fixed Bed Knives . . . 2 blades
Cutting Circle . . . . . 25 in. dia
Construction . . . . . Welded

3- Machine Drive
Type . . . . . Supplied by USPCI
Drive . . . . . Matched Belts
Horsepower . . . . . 60 HP

FIGURE 1. ALSTEELE GRANULATOR

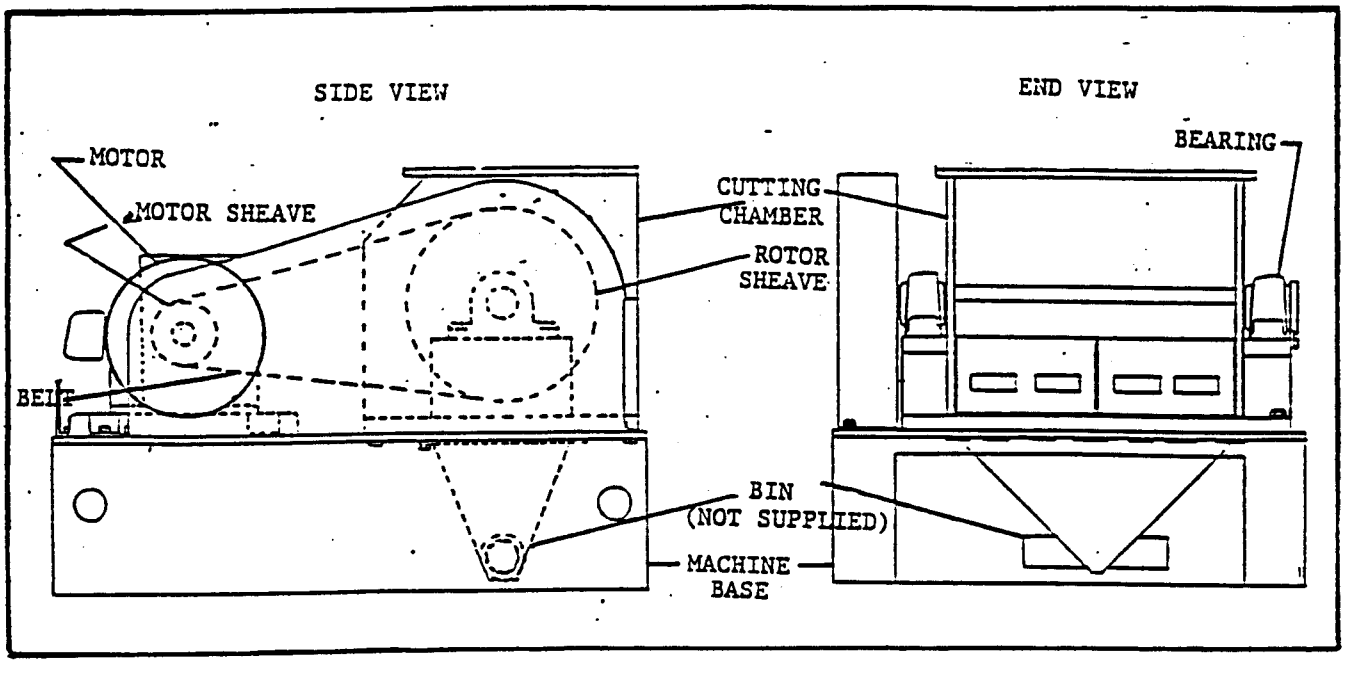

III. PRINCIPALS OF OPERATION

A. GENERAL

The ALSTEELE heavy duty Granulator combines rugged construction with Entoleter's stringent design parameters to provide controlled granule size of sheets, foam, large hollow parts and bulky light-weight parts.

B. OPERATION

Reduction of plastic waste material and reject parts is accomplished by repeated cutting of the material until it becomes small enough to fall or be forced through the screen.

1- Material fed into the hopper falls into the cutting chamber.

2- As fly knives, mounted on the rotor, pass the fixed bed knives, any plastic material in the chamber is cut.

3- Cut material drops to the screen where it either falls through to a collection device or is recycled to be cut again.

IV. INSTALLATION AND OPERATION

A. GENERAL

The ALSTEELE heavy duty Granulator is shipped completely assembled for easier shipment and installation.

B. PRE-INSTALLATION

1- Receiving the Machine

The granulator has been packaged in a manner to provide optimium protection. Inspect the shipping container for signs of rough handling or abuse in transit. evidence of mishandling could indicate equipment damage and the carrier's copy of shipping bills should be marked that such evidence of mishandling is present.

2- Uncrating

Remove outer container. Lift granulator straight up to remove shipping skid.

3- Inspection

a. Perform a visual inspection of the machine for shipping damage. remove safety covers.

b. Remove fasteners and lift upper housing from granulator with a hoist.

> WARNING
>
> Sharp knives are exposed when the upper section is open. Use extreme caution to avoid injury to personnel.

c. Inspect cutting chamber to insure that knives are securely fastened. Check tightness of all knife fasteners.

d. Check knife clearance by turning rotor slowly by hand. Fly knives should not make contact with bed knives. If adjustment is incorrect, refer to maintenance section for corrective procedure.

e. Remove two blocks and drop screen. Check for proper hole size in screen.

f. Reassemble granulator.

C. INSTALLATION

1- Granulator

Move granulator into position where it will be installed.

> WARNING
> All electrical connections must conform to current N.E.C. and local codes.

Provide electrical power to the granulator control panel.

> WARNING
> Do NOT attempt to bypass or defeat the interlock system. Personnel injury or death could result.

D. PREPARATION FOR USE

1- Start-Up Inspection

NOTE: Refer to paragraph E for start-up procedure.

a. Check rotor bearings for proper lubrication ¡paragraph D.5, Section V¿.

b. Check that granulator is level.

c. Remove all tools, rags and debris from granulator system and area.

d. Momentarily energize granulator to verify correct rotation and electrical connections.

e. Remove safety interlock panel and attempt to start granulator. If granulator starts, machine is incorrectly wired or has a defective interlock. Contact Entoleter immediately if granulator start.

> WARNING
> Serious injury can accur if clothing or any part of a persons body gets into the cutting chamber while it is operating.

> CAUTION
> All machines shipped from the factory have passed this test. failure to pass this test after installation may indicate damage in transit.

E. OPERATING PROCEDURE

> CAUTION
> Do NOT attempt to start machine until preparation for use procedures have been performed and operating personnel are familiar with this manual.

1- Initial Start-Up

NOTE: The duration of the initial run should not exceed four hours.

a. Start granulator.

b. Feed material to machine for a period not to exceed four hours.

c. Shut down machine and perform initial inspection ¡paragraph B.1, Section V¿.

> CAUTION
> Shut granulator down immediately if audible clicking of knives making contact is evident.

2- Shutdown

a. Shut down material feed to granulator.

b. When granulator cutting chamber is empty, turn granulator off.

3- Normal Start-Up

CAUTION
The granulator must be empty prior to start-up.

a. Start up system as described in paragraph E.1, Step a.

b. Feed material to granulator.

FIGURE 2. INSTALLATION DIMENSIONS

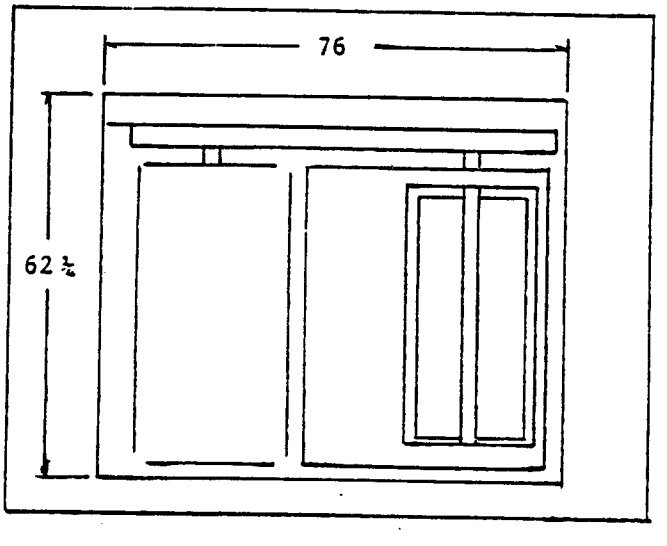

FIGURE 3. OPENING GRANULATOR

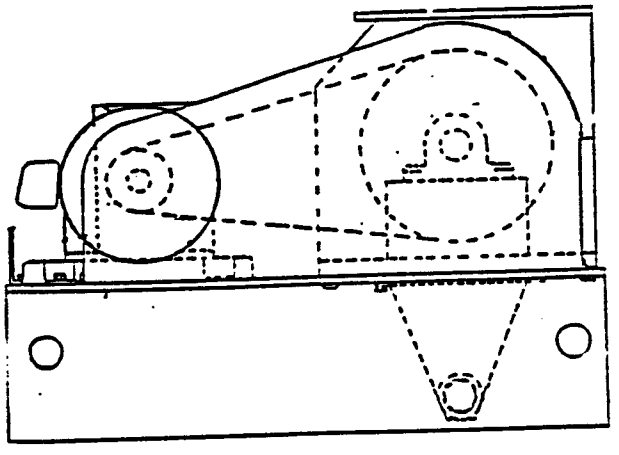

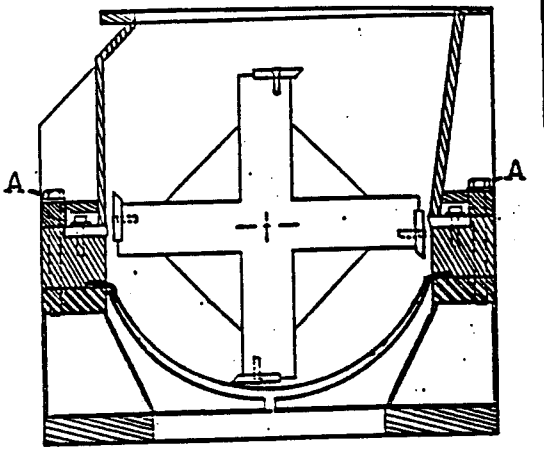

Remove fasteners (A) holding upper housing. Using a hoist, lift upper housing from machine. Rotor and knives are now exposed.

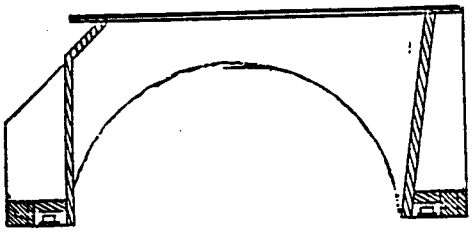

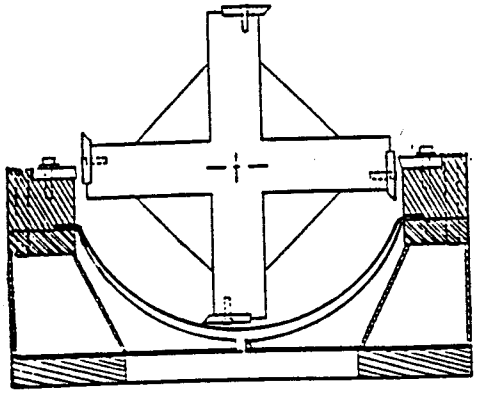

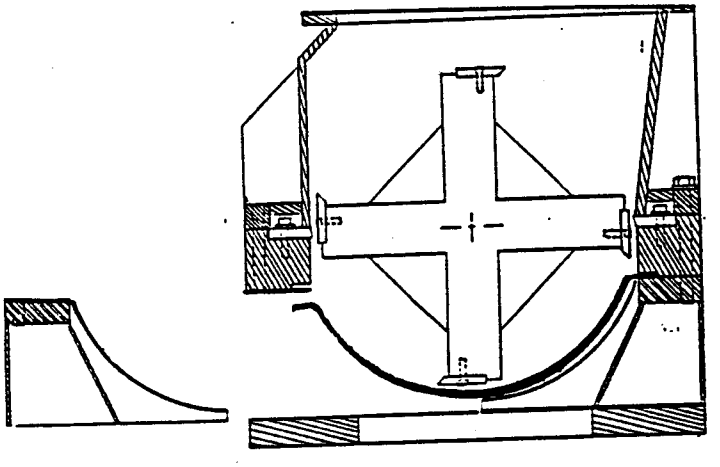

Remove two blocks and let screen down.

Fly knives and bed knives can now be replaced or adjusted.

CAUTION
Support screen when removing blocks.

SCIENTIFIC DUST COLLECTORS

4740 W. ELECTRIC AVE. • MILWAUKEE, WI 53219
(414) 672-0564 • TELEX 2-6602
• FAX (414) 672-5354

FABRIC COLLECTOR

INSTALLATION
OPERATING
MAINTENANCE

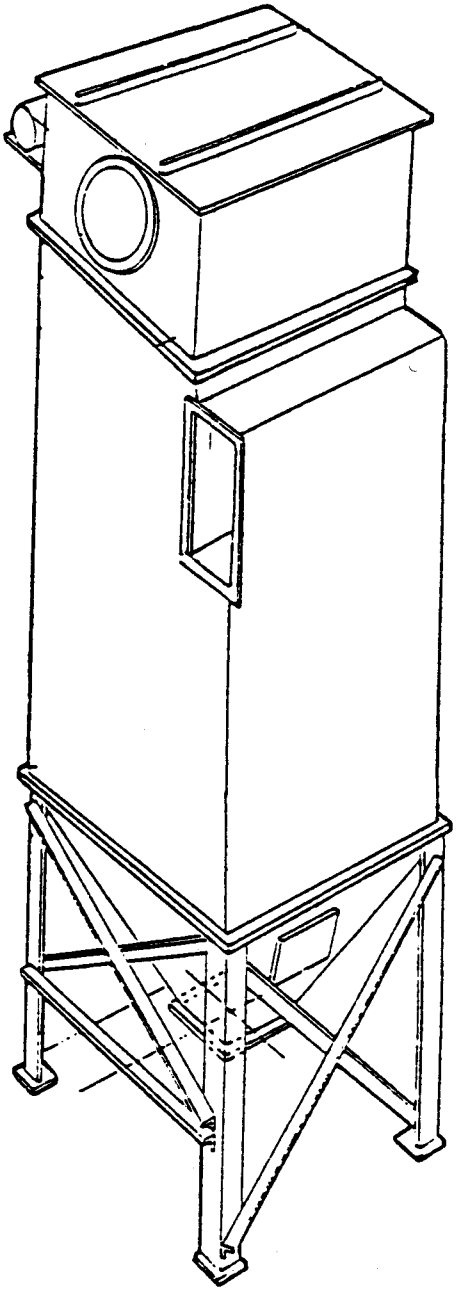

DESCRIPTION . . . . . Page 1

RECEIVING 2

COLLECTOR ASSEMBLY 3

DIFFERENTIAL PRESSURE GAUGE ASSEMBLY . . 3

BAG ASSEMBLY - TOP REMOVAL 3-4

BAG ASSEMBLY - BOTTOM REMOVAL 4

COMPRESSED AIR REQUIREMENTS 5

ELECTRICAL REQUIREMENTS 5

OPERATING INSTRUCTION 6

THE TIMER 6-7

DIFFERENTIAL PRESSURE GAUGE 7

START-UP CHECK LIST 8

MAINTENANCE 9

TROUBLSHOOTING 9

FABRIC TYPE DUST COLLECTOR

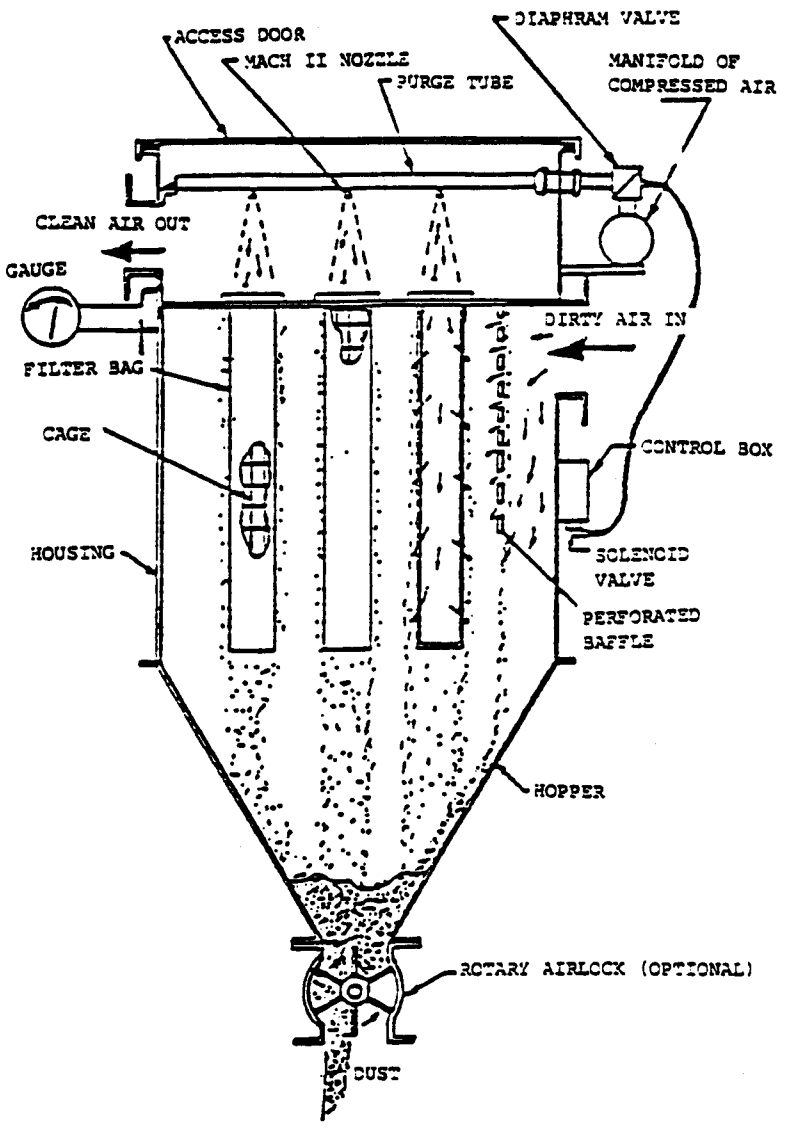

The fabric type dust collector is a pulse-jet model. Cleaning is achieved by back-flushing the filters with short bursts of compressed air, repeated at timed intervals.

The timer signals the solenoid valves, which in turn trigger the diaphram valves. The diaphram valves deliver short bursts of compressed air to the purge pipe nozzles.

The nozzles are directed at the bag openings. The air jet is sufficient in volume to dislodge a portion of the "dust cake", permitting it to settle into the hopper.

The hopper is usually fitted with a slide gate, air lock, or conveyor, which dispose of the collected material without losing the collector's negative operating pressure.

NOTES: 1. FLANGED INLET & OUTLET
2. ACCESS DOOR 3:00
3. TEFLON SHAFT SEAL
4. TYPE C (AMCA) SPARKRESISTANT CONSTR.
5. STANDARD PRIMER

NOTES
1. ALL HOUSINGS ARE FIXED ROTATION & DISCHARGE.
2. FLANGES MATCH 150 # ANSI PIPE FLANGES.
3. FLANGED INLET, FLANGED OUTLET & SHAFT SEAL FURNISHED AS STANDARD.

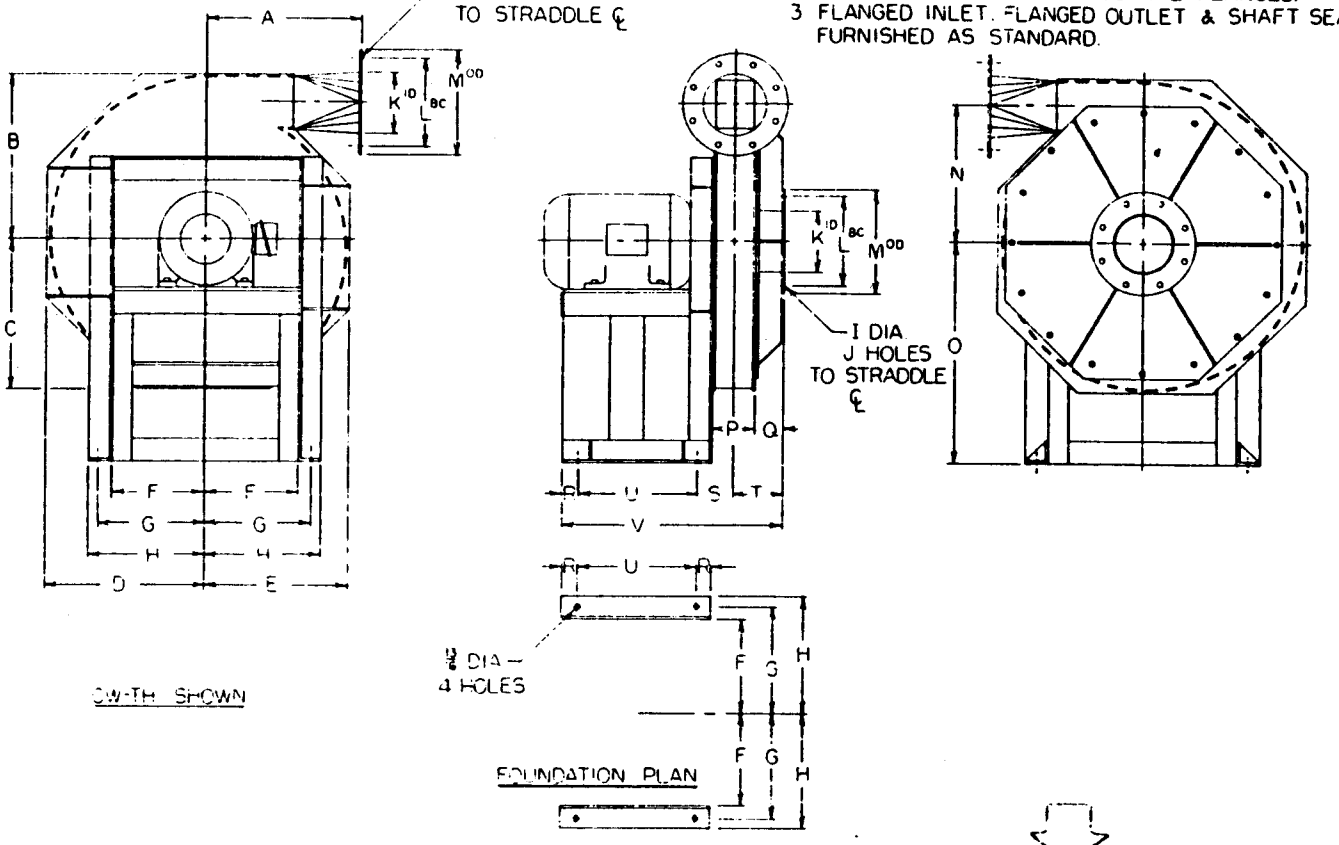

DWG. FOR APPROVAL. FAB. WILL NOT BEGIN UNTIL PRINT IS RETURNED APPROVED OR WITH CHANGES NOTED

DWG. IS CERTIFIED CORRECT FOR CONST. PURPOSES AND RELEASED.

DWG. HAS BEEN REVISED. DESTROY ALL PRINTS SUBMITTED PREVIOUS TO:

ACCESSORIES
1. HOUSING DRAIN
2. ACCESS DOOR
3. INLET SCREEN
4. COMPANION FLANGE
5. STAINLESS STEEL AIRSTREAM TYPE
6. MOTOR SUPPLIED BY A.F.C.
7. MOUNT CUSTOMER MOTOR

NOTE: ROTATION VIEWED FROM DRIVE SIDE.

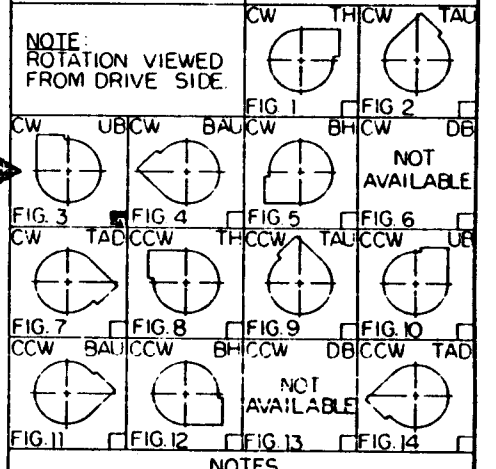

NOTES

FAN SIZE	A	B	C	D	E	F	G	H	I	J	K	L	M	N	O	P	Q	R	S	T	U	V	U	V	U	V	U	V	U	V
																					FRAME SIZE									
																					254-T	256-T	284-TS	286-TS	324-TS	326-TS	364-TS	365-TS	404-TS	405-TS
451	22½	24 1/16	22⅞	23 9/16	22¼	12	13¾	15	⅞	8	8	11¾	13½	20 13/16	32	4⅞	3½	2	4 7/16	5 15/16	15	27⅜	16½	28⅞	18	30⅜	19	31⅜	21	33⅜
452	22½	24 9/16	22 11/16	23⅜	21¾	12	13¾	15	1	12	10	14¼	16	20 7/16	32	5½	3½	2	4¾	6¼	15	28	16½	29½	18	31	19	32	21	34
453	22½	24	21 15/16	23	20 13/16	12	13¾	15	1	12	10	14¼	16	19 31/32	32	5¾	3½	2	4⅞	6⅜	15	28¼	16½	29¾	18	31¼	19	32¼	21	34¼
454	22½	24¾	21	22⅞	19⅛	12	13¾	15	1⅛	12	14	18¾	21	18 11/32	32	8	3½	2	6	7½	15	30½	16½	32	18	33½	19	34½	21	36½
455	22½	25½	21	23¼	18¾	12	13¾	15	1⅛	16	16	21¼	23½	18 9/16	32	10⅜	3½	2	7 3/16	8 11/16	15	32⅞	16½	34⅜	18	35⅞	19	36⅞	21	38⅞

FAN SIZE	U	V	U	V
	FRAME SIZE			
	444-TS	445-TS		
451	24	36⅝		
452	24	37		
453	24	37¼		
454	24	39½		
455	24	41⅞		

CUSTOMER				CFM	SP	BHP	RPM	DEN.	TEMP	ALT.
WILL JONES & ASSOC.				3400	-70 to +1	45.2	3550	.054	100F	
DATE	AFC JOB NO.	QUAN.	CUSTOMER PO NO.	HP	RPM.	PH.	HZ.	VOLTAGE	FRAME	ENCL.
5-15-91	912101J	1	9104-4271	60	3600	3	60	230/460	364T	TEXP

MODEL NO.	ROT	DIS	FIG. NO.	APRT	MARK
RB-453-36	CW	UB	3	4	PO#15262-USCPI BRUCE PATTERSON

AMERICAN FAN COMPANY
3536 STEWARTS ROAD
FAIRFIELD, OHIO 45014

TITLE RB 451, 453, 455 452, 454 APRT 4 PRESSURE BLOWER

DATE 7-31-84 SCALE NONE DRAWN BY BEE

DRAWING NO. C-430

APPENDIX M-C

USPCI AIR MONITORING DATA

February 18, 1992

USPCI, INC
HEALTH AND SAFETY
MONITORING RESULTS
HRS - WICHITA
JULY 19, 1991

SAMPLE NO.	JOB DESCRIPTION LOCATION	CONTAMINANT	EXPOSURE STANDARD	RESULT	COMMENTS
HT071991002	Operator/Helper	Perchloreothylene	25 ppm	1.02 ppm	Exposure occurred in operations and drum processing area; the results include exposure that occurred during tank gauging. Sample time as 318 minutes.
		Methylene Chloride	500 ppm *	0.4 ppm	
		Toluene	100 ppm	10.4 ppm	
		Xylene	100 ppm	1.5 ppm	
		Benzene	1 ppm **	0.06 ppm	
		Acetone	750 ppm	9.2 ppm	
		1,1,1 Trichloroethane	350 ppm	0.84 ppm	
			* TLV=0.1 ppm ** TLV=50 ppm		
HT071991004	Operator/Helper Granulator Area	Perchloroethylene	25 ppm	43.4 ppm	Operator worked primarily in the Granulator Area all day; normal operating conditions - granulator down for maintenance on a frequent basis. Sample time was 317 minutes.
HT071991005	Operator/Helper Drum Processing	Perchloroethylene	25 ppm	11.1 ppm	Operator worked in Drum Processing area and conducted normal tasks for that area (i.e., moving and staging drums, pumping drums, dumping drums, etc.) Sample time was 308 minutes.
		Xylene	100 ppm	9.3 ppm	
		Toluene	100 ppm	1.1 ppm	
		Benzene	1 ppm *	0.03 ppm	
		Methylene Chloride	500 ppm **	0.19 ppm	
			*TLV=0.1 ppm **TLV=50 ppm		
HT071991006	Operator/Helper Tank Storage Area	Perchloroethylene	25 ppm	11.1 ppm	Exposure occurred while gauging tanks; 15 tanks gauged during sampling period. Total time for task and sampling time was 15 minutes.
		Methylene Chloride	500 ppm *	9.3 ppm	
		Toluene	100 ppm	1.1 ppm	
		Xylene	100 ppm	<0.16 ppm	
		Benzene	1 ppm **	0.04 ppm	
		Acetone	750 ppm	0.86 ppm	
		1,1,1 Trichloroethane	350 ppm	10.2 ppm	
		?	*TLV=50 ppm **TLV=0.1 ppm		
HT071991008	Operator/Helper Granulator Area	Perchloroethylene	25 ppm	68.2 ppm	Exposure occurred while dumping drums of granulated material into augur leading to the Dryer. Sample time was 15 minutes.
HT071991009	Operator/Helper Granulator Area	Perchloroethylene	25 ppm	29.7 ppm	Operator was monitored while he was loading canisters into the granulator feed hopper. Sample time was 15 minutes.

USPCI, INC
HEALTH AND SAFETY
MONITORING RESULTS
HRS - WICHITA
JULY 19, 1991

SAMPLE NO.	JOB DESCRIPTION LOCATION	CONTAMINANT	EXPOSURE STANDARD	RESULT	COMMENTS
HT071991010	Operator/Helper Granulator Area	Perchloroethylene	25 ppm	28.4 ppm	Operator was at floor level while the granulator was in operation. Sample time was 15 minutes.
HT071991011	Granulator Area	Perchloroethylene	25 ppm	3.7 ppm	This was an "area" sample collected in the vicinity of the dryer augur. The sample was collected while the granulator was off and the dryer was being unloaded. Sample time was 12 minutes.
HT071991012	N/A	Perchloroethylene Benzene Methylene Chloride	N/A N/A N/A	ND* ND ND * None Detected	"Blank" for quality control.
HT071991013	N/A	Perchloroethylene Benzene Methylene Chloride	N/A N/A N/A	ND ND ND	"Blank" for quality control.
HT071991023	Granulator Area	Perchloroethylene	25 ppm	35 ppm	This indicator tube sample was taken when the operator removed the lid from the canister storage drum.
HT071991022	Granulator Area	Perchloroethylene	25 ppm	7 ppm	This indicator tube sample was taken just after the operator places the canister into the feed hopper and steps back.
HT071991024	Granulator Area	Perchloroethylene	25 ppm	7 ppm	This indicator tube sample was taken at floor level.
HT071991025	Granulator Area - carbon filter room	Perchloroethylene	25 ppm	11 ppm	This indicator tube sample was taken at floor level in the carbon filter room.

USPCI, INC
HEALTH AND SAFETY
MONITORING RESULTS
HRS - WICHITA
AUGUST 15 - 16, 1991

SAMPLE NO.	JOB DESCRIPTION LOCATION	CONTAMINANT	EXPOSURE STANDARD	RESULTS	COMMENTS
HW081591002	Operator/Helper	Benzene	1 ppm	<0.18 ppm	Survey monitoring was performed at the drum processing
		Methylene Chloride	500 ppm	<2.60 ppm	area. Task was limited due to equipment problems.
	Drum Processing	Perchloroethylene	25 ppm	<0.53 ppm	Sample time was 45 minutes.
		Toluene	100 ppm	<0.31 ppm	
		Trichlorethylene	50 ppm	<1.02 ppm	
		1,1,1 Trichloroethane	350 ppm	<1.01 ppm	
HW081691001	Operator/Helper	Benzene	1 ppm	<0.02 ppm	Survey monitoring was performed at the drum processing
		Methylene Chloride	500 ppm	<0.26 ppm	area. Sampling was representative of normal operations.
	Drum Processing	Perchloroethylene	25 ppm	<0.05 ppm	Sample time was 488 minutes.
		Toluene	100 ppm	4.27 ppm	
		Trichloroethylene	50 ppm	<0.10 ppm	
		1,1,1 Trichloroethane	350 ppm	3.04 ppm	
HW081691002	Operator/Helper	Benzene	1 ppm	<0.02 ppm	Survey monitoring was performed at the drum processing
		Methylene Chloride	500 ppm	<0.24 ppm	area. Sampling was representative of normal operations.
	Drum Processing	Perchloroethylene	25 ppm	<0.05 ppm	Sample time was 498 minutes.
		Toluene	100 ppm	2.24 ppm	
		Trichloroethylene	50 ppm	<0.10 ppm	
		1,1,1 Trichloroethane	350 ppm	2.37 ppm	
HW081691004	Operator	Benzene	1 ppm	<0.02 ppm	Survey monitoring performed in drum sampling
		Methylene Chloride	500 ppm	<0.28 ppm	processing area. Sampling was representative of normal
	Drum Processing	Perchloroethylene	25 ppm	<0.05 ppm	operations, the operator spent most of the time operating
		Toluene	100 ppm	4.48 ppm	the forklift and loading drums onto the roller conveyor.
		Trichloroethylene	50 ppm	<0.10 ppm	Sample time was 452 minutes.
		1,1,1 Trichloroethane	350 ppm	4.18 ppm	
HW081691005	N/A	Benzene	N/A	ND	"Blank" for quality control.
		Methylene Chloride	N/A	ND	
		Perchloroethylene	N/A	ND	
		Toluene	N/A	ND	
		Trichloroethylene	N/A	ND	
		1,1,1 Trichloroethane	N/A	ND	
HW081691006	Operator/Helper	Benzene	1 ppm	<0.24 ppm	Survey monitoring performed at the drum processing.
		Methylene Chloride	500 ppm	<3.04 ppm	Sampling was representative of normal operations, the
	Drum Processing	Perchloroethylene	25 ppm	<0.83 ppm	operator spent most of the time operating the drum
		Toluene	100 ppm	22.92 ppm	crusher. Sampling time was 486 minutes.
		Trichloroethylene	50 ppm	<1.51 ppm	
		1,1,1 Trichloroethane	350 ppm	29.41 ppm	
HW081691007	Operator	Benzene	1 ppm	<0.26 ppm	Survey monitoring performed at drum processing.
		Methylene Chloride	500 ppm	<3.22 ppm	Sampling was representative of normal operations.
	Drum Processing	Perchloroethylene	25 ppm	<0.88 ppm	Sample time was 452 minutes.
		Toluene	100 ppm	2.54 ppm	
	MOSH 25	Trichloroethylene	50 ppm	<1.58 ppm	
		1,1,1 Trichloroethane	350 ppm	5.83 ppm	

APPENDIX M-D

OPERATING MANUALS: DRIER UNIT

February 18, 1992

Littleford

PARTS
AND
INSTRUCTION MANUAL

FOR

Model No. FKM-3000-D

Serial No. 2822

Customer ECLIPSE TARGET

Littleford Order No. 40341

LITTLEFORD BROS., INC.
5 Empire Drive Florence, Kentucky 41042

INDEX FOR MODEL FKM-3000-D SERIAL # 40341-2822

~~#2601~~

CUSTOMER Eclipse Target

#2106 - P

SECTION I - GENERAL INFORMATION

FLY SHEETS SBI-3
SAFETY FIRST SBI-3
TERMS AND CONDITIONS SBI-300-28
PARTS AND SERVICE. SBI-300-30
FACTORY SERVICE RATES. SBI-300-31
EQUIPMENT WARRANTY SBI-300-29A
INSTALLATION AND OPERATION INSTRUCTIONS. . . . . SBI-300-50 (3 Pages)
CUSTOMER DRAWING 2106-P

SECTION II - MAIN SHAFT INFORMATION

BEARING ASSEMBLY SB-300-21
BEARING ASSEMBLY PARTS. 300-ML-79
BEARING ASSEMBLY INSTRUCTIONS. SBI-300-3
MAIN SHAFT INSTALLATION INSTRUCTIONS SB-300-7
MAIN SHAFT SEAL ASSEMBLY SB-300-128
MAIN SHAFT SEAL ASSEMBLY PARTS LIST. 300-ML-726
MAIN SHAFT SEAL INSTRUCTIONS . . . . . SBI-300-54 (2- Pages)
AIR SEAL CONTROLS. . . . . N/A
AIR SEAL CONTROLS PARTS LIST . . . . . N/A

SECTION III - MAIN DRIVE INFORMATION

DRIVE ASSEMBLY SB-300-118
DRIVE ASSEMBLY PARTS LIST. 300-ML-858
FALK GEAR REDUCER INSTRUCTIONS & MAINTENANCE INSTRUCT.
118-040 328-113 128-010 428-210

COUPLING INSTRUCTIONS. 428-010

BELT TENSIONING. SB-300-58
MOTOR INFORMATION. . . . . Siemens-Allis (Type RGZ Standard TEFC)

SECTION IV - DISCHARGE & CLEANOUT DOOR INFORMATION

DISCHARGE ASSEMBLY . . . . . N/A
DISCHARGE ASSEMBLY PARTS LIST. . . . . N/A
DISCHARGE LIMIT SWITCH ASSEMBLY. . . . . N/A
DISCHARGE LIMIT SWITCH PARTS LIST. . . . . N/A
LUBRI AIR ASSEMBLY . . . . . N/A
LUBRI AIR PARTS LIST . . . . . N/A
PNEUMATIC CYLINDER REPAIR KITS . . . . . N/A
ELECTROAIRE VALVE KIT. . . . . N/A
CLEANOUT DOOR ASSEMBLY SB-300-56
CLEANOUT DOOR ASSEMBLY PARTS LIST. 300-ML-506
GASKET INSTALLATION. 8125709
SAFETY LIMIT SWITCH ASSEMBLY SB-300-124
SAFETY LIMIT SWITCH PARTS LIST 300-ML-840

N/A Not Applicable for this Machine

LITTLEFORD BROS., INC.

15 Empire Dr. Florence, Ky. 41042
(606) 525-7600

LITTLEFORD-LODIGE PRECISION MIXER

OPERATING & MAINTENANCE INSTRUCTIONS BOOKLET

K-KM-FM-FKM -- CONTINUOUS & BATCH TYPE MIXERS

Manufacturers of Equipment for the Process Industry for over 80 Years

LITTLEFORD BROS., INC.

IMPORTANT

Safety First

Littleford must emphasize the importance of following the SAFETY PROCEDURES in all phases of moving, installing, Operating or maintaining our equipment.

Equipment Owners & Operators must fully read the following Safety Rules and completely familiarize themselves with this book and the equipment prior to handling, operating or servicing the equipment.

TRANSPORTATION:

Lifting lugs are supplied with our equipment, the weight of the unit should be determined prior to transporting the equipment. Care must be exercised not to handle the unit without using proper rigging and hoisting equipment. Proper anchoring of the unit in transportation is needed to avoid sudden jarring and shifting of the components. If drive components are supplied with the equipment, shimming and aligning still may be needed.

INSTALLATION:

Place the unit on a firm level foundation designed by a qualified structural engineer. Anchoring and levelling the equipment to the foundation is required prior to operating. Proper utility service must be installed and inspected to meet all local and federal codes.

OPERATION:

Read the instruction manual, familiarize yourself with all the safety features prior to starting the unit.

1) Check that all limit switches are in operating condition. Remember that any limit switch on this equipment is not intended as an on/off switch. The master switch in the main disconnect must be off prior to opening any cleanout door or reaching into charging, discharging, venting or any ports to gain access to the moving parts of the equipment. The moving parts must be completely stopped prior to touching them.

2) The equipment, when used for heating, pressure, or vacuum service for any process material, the user is fully liable if operating beyond the designed working limits of the manufacturer. Processing of any chemicals, or hazardous material must be done in an environment suitable for the application.

3) Check should be made that the equipment and work area be equipped to meet all federal and local safety codes prior to operation.

All moving parts are provided with guards. Do Not remove unless necessary. DO NOT run equipment with guards removed or any safeties out of order.

MAINTENANCE:

While cleaning, inspecting or performing any service on the equipment, the main power disconnect must be turned off and locked out prior to working on the equipment.

Proper maintenance procedure should be scheduled as frequently as the equipment is used and a log should be kept to indicate proper lubrication, oil changes, limit switches and other safety mechanisms to be assured of proper operating conditions.

Remember that SAFETY is FIRST in working with any piece of equipment.

If you change operating personnel, full training and complete understanding of this equipment must be given to the new personnel prior to operation.

Manufacturer and its agents disclaims any liability on such equipment operating without adhering to the aforementioned safety procedures.

LITTLEFORD BROS., INC.

LITTLEFORD-LODIGE PRECISION MIXER
OPERATING & MAINTENANCE INSTRUCTIONS BOOKLET
K-KM-FM-FKM -- CONTINUOUS & BATCH TYPE MIXERS

A. INSTALLATION

1. Placement: Your mixer should be level when operating. It is mandatory that the mixer be securely bolted to the floor.

2. Electrical Connections: Have your Maintenance Department carefully check each motor junction box, making certain that it is set for the voltage with which you intend to operate. Each starter must be checked to determine that the correct overload heaters are installed.

3. Gaskets: The doors and openings of this mixer, are equipped with gasketing. They are easily exchangeable, and replacements are immediately available from Littleford Bros., Inc., Precision Mixer Division.

B. OPERATION

1. Rotation of Main Mixer Shaft: If the drive has been installed on the mixer by Littleford Bros., Inc., it will be operating at the proper speed. The main plows should rotate in the direction shown by the decals on the machine. Before the initial start-up and periodically thereafter, care should be taken that the plow arms are securely bolted into their main shaft pockets.

2. High Speed Blending Chopper(s) (OPTIONAL): The high speed blending Chopper operates at 3500 RPM. This chopper(s) consists of four (4) Blades and is installed on the extended motor shaft on the inside of the mixing drum. These chopper(s) should rotate in a counter-clockwise direction when looking directly at the blades from the front access doors.

B. OPERATION (continued)

3. Charging and Loading the Mixer: The filling range or capacity is 25% to 70% of total volume. The most favorable filling degree is approximately 60% of total volume, or a point just above the main shaft of the mixer. The material should be charged through the filling opening at the top of the mixing drum. The front clean-out access doors should be closed during the loading cycle.

4. Liquid or Powder Addition: If liquid is to be added to the mix, it should be done through the liquid injector or ports, if provided. Best results are obtained if the liquid is added while the main shaft is operating at the standard RPM.

5. Discharge of the Mix for K-FM and FKM Batch Type. A rectangular contoured opening is installed in the bottom of the drum....the hand lever for operating the discharge door is located outside the mixer head. (If manual discharge operation) The clamping mechanism of this operating lever is adjustable so the door may always be tightly locked. For rapid and complete discharge the main plows may be running at standard RPM. CARE SHOULD BE TAKEN NOT TO REACH UP INTO THE MIXING VESSEL WHILE THE PLOWS ARE ROTATING FOR DISCHARGE. See additional safety instructions titled "Safety First."

6. Discharge of the Mix for KM Continuous Mixers. A rectangular opening with an adjustable discharge door is installed on the head of the mixer. The door is adjustable by means of a rack and pinion gear. The main plows must be running for discharge.

B. OPERATION (continued)

7. Safety Limit Switches: The main access clean-out door(s) are, unless otherwise specified, equipped with safety limit switches that should stop the motors when any of these doors are opened.

8. Cleaning: The Littleford-Lodige Mixer is an extremely easy piece of process equipment to clean. Cleaning may be done with the aid of water, clean cloths, compressed air, brushes or vacuum cleaners. If a cleaning solution other than water is used, be sure that it will not have a damaging effect on the seals and gasket material. For complete safety it is suggested that while cleaning or working in the mixer for any reason, the electrical supply to the motors be disconnected or shut off.

9. Removal of MAIN Plows: If the main plows must be removed for cleaning or repair, care should be taken that each plow is returned to its proper plow mount pocket. Each plow is numbered with a corresponding number stamped on each plow mount pocket.

10. Parts and Maintenance: For part numbers for ordering replacement parts for your mixer, consult the appropriate pages of this manual. Service is also available. Use the description and part numbers listed herein when contacting the factory for parts or service.

WARNING

DO NOT OPERATE THIS EQUIPMENT IN EXCESS OF THE VALUES GIVEN ON MOTOR NAMEPLATES OR CONTRARY TO THE INSTRUCTIONS CONTAINED IN THIS MANUAL. EXCESSIVE STARTS AND STOPS WILL REDUCE MOTOR LIFE.

LITTLEFORD BROS., INC.
PROCESS EQUIPMENT DIV.

MODEL NO.

PRELIMINARY DRAWING NO.
SB-300-8

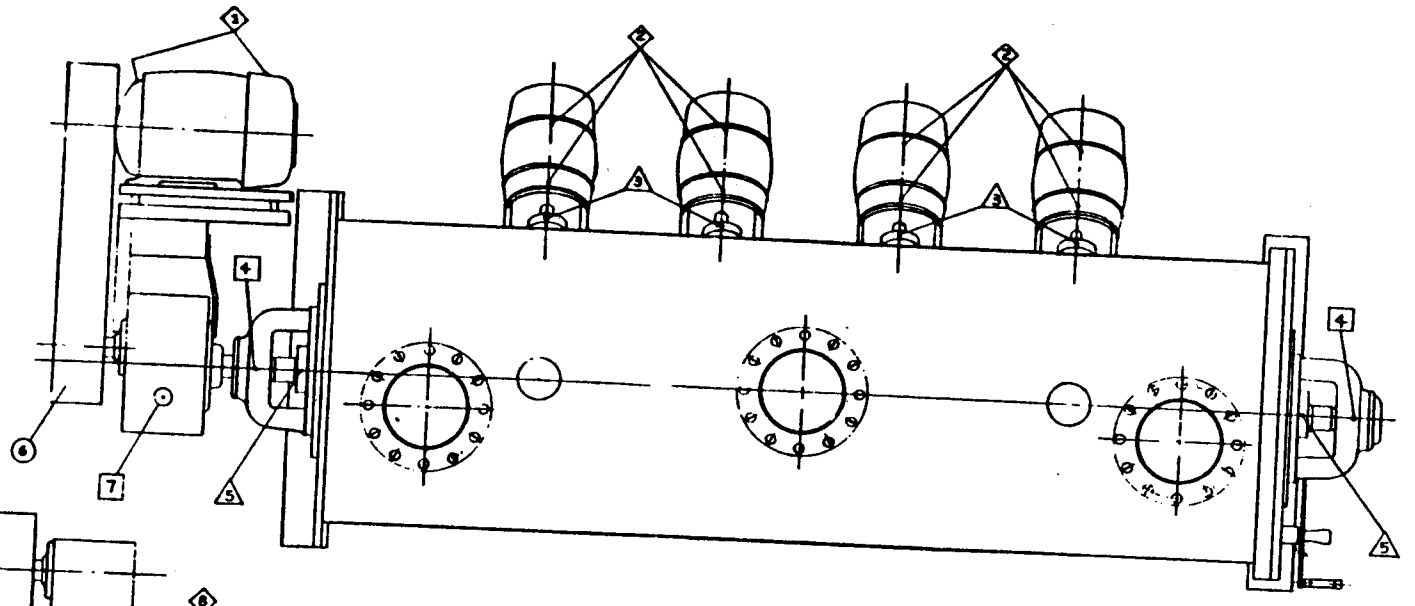

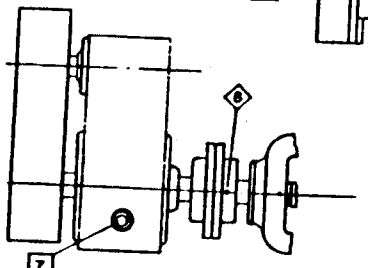

BASE MOUNTED REDUCER

KEY TO LUBRICANT TYPES	
SG	STANDARD GREASE GUN GREASE
PG	PHARMACEUTICAL GREASE GUN GREASE
TO	ENCLOSED GEAR LUBRICATING OIL

KEY TO SERVICE SYMBOLS	
△	ONE WEEK OR 75 HOURS
○	ONE MONTH OR 300 HOURS
□	SIX MONTHS OR 1500 HOURS
◇	NINE MONTHS OR 2400 HOURS

*USE "I" PURPOSE LITHIUM BASE GREASE.

(SOMETIMES REFERS PETROLEUM OTHER PETROLEUM ALLOY). FOR MANUFACTURING, PROCESSING, AND MANUFACTURING AS REGULATED BY:

U.S. DEPARTMENT OF HEALTH, EDUCATION, AND WELFARE, FOOD AND DRUG ADMINISTRATION (FDA), DRUG, AND COSMETIC ACT

LUBRICATION CHART

1	MAIN MOTOR BEARINGS	SG	REMOVE PLUGS AND ADD ZERKS. LUBRICATE AND RETURN PLUGS TO MOTOR
2	CHOPPER MOTOR	-	DO NOT REMOVE PLUGS AND ADD LUBRICATION. BEARINGS ARE LUBRICATED FOR LIFE.
3	CHOPPER PACKING A. FOOD MIXING OR PHARMACEUTICAL B. HIGH TEMPERATURE AND NON-FOOD MIXING	 PG SG	 A. THIS GREASE HAS A LOW MELTING POINT OF 120° TO 140°F. B. A LITHIUM BASE GREASE, INERT TO WATER ACTION.
4	MAIN SHAFT BEARINGS	SG	DO NOT OVER LUBRICATE
5	MAIN SHAFT SEALS	PG SG	LUBRICATE "SPLIT-KLOSURE" SEAL. DO NOT LUBRICATE AIR SEAL OR STANDARD PACKING
6	MAIN DRIVE BELTS		CHECK ADJUSTMENT DURING LUBRICATING MAINTENANCE PERIOD.
7	REDUCER	TO	SEE ATTACHED SHEET FROM REDUCER MANUFACTURER
8	MECHANICAL COUPLING	SG	SEE ATTACHED SHEET WHEN COUPLING IS USED

STANDARD GREASE GUN GREASE (LITTLEFORD SG)

MANUFACTURER	LUBRICANT
ALEMITE	LITHIUM #2
AMERICAN OIL CO.	AMOLITH #2
ATLANTIC REFINING	ATLANTIC LUBRICANT 54
CITIES SERVICE OIL CO.	TROJAN GREASE H-A2
CONTINENTAL OIL CO.	CONOCO SUPERLUBE
FISKE BROS. REFINING CO.	LUBRIPLATE NO. 630-2
GULF OIL CORP.	GULF CROWN GREASE #2
E. F. HOUGHTON & CO.	COSMOLUBE NO. 2
HUMBLE OIL & REFINING CO.	
IMPERIAL OIL LTD.	ESSO MP GREASE H
KENDALL REFINING CO.	KENLUBE S-823
KEYSTONE LUBRICATING CO.	NO. 44 GREASE
NATIONAL REFINING CO.	ENARCO FLOTEX EP #2
OHIO OIL CO.	MARATHON 535 UJ GREASE
PHILLIPS PETROLEUM CO.	PHILUBE MULTIPURPOSE GREASE L2
PURE OIL CO.	POCO FIBRE GREASE #2
SHELL OIL CO.	ALVANIA GREASE NO. 2
SINCLAIR REFINING CO.	SINCOLUBE GREASE NO.
SOCONY MOBIL OIL CO.	MOBILUX NO. 2
STANDARD OIL CO. (CALIF.) (OHIO)	CHEVRON SA GREASE NO. 2
SUN OIL CO.	SOHTIRAN NO. 2
TEXACO INC.	PRESTIGE 42
UNION OIL CO. OF CALIF.	MARFAK HEAVY DUTY NO. 2
	UNOBA 2

LITTLEFORD BROS., INC.

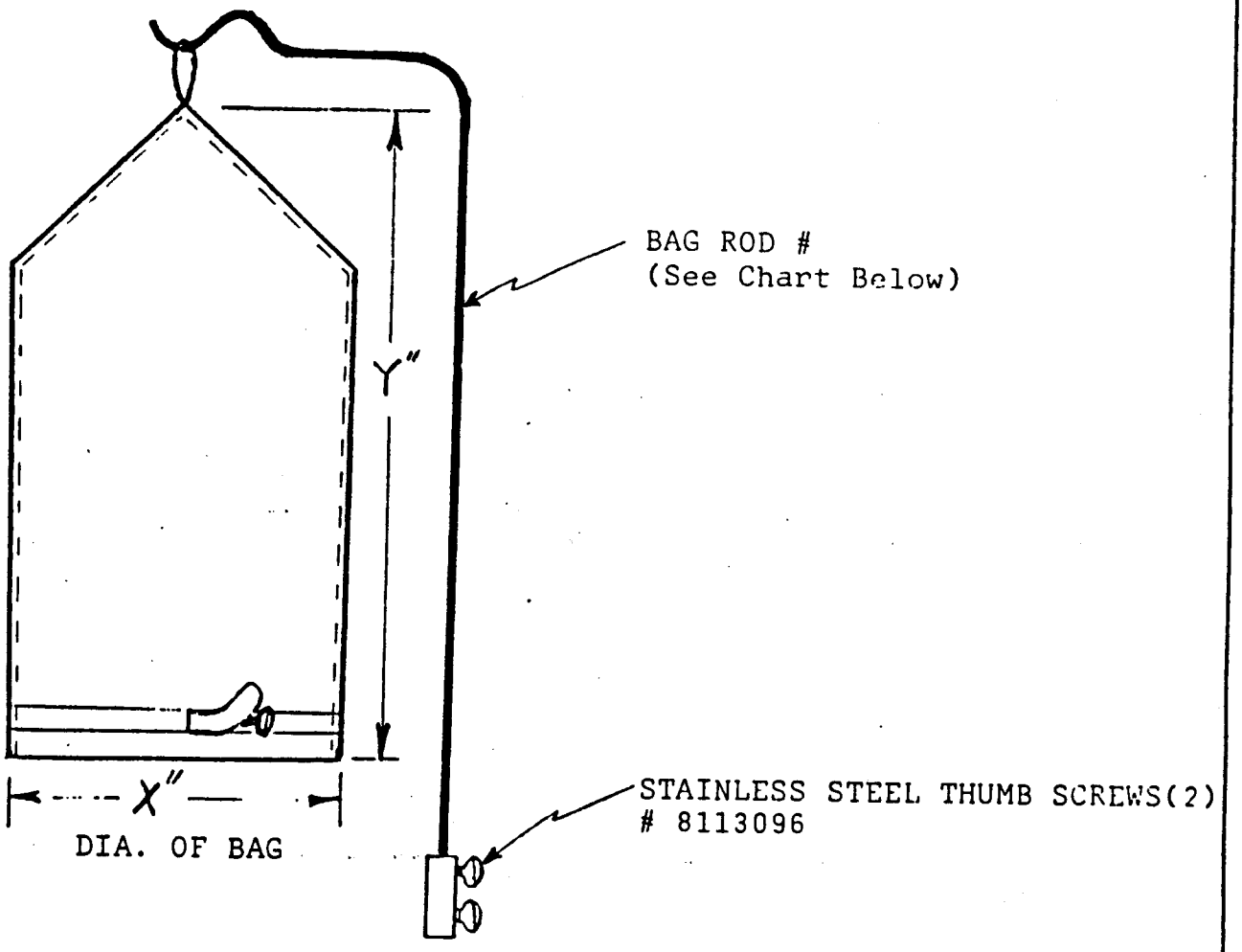

VENT SIZE	"X" DIM.	"Y" DIM.	BAG PART NUMBER	BAG CLAMP PART NUMBER	ROD PART NUMBER
8"	9"	20"	8115690	8115517	8123330
8"	9"	36"	8117044	8115517	8117061
10¼"	11"	20"	8115691	8115785	8123358
15½"	16½"	28"	8115692	8115876	8123753

NOTE: ALL BAG MATERIAL DACRON # 7101-B

LITTLEFORD BROS., INC. PROCESS EQUIPMENT DIV.	JACKET SCHEMATIC	SB-300-65

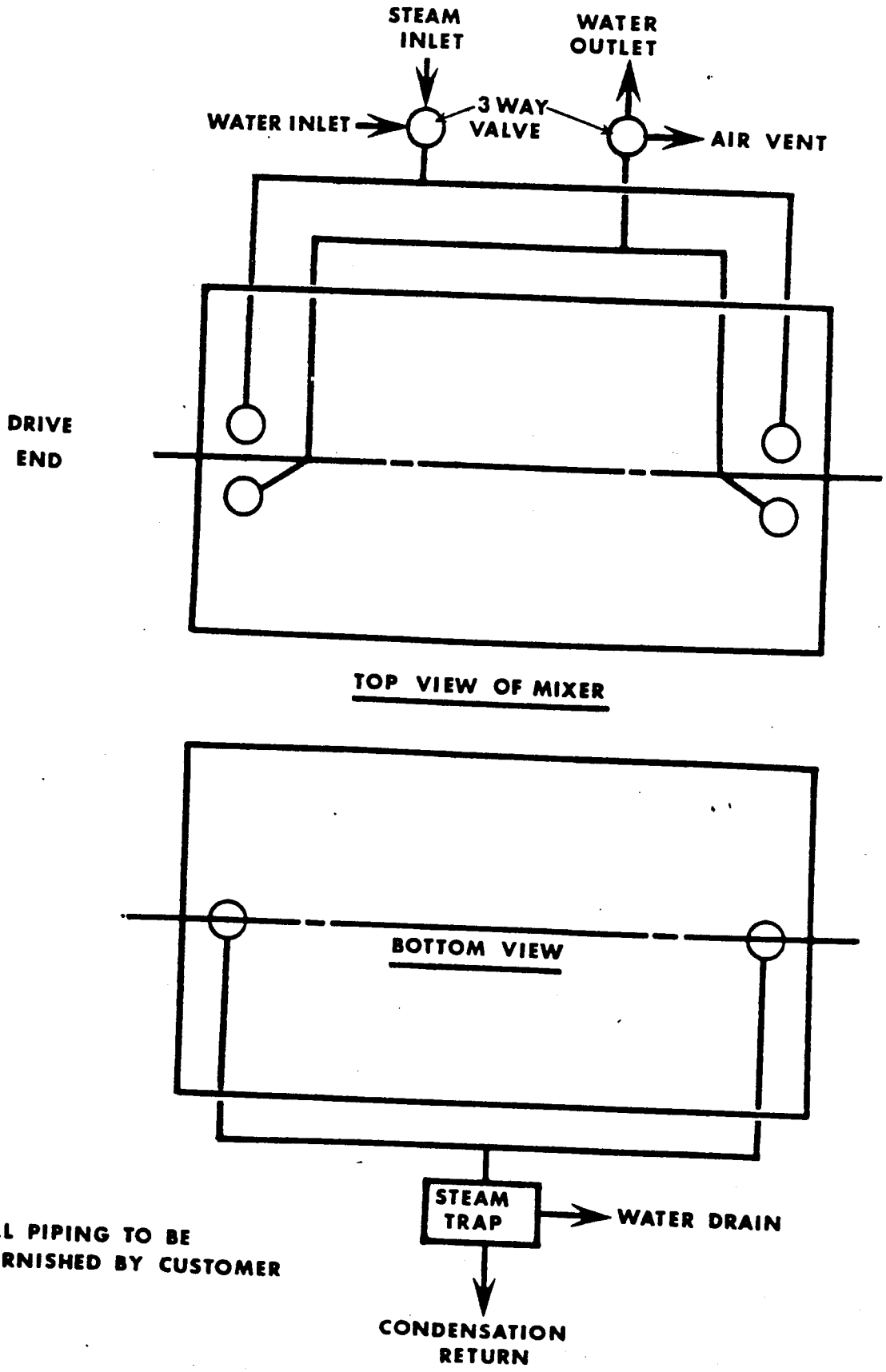

ALL PIPING TO BE FURNISHED BY CUSTOMER

APPENDIX M-E

OPERATING MANUALS: DISPERSING UNIT

February 18, 1992

FCF BOWERS

FCF-BOWERS INC.
487 LORNE AVE. E., STRATFORD, ONT. N5A 6T1
Tel. 519-271-4750 Fax. 519-271-1092

BOWERS DISPERSER

Installation, Operating & Maintenance Instructions

Spare Parts Diagrams

Machine Model No: 60 VSM 18 Serial No: 1610-91

Please quote these numbers in all communications regarding this machine and especially if ordering parts.

Customer: Hydrocarbon Recycling

Customer's P.O. No. 15196 Shipped: June 1991

Safety First

Any moving machine part can be dangerous. To prevent accidents, never run the machine unless rotor is **in a batch**. Caution - a cleaning rag or loose clothing wrapped around a rotating shaft or coming into contact with a moving rotor can cause serious injury.

FCF BOWERS
CUSTOM FABRICATION
DISPERSERS, MIXERS
PROCESS VESSELS
MCCR-ASME-U
CSA - Z 299.3

Gordon Switzer
Technical Sales & Service

FCF-BOWERS INC.
487 LORNE AVENUE EAST, STRATFORD, ONTARIO N5A 6T1
Tel. 519-271-4750 Fax. 519-271-1092

TECHNICAL SPECIFICATION

Electrical Components satisfy hazardous area application Class 1, Division 2, Group D.

Disperser

Motor 60HP/1800RPM 575V/3Ph/60Hz 364T Frame
Full Load Current 56 Amps

V.S. Drive - Speed Selector 417/518-60

V Belts 8.0/21.2 (2.65 Ratio)

Disperser drive is rated 60 HP at 680 RPM. Refer to Diagram No. 1

Motor Speed (RPM)	C'Shaft Speed (RPM)	Disperser Speed (RPM)
1800	3000	1132 (Max)
	1800	680 (1:1)
	630	240 (Min)

Useful Speed Range 250 to 1040 RPM

Tip Speed
21" Rotor 1319 rpm to 5717 RPM

PROCESSING RECOMMENDATIONS & INSTRUCTIONS

The enclosed sheet headed P-2 & P-7 Dispersion Rotors briefly describes how these blades utilise dual shear to produce maximum process results in a minimum of time.

The information on rotor to tank relationship, speed, power and batch size given on the reverse side of the Rotor Sheet and the following operating tips have been prepared to assist you, the operator, in obtaining the best possible process results with a minimum of effort.

Tank selection is a very important first step. Whenever possible always use a tank in which the depth of your batch will be at least equal to the tank diam. Use of tanks with larger diameters requires use of larger rotors to maintain a satisfactory tank diam. to rotor ratio. These larger size rotors required, may well be beyond the size range suitable for proper use with your machine.

The rotor to tank ratio table will prove a useful guide for selection of proper tank and rotor combination. "Standard" ratios shown are widely used for products such as paint base pastes, larger ratios can often be used for products having a lower viscosity and such operations as thinning, tinting, cutting and general mixing. Smaller ratios will be required for processing higher viscosity materials.

Procedure is usually the same for all products. The liquid portion of the batch is placed in the tank and the machine is started. Dry ingredients are then added. Feed (do not dump) dry materials into the batch as fast as they are being incorporated into the liquid. This usually only requires seconds but can make a difference of minutes on total batch processing time. This method of addition insures fastest wetting of dry materials and minimizes possibility of lumping. "Floating" powder is usually an indication that it is being added too fast or that the impeller is too low in the batch, to correct raise impeller slightly and/or decrease feed rate.

When all dry ingredients are in, any material adhering to the tank wall or shaft should be removed into the batch.

PROCESSING RECOMMENDATIONS & INSTRUCTIONS (Cont'd.)

After all ingredients are in there should be a rotational and fold in movement to the batch with material moving from the tank wall towards the disperser shaft. The rotor should be fully buried in the batch at all times. Excessive vortexing can cause undesirable aeration of the product and result in power wasting rotor skip. There are several ways to eliminate excessive vortexing including: use small diam. tank (and rotor) with resultant greater product depth, adjust depth of rotor, reduce speed, increase viscosity by holding back some of the batch liquid or set rotor slightly off center in tank.

Power available is limited to the rating of the motor fitted to your machine. The full load rating of the motor in amps is given on the nameplate fitted to this motor. Check the reading on your ammeter periodically during processing to make sure that you are not exceeding the full load amp rating of your motor. Overloading of the motor can cause serious damage. In the event of overloading there are several ways in which the power drawn may be decreased. These are: reduce speed, lower viscosity of batch, decrease batch size and use smaller rotor.

Speed required to get the process results you require will vary from product to product. Dispersion applications usually require a rotor tip speed in the 3400 to 4000 feet per minute (F.P.M.) range. Speeds for such operations as thinning, mixing, cutting, etc. are usually 500 to 1000 F.P.M. less than for dispersion. Since power drawn increases with speed you should always use the minimum speed required to process each batch. Use of lowest possible speed will minimize possibility of rotor skip and slip. Rotor skip causes uneven rotor loading and wide power demand fluctuation and vibration. Rotor slip generates undesirable heat.

Rotor speeds are always expressed in feet per minute. To determine this speed divide rotor diam. in inches by 12 and multiply resulting figure by 3.14 times shaft R.P.M. (revolutions per minute).

NOTE: While the above information refers specifically to the Standard P-2 Rotors it is also generally applicable to processing with the new P-7 Rotor which has been specifically designed for high viscosity applications.

Naturally with higher viscosity materials the smaller rotor to tank ratios should be used and with the P-7 Rotor suggested speed ranges may be increased by approx. 500 F.P.M.

IMPORTANT

Do not overload motor.

Do not adjust speed with motor stopped.

Do not lift rotor out of batch with motor running.

Always stop and start machine at lowest speed.

Always have rotor in batch or empty tank when running.

Always make sure all controls are locked before starting unit.

Always keep machine clean and service regularly.

APPENDIX M-F

DRAFT PRELIMINARY ASSESSMENT REPORT FOR HRIW

February 18, 1992

170A

DRAFT
PRELIMINARY ASSESSMENT REPORT

RCRA FACILITY ASSESSMENT
HYDROCARBON RECYCLERS, INC.
WICHITA, KANSAS

Prepared for:

U.S. ENVIRONMENTAL PROTECTION AGENCY
Office of Waste Programs Enforcement
Washington, D.C. 20460

Work Assignment No.	:	R07015
USEPA Region	:	7
Date Prepared	:	September 24, 1990
Contract No.	:	68-W9-0006
PRC No.	:	009R07015
Prepared by	:	B&V Waste Science and Technology Corp.
Work Assignment Manager	:	John P. Nett
Telephone No.	:	913/339-2900
USEPA Primary Contract	:	Mark Matthews
Telephone No.	:	913/551-7635

prc

PRC Environmental Management, Inc.

DRAFT
PRELIMINARY ASSESSMENT REPORT

RCRA FACILITY ASSESSMENT
HYDROCARBON RECYCLERS, INC.
WICHITA, KANSAS

Prepared for:

U.S. ENVIRONMENTAL PROTECTION AGENCY
Office of Waste Programs Enforcement
Washington, D.C. 20460

Work Assignment No.	:	R07015
USEPA Region	:	7
Date Prepared	:	September 24, 1990
Contract No.	:	68-W9-0006
PRC No.	:	009R07015
Prepared by	:	B&V Waste Science and Technology Corp.
Work Assignment Manager	:	John P. Nett
Telephone No.	:	913/339-2900
USEPA Primary Contract	:	Mark Matthews
Telephone No.	:	913/551-7635

RCRA FACILITY ASSESSMENT
DRAFT PRELIMINARY ASSESSMENT REPORT
HYDROCARBON RECYCLERS, INC.

TABLE OF CONTENTS

SECTION PAGE

ABBREVIATIONS i

1.0 INTRODUCTION 1-1
- 1.1 HAZARDOUS AND SOLID WASTE AMENDMENTS AND OTHER REGULATORY AUTHORITY 1-1
- 1.2 RCRA CORRECTIVE ACTION PROGRAM 1-3
- 1.3 PRELIMINARY REVIEW 1-4
- 1.4 VISUAL SITE INSPECTION 1-5

2.0 ENVIRONMENTAL SETTING 2-1
- 2.1 FACILITY LOCATION AND GEOGRAPHIC SETTING 2-1
- 2.2 CLIMATOLOGY 2-1
- 2.3 HYDROLOGY 2-3
- 2.4 SOILS AND GEOLOGY 2-4
- 2.5 HYDROGEOLOGY 2-8
- 2.6 GROUND WATER USAGE AND WATER QUALITY 2-9

3.0 FACILITY AND PROCESS DESCRIPTIONS 3-1
- 3.1 PAST FACILITY OPERATION 3-1
  - 3.1.1 South Plant 3-1
  - 3.1.2 North Plant 3-2
- 3.2 CURRENT FACILITY OPERATION 3-3
- 3.3 REGULATORY HISTORY 3-7

4.0 SOLID WASTE MANAGEMENT UNITS AND AREAS OF CONCERN 4-1
- 4.1 PROCESS AREA STORAGE TANKS 4-1
  - 4.1.1 Unit Characteristics 4-1
  - 4.1.2 Waste Characteristics 4-3
  - 4.1.3 History of Releases 4-4
  - 4.1.4 Potential for Release 4-4
- 4.2 WASTE BLENDING AND DRUM PROCESSING AREA 4-5
  - 4.2.1 Unit Characteristics 4-5
  - 4.2.2 Waste Characteristics 4-6
  - 4.2.3 History of Releases 4-6
  - 4.2.4 Potential for Release 4-6

RCRA FACILITY ASSESSMENT
DRAFT PRELIMINARY ASSESSMENT REPORT
HYDROCARBON RECYCLERS, INC.

TABLE OF CONTENTS

4.3 FORMER DRUM PROCESSING AREA 4-6
4.3.1 Unit Characteristics 4-6
4.3.2 Waste Characteristics 4-7
4.3.3 History of Releases 4-8
4.3.4 Potential for Release 4-8
4.4 PROCESS AREA TRUCK BAY 4-9
4.4.1 Unit Characteristics 4-9
4.4.2 Waste Characteristics 4-9
4.4.3 History of Releases 4-9
4.4.4 Potential for Release 4-9
4.5 SPARGING AREA 4-10
4.5.1 Unit Characteristics 4-10
4.5.2 Waste Characteristics 4-10
4.5.3 History of Releases 4-11
4.5.4 Potential for Release 4-11
4.6 HOT ROOM 4-11
4.6.1 Unit Characteristics 4-11
4.6.2 Waste Characteristics 4-11
4.6.3 History of Releases 4-12
4.6.4 Potential for Release 4-12
4.7 ELEVATED TANK STORAGE AREA 4-12
4.7.1 Unit Characteristics 4-12
4.7.2 Waste Characteristics 4-12
4.7.3 History of Releases 4-13
4.7.4 Potential for Release 4-13
4.8 NONREGULATED WASTE STORAGE AREA 4-13
4.8.1 Unit Characteristics 4-13
4.8.2 Waste Characteristics 4-14
4.8.3 History of Releases 4-14
4.8.4 Potential for Release 4-14
4.9 SOLIDS DRYER AREA 4-14
4.9.1 Unit Characteristics 4-14
4.9.2 Waste Characteristics 4-15
4.9.3 History of Releases 4-15
4.9.4 Potential for Release 4-15

RCRA FACILITY ASSESSMENT
DRAFT PRELIMINARY ASSESSMENT REPORT
HYDROCARBON RECYCLERS, INC.

TABLE OF CONTENTS

4.10 DRUM CRUSHER 4-15
4.10.1 Unit Characteristics 4-15
4.10.2 Waste Characteristics 4-16
4.10.3 History of Releases 4-16
4.10.4 Potential for Release 4-16
4.11 CRUSHED DRUM ROLL-OFF BOXES 4-16
4.11.1 Unit Characteristics 4-16
4.11.2 Waste Characteristics 4-16
4.11.3 History of Releases 4-17
4.11.4 Potential for Release 4-17
4.12 WARM ROOM 4-17
4.12.1 Unit Characteristics 4-17
4.12.2 Waste Characteristics 4-17
4.12.3 History of Releases 4-18
4.12.4 Potential for Release 4-18
4.13 DOCK AREA 4-18
4.13.1 Unit Characteristics 4-18
4.13.2 Waste Characteristics 4-19
4.13.3 History of Releases 4-19
4.13.4 Potential for Release 4-19
4.14 DRUM STORAGE WAREHOUSE (BUILDING C) 4-20
4.14.1 Unit Characteristics 4-20
4.14.2 Waste Characteristics 4-21
4.14.3 History of Releases 4-21
4.14.4 Potential for Release 4-21
4.15 CORROSIVE WASTE STORAGE AREA 4-21
4.15.1 Unit Characteristics 4-21
4.15.2 Waste Characteristics 4-22
4.15.3 History of Releases 4-22
4.15.4 Potential for Release 4-22
4.16 DRY SOLIDS GONDOLA 4-23
4.16.1 Unit Characteristics 4-23
4.16.2 Waste Characteristics 4-23
4.16.3 History of Releases 4-23
4.16.4 Potential for Release 4-23

RCRA FACILITY ASSESSMENT
DRAFT PRELIMINARY ASSESSMENT REPORT
HYDROCARBON RECYCLERS, INC.

TABLE OF CONTENTS

4.17 LABORATORY SAMPLE STORAGE AREA 4-24
4.17.1 Unit Characteristics 4-24
4.17.2 Waste Characteristics 4-24
4.17.3 History of Releases 4-24
4.17.4 Potential for Release 4-25
4.18 VEHICLE FUELING TANKS 4-25
4.18.1 Unit Characteristics 4-25
4.18.2 Waste Characteristics 4-25
4.18.3 History of Releases 4-25
4.18.4 Potential for Release 4-25
4.19 OPEN AREA ALONG SOUTHWEST CORNER 4-26
4.19.1 Unit Characteristics 4-26
4.19.2 Waste Characteristics 4-26
4.19.3 History of Releases 4-26
4.19.4 Potential for Release 4-27
4.20 BUILDING J 4-27
4.21.1 Unit Characteristics 4-27
4.21.2 Waste Characteristics 4-27
4.21.3 History of Releases 4-28
4.21.4 Potential for Release 4-28
4.21 BUILDING I 4-28
4.21.1 Unit Characteristics 4-28
4.21.2 Waste Characteristics 4-29
4.21.3 History of Releases 4-29
4.21.4 Potential for Release 4-30
4.22 CONCRETE VAULT 4-30
4.22.1 Unit Characteristics 4-30
4.22.2 Waste Characteristics 4-31
4.22.3 History of Releases 4-31
4.22.4 Potential for Release 4-31
4.23 OPEN AREA NORTH OF BUILDING I 4-31
4.23.1 Unit Characteristics 4-31
4.23.2 Waste Characteristics 4-32
4.23.3 History of Releases 4-32
4.23.4 Potential for Release 4-33

RCRA FACILITY ASSESSMENT
DRAFT PRELIMINARY ASSESSMENT REPORT
HYDROCARBON RECYCLERS, INC.

TABLE OF CONTENTS

5.0 CONCLUSIONS AND SUGGESTED FURTHER ACTION 5-1
- 5.1 GENERAL FACILITY SUMMARY 5-1
- 5.2 CONTAMINANT MIGRATION AND POTENTIAL RECEPTORS 5-3
  - 5.2.1 Soil 5-3
  - 5.2.2 Ground Water 5-4
  - 5.2.3 Surface Water 5-4
  - 5.2.4 Air 5-4
  - 5.2.5 Subsurface Gas 5-5
- 5.3 RECOMMENDATIONS FOR FURTHER ACTION 5-5

6.0 REFERENCES 6-1

APPENDIX A
VISUAL SITE INSPECTION SUMMARY

APPENDIX B
VISUAL SITE INSPECTION PHOTOGRAPH LOG

APPENDIX C
VISUAL SITE INSPECTION NOTE LOG

RCRA FACILITY ASSESSMENT
DRAFT PRELIMINARY ASSESSMENT REPORT
HYDROCARBON RECYCLERS, INC.

TABLE OF CONTENTS

LIST OF TABLES

TABLE		PAGE
TABLE 2-1	CLIMATOLOGICAL DATA, WICHITA, KANSAS	2-2
TABLE 2-2	GENERAL SECTION OF GEOLOGIC FORMATIONS IN SEDGWICK COUNTY, KANSAS, AND THEIR WATER-BEARING PROPERTIES	2-5
TABLE 2-3	RECORD OF SELECTED EXISTING WELLS LOCATED WITHIN A 1-MILE RADIUS FROM THE HRI FACILITY	2-10
TABLE 2-4	ANALYTICAL RESULTS FOR VOLATILE ORGANIC COMPOUND CONCENTRATIONS IN GROUND WATER SAMPLES TAKEN FROM EXISTING WELLS IN THE VICINITY OF HRI	2-12
TABLE 4-1	LIST OF SOLID WASTE MANAGEMENT UNITS AND AREAS OF CONCERN	4-2
TABLE 5-1	SUMMARY OF RECOMMENDATIONS	5-6

LIST OF FIGURES

FIGURE		FOLLOWING PAGE
FIGURE 2-1	SITE VICINITY MAP	2-1
FIGURE 2-2	SITE PLAN AND FACILITY LAYOUT	2-3
FIGURE 2-3	EXISTING WELLS AND GROUND WATER CONTOURS FOR THE HRI AREA	2-9

RCRA FACILITY ASSESSMENT
DRAFT PRELIMINARY ASSESSMENT REPORT
HYDROCARBON RECYCLERS, INC.

TABLE OF CONTENTS

LIST OF FIGURES (CONTINUED)

FIGURE		FOLLOWING PAGE
FIGURE 2-4	EXISTING WELLS IN THE VICINITY OF HRI	2-10
FIGURE 3-1	REID SUPPLY COMPANY NORTH PLANT - 7/26/80	3-2
FIGURE 3-2	WASTE CHANNELING THROUGH HRI FACILITY	3-3

RCRA FACILITY ASSESSMENT
DRAFT PRELIMINARY ASSESSMENT REPORT
HYDROCARBON RECYCLERS, INC.

LIST OF ABBREVIATIONS

BVWST	B&V Waste Science and Technology Corp.
CEI	compliance envaluation inspection
CM	corrective measures
cm/s	centimeters per second
CSI	Conservation Services, Inc.
gpd	gallons per day
HRI	Hydrocarbon Recyclers, Inc.
KDHE	Kansas Department of Health and Environment
msl	mean sea level
NOAA	National Oceanic and Atmospheric Administration
NOD/LOW	Notice of Defiency/Letter Of Warning
NOV	notice of violation
PR	preliminary review
PRC	PRC Environmental Management, Inc.
RCRA	Resource Conservation and Recovery Act
RFA	RCRA facility assessment
RFI	RCRA facility investigation
RI	remedial investigation
RSC	Reid Supply Company
SCS	Soil Conservation Service
SCSC	Service Chemical Supply Company
SV	sampling visit
SWMU	solid waste management unit
TSD	treatment storage and disposal
ug/l	micrograms per liter
USDA	United States Department of Agriculture
USEPA	United States Environmental Protection Agency
USPCI	U.S. Pollution Control, Inc.
VOC	volatile organic compound
VSI	visual site inspection
WNID	Wichita North Industrial District

1.0 INTRODUCTION

PRC Environmental Management, Inc. (PRC) received Work Assignment No. R07015 from the U.S. Environmental Protection Agency (USEPA) under Contract No. 68-W9-0006 (TES 9). Under this work assignment, Black & Veatch Waste Science and Technology Corp. (BVWST) will provide technical support to USEPA in the performance of a Resource Conservation and Recovery Act (RCRA) facility assessment (RFA) of the Hydrocarbon Recyclers, Inc. facility in Wichita, Kansas.

The purpose of this report is to document the first two steps in the RFA process [the preliminary review (PR) and the visual site inspection (VSI)]. This Preliminary Assessment report will document the information gathered in the PR and VSI and will evaluate the need for a sampling visit (SV). This report is an intermediate step in the RFA under the RCRA corrective action program. Information in Sections 1.1 and 1.2 has been developed from the RCRA Facility Assessment Guidance (USEPA, 1986).

1.1 HAZARDOUS AND SOLID WASTE AMENDMENTS AND OTHER REGULATORY AUTHORITY

The Hazardous and Solid Waste Amendments (HSWA) of November 8, 1984 provide the USEPA with the authority to require corrective action at RCRA treatment, storage, and disposal (TSD) facilities. These authorities include:

- <u>§3004(u) - Corrective Action for Continuing Releases</u>
  Requires that any permit issued after November 8, 1984 provide for corrective action for all releases from solid waste management units (SWMUs) at the facility regardless of the time which waste was placed in the unit. The provision also requires that owners/operators demonstrate financial assurance for any required corrective action, and allows schedules of compliance to be used in permits where the corrective action cannot be completed prior to permit issuance.

- <u>§3008(h) - Interim Status Corrective Action Orders</u>
  Provides authority to issue enforcement orders to compel corrective actions or other response measures at interim status facilities, as well as authority to take civil action against facilities for appropriate relief.

- §3004(v) - Corrective Action Beyond the Facility Boundary
  Directs USEPA to issue regulations requiring corrective action beyond the facility boundary to protect human health and the environment. The only exception to this is if the owner/operator can demonstrate that it is unable to obtain permission to take corrective action on offsite property. Until the regulations requiring corrective action beyond the facility boundary are promulgated, corrective action orders may be issued to require the necessary corrective action.

The HSWA §3004(u) provision focuses on investigating releases from SWMUs at RCRA facilities. SWMUs are defined as "any discernible (solid) waste (as defined in 40 CFR 261.2) unit at a RCRA facility from which hazardous constituents might migrate, irrespective of whether the unit was intended for the management of solid and/or hazardous waste" (USEPA, 1986). The SWMU definition includes containers; tanks; surface impoundments; waste piles; land treatment units; landfills; incinerators; underground injection wells; wastewater treatment units; recycling units; and areas contaminated by routine, and systematic discharges from a process area. The §3008(h) authority applies to any release of hazardous wastes and/or hazardous constituents from an Interim Status TSD facility. Other HSWA authorities that may be utilized by USEPA in addressing releases include:

- §3005(c) - Permit Issuance
  Authorizes USEPA, upon determination that a facility is in compliance with Sections 3004 and 3005 of RCRA, to issue permits to TSD facilities that have applied for such permits.

- §3007 - Inspections
  Permits USEPA to enter, inspect, sample, and examine records of any generator or TSD facility for purposes of developing any regulation or enforcing the provisions of RCRA.

- §3008(a) - Compliance Orders
  In case of a violation of RCRA Subtitle C--Hazardous Waste Management, this section authorizes USEPA either to issue an order assessing a civil penalty and/or requiring compliance, or to commence a civil action for appropriate relief.

- §3013 - Monitoring, Analysis, and Testing
  Provides authority to order a TSD facility to perform monitoring, analysis and testing at the site, if there is a potential for a substantial hazard to human health or the environment. If the facility cannot perform the

work, USEPA may perform it, or USEPA may authorize the state to perform the monitoring.

- §7003 - Imminent Hazard
  Authorizes USEPA to bring suit to prohibit handling, transportation, treatment, storage or disposal of a solid or hazardous waste if "imminent or substantial endangerment to health or the environment" is present. This Section also authorizes USEPA to take other appropriate actions, as necessary.

1.2 RCRA CORRECTIVE ACTION PROGRAM

The RCRA corrective action program derived from the HSWA authorities consists of three phases:

- The RFA to identify releases, or potential releases, requiring further investigation.
- The RCRA Facility Investigation (RFI) to fully characterize the extent of releases.
- Corrective Measures (CM) to determine the need for, and extent of, remedial measures. This step includes the selection and implementation of appropriate remedies for all problems identified.

The specific intent of the RFA is to identify and gather information on releases at RCRA facilities, to evaluate solid waste management units and other areas of concern for releases to all media, and to make preliminary determinations regarding releases of concern and the need for further actions and interim measures at the facility.

The RFA potentially consists of three steps: the Preliminary Review (PR), the Visual Site Inspection (VSI), and the Sampling Visit (SV). The PR focuses on evaluating existing data in the form of inspection reports, permit applications, historical monitoring data, and information obtained through interviews with state personnel who are familiar with the facility. The VSI, the second step, consists of a visit to the facility for visual data collection to assist in determining whether releases have occurred. The optional third step of the RFA is the SV, which may be used to fill data gaps, if any remain after completion of the PR and VSI.

1.3 PRELIMINARY REVIEW

The preliminary review for the Hydrocarbon Recyclers, Inc. (HRI) involved review of USEPA Region VII and Kansas Department of Health and Environment (KDHE) file documents for the facility. The PR was conducted in March 1990 by Mr. John Nett of BVWST. Documents reviewed as a part of the PR included RCRA Part A and B permitting records, inspection and enforcement records and correspondence, and facility submittals to KDHE and USEPA. Specific file documents that were reviewed and incorporated into this report include the following:

- RCRA Part B Permit Application for Reid Supply Company, Wichita, Kansas. December 6, 1984.
- Report of RCRA Compliance Inspection at Reid Supply Company, Wichita, Kansas. USEPA Region VII, Environmental Services Division. April 5-6, 1984.
- Part B Application Inspection Report, Reid Supply Company. October 30, 1984.
- Re-inspection at Reid Supply Company, Wichita, Kansas, to determine compliance with State Order (RCRA). USEPA Region VII Memorandum. July 26, 1984.
- RCRA Compliance Inspection Report, Conservation Services, Inc. KDHE. July 2, 1987.
- Partial Closure Plan, Hydrocarbon Recyclers, Inc. April 1988.
- RCRA Compliance Inspection Report, Conservation Services -- Hydrocarbon Recyclers, Inc. June 28, 1988.
- RCRA Compliance Inspection Report, Hydrocarbon Recyclers, Inc. June 21, 1989.

Information from these documents, as well as other file and background sources, helped to identify and characterize the solid waste management units and other areas of concern, as well as potential release from these locations at the HRI facility.

1.4 VISUAL SITE INSPECTION OF HYDROCARBON RECYCLERS, INC.

A visual site inspection was conducted at the HRI Wichita, Kansas, facility on June 19, 1990. The VSI was conducted by Mr. John Nett, civil engineer, and Mr. Jerome Frizzell, environmental scientist, with BVWST. Accompanying BVWST personnel on the VSI were Mr. Mark Matthews, USEPA Region VII - RCRA Permits Section, and Ms. Brenda Clark, KDHE. Representing HRI during the inspection were Mr. Charles Trumbold, General Manager - HRI Wichita, Kansas facility; Mr. David Trumbold, Sales Manager - HRI Wichita, Kansas facility; and Ms. Catherine Orban, Permit Writer - HRI Tulsa Operations. During the VSI, the history of the facility and current waste operations were reviewed, solid waste management units and areas of concern were discussed and observed, and photographs of these areas were taken. Data gaps which remained following the PR were addressed during the discussions with the HRI representatives. Additional information gathered during the VSI has been incorporated into this preliminary assessment report. A summary of the VSI and a log of the photographs taken during the VSI are contained in Appendices A and B of this report, respectively.

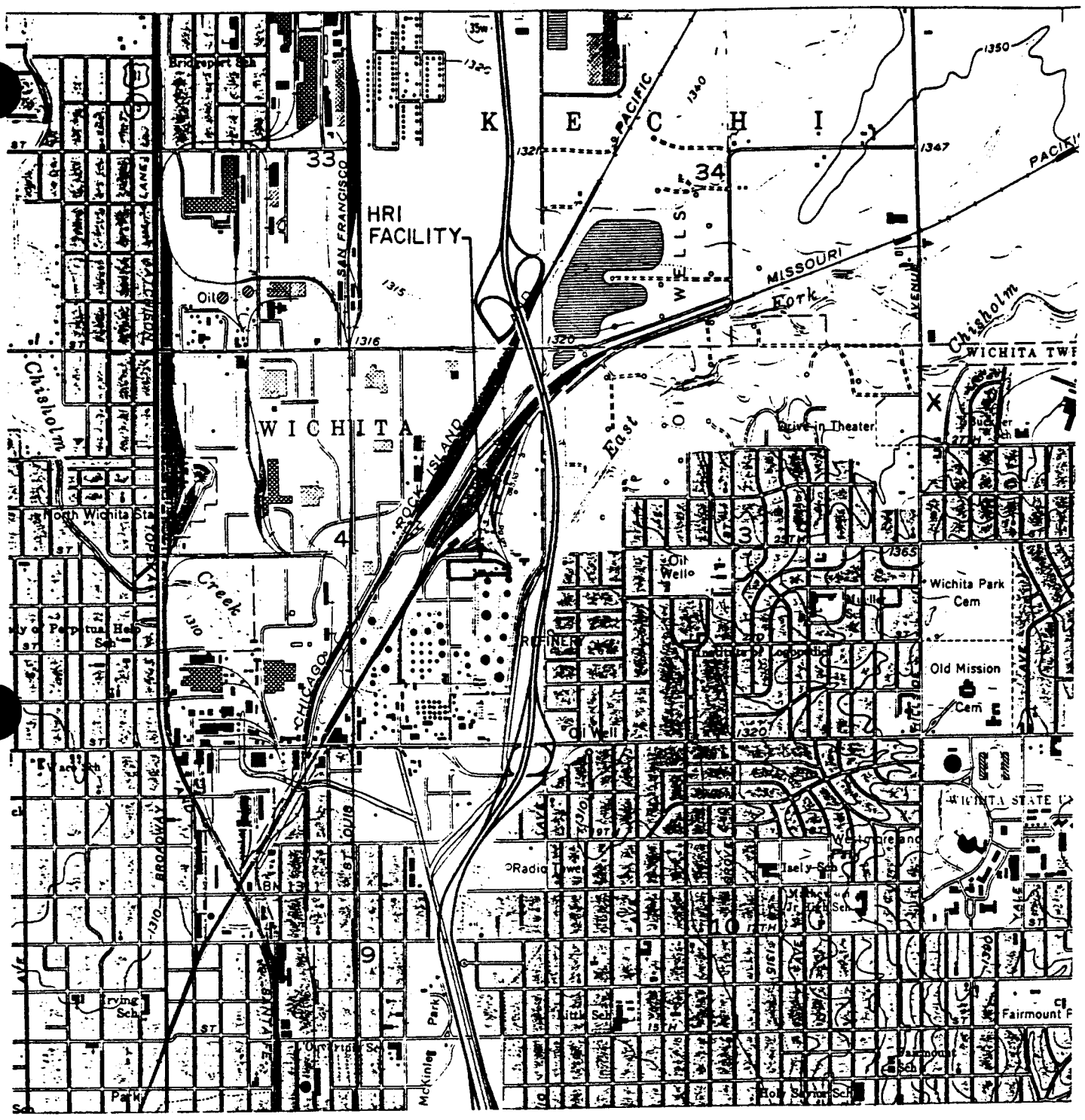

SCALE:

1000 0 1000 2000 3000

FEET

N

SOURCE: U.S. GEOLOGICAL SURVEY, 7.5 MINUTE SERIES (TOPOGRAPHIC) WICHITA EAST QUADRANGLE, KANSAS, 1961.

FIGURE 2-1
SITE VICINITY MAP
HRI FACILITY
RCRA FACILITY ASSESSMENT

TABLE 2-1 CLIMATOLOGICAL DATA, WICHITA, KANSAS.

	Temperature (deg F)					Precipitation (in.)				Snowfall (in.)		Surface Winds	
Month	Mean Daily Max.	Mean Daily Min.	Mean Monthly	Extreme Max.	Extreme Min.	Monthly Mean	Monthly Max.	Monthly Min.	Max. 24 Hrs.	Monthly Max.	Max. 24 Hrs.	Prevailing Direction	Mean Speed (mph
Jan	40	19	30	75	-12	0.68	2.73	T	1.72	19.7	13.0	S	12.2
Feb	46	24	35	84	-21	0.85	3.33	0.02	1.53	16.7	11.9	N	12.7
Mar	56	32	44	89	-2	2.01	9.17	0.01	2.65	16.5	13.5	S	14.1
Apr	68	45	56	96	15	2.30	5.57	0.22	2.51	4.6	4.6	S	14.1
May	77	55	66	100	31	3.91	8.85	0.52	4.70	0.0	0.0	S	12.4
Jun	87	65	76	110	43	4.06	10.46	0.94	4.98	0.0	0.0	S	12.1
Jul	93	70	81	113	51	3.62	9.22	0.05	3.86	0.0	0.0	S	11.2
Aug	92	68	80	110	48	2.80	7.91	0.31	3.76	0.0	0.0	S	11.1
Sep	82	59	71	105	31	3.45	9.46	0.03	3.03	0.0	0.0	S	11.6
Oct	71	47	59	95	21	2.47	6.13	T	5.03	0.1	0.1	S	11.9
Nov	55	34	44	85	1	1.47	5.88	T	4.33	7.1	6.8	S	12.2
Dec	45	24	34	83	-10	0.99	4.71	0.03	2.60	13.8	9.0	S	12.1
Ann	68	45	56	113	-21	28.61	10.46	T	5.03	19.7	13.5	S	12.3

Source: Local Climatological Data, Annual Summary, Wichita, Kansas, NOAA, 1988.
Period of record for normals: 1951 - 1988

T indicates trace amounts

characterized by heavy rainfall, strong winds, and tornados, is not uncommon during the spring and early summer months. Average annual snowfall is nearly 20 inches per year (NOAA, 1988).

The average annual prevailing wind direction is from the south, with the exception of northerly winds prevailing during the month of February. The average annual wind speed is 12.3 miles per hour. Wind speeds average 14.1 miles per hour during the months of March and April (NOAA, 1988).

2.3 HYDROLOGY

As mentioned in subsection 2.1, the HRI facility lies within the tributary basin for the Arkansas River. The Arkansas River Valley is characterized by very little relief. Surface water from the HRI facility drains to tributaries of Chisolm Creek, a tributary to the Arkansas River. Chisolm Creek has been channelized south of 21st Street (see in Figure 2-1) and receives only local drainage at this location (Bevans, 1989). This concrete-lined channel, the Wichita Drainage Canal, originates south of the intersection of 21st and Wabash and receives flow from a tributary to Chisolm Creek. This tributary receives surface runoff from a highly industrialized area which includes several heavy industries and the Union Pacific and Chicago-Rock Island rail yards, northwest of HRI. From this point, the channel proceeds southeast where flow from Chisolm Creek and the East Fork of Chisolm Creek are received.

The Wichita Drainage Canal primarily flows south between the northbound and southbound lanes of Interstate 135 in the vicinity of HRI, and is utilized for flood control along the Chisolm Creek drainage basin. The canal receives streamflow from Dry Creek and Gypsum Creek, six miles south of HRI, prior to discharging to the Arkansas River, approximately seven miles south of the HRI facility.

Surface water runoff from the central portion of the HRI (see Figure 2-2) property primarily flows north and west (Trombold, 1984). Runoff flows parallel to the northern boundary of the property, then flows south along the western boundary of the property. Runoff from the southcentral and southwestern portions of the property flows south toward a berm which provides containment for above ground oil storage tanks on the adjacent Derby Refinery property, then parallel to the

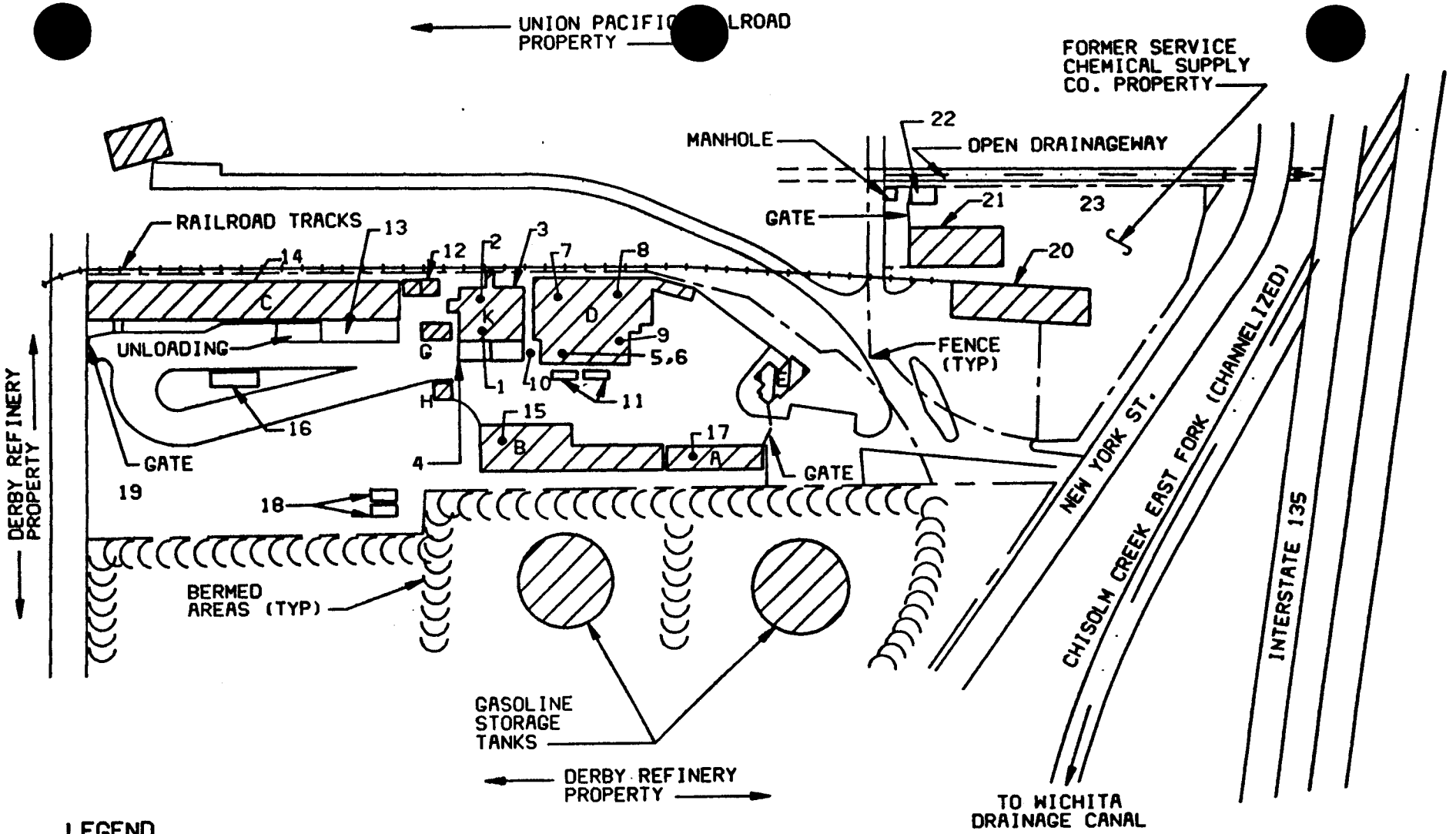

LEGEND

1. PROCESS AREA STORAGE TANKS
2. WASTE BLENDING AND DRUM PROCESSING
3. FORMER DRUM PROCESSING AREA
4. PROCESS AREA TRUCK BAY
5. SPARGING AREA
6. HOT ROOM
7. ELEVATED TANK STORAGE AREA
8. NONREGULATED WASTE STORAGE AREA
9. SOLIDS DRYER AREA
10. DRUM CRUSHER
11. CRUSHED DRUM ROLL-OFF BOXES
12. WARM ROOM
13. DOCK AREA
14. DRUM STORAGE WAREHOUSE (BUILDING C)
15. CORROSIVE WASTE STORAGE AREA
16. DRY SOLIDS GONDOLA
17. LABORATORY SAMPLE STORAGE AREA
18. VEHICLE FUELING TANKS
19. OPEN AREA ALONG SOUTHWEST CORNER
20. BUILDING J
21. BUILDING I
22. CONCRETE VAULT
23. OPEN AREA NORTH OT BUILDING I

SOURCE: FACILITY MAP FOR HYDROCARBON RECYCLERS INC. PREPARED BY REISS & GOODNESS ENGINEERS.

N

NO SCALE

FIGURE 2-2
SITE PLAN AND FACILITY LAYOUT
HRI FACILITY
RCRA FACILITY ASSESSMENT

CAD DWG NO:C0000522
DATE:9-24-90 KIN
PLOT SCALE:1=1

southern border of the property. This runoff then flows south in a manner similar to runoff from the northern and central portions of the property.

Surface water runoff from the property northeast of the HRI facility, on which operations were conducted by the former Service Chemical Supply Company (SCSC), flows north to a drainageway, then flows east to discharge to the Wichita Drainage Canal. The drainageway also collects surface water runoff from the Union Pacific Railroad property which lies north of the HRI facility and former SCSC property.

2.4 SOILS AND GEOLOGY

The surface soils characteristic to the HRI property have been studied and mapped by the U.S. Department of Agriculture (USDA) Soil Conservation Service (SCS). The predominant soil type found at HRI is an urban land, Tabler complex (USDA, 1976). Tabler soil is described by SCS as a fine montmorillinitic thermic complex. From 0 to 9 inches below land surface, the soil is characterized as a silty clay loam (ML or CL by Unified Classification) with low shrink-swell potential and a hydraulic conductivity range between 0.2 and 0.6 (in/hr) [1.41×10^{-4} and 4.23×10^{-4} centimeters per second (cm/s)] (USDA, 1976). Hydraulic conductivity increases to greater than 0.6 in/hr (4.23×10^{-4} cm/sec) and shrink-swell potential is high between nine and sixty inches below land surface (USDA, 1976).

The general stratigraphy of Sedgwick County is detailed in Table 2-2. Rocks that crop out in Sedgwick County are sedimentary in origin and range in age from Permian to Recent. The oldest rocks that crop out in the county are from the Wellington Formation of the Permian System. This portion of the Wellington Formation consists of mostly calcareous gray and blue-grey shale containing several thin beds of impure limestone, and thin beds of gypsum (Lane, 1965). These rocks are the bedrock surface for the eastern two-thirds of the county, which includes the HRI facility. Most of this bedrock is shale, which is easily eroded. Unconsolidated, colluvial, fluvial, and eolian deposits occur over the bedrock.

In the vicinity of the HRI facility, the overlying deposits are characterized by 10 to 15 feet of silt and clay (HWS, 1989) underlain by alluvium and terrace deposits of Wisconsin to Holocene age (primarily fine-to-coarse sand and fine-to-coarse gravel with clayey silt in the upper portion) (Bevans, 1989). These deposits range in depth

Table 2-2. General Section of Geologic Formations * in Sedgwick County, Kansas, and Their Water-Bearing Properties.

	Stratigraphic Units Used in This Report	Maximum Thickness (feet)	Physical Character	Water Supply
Neocene System Pleistocene Series Upper Pleistocene Subseries	Dune sand (Recent)	5	Composed of fine to medium silty sand.	Lies above the water table and does not yield water to wells.
	Alluvium and terrace deposits (Wisconsin to Recent)	45	Composed of fine to coarse sand and fine to very coarse arkosic gravel containing only minor amounts of silt and clay that grade upward into clayey silt. Clay balls up to 1 foot in diameter are common in the sand and gravel.	Constitutes the most widely used aquifer in the county and yields large supplies of very hard water to many wells. Wells yielding up to 2,000 gpm can be developed locally. Adjacent to the Arkansas River the water is too highly mineralized for many uses.
	Colluvium (Illinoian to Recent)	30	A heterogeneous mixture of silt, clay, sand, gravel, and bedrock fragments deposited by slope processes.	Generally above the water table and thus yields no water to wells. Where deposits are thick and contain sand and gravel lenses, wells yielding a few gpm may be possible but would be subject to failure in dry years.
	Loess (Illinoian to Recent)	74	Wind-deposited tan to pink-tan, calcareous silt, containing zones of caliche, containing zones of caliche nodules and some sandy zones.	Generally above water table, but locally the basal part is saturated and the sandy zone may yield some water to wells.
	Terrace deposits (Illinoian)	75	Composed of fine to coarse sand and fine to coarse arkosic gravel that grades upward into sandy silt. Sand and gravel beds locally contain silt and clay lenses, and clay balls up to 1 foot in diameter are common.	Well yields of 500 gpm of good quality water are generally available from the deposits, and locally yields up to 1,000 gpm can be obtained.

Table 2-2. General Section of Geologic Formations * in Sedgwick County, Kansas, and Their Water-Bearing Properties (Continued).

	Stratigraphic Units Used in This Report	Maximum Thickness (feet)	Physical Character	Water Supply
Lower Pleistocene Subseries	Undifferentiated deposits (Nebraskan and Kansan)	157	Composed of light tan to light gray, commonly sandy, silt and clay, and fine to coarse arkosic gravel. Locally contains a lenticular bed of volcanic ash and the Pearlette ash bed of late Kansan age.	Yield small quantities of good quality water to wells in the Arkansas Valley that are screened in multiple porous zones and penetrate the complete section of unconsolidated rocks. The water is highly mineralized locally near the Arkansas River. Where present in the uplands west of the Arkansas Valley, well yields of up to 50 gpm are possible locally.
Pliocene Series	Ogallala Formation	150±	Composed of lenticular beds of calcareous, gray to pink-tan silt and clay, fine to coarse sand, and fine to coarse gravel. The sediments reflect two sources: arkosic sand and gravel beds derived from the west are interfingered in the northern part of the county with sand, and gravel beds composed of gray to tan quartz and ironstone derived from Cretaceous rocks to the north. In subsurface only.	Contributes large supplies of good quality water to many municipal, irrigation, and industrial wells screened in multiple porous zones, and penetrates the complete section of unconsolidated rocks.
Permian System Permian Series	Ninnescah Shale	175±	Composed of alternating beds of brownish-red silty shale and siltstone, and a few thin beds of gray-green silty shale in lower part. Some gypsum is present as thin, cross-cutting and intersecting vein fillings.	Yields small quantities of water to many stock and domestic wells in the western part of the county. Water obtained from the weathered zone in the formation is generally of good quality. Water from deeper zones is generally highly mineralized but usable.

Table 2-2. General Section of Geologic Formations * in Sedgwick County, Kansas, and Their Water-Bearing Properties (Continued).

	Stratigraphic Units Used in This Report	Maximum Thickness (feet)	Physical Character	Water Supply
Permian Series	Wellington Formation	550±	Calcareous gray and blue shale containing several thin beds of impure limestone and thin beds of gypsum and anhydrite. Some beds of maroon and gray-green shale near top of formation. The thick Hutchinson Salt Member is present near the middle of the formation in the western part of the county.	Yields small quantities of highly mineralized water to many stock and domestic wells east of the Arkansas River Valley and in the south-central part of the county. Moderately large water supplies of as much as 350 gpm are available from solution zones in gypsum beds near east county line. The water is highly mineralized but usable.

* As classified by the State Geological Survey of Kansas

SOURCE: "Geohydrology of Sedgwick County, Kansas". Kansas Geological Survey Bulletin 176. December 1965. Table 2, pg. 16.

from 30 to 40 feet below land surface at HRI, with the Wellington Formation bedrock encountered immediately below at an approximate elevation of 1275 feet above msl. The Wellington Formation is approximately 200 feet in thickness in the vicinity of the HRI facility.

2.5 HYDROGEOLOGY

The terrace and alluvium deposits are the most widely used source of ground water in Sedgwick County (Bevans, 1989). In general, the saturated unconsolidated deposits, such as the alluvium and terrace deposits, yield much greater quantities of water than saturated bedrock in Sedgwick County. The fine-grained consolidated nature of the bedrock (weathered Permian shale) hinders the movement of water and limits recharge and yields to wells (Bevans, 1989).

Although the alluvial deposits are stratified and lenticular, sand and gravel beds within the deposits containing ground water are interconnected, and the complete sequence of silt, clay, sand, and gravel beds responds to long-term withdrawals of ground water as a single aquifer (Lane, 1965). The saturated thickness of the unconsolidated Neogene sediments (alluvium and terrace deposits) in the vicinity of the HRI facility are approximately 20 feet.

Precipitation is the primary source of recharge in the Arkansas River Valley with the quantity of recharge at a particular location affected by local conditions. The estimated net average recharge to the unconsolidated deposits in the Arkansas Valley is 20 percent of the annual precipitation (about six inches) in years of normal rainfall (Bevans, 1965). In much of the Arkansas River Valley in areas adjacent to the principal streams, the depth to ground water is less than 10 feet below land surface.

Ground water can also be obtained in small yields from the weathered zone of the Wellington formation, though it may be mineralized where solution has occurred within the weathered shale. In the area underlying the Arkansas River Valley, the Hutchison Salt Member in the middle of the Wellington Formation has been removed by dissolution processes resulting in solution cavities and greatly fractured collapsed beds. This portion of the formation, sometimes referred to as the Wellington aquifer, can yield large quantities of high-concentration saline water (Bevans, 1989).

Quantitative hydrogeologic parameters have been estimated from ground water investigations conducted in 1987 and 1988 at industrial properties located in the Wichita North Industrial District (WNID). WNID is an industrial area bounded by Broadway to the west, Interstate 135 to the east, and 37th Street North and 21st Street North to the north and south, respectively. In the area of the HRI facility, transmissivity of the alluvium was estimated as 50,000 gallons per day per foot (6.68 x 10^{-4} m^2/s). At the Derby Refinery, immediately south of the HRI facility, hydraulic conductivities for the silt and clay and Pleistocene alluvium were estimated at 200 and 1000 gallons per day per square foot (9.43 x 10^{-3} and 4.72 x 10^{-2} cm/s), respectively (HWS, 1989).

In the Arkansas Valley, ground water flows primarily down the valley parallel to the river (Bevans, 1989). In the vicinity of the HRI facility, the ground water flow is generally to the south, paralleling the Arkansas River and Chisolm Creek. Tributaries to Chisolm Creek drain the area around HRI. Approximate ground water contours in the vicinity of the HRI facility are shown on Figure 2-3.

2.6 GROUND WATER USAGE AND WATER QUALITY

Identified existing wells within a one mile radius of the HRI facility shown on Figure 2-3 are detailed in Table 2-3. Usage for wells within a one-mile radius includes observation and monitoring of ground water, industrial water usage, and domestic supply which is generally limited to lawn and garden irrigation (Bevans, 1989).

Two wells (labeled as HRI-2 and HRI-3 on Figure 2-4) are utilized for ground water monitoring on the HRI property. Several other wells near or adjacent to the facility used for monitoring and domestic supply are also shown on Figure 2-4. Information on these wells was compiled through the following sources: Lane, 1965; Bevan, 1989; HWS, 1989; and the KDHE Well Inventory System. Well RSC-1, identified on Figure 2-4 as a well on the adjacent property formerly occupied by SCSC, was reportedly utilized for still cooling water during operations previously conducted by the Reid Supply Company (Trombold, 1984). It is unknown whether this well is still accessible or productive. Monitoring wells UPR-1 and UPR-2 on Figure 2-4 were installed by Union Pacific on the same property to monitor ground water quality south of the drainageway which separates these two properties.

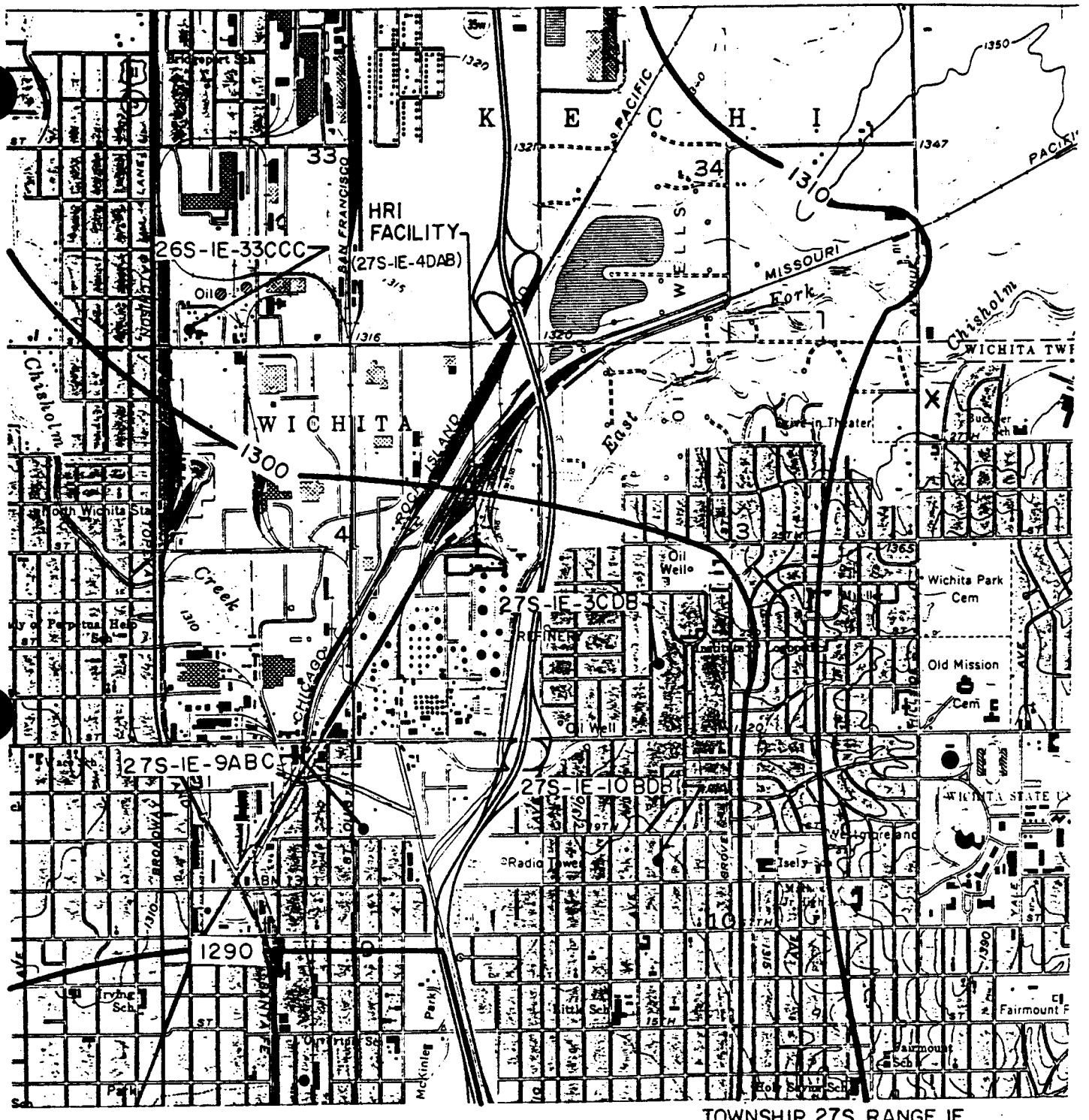

SCALE:

1000 0 1000 2000 3000

FEET

N

TOWNSHIP 27S, RANGE IE, SECTION 6

WELL NUMBERING CONVENTION

B A C D

27S-IE-6ACD

NOTE: CONTOUR INTERVAL IS 10 FEET.

SOURCE: U.S. GEOLOGICAL SURVEY, 7.5 MINUTE SERIES (TOPOGRAPHIC) WICHITA EAST QUADRANGLE, KANSAS, 1961 AND "WATER RESOURCES OF SEDGWICK COUNTY, KANSAS", HUGH E. BEVANS, USGS, 1989, PLATE 2.

FIGURE 2-3
EXISTING WELLS AND GROUND WATER CONTOURS FOR THE HRI AREA
HRI FACILITY
RCRA FACILITY ASSESSMENT

Table 2-3. Record of Selected Existing Wells Located Within a 1-Mile Radius from the HRI Facility.***

Well No.	Water Use*	Depth of Well (ft.)	Principal Water-Bearing Units: Character of Material	Principal Water-Bearing Units: Geologic Source**	Date of Measurement (m-d-y)	Land Surface Elevation (ft.)	Depth to Ground Water (ft.)	Ground Water Level (ft.above msl)	Remarks
26S-1E-33CCC	O	17.0	Sand	Q1,Pw	12-06-85	1,315	9.0	1,306	--
27S-1E-3CDB	L&G	25.0	Gravel	Qal	12-11-85	1,313	16.1	1,297	Yields 50 gpm
27S-1E-9ABC	L&G	35.0	Sand	Qal	12-12-85	1,305	12.9	1,292	Yields 80 gpm
27S-1E-10BDB	L&G	40.0	Sand	Qal	12-12-85	1,310	16.8	1,293	--

Source: "Water Resources of Sedgwick County, Kansas". U.S. Geological Survey Water-Resources Investigation Report 88-4225. 1989.

* Use: L&G, lawn and garden; O, observation.

** Geologic Source: Qal, alluvium and terrace deposits of Wisconsin to Holocene age; Q1, loess deposits; Pw, Wellington Formation.

*** The coordinate location for the HRI facility is 27S-1E-4DAB, as shown on Figure 2-3.

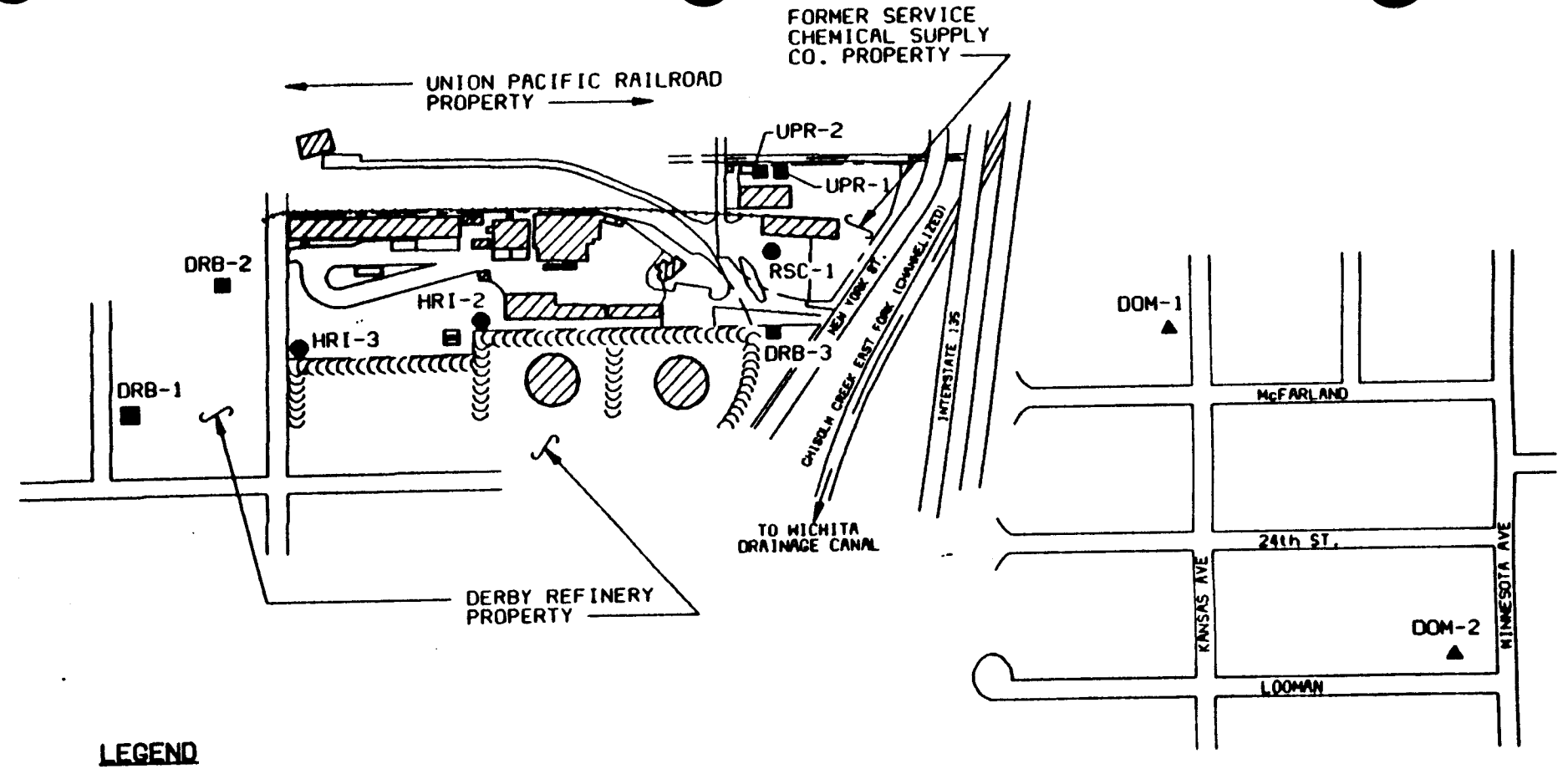

LEGEND

DRB-1 ■ SHALLOW MONITORING WELL SCREENED AT OR WITHIN 5 FEET OF THE WATER TABLE

HRI-2 ● DEEP MONITORING WELL SCREENED AT OR WITHIN 5 FEET OF THE BASE OF THE AQUIFER

DOM-1 ▲ DOMESTIC WELL, CONSTRUCTION DETAILS UNKNOWN

N

NO SCALE

SOURCE: "WICHITA NORTH INDUSTRIAL DISTRICT, PHASE 1, PART 1 - INITIAL SITE ASSESSMENT". APPENDIX B HWS TECHNOLOGIES INC. FEBRUARY 24, 1989.

CAD DWG NO:C0000529
DATE:08-14-90 AND
PLOT SCALE:1=1

FIGURE 2-4
EXISTING WELLS IN THE VICINTY OF HRI
HRI FACILITY
RCRA FACILITY ASSESSMENT

While the unconsolidated deposits are generally reported to be the best sources of ground water in Sedgwick County for both quality and quantity of water (Bevans, 1989), local areas of saline water in the unconsolidated alluvium and terrace deposits may occur from dissolution of soluble minerals and infiltration of sodium chloride water from the Arkansas River. Iron and manganese concentrations may also be elevated locally in these deposits and has been known to cause well "fouling" immediately south of HRI (HWS, 1989). Volatile organic compounds (VOCs) have been detected in samples collected during ground water investigations conducted by KDHE and in samples collected by local industries in the WNID. VOCs were detected in samples collected from wells screened at the base of the aquifer at the shale interface, and in the overlying saturated unconsolidated deposits.

Within the WNID, VOCs have been reported as the most wide spread contaminant (HWS, 1989). Analytical results for ground water samples collected in 1987 from the wells identified on Figure 2-4 are given in Table 2-4. In addition to the analytical results in Table 2-4, ground water samples have been periodically collected at the HRI facility and analyzed by KDHE, most recently during a remedial investigation (RI) of the WNID site.

In addition to the analytical results provided in Table 2-4, analytical results are available for ground water samples collected from wells HRI-2 and HRI-3 on April 5, 1989 during the WNID RI. Trichloroethethylene and carbon tetrachloride were detected in a ground water sample collected from HRI-2 at concentrations of 1,000 and 550 micrograms per liter (ug/l), respectively. The same compounds were detected in a sample from HRI-3 at concentrations of 3.5 and 14 ug/l, respectively. In addition, the following compounds were also detected in HRI-3: chloroform, 7.7 ug/l; tetrachloroethylene, 1.1 ug/l; and 1,2-dichloroethylene, 0.4 ug/l.

A well identified as an active water well by HRI was sampled by KDHE on August 14, 1985. No VOCs were detected in the sample collected from this well. It is unknown whether this well is the well previously identified for still cooling water supply. A domestic well east of the HRI facility, near Kansas Avenue and McFarland (see Figure 2-4 and Table 2-4), was sampled for VOCs. Analytical results for a sample collected from this well, DOM-1, showed the following contaminants: 1,2 dichloroethane, 14.9 ug/l; toluene, 1.0 ug/l; and xylenes, 2.3 ug/l.

Table 2-4. Analytical Results for Volatile Organic Compound Concentrations in Ground Water Samples Taken From Existing Wells in the Vicinity of HRI.

Volatile Organic:	Detection Limit (ug/l)	Concentration (ug/l): HRI-2** (ug/l)	HRI-3** (ug/l)	RSC-1** (ug/l)	UPR-1* (ug/l)	UPR-2* (ug/l)	DRB-1* (ug/l)	DRB-2* (ug/l)	DRB-3* (ug/l)	DOM-1*** (ug/l)	DOM-2*** (ug/l)
Chloromethane	5.0	ND	ND	ND	ND	ND	ND	ND	ND	ND	ND
Bromomethane	1.2	ND	ND	ND	ND	ND	ND	ND	ND	ND	ND
Vinyl Chloride	0.8	ND	ND	ND	ND	ND	ND	ND	ND	ND	ND
Chloroethane	3.7	ND	ND	ND	ND	ND	ND	ND	ND	ND	ND
Methylene Chloride	0.9	ND	2.6	ND	66.0	27.0	ND	ND	1.2	ND	ND
1,1-Dichloroethene	0.6	ND	26.5	ND	365.0	18.0	ND	ND	191.0	ND	ND
1,1-Dichloroethane	0.5	ND	4.4	ND	86.0	15.0	ND	ND	91.0	ND	ND
trans &/or cis 1,2-Dichloroethene	0.5	ND	76.4	1.7	ND	18.0	ND	ND	53.0	ND	ND
Chloroform	0.5	ND	147.0	17.5	15.0	ND	ND	4.9	1.5	ND	ND
1,2-Dichloroethane	0.6	ND	ND	ND	59.0	ND	0.6	ND	ND	14.9	ND
1,1,1-Trichloroethane	0.7	ND	122.0	ND	4755.0	97.0	0.6	ND	960.0	ND	ND
Carbon Tetrachloride	0.7	ND	635.0	84.4	ND	ND	ND	17.0	ND	ND	ND
Bromodichloromethane	0.5	ND	ND	ND	ND	ND	ND	ND	ND	ND	ND
1,2-Dichloropropane	0.4	ND	ND	ND	ND	ND	ND	ND	2.5	ND	ND
trans 1,3-dichloropropene	0.8	ND	ND	ND	ND	ND	ND	ND	ND	ND	ND
Trichloroethene	0.6	8.1	6260.0	16.5	ND	13.0	2.1	ND	450.0	ND	ND
Benzene	0.4	ND	ND	ND	ND	ND	ND	ND	ND	ND	ND
Dibromochloromethane	0.7	ND	ND	ND	ND	ND	ND	ND	ND	ND	ND
cis 1,3-Dichloropropene	0.9	ND	ND	ND	ND	ND	ND	ND	ND	ND	ND
1,1,2-Trichloroethane	0.6	ND	ND	ND	ND	ND	ND	ND	ND	ND	ND
Bromoform	1.5	ND	ND	ND	ND	ND	ND	ND	ND	ND	ND
1,1,2,2-Tetrachloroethane	0.6	ND	ND	ND	ND	ND	ND	ND	ND	ND	ND
Tetrachloroethene	1.1	ND	504.0	2.6	ND	26.0	ND	ND	78.0	ND	ND
Toluene	0.4	ND	0.9	0.9	190.0	151.0	ND	ND	ND	1.0	ND
Chlorobenzene	0.4	ND	ND	ND	ND	ND	ND	ND	ND	ND	ND
Ethylbenzene	0.7	ND	ND	ND	ND	11.0	ND	ND	ND	ND	ND
meta-Xylene	0.6	ND	ND	15.1	ND	ND	ND	ND	ND	2.1	ND
ortho &/or para-Xylene	0.6	ND	ND	23.1	250.0	214.0	ND	ND	ND	2.0	ND
1,3-Dichlorobenzene	1.0	ND	ND	ND	ND	ND	ND	ND	ND	ND	ND
1,2 &/or 1,4-Dichlorobenzene	1.0	ND	ND	ND	ND	ND	ND	ND	ND	ND	ND

Key - HRI-1 - Monitoring Well Utilized by Hydrocarbon Recyclers, Inc.
DRB-1 - Monitoring Well by Derby Refinery, 1980-1983
UPR-1 - Monitoring Well Installed by Union Pacific on Former SCSC Property
DOM-1 - Domestic Well
ND - Not Detected

* Well screened at or within 5 ft. of the water table
** Well screened within 5 ft. of the base of the aquifer
*** Screened depth unknown

Source: "Wichita North Industrial District, Phase I - Part 1 - Initial Site Assesment". HWS Technologies Inc. February 24, 1989. and KDHE GC/MS Analysis Reports for Ground Water Samples Collected May 21, 1987. Lab Nos. 7037440, 50, & 60.

Table of Contents

List of Attachments . . . . . Page ii

N-1 Air Emission Standards for Process Vents . . . . . Page 1
N-1a Applicability . . . . . Page 1

N-2 Air Emissions Standards for Equipment Leaks . . . . Page 2
N-2a Applicability . . . . . Page 2
N-2b Pumps in Light Liquid Service . . . . . Page 3
N-2c Compressors . . . . . Page 4
N-2d Pressure Relief Devices . . . . . Page 5
N-2e Sampling Connection Systems . . . . . Page 5
N-2f Open-ended Valves or Lines . . . . . Page 5
N-2g Valves in Gas/Vapor Service or in Light Liquid Service . . . . . Page 6
N-2h Pumps & Valves in Heavy Liquid Service; Flanges, and Other Connectors . . . . . Page 7

N-3 Delay of Repair . . . . . Page 9
N-3a Valves: . . . . . Page 9
N-3b Pumps: . . . . . Page 10

N-4 Alternative Standards - Valves in Gas/Vapor Service or Light Liquid Service: . . . . . Page 11
N-4a Percentage of Valves Allowed to Leak . . . . . Page 11
N-4b Skip Period Leak Detection and Repair . . . . . Page 12

N-5 Test Methods and Procedures . . . . . Page 13
N-5a Testing for No Detectable Emissions . . . . . Page 13
N-5b Testing Organic Concentration . . . . . Page 14

N-6 Recordkeeping Requirements . . . . . Page 16
N-6a Equipment Information . . . . . Page 16
N-6b Method Of Compliance . . . . . Page 17
N-6c Control Devices . . . . . Page 18
N-6d Leak Identification . . . . . Page 19
N-6e Equipment List . . . . . Page 21
N-6f No Detectable Emission Equipment . . . . . Page 21
N-6g Pressure Relief and Vacuum Equipment . . . . . Page 21
N-6h Difficult to Monitor Valves . . . . . Page 22
N-6i Process Information for Exemptions . . . . . Page 22
N-6j Operating Information . . . . . Page 23
N-6k Additional Fugitive Emission Requirements . . . Page 23

List of Attachments

Appendix N-A - Facility and Process Drawings
Appendix N-B - Regional Administrator Letter
Appendix N-C - Monitoring Method and Equipment Documentation
Appendix N-D - Equipment Lists
Appendix N-E - Equipment Designated As No Detectable Emissions
Appendix N-F - Monitoring Results and Repair Reports

N-1 Air Emission Standards for Process Vents

N-1a Applicability

The Hydrocarbon Recyclers, Inc. of Wichita (HRIW) facility stores, treats, and recovers for recycling hazardous waste and hazardous waste fuel. (For a more complete description of hazardous waste management activities at HRIW, refer to Section B, Facility Description.) The hazardous waste management units at HRIW are subject to the 40 CFR Part 270 permitting requirements by 265.1 (b) and 266.34(c) and are allowed to operate under 270.10 (e) according to interim status standards until a permit is issued. However, there are no regulated units currently operated at the HRIW facility subject to the 40 CFR 264 Subpart AA process vent emissions standards.

N-2 Air Emissions Standards for Equipment Leaks

N-2a Applicability

The HRIW facility stores, treats and recovers for recycling hazardous waste and hazardous waste fuel. The waste lines and equipment are used at HRIW to transfer hazardous waste liquids between or from waste storage tanks, or miscellaneous exempt units, or from or to trucks for off site receipt or shipment. It is assumed, based on knowledge of process, that the hazardous waste liquids or gases handled in these lines at the facility potentially contact hazardous waste in excess of ten (10) percent total organic carbon (TOC) and are therefore subject to these standards. Appendix N-A, Facility and Process Drawings, contains diagrams of the pertinent equipment and piping in use at HRIW.

A majority of the equipment at the HRIW facility is potentially in ten (10) percent, or greater, TOC hazardous waste liquid or gas service except for water, air, or fire suppressant lines. These lines are identified separately from all other lines by their color or labelling.

The Drier Unit, its accumulation tank (V-18), and their

associated piping operate under vacuum; however, HRIW does not elect to exempt them from monitoring requirements at this time.

N-2b <u>Pumps in Light Liquid Service</u>

All pumps at the HRIW facility are assumed to be in light liquid service at some time due to the varied nature of the wastes managed at the facility. Because the exact composition of the waste stream varies, a heavy liquid service designation is difficult to sustain during actual operations. Therefore, all pumps at the facility are potentially subject to light liquid service standards and will be monitored monthly to detect leaks using the method specified in 264.1063 (b) unless exempted by a classification of no detectable emissions.

All pumps at the facility are subject to regular RCRA inspections, as described in Section F, Inspection Plan. These will occur at a minimum of once per week to locate indications of liquids dripping from pump seals. If there are indications that liquids are dripping from the pump seal, a leak is considered to be detected.

When a leak is detected, a first attempt at repair shall be made within five (5) calendar days and a permanent repair attempted

within fifteen (15) calendar days of detection unless the standards of 264.1059 are met.

There are currently no pumps in operation at the HRIW facility with a dual mechanical seal that includes a barrier fluid. When these types of pumps are installed, HRIW will comply with the requirements of 40 CFR 264.1052 (d) if these pumps are to be exempted from monitoring requirements.

There are several pumps at the HRIW facility which are eligible for the "no detectable emissions" exemption from 264.1052 (a), (b), and (d) with an instrument reading of 500 ppm or less above background. These pumps have no externally actuated shaft which penetrates the pump housing, and operate with no detectable emissions (i.e., less than 500 ppm measured by the method specified in 264.1063 (c)) and have been initially tested for compliance with this standard and will be tested annually for leaks above 500 ppm.

N-2c <u>Compressors</u>

There are no compressor units subject to air emission standards at the HRIW facility.

N-2d <u>Pressure Relief Devices</u>

There are no pressure relief devices subject to the 40 CFR Subpart BB regulations currently being operated in hazardous waste gas/vapor or liquid service at HRI Wichita.

N-2e <u>Sampling Connection Systems</u>

All sampling systems at the HRIW facility are of the *in situ* type, are used in-line, and are not subject to subparagraphs (b) and (c) of 264.1055. These systems typically consist of a valve with an open ended line. This equipment is subject to the leak emissions standards and is included in the monitoring plan as required by 264.1056 or 264.1057. This system is operated in method consistent with the basis for the standards contained in 264.1055 (a) and (b) in that any purged waste prior to sampling is returned to the process.

N-2f <u>Open-ended Valves or Lines</u>

All open-ended valves and lines at the HRIW facility are equipped with caps or plugs intended to seal the open end when the line or valve is not in service. All double block lines at the facility (i.e., lines with two valves) are operated such that the valve on

the hazardous waste stream side is closed before the second valve is closed.

N-2g <u>Valves in Gas/Vapor Service or in Light Liquid Service</u>

All valves at the HRIW facility are assumed to be in ten (10) percent or greater organic content light liquid gas/vapor service at some time due to the varied nature of the wastes managed at the facility. Because the exact composition of the waste streams varies, a heavy liquid service designation is difficult to sustain during actual operations. Therefore all valves at the facility are potentially subject to light liquid service requirements and will be treated as being in light liquid service for the purpose of complying with the air emission regulations. This designation assures that HRIW complies with the requirements of 264.1063 (g).

Valves will be monitored monthly to detect leaks using the method specified in 264.1063 (b) unless exempted according to 264.1061 or according to 264.1057 (f), (g), or (h). If an instrument reading in excess of 10,000 ppm is measured during monitoring, a leak subject to the repair provisions of this program is detected.

When a leak is detected, a first attempt at repair shall be made within five (5) days and a permanent repair attempted within fifteen (15) calendar days of detection unless the standards of 264.1059 are met. First attempts at repair shall include tightening of bonnet bolts, replacement of bonnet bolts, tightening of packing gland nuts, and/or injection of lubricant into lubricated packings.

There are no valves in use at the HRIW facility eligible for the no detectable emission exemption. Similarly, there are no valves designated as unsafe-to-monitor.

There are numerous valves designated as difficult-to-monitor pursuant to this paragraph on the existing units which were in operation prior to June 21, 1990. These valves have been determined to be difficult to monitor due to their location or elevation as required by 264.1064 (h) (2). Valves that have been identified as difficult to monitor are identified in the tables in Appendix N-D by the identification number PUXXX or MUXXX. These valves will be monitored according to a written plan for obtaining access to these valves for monitoring at a minimum of once per year.

N-2h <u>Pumps & Valves in Heavy Liquid Service; Flanges, and Other Connectors</u>

There are no pumps or valves designated in heavy liquid service at the HRIW facility. Flanges and other connectors shall be monitored within five (5) calendar days by the method specified in 264.1063 (b) if evidence of a potential leak is found by visual, audible, olfactory, or other method. These potential leaks will normally be initially identified during scheduled inspections of the tank system and associated piping.

When a leak is detected, a first attempt at repair shall be made within five (5) calendar days and a permanent repair attempted within fifteen (15) calendar days of detection unless the standards of 264.1059 are met.

The practices specified in paragraph 264.1057 (e) shall constitute a first attempt at repair.

N-3 Delay of Repair

In the event that any repair of a connection, pump, or valve associated with a process unit must be delayed beyond fifteen (15) calendar days because it requires the shutdown of the hazardous waste management unit, that repair shall be completed during the next unit shutdown.

A delay of any other repair of a connection, pump, or valve will extend beyond the (15) days only if the equipment for which a leak has been detected can be isolated from the system and no longer contacts hazardous waste liquid or gas/vapor in concentrations exceeding ten (10) percent by weight.

N-3a Valves:

In delaying a repair of a valve beyond fifteen (15) calendar days, HRIW will determine whether or not the emissions from an immediate repair would exceed those likely to result from the procedures that would be used if repair could be delayed.

HRIW will assure that when a delayed repair of a valve is performed, the purged material collected during the repair is

destroyed or recovered in a controlled device complying with 264.1060. Since HRIW does not have processes regulated by 40 CFR 264 Subpart AA, purged material collected from delayed repairs shall be returned to the process in accordance with 264.1032 (a)(1).

Repairs of valves may be delayed at HRIW beyond the first unit shutdown in the event that the repair requires spare parts which were well stocked prior to the shutdown but were depleted and unavailable at the time of shutdown. Additional delays beyond the second unit shutdown will only occur if the second shutdown occurs within six (6) months after the first.

N-3b <u>Pumps:</u>

Repairs of pumps will be delayed by HRIW beyond fifteen (15) calendar days if the repair requires the use of a dual mechanical seal and barrier fluid system. Such delayed repairs of pumps will be completed as soon as practicable but no later than six (6) months from the time the leak was detected.

N-4 Alternative Standards - Valves in Gas/Vapor Service or Light Liquid Service:

N-4a Percentage of Valves Allowed to Leak

All valves at the HRIW facility in light liquid or gas service are identified on the attached drawings, are associated with hazardous waste management units, are subject to 264.1057, and are eligible for this alternative standard. HRIW elects to meet the two (2) percent standard for valves by meeting the following requirements of 264.1061 (b) (1) - (3).

A copy of the letter notifying the Regional Administrator of HRIW's implementation of this alternative standard is included in Appendix N-B.

A performance test using the method specified in 264.1063 (b) was performed on all identified valves at the facility on December 17, 1990. No leaks greater than 10,000 ppm were detected in any valves. This test shall be repeated annually and at the request of the Regional Administrator.

Future annual performance tests shall detect a leak if readings exceed 10,000 ppm. If a leak is detected, it will be repaired in

accordance with 264.1057 (d) and (e).

Future annual performance tests shall calculate the percentage leak rate by dividing the number of valves with readings in excess of 10,000 ppm by the total number of valves eligible. The initial performance test conducted in December 1990 did not detect any leaking valves. The resulting leak rate for the initial performance test of zero (0) percent meets the two (2) percent standard.

Should HRIW decide to discontinue meeting this alternative standard, the Regional Administrator will be notified.

N-4b <u>Skip Period Leak Detection and Repair</u>

HRIW does not elect to meet this alternative standard for valves in the regulated service at this time. Should HRIW elect to meet this alternative standard in the future, the Regional Administrator shall be notified and the program revised to comply with 264.1062 (b).

N-5 Test Methods and Procedures

The test methods used by HRIW comply with 264.1063. Relevant instrument and method information is included in this document as Appendix N-C.

Monitoring performed at HRIW is done in accordance with Method 21 as set forth in 40 CFR Part 60.

The instrument currently being used for modeling is a Foxboro OVA Model 108; other instruments may be utilized depending on performance and instrument availability. The performance criteria for this instrument against Method 21 requirements are well documented and are included in Appendix N-C. The instrument is calibrated according to Method 21 requirements and the results documented as part of the monitoring. Examples of calibration forms for documenting this information appear in Appendix N-C. Calibration gases conform to Method 21 requirements and are documented with each calibration (see Appendix N-C).

N-5a Testing for No Detectable Emissions

The only equipment at HRIW designated as meeting the "no

detectable emission" standard are pumps meeting the criteri of 264.1052 (e). These pumps will be monitored annually following the procedures of 264.1052 (b). The background levels will be recorded as set forth in Method 21 in determining the leakage rates from these pumps.

When monitoring for leaks, the instrument probe is traversed around all potential leak sources from these pumps as close to the interface as possible as described in Method 21.

The background value shall be subtracted from the highest reading on each pump in determining compliance with the 500 ppm level for no detectable leakage.

N-5b <u>Testing Organic Concentration</u>

All identified hazardous waste equipment in waste service contacts ten (10) percent or greater liquid wastes. HRIW has made this determination based on knowledge of the waste streams handled by HRIW and complies with 264.1063 (g). Additional testing using methods stipulated by paragraphs 264.1063 (d) (1) and (2) for this initial designation is not required at HRIW. Since all identified hazardous waste equipment has been designated as being in light liquid, ten (10) percent or greater

organic liquid waste service, documentation of this determination based on knowledge of process is not required.

Should HRIW determine that a system can be designated as contacting less than ten (10) percent organic concentration streams, or the Regional Administrator does not agree that a stream contains less than ten (10) percent by weight organics, the determination will only be revised after following the procedures in 264.1063 (d) (1) or (2).

Any samples used to determine the percent organic content shall be representative of the highest total organic content hazardous waste that is expected to be handled in or contact the equipment.

Since all equipment at the HRIW facility has been designated in light liquid service, no waste constituent vapor pressure determinations are necessary.

No control device efficiency tests are performed at the HRIW facility since emissions reductions using control devices are not required by 264.1034.

N-6 Recordkeeping Requirements

HRIW is subject to the leak detection and repair requirements only and has no closed vent or control devices. The recordkeeping provisions of this paragraph for the Subpart BB program only apply to HRIW. Although HRIW is owned by USPCI and is part of a multiple facility system subject to these standards, HRIW elects to maintain the required records on site. Additional information on this program for HRIW may also be maintained at USPCI's corporate office in Houston, Texas.

N-6a Equipment Information

The identification numbers for equipment subject to leak detection and repair requirements and associated hazardous waste management units appear in the Tables in Appendix N-D. The numbers separate the equipment into two categories. Valves and connections are identified with PXXX number, pumps are identified by a MXXX number. These numbers are unique to each piece of equipment.

Drawings of the process and facility plot plan are included in Appendix N-A. These drawings also show each piece of equipment

subject to these standards and their identification numbers. The exact location of each piece of equipment is identified for monitoring and repair tracking from this information.

The tables in Appendix N-D include equipment descriptions, types, models, serial numbers, and operating characteristics where available.

All hazardous waste streams handled at the HRIW facility have been assumed to exceed the ten (10) percent organic content limit and a majority are liquids. The gas/vapor service equipment is identified by type of associated process. This service is limited to equipment on condensers and vent lines, and are identified in the tables included in Appendix N-D. All pipelines subject to these standards are identified as being in either vapor or liquid service in the pipe line lists in Appendix N-D. Light liquid services are identified by the identification number for the pipeline in which the equipment is installed. K-XXX represents a kiln fuel service, N-XXX represents a non-chlorinated organics service, C-XXX represents a chlorinated organics service, W-XXX represents an aqueous organics service, and O-XXX represents waste oil service.

N-6b <u>Method Of Compliance</u>

Pumps are monitored monthly in accordance with 264.1052 (a), (b), and (c); except for those pumps listed in Appendix N-E. Those pumps are tested for compliance with no detectable emissions standards annually.

Valves are tested annually for leaks in accordance with 264.1061, (standards allowing no greater than two (2) percent of the valves to leak); except for those valves which are designated as difficult to monitor. These valves are monitored for leaks annually.

Flanges and other connectors are inspected weekly and monitored if evidence of a leak is found.

All open-ended valves and lines at the HRIW facility are equipped with caps or plugs intended to seal the open end when the line or valve is not in service. All double block lines at the facility are operated such that the valve on the hazardous waste stream side is closed before the second valve is closed.

N-6c <u>Control Devices</u>

No control devices are required on the units at the HRIW facility, so no implementation schedule for their installation,

their design, or performance test plans have been prepared.

N-6d <u>Leak Identification</u>

Whenever a leak is detected on any equipment, a weatherproof tag shall be attached showing the equipment identification number, the date a potential leak was visually identified, the date a leak was detected in accordance with 264.1058 (a). This equipment identification tag will be removed after repair except for valves.

The equipment identification tag will remain on repaired valves until two (2) successive months of monitoring indicate that the leak has been repaired by measurements less than 10,000 ppm.

When a leak has been detected by exceeding a 10,000 ppm measurement, information on the leak and its repair will be documented and made part of the operating record. An example of the leak reports and repair records are included in Appendix N-F. This information shall include the following.

- The instrument and operator and the leaking equipment identification number.

- The date a potential leak was identified.

- The date a leak was detected by exceeding 10,000 ppm on the instrument and the date of each attempted repair.

- The repair method applied with each attempt to repair the leak.

- The monitoring results following each repair attempt and the indication of "greater than 10,000 ppm" if the reading is above 10,000 ppm.

- The notation "Repair Delayed" if repairs are delayed past fifteen (15) days.

- Documentation of the repair delay in accordance with 264.1059 (c).

- The signature of the owner or operator whose decision it is to delay the repair due to the need for a hazardous waste management unit shutdown.

- The expected date of successful repair of the leak if it is not repaired within fifteen (15) days.

- The date of successful repair.

N-6e <u>Equipment List</u>

The list of equipment subject to the requirements of 264.1052 through 264.1060 appears in the tables in Appendix N-D.

N-6f <u>No Detectable Emission Equipment</u>

A list of equipment designated by HRIW as meeting the no detectable emissions standards for pumps from 264.1052 (e) appears in Appendix N-E along with a statement signed by USPCI's designee at the HRIW facility.

The dates of the compliance tests, the background value, and the highest value measured for each pump designated according to 264.1052 (e) and identified according to paragraph (g) (2) (i) of this section appears in Appendix N-F along with all field records of the monthly monitoring performed on all regulated equipment at the HRIW facility.

N-6g <u>Pressure Relief and Vacuum Equipment</u>

There are no pressure relief devices at the HRIW facility subject

to this requirement. The dryer and the two tanks which accumulate liquids evaporated in the dryer operate under vacuum; however, HRIW is not at this time seeking an exemption for these units from monitoring requirements.

N-6h <u>Difficult to Monitor Valves</u>

Valves that have been identified as difficult to monitor are identified in the tables in Appendix N-D by the identification number PUXXX or MUXXX. HRIW does not elect to identify any equipment as unsafe-to-monitor at this time. The difficult-to-monitor valves identified pursuant to 264.1057 (h) in the tables in Appendix N-D are all located in difficult to reach or are at or above two (2) meters above a supported surface. The valves will be monitored annually when a portable structure capable of safely supporting monitoring personnel can be scheduled, but in no case later than one year from the date which all accessible equipment is monitored.

N-6i <u>Process Information for Exemptions</u>

Information is available in the facility records which indicates the design capacity of the hazardous waste management units.

The facility operating record includes information on the influent and effluent of each hazardous waste management unit subject to these requirements.

No hazardous waste management unit exclusively handles heavy liquids and all equipment is covered by sections of the requirements which apply to light liquids. All identified hazardous waste equipment in waste service contacts waste with ten (10) percent or greater organics. HRIW has made this determination based on knowledge of the waste streams. No exemptions are currently being claimed on the basis of weight percent organics in the waste stream or type of liquid service (heavy or light). This information constitutes the supporting information on the applicability of these requirements at the HRIW facility and will be updated on a regular basis.

N-6j <u>Operating Information</u>

The records required by 264.1064 (d) and (e) will be maintained on site for a period of three years.

N-6k <u>Additional Fugitive Emission Requirements</u>

HRIW is not subject to the additional requirements from 40 CFR

Part 60, subpart VV; or Part 61, subpart V; and therefore cannot document compliance with this section using duplicative information.

Appendix N-A - Facility and Process Drawings

February 18, 1992

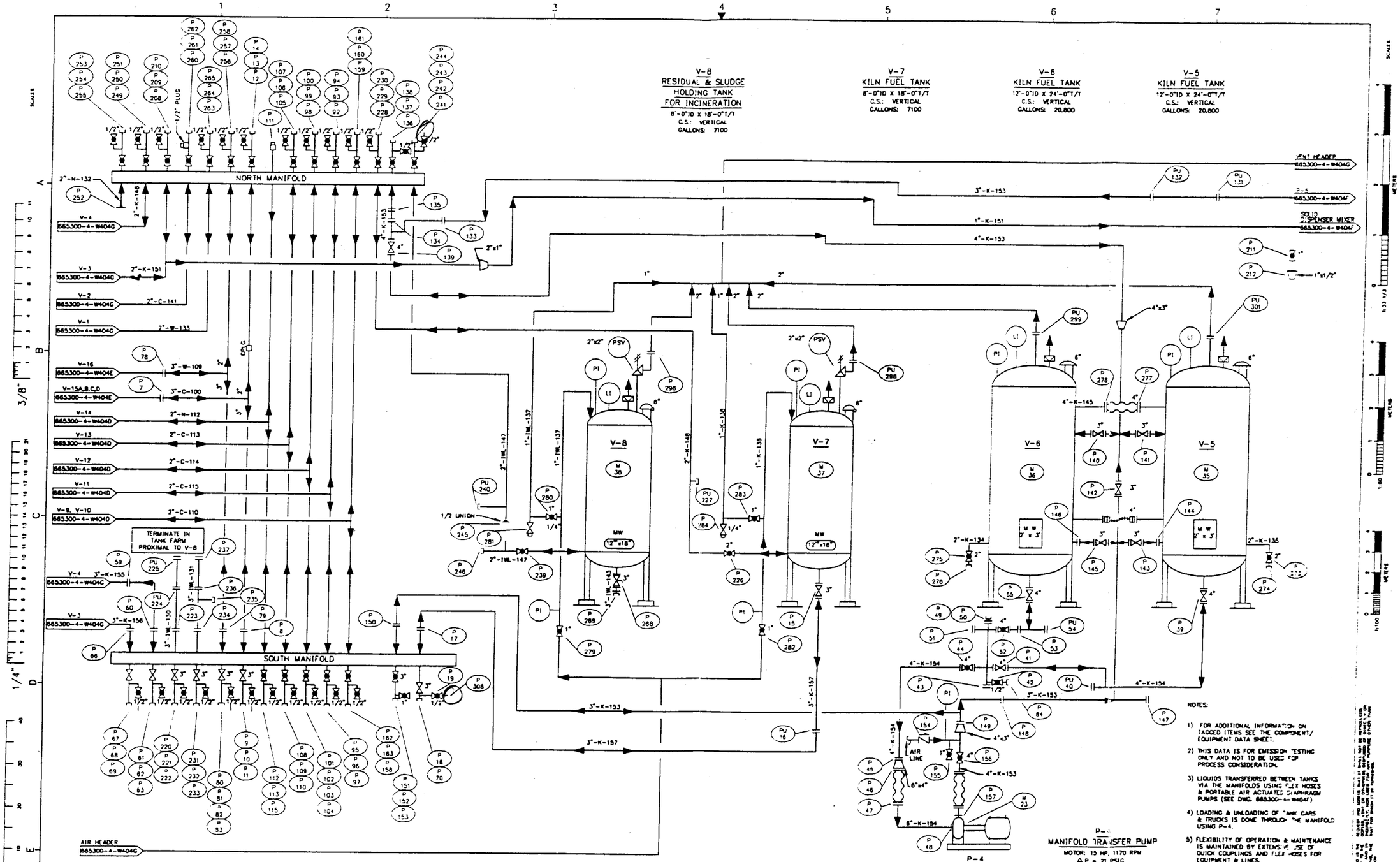

NOTES:

1) FOR ADDITIONAL INFORMATION ON TAGGED ITEMS SEE THE COMPONENT/EQUIPMENT DATA SHEET.
2) THIS DATA IS FOR EMISSION TESTING ONLY AND NOT TO BE USED FOR PROCESS CONSIDERATION.
3) LIQUIDS TRANSFERRED BETWEEN TANKS VIA THE MANIFOLDS USING FLEX HOSES & PORTABLE AIR ACTUATED DIAPHRAGM PUMPS (SEE DWG. 665300-4-W404F)
4) LOADING & UNLOADING OF TANK CARS & TRUCKS IS DONE THROUGH THE MANIFOLD USING P-4.
5) FLEXIBILITY OF OPERATION & MAINTENANCE IS MAINTAINED BY EXTENSIVE USE OF QUICK COUPLINGS AND FLEX HOSES FOR EQUIPMENT & LINES.

1	REVISED PER CLIENT COMMENTS	4-W511-1	TANK FARM TRANSPOSITION
		4-W511-2	TANK FARM TRANSPOSITION

USPCI
A Subsidiary of Union Pacific Corporation

FLUOR DANIEL

DRAWN BY: C.L. AMES
CHECKED BY: R. SCOTT

PIPING & INSTRUMENT DIAGRAM
TANK FARM II
V-5 THRU V-8/NORTH & SOUTH MANIFOLDS
WICHITA, KANSAS

SCALE: NONE
DRAWING NUMBER: 665300-4-W404H
SHEET: 9

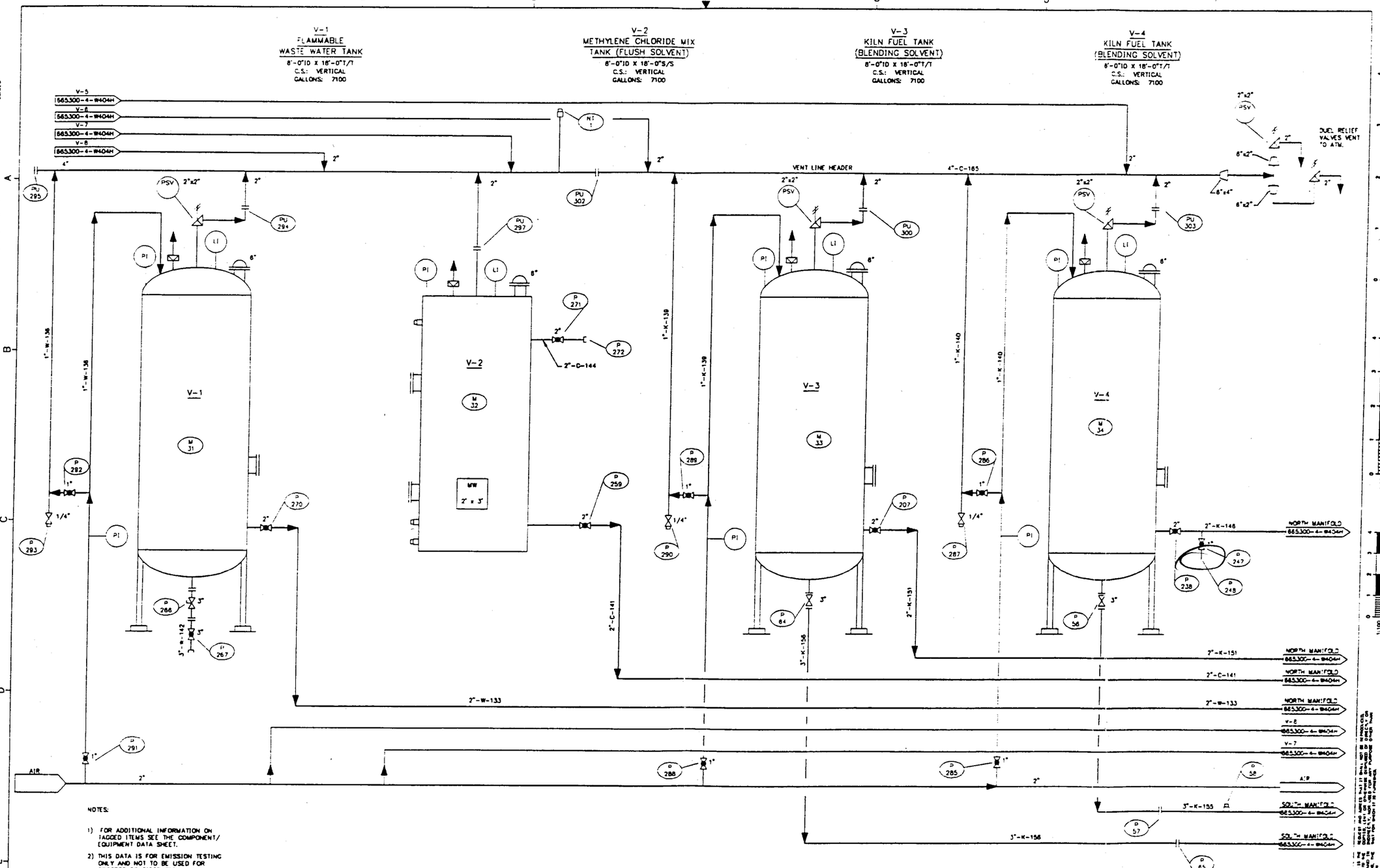
V-1
FLAMMABLE
WASTE WATER TANK
8'-0"ID X 18'-0"T/T
C.S.: VERTICAL
GALLONS: 7100
V-2
METHYLENE CHLORIDE MIX
TANK (FLUSH SOLVENT)
8'-0"ID X 18'-0"S/S
C.S.: VERTICAL
GALLONS: 7100
V-3
KILN FUEL TANK
(BLENDING SOLVENT)
8'-0"ID X 18'-0"T/T
C.S.: VERTICAL
GALLONS: 7100
V-4
KILN FUEL TANK
(BLENDING SOLVENT)
8'-0"ID X 18'-0"T/T
C.S.: VERTICAL
GALLONS: 7100
VENT LINE HEADER
DUEL RELIEF VALVES VENT TO ATM.
NORTH MANIFOLD
SOUTH MANIFOLD
AIR
NOTES:
1) FOR ADDITIONAL INFORMATION ON TAGGED ITEMS SEE THE COMPONENT/ EQUIPMENT DATA SHEET.
2) THIS DATA IS FOR EMISSION TESTING ONLY AND NOT TO BE USED FOR PROCESS CONSIDERATION.
REVISED PER CLIENT COMMENTS
4-W511-1 TANK FARM TRANSPOSITION
4-W511-2 TANK FARM TRANSPOSITION
USPCI
A Subsidiary of Union Pacific Corporation
FLUOR DANIEL
PIPING & INSTRUMENT DIAGRAM
TANK FARM 1/V-1, V-2, V-3 & V-4
WICHITA, KANSAS
665300-4-W404G

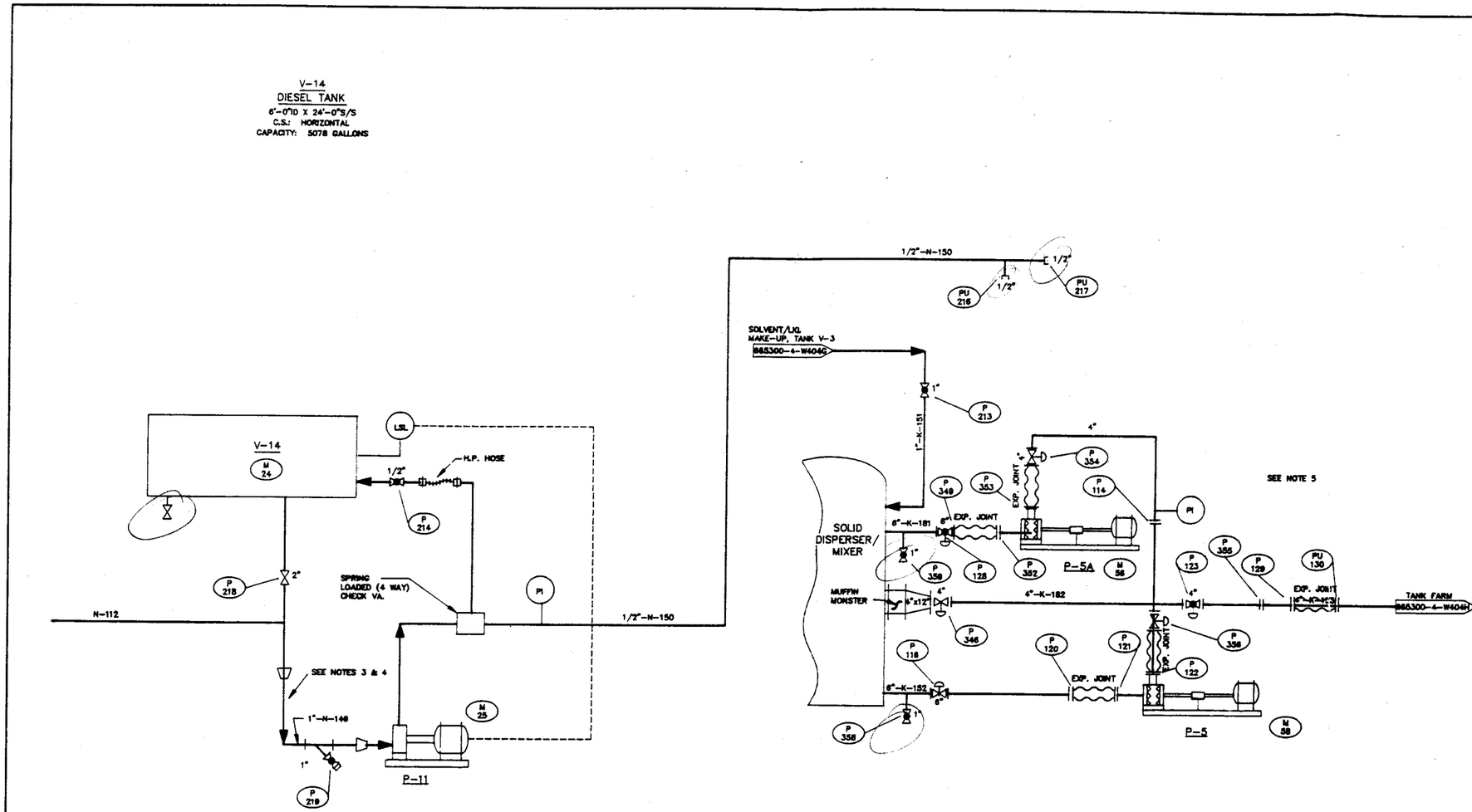

P-11
DIESEL INJECTION PUMP
Δ P=
MOTOR: 10 HP, 1750 RPM

P-5, P-5A
VAUGHAN/GRINDER PUMP
Δ P=
MOTOR: 20 HP, 1760 RPM
BELT DRIVEN WITH GEAR BOX

DIAPHRAGM PUMP DETAILS

TYPICAL AIR OPERATED DIAPHRAGM PUMP(S) AND FLEXIBLE HOSES WITH QUICK CONNECTIONS ON BOTH ENDS ARE EXTENSIVELY USED IN PLANT OPERATIONS.

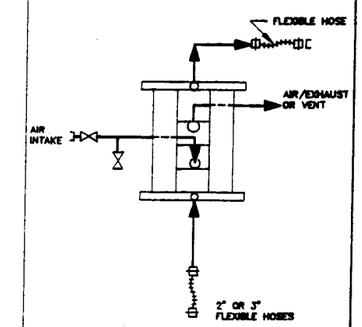

TAG NUMBERS:	PUMP NUMBERS:
M 28	P-6
M 29	P-7
M 30	P-8
M 39	P-9
M 40	P-10

P-6,7,8,9,10
AIR OPERATED DIAPHRAGM PUMP(S)
(PORTABLE)

- FIVE (5) PORTABLE PUMPS
- USE QUICK COUPLING CONNECTIONS FOR BOTH AIR AND PROCESS FLUIDS.
- PUMPS USED FOR LOADING, UNLOADING, TRANSFER BETWEEN TRUCKS, TANKS, DRUMS, AND MANIFOLDS.
- ALWAYS USE FLEXIBLE HOSES TO AND FROM THE PUMP
- RATE OF PUMPING IS CONTROLLED BY INTAKE AIR VOLUME AND PRESSURE.

NOTES:

1) FOR ADDITIONAL INFORMATION ON TAGGED ITEMS SEE THE COMPONENT/ EQUIPMENT DATA SHEET.
2) THIS DATA IS FOR EMISSION TESTING ONLY AND NOT TO BE USED FOR PROCESS CONSIDERATION.
3) HIGH PRESSURE DIESEL SUPPLY TO THE PROCESS AREA DRUM WASHING HP SPRAY NOZZLE ONLY.
4) DRUM RESTS ON SADDLE, MOTOR AND PUMP ARE SKID MOUNTED. HP PUMP IS BELT DRIVEN.
5) DUE TO HIGH SOLID CONTENT OF THE MIXED STREAM (FROM 20% TO 50%), SOLID SETTLING IS ALWAYS A PROBLEM. FOR UNPLUGGING PURPOSE, ALL THE PIPING, FILTER, AND THE PUMP ITSELF ARE DESIGNED FOR QUICK OPENING AND REASSEMBLY.

REV	DATE	REVISION DESCRIPTION	DRAWN	CHECK	APP.	DESIGN	PIPING	VESSEL	ELEC.	CONTROL	DWG. NO.	REFERENCE DRAWING
1		REVISED PER CLIENT'S COMMENTS									4-W511-1	TANK FARM TRANSPOSITION
2	2/92	REVISED PER PROCESS AREA RENOVATION									4-W510-1	PROCESS AREA TRANSPOSITION
											4-W404	PLOT PLAN

USPCI
A Subsidiary of Union Pacific Corporation

FLUOR DANIEL

DRAWN BY C.L. AMES
CHECKED BY W. SCOTT
REFERENCE MTL
REFERENCE ENGR. RC
PROJECT ENGR. CM
CLIENT
APP. DATE

PIPING & INSTRUMENT DIAGRAM
PROCESS AREAS /V-17,P11 & P-5
PUMP DETAILS
WICHITA, KANSAS

SCALE NONE
DRAWING NUMBER 665300-4-W404F
SHEET 7 of 9
REVISION 2

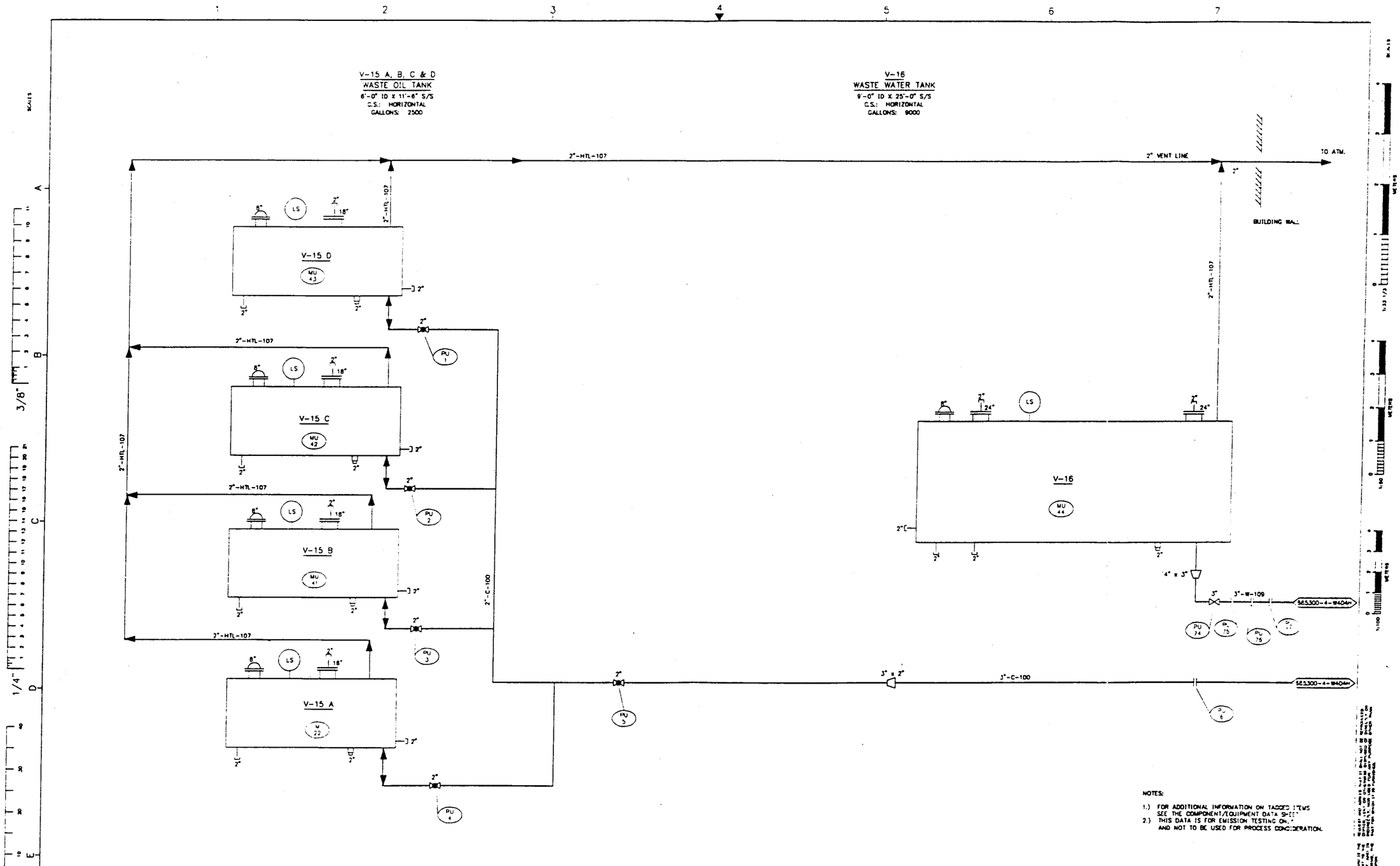

1	REVISED PER CLIENT COMMENTS	4-W512	STORAGE TANK RM. TRANSPOSITION

USPCI
A Subsidiary of Union Pacific Corporation

FLUOR DANIEL

DRAWN BY: CL AMES
CHECKED BY: DC
SUPERVISOR: MTL
SUPERVISOR ENGR.: RC
PROJECT ENGR.: CM
SCALE: NONE
DRAWING NUMBER: 665300-4-W404E
SHEET 1 OF 9

PIPING & INSTRUMENT DIAGRAM
STORAGE TANK ROOM II/V-15 A-D & V-16
WICHITA, KANSAS

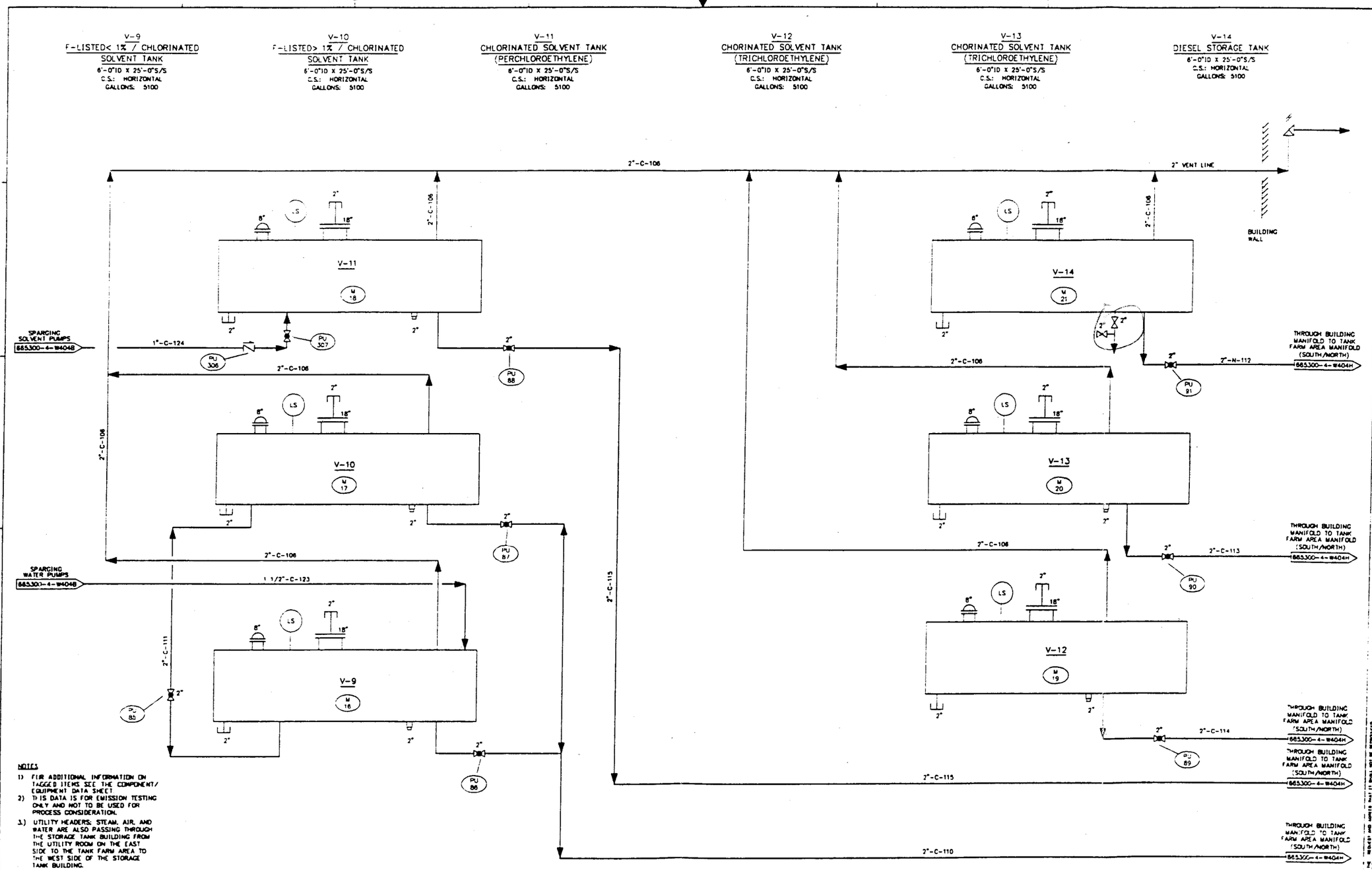

NOTES

1) FOR ADDITIONAL INFORMATION ON TAGGED ITEMS SEE THE COMPONENT/EQUIPMENT DATA SHEET.
2) THIS DATA IS FOR EMISSION TESTING ONLY AND NOT TO BE USED FOR PROCESS CONSIDERATION.
3.) UTILITY HEADERS: STEAM, AIR, AND WATER ARE ALSO PASSING THROUGH THE STORAGE TANK BUILDING FROM THE UTILITY ROOM ON THE EAST SIDE TO THE TANK FARM AREA TO THE WEST SIDE OF THE STORAGE TANK BUILDING.

	DATE	REVISION DESCRIPTION	DRAWN CHECK	APP	ISSUED CHECK STRUCT.	PIPING	MECHAN.	ELEC.	CONTROL	DWG. NO.	REFERENCE DRAWING
1		REVISED PER CLIENT COMMENTS								4-W512	STORAGE TANK RM. TRANSPOSITION

USPCI
A Subsidiary of Union Pacific Corporation

FLUOR DANIEL

DRAWN BY: C.L. AMES
CHECKED BY: DC
SUPERVISOR: MR
SUPERVISOR ENGR.: RC
PROJECT ENGR.: CM
CLIENT: CRM
RELEASE DATE
INITIALS
APP. DATE
APP. DATE

PIPING & INSTRUMENT DIAGRAM
STORAGE TANK ROOM I/V-9 THRU V-14
WICHITA, KANSAS

SCALE: NONE
DRAWING NUMBER: 665300-4-W404D
SHEET: 5 of 9
REVISION: 1

DISTRIBUTION CODE

3/18/91
FILE NAME

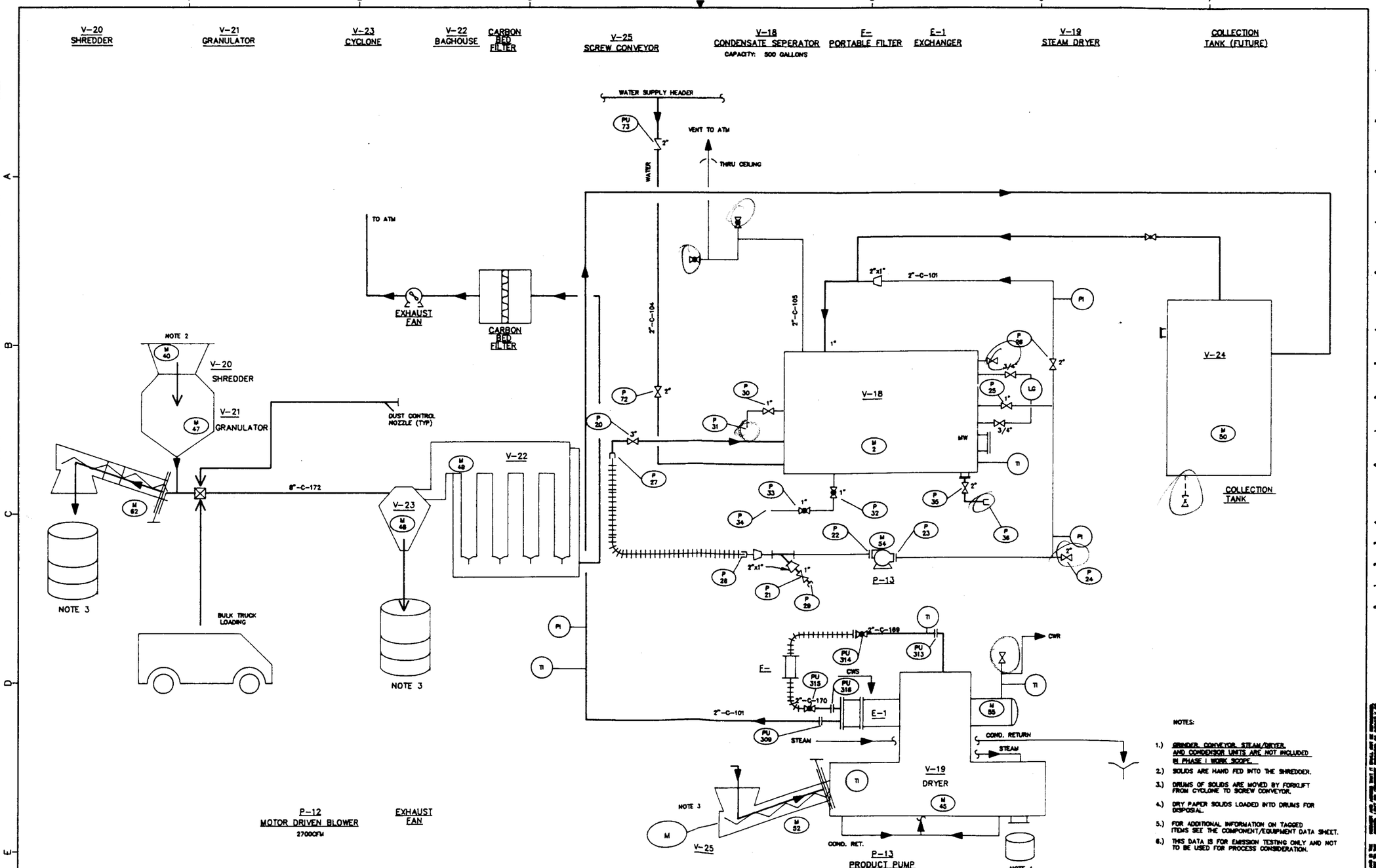

NOTES:

1.) GRINDER, CONVEYOR, STEAM/DRYER, AND CONDENSOR UNITS ARE NOT INCLUDED IN PHASE I WORK SCOPE.
2.) SOLIDS ARE HAND FED INTO THE SHREDDER.
3.) DRUMS OF SOLIDS ARE MOVED BY FORKLIFT FROM CYCLONE TO SCREW CONVEYOR.
4.) DRY PAPER SOLIDS LOADED INTO DRUMS FOR DISPOSAL.
5.) FOR ADDITIONAL INFORMATION ON TAGGED ITEMS SEE THE COMPONENT/EQUIPMENT DATA SHEET.
6.) THIS DATA IS FOR EMISSION TESTING ONLY AND NOT TO BE USED FOR PROCESS CONSIDERATION.

REV.	DATE	REVISION DESCRIPTION	DRAWN	APP.	ISSUED	REVISED	CHECKED	APPROVED	DWG. NO.	REFERENCE DRAWING
1		REVISED PER CLIENT'S COMMENTS							4-W314	NEW PROCESS ROOM/TRANSPOSITION
2		AS PER B. PATTERSON								
3		REVISED PER COMMENTS FROM D. NIVENS								

USPCI
A Subsidiary of Union Pacific Corporation

FLUOR DANIEL

DRAWN BY C.L. AMES
ENGINEERED BY W. SCOTT

PIPING & INSTUMENT DIAGRAM
NEW PROCESS/CONDENSATE SEPARATOR & PUMP
WICHITA, KANSAS

SCALE NONE | DRAWING NUMBER 665300-4-W404A | SHEET 2 of 9 | REVISION 3

7/16/91 FILE NAME: W404A

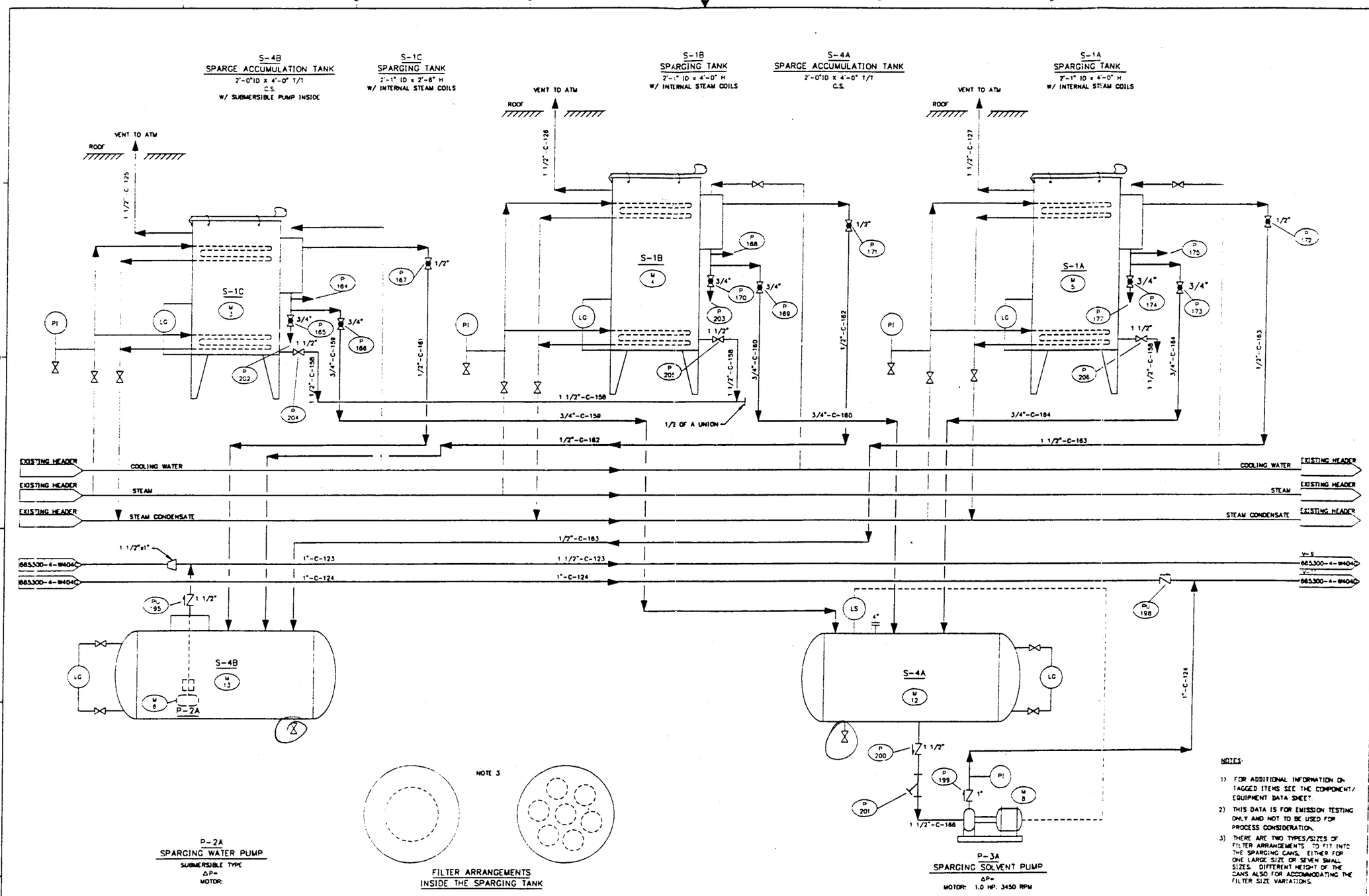

NOTES:

1) FOR ADDITIONAL INFORMATION ON TAGGED ITEMS SEE THE COMPONENT/EQUIPMENT DATA SHEET.
2) THIS DATA IS FOR EMISSION TESTING ONLY AND NOT TO BE USED FOR PROCESS CONSIDERATION.
3) THERE ARE TWO TYPES/SIZES OF FILTER ARRANGEMENTS TO FIT INTO THE SPARGING CANS. EITHER FOR ONE LARGE SIZE OR SEVEN SMALL SIZES. DIFFERENT HEIGHT OF THE CANS ALSO FOR ACCOMMODATING THE FILTER SIZE VARIATIONS.

REV.	DATE	REVISION DESCRIPTION	DRAWN	CHECK	APP	DWG. NO.	REFERENCE DRAWING
1		REVISED PER CLIENT COMMENTS				4-W513	SPARGER ROOM TRANSPOSITION

USPCI
A Subsidiary of Union Pacific Corporation

FLUOR DANIEL

DRAWN BY: C.L. AMES
CHECKED BY: W. SCOTT

PIPING & INSTRUMENT DIAGRAM
SPARGING ROOM I - ROUND SPARGERS SYSTEM
WICHITA, KANSAS

SCALE: NONE
DRAWING NUMBER: 665300-4-W404B
SHEET: 3 of 9

3/20/91

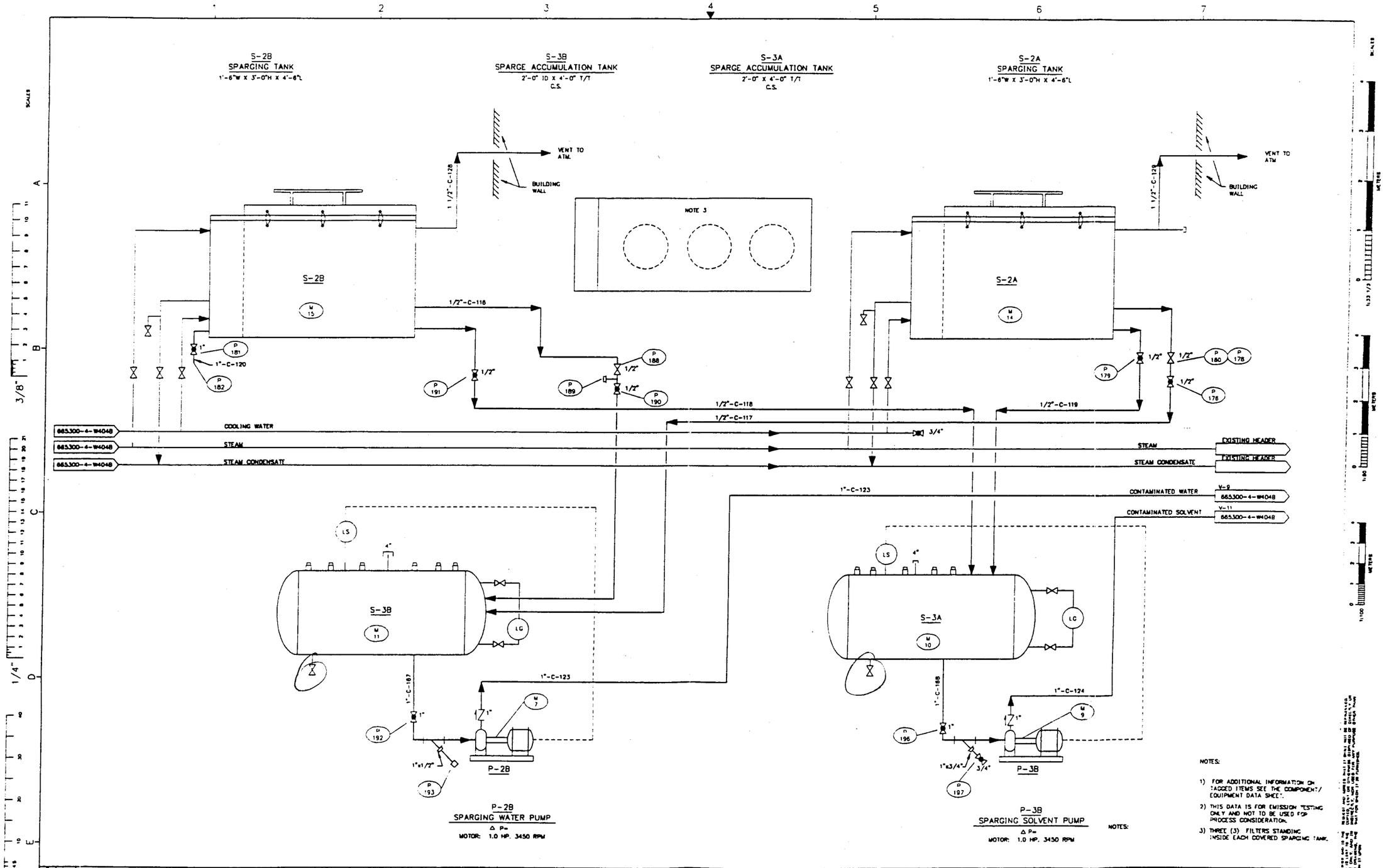

1		PEVISED PER CLIENT COMMENTS							4-W513	SPARGER ROOM TRANSPOSITION	

USPCI
A Subsidiary of Union Pacific Corporation

FLUOR DANIEL

DRAWN BY: CL AMES
CHECKED BY: W. SCOTT

PIPING & INSTRUMENT DIAGRAM
SPARGING ROOM II-RECTANGULAR SPARGERS SYSTEM
WICHITA, KANSAS

SCALE: NONE
DRAWING NUMBER: 665300-4-W404C
SHEET: 4 OF 5

3/20/91

MANUALLY OPERATED VALVES

* BY ADDING AN ACTUATOR TO THE BASIC VALVE SYMBOL,THE VALVE BECOMES A CONTROL VALVE

- GATE VALVE
- GLOBE VALVE
- CHECK VALVE
- PLUG VALVE
- HAND CONTROL VALVE
- BALL VALVE
- BUTTERFLY VALVE OR DAMPER
- STOP CHECK VALVE
- BLOWDOWN VALVE
- CONTROL VALVE

OTHER VALVES:
INDICATED PROPER ABBREVIATION UNDER VALVE, EXAMPLE: TSO

- THREE WAY VALVE
- RELIEF VALVE
- FLAME ARRESTOR
- FLEX HOSE
- EXPANSION JOINT
- P XXX MONITOR POINT

P - PIPE MONITOR POINTS
M - MECHANICAL MONITOR POINTS
PU - MONITOR POINTS UNABLE TO REACH
NT - UNTAGGED MONITOR POINTS

- EDUCTOR
- UNION
- FLANGE
- HOSE COUPLING
- SCREWED CAP
- WELD CAP
- PLUG
- SPECTICLE BLIND
- RUPTURE DISK
- THIEF HATCH
- SIGHT GLASS
- COUPLING W/PIPE CONTINUATION
- REDUCER
- COUPLING
- ATMOSPHERIC VENT
- VALVE, SWAGE (OR REDUCER), AND SCREWED CAP
- INSTRUMENT PNEUMATIC LINE
- INSTRUMENT ELECTRICAL LEAD

ABBREVIATIONS

AG	- ABOVE GROUND	LA	- LEVEL ALARM
ATM	- ATMOSPHERE	LC	- LOCK CLOSED
BF	- BLIND FLANGE	LCV	- LEVEL CONTROL VALVE
BL	- BATTERY LIMIT	LG	- LEVEL GLASS
BW	- BACKWASH	LO	- LOCK OPEN
CO	- CHAIN OPERATED	LP	- LOW PRESSURE
CP	- CORROSION PROBE	L.PT	- LOW POINT
CSC	- CAR SEAL CLOSED	LT	- LEVEL TRANSMITTER
CSO	- CAR SEAL OPEN	NC	- NORMALLY CLOSED
DE	- DE-ENERGIZE	NNF	- NORMALLY NO FLOW
(E)	- EXISTING	PI	- PRESSURE INDICATOR
EXT	- EXTERNAL	PO	- PUMP OUT
(F)	- FURNISHED	RF	- RAISED FACE FLANGE
(F& P)	- FURNISHED & PIPED	RTJ	- RING TYPE JOINT FLANGE
FC	- FAIL CLOSED	SC	- SAMPLE CONNECTION
FD	- FLEX-DISC VALVE	SO	- STEAM OUT
FI	- FAIL INDETERMINATE	SP	- SET POINT
FL	- FAIL LOCKED	SP.GR.	- SPECIFIC GRAVITY
FO	- FAIL OPEN	SS	- SOFT-SEAT VALVE
FP	- FULL PORT	TSO	- TIGHT SHUT-OFF
FV	- FULL VACUUM	S-S	- SEAM TO SEAM
GO	- GEAR OPERATED	TC	- TEMPERATURE CONTROLER
HP	- HORSE POWER OR HIGH PRESSURE	TE	- TEMPERATURE ELEMENT
H.PT	- HIGH POINT	T-F	- TANGENT TO FLANGE
Iac	- INSULATION ACOUSTIC	TI	- TEMPERATURE INDICATOR
I/P	- INSTRUMENT/PROCESS	TOS	- TOP OF STEEL
INS	- INSULATION	T-S	- TANGENT TO SEAM
IA	- INSTRUMENT AIR	T-T	- TANGENT TO TANGENT
Ic	- INSULATION COLD	TYP	- TYPICAL
Ih	- INSULATION HOT	UG	- UNDERGROUND
Is	- INSULATION SAFETY	VAC	- VACUUM
HRI	HYDROCARBON RECYCLERS INCORPORATED	VB	- VORTEX BREAKER
USPCI	UNITED STATES POLLUTION CONTROL INC.		

LINE IDENTIFICATION

3" - N - 176 - Ih

LINE SIZE
COMMODITY
LINE NUMBER
INSULATION (SEE ABBREVIATIONS)

N	- NONCHLORINATED
C	- CHLORINATED
K	- KILN FUEL
O	- WASTE OIL
TJ	- THIN FILM UNIT
AU	- "A" UNIT
VU	- "V" UNIT
CU	- "C" UNIT
W	- PROCESS WATER
IWL	- INCINERATOR WATER LINE
AZ	- AZEOTROPIC UNIT
FU	- FLASH UNIT
RU	- REFLUX UNIT
IPA	- ISOPROPYL ALCOHOL
CWS	- COOLING WATER SUPPLY
CWR	- COOLING WATER RETURN
HOS	- HOT OIL SUPPLY
HOR	- HOT OIL RETURN

U.S.P.C.I PURCHASE ORDER NO. 90068

REV.	DATE	REVISION DESCRIPTION	DRAWN CHECK	APP.	ISSUED FOR: CONSTR.	PROCS	MECHS.	ELEC.	INSTRUM.	DWG. NO.	REFERENCE DRAWINGS
1		REVISED PER CLIENT COMMENTS									

USPCI
A Subsidiary of Union Pacific Corporation

FLUOR DANIEL

DRAWN BY R. GARZA
ENGINEER BY RGH
CONTROL NO. M.T.
RELEASE DATE
SUPERVISOR ENGR. RC
APPROVED ENGR. CM
APP. DATE
CLIENT
APP. DATE

P & ID
LEGEND & SYMBOLOGY
WICHITA, KANSAS

SCALE NONE
DRAWING NUMBER 665300-4-W401
SHEET 1 of 9
REVISION 1

DISTRIBUTION CODE

3/21/91 FILE NAME : W401

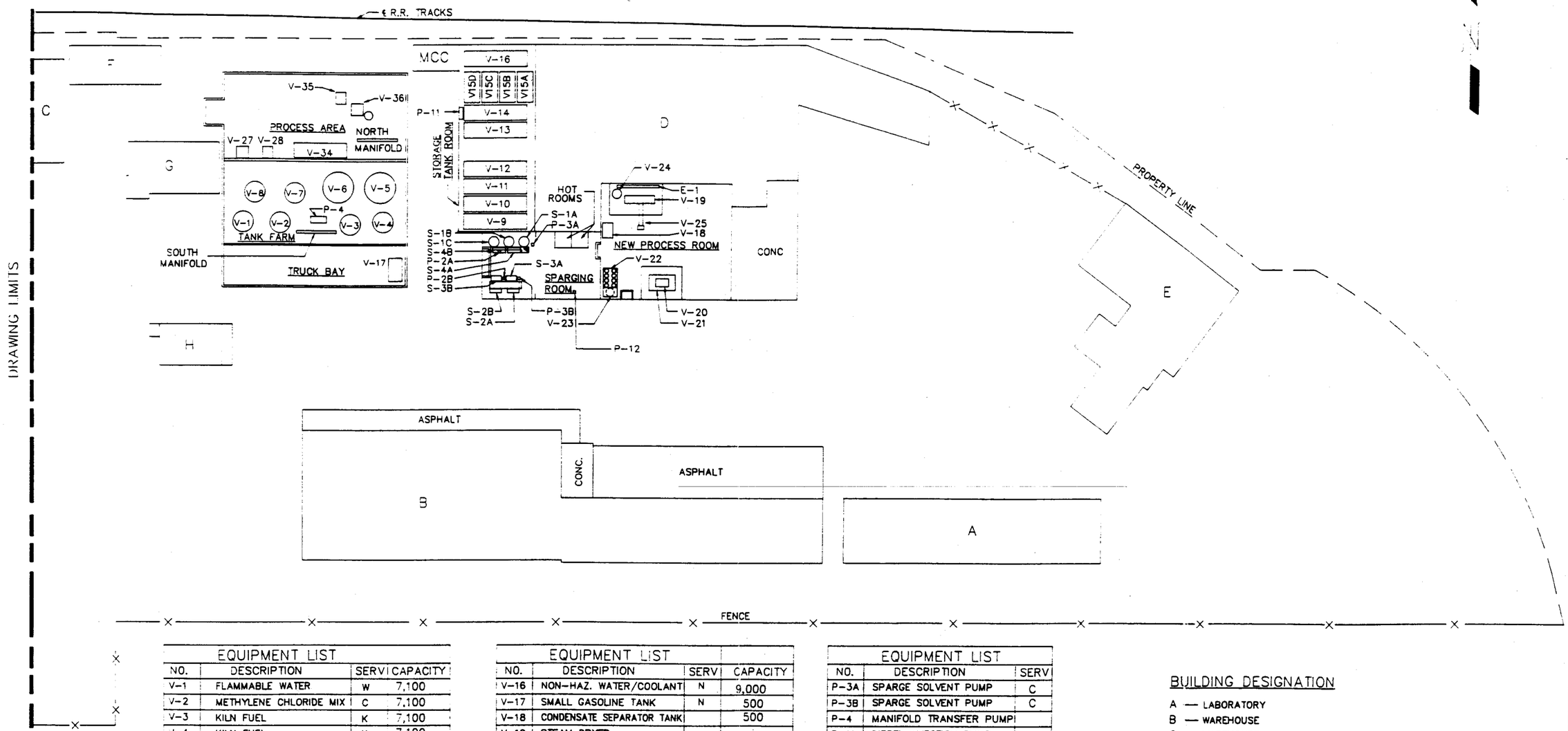

EQUIPMENT LIST			
NO.	DESCRIPTION	SERV	CAPACITY
V-1	FLAMMABLE WATER	W	7,100
V-2	METHYLENE CHLORIDE MIX	C	7,100
V-3	KILN FUEL	K	7,100
V-4	KILN FUEL	K	7,100
V-5	KILN FUEL	K	20,800
V-6	KILN FUEL	K	20,800
V-7	KILN FUEL	K	7,100
V-8	INCINERATION	IWL	7,100
V-9	F-LISTED <1%	C	5,100
V-10	F-LISTED >1%	C	5,100
V-11	PERCHLOROETHYLENE	C	5,100
V-12	TRICHLOROETHYLENE	C	5,100
V-13	TRICHLOROETHYLENE	C	5,100
V-14	DIESEL	N	5,100
V-15	WASTE OIL	O	2,500

EQUIPMENT LIST			
NO.	DESCRIPTION	SERV	CAPACITY
V-16	NON-HAZ. WATER/COOLANT	N	9,000
V-17	SMALL GASOLINE TANK	N	500
V-18	CONDENSATE SEPARATOR TANK		500
V-19	STEAM DRYER		
V-20	SHREDDER		
V-21	GRANULATOR		
V-22	BAG HOUSE		
V-23	CYCLONE		
V-25	SCREW CONVEYOR		
F-1	GRINDING PUMP FILTER		
E-1	EXCHANGER		
V-	MIXING VAT		
	VAT SOLID DISPERSER		
P-2A	SPARGE WATER PUMP	C	
P-2B	SPARGE WATER PUMP	C	

EQUIPMENT LIST		
NO.	DESCRIPTION	SERV
P-3A	SPARGE SOLVENT PUMP	C
P-3B	SPARGE SOLVENT PUMP	C
P-4	MANIFOLD TRANSFER PUMP	
P-11	DIESEL INJECTION PUMP	
P-12	BLOWER	
S-1A	SPARGING TANK	C
S-1B	SPARGING TANK	C
S-1C	SPARGING TANK	C
S-2A	SPARGING TANK	C
S-2B	SPARGING TANK	C
S-3A	SPARGE ACCUM. TANK	C
S-3B	SPARGE ACCUM. TANK	C
S-4A	SPARGE ACCUM. TANK	C
S-4B	SPARGE ACCUM. TANK	C

BUILDING DESIGNATION

- A — LABORATORY
- B — WAREHOUSE
- C — WAREHOUSE
- D — WAREHOUSE
- E — ADMINISTRATION ENGINEERING SALES
- F — OPERATIONS
- G — LUNCH ROOM
- H — MAINTENANCE
- MCC — MOTOR CONTROL CENTER

REDUCED
Approx.
Half Size

NO.	DATE	REVISION DESCRIPTION
1		REVISED PER CLIENT'S COMMENTS
2	12/91	REVISED PER WICHITA RENOVATION

USPCI
A Subsidiary of Union Pacific Corporation

FLUOR DANIEL

DRAWN BY: JOE MARTINEZ
CHECKED BY: D.C.
SUPERVISOR: M.T.L.
SUPERVISOR ENGR.: R.C.
PROJECT ENGR.: C.M.
CLIENT:
RELEASE DATE
INITIALS
APP. DATE
SCALE: 1"=20'-0"
DRAWING NUMBER: 665300-4-W050
SHEET: 1 of 1
REVISION: 2

PIPING
PLOT PLAN
WICHITA, KANSAS

DISTRIBUTION CODE

02/11/91
FILE NAME: W050

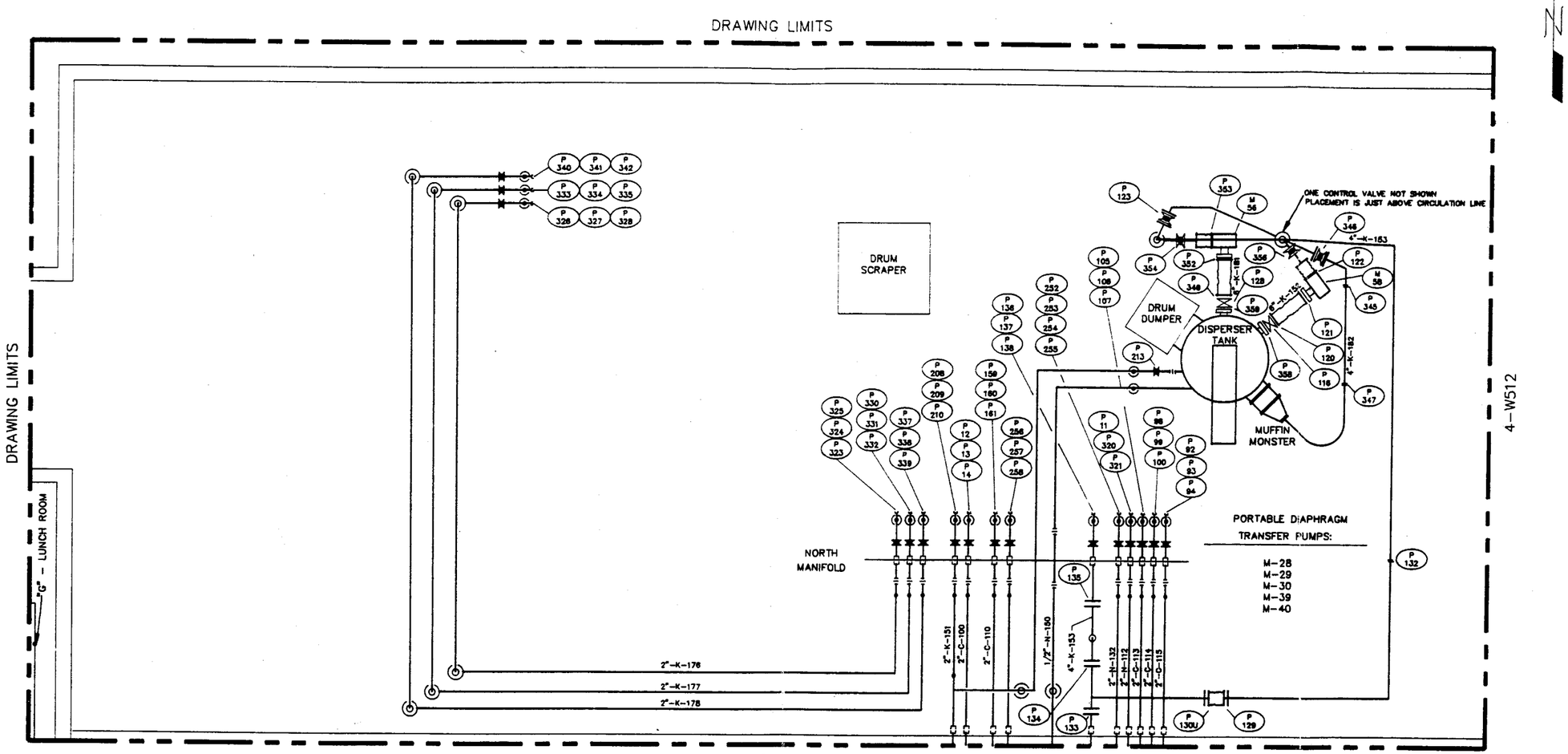

NOTES:

1) FOR ADDITIONAL INFORMATION ON TAGGED ITEMS SEE THE COMPONENT/ EQUIPMENT DATA SHEET.
2) THIS DATA IS FOR EMISSION TESTING ONLY AND NOT TO BE USED FOR PROCESS CONSIDERATION.

REV.	DATE	REVISION DESCRIPTION	DRAWN CHECK	APP.	DESIGN CHECK: ENGINEER	PROJ.	MECH.	ELEC.	ENGINEER	DWG. NO.	REFERENCE DRAWING
1		REVISED PER CLIENT COMMENTS								4-W404F	PROCESS AREA / P & ID
2		REVISED PER PROCESS ARE RENOVATION								4-W404H	TANK FARM ROOM 9 / P & ID
										4-W080	PLOT PLAN
										4-W510-2	TRANS. PROCESS AREA

USPCI
A Subsidiary of Union Pacific Corporation

FLUOR DANIEL

DRAWN BY: CL. AMES
ENGINEER BY: W. SCOTT
SUPERVISOR MTL: RELEASE DATE
SUPERVISOR ENGR. INC: SCALE
PROJECT ENGR. CM: APP. DATE
AUDIT: APP. DATE
DISTRIBUTION CODE

PIPING TRANSPOSITION
PROCESS AREA
WICHITA, KANSAS

SCALE: 3/8" = 1'-0"
DRAWING NUMBER: 665300-4-W510-1
SHEET 1 OF 2
REVISION 2

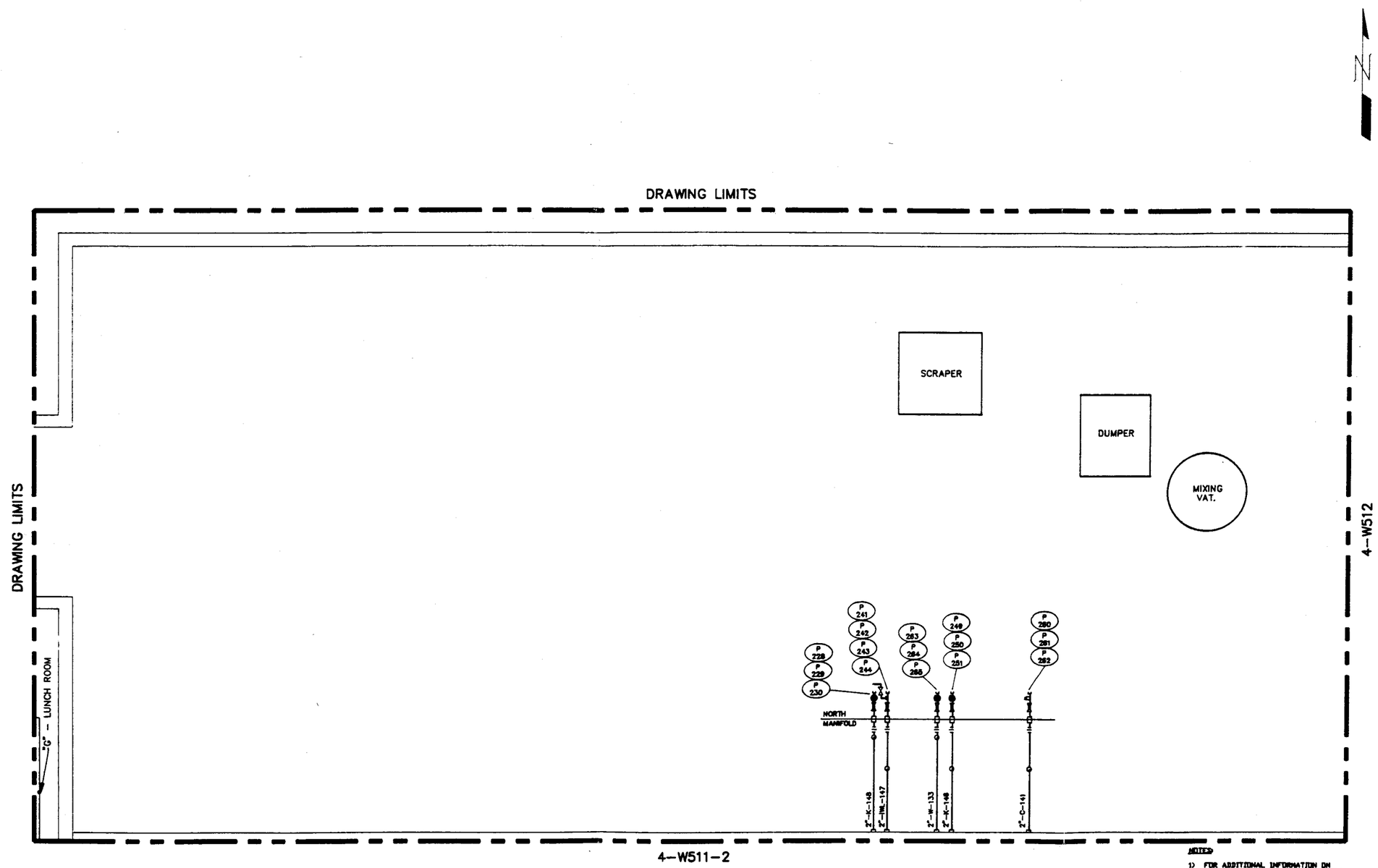

NOTES:

1) FOR ADDITIONAL INFORMATION ON TAGGED ITEMS SEE THE COMPONENT/ EQUIPMENT DATA SHEET.

2) THIS DATA IS FOR EMISSION TESTING ONLY AND NOT TO BE USED FOR PROCESS CONSIDERATION.

NO.	DATE	REVISION DESCRIPTION	DRAWN	CHECK	APP.	DESIGN CHECK					DWG. NO.	REFERENCE DRAWING
1		REVISED PER CLIENTS COMMENTS									4-W050	PLOT PLAN
2		REVISED PER PROCESS AREA RENOVATION									4-W404G	TANK FARM I / P & ID
											4-W510-1	TRANS. PROCESS AREA

USPCI
A Subsidiary of Union Pacific Corporation

FLUOR DANIEL

DRAWN BY: CL AMES
CHECKED BY: DC
ENGINEER: MTL
ENGINEERING CHECK: RC
PROJECT ENGR.: CM
SCALE: NONE

PIPING TRANSPOSITION
PROCESS AREA
WICHITA, KANSAS

DRAWING NUMBER: 665300-4-W510-2
SHEET: 2 of 2
REVISION: 2

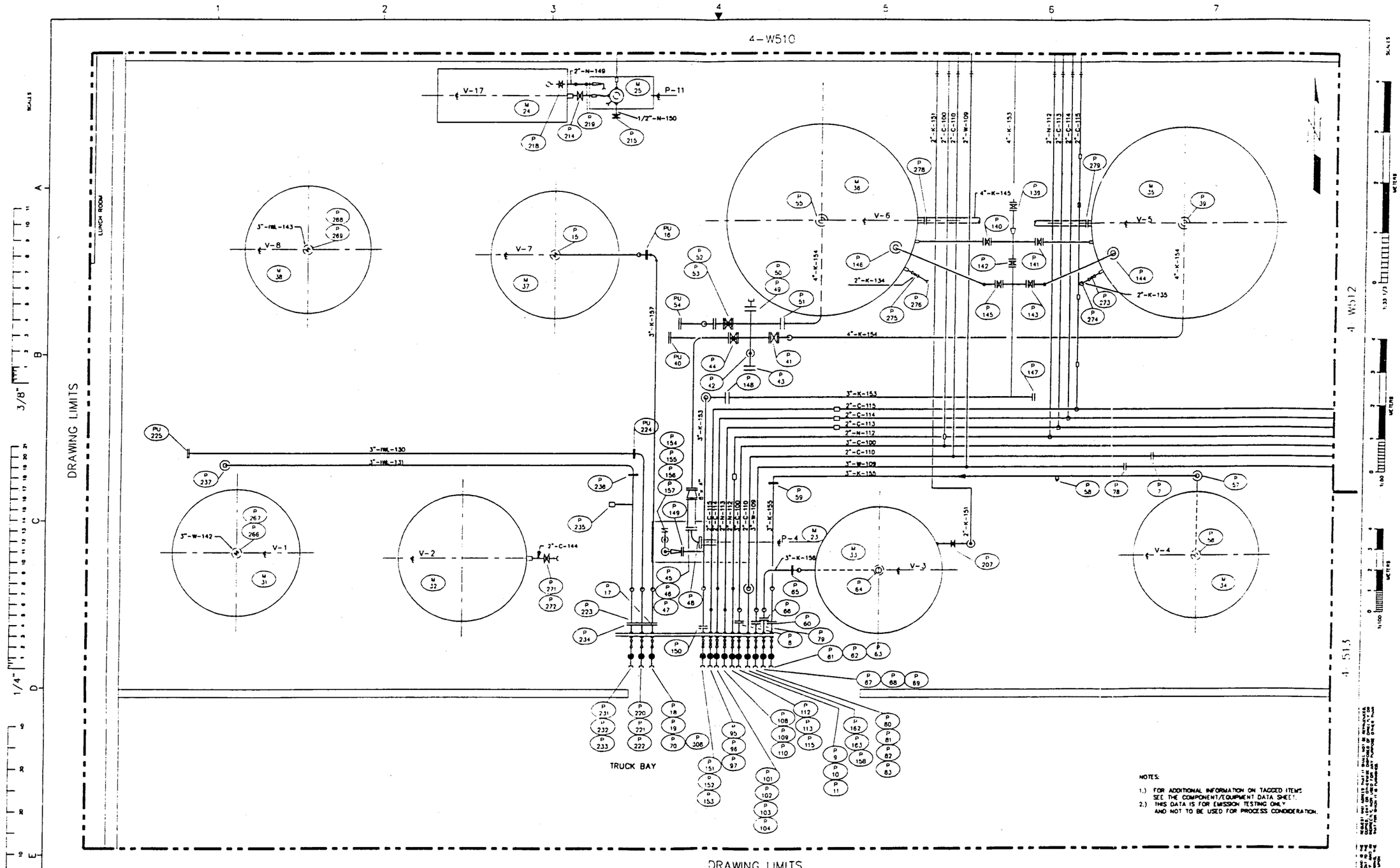

NOTES:

1.) FOR ADDITIONAL INFORMATION ON TAGGED ITEMS SEE THE COMPONENT/EQUIPMENT DATA SHEET.
2.) THIS DATA IS FOR EMISSION TESTING ONLY AND NOT TO BE USED FOR PROCESS CONSIDERATION.

NO.	DATE	REVISION DESCRIPTION	DRAWN	CHECK	APP.	ISSUED CHECK: DRAFT	PIPING	VESSEL	ELEC.	CONTROL	DWG. NO.	REFERENCE DRAWING
1		REVISED PER CLIENT COMMENTS									4-W050	PLOT PLAN
											4-W511-2	TANK FARM TRANSPOSITION
											4-W404G	TANK FARM I TRANSPOSITION
											4-W404H	TANK FARM II TRANSPOSITION

USPCI
A Subsidiary of Union Pacific Corporation

FLUOR DANIEL

DRAWN BY: C.L. AMES
CHECKED BY: D.C.
SUPERVISOR: M.T.L.
SUPERVISOR CHKR.: R.C.
PROJECT CHKR.: C.M.
CLIENT
APP. DATE
SCALE: 3/8" = 1'-0"
DRAWING NUMBER: 665300-4-W511-1
SHEET 1 OF 2
REVISION
DISTRIBUTION CODE
02/13/91
FILE NAME W511-1

PIPING TRANSPOSITION
TANK FARM
WICHITA, KANSAS

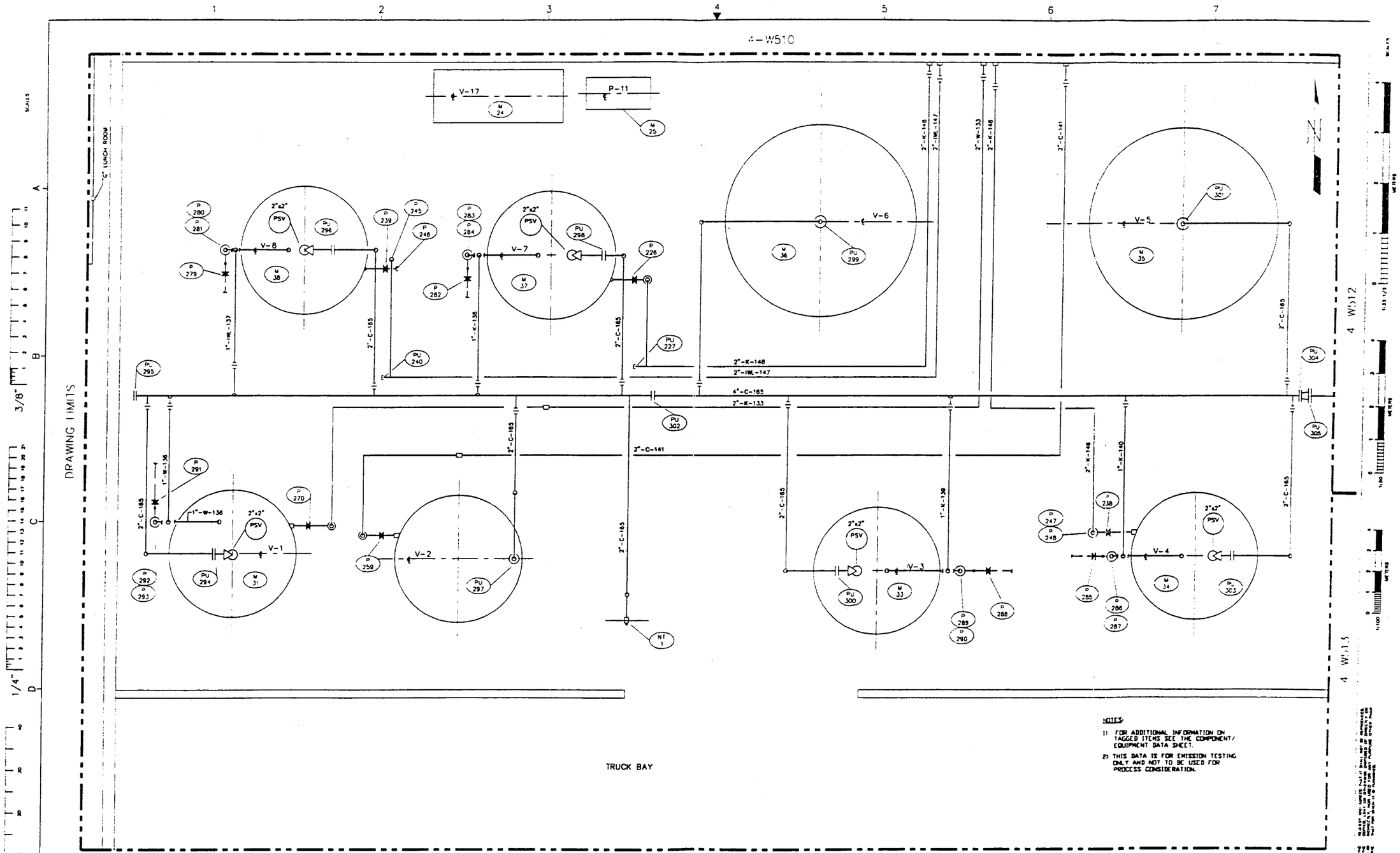

1		REVISED PER CLIENT COMMENTS							4-W404G	TANK FARM I P & ID
									4-W050	PLOT PLAN
									4-W511-1	TRANS. TANK FARM

USPCI
A Subsidiary of Union Pacific Corporation

FLUOR DANIEL

DRAWN BY: C.L. AMES
CHECKED BY: W. SCOTT
SUPERVISOR: MT.
SUPERVISOR CHKR.: RC
PROJECT CHKR.: CM
CLIENT:

PIPING TRANSPOSITION
TANK FARM
WICHITA, KANSAS

SCALE: 3/8" = 1'-0"
DRAWING NUMBER: 665300-4-W511-2
SHEET: 2 of 2

3/22/91
FILE NAME: W511-2

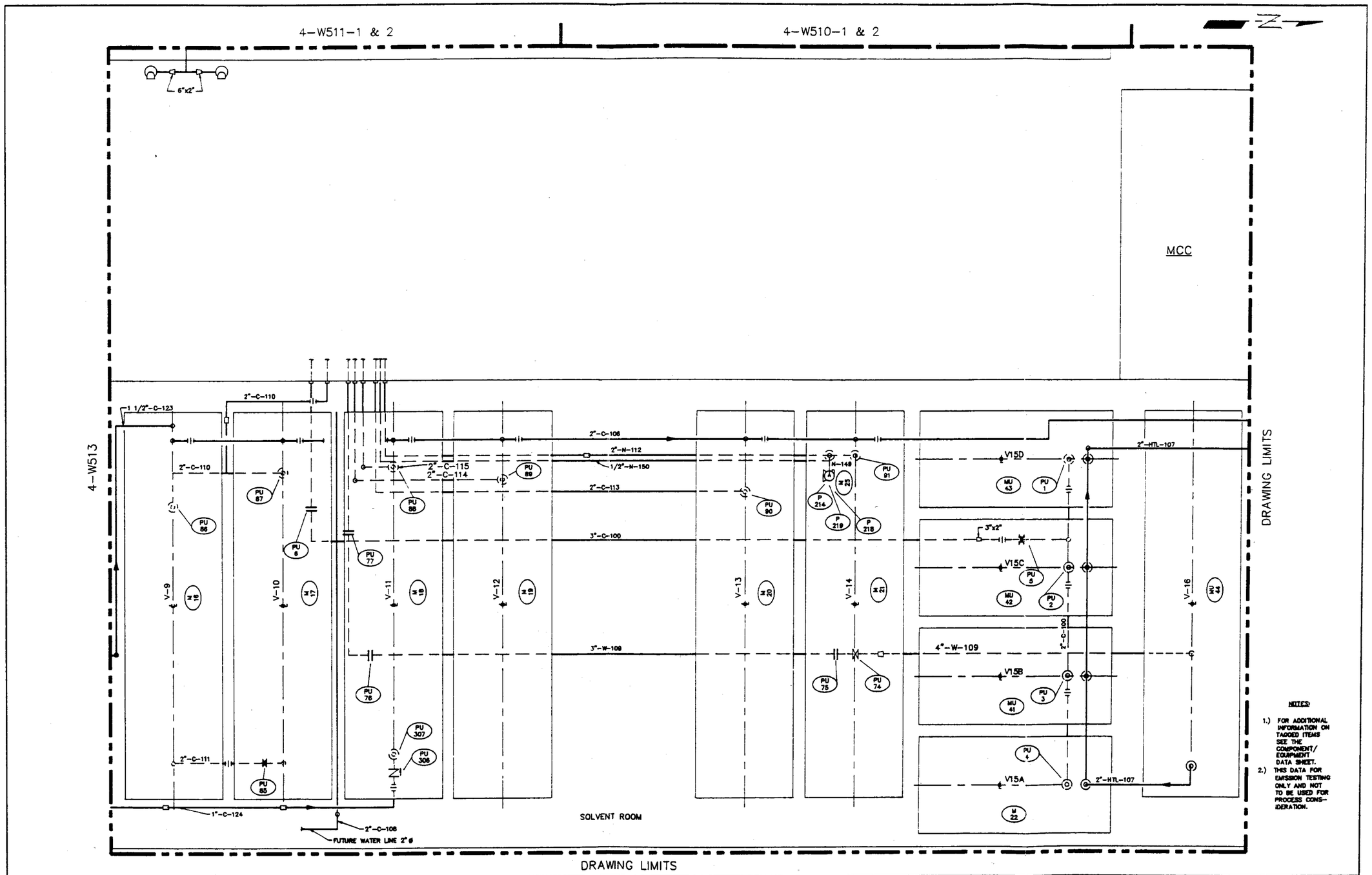

NOTES:

1.) FOR ADDITIONAL INFORMATION ON TAGGED ITEMS SEE THE COMPONENT/ EQUIPMENT DATA SHEET.

2.) THIS DATA FOR EMISSION TESTING ONLY AND NOT TO BE USED FOR PROCESS CONSIDERATION.

NO.	DATE	REVISION DESCRIPTION	DRAWN	CHECK	APP.	DRAWN	CHECK	APP.	DWG. NO.	REFERENCE DRAWING
1		REVISED PER CLIENTS COMMENTS							4-W050	PLOT PLAN
2	12/91	REVISED PER WICHITA RENOVATIONS							4-W404D	P&ID STORAGE TANK ROOM I
									4-W404E	P&ID STORAGE TANK ROOM II

USPCI
A Subsidiary of Union Pacific Corporation

FLUOR DANIEL

DRAWN BY C.L. AMES
CHECKED BY D.C.
SUPERVISOR M.T.L.
SUPERVISOR ENGR. R.C.
PROJECT ENGR. C.M.
CLIENT

PIPING TRANSPOSITION
STORAGE TANK ROOM
WICHITA, KANSAS

SCALE 3/8"=1'-0"
DRAWING NUMBER 665300-4-W512
SHEET 1 of 1
REVISION 2

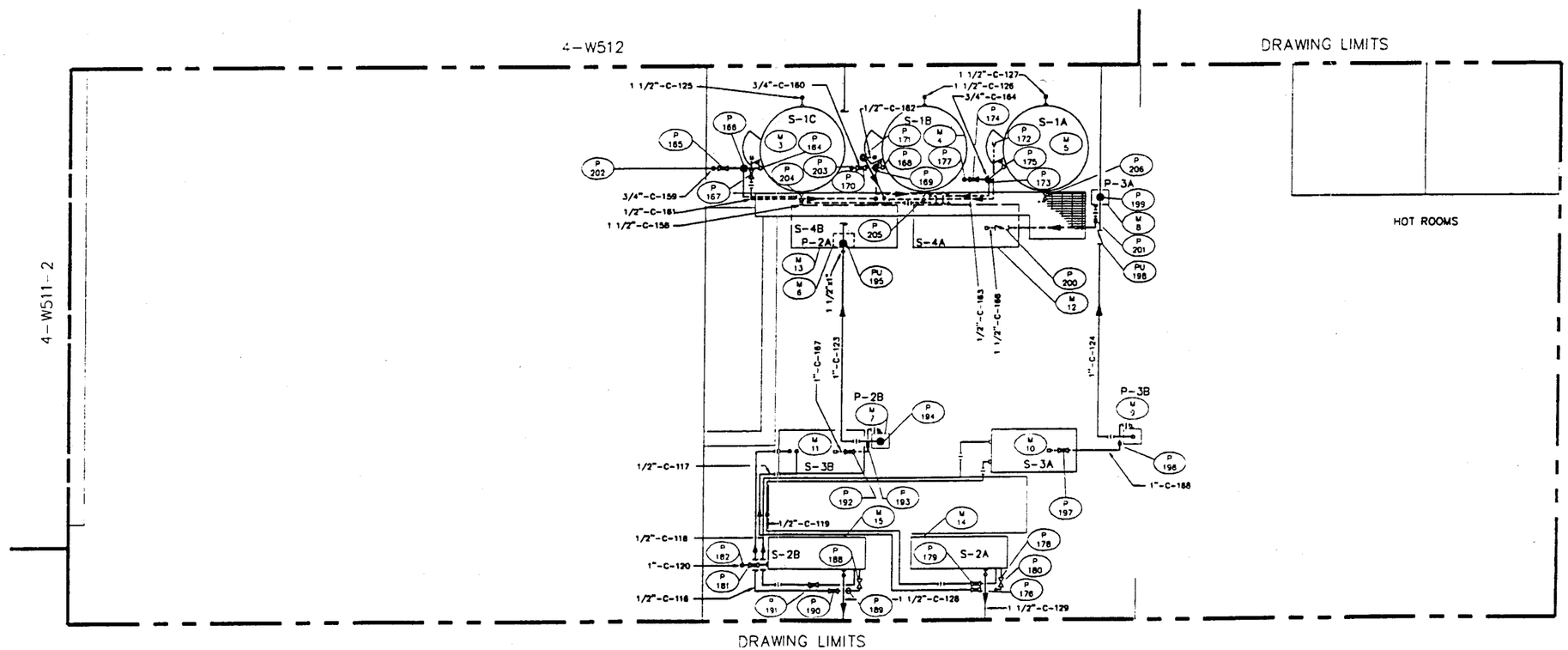

NOTES:

1) FOR ADDITIONAL INFORMATION ON TAGGED ITEMS SEE THE COMPONENT/ EQUIPMENT DATA SHEET.
2) THIS DATA IS FOR EMISSION TESTING ONLY AND NOT TO BE USED FOR PROCESS CONSIDERATION.

REV. NO.	DATE	REVISION DESCRIPTION	DRAWN / CHECK	APP.	REQUIRED CHECKS: STRUCT.	PIPING	MECHS.	ELEC.	INSULATE	DWG. NO.	REFERENCE DRAWING
1		REVISED PER CLIENT COMMENTS								4-W050	PLOT PLAN
										4-W404B	SPARGING ROOM I / P & ID
										4-W404C	SPARGING ROOM II / P & ID

USPCI
A Subsidiary of Union Pacific Corporation

FLUOR DANIEL

DRAWN BY: C.L. AMES
CHECKED BY: R. SCOTT
SUPERVISOR: M.L.
RELEASE DATE:
SUPERVISOR ENGR.: N.C.
DETAILS:
PROJECT ENGR.: CM
APP. DATE:
SCALE: 3/8"=1'-0"
DRAWING NUMBER: 665300-4-W513
SHEET:
REVISION:
DISTRIBUTION CODE:

PIPING TRANSPOSITION
SPARGER ROOM
WICHITA, KANSAS

3/27/91

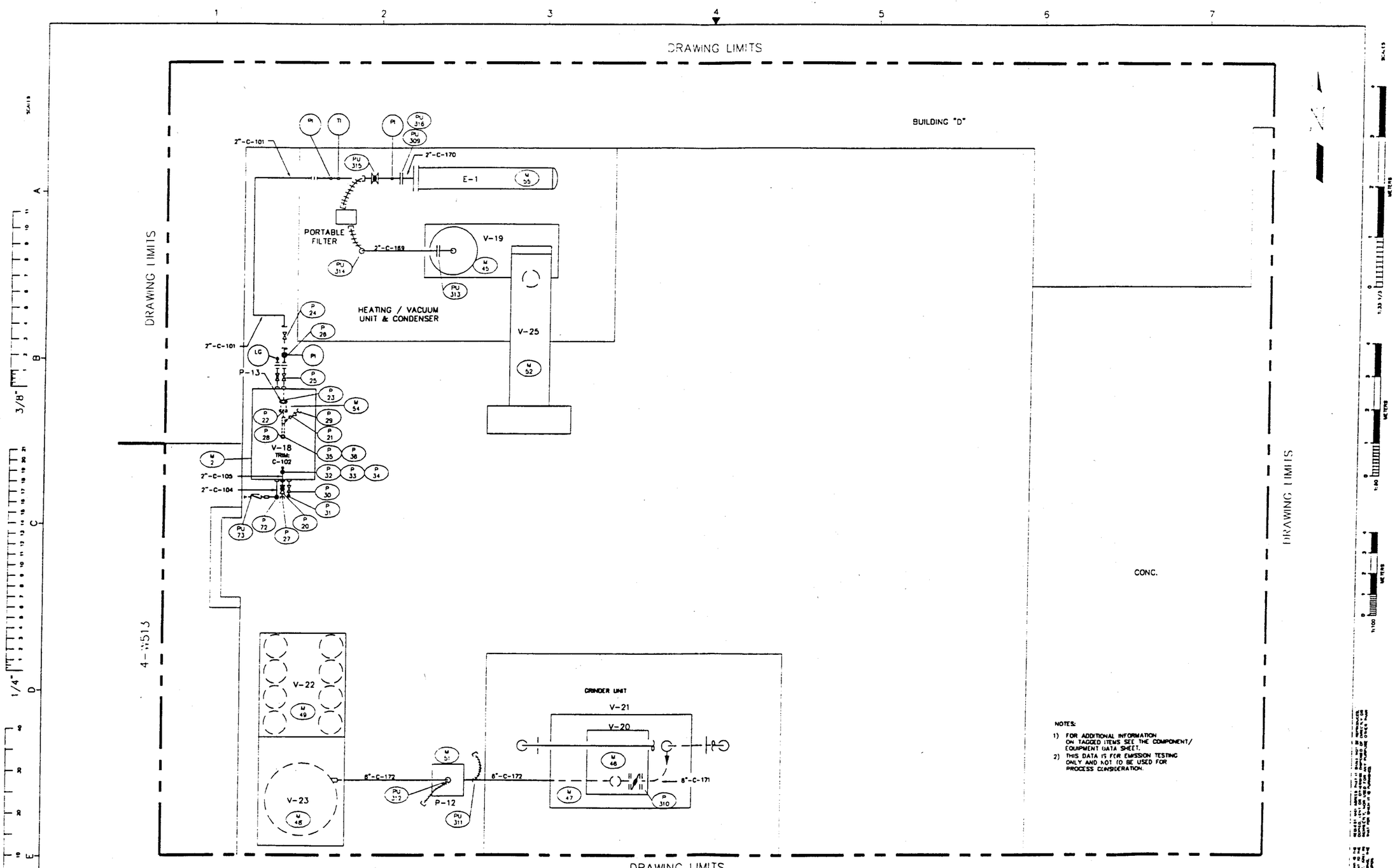

1	REVISED PER CLIENT COMMENTS	4-W404A	NEW PROCESS P & ID
		4-W050	PLOT PLAN

USPCI
A Subsidiary of Union Pacific Corporation

FLUOR DANIEL

DRAWN BY: C.L. AMES
CHECKED BY: W. SCOTT

PIPING TRANSPOSITION
NEW PROCESS ROOM
WICHITA, KANSAS

SCALE: 3/8"=1'-0"
DRAWING NUMBER: 665300-4-W514

3/22/91

Appendix N-B - Regional Administrator Letter

February 18, 1992

USPCI
A Subsidiary of
Union Pacific Corporation
Hydrocarbon Recovery Services

December 21, 1990

Morris Kay
United States Environmental Protection Agency
Region VII
726 Minnesota Avenue
Kansas City, Kansas 60101

VIA CERTIFIED MAIL - RETURN RECEIPT REQUESTED

Re: Hydrocarbon Recovery Services, Inc. of Wichita, EPA ID. No. KSD007246846, 40 CFR part 265, Subpart BB Program

Mr. Kay:

This letter is sent to notify you that, pursuant to paragraph 265.1061, subparagraph (b), Hydrocarbon Recovery Services, Inc. of Wichita (HRS) is electing to comply with the "2 percent of all valves leaking" standard as an alternative to monthly monitoring of it's valve equipment in hazardous waste light organic liquid service. A performance test of the applicable equipment was completed at our facility on December 17, 1990 and 0% were found to exceed the 500 ppm emission standard. If a leak is detected in any of this equipment it will be repaired pursuant to paragraph 265.1057 (d) and (e). Should you or your staff have any questions please contact me at 316-268-9490.

Sincerely,
HYDROCARBON RECOVERY SERVICES, INC. OF WICHITA

Stephen M Keiter

Stephen Keiter

cc: Thomas Gross, KDHE BOWM
Catherine Orban, HRS-Tulsa
Dave Coker, USPCI-Houston

2549 North New York Street • Wichita, Kansas 67219 • 316/267-5742 • Fax 316/267-8155

Hydrocarbon Recyclers, Inc. of Wichita
RCRA Permit Application
Section N
Air Emissions (40 CFR 264 Subparts AA and BB)
Appendix C - Monitoring Method and Equipment Documentation

Appendix N-C - Monitoring Method and Equipment Documentation

February 18, 1992

METHOD 21. DETERMINATION OF VOLATILE ORGANIC COMPOUND LEAKS

1. Applicability and Principle

1.1 Applicability. This method applies to the determination of volatile organic compound (VOC) leaks from process equipment. These sources include, but are not limited to, valves, flanges and other connections, pumps and compressors, pressure relief devices, process drains, open-ended valves, pump and compressor seal system degassing vents, accumulator vessel vents, agitator seals, and access door seals.

1.2 Principle. A portable instrument is used to detect VOC leaks from individual sources. The instrument detector type is not specified, but it must meet the specifications and performance criteria contained in Section 3. A leak definition concentration based on a reference compound is specified in each applicable regulation. This procedure is intended to locate and classify leaks only, and is not to be used as a direct measure of mass emission rates from individual sources.

2. Definitions

2.1 Leak Definition Concentration. The local VOC concentration at the surface of a leak source that indicates that a VOC emission (leak) is present. The leak definition is an instrument meter reading based on a reference compound.

2.2 Reference Compound. The VOC species selected as an instrument calibration basis for specification of the leak definition concentration. [For example: If a leak definition concentration is 10,000 ppmv as methane, then any source emission that results in a local concentration that yields a meter reading of 10,000 on an instrument calibrated with methane would be classified as a leak. In this example, the leak definition is 10,000 ppmv, and the reference compound is methane.]

2.3 Calibration Gas. The VOC compound used to adjust the instrument meter reading to a known value. The calibration gas is usually the reference compound at a concentration approximately equal to the leak definition concentration.

2.4 No Detectable Emission. The local VOC concentration at the surface of a leak source that indicates that a VOC emission (leak) is not present. Since background VOC concentrations may exist, and to account for instrument drift and imperfect reproducibility, a difference between the source surface concentration and the local ambient concentration is determined. A difference based on meter readings of less than 5 percent of the leak definition concentration indicates that a VOC emission (leak) is not present. (For example, if the leak definition in a regulation is 10,000 ppmv, then the allowable increase in surface concentration versus local ambient concentration would be 500 ppmv based on the instrument meter readings.)

2.5 Response Factor. The ratio of the known concentration of a VOC compound to the observed meter reading when measured using an instrument calibrated with the reference compound specified in the application regulation.

2.6 Calibration Precision. The degree of agreement between measurements of the same known value, expressed as the relative percentage of the average difference between the meter readings and the known concentration to the known concentration.

2.7 Response Time. The time interval from a step change in VOC concentration at the input of the sampling system to the time at which 90 percent of the corresponding final value is reached as displayed on the instrument readout meter.

3.0 Apparatus

3.1 Monitoring Instrument.

3.1.1 Specifications.

a. The VOC instrument detector shall respond to the compounds being processed. Detector types which may meet this requirement include, but are not limited to, catalytic oxidation, flame ionization, infrared absorption, and photoionization.

b. The instrument shall be capable of measuring the leak definition concentration specified in the regulation.

c. The scale of the instrument meter shall be readable to ±5 percent of the specified leak definition concentration.

d. The instrument shall be equipped with a pump so that a continuous sample is provided to the detector. The nominal sample flow rate shall be 1/2 to 3 liters per minute.

e. The instrument shall be intrinsically safe for operation in explosive atmospheres as defined by the applicable U.S.A. standards (e.g., National Electrical Code by the National Fire Prevention Association).

3.1.2 Performance Criteria.

a. The instrument response factors for the individual compounds to be measured must be less than 10.

b. The instrument response time must be equal to or less than 30 seconds. The response time must be determined for the instrument configuration to be used during testing.

c. The calibration precision must be equal to or less than 10 percent of the calibration gas value.

d. The evaluation procedure for each parameter is given in Section 4.4.

3.1.3 Performance Evaluation Requirements.

a. A response factor must be determined for each compound that is to be measured, either by testing or from reference sources. The response factor tests are required before placing the analyzer into service, but do not have to be repeated at subsequent intervals.

b. The calibration precision test must be completed prior to placing the analyzer into service, and at subsequent 3-month intervals or at the next use whichever is later.

c. The response time test is required prior to placing the instrument into service. If a modification to the sample pumping system of flow configuration is made that would change the response time, a new test is required prior to further use.

3.2 Calibration Gases. The monitoring instrument is calibrated in terms of parts per million by volume (ppmv) of the reference compound specified in the applicable regulation. The calibration gases required for

monitoring and instrument performance evaluation are a zero gas (air, <10 ppmv VOC) and a calibration gas in air mixture approximately equal to the leak definition specified in the regulation. If cylinder calibration gas mixtures are used, they must be analyzed and certified by the manufacturer to be within ±2 percent accuracy, and a shelf life must be specified. Cylinder standards must be either reanalyzed or replaced at the end of the specified shelf life. Alternately, calibration gases may be prepared by the user according to any accepted gaseous standards preparation procedure that will yield a mixture accurate to within ±2 percent. Prepared standards must be replaced each day of use unless it can be demonstrated that degradation does not occur during storage.

Calibrations may be performed using a compound other than the reference compound if a conversion factor is determined for that alternative compound so that the resulting meter readings during source surveys can be converted to reference compound results.

4. Procedures

4.1 Pretest Preparations. Perform the instrument evaluation procedures given in Section 4.4 if the evaluation requirements of Section 3.1.3 have not been met.

4.2 Calibration Procedures. Assemble and start up the VOC analyzer according to the manufacturer's instructions. After the appropriate warmup period and zero or internal calibration procedure, introduce the calibration gas into the instrument sample probe. Adjust the instrument meter readout to correspond to the calibration gas value. [Note: If the meter readout cannot be adjusted to the proper value, a malfunction of the analyzer is indicated and corrective actions are necessary before use.]

4.3 Individual Source Surveys.

4.3.1 Type I--Leak Definition Based on Concentration. Place the probe inlet at the surface of the component interface where leakage could occur. Move the probe along the interface periphery while observing the instrument readout. If an increased meter reading is observed, slowly sample the interface where leakage is indicated until the maximum meter reading is obtained. Leave the probe inlet at this maximum reading location for approximately two times the instrument response time. If the

maximum observed meter reading is greater than the leak definition in the applicable regulation, record and report the results as specified in the regulation reporting requirements. Examples of the application of this general technique to specific equipment types are:

a. Valves--The most common source of leaks from valves is at the seal between the stem and housing. Place the probe at the interface where the stem exits the packing gland and sample the stem circumference. Also, place the probe at the interface of the packing gland take-up flange seat and sample the periphery. In addition, survey valve housings of multipart assembly at the surface of all interfaces where leaks could occur.

b. Flanges and Other Connections--For welded flanges, place the probe at the outer edge of the flange-gasket interface and sample the circumference of the flange. Sample other types of nonpermanent joints (such as threaded connections) with a similar traverse.

c. Pumps and Compressors--Conduct a circumferential traverse at the outer surface of the pump or compressor shaft and seal interface. If the source is a rotating shaft, position the probe inlet within 1 cm of the shaft seal interface for the survey. If the housing configuration prevents a complete traverse of the shaft periphery, sample all accessible portions. Sample all other joints on the pump or compressor housing where leakage could occur.

d. Pressure Relief Devices--The configuration of most pressure relief devices prevents sampling at the sealing seat interface. For those devices equipped with an enclosed extension, or horn, place the probe inlet at approximately the center of the exhaust area to the atmosphere.

e. Process Drains--For open drains, place the probe inlet at approximately the center of the area open to the atmosphere. For covered drains, place the probe at the surface of the cover interface and conduct a peripheral traverse.

f. Open-Ended Lines or Valves--Place the probe inlet at approximately the center of the opening to the atmosphere.

g. Seal System Degassing Vents and Accumulator Vents--Place the probe inlet at approximately the center of the opening to the atmosphere.

h. Access Door Seals--Place the probe inlet at the surface of the door seal interface and conduct a peripheral traverse.

4.3.2 Type II--"No Detectable Emission".

Determine the local ambient concentration around the source by moving the probe inlet randomly upwind and downwind at a distance of one to two meters from the source. If an interference exists with this determination due to a nearby emission or leak, the local ambient concentration may be determined at distances closer to the source, but in no case shall the distance be less than 25 centimeters. Then move the probe inlet to the surface of the source and conduct a survey as described in 4.3.1. If an increase greater than 5 percent of the leak definition concentration is obtained, record and report the results as specified by the regulation.

For those cases where the regulation requires a specific device installation, or that specified vents be ducted or piped to a control device, the existence of these conditions shall be visually confirmed. When the regulation also requires that no detectable emissions exist, visual observations and sampling surveys are required. Examples of this technique are:

(a) Pump or Compressor Seals--If applicable, determine the type of shaft seal. Perform a survey of the local area ambient VOC concentration and determine if detectable emissions exist as described above.

(b) Seal System Degassing Vents, Accumulator Vessel Vents, Pressure Relief Devices--If applicable, observe whether or not the applicable ducting or piping exists. Also, determine if any sources exist in the ducting or piping where emissions could occur prior to the control device. If the required ducting or piping exists and there are no sources where the emissions could be vented to the atmosphere prior to the control device, then it is presumed that no detectable emissions are present.

4.4 Instrument Evaluation Procedures. At the beginning of the instrument performance evaluation test, assemble and start up the instrument according to the manufacturer's instructions for recommended warmup period and preliminary adjustments.

4.4.1 Response Factor. Calibrate the instrument with the reference compound as specified in the applicable regulation. For each organic species that is to be measured during individual source surveys, obtain or prepare a known standard in air at a concentration of approximately 80 percent of the applicable leak definition unless limited by volatility or

explosivity. In these cases, prepare a standard at 90 percent of the saturation concentration, or 70 percent of the lower explosive limit, respectively. Introduce this mixture to the analyzer and record the observed meter reading. Introduce zero air until a stable reading is obtained. Make a total of three measurements by alternating between the known mixture and zero air. Calculate the response factor for each repetition and the average response factor.

Alternatively, if response factors have been published for the compounds of interest for the instrument or detector type, the response factor determination is not required, and existing results may be referenced. Examples of published response factors for flame ionization and catalytic oxidation detectors are included in Section 5.

4.4.2 Calibration Precision. Make a total of three measurements by alternately using zero gas and the specified calibration gas. Record the meter readings. Calculate the average algebraic difference between the meter readings and the known value. Divide this average difference by the known calibration value and multiply by 100 to express the resulting calibration precision as a percentage.

4.4.3 Response Time. Introduce zero gas into the instrument sample probe. When the meter reading has stabilized, switch quickly to the specified calibration gas. Measure the time from switching to when 90 percent of the final stable reading is attained. Perform this test sequence three times and record the results. Calculate the average response time.

5. Bibliography

5.1 DuBose, D. A., and G. E. Harris. Response Factors of VOC Analyzers at a Meter Reading of 10,000 ppmv for Selected Organic Compounds. U.S. Environmental Protection Agency, Research Triangle Park, N.C. Publication No. EPA 600/2-81-051. September 1981.

5.2 Brown, G. E., et al. Response Factors of VOC Analyzers Calibrated with Methane for Selected Organic Compounds. U.S. Environmental Protection Agency, Research Triangle park, N.C. Publication No. EPA 600/2-81-022. May 1981.

5.3 DuBose, D. A., et al. Response of Portable VOC Analyzers to Chemical Mixtures. U.S. Environmental Protection Agency, Research Triangle Park, N.C. Publication No. EPA 600/2-81-110. September 1981.

EPA CALIBRATION
(METHOD 21)

A. CONDUCT FACTORY CALIBRATION WITH 100 PPM AND 10000 PPM METHANE.

B. ~~CONNECT CHARCOAL FILTER OR~~ INTRODUCE ZERO AIR TO SAMPLE PROBE. RECORD READING AND COMPUTE DRIFT.

C. INTRODUCE 10000 PPM METHANE. RECORD READING AND COMPUTE DRIFT. ALSO RECORD RESPONSE TIME.

D. REPEAT STEPS B AND C TWICE MORE.

E. AVERAGE THE DRIFT VALUES. RECORD AVERAGES.

F. AVERAGE THE RESPONSE TIMES. RECORD AVERAGES.

G. COMPUTE THE FOLLOWING:

$$\frac{\text{DRIFT AVERAGE}}{\text{CALIBRATION CONCENTRATION}} \times 100 = \text{CALIBRATION PRECISION}$$

CERTIFIED CALIBRATION

EPA METHOD 21

COMPANY_____ CALIBRATION GASES: (2)

INSTRUMENT S/N_____ _____

MODEL_____ _____

	(3) Zero Reading (PPM)	Zero Drift (PPM)	Cal Reading (PPM)	Cal Drift (PPM)	Response Time (SEC)
1.					
2.					
3.					

(1)Mean Value: Zero Drift:_____ ppm Cal Drift:_____ ppm

(5)Response Time:_____ seconds

(4)Calibration Precision = $\frac{\text{Mean Cal Drift}}{\text{Cal Gas Concentration}}$ X 100 =____%

(1) Absolute Value
(2) Calibration Gas Concentration
(3) Zero Reading Must Be Less Than 10ppm
(4) Calibration Precision must be ≤ 10% of Calibration Gas Concentration
(5) Response Time must be ≤ 30 seconds

Calibrated by _____

Date _____

CENTURY OVA 108 PORTABLE ORGANIC VAPOR ANALYZER

The requirement for accurate and reliable environmental monitoring and leak detection is a high priority for industry. With the increased scope of environmental regulation, industry has a requirement for instrumentation that is application-oriented, and sufficiently flexible to meet changing needs. The dual mode CENTURY OVA 108 Portable Organic Vapor Analyzer is designed to meet these needs.

Several of the many OVA 108 features are:

- Provides continuous, direct readout of total organic vapor concentrations for survey purposes (Mode 1).
- Allows qualitative and quantitative analyses using the gas chromatographic mode (Mode 2).
- It is a light-weight, completely field-portable instrument weighing approximately 5.5 kg (12 lb), that provides eight hours of continuous operation per battery charge.
- Attenuation of ranges is not required.
- FM and BASEEFA certified intrinsically safe for use in Class I, Groups A, B, C, and D, Division 1 hazardous locations.
- Many hundreds of successful field-proven applications have demonstrated the exceptional reliability and ruggedness of this analyzer.
- Uses a flame ionization detector, which does not respond to ambient gases, such as CO and CO_2, and exhibits no sensitivity changes due to variations in relative humidity.

FOXBORO®

© 1985 by The Foxboro Company

®Registered Trademark

INTRODUCTION

The CENTURY OVA 108 is a highly sensitive analyzer that allows the detection of trace quantities of volatile organics and still maintains a large dynamic range capability. Using a logarithmic scale, the OVA 108 analyzes organics from 1 to 10 000 parts per million (ppm). This range provides for both low and middle range concentration information important to general environmental monitoring. It also has the ability to monitor the high levels required for process leak detection.

DESCRIPTION

The OVA 108 is a dual mode analyzer combining the features of a continuous survey, direct reading instrument and a gas chromatograph. The survey mode allows the continuous monitoring of total organics to provide the rapid identification of airborne organics. These values are reported directly in ppm methane equivalent. Upon the identification of the "hot spots" or high concentration areas, the gas chromatographic mode can be utilized to further analyze the sample, separating and reporting the various organic materials present and their concentrations. This combination of analytical modes provides the best flexibility necessary to meet the environmental management needs of industry. The OVA 108 is an easy to operate instrument that is able to withstand and surpass the most demanding application use.

PRINCIPLE OF OPERATION

Flame Ionization Detector

The CENTURY OVA 108 utilizes a flame ionization detector to monitor the presence of organic vapors.

The principle benefits of monitoring with a flame ionization detector are:

- Universal organic compound response with approximately the same high sensitivity for all.
- Flame ionization will not respond to changes in relative humidity or changes in CO and CO_2 concentration.
- It is a mass sensing detector which exhibits minimal effects from changes in temperature, pressure, or flow.
- Provides excellent dynamic range and concentration linearity.

Sample gathering is done by using a small diaphragm air pump. Detection requires a hydrogen delivery system, a sample delivery system, and an electronic amplification and display system. The hydrogen delivery system provides an eight hour supply of hydrogen gas (with a precisely controlled flow) to the detector. The sample delivery system provides air to the detector chamber to maintain the flame combustion and introduce the organic air contaminants for analysis. Figure 1 illustrates both the hydrogen flow and air flow patterns in the OVA 108.

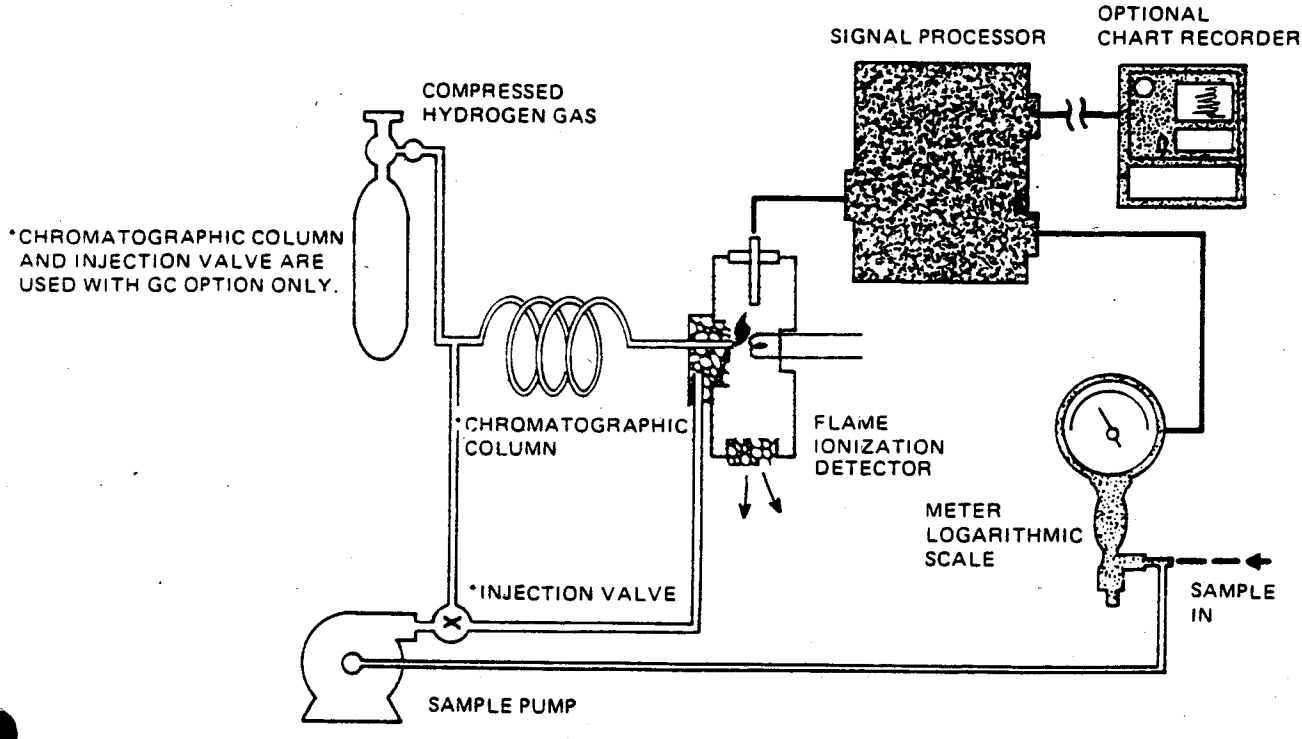

Figure 1. OVA 108 Schematic Diagram

Survey Analysis — Mode 1

In Mode 1, the air sample is delivered continuously to the detector chamber. When an organic vapor is exposed to the hydrogen flame via the air flow, the carbon molecules ionize and a current is carried between the detector electrodes. This current is proportional to the concentration of vapor in the sample. Different compounds will ionize to varying extents in the flame. The OVA 108 is internally calibrated for methane gas, and all survey responses are expressed in methane equivalent. The OVA 108 can be calibrated to read directly for other compounds, (for example, benzene) through the gas select adjustment dial on the instrument front panel.

Chromatographic Analysis — Mode 2

With Mode 2, the OVA 108 functions as a portable gas chromatograph utilizing hydrogen as a carrier gas and a flame ionization detector as the sensor. In this mode, a fixed volume of sample air is injected (by means of an air injection valve) into the chromatographic column which contains a suitable packing material. At the same time that a sample is introduced into the column, the remaining sample air is directed through an integral charcoal filter (not shown in Figure 1) to provide the detector with a supply of pure air.

While moving through the chromatographic column, the sample constituents are separated based on their interaction with the column packing material. As the constituents leave the column, they are carried to the detector and register on the logarithmic meter and the attached optional chart recorder. The time, measured from the moment of sample injection until the compound of interest exits the column, is known as the retention time and serves to identify the compound. The area under the chromatographic peak is proportional to the concentration of the compound in the air sample. The peak height can also be used to determine sample concentration since it closely correlates with peak area. Figure 2 illustrates an example of a logarithmic chromatogram.

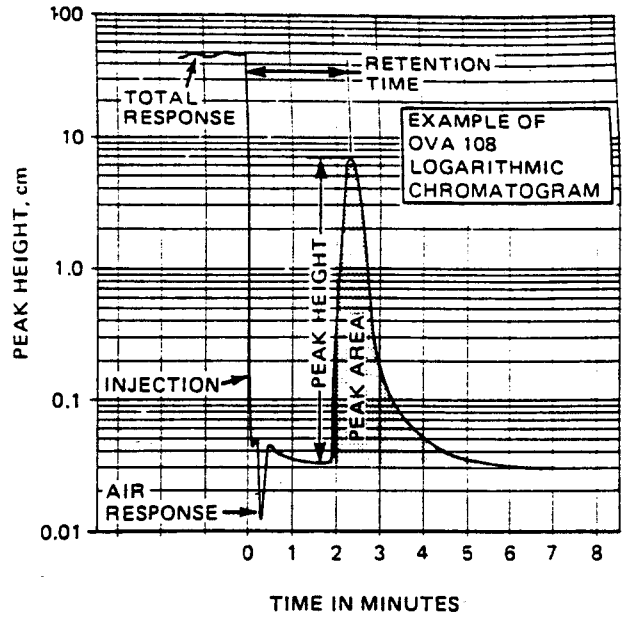

Figure 2. OVA 108 Generalized Chromatogram

OVA 108 APPLICATIONS

The OVA 108 is well-suited for use in the following typical applications:

- Process Leak Detection in the Petroleum, Chemical, or Natural Gas Industries
- Equipment Leaks of Volatile Organic Carbon (VOC), Reference Methods 18 and 22, Fugitive Emissions, EPA 40, Code of Federal Regulations (CFR), Part 60
- Landfill Monitoring
- Benzene Equipment Leaks, Fugitive Emissions Sources, EPA 40, CFR Part 61
- Equipment Leaks of VOC from Onshore Natural Gas Processing Plants, EPA 40, CFR Part 61
- Stack Monitoring for VOC
- Quality Control Monitoring Carbon Absorption Systems

STANDARD SPECIFICATIONS

Readout 1 to 10 000 ppm, logarithmic scale

Minimum Detectable Limit (Methane) 0.5 ppm

Response Time Approximately two seconds for 90% of reading

Fuel for Detector Hydrogen

Carrier Gas for Chromatograph Hydrogen (self-contained tank)

Sample Flow Rate Approximately 2 L/min

Concentration Alarm Audible alarm, user-selectable level

Electric Power 12 V dc rechargeable battery

Voltage Output to Recorder 0 to 5 V dc

Flame Out Indication Audible and visual

Operation Time in Portable Mode Eight hours

Filters Sintered metal, user-cleanable

Nominal Dimensions (Sidepack)
230 × 300 × 100 mm (9 × 12 × 4 in)

Approximate Mass 5.5 kg (12 lb)

PRODUCT SAFETY SPECIFICATIONS

EPA Reference Method 21

The Environmental Protection Agency, Reference Method 21, EPA 40, CFR Part 60, states the performance specifications by which volatile organic compounds (VOC) will be determined. These performance specifications ensure that instrumentation used to monitor VOC will report the data in a timely, accurate, and safe way. The CENTURY OVA 108 meets the specifications of Method 21 as follows:

1. Flame ionization is an approved detector.
2. The instrument shall be intrinsically safe and meet all aspects of Article 500 of the National Electrical Code of the United States — FM I/1/ABCD.
3. The instrument shall measure the prescribed leak level: example, 10 000 ppm.
4. The sampling rate shall be between 1/2 and 3 litres per minute. The OVA 108 sampling rate is 2 litres/per minute.
5. Accuracy shall be ±5% of the designated leak level.
6. Response time must be less than 30 seconds. The OVA 108 has a response time of approximately two seconds.

Electrical Classification

FM certified intrinsically safe for use in Class I, Groups A, B, C, and D, Division 1 hazardous locations.

BASEEFA certified intrinsically safe, Ex ib, for IIC, Zone 1, Temperature Class T6.

INSTRUMENT ACCESSORIES

(Also Refer to Figure Below)

Dilutor Kit Used to monitor inert atmospheres, or extend the concentration range of the instrument. The dilution ratios are adjustable 5 to 50 times. Specify Part Number 511745-1.

Portable Isothermal Kit (PIP Kit) Used for the temperature control of the OVA columns at 0, 40, and 100°C (32, 104, and 212°F). Specify Part Number 511800-1.

Standard Chromatographic Columns Various column packings available. Specify Part Number 510454, also type and length of column.

Portable Strip Chart Recorder Used for making hard copy records for both Option A and Option B configurations. Specify Part Number 510445-2 for FM certifications, and Part Number 510445-5 for BASEEFA certifications.

Septum Adapter Used for making syringe injections of gases into the instrument. Specify Part Number 510645-1.

Charcoal Filter Adapter Used for zeroing the instrument in contaminated environments. Specify Part Number 510095-1.

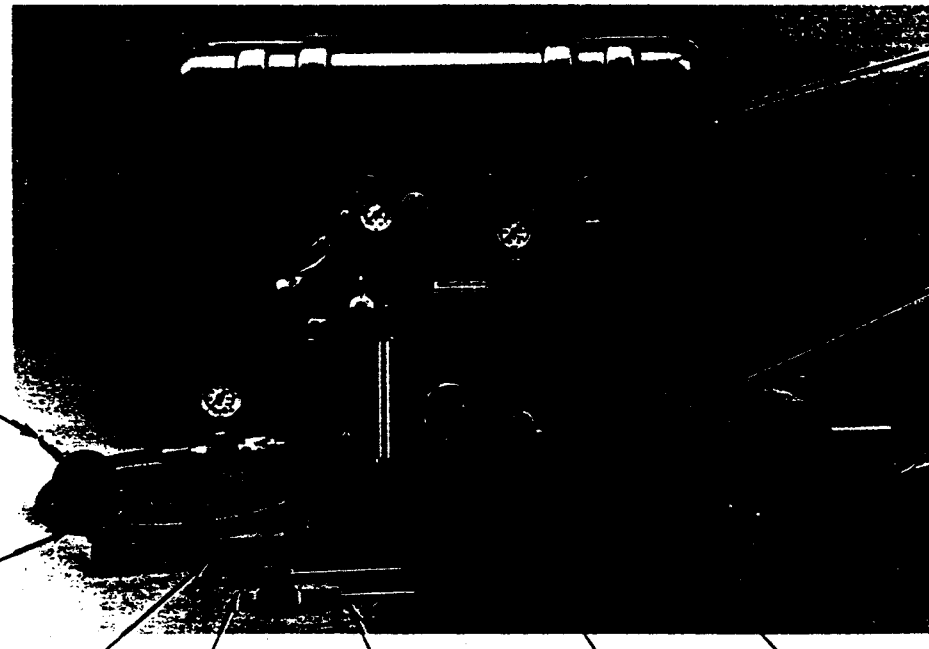

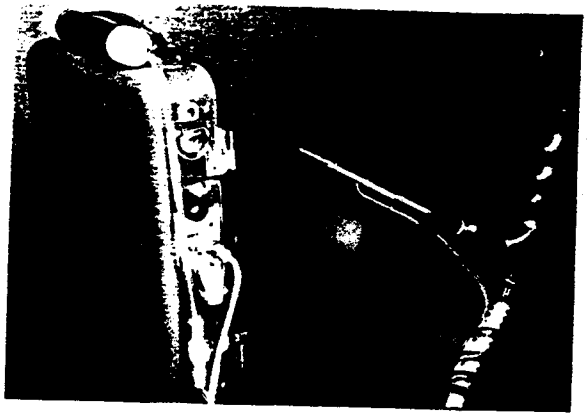

Dilutor Kit for CENTURY Organic Vapor Analyzers (OVA)

The Dilutor Kit, Part Number CR010MR, enables the owners of CENTURY Organic Vapor Analyzers to expand the dynamic range of the instrument by 10:1, 25:1, or 50:1. Each Dilutor Kit contains the following equipment:

- Dilutor Fittings
- 10:1 Dilutor Orifice — standard (25:1 and 50:1 Orifices are available)
- Charcoal Scrubber
- 1 cm Spacer
- Spiral Wrap
- Velcro Fasteners
- Valve Bracket
- Fine Metering Valve
- Tygon Tubing
- Disposable Charcoal Filters
- O-Rings
- Flexible 1 cm Spacer

A fine Hoke metering valve is employed to accurately control the amount of dilution (charcoal scrubbed air). The exact dilution setting can be recorded from the valve to assure a repeatable dilution.

Using the Dilutor Kit, it is now possible to easily measure samples in concentrations above the full scale of the meter, monitor inert atmospheres, zero the OVA in contaminated environments, and measure the extent of leaks in equipment from a fixed distance.

For further information, call (203) 853-1616, or write The Foxboro Company, Foxboro, MA 02035.

Copyright © 1989 by The Foxboro Company
3-674A-1 6/89 Printed in U.S.A.
CENTURY and the Foxboro logo are trademarks of the Foxboro Company.

INTEK CORPORATION
10410 Rockley Rd.
Houston, Texas 77099
713/498-5855

FOXBORO®

CERTIFIED CALIBRATION

EPA METHOD 21

COMPANY USPCL

INSTRUMENT S/N 41063

MODEL OVA-128

CALIBRATION GASES: (2)

10,000 ppm CH_4 in Air

Zero Air

	(3) Zero Reading (PPM)	Zero Drift (PPM)	Cal Reading (PPM)	Cal Drift (PPM)	Response Time (SEC)
1.	0.1	.1	9800	200	5
2.	0.2	.2	10,000	0	4
3.	0.1	.1	10,000	0	5

(1)Mean Value: Zero Drift: .13 ppm Cal Drift: 67 ppm

(5)Response Time: 5 seconds

(4)Calibration Precision = $\frac{\text{Mean Cal Drift}}{\text{Cal Gas Concentration}} = \frac{67}{10,000}$ X 100 = 0.67 %

(1) Absolute Value
(2) Calibration Gas Concentration
(3) Zero Reading Must Be Less Than 10ppm
(4) Calibration Precision must be ≤ 10% of Calibration Gas Concentration
(5) Response Time must be ≤ 30 seconds

Calibrated by Rudy Verzuh

Date 1/17/91

Appendix N-D - Equipment Lists

February 18, 1992

PIPING COMPONENT DATA SHEETS

For purposes of this project, piping components are identified as any device in a pipe line, where a potential "break" could occur, which would cause harmful fluids or vapors to leak into the environment. Examples of piping components are: valves, flanges, in-line instruments, fittings, nozzles, drains, etc.

BACK GROUND TO FORM DEVELOPMENT:

The "Component/Equipment Data Sheet" form was developed especially for this project in response to USPCI's requests for specific data as detailed in different sections of their "Request for Proposal". The primary purpose of this form is to identify, catalog and document those components which require emission test monitoring, per USPCI'S interpretation of EPA regulations.

The form was the first deliverable requested by USPCI. It was submitted for review and approval with Fluor Daniel's official proposal. The form was modified slightly and approved for use in its present format on 12 Nov 1990, by Mr. Dave Coker, USPCI Project Manager.

This set of "Piping Component Data Sheets" is arranged in "P-xxx" Tag number sequence for each HRI plant.

The form itself, which is a Lotus 1-2-3 spread sheet, was created to record data for both mechanical equipment and piping components. Consequently some of the columns, that apply to mechanical equipment, do not apply to piping components and vice versa. The form contains 25 columns and only nine apply to the piping component list. These nine columns are:

1. Tag Number: This is the number of the aluminum write-on tag that Fluor Daniel personnel attached to a particular component. For purposes of distinguishing pipe tags from mechanical tags, it was agreed that piping component tags would be assigned a "P" prefix and mechanical equipment tags would be given an "M" prefix. It should be noted that some tag numbers are identical except for having a different alpha character suffix. Usually this situation applies to valves where the valve stem and both flanges require testing. In this case the valve would be numbered P-001, one flange would be P-001A and the other flange would be P-001B. It is also important to note that there were some cases - for reasons of safety - when Fluor Daniel personnel could not safely reach a particular component that required a tag. These cases are identified by a "U" suffix to the tag number (i.e. P-xxx U. This suffix indicates that Fluor Daniel personnel were Unable to attach a tag.

2. Location: The location column is used to identify the most prominent land mark or area in or near which the tagged component can be found. In most cases, the closest piece of equipment is listed. For example a T-1 location code would indicate the component is located on or near Tank No. 1. There are times when the location may be listed as "Pipeway" In this case, the component is located somewhere within the pipeway.

3. Component/Equipment Name: This column will record the diameter dimension - in inches - and the name of the piping device being listed. In order to be able to group and sort on this column, the devices are listed in a standardized order, first by primary category, then by type and then by method of attachment. For example a screwed on ball valve is listed as "Valve (Ball - Screwed)". Using this method it is possible to sort on this column such that valve lists can be developed to group all valves together by type and diameter size. In fact this was the method used to develop the Valve List that appears in a later section of this manual.

4. Line/Equipment Identification Number: This column is used to identify the number of the pipe line in which the component is installed. The "Pipe Line Number" is assigned in accordance with the procedure described earlier in this manual.

5. Unit Process System: Data in this column identifies the "Processing Unit" the component is servicing or is associated with. For example the Thin Film Unit or the Flash Distillation Unit.

6. Product or Service: This column identifies the most common product that flows through a pipe line or the most common utility service the line is supporting. The only products this project is focusing on are Kiln Fuels, Chlorinated Solvents, Non-chlorinated Solvents, Waste Oil, Waste Water and Incineration Waste Liquids. Because of this focus, this particular column is redundant because it repeats information shown in the Line Identification Number column.

7. P & ID Drawing Reference Number: This column references the drawing number of the P & ID on which the specific line under consideration is drawn.

8. Material of Construction: This column identifies the material of which the pipe line is manufactured. Most generally it will be Carbon Steel (C.S.). Occasionally it may be Stainless Steel (S.S.).

9. Comments: Applicable comments are entered in this column.

UNITED STATES POLLUTION CONTROL INC.
HYDROCARBON RECYCLERS INC. – PROJECT
PLANT LOCATION: WICHITA

USPCI P. O. No. 90088
FD CONTRACT No. 665300

FLUOR DANIEL

PIPING COMPONENT DATA SHEET – WICHITA

USPCI APPROVAL:

PREPARED BY: CARROLL MICHAUD
DATE: 29 MAR 91
UPDATED: 7 FEB 92

WTA_PIPE

TAG No.	LOCATION	LINE SIZE INCH	COMPONENT / EQUIPMENT NAME	COMP. SHT No.	EQUIP. ID No.	UNIT PROCESS SYSTEM	PRODUCT or SERVICE	P & ID REF. DWG.	VENDOR / FAB'CATOR	NAME PLAT EXIST	MODEL No.	AGE EST. OF Mo	MAT'L CONST.	DESIGN TEMP	DESIGN PRES	RATED / SPECIFIED CAPACITY	DIMENSIONS DIA.	DIMENSIONS L x W x H	WT Lbs	EPA EMISSION REQUIREMENTS MONITR	EPA EMISSION REQUIREMENTS CNTRO	DOC. AVAILABLE SPEC. DATA	DOC. AVAILABLE OPS	DOC. AVAILABLE MAINT	POWER SOURCE	COMMENTS
*P-001U	SOLV.ROOM	2"	VALVE (BALL SCREWED)		C-100		CHLORIDE						C.S.									N/A	N/A	N/A	N/A	
*P-002U	SOLV.ROOM	2"	VALVE (BALL SCREWED)		C-100		CHLORIDE						C.S.									N/A	N/A	N/A	N/A	
*P-003U	SOLV.ROOM	2"	VALVE (BALL SCREWED)		C-100		CHLORIDE						C.S.									N/A	N/A	N/A	N/A	
*P-004U	SOLV.ROOM	2"	VALVE (BALL SCREWED)		C-100		CHLORIDE						C.S.									N/A	N/A	N/A	N/A	
*P-005U	SOLV.ROOM	2"	VALVE (BALL SCREWED)		C-100		CHLORIDE						C.S.									N/A	N/A	N/A	N/A	
*P-006U	SOLV.ROOM	3"	FLANGE (150 #, R.F.)		C-100		CHLORIDE						C.S.									N/A	N/A	N/A	N/A	
*P-007	TANK FARM	3"	FLANGE (150 #, R.F.)		C-100		CHLORIDE						C.S.									N/A	N/A	N/A	N/A	
*P-008	TANK FARM	3"	FLANGE (150 #, R.F.)		C-100		CHLORIDE						C.S.									N/A	N/A	N/A	N/A	
*P-009	TANK FARM	3"	VALVE (GATE – SCREWED)		C-100		CHLORIDE						C.S.									N/A	N/A	N/A	N/A	
*P-010	TANK FARM	3"	HOSE CONNECTION		C-100		CHLORIDE						C.S.									N/A	N/A	N/A	N/A	
*P-011	TANK FARM	1/2"	VALVE (BALL SCREWED)		C-100		CHLORIDE						C.S.									N/A	N/A	N/A	N/A	
*P-012	TANK FARM	2"	VALVE (BALL SCREWED)		C-100		CHLORIDE						C.S.									N/A	N/A	N/A	N/A	
*P-013	TANK FARM	2"	HOSE CONNECTION		C-100		CHLORIDE						C.S.									N/A	N/A	N/A	N/A	
*P-014	TANK FARM	1/2"	VALVE (BALL SCREWED)		C-100		CHLORIDE						C.S.									N/A	N/A	N/A	N/A	
*P-015	TANK FARM	3"	VALVE (GATE)		K-157		KLN FUEL						C.S.									N/A	N/A	N/A	N/A	
*P-015A	TANK FARM	3"	FLANGE (150 #)		K-157		KLN FUEL						C.S.									N/A	N/A	N/A	N/A	
*P-015B	TANK FARM	3"	FLANGE (150 #)		K-157		KLN FUEL						C.S.									N/A	N/A	N/A	N/A	
*P-016U	TANK FARM	3"	FLANGE (150 #, SLIP ON)		K-157		KLN FUEL						C.S.									N/A	N/A	N/A	N/A	
*P-017	TANK FARM	3"	FLANGE (150 #, SLIP ON)		K-157		KLN FUEL						C.S.									N/A	N/A	N/A	N/A	
*P-018	TANK FARM	3"	VALVE (GATE – SCREWED)		K-157		KLN FUEL						C.S.									N/A	N/A	N/A	N/A	
*P-019	TANK FARM	1/2"	VALVE (BALL SCREWED)		K-157		KLN FUEL						C.S.									N/A	N/A	N/A	N/A	
*P-020	COND. RM	3"	VALVE (GATE – SCREWED)		C-101		CHLORIDE						C.S.									N/A	N/A	N/A	N/A	
*P-021	COND. RM	1"	VALVE (GATE – SCREWED)		C-101		CHLORIDE						C.S.									N/A	N/A	N/A	N/A	
*P-022	COND. RM	2"	FLANGE (300 # SCREWED)		C-101		CHLORIDE						C.S.									N/A	N/A	N/A	N/A	
*P-023	COND. RM	2"	FLANGE (300 # SCREWED)		C-101		CHLORIDE						C.S.									N/A	N/A	N/A	N/A	
*P-024	COND. RM	2"	VALVE (GATE – SCREWED)		C-101		CHLORIDE						C.S.									N/A	N/A	N/A	N/A	
*P-025	COND. RM	1"	VALVE (GATE – SCREWED)		C-101		CHLORIDE						C.S.									N/A	N/A	N/A	N/A	
*P-026	COND. RM	2"	VALVE (GATE – SCREWED)		C-101		CHLORIDE						C.S.									N/A	N/A	N/A	N/A	
*P-027	COND. RM	3"	HOSE CONNECTION		C-101		CHLORIDE						C.S.									N/A	N/A	N/A	N/A	
*P-028	COND. RM	3"	HOSE CONNECTION		C-101		CHLORIDE						C.S.									N/A	N/A	N/A	N/A	
*P-029	COND. RM	1"	HOSE CONNECTION		C-101		CHLORIDE						C.S.									N/A	N/A	N/A	N/A	
*P-030	COND. RM	1"	VALVE (GATE – SCREWED)		C-102		CHLORIDE						C.S.									N/A	N/A	N/A	N/A	
*P-031	COND. RM	1"	ELBOW (OPEN)		C-102		CHLORIDE						C.S.									N/A	N/A	N/A	N/A	
*P-032	COND. RM	1"	VALVE (BALL SCREWED)		C-102		CHLORIDE						C.S.									N/A	N/A	N/A	N/A	
*P-033	COND. RM	1"	VALVE (BALL SCREWED)		C-102		CHLORIDE						C.S.									N/A	N/A	N/A	N/A	
*P-034	COND. RM	1"	OPEN PIPE		C-102		CHLORIDE						C.S.									N/A	N/A	N/A	N/A	
*P-035	COND. RM	2"	VALVE (GATE – SCREWED)		C-102		CHLORIDE						C.S.									N/A	N/A	N/A	N/A	
*P-036	COND. RM	2"	HOSE CONNECTION		C-102		CHLORIDE						C.S.									N/A	N/A	N/A	N/A	
*P-037			VOID																							
*P-038U			VOID																							
*P-039	TANK FARM	4"	VALVE (GATE – FLANGED)		K-154		KLN FUEL						C.S.									N/A	N/A	N/A	N/A	
*P-039A	TANK FARM	4"	FLANGE (150 #)		K-154		KLN FUEL						C.S.									N/A	N/A	N/A	N/A	
*P-039B	TANK FARM	4"	FLANGE (150 #)		K-154		KLN FUEL						C.S.									N/A	N/A	N/A	N/A	
*P-040U	TANK FARM	4"	FLANGE (150 #) & BLIND		K-154		KLN FUEL						C.S.									N/A	N/A	N/A	N/A	
*P-041	TANK FARM	4"	VALVE (GATE – 150 #)		K-154		KLN FUEL						C.S.									N/A	N/A	N/A	N/A	
*P-041A	TANK FARM	4"	FLANGE (150 #)		K-154		KLN FUEL						C.S.									N/A	N/A	N/A	N/A	
*P-041B	TANK FARM	4"	FLANGE (150 #)		K-154		KLN FUEL						C.S.									N/A	N/A	N/A	N/A	
*P-042	TANK FARM	1/2"	VALVE (BALL SCREWED)		K-154		KLN FUEL						C.S.									N/A	N/A	N/A	N/A	
*P-043	TANK FARM	4"	FLANGE (150 #) & BLIND		K-154		KLN FUEL						C.S.									N/A	N/A	N/A	N/A	
*P-044	TANK FARM	4"	VALVE (BALL 150#)		K-154		KLN FUEL						C.S.									N/A	N/A	N/A	N/A	
*P-044A	TANK FARM	4"	FLANGE (150 # – SLIP ON)		K-154		KLN FUEL						C.S.									N/A	N/A	N/A	N/A	
*P-044B	TANK FARM	4"	FLANGE (150 # – SLIP ON)		K-154		KLN FUEL						C.S.									N/A	N/A	N/A	N/A	
*P-045	TANK FARM	4"	FLANGE (150 #)		K-154		KLN FUEL						C.S.									N/A	N/A	N/A	N/A	
*P-046	TANK FARM	6"	FLANGE (150 #)		K-154		KLN FUEL						C.S.									N/A	N/A	N/A	N/A	
*P-047	TANK FARM	6"	FLANGE (150 #)		K-154		KLN FUEL						C.S.									N/A	N/A	N/A	N/A	
*P-048	TANK FARM	6"	FLANGE (150 #)		K-154		KLN FUEL						C.S.									N/A	N/A	N/A	N/A	
*P-049	TANK FARM	4"	FLANGE (150 #)		K-154		KLN FUEL						C.S.									N/A	N/A	N/A	N/A	
*P-050	TANK FARM	4"	HOSE COUPLING		K-154		KLN FUEL						C.S.									N/A	N/A	N/A	N/A	
*P-051	TANK FARM	4"	FLANGE (150 #) & BLIND		K-154		KLN FUEL						C.S.									N/A	N/A	N/A	N/A	
*P-052	TANK FARM	4"	VALVE (BALL 150#)		K-154		KLN FUEL						C.S.									N/A	N/A	N/A	N/A	
*P-052A	TANK FARM	4"	FLANGE (150 # – SLIP ON)		K-154		KLN FUEL						C.S.									N/A	N/A	N/A	N/A	
*P-052B	TANK FARM	4"	FLANGE (150 # – SLIP ON)		K-154		KLN FUEL						C.S.									N/A	N/A	N/A	N/A	
*P-053	TANK FARM	4"	FLANGE (150 # – SLIP ON)		K-154		KLN FUEL						C.S.									N/A	N/A	N/A	N/A	
*P-054	TANK FARM	4"	FLANGE (150 #) & BLIND		K-154		KLN FUEL						C.S.									N/A	N/A	N/A	N/A	
*P-055	TANK FARM	[illegible]	VALVE (GATE – 150 #)		K-154		KLN FUEL						C.S.									N/A	N/A	N/A	N/A	
*P-055A	TANK FARM	[illegible]	FLANGE (150 #)		K-154		KLN FUEL						C.S.									N/A	N/A	N/A	N/A	
*P-055B	TANK FARM	[illegible]	FLANGE (150 #)		K-154		KLN FUEL						C.S.									N/A	N/A	N/A	N/A	
*P-056	TANK FARM	3"	VALVE (GATE – 150 #)		K-155		KLN FUEL						C.S.									N/A	N/A	N/A	N/A	
*P-056A	TANK FARM	[illegible]	FLANGE (150 #)		[illegible]		[illegible]						C.S.									N/A	N/A	N/A	N/A	

*P-057	TANK FARM	3"	FLANGE (150 #)	K-155	KLN FUEL					C.S.								N/A	N/A	N/A	N/A						
*P-058	TANK FARM	2"	PLUG (SCREWED)	K-155	KLN FUEL					C.S.								N/A	N/A	N/A	N/A						
*P-059	TANK FARM	3"	FLANGE (150 #)	K-155	KLN FUEL					C.S.								N/A	N/A	N/A	N/A						
*P-060	TANK FARM	3"	FLANGE (150 #)	K-155	KLN FUEL					C.S.								N/A	N/A	N/A	N/A						
*P-061	TANK FARM	3"	VALVE (GATE-150 # SCRWD)	K-155	KLN FUEL					C.S.								N/A	N/A	N/A	N/A						
*P-062	TANK FARM	3"	HOSE CONNECTION	K-155	KLN FUEL					C.S.								N/A	N/A	N/A	N/A						
*P-063	TANK FARM	1/2"	VALVE (BALL SCREWED)	K-155	KLN FUEL					C.S.								N/A	N/A	N/A	N/A						
*P-064	TANK FARM	3"	VALVE (GATE-150 # FLNGD)	K-156	KLN FUEL					C.S.								N/A	N/A	N/A	N/A						
*P-064A	TANK FARM	3"	FLANGE (150 #)	K-156	KLN FUEL					C.S.								N/A	N/A	N/A	N/A						
*P-064B	TANK FARM	3"	FLANGE (150 #)	K-156	KLN FUEL					C.S.								N/A	N/A	N/A	N/A						
*P-065	TANK FARM	3"	FLANGE (150 #)	K-156	KLN FUEL					C.S.								N/A	N/A	N/A	N/A						
*P-066	TANK FARM	3"	FLANGE (150 #)	K-156	KLN FUEL					C.S.								N/A	N/A	N/A	N/A						
*P-067	TANK FARM	3"	VALVE (GATE - SCREWED)	K-156	KLN FUEL					C.S.								N/A	N/A	N/A	N/A						
*P-068	TANK FARM	3"	HOSE CONNECTION	K-156	KLN FUEL					C.S.								N/A	N/A	N/A	N/A						
*P-069	TANK FARM	1/2"	VALVE (BALL SCREWED)	K-156	KLN FUEL					C.S.								N/A	N/A	N/A	N/A						
*P-070	TANK FARM	3"	HOSE CONNECTION	K-157	KLN FUEL					C.S.								N/A	N/A	N/A	N/A						
*P-071	COND. RM	2"	FLANGE (SCREWED)	N-103	NON-CHL					C.S.								N/A	N/A	N/A	N/A						
*P-072	COND. RM	2"	VALVE (GATE - SCREWED)	C-104	CHLORIDE					C.S.								N/A	N/A	N/A	N/A						
*P-073U	COND. RM	2"	VALVE (CHECK - SCREWED)	C-104	CHLORIDE					C.S.								N/A	N/A	N/A	N/A						
*P-074U	SOLV.ROOM	3"	VALVE (GATE - SCREWED)	W-109	WATER					C.S.								N/A	N/A	N/A	N/A						
*P-075U	SOLV.ROOM	3"	FLANGE (SCREWED)	W-109	WATER					C.S.								N/A	N/A	N/A	N/A						
*P-076U	SOLV.ROOM	3"	FLANGE (RAISED FACE)	W-109	WATER					C.S.								N/A	N/A	N/A	N/A						
*P-077U	SOLV.ROOM	3"	FLANGE (RAISED FACE)	W-109	WATER					C.S.								N/A	N/A	N/A	N/A						
*P-078	TANK FARM	3"	FLANGE (RAISED FACE)	W-109	WATER					C.S.								N/A	N/A	N/A	N/A						
*P-079	TANK FARM	3"	FLANGE (RAISED FACE)	W-109	WATER					C.S.								N/A	N/A	N/A	N/A						
*P-080	TANK FARM	3"	VALVE (GATE - SCREWED)	W-109	WATER					C.S.								N/A	N/A	N/A	N/A						
*P-081	TANK FARM	1/2"	VALVE (BALL SCREWED)	W-109	WATER					C.S.								N/A	N/A	N/A	N/A						
*P-082	TANK FARM	1/2"	OPEN PIPE	W-109	WATER					C.S.								N/A	N/A	N/A	N/A						
*P-083	TANK FARM	3"	HOSE CONNECTION	W-109	WATER					C.S.								N/A	N/A	N/A	N/A						
*P-084	TANK FARM	1/2"	HOSE CONNECTION	K-154	KLN FUEL					C.S.								N/A	N/A	N/A	N/A						
*P-085U	SOLV.ROOM	2"	VALVE (BALL SCREWED)	C-111	CHLORIDE					C.S.								N/A	N/A	N/A	N/A						
*P-086U	SOLV.ROOM	2"	VALVE (BALL SCREWED)	C-110	CHLORIDE					C.S.								N/A	N/A	N/A	N/A						
*P-087U	SOLV.ROOM	2"	VALVE (BALL SCREWED)	C-110	CHLORIDE					C.S.								N/A	N/A	N/A	N/A						
*P-088U	SOLV.ROOM	2"	VALVE (BALL SCREWED)	C-115	CHLORIDE					C.S.								N/A	N/A	N/A	N/A						
*P-089U	SOLV.ROOM	2"	VALVE (BALL SCREWED)	C-114	CHLORIDE					C.S.								N/A	N/A	N/A	N/A						
*P-090U	SOLV.ROOM	2"	VALVE (BALL SCREWED)	C-113	CHLORIDE					C.S.								N/A	N/A	N/A	N/A						
*P-091U	SOLV.ROOM	2"	VALVE (BALL SCREWED)	N-112	NON-CHL					C.S.								N/A	N/A	N/A	N/A						
*P-092	PROC AREA	2"	VALVE (BALL SCREWED)	C-115	CHLORIDE					C.S.								N/A	N/A	N/A	N/A						
*P-093	PROC AREA	1/2"	VALVE (BALL SCREWED)	C-115	CHLORIDE					C.S.								N/A	N/A	N/A	N/A						
*P-094	PROC AREA	2"	HOSE CONNECTION	C-115	CHLORIDE					C.S.								N/A	N/A	N/A	N/A						
*P-095	TANK FARM	2"	VALVE (BALL SCREWED)	C-115	CHLORIDE					C.S.								N/A	N/A	N/A	N/A						
*P-096	TANK FARM	1/2"	VALVE (BALL SCREWED)	C-115	CHLORIDE					C.S.								N/A	N/A	N/A	N/A						
*P-097	TANK FARM	2"	HOSE CONNECTION	C-115	CHLORIDE					C.S.								N/A	N/A	N/A	N/A						
*P-098	PROC AREA	2"	VALVE (BALL SCREWED)	C-114	CHLORIDE					C.S.								N/A	N/A	N/A	N/A						
*P-099	PROC AREA	1/2"	VALVE (BALL SCREWED)	C-114	CHLORIDE					C.S.								N/A	N/A	N/A	N/A						
*P-100	PROC AREA	2"	HOSE CONNECTION	C-114	CHLORIDE					C.S.								N/A	N/A	N/A	N/A						
*P-101	TANK FARM	2"	VALVE (BALL SCREWED)	C-114	CHLORIDE					C.S.								N/A	N/A	N/A	N/A						
*P-102	TANK FARM	1/2"	VALVE (BALL SCREWED)	C-114	CHLORIDE					C.S.								N/A	N/A	N/A	N/A						
*P-103	TANK FARM	1/2"	DRAIN (OPEN)	C-114	CHLORIDE					C.S.								N/A	N/A	N/A	N/A						
*P-104	TANK FARM	2"	HOSE CONNECTION	C-114	CHLORIDE					C.S.								N/A	N/A	N/A	N/A						
*P-105	PROC AREA	2"	VALVE (BALL SCREWED)	C-113	CHLORIDE					C.S.								N/A	N/A	N/A	N/A						
*P-106	PROC AREA	1/2"	VALVE (BALL SCREWED)	C-113	CHLORIDE					C.S.								N/A	N/A	N/A	N/A						
*P-107	PROC AREA	2"	HOSE CONNECTION	C-113	CHLORIDE					C.S.								N/A	N/A	N/A	N/A						
*P-108	TANK FARM	2"	VALVE (BALL SCREWED)	C-113	CHLORIDE					C.S.								N/A	N/A	N/A	N/A						
*P-109	TANK FARM	1/2"	VALVE (BALL SCREWED)	C-113	CHLORIDE					C.S.								N/A	N/A	N/A	N/A						
*P-110	TANK FARM	2"	HOSE CONNECTION	C-113	CHLORIDE					C.S.								N/A	N/A	N/A	N/A						
*P-111	PROC AREA	2"	PLUG	N-112	NON-CHL					C.S.								N/A	N/A	N/A	N/A						
*P-112	TANK FARM	2"	VALVE (BALL SCREWED)	N-112	NON-CHL					C.S.								N/A	N/A	N/A	N/A						
*P-113	TANK FARM	1/2"	VALVE (BALL SCREWED)	N-112	NON-CHL					C.S.								N/A	N/A	N/A	N/A						
*P-114	PROC AREA	3&2"	FLANGE (150 #)	K-153	KLN FUEL					C.S.								N/A	N/A	N/A	N/A						
*P-115	TANK FARM	2"	HOSE CONNECTION	N-112	NON-CHL					C.S.								N/A	N/A	N/A	N/A						
*P-116	PROC AREA	4"	VALVE (PLUG - 150 #)	K-152	KLN FUEL					C.S.								N/A	N/A	N/A	N/A						
*P-116A	PROC AREA	4"	FLANGE NOZZLE (150 #)	K-152	KLN FUEL					C.S.								N/A	N/A	N/A	N/A	REMOVED FROM SERVICE					
*P-116B	PROC AREA	4"	FLANGE (150 # - SLIP ON)	K-152	KLN FUEL					C.S.								N/A	N/A	N/A	N/A	REMOVED FROM SERVICE					
*P-117	PROC AREA	4"	FLANGE (150 # - SLIP ON)	K-152	KLN FUEL					C.S.								N/A	N/A	N/A	N/A	REMOVED FROM SERVICE					
*P-118	PROC AREA	4"	FLANGE (150 # - SLIP ON)	K-152	KLN FUEL					C.S.								N/A	N/A	N/A	N/A	REMOVED FROM SERVICE					
*P-119	PROC AREA	4"	FLANGE (150 # - SLIP ON)	K-152	KLN FUEL					C.S.								N/A	N/A	N/A	N/A	REMOVED FROM SERVICE					
*P-120	PROC AREA	4"	FLANGE (150 # STRAINER)	K-152	KLN FUEL					C.S.								N/A	N/A	N/A	N/A						
*P-120A	PROC AREA	4"	FLANGE (150 # STRAINER)	K-152	KLN FUEL					C.S.								N/A	N/A	N/A	N/A	REMOVED FROM SERVICE					
*P-121	PROC AREA	4"	FLANGE (150 #) PUMP NOZZLE	K-152	KLN FUEL					C.S.								N/A	N/A	N/A	N/A						
*P-122	PROC AREA	3"	FLANGE (150 #)	K-153	KLN FUEL					C.S.								N/A	N/A	N/A	N/A						

*P-123	PROC AREA	3"	VALVE (BALL 150# FLANGED)	K-153	KLN FUEL					C.S.								N/A	N/A	N/A	N/A		*
*P-123A	PROC AREA	3"	FLANGE (150 #)	K-153	KLN FUEL					C.S.								N/A	N/A	N/A	N/A	REMOVED FROM SERVICE	*
*P-123B	PROC AREA	3"	FLANGE (150 #)	K-153	KLN FUEL					C.S.								N/A	N/A	N/A	N/A	REMOVED FROM SERVICE	*
*P-124	PROC AREA	2"	VALVE (BALL SCREWED)	K-153	KLN FUEL					C.S.								N/A	N/A	N/A	N/A	REMOVED FROM SERVICE	*
*P-125	PROC AREA	2"	HOSE CONNECTION	K-153	KLN FUEL					C.S.								N/A	N/A	N/A	N/A	REMOVED FROM SERVICE	*
*P-126	PROC AREA	2"	VALVE (BALL SCREWED)	K-153	KLN FUEL					C.S.								N/A	N/A	N/A	N/A	REMOVED FROM SERVICE	*
*P-127	PROC AREA	2"	HOSE CONNECTION	K-153	KLN FUEL					C.S.								N/A	N/A	N/A	N/A	REMOVED FROM SERVICE	*
*P-128	PROC AREA	3"	VALVE (PLUG - 150 #)	K-153	KLN FUEL					C.S.								N/A	N/A	N/A	N/A		*
*P-128A	PROC AREA	3"	NOZZLE (150 #) VAT	K-153	KLN FUEL					C.S.								N/A	N/A	N/A	N/A	REMOVED FROM SERVICE	*
*P-128B	PROC AREA	3"	FLANGE (150 #)	K-153	KLN FUEL					C.S.								N/A	N/A	N/A	N/A	REMOVED FROM SERVICE	*
*P-129	PROC AREA	3"	FLANGE (150 #)	K-153	KLN FUEL					C.S.								N/A	N/A	N/A	N/A		*
*P-130U	PROC AREA	3"	FLANGE (150 #)	K-153	KLN FUEL					C.S.								N/A	N/A	N/A	N/A		*
*P-131U	PROC AREA	3"	FLANGE (150 #)	K-153	KLN FUEL					C.S.								N/A	N/A	N/A	N/A		*
*P-132	PROC AREA	3"	FLANGE (150 #)	K-153	KLN FUEL					C.S.								N/A	N/A	N/A	N/A		*
*P-133	PROC AREA	3"	FLANGE (150 #)	K-153	KLN FUEL					C.S.								N/A	N/A	N/A	N/A		*
*P-134	PROC AREA	4"	FLANGE (150 #)	K-153	KLN FUEL					C.S.								N/A	N/A	N/A	N/A		*
*P-135	PROC AREA	4"	FLANGE (150 #)	K-153	KLN FUEL					C.S.								N/A	N/A	N/A	N/A		*
*P-136	PROC AREA	4"	VALVE (BALL SCREWED)	K-153	KLN FUEL					C.S.								N/A	N/A	N/A	N/A		*
*P-137	PROC AREA	1/2"	VALVE (BALL SCREWED)	K-153	KLN FUEL					C.S.								N/A	N/A	N/A	N/A		*
*P-138	PROC AREA	4"	HOSE CONNECTION	K-153	KLN FUEL					C.S.								N/A	N/A	N/A	N/A		*
*P-139	TANK FARM	4"	VALVE (GATE - 150 #)	K-153	KLN FUEL					C.S.								N/A	N/A	N/A	N/A		*
*P-139A	TANK FARM	4"	FLANGE (150 #)	K-153	KLN FUEL					C.S.								N/A	N/A	N/A	N/A		*
*P-139B	TANK FARM	4"	FLANGE (150 #)	K-153	KLN FUEL					C.S.								N/A	N/A	N/A	N/A		*
*P-140	TANK FARM	3"	VALVE (GATE - 150 #)	K-153	KLN FUEL					C.S.								N/A	N/A	N/A	N/A		*
*P-140A	TANK FARM	3"	FLANGE (150 #)	K-153	KLN FUEL					C.S.								N/A	N/A	N/A	N/A		*
*P-140B	TANK FARM	3"	FLANGE (150 #)	K-153	KLN FUEL					C.S.								N/A	N/A	N/A	N/A		*
*P-141	TANK FARM	3"	VALVE (GATE - 150 #)	K-153	KLN FUEL					C.S.								N/A	N/A	N/A	N/A		*
*P-141A	TANK FARM	3"	FLANGE (150 #)	K-153	KLN FUEL					C.S.								N/A	N/A	N/A	N/A		*
*P-141B	TANK FARM	3"	FLANGE (150 #)	K-153	KLN FUEL					C.S.								N/A	N/A	N/A	N/A		*
*P-142	TANK FARM	3"	VALVE (GATE - 150 #)	K-153	KLN FUEL					C.S.								N/A	N/A	N/A	N/A		*
*P-142A	TANK FARM	3"	FLANGE (150 #)	K-153	KLN FUEL					C.S.								N/A	N/A	N/A	N/A		*
*P-142B	TANK FARM	3"	FLANGE (150 #)	K-153	KLN FUEL					C.S.								N/A	N/A	N/A	N/A		*
*P-143	TANK FARM	3"	VALVE (GATE - 150 #)	K-153	KLN FUEL					C.S.								N/A	N/A	N/A	N/A		*
*P-143A	TANK FARM	3"	FLANGE (150 #)	K-153	KLN FUEL					C.S.								N/A	N/A	N/A	N/A		*
*P-143B	TANK FARM	3"	FLANGE (150 #)	K-153	KLN FUEL					C.S.								N/A	N/A	N/A	N/A		*
*P-144	TANK FARM	3"	FLANGE (150 #)	K-153	KLN FUEL					C.S.								N/A	N/A	N/A	N/A		*
*P-145	TANK FARM	3"	VALVE (GATE - 150 #)	K-153	KLN FUEL					C.S.								N/A	N/A	N/A	N/A		*
*P-145A	TANK FARM	3"	FLANGE (150 #)	K-153	KLN FUEL					C.S.								N/A	N/A	N/A	N/A		*
*P-145B	TANK FARM	3"	FLANGE (150 #)	K-153	KLN FUEL					C.S.								N/A	N/A	N/A	N/A		*
*P-146	TANK FARM	3"	FLANGE (150 #)	K-153	KLN FUEL					C.S.								N/A	N/A	N/A	N/A		*
*P-147	TANK FARM	3"	FLANGE (150 #)	K-153	KLN FUEL					C.S.								N/A	N/A	N/A	N/A		*
*P-148	TANK FARM	3"	FLANGE (150 #)	K-153	KLN FUEL					C.S.								N/A	N/A	N/A	N/A		*
*P-149	TANK FARM	3"	FLANGE (150 #)	K-153	KLN FUEL					C.S.								N/A	N/A	N/A	N/A		*
*P-150	TANK FARM	3"	FLANGE (150 #)	K-153	KLN FUEL					C.S.								N/A	N/A	N/A	N/A		*
*P-151	TANK FARM	3"	VALVE (BALL SCREWED)	K-153	KLN FUEL					C.S.								N/A	N/A	N/A	N/A		*
*P-152	TANK FARM	1"	VALVE (BALL SCREWED)	K-153	KLN FUEL					C.S.								N/A	N/A	N/A	N/A		*
*P-153	TANK FARM	3"	HOSE CONNECTION	K-153	KLN FUEL					C.S.								N/A	N/A	N/A	N/A		*
*P-154	TANK FARM	1"	VALVE (CHECK - SCREWED)	K-153	KLN FUEL					C.S.								N/A	N/A	N/A	N/A		*
*P-155	TANK FARM	1"	VALVE (BALL SCREWED)	K-153	KLN FUEL					C.S.								N/A	N/A	N/A	N/A		*
*P-156	TANK FARM	4"	VALVE (BALL 150#)	K-153	KLN FUEL					C.S.								N/A	N/A	N/A	N/A		*
*P-156A	TANK FARM	4"	FLANGE (150 #)	K-153	KLN FUEL					C.S.								N/A	N/A	N/A	N/A		*
*P-156B	TANK FARM	4"	FLANGE (150 #)@ EXP.JNT.	K-153	KLN FUEL					C.S.								N/A	N/A	N/A	N/A		*
*P-157	TANK FARM	4"	FLANGE (150 #)@ PUMP	K-153	KLN FUEL					C.S.								N/A	N/A	N/A	N/A		*
*P-158	TANK FARM	2"	HOSE CONNECTION	C-110	CHLORIDE					C.S.								N/A	N/A	N/A	N/A		*
*P-159	TANK FARM	2"	VALVE (BALL SCREWED)	C-110	CHLORIDE					C.S.								N/A	N/A	N/A	N/A		*
*P-160	TANK FARM	1/2"	VALVE (BALL SCREWED)	C-110	CHLORIDE					C.S.								N/A	N/A	N/A	N/A		*
*P-161	TANK FARM	2"	HOSE CONNECTION	C-110	CHLORIDE					C.S.								N/A	N/A	N/A	N/A		*
*P-162	TANK FARM	2"	VALVE (BALL SCREWED)	C-110	CHLORIDE					C.S.								N/A	N/A	N/A	N/A		*
*P-163	TANK FARM	1/2"	VALVE (BALL SCREWED)	C-110	CHLORIDE					C.S.								N/A	N/A	N/A	N/A		*
*P-164	SPARGER	3/4"	VENT (SCREWED)	C-159	CHLORIDE					C.S.								N/A	N/A	N/A	N/A		*
*P-165	SPARGER	3/4"	VALVE (BALL SCREWED)	C-159	CHLORIDE					C.S.								N/A	N/A	N/A	N/A		*
*P-166	SPARGER	3/4"	VALVE (BALL SCREWED)	C-159	CHLORIDE					C.S.								N/A	N/A	N/A	N/A		*
*P-167	SPARGER	1/2"	VALVE (BALL SCREWED)	C-161	CHLORIDE					C.S.								N/A	N/A	N/A	N/A		*
*P-168	SPARGER	3/4"	VENT (SCREWED)	C-160	CHLORIDE					C.S.								N/A	N/A	N/A	N/A		*
*P-169	SPARGER	3/4"	VALVE (BALL SCREWED)	C-160	CHLORIDE					C.S.								N/A	N/A	N/A	N/A		*
*P-170	SPARGER	3/4"	VALVE (BALL SCREWED)	C-160	CHLORIDE					C.S.								N/A	N/A	N/A	N/A		*
*P-171	SPARGER	1/2"	VALVE (BALL SCREWED)	C-162	CHLORIDE					C.S.								N/A	N/A	N/A	N/A		*
*P-172	SPARGER	1/2"	VALVE (BALL SCREWED)	C-163	CHLORIDE					C.S.								N/A	N/A	N/A	N/A		*
*P-173	SPARGER	3/4"	VALVE (BALL SCREWED)	C-164	CHLORIDE					C.S.								N/A	N/A	N/A	N/A		*
*P-174	SPARGER	3/4"	VALVE (BALL SCREWED)	C-164	CHLORIDE					C.S.								N/A	N/A	N/A	N/A		*
*P-175	SPARGER	3/4"	VENT (SCREWED)	C-164	CHLORIDE					C.S.								N/A	N/A	N/A	N/A		*

*P-176	SPARGER	1/2"	VALVE (BALL SCREWED)	C-117	CHLORIDE					C.S.								N/A	N/A	N/A	N/A				
*P-177	SPARGER	3/4"	DRAIN LINE (OPEN)	C-164	CHLORIDE					C.S.								N/A	N/A	N/A	N/A				
*P-178			VOID																						
*P-179			VOID																						
*P-180			VOID																						
*P-181	SPARGER	1/2"	VALVE (BALL SCREWED)	C-118	CHLORIDE					C.S.								N/A	N/A	N/A	N/A				
*P-182	SPARGER	1"	ELBOW (OPEN)	C-123	CHLORIDE					C.S.								N/A	N/A	N/A	N/A				
*P-183	SPARGER	1/2"	PLUG (SCREWED)	C-123	CHLORIDE					C.S.								N/A	N/A	N/A	N/A				
*P-184	SPARGER	1"	VALVE (CHECK - SCREWED)	C-123	CHLORIDE					C.S.								N/A	N/A	N/A	N/A				
*P-185	SPARGER	1.5"	VALVE (CHECK - SCREWED)	C-123	CHLORIDE					C.S.								N/A	N/A	N/A	N/A				
*P-186	SPARGER	1"	VALVE (BALL SCREWED)	C-124	CHLORIDE					C.S.								N/A	N/A	N/A	N/A				
*P-187	SPARGER	3/4"	VALVE (BALL SCREWED)	C-124	CHLORIDE					C.S.								N/A	N/A	N/A	N/A				
*P-188	SPARGER	1"	VALVE (CHECK - SCREWED)	C-124	CHLORIDE					C.S.								N/A	N/A	N/A	N/A				
*P-189	SPARGER	1/2"	DRAIN (SCREWED)	C-116	CHLORIDE					C.S.								N/A	N/A	N/A	N/A				
*P-190	SPARGER	1/2"	VALVE (BALL SCREWED)	C-116	CHLORIDE					C.S.								N/A	N/A	N/A	N/A				
*P-191	SPARGER	1/2"	VALVE (BALL SCREWED)	C-118	CHLORIDE					C.S.								N/A	N/A	N/A	N/A				
*P-192	SPARGER	1"	VALVE (BALL SCREWED)	C-123	CHLORIDE					C.S.								N/A	N/A	N/A	N/A				
*P-193	SPARGER	1/2"	PLUG (SCREWED)	C-123	CHLORIDE					C.S.								N/A	N/A	N/A	N/A				
*P-194	SPARGER	1"	VALVE (CHECK - SCREWED)	C-123	CHLORIDE					C.S.								N/A	N/A	N/A	N/A				
*P-195U	SPARGER	1.5"	VALVE (CHECK - SCREWED)	C-123	CHLORIDE					P.V.C								N/A	N/A	N/A	N/A				
*P-196	SPARGER	1"	VALVE (BALL SCREWED)	C-124	CHLORIDE					C.S.								N/A	N/A	N/A	N/A				
*P-197	SPARGER	3/4"	VALVE (BALL SCREWED)	C-124	CHLORIDE					C.S.								N/A	N/A	N/A	N/A				
*P-198U	SPARGER	1"	VALVE (CHECK - SCREWED)	C-124	CHLORIDE					C.S.								N/A	N/A	N/A	N/A				
*P-199	SPARGER	1"	VALVE (CHECK - SCREWED)	C-124	CHLORIDE					C.S.								N/A	N/A	N/A	N/A				
*P-200	SPARGER	1.5"	VALVE (CHECK - SCREWED)	C-124	CHLORIDE					C.S.								N/A	N/A	N/A	N/A				
*P-201	SPARGER	1/2"	PLUG (SCREWED)	C-124	CHLORIDE					C.S.								N/A	N/A	N/A	N/A				
*P-202	SPARGER	3/4"	DRAIN LINE (OPEN)	C-159	CHLORIDE					C.S.								N/A	N/A	N/A	N/A				
*P-203	SPARGER	3/4"	DRAIN LINE (OPEN)	C-160	CHLORIDE					C.S.								N/A	N/A	N/A	N/A				
*P-204	SPARGER	1.5"	VALVE (GATE - SCREWED)	C-158	CHLORIDE					C.S.								N/A	N/A	N/A	N/A				
*P-205	SPARGER	1.5"	VALVE (GATE - SCREWED)	C-158	CHLORIDE					C.S.								N/A	N/A	N/A	N/A				
*P-206	SPARGER	1.5"	VALVE (GATE - SCREWED)	C-158	CHLORIDE					C.S.								N/A	N/A	N/A	N/A				
*P-207	TANK FARM	2"	VALVE (BALL SCREWED)	K-151	KLN FUEL					C.S.								N/A	N/A	N/A	N/A				
*P-208	TANK FARM	2"	VALVE (BALL SCREWED)	K-151	KLN FUEL					C.S.								N/A	N/A	N/A	N/A				
*P-209	TANK FARM	1/2"	VALVE (BALL SCREWED)	K-151	KLN FUEL					C.S.								N/A	N/A	N/A	N/A				
*P-210	TANK FARM	2"	HOSE CONNECTION	K-151	KLN FUEL					C.S.								N/A	N/A	N/A	N/A				
*P-211	PROC AREA	1"	VALVE (BALL SCREWED)	K-151	KLN FUEL					C.S.								N/A	N/A	N/A	N/A				
*P-212	PROC AREA	1"	DRAIN LINE (OPEN)	K-151	KLN FUEL					C.S.								N/A	N/A	N/A	N/A	REMOVED FROM SERVICE			
*P-213	PROC AREA	1"	VALVE (BALL SCREWED)	K-151	KLN FUEL					C.S.								N/A	N/A	N/A	N/A				
*P-214	TANK FARM	1/2"	VALVE (BALL SCREWED)	N-150	NON-CHL					C.S.								N/A	N/A	N/A	N/A				
*P-215	TANK FARM	1/2"	VALVE (BALL SCREWED)	N-150	NON-CHL					C.S.								N/A	N/A	N/A	N/A	REMOVED FROM SERVICE			
*P-216U	PROC AREA	1/2"	HOSE CONNECTION	N-150	NON-CHL					C.S.								N/A	N/A	N/A	N/A				
*P-217U	PROC AREA	1/2"	HOSE CONNECTION	N-150	NON-CHL					C.S.								N/A	N/A	N/A	N/A				
*P-218	TANK FARM	2"	VALVE (GATE - SCREWED)	N-149	NON-CHL					C.S.								N/A	N/A	N/A	N/A				
*P-219	TANK FARM	1.5"	VALVE (BALL SCREWED)	N-149	NON-CHL					C.S.								N/A	N/A	N/A	N/A				
*P-220	TANK FARM	3"	HOSE CONNECTION	I-130	NON-CHL					C.S.								N/A	N/A	N/A	N/A				
*P-221	TANK FARM	1/2"	VALVE (BALL SCREWED)	I-130	OIL WTR					C.S.								N/A	N/A	N/A	N/A				
*P-222	TANK FARM	3"	VALVE (GATE - SCREWED)	I-130	OIL WTR					C.S.								N/A	N/A	N/A	N/A				
*P-223	TANK FARM	3"	FLANGE (RAISED FACE)	I-130	OIL WTR					C.S.								N/A	N/A	N/A	N/A				
*P-224U	TANK FARM	3"	FLANGE (RAISED FACE)	I-130	OIL WTR					C.S.								N/A	N/A	N/A	N/A				
*P-225U	TANK FARM	3"	FLANGE (RAISED FACE)	I-130	OIL WTR					C.S.								N/A	N/A	N/A	N/A				
*P-226	TANK FARM	2"	VALVE (BALL SCREWED)	K-148	KLN FUEL					C.S.								N/A	N/A	N/A	N/A				
*P-227U	TANK FARM	2"	CAP (SCREWED)	K-148	KLN FUEL					C.S.								N/A	N/A	N/A	N/A				
*P-228	TANK FARM	2"	VALVE (BALL SCREWED)	K-148	KLN FUEL					C.S.								N/A	N/A	N/A	N/A				
*P-229	TANK FARM	1/2"	VALVE (BALL SCREWED)	K-148	KLN FUEL					C.S.								N/A	N/A	N/A	N/A				
*P-230	TANK FARM	2"	HOSE CONNECTION	K-148	KLN FUEL					C.S.								N/A	N/A	N/A	N/A				
*P-231	TANK FARM	3"	VALVE (GATE - SCREWED)	I-131	OIL WTR					C.S.								N/A	N/A	N/A	N/A				
*P-232	TANK FARM	1/2"	VALVE (BALL SCREWED)	I-131	OIL WTR					C.S.								N/A	N/A	N/A	N/A				
*P-233	TANK FARM	3"	HOSE CONNECTION	I-131	OIL WTR					C.S.								N/A	N/A	N/A	N/A				
*P-234	TANK FARM	3"	FLANGE (RAISED FACE)	I-131	OIL WTR					C.S.								N/A	N/A	N/A	N/A				
*P-235	TANK FARM	2"	COUPLING	I-131	OIL WTR					C.S.								N/A	N/A	N/A	N/A				
*P-236	TANK FARM	3"	FLANGE (RAISED FACE)	I-131	OIL WTR					C.S.								N/A	N/A	N/A	N/A				
*P-237	TANK FARM	3"	FLANGE (RAISED FACE)	I-131	OIL WTR					C.S.								N/A	N/A	N/A	N/A				
*P-238	TANK FARM	2"	VALVE (BALL SCREWED)	K-146	KLN FUEL					C.S.								N/A	N/A	N/A	N/A				
*P-239	TANK FARM	2"	VALVE (BALL SCREWED)	I-147	OIL WTR					C.S.								N/A	N/A	N/A	N/A				
*P-240U	TANK FARM	2"	CAP (SCREWED)	I-147	OIL WTR					C.S.								N/A	N/A	N/A	N/A				
*P-241	TANK FARM	2"	VALVE (BALL SCREWED)	I-147	OIL WTR					C.S.								N/A	N/A	N/A	N/A				
*P-242	TANK FARM	2"	HOSE CONNECTION	I-147	OIL WTR					C.S.								N/A	N/A	N/A	N/A				
*P-243	TANK FARM	1/2"	VALVE (BALL SCREWED)	I-147	OIL WTR					C.S.								N/A	N/A	N/A	N/A				
*P-244	TANK FARM	1/2"	DRAIN LINE (OPEN)	I-147	OIL WTR					C.S.								N/A	N/A	N/A	N/A				
*P-245	TANK FARM	2"	OPEN PIPE (1/2" UNION)	I-147	OIL WTR					C.S.								N/A	N/A	N/A	N/A				
*P-246	TANK FARM	2"	HOSE CONNECTION	I-147	OIL WTR					C.S.								N/A	N/A	N/A	N/A				

*P-247	TANK FARM	1"	VALVE (BALL SCREWED)	K-146	KLN FUEL	C.S.	N/A	N/A	N/A	N/A
*P-248	TANK FARM	1"	DRAIN (OPEN)	K-146	KLN FUEL	C.S.	N/A	N/A	N/A	N/A
*P-249	TANK FARM	2"	VALVE (BALL SCREWED)	K-146	KLN FUEL	C.S.	N/A	N/A	N/A	N/A
*P-250	TANK FARM	1/2"	VALVE (BALL SCREWED)	K-146	KLN FUEL	C.S.	N/A	N/A	N/A	N/A
*P-251	TANK FARM	2"	HOSE CONNECTION	K-146	KLN FUEL	C.S.	N/A	N/A	N/A	N/A
*P-252	TANK FARM	2"	UNION (OPEN)	-132	--	C.S.	N/A	N/A	N/A	N/A
*P-253	TANK FARM	2"	VALVE (BALL SCREWED)	-132	--	C.S.	N/A	N/A	N/A	N/A
*P-254	TANK FARM	1/2"	VALVE (BALL SCREWED)	-132	--	C.S.	N/A	N/A	N/A	N/A
*P-255	TANK FARM	2"	HOSE CONNECTION	-132	--	C.S.	N/A	N/A	N/A	N/A
*P-256	TANK FARM	2"	VALVE (BALL SCREWED)	W-109	WATER	C.S.	N/A	N/A	N/A	N/A
*P-257	TANK FARM	1/2"	VALVE (BALL SCREWED)	W-109	WATER	C.S.	N/A	N/A	N/A	N/A
*P-258	TANK FARM	2"	HOSE CONNECTION	W-109	WATER	C.S.	N/A	N/A	N/A	N/A
*P-259	TANK FARM	2"	VALVE (BALL SCREWED)	C-141	WATER	C.S.	N/A	N/A	N/A	N/A
*P-260	TANK FARM	1/2"	DRAIN (PLUGGED)	C-141	WATER	C.S.	N/A	N/A	N/A	N/A
*P-261	TANK FARM	2"	VALVE (BALL SCREWED)	C-141	WATER	C.S.	N/A	N/A	N/A	N/A
*P-262	TANK FARM	2"	HOSE CONNECTION	C-141	WATER	C.S.	N/A	N/A	N/A	N/A
*P-263	TANK FARM	2"	HOSE CONNECTION	W-133	WATER	C.S.	N/A	N/A	N/A	N/A
*P-264	TANK FARM	1/2"	VALVE (BALL SCREWED)	W-133	WATER	C.S.	N/A	N/A	N/A	N/A
*P-265	TANK FARM	2"	VALVE (BALL SCREWED)	W-133	WATER	C.S.	N/A	N/A	N/A	N/A
*P-266	TANK FARM	3"	VALVE (PLUG-150 # FLNGD)	W-142	WATER	C.S.	N/A	N/A	N/A	N/A
*P-266A	TANK FARM	3"	NOZZLE (150# FLANGED)	W-142	WATER	C.S.	N/A	N/A	N/A	N/A
*P-267	TANK FARM	3"	VALVE (BALL 150#) & H.C.	W-142	WATER	C.S.	N/A	N/A	N/A	N/A
*P-268	TANK FARM	3"	VALVE (PLUG-150 # FLNGD)	I-143	OIL WTR	C.S.	N/A	N/A	N/A	N/A
*P-268A	TANK FARM	3"	FLANGE (150 #)	I-143	OIL WTR	C.S.	N/A	N/A	N/A	N/A
*P-269	TANK FARM	3"	FLANGE (150 #) & H.C.	I-143	OIL WTR	C.S.	N/A	N/A	N/A	N/A
*P-270	TANK FARM	2"	VALVE (BALL SCREWED)	W-133	WATER	C.S.	N/A	N/A	N/A	N/A
*P-271	TANK FARM	2"	VALVE (BALL SCREWED)	C-144	CHLORIDE	C.S.	N/A	N/A	N/A	N/A
*P-272	TANK FARM	2"	HOSE CONNECTION	C-144	CHLORIDE	C.S.	N/A	N/A	N/A	N/A
*P-273	TANK FARM	2"	VALVE (BALL SCREWED)	K-135	KLN FUEL	C.S.	N/A	N/A	N/A	N/A
*P-274	TANK FARM	2"	HOSE CONNECTION	K-135	KLN FUEL	C.S.	N/A	N/A	N/A	N/A
*P-275	TANK FARM	2"	VALVE (BALL SCREWED)	K-134	KLN FUEL	C.S.	N/A	N/A	N/A	N/A
*P-276	TANK FARM	2"	HOSE CONNECTION	K-134	KLN FUEL	C.S.	N/A	N/A	N/A	N/A
*P-277	TANK FARM	-	FLANGE (150 #)	K-145	KLN FUEL	C.S.	N/A	N/A	N/A	N/A
*P-278	TANK FARM	-	FLANGE (150 #)	K-145	KLN FUEL	C.S.	N/A	N/A	N/A	N/A
*P-279	TANK FARM	1"	VALVE (BALL SCREWED)	I-137	OIL WTR	C.S.	N/A	N/A	N/A	N/A
*P-280	TANK FARM	1"	VALVE (BALL SCREWED)	I-137	OIL WTR	C.S.	N/A	N/A	N/A	N/A
*P-281	TANK FARM	1/4"	DRAIN	I-137	OIL WTR	C.S.	N/A	N/A	N/A	N/A
*P-282	TANK FARM	1"	VALVE (BALL SCREWED)	K-138	KLN FUEL	C.S.	N/A	N/A	N/A	N/A
*P-283	TANK FARM	1"	VALVE (BALL SCREWED)	K-138	KLN FUEL	C.S.	N/A	N/A	N/A	N/A
*P-284	TANK FARM	1/4"	DRAIN	K-138	KLN FUEL	C.S.	N/A	N/A	N/A	N/A
*P-285	TANK FARM	1"	VALVE (BALL SCREWED)	K-140	KLN FUEL	C.S.	N/A	N/A	N/A	N/A
*P-286	TANK FARM	1"	VALVE (BALL SCREWED)	K-140	KLN FUEL	C.S.	N/A	N/A	N/A	N/A
*P-287	TANK FARM	1/4"	DRAIN	K-140	KLN FUEL	C.S.	N/A	N/A	N/A	N/A
*P-288	TANK FARM	1"	VALVE (BALL SCREWED)	K-139	KLN FUEL	C.S.	N/A	N/A	N/A	N/A
*P-289	TANK FARM	1"	VALVE (BALL SCREWED)	K-139	KLN FUEL	C.S.	N/A	N/A	N/A	N/A
*P-290	TANK FARM	1/4"	DRAIN	K-139	KLN FUEL	C.S.	N/A	N/A	N/A	N/A
*P-291	TANK FARM	1"	VALVE (BALL SCREWED)	W-136	WATER	C.S.	N/A	N/A	N/A	N/A
*P-292	TANK FARM	1"	VALVE (BALL SCREWED)	W-136	WATER	C.S.	N/A	N/A	N/A	N/A
*P-293	TANK FARM	1/4"	DRAIN	W-136	WATER	C.S.	N/A	N/A	N/A	N/A
*P-294U	TANK FARM	2"	FLANGE (150 #)	V-165	VENT	C.S.	N/A	N/A	N/A	N/A
*P-295U	TANK FARM	2"	FLANGE (150 #)	V-165	VENT	C.S.	N/A	N/A	N/A	N/A
*P-296U	TANK FARM	2"	FLANGE (150 #)	V-165	VENT	C.S.	N/A	N/A	N/A	N/A
*P-297U	TANK FARM	2"	FLANGE (150 #)	V-165	VENT	C.S.	N/A	N/A	N/A	N/A
*P-298U	TANK FARM	2"	FLANGE (150 #)	V-165	VENT	C.S.	N/A	N/A	N/A	N/A
*P-299U	TANK FARM	2"	FLANGE (150 #)	V-165	VENT	C.S.	N/A	N/A	N/A	N/A
*P-300U	TANK FARM	2"	FLANGE (150 #)	V-165	VENT	C.S.	N/A	N/A	N/A	N/A
*P-301U	TANK FARM	2"	FLANGE (150 #)	V-165	VENT	C.S.	N/A	N/A	N/A	N/A
*P-302U	TANK FARM	4"	FLANGE (150 #)	V-165	VENT	C.S.	N/A	N/A	N/A	N/A
*P-303U	TANK FARM	2"	FLANGE (150 #)	V-165	VENT	C.S.	N/A	N/A	N/A	N/A
*P-304U	TANK FARM	4"	FLANGE (150 #)	V-165	VENT	C.S.	N/A	N/A	N/A	N/A
*P-305U	TANK FARM	6"	FLANGE (150 #)	V-165	VENT	C.S.	N/A	N/A	N/A	N/A
*P-306U	SOLV.ROOM	1"	VALVE (CHECK - SCREWED)	C-124	CHLORIDE	C.S.	N/A	N/A	N/A	N/A
*P-307U	SOLV.ROOM	1"	VALVE (BALL SCREWED)	C-124	CHLORIDE	C.S.	N/A	N/A	N/A	N/A
*P-308	TANK FARM	1/2"	ELL (OPEN)	K-157	KLN FUEL	C.S.	N/A	N/A	N/A	N/A
*P-309U	GRIND RM	2"	FLANGE	C-101	CHLORIDE		N/A	N/A	N/A	N/A
*P-310	GRIND RM	8"	HOSE CONNECTION	C-168	CHLORIDE	C.S.	N/A	N/A	N/A	N/A
*P-311U	GRIND RM	8"	HOSE CONNECTION	C-169	CHLORIDE	C.S.	N/A	N/A	N/A	N/A
*P-312U	GRIND RM	8"	HOSE CONNECTION	C-170	CHLORIDE	C.S.	N/A	N/A	N/A	N/A
*P-313U	GRIND RM	2"	VALVE (BALL)	C-166	CHLORIDE	C.S.	N/A	N/A	N/A	N/A
*P-314U	GRIND RM	2"	FLANGE	C-166	CHLORIDE	C.S.	N/A	N/A	N/A	N/A
*P-315U	GRIND RM	2"	VALVE (BALL)	C-167	CHLORIDE	C.S.	N/A	N/A	N/A	N/A

*P-316U	GRIND RM	2"	FLANGE	C-167	CHLORIDE					C.S.								N/A	N/A	N/A	N/A			*
*P-320	TANK FARM	2"	VALVE (BALL SCREWED)	N-112	NON-CHL					C.S.								N/A	N/A	N/A	N/A			*
*P-321	TANK FARM	2"	HOSE CONNECTION	N-112	NON-CHL					C.S.								N/A	N/A	N/A	N/A			*
*P-323	TANK FARM	2"	VALVE (BALL SCREWED)	K-176	KLN FUEL					C.S.								N/A	N/A	N/A	N/A			*
*P-324	TANK FARM	1/2"	VALVE (BALL SCREWED)	K-176	KLN FUEL					C.S.								N/A	N/A	N/A	N/A			*
*P-325	TANK FARM	2"	HOSE CONNECTION	K-176	KLN FUEL					C.S.								N/A	N/A	N/A	N/A			*
*P-326	PROC AREA	2"	VALVE (BALL SCREWED)	K-176	KLN FUEL					C.S.								N/A	N/A	N/A	N/A			*
*P-327	PROC AREA	1/2"	VALVE (BALL SCREWED)	K-176	KLN FUEL					C.S.								N/A	N/A	N/A	N/A			*
*P-328	PROC AREA	2"	HOSE CONNECTION	K-176	KLN FUEL					C.S.								N/A	N/A	N/A	N/A			*
*P-330	TANK FARM	2"	VALVE (BALL SCREWED)	K-177	KLN FUEL					C.S.								N/A	N/A	N/A	N/A			*
*P-331	TANK FARM	1/2"	VALVE (BALL SCREWED)	K-177	KLN FUEL					C.S.								N/A	N/A	N/A	N/A			*
*P-332	TANK FARM	2"	HOSE CONNECTION	K-177	KLN FUEL					C.S.								N/A	N/A	N/A	N/A			*
*P-333	PROC AREA	2"	VALVE (BALL SCREWED)	K-177	KLN FUEL					C.S.								N/A	N/A	N/A	N/A			*
*P-334	PROC AREA	1/2"	VALVE (BALL SCREWED)	K-177	KLN FUEL					C.S.								N/A	N/A	N/A	N/A			*
*P-335	PROC AREA	2"	HOSE CONNECTION	K-177	KLN FUEL					C.S.								N/A	N/A	N/A	N/A			*
*P-337	TANK FARM	2"	VALVE (BALL SCREWED)	K-178	KLN FUEL					C.S.								N/A	N/A	N/A	N/A			*
*P-338	TANK FARM	1/2"	VALVE (BALL SCREWED)	K-178	KLN FUEL					C.S.								N/A	N/A	N/A	N/A			*
*P-339	TANK FARM	2"	HOSE CONNECTION	K-178	KLN FUEL					C.S.								N/A	N/A	N/A	N/A			*
*P-340	PROC AREA	2"	VALVE (BALL SCREWED)	K-178	KLN FUEL					C.S.								N/A	N/A	N/A	N/A			*
*P-341	PROC AREA	1/2"	VALVE (BALL SCREWED)	K-178	KLN FUEL					C.S.								N/A	N/A	N/A	N/A			*
*P-342	PROC AREA	2"	HOSE CONNECTION	K-178	KLN FUEL					C.S.								N/A	N/A	N/A	N/A			*
*P-345	PROC AREA	4"	FLANGE	K-182	KLN FUEL					C.S.								N/A	N/A	N/A	N/A			*
*P-346	PROC AREA	4"	VALVE (BALL FLANGED)	K-182	KLN FUEL					C.S.								N/A	N/A	N/A	N/A			*
*P-347	PROC AREA	4"	FLANGE	K-182	KLN FUEL					C.S.								N/A	N/A	N/A	N/A			*
*P-348	PROC AREA	6"	VALVE (PLUG -- 150 #)	K-181	KLN FUEL					C.S.								N/A	N/A	N/A	N/A			*
*P-349	PROC AREA	6"	FLANGE (150 # -- SLIP ON)	K-181	KLN FUEL					C.S.								N/A	N/A	N/A	N/A			*
*P-350	PROC AREA	6"	FLANGE (150 # -- SLIP ON)	K-181	KLN FUEL					C.S.								N/A	N/A	N/A	N/A			*
*P-351	PROC AREA	6"	FLANGE (150 # -- SLIP ON)	K-181	KLN FUEL					C.S.								N/A	N/A	N/A	N/A			*
*P-352	PROC AREA	6"	FLANGE (150 # STRAINER)	K-181	KLN FUEL					C.S.								N/A	N/A	N/A	N/A			*
*P-353	PROC AREA	4"	FLANGE (150 #) PUMP NOZZLE	K-181	KLN FUEL					C.S.								N/A	N/A	N/A	N/A			*
*P-354	PROC AREA	4"	VALVE (BALL SCREWED)	K-181	KLN FUEL					C.S.								N/A	N/A	N/A	N/A			*
*P-355	PROC AREA	4"	FLANGE (150 #) PUMP NOZZLE	K-153	KLN FUEL					C.S.								N/A	N/A	N/A	N/A			*
*P-356	PROC AREA	4"	VALVE (BALL SCREWED)	K-152	KLN FUEL					C.S.								N/A	N/A	N/A	N/A			*
*P-358	PROC AREA	1"	VALVE (BALL SCREWED)	K-152	KLN FUEL					C.S.								N/A	N/A	N/A	N/A			*
*P-359	PROC AREA	1"	VALVE (BALL SCREWED)	K-181	KLN FUEL					C.S.								N/A	N/A	N/A	N/A			*

PIPING LINE LIST

Piping line lists have been developed for each HRI plant. These lists are computer generated off of the Autocad P & ID drawings. The lists identify each of the pipe lines that were included in the scope of the work. "Write-On" aluminum tags were attached to each piping component (valves, flanges, in-line devices, fittings, etc) that were installed in the lines. The tag numbers associated with each line are listed in the remarks section of the line list form. Water, air, utility and other lines carrying non-harmful products are specifically omitted from these lists, even though they may support the process lines that are included in this listing.

The "Line List Form" contains sixteen columns. The information contained in each is as follows:

1. Revision Number: The number of times a line has been modified or revised will be recorded in this column.

2. Flow Diagram Reference Drawing Number Suffix: The P & ID drawing reference number suffix is given in this column. The P & ID drawing numbers for each HRI plant are the same except for the suffix alpha character. Therefore only the drawing number suffix is listed in this column.

3. Line Number: The number of the pipe line is indicated in this column.

4. Line Class: Normally the national standard pipe classification code would be entered in this column. This data for the existing pipe installed at each HRI plant was not available to Fluor Daniel and therefore this column remains blank.

5. Line Size: The diameter of the pipe line - in inches - is shown in this column.

6. Line Service: The service of the line (i.e. product being transported) is indicated in this column. For purposes of this project, the line service is limited to those identified in the "Pipe Line Numbering System" page preceding this one.

7. Vapor / Liquid: Each line of this column is divided into a top and bottom half representing vapor (V) and liquid (L) respectively. An "X" in the top half indicates the line contains a vapor product. An "X" in the bottom half indicates the line contains a liquid product. This column is blank for this report since the lines may be used for multiple service and Fluor Daniel did not have adequate information to provide this data.

8. <u>From:</u> This column indicates the origin or departure point of the listed pipe line.

9. <u>To:</u> This column indicates the final or destination point of the listed pipe line.

10. <u>Design and Operating Pressures (PSIG):</u> Each line of this column is divided into a top and bottom half representing Design and Operating Pressures respectively. This information was not available to Fluor Daniel and so this column remains blank for this report.

11. <u>Design and Operating Temperatures (°F):</u> Each line of this column is divided into a top and bottom half representing Design and Operating Pressures respectively. This information was not available to Fluor Daniel and so this column remains blank for this report.

12. <u>Insulation (INS):</u> This column will contain a "No" if the line is not insulated. Otherwise it will contain a number to indicate the thickness - in inches - of the insulation installed on the line (i.e. 1").

13. <u>Stress Check/ Post Weld Heat Treatment Requirements:</u> Each line of this column is divided into a top and bottom half representing Stress Check and Post Welding Heat Treating requirements respectively. This information was not applicable to this project and so this column remains blank for this report.

14. <u>Branch Reinforcement Requirements:</u> This column is used to indicate if special reinforcing is required wherever a line branches off into another line (i.e. "T's" "Y's" or "L's"). This information was not applicable to this project and so this column remains blank for this report.

15. <u>System Number & Hydrotest Requirements:</u> This column will contain the "System Number" to which the pipe line is associated. It also will indicate the pressure at which the line will be hydrotested. This information was not applicable to this project and so this column remains blank for this report.

16. <u>Remarks:</u> Additional comments pertaining to the line are entered in this column. For this project we have indicated the method used to join the pipe together. (i.e. BW = Butt Weld, SCR'D = Screwed, SW = Socket Weld). We also indicate the numbers of the pipe tags that Fluor Daniel personnel attached to the lines.

Area: W
Unit:
Mod:

FLUOR DANIEL

PIPE LINE LIST

WICHITA

Contract: 665300
Rev: 0 Page: 1
Date: 04/24/91 By: RDH

REV	FLOW DIAG	LINE NO.	LINE CLASS	LINE SIZE	SERVICE	V/L	FROM	TO	DES PSIG / OPER PSIG	DES °F / OPER °F	INS	STR CHK / PW HT	BR RENCH	SYS# TEST MIN.	REMARKS
	E H	100		3" 2"	C	L	TANKS 15A, 15B, 15C & 15D	LOWER NORTH & SOUTH MANIFOLDS			NO				BW/SCR'D P7-14
	A	101		3" 2"	C	L	CONDENSATE/SEPARATOR	CONDENSATE/SEPARATOR PUMP;DRYER & COND.			NO				SCR'D P20-29
	A	102		2" 1" 3/4"	C	L	CONDENSATE SEPARATOR TRIM				NO				SCR'D P30-PU38
		108		2"	C	L	FUTURE WATER LINE IN SOLVENT ROOM	TANK FARM			NO				SCR'D
	E H	109		4" 3" 2"	W	L	V-16	LOWER NORTH & SOUTH MANIFOLDS			NO				BW/SCR'D PU74-P83 P256-258
	C H	110		2"	C	L	V-9 & V-10	LOWER NORTH & SOUTH MANIFOLDS			NO				SCR'D PU86
	C	111		2"	C	L	V-9	V-10			NO				SCR'D PU85-87, P158-163
	C H	112		2"	N	L	V-14	UPPER NORTH & SOUTH MANIFOLDS			NO				SCR'D PU91, P111-113, 115
	C H	113		2"	C	L	V-13	LOWER NORTH & SOUTH MANIFOLDS			NO				SCR'D PU90, P105-110
	C H	114		2"	C	L	V-12	LOWER NORTH & SOUTH MANIFOLDS			NO				SCR'D PU89, P98-104
	C H	115		2"	C	L	V-11	LOWER NORTH & SOUTH MANIFOLDS			NO				SCR'D PU88, P92-97
	C	116		1/2"	C	L	SOUTHWEST SPARGER TANK	SOUTHWEST SPARGER			NO				SCR'D P188-190

Area: W
Unit:
Mod:

FLUOR DANIEL

PIPE LINE LIST

WICHITA

Contract: 665300
Rev: 0 Page: 2
Date: 04/24/91 By: RDH

REV	FLOW	DIAG	LINE NO.	LINE CLASS	LINE SIZE	SERVICE	V/L	FROM	TO	DES PSIG / OPER PSIG	DES °F / OPER °F	INS	STR CHK / PW HT	BRNCH	REINF	SYS# TEST MIN.	REMARKS
	C		117		1/2"	C	L	SOUTHWEST SPARGER TANK	SOUTHEAST SPARGER			NO					SCR'D P176
	C		118		1/2"	C	L	SOUTHEAST SPARGER TANK	SOUTHWEST SPARGER			NO					SCR'D P191
	C		119		1/2"	C	L	SOUTHEAST SPARGER TANK	SOUTHEAST SPARGER			NO					SCR'D P179
	C		120		1"	C	L	SOUTHWEST SPARGER DRAIN				NO					SCR'D P181-182
	B C D		123		1 1/2 1"	C	L	SOUTHWEST& NORTHWEST SPARGER TANK PUMPS	V-9			NO					SCR'D P192-PU195
	B C D		124		1"	C	L	SOUTHEAST& NORTHEAST SPARGER TANK PUMPS	V-11			NO					SCR'D P196-201. PU306-307
	H		130		3"	IWL	L	SOUTH MANIFOLD	V-8			NO					BW/SCR'D P220-PU225
	H		131		3"	IWL	L	SOUTH MANIFOLD	V-8			NO					BW/SCR'D P231-237
	H		132		2"	N	L	LOWER NORTH MANIFOLD				NO					SCR'D P252-255
	H		134		2"	K	L	V-6 DRAIN				NO					SCR'D P275-276
	H		135		2"	K	L	V-5 DRAIN				NO					SCR'D P273-274
	H		137		1"	IWL	V	V-8	VENT LINE			NO					SCR'D P279-281

Area: W
Unit:
Mod:

FLUOR DANIEL

PIPE LINE LIST

WICHITA

Contract: 665300
Rev: 0 Page: 3
Date: 04/24/91 By: RDH

REV	FLOW	DIAG	LINE NO.	LINE CLASS	LINE SIZE	SERVICE	V/L	FROM	TO	DES PSIG / OPER PSIG	DES °F / OPER °F	INS	STR CHK / PW HT	BR NCH	REINF	SYS# TEST MIN.	REMARKS
	G		138		1"	IWL	V	V-7	VENT LINE			NO					SCR'D P282-284
	G H		141		2"	C	L	V-2	LOWER NORTH MANIFOLD			NO					SCR'D P259-262
	G		142		3"		L	V-1 OUTLET				NO					SCR'D P266-267
	H		143		3"	IWL	L	V-8 OUTLET				NO					SCR'D P268-269
	G		144		2"	C	L	V-2 OUTLET				NO					SCR'D P271-272
	H		145			K	L	V-5	V-6			NO					SCR'D P277-278
	G H		146		2"	K	L	V-4	LOWER NORTH MANIFOLD			NO					SCR'D P238,P247-251
	H		147		2"	IWL	L	V-8	LOWER NORTH MANIFOLD			NO					SCR'D P239-246
	H		148		2"	K	L	V-7	LOWER NORTH MANIFOLD			NO					SCR'D P226-230
	F		149		2" 1 1/2	N	L	DEISEL TANK	DEISEL PUMP			NO					SCR'D P218-219
	F		150		1/2"	N	L	DEISEL PUMP & TANK	MIXING VAT AREA			NO					SCR'D P214-PU217
	F G H		151		1"	K	L	VAT SOLID DISPERSER	LOWER NORTH MANIFOLD & V-3			NO					SCR'D P207-213

Area: W
Unit:
Mod:

FLUOR DANIEL

Contract: 665300
Rev: 0 Page: 4
Date: 04/24/91 By: RDH

PIPE LINE LIST
WICHITA

REV	FLOW	DIAG	LINE NO.	LINE CLASS	LINE SIZE	SERVICE	V / L	FROM	TO	DES PSIG / OPER PSIG	DES °F / OPER °F	INS	STR CHK / PW HT	BR RE / NC IN / H F	SYSW TEST MIN.	REMARKS
	F		152		4"	X	L	MIXING VAT	GORATOR PUMP			NO				BW P116-121
	F H		153		4" 3"	X	L	GORATOR PUMP	VAT, V-5, V-6, SOUTH MANIFOLD			NO				BW/SCR'D P114, P122-157
	H		154		6" 4" 1/2"	X	L	GORATOR PUMP	V-5, V-6			NO				BW/SCR'D P39-55,84
	G H		155		3" 2" 1/2"	X	L	V-4	SOUTH MANIFOLD			NO				BW/SCR'D P56-63
	G H		156		3"	X	L	V-3	SOUTH MANIFOLD			NO				BW/SCR'D P64-69
	H		157		3"	X	L	V-7	SOUTH MANIFOLD			NO				BW/SCR'D P15-19,70
	B		158		1 1/2	C	L	3 NORTH SPARGER DRAINS				NO				SCR'D P204-206
	B		159		3/4"	C	L	NORTHWEST SPARGER	NORTHEAST SPARGER TANK & ATM.			NO				SCR'D P164-166,202
	B		160		3/4"	C	L	NORTH MIDDLE SPARGER	NORTHEAST SPARGER TANK & ATM.			NO				SCR'D P168-170,203
	B		161		1/2"	C	L	NORTHWEST SPARGER	NORTHWEST SPARGER TANK			NO				SCR'D P167
	B		162		1/2"	C	L	NORTH MIDDLE SPARGER	NORTHWEST SPARGER TANK			NO				SCR'D P171
	B		163		1/2"	C	L	NORTHEAST SPARGER	NORTHWEST SPARGER TANK			NO				SCR'D P172

Area: W
Unit:
Mod:

FLUOR DANIEL

PIPE LINE LIST
WICHITA

Contract: 665300
Rev: 0 Page: 5
Date: 04/24/91 By: RDH

REV	FLOW	DIAG	LINE NO.	CLASS	SIZE	SERVICE	V L	FROM	TO	DES PSIG / OPER PSIG	DES °F / OPER °F	INS	STR CHK PW HT	BR RENCH F	SYSW TEST MIN.	REMARKS
	B		164		3/4"	C	L	NORTHEAST SPARGER	NORTHEAST SPARGER TANK & ATM.			NO				SCR'D P173-175,177
	B		166		1 1/2	C	L	S-4A	P-3A			NO				SCR'D P200,201
	C		167		1"	C	L	S-3B	P-2B			NO				SCR'D P192,193
	C		168		1"	C	L	S-3A	P-3B			NO				SCR'D P196,197
	A		169		2"	C		DRYER	PORTABLE FILTER			NO				BW/SCR'D PU313-314
	A		170		2"	C		PORTABLE FILTER	EXCHANGER			NO				BW/SCR'D PU315-316
	A		171		8"	C		PICK UP HOODS	BLOWER							P310
	A		172		8"	C		GRANULATOR	BLOWER							PU311
	A		173		8"	C		BLOWER	CYCLONE							PU312
			176		2"	K	L	NORTH MANIFOLD	PROCESS AREA			N				
			177		2"	K	L	NORTH MANIFOLD	PROCESS AREA			N				
			178		2"	K	L	NORTH MANIFOLD	PROCESS AREA			N				

Area: W
Unit:
Mod:

FLUOR DANIEL

PIPE LINE LIST
WICHITA

Contract: 665300
Rev: 0 Page: 6
Date: 04/24/91 By: RDH

REV	FLOW DIAG	LINE NO.	LINE CLASS	LINE SIZE	SERVICE	V/L	FROM	TO	DES PSIG / OPER PSIG	DES °F / OPER °F	INS	STR CHK / PW HT	BRNCH REINF	SYS# TEST MIN.	REMARKS
	F	181		6	K		V-26	DISPERSER			NO				
	F	182		4	K		V-26	DISPERSER			NO				

EQUIPMENT DATA SHEETS

The Equipment Data Sheets are used to identify, catalog and document that equipment which requires emission test monitoring. The first day at each plant included a meeting of USPCI, HRI and Fluor Daniel personnel. In this meeting USPCI and HRI reached agreement and identified for Fluor Daniel each piece of equipment that was to be included in this project.

Fluor Daniel personnel then went out and tagged each applicable equipment with write-on aluminum tags. The technique for doing this was similar at Tulsa and Wichita; but it differed at San Antonio. At Tulsa and Wichita only one aluminum tag was attached per each piece of equipment. At San Antonio, aluminum tags were attached at all potential leak/emission points (flanges, nozzles, instruments, plugs, hand holes, manways, etc.). The Tulsa Equipment Data Sheet was augmented with an "Equipment Trim" sheet and the Wichita Data Sheet was augmented with an "Equipment Monitor Point" sheet. Both sheets identify all potential leak points on each piece of equipment and basically achieve the same results that tagging would achieve. These sheets are described in their respective section of this manual.

This set of "Equipment Data Sheets" is arranged first by process area or unit, then by equipment type and finally in "M-xxx" Tag number sequence for each HRI plant. Generally, all 26 data columns are used to document the various equipment involved in this project. The twenty six columns and their uses are as follows:

1. <u>Tag Number:</u> This is the number of the aluminum write-on tag that Fluor Daniel personnel attached to each piece of equipment. As mentioned earlier mechanical tags are assigned an "M" prefix. It is also important to note that there were some cases -for reasons of safety - when Fluor Daniel people could not safely reach an equipment trim device even though it was recognized it should be tagged and tested. In these cases, a "U" suffix has been assigned to the tag number (i.e. "M-xxxU"). This means that Fluor Daniel personnel were <u>U</u>nable to attach a tag.

2. <u>Location:</u> The location column is used to identify the location the equipment tag can be found. Generally this will either be "Tank Top" or "Ground Level".

3. <u>Component/Equipment Name:</u> This column gives the name of the listed equipment item.

4. <u>Line/Equipment Identification Number:</u> This column gives the pipe line number in which the component is installed. The "Pipe Line Number" is assigned in accordance with the procedure described earlier in this manual.

5. Unit Process System: Data in this column identifies the "Processing Unit" the component is servicing or is associated with. For example the Thin Film Unit or the Flash Distillation Unit.

6. Product or Service: This column identifies the most common product that flows through or is stored in the equipment. The only products this project is focusing on are Kiln Fuels, Chlorinated Solvents, Non-chlorinated Solvents, Waste Oil, Waste Water and Incineration Waste Liquids. Because of this focus, this particular column is redundant because it repeats information shown in the Line Identification Number column.

7. P & ID Drawing Reference Number: This column references the drawing number of the P & ID on which the specific equipment item is shown.

8. Vendor / Fabricator: This column identifies the name of the company that fabricated the item of equipment listed. In the case of storage tanks and vessels, Fluor Daniel personnel could not find equipment name tags attached to the tank or vessel and consequently the data appearing in this column is N/A or Not Available. Pumps and other rotating equipment were the few equipment items on which name plates could be found.

9. Name Plate Exist: This column contains a "Yes" or a "No" to identify whether or not a name plate is attached to the listed equipment item.

10. Model Number: The model number of the listed equipment is shown in this column whenever the data is available.

11. Estimated Age of the Equipment (In Months): The intent of this column is to provide the age of the listed equipment item. In most cases this information could not be determined. Occasionally Fluor Daniel personnel were able to determine the year in which the equipment was manufactured. In these cases the year is listed in this column (i.e. 1977 would be listed as '77.)

12. Material of Construction: The primary material of which the equipment is constructed is given in this column. The following codes are used:

Al	=	Aluminum
C.I.	=	Cast Iron
C.S.	=	Carbon Steel
S.S.	=	Stainless Steel

13. Design Temperature: The design temperature - in degrees Fahrenheit - for the listed equipment is shown in this column when the information is known. Otherwise this column is left blank. In most cases, this information was not available. Occasionally Fluor Daniel was able to obtain the operating temperature. Operating temperatures are recognized by "OPER" appearing above the temperature number provided and ambient temperatures are identified by an "AMB" appearing in the column.

14. Design Pressure: The design pressure - in pounds per square inch (psi) - for the listed equipment is shown in this column when the information is known. Otherwise this column is left blank. In most cases, this information was not available. Occasionally Fluor Daniel was able to obtain the operating pressure. Operating pressures are recognized by "OPER" appearing above the pressure number provided and atmospheric pressures are identified by an "ATM" appearing in the column. Also a vacuum pressure in inches of mercury was obtained on some items of equipment. This is shown as "25 in. VAC"

15. Rated / Specified Capacity: The numbers shown in this column will represent different values depending on the type of equipment listed as follows:

    A. Pump data may be given in:
        1. gallons per minute (GPM)
        2. Motor Horsepower & speed (Hp)/(RPM).
    B. Tank and vessel data is given in gallons.

16. Dimensions - Diameter: This lists the diameter - in feet and inches - of cylindrical equipment items; otherwise the column is blank for non cylindrical items.

17. Dimensions - L x W x H: This column gives the length, width and height of the listed equipment items; otherwise the column is blank. In the case of equipment with rounded ends the length given is for the tangent to tangent distance, (i.e. 14' T-T).

18. Weight: The weight - in pounds - of the listed equipment is given in this column, when known. In many cases this data was not available and therefore, this column is mostly blank.

19. EPA Emission Requirement - Monitor: This column is used to identify if the listed equipment is required to be monitored or tested in accordance with established EPA regulations. The number of monitor or "sniff" points for

UNITED STATES POLLUTION CONTROL INC. — P. O. No. 90088 — FLUOR DANIEL — PREPARED BY: CARROLL MICHAUD

HYDROCARBON RECYCLERS INC. - PROJECT — EQUIPMENT DATA SHEET - WICHITA — DATE: 29 MAR 91

PLANT LOCATION: WICHITA — FD CONTRACT No. 665300 — WCTA_EQ

TAG No.	LOCATION	COMPONENT / EQUIPMENT NAME	COMP. EQUIP. ID No.	UNIT PROCESS SYSTEM	PRODUCT SERVICE	P & ID REF. DWG.	VENDOR / FABRICATOR	NAME PLAT EXIST	MODEL No.	AGE EST. Mo	MAT'L OF CONST	DESIGN TEMP	DESIGN PRES	RATED / SPECIFIED CAPACITY	DIMENSIONS DIA.*	DIMENSIONS L x W x H	WT Lbs	EPA EMISSION REQUIREMENTS MONITF	EPA EMISSION REQUIREMENTS CNTRO	DOC. AVAILABLE SPEC DATA	DOC. AVAILABLE OPS	DOC. AVAILABLE MAINT	POWER SOURC	COMMENTS	PHOTO ALBUM No.
M-03	GRND LVLN	SPARGING TANK	S-1C	SPARGING		W404B	PURITAN	YES	SRS-2500	88			50		25"	30" H		5		NO			ELEC.		98
M-04	GRND LVLN	SPARGING TANK	S-1B	SPARGING		W404B	PURITAN	YES	SRS-4000	88			50		25"	48" H		4		NO			ELEC.		98
M-05	GRND LVLN	SPARGING TANK	S-1A	SPARGING		W404B	PURITAN	YES	SRS-4000	88			50		25"	48" H		5		NO			ELEC.		98
M-06	GRND LVL	SPARGE WATER PUMP	P-2A	SPARGING		W404B		NO												NO			ELEC.	PUMP IS SUBMERGED	100
M-07	GRND LVL	SPARGE WATER PUMP	P-2B	SPARGING		W404C	INGER RAND	YES	SMP-1000					1Hp 3450RPM		1" X 4"	23			NO			ELEC.	ALLENTOWN, PA	100
M-08	GRND LVL	SPARGE SOLVENT PUMP	P-3A	SPARGING		W404B	INGER RAND	YES	SMP-1000					1Hp 3450RPM		1" X 4"	23			NO			ELEC.	ALLENTOWN, PA	98
M-09	GRND LVL	SPARGE SOLVENT PUMP	P-3B	SPARGING		W404C	INGER RAND	YES	SMP-1000					1Hp 3450RPM		1" X 4"	23			NO			ELEC.	ALLENTOWN, PA	113
M-10	GRND LVLS	SPARGE ACCUM. TANK	S-3A	SPARGING		W404C		NO							24"	48" L		8							99
M-11	GRND LVLS	SPARGE ACCUM TANK	S-3B	SPARGING		W404C		NO							24"	48" L		7							99
M-12	GRND LVLN	SPARGE ACCUM. TANK	S-4A	SPARGING		W404B		NO							24"	48" L		7							98
M-13	GRND LVLN	SPARGE ACCUM. TANK	S-4B	SPARGING		W404B		NO							24"	48" L		5							98
M-14	GRND LVLS	SPARGING TANK	S-2A	SPARGING		W404C	HYPUR	YES	CSC-100							54X18X36		1		NO			ELEC	WAYNE, NJ	99
M-15	GRND LVLS	SPARGING TANK	S-2B	SPARGING		W404C	HYPUR	YES	CSC-100							54X18X36		1		NO			ELEC	WAYNE, NJ	99
M-01	GRND LVL	CONDEN SEPARATOR PUMP	P-1	GRIND RM		W404A	GRUNDFOSS	YES	16-40		C.I		230	7.5Hp 3450RPM		11.5x8.5	206			YES			ELEC	CLOVIS, CA; 65 GPM MAX	129
M-02	GRND LVL	CONDEN SEPARATOR TANK	V-18	GRIND RM		W404A									48"	60" L		4							129
M-23	GRND LVL	MANIFOLD TXFER PUMP	P-4	TNK FARM		W404H	VAUGHN	YES	84L6S				21	15HP 1170RPM						YES			ELEC	MONTESANO, WA; 200 GPM	56
M-31	TANK TOP	WASTE WATER	V-1	TNK FARM		W404G	STECO	YES							8'	18' H		9							1
M-32	TANK TOP	CHLOR RECYCLE SOLVENT	V-2	TNK FARM		W404G	STECO	YES							8'	18' H		8							4
M-33	TANK TOP	KILN FUEL TANK	V-3	TNK FARM		W404G	STECO	YES							8'	18' H		11							3/6/11
M-34	TANK TOP	KILN FUEL TANK	V-4	TNK FARM		W404G	STECO	YES							8'	18' H		9							6
M-35	TANK TOP	KILN FUEL TANK	V-5	TNK FARM		W404H									12'	24' H		10							6
M-36	TANK TOP	KILN FUEL TANK	V-6	TNK FARM		W404H									12'	24' H		8							12
M-37	TANK TOP	KILN FUEL TANK	V-7	TNK FARM		W404H	STECO	YES							8'	18' H		9							5
M-38	TANK TOP	INCINERATION WASTE LIQUID	V-8	TNK FARM		W404H	STECO	YES							8'	18' H		10							5
M-25	GRND LVL	DIESEL INJECTION PUMP	P-11	DRUM PRO		W404F	CAT	YES	1050				60	10Hp 1750RPM		1" X 1/2"	44			NO			ELEC	10 GPM MAX	16
M-56	GRND LVL	GRINDING PUMP	P-5A	DRUM PRO		W404F	VAUGHN	YES		91	C.I		75	20Hp 1760RPM		3"X4"X8'	400			YES			ELEC	BELT DRIVE	NONE
M-58	GRND LVL	GRINDING PUMP	P-5	DRUM PRO		W404F	VAUGHN			91													ELEC	BELT DRIVE	NONE
M-28	GRND LVL	PORTBL DIAPHM TXR PUMP	P-6	DRUM PRO			ROPER	YES	DB-133CC		C.I.			240 GPM MAX			250			YES			AIR	TYPE 3	NONE
M-29	GRND LVL	PORTBL DIAPHM TXR PUMP	P-7	DRUM PRO			ROPER		DB-133CC		C.I.									YES			AIR	TYPE 3	NONE
M-30	GRND LVL	PORTBL DIAPHM TXR PUMP	P-8	DRUM PRO			ROPER		DB-133CC		C.I.									YES			AIR	TYPE 3	NONE
M-39	GRND LVL	PORTBL DIAPHM TXR PUMP	P-9	DRUM PRO			ROPER		DB-133CC		C.I.									YES			AIR	TYPE 3	NONE
M-40	GRND LVL	PORTBL DIAPHM TXR PUMP	P-10	DRUM PRO			ROPER		DB-133CC		C.I.														NONE
M-16	UPPER LVL	SOLV STORE TANK	V-9	SOL STOR		W404D		UNK							6'	25' L		5							
M-17	UPPER LVL	SOLV STORE TANK	V-10	SOL STOR		W404D		UNK							6'	25' L		6							137/154
M-18	UPPER LVL	SOLV STORE TANK	V-11	SOL STOR		W404D		UNK							6'	25' L		5							138/154
M-19	UPPER LVL	SOLV STORE TANK	V-12	SOL STOR		W404D		UNK							6'	25' L		6							138/155
M-20	UPPER LVL	SOLV STORE TANK	V-13	SOL STOR		W404D		UNK							6'	25' L		7							143/156
M-21	UPPER LVL	SOLV STORE TANK	V-14	SOL STOR		W404D		UNK							6'	25' L		7							143/158
M-22	UPPER LVL	SOLV STORE TANK	V-15 A	SOL STOR		W404E		UNK							6'	11' 6" L		6							158
M-24	GRND LVL	DIESEL STORE TANK	V-17	SOL STOR	DIESEL	W404F		NO							39"	8' L									149
M-4U	UPPER LVL	SOLV STORE TANK	V-15 B	SOL STOR		W404E		UNK							6'	11' 6" L		5							
M-4U	UPPER LVL	SOLV STORE TANK	V-15 C	SOL STOR		W404E		UNK							6'	11' 6" L		5							14
M-4U	UPPER LVL	SOLV STORE TANK	V-15 D	SOL STOR		W404E		UNK							6'	11' 6" L		5							149
M-4U	UPPER LVL	SOLV STORE TANK	V-16	SOL STOR		W404E		UNK							9'	25' L		3							149
																									161
M-45	GRND LVL	STEAM DRYER	DR-	GRIND RM		W404A																		0.00	
M-46	GRND LVL	SHREDDER		GRIND RM		W404A																			
M-47	GRND LVL	GRANULATOR		GRIND RM		W404A																			
M-48	GRND LVL	CYCLONE		GRIND RM		W404A																			
M-49	GRND LVL	BAGHOUSE		GRIND RM		W404A																			
M-50	GRND LVL	COLLECTION TANK (FUTURE)	T-	GRIND RM		W404A																			
M-51	GRND LVL	BLOWER		GRIND RM		W404A																			
M-52	GRND LVL	SCREW CONVEYOR	CV-	GRIND RM		W404A																			
M-53	GRND LVL	CONDEN SEP. (DUP.M-02)	V-18	GRIND RM		W404A																		TAG M53 DUPLICATES M02	
M-54	GRND LVL	PUMP (DUP.M-01)	P-18	GRIND RM		W404A																		TAG M54 DUPLICATES M01	
M-55	GRND LVL	EXCHANGER	E-	GRIND RM		W404A																			
M-62	GRND LVL	SCREW CONVEYOR	CV-	GRIND RM		W404A																			

THIS DATA SHEET IS ORGANIZED FIRST BY PROJECT AREA AND THEN IN MECHANICAL TAG NUMBER (M-XXX) SEQUENCE.

PREPARED BY: CARROLL

UNITED STATES POLLUTION CONTROL INC. P. O. Box [illegible]
HYDROCARBON RECYCLERS INC. - PROJECT: [illegible] DATA SHEET - WICHITA
PLANT LOCATION: WICHITA FD CONTRACT No. [illegible]

DATE: 29 MAR 81

TAG No.	LOCATION	COMPONENT / EQUIPMENT NAME	COMP. EQUIP. ID No.	UNIT PROCESS SYSTEM	FACILITY or SERVICE	P & ID REF. DWG.	VENDOR / FABRICATOR	NAME PLATE EXIST	MODEL No.	AGE EST. Yrs	MAT'L OF CONST.	DESIGN TEMP	RATED / SPECIFIED CAPACITY FRES	DIMENSIONS DIA.	L x W x H	WT LBS	EPA EMISSION REQUIREMENTS MONITR	CONTROL	DOC. AVAILABLE SPEC DATA	OPS	MAINT	POWER SOURCE	COMMENTS	PHOTO ALBUM No.
																								56
M-03	GRND LVLN	SPARGING TANK	S-1C	SPARGING		W4046	PUSITAN	YES	SRS-2500	86		50		25"	30" H		5		NO			ELEC.		98
M-04	GRND LVLN	SPARGING TANK	S-1B	SPARGING		W4046	PUSITAN	YES	SRS-4000	83		50		25"	48" H		4		NO			ELEC.		95
M-05	GRND LVLN	SPARGING TANK	S-1A	SPARGING		W4046	PUSITAN	YES	SRS-4000	83		50		25"	48" H		5		NO			ELEC.		100
M-06	GRND LVL	SPARGE WATER PUMP	P-2A	SPARGING		W4045		NO					1Hp 3450RPM		1" X 4"	23			NO			ELEC.	PUMP IS SUBMERGED	100
M-07	GRND LVL	SPARGE WATER PUMP	P-2B	SPARGING		W4045	[illegible]	YES	SMP-1060				1Hp 3450RPM		1" X 4"	23			NO			ELEC.	ALLENTOWN, PA	98
M-08	GRND LVL	SPARGE SOLVENT PUMP	P-3A	SPARGING		W4046	INGERSOLL RAND	YES	SMP-1060				1Hp 3450RPM		1" X 4"	23			NO			ELEC.	ALLENTOWN, PA	113
M-09	GRND LVL	SPARGE SOLVENT PUMP	P-3B	SPARGING		W4046	INGERSOLL RAND	YES	SMP-1060															99
M-10	GRND LVLS	SPARGE ACCUM. TANK	S-3A	SPARGING		W4042		NO						24"	48" L		8							99
M-11	GRND LVLS	SPARGE ACCUM. TANK	S-3B	SPARGING		W4042		NO						24"	48" L		7							98
M-12	GRND LVLN	SPARGE ACCUM. TANK	S-4A	SPARGING		W4042		NO						24"	48" L		7							98
M-13	GRND LVLN	SPARGE ACCUM. TANK	S-4B	SPARGING		W4042		NO						24"	48" L		5							99
M-14	GRND LVLS	SPARGING TANK	S-2A	SPARGING		W4042	HAYLAR	YES	ESS-100						54X18X36		1		NO			ELEC.	WAYNE, NJ	97
M-15	GRND LVLS	SPARGING TANK	S-2B	SPARGING		W4042	HAYLAR	YES	ESS-100						54X18X36		1		NO			ELEC.	WAYNE, NJ	
M-01	GRND LVL	CONDEN SEPARATOR PUMP	P-1	GRIND RM		[illegible]	[illegible]	YES	15-40		C.I.	220	7.5Hp 3450RPM		11.5x3.5	206			YES			ELEC	CLOVIS, CA: 65 GPM MAX	125
M-02	GRND LVL	CONDEN SEPARATOR TANK	V-1S	GRIND RM		[illegible]								48"	60" L		4							124
M-33	GRND LVL	MANIFOLD TXFER PUMP	P-4	TNK FARM		W4046	[illegible]	YES	84LS5				21 15HP 1170RPM						YES			ELEC	MONTESANO, WA: 200 GPM	35
M-31	TANK TOP	WASTE WATER	V-1	TNK FARM		W4046	STECO	YES						6'	18' H		9							1
M-32	TANK TOP	CHLOR RECYCLE SOLVENT	V-2	TNK FARM		W4046	STECO	YES						8'	18' H		8							3
M-33	TANK TOP	KILN FUEL TANK	V-3	TNK FARM		W4046	STECO	YES						6'	18' H		11							3/6/11
M-34	TANK TOP	KILN FUEL TANK	V-4	TNK FARM		W4046	STECO	YES						8'	18' H		9							5
M-35	TANK TOP	KILN FUEL TANK	V-5	TNK FARM		W4046								12'	24' H		10							6
M-36	TANK TOP	KILN FUEL TANK	V-6	TNK FARM		W4046	STECO	YES						12	24' H		8							12
M-37	TANK TOP	KILN FUEL TANK	V-7	TNK FARM		W4046	STECO	YES						8'	18' H		9							5
M-38	TANK TOP	INCINERATION WASTE LIQUID	V-8	TNK FARM		W4046	STECO	YES						8'	18' H		10							5
M-25	GRND LVL	DIESEL INJECTION PUMP	P-11	DRUM FRCC		W4047	[illegible]	YES	1057			60	10Hp 1750RPM		1" X 1/2"	44			NO			ELEC	10 GPM MAX	16
M-26	GRND LVL	GRINDING PUMP	P-5	DRUM FRCC		W4047	[illegible] SILVER	YES	GORTR 435	76	C.I.	75	20Hp 1750RPM		3"X4"X8"	400			YES			ELEC	BELT DRIVE	76
M-27	GRND LVL	GRINDING PUMP FILTER	F-1	DRUM FRCC		W4046								110"	24" H								MAGNETIC TYPE	77
M-28	GRND LVL	PORTBL DIAPHM TXR PUMP	P-6	DRUM FRCC			ROPER	YES	DB-133CCN		C.I.		240 GPM MAX			250			YES			AIR	TYPE 3	NONE
M-29	GRND LVL	PORTBL DIAPHM TXR PUMP	P-7	DRUM FRCC			ROPER		DB-133CCN		C.I.								YES			AIR	TYPE 3	NONE
M-30	GRND LVL	PORTBL DIAPHM TXR PUMP	P-8	DRUM FRCC			ROPER		DB-133CCN		C.I.								YES			AIR	TYPE 3	NONE
M-39	GRND LVL	PORTBL DIAPHM TXR PUMP	P-9	DRUM FRCC			ROPER		DB-133CCN		C.I.								YES			AIR	TYPE 3	NONE
M-40	GRND LVL	PORTBL DIAPHM TXR PUMP	P-10	DRUM FRCC			ROPER		DB-133CCN		C.I.													NONE
M-16	UPPER LVL	SOLV STORE TANK	V-9	SOL STOR		W4046		UNK						6'	25' L		5							137/154
M-17	UPPER LVL	SOLV STORE TANK	V-10	SOL STOR		W4046		UNK						6'	25' L		6							136/154
M-18	UPPER LVL	SOLV STORE TANK	V-11	SOL STOR		W4046		UNK						6'	25' L		5							133/152
M-19	UPPER LVL	SOLV STORE TANK	V-12	SOL STOR		W4046		UNK						6'	25' L		6							142/158
M-20	UPPER LVL	SOLV STORE TANK	V-13	SOL STOR		W4046		UNK						6'	25' L		7							141/159
M-21	UPPER LVL	SOLV STORE TANK	V-14	SOL STOR		W4046		UNK						6'	25' L		7							159
M-22	UPPER LVL	SOLV STORE TANK	V-15	SOL STOR		W4046		UNK						6'	11' 6" L		6							149
M-24	GRND LVL	DIESEL STORE TANK	V-17	SOL STOR	DIESEL	W4047		NO						37"	8' L									14
M-41U	UPPER LVL	SOLV STORE TANK	V-15	SOL STOR		W4046		UNK						6'	11' 6" L		5							147
M-42U	UPPER LVL	SOLV STORE TANK	V-15	SOL STOR		W4046		UNK						6'	11' 6" L		5							149
M-43U	UPPER LVL	SOLV STORE TANK	V-15	SOL STOR		W4046		UNK						6'	11' 6" L		5							161
M-44U	UPPER LVL	SOLV STORE TANK	V-15	SOL STOR		W4046		UNK						7'	25' L		3							
M-45	GRND LVL	STEAM DRYER	DR-	GRIND RM		W4046																		
M-46	GRND LVL	SHREDDER		GRIND RM		W4046																		
M-47	GRND LVL	GRANULATOR		GRIND RM		W4046																		
M-48	GRND LVL	CYCLONE		GRIND RM		W4046																		
M-49	GRND LVL	BAGHOUSE		GRIND RM		W4046																		
M-50	GRND LVL	COLLECTION TANK (FUTURE)	T-	GRIND RM		W4046																		
M-51	GRND LVL	BLOWER		GRIND RM		W4046																		
M-52	GRND LVL	SCREW CONVEYOR	CV-	GRIND RM		W4046																	TAG M53 DUPLICATES M02	
M-53	GRND LVL	CONDEN SEP. (DUP.M-02)	V-1B	GRIND RM		W4046																	TAG M54 DUPLICATES M01	
M-54	GRND LVL	PUMP (DUP.M-01)	P-1B	GRIND RM		W4046																		
M-55	GRND LVL	EXCHANGER	E-	GRIND RM		W4046																		

THIS DATA SHEET IS ORGANIZED FIRST BY PROJECT AREA AND THEN IN MECHANICAL TAG NUMBER (M-XXX) SEQUENCE.
[illegible]

LOCATION OF EQUIPMENT MONITORING POINTS
Wichita Plant Only

This "Equipment Monitoring Point Location List" was developed for use at HRI's Wichita plant. Its purpose is to identify by location potential leak or emission points for the listed tanks. This list is in lieu of attaching an aluminum "Write-On Tag" as was done at the San Antonio plant.

The form contains eleven columns which are used as follows:

1. Tank Number: The tank identification number is shown in this column.

2. Tank Location: The process area location of the tank is provided in this column.

3. Contents / Service: The contents that the tank is normally expected to hold are listed in this column.

4. thru 9. Location on Tank of Potential Leak Points: A number is listed in the applicable location column to indicate the number of potential leak points that exist for that particular location on the tank.

10. Total: This column contains the total sum of all potential leak points that exist for the listed tank.

11. Comments: Special remarks pertaining to the tank are listed in this column.

UNITED STATES POLLUTION CONTROL INC.
HYDROCARBON RECYCLERS INC. - PROJECT

EQUIPMENT MONITORING POINTS

PLANT LOCATION: WICHITA

TANK No.	LOCATION	CONTENTS / SERVICE	NUMBER OF MONITOR POINT							COMMENTS
			TOP	BOTTOM	NORTH	EAST	SOUTH	WEST	TOTAL	
V-01	K.F. STORE	WASTE WATER	6			1	1	1	9	
V-02	K.F. STORE	CHLOR RECYCLE SOLVENT	6			1	1		8	
V-03	K.F. STORE	KILN FUEL	3			2	1	5	11	
V-04	K.F. STORE	KILN FUEL	6	1		1		1	9	
V-05	K.F. STORE	KILN FUEL	6		1	1	1	1	10	
V-06	K.F. STORE	KILN FUEL	6				1	1	8	
V-07	K.F. STORE	KILN FUEL	6		1	1		1	9	
V-08	K.F. STORE	INCINERTR WASTE LIQUIDS	6	1	1	1		1	10	
V-09	SOLV STORE	CHLORINATED SOLVENTS	3	2					5	
V-10	SOLV STORE	CHLORINATED SOLVENTS	3	3					6	
V-11	SOLV STORE	CHLORINATED SOLVENTS	3	2					5	
V-12	SOLV STORE	CHLORINATED SOLVENTS	3	3					6	
V-13	SOLV STORE	CHLORINATED SOLVENTS	4	3					7	
V-14	SOLV STORE	NON-CHLORINATED SOLVENTS	4	3					7	
V-15 A	SOLV STORE	WASTE OIL	3	1	2				6	
V-15 B	SOLV STORE	WASTE OIL	2	1	2				5	
V-15 C	SOLV STORE	WASTE OIL	2	1	2				5	
V-15 D	SOLV STORE	WASTE OIL	2	1	2				5	
V-16	SOLV STORE	WASTE WATER	UN	3					3	
V-17	SOLV STORE	DEISEL STORAGE TANK	2			2		1	5	
S-1 A	SPARGR ROOM		1		1		2	1	5	
S-1 B	SPARGR ROOM		1		1		2		4	
S-1 C	SPARGR ROOM		1		1	1	1	1	5	
S-2 A	SPARGR ROOM			1					1	
S-2 B	SPARGR ROOM			1					1	
S-3 A	SPARGR ROOM			7				1	8	
S-3 B	SPARGR ROOM			6				1	7	
S-4 A	SPARGR ROOM		2	1	1	1	1	1	7	
S-4 B	SPARGR ROOM		1	1		1		2	5	
	SPEC.ROOM	CONDEN./SEPARATOR TANK		1	2		1		4	
									0	
									0	
									0	
									186	

UNITED STATES POLLUTION CONTROL INC.
HYDROCARBON RECYCLERS INC. - PROJECT

FLUOR DANIEL

DATE: 7 MAR 91

USPCI P.O. No. 90088
FD CONTRACT No. 665300

WICHITA EQUIPMENT TRIM

PLANT LOCATION: WICHITA

PREPARED BY: G. GOGOLA

EQUIP No.	EQUIPMENT NAME	AREA UNIT	ACCESS HOLES		INSTRUMENTATION						VALVES				VENT	PLUG	BLND FLNG	NZLE	OTHR	TOTAL	COMMENTS
			MAN	HAND	TEMP	PRES	LEVL	SGHT	FLOW	OTHR	SAFTY	DRAIN	CONV	OTHER							
V-19	STEAM DRYER	GRIND RM			2						2	2		2				5		13	
V-20	SHREDDER	GRIND RM																	1	1	
V-21	GRINDER	GRIND RM																	2	2	
V-23	CYCLONE	GRIND RM																2	1	3	
V-22	BAGHOUSE	GRIND RM																1		1	
V-	COLLECTION TANK (FUTURE)	GRIND RM		1												2		2		5	
P-12	BLOWER	GRIND RM																2		2	
V-25	SCREW CONVEYOR	GRIND RM												1					2	3	
V-18	CONDENSATE SEPARATOR	GRIND RM		1	1	2	1				1	3	1		1			3		14	
P-13	PUMP																	2		2	
E-1	EXCHANGER				1													4		5	
																				0	
																				0	
																				0	
																				0	
																				0	

Appendix N-E - Equipment Designated As No Detectable Emissions

February 18, 1992

Be it known that I, as the designated authorizing individual for USPCI Hydrocarbon Recovery Services, Inc. of Wichita, have designated the following pumps as meeting the criteria from 40 CFR Part 265.1052, paragraphs (e)(1) through (3). These pumps are eligible for the exemption from the monthly monitoring required of pumps in light liquid hazardous waste service and will be monitored on an annual basis and when leaks become visually apparent.

Stephen M Kerter — 12/21/90

Name — Date

Pump Identification No.	Type and Description
M - 28	Pneumatic #P-6
M - 29	Pneumatic #P-7
M - 30	Pneumatic #P-8
M - 39	Pneumatic #P-9
M - 40	Pneumatic #P-10

Appendix N-F - Monitoring Results and Repair Reports

February 18, 1992

RCRA VOC EQUIPMENT LDAR PROGRAM – FIELD LEAK MONITORING RECORD (40 CFR 265 SUBPART BB)

FACILITY: Wichita HRS USEPA ID NUMBER: KSD007246846 Date: 12/15/90

Instrument Operator: D. Cocker Calibration Gas ID#: 10r31995 Daily Calibration Check: 10,000 ppm CH_4

Instrument ID#: 20859 Inspector's Name: Ron Robertson Inspector's Signature: [signature]

Pipeline/Process ID: K 153 (Process Area) Type of Material Service: Kiln Fuel

DESCRIPTION	TAG NUMBER	EQUIPEMENT/CONNECTION CONDITION DESCRIPTION	OVA READING
3" Ball Valve near middle process unit	P123		<10 ppm
2" Ball Valve near middle process unit	P124		15 ppm
2" Ball Valve near middle process unit	P126		<10 ppm
2" Hose Connection near middle unit	P127	Connected	
3" Plug Valve off middle unit	P128		<10 ppm
2" Hose Connection near middle unit	P125	Connected	
4" Ball Valve at Process Area manifold	P136		20 ppm
1/2" " " " " " "	P137		<10 ppm
4" Hose Connection at Process Manifold	P138	Capped	<10 ppm

Comments (Weather, Dilutor Cal.)

Background Measurements: #1 #2 #3 #4 #5

RCRA VOC EQUIPMENT LDAR PROGRAM – FIELD LEAK MONITORING RECORD (40 CFR 265 SUBPART BB)

FACILITY: HRE-WICHITA USEPA ID NUMBER: KSD007246846 Date: 12/15/10

Instrument Operator: D. Coker Calibration Gas ID#: LOT 31995 Daily Calibration Check: 10 ppm Methane

Instrument ID#: 20859 Inspector's Name: Ron Robertson Inspector's Signature: [illegible]

Pipeline/Process ID: C115 Type of Material Service: CHLORINATED ORGANIC LIQUIDS/

DESCRIPTION	TAG NUMBER	EQUIPEMENT/CONNECTION CONDITION DESCRIPTION	OVA READING
2" BALL VALVE PAST MAN.	P-92		15 ppm
1½" BALL VALVE AT DH MAN.	P-93		<10 ppm
2" HOSE CONNECTION AT DA MAN	P-94	CAPPED	<10 ppm
2" BALL VALVE AT MAN.	P-95		<10 ppm
1½" BALL VALVE AT TM.	P-96		<10 ppm
2" HOSE CONNECTION AT TM.	P-97		<10 ppm

Comments (Weather, Dilutor Cal.)

Background Measurements: #1 #2 #3 #4 #5

RCRA VOC EQUIPMENT LDAR PROGRAM – FIELD LEAK MONITORING RECORD (40 CFR 265 SUBPART BB)

FACILITY: Wichita-HRS USEPA ID NUMBER: KSD007246846 Date: 12/15/90

Instrument Operator: D Gokce Calibration Gas ID#: LOT 3995 Daily Calibration Check: 10,000 ppm CH4

Instrument ID#: 20859 Inspector's Name: R. Robertson Inspector's Signature: [signature]

Pipeline/Process ID: K153 (Tank Farm) Type of Material Service: Kiln Fuel

DESCRIPTION	TAG NUMBER	EQUIPEMENT/CONNECTION CONDITION DESCRIPTION	OVA READING
4" Gate Valve Between Tanks V5+V6	P139		<10 ppm
3" Gate Valve Near Tank V6	P140		<10 ppm
= = = = = V5	P141		<10 ppm
3" Gate Valve Between V5+V6	P142		<10 ppm
= = = = = =	P143	<10 ppm	~~<10 ppm~~
= = = = = =	P145		<10 ppm
3" Ball Valve at Truck Bay Manifold	P151		<10 ppm
1" = = = = = =	P152	OPEN ENDED, BG. #1	22 ppm
Hose Connection = =	P153	CAPPED	
1" Check Valve N. of Truck Bay Manifold	P154		
1" Ball Valve = = =	P155	OPEN ENDED	<10 ppm
4" Ball Valve = = =	P156		<10 ppm

Comments (Weather, Dilutor Cal.)

Background Measurements: #1 22 #2 #3 #4 #5

RCRA VOC EQUIPMENT LDAR PROGRAM – FIELD LEAK MONITORING RECORD (40 CFR 265 SUBPART BB)

FACILITY: HRI-WICHITA USEPA ID NUMBER: KSD007246846 Date: 12/15/90

Instrument Operator: RUDY VEIZZUH Calibration Gas ID#: 31995 Daily Calibration Check: 10,000 ppm METHANE

Instrument ID#: 20749 Inspector's Name: RUDY VEIZZUH Inspector's Signature: [signature]

Pipeline/Process ID: K-156/C104/W109 Type of Material Service: KILN FUEL / CHLORINATED ORGANIC LIQUIDS, AQ [illegible]

DESCRIPTION	TAG NUMBER	EQUIPEMENT/CONNECTION CONDITION DESCRIPTION	OVA READING
3" GATE VALVE AV-3	P-64		<10 ppm
3" GATE VALVE AT T.M.	P-67		<10 ppm
3" HOSE CONNECTION AT TM.	P-68	CAPPED	
1/2" BALL VALVE AT T.M	P-69		15 ppm
2" GATE VALVE AT D.T.	P-72		<10 ppm
2" CHECK VALVE	P-73 V	Unable to Reach	
3" GATE VALVE AT T.M.	P-80		<10 ppm
1/2" BALL VALVE AT T.M. OE.	P-81, 82	OPEN ENDED	<10 ppm
3" HOSE CONNECTION AT TM.	P-83	CAPPED	

Comments (Weather, Dilutor Cal.)

Background Measurements: #1 #2 #3 #4 #5

RCRA VOC EQUIPMENT LDAR PROGRAM – FIELD LEAK MONITORING RECORD (40 CFR 265 SUBPART BB)

FACILITY: HEI - WICHITA USEPA ID NUMBER: KSD007246846 Date: 12/15/96

Instrument Operator: RUDY VERZUH Calibration Gas ID#: 31995 Daily Calibration Check: 10,000 ppm METHANE

Instrument ID#: 20749 Inspector's Name: RUDY VERZUH Inspector's Signature: [signature]

Pipeline/Process ID: C101/C102 Type of Material Service: CHLORINATED ORGANIC LIQUIDS/

DESCRIPTION	TAG NUMBER	EQUIPEMENT/CONNECTION CONDITION DESCRIPTION	OVA READING
3" GATE VALVE AT	P-20		<10 ppm
1" GATE VALVE AT DRYER TANK	P-21		<10 "
2" GATE VALVE AT DRYER TANK	P-24	Open Ended Line (Needs Cap)	<10 "
1" GATE VALVE " " "	P-25		<10 "
2" GATE VALVE " " "	P-26		<10 "
3" HOSE CONNECTION AT D.T.	P-27		<10 "
3" HOSE CONNECTION AT D.T.	P-28		<10 "
1" HOSE CONNECTION AT D.T.	P-29	Open Ended Line	10 "
1" BALL VALVE AT D.T.	P-33,34		<10 "
1" GATE VALVE AT D.T.	P-30		<10 "
1" EL BOW - OPEN ENDED AT D.T.	P-31	Open Ended Line	15 "
1" BALL VALVE - OPEN ENDED	P-32		<10 "
1" GATE VALVE AT D.T.	P-35		<10 "
2" HOSE CONNECTION AT D.T.	P-36	Drain Line - Needs Cap	"

Comments (Weather, Dilutor Cal.)

Background Measurements: #1 #2 #3 #4 #5

RCRA VOC EQUIPMENT LDAR PROGRAM – FIELD LEAK MONITORING RECORD (40 CFR 265 SUBPART BB)

FACILITY: WICHITA - HRI USEPA ID NUMBER: KSD007246846 Date: 12/15/96

Instrument Operator: RUDY VERZUH Calibration Gas ID#: 31995 Daily Calibration Check: 10,000 ppm METHANE

Instrument ID#: 20749 Inspector's Name: RUDY VERZUH Inspector's Signature: [signature]

Pipeline/Process ID: C100/K157 Type of Material Service: CHLORINATED ORGANIC LIQUIDS / [illegible]

DESCRIPTION	TAG NUMBER	EQUIPEMENT/CONNECTION CONDITION DESCRIPTION	OVA READING
3" GATE VALVE AT TRUCK MANIFOLD	P-9		<10 ppm
3" HOSE CONNECTION AT MANIFOLD	P-10		<10 "
1/2" BALL VALVE (DRAIN ON C-100)	P-11	Needs Cap (Open Ended Line)	<10 "
2" BALL VALVE AT DH MANIFOLD	P-12		14 "
2" HOSE CONNECTION AT DH MAN.	P-13		<10
1/2" BALL VALVE AT DH MAN.	P-14	Drain Line, Needs Cap	<10
3" GATE VALVE AT TANK V-7	P-15		<10
3" GATE VALVE AT AT TRUCK MAN.	P-18		<10
1/2" BALL VALVE AT TRUCK MAN.	P-19	Drain Line, Needs Cap	<10

Comments (Weather, Dilutor Cal.)

Background Measurements: #1 #2 #3 #4 #5

RCRA VOC EQUIPMENT LDAR PROGRAM – FIELD LEAK MONITORING RECORD (40 CFR 265 SUBPART BB)

FACILITY: ARI - WICHITA USEPA ID NUMBER: KSD007246846 Date: 12/15/90

Instrument Operator: RUDY VERZUH Calibration Gas ID#: 31995 Daily Calibration Check: 10,000 ppm Methane

Instrument ID#: 20749 Inspector's Name: RUDY VERZUH Inspector's Signature: [illegible]

Pipeline/Process ID: K154/K155 Type of Material Service: KILN FUEL

DESCRIPTION	TAG NUMBER	EQUIPEMENT/CONNECTION CONDITION DESCRIPTION	OVA READING
4" GATE VALVE AT TANK V-5	P-39		<10 ppm
4" GATE VALVE NEAR TANK V-6	P-41		<10 "
1/2" BALL VALVE " " "	P-42		<10 "
4" BALL VALVE " " "	P-44		<10 "
4" HOSE CONNECTION " "	P-50		<10 "
4" BALL VALVE	P-52		<10 ppm
4" GATE VALVE AT V6	P-55		<10 "
1/2" HOSE CONNECTION AT	P-84	OPEN ENDED	
3" GATE VALVE AT V4	P-56		<10 ppm
3" GATE VALVE AT TRUCK MAN.	P-61		<10 ppm
3" HOSE CONNECTION AT TM.	P-62	CAPPED	
1/2" BALL VALVE AT T.M.	P-63		<10 ppm

Comments (Weather, Dilutor Cal.)

Background Measurements: #1 #2 #3 #4 #5

RCRA VOC EQUIPMENT LDAR PROGRAM – FIELD LEAK MONITORING RECORD (40 CFR 265 SUBPART BB)

FACILITY: HCI WICHITA USEPA ID NUMBER: KSD007246846 Date: 12/17/90

Instrument Operator: RUDY VERZUH Calibration Gas ID#: 31995 Daily Calibration Check: 10,000 ppm METHANE

Instrument ID#: 20749 Inspector's Name: RUDY VERZUH Inspector's Signature: [signature]

Pipeline/Process ID: N112/K152/C110 Type of Material Service: NON-CHLORINATED ORGANIC LIQUIDS / KILN FEED / CHLORINATED ORGANIC LIQUIDS

DESCRIPTION	TAG NUMBER	EQUIPEMENT/CONNECTION CONDITION DESCRIPTION	OVA READING
2" Ball Valve at Truck Man.	P-112		<10 ppm
1/2" Ball Valve at Truck Man.	P-113	Open Ended Line	<10 "
2" Hose Connection at Truck Man.	P-115		<10 "
4" Plug Valve at Disperser	P-116		<10 ppm
2" Hose Connection at DH. Man.	P-158		<10 ppm
1/2" Ball Valve at DH Man	P-160	Open Ended Line	15 ppm
2" Ball Valve at DH Man.	P-159		<10 ppm
2" Hose Connection at Truck Man.	P-161	Open Line Needs Cap	<10 ppm
2" Ball Valve at Truck Man.	P-162	~~Open Line Needs Cap~~	<10 "
1/2" Ball Valve at Truck Man.	P-163	Open Ended Line	<10 "

Comments (Weather, Dilutor Cal.)

Background Measurements: #1 #2 #3 #4 #5

RCRA VOC EQUIPMENT LDAR PROGRAM – FIELD LEAK MONITORING RECORD (40 CFR 265 SUBPART BB)

FACILITY: ARI - WICHITA USEPA ID NUMBER: KSD007246846 Date: 12/17/90

Instrument Operator: RUDY VERZUH Calibration Gas ID#: Lot 31995 Daily Calibration Check: 10,000 ppm Methane

Instrument ID#: 20749 Inspector's Name: RUDY VERZUH Inspector's Signature: [signature]

Pipeline/Process ID: C114/C113 Type of Material Service: CHLORINATED ORGANIC LIQUIDS

DESCRIPTION	TAG NUMBER	EQUIPEMENT/CONNECTION CONDITION DESCRIPTION	OVA READING
2" Ball Valve At DA MAN	P-98		< 10 ppm
1/2" Ball Valve At DA MAN	P-99	Open Ended Drain Line	< 10 "
2" Hose Connection At DA MAN	P-100	Capped	< 10 "
2" Ball Valve At Truck MAN	P-101		< 10 "
1/2 Ball Valve At Truck MAN	P-102, 103	Open Ended Line	< 10 "
2" Hose Connection At Truck MAN	P-104	Capped	< 10 "
2" Ball Valve At DA MAN	P-105		< 10 ppm
1/2" Ball Valve At DA MAN	P-106	Open Ended Drain Line	< 10 ppm
2" Hose Connection At DA MAN	P107	Capped	< 10 ppm
2" Ball Valve At Truck MAN	P108		< 10 ppm
1/2" Ball Valve At Truck MAN	P-109	Open Ended Drain Line	< 10 "
2" Hose Connection At Truck MAN	P-110	Needs Cap	< 10 "

Comments (Weather, Dilutor Cal.)

Background Measurements: #1 #2 #3 #4 #5

RCRA VOC EQUIPMENT LDAR PROGRAM – FIELD LEAK MONITORING RECORD (40 CFR 265 SUBPART BB)

FACILITY: HRI - WICHITA USEPA ID NUMBER: KSD007246846 Date: 12/15/90

Instrument Operator: D Coker Calibration Gas ID#: LOT 31995 Daily Calibration Check: 10,000 ppm METHANE

Instrument ID#: 20859 Inspector's Name: R. [illegible] Inspector's Signature: [illegible]

Pipeline/Process ID: C124/C159/C160/C158 Type of Material Service: CHLORINATED ORGANIC LIQUIDS/

DESCRIPTION	TAG NUMBER	EQUIPEMENT/CONNECTION CONDITION DESCRIPTION	OVA READING
1" BALL VALVE AT	P-186		12
3/4" BALL VALVE	P-187		20
1" CHECK VALVE	P-188		<10
1" BALL VALVE S-3A	P-196		18
3/4" BALL VALVE AT P3B	P-197	NEEDS PLUG	10
1" CHECK VALVE AT P-3A	P-198V		<10
3/4" DRAIN LINE AT 1C	P-202		<10
3/4" DRAIN LINE AT 1B	P-203		<10
1 1/2" GATE VALVE ~~1B~~ 1C	P-204	NEEDS PLUGGED	<10
1 1/2" GATE VALVE " 1B	P-205	"	<10
1 1/2" GATE VALVE ~~B~~ 1A	P-206	"	<10

Comments (Weather, Dilutor Cal.)

Background Measurements: #1 #2 #3 #4 #5

RCRA VOC EQUIPMENT LDAR PROGRAM – FIELD LEAK MONITORING RECORD (40 CFR 265 SUBPART BB)

FACILITY: HRI WICHITA USEPA ID NUMBER: KSD007246468 Date: 12/15/96

Instrument Operator: D. COLER Calibration Gas ID#: LOT 31445 Daily Calibration Check: 10,000ppm METHANE

Instrument ID#: 20859 Inspector's Name: R. [illegible] Inspector's Signature: [illegible]

Pipeline/Process ID: K151/N150/N149 Type of Material Service: KILN FUEL/NON CHLORINATED ORGANIC LIQUIDS

DESCRIPTION	TAG NUMBER	EQUIPEMENT/CONNECTION CONDITION DESCRIPTION	OVA READING
2" BALL VALVE AT V3	P-207	AMBIENT IS 12-15 ppm	10
2" BALL VALVE AT DA MAN.	P-208		11
1/2" BALL VALVE AT DA MAN.	P-209	NOZZLE PLUG	17
2" HOSE CONNECTION AT DA MAN	P-210		22
1" BALL VALVE W ~~SPARGER~~ DISPERSER	P-211	A	11
1" DRAIN LINE W OF ~~SPARGER~~ DISPERSER	P-212		40
1" BALL VALVE W OF DISPERSER	P-213		17
1/2" BALL VALVE DIESEL TANK	P-214		17
1/2" BALL VALVE DIESEL TANK	P-215	NOZZLE PLUG	12
1/2" HOSE CONNECTION DISPERSER	P-216 V		13
1/2" HOSE CONNECTION DISPERSER	P-217 V		17
2" GATE VALVE DIESEL TANK	P-218		<10
1 1/2" BALL VALVE DIESEL TANK	P-219	NOZZLE PLUG	13

Comments (Weather, Dilutor Cal.)

Background Measurements: #1 #2 #3 #4 #5

RCRA VOC EQUIPMENT LDAR PROGRAM – FIELD LEAK MONITORING RECORD (40 CFR 265 SUBPART BB)

FACILITY: ACI WICHITA USEPA ID NUMBER: KSD007246846 Date: 12/15/90

Instrument Operator: RUDY VERZUH Calibration Gas ID#: Lot 31995 Daily Calibration Check: 10,000 ppm METHANE

Instrument ID#: 20749 Inspector's ~~Name~~ Signature: [signature] Inspector's ~~Signature~~ Name: RUDY VERZUH

Pipeline/Process ID: W104/C141/W133 Type of Material Service: AQUEOUS ORGANIC LIQUIDS/CONCENTRATED ORGANIC LIQUIDS

DESCRIPTION	TAG NUMBER	EQUIPEMENT/CONNECTION CONDITION DESCRIPTION	OVA READING
2" BALL VALVE DA MAN	P-256		12 ppm
1/2" BALL VALVE DA MAN	P-257	open ended line	21 "
2" HOSE CONNECTION DA MAN.	P-258		12 "
2" BALL VALVE V2	P-259		<10 ppm
2" BALL VALVE A DA MAN	P-261		10 "
2" HOSE CONNECTION DA MAN	P-262		< 10 ppm
2" HOSE CONNECTION DA MAN.	P-263		10 ppm
1/2" BALL VALVE DA MAN.	P-264	open ended drain line	10 "
2" BALL VALVE DA MAN.	P-265		12 "

Comments (Weather, Dilutor Cal.)

Background Measurements: #1 #2 #3 #4 #5

RCRA VOC EQUIPMENT LDAR PROGRAM – FIELD LEAK MONITORING RECORD (40 CFR 265 SUBPART BB)

FACILITY: HCI WICHITA USEPA ID NUMBER: KSD007246846 Date: 12/15/10

Instrument Operator: RUDY VERZUH Calibration Gas ID#: Lot 31995 Daily Calibration Check: 10000 ppm METHANE

Instrument ID#: 20749 Inspector's Name: RUDY VERZUH Inspector's Signature: [signature]

Pipeline/Process ID: X146/I147 Type of Material Service: KILN FUEL

DESCRIPTION	TAG NUMBER	EQUIPEMENT/CONNECTION CONDITION DESCRIPTION	OVA READING
2" Ball Valve AT V4	P-238		<10 ppm
1" Ball Valve AT V4	P-247		<10 ppm
1" OPEN LINE AT V4	P-248	Open ended line	<10 ppm
2" Ball VALVE AT DH MAN.	P-249		22 =
1/2" Ball VALVE AT DH MAN.	P-250	Open ended Line	21 =
2" Hose Connection AT DH MAN.	P-251		12 =
2" Ball Valve V-8	P-239		<10 ppm
2" Ball Valve AT DH MAN.	P-241		10 =
2" Hose Connection DH MAN.	P-242		<10 =
1/2" Ball Valve DH MAN.	P-243	Open ended drain line	<10 =
1/2" DRAIN LINE DH MAN.	P-244	↓ ↓ ↓ ↓	15
2" Hose Connection V-8	P-246	No longer Exist	
2" OPEN LINE V-8	P-245	= = =	

Comments (Weather, Dilutor Cal.)

Background Measurements: #1 #2 #3 #4 #5

RCRA VOC EQUIPMENT LDAR PROGRAM – FIELD LEAK MONITORING RECORD (40 CFR 265 SUBPART BB)

FACILITY: HRI WICHITA USEPA ID NUMBER: KSD007246846 Date: 12/15/90

Instrument Operator: RUDY VERZUH Calibration Gas ID#: LOT 31995 Daily Calibration Check: 10,000 PPM METHANE

Instrument ID#: 20749 Inspector's Name: RUDY VERZUH Inspector's Signature: [signature]

Pipeline/Process ID: I130/K148/I131/N132 Type of Material Service: KILN FUEL / NON CHLORINATE ORGANIC LIQUID

DESCRIPTION	TAG NUMBER	EQUIPEMENT/CONNECTION CONDITION DESCRIPTION	OVA READING
1/2" BALL VALVE AT TRUCK MAN.	P-221	Open ended drain line	<10 ppm
3" GATE VALVE AT TRUCK MAN.	P-222		<10 "
3" HOSE CONNECTION AT TRUCK MAN.	P-220		<10 "
2" BALL VALVE AT V-7	P-226		<10 ppm
2" BALL VALVE AT DH MAN.	P-228		11 "
1/2" BALL VALVE AT DH MAN.	P-229	Open ended line	14 "
2" HOSE CONNECTION AT DH MAN.	P-230		11
2" OPEN LINE AT DH MAN.	P-252	Capped	<10 PPM
2" BALL VALVE AT DH MAN.	P-253		<10 "
1/2" BALL VALVE AT DA. MAN.	P-254		10 "
2" HOSE CONNECTION AT DA MAN	P-255		<10 "

Comments (Weather, Dilutor Cal.)

Background Measurements: #1 #2 #3 #4 #5

RCRA VOC EQUIPMENT LDAR PROGRAM – FIELD LEAK MONITORING RECORD (40 CFR 265 SUBPART BB)

FACILITY: HRI WICHITA USEPA ID NUMBER: KSD007246846 Date: 12/15/90

Instrument Operator: D. Coker Calibration Gas ID#: LOT 31995 Daily Calibration Check: 10,000 ppm METHANE

Instrument ID#: 20859 Inspector's Name: R. Robertson Inspector's Signature: R. Robertson

Pipeline/Process ID: C159/C161/C160/C162/C163 Type of Material Service: ORGANIC & ORGANIC LIQUIDS/

DESCRIPTION	TAG NUMBER	EQUIPEMENT/CONNECTION CONDITION DESCRIPTION	OVA READING
3/4" LINE VENT SPARGERS-1C	P-164	NOT PLUGGED	250
3/4" BALL VALVE "	P-165		10
3/4" BALL VALVE "	P-166		10
~~1/2" BALL VALVE~~ "			
1/2" BALL VALVE "	P-167		10
3/4" VENT LINE SPARGERS-1B	P168	NOT PLUGGED	53
3/4" BALL VALVE " "	P169		15
3/4" BALL VALVE " "	P170		19
	P		
1/2" BALL VALVE " "	P171		<10
1/2" BALL VALVE	P172		10

Comments (Weather, Dilutor Cal.)

Background Measurements: #1 #2 #3 #4 #5

RCRA VOC EQUIPMENT LDAR PROGRAM – FIELD LEAK MONITORING RECORD (40 CFR 265 SUBPART BB)

FACILITY: HRI WICHITA USEPA ID NUMBER: KSD007246846 Date: 12/15/90

Instrument Operator: D Coker Calibration Gas ID#: LOT 31995 Daily Calibration Check: 10,000 ppm Methane

Instrument ID#: 20859 Inspector's Name: R Robertson Inspector's Signature: R Robertson

Pipeline/Process ID: C164/C117/C118/C123 Type of Material Service: CHLORINATED ORGANIC LIQUIDS/

DESCRIPTION	TAG NUMBER	EQUIPEMENT/CONNECTION CONDITION DESCRIPTION	OVA READING
3/4" BALL VALVE AT SPARGER S-1A	P-173		<10
3/4" BALL VALVE AT SPARGER S-1A	P-174		10
3/4" VENT LINE SPARGER S-1A	P-175		340
3/4" DRAIN LINE SPARGER " "	P-177		14
~~3/4~~ 1/2" BALL VALVE AT S-2A	P-176		24
1/2" BALL VALVE AT S-2B	P-181		<10
OPEN ENDED LINE S-2B	P-182		<10
1" CHECK VALVE S-2B	P-184		14

Comments (Weather, Dilutor Cal.)

Background Measurements: #1 #2 #3 #4 #5

CO

RCRA VOC EQUIPMENT LDAR PROGRAM – FIELD LEAK MONITORING RECORD (40 CFR 265 SUBPART BB)

FACILITY: HRT WICHITA USEPA ID NUMBER: KSD007246846 Date: 12/15/90

Instrument Operator: RUDY VERZUH Calibration Gas ID#: Lot 3199T Daily Calibration Check: 10,000 ppm METHANE

Instrument ID#: 20749 Inspector's Name: R. VERZUH Inspector's Signature: [signature]

Pipeline/Process ID: K134/K137/K138/K140 Type of Material Service: Kiln Fuel

DESCRIPTION	TAG NUMBER	EQUIPEMENT/CONNECTION CONDITION DESCRIPTION	OVA READING
2" BALL VALVE V6	P 275		<10 ppm
2" HOSE CONNECTION V6	P-276		<10 ppm
1" BALL VALVE V8	P-279		<10 ppm
1" BALL VALVE V8	P-280		11 "
1/4" OPEN LINE V8	P-281	Open ended line	10 "
1" BAL VALVE V7	P282		<10 ppm
1" BAL VALVE V7	P-283		<10 "
1/4" OPEN LINE V7	P-284	Open ended line	<10 "
1" BALL VALVE V4	P-285		40 ppm
1" BALL VALVE V4	P-286		200 ppm
1/4" OPEN LINE V4	P-287	Needs to be plugged unless it's being used as a vent line	>10,000 ppm

Comments (Weather, Dilutor Cal.)

Background Measurements: #1 #2 #3 #4 #5

RCRA VOC EQUIPMENT LDAR PROGRAM – FIELD LEAK MONITORING RECORD (40 CFR 265 SUBPART BB)

FACILITY: HRI WICHITA USEPA ID NUMBER: KSD007240846 Date: 12/15/90

Instrument Operator: R. VERZUH Calibration Gas ID#: Lot 31995 Daily Calibration Check: 10,000 ppm Methane

Instrument ID#: 20749 Inspector's Name: RUDY VERZUH Inspector's Signature: [signature]

Pipeline/Process ID: K139/K136/C124/K157 Type of Material Service: KILN FUEL VAPORS/

DESCRIPTION	TAG NUMBER	EQUIPEMENT/CONNECTION CONDITION DESCRIPTION	OVA READING
1" BALL VALVE V3	P-~~289~~ 288		10 ppm
1" BALL VALVE V3	P-~~290~~ 289		10 ppm
1/4" DRAIN OPENLINE V3	P-290		<10 ppm
1" BALL VALVE V1	P-291		0 ppm
1" BALL VALVE V1	P-292		0
1/4 DRAIN OPENLINE V1	P-293		<10 ppm
1" BALL VALVE	P-307V	Unable to Reach	
1/2 CARBON OPEN LINE AT T.M.	P-308	Needs Cap	<10 ppm

Comments (Weather, Dilutor Cal.)

Background Measurements: #1 #2 #3 #4 #5

RCRA VOC EQUIPMENT LDAR PROGRAM – FIELD LEAK MONITORING RECORD (40 CFR 265 SUBPART BB)

FACILITY: HRI WICHITA USEPA ID NUMBER: KSD007264846 Date: 12/15/90

Instrument Operator: R. VERZUH Calibration Gas ID#: Lot 31995 Daily Calibration Check: 10,000 ppm Methane

Instrument ID#: 20749 Inspector's Name: RUDY VERZUH Inspector's Signature: [signature]

Pipeline/Process ID: W142/I143/W133/C144/K135 Type of Material Service: AQUEOUS ORGANIC LIQUIDS/

6

DESCRIPTION	TAG NUMBER	EQUIPEMENT/CONNECTION CONDITION DESCRIPTION	OVA READING
3" PLUG VALVE AT V-1	P-266	Not found	
3" BALL VALVE AT V-1	P-267		<10 ppm
3" PLUG VALVE AT V8	P-268		<10 ppm
2" BALL VALVE AT AT V-1	P-270		<10 ppm
2" BALL VALVE AT V2	P-271		<10 ppm
2" HOSE CONNECTION AT V2	P-272		<10 "
2" BALL VALVE AT V5	P-273		<10 ppm
2" HOSE CONNECTION AT V5	P-274		<10 "

Comments (Weather, Dilutor Cal.)

Background Measurements: #1 #2 #3 #4 #5

RCRA VOC EQUIPMENT LDAR PROGRAM – FIELD LEAK MONITORING RECORD (40 CFR 265 SUBPART BB)

FACILITY: ART WICHITA USEPA ID NUMBER: KSD007246646 Date: 12/15/90

Instrument Operator: D. COKER Calibration Gas ID#: LOT 31995 Daily Calibration Check: 10000ppm METHANE

Instrument ID#: 20859 Inspector's Name: R. ROBERTSON Inspector's Signature: R. Robertson

Pipeline/Process ID: PUMPS AND FILTERS Type of Material Service: VARIOUS

DESCRIPTION	TAG NUMBER	EQUIPEMENT/CONNECTION CONDITION DESCRIPTION	OVA READING
PUMP 2A (SUBMERSIBLE)	M-6	N.A.	———
PUMP 2B S-3B	M-7		<10
PUMP 3A S-4A	M-8		<10
PUMP 3B S-3A	M-9		1<
PUMP P1 AT DRY CONDEN.			
TANK V-18	M-1		<.5
MANIFOLD TRANSFER PUMP P-4	M-23		1:1
TRUCK MANIFOLD			
DIESEL INJECTION PUMP P-11	M-25		2.5
AT DIESEL TANK			

Comments (Weather, Dilutor Cal.)

Background Measurements: #1 #2 #3 #4 #5

RCRA VOC EQUIPMENT LDAR PROGRAM – FIELD LEAK MONITORING RECORD (40 CFR 265 SUBPART BB)

FACILITY: HRI WICHITA USEPA ID NUMBER: KSD007246876 Date: 12/15/90

Instrument Operator: P. Coker Calibration Gas ID#: LOT 31495 Daily Calibration Check: 10,000 ppm METHANE

Instrument ID#: 20859 Inspector's Name: R. Robertson Inspector's Signature: R. Robertson

Pipeline/Process ID: PUMPS AND FILTERS Type of Material Service: VARIOUS

DESCRIPTION	TAG NUMBER	EQUIPEMENT/CONNECTION CONDITION DESCRIPTION	OVA READING
GUNNATOR SCREW PUMP P-5	M-26		50
IN DISPERSER			
GRINDING PUMP FILTER F-1	M-27		15
DIAPHRAM PUMP P-6	M-28	INCLUDES CONNECTIONS	15
DIAPHRAM PUMP P-7	M-29		40
DIAPHRAM PUMP P-8	M-30		40
DIAPHRAM PUMP P-9	M-39		15
DIAPHRAM PUMP P-10	M-40	OUT OF SERVICE	

Comments (Weather, Dilutor Cal.)

Background Measurements: #1 #2 #3 #4 #5

SITE/FACILITY _____

NOTICE !

THIS IS A 5 AND 15 DAY TIME LIMIT REPAIR ORDER

	Initial Date	Mandatory 5–Day Action	Mandatory 15–Day Action
	DATE: 12/17/90	12/22/90	01/01/91
VALVES: (40 CFR 265.1057)		Tightening or replacing bonnet bolts, tightenting packing gland nuts, or injecting lubricant into the lubricated packing.	Leak source must be repaired such that it passes next monitoring event emission level of 10,000 ppm.
PUMPS: (40 CFR 265.1052)		Tightening or replacing casing bolts, tightenting packing gland bolts.	Leak source must be repaired such that it passes next monitoring event emission level of 10,000 ppm or taken out of service.
CONNECTIONS: (40 CFR 265.1058)		Tightening flange bolts.	Leak source must be repaired such that it passes next monitoring event emission level of 10,000 ppm.
PRESSURE RELIEF DEVICES: (40 CFR 265.1054)			Leak source must be repaired such that it passes next monitoring event emission level of 500 ppm.
OPEN ENDED LINES: (40 CFR 265.1058)		Replacement of plug, blind flange, or closure of second block valve with drain.	

ITEM	DATE PERFORMED 5–DAY	DATE PERFORMED 15–DAY	INITIALS OF PERSON PERFORMING REPAIR
1" BALL VALVE AT TRUCK BAY-LINE K153 NEEDS	12/20/90		AR
PLUG. (P-152)	12/20/90		AR
1" BALL VALVE AT TRUCK BAY-LINE K153 NEEDS	12/20/90		AR
PLUG. (P-155)	12/20/90		AR
OPEN ENDED 1/2" BALL VALVE (P-61) AT TRUCK MANIFOLD NEEDS PLUG.	12/20/90		AR
2" GATE VALVE AT (P-34) DRYER TANK NEEDS PLUG.	12/20/90		AR
1" HOSE CONNECTION AT DRYER TANK NEEDS PLUG. (P-34)	12/20/90		AR
1" ELBOW OPEN ENDED (P-31) NEEDS PLUG.	12/20/90		AR
1" HOSE CONNECTION (P-29) NEEDS PLUG AT DRYER TANK.	12/20/90		AR
2" HOSE CONNECTION NEEDS PLUG AT DRYER TANK.	12/20/90		AR
1/2" BALL VALVE (P-17) NEEDS PLUG.	12/20/90		AR

CC: Plant/Operations Manager, Director of Operations, Maintanence Supervisor, Environmental Compliance Dept., 40 CFR 265.1035 File

NOTICE !

THIS IS A 5 AND 15 DAY TIME LIMIT REPAIR ORDER

	Initial Date	Mandatory 5–Day Action	Mandatory 15–Day Action
DATE:	12/17/90	12/22/90	01/01/91
VALVES: (40 CFR 265.1057)		Tightening or replacing bonnet bolts, tightenting packing gland nuts, or injecting lubricant into the lubricated packing.	Leak source must be repaired such that it passes next monitoring event emission level of 10,000 ppm.
PUMPS: (40 CFR 265.1052)		Tightening or replacing casing bolts, tightenting packing gland bolts.	Leak source must be repaired such that it passes next monitoring event emission level of 10,000 ppm or taken out of service.
CONNECTIONS: (40 CFR 265.1058)		Tightening flange bolts.	Leak source must be repaired such that it passes next monitoring event emission level of 10,000 ppm.
PRESSURE RELIEF DEVICES: (40 CFR 265.1054)			Leak source must be repaired such that it passes next monitoring event emission level of 500 ppm.
OPEN ENDED LINES: (40 CFR 265.1058)		Replacement of plug, blind flange, or closure of second block valve with drain.	

ITEM	DATE PERFORMED 5–DAY	DATE PERFORMED 15–DAY	INITIALS OF PERSON PERFORMING REPAIR
1/2" BALL VALVE NEEDS PLUG AT DRUM HAND. MANIFOLD (P-14).	12/20/90		RR
1/2" BALL VALVE NEEDS PLUG AT TRUCK MANIFOLD (P-19).	12/20/90		RR
1/2" HOSE CONNECTION AT V6 NEEDS PLUG (P-84).	12/20/90		RR
1/2" BALL VALVE AT TRUCK MANIFOLD NEEDS PLUG (P-113)	12/20/90		RR
1/2" BALL VALVE AT DRUM HAND. MANIFOLD NEEDS PLUG (P-160)	12/20/90		RR
2" HOSE CONNECTION AT TRUCK MANIFOLD NEEDS PLUG (P-161)	12/20/90		RR
1/2" BALL VALVE AT TRUCK MANIFOLD NEEDS PLUG (P-163)	12/20/90		RR
1/2" BALL VALVE AT DRUM HANDLING P-49, P-106,	12/20/90		RR
P-209, P-257, P-264, P-250, P-243 P-244,	12/20/90		RR
~~P-221~~ & P-229, NEED PLUGS.	12/20/90		RR

CC: Plant/Operations Manager, Director of Operations, Maintanence Supervisor, Environmental Compliance Dept., 40 CFR 265.1035 File

NOTICE !

THIS IS A 5 AND 15 DAY TIME LIMIT REPAIR ORDER

	Initial Date	Mandatory 5–Day Action	Mandatory 15–Day Action
	DATE: 12/17/90	12/22/90	01/01/91
VALVES: (40 CFR 265.1057)		Tightening or replacing bonnet bolts, tightenting packing gland nuts, or injecting lubricant into the lubricated packing.	Leak source must be repaired such that it passes next monitoring event emission level of 10,000 ppm.
PUMPS: (40 CFR 265.1052)		Tightening or replacing casing bolts, tightenting packing gland bolts.	Leak source must be repaired such that it passes next monitoring event emission level of 10,000 ppm or taken out of service.
CONNECTIONS: (40 CFR 265.1058)		Tightening flange bolts.	Leak source must be repaired such that it passes next monitoring event emission level of 10,000 ppm.
PRESSURE RELIEF DEVICES: (40 CFR 265.1054)			Leak source must be repaired such that it passes next monitoring event emission level of 500 ppm.
OPEN ENDED LINES: (40 CFR 265.1058)		Replacement of plug, blind flange, or closure of second block valve with drain.	

ITEM	DATE PERFORMED 5–DAY	DATE PERFORMED 15–DAY	INITIALS OF PERSON PERFORMING REPAIR
1/2" BALL VALVES AT TRUCK MANIFOLD P-102, P-109	12/20/90	RR	
P-110, P-221, NEED PLUGS.	12/20/90	RR	
3/4" BALL VALVE AT P3B (P-147) NEEDS PLUG.	12/20/90	RR	
1 1/2" GATE VALVE AT 1C, 1B, 1A (P-304) NEEDS PLUG (P-306, P-26).	12/20/90	12-30-90	RR & D.L.
1/2" PLUG VALVE AT DIESEL TANK NEEDS PLUG (P-315).	12/20/90	RR	
1 1/2" BALL VALVE AT DIESEL TANK NEEDS PLUG (P-319).	12/20/90	RR	
1" OPEN LINE AT TANK U4 NEEDS PLUG (P-249).	12/20/90	RR	
3/4" VENT LINE ON SPARGER 1C NEEDS PLUG (P-164).	12/20/90	RR	
3/4" VENT LINE ON SPARGER 1B NEEDS PLUG (P-169).	12/20/90	RR	

CC: Plant/Operations Manager, Director of Operations, Maintanence Supervisor, Environmental Compliance Dept., 40 CFR 265.1035 File

NOTICE !

THIS IS A 5 AND 15 DAY TIME LIMIT REPAIR ORDER

	Initial Date	Mandatory 5–Day Action	Mandatory 15–Day Action
	DATE: 12/17/90	12/22/90	01/01/91
VALVES: (40 CFR 265.1057)		Tightening or replacing bonnet bolts, tightenting packing gland nuts, or injecting lubricant into the lubricated packing.	Leak source must be repaired such that it passes next monitoring event emission level of 10,000 ppm.
PUMPS: (40 CFR 265.1052)		Tightening or replacing casing bolts, tightenting packing gland bolts.	Leak source must be repaired such that it passes next monitoring event emission level of 10,000 ppm or taken out of service.
CONNECTIONS: (40 CFR 265.1058)		Tightening flange bolts.	Leak source must be repaired such that it passes next monitoring event emission level of 10,000 ppm.
PRESSURE RELIEF DEVICES: (40 CFR 265.1054)			Leak source must be repaired such that it passes next monitoring event emission level of 500 ppm.
OPEN ENDED LINES: (40 CFR 265.1058)		Replacement of plug, blind flange, or closure of second block valve with drain.	

ITEM	DATE PERFORMED		INITIALS OF PERSON PERFORMING REPAIR
	5–DAY	15–DAY	
1/4" VENT LINE AT V6 (P-281) NEEDS PLUG.	12/20/90		AR
1/4" VENT LINE AT V7 (P-284) NEEDS PLUG.	12/20/90		AR
1/4" VENT LINE AT V4 (P-287) NEEDS PLUG.	12/20/90		AR
1/2" ELBOW W/ OPEN LINE (P-308) NEEDS PLUG.	12/20/90		AR

CC: Plant/Operations Manager, Director of Operations, Maintanence Supervisor, Environmental Compliance Dept., 40 CFR 265.1035 File

CERTIFIED CALIBRATION

EPA METHOD 21

COMPANY USPCI

INSTRUMENT S/N 41063

MODEL OVA-128

CALIBRATION GASES: (2)

100 PPM CH_4 in AIR

1000

	(3) Zero Reading (PPM)	Zero Drift (PPM)	Cal Reading (PPM)	Cal Drift (PPM)	Response Time (SEC)
1.	0.1	.1	100	5	5
2.	0.1	.1	1000	10	4
3.	0.1	.1	1000	30	4

(1)Mean Value: Zero Drift: .13 ppm Cal Drift: .31 ppm

(5)Response Time: 4 seconds

(4)Calibration Precision = $\frac{\text{Mean Cal Drift}}{\text{Cal Gas Concentration}}$ X 100 = 1.4 %

(1) Absolute Value
(2) Calibration Gas Concentration
(3) Zero Reading Must Be Less Than 10ppm
(4) Calibration Precision must be ≤ 10% of Calibration Gas Concentration
(5) Response Time must be ≤ 30 seconds

Calibrated by R Robert

Date 6-25-91

RCRA VOC EQUIPMENT LDAR PROGRAM – FIELD LEAK MONITORING RECORD (40 CFR 265 SUBPART BB)

FACILITY: HRI-Wichita USEPA ID NUMBER: KSD007246846 Date: 6-25-91

Instrument Operator: R. Burbarsne Calibration Gas ID#: 100PPM Methane Daily Calibration Check: R

Instrument ID#: 41063 Inspector's Name: R. Verzuh Inspector's Signature: See Attached

Pipeline/Process ID: Below Type of Material Service: Aqueous & Organic Liquids

DESCRIPTION	TAG NUMBER	EQUIPEMENT/CONNECTION CONDITION DESCRIPTION	OVA READING
Sparger Water Pump P-2B	M-7	Out of Service	<10
Sparger Solvent Pump P-3A	M-8		<10
Sparger Solvent Pump P-3B	M-9		<10
Condensate Separator Pump P-1	M-1		<10
Manifold Transfer Pump P-4	M-23		10
Diesel Injection Pump P-11	M-25		.10
Grinding Pump P-5	M-26		<10

Comments (Weather, Dilutor Cal.)

Background Measurements: #1 #2 #3 #4 #5

CERTIFIED CALIBRATION

EPA METHOD 21

COMPANY USPCI

INSTRUMENT S/N 41063

MODEL OVA 128

CALIBRATION GASES: (2)

10,000 PPM CH_4 in Air

100 PPM CH_4 in Air

	(3) Zero Reading (PPM)	Zero Drift (PPM)	Cal Reading (PPM)	Cal Drift (PPM)	Response Time (SEC)
1.	0.0	.1	95	2	3
2.	0.0	0	10,000	100	3
3.	0.0	.2	9960	60	4

(1)Mean Value: Zero Drift: .1 ppm Cal Drift: 54 ppm

(5)Response Time: 3 seconds

(4)Calibration Precision = $\frac{\text{Mean Cal Drift}}{\text{Cal Gas Concentration}}$ X 100 = .54%

(1) Absolute Value
(2) Calibration Gas Concentration
(3) Zero Reading Must Be Less Than 10ppm
(4) Calibration Precision must be ≤ 10% of Calibration Gas Concentration
(5) Response Time must be ≤ 30 seconds

Calibrated by R Robert

Date 9-30-91

RCRA VOC EQUIPMENT LDAR PROGRAM – FIELD LEAK MONITORING RECORD (40 CFR 265 SUBPART BB)

FACILITY: HRI-Wichita USEPA ID NUMBER: KS0007246846 Date: 9-30-91

Instrument Operator: R. Robertson Calibration Gas ID#: 100PPM Methane Daily Calibration Check: [illegible]

Instrument ID#: 41063 Inspector's Name: R. Verzuh Inspector's Signature: See Attached

Pipeline/Process ID: Below Type of Material Service: Aqueous & Organic Liquids

DESCRIPTION	TAG NUMBER	EQUIPEMENT/CONNECTION CONDITION DESCRIPTION	OVA READING
Sparger Water Pump P-2b	M-7		<10
Sparger Solvent Pump P-3a	M-8	Out of Service	<10
Sparger Solvent Pump P-3b	M-9		<10
Condensate Separator Pump P-1	M-1		10
Manifold Transfer Pump P-4	M-23		10
Diesel Injection Pump P-11	M-25		15
Grinder Pump P-5	M-26		<10

Comments (Weather, Dilutor Cal.)

Background Measurements: #1 5 #2 10 #3 <10 #4 #5

RCRA VOC EQUIPMENT LDAR PROGRAM – FIELD LEAK MONITORING RECORD (40 CFR 265 SUBPART BB)

FACILITY: HRI-WICHITA USEPA ID NUMBER: KSD007246846 Date: 1-21-91

Instrument Operator: R. Robertson Calibration Gas ID#: 100PPM METHANE Daily Calibration Check: RC

Instrument ID#: 41063 Inspector's Name: R VERZUH Inspector's Signature: SEE ATTACHED

Pipeline/Process ID: BELOW Type of Material Service: AQUEOUS AND ORGANIC LIQUIDS;

DESCRIPTION	TAG NUMBER	EQUIPEMENT/CONNECTION CONDITION DESCRIPTION	OVA READING
SPARGER WATER PUMP P-2B	M-7		0
SPARGER SOLVENT PUMP P-3A	M-8		0
SPARGER SOLVENT PUMP P-3B	M-9		0
CONDENSATE SEPERATOR PUMP P-1	M-1		<10
MANIFOLD TRANSFER PUMP P-4	M-23		0
DIESEL INJECTION PUMP P-11	M-25		<10
GRINDING PUMP P-5	M-26		10

Comments (Weather, Dilutor Cal.)

Background Measurements: #1 Ø #2 <2 #3 <2 #4 Ø #5

CERTIFIED CALIBRATION

EPA METHOD 21

COMPANY USPCL

INSTRUMENT S/N 41063

MODEL OVA-128

CALIBRATION GASES: (2)

10,000 ppm CH4 in Air

Zero Air

	(3) Zero Reading (PPM)	Zero Drift (PPM)	Cal Reading (PPM)	Cal Drift (PPM)	Response Time (SEC)
1.	0.1	.1	9800	200	5
2.	0.2	.2	10,000	0	4
3.	0.1	.1	10,000	0	5

(1)Mean Value: Zero Drift: .13 ppm Cal Drift: 67 ppm

(5)Response Time: 5 seconds

(4)Calibration Precision = $\frac{\text{Mean Cal Drift}}{\text{Cal Gas Concentration}}$ $\frac{67}{10,000}$ X 100 = 0.67 %

(1) Absolute Value
(2) Calibration Gas Concentration
(3) Zero Reading Must Be Less Than 10ppm
(4) Calibration Precision must be ≤ 10% of Calibration Gas Concentration
(5) Response Time must be ≤ 30 seconds

Calibrated by Rudy Verzuh

Date 1/17/91

RCRA VOC EQUIPMENT LDAR PROGRAM – FIELD LEAK MONITORING RECORD (40 CFR 265 SUBPART BB)

FACILITY: HRI-Wichita USEPA ID NUMBER: KSD007246846 Date: 2-22-91

Instrument Operator: R. Rodriguez Calibration Gas ID#: 100ppm Methane Daily Calibration Check: R

Instrument ID#: 41063 Inspector's Name: R. Vazquez Inspector's Signature: See Attached

Pipeline/Process ID: Below Type of Material Service: Aqueous Organic Liquids

DESCRIPTION	TAG NUMBER	EQUIPEMENT/CONNECTION CONDITION DESCRIPTION	OVA READING
Separator Water Pump P-2B	M-7		<1
Separator Solvent Pump P-3A	M-8		<1
Separator Solvent Pump P-3B	M-9		<1
Condensate Separator Pump P-1	M-1		<1
Manifold Transfer Pump P-4	M-23		<1
Desalter Pump P-11	M-25		<1
Crude Pump P-5	M-26		<1

Comments (Weather, Dilutor Cal.)

Background Measurements: #1 0 #2 <2 #3 <2 #4 <2 #5

CERTIFIED CALIBRATION

EPA METHOD 21

COMPANY USPCI

INSTRUMENT S/N 41063

MODEL

CALIBRATION GASES: (2)

100 PPM CH_4 in AIR

10 PPM "

	(3) Zero Reading (PPM)	Zero Drift (PPM)	Cal Reading (PPM)	Cal Drift (PPM)	Response Time (SEC)
1.	0.1	.1	980	200	5
2.	0.2	.2	10,000	0	5
3.	0.1	.1	10,000	0	5

(1)Mean Value: Zero Drift: .13 ppm Cal Drift: 67 ppm

(5)Response Time: 5 seconds

(4)Calibration Precision = $\frac{\text{Mean Cal Drift}}{\text{Cal Gas Concentration}}$ $\frac{67}{10,000}$ X 100 = .67%

(1) Absolute Value
(2) Calibration Gas Concentration
(3) Zero Reading Must Be Less Than 10ppm
(4) Calibration Precision must be ≤ 10% of Calibration Gas Concentration
(5) Response Time must be ≤ 30 seconds

Calibrated by [signature]

Date 2-22-91

RCRA VOC EQUIPMENT LDAR PROGRAM – FIELD LEAK MONITORING RECORD (40 CFR 265 SUBPART BB)

FACILITY: HRI-Wichita USEPA ID NUMBER: KSD007246846 Date: 3-21-91

Instrument Operator: R. Rumbaugh Calibration Gas ID#: 100ppm Methane Daily Calibration Check: R

Instrument ID#: 41063 Inspector's Name: R. Vogt Inspector's Signature: See Attached

Pipeline/Process ID: Below Type of Material Service: Aqueous & Organic Liquids

DESCRIPTION	TAG NUMBER	EQUIPEMENT/CONNECTION CONDITION DESCRIPTION	OVA READING
Separator Water Pump P-2B	M-7		Ø
Separator Solvent Pump P-3A	M-8		Ø
Separator Solvent Pump P-3B	M-9		Ø
Condensate Separator Pump P-1	M-1		<2
Manifold Transfer Pump P-4	M-23		<2
Dissolver Pump P-11	M-25		10
Grinding Pump P-5	M-26		10

Comments (Weather, Dilutor Cal.)

Background Measurements: #1 <2 #2 Ø #3 Ø #4 Ø #5

CERTIFIED CALIBRATION

EPA METHOD 21

COMPANY USPCI

INSTRUMENT S/N 41067

MODEL OVA-128

CALIBRATION GASES: (2)

100PPM CH4 in Air

100PPM "

	(3) Zero Reading (PPM)	Zero Drift (PPM)	Cal Reading (PPM)	Cal Drift (PPM)	Response Time (SEC)
1.	0.1	.1	980	200	5
2.	0.1	.1	10,000	Ø	4
3.	0.1	.1	10,000	Ø	6

(1)Mean Value: Zero Drift: .13 ppm Cal Drift: .67 ppm

(5)Response Time: 5 seconds

(4)Calibration Precision = $\frac{\text{Mean Cal Drift}}{\text{Cal Gas Concentration}}$ X 100 = .6 %

Mean Cal Drift: .67

Cal Gas Concentration: 10,000

(1) Absolute Value
(2) Calibration Gas Concentration
(3) Zero Reading Must Be Less Than 10ppm
(4) Calibration Precision must be ≤ 10% of Calibration Gas Concentration
(5) Response Time must be ≤ 30 seconds

Calibrated by [signature]

Date 3-21-91

RCRA VOC EQUIPMENT LDAR PROGRAM – FIELD LEAK MONITORING RECORD (40 CFR 265 SUBPART BB)

FACILITY: HRI-Wichita USEPA ID NUMBER: KSD007246846 Date: 4-22-91

Instrument Operator: R. Burbertson Calibration Gas ID#: 100PPM Methane Daily Calibration Check: R

Instrument ID#: 41063 Inspector's Name: R. Vorzuh Inspector's Signature: See Attached

Pipeline/Process ID: Below Type of Material Service: Aqueous & Organic Liquids

DESCRIPTION	TAG NUMBER	EQUIPEMENT/CONNECTION CONDITION DESCRIPTION	OVA READING
Sparger Water Pump P-2B	M-7		Ø
Sparger Solvent Pump P-3A	M-8		Ø
Sparger Solvent Pump P-3B	M-9		Ø
Condensate Separator Pump P-1	M-1		Ø
Manifold Transfer Pump P-4	M-23		Ø
Diesel Injection Pump P-11	M-25		12
Grinding Pump P-5	M-26		10

Comments (Weather, Dilutor Cal.)

Background Measurements: #1 Ø #2 <2 #3 Ø #4 Ø #5

CERTIFIED CALIBRATION

EPA METHOD 21

COMPANY USPCI

INSTRUMENT S/N 4183

MODEL OVA 128

CALIBRATION GASES: (2)

100 PPM CH4 in Air

10

	(3) Zero Reading (PPM)	Zero Drift (PPM)	Cal Reading (PPM)	Cal Drift (PPM)	Response Time (SEC)
1.	-0.1	.1	70	200	5
2.	0.1	.1	100	∅	4
3.	0.1	.1	100	∅	4

(1)Mean Value: Zero Drift: .13 ppm Cal Drift: .67 ppm

(5)Response Time: 5 seconds

(4)Calibration Precision = $\frac{\text{Mean Cal Drift}}{\text{Cal Gas Concentration}}$ = $\frac{.67}{100}$ X 100 = .6 %

(1) Absolute Value
(2) Calibration Gas Concentration
(3) Zero Reading Must Be Less Than 10ppm
(4) Calibration Precision must be ≤ 10% of Calibration Gas Concentration
(5) Response Time must be ≤ 30 seconds

Calibrated by [signature]

Date 4-22-91

RCRA VOC EQUIPMENT LDAR PROGRAM – FIELD LEAK MONITORING RECORD (40 CFR 265 SUBPART BB)

FACILITY: HRI-WICHITA USEPA ID NUMBER: KSD007246846 Date: 5/21/91

Instrument Operator: R. Rodriguez Calibration Gas ID#: 10 PPM Methane Daily Calibration Check: R

Instrument ID#: 41063 Inspector's Name: R. Vasquez Inspector's Signature: See Attached

Pipeline/Process ID: Below Type of Material Service: Aqueous & Organic Liquids

DESCRIPTION	TAG NUMBER	EQUIPEMENT/CONNECTION CONDITION DESCRIPTION	OVA READING
Separator Water Pump P-2B	M-7		Ø
Separator Solvent Pump P-3A	M-8		Ø
Separator Solvent Pump P-3B	M-9		Ø
Condensate Separator Pump P-1	M-1		<2
Manifold Transfer Pump P-1	M-23		<2
Dissolution Pump P-11	M-25		<2
Crude Pump P-5	M-26		5

Comments (Weather, Dilutor Cal.)

Background Measurements: #1 Ø #2 Ø #3 Ø #4 Ø #5

CERTIFIED CALIBRATION

EPA METHOD 21

COMPANY USPCI

INSTRUMENT S/N 41063

MODEL OVA-128

CALIBRATION GASES: (2)

100 PPM CH_4 in AIR

1000

	(3) Zero Reading (PPM)	Zero Drift (PPM)	Cal Reading (PPM)	Cal Drift (PPM)	Response Time (SEC)
1.	0.1	.1	100	5	5
2.	0.1	.1	1000	60	4
3.	0.1	.1	1000	30	4

(1)Mean Value: Zero Drift: .13 ppm Cal Drift: .31 ppm

(5)Response Time: 4 seconds

(4)Calibration Precision = $\frac{\text{Mean Cal Drift}}{\text{Cal Gas Concentration}}$ X 100 = 1.4 %

(1) Absolute Value
(2) Calibration Gas Concentration
(3) Zero Reading Must Be Less Than 10ppm
(4) Calibration Precision must be ≤ 10% of Calibration Gas Concentration
(5) Response Time must be ≤ 30 seconds

Calibrated by R Robert

Date 6-25-91

RCRA VOC EQUIPMENT LDAR PROGRAM – FIELD LEAK MONITORING RECORD (40 CFR 265 SUBPART BB)

FACILITY: HRI-Wichita USEPA ID NUMBER: KSD007246846 Date: 6-25-91

Instrument Operator: R. Burbarsor Calibration Gas ID#: 100PPM Methane Daily Calibration Check: R

Instrument ID#: 41063 Inspector's Name: R. Verzuh Inspector's Signature: See Attached

Pipeline/Process ID: Below Type of Material Service: Aqueous & Organic Liquids

DESCRIPTION	TAG NUMBER	EQUIPEMENT/CONNECTION CONDITION DESCRIPTION	OVA READING
Sparger Water Pump P-2B	M-7	Out of Service	<10
Sparger Solvent Pump P-3A	M-8		<10
Sparger Solvent Pump P-3B	M-9		<10
Condensate Separator Pump P-1	M-1		<10
Manifold Transfer Pump P-4	M-23		10
Diesel Injection Pump P-11	M-25		10
Grinding Pump P-5	M-26		<10

Comments (Weather, Dilutor Cal.)

Background Measurements: #1 #2 #3 #4 #5

CERTIFIED CALIBRATION

EPA METHOD 21

COMPANY USPCI

INSTRUMENT S/N 41063

MODEL OVA128

CALIBRATION GASES: (2)

1000 PPM CH4 in AIR

100 PPM CH4 in AIR

	(3) Zero Reading (PPM)	Zero Drift (PPM)	Cal Reading (PPM)	Cal Drift (PPM)	Response Time (SEC)
1.	0.1	.1	90	5	4
2.	0.1	.1	1000	Ø	4
3.	0.1	.1	1000	Ø	3

(1)Mean Value: Zero Drift: .13 ppm Cal Drift: .12 ppm

(5)Response Time: 4 seconds

(4)Calibration Precision = $\frac{\text{Mean Cal Drift}}{\text{Cal Gas Concentration}}$ X 100 = .57%

(1) Absolute Value
(2) Calibration Gas Concentration
(3) Zero Reading Must Be Less Than 10ppm
(4) Calibration Precision must be ≤ 10% of Calibration Gas Concentration
(5) Response Time must be ≤ 30 seconds

Calibrated by [signature]

Date 7-25-91

RCRA VOC EQUIPMENT LDAR PROGRAM – FIELD LEAK MONITORING RECORD (40 CFR 265 SUBPART BB)

FACILITY: HRI-Wichita USEPA ID NUMBER: KSD007246846 Date: 7-25-91

Instrument Operator: R. Robertson Calibration Gas ID#: 100PPM Methane Daily Calibration Check: R

Instrument ID#: 41063 Inspector's Name: R. Vazquez Inspector's Signature: See Attached

Pipeline/Process ID: Below Type of Material Service: Aqueous & Organic Liquids

DESCRIPTION	TAG NUMBER	EQUIPEMENT/CONNECTION CONDITION DESCRIPTION	OVA READING
Sparger Water Pump P-2B	M-7	Out of Service	<10
Sparger Solvent Pump P-3A	M-8		<10
Sparger Solvent Pump P-3B	M-9		<10
Condensate Separator Pump P-1	M-1		<10
Manifold Transfer Pump P-4	M-23		10
Diesel Injection Pump P-11	M-25		15
Grinding Pump P-5	M-26		

Comments (Weather, Dilutor Cal.)

Background Measurements: #1 #2 #3 #4 #5

CERTIFIED CALIBRATION

EPA METHOD 21

COMPANY USPCI

INSTRUMENT S/N 41883

MODEL OVA128

CALIBRATION GASES: (2)

10000 PPM CH4 in AIR

100 PPM CH4 in AIR

	(3) Zero Reading (PPM)	Zero Drift (PPM)	Cal Reading (PPM)	Cal Drift (PPM)	Response Time (SEC)
1.	0.0	.1	95	5	3
2.	0.0	.1	10,000	0	4
3.	0.0	0	9,900	100	3

(1)Mean Value: Zero Drift: .1 ppm Cal Drift: 52 ppm

(5)Response Time: 3 seconds

(4)Calibration Precision = $\frac{\text{Mean Cal Drift}}{\text{Cal Gas Concentration}}$ X 100 = .52%

(1) Absolute Value
(2) Calibration Gas Concentration
(3) Zero Reading Must Be Less Than 10ppm
(4) Calibration Precision must be ≤ 10% of Calibration Gas Concentration
(5) Response Time must be ≤ 30 seconds

Calibrated by R. Valentine

Date 9-28-91

RCRA VOC EQUIPMENT LDAR PROGRAM – FIELD LEAK MONITORING RECORD (40 CFR 265 SUBPART BB)

FACILITY: HRI-Wichita USEPA ID NUMBER: KSD007246846 Date: 8-28-91

Instrument Operator: R. Robertson Calibration Gas ID#: 100PPM Methane Daily Calibration Check: [illegible]

Instrument ID#: 41063 Inspector's Name: R. Vergara Inspector's Signature: [illegible]

Pipeline/Process ID: Below Type of Material Service: Aqueous & Organic Liquids

DESCRIPTION	TAG NUMBER	EQUIPEMENT/CONNECTION CONDITION DESCRIPTION	OVA READING
Sparger Water Pump P-2b	M-7	Out of Service	<10
Sparger Solvent Pump P-3a	M-8		<10
Sparger Solvent Pump P-3b	M-9		<10
Condensate Separator Pump P-1	M-1		<10
Manifold Transfer Pump P-4	M-23		<10
Diesel Injection Pump P-11	M-25		10
Grinding Pump P-5	M-26		<10

Comments (Weather, Dilutor Cal.)

Background Measurements: #1 5 #2 3 #3 4 #4 #5