REPORT

Comprehensive Performance Testing of a Contained Thermal Treatment Process

General Dynamics Ordnance and Tactical Systems
Munition Services
Joplin, Missouri

September 2012

RCRA

521684

O'BRIEN & GERE

GENERAL DYNAMICS
Ordnance and Tactical Systems
Munition Services

RECEIVED
SEP 2 7 2012
AWMD/WRAP-MIRP

September 25, 2012

Richard Nussbaum P.E., R.G.
Chief, Permits Section
MDNR Hazardous Waste Program
1730 E. Elm Street (lower level), P.O. Box 176
Jefferson City, MO 65102

P.O. Box 1386
Joplin, MO 64801
Tel (417)-624-0212
Fax (417)-782-6366

Re: EBV Explosives Environmental Company
Permit No. MOD985798164 and Temporary Authorization

Dear Mr. Nussbaum:

EBV Explosives Environmental Company dba General Dynamics Ordnance and Tactical Systems Munitions Services (GD-OTS MS) is submitting the Comprehensive Performance Test Report for Building #1. The report documents compliance with the emission requirements of the Hazardous Waste Management Facility Permit. The report also contains the updated table of Automatic Waste Feed Cut-offs setpoints that have been changed after the printing of this report due to a conference call between GD, EPA Region 7 and MDNT HWP. Please utilize the tables submitted under separate cover.

If you have any questions regarding this report, please contact me at (610) 298-3085.

Very truly yours,

David R. Zoghby
Senior Director of Marketing
& Commercial Contracts

Attachments: CPT Report

cc. Darleen Groner, MDNR HWP
Tim O'Brien, MDNR HWP
Ken Herstowski, EPA Region 7

GENERAL DYNAMICS
Ordnance and Tactical Systems
Munition Services

RECEIVED
SEP 27 2012
AWMD/WRAP-MIRP

September 25, 2012

Richard Nussbaum P.E., R.G.
Chief, Permits Section
MDNR Hazardous Waste Program
1730 E. Elm Street (lower level), P.O. Box 176
Jefferson City, MO 65102

P.O. Box 1386
Joplin, MO 64801
Tel (417)-624-0212
Fax (417)-782-6366

Re: EBV Explosives Environmental Company Permit No. MOD985798164

Dear Mr. Nussbaum:

Pursuant to 40 C.F.R. 270.42(a)(2) and Special Permit Condition II(N), EBV Explosives Environmental Company dba General Dynamics Ordnance and Tactical Systems Munition Services (GD-OTS MS) hereby submits as a Class 1 permit modification with prior Director Approval the updated table of Automatic Waste Feed Cut-offs set points for Building #1, the Contained Thermal Treatment System. These set points are based on the completed Comprehensive Performance Test Plan and Report and a conference call with EPA Region 7 and MDNR HWP.

If you have any questions regarding this report, please contact me at (610) 298-3085.

Very truly yours,

David R. Zoghby
Senior Director of Marketing
& Commercial Contracts

Attachments Table 17-3 & 4 Automatic Waste Feed Cut-offs

cc. Darleen Groner, MDNR HWP
Tim O'Brien, MDNR HWP
Ken Herstowski, EPA Region 7

Table 17-3

TTU CPT Based Automatic Waste Feed Cutoff (AWFCO) Summary

Parameter	Setpoint	Value	Equipment Tag #	Equipment Model	Basis
TTU Feed Rate - High	1,120 for each TTU	Units		PLC Calculation	AMHRA
APCS-C1 & APCS-C2 Stack Flow – High	2,529	Nm3/h	AFS-C101 AFS-C102	SDF-22 Flow Transducer & SKI Flow Computer	AMHRA

HRA – Hourly Rolling Average
AMHRA – Average of the Maximum Hourly Run Averages

TTU MS Based Automatic Waste Feed Cutoff (AWFCO) Summary

Parameter	Setpoint	Value	Equipment Tag #	Equipment Model	Basis
TTU-1,2,3,4 Pressure - High	-5	Pa	PI-C101-1 PI-C102-1 PI-C103-1 PI-C104-1	Keller Electronic DP Regulator Type 83400	Fugitive
PF-C101 & PF-C102 Primary Cartridge Filter Outlet Temp - High	300	° F	TI-C101-2 TI-C102-2	Omnigrad M TR10 Modular RTD Assembly	MOC Metal
PF-C101 & PF-C102 Primary Cartridge Filter DP – Low	0.5	mbar HRA	PI-C101-2 PI-C102-2	Keller Electronic DP Regulator Type 83400	PM
FH-C101 & FH-C102 HEPA Filter DP – Low	1.0	mbar HRA	PI-C101-4 PI-C102-4	Keller Electronic DP Regulator Type 83400	PM
APCS-C1 & APCS-C2 Particulate Sensor	0.0005	gr/dscf	XSH-C101 XSH-C102	DustAlarm Broken Bag Detector	PM
APCS-C1 & APCS-C2 Stack Flow – Low	2,250	Nm3/h HRA	AFS-C101 AFS-C102	SDF-22 Flow Transducer & SKI Flow Computer	Fugitive
TTU Doors open	No Signal	No Signal		Limit Switches	Fugitive

MS – Manufacturers or Engineering Specification
MOC – Material of Construction
Fugitive – Fugitive Emission Control

OPLs for compliance with:
Metal – LVM & SVM
PM – Particulate Matter

Table 17-4

SK CPT Based Automatic Waste Feed Cutoff (AWFCO) Summary

Parameter	Setpoint	Value	Equipment Tag #	Equipment Model	Basis
SK Feedrate HRA - High	4,853	Units		PLC Calculation	AMHRA
APCS-S1 Stack Flow – High	618	Nm3/h	AFS_S101	SDF-22 Flow Transducer & SKI Flow Computer	AMHRA

HRA – Hourly Rolling Average

AMHRA – Average of the Maximum Hourly Run Averages

SK MS Based Automatic Waste Feed Cutoff (AWFCO) Summary

Parameter	Setpoint	Value	Equipment Tag #	Equipment Model	Basis
SK-1,2,3,4 Pressure - High	-5	Pa	PI-S101 PI-S102 PI-S103 PI-S104	Keller Electronic DP Regulator Type 83400	Fugitive
SK-1,2,3,4 Temperature - Low	550	° F	TI-S101 TI-S102 TI-S103 TI-S104	Omnigrad M TR10 Modular RTD Assembly	Safety
PF-S101 Primary Cartridge Filter DP – Low	0.5	mbar	PI-S101-1	Keller Electronic DP Regulator Type 83400	PM
PF-S101 Primary Cartridge Filter Outlet Temp - High	300	° F	PI-S101-1	Omnigrad M TR10 Modular RTD Assembly	MOC Metal
FH-S101 HEPA Filter DP - Low	1.0	mbar	PI-S101-2	Keller Electronic DP Regulator Type 83400	PM
APCS-S1 Particulate Sensor	0.0005	gr/dscf	XSH-S101	DustAlarm Broken Bag Detector	PM
APCS-S1 Stack Flow – Low	360	Nm3/h	AFS-S101	SDF-22 Flow Transducer & SKI Flow Computer	Fugitive

MS – Manufacturers or Engineering Specification
Safety – GD Safety setpoint
MOC – Material of Construction
Fugitive – Fugitive Emission Control

OPLs for compliance with:
Metal – LVM & SVM
PM – Particulate Matter

REPORT

3374 | 49349

RECEIVED
SEP 2 7 2012
AWMD/WRAP-MIRP

Comprehensive Performance Testing of a Contained Thermal Treatment Process

General Dynamics Ordnance and Tactical Systems
Munition Services
Joplin, Missouri

JEFF GORMAN, PROJECT ASSOCIATE
AUTHOR
O'Brien & Gere Engineers, Inc.

DAVID OSTASZEWSKI, P.E., SENIOR MANAGING ENGINEER
REVIEWER
O'Brien & Gere Engineers, Inc.

TABLE OF CONTENTS

List of Tables iii
List of Figures iii
List of Appendices iii
List of Acronyms and Abbreviations iv
1. Executive Summary 1
2. Introduction 2
2.1 Project Scope 2
2.2 Facility ID, Mailing Address, and Primary Contacts 2
2.3 Purpose and Objective of the Comprehensive Performance Test 3
3. Process Description 5
3.1 Waste Feed Systems 5
3.1.1 CPT Feed Handling 5
3.2 Manufacturer, Make and Model of the TTU and SK 5
3.3 Air Pollution Control Equipment 6
3.3.1 TTU APCS 6
3.3.2 SK APCS 7
3.4 APCS Monitoring 7
3.5 Residence Time 8
3.6 Process Monitoring and Control 8
3.7 Automatic Waste Feed Cut-off System 10
4. Sampling Program Overview 13
4.1 Sampling Summary 13
4.2 Sampling Locations 13
4.2.1 SK Exhaust Stack 13
4.2.2 TTU Exhaust Stack 13
4.3 Sampling Procedures 13
4.3.1 Metals 13
4.3.2 PCDD/PCDF and Semi-Volatile Organics 14
4.3.3 Explosive Compounds 14
4.3.4 Volatile Organic Sampling Train (VOST) 14
4.3.5 Particulate Matter 14
4.3.6 Continuous Emissions Monitoring 15
4.4 Analytical Procedures 15
4.4.1 Metals 15
4.4.3 Particulate Matter 15
4.4.4 Explosive Compounds 16
4.4.5 Votatile Organic Compounds 16

4.4.6 PCDDs/PCDFs and Semi-volatile Organic Compounds 16
5. Program Results 22
5.1 Static Kilns 22
5.1.1 Process Operating Conditions 22
5.1.2 Dioxins and Furans (PCCD/PCDF) Results 22
5.1.3 Particulate Matter Results 22
5.1.4 Metals Results 22
5.1.5 Carbon Monoxide Results 22
5.1.6 Nitrogen Oxides Results 22
5.1.7 Risk Assessment Test Results 22
5.1.8 Total Hydrocarbon Results 23
5.1.9 Semi-volatile Organic Compound Results 23
5.1.10 Volatile Organic Compound Results 23
5.1.11 Explosive Compound Results 23
5.2 Thermal Treatment Units 23
5.2.1 Process Operating Conditions 23
5.2.2 Dioxins and Furans (PCCD/PCDF) Results 23
5.2.3 Particulate Matter Results 23
5.2.4 Carbon Monoxide Results 24
5.2.5 Nitrogen Oxides Results 24
5.2.6 Risk Assessment Test Results 24
5.2.7 Total Hydrocarbon Results 24
5.2.8 Semi-volatile Organic Compound Results 24
5.2.9 Volatile Organic Compound Results 24
5.2.10 Explosive Compound Results 24
6. Quality Assurance/Quality Control 42
6.1 Sample Collection QA/QC 42
6.1.1 Sample Custody 43
6.2 Stack Gas Analyses 43
6.2.1 Volatile Organics 43
6.2.2 PCDDs/PCDFs 43
6.2.3 Semi-volatile Organics 44
6.2.4 Particulate Matter 44
6.2.5 Explosive Compounds 44
6.2.6 Metals 45

LIST OF TABLES

Table 1-1 Summary of CPT Emission Results – Permit Requirements 1
Table 2-1 Summary of Applicable Emission Standards 4
Table 3-1 APCS Instrumentation Summary 9
Table 3-2 TTU Automatic Waste Feed Cutoff Summary 11
Table 3-3 SK Automatic Waste Feed Cutoff Summary 12
Table 4-1 SK Test Port Levels C, D, and F Traverse Point Locations 17
Table 4-2 TTU Test Port Level C Traverse Point Locations 18
Table 4-3 TTU Test Port Levels E and F Traverse Point Locations 19
Table 5-1 Automatic Waste Feed Cut-offs – Static Kilns 24
Table 5-2 Summary of Waste Feed Data – Static Kilns 25
Table 5-3 Summary of Process Data – Static Kilns 26
Table 5-4 Summary of PCDD/PCDF Results –Static Kilns 27
Table 5-5 Summary of Metals and PM Results – Static Kilns 28
Table 5-6 Summary of NO_X, CO and THC Results – Static Kilns 29
Table 5-7 Summary of SVOC Results – Static Kilns 30
Table 5-8 Summary of VOC Results – Static Kilns 31
Table 5-9 Summary of Explosive Compound Results – Static Kilns 32
Table 5-10 Automatic Waste Feed Cut-offs – Thermal Treatment Units 33
Table 5-11 Summary of Waste Feed Data – Thermal Treatment Units 34
Table 5-12 Summary of Process Data – Thermal Treatment Units 35
Table 5-13 Summary of PCDD/PCDF Results –Thermal Treatment Units 36
Table 5-14 Summary of Particulate Matter Results –Thermal Treatment Units 37
Table 5-15 Summary of NO_X, CO and THC Results – Thermal Treatment Units 38
Table 5-16 Summary of SVOC Results – Thermal Treatment Units 39
Table 5-17 Summary of VOC Results – Thermal Treatment Units 40
Table 5-18 Summary of Explosive Compound Results – Thermal Treatment Units 41
Table 6-1 QC Summary for Volatile Organics in Stack Gas Samples 43
Table 6-2 QC Summary for PCDDs/PCDFs in Stack Gas Samples – June 2012 Test Program 44
Table 6-3 QC Summary for Semi-volatile Organics in Stack Gas Samples 44
Table 6-4 QC Summary for Energetic Materials in Stack Gas Samples 45
Table 6-5 QC Summary for Metals in Stack Gas Samples 45

LIST OF FIGURES

Figure 4-1 SK Exhaust Stack Schematic 20
Figure 4-2 TTU Exhaust Stack Schematic 21

LIST OF APPENDICES

A Process Data
B Field Data Sheets and Calculations
C Calibration Records
D Laboratory Reports

LIST OF ACRONYMS AND ABBREVIATIONS

ACFM	Actual Cubic Feet per Minute
AC	Activated Carbon
APCS	Air Pollution Control System
APS	Acid Polar Solvents
CEMS	Continuous Emission Monitoring System
CFR	Code of Federal Regulations
Cl_2	Chlorine
CO	Carbon Monoxide
CO_2	Carbon Dioxide
CPT	Comprehensive Performance Test
CTTP	Contained Thermal Treatment Process
dscm	Dry standard cubic meter
DP	Differential Pressure
EPA	Environmental Protection Agency
ft	feet
FRC	Fiberglass Reinforced Plastic
GC/FID	Gas Chromatograph/Flame Ionization Detector
GC/MS	Gas Chromatograph/Mass Spectrometer
gr/dscf	grains per dry standard cubic foot
H_2O_2	Hydrogen Peroxide
H_2SO_4	Sulfuric Acid
HCl	Hydrogen Chloride
HHV	Higher Heating Value
HNO_3	Nitric Acid
IC/PCR	Ion Chromatography/Post column Reactor
ID	Induced Draft
in	inches
in. vac.	Inches vacuum
IWS	Ionizing Wet Scrubbers
lpm	liters per minutes
lb/hr	pounds per hour
mg/dscm	milligram per dry standard cubic meter
MMBtu/hr	million British Thermal Units per hour
MDNR	Missouri Department of Natural Resources

ng	Nanogram
NEW	Net Explosive Weight
NO_x	Oxides of Nitrogen
PAH	Polynuclear Aromatic Hydrocarbons
PCB	Polychlorinated biphenyl
PCDD	Polychlorinated Dibenzo-p-dioxin
PCDF	Polychlorinated Dibenzo-p-furan
PLC	Programmable Logic Control System
O_2	Oxygen
PM	Particulate Matter
POHCs	Principal Organic Hazardous Constituents
ppmv	Part per million volume
QA/QC	Quality Assurance/Quality Control
RCRA	Resource Conservation and Recovery Act
SCC	Secondary Combustion Chamber
SBC	Sodium Bicarbonate
SK	Static Kiln
STEM	Sampling Train for Energetic Compounds
TCO	Total Chromatograph Organics
TEQ	Toxic Equivalent
THC	Total Hydrocarbons
TTU	Thermal Treatment Unit
VFD	Variable Frequency Drive
VOST	Volatile Organic Sampling Train
µg/dscm	Microgram per dry standard cubic meter

1. EXECUTIVE SUMMARY

O'Brien & Gere was retained by General Dynamics Ordnance and Tactical Systems Munition Services (GD-OTS MS) to conduct a Comprehensive Performance Test (CPT) at the GD-OTS MS facility located in Joplin, Missouri on the Building #1 Contained Thermal Treatment Process (CTTP). The CTTP consists of Thermal Treatment Units (TTU) and Static Kilns (SK). The TTU treat the M42 / M46 / M77 submunition w/o fuze and the SK treats the M223 fuze from the M42 / M46 / M77 submunitions. The purpose of the test program was to demonstrate compliance with the conditions of the Missouri Hazardous Waste Management Facility Permit #MOD985798164 (RCRA Permit).

The CPT was conducted during the week of June 25-29, 2012 for all parameters. Results from the CPT showed that all emission standards were met. All testing was conducted in accordance with an approved CPT Plan and under full oversight of EPA Region 7 and the Missouri Department of Natural Resources (MDNR).

The CPT was conducted at a single set of operating condition that included feeding the maximum quantities of the specified waste into the thermal treatment system while operating the Air Pollution Control System (APCS) at worst case conditions.

Results of the CPT can be found in Section 5.0 of this document. An overall summary of emission results and/or performance criteria for all regulated parameters is provided in Table 1-1. All test parameters for the CPT ultimately complied with all relevant emission standards.

Table 1-1 Summary of CPT Emission Results – Permit Requirements

Test Method and Emission Parameter	Units	Test Results		RCRA Permit Standards
Test Method and Emission Parameter	**Units**	**Test Results**		**RCRA Permit Standards**
EPA Method 23 PCDD/PCDF (TEQs)	ng/dscm	SK	TTU	0.11
		0.0028	0.0075	
EPA Method 5 PM	gr/dscf	SK	TTU	0.0015
		0.0005	0.0005	
EPA Method 29 LVM [a]	µg/dscm	SK	TTU	10
		1.56	NA	
SVM [a]	µg/dscm	SK	TTU	23
		3.01	NA	

[a] LVM – Pb and Cd, SVM - As, Be, and Cr.

2. INTRODUCTION

2.1 PROJECT SCOPE

O'Brien & Gere was retained by General Dynamics Ordnance and Tactical Systems Munition Services (GD-OTS MS) to conduct a Comprehensive Performance Test (CPT) at the GD-OTS MS facility located in Joplin, Missouri on the Building #1 Contained Thermal Treatment Process (CTTP). The CTTP consists of Thermal Treatment Units (TTU) and Static Kilns (SK). The TTU treat the M42 / M46 / M77 submunition w/o fuze and the SK treats the M223 fuze from the M42 / M46 / M77 submunitions.

The CPT was conducted during the week of June 25-29, 2012. Results from the CPT showed that all emission standards were met. (see Section 5.1 for additional details). All test programs were conducted in accordance with an approved CPT Plan and under full oversight of EPA Region 7 and the Missouri Department of Natural Resources (MDNR) for the following parameters:

- Dioxins and furans
- Particulate matter
- Arsenic, beryllium, chromium, cadmium, mercury, and lead
- Volatile and semi-volatile organic compounds
- Explosive compounds
- Carbon monoxide
- Nitrogen oxides
- Total hydrocarbons (THC)

Testing was conducted during a single operating condition at both the SK and TTU exhaust while feeding maximum quantities of fuzes to the SK and submunitions to each TTU. Dave Zoghby of GD-OTS MS was present to coordinate facility operations with the field testing. Steve Jaques of MDNR was present on various days to witness the field testing.

A summary of the test results can be found in Section 5 of this report. The remaining sections of the report include a process description, summary of the scope of work conducted, sampling methods used, test equipment and analytical QA/QC procedures.

2.2 FACILITY ID, MAILING ADDRESS, AND PRIMARY CONTACTS

Facility:
Mr. David Zoghby
Phone: 610-298-3085
Email: dave.zoghby@gd-ots.com.com
GD-OTS Munition Services
4174 County Road 180
Carthage, MO 64836
Facility ID#: MOD 985 798 164

Testing Firm:
O'Brien & Gere Engineers
7600 Morgan Rd.
Liverpool, New York 13090
Contact: Mr. Jeff Gorman, Senior Project Manager
Phone: (315) 956-6022
Email: Jeffrey.Gorman@obg.com

Laboratories:

Explosive compounds, Metals, and PM

Test America
880 Riverside Parkway
West Sacramento, CA 95605
Contact: Robert Weidenfield, Project Manager
Phone: (916) 373-5600
Email: Robert.weidenfeld@testamericainc.com

PCDD/PCDF, VOCs, and SVOCs

Test America
5815 Middlebrook Pike
Knoxville, TN 37921
Contact: Kevin Woodcock, Project Manager
Phone: (865) 291-3082
Email: Kevin.woodcock@testamericainc.com

2.3 PURPOSE AND OBJECTIVE OF THE COMPREHENSIVE PERFORMANCE TEST

The CPT was designed to demonstrate compliance with the conditions of the Missouri Hazardous Waste Management Facility Permit #MOD985798164 (RCRA Permit) for the CTTP through two performance tests, one for the two thermal treatment units (TTU) and its associated air pollution control system (APCS) and one for the static kilns (SK) associated APCS.

The emissions standards that the SK was evaluated against during this CPT are summarized in **Table 2-1** below. In addition, process monitoring data was collected in order to set operating limits for the SK and APCS for the following parameters:

The following SK operating parameters were evaluated:

- Maximum feed rate;
- Maximum operating temperature;
- Maximum ash feed rate;
- Maximum LV and SV Metals feed rates; and
- Minimum flue gas flow rate

The following APCS operating parameters were evaluated:

- Primary Filter Differential Pressure;
- HEPA Filter Differential Pressure; and
- Minimum flue gas flow rate

The emissions standards that the TTU was evaluated against during this CPT are summarized in Table 2-1 below. In addition, process monitoring data was collected in order to set operating limits for the TTU and APCS for the following parameters:

- The following TTU operating parameters were evaluated:
- Maximum feed rate;
- Maximum ash feed rate; and
- Minimum flue gas flow rate

The following APCS operating parameters were evaluated:

- Primary Filter Differential Pressure;
- HEPA Filter Differential Pressure; and
- Minimum flue gas flow rate

Table 2-1 Summary of Applicable Emission Standards

Emissions Parameter	RCRA Permit
Dioxins and Furans (D/Fs)	≤0.11 ng/dscm TEQ basis
Particulate Matter (PM)	≤ 0.0015 gr/dscf (filterable particulate)
Semi-Volatile Metals (As, Cr & Be)	≤ 23 ug/dscm
Low Volatile Metals (Pb & Cd)	≤ 10 ug/dscm

3. PROCESS DESCRIPTION

This section presents a summary description of the Building #1 Contained Thermal Treatment Process (CTTP). Process Flow Diagrams (PFD) and Process & Instrumentation Diagrams (P&ID) are provided in Appendix A of this Plan. The main components of the CTTP consist of a feed conveying system from the demil each of four lines for carrying the submunitions to the Thermal Treatment Units (TTU); four TTU for thermally treating the submunitions; two Air Pollution Control System (APCS) for treatment of the TTU combustion gases, each APCS handling two TTUs; a metals handling systems; a feed conveying system for carrying the fuzes to the Static Kiln (SK); four SKs for thermally treating the fuzes; an Air Pollution Control System (APCS) for treatment of all of the SK combustion gases; and plant support systems. The process is monitored and controlled by a programmable logic control system (PLC) capable of continuously monitoring the process to assure all operational parameters are within regulatory and permit limits while waste is being fed to either unit. The PLC operates on an Uninterruptible Power Supply (UPS) in the event of commercial electrical power failure.

3.1 WASTE FEED SYSTEMS

Military munitions are brought on site by truck and taken to one of four storage magazines on the facility site. The magazines are each sited and designed for 100,000 pounds Net Explosive Weight (NEW) of Class 1.1 Explosives. The munitions demilitarization system disassembles the military munition by removing the M42 / M46 / M77 submunitions, removing the ribbon from the fuze, removing the fuze from the submunition and then removing the copper cone exposing the explosive fill. The submunitions and copper cones from each demil line are fed to the associated TTU via a treatment conveyor with holders. The fuzes from all demil lines are fed to one of the SKs via a belt conveyor. The maximum feedrate to the TTU is the maximum rate at which the disassembly equipment can process submunitions. The design feedrate is 4 submunitions each 12 second cycle to the TTU or 1,200 submunitions per hour and 4 fuzes per cycle per demil line to the SK or 4,800 fuzes per hour.

3.1.1 CPT Feed Handling

Before the TTU CPT, GD-OTS MS demilitarized submunitions and remove the submunition bodies from the demil line before they are thermal treated and package them for storage. During the TTU CPT runs, the operators placed the submunition bodies on the feed conveyor for feeding to each of the two TTUs, at 1,200 submunition bodies per hour.

Before the SK CPT runs, GD-OTS MS purchased, from the US Army, the same M223 fuzes that are installed on the M42/M46/M77 submunitions, which are processed in the CTTP. During the SK CPT, the operators placed the M223 fuzes on the SK feed conveyor in Demil Line #1 for feeding to the SK at 4,800 per hour.

This method of feeding the treatment units during the CPT allowed the safe processing of the design quantity of submunitions and fuzes.

3.2 MANUFACTURER, MAKE AND MODEL OF THE TTU AND SK

The TTU is a thermal treatment unit specially designed by EBV EEC and SAB, Elmshorn, Germany. It incorporates the design of the TTU used by EBV GmbH in Germany from 1996 thru 2002, to thermally treat millions of the same type of submunitions. The chamber or enclosures were designed by EBV EEC. The equipment in the TTU is manufactured for EBV EEC by SAB. The enclosures are concrete and steel chamber sealed with high temperature epoxy sealant through which passes a chain conveyor with special fixtures for holding the submunitions and copper cones. The submunitions and copper cones are loaded in the fixtures on the Treatment Conveyor by the disassembly line equipment. As the submunitions and copper cones enter TTU, the explosives in the submunitions are ignited four submunitions-at-a-time using four small natural gas fired torches. The torches move into position when the submunitions stop at the ignition position and the torch flames impinge on the explosive filler for 3 seconds to ensure the explosives are ignited. Flame sensors verify the torches are lit, and then a second set of flame sensors scan the submunitions to verify that the explosives have been ignited and are burning. The heat and flame from the burning of the explosive filler flashes the copper cone held in the fixture above the burning submunition. The explosives are completely consumed in

approximately 60 seconds. There is a residence time of 3 minutes in the unit which is sufficient time to ensure that the explosives are completely burned before the treated submunition body exits the TTU.

In the event the flame sensors do not detect a flame from burning explosives after the natural gas torches are pulled back, the torches more forward for a second attempt to ignite the explosives. If the second attempt fails, an alarm will occur to alert the operator of the need to investigate the reason for the failure to ignite the explosives on that submunition.

The SK is an electrically heated chamber specially designed by EBV EEC and SAB, Elmshorn, Germany, into which the fuzes are fed for destruction. It incorporates the design of the SK used by EBV GmbH in Germany from 1996 thru 2002 to thermally treat millions of fuzes from the same type of submunitions as EBV EEC. The enclosures are concrete chambers in which the SKs are installed. The SKs are manufactured for EBV EEC by SAB. The static kiln is a batch type thermal treatment unit in which the treatment chamber is heated by electrical induction heating to a temperature sufficient to destroy the explosives in the fuzes. The fuzes removed from the submunitions are transferred by a belt conveyed to a SK for treatment. There are four SKs installed with the ability to alternate between them. One SK is in use while the other SKs are cooling, are being emptied of metal scrap residue, or are heating up for use.

3.3 AIR POLLUTION CONTROL EQUIPMENT

3.3.1 TTU APCS

The APCSs for both the pairs of TTUs consist of a Keller Vario primary cartridge filter system and a HEPA filter. The emissions from two TTUs are pulled into one APCS. The ductwork from the TTUs to the APCS is designed to balance the flow and the openings in each TTU are the same. Figure 17-1 of the MHWMF Permit shows the ductwork layout.

Primary Cartridge Filter removes particulates from the TTU with a Polyphenylensulfide felt cartridge with a Teflon membrane. The unit has a pulse-jet cleaning system which uses compressed air to clean the cartridges. The particulates are collected in the bottom section of the filter in two 30 liter containers. A manual valve on the bottom of the filter allows the removal of the dust filled collection containers to be emptied into a 55 gal drum for transfer to the roll-off bins at the Incinerator 90 day pad. These roll-offs are shipped for offsite disposal at a permitted commercial hazardous waste landfill. The units are sized to accommodate 3415 m^3/h of flue gas. The unit has 8 cartridges with a total of 80 m^2 filtering surface area. The air to cloth ratio of the unit, which is defined as the actual gas flow divided by the filter area, is 2.3:1 $ft^3/min\text{-}ft^2$. The pressure drop across the unit runs between 2 to 10 mbar. The inlet pressure is around -9 mbar. The outlet temperature is typically between 100°F to 170°F, but is designed for up to 300°F.

The ID Fan mounted on top of the Primary Cartridge Filter pulls the exhaust gases from the TTUs thru the Primary Cartridge Filter and sends them to the HEPA Filter. The ID Fan has a variable speed control system to control the airflow thru the system. If a fan fails or the airflow drop too low, the feed system is shut down and the burning of the in-process wastes should be complete in about one minute to minimize the potential release of emissions.

HEPA Filter is used as a polishing filter designed to the clean room H13 standards which remove >99.99% of 0.3 micron particles. The HEPA Filter uses replaceable cartridges that are changed when the pressure drop across the filter reaches the manufacturers recommended level. The cartridge are packaged and transferred to roll-offs at the Incinerator 90 day Pad. These roll-offs are shipped for offsite disposal at a permitted commercial hazardous waste landfill.

The ID Fan on the top of the Primary Cartridge Filter pushes the gases thru the HEPA Filter. The HEPA Filter uses two 1FRK-1000-1W filter cartridges sized to accommodate 2,050 m^3/h of flue gas each. The pressure drop across the HEPA Filter is expected to be between 1 to 18 mbar. The inlet pressure to the HEPA Filter is around 6 mbar.

The exhaust gases from the APCS enter a Stack where are released to the atmosphere. A SDF-22 Flow Transducer & SKI Flow Computer is installed in the duct to the stack. The location is based on manufactures

specification and will be in compliance with EPA methods 1 & 1A. The stack flow is between 2,446 - 3,000 Nm^3/h. The minimum flow is based on the air velocity calculation in the opening of the TTU as required in Procedure T and detailed in the application.

The Stack for this APCS is 30 feet tall and 11 inches in diameter. The Stack is constructed of corrosion resistant steel and is mounted on a concrete foundation. Condensed water from the Stack, if any, is drained off daily into a 5 gal pail and treated at the Incineration Process. Six pairs of sample ports in the Stack, 90 degrees apart, are located to ensure there are at least 2 pipe diameters of straight flow before and at least 1 pipe diameters after the sample ports as required by EPA sampling method 1 and 1A.

3.3.2 SK APCS

The APCS for the SKs consist of a Keller Vario primary cartridge filter system and a HEPA filter. The emissions from all four SKs are pulled into the one APCS. Primary Cartridge Filter removes particulates from the SK gases by with a Polyphenylensulfide felt cartridge with a Teflon membrane. The unit has a pulse-jet cleaning system which uses compressed air to clean the cartridges. The particulates are collected in two 30 liter containers. A manual valve on the bottom of the filter allows the removal of the dust filled collection containers to be emptied into a 55 gal drum for transfer to the roll-off bins at the Incinerator 90 day pad. These roll-offs are shipped for offsite disposal at a permitted commercial hazardous waste landfill. The units are sized to accommodate 800 m^3h of flue gas. The unit has 4 cartridges with a total of 24 m^3 filtering surface. The air to cloth ratio in the unit, which is defined as the actual gas flow divided by the filter area, is 1.9: 1 $ft^3/min\text{-}ft^2$. The pressure drop across the unit, based on discussion with the APCS manufacturer, is expected to be between 2 to 10 mbar. The inlet pressure is around -10 mbar. The inlet temperature is typically between 50°F and 120°F, but is designed for up to 300°F.

The ID Fan mounted on top of the Primary Cartridge Filter pulls the exhaust gases from the SKs thru the Primary Cartridge Filter and sends them to the HEPA Filter and out the Stack. The ID Fan has a variable speed control system to control the airflow thru the system. If a fan fails or the airflow drop too low, the feed system is shut down and the burning of the in-process wastes should be complete in about one minute to minimize the potential release of emissions.

HEPA Filter is used as a polishing filter designed to the clean room H13 standards which remove >99.99% of 0.3 micron particles. The HEPA Filter uses one 1FRK-1000-1W filter cartridge that is changed when the pressure drop across the filter reaches the manufacturers recommended level. The cartridge is packaged and transferred to roll-offs at the Incinerator 90 day Pad and handled as hazardous waste. The roll-offs are shipped offsite disposal at a permitted commercial hazardous waste landfill. The HEPA Filter is sized to accommodate 800 m^3/h of flue gas. The pressure drop across the HEPA Filter, based on discussion with the APCS manufacturer, expected to be between 0.5 to 4 mbar. The inlet pressure to the HEPA Filter is expected to be 5 mbar.

The exhaust gases from the ID Fan of the SK APCSs enter a Stack and are released to the atmosphere. A SDF-22 Flow Transducer & SKI Flow Computer is installed in the duct to the stack. The location is based on manufactures specification and will be in compliance with EPA methods. The stack flow is between 360 - 750 Nm^3/h. The minimum flow is based on the air velocity calculation in the opening of the TTU as required in Procedure T and detailed in the application.

The Stack for this APCS is 30 feet tall and 6 inches in diameter. The Stack is constructed of corrosion resistant steel and is mounted on a concrete foundation. Condensed water from the Stack, if any, is drained off daily into a 5 gal pail and treated at the Incineration Process. Six pairs of sample ports in the Stack, 90 degrees apart, are located to ensure there are at least 2 pipe diameters of straight flow before and at least 1 pipe diameters after the sample ports as required by EPA sampling method 1 and 1A.

3.4 APCS MONITORING

The pressure drops across the primary cartridge filters, HEPA filters are continuously monitored to determine if plugging or breaching of the filters is occurring. A DustAlarm Model 18-83 broken bag detector is installed in the

duct work to each Stack. This unit is set to alarm at its most sensitive level and senses particulates down to 0.0005 gr/dscf.

3.5 RESIDENCE TIME

The residence time for the submunitions in the TTU is approximately 3 minutes. The explosives burn out within approximately 60 seconds. The residence time for the fuzes in the SK varies since it is a batch type unit and the fuzes are continually being added until the chamber is full of the scrap metal. The fuzes normally function within 60 seconds of entry into the chamber with the minimum residence time being 10 minutes, which is the waiting time after the last fuze enters the SK before the chamber heating is turned off.

3.6 PROCESS MONITORING AND CONTROL

The TTU, SK and APCSs are controlled by a PLC controller which monitors temperatures, and pressures in the APCSs, and control temperature in the SK. Control loops tied to the flow sensors control the speed of the exhaust fans on the primary filters to maintain proper pressures and flows through the APCSs. The Primary Cartridge filter has a pulse jet cleaning system that monitors the differential pressure (DP) across the filter and sends a very short pulse of compressed air to each row of the cartridges to knock the dust off when the DP reaches the set point. The pulses continue down the row of cartridges until the DP is reduced to a second set point. The pressure on the pulse is also controlled by a regulator. The PLC for the demilitarization process controls the feed rate of the waste to the TTU submunition feed conveyor and the fuze belt conveyor. The PLC controller monitors and controls the ignition of the natural gas ignition torches and the ignition of the explosives in the submunitions in the TTU, and the detectors at the end of the TTU which inspect and verify that the explosives have completely been burned from the submunitions. The PLC controls the rate the submunitions are being demilitarized on each of the four demil lines and thus the feed rate to each TTU and the total feed rate to the SK is below the permit limits. The PLC stops the demil process to ensure the permit limits are not exceeded.

The PLC provides the following:

- Alarm for an exceedance of a designated set point, such as a high pressure, low pressure, or high temperature;
- Shut-down of individual equipment when the measured parameter exceeds a set point (such as a shut-off of disassembly equipment when the air flow gets too low.

The PLC continuously controls and monitors the operation of the TTU, SK and associated APCSs. When out-of-range conditions exist, it notifies the operator of those conditions. The PLC is programmed to shut-down equipment (i.e., bring the system into a safe mode) when designated parameters are exceeded, which is a protective mechanism against potential equipment damage, operation outside of permit limits, or conditions that might lead to a release to the environment.

Table 3-1 list all of the instruments on the SK APCS and the two TTU APCSs.

Table 3-1 APCS Instrumentation Summary

APCS-S1	
Sensor	**Tag ID#**
Temp SK-101	TI-S101
Temp SK-102	TI-S102
Temp SK-103	TI-S103
Temp SK-104	TI-S104
Press. SK-101 Duct	PI-S101
Press. SK-102 Duct	PI-S102
Press. SK-103 Duct	PI-S103
Press. SK-104 Duct	PI-S104
Temp Cart Filter PF-S101	TI-S101-1
DP Cart Filter PF-S101	PI-S101-1
DP HEPA Filter FH-S101	PI-S101-2
Stack Airflow S-S101	AFS-S101
Dustmeter	XSH-S101
APCS-C1	
Sensor	**Tag ID#**
Press. TTU1 Duct	PI-C101-1
Press. TTU2 Duct	PI-C102-1
Temp.TTU1	TI-C101-1
Temp.TTU2	TI-C102-1
Temp Cart Filter PF-C101	TI-C101-2
DP Cart Filter PF-C101	PI-C101-2
DP HEPA Filter FH-C101	PI-C101-4
Stack Airflow S-C101	AFS-C101
Dustmeter	XSH-C101
APCS-C2	
Sensor	**Tag ID#**
Press. TTU3 Duct	PI-C103-1
Press. TTU4 Duct	PI-C104-1
Temp.TTU3	TI-C103-1
Temp.TTU4	TI-C104-1
Temp Cart Filter PF-C102	TI-C102-2
DP Cart Filter PF-C102	PI-C102-2
DP HEPA Filter FH-C102	PI-C102-4
Stack Airflow S-C102	AFS-C102
Dustmeter	XSH-C102

3.7 AUTOMATIC WASTE FEED CUT-OFF SYSTEM

The TTU and SK have an Automatic Waste Feed Cut-Off (AWFCO) System that will shut off the flow of submunitions to the TTU and fuzes to the SK by stopping the disassembly line in the event certain operating parameters deviate from allowable set limits. The PLC continuously monitors operating parameters, making adjustments to the process as needed for proper control. Alarm logic is incorporated into the PLC to automatically initiate an AWFCO. Table 3-2 and Table 3-3 summarize the current AWFCO set points. AWFCO limits have not been set for metals, ash and chlorine since these limits would be based on feed rate and with only one feed for the system, using the feed rate ensures compliance with these limits. AWFCO limits have been established based on regulatory or permit limits that are summarized below.

Regulatory/permit limits – established to comply with existing permits. An example of this type of limit is the minimum temperature AWFCO, below which fuzes cannot be fed to the SK until the proper minimum temperature is re-established with the electrical induction heaters.

In addition to the AWFCO system, operators can manually shutdown waste feeds or the entire process should this be needed. The PLC has also been programmed to stop the waste feed based on other factors summarized below.

Process safety limits – established to assure process equipment is protected and unsafe operating conditions do not occur. An example of this is failure of submunitions to ignite which would result in unburned explosives exiting the TTU.

Utility or Power failure – established to facilitate a controlled shutdown of the process during loss of process air, or electricity. An example of this is the loss of compressed air that is necessary for cleaning of the primary filters. Wastes will not be re-introduced into the TTU or SK until proper operation is re-established.

Table 3-2 TTU Automatic Waste Feed Cutoff Summary

Parameter	Value	Setpoint	Equipment Tag #	Equipment Model	Calibration
TTU Feedrate	Units HRA	1,200 for each TTU		PLC Calculation	NA
TTU-1,2,3,4 Pressure - High	mbar	-1	PI-C101-1 PI-C102-1 PI-C103-1 PI-C104-1	Keller Electronic DP Regulator Type 83400	Quarterly
PF-C101 & PF-C102 Primary Cartridge Filter Outlet Temperature - High	° F	300	TI-C101-2 TI-C102-2	Omnigrad M TR10 Modular RTD Assembly	Annually
PF-C101 & PF-C102 Primary Cartridge Filter Differential Pressure – Low	mbar HRA	2.0	PI-C101-2 PI-C102-2	Keller Electronic DP Regulator Type 83400	Quarterly
FH-C101 & FH-C102 HEPA Filter Differential Pressure – Low	mbar HRA	1.0	PI-C101-4 PI-C102-4	Keller Electronic DP Regulator Type 83400	Quarterly
APCS-C1 & APCS-C2 Particulate Sensor	gr/dscf	0.0005	XSH-C101 XSH-C102	DustAlarm Broken Bag Detector	Annually
APCS-C1 & APCS-C2 Stack Flow – Low	Nm3/h HRA	2,446 (1,223 for each TTU	AFS-C101 AFS-C102	SDF-22 Flow Transducer & SKI Flow Computer	Annually
APCS-C1 & APCS-C2 Stack Flow – High	Nm3/h HRA	3,000 (1,500 for each TTU)	AFS-C101 AFS-C102	SDF-22 Flow Transducer & SKI Flow Computer	Annually
TTU Doors open	No Signal	No Signal		Limit Switches	Quarterly

Table 3-3 SK Automatic Waste Feed Cutoff Summary

Parameter	Value	Setpoint	Equipment Tag #	Equipment Model	Calibration
SK Feedrate	Units HRA	1,200 for each Line		PLC Calculation	NA
SK-1,2,3,4 Pressure - High	mbar	0	PI-S101 PI-S102 PI-S103 PI-S104	Keller Electronic DP Regulator Type 83400	Quarterly
SK-1,2,3,4 Temperature - Low	° F	550	TI-S101 TI-S102 TI-S103 TI-S104	Omnigrad M TR10 Modular RTD Assembly	Annually
PF-S101 Primary Cartridge Filter Differential Pressure – Low	mbar HRA	2.0	PI-S101-1	Keller Electronic DP Regulator Type 83400	Quarterly
PF-S101 Primary Cartridge Filter Outlet Temperature - High	° F	300	PI-S101-1	Omnigrad M TR10 Modular RTD Assembly	Annually
FH-S101 HEPA Filter Differential Pressure - Low	mbar HRA	1.0	PI-S101-2	Keller Electronic DP Regulator Type 83400	Quarterly
APCS-S1 Particulate Sensor	gr/dscf	0.0005	XSH-S101	DustAlarm Broken Bag Detector	Annually
APCS-S1 Stack Flow – Low	Nm3/h HRA	120 (30 per SK)	AFS-S101	SDF-22 Flow Transducer & SKI Flow Computer	Annually
APCS-S1 Stack Flow – High	Nm3/h HRA	720 (180 per SK)	AFS_S101	SDF-22 Flow Transducer & SKI Flow Computer	Annually

4. SAMPLING PROGRAM OVERVIEW

This section provides a summary of the PTTU CPT program and a discussion of the sampling methods used during the field testing. Test equipment calibration and QA/QC procedures are detailed in Section 5.0.

4.1 SAMPLING SUMMARY

O'Brien & Gere conducted source emission testing at the exhaust of APCS serving the PTTU during a single operating condition. Testing was conducted to determine emissions of the following pollutants:

- Dioxins and furans
- Particulate matter
- Arsenic, beryllium, chromium, cadmium, and lead
- Volatile and semi-volatile organic compounds
- Explosive compounds
- Carbon monoxide
- Nitrogen oxides
- Total hydrocarbons (THC)

Testing for each pollutant was conducted in triplicate during each operating condition.

4.2 SAMPLING LOCATIONS

Prior to testing, a cyclonic flow test requested by EPA Region 7 was conducted at both the SK and TTU exhaust stack sampling locations. Results the tests indicated that simultaneous sampling of all emissions test parameters was acceptable. The cyclonic testing results are included in Appendix C.

4.2.1 SK Exhaust Stack

Four different test port levels were utilized in the 6-inch inside diameter exhaust stack in order to accommodate simultaneous sampling of all emissions test parameters. In accordance with EPA RM 1A, all isokinetic sampling was performed at 8 traverse points from the test ports at Levels F (EPA RM 5/29), D (EPA RM 23/0010), and C (STEM). The VOST and CEMS samples were collected at a single point in the stack at level A. Actual traverse point locations are shown in **Table 4-1**. **Figure 4-1** provides a schematic of the SK APCS stack showing the location of the sampling ports and the upstream/downstream distances from flow disturbances.

4.2.2 TTU Exhaust Stack

Four different test port levels were utilized in the 11-inch inside diameter exhaust stack in order to accommodate simultaneous sampling of all emissions test parameters. In accordance with EPA RM 1A, the EPA RM 23/0010 sampling train was performed at 24 traverse points from the test ports at Level C. All other isokinetic sampling was performed at 8 traverse points from the test ports at Levels E (EPA RM 5) and F (STEM). The VOST and CEMS samples were collected at a single point in the stack at level A. Actual traverse point locations are shown in **Tables 4-2 and 4-3**. **Figure 4-2** provides a schematic of the TTU APCS stack showing the location of the sampling ports and the upstream/downstream distances from flow disturbances.

4.3 SAMPLING PROCEDURES

4.3.1 Metals

Multiple metals sampling was conducted in accordance with USEPA Method 29 procedures. The sample train consisted of a glass button-hook nozzle attached to a heated glass lined probe (248 °F ± 25 °F).

Sample gas was drawn through the nozzle and probe isokinetically and then passed through a heated, glass fiber filter (248 °F ± 25 °F). Upon exiting the filter, the gas was drawn through a series of six impingers containing the reagents prescribed by the method. The first and second impingers each contained 100 mls of 5% HNO3/10% H_2O_2 solution to enhance the collection of metals of interest. The third impinger was empty to catch any

overflow from the first two impingers. The fourth impinger contained a pre-weighed amount of silica gel to remove any residual moisture present in the gas stream. Following the impinger system, the gas was drawn through a dry gas meter, a calibrated orifice, and a leak-free pump. Each test run was 120 minutes in duration.

4.3.2 PCDD/PCDF and Semi-Volatile Organics

PCDD/PCDF and SVOC emissions were determined simultaneously by combining Method 23 and Method 0010 into a single sample train. The sample train consisted of a heat-traced probe with a borosilicate buttonhook nozzle. The glass probe was maintained at a temperature of 250°F ± 25°F. After the probe, the gas passed through a heated glass fiber filter. Downstream of the heated filter, the sample gas passed through a water-cooled module, then through a sorbent module containing the XAD-2 sorbent resin. The XAD module, which was kept at a temperature below 20°C, was followed by a series of four impingers. The XAD inlet temperature was monitored to ensure that the proper temperature is maintained. The first impinger, which acted as a condensate reservoir was connected to the outlet of the XAD module and was modified with a short stem so that the sample gas would not bubble through the collected condensate. Condensate collected in the first impinger was collected and analyzed for SVOCS. The first and fourth impingers were both empty. The second and third impingers each contained 100 mls of HPLC Grade or better water and the fifth impinger contained a pre-weighed amount of silica gel. All connections within the train were either glass or Teflon; no sealant greases were used. The impingers were followed by a pump, dry gas meter, and a calibrated orifice meter. Condensate collected in the first impinger was collected and analyzed for SVOCS. Each test run had a duration of 180 minutes to ensure that a minimum of 3 cubic meters were collected.

4.3.3 Explosive Compounds

Energetic compounds were sampled using a modified Method 5 sampling train. The sample train consisted of a heat-traced probe with a borosilicate buttonhook nozzle. The glass probe was maintained at a temperature of 250°F ± 25°F. After the probe, the gas passed through a heated glass fiber filter. Upon exiting the filter, the gas was drawn through a series of five impingers where a two-section resin trap was incorporated between the third and fourth impingers. The first impinger contained 50 mls of water and the second and third each contained 100 mls of water. The fourth impinger was empty and the fifth impinger contained a pre-weighed amount of silica gel. Each test run had a duration of 180 minutes to ensure that a minimum of 3 cubic meters were collected.

4.3.4 Volatile Organic Sampling Train (VOST)

VOST sampling was conducted in accordance with procedures outlined in SW-846 Method 0031 to determine the standard analytical list of volatile organic compounds.

The VOST system was operated at a flow of 0.5 lpm for a period of 40 minutes. This rate and sampling time yields a 20 liter sample. Three samples constituted one VOST run. The VOST sampling was conducted at a single point in the PTTU exhaust stack using a heated sampling probe. The sample train consisted of a glass-lined probe with a glass wool plug to remove particulate, followed by an assembly of condensers and organic resin traps. The gas stream was cooled by a water-cooled condenser and VOCs were collected on a set of sorbent traps (Tenax-GC/Tenax-GC/Anasorb-747). Liquid condensate was collected in an impinger that was placed between the two Tenax-GC traps and Anasorb-747 trap.

The sample temperature was monitored at the outlet of the sample probe and at the inlet to the first Tenax cartridge using thermocouples. The gas temperature through the probe was maintained above 135°C to prevent premature volatile condensation. The temperature of the gas when it passes through the resin cartridges was maintained at less than 20°C.

4.3.5 Particulate Matter

Filterable PM emissions were determined in accordance with USEPA RM 5. The front-half of the sample train consisted of a glass nozzle, a heated glass-lined probe with a Type-S Pitot tube attached. Each PM sample was collected on a quartz fiber filter maintained at a temperature of 248°F (+/- 25°F).

At the completion of each test run the front-half of the sample train was recovered in accordance with RM 5. The heated filter is removed from the housing, placed in a petri dish and labeled. The nozzle, probe, and front half of the filter housing of the RM 5 train was brushed and rinsed a minimum of three times with acetone and placed in a sample container. Each test run was 120 minutes in duration.

4.3.6 Continuous Emissions Monitoring

A transportable CEMS was used to monitor the stack flue gas for NO_X, CO, THC, O_2 and CO_2, in accordance with USEPA Methods 7E, 10, 25A and 3A, respectively.

The CEMS consisted of three subsystems: sample acquisition/conditioning, sample analysis, and a data acquisition system. The sample acquisition/conditioning unit was designed to deliver a representative sample of the stack gas stream to the sample analysis subsystem. A heated probe was placed at a representative point in the stack. The probe was attached to a heated filter box (300-350°F), which contains a Gellman type filter to remove any heavy particulate matter present in the gas stream. After passing through the filter, the flue gas was passed through a heated sample line to a condenser to remove any moisture present in the gas stream. The flue gas was then directed to a manifold system, which in turn will direct a portion of the gas to all of the analyzers with the exception of the THC analyzer. Just upstream of the condenser, a "T" was placed in the line and a second heated sample line (300-350°F) was attached at this point. This heated line was connected directly to the back of the THC analyzer. This modification was used to avoid the possibility of some organic compounds condensing out in the condenser, resulting in a reduced THC concentration.

A data acquisition system was used to continuously monitor analyzer outputs. A laptop computer was linked to the instruments via an input/output (I/O) circuit board and PCMCIA interface. The PC polls data from the analyzers five times per second and displays instantaneous data as 2-second averages. Thirty-second averages are also displayed and written to a data file from which the 1-minute averages were calculated. The 1-minute averages were printed out for each test run.

At the beginning of each sampling day, direct instrument calibrations for zero and two upscale gases was performed prior to initiation of testing. Following these direct calibrations, system calibrations were performed both prior to and following each run using a zero and one upscale gas concentration. Following completion of the runs, one complete system calibration was performed.

4.4 ANALYTICAL PROCEDURES

This section delineates the analytical protocols that were used to analyze samples during this test program. Samples of stack gas were collected and analyzed for the parameters previously discussed using the appropriate laboratory protocols detailed in this section.

4.4.1 Metals

The sampling train generated two individual samples for analysis. The first sample, labeled Fraction 1A consisted of the digested sample from the front half of the train, particulate filter and the front-half nitric acid probe rinse. Fraction 2A consists of digestates from the HNO_3/H_2O_2 impingers 1, and 2.

Analyses for metals were performed using Inductively Coupled Argon Plasma Mass Spectroscopy (ICP-MS) as described in EPA Method 6020 (SW-846, 3rd Edition).

All quality control procedures, including the interference check standard, were followed as described in the respective method.

4.4.3 Particulate Matter

Gravimetric analyses were performed on samples collected from the Method 5 sampling train. Weights were obtained on the front-half acetone rinse and particulate filter using a Mettler H35 analytical balance. Aqueous impingers solutions were extracted by DI water and were dried down in tared glass beakers to a constant weight. The organic impinger solution was extracted by hexane and dried down. Condensable particulate was

recovered from the CPM filter through desiccation and extraction using DI water and hexane. Total particulate matter collected is the sum of the weights obtained from the procedures above.

4.4.4 Explosive Compounds

Stack flue samples were analyzed for explosive residues by high performance liquid chromatography with ultra-violet detection. The target compounds were HMX, RDX, Nitroglycerin, 2,4-DNT, 2,6-DNT and 2,4,6-TNT.

Prior to sample preparation, the FH filter/rinse container was shaken to thoroughly mix the contents, and the volume was measured and recorded. An aliquot was removed for analysis by SW-846 Method 8330 mod (HPLC-UV). The volume of the combined impingers (1, 2, and 3) was measured and recorded, and the sample was extracted using a solid phase extraction cartridge. The resulting extract was analyzed by SW-846 Method 8330 mod (HPLC-UV).

The XAD resin sections were each extracted and analyzed separately. The top glass wool, resin section, and middle glass wool were removed and placed in a jar for extraction. The second (bottom) resin section and bottom glass wool were placed in a second jar for extraction. Each of the trap sections was serially extracted three times with acetonitrile. The serial extracts of each section were combined, and the volume of the combined extract was measured. The final combined extract is analyzed by SW-846 Method 8330 mod.

4.4.5 Votatile Organic Compounds

The samples collected from each VOST run consisted of two Tenax cartridge, a Tenax/charcoal backup cartridge, and a condensate sample. All three cartridges were combined and desorbed together and analyzed for the standard list of VOCs using the thermal desorption GC/MS procedures specified in SW-846 Method 5041A. Condensate samples were analyzed using SW-846 Method 8260B.

4.4.6 PCDDs/PCDFs and Semi-volatile Organic Compounds

Stack gas samples collected using the Method 23/0010 sampling train were analyzed for polychlorinated dibenzo-p-dioxins and polychlorinated dibenzofurans (PCDDs/PCDFs) using a high resolution GC/MS as per SW-846 Method 8290. Analysis of SVOCs collected in the sampling train, were performed by low-resolution mass spectrometry following the analytical protocol of SW-846 Method 8270C.

All components of the combined sampling train were submitted to the laboratory for extraction and analysis. The acetone and toluene rinses were concentrated and combined with the XAD and filter for Soxhlet extraction. Sample fractions were combined so as to yield one analysis.

Table 4-1 SK Test Port Levels C, D, and F Traverse Point Locations

Facility: General Dynamics

Source Identification: Static Kilns

Stack Diameter: 6 inches

Minimum Number of Traverse points as specified by EPA Method 1: 8

Number of traverse points sampled: 8

Traverse Point Number	Percent of Stack Diameter From Inside Wall	Distance in Inches From Inside Wall*
1	6.7	0.4
2	25.0	1.5
3	75.0	4.5
4	93.3	5.6

*Traverse points located within 1.00" to the stack wall for stacks having an inside diameter greater than 24" will be relocated as well as traverse points located within 0.50 inches to the stack wall on stacks with a 24" ID or less to meet criteria.

Table 4-2 TTU Test Port Level C Traverse Point Locations

Facility: General Dynamics

Source Identification: Thermal Treatment Units

Stack Diameter: 11 inches

Minimum Number of Traverse points as specified by EPA Method 1: 24

Number of traverse points sampled: 24

Traverse Point Number	Percent of Stack Diameter From Inside Wall	Distance in Inches From Inside Wall*
1	2.1	0.2
2	6.7	0.7
3	11.8	1.3
4	17.7	1.9
5	25.0	2.8
6	35.6	3.9
7	64.4	7.1
8	75.0	8.3
9	82.3	9.1
10	88.2	9.7
11	93.3	10.3
12	97.9	10.8

*Traverse points located within 1.00" to the stack wall for stacks having an inside diameter greater than 24" will be relocated as well as traverse points located within 0.50 inches to the stack wall on stacks with a 24" ID or less to meet criteria.

Table 4-3 TTU Test Port Levels E and F Traverse Point Locations

Facility: General Dynamics

Source Identification: Thermal Treatment Units

Stack Diameter: 11 inches

Minimum Number of Traverse points as specified by EPA Method 1: 8

Number of traverse points sampled: 8

Traverse Point Number	Percent of Stack Diameter From Inside Wall	Distance in Inches From Inside Wall*
1	6.7	0.7
2	25.0	2.8
3	75.0	8.3
4	93.3	10.3

*Traverse points located within 1.00" to the stack wall for stacks having an inside diameter greater than 24" will be relocated as well as traverse points located within 0.50 inches to the stack wall on stacks with a 24" ID or less to meet criteria.

Figure 4-1 SK Exhaust Stack Schematic

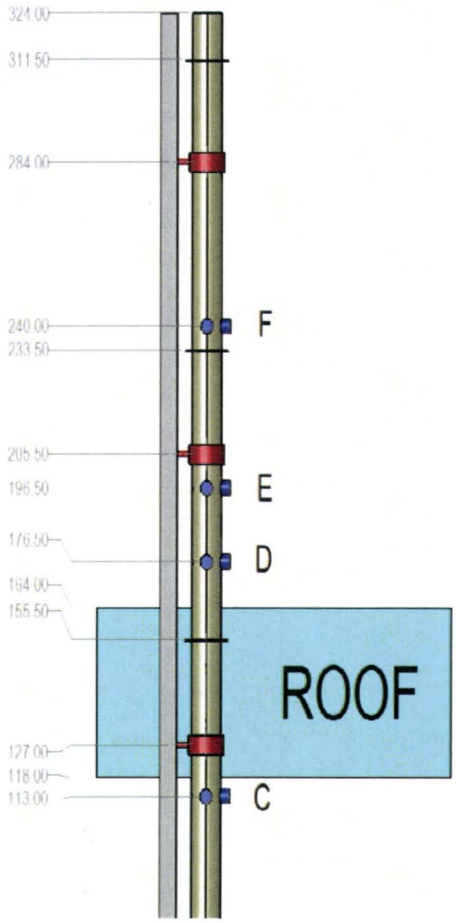

Figure 4-2 TTU Exhaust Stack Schematic

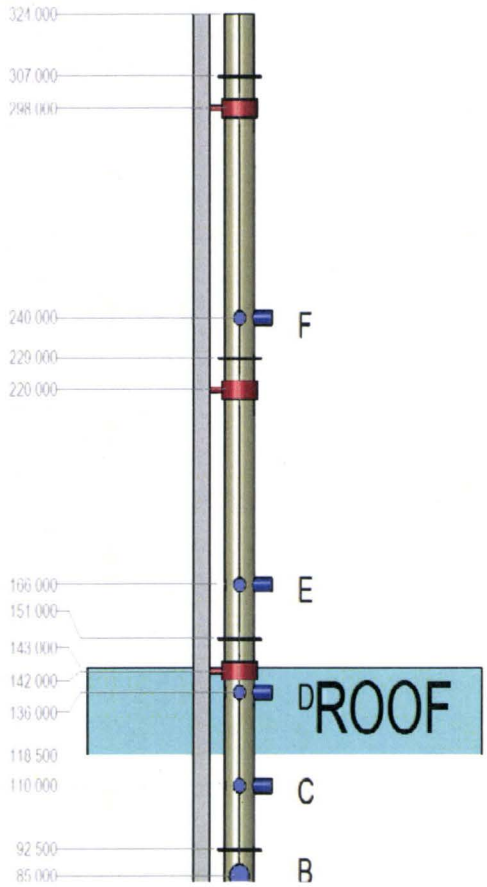

5. PROGRAM RESULTS

The following section briefly discusses the results of this test program. Field data sheets and supporting emission calculations are presented in **Appendix B**. Laboratory analytical data is summarized in **Appendix D**. The CPTs were conducted at a single operating condition that included feeding the maximum quantities of the specified waste to both the static kilns and thermal treatment units while operating their APCSs at worst case conditions.

5.1 STATIC KILNS

5.1.1 Process Operating Conditions

This comprehensive performance test program was designed to meet the applicable emission standards and also to gather critical emission measurement data to be used as input to the risk assessment. A single operating condition was designed to accommodate all required testing. The updated table of Automatic Waste Feed Cut-off setpoints is provided in **Table 5-1**.

A summary of the waste feed data collected during the testing is provided in **Table 5-2**. The waste feed rate is summarized on an hourly rolling average basis. Throughout the test program, detailed process information was collected continuously by the facility's process control computers and data historian. **Table 5-3** also provides a summary of process data including minimum, maximum and average values for key process variables recorded during all sampling run periods. Detailed one-minute process data summaries are included in **Appendix A**.

The only waste treated in the SK is the M223 Fuze which has a known and fixed composition as shown in the US Army MIDAS information submitted with the application. Based on the US Army MIDAS information, there is no mercury or chlorine in this waste, so compliance with the mercury feedrate limit is ensured. The results of this CPT have shown compliance with the emission levels for particulate matter, LVM and SVM; thus compliance with the total hazardous waste feed rate limit shown in the tests ensures compliance with the ash (particulate matter), LVM and SVM feed rate limits.

The SK, TTU and APCSs are at steady state conditions within 15 minutes from the time the first treated submunitions are removed from the TTU treatment conveyor. The sampling for the three SK runs started 57, 15 and 30 minutes respectively after the start of the waste feed.

5.1.2 Dioxins and Furans (PCCD/PCDF) Results

A summary of the dioxins and furans emissions is provided in **Table 5-4**. The dioxins and furans concentrations for the SK exhaust averaged approximately 0.0028 ng/dscm within the RCRA Permit limit of 0.11 ng/dscm.

5.1.3 Particulate Matter Results

A summary of the PM emissions is provided in **Table 5-5**. The filterable PM concentrations for the SK exhaust averaged approximately 0.0005 gr/dscf, within the RCRA Permit limit of 0.0015 gr/dscf.

5.1.4 Metals Results

A summary of the metals emissions categorized by semi-volatile metals (SVM) and low-volatile metals (LVM) is provided in **Table 5-5**. The SVM emissions averaged approximately 3.01 μg/dscm, within the RCRA Permit limit of 23 ug/dscm and the LVM emissions averaged 1.56 μg/dscm, within the RCRA Permit limit of 10 ug/dscm.

5.1.5 Carbon Monoxide Results

A summary of the CO data can be found in **Table 5-6**. The CO emissions averaged approximately 20.6 ppm, dry.

5.1.6 Nitrogen Oxides Results

A summary of the NO_X data can be found in **Table 5-6**. The NO_X emissions averaged approximately 3.21 ppm, dry.

5.1.7 Risk Assessment Test Results

This section presents a summary of the test parameters that were measured to serve as input to the risk assessment modeling process.

5.1.8 Total Hydrocarbon Results

A summary of the THC data can be found in **Table 5-6**. The THC emissions averaged approximately 1.99 ppm, dry.

5.1.9 Semi-volatile Organic Compound Results

Emission data were determined for a target list of SVOCs (a total of 74 compounds). Emission results for detected SVOCs are provided in **Table 5-7**. Only two of the 74 targets compounds were detected above the reporting limit in any sample train: benzyl alcohol and bis (2-ethylhexyl) phthalate. Additional detailed information is provided with the field data and calculations in **Appendix B** and the analytical data report in **Appendix D**.

5.1.10 Volatile Organic Compound Results

Emission data were determined for a target list of VOCs (a total of 64 compounds). Emission results for detected VOCs are provided in **Table 5-8**. Additional detailed information is provided with the field data and calculations in **Appendix B** and the analytical data report in **Appendix D**.

5.1.11 Explosive Compound Results

Emission data were determined for a target list of explosive compounds (a total of 6 compounds). Emission results for detected compounds are provided in **Table 5-9**. Only one of the 6 target compounds were detected above the reporting limit in any sample train: 2,6-dinitrotoluene. Additional detailed information is provided with the field data and calculations in **Appendix B** and the analytical data report in **Appendix D**.

5.2 THERMAL TREATMENT UNITS

5.2.1 Process Operating Conditions

This comprehensive performance test program was designed to meet the applicable emission standards and also to gather critical emission measurement data to be used as input to the risk assessment. A single operating condition was designed to accommodate all required testing. The updated table of Automatic Waste Feed Cut-off setpoints is provided in **Table 5-10**.

A summary of the waste feed data collected during the testing is provided in **Table 5-11**. The waste feed rate is summarized on an hourly rolling average basis. Throughout the test program, detailed process information was collected continuously by the facility's process control computers and data historian. **Table 5-12** also provides a summary of process data including minimum, maximum and average values for key process variables recorded during all sampling run periods. Detailed one-minute process data summaries are included in **Appendix A**.

The only waste treated in the TTU is the submunition body of the M42/46/77 submunition which has a known and fixed composition as shown in the US Army MIDAS information submitted with the application. Based on the US Army MIDAS information, there is no LVM, SVM, mercury or chlorine in this waste, so compliance with the LVM, SVM and mercury federate limits are ensured. The results of this CPT have shown compliance with the emission levels for particulate matter; thus compliance with the total hazardous waste feed rate limit shown in the tests ensures compliance with the ash (particulate matter) feed rate limit.

The SK, TTU and APCSs are at steady state conditions within 15 minutes from the time the first treated submunitions are removed from the TTU treatment conveyor. The sampling for the three TTU runs started 36, 22 and 40 minutes respectively after the start of the waste feed.

5.2.2 Dioxins and Furans (PCCD/PCDF) Results

A summary of the dioxins and furans emissions is provided in **Table 5-13**. The dioxins and furans concentrations for the TTU exhaust averaged approximately 0.0075 ng/dscm, within the RCRA Permit limit of 0.11 ng/dscm.

5.2.3 Particulate Matter Results

A summary of the PM emissions is provided in **Table 5-14**. The filterable PM concentrations for the TTU exhaust averaged approximately 0.0005 gr/dscf, within the RCRA Permit limit of 0.0015 gr/dscf.

5.2.4 Carbon Monoxide Results

A summary of the CO data can be found in **Table 5-15**. The CO emissions averaged approximately 7.74 ppm, dry.

5.2.5 Nitrogen Oxides Results

A summary of the NO_X data can be found in **Table 5-15**. The NO_X emissions averaged approximately 105 ppm, dry.

5.2.6 Risk Assessment Test Results

This section presents a summary of the test parameters that were measured to serve as input to the risk assessment modeling process.

5.2.7 Total Hydrocarbon Results

A summary of the THC data can be found in **Table 5-15**. The THC emissions averaged approximately 31.2 ppm, dry.

5.2.8 Semi-volatile Organic Compound Results

Emission data were determined for a target list of SVOCs (a total of 74 compounds). Emission results for detected SVOCs are provided in **Table 5-16**. Only one of the 74 targets compounds were detected above the reporting limit in any sample train: phenol. Additional detailed information is provided with the field data and calculations in **Appendix B** and the analytical data report in **Appendix D**.

5.2.9 Volatile Organic Compound Results

Emission data were determined for a target list of VOCs (a total of 64 compounds). Emission results for detected VOCs are provided in **Table 5-17**. Additional detailed information is provided with the field data and calculations in **Appendix B** and the analytical data report in **Appendix D**.

5.2.10 Explosive Compound Results

Emission data were determined for a target list of explosive compounds (a total of 6 compounds). Emission results for detected compounds are provided in **Table 5-18**. Four of the 6 target compounds were detected above the reporting limit in any sample train: 2,6-dinitrotoluene, HMX, RDX 2,4,6-Trinitrotoluene. Additional detailed information is provided with the field data and calculations in **Appendix B** and the analytical data report in **Appendix D**.

Table 5-1 Automatic Waste Feed Cut-offs – Static Kilns

Parameter	Value	Setpoint	Equipment Tag #	Basis	Equipment Model	Calibration
SK Feedrate	Units HRA	4,853		ATRA	PLC Calculation	NA
SK-1,2,3,4 Pressure - High	Pa	-10	PI-S101 PI-S102 PI-S103 PI-S104	MS	Keller Electronic DP Regulator Type 83400	Quarterly
SK-1,2,3,4 Temperature - Low	° F	550	TI-S101 TI-S102 TI-S103 TI-S104	MS	Omnigrad M TR10 Modular RTD Assembly	Annually
PF-S101 Primary Cartridge Filter DP – Low	mbar HRA	1.5	PI-S101-1	MS	Keller Electronic DP Regulator Type 83400	Quarterly
PF-S101 Primary Cartridge Filter Outlet Temp - High	° F	300	PI-S101-1	MS	Omnigrad M TR10 Modular RTD Assembly	Annually
FH-S101 HEPA Filter DP - Low	mbar HRA	0.5	PI-S101-2	MS	Keller Electronic DP Regulator Type 83400	Quarterly
APCS-S1 Particulate Sensor	gr/dscf	0.0005	XSH-S101	MS	DustAlarm Broken Bag Detector	Annually
APCS-S1 Stack Flow – Low	Nm3/h HRA	360	AFS-S101	MS	SDF-22 Flow Transducer & SKI Flow Computer	Annually
APCS-S1 Stack Flow – High	Nm3/h HRA	603	AFS_S101	ATRA	SDF-22 Flow Transducer & SKI Flow Computer	Annually

HRA – Hourly Rolling Average
MS – Manufacturers or Engineering Specification
ATRA – Average of the Test Run Averages

Table 5-2 Summary of Waste Feed Data – Static Kilns

Feed Rate based on Actual Fuze Count

Test Date	6/26/2012	6/26/2012	6/27/2012			
	Run 1	Run 2	Run 3	Avg of 3 runs	Fuze Wt	0.2131 lbs
Feed Start Time	12:43	17:50	8:20		NEW Wt	0.0019 lbs
Feed End Time	16:58	21:05	11:50			
Total Feed Time (hrs)	4.25	3.25	3.50	9.1	lbs/hr NEW	
Total Fuzes Fed	20,840	15,720	16,860	1,034	lbs/hr	
Avg Fuzes Fed/Hr	4,904	4,837	4,817	**4,853**	Fuzes per hour	

Feed Rate based on Convenyor Speed

Note: Conveyor speed was set at constant speed of 8 flights/min, with 10 fuzes being fed on each flight. Resulting feed rate was to be 80 fuzes/minute.

Conveyor speed was measured throughout each test at ~30 minute increments by checking the time it took for 32 conveyor flights to pass a mark on the conveyor frame.

During feeding and sampling, time measurements were consistently 3:58-4:00 minutes for 32 flight, or slightly more than 8 flights/minute.

Run 1 6/26/2012	Feed Conveyor Rate in min for 32 Flights	Fuzes /hr	Run 2 6/26/2012	Feed Conveyor Rate in min for 32 Flights	Fuzes /hr	Run 3 6/27/2012	Feed Conveyor Rate in min for 32 Flights	Fuzes /hr
Average	0:03:59	4,820	**Average**	0:03:59	4,823	**Average**	0:04:00	4,810
Min	0:03:58	4,800	**Min**	0:03:57	4,800	**Min**	0:03:56	4,702
Max	0:04:00	4,840	**Max**	0:04:00	4,861	**Max**	0:04:05	4,881
Time PM			**Time PM**			**Time AM**		
12:48	0:04:00	4,800	5:53	0:03:57	4,861	8:02	0:04:03	4,741
13:30	0:04:00	4,800	5:56	0:03:57	4,861	8:27	0:04:05	4,702
13:50	0:03:59	4,820	6:02	0:04:00	4,800	8:32	0:03:56	4,881
14:22	0:03:59	4,820	6:08	0:04:00	4,810	8:37	0:03:59	4,820
14:50	0:03:59	4,820	6:35	0:03:59	4,820	8:45	0:03:59	4,820
15:20	0:03:58	4,840	7:05	0:03:59	4,820	9:00	0:03:59	4,820
15:51	0:03:58	4,840	7:35	0:04:00	4,800	9:18	0:03:59	4,820
16:20	0:03:59	4,820	8:05	0:03:59	4,820	9:45	0:03:59	4,820
16:50	0:03:59	4,820	8:32	0:03:59	4,820	10:05	0:03:59	4,820
			8:57	0:03:59	4,820	10:35	0:03:59	4,820
						11:10	0:03:59	4,820
Average Fuzes/hr for 3 Runs		4,818				11:45	0:03:58	4,840

Table 5-3 Summary of Process Data – Static Kilns

APCS -S1 Operating Data Summary

	6/26/2012	Static Kiln #1 Temp °F	Static Kiln #2 Temp °F	Static Kiln #1 Pressure Pa	Static Kiln #2 Pressure Pa	Cartridge Filter Outlet Temp °F	Cartridge Filter DP mBar	HEPA Filter DP mBar	Stack Flow Nm3/h	Stack Flow acfm
Run 1	Average	698		-21		129	3.3	0.7	603	395
	Min	680		-25		128	1.8	0.6	590	387
	Max	712		-16		130	4.3	0.7	615	403
Run 2	Average		707		-13	121	3.4	0.7	603	390
	Min		680		-17	116	1.7	0.6	590	380
	Max		732		-10	125	4.3	0.7	616	400
Run 3	Average	699		-25		123	3.3	0.8	602	391
	Min	680		-32		119	1.8	0.7	589	381
	Max	712		-9		126	4.3	0.8	622	405
Average of Runs	Average	701		-20		124	3.3	0.7	603	392
	Min	680		-25		121	1.8	0.7	590	383
	Max	719		-11		127	4.3	0.8	618	403

Data for Static Kiln being Fed

Table 5-4 Summary of PCDD/PCDF Results –Static Kilns

Run Identification	Run 1	Run 2	Run 3	Average
Run Date	26Jun12	26Jun12	27Jun12	
Start/Stop Time	1340-1658	1805-2105	0850-1150	
Run Duration (min.)	180	180	180	
Exhaust Gas Conditions				
Temperature (deg. F)	124	125	116	122
Moisture (volume %)	1.82	1.85	1.27	1.65
Oxygen (dry volume %)	20.8	20.8	20.9	20.8
Carbon Dioxide (dry volume %)	0.25	0.00	0.00	0.08
Sample and Exhaust Gas Flow Rate Data				
Sample Volume (dscf)	145.3	143.3	139.1	142.6
Volumetric Flow Rate (acfm)	506	503	508	506
Volumetric Flow Rate (dscfm)	436	434	449	440
Dioxin/Furan Results				
PCDD/DF TEQ (ng/dscm)	0.0045	0.0019	0.0020	0.0028
PCDD/DF TEQ (lb/hr)	7.39E-12	3.04E-12	3.31E-12	4.58E-12

[a] PCDD/DF emission limit is 0.11 ng/dscm

Table 5-5 Summary of Metals and PM Results – Static Kilns

Run Identification	Run 1		Run 2		Run 3		Average	
Run Date	26Jun12		26Jun12		27Jun12			
Start/Stop Time	1340-1617		1805-2005		0850-1050			
Exhaust Gas Conditions								
Temperature (deg. F)	125		124		116		**121**	
Moisture (volume %)	1.7		1.9		1.5		**1.7**	
Oxygen (dry volume %)	20.78		20.76		20.78		**20.77**	
Carbon Dioxide (dry volume %)	0.23		0.00		0.00		**0.08**	
Volumetric Flow Rate								
acfm	515		512		498		**508**	
dscfm	444		441		439		**441**	
Metals Emissions	ug/dscm	lb/hr	ug/dscm	lb/hr	ug/dscm	lb/hr	**ug/dscm**	**lb/hr**
Arsenic	<1.06	<1.77E-06	<1.04	<1.72E-06	<1.08	<1.77E-06	**<1.06**	**<1.75E-06**
Beryllium	<0.53	<8.83E-07	<0.52	<8.58E-07	<0.54	<8.85E-07	**<0.53**	**<8.75E-07**
Chromium	<1.06	<1.77E-06	1.49	2.46E-06	1.72	2.83E-06	**1.42**	**2.35E-06**
SVM Totals	**2.66**	**4.41E-06**	**3.05**	**5.03E-06**	**3.34**	**5.49E-06**	**3.01**	**4.98E-06**
Cadmium	<0.53	<8.83E-07	<0.52	<8.58E-07	<0.54	<8.85E-07	**<0.53**	**<8.75E-07**
Lead	1.20	2.00E-06	1.11	1.83E-06	0.79	1.30E-06	**1.03**	**1.71E-06**
LVM Totals	**1.73**	**2.88E-06**	**1.63**	**2.69E-06**	**1.33**	**2.18E-06**	**1.56**	**2.58E-06**
Filterable Particulate Matter Emissions	gr/dscf	lb/hr	gr/dscf	lb/hr	gr/dscf	lb/hr	**gr/dscf**	**lb/hr**
	0.0003	0.0011	0.0007	0.0026	0.0004	0.0016	**0.0005**	**0.0018**

a SVM Emission Limit = 23 ug/dscm
b LVM Emission Limit = 10 ug/dscm
c PM Emission Limit = 0.0015 gr/dscf

Table 5-6 Summary of NO_X, CO and THC Results – Static Kilns

Run Identification	Run 1	Run 2	Run 3	Average
Run Date	26Jun12	26Jun12	27Jun12	
Start/Stop Time	1340-1658	1805-2105	0850-1150	
Exhaust Gas Conditions				
Moisture (volume %)	1.70	1.85	1.40	1.65
Oxygen (dry volume %)	20.8	20.8	20.9	20.8
Carbon Dioxide (dry volume %)	0.25	0.00	0.00	0.08
Volumetric Flow Rate				
dscfm	436	434	449	440
Carbon Monoxide				
ppm, dry	20.3	19.3	22.4	20.6
lb/hr	0.039	0.036	0.044	0.040
Nitrogen Oxides				
ppm, dry	3.38	2.74	3.51	3.21
lb/hr	0.011	0.009	0.011	0.010
Total Hydrocarbons (as Propane)				
ppm, dry	2.73	1.87	1.38	1.99
lb/hr	0.0082	0.0056	0.0043	0.0060

Table 5-7 Summary of SVOC Results – Static Kilns

Run Identification	Run 1		Run 2		Run 3		Average	
Run Date	26Jun12		26Jun12		27Jun12			
Start/Stop Time	1340-1658		1805-2105		0850-1150			
Exhaust Gas Conditions								
Temperature (deg. F)	124		125		116		**122**	
Moisture (volume %)	1.82		1.85		1.27		**1.65**	
Oxygen (dry volume %)	20.8		20.8		20.9		**20.8**	
Carbon Dioxide (dry volume %)	0.25		0.00		0.00		**0.08**	
Volumetric Flow Rate								
acfm	506		503		508		**506**	
dscfm	436		434		449		**440**	
SVOCs Emissions	ug/dscm	lb/hr	ug/dscm	lb/hr	ug/dscm	lb/hr	**ug/dscm**	**lb/hr**
Benzyl Alcohol	63.2	1.03E-04	<4.43E+01	<7.20E-05	<40.6	<6.84E-05	**<49.39**	**<8.12E-05**
Bis (2-Ethylhexyl) phtalate	15.3	2.50E-05	<9.86E+00	<1.60E-05	<10.2	<1.71E-05	**<11.77**	**<1.94E-05**

Table 5-8 Summary of VOC Results – Static Kilns

	Run No.	Run 1	Run No.	Run 2	Run No.	Run 3
	Date	6/26/2012	Date	6/26/2012	Date	6/27/2012
	Start Time	1340	Start Time	1805	Start Time	850
	Stop Time	1618	Stop Time	2042	Stop Time	1120
	Units		Units		Units	
VOST Sample Volume	dsL	59.55	dsL	59.74	dsL	60.45
Exhaust Flow Rate	dscfm	436	dscfm	434	dscfm	449
Volatile Organics	µg/dscm	lb/hr	µg/dscm	lb/hr	µg/dscm	lb/hr
Acetone	32.8	5.35E-05	19.2	3.13E-05	21.3	3.56E-05
Benzene	14.8	2.41E-05	15.3	2.49E-05	21.8	3.64E-05
2-Butanone	6.36	1.04E-05	ND	ND	ND	ND
n-Butylbenzene	0.19	3.05E-07	ND	ND	ND	ND
Carbon disulfide	2.35	3.84E-06	1.81	2.94E-06	2.36	3.95E-06
Carbon tetrachloride	0.35	5.69E-07	ND	ND	0.17	2.84E-07
1,2-Dichlorobenzene	0.72	1.18E-06	ND	ND	1.70	2.84E-06
Dichlorodifluoromethane	4.03	6.58E-06	3.72	6.06E-06	3.52	5.87E-06
Ethylbenzene	4.44	7.26E-06	3.34	5.42E-06	3.84	6.41E-06
Isopropylbenzene	0.79	1.29E-06	0.91	1.47E-06	0.50	8.37E-07
n-Propylbenzene	0.58	9.55E-07	0.41	6.74E-07	0.60	1.00E-06
Styrene	2.41	3.94E-06	2.41	3.91E-06	2.91	4.85E-06
Tetrachloroethene	0.43	6.96E-07	ND	ND	0.06	1.08E-07
Toluene	15.4	2.52E-05	8.14	1.32E-05	7.51	1.25E-05
Trichloroethene	0.56	9.17E-07	ND	ND	ND	ND
Trichlorofluoromethane	11.3	1.85E-05	4.85	7.89E-06	7.84	1.31E-05
1,2,4-Trimethylbenzene	2.08	3.40E-06	2.02	3.29E-06	1.94	3.24E-06
1,3,5-Trimethylbenzene	0.62	1.01E-06	0.65	1.05E-06	0.62	1.03E-06
m-Xylene & p-Xylene	14.6	2.38E-05	11.5	1.87E-05	11.8	1.97E-05
o-Xylene	8.61	1.41E-05	7.16	1.16E-05	7.05	1.18E-05

Table 5-9 Summary of Explosive Compound Results – Static Kilns

Run Identification	Run 1		Run 2		Run 3		Average	
Run Date	26Jun12		26Jun12		27Jun12			
Start/Stop Time	1340-1658		1805-2105		0850-1150			
Exhaust Gas Conditions								
Temperature (deg. F)	126		126		117		**123**	
Moisture (volume %)	1.65		1.83		1.46		**1.65**	
Oxygen (dry volume %)	20.8		20.8		20.9		**20.8**	
Carbon Dioxide (dry volume %)	0.25		0.00		0.00		**0.1**	
Volumetric Flow Rate								
acfm	499		496		500		**498**	
dscfm	429		426		439		**431**	
Explosive Compound Emissions	ug/dscm	lb/hr	ug/dscm	lb/hr	ug/dscm	lb/hr	**ug/dscm**	**lb/hr**
2, 6-Dinitrotoluene	<0.35	<5.63E-07	0.61	9.77E-07	0.66	1.08E-06	**0.54**	**8.72E-07**

Table 5-10 Automatic Waste Feed Cut-offs – Thermal Treatment Units

Parameter	Value	Setpoint	Equipment Tag #	Basis	Equipment Model	Calibration
TTU Feedrate	Units HRA	1,120 for each TTU		ATRA	PLC Calculation	NA
TTU-1,2,3,4 Pressure - High	mbar	-1	PI-C101-1 PI-C102-1 PI-C103-1 PI-C104-1	MS	Keller Electronic DP Regulator Type 83400	Quarterly
PF-C101 & PF-C102 Primary Cartridge Filter Outlet Temp - High	° F	300	TI-C101-2 TI-C102-2	MS	Omnigrad M TR10 Modular RTD Assembly	Annually
PF-C101 & PF-C102 Primary Cartridge Filter DP – Low	mbar HRA	2.0	PI-C101-2 PI-C102-2	MS	Keller Electronic DP Regulator Type 83400	Quarterly
FH-C101 & FH-C102 HEPA Filter DP – Low	mbar HRA	1.0	PI-C101-4 PI-C102-4	MS	Keller Electronic DP Regulator Type 83400	Quarterly
APCS-C1 & APCS-C2 Particulate Sensor	gr/dscf	0.0005	XSH-C101 XSH-C102	MS	DustAlarm Broken Bag Detector	Annually
APCS-C1 & APCS-C2 Stack Flow – Low	Nm3/h HRA	2,250	AFS-C101 AFS-C102	MS	SDF-22 Flow Transducer & SKI Flow Computer	Annually
APCS-C1 & APCS-C2 Stack Flow – High	Nm3/h HRA	2,478	AFS-C101 AFS-C102	ATRA	SDF-22 Flow Transducer & SKI Flow Computer	Annually
TTU Doors open	No Signal	No Signal		MS	Limit Switches	Quarterly

HRA – Hourly Rolling Average
MS – Manufacturers or Engineering Specification
ATRA – Average of the Test Run Averages

Table 5-11 Summary of Waste Feed Data – Thermal Treatment Units

Test Date	6/27/2012		6/27/2012		6/28/2012	
	Run No. 1		Run No. 2		Run No. 3	
Feed Start Time	14:50		19:30		8:10	
Sampling Start Time	15:26		19:52		8:50	
Sampling and Feed End Time	18:52		22:57		11:55	
Total Feed Time (hrs)	3 hrs 26 mins		3 hrs 5 mins		3 hrs 5 mins	
	Line No. 3	Line No. 4	Line No. 3	Line No. 4	Line No. 3	Line No. 4
Grenade Counter at beginning of Sampling	704	504	5,088	4,248	12,668	12,716
Grenade Counter at end of Sampling	4,624	3,824	8,424	7,784	16,320	16,416
Total Grenades fed/line during Sampling	3,920	3,320	3,336	3,536	3,652	3,700
Avg Grenades fed/hr/line during Sampling	1,142	967	1,082	1,147	1,184	1,200
Total Grenades fed both Lines during Sampling	7,240		6,872		7,352	
Avg Grenades fed/hr for both Lines during Sampling	2,109		2,229		2,384	
Avg for all 3 runs	2,241	Grenades for both lines				
	1,120	Grenades per line				
	434	lbs/hr per line		Grenade Wt.	0.3873	lbs
	76.2	lbs/hr NEW per line		NEW Wt.	0.068	lbs

Note: Goal was to achieve a conveyor cycle rate of 4 grenades every 12 seconds through TTU.
On Run 1, conveyor speed on Line No. 4 was running at a cycle rate of 4 grenades every 14.8 seconds due to a program glitch that wasn't corrected until just prior to completion of the run.
Therefore, average grenade feed rate for Line 4 on Run 1 is lower than Line 3.

Table 5-12 Summary of Process Data – Thermal Treatment Units

APCS -C2 Operating Data Summary

	6/27	TTU-3 Pressure Pa	TTU-4 Pressure Pa	TTU-3 Temp °F	TTU-4 Temp °F	Cartridge Filter Exit Temp °F	Cartridge Filter DP mBar	HEPA Filter DP mBar	Stack Flow Nm3/h	Stack Flow acfm
Run 1	Average	-10.3	-22.5	132.1	125.0	223.0	5.4	5.0	2,482	1,888
	Min	-17.4	-31.6	117.2	111.4	193.4	4.9	4.6	2,411	1,787
	Max	-7.1	-3.6	139.8	132.8	232.4	5.7	5.2	2,523	1,938
Run 2	Average	-10.4	-23.6	140.1	136.8	231.2	5.7	4.9	2,477	1,906
	Min	-16.5	-32.8	132.6	126.6	207.3	5.3	4.7	2,429	1,843
	Max	-0.3	-3.7	144.9	140.7	239.3	5.9	5.0	2,527	1,962
Run 3	Average	-11.1	-24.2	139.1	136.8	229.2	5.4	4.8	2,476	1,901
	Min	-15.4	-34.2	124.6	125.8	206.5	5.0	4.5	2,412	1,843
	Max	-7.5	-14.9	147.9	144.0	239.6	5.7	5.0	2,536	1,949
Avg of Runs	Average	-10.6	-23.5	137.1	132.8	227.8	5.5	4.9	2,478	1,898
	Min	-16.4	-32.8	124.8	121.3	202.4	5.1	4.6	2,417	1,824
	Max	-5.0	-7.4	144.2	139.1	237.1	5.7	5.1	2,529	1,950

Table 5-13 Summary of PCDD/PCDF Results –Thermal Treatment Units

Run Identification	Run 1	Run 2	Run 3	Average
Run Date	27Jun12	27Jun12	28Jun12	
Start/Stop Time	1527-1852	1952-2257	0850-1156	
Run Duration (min.)	180	180	180	
Exhaust Gas Conditions				
Temperature (deg. F)	155	171	190	172
Moisture (volume %)	2.32	2.50	2.42	2.41
Oxygen (dry volume %)	20.1	20.1	20.1	20.1
Carbon Dioxide (dry volume %)	1.32	0.86	0.96	1.05
Sample and Exhaust Gas Flow Rate Data				
Sample Volume (dscf)	104.5	106.5	112.2	107.7
Volumetric Flow Rate (acfm)	1,831	1,880	2,066	1,926
Volumetric Flow Rate (dscfm)	1,487	1,485	1,590	1,521
Dioxin/Furan Results				
PCDD/DF TEQ (ng/dscm)	0.0062	0.0091	0.0072	0.0075
PCDD/DF TEQ (lb/hr)	3.47E-11	5.09E-11	4.31E-11	4.29E-11

[a] PCDD/DF emission limit is 0.11 ng/dscm

Table 5-14 Summary of Particulate Matter Results –Thermal Treatment Units

Run Identification	Run 1	Run 2	Run 3	Average
Run Date	27Jun12	27Jun12	28Jun12	
Start/Stop Time	1527-1741	1952-2202	0850-1100	
Exhaust Gas Conditions				
Temperature (deg. F)	170	179	180	**176**
Moisture (volume %)	3.45	2.32	4.62	**3.46**
Oxygen (dry volume %)	20.2	20.1	20.1	**20.1**
Carbon Dioxide (dry volume %)	1.3	0.9	1.0	**1.1**
Volumetric Flow Rate				
acfm	1,940	1,962	1,997	**1,966**
dscfm	1,520	1,535	1,526	**1,527**
Filterable Particulate Matter Emissions				
gr/dscf	0.0005	0.0005	0.0005	**0.0005**
lb/hr	0.0063	0.0063	0.0062	**0.0063**

[a] Filterable PM Emission Limit = 0.0015 gr/dscf

Table 5-15 Summary of NO_X, CO and THC Results – Thermal Treatment Units

Run Identification	Run 1	Run 2	Run 3	Average
Run Date	27Jun12	27Jun12	28Jun12	
Start/Stop Time	1527-1852	1952-2257	850-1150	
Exhaust Gas Conditions				
Moisture (volume %)	2.32	2.50	2.42	2.41
Oxygen (dry volume %)	20.1	20.1	20.1	20.1
Carbon Dioxide (dry volume %)	1.32	0.86	0.96	1.05
Volumetric Flow Rate				
dscfm	1,487	1,485	1,590	1,521
Carbon Monoxide				
ppm, dry	8.24	8.19	6.80	7.74
lb/hr	0.053	0.053	0.047	0.051
Nitrogen Oxides				
ppm, dry	101	108	105	105
lb/hr	1.08	1.15	1.19	1.14
Total Hydrocarbons (as Propane)				
ppm, dry	36.2	28.7	28.6	31.2
lb/hr	0.37	0.29	0.31	0.33

Table 5-16 Summary of SVOC Results – Thermal Treatment Units

Run Identification	Run 1		Run 2		Run 3		Average	
Run Date	27Jun12		27Jun12		28Jun12			
Start/Stop Time	1527-1852		1952-2257		0850-1156			
Exhaust Gas Conditions								
Temperature (deg. F)	155		171		190		**172**	
Moisture (volume %)	2.32		2.50		2.42		**2.41**	
Oxygen (dry volume %)	20.13		20.13		20.11		**20.12**	
Carbon Dioxide (dry volume %)	1.32		0.86		0.96		**1.05**	
Volumetric Flow Rate								
acfm	1,831		1,880		2,066		**1,926**	
dscfm	1,487		1,485		1,590		**1,521**	
SVOCs Emissions	ug/dscm	lb/hr	ug/dscm	lb/hr	ug/dscm	lb/hr	**ug/dscm**	**lb/hr**
Phenol	9.13	5.08E-05	9.29	5.17E-05	8.50	5.06E-05	**8.97**	**5.10E-05**

Table 5-17 Summary of VOC Results – Thermal Treatment Units

	Run No.	Run 1	Run No.	Run 2	Run No.	Run 3
	Date	6/27/2012	Date	6/27/2012	Date	6/28/2012
	Start Time	1537	Start Time	1952	Start Time	850
	Stop Time	1807	Stop Time	2225	Stop Time	1122
	Units		Units		Units	
VOST Sample Volume	dsL	60.29	dsL	59.28	dsL	59.13
Exhaust Flow Rate	dscfm	1,487	dscfm	1,485	dscfm	1,590
Volatile Organics	µg/dscm	lb/hr	µg/dscm	lb/hr	µg/dscm	lb/hr
Acetone	27.03	1.51E-04	31.05	1.73E-04	26.43	1.57E-04
Benzene	11.05	6.16E-05	6.49	3.61E-05	4.31	2.57E-05
2-Butanone	3.29	1.83E-05	6.84	3.80E-05	5.50	3.28E-05
n-Butylbenzene	0.17	9.64E-07	ND	ND	ND	ND
Chloromethane	5.09	2.83E-05	1.02	5.69E-06	0.99	5.92E-06
1,2-Dichlorobenzene	1.10	6.12E-06	1.78	9.90E-06	0.98	5.83E-06
Dichlorodifluoromethane	2.87	1.60E-05	2.27	1.26E-05	2.54	1.51E-05
Ethylbenzene	0.83	4.64E-06	0.68	3.80E-06	ND	ND
Naphthalene	0.96	5.33E-06	ND	ND	ND	ND
n-Propylbenzene	0.17	9.64E-07	ND	D	ND	ND
Styrene	0.35	1.93E-06	1.12	6.25E-06	0.61	3.64E-06
Toluene	8.32	4.63E-05	3.91	2.18E-05	2.46	1.46E-05
Trichloroethene	0.69	3.86E-06	ND	ND	ND	ND
1,2,4-Trimethylbenzene	1.34	7.47E-06	0.79	4.38E-06	ND	ND
1,3,5-Trimethylbenzene	0.28	1.54E-06	ND	ND	ND	ND
m-Xylene & p-Xylene	5.25	2.93E-05	3.17	1.76E-05	2.34	1.39E-05
o-Xylene	1.85	1.03E-05	1.33	7.40E-06	1.00	5.93E-06

Table 5-18 Summary of Explosive Compound Results – Thermal Treatment Units

Run Identification	Run 1		Run 2		Run 3		Average	
Run Date	27Jun12		27Jun12		28Jun12			
Start/Stop Time	1527-1828		1952-2252		0850-1100			
Exhaust Gas Conditions								
Temperature (deg. F)	177		186		179		**181**	
Moisture (volume %)	2.61		2.36		2.62		**2.53**	
Oxygen (dry volume %)	20.1		20.1		20.1		**20.1**	
Carbon Dioxide (dry volume %)	1.32		0.86		0.96		**1.05**	
Volumetric Flow Rate								
acfm	1,989		2,031		2,080		**2,033**	
dscfm	1,557		1,571		1,625		**1,584**	
Explosive Compound Emissions	ug/dscm	lb/hr	ug/dscm	lb/hr	ug/dscm	lb/hr	**ug/dscm**	**lb/hr**
2, 6-Dinitrotoluene	1.27	7.42E-06	1.23	7.24E-06	0.42	2.58E-06	**0.98**	**5.75E-06**
HMX	0.39	2.30E-06	0.41	2.39E-06	0.34	2.05E-06	**0.38**	**2.25E-06**
RDX	25.0	1.46E-04	118	6.92E-04	122	7.43E-04	**88.3**	**5.27E-04**
2,4.6-Trinitrotoluene	0.58	3.39E-06	0.65	3.39E-06	0.63	3.83E-06	**0.62**	**3.54E-06**

6. QUALITY ASSURANCE/QUALITY CONTROL

This test program incorporated a variety of QA/QC measures to ensure the validity of the final results. These measures were based upon routine field and laboratory practices as well as specific requirements delineated in the approved CPT Plan and the applicable sampling and analytical methods.

This section presents the results of all QA/QC measures evaluated during all sampling programs and during all phases of sample analysis. Data generated for the program are judged to be completely valid since overall accuracy and precision goals consistent with general program objectives were achieved. Analytical QA/QC data are presented to support all sample results used for determining compliance with performance criteria and/or emission standards.

6.1 SAMPLE COLLECTION QA/QC

One set of reagent blanks for each isokinetic sampling train was submitted for analysis. For the VOST methodology, one field blank for each day of testing and one trip blank per sample shipment were also submitted along with program samples. In addition, one field sampling train blank was submitted for the explosive compounds sampling train.

Sampling QA/QC measures for this program included the calibration of all applicable sampling equipment used as described below. Field equipment were calibrated according to EPA procedures specified in EPA/600/R-94/038e (September 1994) and 40 CFR 60, Methods 1-5, as well as manufacturer's specifications.

» Dry Gas Meters and Orifice Meters:

Dry gas meters for all sampling trains were calibrated using critical orifices. The procedure entails five runs using four separate critical orifices running at an actual vacuum 1-2 in. greater than the theoretical critical vacuum. The minimum sample volume required per orifice is 5 ft^3. Meter boxes are calibrated annually and then verified by use of the alternative Method 5 post-test calibration procedure. Copies of the annual and post-test calibration forms are presented in **Appendix C**.

» Sampling Nozzles:

Each glass nozzle was calibrated with a micrometer prior to testing and identified with a unique ID number. These data are then checked onsite prior to use. Any stainless steel nozzles used during the program are calibrated onsite prior to testing. The internal diameter of each nozzle used is measured to 0.001 inches along three points of the circumference with a dial vernier caliper and the three measurements are then averaged. Nozzle calibration data are provided in **Appendix C**

» Balance:

The analytical balance used in the field to determine initial and final silica gel weights is calibrated against Class M weights provided by the Mettler Corporation.

» Thermocouples:

The Type K thermocouples in each meter control box, heated sample box, impinger umbilical connector, XAD resin trap and sample probe were calibrated against ASTM mercury-in-glass thermometers at two or more points: an ice bath, ambient temperature and/or boiling water bath. Calibration data are provided in **Appendix C.**

» Pitot Tubes:

Each S-type stainless steel pitot tube used is designed to meet geometric configurations as defined in EPA Method 2. Sample probe calibration data forms are provided in **Appendix C**

6.1.1 Sample Custody

Chain of custody procedures followed during the test program were as outlined in the CTTP CPT plan. Chain of custody forms were computer generated by O'Brien & Gere along with the majority of sample labels. CTTP exhaust stack samples were delivered to a Test America courier for transport to the Test America facility in Knoxville, Tennessee or shipped to the Test America facility in Sacramento, California.

6.2 STACK GAS ANALYSES

6.2.1 Volatile Organics

Evaluation of the validity of the data resultant from the analysis of the VOST samples for the CPT was based on the following indicators:

- Recoveries of 4 surrogate compounds added to the VOST samples prior to analysis;
- Recoveries of the matrix spike
- Results of analyses of field, trip and lab blank samples.

No target compounds were detected in any of the method blanks above the reporting limit. Based on the overall results summarized in **Table 6-1**, completeness was therefore determined to be 100% for all VOST analyses.

Table 6-1 QC Summary for Volatile Organics in Stack Gas Samples

QC Parameter	Target Criteria	Program Results
Field and Trip Blanks	Below detection limit	All compounds below reporting limit
Method Blanks	Below detection limit	All compounds below reporting limit
Matrix Spike Recoveries	Different % recovery range for each compound spiked	All recoveries within defined limits
Accuracy-Surrogate Recoveries	Different % recovery range for each compound spiked	All surrogate recoveries within defined limits

6.2.2 PCDDs/PCDFs

Evaluation of the validity of the PCDD/PCDF data resultant from the analysis of the Method 23 sampling train samples was based on the following criteria:

- Recoveries of surrogate recovery standards added to the samples prior to sampling or sample extraction.
- Recoveries of spiked blank for evaluation of analyte recovery.
- Results of duplicate paired analysis of separate section of same sample.
- Results of analyses of field and method blank samples.

On the basis of the QC results summarized in **Table 6-2**, no sample analyses were rejected, and all data were determined to be valid.

Table 6-2 QC Summary for PCDDs/PCDFs in Stack Gas Samples – June 2012 Test Program

QC Parameter	Target Criteria	Program Results
Field Blank	Below detection limit	All compounds below reporting limit
Method Blank	Below detection limit	3 congeners detected above EDL
Accuracy for surrogate recovery standards	70 – 130% recovery	All labeled standards within limits
Results of duplicate analyses	< 50% RPD	All samples within limits
Lab Control Samples and Spiked Blanks	70 – 130% recovery	All labeled standards within limits

6.2.3 Semi-volatile Organics

Evaluation of the validity of the data resultant from the analysis of the SVOC samples for the CPT was based on the following indicators:

- Recoveries of 6 surrogate compounds added to the SVOC samples prior to analysis;
- Recoveries of the spiked blanks
- Results of duplicate paired analysis of separate section of same sample.
- Results of analyses of field and method blank samples.

On the basis of the QC results summarized in **Table 6-3**, no sample analyses were rejected, and all data were determined to be valid.

Table 6-3 QC Summary for Semi-volatile Organics in Stack Gas Samples

QC Parameter	Target Criteria	Program Results
Field blank	Below detection limit	No compounds detected except
Method Blank	Below detection limit	All analytes ND or below reporting limit
Lab Control Samples and Spiked Blanks	Different % recovery range for each of the compounds spiked	All within specified limits
Results of duplicate analyses	Different % RPD limit for each of the compounds spiked	All RPD values within specified limits
Accuracy – Surrogates Recoveries	Different % recovery range for each compound spiked	All within specified limits

6.2.4 Particulate Matter

Evaluation of results of gravimetric analysis of the Method 5 samples was based on routine laboratory practices and processing of method blank and field blank samples. For the Method 5 samples, no contamination was noted in either the lab acetone blank or the field blank and thus no blank correction was performed. Additional QC measures followed by the gravimetric lab, such as maintenance of proper ambient conditions and use of standard weights, ensured valid data.

6.2.5 Explosive Compounds

Evaluation of the validity of the explosive compound analysis of the sample train samples was based on three sets of objectives. These were:

- Results of analysis of matrix spikes and spiked blanks.
- Results from the duplicate analysis of all samples.
- Results of analysis of field and method blank samples.

Target criteria and results are shown in **Table 6-4**. All results met trial burn data quality objectives and completeness was therefore determined to be 100% for these parameters.

Table 6-4 QC Summary for Energetic Materials in Stack Gas Samples

QC Parameter	Target Criteria	Program Results
Field Blank	Below detection limit	All parameters ND
Method Blank	Below detection limit	All parameters ND
Lab Control samples and Spike Recoveries	50%-150% recovery	All samples within limits
Surrogate Recoveries	50%-150% recovery	All samples within limits
Duplicate Analyses (All samples)	0-50% RPD	All samples within limits.

6.2.6 Metals

Evaluation of the validity of the metals data resultant from the analysis of the Method 29 sampling trains was based on the following data quality objectives:

- Results of analysis of matrix spikes and spiked blank recoveries for all target metals.
- Results of analysis of samples analyzed in duplicate.
- Results of analyses of field and method blank samples.

Minor contamination was noted in field blank as chromium and lead were detected and thus blank correction was performed to the extent allowed by the method. Data summarized in **Table 6-5** show that no other problems were encountered during sample analysis and all metals train data were therefore judged to be completely acceptable.

Table 6-5 QC Summary for Metals in Stack Gas Samples

QC Parameter	Target Criteria	Program Results
Field Blank	Below detection limit	Chromium and lead all reported above the reporting limit. Final results have been blank-corrected to the maximum extent allowed in accordance with method specific procedures.
Method Blank	Below Detection Limit	No metals detected above the reporting limit
Matrix spike Recoveries	Different % recovery range for each of the metals spiked	All recoveries within limits
Lab Control Samples and Spiked Blanks	Different % recovery range for each of the metals spiked	All metals within limits
Duplicate Analyses	0-15% RPD	All results within limits

Process Data

APCS -S1 Run 1 Operating Data	6/26/2012	Static Kiln #1 Temp °F	Static Kiln #2 Temp °F	Static Kiln #3 Temp °F	Static Kiln #4 Temp °F	Static Kiln #1 Pressure Pa	Static Kiln #2 Pressure Pa	Static Kiln #3 Pressure Pa	Static Kiln #4 Pressure Pa	Cartridge Filter Outlet Temp °F	Cartridge Filter DP mBar	HEPA Filter DP mBar	Stack Flow Nm3/h	Stack Flow acfm
	Average	698	709	696	526	-21	-17	-22	-21	129	3	1	603	395
	Min	680	680	680	503	-25	-20	-27	-28	128	2	1	590	387
	Max	712	737	710	550	-16	-14	-16	-14	130	4	1	615	403
	Time													
Fed going to SK-1	12:00	710	698	680	577	-21.8	-16.6	-24.3	-23.7	126	4.1	0.7	613	400
	12:01	712	698	681	575	-19.6	-16.8	-16.7	-20.0	126	4.0	0.7	602	392
	12:02	714	696	683	575	-22.1	-17.5	-20.3	-23.3	126	4.1	0.7	601	392
	12:03	714	694	685	575	-20.2	-16.1	-22.0	-16.4	126	4.0	0.7	602	393
	12:04	714	694	689	575	-20.9	-16.3	-22.8	-22.8	126	4.0	0.7	593	387
	12:05	714	692	694	575	-20.2	-17.6	-22.4	-18.1	126	4.1	0.7	612	400
	12:06	714	692	699	575	-21.8	-17.3	-21.2	-25.1	126	4.1	0.7	599	391
	12:07	714	690	703	573	-22.1	-18.9	-23.7	-21.1	126	4.2	0.7	607	396
	12:08	714	689	707	573	-20.8	-15.8	-18.9	-21.7	126	4.0	0.7	608	397
	12:09	714	689	708	573	-19.9	-14.3	-23.7	-21.7	126	4.0	0.7	605	395
	12:10	712	687	708	573	-19.9	-17.1	-21.7	-20.5	126	4.0	0.7	592	387
	12:11	710	687	710	573	-22.8	-18.1	-22.0	-18.6	126	4.1	0.7	599	391
	12:12	710	685	710	573	-21.1	-16.4	-23.0	-23.1	126	4.0	0.7	602	393
	12:13	708	683	710	572	-21.9	-17.9	-23.6	-23.1	126	4.1	0.7	598	390
	12:14	708	683	710	572	-21.8	-17.4	-20.7	-21.7	126	4.1	0.7	602	393
	12:15	707	681	710	572	-21.4	-17.2	-24.7	-24.2	126	4.1	0.7	609	398
	12:16	707	681	708	572	-20.3	-17.8	-19.3	-23.7	126	4.0	0.7	611	399
	12:17	705	680	708	572	-20.2	-15.3	-18.2	-21.3	126	4.0	0.7	597	390
	12:18	703	680	708	572	-20.5	-17.4	-22.0	-20.4	126	4.1	0.7	604	394
	12:19	703	681	707	572	-21.1	-19.1	-22.1	-21.5	126	4.1	0.7	605	395
	12:20	701	687	707	570	-20.7	-16.7	-22.3	-22.2	126	4.1	0.7	604	394
	12:21	701	694	705	570	-21.2	-17.5	-20.2	-18.9	127	4.1	0.7	605	395
	12:22	699	701	705	570	-20.0	-16.5	-20.5	-20.7	127	4.0	0.7	602	393
	12:23	698	710	703	570	-23.0	-17.5	-21.2	-22.2	127	4.1	0.7	607	396
	12:24	698	719	703	570	-21.0	-16.0	-23.4	-20.5	127	4.1	0.7	603	394
	12:25	696	725	701	570	-21.6	-16.3	-24.0	-22.8	127	4.1	0.7	609	398
	12:26	696	728	701	568	-21.2	-19.3	-24.7	-22.9	127	4.2	0.7	605	395
	12:27	694	732	699	568	-22.6	-15.4	-22.5	-22.3	127	4.1	0.7	605	396
	12:28	692	734	699	568	-21.6	-17.6	-23.2	-24.7	127	4.1	0.7	604	395
	12:29	692	735	699	568	-20.1	-16.5	-19.7	-24.6	127	4.0	0.7	600	392
	12:30	690	737	698	568	-19.0	-15.2	-21.4	-22.4	127	4.0	0.7	604	395
	12:31	689	737	698	568	-21.7	-18.1	-24.3	-21.7	127	4.2	0.7	606	396
	12:32	689	737	696	568	-21.2	-16.9	-26.6	-25.1	127	4.1	0.7	612	400
	12:33	687	735	696	566	-19.6	-16.7	-21.4	-22.7	127	4.0	0.7	596	390
	12:34	687	735	694	566	-20.1	-17.1	-22.6	-19.0	127	4.1	0.7	611	400
	12:35	685	735	694	566	-21.5	-17.9	-22.0	-20.3	127	4.1	0.7	602	394
	12:36	683	734	692	566	-20.5	-15.3	-20.4	-23.8	127	4.0	0.7	605	396
	12:37	683	734	692	566	-21.2	-17.3	-22.1	-23.8	127	4.1	0.7	594	388
	12:38	681	732	692	566	-21.0	-17.5	-21.2	-22.5	127	4.1	0.7	612	400
	12:39	681	732	690	566	-21.2	-16.8	-21.7	-22.0	128	4.1	0.7	606	397

APCS -S1 Run 1 Operating Data	6/26/2012	Static Kiln #1 Temp °F	Static Kiln #2 Temp °F	Static Kiln #3 Temp °F	Static Kiln #4 Temp °F	Static Kiln #1 Pressure Pa	Static Kiln #2 Pressure Pa	Static Kiln #3 Pressure Pa	Static Kiln #4 Pressure Pa	Cartridge Filter Outlet Temp °F	Cartridge Filter DP mBar	HEPA Filter DP mBar	Stack Flow Nm3/h	Stack Flow acfm
	12:40	681	730	690	564	-19.2	-16.7	-23.1	-22.4	127	4.1	0.7	613	401
	12:41	685	730	689	564	-18.3	-16.3	-21.3	-21.8	127	4.1	0.7	595	389
	12:42	690	728	689	564	-16.4	-16.1	-20.8	-21.4	127	4.0	0.7	603	395
Feed Start	12:43	699	726	689	564	-19.6	-17.1	-21.9	-20.0	128	4.2	0.7	595	390
	12:44	703	726	687	564	-18.8	-17.0	-24.1	-24.8	128	4.2	0.7	607	397
	12:45	707	725	687	564	-20.4	-15.9	-25.1	-22.5	128	4.1	0.7	598	391
	12:46	710	723	685	564	-20.5	-15.5	-21.9	-25.6	128	4.1	0.7	596	390
	12:47	712	721	685	563	-18.1	-14.4	-19.9	-18.6	128	4.1	0.7	601	394
	12:48	712	721	685	563	-19.2	-17.9	-24.6	-24.4	128	4.3	0.7	606	397
	12:49	714	719	683	563	-20.6	-15.8	-23.8	-20.6	128	4.2	0.7	594	389
	12:50	712	717	683	563	-17.1	-14.4	-19.2	-20.1	128	2.0	0.7	577	378
	12:51	714	717	681	563	-17.1	-16.5	-19.6	-22.7	129	2.2	0.7	608	398
	12:52	712	716	681	563	-19.3	-17.8	-22.4	-20.4	129	2.3	0.7	610	400
	12:53	712	714	681	563	-20.1	-17.9	-22.5	-23.2	129	2.5	0.7	608	398
	12:54	712	714	680	561	-18.1	-15.7	-19.1	-18.5	129	2.4	0.7	601	394
	12:55	710	712	681	561	-21.1	-18.1	-23.5	-16.1	129	2.6	0.7	610	400
	12:56	708	710	683	561	-21.3	-18.0	-22.1	-23.2	129	2.7	0.7	605	396
	12:57	707	710	687	561	-18.1	-16.2	-20.6	-20.2	129	2.6	0.7	599	393
	12:58	707	708	690	561	-18.0	-16.5	-19.7	-22.3	129	2.7	0.7	606	397
	12:59	705	707	696	561	-21.1	-18.8	-20.2	-22.9	129	2.8	0.7	602	395
	13:00	703	707	701	559	-18.8	-17.8	-20.3	-17.6	129	2.8	0.7	595	390
	13:01	703	705	705	559	-21.0	-19.7	-21.8	-21.7	129	3.0	0.7	604	396
	13:02	701	703	707	559	-19.7	-16.9	-18.5	-18.4	129	2.9	0.7	589	386
	13:03	699	703	708	559	-17.6	-16.5	-17.6	-22.5	129	2.9	0.7	604	396
	13:04	698	701	710	559	-19.2	-18.2	-23.8	-26.7	129	3.0	0.7	601	394
	13:05	696	699	710	559	-18.4	-17.7	-22.0	-20.7	129	3.0	0.7	603	395
	13:06	694	699	710	559	-21.9	-18.4	-25.5	-25.6	129	3.2	0.7	607	398
	13:07	692	698	710	557	-19.4	-18.8	-20.4	-21.3	129	3.1	0.7	606	397
	13:08	692	698	710	557	-19.8	-17.1	-21.7	-21.0	129	3.1	0.7	593	389
	13:09	690	696	710	557	-18.9	-18.3	-23.7	-22.4	129	3.2	0.7	600	394
	13:10	689	694	710	557	-19.4	-17.6	-19.5	-21.8	129	3.2	0.7	604	396
	13:11	687	694	708	557	-19.1	-16.6	-17.7	-23.5	129	3.2	0.7	594	390
	13:12	685	692	708	557	-21.5	-18.4	-23.8	-25.0	129	3.4	0.7	613	402
	13:13	683	690	707	557	-18.4	-15.2	-20.4	-21.6	129	3.2	0.7	598	392
	13:14	681	690	707	555	-19.7	-17.4	-21.0	-21.0	129	3.3	0.7	607	398
	13:15	680	689	705	555	-21.8	-19.4	-24.6	-21.5	129	3.4	0.7	603	395
	13:16	681	689	705	555	-19.7	-16.1	-20.8	-21.9	129	3.3	0.7	604	396
	13:17	685	687	703	555	-20.2	-18.5	-23.9	-22.2	129	3.5	0.7	608	399
	13:18	692	685	703	555	-17.7	-16.1	-20.4	-19.9	129	3.4	0.7	594	389
	13:19	699	685	701	555	-21.1	-18.0	-23.3	-23.2	129	3.6	0.7	604	396
	13:20	705	683	701	555	-19.0	-17.5	-26.5	-21.1	129	3.5	0.7	601	394
	13:21	708	683	699	554	-18.4	-15.1	-20.5	-23.7	129	3.5	0.7	608	399
	13:22	710	681	699	554	-20.2	-16.6	-24.6	-23.6	128	3.6	0.7	601	394
	13:23	712	681	699	554	-18.1	-16.1	-20.5	-22.9	128	3.5	0.7	596	391

APCS -S1 Run 1 Operating Data	6/26/2012	Static Kiln #1 Temp °F	Static Kiln #2 Temp °F	Static Kiln #3 Temp °F	Static Kiln #4 Temp °F	Static Kiln #1 Pressure Pa	Static Kiln #2 Pressure Pa	Static Kiln #3 Pressure Pa	Static Kiln #4 Pressure Pa	Cartridge Filter Outlet Temp °F	Cartridge Filter DP mBar	HEPA Filter DP mBar	Stack Flow Nm3/h	Stack Flow acfm
	13:24	712	680	698	554	-19.6	-17.1	-23.1	-24.4	129	3.6	0.7	615	403
	13:25	714	680	698	554	-18.5	-16.9	-23.1	-23.2	129	3.6	0.7	599	393
	13:26	712	683	696	554	-18.2	-14.8	-22.7	-20.8	129	3.5	0.7	602	395
	13:27	714	687	696	554	-19.9	-17.2	-21.7	-23.7	129	3.7	0.7	610	400
	13:28	712	694	694	552	-18.1	-18.0	-22.0	-18.4	129	3.6	0.7	597	391
	13:29	710	701	694	552	-18.4	-16.5	-21.8	-20.3	129	3.6	0.7	603	395
	13:30	710	710	692	552	-19.5	-17.0	-25.0	-25.9	129	3.8	0.7	602	394
	13:31	708	719	692	552	-17.0	-16.5	-22.0	-20.0	129	3.7	0.7	597	391
	13:32	707	725	692	552	-18.7	-16.4	-22.9	-24.3	129	3.7	0.7	604	396
	13:33	705	728	690	552	-18.6	-17.0	-19.1	-21.0	129	3.8	0.7	612	401
	13:34	705	732	690	552	-18.6	-15.8	-21.0	-17.2	129	3.7	0.7	597	392
	13:35	703	734	689	550	-20.6	-17.2	-23.1	-20.5	129	3.9	0.7	601	394
	13:36	701	735	689	550	-18.9	-18.2	-20.8	-22.5	129	3.8	0.7	594	390
	13:37	699	735	689	550	-17.6	-17.0	-22.6	-19.4	129	3.8	0.7	593	389
	13:38	699	735	687	550	-21.1	-18.0	-24.7	-22.6	129	4.0	0.7	602	395
	13:39	696	735	687	550	-19.7	-17.1	-22.3	-22.5	129	4.0	0.7	599	393
Sampling Start	13:40	694	735	685	550	-18.8	-15.6	-22.5	-21.6	129	3.9	0.7	597	391
	13:41	692	735	685	550	-18.4	-16.1	-21.0	-21.7	129	3.9	0.7	597	392
	13:42	692	734	683	550	-20.0	-18.9	-23.0	-17.4	129	4.0	0.7	598	392
	13:43	690	734	683	548	-21.2	-18.8	-23.2	-18.7	129	4.1	0.7	610	400
	13:44	689	732	683	548	-18.9	-19.2	-22.9	-21.7	129	3.9	0.7	601	394
	13:45	687	732	681	548	-18.8	-16.0	-24.9	-19.9	129	4.0	0.7	608	398
	13:46	685	730	681	548	-19.5	-16.0	-21.7	-23.2	129	4.0	0.7	596	391
	13:47	683	730	680	548	-18.0	-16.4	-22.5	-21.2	129	4.0	0.7	599	392
	13:48	681	728	680	548	-18.0	-15.6	-20.3	-19.9	129	4.0	0.7	597	392
	13:49	680	728	681	548	-18.0	-16.8	-18.9	-22.9	129	4.1	0.7	608	399
	13:50	681	726	685	546	-19.7	-16.0	-18.3	-20.0	129	4.1	0.7	598	392
	13:51	683	725	687	546	-20.4	-17.3	-23.2	-21.8	129	4.1	0.7	601	394
	13:52	690	725	692	546	-19.3	-17.1	-22.8	-19.7	129	4.2	0.7	604	396
	13:53	698	723	696	546	-19.6	-17.1	-19.7	-25.3	128	4.2	0.7	603	395
	13:54	703	721	701	546	-19.4	-19.0	-19.5	-24.3	128	4.2	0.7	596	390
	13:55	707	719	705	546	-19.8	-19.9	-20.3	-25.2	128	4.3	0.7	612	401
	13:56	710	719	707	546	-19.2	-17.3	-22.7	-21.6	128	2.0	0.7	596	391
	13:57	710	717	708	546	-18.9	-16.6	-20.7	-18.3	128	2.0	0.7	609	399
	13:58	712	716	710	545	-20.7	-15.4	-20.9	-21.3	128	2.1	0.7	594	389
	13:59	712	716	710	545	-18.7	-15.5	-23.7	-19.8	128	2.2	0.7	607	397
	14:00	712	714	710	545	-20.4	-16.1	-20.0	-20.7	128	2.2	0.7	595	390
	14:01	710	712	710	545	-20.6	-17.8	-23.8	-22.9	128	2.4	0.7	600	393
	14:02	710	712	710	545	-19.0	-16.4	-22.4	-20.6	128	2.4	0.7	604	395
	14:03	710	710	708	545	-22.1	-19.0	-22.7	-22.5	128	2.5	0.7	598	391
	14:04	708	708	708	545	-17.8	-17.9	-18.7	-20.0	128	2.5	0.7	603	394
	14:05	707	708	708	543	-18.4	-15.3	-21.7	-18.1	128	2.5	0.7	596	390
	14:06	705	707	707	543	-18.0	-16.4	-27.2	-23.8	128	2.7	0.7	613	402
	14:07	705	705	707	543	-18.4	-15.5	-20.5	-18.9	128	2.6	0.7	595	389

APCS -S1 Run 1 Operating Data	6/26/2012	Static Kiln #1 Temp °F	Static Kiln #2 Temp °F	Static Kiln #3 Temp °F	Static Kiln #4 Temp °F	Static Kiln #1 Pressure Pa	Static Kiln #2 Pressure Pa	Static Kiln #3 Pressure Pa	Static Kiln #4 Pressure Pa	Cartridge Filter Outlet Temp °F	Cartridge Filter DP mBar	HEPA Filter DP mBar	Stack Flow Nm3/h	Stack Flow acfm
	14:08	703	705	705	543	-19.6	-17.1	-18.8	-19.6	128	2.7	0.7	604	395
	14:09	701	703	705	543	-21.7	-16.2	-22.6	-21.3	128	2.8	0.7	601	394
	14:10	699	701	705	543	-19.5	-14.7	-20.0	-21.7	128	2.7	0.7	600	393
	14:11	698	701	703	543	-21.4	-17.8	-23.1	-24.4	128	2.9	0.7	613	401
	14:12	696	699	703	543	-15.7	-17.3	-23.5	-27.5	128	2.9	0.7	612	401
	14:13	694	699	701	541	-18.7	-16.1	-21.0	-20.5	128	2.8	0.7	597	391
	14:14	692	698	701	541	-19.0	-16.7	-18.6	-19.8	128	2.9	0.7	604	395
	14:15	690	696	699	541	-20.8	-18.3	-24.7	-23.7	128	3.1	0.7	611	400
	14:16	689	696	699	541	-19.6	-16.0	-22.4	-20.5	128	3.0	0.7	595	390
	14:17	687	694	698	541	-19.7	-16.0	-20.9	-23.3	128	3.0	0.7	594	389
	14:18	685	692	698	541	-20.5	-18.6	-23.4	-24.5	128	3.1	0.7	608	398
	14:19	683	692	696	541	-19.9	-16.5	-21.7	-22.6	128	3.1	0.7	607	397
	14:20	683	690	696	541	-22.9	-15.5	-26.5	-23.7	128	3.3	0.7	607	397
	14:21	681	690	696	539	-21.3	-16.7	-23.7	-21.7	128	3.2	0.7	612	401
	14:22	681	689	694	539	-19.6	-16.4	-20.8	-24.5	128	3.2	0.7	596	390
	14:23	683	687	694	539	-21.7	-17.3	-24.6	-25.0	128	3.3	0.7	605	396
	14:24	689	687	692	539	-20.6	-16.9	-18.3	-18.2	128	3.2	0.7	595	390
	14:25	696	685	692	539	-20.7	-15.7	-19.7	-16.5	128	3.3	0.7	608	398
	14:26	703	685	690	539	-20.9	-16.5	-21.6	-18.3	128	3.3	0.7	599	392
	14:27	705	683	690	539	-20.4	-17.1	-22.9	-22.7	128	3.3	0.7	594	389
	14:28	708	681	689	537	-20.2	-16.4	-22.3	-17.4	128	3.3	0.7	601	393
	14:29	710	681	689	537	-20.3	-16.3	-24.0	-22.1	128	3.4	0.7	601	393
	14:30	712	680	689	537	-21.1	-17.0	-25.4	-22.2	128	3.4	0.7	600	393
	14:31	712	680	687	537	-19.7	-14.3	-21.3	-20.7	128	3.4	0.7	600	393
	14:32	712	681	687	537	-21.5	-17.6	-18.2	-20.3	128	3.4	0.7	608	398
	14:33	712	683	685	537	-22.7	-17.8	-23.0	-18.9	128	3.5	0.7	602	394
	14:34	710	689	685	537	-19.5	-14.9	-22.0	-23.8	128	3.5	0.7	593	388
	14:35	710	696	685	536	-19.0	-16.0	-17.8	-23.0	128	3.5	0.7	606	397
	14:36	708	705	683	536	-19.5	-17.4	-19.5	-20.3	128	3.5	0.7	594	389
	14:37	707	714	683	536	-25.1	-17.5	-23.4	-25.1	128	3.7	0.7	611	400
	14:38	705	721	681	536	-18.9	-14.7	-21.1	-21.4	128	3.5	0.7	605	396
	14:39	705	726	681	536	-19.1	-17.5	-24.9	-23.2	128	3.6	0.7	611	400
	14:40	703	730	681	536	-19.8	-17.0	-21.6	-23.8	128	3.6	0.7	596	390
	14:41	701	732	680	536	-19.9	-16.9	-23.2	-23.3	128	3.6	0.7	604	396
	14:42	699	734	681	536	-20.1	-15.5	-21.2	-19.5	128	3.7	0.7	608	398
	14:43	698	735	683	534	-20.2	-15.8	-22.2	-19.3	128	3.7	0.7	591	387
	14:44	696	737	687	534	-21.1	-15.4	-23.4	-21.8	128	3.8	0.7	601	394
	14:45	696	737	690	534	-19.2	-16.0	-22.1	-22.1	128	3.7	0.7	599	392
	14:46	694	735	694	534	-18.4	-15.6	-20.0	-19.3	128	3.7	0.7	602	394
	14:47	692	735	699	534	-22.6	-18.7	-21.6	-23.2	128	3.9	0.7	606	397
	14:48	690	735	703	534	-21.9	-19.1	-21.0	-22.2	128	3.9	0.7	609	399
	14:49	689	734	707	534	-22.3	-17.5	-24.8	-23.4	128	3.9	0.7	600	393
	14:50	687	734	708	534	-22.2	-19.5	-23.7	-22.1	128	3.9	0.7	601	394
	14:51	685	732	708	532	-22.4	-16.8	-21.4	-18.6	128	3.9	0.7	598	392

APCS -S1 Run 1 Operating Data	6/26/2012	Static Kiln #1 Temp °F	Static Kiln #2 Temp °F	Static Kiln #3 Temp °F	Static Kiln #4 Temp °F	Static Kiln #1 Pressure Pa	Static Kiln #2 Pressure Pa	Static Kiln #3 Pressure Pa	Static Kiln #4 Pressure Pa	Cartridge Filter Outlet Temp °F	Cartridge Filter DP mBar	HEPA Filter DP mBar	Stack Flow Nm3/h	Stack Flow acfm
	14:52	683	732	710	532	-20.4	-15.1	-21.9	-17.7	128	3.8	0.7	598	392
	14:53	681	730	710	532	-22.1	-16.8	-22.5	-15.9	128	4.0	0.7	615	403
	14:54	681	730	710	532	-21.0	-15.3	-19.4	-20.5	128	3.9	0.7	607	398
	14:55	683	728	710	532	-19.5	-14.5	-19.1	-21.7	128	3.8	0.7	600	393
	14:56	690	728	710	532	-21.6	-15.0	-17.7	-23.6	128	4.0	0.7	608	399
	14:57	696	726	708	532	-22.5	-17.0	-22.2	-23.3	128	4.0	0.7	600	393
	14:58	703	725	708	530	-20.7	-14.7	-19.8	-18.6	128	3.9	0.7	598	392
	14:59	707	723	708	530	-20.8	-15.9	-20.3	-18.4	128	3.9	0.7	590	387
	15:00	708	723	707	530	-22.9	-17.6	-22.6	-20.8	128	4.1	0.7	606	397
	15:01	710	721	707	530	-20.7	-17.0	-21.1	-21.1	128	4.0	0.7	594	389
	15:02	712	719	705	530	-22.3	-15.4	-24.7	-19.7	128	4.1	0.7	611	400
	15:03	712	719	705	530	-21.4	-17.3	-22.4	-21.2	128	4.1	0.7	595	389
	15:04	712	717	703	530	-21.7	-16.7	-20.3	-21.0	128	4.1	0.7	610	399
	15:05	712	716	703	528	-21.1	-15.5	-21.9	-19.6	128	4.1	0.7	598	392
	15:06	710	716	701	528	-23.4	-16.2	-23.0	-21.9	128	4.2	0.7	597	391
	15:07	710	714	701	528	-24.0	-17.2	-21.3	-21.8	128	4.3	0.7	604	395
	15:08	708	712	701	528	-22.6	-15.5	-19.8	-18.9	128	4.1	0.7	599	392
	15:09	708	712	699	528	-22.1	-16.4	-22.1	-21.6	128	4.2	0.7	608	398
	15:10	707	710	699	528	-20.3	-14.9	-22.1	-17.8	128	4.1	0.7	604	395
	15:11	705	708	698	528	-21.8	-16.8	-22.5	-18.3	128	4.3	0.7	608	398
	15:12	703	708	698	528	-20.5	-13.7	-19.0	-17.8	128	1.9	0.7	598	391
	15:13	701	707	696	527	-20.5	-15.3	-20.2	-18.2	128	2.0	0.7	592	388
	15:14	699	705	696	527	-22.6	-15.9	-21.6	-20.8	128	2.2	0.7	594	389
	15:15	698	705	694	527	-22.7	-15.6	-20.1	-23.3	128	2.3	0.7	594	389
	15:16	696	703	694	527	-22.6	-18.2	-25.2	-20.3	129	2.5	0.7	609	399
	15:17	694	701	692	527	-19.7	-15.1	-20.7	-20.1	129	2.4	0.7	597	391
	15:18	692	701	692	527	-20.1	-16.3	-19.0	-23.0	128	2.5	0.7	594	389
	15:19	690	699	692	527	-20.0	-17.0	-16.7	-17.8	129	2.5	0.7	603	395
	15:20	689	698	690	525	-21.9	-15.7	-21.2	-23.1	128	2.7	0.7	607	398
	15:21	687	698	690	525	-19.5	-14.6	-23.0	-17.6	128	2.7	0.7	611	400
	15:22	687	696	689	525	-21.2	-16.4	-23.2	-24.2	128	2.7	0.7	597	391
	15:23	685	696	689	525	-21.3	-15.7	-20.5	-22.3	128	2.7	0.7	602	394
	15:24	683	694	689	525	-19.7	-18.4	-22.3	-18.5	128	2.8	0.7	610	399
	15:25	681	692	687	525	-20.4	-15.9	-25.7	-18.8	128	2.8	0.7	606	397
	15:26	680	692	687	525	-19.9	-16.2	-23.9	-21.8	128	2.9	0.7	612	401
	15:27	683	690	685	523	-21.7	-17.1	-21.1	-17.5	129	3.0	0.7	597	391
	15:28	687	689	685	523	-21.2	-15.7	-17.6	-23.4	128	2.9	0.7	593	389
	15:29	694	689	685	523	-22.2	-17.0	-25.8	-23.3	129	3.0	0.7	599	393
	15:30	701	687	683	523	-22.1	-18.1	-25.7	-20.2	129	3.0	0.7	603	395
	15:31	705	687	683	523	-21.5	-18.1	-22.9	-22.5	129	3.0	0.7	604	396
	15:32	708	685	681	523	-23.5	-16.4	-22.8	-22.2	129	3.1	0.7	597	392
	15:33	710	685	681	523	-22.2	-15.5	-18.5	-19.0	129	3.0	0.7	601	394
	15:34	712	683	681	523	-23.1	-16.1	-23.2	-23.5	129	3.2	0.7	602	395
	15:35	712	681	680	521	-21.7	-17.6	-20.8	-20.0	129	3.1	0.7	590	387

APCS -S1 Run 1 Operating Data	6/26/2012	Static Kiln #1 Temp °F	Static Kiln #2 Temp °F	Static Kiln #3 Temp °F	Static Kiln #4 Temp °F	Static Kiln #1 Pressure Pa	Static Kiln #2 Pressure Pa	Static Kiln #3 Pressure Pa	Static Kiln #4 Pressure Pa	Cartridge Filter Outlet Temp °F	Cartridge Filter DP mBar	HEPA Filter DP mBar	Stack Flow Nm3/h	Stack Flow acfm
	15:36	712	681	681	521	-22.5	-14.6	-25.2	-20.8	129	3.2	0.7	610	400
	15:37	712	680	685	521	-21.6	-14.9	-21.2	-20.2	129	3.2	0.7	607	398
	15:38	710	680	687	521	-21.6	-16.1	-19.4	-21.9	129	3.3	0.7	606	397
	15:39	710	681	692	521	-22.0	-16.0	-21.9	-15.8	129	3.2	0.7	609	399
	15:40	708	683	696	521	-21.3	-15.9	-26.6	-23.6	129	3.3	0.7	595	390
	15:41	708	690	701	521	-22.5	-17.5	-23.1	-24.5	129	3.3	0.7	598	392
	15:42	707	698	705	521	-22.4	-16.5	-23.3	-22.2	129	3.4	0.7	610	400
	15:43	705	705	707	519	-22.8	-17.2	-22.3	-19.5	129	3.5	0.7	610	400
	15:44	703	714	708	519	-22.7	-16.1	-19.7	-19.8	129	3.4	0.7	596	391
	15:45	701	721	710	519	-22.7	-18.4	-24.5	-20.8	129	3.5	0.7	612	401
	15:46	699	726	710	519	-22.2	-16.1	-20.5	-17.4	129	3.4	0.7	603	396
	15:47	698	730	710	519	-21.2	-15.6	-23.4	-21.5	129	3.5	0.7	605	397
	15:48	696	732	710	519	-23.6	-17.7	-20.5	-20.5	129	3.6	0.7	606	397
	15:49	696	735	710	519	-19.1	-14.4	-19.8	-19.0	129	3.4	0.7	602	395
	15:50	694	735	710	518	-22.3	-17.7	-21.8	-16.4	130	3.6	0.7	600	394
	15:51	692	737	708	518	-21.7	-15.8	-22.4	-19.5	130	3.6	0.7	607	399
	15:52	690	735	708	518	-22.1	-16.5	-20.9	-23.4	130	3.6	0.7	599	394
	15:53	687	735	708	518	-23.8	-18.9	-24.8	-19.6	130	3.7	0.7	600	394
	15:54	685	735	707	518	-20.1	-14.3	-22.1	-19.7	129	3.6	0.7	598	392
	15:55	683	735	707	518	-22.3	-15.5	-22.7	-22.5	129	3.7	0.7	597	392
	15:56	681	734	705	518	-23.3	-16.5	-22.5	-22.2	129	3.8	0.7	610	400
	15:57	681	734	705	518	-21.9	-17.0	-20.8	-22.8	129	3.8	0.7	603	396
	15:58	681	732	703	516	-20.9	-16.1	-23.7	-16.2	129	3.8	0.7	612	402
	15:59	685	732	703	516	-21.4	-16.8	-24.5	-21.7	129	3.8	0.7	613	403
	16:00	690	730	701	516	-18.1	-16.1	-20.1	-21.2	129	3.7	0.6	602	395
	16:01	698	730	701	516	-22.8	-18.6	-24.0	-21.8	129	3.8	0.7	609	399
	16:02	703	728	699	516	-23.7	-19.5	-24.2	-20.5	129	3.9	0.7	608	399
	16:03	707	726	699	516	-21.7	-16.5	-24.0	-20.7	129	3.8	0.7	599	393
	16:04	708	726	698	516	-21.9	-17.8	-20.8	-19.2	129	3.9	0.7	611	401
	16:05	710	725	698	516	-20.3	-16.0	-16.3	-17.0	129	3.9	0.7	605	397
	16:06	712	723	698	514	-22.3	-17.6	-23.7	-22.3	129	4.0	0.7	614	403
	16:07	712	723	696	514	-23.1	-15.7	-20.3	-22.6	129	3.9	0.7	608	399
	16:08	710	721	696	514	-20.5	-15.9	-19.6	-20.3	129	3.9	0.7	594	389
	16:09	710	719	694	514	-21.2	-18.5	-18.9	-20.5	129	3.9	0.7	600	394
	16:10	710	717	694	514	-22.1	-18.8	-23.1	-21.5	129	4.1	0.7	602	395
	16:11	708	717	692	514	-21.5	-15.6	-19.3	-21.1	129	4.0	0.6	596	391
	16:12	707	716	692	514	-22.1	-15.6	-20.2	-21.6	129	4.0	0.7	596	391
	16:13	705	714	690	514	-21.0	-14.5	-22.1	-19.3	129	4.0	0.7	602	395
	16:14	703	714	690	512	-22.5	-16.5	-23.9	-23.1	129	4.1	0.7	608	399
	16:15	701	712	690	512	-21.2	-16.1	-23.1	-18.7	129	4.2	0.7	614	403
	16:16	699	710	689	512	-22.7	-16.5	-23.9	-19.6	129	4.1	0.7	612	402
	16:17	699	710	689	512	-23.3	-17.0	-22.5	-23.4	129	4.2	0.7	604	397
	16:18	698	708	687	512	-22.3	-17.9	-18.9	-17.7	129	4.1	0.7	592	389
	16:19	696	707	687	512	-23.8	-17.7	-22.2	-22.2	129	4.3	0.7	612	402

APCS -S1 Run 1 Operating Data	6/26/2012	Static Kiln #1 Temp °F	Static Kiln #2 Temp °F	Static Kiln #3 Temp °F	Static Kiln #4 Temp °F	Static Kiln #1 Pressure Pa	Static Kiln #2 Pressure Pa	Static Kiln #3 Pressure Pa	Static Kiln #4 Pressure Pa	Cartridge Filter Outlet Temp °F	Cartridge Filter DP mBar	HEPA Filter DP mBar	Stack Flow Nm3/h	Stack Flow acfm
	16:20	694	707	685	512	-22.6	-15.2	-17.9	-19.9	129	4.2	0.7	591	388
	16:21	692	705	685	512	-21.0	-15.0	-17.0	-14.1	129	4.2	0.7	604	397
	16:22	690	703	685	512	-20.9	-14.7	-24.7	-18.9	129	1.8	0.7	590	387
	16:23	689	703	683	510	-24.6	-15.5	-25.2	-21.4	129	2.0	0.7	613	402
	16:24	687	701	683	510	-21.3	-15.7	-24.4	-20.1	129	2.0	0.7	599	393
	16:25	685	701	681	510	-21.9	-16.9	-24.6	-25.5	129	2.1	0.7	595	390
	16:26	683	699	681	510	-23.1	-16.9	-25.5	-23.0	129	2.2	0.6	593	389
	16:27	681	698	681	510	-22.9	-17.3	-21.9	-22.7	129	2.3	0.7	601	394
	16:28	681	698	680	510	-21.6	-17.6	-20.4	-20.7	129	2.3	0.7	609	400
	16:29	681	696	681	510	-20.3	-17.5	-22.1	-17.7	129	2.3	0.7	605	397
	16:30	683	694	683	510	-20.4	-16.0	-23.3	-23.4	129	2.3	0.7	605	397
	16:31	690	694	685	509	-23.1	-16.7	-22.1	-22.2	129	2.5	0.7	602	395
	16:32	696	692	689	509	-22.1	-16.2	-23.5	-20.5	129	2.5	0.7	614	403
	16:33	703	692	694	509	-21.9	-17.3	-24.0	-21.2	129	2.6	0.7	609	400
	16:34	707	690	698	509	-21.0	-16.2	-23.8	-21.0	129	2.6	0.6	592	388
	16:35	708	689	703	509	-22.6	-17.1	-22.0	-24.9	130	2.6	0.6	596	391
	16:36	712	689	705	509	-23.5	-16.3	-22.3	-17.7	130	2.7	0.7	611	401
	16:37	712	687	708	509	-22.0	-17.2	-23.9	-19.7	130	2.7	0.6	594	390
	16:38	712	687	708	509	-20.8	-16.0	-16.6	-14.5	129	2.7	0.7	605	397
	16:39	712	685	710	509	-22.7	-16.8	-22.7	-18.4	129	2.8	0.6	600	394
	16:40	712	683	710	507	-22.0	-16.0	-20.8	-19.7	129	2.8	0.7	598	392
	16:41	710	683	710	507	-20.8	-17.3	-18.9	-17.9	129	2.8	0.7	609	399
	16:42	710	681	710	507	-21.2	-14.5	-19.6	-21.6	129	2.8	0.7	608	399
	16:43	708	681	710	507	-20.1	-15.0	-24.3	-21.9	129	2.8	0.7	606	397
	16:44	707	680	710	507	-23.4	-18.0	-22.5	-23.2	129	2.9	0.7	601	394
	16:45	705	680	708	507	-21.6	-18.1	-21.2	-21.6	129	2.9	0.7	602	395
	16:46	703	681	708	507	-24.3	-17.7	-19.1	-22.5	129	3.0	0.7	602	395
	16:47	701	685	707	507	-23.1	-18.0	-25.7	-22.9	129	3.1	0.7	610	400
	16:48	699	692	707	505	-19.9	-17.5	-22.7	-17.6	129	3.1	0.7	599	393
	16:49	698	699	707	505	-20.1	-15.4	-23.9	-20.2	129	3.0	0.7	607	398
	16:50	696	708	705	505	-22.3	-14.9	-22.3	-21.0	129	3.1	0.7	595	390
	16:51	696	717	705	505	-22.0	-15.3	-24.2	-19.2	129	3.2	0.7	603	395
	16:52	694	723	703	505	-22.4	-18.0	-24.6	-21.3	129	3.2	0.7	613	402
	16:53	692	726	703	505	-19.7	-15.0	-22.6	-20.3	129	3.0	0.7	599	392
	16:54	690	730	701	505	-24.7	-18.1	-20.1	-23.2	129	3.2	0.7	598	392
	16:55	689	734	701	505	-19.8	-16.5	-21.1	-18.8	129	3.2	0.7	613	401
	16:56	687	735	699	503	-19.7	-17.9	-20.8	-18.3	128	3.2	0.7	604	396
	16:57	685	735	699	503	-21.2	-16.8	-22.0	-19.1	129	3.3	0.7	611	401
Run Complete	16:58	685	735	698	503	-21.2	-18.0	-24.8	-19.4	129	3.3	0.7	612	401
	16:59	683	735	698	503	-12.4	-16.2	-18.5	-19.1	129	3.3	0.7	607	398

APCS -S1 Run 2 Operating Data	6/26/2012	Static Kiln #1 Temp °F	Static Kiln #2 Temp °F	Static Kiln #3 Temp °F	Static Kiln #4 Temp °F	Static Kiln #1 Pressure PA	Static Kiln #2 Pressure Pa	Static Kiln #3 Pressure Pa	Static Kiln #4 Pressure Pa	Cartridge Filter Outlet Temp °F	Cartridge Filter DP mBar	HEPA Filter DP mBar	Stack Flow Nm3/h	Stack Flow acfm
	Average	410	707	695	472	-17.6	-13.3	-21.4	-19.6	121	3.4	0.7	603	390
	Min	330	680	680	455	-21.2	-16.6	-27.2	-24.5	116	1.7	0.6	590	380
	Max	534	732	710	491	-11.9	-9.9	-16.0	-14.5	125	4.3	0.7	616	400
Fed going to SK-2	Time													
	17:00	681	735	696	503	-22.2	-16.2	-20.4	-20.3	129	3.4	0.7	595	390
	17:01	681	734	696	503	-22.9	-15.5	-24.1	-19.6	128	3.4	0.7	596	390
	17:02	685	734	696	503	-24.2	-15.9	-20.8	-22.6	128	3.5	0.7	601	394
	17:03	690	734	694	503	-20.2	-15.5	-23.1	-20.8	128	3.5	0.7	606	397
	17:04	699	732	694	503	-17.7	-16.8		-21.1	128	3.6	0.7	613	401
	17:05	703	732	692	501	-30.8	-16.8	-22.2	-19.6	128	3.6	0.7	595	390
	17:06	708	730	692	501	-20.9	-16.2	-19.4	-19.9	128	3.6	0.7	610	399
	17:07	710	730	690	501	-18.4	-14.6	-17.9	-18.3	128	3.6	0.7	594	389
	17:08	712	728	690	501	-21.4	-18.3	-20.6	-20.6	128	3.8	0.7	597	391
	17:09	712	726	690	501	-19.0	-15.1	-20.0	-19.5	128	3.8	0.7	608	398
	17:10	712	726	689	501	-21.8	-16.9	-22.3	-15.8	128	3.8	0.7	597	391
	17:11	712	725	689	501	-19.0	-16.8	-19.3	-14.5	128	3.7	0.7	607	398
	17:12	712	723	687	501	-19.5	-16.6	-18.8	-21.2	128	3.7	0.7	598	392
	17:13	710	723	687	501	-20.3	-17.2	-24.6	-21.5	128	3.8	0.7	602	394
	17:14	710	721	687	500	-19.5	-16.2	-19.1	-22.9	128	3.8	0.7	612	401
	17:15	708	719	685	500	-21.5	-18.8	-23.1	-21.9	128	3.9	0.7	604	396
	17:16	705	719	685	500	-17.7	-17.8	-20.6	-17.9	128	3.9	0.7	602	394
	17:17	699	717	683	500	-17.0	-13.9	-21.5	-21.8	128	3.8	0.7	597	391
	17:18	692	716	683	500	-16.4	-14.7	-21.7	-18.4	128	3.7	0.7	607	397
	17:19	687	716	683	500	-18.5	-15.0	-17.7	-21.3	128	3.8	0.7	594	389
	17:20	683	714	681	500	-17.4	-15.1	-20.2	-15.2	128	3.8	0.7	609	399
	17:21	680	712	681	500	-17.5	-14.6	-19.9	-21.1	128	3.7	0.6	595	390
	17:22	672	712	680	498	-18.2	-16.6	-23.9	-22.0	128	3.9	0.7	603	395
	17:23	669	710	681	498	-17.8	-15.2	-17.1	-19.8	128	3.8	0.7	603	395
	17:24	665	708	683	498	-17.3	-15.6	-23.7	-21.7	128	3.8	0.7	603	394
	17:25	660	708	685	498	-17.6	-15.5	-22.4	-21.9	128	3.8	0.7	598	392
	17:26	658	707	689	498	-16.4	-15.0	-19.0	-16.7	127	3.8	0.7	599	392
	17:27	654	705	692	498	-18.0	-17.0	-19.4	-21.6	127	3.9	0.7	598	391
	17:28	649	705	698	498	-18.0	-16.7	-24.2	-20.7	127	3.8	0.7	612	400
	17:29	645	703	701	498	-15.7	-14.7	-24.1	-20.3	127	3.8	0.7	607	397
	17:30	642	701	705	498	-17.5	-16.2	-23.5	-16.3	127	3.8	0.7	612	400
	17:31	636	701	707	496	-16.6	-13.8	-17.1	-20.3	127	3.7	0.7	593	388
	17:32	633	699	708	496	-16.4	-15.2	-22.8	-20.5	127	3.9	0.7	598	391
	17:33	627	698	710	496	-18.9	-14.6	-21.1	-20.1	127	3.8	0.7	610	399
	17:34	626	698	710	496	-16.5	-15.1	-20.1	-16.8	127	3.8	0.7	603	395
	17:35	622	696	710	496	-17.7	-16.4	-22.3	-18.8	127	3.8	0.7	598	391
	17:36	618	696	710	496	-16.3	-15.3	-22.6	-19.5	127	3.8	0.7	607	397
	17:37	613	694	710	496	-17.0	-15.6	-19.8	-19.6	127	3.8	0.7	607	397
	17:38	609	692	708	496	-16.2	-15.6	-19.0	-19.6	127	3.7	0.7	600	392
	17:39	606	692	708	496	-16.4	-15.0	-18.2	-21.2	127	3.7	0.7	607	397
	17:40	604	690	708	494	-19.1	-16.1	-21.9	-20.1	127	3.8	0.7	601	393
	17:41	600	690	707	494	-16.7	-15.7	-23.6	-21.5	127	3.7	0.7	597	390
	17:42	599	689	707	494	-17.8	-16.4	-18.2	-21.1	127	3.8	0.7	596	390
	17:43	595	687	705	494	-16.9	-16.9	-21.9	-17.1	127	3.9	0.7	613	400

APCS -S1 Run 2 Operating Data	6/26/2012	Static Kiln #1 Temp °F	Static Kiln #2 Temp °F	Static Kiln #3 Temp °F	Static Kiln #4 Temp °F	Static Kiln #1 Pressure PA	Static Kiln #2 Pressure Pa	Static Kiln #3 Pressure Pa	Static Kiln #4 Pressure Pa	Cartridge Filter Outlet Temp °F	Cartridge Filter DP mBar	HEPA Filter DP mBar	Stack Flow Nm3/h	Stack Flow acfm
	17:44	591	687	705	494	-18.4	-15.9	-21.5	-21.2	126	3.9	0.7	602	393
	17:45	588	685	703	494	-15.7	-15.0	-17.7	-20.0	126	3.7	0.7	598	391
	17:46	584	685	703	494	-17.9	-14.2	-19.1	-18.7	126	3.8	0.7	602	393
	17:47	581	683	701	494	-16.1	-13.9	-19.5	-18.7	126	3.8	0.7	603	393
	17:48	579	681	701	494	-17.0	-18.0	-22.8	-22.2	126	3.8	0.7	600	391
	17:49	577	681	701	492	-16.6	-16.2	-18.6	-18.7	126	3.7	0.7	593	387
Feed Start	17:50	572	680	699	492	-18.3	-16.6	-25.7	-18.5	126	3.8	0.7	600	391
	17:51	570	680	699	492	-16.3	-15.1	-22.7	-20.7	126	3.7	0.7	597	389
	17:52	566	681	698	492	-17.7	-16.7	-20.7	-18.6	126	3.8	0.7	604	394
	17:53	563	683	698	492	-16.5	-15.7	-22.1	-21.7	126	3.9	0.7	607	396
	17:54	561	690	696	492	-18.1	-19.7	-25.0	-21.1	125	3.9	0.7	607	395
	17:55	557	698	696	492	-17.8	-15.4	-20.9	-22.4	125	3.8	0.6	594	387
	17:56	555	705	694	492	-18.6	-14.7	-22.2	-17.7	125	4.0	0.7	614	400
	17:57	552	714	694	492	-16.1	-13.2	-23.2	-20.2	125	3.8	0.6	591	385
	17:58	548	719	692	492	-15.9	-14.6	-21.0	-22.0	125	3.8	0.7	605	394
	17:59	546	725	692	491	-19.0	-15.7	-21.9	-21.4	125	3.9	0.7	609	397
	18:00	545	728	692	491	-16.0	-14.3	-21.9	-18.6	125	3.8	0.6	598	389
	18:01	543	730	690	491	-18.1	-17.8	-23.9	-21.8	125	4.0	0.7	610	397
	18:02	541	730	690	491	-19.1	-15.8	-25.3	-20.6	125	4.0	0.7	601	391
	18:03	537	730	689	491	-16.0	-14.5	-19.9	-17.5	125	3.9	0.6	597	388
	18:04	536	732	689	491	-17.8	-15.1	-25.2	-23.5	125	4.1	0.7	608	396
Sampling Start	18:05	534	730	689	491	-19.5	-14.7	-19.1	-19.8	125	4.0	0.7	596	388
	18:06	532	730	687	491	-16.9	-14.9	-22.3	-22.8	124	4.0	0.7	600	391
	18:07	528	728	687	489	-19.0	-13.5	-21.2	-22.5	124	4.1	0.7	598	389
	18:08	527	726	685	489	-19.2	-12.5	-21.3	-18.6	124	4.0	0.7	603	393
	18:09	525	725	685	489	-16.7	-12.4	-21.0	-16.9	124	4.0	0.7	601	391
	18:10	523	725	683	489	-17.7	-12.9	-20.3	-14.8	124	4.1	0.7	607	395
	18:11	521	723	683	489	-18.2	-14.6	-21.3	-19.5	124	4.2	0.7	597	389
	18:12	519	721	683	489	-17.5	-12.7	-24.6	-20.9	124	4.2	0.7	614	400
	18:13	516	719	681	489	-18.5	-14.2	-23.4	-20.3	124	4.2	0.7	611	398
	18:14	514	717	681	489	-15.4	-13.3	-21.8	-19.1	124	4.2	0.7	595	387
	18:15	512	716	681	489	-18.8	-14.5	-17.1	-21.6	124	4.2	0.7	602	392
	18:16	510	716	680	487	-15.3	-12.0	-23.3	-19.8	124	4.2	0.7	596	388
	18:17	509	714	681	487	-18.2	-13.9	-21.8	-19.5	124	4.2	0.7	607	395
	18:18	507	712	683	487	-17.1	-13.9	-21.5	-14.8	124	4.3	0.7	599	389
	18:19	505	710	687	487	-16.8	-14.4	-22.3	-20.2	124	2.0	0.7	595	387
	18:20	501	708	690	487	-17.4	-14.8	-22.4	-22.2	124	2.1	0.7	593	386
	18:21	500	707	696	487	-16.2	-12.9	-20.9	-19.3	124	2.1	0.7	604	393
	18:22	498	705	699	487	-17.3	-14.0	-20.2	-18.9	124	2.2	0.6	596	387
	18:23	496	703	705	487	-17.8	-14.2	-20.9	-16.6	124	2.3	0.6	594	386
	18:24	494	701	707	487	-17.2	-14.0	-21.8	-20.9	124	2.4	0.7	611	397
	18:25	492	699	708	485	-18.9	-13.9	-19.8	-21.9	124	2.4	0.7	608	396
	18:26	491	698	710	485	-18.5	-14.7	-23.7	-20.6	124	2.5	0.6	601	391
	18:27	489	696	710	485	-17.5	-14.2	-19.4	-16.7	124	2.5	0.7	601	391
	18:28	487	696	710	485	-19.0	-15.7	-18.1	-23.1	124	2.6	0.7	605	393
	18:29	485	694	710	485	-19.5	-14.2	-23.6	-20.3	124	2.7	0.6	599	390
	18:30	485	692	710	485	-17.8	-13.2	-20.2	-20.5	124	2.7	0.7	608	396
	18:31	483	690	710	485	-18.4	-15.3	-21.5	-21.9	124	2.8	0.7	607	395

APCS -S1 Run 2 Operating Data	6/26/2012	Static Kiln #1 Temp °F	Static Kiln #2 Temp °F	Static Kiln #3 Temp °F	Static Kiln #4 Temp °F	Static Kiln #1 Pressure PA	Static Kiln #2 Pressure Pa	Static Kiln #3 Pressure Pa	Static Kiln #4 Pressure Pa	Cartridge Filter Outlet Temp °F	Cartridge Filter DP mBar	HEPA Filter DP mBar	Stack Flow Nm3/h	Stack Flow acfm
	18:32	480	689	708	485	-16.9	-14.4	-22.8	-19.9	124	2.7	0.7	612	398
	18:33	480	687	708	485	-17.2	-13.2	-18.3	-20.4	124	2.7	0.7	603	392
	18:34	476	687	708	483	-17.0	-14.4	-20.2	-20.3	124	2.8	0.7	608	395
	18:35	474	685	707	483	-16.7	-12.4	-17.9	-19.8	124	2.8	0.7	604	393
	18:36	473	683	707	483	-19.0	-15.0	-19.2	-15.0	123	2.9	0.7	606	394
	18:37	471	681	705	483	-16.4	-14.6	-21.6	-18.7	123	2.9	0.7	595	387
	18:38	471	680	705	483	-19.2	-16.6	-23.8	-18.7	123	3.0	0.7	605	393
	18:39	469	680	703	483	-17.6	-14.6	-21.3	-20.3	123	3.0	0.7	602	391
	18:40	467	681	703	483	-17.8	-13.3	-24.1	-20.9	123	3.0	0.7	596	387
	18:41	465	685	701	483	-16.7	-14.1	-23.0	-18.8	123	3.0	0.7	605	393
	18:42	464	690	701	483	-19.7	-15.6	-21.6	-18.0	123	3.1	0.7	605	393
	18:43	462	698	699	482	-16.6	-15.2	-20.9	-19.1	123	3.0	0.7	594	386
	18:44	462	707	699	482	-14.8	-14.2	-20.3	-20.4	123	3.1	0.7	609	395
	18:45	460	716	699	482	-18.4	-13.0	-25.0	-20.1	123	3.2	0.7	608	395
	18:46	458	721	698	482	-19.2	-15.5	-20.4	-21.1	123	3.2	0.6	595	387
	18:47	456	726	698	482	-17.5	-14.6	-21.5	-22.5	123	3.2	0.7	611	397
	18:48	455	730	696	482	-16.6	-12.5	-18.9	-17.7	123	3.2	0.7	595	386
	18:49	455	730	696	482	-17.8	-16.0	-20.6	-18.6	123	3.3	0.7	599	389
	18:50	453	732	694	482	-17.4	-14.7	-21.9	-19.7	123	3.2	0.7	592	384
	18:51	451	732	694	480	-17.9	-14.4	-25.6	-17.0	123	3.3	0.7	610	396
	18:52	449	732	692	480	-17.5	-14.1	-20.4	-21.1	123	3.4	0.7	611	397
	18:53	449	732	692	480	-15.1	-13.4	-21.9	-19.8	123	3.3	0.7	604	392
	18:54	447	730	690	480	-17.7	-15.5	-22.0	-20.4	123	3.4	0.7	609	396
	18:55	447	728	690	480	-16.2	-15.2	-19.9	-17.3	123	3.3	0.7	603	392
	18:56	446	728	690	480	-16.9	-14.2	-17.9	-21.3	123	3.4	0.6	594	385
	18:57	444	726	689	480	-18.4	-15.1	-19.6	-20.2	123	3.5	0.7	602	391
	18:58	442	725	689	480	-17.9	-13.5	-21.8	-22.4	123	3.5	0.7	600	390
	18:59	442	723	687	480	-18.0	-14.2	-23.3	-21.0	122	3.5	0.7	610	396
	19:00	440	721	687	478	-17.0	-13.9	-19.3	-20.2	122	3.4	0.6	594	385
	19:01	438	719	687	478	-18.3	-16.4	-20.9	-16.8	122	3.6	0.7	595	386
	19:02	437	717	685	478	-18.5	-14.5	-20.9	-21.2	122	3.7	0.7	607	394
	19:03	437	716	685	478	-18.0	-15.0	-19.4	-19.7	122	3.7	0.7	602	390
	19:04	435	714	683	478	-18.2	-13.9	-21.9	-21.3	122	3.6	0.7	594	385
	19:05	433	712	683	478	-16.4	-16.3	-24.8	-22.6	122	3.7	0.7	606	393
	19:06	433	712	683	478	-19.3	-16.0	-24.3	-21.3	122	3.8	0.7	612	397
	19:07	431	708	681	478	-16.3	-13.2	-21.1	-21.6	122	3.7	0.7	599	388
	19:08	431	708	681	478	-17.2	-11.9	-20.3	-20.4	122	3.6	0.7	597	387
	19:09	429	707	680	476	-16.9	-13.1	-18.1	-15.4	122	3.7	0.6	590	383
	19:10	428	705	681	476	-17.3	-13.3	-19.4	-18.8	122	3.8	0.7	595	386
	19:11	428	703	681	476	-17.8	-12.7	-21.8	-18.2	122	3.7	0.7	605	392
	19:12	426	701	685	476	-16.5	-13.9	-19.6	-20.6	122	3.8	0.7	595	385
	19:13	424	699	689	476	-19.3	-14.3	-19.9	-19.1	122	3.9	0.7	604	391
	19:14	424	698	692	476	-18.7	-14.1	-24.9	-16.7	122	3.9	0.7	601	389
	19:15	422	696	698	476	-21.2	-13.0	-21.5	-18.3	122	3.8	0.7	603	390
	19:16	420	694	703	476	-16.5	-12.6	-20.9	-18.1	122	3.9	0.7	601	389
	19:17	420	692	707	476	-19.1	-12.5	-19.9	-21.1	122	3.9	0.7	612	397
	19:18	419	690	708	476	-18.5	-13.7	-24.0	-20.7	122	4.0	0.7	607	393
	19:19	417	689	710	474	-17.4	-13.5	-22.1	-15.9	122	4.0	0.6	597	387

APCS -S1 Run 2 Operating Data	6/26/2012	Static Kiln #1 Temp °F	Static Kiln #2 Temp °F	Static Kiln #3 Temp °F	Static Kiln #4 Temp °F	Static Kiln #1 Pressure PA	Static Kiln #2 Pressure Pa	Static Kiln #3 Pressure Pa	Static Kiln #4 Pressure Pa	Cartridge Filter Outlet Temp °F	Cartridge Filter DP mBar	HEPA Filter DP mBar	Stack Flow Nm3/h	Stack Flow acfm
	19:20	417	687	710	474	-16.7	-12.4	-22.6	-22.4	121	4.0	0.7	610	395
	19:21	415	685	710	474	-16.5	-14.4	-20.9	-15.1	121	3.9	0.7	610	395
	19:22	415	683	710	474	-15.5	-12.2	-16.0	-17.9	121	3.9	0.6	598	387
	19:23	413	681	710	474	-19.0	-14.8	-21.3	-16.9	121	4.0	0.7	609	394
	19:24	411	680	710	474	-17.1	-13.5	-20.4	-16.8	121	4.0	0.7	591	383
	19:25	410	680	710	474	-20.1	-14.2	-21.1	-21.3	121	4.1	0.6	604	391
	19:26	410	680	708	474	-15.9	-13.7	-21.5	-16.5	121	4.0	0.7	599	388
	19:27	408	683	708	474	-17.9	-14.6	-22.8	-18.0	121	4.2	0.7	607	393
	19:28	408	687	708	473	-17.4	-14.9	-23.9	-18.6	121	4.1	0.7	610	394
	19:29	406	694	707	473	-18.9	-13.8	-20.4	-20.0	121	4.1	0.7	598	387
	19:30	406	703	707	473	-18.5	-13.7	-21.3	-22.2	121	4.1	0.7	602	390
	19:31	404	712	705	473	-19.7	-12.1	-23.4	-21.7	121	4.1	0.7	601	389
	19:32	404	719	705	473	-17.1	-13.9	-22.0	-20.5	121	4.1	0.7	600	388
	19:33	402	725	703	473	-17.4	-13.3	-18.1	-16.3	121	4.1	0.7	600	388
	19:34	401	728	703	473	-16.5	-14.3	-18.8	-20.6	121	4.2	0.7	594	384
	19:35	401	730	701	473	-17.6	-13.2	-21.2	-20.9	121	4.2	0.7	611	395
	19:36	399	732	701	473	-15.9	-11.5	-19.0	-21.3	121	4.2	0.7	592	383
	19:37	399	732	699	471	-16.0	-14.1	-19.7	-18.9	121	4.2	0.7	597	386
	19:38	397	732	699	471	-14.4	-11.7	-18.9	-16.3	121	1.7	0.7	594	384
	19:39	395	732	698	471	-17.8	-12.4	-23.2	-15.8	121	1.9	0.6	594	384
	19:40	395	732	698	471	-19.3	-14.8	-24.4	-20.1	120	2.1	0.7	606	392
	19:41	393	730	696	471	-17.3	-13.0	-20.7	-21.5	120	2.1	0.6	595	384
	19:42	393	728	696	471	-17.7	-13.8	-19.5	-20.6	120	2.2	0.7	610	394
	19:43	392	726	696	471	-17.6	-13.4	-20.8	-20.4	120	2.2	0.7	603	389
	19:44	392	725	694	471	-16.7	-12.6	-18.4	-19.5	120	2.2	0.7	597	386
	19:45	390	723	694	471	-18.8	-14.9	-21.1	-20.7	120	2.4	0.7	602	389
	19:46	390	721	692	469	-19.3	-12.7	-23.0	-18.3	120	2.4	0.7	609	394
	19:47	388	719	692	469	-14.3	-11.2	-22.4	-17.4	120	2.4	0.7	606	391
	19:48	388	717	690	469	-19.6	-13.9	-17.4	-17.9	120	2.5	0.7	609	394
	19:49	388	716	690	469	-18.1	-13.7	-18.5	-19.5	120	2.5	0.7	609	394
	19:50	386	714	690	469	-16.3	-12.9	-24.7	-18.4	120	2.6	0.7	613	396
	19:51	386	712	689	469	-17.8	-13.1	-18.0	-23.1	120	2.6	0.7	600	387
	19:52	384	710	689	469	-17.6	-12.9	-24.7	-16.2	120	2.7	0.7	605	391
	19:53	384	708	687	469	-17.7	-13.2	-23.5	-16.3	120	2.7	0.7	610	394
	19:54	384	707	687	469	-16.0	-12.2	-19.1	-14.5	120	2.7	0.7	603	389
	19:55	383	705	685	469	-17.3	-12.5	-23.5	-20.8	120	2.8	0.7	604	390
	19:56	381	703	685	467	-16.3	-12.4	-19.8	-21.0	120	2.7	0.7	603	389
	19:57	381	701	685	467	-17.6	-13.6	-19.1	-20.5	120	2.8	0.6	597	385
	19:58	379	699	683	467	-19.3	-13.8	-23.1	-21.7	120	2.9	0.7	613	396
	19:59	379	698	683	467	-17.7	-14.4	-18.9	-19.5	119	2.8	0.7	610	394
	20:00	379	696	681	467	-17.9	-14.5	-22.3	-20.4	120	3.0	0.7	601	388
	20:01	377	694	681	467	-16.7	-12.4	-20.9	-17.8	120	2.9	0.7	604	390
	20:02	377	692	681	467	-15.9	-15.3	-22.5	-19.8	119	3.0	0.7	610	394
	20:03	375	690	680	467	-16.5	-12.5	-21.9	-23.5	119	3.0	0.7	597	385
	20:04	375	690	681	467	-17.8	-13.2	-27.2	-18.2	119	3.1	0.7	615	397
	20:05	374	689	683	465	-16.5	-13.6	-25.5	-16.7	119	3.0	0.7	596	384
	20:06	374	687	685	465	-17.6	-14.2	-22.1	-21.5	119	3.1	0.6	596	385
	20:07	372	685	690	465	-17.6	-12.7	-22.4	-21.5	119	3.2	0.7	602	388

APCS -S1 Run 2 Operating Data	6/26/2012	Static Kiln #1 Temp °F	Static Kiln #2 Temp °F	Static Kiln #3 Temp °F	Static Kiln #4 Temp °F	Static Kiln #1 Pressure PA	Static Kiln #2 Pressure Pa	Static Kiln #3 Pressure Pa	Static Kiln #4 Pressure Pa	Cartridge Filter Outlet Temp °F	Cartridge Filter DP mBar	HEPA Filter DP mBar	Stack Flow Nm3/h	Stack Flow acfm
	20:08	372	683	694	465	-17.1	-11.8	-19.8	-14.5	119	3.1	0.7	601	388
	20:09	370	681	699	465	-20.1	-15.3	-21.2	-20.6	119	3.3	0.7	604	390
	20:10	370	680	703	465	-16.0	-14.0	-21.4	-18.5	119	3.2	0.7	608	392
	20:11	370	680	707	465	-17.8	-13.4	-24.1	-22.8	119	3.3	0.7	614	396
	20:12	368	681	708	465	-11.9	-11.9	-19.2	-18.4	119	3.2	0.7	606	391
	20:13	368	683	710	465	-17.2	-14.2	-22.6	-19.3	119	3.3	0.7	608	392
	20:14	366	690	710	465	-18.0	-13.2	-21.2	-19.0	119	3.2	0.6	595	384
	20:15	366	699	710	464	-18.4	-13.7	-23.7	-20.9	119	3.4	0.7	608	392
	20:16	365	708	710	464	-17.5	-14.6	-24.4	-21.5	119	3.3	0.7	596	384
	20:17	365	716	710	464	-18.0	-13.2	-22.5	-18.1	119	3.3	0.7	609	392
	20:18	365	721	710	464	-18.1	-13.6	-21.9	-20.2	119	3.4	0.7	615	396
	20:19	363	725	710	464	-17.8	-13.3	-18.6	-20.9	119	3.3	0.7	607	391
	20:20	363	728	708	464	-19.0	-12.4	-20.7	-17.5	119	3.4	0.7	596	384
	20:21	361	730	708	464	-19.0	-14.8	-21.7	-17.6	118	3.5	0.7	614	395
	20:22	361	730	708	464	-19.1	-14.3	-21.3	-16.6	118	3.5	0.7	615	396
	20:23	361	732	707	464	-18.6	-15.8	-24.3	-17.8	118	3.6	0.7	603	388
	20:24	359	730	707	462	-17.0	-10.6	-18.2	-15.4	118	3.4	0.6	595	383
	20:25	359	730	705	462	-17.3	-12.9	-24.7	-24.5	118	3.5	0.7	594	382
	20:26	357	728	705	462	-19.4	-14.4	-23.4	-22.7	118	3.6	0.7	616	396
	20:27	356	726	703	462	-16.1	-11.9	-19.2	-20.1	118	3.5	0.7	602	387
	20:28	356	725	703	462	-18.7	-14.1	-26.3	-20.6	118	3.7	0.7	599	386
	20:29	356	723	701	462	-16.1	-12.3	-20.2	-20.0	118	3.6	0.7	596	383
	20:30	354	721	701	462	-17.2	-12.3	-21.6	-19.5	118	3.6	0.7	611	393
	20:31	354	721	699	462	-17.2	-11.9	-22.6	-20.4	118	3.6	0.6	593	382
	20:32	354	717	699	462	-18.2	-12.7	-23.3	-22.2	118	3.8	0.7	607	390
	20:33	352	716	698	462	-17.0	-13.0	-19.8	-18.9	118	3.7	0.7	611	393
	20:34	352	716	698	460	-16.6	-13.7	-22.5	-20.2	118	3.7	0.7	600	386
	20:35	350	714	696	460	-18.2	-15.1	-24.8	-18.0	117	3.8	0.7	603	388
	20:36	350	712	696	460	-20.0	-13.5	-21.4	-18.5	117	3.8	0.7	596	383
	20:37	350	708	696	460	-18.1	-10.4	-21.7	-20.8	117	3.8	0.7	613	394
	20:38	348	707	694	460	-16.0	-12.3	-23.3	-23.1	117	3.8	0.7	597	384
	20:39	348	705	694	460	-18.0	-10.5	-19.0	-18.7	117	3.9	0.7	615	396
	20:40	347	703	692	460	-17.0	-12.0	-23.0	-19.4	117	3.9	0.7	610	392
	20:41	347	701	692	460	-17.3	-10.2	-20.6	-23.0	117	3.9	0.7	596	383
	20:42	345	699	690	460	-18.1	-11.4	-22.2	-20.9	117	4.0	0.7	609	391
	20:43	345	698	690	460	-17.2	-11.3	-21.1	-21.6	117	3.9	0.7	608	391
	20:44	345	696	690	458	-19.1	-12.6	-19.7	-21.5	117	3.9	0.7	592	380
	20:45	343	694	689	458	-19.7	-11.9	-20.6	-19.0	117	4.0	0.7	598	384
	20:46	343	692	689	458	-17.7	-12.5	-17.6	-21.2	117	4.1	0.7	608	391
	20:47	343	690	687	458	-17.2	-11.6	-18.7	-19.4	117	3.9	0.7	607	390
	20:48	341	690	687	458	-17.6	-11.9	-24.5	-19.2	117	4.0	0.7	598	384
	20:49	341	689	685	458	-19.0	-12.8	-21.3	-21.2	117	4.1	0.7	600	386
	20:50	341	687	685	458	-17.6	-10.3	-21.1	-17.0	117	4.0	0.7	608	390
	20:51	339	685	685	458	-17.1	-10.6	-19.7	-20.2	117	4.1	0.7	599	385
	20:52	339	683	683	458	-19.1	-11.5	-23.7	-19.2	117	4.2	0.7	607	390
	20:53	338	681	683	458	-18.3	-11.0	-20.3	-21.0	116	4.1	0.7	596	382
	20:54	338	680	683	458	-18.9	-10.4	-24.9	-22.1	116	4.2	0.7	612	393
	20:55	336	680	681	456	-17.5	-10.1	-21.0	-15.9	116	4.0	0.7	595	382

APCS -S1 Run 2 Operating Data	6/26/2012	Static Kiln #1 Temp °F	Static Kiln #2 Temp °F	Static Kiln #3 Temp °F	Static Kiln #4 Temp °F	Static Kiln #1 Pressure PA	Static Kiln #2 Pressure Pa	Static Kiln #3 Pressure Pa	Static Kiln #4 Pressure Pa	Cartridge Filter Outlet Temp °F	Cartridge Filter DP mBar	HEPA Filter DP mBar	Stack Flow Nm3/h	Stack Flow acfm
	20:56	336	681	681	456	-19.0	-11.3	-24.4	-20.9	116	4.2	0.7	604	388
	20:57	336	685	680	456	-18.8	-9.9	-21.6	-19.3	116	4.2	0.7	611	392
	20:58	334	692	681	456	-16.3	-11.2	-18.0	-20.5	116	4.0	0.7	600	385
	20:59	334	701	683	456	-18.5	-11.5	-22.7	-21.5	116	4.2	0.7	608	390
	21:00	334	708	685	456	-17.5	-10.2	-24.9	-18.1	116	4.2	0.7	614	394
	21:01	332	716	690	456	-16.2	-10.9	-19.2	-15.5	116	1.8	0.7	606	389
	21:02	332	721	694	456	-16.8	-13.0	-21.6	-21.1	116	1.9	0.7	599	384
	21:03	332	725	699	456	-17.7	-11.2	-20.4	-19.2	116	2.0	0.7	609	390
	21:04	330	726	703	456	-16.2	-10.7	-18.5	-19.7	116	2.0	0.7	601	385
Run Complete	21:05	330	728	707	455	-18.0	-11.7	-23.1	-21.5	116	2.2	0.7	602	386
	21:06	329	728	708	455	-17.2	-11.8	-20.7	-20.9	116	2.2	0.7	611	392
	21:07	329	728	710	455	-14.9	-9.8	-20.7	-14.1	116	2.2	0.7	600	385
	21:08	327	728	710	455	-19.1	-13.0	-24.4	-20.0	116	2.5	0.7	604	388
	21:09	327	726	710	455	-16.6	-12.6	-24.4	-16.1	116	2.4	0.7	597	383
	21:10	327	725	710	455	-17.8	-10.1	-22.8	-17.3	116	2.5	0.7	592	380
	21:11	327	725	710	455	-15.4	-11.4	-20.3	-19.3	116	2.6	0.7	591	379
	21:12	325	723	710	455	-18.1	-13.0	-22.9	-21.1	116	2.7	0.7	615	394
	21:13	325	721	710	455	-17.5	-12.2	-21.6	-18.1	116	2.7	0.7	607	390
	21:14	325	721	708	455	-18.7	-12.7	-21.3	-23.4	116	2.8	0.7	599	384
	21:15	323	719	708	455	-17.2	-11.7	-17.7	-19.1	116	2.7	0.7	589	378
	21:16	323	717	708	453	-17.5	-13.5	-19.1	-19.3	116	2.8	0.7	612	392
	21:17	323	716	707	453	-16.5	-11.8	-22.8	-20.2	116	2.8	0.7	611	392
	21:18	323	714	707	453	-17.9	-12.6	-20.5	-21.2	116	2.8	0.7	611	392
	21:19	321	712	705	453	-17.3	-12.0	-19.6	-18.9	116	2.7	0.7	602	386
	21:20	321	712	705	453	-17.9	-13.0	-21.9	-19.6	116	2.9	0.7	601	386
	21:21	321	710	703	453	-17.6	-11.6	-20.4	-17.4	116	2.8	0.7	596	382
	21:22	320	708	703	453	-17.9	-11.0	-20.3	-16.4	116	2.7	0.7	608	390
	21:23	320	708	701	453	-18.3	-12.6	-23.1	-20.7	116	2.8	0.7	597	383
	21:24	318	707	701	453	-19.5	-13.6	-21.9	-21.0	116	2.9	0.7	613	393
	21:25	318	703	699	453	-17.2	-11.3	-18.4	-18.7	116	2.8	0.7	607	389
	21:26	316	696	699	451	-18.2	-11.0	-22.6	-22.7	116	2.8	0.7	595	382
	21:27	316	690	698	451	-17.8	-11.4	-21.1	-14.7	116	2.9	0.7	597	383
	21:28	314	683	698	451	-16.2	-8.2	-20.8	-18.9	116	2.8	0.7	598	383
	21:29	314	676	698	451	-16.9	-10.0	-17.6	-19.2	116	2.7	0.7	606	388
	21:30	312	671	696	451	-18.2	-10.1	-24.9	-21.8	115	2.9	0.7	601	385

APCS -S1 Run 3 Operating Data	6/27/2012	Static Kiln #1 Temp °F	Static Kiln #2 Temp °F	Static Kiln #3 Temp °F	Static Kiln #4 Temp °F	Static Kiln #1 Pressure Pa	Static Kiln #2 Pressure Pa	Static Kiln #3 Pressure Pa	Static Kiln #4 Pressure Pa	Cartridge Filter Outlet Temp °F	Cartridge Filter DP mBar	HEPA Filter DP mBar	Stack Flow Nm3/h	Stack Flow acfm
	Average	699	709	696	707	-24.7	-12.1	-22.1	-19.7	123	3.3	0.8	602	391
	Min	680	680	680	680	-31.9	-15.4	-27.6	-25.7	119	1.8	0.7	589	381
	Max	712	735	710	730	-8.6	-9.4	-17.0	-14.2	126	4.3	0.8	622	405
Fed going to SK-1	Time													
	7:00	714	681	696	694	-23.8	-11.0	-20.6	-18.0	116	3.5	0.8	597	383
	7:01	712	680	694	694	-25.5	-11.6	-23.2	-19.7	116	3.6	0.9	613	393
	7:02	712	680	694	692	-25.9	-9.5	-23.7	-14.7	116	3.6	0.9	612	393
	7:03	712	683	692	692	-24.2	-11.2	-23.7	-20.4	116	3.5	0.8	600	385
	7:04	710	687	692	692	-26.4	-10.8	-28.1	-19.8	116	3.7	0.8	602	386
	7:05	708	694	690	690	-24.5	-10.5	-22.3	-17.9	116	3.5	0.8	602	386
	7:06	708	703	690	690	-25.5	-10.2	-24.7	-17.2	116	3.6	0.8	595	382
	7:07	707	712	689	689	-25.7	-11.2	-18.2	-19.0	117	3.6	0.9	611	392
	7:08	705	719	689	689	-28.5	-11.1	-21.6	-19.5	117	3.7	0.9	609	391
	7:09	703	725	687	687	-26.9	-11.6	-20.9	-19.2	117	3.6	0.8	601	386
	7:10	701	728	687	687	-27.8	-11.3	-20.5	-18.9	117	3.6	0.9	609	391
	7:11	699	732	685	685	-28.2	-13.9	-24.6	-19.6	117	3.8	0.9	605	388
	7:12	699	734	685	685	-26.6	-11.7	-22.2	-18.7	117	3.7	0.8	602	387
	7:13	698	734	683	685	-27.9	-10.6	-22.2	-21.0	117	3.7	0.8	598	384
	7:14	696	734	683	683	-24.1	-9.7	-25.0	-21.1	117	3.5	0.9	607	390
	7:15	694	734	683	683	-27.2	-11.3	-21.7	-20.3	117	3.7	0.8	598	384
	7:16	692	734	681	683	-25.6	-11.2	-22.4	-18.8	117	3.6	0.9	610	392
	7:17	690	734	681	681	-25.6	-11.7	-21.2	-22.2	117	3.6	0.8	593	381
	7:18	689	732	680	681	-25.5	-10.5	-22.1	-15.3	117	3.6	0.9	607	390
	7:19	689	732	681	681	-28.4	-11.3	-24.1	-19.8	117	3.7	0.8	602	387
	7:20	687	730	683	680	-27.5	-12.9	-23.8	-20.6	117	3.7	0.9	611	393
	7:21	685	730	685	681	-28.2	-12.1	-23.0	-18.6	118	3.7	0.9	604	389
	7:22	683	728	690	683	-27.4	-11.6	-25.0	-21.3	118	3.7	0.8	606	390
	7:23	681	726	696	689	-24.2	-11.3	-20.0	-15.1	117	3.5	0.9	595	383
	7:24	681	726	699	696	-25.0	-10.1	-22.1	-19.7	118	3.6	0.9	594	382
	7:25	681	725	705	703	-25.0	-10.5	-23.3	-18.4	118	3.6	0.9	605	389
	7:26	685	723	707	710	-27.1	-9.8	-18.7	-15.9	118	3.6	0.8	594	382
	7:27	690	723	708	717	-27.3	-11.9	-21.0	-22.2	118	3.7	0.8	598	385
	7:28	699	721	710	721	-23.5	-11.0	-22.7	-19.0	118	3.6	0.9	609	392
	7:29	703	719	710	725	-24.5	-11.4	-24.6	-14.5	118	3.5	0.8	595	383
	7:30	708	719	710	726	-27.7	-12.8	-23.7	-21.2	118	3.7	0.8	599	386
	7:31	710	717	708	726	-26.2	-10.7	-25.0	-21.5	118	3.6	0.9	613	395
	7:32	712	716	708	728	-24.0	-10.3	-22.9	-21.0	118	3.5	0.9	606	390
	7:33	714	714	708	728	-24.8	-10.4	-22.0	-18.5	118	3.5	0.9	605	390
	7:34	714	712	707	728	-25.8	-12.2	-24.2	-14.6	118	3.6	0.8	595	383
	7:35	714	710	707	728	-25.3	-11.1	-25.7	-20.6	118	3.7	0.8	597	384
	7:36	714	710	705	728	-25.9	-11.2	-24.2	-18.2	118	3.6	0.9	611	394
	7:37	714	708	705	726	-25.2	-10.4	-22.0	-19.1	118	3.6	0.8	593	382
	7:38	714	707	705	726	-27.1	-11.7	-25.5	-20.0	118	3.7	0.9	599	386
	7:39	712	705	703	726	-25.9	-10.3	-21.7	-20.3	118	3.6	0.9	613	395
	7:40	710	703	701	725	-22.3	-11.4	-17.7	-19.3	119	3.5	0.8	590	380
	7:41	708	703	701	725	-28.3	-11.5	-27.6	-16.0	119	3.7	0.8	599	386
	7:42	708	701	699	723	-28.1	-12.3	-22.6	-23.4	119	3.7	0.9	610	393
	7:43	707	699	699	723	-25.8	-11.0	-24.0	-16.5	119	3.6	0.9	609	392
	7:44	707	699	698	721	-25.0	-11.8	-18.6	-20.3	119	3.5	0.9	599	386
	7:45	705	698	698	721	-26.3	-10.9	-25.4	-18.6	119	3.6	0.9	609	392
	7:46	703	696	696	719	-26.3	-11.1	-24.5	-19.3	119	3.6	0.9	604	389
	7:47	701	696	696	719	-25.3	-10.8	-19.9	-22.2	119	3.6	0.9	609	393

APCS -S1 Run 3 Operating Data	6/27/2012	Static Kiln #1 Temp °F	Static Kiln #2 Temp °F	Static Kiln #3 Temp °F	Static Kiln #4 Temp °F	Static Kiln #1 Pressure Pa	Static Kiln #2 Pressure Pa	Static Kiln #3 Pressure Pa	Static Kiln #4 Pressure Pa	Cartridge Filter Outlet Temp °F	Cartridge Filter DP mBar	HEPA Filter DP mBar	Stack Flow Nm3/h	Stack Flow acfm
	7:48	701	694	694	717	-27.1	-13.0	-26.6	-21.1	119	3.7	0.9	606	391
	7:49	699	692	694	716	-26.0	-12.1	-23.4	-17.6	119	3.7	0.9	613	395
	7:50	698	692	692	716	-25.2	-11.7	-23.3	-20.9	119	3.6	0.8	596	384
	7:51	696	690	692	714	-26.8	-10.8	-24.8	-14.2	119	3.6	0.8	596	384
	7:52	694	690	692	714	-26.3	-12.3	-24.7	-16.9	119	3.7	0.9	608	392
	7:53	692	689	690	712	-25.1	-10.4	-20.6	-19.5	119	3.6	0.9	608	392
	7:54	692	687	690	712	-25.8	-11.2	-22.1	-17.6	119	3.6	0.8	594	383
	7:55	690	687	689	710	-26.5	-10.4	-22.4	-20.8	119	3.7	0.9	610	393
	7:56	689	685	689	710	-25.3	-10.8	-25.1	-19.4	119	3.6	0.9	611	394
	7:57	687	683	687	708	-25.4	-10.1	-20.8	-16.2	119	3.5	0.8	589	380
	7:58	685	681	687	708	-27.0	-11.5	-24.9	-19.5	119	3.7	0.8	605	390
	7:59	683	681	685	707	-26.8	-11.8	-25.2	-19.9	119	3.6	0.8	611	394
	8:00	683	680	685	707	-26.3	-11.0	-24.5	-19.5	119	3.6	0.8	594	383
	8:01	681	681	685	705	-26.2	-12.0	-26.3	-20.8	119	3.7	0.9	604	390
	8:02	680	683	683	705	-24.0	-11.2	-23.3	-17.1	119	3.5	0.9	603	389
	8:03	681	689	683	705	-26.7	-11.8	-24.3	-18.3	119	3.7	0.8	602	389
	8:04	689	696	681	703	-27.7	-10.0	-26.0	-18.9	119	3.6	0.8	612	395
	8:05	694	705	681	703	-24.5	-10.9	-22.4	-15.3	119	3.6	0.9	611	394
	8:06	701	714	681	701	-25.5	-9.9	-23.7	-19.9	119	3.6	0.8	598	386
	8:07	705	721	680	701	-24.1	-9.7	-23.6	-18.6	119	3.5	0.8	592	382
	8:08	708	726	681	699	-25.5	-12.6	-19.7	-16.5	119	3.6	0.8	592	382
	8:09	710	730	683	699	-27.0	-11.5	-27.4	-21.2	120	3.8	0.9	606	391
	8:10	712	732	687	698	-25.1	-12.0	-21.5	-17.4	120	3.6	0.8	617	398
	8:11	714	734	690	698	-22.2	-10.0	-19.2	-19.3	120	3.5	0.8	604	390
	8:12	714	734	696	696	-26.1	-13.8	-23.7	-24.4	120	3.7	0.8	598	386
	8:13	714	734	701	696	-27.0	-13.0	-25.9	-21.0	120	3.7	0.8	603	389
	8:14	714	735	705	694	-25.3	-11.3	-21.8	-20.2	119	3.6	0.8	597	385
	8:15	712	734	707	694	-23.9	-11.3	-19.2	-20.4	119	3.5	0.8	605	391
	8:16	712	734	708	694	-25.2	-12.5	-21.2	-17.1	119	3.6	0.8	607	392
	8:17	712	734	710	692	-26.4	-11.9	-24.7	-20.1	119	3.7	0.8	609	393
	8:18	710	732	710	692	-24.4	-11.1	-22.3	-15.7	119	3.6	0.8	597	385
	8:19	708	730	710	690	-27.0	-10.7	-23.6	-20.4	119	3.7	0.8	602	388
Feed Start	8:20	707	730	708	690	-24.7	-11.0	-21.8	-23.2	119	3.6	0.8	596	384
	8:21	707	728	708	690	-22.6	-11.7	-21.8	-22.6	119	3.6	0.8	604	389
	8:22	705	728	708	689	-28.0	-12.0	-25.3	-23.1	119	3.8	0.8	606	391
	8:23	703	726	707	689	-23.8	-11.3	-21.6	-21.9	119	3.6	0.8	596	385
	8:24	701	725	707	687	-23.1	-11.6	-23.0	-19.3	119	3.6	0.8	594	383
	8:25	701	725	705	687	-23.9	-12.1	-18.1	-19.9	119	3.6	0.8	595	384
	8:26	699	723	705	687	-27.4	-11.7	-26.7	-17.1	119	3.8	0.8	610	394
	8:27	699	721	703	685	-26.0	-10.8	-23.0	-15.5	119	3.8	0.8	604	390
	8:28	698	719	703	685	-24.4	-10.7	-23.7	-22.9	119	3.8	0.8	610	394
	8:29	696	717	701	685	-24.4	-10.3	-22.0	-18.9	119	3.8	0.8	614	396
	8:30	694	717	701	683	-28.5	-12.5	-23.7	-21.3	119	3.8	0.8	612	395
	8:31	692	716	699	683	-24.5	-11.1	-22.0	-18.8	119	3.8	0.8	594	383
	8:32	690	714	699	683	-24.4	-12.4	-23.6	-21.4	119	3.9	0.8	612	394
	8:33	689	712	698	681	-26.9	-10.2	-23.9	-20.5	119	3.9	0.8	600	387
	8:34	687	712	698	681	-26.3	-11.2	-20.9	-20.3	119	3.8	0.8	607	391
	8:35	685	710	696	680	-25.5	-10.7	-20.7	-21.2	119	3.9	0.8	594	383
	8:36	683	708	696	681	-25.6	-10.6	-26.2	-16.5	119	3.9	0.8	607	392
	8:37	681	708	694	681	-24.6	-12.3	-22.9	-20.2	119	4.0	0.8	611	394
	8:38	681	707	694	685	-24.6	-12.0	-22.1	-21.9	120	4.0	0.8	596	384
	8:39	683	705	692	690	-26.3	-11.6	-24.9	-18.6	119	4.1	0.8	606	391

APCS -S1 Run 3 Operating Data	6/27/2012	Static Kiln #1 Temp °F	Static Kiln #2 Temp °F	Static Kiln #3 Temp °F	Static Kiln #4 Temp °F	Static Kiln #1 Pressure Pa	Static Kiln #2 Pressure Pa	Static Kiln #3 Pressure Pa	Static Kiln #4 Pressure Pa	Cartridge Filter Outlet Temp °F	Cartridge Filter DP mBar	HEPA Filter DP mBar	Stack Flow Nm3/h	Stack Flow acfm
	8:40	690	703	692	699	-25.5	-11.6	-20.6	-16.7	119	4.0	0.8	612	395
	8:41	698	703	690	707	-23.8	-10.8	-20.4	-19.2	119	3.9	0.8	595	384
	8:42	703	701	690	712	-27.3	-12.2	-24.0	-16.4	119	4.1	0.8	610	393
	8:43	707	699	690	719	-23.3	-10.7	-18.9	-16.2	119	3.9	0.8	603	389
	8:44	710	699	689	723	-26.1	-10.6	-20.6	-20.2	119	4.1	0.8	608	392
	8:45	712	698	689	726	-22.7	-11.2	-22.1	-21.6	119	4.2	0.8	599	386
	8:46	712	698	687	728	-25.6	-13.0	-23.2	-21.6	119	4.2	0.8	607	391
	8:47	712	696	687	728	-23.9	-10.8	-21.1	-15.0	119	4.1	0.8	600	387
	8:48	712	694	685	728	-22.4	-12.3	-20.6	-15.5	119	4.0	0.8	600	387
	8:49	712	692	685	728	-24.2	-12.2	-21.6	-19.7	119	4.2	0.8	610	393
Sampling Start	8:50	712	690	683	728	-23.4	-10.9	-21.1	-17.9	119	4.1	0.8	597	385
	8:51	710	690	683	728	-24.2	-13.0	-24.0	-21.1	120	4.3	0.8	599	387
	8:52	708	689	683	728	-23.5	-10.0	-22.7	-20.8	120	4.2	0.8	608	392
	8:53	707	689	681	728	-23.8	-9.4	-22.0	-18.8	120	4.2	0.8	598	386
	8:54	707	687	681	726	-26.6	-12.2	-23.0	-19.0	120	2.1	0.8	605	391
	8:55	705	685	680	726	-25.3	-11.1	-25.3	-15.8	120	2.2	0.8	612	396
	8:56	703	685	680	725	-26.0	-10.8	-24.7	-21.9	120	2.3	0.8	596	385
	8:57	701	683	681	725	-23.1	-11.1	-21.2	-20.8	121	2.4	0.8	592	383
	8:58	699	681	685	723	-25.3	-12.8	-21.4	-19.4	121	2.5	0.8	609	394
	8:59	698	681	689	723	-8.6	-13.0	-22.3	-19.0	121	2.5	0.8	593	384
	9:00	696	680	694	721	-24.4	-10.1	-21.6	-20.1	121	2.6	0.8	594	384
	9:01	694	680	699	721	-27.3	-12.2	-24.8	-18.9	121	2.7	0.8	606	392
	9:02	694	681	703	719	-23.3	-11.0	-24.1	-21.0	121	2.7	0.8	591	383
	9:03	692	685	707	717	-24.5	-10.9	-21.8	-20.7	121	2.8	0.8	589	381
	9:04	690	692	708	717	-24.3	-11.3	-21.5	-20.2	121	2.8	0.8	595	385
	9:05	687	701	710	716	-22.8	-11.6	-23.6	-21.6	121	2.8	0.8	593	384
	9:06	685	710	710	716	-23.9	-11.0	-22.3	-19.8	121	2.9	0.8	594	385
	9:07	683	717	710	714	-24.6	-12.8	-26.8	-21.4	121	3.0	0.8	606	393
	9:08	681	725	708	714	-25.5	-12.2	-24.5	-20.5	121	3.0	0.8	598	387
	9:09	680	728	708	712	-24.4	-11.9	-24.5	-20.3	121	3.0	0.8	595	385
	9:10	681	732	708	712	-23.8	-10.2	-23.5	-20.1	121	3.0	0.8	591	383
	9:11	687	734	707	710	-25.2	-9.7	-24.7	-18.8	122	3.1	0.8	610	395
	9:12	694	735	707	710	-24.5	-12.5	-23.3	-20.1	122	3.1	0.8	612	396
	9:13	701	735	707	710	-24.4	-11.4	-22.5	-24.8	122	3.2	0.8	599	388
	9:14	705	735	705	708	-24.1	-13.1	-21.6	-19.2	122	3.1	0.8	600	389
	9:15	708	735	703	708	-22.4	-12.1	-23.8	-17.8	121	3.3	0.8	601	389
	9:16	710	735	703	707	-23.4	-11.3	-21.2	-16.6	121	3.2	0.8	603	390
	9:17	712	734	703	707	-25.6	-11.2	-23.7	-17.1	121	3.3	0.8	594	385
	9:18	712	734	701	705	-25.5	-11.7	-23.1	-22.6	121	3.3	0.8	596	386
	9:19	712	732	701	705	-25.7	-12.4	-24.3	-22.1	121	3.4	0.8	604	391
	9:20	712	732	699	703	-27.3	-12.8	-24.7	-20.4	122	3.4	0.8	606	392
	9:21	712	730	699	703	-25.0	-11.2	-23.8	-19.4	122	3.4	0.8	596	386
	9:22	710	728	698	701	-23.1	-9.9	-21.5	-17.6	122	3.3	0.8	600	388
	9:23	710	728	698	701	-27.1	-12.7	-24.5	-22.7	122	3.5	0.8	617	399
	9:24	708	726	696	699	-24.0	-10.5	-22.5	-19.6	122	3.4	0.8	609	395
	9:25	707	725	696	699	-24.5	-13.2	-21.8	-19.2	122	3.6	0.8	607	393
	9:26	705	725	694	698	-22.6	-9.9	-20.7	-19.6	122	3.4	0.8	593	384
	9:27	703	723	694	698	-23.3	-12.0	-23.7	-17.7	122	3.5	0.8	611	396
	9:28	701	721	692	696	-23.5	-12.3	-22.0	-21.9	122	3.5	0.8	592	383
	9:29	701	721	692	696	-23.4	-10.7	-24.5	-23.4	122	3.5	0.8	600	389
	9:30	699	719	690	694	-23.5	-10.5	-23.2	-16.1	122	3.6	0.8	607	393
	9:31	696	717	690	694	-26.3	-12.2	-22.1	-20.8	122	3.6	0.8	594	384

APCS -S1 Run 3 Operating Data	6/27/2012	Static Kiln #1 Temp °F	Static Kiln #2 Temp °F	Static Kiln #3 Temp °F	Static Kiln #4 Temp °F	Static Kiln #1 Pressure Pa	Static Kiln #2 Pressure Pa	Static Kiln #3 Pressure Pa	Static Kiln #4 Pressure Pa	Cartridge Filter Outlet Temp °F	Cartridge Filter DP mBar	HEPA Filter DP mBar	Stack Flow Nm3/h	Stack Flow acfm
	9:32	694	716	689	694	-22.9	-12.4	-22.3	-15.6	122	3.6	0.8	599	388
	9:33	692	716	689	692	-24.5	-12.7	-20.1	-18.3	122	3.7	0.8	612	397
	9:34	690	714	687	692	-22.2	-11.6	-22.5	-18.4	122	3.7	0.8	596	386
	9:35	689	712	687	692	-25.5	-14.0	-26.7	-14.2	122	3.8	0.8	606	393
	9:36	687	710	687	690	-23.7	-11.7	-19.0	-20.6	122	3.8	0.8	599	388
	9:37	685	710	685	690	-23.4	-13.4	-20.4	-18.8	122	3.7	0.8	591	383
	9:38	683	708	685	690	-24.1	-12.9	-23.8	-17.3	122	3.8	0.8	609	394
	9:39	681	707	683	689	-23.5	-11.1	-22.0	-19.9	121	3.8	0.8	596	386
	9:40	680	707	683	689	-24.6	-13.0	-24.7	-21.4	121	3.8	0.8	611	396
	9:41	681	705	683	687	-22.7	-11.6	-22.0	-23.4	121	3.8	0.8	593	384
	9:42	687	703	681	687	-25.5	-12.3	-18.6	-20.3	121	3.9	0.8	598	387
	9:43	694	703	681	687	-24.2	-12.5	-23.6	-21.3	121	3.8	0.8	602	390
	9:44	701	701	680	685	-24.0	-12.5	-21.0	-17.0	121	3.8	0.8	594	384
	9:45	705	699	681	685	-24.2	-12.4	-22.8	-19.7	121	3.9	0.8	614	397
	9:46	708	699	683	685	-22.8	-12.4	-20.1	-18.4	121	3.9	0.8	612	396
	9:47	710	698	685	683	-26.3	-12.6	-23.5	-20.0	121	4.0	0.8	598	387
	9:48	712	696	690	683	-22.2	-10.6	-21.3	-18.7	121	3.8	0.8	598	387
	9:49	712	696	696	681	-23.6	-11.8	-20.4	-19.8	121	3.9	0.8	591	383
	9:50	712	694	699	681	-24.0	-11.9	-19.6	-21.6	121	3.9	0.8	596	386
	9:51	710	692	705	680	-24.8	-11.7	-21.4	-21.6	121	4.1	0.8	600	388
	9:52	710	690	707	681	-24.5	-12.7	-21.2	-20.1	121	3.9	0.8	604	391
	9:53	710	690	708	683	-24.4	-13.3	-20.6	-16.8	122	4.0	0.8	613	397
	9:54	708	689	710	687	-23.0	-10.4	-18.5	-17.9	121	3.9	0.8	599	388
	9:55	707	689	710	692	-25.1	-11.8	-19.3	-21.3	121	4.1	0.8	594	385
	9:56	705	687	710	699	-26.9	-13.6	-20.8	-18.3	121	4.2	0.8	612	396
	9:57	705	685	708	707	-22.9	-14.4	-22.7	-21.0	121	4.2	0.8	604	391
	9:58	703	685	708	714	-23.1	-11.6	-21.0	-22.8	121	4.1	0.8	614	398
	9:59	701	683	708	719	-25.9	-13.9	-21.6	-18.5	121	4.2	0.8	598	387
	10:00	698	681	707	723	-24.7	-12.0	-18.6	-18.7	122	4.1	0.8	597	387
	10:01	696	681	707	726	-24.6	-12.5	-22.8	-16.7	122	4.3	0.8	605	392
	10:02	694	680	705	728	-23.1	-11.7	-17.0	-16.2	122	1.8	0.8	600	389
	10:03	692	680	705	728	-26.7	-13.8	-22.7	-20.9	122	1.9	0.8	606	392
	10:04	690	683	705	730	-23.6	-13.2	-25.8	-21.6	122	2.0	0.8	603	391
	10:05	689	687	703	730	-27.3	-12.2	-26.8	-21.4	122	2.1	0.8	608	394
	10:06	687	694	703	730	-24.0	-11.0	-21.3	-15.4	122	2.1	0.8	598	388
	10:07	685	703	701	728	-24.1	-12.4	-21.2	-19.0	122	2.2	0.8	597	387
	10:08	683	712	701	728	-24.6	-13.5	-23.9	-22.7	122	2.3	0.8	602	391
	10:09	681	719	699	728	-23.5	-12.9	-20.5	-21.5	123	2.3	0.8	596	387
	10:10	680	725	699	726	-25.1	-12.3	-22.4	-20.3	123	2.4	0.8	596	387
	10:11	681	728	698	726	-23.7	-11.8	-21.1	-19.6	123	2.4	0.8	610	396
	10:12	687	732	698	725	-26.5	-14.0	-24.4	-22.1	123	2.5	0.8	600	389
	10:13	694	732	696	725	-25.6	-13.5	-22.0	-18.7	123	2.5	0.8	608	395
	10:14	701	734	696	723	-25.9	-14.2	-21.3	-21.3	123	2.6	0.8	602	391
	10:15	705	734	694	723	-23.6	-12.0	-21.7	-20.0	123	2.5	0.8	604	392
	10:16	708	734	694	721	-25.1	-13.9	-20.2	-19.8	123	2.6	0.8	607	394
	10:17	710	734	692	719	-24.3	-11.2	-19.4	-20.3	123	2.6	0.8	590	384
	10:18	712	734	692	719	-26.9	-12.3	-23.5	-21.3	124	2.8	0.8	599	390
	10:19	712	734	690	719	-25.3	-11.3	-19.5	-20.6	124	2.7	0.8	603	392
	10:20	712	732	690	717	-23.7	-11.3	-22.9	-18.1	124	2.7	0.8	598	389
	10:21	712	730	689	717	-24.5	-12.0	-17.7	-19.1	124	2.8	0.8	614	399
	10:22	712	730	689	716	-25.6	-11.9	-21.3	-17.7	124	2.9	0.7	595	387
	10:23	710	730	689	716	-25.5	-13.5	-23.3	-20.3	124	2.9	0.7	594	386

APCS -S1 Run 3 Operating Data	6/27/2012	Static Kiln #1 Temp °F	Static Kiln #2 Temp °F	Static Kiln #3 Temp °F	Static Kiln #4 Temp °F	Static Kiln #1 Pressure Pa	Static Kiln #2 Pressure Pa	Static Kiln #3 Pressure Pa	Static Kiln #4 Pressure Pa	Cartridge Filter Outlet Temp °F	Cartridge Filter DP mBar	HEPA Filter DP mBar	Stack Flow Nm3/h	Stack Flow acfm
	10:24	710	728	687	714	-24.0	-11.7	-19.6	-18.5	124	2.9	0.8	600	391
	10:25	708	726	687	714	-25.5	-15.4	-24.5	-20.7	124	3.0	0.8	602	392
	10:26	707	726	685	712	-25.7	-13.9	-26.6	-25.7	124	3.1	0.8	613	399
	10:27	705	725	685	712	-25.1	-11.2	-20.9	-19.5	124	3.0	0.8	605	394
	10:28	703	723	683	710	-24.5	-14.7	-24.3	-19.0	124	3.1	0.8	615	400
	10:29	701	723	683	710	-24.7	-12.2	-22.4	-17.1	124	3.1	0.8	608	396
	10:30	699	721	683	708	-24.4	-13.5	-21.5	-19.2	124	3.2	0.7	596	388
	10:31	698	719	681	708	-22.2	-14.5	-24.4	-21.1	124	3.3	0.8	608	396
	10:32	696	717	681	707	-24.6	-12.0	-20.4	-20.9	125	3.2	0.8	611	398
	10:33	694	717	681	707	-24.4	-12.4	-21.5	-17.1	125	3.2	0.7	594	387
	10:34	692	716	680	705	-15.2	-10.9	-20.0	-17.4	125	3.1	0.7	600	391
	10:35	690	714	681	705	-26.8	-12.9	-23.1	-18.4	124	3.4	0.8	610	397
	10:36	689	712	685	703	-23.9	-12.6	-23.2	-20.5	124	3.3	0.7	592	385
	10:37	687	712	689	703	-25.3	-14.9	-22.6	-20.1	124	3.3	0.7	594	386
	10:38	685	710	692	701	-23.5	-12.1	-22.3	-18.7	124	3.2	0.7	599	390
	10:39	683	708	698	701	-25.5	-13.3	-23.3	-21.0	124	3.4	0.7	596	388
	10:40	683	708	703	699	-24.4	-10.5	-19.8	-21.0	124	3.3	0.7	605	394
	10:41	681	707	705	699	-23.4	-10.6	-22.2	-19.2	124	3.3	0.7	594	387
	10:42	680	705	708	698	-23.0	-11.5	-21.1	-18.3	125	3.4	0.7	608	396
	10:43	683	703	708	698	-23.7	-11.0	-20.7	-21.6	125	3.4	0.7	598	389
	10:44	689	703	710	698	-25.4	-12.6	-20.4	-17.1	125	3.5	0.7	593	386
	10:45	696	701	710	696	-21.9	-12.1	-20.7	-14.5	125	3.4	0.7	606	395
	10:46	703	699	710	696	-25.3	-13.3	-22.5	-22.0	125	3.6	0.7	599	390
	10:47	707	699	708	694	-25.7	-11.9	-24.2	-20.6	125	3.5	0.7	600	391
	10:48	708	698	708	694	-25.0	-12.6	-24.1	-16.9	125	3.6	0.7	593	386
	10:49	712	696	707	694	-28.9	-12.0	-23.7	-24.6	125	3.7	0.7	614	400
	10:50	712	696	707	692	-26.7	-10.7	-20.8	-16.9	125	3.5	0.7	606	395
	10:51	712	694	705	692	-23.8	-12.2	-17.9	-18.2	125	3.5	0.7	597	389
	10:52	712	692	705	692	-26.7	-12.7	-21.9	-24.4	125	3.7	0.7	601	392
	10:53	712	690	705	690	-25.4	-11.3	-21.3	-16.3	125	3.6	0.7	596	388
	10:54	712	690	703	690	-26.4	-12.6	-23.9	-21.6	125	3.8	0.7	603	393
	10:55	710	689	703	690	-26.0	-13.3	-21.5	-22.8	125	3.7	0.7	598	389
	10:56	708	687	701	689	-24.2	-12.1	-20.0	-19.3	125	3.7	0.7	595	387
	10:57	707	687	701	689	-26.9	-12.6	-27.6	-24.6	125	3.9	0.7	607	395
	10:58	707	685	699	687	-25.9	-13.2	-22.8	-18.0	125	3.8	0.7	609	397
	10:59	705	683	699	687	-29.4	-12.2	-20.4	-19.5	125	3.8	0.7	612	399
	11:00	703	683	698	685	-27.0	-12.8	-23.8	-22.2	125	3.9	0.7	603	393
	11:01	701	683	698	685	-25.4	-14.3	-27.2	-21.8	125	3.9	0.7	605	394
	11:02	699	681	696	685	-25.3	-14.0	-20.0	-17.0	125	3.8	0.7	612	399
	11:03	698	680	696	683	-25.7	-12.1	-22.5	-19.0	125	3.8	0.7	599	390
	11:04	696	680	694	683	-24.5	-11.4	-20.9	-17.9	125	3.8	0.7	593	386
	11:05	694	683	694	681	-27.4	-13.5	-25.1	-21.6	125	4.0	0.7	606	395
	11:06	692	687	692	681	-25.2	-10.2	-20.7	-17.4	125	3.9	0.7	597	389
	11:07	690	694	692	681	-27.1	-14.1	-22.6	-20.7	125	4.0	0.7	605	394
	11:08	689	701	690	680	-27.0	-13.0	-20.8	-20.5	125	4.0	0.7	611	398
	11:09	685	710	690	681	-25.8	-12.5	-21.6	-19.3	125	4.0	0.7	609	397
	11:10	683	717	690	685	-26.2	-10.5	-18.9	-19.0	125	3.9	0.7	604	394
	11:11	683	723	689	690	-27.3	-12.3	-24.3	-24.1	125	4.1	0.7	600	391
	11:12	681	726	689	696	-25.7	-13.5	-21.3	-19.2	125	4.0	0.7	600	391
	11:13	680	730	687	705	-25.5	-12.0	-20.6	-21.1	125	4.1	0.7	614	400
	11:14	683	732	687	712	-24.5	-9.9	-20.2	-18.6	125	4.0	0.7	596	388
	11:15	689	734	685	717	-24.7	-12.5	-20.1	-18.7	125	4.0	0.7	598	390

APCS -S1 Run 3 Operating Data	6/27/2012	Static Kiln #1 Temp °F	Static Kiln #2 Temp °F	Static Kiln #3 Temp °F	Static Kiln #4 Temp °F	Static Kiln #1 Pressure Pa	Static Kiln #2 Pressure Pa	Static Kiln #3 Pressure Pa	Static Kiln #4 Pressure Pa	Cartridge Filter Outlet Temp °F	Cartridge Filter DP mBar	HEPA Filter DP mBar	Stack Flow Nm3/h	Stack Flow acfm
	11:16	696	734	685	721	-25.2	-12.3	-21.7	-18.7	125	4.0	0.7	598	389
	11:17	701	734	685	725	-25.5	-12.5	-22.7	-19.8	125	4.1	0.7	610	398
	11:18	707	732	683	726	-25.4	-12.9	-22.3	-18.9	125	4.1	0.7	596	388
	11:19	708	732	683	728	-23.6	-9.8	-21.8	-18.4	125	4.0	0.7	595	388
	11:20	710	732	681	728	-26.0	-12.4	-21.5	-20.2	125	4.1	0.7	608	396
	11:21	710	732	681	728	-30.7	-11.5	-19.1	-20.3	125	4.1	0.7	604	393
	11:22	712	730	681	728	-25.2	-12.2	-26.6	-21.3	125	2.0	0.8	622	405
	11:23	710	730	680	728	-25.1	-11.8	-20.2	-19.3	125	2.0	0.7	599	390
	11:24	710	728	681	728	-24.5	-11.6	-20.4	-15.6	125	2.1	0.7	603	393
	11:25	710	726	683	728	-25.3	-11.6	-24.5	-19.9	125	2.2	0.7	612	399
	11:26	708	726	687	726	-22.9	-10.4	-23.8	-23.1	126	2.2	0.7	604	394
	11:27	707	725	692	726	-24.6	-12.6	-21.4	-19.5	126	2.3	0.7	591	386
	11:28	705	723	698	725	-31.0	-11.8	-26.2	-20.2	126	2.4	0.7	607	396
	11:29	703	723	701	725	-26.5	-10.8	-22.6	-18.2	126	2.5	0.7	602	393
	11:30	701	721	705	723	-24.0	-10.7	-20.9	-19.2	126	2.5	0.7	604	394
	11:31	699	721	707	723	-30.3	-12.4	-20.0	-19.2	126	2.6	0.7	608	396
	11:32	698	719	708	721	-24.1	-10.7	-21.1	-16.6	126	2.6	0.7	593	387
	11:33	696	717	710	721	-24.6	-12.0	-22.1	-22.5	126	2.7	0.7	604	394
	11:34	694	716	710	719	-25.9	-11.5	-21.2	-19.1	126	2.7	0.7	607	396
	11:35	692	716	708	719	-25.5	-12.2	-22.9	-23.5	126	2.8	0.7	596	389
	11:36	690	714	708	717	-24.8	-11.9	-20.0	-22.4	126	2.9	0.7	609	397
	11:37	690	712	708	717	-22.9	-12.9	-22.4	-18.9	126	2.8	0.7	594	387
	11:38	689	710	707	716	-23.6	-10.5	-18.7	-19.4	126	2.9	0.7	609	397
	11:39	687	710	707	716	-23.9	-10.6	-23.6	-18.8	126	2.9	0.7	609	397
	11:40	685	708	705	714	-24.0	-11.9	-25.6	-20.1	125	3.0	0.7	606	395
	11:41	683	708	705	714	-23.1	-12.9	-19.3	-16.4	125	3.0	0.7	609	397
	11:42	681	707	705	712	-24.3	-12.0	-19.8	-21.7	126	3.1	0.7	602	393
	11:43	681	705	703	712	-23.9	-11.2	-22.9	-18.2	126	3.1	0.7	600	391
	11:44	683	703	703	710	-25.1	-12.4	-22.1	-20.0	126	3.1	0.7	609	398
	11:45	690	703	701	710	-24.3	-10.1	-19.7	-18.9	126	3.1	0.7	601	392
	11:46	698	701	701	708	-24.2	-10.7	-17.8	-14.2	126	3.1	0.7	598	390
	11:47	703	699	699	708	-26.1	-13.5	-23.1	-20.1	126	3.3	0.7	608	397
	11:48	707	698	699	707	-24.6	-12.5	-21.0	-15.3	126	3.3	0.7	597	389
	11:49	708	698	698	707	-23.1	-11.0	-20.9	-21.5	126	3.3	0.7	606	395
Run Complete	11:50	710	696	698	705	-24.1	-12.1	-22.8	-18.8	126	3.3	0.7	595	388
	11:51	712	694	696	705	-24.1	-11.3	-21.9	-16.6	126	3.4	0.7	595	389
	11:52	712	694	696	703	-31.9	-10.9	-23.0	-15.6	126	3.5	0.7	616	402
	11:53	712	692	694	703	-24.8	-10.2	-19.3	-22.2	126	3.4	0.7	609	398
	11:54	710	690	694	701	-24.7	-11.9	-21.5	-20.9	126	3.5	0.7	607	396
	11:55	708	689	692	701	-22.7	-12.6	-20.5	-19.6	126	3.5	0.7	594	388
	11:56	708	689	692	701	-25.8	-11.7	-24.8	-23.1	126	3.5	0.7	609	398
	11:57	707	687	692	699	-26.0	-12.1	-19.0	-18.8	126	3.6	0.7	600	392
	11:58	707	687	690	699	-24.5	-11.6	-19.0	-19.7	126	3.5	0.7	598	390
	11:59	705	685	690	698	-24.7	-11.5	-20.5	-18.8	126	3.6	0.7	597	390
	12:00	703	685	689	698	-23.9	-11.5	-21.3	-22.2	126	3.6	0.7	607	396

APCS -C2 Run 1 Operating Data	6/27/2012	TTU-3 Pressure Pa	TTU-4 Pressure Pa	TTU-3 Temp °F	TTU-4 Temp °F	Catridge Filter Exit Temp °F	Catridge Filter DP mBar	HEPA Filter DP mBar	Stack Flow Nm3/h	Stack Flow acfm
	Average	-10.3	-22.6	132.1	125.0	223.0	5.4	5.0	2,482	1,888
	Min	-17.4	-31.6	117.2	111.4	193.4	4.9	4.6	2,411	1,787
	Max	-7.1	-3.6	139.8	132.8	232.4	5.7	5.2	2,523	1,938
	Time									
	14:00	-12.7	-18.1	104.5	83.7	116.2	3.7	4.0	2,514	1,613
	14:01	-11.5	-17.4	104.4	83.6	115.5	3.8	4.0	2,478	1,588
	14:02	-12.7	-19.1	104.4	83.6	114.9	3.7	4.0	2,474	1,584
	14:03	-11.6	-16.4	104.3	83.5	114.4	3.7	4.0	2,476	1,584
	14:04	-12.5	-21.2	104.2	83.8	113.9	3.7	4.0	2,479	1,584
	14:05	-12.6	-21.1	104.0	83.8	113.4	3.8	4.0	2,514	1,605
	14:06	-12.4	-20.5	104.0	83.6	113.0	3.7	4.0	2,466	1,573
	14:07	-11.2	-17.9	103.9	83.9	112.6	3.7	4.0	2,493	1,590
	14:08	-11.3	-18.0	103.7	84.4	112.3	3.7	4.0	2,490	1,587
	14:09	-12.6	-18.0	103.7	84.4	112.0	3.7	4.0	2,502	1,594
	14:10	-11.1	-17.8	103.6	84.5	111.5	3.7	3.9	2,488	1,584
	14:11	-11.6	-18.7	103.5	84.5	111.3	3.7	3.9	2,464	1,568
	14:12	-11.7	-20.2	103.4	84.4	111.0	3.7	3.9	2,488	1,582
	14:13	-11.8	-17.4	103.3	84.4	110.7	3.7	4.0	2,519	1,601
	14:14	-11.8	-20.2	103.3	84.3	110.3	3.7	4.0	2,483	1,577
	14:15	-11.4	-19.9	103.2	84.3	110.1	3.7	3.9	2,463	1,563
	14:16	-11.4	-17.3	103.1	84.3	109.7	3.7	4.0	2,499	1,586
	14:17	-12.1	-22.3	103.0	84.3	109.6	3.7	4.0	2,492	1,581
	14:18	-12.0	-20.3	103.0	84.2	109.4	3.7	3.9	2,453	1,555
	14:19	-12.0	-20.7	102.9	84.1	109.2	3.7	3.9	2,471	1,566
	14:20	-10.2	-17.8	102.9	84.2	108.9	3.7	3.9	2,456	1,556
	14:21	-11.8	-21.1	102.8	84.2	108.8	3.7	3.9	2,475	1,568
	14:22	-11.9	-20.1	102.7	84.2	108.6	3.7	4.0	2,473	1,566
	14:23	-11.6	-19.1	102.7	84.2	108.5	3.7	4.0	2,472	1,565
	14:24	-12.3	-20.4	102.6	84.3	108.3	3.7	4.0	2,482	1,571
	14:25	-11.9	-18.6	102.6	84.2	108.2	3.7	3.9	2,455	1,553
	14:26	-11.0	-17.1	102.6	84.3	108.0	3.7	4.0	2,490	1,575
	14:27	-11.4	-16.5	102.5	84.2	108.0	3.7	4.0	2,528	1,599
	14:28	-11.3	-18.3	102.5	84.1	107.9	3.7	3.9	2,485	1,571
	14:29	-12.2	-21.1	102.4	84.2	107.8	3.7	4.0	2,486	1,572
	14:30	-11.4	-16.1	102.3	84.3	107.6	3.7	4.0	2,524	1,595
	14:31	-11.7	-20.5	102.3	84.3	107.6	3.7	3.9	2,458	1,554
	14:32	-11.6	-19.9	102.2	84.3	107.4	3.7	3.9	2,474	1,563
	14:33	-11.2	-20.3	102.1	84.3	107.4	3.7	3.9	2,467	1,559
	14:34	-11.5	-18.0	102.1	84.4	107.2	3.7	4.0	2,482	1,568
	14:35	-11.7	-18.2	102.0	84.2	107.1	3.7	4.0	2,521	1,593
	14:36	-11.9	-20.0	102.0	84.2	106.9	3.7	3.9	2,470	1,559
	14:37	-11.3	-18.8	101.9	84.3	106.9	3.7	4.0	2,544	1,606
	14:38	-10.6	-19.2	101.9	84.3	106.8	3.7	4.0	2,508	1,583
	14:39	-15.8	-22.6	102.0	84.3	106.7	3.7	4.0	2,527	1,595
	14:40	-5.9	-9.3	101.9	84.1	106.6	3.7	4.0	2,519	1,590
	14:41	-11.2	-22.2	101.9	84.2	106.5	3.6	3.9	2,477	1,562
	14:42	-11.9	-16.5	101.8	84.1	106.3	3.7	3.9	2,485	1,567
	14:43	-12.0	-20.5	101.8	84.1	106.3	3.7	4.0	2,518	1,588
	14:44	-10.6	-17.2	101.8	84.2	106.1	3.7	3.9	2,463	1,553
	14:45	-11.4	-19.5	101.8	84.1	106.2	3.7	3.9	2,454	1,548
	14:46	-11.6	-17.5	101.8	84.3	106.0	3.7	4.0	2,505	1,579
	14:47	-11.3	-20.1	101.7	84.1	106.0	3.7	4.0	2,477	1,561
	14:48	-11.6	-15.5	101.7	84.0	106.0	3.7	3.9	2,470	1,557
	14:49	-8.9	-16.5	101.7	85.6	105.9	3.7	3.9	2,481	1,564
Feed Start	14:50	-8.9	-16.8	101.6	87.6	105.9	3.7	3.9	2,463	1,552
	14:51	-9.5	-18.8	101.6	89.4	106.0	3.7	4.0	2,517	1,587
	14:52	-8.4	-19.6	101.6	91.0	106.4	3.7	3.9	2,480	1,564
	14:53	-7.2	-20.4	101.6	92.1	106.7	3.8	4.0	2,479	1,565
	14:54	-7.4	-20.0	101.9	92.9	109.0	3.9	4.0	2,493	1,580
	14:55	-7.7	-21.1	102.3	93.6	112.3	4.0	4.0	2,523	1,608

APCS -C2 Run 1 Operating Data	6/27/2012	TTU-3 Pressure Pa	TTU-4 Pressure Pa	TTU-3 Temp °F	TTU-4 Temp °F	Catridge Filter Exit Temp °F	Catridge Filter DP mBar	HEPA Filter DP mBar	Stack Flow Nm3/h	Stack Flow acfm
	14:56	-6.5	-6.4	102.9	94.1	116.4	4.0	4.0	2,486	1,596
	14:57	-9.4	-20.5	103.5	94.9	120.1	4.1	4.0	2,458	1,588
	14:58	-9.8	-22.7	104.1	96.0	126.2	4.3	4.1	2,454	1,602
	14:59	-9.9	-29.3	104.7	97.3	131.5	4.3	4.1	2,479	1,633
	15:00	-7.9	-16.7	105.3	98.4	138.6	4.4	4.2	2,463	1,642
	15:01	-8.7	-21.1	105.9	99.5	143.5	4.4	4.2	2,458	1,652
	15:02	-11.6	-26.4	106.5	100.4	148.0	4.5	4.3	2,483	1,681
	15:03	-10.0	-22.3	107.2	101.0	152.1	4.5	4.3	2,449	1,670
	15:04	-8.7	-21.6	107.8	101.6	155.3	4.6	4.3	2,463	1,687
	15:05	-11.3	-22.9	108.5	102.2	157.5	4.6	4.3	2,472	1,700
	15:06	-7.2	-21.6	108.9	102.9	161.1	4.6	4.4	2,502	1,731
	15:07	-8.9	-24.3	109.5	103.5	163.9	4.6	4.4	2,489	1,730
	15:08	-11.0	-30.6	109.9	104.1	166.5	4.7	4.4	2,498	1,743
	15:09	-10.8	-19.8	110.4	104.7	169.5	4.7	4.4	2,485	1,742
	15:10	-10.1	-22.8	110.8	105.2	171.9	4.7	4.5	2,472	1,740
	15:11	-8.6	-15.9	111.3	105.6	172.6	4.7	4.5	2,476	1,744
	15:12	-7.5	-20.5	111.8	106.2	175.6	4.8	4.5	2,499	1,769
	15:13	-10.4	-22.3	112.2	106.7	176.2	4.7	4.5	2,482	1,759
	15:14	-9.2	-18.4	112.7	107.1	178.4	4.8	4.5	2,488	1,769
	15:15	-9.7	-21.3	113.0	107.6	180.8	4.8	4.5	2,477	1,768
	15:16	-9.2	-19.5	113.5	107.9	181.7	4.8	4.6	2,490	1,779
	15:17	-9.6	-19.3	113.9	108.3	182.2	4.8	4.6	2,493	1,783
	15:18	-7.8	-19.1	114.2	108.7	184.7	4.8	4.6	2,504	1,798
	15:19	-7.8	-22.5	114.7	109.1	185.7	4.8	4.6	2,474	1,779
	15:20	-11.1	-28.4	115.1	109.5	187.8	4.8	4.6	2,473	1,784
	15:21	-9.5	-14.9	115.5	109.8	188.5	4.9	4.6	2,485	1,795
	15:22	-9.4	-26.0	115.8	110.1	189.1	4.9	4.6	2,486	1,797
	15:23	-9.5	-24.2	116.2	110.5	189.4	4.8	4.6	2,457	1,777
	15:24	-10.7	-18.2	116.6	110.8	190.4	4.9	4.6	2,457	1,779
	15:25	-8.8	-26.4	116.9	111.1	192.5	4.9	4.7	2,476	1,799
Sampling Start	15:26	-9.2	-25.3	117.2	111.4	193.4	4.9	4.6	2,456	1,787
	15:27	-9.2	-29.0	117.5	111.7	194.7	4.9	4.7	2,461	1,794
	15:28	-10.1	-26.2	117.8	111.9	195.6	4.9	4.7	2,463	1,798
	15:29	-9.9	-23.4	118.1	112.1	196.2	4.9	4.7	2,452	1,792
	15:30	-7.1	-21.3	118.5	112.4	197.8	5.0	4.7	2,473	1,812
	15:31	-8.3	-21.8	118.7	112.6	197.9	5.0	4.7	2,486	1,822
	15:32	-10.7	-24.8	118.9	112.9	198.7	5.0	4.7	2,507	1,839
	15:33	-9.3	-18.1	119.2	113.2	200.2	5.0	4.7	2,478	1,822
	15:34	-11.5	-16.4	119.5	113.5	201.3	5.1	4.7	2,485	1,830
	15:35	-11.0	-20.2	119.8	113.9	201.4	5.0	4.7	2,493	1,836
	15:36	-10.0	-22.0	120.1	114.1	201.7	5.1	4.7	2,515	1,853
	15:37	-10.1	-18.4	120.4	114.5	202.8	5.0	4.7	2,498	1,844
	15:38	-8.3	-20.4	120.6	114.6	203.1	5.1	4.7	2,483	1,833
	15:39	-7.5	-22.0	120.9	114.8	204.6	5.0	4.7	2,488	1,841
	15:40	-9.8	-23.2	121.2	115.1	205.3	5.1	4.7	2,472	1,832
	15:41	-10.1	-19.6	121.4	115.4	205.7	5.0	4.7	2,459	1,823
	15:42	-8.7	-21.1	121.6	115.5	206.1	5.1	4.7	2,478	1,838
	15:43	-9.3	-22.7	121.8	115.8	207.2	5.1	4.8	2,500	1,858
	15:44	-14.8	-30.3	122.0	115.9	208.1	5.1	4.8	2,490	1,853
	15:45	-14.8	-3.6	122.2	116.1	208.4	5.1	4.8	2,500	1,861
	15:46	-9.3	-26.1	122.4	116.3	208.6	5.1	4.8	2,497	1,860
	15:47	-12.4	-21.4	122.8	116.6	209.0	5.1	4.7	2,458	1,832
	15:48	-10.4	-22.7	123.0	116.9	209.1	5.1	4.8	2,500	1,863
	15:49	-11.9	-22.8	123.1	117.1	209.9	5.1	4.8	2,486	1,855
	15:50	-8.4	-18.7	123.3	117.1	210.2	5.2	4.8	2,488	1,857
	15:51	-10.1	-24.1	123.6	117.3	210.9	5.1	4.8	2,512	1,877
	15:52	-9.9	-19.6	123.8	117.5	211.1	5.1	4.7	2,442	1,825
	15:53	-9.9	-15.3	124.0	117.6	211.8	5.1	4.8	2,456	1,838
	15:54	-9.6	-24.8	124.2	117.8	212.1	5.2	4.8	2,496	1,868
	15:55	-11.0	-18.9	124.4	117.9	212.5	5.2	4.8	2,501	1,873

APCS -C2 Run 1 Operating Data	6/27/2012	TTU-3 Pressure Pa	TTU-4 Pressure Pa	TTU-3 Temp °F	TTU-4 Temp °F	Catridge Filter Exit Temp °F	Catridge Filter DP mBar	HEPA Filter DP mBar	Stack Flow Nm3/h	Stack Flow acfm
	15:56	-9.9	-22.0	124.6	118.1	212.4	5.2	4.8	2,486	1,862
	15:57	-9.9	-19.5	124.8	118.3	213.1	5.2	4.8	2,451	1,837
	15:58	-10.0	-25.5	125.0	118.5	213.3	5.2	4.8	2,470	1,852
	15:59	-10.4	-25.5	125.3	118.6	213.7	5.2	4.9	2,505	1,879
	16:00	-10.7	-17.4	125.3	118.6	213.9	5.1	4.8	2,495	1,872
	16:01	-9.0	-15.0	125.2	118.3	212.2	5.1	4.8	2,482	1,858
	16:02	-9.6	-14.0	125.2	118.3	210.4	5.1	4.8	2,472	1,846
	16:03	-7.4	-16.3	125.3	118.5	210.5	5.2	4.8	2,500	1,867
	16:04	-7.2	-11.5	125.6	118.7	211.1	5.2	4.8	2,491	1,862
	16:05	-8.7	-24.4	125.8	118.9	212.3	5.2	4.8	2,462	1,843
	16:06	-8.1	-20.2	126.0	119.0	212.7	5.2	4.8	2,512	1,882
	16:07	-7.6	-23.2	126.2	119.4	213.9	5.2	4.8	2,466	1,851
	16:08	-10.4	-18.9	126.3	119.6	214.1	5.3	4.8	2,488	1,868
	16:09	-10.0	-15.7	126.5	119.8	215.1	5.2	4.8	2,445	1,839
	16:10	-10.3	-24.9	126.7	119.9	215.8	5.2	4.8	2,467	1,857
	16:11	-9.1	-22.7	127.0	120.2	216.0	5.2	4.9	2,475	1,863
	16:12	-10.2	-23.0	127.1	120.4	215.9	5.2	4.8	2,463	1,854
	16:13	-8.5	-21.1	127.2	120.5	216.6	5.2	4.8	2,480	1,869
	16:14	-11.3	-29.4	127.5	120.6	217.0	5.3	4.9	2,481	1,870
	16:15	-11.9	-26.5	127.6	120.6	217.5	5.2	4.8	2,466	1,860
	16:16	-10.5	-23.3	127.7	120.9	217.6	5.3	4.9	2,486	1,876
	16:17	-10.6	-26.0	127.9	121.1	218.6	5.3	4.9	2,480	1,874
	16:18	-11.3	-24.4	128.1	121.3	218.2	5.3	4.9	2,468	1,864
	16:19	-8.4	-30.5	128.4	121.7	218.2	5.3	4.9	2,523	1,906
	16:20	-8.6	-27.3	128.6	121.7	217.0	5.3	4.9	2,473	1,864
	16:21	-10.2	-16.0	128.8	121.8	217.6	5.3	4.9	2,497	1,884
	16:22	-9.6	-21.1	128.9	122.0	217.7	5.3	4.9	2,469	1,863
	16:23	-8.8	-20.6	128.9	122.1	218.4	5.3	4.9	2,515	1,900
	16:24	-9.8	-19.6	129.1	122.3	218.8	5.3	4.9	2,481	1,875
	16:25	-8.3	-20.6	129.3	122.4	220.0	5.3	4.9	2,472	1,872
	16:26	-8.1	-19.4	129.3	122.4	220.0	5.3	4.9	2,511	1,901
	16:27	-9.8	-22.0	129.5	122.5	220.7	5.3	4.9	2,464	1,868
	16:28	-10.9	-28.0	129.6	122.5	220.4	5.4	4.9	2,469	1,871
	16:29	-10.3	-26.1	129.8	122.6	221.5	5.3	4.9	2,481	1,883
	16:30	-8.5	-20.9	129.9	122.8	220.9	5.4	4.9	2,463	1,868
	16:31	-9.7	-20.6	130.1	123.0	220.6	5.4	4.9	2,486	1,884
	16:32	-12.2	-28.7	130.2	123.0	219.7	5.4	4.9	2,498	1,891
	16:33	-11.8	-24.8	130.2	123.2	220.7	5.4	4.9	2,505	1,899
	16:34	-11.8	-25.9	130.3	123.3	221.2	5.4	4.9	2,473	1,876
	16:35	-10.1	-24.4	130.5	123.3	222.1	5.4	4.9	2,483	1,886
	16:36	-11.3	-23.5	130.6	123.5	222.3	5.4	4.9	2,464	1,873
	16:37	-12.4	-26.1	130.6	123.7	223.1	5.4	5.0	2,519	1,916
	16:38	-14.5	-26.6	130.7	123.9	224.1	5.4	4.9	2,465	1,878
	16:39	-13.9	-22.7	130.7	124.2	224.9	5.5	4.9	2,447	1,867
	16:40	-10.2	-25.3	130.8	124.3	225.6	5.4	5.0	2,460	1,878
	16:41	-12.3	-27.4	130.8	124.5	226.2	5.4	4.9	2,445	1,868
	16:42	-12.3	-30.5	131.0	124.7	226.4	5.5	5.0	2,504	1,914
	16:43	-14.6	-31.2	131.1	124.9	227.8	5.5	5.0	2,520	1,930
	16:44	-12.3	-22.3	131.1	125.0	227.0	5.5	5.0	2,521	1,929
	16:45	-12.6	-24.1	131.2	125.0	227.6	5.5	5.0	2,479	1,898
	16:46	-17.4	-27.3	131.3	125.1	227.4	5.5	5.0	2,489	1,906
	16:47	-12.5	-20.1	131.4	125.2	228.1	5.5	5.0	2,487	1,906
	16:48	-14.2	-24.1	131.5	125.4	228.6	5.5	5.0	2,478	1,900
	16:49	-9.8	-22.2	131.6	125.3	230.6	5.5	5.0	2,474	1,903
	16:50	-12.6	-23.8	131.7	125.4	230.5	5.5	5.0	2,510	1,930
	16:51	-13.1	-24.0	131.8	125.5	231.2	5.5	5.0	2,471	1,902
	16:52	-14.5	-25.5	132.0	125.5	231.2	5.4	5.0	2,433	1,873
	16:53	-12.7	-25.2	132.1	125.6	231.0	5.5	5.0	2,451	1,886
	16:54	-10.5	-24.4	132.3	125.9	232.2	5.5	5.0	2,469	1,903
	16:55	-9.5	-24.6	132.5	126.0	232.1	5.5	5.0	2,481	1,912

APCS -C2 Run 1 Operating Data	6/27/2012	TTU-3 Pressure Pa	TTU-4 Pressure Pa	TTU-3 Temp °F	TTU-4 Temp °F	Catridge Filter Exit Temp °F	Catridge Filter DP mBar	HEPA Filter DP mBar	Stack Flow Nm3/h	Stack Flow acfm
	16:56	-11.3	-24.1	132.8	125.9	231.6	5.4	5.0	2,487	1,915
	16:57	-9.3	-21.6	132.9	125.5	230.2	5.5	5.0	2,497	1,920
	16:58	-11.4	-18.4	133.1	125.3	229.6	5.4	5.0	2,499	1,919
	16:59	-9.6	-25.8	133.2	125.2	228.4	5.4	5.0	2,480	1,901
	17:00	-11.4	-24.2	133.3	125.3	228.5	5.4	5.0	2,473	1,896
	17:01	-9.5	-20.8	133.5	125.5	228.2	5.5	5.0	2,498	1,915
	17:02	-8.5	-25.6	133.5	125.8	228.1	5.4	5.0	2,471	1,894
	17:03	-10.5	-27.5	133.7	125.9	228.0	5.5	5.0	2,486	1,905
	17:04	-7.4	-19.3	133.9	126.0	227.7	5.4	5.0	2,512	1,924
	17:05	-10.5	-22.9	134.0	126.0	228.4	5.5	5.0	2,467	1,891
	17:06	-11.8	-26.9	134.1	126.2	228.6	5.4	5.0	2,483	1,904
	17:07	-11.1	-17.5	134.2	126.2	228.6	5.5	5.0	2,493	1,911
	17:08	-10.1	-19.4	134.4	126.2	228.4	5.4	5.0	2,472	1,895
	17:09	-8.3	-16.8	134.6	126.2	228.9	5.5	5.0	2,494	1,913
	17:10	-9.6	-18.1	134.5	126.3	228.7	5.5	5.0	2,481	1,903
	17:11	-11.3	-20.8	134.7	126.2	229.1	5.4	5.0	2,453	1,882
	17:12	-9.5	-27.5	134.8	126.3	229.1	5.5	5.0	2,459	1,887
	17:13	-8.3	-24.9	134.9	126.3	228.7	5.5	5.0	2,492	1,911
	17:14	-12.2	-24.8	134.5	126.6	228.2	5.4	5.0	2,484	1,904
	17:15	-12.9	-23.3	134.0	126.7	226.3	5.3	5.0	2,502	1,912
	17:16	-13.2	-21.3	133.5	126.9	223.0	5.2	5.0	2,500	1,901
	17:17	-8.7	-21.8	133.0	127.0	219.4	5.2	5.0	2,483	1,879
	17:18	-8.0	-23.6	132.6	127.1	217.3	5.3	5.0	2,488	1,876
	17:19	-9.0	-20.6	132.6	127.2	217.6	5.4	5.0	2,488	1,878
	17:20	-9.3	-18.9	132.6	127.2	218.9	5.4	5.0	2,492	1,884
	17:21	-7.9	-23.0	132.8	127.2	220.2	5.4	5.0	2,467	1,868
	17:22	-11.9	-21.5	132.9	127.2	222.4	5.4	5.0	2,491	1,893
	17:23	-10.5	-18.8	133.1	127.3	223.7	5.5	5.0	2,490	1,896
	17:24	-10.9	-22.4	133.3	127.3	224.8	5.4	5.0	2,476	1,888
	17:25	-9.4	-27.8	133.4	127.1	225.5	5.5	5.0	2,465	1,882
	17:26	-9.6	-23.9	133.6	127.3	225.9	5.4	5.0	2,485	1,898
	17:27	-9.1	-19.9	133.8	127.4	226.2	5.5	5.0	2,486	1,900
	17:28	-7.9	-21.6	133.9	127.5	226.7	5.5	5.0	2,482	1,898
	17:29	-10.0	-24.5	134.2	127.7	227.0	5.5	5.0	2,467	1,887
	17:30	-10.7	-20.2	134.3	127.8	227.0	5.5	5.0	2,470	1,890
	17:31	-8.9	-20.8	134.5	127.8	227.6	5.5	5.0	2,486	1,903
	17:32	-11.2	-21.5	134.7	128.0	228.2	5.5	5.0	2,467	1,891
	17:33	-9.1	-23.3	134.9	128.1	227.8	5.5	5.1	2,468	1,890
	17:34	-10.0	-19.0	135.0	128.1	228.3	5.5	5.1	2,491	1,910
	17:35	-10.0	-25.5	135.2	128.2	228.5	5.5	5.1	2,478	1,900
	17:36	-12.0	-23.5	135.3	128.3	228.4	5.5	5.1	2,474	1,897
	17:37	-11.2	-18.6	135.5	127.7	227.8	5.5	5.1	2,484	1,903
	17:38	-11.0	-16.8	135.7	127.4	228.2	5.5	5.1	2,499	1,915
	17:39	-12.3	-17.4	135.8	127.6	228.2	5.6	5.1	2,497	1,914
	17:40	-10.8	-17.9	135.9	127.9	229.2	5.6	5.1	2,495	1,915
	17:41	-9.6	-25.1	136.0	128.0	229.2	5.6	5.1	2,487	1,909
	17:42	-11.7	-26.1	136.1	128.2	230.3	5.6	5.1	2,516	1,934
	17:43	-10.1	-25.3	136.2	128.2	231.3	5.6	5.1	2,481	1,910
	17:44	-9.4	-25.8	136.3	128.3	231.7	5.6	5.1	2,492	1,920
	17:45	-9.0	-24.7	136.5	128.5	230.8	5.6	5.1	2,511	1,932
	17:46	-9.2	-23.0	136.6	128.6	230.6	5.6	5.1	2,515	1,934
	17:47	-10.0	-25.1	136.7	128.7	230.5	5.6	5.1	2,470	1,899
	17:48	-10.2	-17.7	136.8	128.7	230.8	5.6	5.1	2,498	1,922
	17:49	-12.2	-17.9	137.0	128.8	230.3	5.6	5.1	2,501	1,922
	17:50	-12.2	-17.9	137.0	128.7	230.4	5.6	5.1	2,488	1,913
	17:51	-8.8	-23.5	137.1	128.9	230.6	5.6	5.1	2,461	1,893
	17:52	-9.0	-22.1	137.3	129.1	230.5	5.6	5.1	2,504	1,925
	17:53	-9.7	-19.5	137.2	129.1	230.7	5.6	5.1	2,469	1,899
	17:54	-10.3	-19.5	137.3	129.2	230.8	5.6	5.2	2,515	1,935
	17:55	-9.3	-22.8	137.3	129.3	231.1	5.6	5.1	2,462	1,895

APCS -C2 Run 1 Operating Data	6/27/2012	TTU-3 Pressure Pa	TTU-4 Pressure Pa	TTU-3 Temp °F	TTU-4 Temp °F	Catridge Filter Exit Temp °F	Catridge Filter DP mBar	HEPA Filter DP mBar	Stack Flow Nm3/h	Stack Flow acfm
	17:56	-10.8	-31.3	137.4	129.5	231.3	5.5	5.1	2,486	1,914
	17:57	-10.2	-21.8	137.6	129.6	230.9	5.6	5.1	2,469	1,899
	17:58	-9.6	-24.6	137.6	129.7	231.2	5.6	5.1	2,484	1,912
	17:59	-8.8	-28.1	137.8	129.5	230.5	5.6	5.1	2,511	1,931
	18:00	-10.0	-27.5	137.9	129.5	230.7	5.6	5.1	2,487	1,913
	18:01	-11.9	-28.5	138.0	129.7	231.0	5.5	5.1	2,453	1,888
	18:02	-11.1	-24.1	138.0	129.7	230.8	5.6	5.1	2,493	1,918
	18:03	-11.7	-25.9	138.1	129.7	230.7	5.6	5.1	2,465	1,896
	18:04	-10.1	-28.6	138.2	129.7	230.6	5.6	5.1	2,502	1,924
	18:05	-9.8	-20.0	138.3	129.7	230.6	5.6	5.1	2,476	1,905
	18:06	-8.6	-20.1	138.3	129.9	230.4	5.6	5.1	2,487	1,912
	18:07	-10.1	-20.3	138.4	129.9	230.3	5.6	5.1	2,491	1,915
	18:08	-9.4	-20.1	138.4	129.8	230.6	5.6	5.1	2,485	1,911
	18:09	-9.1	-19.7	138.4	129.9	230.8	5.6	5.1	2,457	1,890
	18:10	-9.6	-22.6	138.5	130.0	230.9	5.6	5.1	2,492	1,917
	18:11	-10.9	-17.5	138.4	130.0	231.4	5.6	5.1	2,457	1,892
	18:12	-9.3	-21.8	137.9	130.1	229.8	5.5	5.1	2,502	1,922
	18:13	-9.7	-18.1	137.4	130.2	227.5	5.5	5.1	2,482	1,901
	18:14	-8.4	-28.8	137.3	130.3	226.9	5.5	5.1	2,500	1,912
	18:15	-8.0	-23.3	137.2	130.3	226.6	5.5	5.1	2,466	1,885
	18:16	-10.4	-19.7	137.3	130.2	226.9	5.6	5.1	2,482	1,898
	18:17	-9.6	-22.2	137.5	130.4	227.5	5.6	5.1	2,472	1,893
	18:18	-11.7	-27.1	137.6	130.6	228.4	5.5	5.1	2,452	1,880
	18:19	-7.3	-22.3	137.7	130.5	228.7	5.6	5.1	2,482	1,904
	18:20	-11.6	-27.2	137.7	130.4	229.5	5.6	5.1	2,478	1,903
	18:21	-8.7	-31.6	137.8	130.4	229.6	5.6	5.1	2,483	1,907
	18:22	-12.5	-28.3	137.9	130.4	231.2	5.6	5.1	2,496	1,922
	18:23	-10.3	-21.8	138.0	130.5	230.8	5.6	5.0	2,411	1,855
	18:24	-8.1	-19.8	138.2	130.6	231.6	5.6	5.1	2,475	1,906
	18:25	-8.5	-17.9	138.3	130.8	231.2	5.6	5.1	2,480	1,909
	18:26	-9.8	-20.5	138.4	130.8	231.0	5.6	5.1	2,488	1,914
	18:27	-9.5	-22.6	138.5	130.8	230.5	5.6	5.1	2,462	1,893
	18:28	-9.3	-22.4	138.7	130.9	230.7	5.7	5.1	2,506	1,927
	18:29	-11.1	-21.2	138.8	130.8	230.6	5.6	5.1	2,471	1,900
	18:30	-9.8	-22.9	138.9	130.7	231.1	5.6	5.0	2,424	1,865
	18:31	-10.8	-23.7	138.9	130.7	231.0	5.6	5.1	2,450	1,885
	18:32	-11.0	-26.6	139.1	130.8	231.8	5.7	5.1	2,515	1,938
	18:33	-12.3	-21.0	139.1	131.1	231.7	5.6	5.1	2,485	1,914
	18:34	-8.4	-26.6	139.2	131.2	232.4	5.6	5.1	2,475	1,908
	18:35	-8.2	-26.4	139.2	131.3	231.9	5.6	5.1	2,494	1,921
	18:36	-8.9	-27.2	139.3	131.3	231.8	5.6	5.1	2,471	1,904
	18:37	-11.6	-24.7	139.3	131.3	231.6	5.6	5.1	2,482	1,912
	18:38	-11.3	-20.8	139.4	131.4	231.2	5.6	5.1	2,475	1,905
	18:39	-11.3	-17.0	139.4	131.4	231.2	5.6	5.1	2,494	1,920
	18:40	-10.2	-24.3	139.4	131.4	231.5	5.6	5.1	2,453	1,889
	18:41	-8.8	-21.3	139.5	131.5	231.6	5.7	5.1	2,485	1,914
	18:42	-9.6	-28.9	139.5	131.6	232.2	5.6	5.1	2,479	1,911
	18:43	-12.5	-21.6	139.6	131.7	231.4	5.7	5.1	2,510	1,933
	18:44	-9.2	-24.8	139.7	131.7	231.0	5.7	5.1	2,489	1,916
	18:45	-8.9	-21.6	139.7	131.7	231.1	5.7	5.1	2,487	1,914
	18:46	-11.6	-22.3	139.8	131.7	231.5	5.7	5.1	2,502	1,927
	18:47	-13.8	-21.6	139.6	131.5	231.7	5.6	5.1	2,479	1,910
	18:48	-10.7	-26.3	139.2	131.5	231.4	5.6	5.1	2,483	1,912
	18:49	-9.3	-24.4	138.9	131.7	229.3	5.5	5.1	2,480	1,903
	18:50	-13.0	-21.3	138.8	132.1	228.9	5.6	5.1	2,515	1,929
	18:51	-10.1	-21.8	138.5	132.5	229.2	5.6	5.1	2,491	1,912
Run Stop	18:52	-11.4	-16.2	138.2	132.8	229.6	5.6	5.1	2,465	1,893

APCS -C2 Run 2 Operating Data	6/27/2012	TTU-3 Pressure Pa	TTU-4 Pressure Pa	TTU-3 Temp °F	TTU-4 Temp °F	Catridge Filter Exit Temp °F	Catridge Filter DP mBar	HEPA Filter DP mBar	Stack Flow Nm3/h	Stack Flow acfm
	Average	-10.4	-23.6	140.1	136.8	231.2	5.7	4.9	2,477	1,906
	Min	-16.5	-32.8	132.6	126.6	207.3	5.3	4.7	2,429	1,843
	Max	-0.3	-3.7	144.9	140.7	239.3	5.9	5.0	2,527	1,962
	Time									
	18:53	-12.0	-15.8	138.3	133.0	229.7	5.6	5.1	2,465	1,894
	18:54	-13.7	-22.7	138.2	133.0	231.0	5.5	5.0	2,429	1,869
	18:55	-12.5	-24.0	137.8	132.4	228.2	5.2	5.0	2,452	1,879
	18:56	-11.4	-22.2	137.6	131.5	222.2	5.2	5.1	2,513	1,909
	18:57	-11.9	-23.4	137.1	130.5	215.4	5.0	5.0	2,467	1,855
	18:58	-11.9	-23.1	136.7	129.5	209.0	5.0	4.9	2,488	1,854
	18:59	-11.6	-23.9	136.2	128.7	203.5	4.9	4.9	2,497	1,845
	19:00	-11.1	-23.2	135.8	127.8	198.2	4.9	4.9	2,495	1,829
	19:01	-13.6	-28.6	135.3	127.1	194.0	4.9	4.9	2,517	1,833
	19:02	-11.3	-22.8	134.7	126.2	189.9	4.8	4.8	2,509	1,816
	19:03	-11.0	-22.9	134.3	125.4	186.5	4.8	4.8	2,499	1,799
	19:04	-10.7	-23.4	133.8	124.6	183.1	4.8	4.7	2,492	1,784
	19:05	-11.7	-24.6	133.3	123.9	180.3	4.7	4.7	2,466	1,758
	19:06	-11.1	-23.1	132.8	123.3	177.6	4.8	4.7	2,509	1,782
	19:07	-10.2	-25.1	132.3	122.8	175.2	4.7	4.7	2,516	1,780
	19:08	-10.5	-20.6	131.7	122.2	172.5	4.7	4.7	2,511	1,768
	19:09	-10.2	-22.0	131.2	121.7	170.4	4.7	4.7	2,495	1,751
	19:10	-10.9	-23.4	130.8	121.2	167.9	4.7	4.6	2,495	1,745
	19:11	-10.6	-22.0	130.4	120.7	166.1	4.7	4.6	2,485	1,733
	19:12	-13.3	-24.2	129.9	120.4	164.1	4.7	4.6	2,517	1,749
	19:13	-10.0	-20.9	129.5	119.9	162.4	4.6	4.6	2,440	1,691
	19:14	-12.5	-23.9	129.1	119.4	160.6	4.6	4.6	2,489	1,721
	19:15	-13.2	-27.1	128.7	119.2	159.1	4.6	4.6	2,471	1,703
	19:16	-10.8	-20.9	128.3	118.9	157.5	4.6	4.5	2,443	1,680
	19:17	-10.7	-20.6	127.9	118.5	156.3	4.6	4.5	2,462	1,690
	19:18	-10.3	-21.8	127.6	118.2	154.6	4.6	4.5	2,457	1,681
	19:19	-10.8	-20.8	127.2	118.0	153.3	4.6	4.5	2,483	1,696
	19:20	-10.5	-23.7	126.8	117.8	152.0	4.6	4.5	2,494	1,700
	19:21	-10.6	-20.7	126.6	117.5	150.9	4.5	4.5	2,511	1,708
	19:22	-9.8	-21.5	126.3	117.2	149.6	4.6	4.5	2,498	1,696
	19:23	-10.6	-22.1	126.0	117.0	148.5	4.5	4.5	2,497	1,692
	19:24	-10.2	-20.8	125.8	116.7	147.4	4.5	4.5	2,490	1,684
	19:25	-12.8	-25.0	125.5	116.6	146.3	4.5	4.5	2,503	1,690
	19:26	-12.5	-23.2	125.1	116.4	145.3	4.5	4.5	2,476	1,669
	19:27	-10.8	-21.0	124.9	116.2	144.4	4.5	4.5	2,507	1,687
	19:28	-10.3	-20.0	124.6	115.9	143.5	4.5	4.4	2,473	1,662
	19:29	-11.4	-11.2	124.4	116.0	142.8	4.5	4.4	2,490	1,671
Feed Start	19:30	-7.6	-22.6	124.2	116.5	143.4	4.7	4.4	2,508	1,685
	19:31	-9.2	-19.4	124.2	117.6	147.5	4.9	4.5	2,512	1,700
	19:32	-8.4	-23.3	124.6	118.7	155.1	5.1	4.5	2,498	1,711
	19:33	-7.7	-20.3	125.1	119.8	162.5	5.1	4.5	2,473	1,715
	19:34	-9.3	-25.2	125.5	120.6	169.4	5.2	4.6	2,500	1,752
	19:35	-11.4	-24.9	126.0	121.5	175.2	5.2	4.6	2,465	1,744
	19:36	-11.4	-21.9	126.5	122.2	180.3	5.3	4.7	2,463	1,756
	19:37	-9.2	-25.2	127.0	122.9	183.8	5.3	4.7	2,470	1,771
	19:38	-8.7	-17.5	127.5	123.5	187.4	5.4	4.7	2,491	1,796
	19:39	-8.9	-25.7	127.9	123.9	190.1	5.4	4.8	2,513	1,819
	19:40	-10.2	-24.7	128.4	124.4	193.6	5.4	4.8	2,499	1,819
	19:41	-9.8	-26.3	128.8	124.8	195.6	5.4	4.8	2,474	1,806
	19:42	-10.0	-20.8	129.1	125.3	197.9	5.5	4.8	2,461	1,803
	19:43	-11.7	-17.0	129.5	125.7	199.3	5.4	4.8	2,468	1,812
	19:44	-7.1	-28.0	129.7	126.1	201.1	5.5	4.8	2,477	1,823
	19:45	-9.3	-19.4	130.0	126.3	202.8	5.5	4.9	2,471	1,824

APCS -C2 Run 2 Operating Data	6/27/2012	TTU-3 Pressure Pa	TTU-4 Pressure Pa	TTU-3 Temp °F	TTU-4 Temp °F	Catridge Filter Exit Temp °F	Catridge Filter DP mBar	HEPA Filter DP mBar	Stack Flow Nm3/h	Stack Flow acfm
	19:46	-9.0	-16.7	130.4	126.5	205.4	5.5	4.9	2,483	1,840
	19:47	-8.5	-25.7	130.7	126.9	205.5	5.5	4.9	2,495	1,849
	19:48	-8.6	-24.8	131.1	126.6	206.7	5.5	4.9	2,481	1,842
	19:49	-8.8	-27.4	131.5	126.1	205.5	5.4	4.9	2,482	1,839
	19:50	-8.6	-22.6	131.9	125.8	204.6	5.5	4.9	2,447	1,811
	19:51	-11.1	-19.1	132.3	126.0	205.2	5.5	4.9	2,482	1,839
Sampling Start	19:52	-12.0	-23.8	132.6	126.6	207.3	5.6	4.9	2,480	1,843
	19:53	-10.9	-23.4	132.9	127.0	209.3	5.6	4.9	2,485	1,852
	19:54	-10.2	-21.1	133.2	127.5	211.1	5.6	4.9	2,505	1,872
	19:55	-11.2	-21.3	133.4	127.8	211.7	5.6	4.9	2,501	1,871
	19:56	-10.4	-26.0	133.7	128.3	213.3	5.6	4.9	2,482	1,861
	19:57	-0.3	-5.5	133.9	128.4	215.0	5.6	5.0	2,487	1,869
	19:58	-8.1	-18.5	134.3	128.8	216.8	5.7	4.9	2,483	1,872
	19:59	-8.5	-19.9	134.4	129.1	218.0	5.6	4.9	2,489	1,879
	20:00	-9.0	-19.1	134.7	129.4	219.2	5.7	4.9	2,472	1,870
	20:01	-9.1	-20.5	134.9	129.8	220.4	5.6	5.0	2,469	1,871
	20:02	-10.4	-27.2	135.2	130.1	221.1	5.7	5.0	2,468	1,872
	20:03	-9.0	-23.2	135.3	130.3	221.8	5.7	5.0	2,471	1,877
	20:04	-11.6	-16.5	135.5	130.5	222.7	5.7	5.0	2,461	1,871
	20:05	-9.1	-24.5	135.6	130.5	223.1	5.6	4.9	2,454	1,867
	20:06	-12.2	-25.8	135.8	130.8	223.2	5.7	4.9	2,474	1,882
	20:07	-10.1	-18.1	136.0	131.0	224.0	5.7	5.0	2,500	1,905
	20:08	-8.2	-21.8	136.2	131.2	224.4	5.7	5.0	2,508	1,912
	20:09	-9.2	-24.0	136.3	131.3	224.8	5.6	5.0	2,478	1,890
	20:10	-8.8	-23.0	136.4	131.5	224.8	5.7	4.9	2,461	1,876
	20:11	-11.9	-19.6	136.7	131.7	225.7	5.7	5.0	2,486	1,898
	20:12	-8.9	-24.8	136.7	131.8	226.1	5.7	5.0	2,477	1,893
	20:13	-11.5	-24.6	136.9	132.0	227.4	5.7	5.0	2,469	1,890
	20:14	-10.2	-24.4	137.1	132.1	227.5	5.8	5.0	2,466	1,888
	20:15	-11.2	-24.7	137.2	132.2	228.2	5.7	5.0	2,491	1,909
	20:16	-12.4	-29.0	137.3	132.4	228.4	5.7	4.9	2,437	1,868
	20:17	-11.5	-26.6	137.5	132.4	229.5	5.7	5.0	2,498	1,918
	20:18	-12.8	-26.3	137.7	132.8	230.1	5.8	5.0	2,490	1,914
	20:19	-7.4	-25.2	137.9	133.0	230.6	5.8	5.0	2,509	1,930
	20:20	-8.6	-24.5	138.0	133.2	230.6	5.7	4.9	2,447	1,882
	20:21	-9.5	-29.1	138.1	133.3	231.1	5.7	5.0	2,454	1,889
	20:22	-11.3	-23.4	138.3	133.7	231.4	5.8	5.0	2,460	1,894
	20:23	-9.5	-28.4	138.4	133.8	231.8	5.8	5.0	2,499	1,926
	20:24	-10.9	-26.2	138.4	133.7	231.6	5.8	5.0	2,482	1,911
	20:25	-12.3	-26.1	137.9	134.0	230.8	5.6	5.0	2,485	1,912
	20:26	-9.9	-18.2	137.5	134.1	228.3	5.7	5.0	2,467	1,891
	20:27	-10.7	-23.6	137.5	133.8	228.1	5.7	5.0	2,496	1,912
	20:28	-8.5	-24.5	137.3	134.0	227.8	5.7	5.0	2,495	1,911
	20:29	-11.1	-26.4	137.4	134.2	228.6	5.7	4.9	2,486	1,906
	20:30	-9.3	-22.8	137.6	134.3	228.0	5.7	4.9	2,458	1,883
	20:31	-8.6	-18.9	137.6	134.3	229.5	5.8	5.0	2,483	1,907
	20:32	-10.5	-18.8	137.8	134.3	230.5	5.8	5.0	2,483	1,909
	20:33	-10.0	-24.3	138.0	134.4	231.9	5.8	5.0	2,486	1,916
	20:34	-10.3	-17.8	138.2	134.6	231.2	5.8	5.0	2,464	1,897
	20:35	-11.2	-14.6	138.3	134.6	232.5	5.8	5.0	2,498	1,927
	20:36	-9.3	-23.6	138.5	134.5	232.6	5.8	5.0	2,455	1,893
	20:37	-9.8	-24.9	138.7	134.8	233.3	5.8	5.0	2,494	1,926
	20:38	-9.7	-23.1	138.9	135.0	233.7	5.8	5.0	2,483	1,918
	20:39	-8.8	-23.1	139.1	135.2	234.2	5.8	5.0	2,503	1,935
	20:40	-9.9	-21.9	139.2	135.4	233.8	5.8	5.0	2,481	1,917
	20:41	-10.6	-25.9	139.4	135.5	234.9	5.8	5.0	2,481	1,920
	20:42	-11.4	-24.7	139.5	135.6	233.6	5.8	5.0	2,472	1,909

APCS -C2 Run 2 Operating Data	6/27/2012	TTU-3 Pressure Pa	TTU-4 Pressure Pa	TTU-3 Temp °F	TTU-4 Temp °F	Catridge Filter Exit Temp °F	Catridge Filter DP mBar	HEPA Filter DP mBar	Stack Flow Nm3/h	Stack Flow acfm
	20:43	-10.9	-27.4	139.5	135.7	234.3	5.8	5.0	2,467	1,908
	20:44	-11.0	-25.1	139.7	135.5	234.8	5.8	5.0	2,482	1,920
	20:45	-10.7	-22.3	139.8	135.8	235.0	5.8	5.0	2,476	1,916
	20:46	-10.2	-22.3	139.9	135.9	235.2	5.8	5.0	2,450	1,897
	20:47	-10.9	-28.8	139.9	136.0	235.6	5.8	5.0	2,479	1,921
	20:48	-9.8	-28.6	140.1	136.2	235.5	5.8	5.0	2,513	1,946
	20:49	-9.7	-26.5	140.2	136.1	236.4	5.8	5.0	2,485	1,927
	20:50	-9.8	-22.2	140.4	136.2	236.1	5.8	5.0	2,474	1,918
	20:51	-10.2	-22.5	140.5	136.2	236.3	5.8	5.0	2,483	1,926
	20:52	-9.8	-22.7	140.5	136.2	236.0	5.8	5.0	2,473	1,917
	20:53	-10.3	-22.5	140.6	136.4	236.6	5.8	5.0	2,480	1,924
	20:54	-10.4	-24.4	140.7	136.6	235.5	5.8	5.0	2,463	1,907
	20:55	-8.2	-25.9	140.7	136.6	236.2	5.8	5.0	2,487	1,928
	20:56	-11.8	-32.8	140.7	136.8	236.4	5.9	5.0	2,526	1,959
	20:57	-11.8	-29.0	140.6	136.9	237.4	5.9	5.0	2,509	1,949
	20:58	-13.2	-28.0	140.6	137.2	237.8	5.8	5.0	2,497	1,940
	20:59	-10.7	-21.4	140.5	137.3	239.3	5.8	5.0	2,481	1,932
	21:00	-9.0	-29.8	140.5	137.3	239.1	5.7	4.9	2,480	1,930
	21:01	-9.0	-3.7	140.6	137.2	239.2	5.8	5.0	2,474	1,927
	21:02	-10.4	-22.2	140.6	137.3	238.6	5.8	5.0	2,482	1,931
	21:03	-8.9	-21.5	140.6	137.4	238.4	5.8	5.0	2,475	1,925
	21:04	-9.9	-22.8	140.8	137.3	238.8	5.8	5.0	2,497	1,943
	21:05	-9.5	-19.0	140.8	137.5	238.9	5.8	5.0	2,495	1,942
	21:06	-12.8	-27.8	141.0	137.5	238.9	5.8	4.9	2,454	1,910
	21:07	-10.0	-27.7	140.9	137.4	238.4	5.8	4.9	2,442	1,899
	21:08	-9.4	-17.4	141.1	137.5	238.7	5.8	4.9	2,467	1,919
	21:09	-9.3	-22.1	141.1	137.6	239.0	5.8	5.0	2,490	1,939
	21:10	-11.3	-30.6	141.0	137.6	238.5	5.7	4.9	2,484	1,932
	21:11	-9.5	-20.9	141.2	137.8	238.9	5.8	5.0	2,498	1,944
	21:12	-11.0	-21.6	141.0	137.9	238.7	5.7	4.9	2,479	1,929
	21:13	-10.6	-19.4	140.7	137.9	238.2	5.7	4.9	2,476	1,925
	21:14	-10.6	-22.5	140.4	138.1	237.2	5.6	4.9	2,429	1,886
	21:15	-12.2	-20.4	140.0	138.2	236.1	5.6	4.9	2,485	1,926
	21:16	-12.6	-26.2	139.5	138.2	233.9	5.5	4.9	2,475	1,913
	21:17	-12.3	-24.5	139.2	138.3	230.4	5.5	4.9	2,520	1,937
	21:18	-12.4	-19.5	138.8	138.4	226.7	5.3	4.9	2,492	1,905
	21:19	-10.7	-26.9	138.3	138.2	223.6	5.4	4.8	2,463	1,875
	21:20	-11.0	-24.7	137.9	138.2	223.1	5.5	4.8	2,451	1,864
	21:21	-9.0	-23.9	137.8	138.4	224.9	5.6	4.8	2,444	1,864
	21:22	-9.6	-21.1	138.0	138.5	227.0	5.6	4.8	2,462	1,884
	21:23	-10.4	-24.8	138.3	138.5	228.3	5.6	4.8	2,482	1,903
	21:24	-10.8	-25.5	138.5	138.5	229.8	5.6	4.8	2,467	1,895
	21:25	-11.5	-14.6	138.7	138.5	230.9	5.7	4.9	2,499	1,923
	21:26	-9.8	-20.3	138.9	138.6	232.2	5.6	4.9	2,467	1,902
	21:27	-10.2	-19.2	139.1	138.5	232.2	5.7	4.9	2,474	1,907
	21:28	-7.8	-25.9	139.3	138.5	232.9	5.7	4.9	2,482	1,915
	21:29	-8.8	-21.9	139.5	138.6	232.9	5.7	4.9	2,482	1,916
	21:30	-10.3	-23.4	139.7	138.4	233.5	5.6	4.9	2,462	1,901
	21:31	-13.2	-24.8	140.0	138.4	233.6	5.7	4.9	2,488	1,922
	21:32	-8.8	-26.5	140.2	138.4	234.5	5.7	4.9	2,494	1,929
	21:33	-9.4	-21.6	140.3	138.4	234.7	5.7	4.9	2,498	1,932
	21:34	-10.8	-19.9	140.5	138.5	235.0	5.6	4.8	2,455	1,900
	21:35	-11.1	-21.9	140.7	138.7	236.0	5.7	4.9	2,466	1,912
	21:36	-11.3	-27.5	140.8	138.8	236.7	5.7	4.9	2,508	1,946
	21:37	-10.2	-19.3	140.9	139.0	236.6	5.7	4.9	2,476	1,921
	21:38	-10.4	-26.2	141.1	139.0	237.0	5.7	4.9	2,490	1,933
	21:39	-9.0	-26.1	141.3	139.0	236.3	5.8	4.9	2,506	1,943

APCS -C2 Run 2 Operating Data	6/27/2012	TTU-3 Pressure Pa	TTU-4 Pressure Pa	TTU-3 Temp °F	TTU-4 Temp °F	Catridge Filter Exit Temp °F	Catridge Filter DP mBar	HEPA Filter DP mBar	Stack Flow Nm3/h	Stack Flow acfm
	21:40	-10.6	-23.3	141.5	139.2	237.2	5.7	4.9	2,472	1,919
	21:41	-8.7	-24.6	141.7	139.4	236.6	5.7	4.9	2,481	1,925
	21:42	-11.4	-18.4	141.8	139.3	237.0	5.7	4.9	2,440	1,894
	21:43	-8.6	-20.6	141.9	139.2	237.0	5.8	4.9	2,494	1,936
	21:44	-12.0	-20.8	142.1	139.3	237.8	5.7	4.9	2,445	1,900
	21:45	-10.1	-26.8	142.2	139.3	237.9	5.8	4.9	2,464	1,915
	21:46	-9.8	-23.6	142.3	139.4	238.2	5.7	4.9	2,437	1,895
	21:47	-11.6	-26.6	142.4	138.6	237.6	5.6	4.9	2,461	1,912
	21:48	-12.0	-27.8	142.5	137.4	235.5	5.6	4.9	2,450	1,897
	21:49	-13.4	-29.0	142.6	137.2	234.2	5.7	4.8	2,452	1,896
	21:50	-11.3	-22.6	142.6	137.5	234.7	5.7	4.9	2,473	1,913
	21:51	-9.1	-27.5	142.7	137.9	235.1	5.7	4.8	2,445	1,893
	21:52	-11.2	-17.7	142.7	138.1	235.9	5.8	4.9	2,481	1,923
	21:53	-9.8	-23.1	142.9	138.3	235.8	5.7	4.8	2,456	1,903
	21:54	-11.1	-23.1	143.0	138.5	236.4	5.7	4.9	2,477	1,921
	21:55	-10.6	-25.7	143.1	138.5	236.4	5.7	4.8	2,430	1,885
	21:56	-11.2	-26.3	143.2	138.7	236.6	5.7	4.8	2,456	1,905
	21:57	-9.2	-24.7	143.3	138.7	237.0	5.8	4.8	2,467	1,914
	21:58	-12.1	-23.4	143.4	139.0	237.3	5.8	4.9	2,527	1,962
	21:59	-11.1	-26.2	143.5	139.2	237.5	5.8	4.9	2,486	1,931
	22:00	-9.6	-24.9	143.5	139.3	237.9	5.8	4.9	2,517	1,956
	22:01	-10.2	-26.0	143.7	139.3	237.9	5.8	4.9	2,481	1,928
	22:02	-8.2	-25.2	143.7	139.3	238.4	5.8	4.9	2,478	1,927
	22:03	-10.2	-26.2	143.8	139.5	238.5	5.8	4.9	2,465	1,917
	22:04	-11.9	-16.4	143.3	139.2	238.3	5.6	4.9	2,503	1,947
	22:05	-16.5	-29.9	142.7	138.5	234.9	5.5	4.9	2,501	1,936
	22:06	-4.5	-10.3	142.2	138.7	230.6	5.4	4.8	2,493	1,917
	22:07	-10.9	-19.0	141.6	139.0	227.0	5.4	4.8	2,482	1,899
	22:08	-12.8	-15.7	141.0	139.2	224.4	5.3	4.8	2,477	1,888
	22:09	-11.8	-21.9	140.6	139.2	221.8	5.3	4.7	2,468	1,873
	22:10	-8.7	-27.6	140.2	139.6	219.8	5.4	4.7	2,458	1,861
	22:11	-11.7	-26.6	140.0	139.7	219.7	5.5	4.7	2,497	1,890
	22:12	-10.1	-25.1	140.0	139.7	221.3	5.4	4.7	2,470	1,874
	22:13	-10.6	-21.3	140.2	139.8	223.0	5.5	4.7	2,477	1,884
	22:14	-12.0	-22.2	140.2	139.8	224.7	5.5	4.7	2,488	1,897
	22:15	-9.8	-26.7	139.7	139.8	224.9	5.5	4.7	2,467	1,881
	22:16	-8.7	-22.6	139.5	139.8	224.5	5.4	4.7	2,460	1,875
	22:17	-11.6	-27.2	139.5	139.7	224.2	5.5	4.7	2,470	1,882
	22:18	-11.3	-29.1	139.7	139.4	225.6	5.6	4.7	2,474	1,889
	22:19	-9.6	-24.9	139.8	139.5	227.0	5.5	4.7	2,439	1,866
	22:20	-9.5	-26.7	140.1	139.7	228.0	5.6	4.8	2,477	1,898
	22:21	-11.2	-23.8	140.3	139.9	228.5	5.6	4.7	2,477	1,899
	22:22	-9.5	-25.3	140.5	140.1	229.7	5.6	4.7	2,468	1,895
	22:23	-11.2	-28.6	140.7	140.1	229.9	5.6	4.7	2,487	1,911
	22:24	-10.7	-25.9	140.9	140.3	230.4	5.6	4.8	2,461	1,892
	22:25	-11.7	-24.6	141.1	140.3	230.6	5.7	4.7	2,452	1,886
	22:26	-10.1	-20.5	141.4	140.3	231.8	5.6	4.7	2,455	1,892
	22:27	-10.5	-25.3	141.5	140.1	231.9	5.7	4.8	2,472	1,905
	22:28	-10.7	-20.1	141.7	140.4	232.4	5.6	4.8	2,475	1,909
	22:29	-12.7	-27.1	141.9	140.5	233.0	5.7	4.8	2,498	1,928
	22:30	-11.5	-29.4	142.1	140.5	233.1	5.7	4.8	2,484	1,917
	22:31	-10.4	-23.6	142.2	140.5	233.0	5.7	4.8	2,500	1,929
	22:32	-10.6	-27.0	142.3	140.4	233.9	5.7	4.8	2,468	1,907
	22:33	-8.9	-25.6	142.5	140.3	233.9	5.7	4.8	2,463	1,903
	22:34	-9.8	-23.3	142.6	140.3	234.1	5.6	4.7	2,464	1,904
	22:35	-10.1	-25.9	142.7	140.3	234.5	5.7	4.8	2,486	1,923
	22:36	-11.8	-27.7	142.9	140.3	235.7	5.7	4.8	2,486	1,926

APCS -C2 Run 2 Operating Data	6/27/2012	TTU-3 Pressure Pa	TTU-4 Pressure Pa	TTU-3 Temp °F	TTU-4 Temp °F	Catridge Filter Exit Temp °F	Catridge Filter DP mBar	HEPA Filter DP mBar	Stack Flow Nm3/h	Stack Flow acfm
	22:37	-12.1	-26.8	143.0	140.5	235.3	5.7	4.8	2,479	1,919
	22:38	-9.5	-27.7	143.1	140.7	236.0	5.7	4.8	2,485	1,926
	22:39	-10.9	-27.7	143.2	140.5	235.2	5.6	4.8	2,486	1,924
	22:40	-11.0	-31.3	143.3	139.7	234.4	5.5	4.8	2,487	1,923
	22:41	-7.9	-27.9	143.5	138.8	230.8	5.4	4.7	2,445	1,881
	22:42	-10.7	-28.9	143.6	137.6	227.0	5.3	4.7	2,493	1,907
	22:43	-11.3	-18.8	143.5	136.5	224.3	5.4	4.7	2,502	1,907
	22:44	-11.1	-16.2	143.7	136.4	224.4	5.4	4.7	2,454	1,870
	22:45	-12.0	-23.5	143.7	136.7	225.2	5.5	4.7	2,448	1,868
	22:46	-13.2	-20.4	143.8	137.1	227.0	5.6	4.7	2,466	1,886
	22:47	-11.2	-28.1	143.9	137.6	227.9	5.6	4.7	2,472	1,893
	22:48	-10.9	-24.0	144.0	138.0	229.5	5.6	4.7	2,446	1,878
	22:49	-12.3	-19.7	144.1	138.2	229.7	5.6	4.7	2,475	1,901
	22:50	-12.1	-28.2	144.2	138.2	230.8	5.6	4.7	2,462	1,894
	22:51	-10.4	-21.2	144.3	138.5	231.1	5.6	4.7	2,457	1,891
	22:52	-10.8	-25.8	144.4	138.5	232.1	5.6	4.7	2,460	1,896
	22:53	-11.8	-20.3	144.5	138.7	232.1	5.6	4.7	2,483	1,914
	22:54	-10.6	-24.6	144.6	139.0	233.1	5.6	4.7	2,481	1,915
	22:55	-8.8	-23.0	144.7	139.0	232.8	5.6	4.7	2,463	1,900
	22:56	-9.8	-24.9	144.8	139.1	232.8	5.6	4.7	2,493	1,923
Run Stop	22:57	-8.3	-20.4	144.9	139.3	233.2	5.6	4.7	2,489	1,921
	22:58	-10.9	-25.9	144.9	139.4	233.2	5.6	4.7	2,485	1,919
	22:59	-13.6	-22.3	145.0	139.6	234.0	5.6	4.7	2,488	1,923
	23:00	-11.6	-26.9	144.8	139.7	233.3	5.4	4.7	2,463	1,902

APCS -C2 Run 3 Operating Data	6/28/2012	TTU-3 Pressure Pa	TTU-4 Pressure Pa	TTU-3 Temp °F	TTU-4 Temp °F	Catridge Filter Exit Temp °F	Catridge Filter DP mBar	HEPA Filter DP mBar	Stack Flow Nm3/h	Stack Flow acfm
	Average	-11.1	-24.2	139.1	136.8	229.2	5.4	4.8	2,476	1,901
	Min	-15.4	-34.2	124.6	125.8	206.5	5.0	4.5	2,412	1,843
	Max	-7.5	-14.9	147.9	144.0	239.6	5.7	5.0	2,536	1,949
	Time									
	7:30	-6.0	-21.3	96.1	111.4	105.8	3.6	3.6	2,494	1,572
	7:31	-6.6	-19.7	95.7	111.5	105.7	3.6	3.6	2,468	1,555
	7:32	-6.8	-20.8	95.2	111.4	105.6	3.6	3.6	2,483	1,564
	7:33	-6.9	-22.8	94.6	111.2	105.4	3.6	3.6	2,446	1,540
	7:34	-5.9	-21.3	94.2	111.2	105.3	3.6	3.6	2,489	1,567
	7:35	-6.4	-21.0	93.6	111.1	105.1	3.6	3.6	2,461	1,549
	7:36	-6.9	-20.8	93.3	111.0	105.1	3.6	3.6	2,494	1,570
	7:37	-6.0	-20.7	93.1	111.1	105.0	3.6	3.7	2,496	1,570
	7:38	-7.0	-22.9	92.8	110.9	104.9	3.6	3.7	2,493	1,568
	7:39	-6.0	-21.9	92.5	110.8	104.8	3.6	3.7	2,492	1,568
	7:40	-8.0	-22.9	92.3	110.9	104.7	3.6	3.7	2,531	1,592
	7:41	-6.5	-21.9	92.2	110.7	104.6	3.6	3.6	2,495	1,569
	7:42	-6.3	-22.3	92.0	110.6	104.5	3.6	3.7	2,515	1,581
	7:43	-6.8	-21.9	91.9	110.6	104.5	3.6	3.6	2,519	1,583
	7:44	-6.5	-21.2	91.8	110.5	104.5	3.6	3.6	2,468	1,551
	7:45	-6.9	-21.8	91.7	110.4	104.4	3.6	3.6	2,477	1,557
	7:46	-7.7	-24.2	91.5	110.3	104.4	3.6	3.6	2,478	1,557
	7:47	-7.2	-21.5	91.4	110.3	104.3	3.6	3.6	2,463	1,547
	7:48	-6.6	-22.1	91.3	110.3	104.2	3.6	3.6	2,436	1,531
	7:49	-7.7	-22.8	91.1	110.2	104.1	3.6	3.6	2,515	1,580
	7:50	-9.6	-20.5	91.3	110.1	104.1	3.6	3.6	2,478	1,556
	7:51	-14.3	-29.5	92.4	110.2	104.1	3.6	3.6	2,488	1,563
	7:52	1.4	-4.2	93.9	110.4	104.4	3.6	3.7	2,500	1,571
	7:53	-11.2	-21.3	95.3	110.2	104.5	3.6	3.6	2,459	1,546
	7:54	-11.1	-17.8	96.7	102.3	104.7	3.6	3.6	2,490	1,566
	7:55	-11.4	-19.9	97.8	97.1	104.7	3.6	3.6	2,481	1,560
	7:56	-12.0	-19.1	98.8	93.2	104.4	3.6	3.6	2,510	1,578
	7:57	-11.8	-24.8	99.8	93.7	104.2	3.6	3.6	2,491	1,565
	7:58	-11.4	-22.8	100.6	96.8	104.0	3.6	3.6	2,462	1,547
	7:59	-12.0	-23.7	101.4	99.8	103.9	3.6	3.6	2,477	1,556
	8:00	-11.6	-23.7	102.1	102.2	104.1	3.6	3.7	2,494	1,567
	8:01	-11.9	-26.1	102.6	104.0	104.2	3.6	3.7	2,493	1,566
	8:02	-11.3	-23.2	103.2	105.5	104.4	3.6	3.6	2,468	1,551
	8:03	-11.0	-21.2	103.7	106.5	104.5	3.6	3.6	2,483	1,561
	8:04	-11.3	-21.7	104.2	107.2	104.7	3.6	3.7	2,466	1,551
	8:05	-10.6	-20.3	104.6	107.5	104.7	3.6	3.6	2,476	1,557
	8:06	-11.5	-19.5	105.0	108.0	104.8	3.6	3.7	2,501	1,573
	8:07	-10.9	-22.2	105.4	108.2	104.8	3.6	3.7	2,507	1,577
	8:08	-12.2	-23.6	105.7	108.5	105.0	3.6	3.7	2,485	1,563
	8:09	-11.9	-22.8	106.0	108.8	105.1	3.6	3.6	2,483	1,562
Feed Start	8:10	-11.3	-22.5	106.3	109.0	105.1	3.6	3.7	2,517	1,584
	8:11	-10.6	-22.3	106.5	109.1	105.1	3.6	3.7	2,473	1,556
	8:12	-10.1	-21.6	106.8	109.3	105.2	3.6	3.7	2,496	1,571
	8:13	-9.6	-24.2	107.0	109.4	105.3	3.6	3.7	2,483	1,564
	8:14	-8.3	-23.0	107.3	110.0	107.5	3.9	3.7	2,466	1,558
	8:15	-7.9	-19.6	107.9	111.0	112.8	4.1	3.7	2,501	1,595
	8:16	-9.8	-23.0	108.6	112.2	121.4	4.2	3.8	2,480	1,606
	8:17	-6.3	-19.9	109.3	113.5	129.4	4.3	3.8	2,493	1,637
	8:18	-8.9	-25.5	110.1	114.4	137.8	4.4	3.9	2,482	1,652
	8:19	-11.1	-21.1	110.8	115.3	143.5	4.4	3.9	2,461	1,654
	8:20	-8.9	-18.9	111.5	115.6	149.0	4.4	4.0	2,501	1,696
	8:21	-11.4	-25.8	112.2	116.1	151.5	4.4	4.0	2,477	1,687
	8:22	-9.3	-21.6	112.8	117.0	155.6	4.5	4.0	2,449	1,679

APCS -C2 Run 3 Operating Data	6/28/2012	TTU-3 Pressure Pa	TTU-4 Pressure Pa	TTU-3 Temp °F	TTU-4 Temp °F	Catridge Filter Exit Temp °F	Catridge Filter DP mBar	HEPA Filter DP mBar	Stack Flow Nm3/h	Stack Flow acfm
	8:23	-8.8	-19.4	113.5	117.6	158.3	4.5	4.1	2,475	1,704
	8:24	-9.3	-22.1	114.1	118.1	162.3	4.6	4.2	2,516	1,743
	8:25	-11.6	-23.3	114.7	118.5	165.2	4.6	4.2	2,501	1,741
	8:26	-11.7	-24.7	115.4	118.9	168.9	4.7	4.2	2,479	1,736
	8:27	-10.2	-25.3	115.9	119.4	170.9	4.7	4.2	2,479	1,742
	8:28	-9.4	-23.3	116.5	119.6	174.1	4.7	4.2	2,465	1,740
	8:29	-10.2	-26.6	117.0	119.9	176.4	4.7	4.3	2,468	1,749
	8:30	-10.3	-26.8	117.5	120.4	178.6	4.7	4.3	2,461	1,750
	8:31	-9.6	-25.3	118.0	120.7	180.0	4.7	4.3	2,497	1,780
	8:32	-12.1	-20.9	118.5	121.0	182.1	4.8	4.3	2,456	1,756
	8:33	-12.3	-25.7	119.0	121.3	183.1	4.8	4.3	2,491	1,784
	8:34	-11.8	-27.7	119.3	121.7	185.4	4.8	4.3	2,493	1,792
	8:35	-10.2	-20.5	119.5	122.0	185.7	4.7	4.3	2,484	1,786
	8:36	-9.9	-22.9	119.8	122.3	187.8	4.8	4.3	2,468	1,781
	8:37	-9.3	-23.5	120.2	122.6	188.6	4.9	4.4	2,492	1,800
	8:38	-10.2	-20.4	120.6	122.6	189.9	4.9	4.4	2,481	1,796
	8:39	-9.6	-27.1	121.0	123.0	191.4	4.9	4.4	2,474	1,795
	8:40	-10.7	-21.2	121.3	123.4	193.9	5.0	4.4	2,472	1,800
	8:41	-10.8	-24.5	121.7	123.7	195.9	4.9	4.4	2,476	1,808
	8:42	-9.9	-26.7	122.1	123.9	197.6	5.0	4.4	2,480	1,816
	8:43	-11.7	-27.6	122.4	124.1	198.6	5.0	4.5	2,498	1,832
	8:44	-11.8	-22.1	122.7	124.4	200.7	5.0	4.5	2,486	1,829
	8:45	-8.9	-22.2	123.1	124.5	201.6	5.0	4.5	2,498	1,841
	8:46	-10.3	-22.3	123.3	124.6	202.6	5.0	4.5	2,477	1,828
	8:47	-13.1	-24.1	123.8	125.0	203.6	5.0	4.5	2,502	1,849
	8:48	-12.7	-22.9	124.1	125.3	204.0	5.0	4.5	2,502	1,850
	8:49	-10.5	-21.3	124.4	125.7	205.1	5.1	4.5	2,478	1,836
Sampling Start	8:50	-13.9	-21.4	124.6	125.8	206.5	5.1	4.5	2,500	1,855
	8:51	-11.0	-24.1	124.9	126.2	207.6	5.1	4.5	2,515	1,870
	8:52	-10.4	-26.0	125.2	126.3	208.0	5.1	4.5	2,516	1,872
	8:53	-10.1	-25.0	125.5	126.5	209.0	5.0	4.5	2,485	1,852
	8:54	-9.4	-25.8	125.9	126.5	209.8	5.1	4.6	2,494	1,860
	8:55	-11.3	-24.2	126.1	126.5	210.7	5.1	4.6	2,525	1,886
	8:56	-11.0	-25.0	126.4	126.7	210.8	5.1	4.5	2,481	1,853
	8:57	-11.2	-22.4	126.6	126.8	211.5	5.1	4.5	2,488	1,860
	8:58	-13.0	-26.2	127.0	127.0	211.9	5.2	4.6	2,513	1,881
	8:59	-12.1	-25.1	127.2	127.2	213.3	5.1	4.6	2,499	1,874
	9:00	-10.5	-22.4	127.4	127.3	214.8	5.2	4.6	2,475	1,860
	9:01	-10.4	-28.4	127.6	127.5	215.1	5.2	4.6	2,492	1,873
	9:02	-10.4	-24.8	127.9	127.7	215.1	5.2	4.6	2,478	1,863
	9:03	-11.0	-26.7	128.2	128.0	215.6	5.2	4.6	2,477	1,864
	9:04	-11.9	-24.5	128.3	128.1	216.4	5.2	4.5	2,447	1,843
	9:05	-12.3	-27.6	128.6	128.3	217.4	5.2	4.6	2,485	1,875
	9:06	-11.1	-26.5	128.8	128.4	217.8	5.2	4.6	2,462	1,858
	9:07	-10.9	-24.4	129.1	128.3	217.1	5.2	4.6	2,490	1,878
	9:08	-13.0	-30.8	129.3	128.6	216.4	5.2	4.6	2,482	1,869
	9:09	-11.8	-24.1	129.7	128.7	216.9	5.2	4.6	2,470	1,862
	9:10	-8.3	-27.6	129.9	129.1	217.6	5.2	4.6	2,488	1,878
	9:11	-11.4	-26.9	130.1	129.2	218.7	5.2	4.6	2,503	1,892
	9:12	-12.1	-24.0	130.3	129.3	218.8	5.2	4.6	2,478	1,873
	9:13	-11.9	-21.4	130.5	129.5	219.3	5.2	4.6	2,438	1,844
	9:14	-12.8	-25.6	130.7	129.6	219.9	5.3	4.6	2,513	1,903
	9:15	-12.1	-19.3	130.9	129.9	220.9	5.2	4.6	2,450	1,858
	9:16	-11.6	-21.2	131.0	130.0	220.4	5.2	4.6	2,465	1,868
	9:17	-12.2	-25.9	131.2	130.2	221.1	5.2	4.6	2,481	1,882
	9:18	-10.6	-19.8	131.4	130.3	221.6	5.3	4.7	2,483	1,885
	9:19	-11.4	-25.0	131.7	130.2	222.7	5.2	4.6	2,452	1,865

APCS -C2 Run 3 Operating Data	6/28/2012	TTU-3 Pressure Pa	TTU-4 Pressure Pa	TTU-3 Temp °F	TTU-4 Temp °F	Catridge Filter Exit Temp °F	Catridge Filter DP mBar	HEPA Filter DP mBar	Stack Flow Nm3/h	Stack Flow acfm
	9:20	-10.4	-21.7	131.9	130.4	222.0	5.3	4.6	2,482	1,885
	9:21	-11.0	-24.8	132.1	130.5	222.6	5.3	4.6	2,487	1,891
	9:22	-9.1	-24.9	132.3	130.6	222.4	5.3	4.7	2,485	1,889
	9:23	-11.2	-25.1	132.5	130.8	223.5	5.3	4.7	2,493	1,897
	9:24	-12.3	-21.3	132.7	131.0	223.6	5.3	4.7	2,488	1,894
	9:25	-9.6	-22.9	132.9	131.5	224.0	5.2	4.7	2,503	1,906
	9:26	-12.3	-18.7	133.1	131.7	224.3	5.3	4.7	2,467	1,880
	9:27	-7.8	-25.0	133.2	131.8	223.7	5.3	4.7	2,496	1,900
	9:28	-11.3	-24.0	133.3	131.9	222.8	5.2	4.7	2,468	1,877
	9:29	-11.2	-27.4	133.4	132.2	222.7	5.2	4.6	2,453	1,865
	9:30	-9.6	-21.0	133.5	132.2	224.1	5.3	4.7	2,488	1,896
	9:31	-9.9	-24.8	133.6	132.3	224.5	5.3	4.7	2,490	1,898
	9:32	-11.4	-25.7	133.8	132.4	223.4	5.3	4.7	2,481	1,888
	9:33	-10.8	-26.6	133.9	132.5	223.5	5.3	4.7	2,490	1,896
	9:34	-13.0	-25.1	134.0	132.7	224.5	5.4	4.7	2,514	1,916
	9:35	-11.6	-25.3	134.2	132.8	225.4	5.3	4.7	2,487	1,898
	9:36	-10.7	-22.3	134.3	132.9	225.3	5.3	4.7	2,481	1,893
	9:37	-10.9	-24.6	134.5	133.0	225.8	5.3	4.7	2,470	1,886
	9:38	-10.4	-22.2	134.6	133.1	224.7	5.3	4.7	2,476	1,888
	9:39	-8.6	-26.5	134.9	133.1	224.5	5.3	4.7	2,485	1,895
	9:40	-10.0	-23.6	135.0	133.2	224.8	5.4	4.7	2,484	1,894
	9:41	-12.0	-24.7	135.1	133.2	225.8	5.3	4.7	2,465	1,882
	9:42	-10.3	-22.6	135.3	133.3	225.9	5.3	4.7	2,431	1,857
	9:43	-10.7	-24.4	135.5	133.3	226.4	5.3	4.6	2,438	1,863
	9:44	-10.8	-30.0	135.6	133.6	226.3	5.3	4.7	2,432	1,859
	9:45	-10.3	-22.3	135.7	133.9	227.1	5.4	4.7	2,449	1,874
	9:46	-11.3	-24.9	135.8	133.9	227.4	5.4	4.7	2,478	1,897
	9:47	-11.5	-19.2	135.9	134.1	229.3	5.4	4.7	2,488	1,910
	9:48	-10.7	-25.3	136.0	134.2	229.0	5.4	4.7	2,435	1,868
	9:49	-11.2	-25.6	136.2	134.4	229.6	5.4	4.7	2,461	1,890
	9:50	-10.3	-21.2	136.3	134.3	228.6	5.4	4.7	2,479	1,901
	9:51	-10.9	-27.1	136.6	134.3	228.7	5.4	4.8	2,509	1,924
	9:52	-10.9	-27.9	136.6	134.4	228.9	5.4	4.8	2,490	1,911
	9:53	-13.2	-24.0	136.7	134.5	228.9	5.4	4.7	2,452	1,881
	9:54	-11.1	-26.4	136.9	134.7	229.2	5.4	4.8	2,477	1,901
	9:55	-12.6	-29.1	137.0	134.8	229.8	5.5	4.8	2,484	1,908
	9:56	-10.6	-28.5	137.1	134.9	230.2	5.4	4.8	2,477	1,904
	9:57	-11.3	-24.0	137.3	134.9	231.0	5.5	4.8	2,470	1,900
	9:58	-9.5	-27.1	137.4	134.9	230.9	5.4	4.8	2,458	1,892
	9:59	-10.3	-27.6	137.7	135.0	230.5	5.5	4.8	2,518	1,937
	10:00	-9.8	-28.4	137.8	135.2	231.2	5.4	4.8	2,485	1,913
	10:01	-10.7	-24.3	138.0	135.1	230.3	5.4	4.8	2,485	1,910
	10:02	-15.4	-19.1	138.1	135.1	230.0	5.4	4.8	2,483	1,908
	10:03	-9.6	-24.6	138.3	135.2	229.7	5.4	4.8	2,461	1,890
	10:04	-10.8	-20.1	138.4	135.5	229.5	5.4	4.8	2,493	1,914
	10:05	-7.6	-19.6	138.5	135.4	229.5	5.4	4.7	2,460	1,889
	10:06	-11.4	-21.8	138.6	135.8	229.9	5.4	4.7	2,453	1,884
	10:07	-10.3	-20.6	138.8	136.0	230.3	5.5	4.8	2,477	1,904
	10:08	-10.2	-24.6	138.8	136.2	230.7	5.4	4.8	2,490	1,915
	10:09	-11.3	-22.7	138.9	136.1	231.1	5.5	4.8	2,509	1,931
	10:10	-10.0	-29.5	139.1	136.1	231.3	5.4	4.8	2,493	1,919
	10:11	-10.5	-21.1	139.1	136.4	231.7	5.5	4.8	2,503	1,928
	10:12	-11.1	-27.3	139.2	136.6	231.9	5.5	4.8	2,489	1,918
	10:13	-12.6	-26.1	139.2	136.6	232.3	5.5	4.8	2,465	1,900
	10:14	-8.1	-21.4	139.5	136.6	232.2	5.4	4.8	2,491	1,920
	10:15	-13.6	-23.9	139.7	136.8	232.6	5.5	4.8	2,467	1,903
	10:16	-9.2	-20.5	139.8	136.9	232.1	5.4	4.8	2,471	1,905

APCS -C2 Run 3 Operating Data	6/28/2012	TTU-3 Pressure Pa	TTU-4 Pressure Pa	TTU-3 Temp °F	TTU-4 Temp °F	Catridge Filter Exit Temp °F	Catridge Filter DP mBar	HEPA Filter DP mBar	Stack Flow Nm3/h	Stack Flow acfm
	10:17	-11.9	-26.6	139.9	137.0	232.0	5.5	4.8	2,486	1,915
	10:18	-11.8	-22.6	140.0	137.1	231.9	5.5	4.8	2,475	1,907
	10:19	-12.4	-28.8	140.1	137.4	233.0	5.6	4.8	2,501	1,930
	10:20	-13.2	-27.6	140.1	137.6	233.6	5.5	4.8	2,453	1,895
	10:21	-10.8	-25.6	140.2	137.7	233.4	5.5	4.8	2,467	1,905
	10:22	-12.8	-26.8	140.3	137.7	233.6	5.5	4.8	2,474	1,911
	10:23	-10.2	-14.9	140.4	137.9	234.0	5.4	4.7	2,441	1,886
	10:24	-8.5	-17.2	140.6	138.5	233.1	5.4	4.8	2,464	1,902
	10:25	-11.2	-28.9	140.7	139.0	231.3	5.5	4.8	2,468	1,900
	10:26	-11.0	-28.5	140.8	138.9	230.4	5.4	4.8	2,496	1,919
	10:27	-13.6	-22.9	140.9	139.0	230.3	5.5	4.8	2,466	1,895
	10:28	-13.5	-24.5	140.8	138.7	230.7	5.5	4.8	2,476	1,905
	10:29	-9.3	-30.4	140.9	138.8	230.8	5.5	4.8	2,465	1,896
	10:30	-10.9	-22.8	141.1	138.8	231.4	5.5	4.8	2,502	1,926
	10:31	-11.5	-25.1	141.2	138.8	232.4	5.5	4.8	2,500	1,928
	10:32	-11.4	-25.7	141.3	138.7	232.2	5.5	4.8	2,474	1,907
	10:33	-10.6	-24.6	141.4	138.6	231.7	5.5	4.8	2,516	1,938
	10:34	-12.4	-26.9	141.6	138.8	232.1	5.5	4.8	2,452	1,890
	10:35	-9.0	-29.8	141.7	139.0	232.4	5.5	4.8	2,492	1,921
	10:36	-11.8	-27.6	141.7	139.2	233.2	5.5	4.8	2,483	1,917
	10:37	-10.1	-28.4	141.7	139.3	233.7	5.5	4.8	2,485	1,920
	10:38	-11.5	-22.6	141.8	139.3	233.8	5.5	4.8	2,480	1,916
	10:39	-8.6	-28.9	141.9	139.4	233.9	5.4	4.7	2,412	1,864
	10:40	-10.6	-24.7	142.1	139.6	233.8	5.5	4.8	2,461	1,901
	10:41	-9.6	-19.1	142.3	139.9	234.2	5.5	4.8	2,447	1,891
	10:42	-11.1	-20.3	142.4	139.9	234.3	5.4	4.8	2,471	1,911
	10:43	-9.9	-26.5	142.6	140.1	233.7	5.5	4.9	2,492	1,925
	10:44	-12.3	-22.0	142.6	140.3	233.7	5.5	4.8	2,488	1,922
	10:45	-10.6	-26.9	142.6	140.4	233.8	5.5	4.9	2,489	1,923
	10:46	-11.8	-22.1	142.6	140.3	234.2	5.5	4.9	2,476	1,914
	10:47	-10.7	-23.4	142.7	140.3	235.1	5.6	4.9	2,476	1,917
	10:48	-11.3	-28.1	142.8	140.3	234.7	5.5	4.9	2,471	1,912
	10:49	-11.4	-25.0	142.9	140.6	234.4	5.5	4.8	2,448	1,893
	10:50	-10.5	-30.9	143.2	140.8	233.3	5.4	4.8	2,487	1,920
	10:51	-10.7	-17.1	143.4	140.9	233.0	5.5	4.8	2,477	1,912
	10:52	-12.4	-21.2	143.5	140.9	232.7	5.5	4.8	2,453	1,892
	10:53	-12.0	-23.4	143.4	140.9	232.2	5.5	4.8	2,447	1,887
	10:54	-9.9	-26.1	143.5	141.2	232.4	5.5	4.9	2,504	1,931
	10:55	-10.0	-20.7	143.6	141.2	232.4	5.5	4.8	2,476	1,910
	10:56	-10.9	-23.8	143.7	141.2	233.1	5.5	4.8	2,461	1,900
	10:57	-10.0	-23.4	143.8	141.2	233.9	5.5	4.9	2,511	1,941
	10:58	-12.2	-23.7	144.0	140.6	233.0	5.4	4.8	2,490	1,922
	10:59	-9.5	-25.4	144.1	139.9	231.1	5.4	4.8	2,486	1,913
	11:00	-8.5	-22.1	144.1	140.0	230.2	5.5	4.9	2,536	1,949
	11:01	-9.5	-20.1	144.2	140.4	230.8	5.5	4.9	2,506	1,928
	11:02	-7.5	-24.6	144.3	140.7	230.2	5.5	4.9	2,486	1,911
	11:03	-10.1	-21.1	144.3	140.7	230.0	5.5	4.9	2,467	1,896
	11:04	-9.7	-23.7	144.4	140.7	230.7	5.5	4.8	2,457	1,890
	11:05	-11.8	-21.2	144.4	141.0	231.0	5.6	4.9	2,501	1,924
	11:06	-12.1	-22.9	144.4	141.1	231.9	5.5	4.8	2,466	1,900
	11:07	-10.1	-25.8	144.4	141.3	233.0	5.5	4.8	2,454	1,894
	11:08	-11.9	-28.3	144.5	141.5	233.7	5.6	4.9	2,486	1,920
	11:09	-14.7	-25.5	144.4	141.5	234.0	5.6	4.9	2,463	1,904
	11:10	-12.7	-23.2	144.5	141.3	234.3	5.6	4.9	2,478	1,916
	11:11	-9.6	-19.9	144.5	141.5	234.4	5.6	4.9	2,483	1,920
	11:12	-13.0	-21.9	144.7	141.6	234.7	5.5	4.9	2,485	1,923
	11:13	-14.8	-25.5	144.9	141.7	234.0	5.5	4.9	2,474	1,912

APCS -C2 Run 3 Operating Data	6/28/2012	TTU-3 Pressure Pa	TTU-4 Pressure Pa	TTU-3 Temp °F	TTU-4 Temp °F	Catridge Filter Exit Temp °F	Catridge Filter DP mBar	HEPA Filter DP mBar	Stack Flow Nm3/h	Stack Flow acfm
	11:14	-9.4	-23.8	145.0	141.5	233.6	5.6	4.9	2,484	1,919
	11:15	-11.7	-20.4	145.0	141.7	233.6	5.6	4.9	2,471	1,909
	11:16	-12.6	-24.5	145.0	141.6	234.4	5.6	4.9	2,496	1,930
	11:17	-10.0	-22.8	145.1	141.7	234.4	5.6	4.9	2,454	1,898
	11:18	-12.1	-27.5	145.1	141.6	234.7	5.5	4.9	2,454	1,899
	11:19	-12.7	-34.2	145.0	141.6	234.5	5.5	4.9	2,460	1,902
	11:20	-12.2	-23.9	144.9	141.8	234.4	5.6	4.9	2,490	1,925
	11:21	-11.8	-23.5	144.9	141.9	234.9	5.6	4.9	2,488	1,925
	11:22	-10.9	-21.7	145.0	142.0	235.3	5.6	4.9	2,444	1,892
	11:23	-15.2	-26.4	145.0	142.1	235.6	5.5	4.9	2,469	1,913
	11:24	-12.7	-28.8	145.2	142.2	235.8	5.6	4.9	2,468	1,912
	11:25	-12.5	-26.7	145.2	142.3	235.6	5.6	4.9	2,510	1,944
	11:26	-11.8	-23.9	145.4	142.3	235.5	5.6	4.9	2,467	1,911
	11:27	-12.3	-26.1	145.4	142.5	235.8	5.6	4.9	2,464	1,909
	11:28	-12.6	-27.0	145.4	142.6	236.9	5.6	4.9	2,475	1,921
	11:29	-10.0	-21.8	145.5	142.4	236.7	5.6	4.9	2,470	1,916
	11:30	-8.9	-23.0	145.7	142.4	236.4	5.6	4.9	2,483	1,926
	11:31	-10.7	-22.8	145.8	142.6	236.6	5.5	4.8	2,424	1,881
	11:32	-9.9	-27.9	145.9	142.7	236.9	5.6	4.9	2,451	1,902
	11:33	-10.3	-25.4	145.9	142.9	237.3	5.6	4.9	2,479	1,925
	11:34	-14.1	-23.5	146.1	142.9	237.8	5.6	5.0	2,474	1,923
	11:35	-10.1	-27.5	146.1	143.0	238.2	5.6	4.9	2,488	1,935
	11:36	-10.3	-23.1	146.0	142.8	238.6	5.5	4.9	2,440	1,898
	11:37	-11.5	-22.8	146.0	142.6	238.5	5.7	5.0	2,485	1,933
	11:38	-10.3	-25.2	146.1	142.8	238.4	5.7	5.0	2,481	1,930
	11:39	-11.2	-20.3	146.1	142.9	239.0	5.7	5.0	2,487	1,936
	11:40	-11.8	-19.6	146.3	143.1	238.6	5.7	5.0	2,479	1,929
	11:41	-10.0	-23.1	146.3	143.2	238.6	5.6	5.0	2,477	1,927
	11:42	-11.0	-23.6	146.4	143.2	239.1	5.7	5.0	2,483	1,933
	11:43	-9.4	-21.6	146.4	143.3	239.0	5.6	4.9	2,446	1,904
	11:44	-10.9	-16.4	146.5	143.6	239.6	5.6	5.0	2,430	1,893
	11:45	-12.1	-23.8	146.7	143.8	238.9	5.6	5.0	2,459	1,914
	11:46	-11.5	-27.7	146.9	143.8	238.9	5.6	5.0	2,469	1,922
	11:47	-11.9	-22.4	147.1	144.0	238.2	5.6	5.0	2,449	1,904
	11:48	-10.9	-18.6	147.2	143.6	237.2	5.5	5.0	2,475	1,921
	11:49	-10.3	-24.0	147.3	143.2	235.7	5.5	5.0	2,462	1,908
	11:50	-8.3	-25.5	147.5	142.9	234.9	5.6	5.0	2,469	1,910
	11:51	-10.6	-23.9	147.6	143.0	234.8	5.5	4.9	2,478	1,917
	11:52	-11.5	-20.3	147.7	143.1	235.3	5.6	5.0	2,449	1,896
	11:53	-9.2	-22.6	147.7	143.2	235.6	5.6	4.9	2,427	1,880
	11:54	-11.1	-21.1	147.8	143.4	236.8	5.6	5.0	2,468	1,915
Run Stop	11:55	-10.8	-21.1	147.9	143.8	236.6	5.6	5.0	2,462	1,910
	11:56	-12.9	-23.7	148.0	143.9	236.8	5.7	5.0	2,474	1,920
	11:57	-11.5	-27.3	148.0	144.0	236.9	5.6	5.0	2,461	1,910
	11:58	-11.0	-29.7	148.0	143.8	237.4	5.6	5.0	2,465	1,914
	11:59	-11.7	-29.5	148.2	143.0	235.4	5.5	5.0	2,475	1,917
	12:00	-11.2	-24.7	148.1	142.3	231.6	5.4	5.0	2,522	1,943

Field Data Sheets and Calculations

Static Kilns

Method 23/0010

Test Data Summary and Calculations
General Dynamics OTS Munition Services
Building 1 - SK Exhaust
Joplin, MO

Parameter	Run 1	Run 2	Run 3
Run Date	26Jun12	26Jun12	27Jun12
Start/Stop Time	1340-1658	1805-2105	0850-1150
Duration of Run, Minutes	180	180	180
Ave. Nozzle Diameter, inches	0.259	0.259	0.259
Pitot Calibration Factor, CF	0.99	0.99	0.99
Meter Gamma	0.990	0.99	0.99
Meter Delta H, inches of H2O	2.01	2.01	2.01
Stack Diameter, inches	6	6	6
Rectangular Width, inches		0	0
Rectangular Length, inches		0	0
Stack Area, sq.ft.	0.20	0.20	0.20
Barometric Pressure, inches of Hg	28.75	28.8	28.93
Static Pressure, inches of H2O	4.1	4.1	4.1
Dry Gas Meter Sample Volume, (VM)ft3			
Initial	298.106	458.148	615.695
Final	457.783	614.72	768.565
Difference	159.677	156.572	152.87
Ave. Stack Temperature, Ts(F)	124.0	125.0	116.0
Ave. Meter Temperature, Tm(F)	95.6	93.1	99.0
Ave. Run Delta H, inches of H2O	2.61	2.51	2.48
Ave. Square Root of Delta P	0.6055	0.6023	0.6151
Moisture Data			
Volume of water collected, mls	31	30	12
Silica Gel, grams	26.2	27.5	26.1
Total Collected, mls	57.2	57.5	38.1
ORSAT Data			
%O2	20.78	20.77	20.89
%CO2	0.25	0.00	0.00
%CO			

Calculations

Vw(std), scf =	2.692	2.707	1.793
Vm(std), dscf =	145.321	143.334	139.078
Bws=	0.018	0.019	0.013
Md=	28.87	28.83	28.84
Ms=	28.67	28.63	28.70
Vs, ft/sec =	42.9	42.7	43.1
Qs, acfm =	506	503	508
Qs(std), dscfm =	436	434	449
Isokinetic Sampling Rate, %	99.4	98.6	92.3

Where:

An = area of the nozzle
As = area of the stack
Vw(std) = volume of water vapor in gas, standard conditions = 0.04707*Vlc
Vm(std) = vol. of gas sampled, standard conditions = 17.647 x Vm x gamma x [Pb + (dH/13.6)]/Tm(R)
Bws = water vapor in gas stream, proportion by volume = Vw(std)/(Vm(std) + Vw(std))
Md = molecular weight of stack gas, dry basis = (0.44 x%CO2) + (0.32 x%O2) + [0.28 x (%N2 + %CO)]
Ms = molecular weight of stack gas, wet basis = [Md x (1-Bws)] + (18.0 x Bws)
Vs = stack gas velocity = 85.49 x Cp x (avg. Sq.Rt. dP) x [Sq.Rt. (Ts(R))/(Ms x Ps)]
Qs = stack gas flow rate = Vs x As x 60
Qs(std) = stack gas flow rate, standard conditions = Qs x (1-Bws) x (528/(Ts(R)) x (Ps/29.92)
Isokinetic sampling rate = {(Ts(R)) x [(0.00267 x Vlc) + (Vm(std)/17.647)] x 100}/(Time x vs x Ps x An x60)

Field Data Summary
General Dynamics OTS Munition Services
Building 1 - SK Exhaust
Joplin, MO

	Run 1							Run 2							Run 3					
Traverse Point	Stack Temp(F)	Delta P	Delta H	Tm(F) in	Tm(F) out	SQRT Delta P		Stack Temp(F)	Delta P	Delta H	Tm(F) in	Tm(F) out	SQRT Delta P		Stack Temp(F)	Delta P	Delta H	Tm(F) in	Tm(F) out	SQRT Delta P
A1	124	0.35	2.63	96	96	0.5916		125	0.35	2.42	94	93	0.5916		116	0.37	2.55	93	87	0.6083
1	124	0.35	2.63	97	95	0.5916		125	0.35	2.42	94	93	0.5916		116	0.37	2.55	97	89	0.6083
1	124	0.35	2.63	97	95	0.5916		125	0.35	2.42	94	94	0.5916		116	0.37	2.55	98	90	0.6083
2	124	0.42	3.15	97	94	0.6481		125	0.40	2.76	96	94	0.6325		116	0.39	2.69	100	91	0.6245
2	124	0.42	3.15	96	94	0.6481		125	0.40	2.76	97	94	0.6325		116	0.39	2.69	100	93	0.6245
2	124	0.42	3.15	95	94	0.6481		125	0.40	2.76	97	94	0.6325		116	0.39	2.48	101	94	0.6245
3	124	0.38	2.85	95	94	0.6164		125	0.40	2.76	98	94	0.6325		116	0.36	2.48	101	94	0.6000
3	124	0.38	2.62	95	94	0.6164		125	0.40	2.76	97	94	0.6325		116	0.36	2.48	101	95	0.6000
3	124	0.38	2.62	95	93	0.6164		125	0.40	2.76	97	94	0.6325		116	0.36	2.48	99	95	0.6000
4	124	0.35	2.63	96	94	0.5916		125	0.34	2.35	96	94	0.5831		116	0.34	2.35	100	95	0.5831
4	124	0.35	2.42	97	94	0.5916		125	0.34	2.35	96	93	0.5831		116	0.34	2.35	100	95	0.5831
4	124	0.35	2.42	96	94	0.5916		125	0.34	2.35	96	93	0.5831		116	0.34	2.35	101	96	0.5831
B1	124	0.30	2.07	95	94	0.5477		125	0.28	1.93	95	92	0.5292		116	0.40	2.76	102	97	0.6325
1	124	0.30	2.07	96	95	0.5477		125	0.28	1.93	95	92	0.5292		116	0.40	2.76	103	98	0.6325
1	124	0.30	2.07	96	95	0.5477		125	0.28	1.93	95	92	0.5292		116	0.40	2.76	103	98	0.6325
2	124	0.40	2.76	98	95	0.6325		125	0.38	2.62	93	91	0.6164		116	0.41	2.83	103	99	0.6403
2	124	0.40	2.76	97	95	0.6325		125	0.38	2.62	93	91	0.6164		116	0.41	2.83	104	100	0.6403
2	124	0.40	2.76	97	95	0.6325		125	0.38	2.62	92	90	0.6164		116	0.41	2.83	104	100	0.6403
3	124	0.36	2.48	97	95	0.6000		125	0.38	2.62	93	90	0.6164		116	0.40	2.30	103	101	0.6325
3	124	0.36	2.48	97	95	0.6000		125	0.38	2.62	92	89	0.6164		116	0.40	2.30	103	101	0.6325
3	124	0.36	2.48	98	95	0.6000		125	0.38	2.62	92	89	0.6164		116	0.40	2.30	104	102	0.6325
4	124	0.38	2.62	98	96	0.6164		125	0.38	2.62	92	89	0.6164		116	0.36	1.95	104	103	0.6000
4	124	0.38	2.62	98	96	0.6164		125	0.38	2.62	91	88	0.6164		116	0.36	1.90	105	103	0.6000
4	124	0.38	2.62	97	95	0.6164		125	0.38	2.62	91	88	0.6164		116	0.36	1.90	105	104	0.6000
Average	124	0.37	2.61	97	95	0.6055		125	0.36	2.51	94	92	0.6023		116	0.38	2.48	101	97	0.6151

O'BRIEN & GERE

EPA Isokinetic Field Sheet

Methods Performed: Method 23

Client	General Dynamics	Run Number	Dioxins 1	Pitot Number	SP2-A
Location	Joplin, MO	Stack Diameter	6"	Pitot Coefficient	0.99
Source	SK	Barometric Pres.	28.75	Stack TC I.D.	TC-3A
Date	06-26-2012	Static Pressure	.84.1	Oven Box I.D.	OB-1
Operators	CW/JS/SG	Meter Box #	MB-7	Impinger Out I.D.	IO-15
Start Time	1340	Meter delta H	2.01	Nozzle Size	0.259
End Time	1658	Meter Gamma	0.990	XAD Trap I.D.	

K Factor = ~~7.5~~ 6.9

Leak Check Rates	Sample Rate in.	Sample Rate cfm	Pitot +	Pitot -
Initial	19	0.006		
Mid				
Mid				
Final	23	0.008		

Sample Point	Sample Time (min)	Velocity Head (in. H_2O)	Orifice Setting (in. H_2O)	Meter Volume (ft³)	Stack	Probe	Oven Box	Impinger	Aux	Meter Inlet	Meter Outlet	Vacuum (in. hg)	Comments/Notes
A 1	7.5	.35	2.63	258.106	124	255	250	65	.35/124	96	96	8.5	Time = 180 min
1	15	.35	2.63	304.65	124	258	250	48	.35/124	97	95	8.5	
1	22.5	.35	2.63	311.265	124	257	250	50	.35/124	97	95	8.5	Start Meter
2	30	.42	3.15	317.28	124	254	250	50	.4 124	97	94	10	@ 298.106
2	37.5	.42	3.15	325.33	124	256	250	52	.4 124	96	94	10	
2	45	.42	3.15	336.15	124	255	250	53	.4 124	95	94	10	
3	52.5	.38	2.85	339.61	124	255	249	54	.4 124	95	94	10.5	
3	60	.38	2.62	346.20	124	255	250	55	.4 124	95	94	10	
3	67.5	.38	2.62	355.52	124	254	250	55	.4 124	95	93	10	
4	75	.35	2.63	360.40	124	255	250	58	.34 124	96	94	10	
4	82.5	.35	2.42	366.85	124	256	250	54	.34 124	97	94	10	
4	90	.35	2.42	372.95	124	255	250	61	.34 124	96	94	9.5	
				379.769		254	250	61		98	94	9.5	Pause for P. change
B 1	7.5	.30	2.07	379.769	124	256	250	63	.28 124	95	94	8.0	@ 15:10
1	15	.30	2.07	383.645	124	253	249	58	.28 124	96	95	8.0	Restart 15:28
1	22.5	.30	2.07	391.39	124	256	250	64	.28 124	96	95	8.0	
2	30	.40	2.76	397.35	124	254	249	65	.38 124	98	95	11	Ending
2	37.5	.40	2.76	404.24	124	258	250	62	.38 124	97	95	11	Meter
2	45	.40	2.76	411.20	124	254	250	55	.38 124	97	95	11	457.783
3	52.5	.36	2.48	417.00	124	257	249	54	.38 124	97	95	10	
3	60	.36	2.48	424.48	124	257	251	54	.38 124	97	95	10	Total
3	67.5	.36	2.48	431.06	124	256	250	55	.38 124	98	95	10	Meter
4	75	.38	2.62	437.22	124	254	250	54	.38 124	98	96	10	Volume
4	82.5	.38	2.62	—	124	255	250	53	.38 124	98	96	10	159.677
4	90	.38	2.62	451.19	124	255	250	55	.38 124	97	95	10	
				457.783									

Impinger Data (vol) #	Initial	Final
1	0	
2	100	
3	100	
4	0	
5	SG	
6		

Silica Gel Data (gm) #	Initial	Final
1		
2		

Moisture Gain	
	ml.
	gm
	Total

Filter Data #	Number	Tare
1		
2		
3		

Molecular Weight Data (%) #	O_2	CO_2
1		
2		
3		
Avg		

\\Fileserver\Syracuse\Office Dept\ENV\DeO1\Source Testing\Field Data Forms\Isokinetic\Iso Field Sheet.xls

O'BRIEN & GERE

EPA Isokinetic Field Sheet

Methods Performed: Method 23

Client	General Dynamics	Run Number	Dioxins 2	Pitot Number	SP2-A
Location	Joplin, MO	Stack Diameter	6"	Pitot Coefficient	Standard (2') 0.99
Source	SK	Barometric Pres.	28.8	Stack TC I.D.	TC-3A
Date	06-26-2012	Static Pressure	4.1	Oven Box I.D.	OB-1
Operators	CW/JS/SG	Meter Box #	MB-7	Impinger Out I.D.	IO-15
Start Time	1805	Meter delta H	2.010	Nozzle Size	0.259
End Time	2105	Meter Gamma	0.990	XAD Trap I.D.	

K Factor = 6.9

Leak Check Rates	Sample Rate in.	Sample Rate cfm	Pitot +	Pitot -
Initial	15	.005	✓	✓
Mid				
Mid				
Final	13	0.004	✓	✓

Sample Point	Sample Time (min)	Velocity Head (in. H_2O)	Orifice Setting (in. H_2O)	Meter Volume (ft³)	Temperature Readings in Degrees Farenheit: Stack	Probe	Oven Box	Impinger	Aux	Meter Inlet	Meter Outlet	Vacuum (in. hg)	Comments/Notes Temp F	Pitot Dp
A 1	7.5	0.35	2.42	458.148	125	254	251	58	56	94	93	6	123	0.35
1	15	0.35	2.42	464.69	126	255	250	58	56	94	93	6	123	0.36
1	22.5	0.35	2.42	471.30	126	255	251	63	57	94	94	6	123	0.35
2	30	0.40	2.76	477.52	125	254	249	64	57	96	94	6	123	0.40
2	37.5	0.40	2.76	484.00	125	255	250	64	57	97	94	6	123	0.40
2	45	0.40	2.76	490.50	125	257	250	66	57	97	94	8	124	0.40
3	52.5	0.40	2.76	497.46	125	254	250	58	57	98	94	8	124	0.38
3	60	0.40	2.76	504.455	125	255	250	54	52	97	94	8	124	0.40
3	67.5	0.40	2.76	511.45	125	255	250	54	52	97	94	8	124	0.38
4	75	0.34	2.35	—	125	254	249	53	53	96	93	8	124	0.34
4	82.5	0.34	2.35	522.78	125	255	250	54	52	96	93	8	124	0.34
4	90	0.34	2.35	530.59	125	255	251	54	52	96	93	8	124	0.32
			2.35	537.73	125	255	251	55	54	96	93	8	124	
B 1	7.5	0.28	1.932	543.02	125	255	249	56	54	95	92	6	124	0.28
1	15	0.28	1.932	550.04	126	255	249	58	54	95	92	6	124	0.26
1	22.5	0.28	1.932	555.85	126	255	249	60	55	95	92	6	124	0.28
2	30	0.38	2.622	561.65	125	255	249	63	56	93	91	6	124	0.38
2	37.5	0.38	2.622	567.45	126	254	250	60	57	93	91	6	124	0.38
2	45	0.38	2.622	574.09	125	255	250	54	52	92	90	7	124	0.38
3	52.5	0.38	2.622	580.40	125	256	249	52	50	93	90	7	124	0.38
3	60	0.38	2.622	587.65	125	254	250	52	50	92	89	7	Total	0.38
3	67.5	0.38	2.622	594.44	125	255	251	52	50	92	89	7	Meter	0.38
4	75	0.38	2.622	601.24	125	255	250	54	51	92	89	7	Volume	0.38
4	82.5	0.38	2.622	—	125	255	249	55	52	91	88	7	156.572	0.38
4	90	0.38	2.622		125	255	249	56	52	91	88	7		0.38
				614.72										

Impinger Data (vol) #	Initial	Final
1	0	
2	100	
3	100	
4	0	
5	SG	
6		

Silica Gel Data (gm) #	Initial	Final
1		
2		

Moisture Gain	
	ml.
	gm
	Total

Filter Data #	Number	Tare
1		
2		
3		

Molecular Weight Data (%) #	O_2	CO_2
1		
2		
3		
Avg		

O'BRIEN & GERE

\\syracusevr\Syracuse\Office-Ops\ENV\Div01\Source Testing\Field Data Forms\Isokinetic\Iso Field Sheet.xls

EPA Isokinetic Field Sheet

Methods Performed: Method 23

Client	General Dynamics	Run Number	Dioxins 3	Pitot Number	SP2-A Standard (2')
Location	Joplin, MO	Stack Diameter	6"	Pitot Coefficient	0.99
Source	SK	Barometric Pres.	28.93	Stack TC I.D.	TC-3A
Date	06-27-2012	Static Pressure	4.1	Oven Box I.D.	OB 1
Operators	CW/JS/SG	Meter Box #	MB 7	Impinger Out I.D.	IO 15
Start Time	8:50	Meter delta H	2.010	Nozzle Size	0.259
End Time	1150	Meter Gamma	0.990	XAD Trap I.D.	

K = 6.9

Leak Check Rates	Sample Rate in.	Sample Rate cfm	Pitot +	Pitot -
Initial	10	0.005	✓	✓
Mid				
Mid				
Final	21	0.006	✓	✓

Sample Point	Sample Time (min)	Velocity Head (in. H_2O)	Orifice Setting (in. H_2O)	Meter Volume (ft³)	Temperature Readings in Degrees Farenheit: Stack	Probe	Oven Box	Impinger	Aux	Meter Inlet	Meter Outlet	Vacuum (in. hg)	Comments/Notes
A 1	7.5	.37	2.55	615.645	116	255	256	52	40	93	87	7	.37 124
1	15	.37	2.55	622.155	116	254	246	50	39	97	84	7	
1	22.5	.37	2.55	628.63	116	254	250	51	39	98	90	7	
2	30	.39	2.69	635.095	116	254	250	52	42	100	91	7	.40 124
2	37.5	.39	2.69	641.17	116	254	250	53	41	100	93	7.5	
2	45	.39	2.484	647.32	116	254	250	55	42	101	94	7.5	
3	52.5	.36	2.484	655.20	116	255	249	55	43	101	94	7.5	.36 124
3	60	.36	2.484	661.73	116	255	251	57	44	101	95	7.5	
3	67.5	.36	2.484	668.22	116	255	248	60	46	99	95	7.5	
4	75	.34	2.346	674.655	116	254	250	56	44	100	95	7.5	.35 122
4	82.5	.34	2.346	680.91	116	256	255	52	43	100	95	7.5	
4	90	.34	2.346	687.10	116	255	250	51	41	101	96	7.5	
											9=		
B 1	7.5	.40	2.76	692.20	116	256	250	52	42	102	97	7.5	.40 124
1	15	.40	2.76	–	116	256	251	52	43	103	98	10	
1	22.5	.40	2.76	705.12	116	256	251	52	42	103	98	10	
2	30	.41	2.83	712.34	116	251	247	53	42	103	99	13	.40 124
2	37.5	.41	2.83	715.16	116	252	252	55	43	104	100	13	* See back
2	45	.41	2.83	726.09	116	255	252	55	48	104	100	13	
3	52.5	.40	~~2.76~~	732.60	116	253	249	57	45	103	101	20	2.30 → Δh
3	60	.40	2.30	738.98	116	253	249	57	45	103	101	20	.40 124
3	67.5	.40	2.30	–	116	255	250	59	47	104	102	20	
4	75	.36	1.95	751.31	116	252	250	52	44	104	103	21	.36 124
4	82.5	.36	1.90	757.125	116	250	249	49	45	105	103	21	
4	90	.36	1.90	762.99	116	255	256	51	45	105	104	21	
				768.565									

Impinger Data (vol) #	Initial	Final
1		
2		
3		
4		
5		
6		

Silica Gel Data (gm) #	Initial	Final
1		
2		

Moisture Gain	
	ml.
	gm
	Total

Filter Data #	Number	Tare
1		
2		
3		

Molecular Weight Data (%) #	O_2	CO_2
1		
2		
3		
Avg		

O'BRIEN & GERE

O'BRIEN & GERE

SAMPLE TRAIN MOISTURE RECOVERY DATA SHEET

Reference Method / Sampling Train : M23/0010 - ~~[illegible]~~ SK

Recovered by : J. Gorman				**Recovered by :**				**Recovered by :**			
Run No. 1		**Date :** 06-26-12		**Run No.** 2		**Date :** 06-26-12		**Run No.** 3		**Date :** 06-26-12	
XAD Module No. :				**XAD Module No. :**				**XAD Module No. :**			
Filter No. :				**Filter No. :**				**Filter No. :**			
Impinger No. and Volume				**Impinger No. and Volume**				**Impinger No. and Volume**			
No.	Initial (mL)	Final (mL)	Rinse (mL)	No.	Initial (mL)	Final (mL)	Rinse (mL)	No.	Initial (mL)	Final (mL)	Rinse (mL)
1	0	30	50	1	0	30	48	1	0	14	48
2	100	100		2	100	100		2	100	96	
3	100	100		3	100	100		3	100	98	
4	0	1		4	0	0		4	0	4	
5				5				5			
6				6				6			
7				7				7			
			DIFF :				DIFF :				DIFF :
Totals	200	231	31	**Totals**	200	230	30	**Totals**	200	212	12
	Initial (g)	Final (g)	DIFF :		Initial (g)	Final (g)	DIFF :		Initial (g)	Final (g)	DIFF :
Silica Gel	281.8	308.0	26.2	Silica Gel	285.4	312.9	27.5	Silica Gel	318.5	344.6	26.1
Final Net Moisture Gain:			57.2	**Final Net Moisture Gain:**			57.5	**Final Net Moisture Gain:**			38.1

C:\Users\MiloSM\Desktop\[Moisture Recovery.xls]A

Method 29/5

Test Data Summary and Calculations
General Dynamics OTS Munition Services
Building 1 - SK Exhaust
Joplin, MO

Parameter	Run 1	Run 2	Run 3
Run Date	26Jun12	26Jun12	27Jun12
Start/Stop Time	1340-1617	1805-2005	0850-1050
Duration of Run, Minutes	120	120	120
Ave. Nozzle Diameter, inches	0.259	0.259	0.259
Pitot Calibration Factor, CF	0.99	0.99	0.99
Meter Gamma	0.984	0.984	0.984
Meter Delta H, inches of H2O	1.67	1.67	1.67
Stack Diameter, inches	6	6	6
Rectangular Width, inches	0	0	0
Rectangular Length, inches	0	0	0
Stack Area, sq.ft.	0.20	0.20	0.20
Barometric Pressure, inches of Hg	28.75	28.75	28.93
Static Pressure, inches of H2O	4.1	4.2	4.1
Dry Gas Meter Sample Volume, (VM)ft3			
Initial	115.475	227.523	342.175
Final	226.778	341.668	451.502
Difference	111.303	114.145	109.327
Ave. Stack Temperature, Ts(F)	124.5	123.9	116.0
Ave. Meter Temperature, Tm(F)	100.3	101.7	100.9
Ave. Run Delta H, inches of H2O	2.30	2.23	2.14
Ave. Square Root of Delta P	0.6163	0.6130	0.6020
Moisture Data			
Volume of water collected, mls	18	24	16
Silica Gel, grams	18.6	17.8	15.1
Total Collected, mls	36.6	41.8	31.1
ORSAT Data			
%O2	20.78	20.76	20.78
%CO2	0.23	0.00	0.00
%CO			

Calculations

Vw(std), scf =	1.723	1.968	1.464
Vm(std), dscf =	99.749	102.027	98.442
Bws=	0.017	0.019	0.015
Md=	28.87	28.83	28.83
Ms=	28.68	28.63	28.67
Vs, ft/sec =	43.7	43.5	42.2
Qs, acfm =	515	512	498
Qs(std), dscfm =	444	441	439
Isokinetic Sampling Rate, %	100.5	103.4	100.3

Where:

Vw(std) = volume of water vapor in gas, standard conditions = 0.04707*Vlc
Vm(std) = vol. of gas sampled, standard conditions = 17.647 x Vm x gamma x [Pb + (dH/13.6)]/Tm(R)
Bws = water vapor in gas stream, proportion by volume = Vw(std)/(Vm(std) + Vw(std))
Md = molecular weight of stack gas, dry basis = (0.44 x%CO2) + (0.32 x%O2) + [0.28 x (%N2 + %CO)]
Ms = molecular weight of stack gas, wet basis = [Md x (1-Bws)] + (18.0 x Bws)
Vs = stack gas velocity = 85.49 x Cp x (avg. Sq.Rt. dP) x [Sq.Rt. (Ts(R))/(Ms x Ps)]
Qs = stack gas flow rate = Vs x As x 60
Qs(std) = stack gas flow rate, standard conditions = Qs x (1-Bws) x (528/(Ts(R)) x (Ps/29.92)
Isokinetic sampling rate = {(Ts(R)) x [(0.00267 x Vlc) + (Vm(std)/17.647)] x 100}/(Time x vs x Ps x An x60)

Field Data Summary
General Dynamics OTS Munition Services
Building 1 - SK Exhaust
Joplin, MO

	Run 1							Run 2							Run 3					
Traverse Point	Stack Temp(F)	Delta P	Delta H	Tm(F) in	Tm(F) out	SQRT Delta P		Stack Temp(F)	Delta P	Delta H	Tm(F) in	Tm(F) out	SQRT Delta P		Stack Temp(F)	Delta P	Delta H	Tm(F) in	Tm(F) out	SQRT Delta P
A1	124	0.34	2.14	96	96	0.5831		124	0.40	2.36	99	98	0.6325		114	0.36	2.12	94	91	0.6000
1	124	0.34	2.14	101	96	0.5831		124	0.40	2.36	102	98	0.6325		114	0.36	2.12	95	91	0.6000
2	124	0.38	2.39	101	96	0.6164		124	0.40	2.36	105	98	0.6325		114	0.37	2.18	100	93	0.6083
2	124	0.38	2.39	102	96	0.6164		123	0.40	2.36	105	98	0.6325		114	0.37	2.18	103	94	0.6083
3	124	0.37	2.33	103	96	0.6083		123	0.38	2.24	106	98	0.6164		114	0.34	2.01	106	96	0.5831
3	124	0.37	2.33	103	97	0.6083		124	0.38	2.24	107	98	0.6164		114	0.34	2.01	107	97	0.5831
4	124	0.38	2.39	104	97	0.6164		124	0.38	2.24	107	98	0.6164		114	0.36	2.12	108	98	0.6000
4	124	0.38	2.24	105	97	0.6164		124	0.38	2.24	106	99	0.6164		114	0.36	2.12	110	100	0.6000
B1	125	0.39	2.30	105	97	0.6245		124	0.30	2.01	106	99	0.5477		118	0.36	2.12	106	100	0.6000
1	125	0.39	2.30	104	97	0.6245		124	0.34	2.01	106	99	0.5831		118	0.36	2.12	105	99	0.6000
2	125	0.38	2.24	104	98	0.6164		124	0.38	2.24	106	99	0.6164		118	0.35	2.07	106	99	0.5916
2	125	0.38	2.24	105	98	0.6164		124	0.38	2.24	106	99	0.6164		118	0.35	2.07	106	99	0.5916
3	125	0.40	2.36	104	98	0.6325		124	0.37	2.18	105	99	0.6083		118	0.37	2.18	106	99	0.6083
3	125	0.40	2.36	106	99	0.6325		124	0.37	2.18	105	98	0.6083		118	0.37	2.18	107	99	0.6083
4	125	0.40	2.36	107	99	0.6325		124	0.38	2.24	105	98	0.6164		118	0.39	2.30	108	100	0.6245
4	125	0.40	2.36	105	99	0.6325		124	0.38	2.24	105	98	0.6164		118	0.39	2.30	108	100	0.6245
Average	125	0.38	2.30	103	97	0.6163		124	0.38	2.23	105	98	0.6130		116	0.36	2.14	105	97	0.6020

Laboratory Results	Run 1	Run 2	Run 3
Filter ID	xxx	xxx	xxx
Front Half Sample:			
Filter wt gain, g	<0.0005	0.0009	<0.0005
Acetone rinse volume, ml	77	96	100
Acetone wt gain, g	0.0016	0.004	0.0026
F.H. Total, g (uncorrected)	0.0021	0.0049	0.0031
Acetone Blank Sample:			
Acetone blank volume, ml	150	150	150
Acetone Blank wt, g	117.78	117.78	117.78
Acetone Blank wt gain (residue), g	<0.0005	<0.0005	<0.0005
Acetone Blank conc., g(residue)/g(acetone)	0.000004	0.000004	0.000004
0.001% (w/w) of Acetone Sample, g	0.0006	0.0008	0.0008
Weight of residue in Acetone Sample, g	0.0003	0.0003	0.0003
Acetone Blank Correction, g	0.0003	0.0003	0.0003
Front Half Total, g (corrected):	0.0018	0.0046	0.0028

O'BRIEN & GERE

Multi-metals Results Summary
General Dynamics OTS Munition Services
Building 1 - SK Exhaust
Joplin, MO

Parameter:	Run 1				Run 2				Run 3				Average		
	(Total ug)	(ug/dscm)	(g/min)	(lb/hr)	(Total ug)	(ug/dscm)	(g/min)	(lb/hr)	(Total ug)	(ug/dscm)	(g/min)	(lb/hr)	(ug/dscm)	(g/min)	(lb/hr)
Arsenic	<3.00	1.06	1.33E-05	1.77E-06	<3.00	1.04	1.30E-05	1.72E-06	<3.00	1.08	1.34E-05	1.77E-06	1.06	1.32E-05	1.75E-06
Beryllium	<1.50	0.53	6.67E-06	8.83E-07	<1.50	0.52	6.49E-06	8.58E-07	<1.50	0.54	6.69E-06	8.85E-07	0.53	6.62E-06	8.75E-07
Cadium	<1.50	0.53	6.67E-06	8.83E-07	<1.50	0.52	6.49E-06	8.58E-07	<1.50	0.54	6.69E-06	8.85E-07	0.53	6.62E-06	8.75E-07
Chromium	<3.00	1.06	1.33E-05	1.77E-06	4.30	1.49	1.86E-05	2.46E-06	4.80	1.72	2.14E-05	2.83E-06	1.42	1.78E-05	2.35E-06
Lead	3.40	1.20	1.51E-05	2.00E-06	3.20	1.11	1.38E-05	1.83E-06	2.20	0.79	9.81E-06	1.30E-06	1.03	1.29E-05	1.71E-06

Where:

Total ug= Total sample collected, micrograms
ug/dscm = grams of pollutant per dry standard cubic meter = (ug/dscf) x (35.314 cubic feet/cubic meter)
g/min = grams per minute, emission rate = ug/dscf x DSCFM x 1 gram/1.00E+06 ug
lb/hr = pounds per hour emission rate = g/min x 60 min/hour/(453.59 g/lb)

EPA Isokinetic Field Sheet

Methods Performed: Method 29

Client	General Dynamics	Run Number	Metals 1	Pitot Number	SP2-A
Location	Joplin, MO	Stack Diameter	6"	Pitot Coefficient	0.99
Source	SK	Barometric Pres.	28.75	Stack TC I.D.	TC-3A
Date	06-26-2012	Static Pressure	+4.1	Oven Box I.D.	OB-5
Operators	CW/JS/SG	Meter Box #	MB-4	Impinger Out I.D.	IO-5
Start Time	1340	Meter delta H	1.67	Nozzle Size	0.257
End Time	1617	Meter Gamma	0.984	XAD Trap I.D.	

K Factor = 5.9

Leak Check Rates	Sample Rate in.	Sample Rate cfm	Pitot +	Pitot -
Initial	11	0.001		
Mid				
Mid				
Final	11	0.000		

Sample Point	Sample Time (min)	Velocity Head (in. H_2O)	Orifice Setting (in. H_2O)	Meter Volume (ft³)	Stack	Probe	Oven Box	Impinger	Aux	Meter Inlet	Meter Outlet	Vacuum (in. hg)	Comments/Notes
A 1	7.5	.34	2.14	115.475	124	248	253	64	163	96	96	4	Time = 1320
1	15	.34	2.14	122.255	124	250	251	58	175	101	96	4	
2	22.5	.34 .38	2.39	129.80	124	250	253	58	186	101	96	4	Start Meter
2	30	.38	2.39	136.1	124	250	253	58	186	102	96	4	@
3	37.5	.34 .37	2.33	142.8	124	250	253	59	186	103	96	4	Mid
3	45	.34 .37	2.33	149.6	124	250	254	60	184	103	97	4	Meter @
4	52.5	.37 .38	2.39	156.7	124	250	251	59	185	104	97	4	170.535
4	60	.37 .38	2.39	162.6	124	250	252	59	186	105	98	4	Port @ 1440
													Restart
B 1	7.5	.39	2.30	170.535	125	251	253	60	187	105	97	4	@ 1447
1	15	.39	2.30	177.8	125	250	255	54	186	104	97	4	
2	22.5	.38	2.24	184.682	125	250	251	57	185	104	98	4	
2	30	.38	2.24	198.43	125	250	253	59	186	105	98	4	
3	37.5	.40	2.36	203.01	125	250	255	60	187	104	98	4	Ending
3	45	.40	2.36	—	125	251	254	59	188	106	99	4	Meter
4	52.5	.40	2.36	212.224	125	250	253	58	188	107	99	4	@ 226.778
4	60	.40	2.36	—	125	250	254	61	187	105	99	4	
				226.778									
													Total Volume = 111.303

Impinger Data (vol) #	Initial	Final
1		
2		
3		
4		
5		
6		

Silica Gel Data (gm) #	Initial	Final
1		
2		

Moisture Gain	
	ml.
	gm
	Total

Filter Data #	Number	Tare
1		
2		
3		

Molecular Weight Data (%) #	O_2	CO_2
1		
2		
3		
Avg		

O'BRIEN & GERE

EPA Isokinetic Field Sheet

Methods Performed: Method 29

Client	General Dynamics	Run Number	Metals 2	Pitot Number	SP2-A Standard (2')
Location	Joplin, MO	Stack Diameter	6"	Pitot Coefficient	0.99
Source	SK	Barometric Pres.	28.75	Stack TC I.D.	TC-3A
Date	06-26-2012	Static Pressure	+4.2	Oven Box I.D.	OB 5
Operators	CW/JS/SG	Meter Box #	MB-4	Impinger Out I.D.	IO 5
Start Time	1805	Meter delta H	1.67	Nozzle Size	0.259
End Time	2005	Meter Gamma	0.984	XAD Trap I.D.	

K Factor = 5.9

Leak Check Rates	Sample Rate in.	Sample Rate cfm	Pitot +	Pitot -
Initial	12	0.005	✓	✓
Mid				
Mid				
Final	13	0.001	✓	✓

Sample Point	Sample Time (min)	Velocity Head (in. H_2O)	Orifice Setting (in. H_2O)	Meter Volume (ft³)	Stack	Probe	Oven Box	Impinger	Aux	Meter Inlet	Meter Outlet	Vacuum (in. hg)	Comments/Notes
A 1	7.5	0.40	2.36	227.523	124	249	253	64	171	99	98	3	Start
1	15	0.40	2.36	—	124	249	252	58	181	102	98	3	Meter
2	22.5	0.40	2.36	242 —	124	250	253	58	181	105	98	3	@ 227.523
2	30	0.40	2.36	249	123	250	253	58	182	105	98	3	
3	37.5	0.38	2.24	256.243	123	250	253	59	185	106	98	3	
3	45	0.38	2.24	263.939	124	250	253	59	185	107	98	3	
4	52.5	0.38	2.24	272.6	124	249	252	60	185	107	98	3	
4	60	0.38	2.24	278.8	124	250	254	61	188	106	99	3	
B 1	7.5	0.34	2.01	285.554	124	250	253	61	188	~~250~~ 106	99	3	
1	15	0.34	2.01	—	124	250	252	61	188	106	99	3	
2	22.5	0.38	2.24	299.2	124	250	252	60	189	106	99	3	Ending
2	30.0	0.38	2.24	306.214	124	250	255	61	188	106	99	3	Meter
3	37.5	0.37	2.18	313.2	124	250	253	61	188	105	99	3	@ 341.668
3	45	0.37	2.18	320.4	124	250	256	54	187	105	98	3	
4	52.5	0.38	2.24	327.4	124	250	252	54	187	105	98	3	
4	60	0.38	2.24	334.4	124	250	253	54	186	105	98	3	
				341.668									
													Total Meter Volume 114.145

Impinger Data (vol) #	Initial	Final
1		
2		
3		
4		
5		
6		

Silica Gel Data (gm) #	Initial	Final
1		
2		

Moisture Gain	
	ml.
	gm
	Total

Filter Data #	Number	Tare
1		
2		
3		

Molecular Weight Data (%) #	O_2	CO_2
1		
2		
3		
Avg		

O'BRIEN & GERE

...Field Data Forms\Isokinetic\Iso Field Sheet.xls

EPA Isokinetic Field Sheet

Methods Performed: Method 29

Client	General Dynamics	Run Number	Metals 3	Pitot Number	SP2-A Standard (2')
Location	Joplin, MO	Stack Diameter	6"	Pitot Coefficient	0.99
Source	SK	Barometric Pres.	28.53	Stack TC I.D.	
Date	06-27-2012	Static Pressure	+4.1	Oven Box I.D.	OB 5
Operators	CW/JS/BG	Meter Box #	MB 4	Impinger Out I.D.	IO 3
Start Time	850	Meter delta H	1.670	Nozzle Size	0.259
End Time	1050	Meter Gamma	0.984	XAD Trap I.D.	—

K Factor 5.9

Leak Check Rates	Sample Rate in.	Sample Rate cfm	Pitot +	Pitot -
Initial	13	0.005	✓	✓
Mid				
Mid				
Final	11.5	0.006	✓	✓

Sample Point	Sample Time (min)	Velocity Head (in. H_2O)	Orifice Setting (in. H_2O)	Meter Volume (ft³)	Temperature Readings in Degrees Farenheit: Stack	Probe	Oven Box	Impinger	Aux	Meter Inlet	Meter Outlet	Vacuum (in. hg)	Comments/Notes
A 1	7.5	.36	2.12	342.375	114	250	251	64	160	94	91	2	.36 120
1	15	.36	2.12	347.80	114	249	258	61	177	95	91	3	
2	22.5	.38	2.18	354.68	114	250	256	49	180	100	93	3	.36 120
2	30	.37	2.18	361.7 —	114	250	255	51	180	103	94	3	
3	37.5	.34	2.01	368.8 —	114	250	253	52	181	106	96	3	.35 120
3	45	.34	2.01	375.25	114	250	250	51	181	107	97	3	
4	52.5	.34	2.12	382.051	114	251	254	52	182	108	98	3	.36 120
4	60	.36	2.12	388.921	114	250	253	52	182	110	100	3	
B 1	7.5	.36	2.12	395.811	118	250	253	54	180	106	100	3	.36 122
1	15	.36	2.12	—	118	250	255	53	179	105	99	3	
2	22.5	.35	2.07	409.597	118	250	252	54	179	106	99	3	.34 122
2	30	.35	2.07	416.666	118	250	253	53	179	106	99	3	
3	37.5	.37	2.18	423.6 —	118	250	255	54	182	106	99	4	.39 122
3	45	.39	2.18	430.327	118	250	254	52	182	107	99	4	
4	52.5	.39	2.30	437.349	118	250	253	52	184	108	100	4	.40 122
4	60	.39	2.30	444. —	118	250	251	53	184	108	100	4	
				451.502									

Start Time = 0850
End Time = 1050

Total Meter Volume 109.327

Impinger Data (vol) #	Initial	Final
1		
2		
3		
4		
5		
6		

Silica Gel Data (gm) #	Initial	Final
1		
2		

Moisture Gain	
	ml.
	gm
	Total

Filter Data #	Number	Tare
1		
2		
3		

Molecular Weight Data (%) #	O_2	CO_2
1		
2		
3		
Avg		

~~6.4~~ 5.9

O'BRIEN & GERE

\\syracusesvr\Syracuse\Office-Ops\ENV\Div01\Source Testing\Field Data Forms\Isokinetic\Iso Field Sheet.xls

O'BRIEN & GERE

SAMPLE TRAIN MOISTURE RECOVERY DATA SHEET

Reference Method / Sampling Train : M29/M5

Recovered by : J. Gorman				**Recovered by :**				**Recovered by :** J. Gorman			
Run No. 1		**Date :** 06-26-12		**Run No.** 2		**Date :** 06-26-12		**Run No.** 3		**Date :** 06-27-12	
XAD Module No. :				**XAD Module No. :**				**XAD Module No. :**			
Filter No. : OBG061812-9				**Filter No. :** OBG061812-2				**Filter No. :** OBG061812-6			
Impinger No. and Volume				**Impinger No. and Volume**				**Impinger No. and Volume**			
No.	Initial (mL)	Final (mL)	Rinse (mL)	No.	Initial (mL)	Final (mL)	Rinse (mL)	No.	Initial (mL)	Final (mL)	Rinse (mL)
1	100	106	38	1	100	118	31	1	100	98	30
2	100	108	30	2	100	106	34	2	100	112	32
3	0	4	32	3	0	0	35	3	0	6	38
4				4				4			
5				5				5			
6				6				6			
7				7				7			
			DIFF :				DIFF :				DIFF :
Totals	200	218	18	Totals	200	224	24	Totals	200	216	16
	Initial (g)	Final (g)	DIFF :		Initial (g)	Final (g)	DIFF :		Initial (g)	Final (g)	DIFF :
Silica Gel	271.9	290.5	18.6	Silica Gel	280.6	298.4	17.8	Silica Gel	288.2	303.3	15.1
Final Net Moisture Gain:			36.6	**Final Net Moisture Gain:**			41.8	**Final Net Moisture Gain:**			31.1

C:\Users\MiloSM\Desktop\[Moisture Recovery.xls]A

STEM

Test Data Summary and Calculations
General Dynamics OTS Munition Services
Building 1 - SK Exhaust
Joplin, MO

Parameter	Run 1	Run 2	Run 3
Run Date	6/26/12	6/26/12	6/27/12
Start/Stop Time	1340-1658	1805-2105	0850-1150
Duration of Run, Minutes	180	180	180
Ave. Nozzle Diameter, inches	0.259	0.259	0.259
Pitot Calibration Factor, CF	0.99	0.99	0.99
Meter Gamma	1.008	1.008	1.008
Meter Delta H, inches of H2O	1.83	1.83	1.83
Stack Diameter, inches	6	6	6
Rectangular Width, inches		0	0
Rectangular Length, inches		0	0
Stack Area, sq.ft.	0.20	0.20	0.20
Barometric Pressure, inches of Hg	28.75	28.75	28.83
Static Pressure, inches of H2O	4.0	4.15	4.1
Dry Gas Meter Sample Volume, (VM)ft3			
Initial	480.487	627.978	775.444
Final	627.683	775.15	923.234
Meter Volume	147.008	147.058	147.736
Ave. Stack Temperature, Ts(F)	125.9	126.0	116.8
Ave. Meter Temperature, Tm(F)	99.6	97.9	98.9
Ave. Run Delta H, inches of H2O	2.33	2.25	2.33
Ave. Square Root of Delta P	0.5968	0.5926	0.6031
Moisture Data			
Volume of water collected, mls	22	30	16
Silica Gel, grams	26.1	23.7	26.9
Total Collected, mls	48.1	53.7	42.9
ORSAT Data			
%O2	20.78	20.77	20.89
%CO2	0.25	0.00	0.00
%CO			

Calculations

Vw(std), scf =	2.264	2.528	2.019
Vm(std), dscf =	135.138	135.574	136.374
Bws=	0.016	0.018	0.015
Md=	28.87	28.83	28.84
Ms=	28.69	28.63	28.68
Vs, ft/sec =	42.4	42.1	42.4
Qs, acfm =	499	496	500
Qs(std), dscfm =	429	426	439
Isokinetic Sampling Rate, %	93.9	94.9	92.7

Where:

Vw(std) = volume of water vapor in gas, standard conditions = 0.04707*Vlc
Vm(std) = vol. of gas sampled, standard conditions = 17.647 x Vm x gamma x [Pb + (dH/13.6)]/Tm(R)
Bws = water vapor in gas stream, proportion by volume = Vw(std)/(Vm(std) + Vw(std))
Md = molecular weight of stack gas, dry basis = (0.44 x%CO2) + (0.32 x%O2) + [0.28 x (%N2 + %CO)]
Ms = molecular weight of stack gas, wet basis = [Md x (1-Bws)] + (18.0 x Bws)
Vs = stack gas velocity = 85.49 x Cp x (avg. Sq.Rt. dP) x [Sq.Rt. (Ts(R))/(Ms x Ps)]
Qs = stack gas flow rate = Vs x As x 60
Qs(std) = stack gas flow rate, standard conditions = Qs x (1-Bws) x (528/(Ts(R)) x (Ps/29.92)
Isokinetic sampling rate = {(Ts(R)) x [(0.00267 x Vlc) + (Vm(std)/17.647)] x 100}/(Time x vs x Ps x An x60)

Field Data Summary
General Dynamics OTS Munition Services
Building 1 - SK Exhaust
Joplin, MO

	Run 1							Run 2							Run 3					
Traverse Point	Stack Temp(F)	Delta P	Delta H	Tm(F) in	Tm(F) out	SQRT Delta P		Stack Temp(F)	Delta P	Delta H	Tm(F) in	Tm(F) out	SQRT Delta P		Stack Temp(F)	Delta P	Delta H	Tm(F) in	Tm(F) out	SQRT Delta P
A1	125	0.35	2.42	98	98	0.5916		126	0.35	2.24	98	98	0.5916		116	0.35	2.24	94	90	0.5916
1	125	0.35	2.42	100	98	0.5916		126	0.35	2.24	100	98	0.5916		116	0.35	2.24	95	91	0.5916
1	125	0.35	2.42	100	97	0.5916		126	0.35	2.24	102	98	0.5916		116	0.35	2.24	99	92	0.5916
2	126	0.36	2.48	100	97	0.6000		126	0.36	2.30	102	98	0.6000		116	0.36	2.30	101	94	0.6000
2	126	0.36	2.48	101	97	0.6000		126	0.36	2.30	102	98	0.6000		116	0.36	2.30	103	96	0.6000
2	126	0.36	2.48	100	97	0.6000		126	0.36	2.30	102	98	0.6000		116	0.36	2.30	103	96	0.6000
3	126	0.36	2.48	101	98	0.6000		126	0.35	2.24	102	98	0.5916		116	0.36	2.30	104	98	0.6000
3	126	0.36	2.30	101	98	0.6000		126	0.35	2.24	101	98	0.5916		116	0.36	2.30	105	99	0.6000
3	126	0.36	2.30	100	98	0.6000		126	0.35	2.24	101	98	0.5916		116	0.36	2.30	98	97	0.6000
4	126	0.34	2.18	100	98	0.5831		126	0.35	2.24	101	98	0.5916		116	0.37	2.37	97	96	0.6083
4	126	0.34	2.18	101	98	0.5831		126	0.35	2.24	101	99	0.5916		116	0.37	2.37	97	95	0.6083
4	126	0.34	2.18	101	98	0.5831		126	0.35	2.24	101	97	0.5916		116	0.37	2.37	97	95	0.6083
B1	126	0.36	2.30	98	98	0.6000		126	0.35	2.24	101	97	0.5916		117	0.36	2.30	100	96	0.6000
1	126	0.36	2.30	99	98	0.6000		126	0.35	2.24	99	96	0.5916		117	0.36	2.30	99	96	0.6000
1	126	0.36	2.30	101	98	0.6000		126	0.35	2.24	99	96	0.5916		117	0.36	2.30	101	97	0.6000
2	126	0.36	2.30	102	99	0.6000		126	0.36	2.30	99	96	0.6000		117	0.38	2.43	100	97	0.6164
2	126	0.36	2.30	102	99	0.6000		126	0.36	2.30	98	95	0.6000		117	0.38	2.43	100	97	0.6164
2	126	0.36	2.30	103	99	0.6000		126	0.36	2.30	98	95	0.6000		117	0.38	2.43	103	98	0.6164
3	126	0.36	2.30	102	99	0.6000		126	0.35	2.24	98	94	0.5916		118	0.37	2.37	101	98	0.6083
3	126	0.36	2.30	103	99	0.6000		126	0.35	2.24	97	94	0.5916		118	0.37	2.37	106	100	0.6083
3	126	0.36	2.30	102	99	0.6000		126	0.35	2.24	97	94	0.5916		118	0.37	2.37	105	100	0.6083
4	126	0.36	2.30	103	100	0.6000		126	0.34	2.18	97	93	0.5831		118	0.36	2.30	105	101	0.6000
4	126	0.36	2.30	104	100	0.6000		126	0.34	2.18	96	93	0.5831		118	0.36	2.30	106	101	0.6000
4	126	0.36	2.30	102	99	0.6000		126	0.34	2.18	96	93	0.5831		118	0.36	2.30	105	101	0.6000
Average	126	0.36	2.33	101	98	0.5968		126	0.35	2.25	100	96	0.5926		117	0.36	2.33	101	97	0.6031

EPA Isokinetic Field Sheet

Methods Performed STEM

Client	General Dynamics	Run Number	Explosive Com. 1	Pitot Number	SP2-A
Location	~~SK~~ Joplin, MO	Stack Diameter	6"	Pitot Coefficient	0.99
Source	SK	Barometric Pres.	28.75	Stack TC I.D.	TC-3A
Date	6-26-2012	Static Pressure	+4.0	Oven Box I.D.	OB-3
Operators	CW/JS/SG	Meter Box #	MB-5	Impinger Out I.D.	
Start Time	1340	Meter delta H	1.83	Nozzle Size	0.259
End Time	1658	Meter Gamma	1.008	XAD Trap I.D.	

K Factor = ~~6.4~~ 6.4 cfm

Leak Check Rates	Sample Rate in.	Sample Rate cfm	Pitot +	Pitot -
Initial	10	0.004		
Mid				
Mid				
Final	11			

Sample Point	Sample Time (min)	Velocity Head (in. H_2O)	Orifice Setting (in. H_2O)	Meter Volume (ft³)	Temperature Readings in Degrees Farenheit: Stack	Probe	Oven Box	Impinger	Aux	Meter Inlet	Meter Outlet	Vacuum (in. hg)	Comments/Notes
A 1	7.5	.35	2.42	480.487	125	258	250	67	—	98	98	4	Time = 180 min
1	15	.35	2.42	486.500	125	262	255	62	—	100	98	4	
1	22.5	.35	2.42	492.999	125	261	256	68	—	100	99	4	Start Meter
2	30	.36	2.48	499.233	126	262	254	63	—	100	97	4	@ 480.487
2	37.5	.36	2.48	505.799	126	260	255	61	—	101	97	4	
2	45	.36	2.48	512.2—	126	261	254	61	—	100	97	4	Start Time
3	52.5	.36	2.48	518.657	126	260	253	61	—	101	98	4	1340
3	60	.36	2.3 ~~2.48~~	—	126	259	254	59	—	101	98	4	
3	62.5	.36	2.3 ~~2.48~~	531.149	126	258	252	60	—	100	98	4	Mid Meter
4	75	.34	2.1 ~~2.35~~	537.100	126	261	254	62	—	100	~~98~~	4	@ 554.325
4	82.5	.34	2.1 ~~2.35~~	542.992	126	263	255	62		101	98	4	Port Change
4	90	.34	2.1 ~~2.35~~	548.578	126	262	255	63		101	98	4	@ 1510
													Restart @
B 1	7.5	.36	2.30 ~~2.48~~	554.325	126	260	258	63		98	98	4	1528
1	15	.36	~~2.48~~	560.111	126	264	259	65		99	98	4	
1	22.5	.36	~~2.48~~	565.872	126	260	254	59		101	98	4	
2	30	.36	~~2.48~~	—	126	260	256	56		102	99	4	
2	37.5	.36	~~2.48~~	578.197	126	259	252	57		102	99	4	
2	45	.36	2.30 ~~2.48~~	—	126	261	252	55		103	99	4	
3	52.5	.36	~~2.48~~	—	126	260	256	57		102	99	4	
3	60	.36	~~2.48~~	596.698	126	258	256	57		103	99	4	
3	62.5	.36	~~2.4~~	602.861	126	261	254	57		102	99	4	
4	75	.36	2.30	608.955	126	260	255	56		103	100	4	
4	82.5	.36	2.30	615.275	126	260	256	56		104	100	4	
4	90	.30	2.30	621.5—	124	262	255	58		102	99	4	
				627.683									
													Total Meter Volume = 147.196

Impinger Data (vol) #	Initial	Final
1	50	
2	100	
3	100	
4		
5		
6		

Silica Gel Data (gm) #	Initial	Final
1		
2		

Moisture Gain	
	ml.
	gm
	Total

Filter Data #	Number	Tare
1		
2		
3		

Molecular Weight Data (%) #	O_2	CO_2
1		
2		
3		
Avg		

O'BRIEN & GERE

\\syracusesvr\Syracuse\Office-Ops\ENV\Div01\Source Testing\Field Data Forms\Isokinetic\Iso Field Sheet.xls

EPA Isokinetic Field Sheet

Methods Performed: STEM

Client	General Dynamics	Run Number	Explosive Com. 2	Pitot Number	SP2-A Standard (2')
Location	Joplin, Mo	Stack Diameter	6"	Pitot Coefficient	0.99
Source	SK	Barometric Pres.	28.75	Stack TC I.D.	TC-3A
Date	06-26-2012	Static Pressure	+4.15	Oven Box I.D.	OB-3
Operators	CW/JS/SG	Meter Box #	MB-5	Impinger Out I.D.	IO-10
Start Time	1805	Meter delta H	1.830	Nozzle Size	0.259
End Time		Meter Gamma	1.008	XAD Trap I.D.	

K Factor = 6.4

Leak Check Rates	Sample Rate in.	Sample Rate cfm	Pitot +	Pitot -
Initial	11	0.002	✓	✓
Mid				
Final ~~Mid~~	11	0.001		
~~Final~~	~~13~~ CDW	~~0.004~~ CDW	✓	✓

Sample Point	Sample Time (min)	Velocity Head (in. H_2O)	Orifice Setting (in. H_2O)	Meter Volume (ft³)	Stack	Probe	Oven Box	Impinger	Aux	Meter Inlet	Meter Outlet	Vacuum (in. hg)	Comments/Notes
A 1	7.5	0.35	2.24	627.978	126	260	257	64	—	98	98	4	Time = 180
1	15	0.35	2.24	634.157	126	261	254	55	—	100	98	4	
1	22.5	0.35	2.24	640.288	126	260	253	59	—	102	98	4	Start
2	30	0.36	2.30	646.381	126	262	256	60	—	102	98	4	Time @
2	37.5	0.36	2.30	652.501	126	260	251	61	—	102	98	4	
2	45	0.36	2.30	658.416	126	261	251	59	—	102	98	4	Meter Start
3	52.5	0.35	2.24	665.70	126	261	251	50	—	102	98	4	@ 627.978
3	60	0.35	2.24	671.2	126	260	253	54	—	101	98	4	
3	67.5	0.35	2.24	677.121	126	260	254	55	—	101	98	4	Meter End
4	75	0.35	2.24	685.1	126	260	254	55	—	101	98	4	@ 775.150
4	82.5	0.35	2.24	689.42	126	259	256	55	—	101	99	4	
4	90	0.35	2.24	695.501	126	261	256	57	—	101	97	4	
				701.611									
B 1	7.5	0.35	2.24	~~705~~ 706	126	261	255	57	—	101	97	4	Total Meter
1	15	0.35	2.24	708	126	260	253	57	—	99	96	4	Volume
1	22.5	0.35	2.24	714.011	126	260	254	58	—	99	96	4	147.172
2	30	0.36	2.30	720.141	126	260	252	58	—	99	96	4	
2	37.5	0.36	2.30	726.321	126	260	253	59	—	98	95	4	
2	45	0.36	2.30	732 —	126	261	253	59	—	98	95	4	
3	52.5	0.35	2.24	738.799	126	259	255	59	—	98	94	4	
3	60	0.35	2.24	744.944	126	259	250	59	—	97	94	4	
3	67.5	0.35	2.24	751.091	126	259	253	58	—	97	94	4	
4	75	0.34	2.18	757.247	126	261	254	58	—	97	93	4	
4	82.5	0.34	2.18	763.244	126	260	254	59	—	96	93	4	
4	90	0.34	2.18	769.136	126	260	254	59		96	93	4	
				775.150									

Impinger Data (vol)	Initial	Final
1	50	
2	100	
3	100	
4		
5		
6		

Silica Gel Data (gm)	Initial	Final
1		
2		

Moisture Gain	
	ml.
	gm
	Total

Filter Data	Number	Tare
1		
2		
3		

Molecular Weight Data (%)	O_2	CO_2
1		
2		
3		
Avg		

O'BRIEN & GERE

EPA Isokinetic Field Sheet

Methods Performed: STEM

Client	General Dynamic	Run Number	Explosive Com. 3	Pitot Number	SP2-A Standard (2')
Location	Joplin, MO	Stack Diameter	6"	Pitot Coefficient	0.99
Source	SK	Barometric Pres.	28.93	Stack TC I.D.	TC-3A
Date	06-27-2012	Static Pressure	+4.1	Oven Box I.D.	OB-3
Operators	CW/JS/SG	Meter Box #	MB-5	Impinger Out I.D.	IO-10
Start Time	0850	Meter delta H	1.830	Nozzle Size	0.259
End Time	1150	Meter Gamma	1.008	XAD Trap I.D.	
		K Factor	6.4		

Leak Check Rates	Sample Rate in.	Sample Rate cfm	Pitot +	Pitot -
Initial	12	0.004		
Mid				
Mid				
Final	14	0.003		

Sample Point	Sample Time (min)	Velocity Head (in. H_2O)	Orifice Setting (in. H_2O)	Meter Volume (ft³)	Stack	Probe	Oven Box	Impinger	Aux	Meter Inlet	Meter Outlet	Vacuum (in. hg)	Comments/Notes
A 1	7.5	0.35	2.24	775.444	116	261	254	49	—	94	90	3	.35 122
1	15	0.35	2.24	780.788	116	260	256	48	—	95	91	3	
1	22.5	0.35	2.24	786.866	116	260	256	56	—	99	92	3	
2	30	0.36	2.30	793.022	116	260	247	63	—	101	94	3	
2	37.5	0.36	2.30	799.154	116	260	253	61	—	103	96	3	.36 122
2	45	0.36	2.30	805.285	116	259	255	59	—	103	96	3	
3	52.5	0.36	2.30	811.382	116	260	255	58	—	104	98	3	.36 122
3	60	0.36	2.30	817.484	116	261	255	57	—	105	99	3	
3	67.5	0.36	2.30	823.633	116	260	257	61	—	98	97	3	
4	75	0.37	2.37	829.—	116	261	253	62	—	97	96	3	.37 122
4	82.5	0.37	2.37	835.932	116	261	251	63	—	97	95	3	
4	90	0.37	2.37	842.621	116	260	253	64	—	97	95	3	
B 1	7.5	0.36	2.30	—	117	261	252	57	—	100	96	3	.36 122
1	15	0.36	2.30	854.427	117	260	252	56	—	99	96	3	
1	22.5	0.36	2.30	860.562	117	261	256	55	—	101	97	3	
2	30	0.38	2.43	866.7—	117	260	255	57	—	100	97	3	.40 122
2	37.5	0.38	2.43	873.002	117	261	258	58	—	100	97	3	
2	45	0.38	2.43	879.333	117	261	257	57	—	103	98	3	
3	52.5	0.37	2.37	885.672	118	259	257	56	—	101	98	3	.38 122
3	60	0.37	2.37	~~[illegible]~~	118	261	253	55	—	106	100	3	
3	62.5	0.37	2.37	~~[illegible]~~ 898.188	118	260	255	55	—	105	100	3	
4	75	0.36	2.30	904.578	118	260	258	55	—	105	101	3	.35 122
4	82.5	0.36	2.30	910.782	118	261	253	55	—	106	101	3	
4	90	0.36	2.30	—	118	262	257	55	—	105	101	3	
				923.234									
													Total Meter Volume 147.790

Impinger Data (vol)	Initial	Final
1		
2		
3		
4		
5		
6		

Silica Gel Data (gm)	Initial	Final
1		
2		

Moisture Gain	
	ml.
	gm
	Total

Filter Data	Number	Tare
1		
2		
3		

Molecular Weight Data (%)	O_2	CO_2
1		
2		
3		
Avg		

O'BRIEN & GERE

\\syracusesvr\Syracuse\Office-Ops\ENV\Div01\Source Testing\Field Data Forms\Isokinetic\Iso Field Sheet.xls

O'BRIEN & GERE

SAMPLE TRAIN MOISTURE RECOVERY DATA SHEET

Reference Method / Sampling Train : STEM - SK

Recovered by : J. Gorman				Recovered by : J. Gorman				Recovered by : J. Gorman			
Run No. 1		Date : 06-26-12		Run No. 2		Date : 06-26-12		Run No. 3		Date : 06-27-12	
XAD Module No. : OB62012-1				XAD Module No. : OB6062012-3				XAD Module No. : OB606012-4			
Filter No. :				Filter No. :				Filter No. :			
Impinger No. and Volume				Impinger No. and Volume				Impinger No. and Volume			
No.	Initial (mL)	Final (mL)	Rinse (mL)	No.	Initial (mL)	Final (mL)	Rinse (mL)	No.	Initial (mL)	Final (mL)	Rinse (mL)
1	50	52	60	1	50	64	44	1	50	~~50~~ 38 (78)	40
2	100	118	66	2	100	116	50	2	100	170	36
3	100	100	40	3	100	100	44	3	100	52	38
4	0	2		4	0			4	0	6	
5				5				5			
6				6				6			
7				7				7			
			DIFF :				DIFF :				DIFF :
Totals	250	272	22	Totals	250	280	30	Totals	250	266	16
	Initial (g)	Final (g)	DIFF :		Initial (g)	Final (g)	DIFF :		Initial (g)	Final (g)	DIFF :
Silica Gel	277.7	303.8	26.1	Silica Gel	297.0	320.7	23.7	Silica Gel	313.4	340.3	26.9
Final Net Moisture Gain:			48.1	Final Net Moisture Gain:			53.7	Final Net Moisture Gain:			42.9

C:\Users\MiloSM\Desktop\[Moisture Recovery.xls]A

VOST

O'BRIEN & GERE

VOST DATA SHEET

FACILITY GENERAL DYNAMICS	DATE 6/26/12
LOCATION CARTHAGE, MO:	OPERATOR N. HARDY
SOURCE SK	BAR. PRESSURE, in. Hg 28.75
CONDITION 1	PROBE LENGTH (ft) 3.
RUN NO. 1A	DESIRED PROBE TEMP. 125 °C
METER CALIBRATION FACTOR (Y) 1.0711	PROBE PURGED ? YES
DRY GAS METER NO. VB3	DESIRED FLOW RATE (Lpm) 0.5
TENAX TUBE NO"S 1A1 1B1	DESIRED SAMPLE VOLUME (dsL) 20
TENAX/CHARCOAL TUBE NO"S 1C1	DGM PRESSURE, in. H_2O 0.9
Train Leak Check -- INITIAL VACUUM (in. Hg): 15	Leak Rate : 0.000 in. Hg in 60 sec.
Train Leak Check -- FINAL VACUUM (in. Hg): 9.5	Leak Rate : 0.000 in. Hg in 60 sec.

ACCEPTANCE CRITERIA : Leak Rate < 2.5 mm Hg (0.1 in. Hg) after 60 sec.

SAMPLING TIME (min)	CLOCK TIME (24-hr)	FLOW RATE (Lpm)	GAS METER READING (L)	TEMPERATURE READINGS PROBE (°C or °F)	DRY GAS METER (°C or °F)	TRAP (°C or °F)	PUMP VAC. (in. Hg)
0	1340	0.5	1481.24	126	42	11	7
5	1345	0.5	1483.04	128	42	13	7
10	1350	0.5	1485.05	127	42	14	8
15	1355	0.6	1487.64	128	43	13	8
20	1400	0.6	1490.05	128	43	13	8
25	1405	0.6	1492.59	128	43	13	8
30	1410	0.6	1495.15	128	43	14	8
35	1415	0.6	1497.51	128	43	14	8
40	1420	—	1500.08	—	—	—	—

COMMENTS :

Laboratory Lot #:

O'BRIEN & GERE

VOST DATA SHEET

FACILITY GENERAL DYNAMICS	DATE 6/26/12
LOCATION CARTHAGE, MO	OPERATOR W. Harsy
SOURCE SK	BAR. PRESSURE, in. Hg 28.75
CONDITION 1	PROBE LENGTH (ft) 3
RUN NO. 1B	DESIRED PROBE TEMP. 125°C
METER CALIBRATION FACTOR (Y) 1.0711	PROBE PURGED ? YES
DRY GAS METER NO. VB3	DESIRED FLOW RATE (Lpm) 0.5
TENAX TUBE NO"S 1A2 1B2	DESIRED SAMPLE VOLUME (dsL) 20
TENAX/CHARCOAL TUBE NO"S 1C2	DGM PRESSURE, in. H_2O 0.9
Train Leak Check -- INITIAL VACUUM (in. Hg): 12	Leak Rate : 0.000 in. Hg in 60 sec.
Train Leak Check -- FINAL VACUUM (in. Hg): 9	Leak Rate : 0.000 in. Hg in 60 sec.

ACCEPTANCE CRITERIA : Leak Rate < 2.5 mm Hg (0.1 in. Hg) after 60 sec.

SAMPLING TIME (min)	CLOCK TIME (24-hr)	FLOW RATE (Lpm)	GAS METER READING (L)	TEMPERATURE READINGS PROBE (°C or °F)	DRY GAS METER (°C or °F)	TRAP (°C or °F)	PUMP VAC. (in. Hg)
0	1435	0.6	1500.32	129	43	15	5
5	1440	0.6	1502.80	129	43	15	6
10	1445	0.6	1505.41	128	43	17	6
15	1450	0.6	—	128	44	10	6
20	1455	0.6	1510.43	127	44	12	6
25	1500	0.6	1512.95	128	44	9	6
30	1505	0.6	1515.57	128	44	9	6
35	1510	0.6	1518.14	128	44	10	6
40	1515	—	1520.41	—	—	—	—

COMMENTS :

Laboratory Lot #:

O'BRIEN & GERE

VOST DATA SHEET

FACILITY GENERAL DYNAMICS	DATE 6/26/12
LOCATION CARTHAGE, MO	OPERATOR W. HARDY
SOURCE SK	BAR. PRESSURE, In. Hg 28.75
CONDITION 1	PROBE LENGTH (ft) 3
RUN NO. 1C	DESIRED PROBE TEMP. 125°C
METER CALIBRATION FACTOR (Y) ~~1A3~~ 1B3 1.0711	PROBE PURGED ? YES
DRY GAS METER NO. ~~1B3~~ VB3	DESIRED FLOW RATE (Lpm) 0.5
TENAX TUBE NO"S 1A3 1B3	DESIRED SAMPLE VOLUME (dsL) 20
TENAX/CHARCOAL TUBE NO"S 1C3	DGM PRESSURE, In. H_2O 0.9
Train Leak Check -- INITIAL VACUUM (In. Hg): 12	Leak Rate : 0.000 In. Hg In 60 sec.
Train Leak Check -- FINAL VACUUM (In. Hg): 11	Leak Rate : 0.000 In. Hg In 60 sec.

ACCEPTANCE CRITERIA : Leak Rate < 2.5 mm Hg (0.1 In. Hg) after 60 sec.

SAMPLING TIME (min)	CLOCK TIME (24-hr)	FLOW RATE (Lpm)	GAS METER READING (L)	TEMPERATURE READINGS PROBE (°C or °F)	DRY GAS METER (°C or °F)	TRAP (°C or °F)	PUMP VAC. (in. Hg)
0	1538	0.6	1520.56	125	43	11	10
5	1543	0.6	1523.14	128	44	11	10
10	1548	0.6	1525.74	128	44	11	10
15	1553	0.6	1528.58	128	44	11	8
20	1558	0.6	1530.95	128	44	14	8
25	1603	0.6	1533.54	128	44	13	8
30	1608	0.6	1535.60	128	45	11	7
35	1613	0.6	1538.—	128	45	11	7
40	1618	—	1541.18	—	—	—	—

COMMENTS :

Laboratory Lot #:

O'BRIEN & GERE

VOST DATA SHEET

FACILITY GENERAL DYNAMICS	DATE 6/26/12
LOCATION CARTHAGE, MO.	OPERATOR W. Hardy
SOURCE SK	BAR. PRESSURE, in. Hg 28.70
CONDITION 1	PROBE LENGTH (ft) 3
RUN NO. 2A	DESIRED PROBE TEMP. 125 °C
METER CALIBRATION FACTOR (Y) 1.0711	PROBE PURGED ? YES
DRY GAS METER NO. V83	DESIRED FLOW RATE (Lpm) 0.5
TENAX TUBE NO"S 2A1 2B1	DESIRED SAMPLE VOLUME (dsL) 20
TENAX/CHARCOAL TUBE NO"S 2C1	DGM PRESSURE, in. H_2O 0.9
Train Leak Check -- INITIAL VACUUM (in. Hg): 9	Leak Rate : 0.000 in. Hg in 60 sec.
Train Leak Check -- FINAL VACUUM (in. Hg): 7	Leak Rate : 0.000 in. Hg in 60 sec.

ACCEPTANCE CRITERIA : Leak Rate < 2.5 mm Hg (0.1 in. Hg) after 60 sec.

SAMPLING TIME (min)	CLOCK TIME (24-hr)	FLOW RATE (Lpm)	GAS METER READING (L)	TEMPERATURE READINGS PROBE (°C or °F)	DRY GAS METER (°C or °F)	TRAP (°C or °F)	PUMP VAC. (in. Hg)
0	1805	0.6	1541.34	129	41	16	5
5	1810	0.6	1543.66	128	41	15	5
10	1815	0.6	1546.35	129	41	14	5
15	1820	0.6	1548.63	128	42	16	5
20	1825	0.6	1551.12	128	42	14	5
25	1830	0.6	1553.60	128	42	14	5
30	1835	0.6	1556.00	128	43	14	5
35	1840	0.6	1558.48	129	43	15	5
40	1845	—	1560.82	—	—	—	—

COMMENTS :

Laboratory Lot #:

O'BRIEN & GERE

VOST DATA SHEET

FACILITY GENERAL DYNAMICS	DATE 6/26/12
LOCATION CARTHAGE, MO	OPERATOR W. HARDY
SOURCE SK	BAR. PRESSURE, in. Hg 28-70
CONDITION 1	PROBE LENGTH (ft) 3
RUN NO. 2B	DESIRED PROBE TEMP. 125 °C
METER CALIBRATION FACTOR (Y) 1.0711	PROBE PURGED ? YES
DRY GAS METER NO. VB3	DESIRED FLOW RATE (Lpm) 0.5
TENAX TUBE NO"S 2A2 2B2	DESIRED SAMPLE VOLUME (dsL) 30
TENAX/CHARCOAL TUBE NO"S 2C2	DGM PRESSURE, in. H_2O 0.9
Train Leak Check -- INITIAL VACUUM (in. Hg): 14	Leak Rate : 0.000 in. Hg in 60 sec.
Train Leak Check -- FINAL VACUUM (in. Hg): 12	Leak Rate : 0.000 in. Hg in 60 sec.

ACCEPTANCE CRITERIA : Leak Rate < 2.5 mm Hg (0.1 in. Hg) after 60 sec.

SAMPLING TIME (min)	CLOCK TIME (24-hr)	FLOW RATE (Lpm)	GAS METER READING (L)	TEMPERATURE READINGS PROBE (°C or °F)	DRY GAS METER (°C or °F)	TRAP (°C or °F)	PUMP VAC. (in. Hg)
0	1900	0.6	1561.03	129	43	15	7
5	1905	0.6	—	128	43	15	6
10	1910	0.6	1566.04	128	43	14	6
15	1915	0.6	1568.51	128	43	15	6
20	1920	0.6	1571.15	128	43	14	6
25	1925	0.6	1573.48	128	44	15	6
30	1930	0.6	1576.10	128	44	15	6
35	1935	0.6	1578.54	128	44	15	6
40	1940	—	1581.04	—	—	—	—

COMMENTS :

Laboratory Lot #:

O'BRIEN & GERE

VOST DATA SHEET

FACILITY GENERAL DYNAMICS	DATE 6/26/12
LOCATION CARTHAGE, MO.	OPERATOR N. HALBY
SOURCE SK	BAR. PRESSURE, in. Hg 28.20
CONDITION 1	PROBE LENGTH (ft) 3
RUN NO. 2C	DESIRED PROBE TEMP. 125°C
METER CALIBRATION FACTOR (Y) 1.0711	PROBE PURGED ? YES
DRY GAS METER NO. VB3	DESIRED FLOW RATE (Lpm) 0.5
TENAX TUBE NO"S 2A3 2B3	DESIRED SAMPLE VOLUME (dsL) 20
TENAX/CHARCOAL TUBE NO"S 2C3	DGM PRESSURE, in. H_2O 0.9
Train Leak Check -- INITIAL VACUUM (in. Hg): 12.5	Leak Rate : 0.000 in. Hg in 60 sec.
Train Leak Check -- FINAL VACUUM (in. Hg): 10	Leak Rate : 0.000 in. Hg in 60 sec.

ACCEPTANCE CRITERIA : Leak Rate < 2.5 mm Hg (0.1 in. Hg) after 60 sec.

SAMPLING TIME (min)	CLOCK TIME (24-hr)	FLOW RATE (Lpm)	GAS METER READING (L)	TEMPERATURE READINGS PROBE (°C or °F)	DRY GAS METER (°C or °F)	TRAP (°C or °F)	PUMP VAC. (in. Hg)
0	2002	0.6	1581.35	129	43	15	9
5	2007	0.6	1583.72	128	43	14	9
10	2012	0.6	1586.15	129	43	14	9
15	2017	0.6	1588.87	128	43	14	8
20	2022	0.6	1591.36	128	43	14	8
25	2027	0.6	1594.15	128	43	15	8
30	2032	0.6	1596.87	128	43	15	8
35	2037	0.6	1599.21	128	43	16	8
40	2042	—	1601.60	—	—	—	—

COMMENTS :

Laboratory Lot #:

O'BRIEN & GERE

VOST DATA SHEET

FACILITY GENERAL DYNAMICS	DATE 6.27.12
LOCATION CARTHAGE, MO	OPERATOR W. HARDY
SOURCE SK	BAR. PRESSURE, in. Hg 28.7
CONDITION 1	PROBE LENGTH (ft) 3
RUN NO. 3A	DESIRED PROBE TEMP. 120°C
METER CALIBRATION FACTOR (Y) 1.0711	PROBE PURGED ? YES
DRY GAS METER NO. VB3	DESIRED FLOW RATE (Lpm) 0.5
TENAX TUBE NO"S 3A1 3B1	DESIRED SAMPLE VOLUME (dsL) 20
TENAX/CHARCOAL TUBE NO"S 3C1	DGM PRESSURE, in. H_2O 1.0
Train Leak Check -- INITIAL VACUUM (in. Hg): 10	Leak Rate : 0.000 in. Hg in 60 sec.
Train Leak Check -- FINAL VACUUM (in. Hg): 13	Leak Rate : 0.000 in. Hg in 60 sec.

ACCEPTANCE CRITERIA : Leak Rate < 2.5 mm Hg (0.1 in. Hg) after 60 sec.

SAMPLING TIME (min)	CLOCK TIME (24-hr)	FLOW RATE (Lpm)	GAS METER READING (L)	TEMPERATURE READINGS PROBE (°C or °F)	DRY GAS METER (°C or °F)	TRAP (°C or °F)	PUMP VAC. (in. Hg)
0	0850	0.6	1601.77	128	33	15	12
5	0855	0.6	1603.83	128	33	14	12
10	0900	0.6	1606.37	128	34	15	12
15	0905	0.6	1608.74	128	34	15	12
20	0910	0.6	1611.15	128	35	15	12
25	0915	0.6	1613.60	128	36	15	12
30	0920	0.6	1615.92	128	37	15	12
35	0925	0.6	1618.65	128	37	15	12
40	0930	—	1621.96	—	—	—	—

COMMENTS :

Laboratory Lot #:

O'BRIEN & GERE

VOST DATA SHEET

FACILITY GENERAL DYNAMICS	DATE 6.27.12
LOCATION CARTHAGE MO.	OPERATOR W. HARGY
SOURCE SK	BAR. PRESSURE, In. Hg 28.7
CONDITION 1	PROBE LENGTH (ft) 3
RUN NO. 3B	DESIRED PROBE TEMP. 120 °F
METER CALIBRATION FACTOR (Y) 1.0711	PROBE PURGED ? YES
DRY GAS METER NO. VB3	DESIRED FLOW RATE (Lpm) 0.5
TENAX TUBE NO"S 3A2 3B2	DESIRED SAMPLE VOLUME (dsL) 20
TENAX/CHARCOAL TUBE NO"S 3C2	DGM PRESSURE, In. H_2O 0.9
Train Leak Check -- INITIAL VACUUM (In. Hg): 11	Leak Rate : 0.000 In. Hg in 60 sec.
Train Leak Check -- FINAL VACUUM (In. Hg): 7	Leak Rate : 0.000 In. Hg in 60 sec.

ACCEPTANCE CRITERIA : Leak Rate < 2.5 mm Hg (0.1 In. Hg) after 60 sec.

SAMPLING TIME (min)	CLOCK TIME (24-hr)	FLOW RATE (Lpm)	GAS METER READING (L)	TEMPERATURE READINGS PROBE (°C or °F)	DRY GAS METER (°C or °F)	TRAP (°C or °F)	PUMP VAC. (In. Hg)
0	0945	0.6	1621.18	128	38	13	6
5	0950	0.6	1623.60	128	39	13	6
10	0955	0.6	1626.08	128	39	13	6
15	1000	0.6	1628.36	128	39	13	6
20	1005	0.6	1630.80	128	40	13	6
25	1010	0.6	1633.23	128	41	14	6
30	1015	0.6	1635.54	128	41	14	6
35	1020	0.6	1638.07	128	41	14	6
40	1025	—	1640.40	—	—	—	—

COMMENTS :

Laboratory Lot #:

O'BRIEN & GERE

VOST DATA SHEET

FACILITY GENERAL DYNAMICS	DATE 6.27.2
LOCATION CARTHAGE, MO.	OPERATOR N. HAYDY
SOURCE SK	BAR. PRESSURE, in. Hg 28.7
CONDITION 1	PROBE LENGTH (ft) 3
RUN NO. 3C	DESIRED PROBE TEMP. 120°C
METER CALIBRATION FACTOR (Y) 1.0711	PROBE PURGED ? YES
DRY GAS METER NO. VB3	DESIRED FLOW RATE (Lpm) 0.5
TENAX TUBE NO"S 3A3 3B3	DESIRED SAMPLE VOLUME (dsL) 20
TENAX/CHARCOAL TUBE NO"S 3C3	DGM PRESSURE, in. H_2O 1.0
Train Leak Check -- INITIAL VACUUM (in. Hg): 10.5	Leak Rate : 0.000 in. Hg in 60 sec.
Train Leak Check -- FINAL VACUUM (in. Hg): 14	Leak Rate : 0.000 in. Hg in 60 sec.

ACCEPTANCE CRITERIA : Leak Rate < 2.5 mm Hg (0.1 in. Hg) after 60 sec.

SAMPLING TIME (min)	CLOCK TIME (24-hr)	FLOW RATE (Lpm)	GAS METER READING (L)	TEMPERATURE READINGS PROBE (°C or °F)	DRY GAS METER (°C or °F)	TRAP (°C or °F)	PUMP VAC. (in. Hg)
0	1040	0.6	1640.48	129	41	16	8
5	1045	0.6	1642.70	128	42	13	8
10	1050	0.6	1645.40	127	42	13	8
15	1055	0.6	1647.70	128	42	13	8
20	1100	0.6	1650.25	128	42	15	8
25	1105	0.6	1652.67	128	43	14	8
30	1110	0.6	1655.00	128	43	15	8
35	1115	0.6	1657.61	128	43	16	8
40	1120	—	1659.92	—	—	—	—

COMMENTS :

Laboratory Lot #:

CEMS

AVERAGED CEM DATA

Job Number: *49349* **Start Time:** *13:40:00*
Run ID: *R1* **Start Date:** *06/26/12*

Date	Time	O2	CO2	NOx	CO	THC
6/26/2012	13:41:00	20.82	0.47	3.71	20.49	2.6
6/26/2012	13:42:00	20.82	0.47	3.82	20.84	2.58
6/26/2012	13:43:00	20.82	0.47	3.76	20.66	2.56
6/26/2012	13:44:00	20.82	0.47	3.74	21.3	2.59
6/26/2012	13:45:00	20.81	0.47	3.9	22.27	2.62
6/26/2012	13:46:00	20.81	0.47	4.08	24.65	2.65
6/26/2012	13:47:00	20.82	0.48	4.25	24.8	2.59
6/26/2012	13:48:00	20.79	0.49	4.06	24.07	2.64
6/26/2012	13:49:00	20.8	0.54	3.96	24.01	2.45
6/26/2012	13:50:00	20.8	0.49	3.88	22.21	2.67
6/26/2012	13:51:00	20.79	0.5	3.57	21.48	2.59
6/26/2012	13:52:00	20.81	0.56	3.46	21.52	2.53
6/26/2012	13:53:00	20.81	0.5	3.8	22.77	2.51
6/26/2012	13:54:00	20.81	0.5	4.01	21.21	2.53
6/26/2012	13:55:00	20.81	0.49	3.76	19.45	2.56
6/26/2012	13:56:00	20.82	0.51	3.56	18.43	2.54
6/26/2012	13:57:00	20.8	0.55	3.6	20.83	2.56
6/26/2012	13:58:00	20.81	0.56	3.94	23.3	2.49
6/26/2012	13:59:00	20.79	0.52	4.04	22.34	2.36
6/26/2012	14:00:00	20.8	0.52	4.06	22.09	2.31
6/26/2012	14:01:00	20.79	0.51	4.12	21.88	2.34
6/26/2012	14:02:00	20.79	0.52	3.9	20.39	2.45
6/26/2012	14:03:00	20.8	0.52	3.72	19.18	2.49
6/26/2012	14:04:00	20.77	0.54	3.65	19.73	2.41
6/26/2012	14:05:00	20.79	0.52	3.85	20.93	2.4
6/26/2012	14:06:00	20.78	0.53	4.12	22.68	2.33
6/26/2012	14:07:00	20.79	0.52	4.21	23.23	2.41
6/26/2012	14:08:00	20.79	0.53	4.3	23.62	2.52
6/26/2012	14:09:00	20.79	0.52	4.31	23.42	2.56
6/26/2012	14:10:00	20.79	0.53	4.51	24.08	2.55
6/26/2012	14:11:00	20.81	0.53	4.55	23.03	2.47
6/26/2012	14:12:00	20.82	0.57	4.14	21.09	2.46
6/26/2012	14:13:00	20.77	0.54	3.94	21.16	2.48

AVERAGED CEM DATA

Job Number: *49349*
Run ID: *R1*

Start Time: *13:40:00*
Start Date: *06/26/12*

Date	Time	O2	CO2	NOx	CO	THC
6/26/2012	14:14:00	20.79	0.55	3.91	20.96	2.57
6/26/2012	14:15:00	20.8	0.55	3.88	20.85	2.66
6/26/2012	14:16:00	20.79	0.55	3.89	20.79	2.57
6/26/2012	14:17:00	20.79	0.54	3.73	19.1	2.5
6/26/2012	14:18:00	20.79	0.55	3.62	18.62	2.5
6/26/2012	14:19:00	20.79	0.55	3.6	19.59	2.56
6/26/2012	14:20:00	20.8	0.57	3.66	19.96	2.68
6/26/2012	14:21:00	20.79	0.56	3.62	18.89	2.73
6/26/2012	14:22:00	20.79	0.6	3.58	17.95	2.67
6/26/2012	14:23:00	20.8	0.56	3.44	17.19	2.58
6/26/2012	14:24:00	20.78	0.56	3.37	17.4	2.61
6/26/2012	14:25:00	20.79	0.56	3.34	17.44	2.65
6/26/2012	14:26:00	20.78	0.57	3.37	17.58	2.75
6/26/2012	14:27:00	20.8	0.58	3.46	17.41	2.75
6/26/2012	14:28:00	20.79	0.58	3.41	17.59	2.72
6/26/2012	14:29:00	20.8	0.57	3.58	18.31	2.68
6/26/2012	14:30:00	20.77	0.58	3.9	20.21	2.73
6/26/2012	14:31:00	20.8	0.59	4.23	21.	2.82
6/26/2012	14:32:00	20.79	0.59	4.56	22.62	2.91
6/26/2012	14:33:00	20.8	0.6	4.4	21.96	2.9
6/26/2012	14:34:00	20.79	0.59	4.19	20.48	2.82
6/26/2012	14:35:00	20.81	0.6	3.86	19.66	2.74
6/26/2012	14:36:00	20.81	0.61	3.79	19.67	2.8
6/26/2012	14:37:00	20.82	0.62	3.9	20.9	2.93
6/26/2012	14:38:00	20.8	0.62	4.17	22.05	3.01
6/26/2012	14:39:00	20.78	0.68	4.19	22.41	3.
6/26/2012	14:40:00	20.79	0.62	4.4	24.26	2.97
6/26/2012	14:41:00	20.8	0.62	4.39	23.08	2.98
6/26/2012	14:42:00	20.79	0.63	4.2	20.9	3.05
6/26/2012	14:43:00	20.79	0.62	4.04	21.87	3.17
6/26/2012	14:44:00	20.78	0.64	4.2	22.49	3.26
6/26/2012	14:45:00	20.79	0.64	4.37	22.32	3.19
6/26/2012	14:46:00	20.79	0.65	4.02	20.43	3.1

AVERAGED CEM DATA

Job Number: *49349* **Start Time:** *13:40:00*
Run ID: *R1* **Start Date:** *06/26/12*

Date	Time	O2	CO2	NOx	CO	THC
6/26/2012	14:47:00	20.79	0.74	3.82	19.17	3.04
6/26/2012	14:48:00	20.8	0.65	3.79	20.92	3.12
6/26/2012	14:49:00	20.8	0.66	4.19	23.1	3.24
6/26/2012	14:50:00	20.81	0.68	4.31	23.17	3.33
6/26/2012	14:51:00	20.74	0.68	4.11	21.44	3.24
6/26/2012	14:52:00	20.8	0.68	3.84	19.55	3.12
6/26/2012	14:53:00	20.8	0.7	3.74	19.08	3.09
6/26/2012	14:54:00	20.79	0.7	3.53	17.74	3.1
6/26/2012	14:55:00	20.79	0.71	3.34	16.96	3.18
6/26/2012	14:56:00	20.81	0.72	3.37	17.08	3.26
6/26/2012	14:57:00	20.78	0.71	3.46	17.55	3.25
6/26/2012	14:58:00	20.79	0.71	3.59	17.77	3.19
6/26/2012	14:59:00	20.8	0.71	3.83	19.37	3.13
6/26/2012	15:00:00	20.8	0.71	4.03	20.14	3.19
6/26/2012	15:01:00	20.8	0.71	4.29	20.85	3.26
6/26/2012	15:02:00	20.79	0.71	4.27	20.94	3.34
6/26/2012	15:03:00	20.79	0.77	4.11	20.48	3.3
6/26/2012	15:04:00	20.8	0.74	4.21	21.38	3.22
6/26/2012	15:05:00	20.8	0.74	4.46	20.79	3.17
6/26/2012	15:06:00	20.79	0.73	4.21	19.3	3.23
6/26/2012	15:07:00	20.8	0.73	4.05	18.49	3.28
6/26/2012	15:08:00	20.78	0.74	4.18	19.8	3.37
6/26/2012	15:09:00	20.79	0.75	4.35	21.05	3.31
6/26/2012	15:10:00	20.8	0.78	4.55	22.79	3.25
6/26/2012	15:11:00	20.8	0.73	4.88	24.08	3.21
6/26/2012	15:12:00	20.79	0.72	4.89	24.56	3.18
6/26/2012	15:13:00	20.79	0.73	4.68	24.42	3.22
6/26/2012	15:14:00	20.78	0.73	4.59	24.26	3.2
6/26/2012	15:15:00	20.79	0.73	4.4	22.31	3.07
6/26/2012	15:16:00	20.78	0.72	4.41	23.3	3.03
6/26/2012	15:17:00	20.79	0.72	4.74	24.45	2.96
6/26/2012	15:18:00	20.78	0.73	4.63	23.3	2.97
6/26/2012	15:19:00	20.78	0.72	4.41	22.32	2.98

AVERAGED CEM DATA

Job Number: *49349*
Run ID: *R1*

Start Time: *13:40:00*
Start Date: *06/26/12*

Date	Time	O2	CO2	NOx	CO	THC
6/26/2012	15:20:00	20.78	0.77	4.19	21.36	2.96
6/26/2012	15:21:00	20.76	0.72	4.1	20.59	2.85
6/26/2012	15:22:00	20.77	0.71	3.85	20.09	2.75
6/26/2012	15:23:00	20.78	0.71	3.86	20.05	2.73
6/26/2012	15:24:00	20.77	0.72	4.01	19.9	2.77
6/26/2012	15:25:00	20.76	0.71	4.05	19.08	2.86
6/26/2012	15:26:00	20.76	0.76	3.86	18.43	2.85
6/26/2012	15:27:00	20.77	0.71	3.7	18.13	2.74
6/26/2012	15:28:00	20.77	0.7	3.7	17.8	2.65
6/26/2012	15:29:00	20.78	0.7	3.54	17.15	2.7
6/26/2012	15:30:00	20.77	0.69	3.38	15.58	2.74
6/26/2012	15:31:00	20.78	0.7	3.12	14.9	2.83
6/26/2012	15:32:00	20.76	0.68	3.22	15.74	2.78
6/26/2012	15:33:00	20.77	0.71	3.3	15.64	2.73
6/26/2012	15:34:00	20.78	0.68	3.34	15.97	2.72
6/26/2012	15:35:00	20.76	0.68	3.5	17.14	2.71
6/26/2012	15:36:00	20.78	0.74	3.55	16.89	2.78
6/26/2012	15:37:00	20.78	0.67	3.66	18.96	2.93
6/26/2012	15:38:00	20.76	0.7	3.7	18.68	2.85
6/26/2012	15:39:00	20.75	0.72	3.58	18.21	2.78
6/26/2012	15:40:00	20.76	0.67	3.38	17.3	2.71
6/26/2012	15:41:00	20.77	0.69	3.34	16.71	2.72
6/26/2012	15:42:00	20.77	0.67	3.22	16.31	2.8
6/26/2012	15:43:00	20.78	0.67	3.28	17.79	2.92
6/26/2012	15:44:00	20.75	0.67	3.57	19.01	2.86
6/26/2012	15:45:00	20.75	0.67	3.67	19.21	2.84
6/26/2012	15:46:00	20.77	0.66	3.94	21.1	2.79
6/26/2012	15:47:00	20.75	0.66	4.	21.8	2.82
6/26/2012	15:48:00	20.76	0.66	4.04	21.63	2.91
6/26/2012	15:49:00	20.76	0.67	3.95	20.92	2.91
6/26/2012	15:50:00	20.77	0.66	4.03	22.65	3.03
6/26/2012	15:51:00	20.74	0.68	4.27	23.04	2.92
6/26/2012	15:52:00	20.77	0.65	4.26	23.27	2.86

AVERAGED CEM DATA

Job Number: *49349*
Run ID: *R1*

Start Time: *13:40:00*
Start Date: *06/26/12*

Date	Time	O2	CO2	NOx	CO	THC
6/26/2012	15:53:00	20.73	0.75	4.22	23.35	2.95
6/26/2012	15:54:00	20.77	0.67	4.36	23.24	3.03
6/26/2012	15:55:00	20.77	0.66	4.34	24.01	3.09
6/26/2012	15:56:00	20.77	0.66	4.2	22.75	3.02
6/26/2012	15:57:00	20.76	0.67	4.08	22.82	2.96
6/26/2012	15:58:00	20.77	0.67	4.02	22.14	2.89
6/26/2012	15:59:00	20.75	0.67	3.89	20.92	2.93
6/26/2012	16:00:00	20.75	0.67	3.72	20.24	2.98
6/26/2012	16:01:00	20.76	0.68	3.58	19.12	3.02
6/26/2012	16:02:00	20.74	0.71	3.53	19.47	3.
6/26/2012	16:03:00	20.77	0.66	3.56	19.46	2.93
6/26/2012	16:04:00	20.76	0.66	3.61	18.93	2.87
6/26/2012	16:05:00	20.76	0.67	3.81	20.21	2.91
6/26/2012	16:06:00	20.76	0.66	4.14	21.83	3.01
6/26/2012	16:07:00	20.77	0.71	4.17	21.98	3.04
6/26/2012	16:08:00	20.76	0.67	3.89	20.75	3.03
6/26/2012	16:09:00	20.77	0.66	3.66	20.22	2.88
6/26/2012	16:10:00	20.77	0.67	3.75	21.04	2.9
6/26/2012	16:11:00	20.75	0.68	3.97	22.72	2.95
6/26/2012	16:12:00	20.75	0.66	4.44	23.97	3.11
6/26/2012	16:13:00	20.76	0.69	4.1	22.45	3.05
6/26/2012	16:14:00	20.76	0.67	3.89	21.53	3.04
6/26/2012	16:15:00	20.77	0.67	3.76	20.95	2.96
6/26/2012	16:16:00	20.78	0.67	3.72	20.2	2.92
6/26/2012	16:17:00	20.77	0.66	3.96	20.14	3.01
6/26/2012	16:18:00	20.75	0.68	4.3	22.14	3.11
6/26/2012	16:19:00	20.76	0.66	4.53	23.62	3.18
6/26/2012	16:20:00	20.79	0.68	4.41	23.49	3.13
6/26/2012	16:21:00	20.75	0.68	4.19	21.89	3.04
6/26/2012	16:22:00	20.76	0.66	3.84	19.88	3.02
6/26/2012	16:23:00	20.76	0.67	3.54	19.88	3.11
6/26/2012	16:24:00	20.77	0.67	3.67	20.46	3.2
6/26/2012	16:25:00	20.76	0.73	3.84	19.52	3.16

AVERAGED CEM DATA

Job Number: *49349*
Run ID: *R1*

Start Time: *13:40:00*
Start Date: *06/26/12*

Date	Time	O2	CO2	NOx	CO	THC
6/26/2012	16:26:00	20.76	0.68	3.59	18.41	3.07
6/26/2012	16:27:00	20.77	0.68	3.73	20.22	3.02
6/26/2012	16:28:00	20.77	0.68	4.07	21.78	3.06
6/26/2012	16:29:00	20.77	0.69	4.05	21.43	3.13
6/26/2012	16:30:00	20.76	0.73	4.	21.82	3.25
6/26/2012	16:31:00	20.77	0.69	3.92	21.39	3.27
6/26/2012	16:32:00	20.77	0.68	3.75	20.19	3.16
6/26/2012	16:33:00	20.77	0.68	3.74	19.98	3.14
6/26/2012	16:34:00	20.74	0.69	3.84	20.5	3.12
6/26/2012	16:35:00	20.76	0.69	3.81	20.21	3.21
6/26/2012	16:36:00	20.76	0.69	3.69	19.65	3.29
6/26/2012	16:37:00	20.75	0.7	3.62	18.23	3.29
6/26/2012	16:38:00	20.75	0.7	3.67	17.83	3.22
6/26/2012	16:39:00	20.75	0.7	3.83	18.73	3.14
6/26/2012	16:40:00	20.77	0.7	3.66	17.59	3.09
6/26/2012	16:41:00	20.77	0.7	3.47	17.03	3.15
6/26/2012	16:42:00	20.77	0.71	3.51	16.44	3.24
6/26/2012	16:43:00	20.76	0.71	3.63	17.72	3.29
6/26/2012	16:44:00	20.74	0.72	3.64	16.33	3.18
6/26/2012	16:45:00	20.78	0.7	3.47	15.29	3.08
6/26/2012	16:46:00	20.76	0.7	3.43	16.03	3.07
6/26/2012	16:47:00	20.77	0.76	3.53	16.18	3.17
6/26/2012	16:48:00	20.76	0.71	3.56	16.54	3.23
6/26/2012	16:49:00	20.75	0.71	3.56	16.9	3.3
6/26/2012	16:50:00	20.77	0.7	3.54	16.44	3.23
6/26/2012	16:51:00	20.76	0.71	3.6	17.22	3.14
6/26/2012	16:52:00	20.78	0.71	3.87	18.88	3.13
6/26/2012	16:53:00	20.78	0.73	4.21	20.76	3.16
6/26/2012	16:54:00	20.78	0.7	3.97	19.13	3.21
6/26/2012	16:55:00	20.77	0.7	3.78	18.77	3.25
6/26/2012	16:56:00	20.76	0.76	3.89	20.99	3.21
6/26/2012	16:57:00	20.73	0.71	4.2	23.44	3.54

AVERAGED CEM DATA

Job Number: *49349*
Run ID: *R1*

Start Time: *13:40:00*
Start Date: *06/26/12*

Date	Time	O2	CO2	NOx	CO	THC
6/26/2012	16:58:00	20.78	0.72	3.13	30.75	4.07
Average Value:		**20.78**	**0.65**	**3.9**	**20.4**	**2.92**
Corrected Average:		**20.93**	**.25**	**3.38**	**20.27**	**2.68**

AVERAGED CEM DATA

Job Number: *49349*
Run ID: *R2*

Start Time: *18:05:00*
Start Date: *06/26/12*

Date	Time	O2	CO2	NOx	CO	THC
6/26/2012	18:06:00	20.75	0.42	2.83	19.78	2.94
6/26/2012	18:07:00	20.75	0.41	2.66	18.92	2.91
6/26/2012	18:08:00	20.77	0.46	2.57	17.24	2.74
6/26/2012	18:09:00	20.75	0.41	2.46	16.47	2.67
6/26/2012	18:10:00	20.74	0.4	2.67	17.55	2.71
6/26/2012	18:11:00	20.76	0.41	2.73	18.02	2.76
6/26/2012	18:12:00	20.76	0.41	2.69	18.18	2.88
6/26/2012	18:13:00	20.76	0.42	2.88	19.57	2.88
6/26/2012	18:14:00	20.76	0.41	3.23	20.52	2.79
6/26/2012	18:15:00	20.75	0.4	3.18	19.56	2.62
6/26/2012	18:16:00	20.75	0.41	2.99	17.91	2.6
6/26/2012	18:17:00	20.74	0.4	2.95	16.38	2.64
6/26/2012	18:18:00	20.76	0.4	2.75	15.78	2.69
6/26/2012	18:19:00	20.76	0.4	2.75	16.19	2.7
6/26/2012	18:20:00	20.75	0.41	2.72	16.73	2.65
6/26/2012	18:21:00	20.71	0.4	2.93	17.29	2.54
6/26/2012	18:22:00	20.74	0.39	3.	17.98	2.52
6/26/2012	18:23:00	20.75	0.4	3.23	19.14	2.59
6/26/2012	18:24:00	20.77	0.39	3.3	20.28	2.78
6/26/2012	18:25:00	20.76	0.39	3.42	19.76	2.72
6/26/2012	18:26:00	20.77	0.39	3.22	18.98	2.61
6/26/2012	18:27:00	20.74	0.39	3.16	18.56	2.51
6/26/2012	18:28:00	20.74	0.38	3.09	18.93	2.45
6/26/2012	18:29:00	20.75	0.39	3.09	18.44	2.5
6/26/2012	18:30:00	20.76	0.38	2.88	17.66	2.61
6/26/2012	18:31:00	20.75	0.43	2.88	18.14	2.61
6/26/2012	18:32:00	20.76	0.38	2.96	17.98	2.49
6/26/2012	18:33:00	20.76	0.38	2.92	17.42	2.38
6/26/2012	18:34:00	20.76	0.38	2.81	16.14	2.39
6/26/2012	18:35:00	20.75	0.38	2.84	15.85	2.48
6/26/2012	18:36:00	20.76	0.38	2.96	16.66	2.56
6/26/2012	18:37:00	20.74	0.37	3.17	17.44	2.54
6/26/2012	18:38:00	20.74	0.37	3.29	18.3	2.45

AVERAGED CEM DATA

Job Number: *49349* **Start Time:** *18:05:00*
Run ID: *R2* **Start Date:** *06/26/12*

Date	Time	O2	CO2	NOx	CO	THC
6/26/2012	18:39:00	20.75	0.36	3.38	18.5	2.32
6/26/2012	18:40:00	20.74	0.36	3.35	17.78	2.26
6/26/2012	18:41:00	20.75	0.36	3.41	18.17	2.33
6/26/2012	18:42:00	20.73	0.36	3.47	18.22	2.44
6/26/2012	18:43:00	20.75	0.36	3.31	17.61	2.44
6/26/2012	18:44:00	20.76	0.35	3.16	17.77	2.36
6/26/2012	18:45:00	20.76	0.35	3.18	17.27	2.25
6/26/2012	18:46:00	20.75	0.35	3.21	18.24	2.26
6/26/2012	18:47:00	20.73	0.36	3.26	17.35	2.35
6/26/2012	18:48:00	20.75	0.34	3.38	19.13	2.48
6/26/2012	18:49:00	20.75	0.36	3.93	22.6	2.51
6/26/2012	18:50:00	20.74	0.4	4.07	21.83	2.38
6/26/2012	18:51:00	20.74	0.33	4.1	22.53	2.28
6/26/2012	18:52:00	20.74	0.33	4.27	24.83	2.33
6/26/2012	18:53:00	20.74	0.33	4.59	26.23	2.39
6/26/2012	18:54:00	20.74	0.33	4.56	25.56	2.42
6/26/2012	18:55:00	20.71	0.33	4.29	23.59	2.39
6/26/2012	18:56:00	20.74	0.33	4.1	23.59	2.3
6/26/2012	18:57:00	20.76	0.33	4.06	23.55	2.21
6/26/2012	18:58:00	20.74	0.33	3.95	23.19	2.25
6/26/2012	18:59:00	20.74	0.38	3.82	22.65	2.33
6/26/2012	19:00:00	20.75	0.33	3.69	21.47	2.39
6/26/2012	19:01:00	20.75	0.33	3.47	20.23	2.29
6/26/2012	19:02:00	20.75	0.33	3.51	19.87	2.21
6/26/2012	19:03:00	20.76	0.31	3.59	20.93	2.15
6/26/2012	19:04:00	20.78	0.32	3.64	22.	2.18
6/26/2012	19:05:00	20.73	0.36	3.68	22.49	2.25
6/26/2012	19:06:00	20.75	0.31	3.67	22.09	2.34
6/26/2012	19:07:00	20.77	0.31	3.65	22.33	2.31
6/26/2012	19:08:00	20.74	0.31	3.84	24.26	2.22
6/26/2012	19:09:00	20.76	0.32	4.	24.56	2.17
6/26/2012	19:10:00	20.76	0.31	3.66	22.96	2.22
6/26/2012	19:11:00	20.73	0.32	3.52	20.98	2.27

AVERAGED CEM DATA

Job Number: *49349*
Run ID: *R2*

Start Time: *18:05:00*
Start Date: *06/26/12*

Date	Time	O2	CO2	NOx	CO	THC
6/26/2012	19:12:00	20.77	0.32	3.28	18.79	2.26
6/26/2012	19:13:00	20.75	0.31	3.08	17.18	2.23
6/26/2012	19:14:00	20.77	0.31	2.85	16.3	2.12
6/26/2012	19:15:00	20.75	0.32	2.68	15.76	2.06
6/26/2012	19:16:00	20.77	0.31	2.8	16.96	2.18
6/26/2012	19:17:00	20.78	0.31	3.13	19.25	2.31
6/26/2012	19:18:00	20.76	0.37	3.45	20.73	2.39
6/26/2012	19:19:00	20.77	0.32	3.63	20.93	2.41
6/26/2012	19:20:00	20.77	0.33	3.56	21.1	2.27
6/26/2012	19:21:00	20.78	0.33	3.35	19.69	2.14
6/26/2012	19:22:00	20.78	0.31	3.2	18.31	2.14
6/26/2012	19:23:00	20.79	0.36	3.16	17.91	2.2
6/26/2012	19:24:00	20.79	0.31	3.1	17.79	2.31
6/26/2012	19:25:00	20.76	0.31	3.31	18.69	2.26
6/26/2012	19:26:00	20.76	0.31	3.45	18.16	2.11
6/26/2012	19:27:00	20.79	0.29	3.31	16.31	1.96
6/26/2012	19:28:00	20.8	0.3	3.2	15.37	1.97
6/26/2012	19:29:00	20.79	0.3	3.07	14.66	1.99
6/26/2012	19:30:00	20.77	0.31	2.85	15.28	2.08
6/26/2012	19:31:00	20.77	0.3	3.	17.	2.09
6/26/2012	19:32:00	20.78	0.29	3.17	16.09	1.95
6/26/2012	19:33:00	20.78	0.34	3.09	17.53	1.94
6/26/2012	19:34:00	20.79	0.3	3.38	19.06	1.96
6/26/2012	19:35:00	20.78	0.29	3.71	22.53	2.09
6/26/2012	19:36:00	20.79	0.29	3.92	22.5	2.2
6/26/2012	19:37:00	20.77	0.28	4.09	22.26	2.14
6/26/2012	19:38:00	20.79	0.28	3.97	22.67	2.08
6/26/2012	19:39:00	20.78	0.28	4.11	25.51	2.09
6/26/2012	19:40:00	20.79	0.28	4.41	26.39	2.11
6/26/2012	19:41:00	20.79	0.28	4.19	24.68	2.25
6/26/2012	19:42:00	20.77	0.28	4.44	28.03	2.41
6/26/2012	19:43:00	20.78	0.29	4.63	28.57	2.36
6/26/2012	19:44:00	20.78	0.29	4.7	29.65	2.26

AVERAGED CEM DATA

Job Number: *49349*
Run ID: *R2*

Start Time: *18:05:00*
Start Date: *06/26/12*

Date	Time	O2	CO2	NOx	CO	THC
6/26/2012	19:45:00	20.77	0.28	4.59	31.15	2.23
6/26/2012	19:46:00	20.8	0.33	4.35	26.77	2.25
6/26/2012	19:47:00	20.79	0.28	3.86	23.55	2.22
6/26/2012	19:48:00	20.79	0.33	3.59	20.61	2.27
6/26/2012	19:49:00	20.81	0.28	3.24	19.13	2.25
6/26/2012	19:50:00	20.79	0.29	3.38	20.42	2.16
6/26/2012	19:51:00	20.78	0.28	3.35	20.55	2.08
6/26/2012	19:52:00	20.78	0.29	3.29	20.81	2.12
6/26/2012	19:53:00	20.79	0.34	3.24	19.44	2.22
6/26/2012	19:54:00	20.77	0.29	3.12	18.19	2.3
6/26/2012	19:55:00	20.78	0.35	3.01	17.49	2.21
6/26/2012	19:56:00	20.77	0.29	2.8	15.53	2.16
6/26/2012	19:57:00	20.78	0.28	2.82	16.17	2.1
6/26/2012	19:58:00	20.77	0.3	2.93	16.49	2.11
6/26/2012	19:59:00	20.8	0.29	2.95	17.25	2.26
6/26/2012	20:00:00	20.79	0.29	3.27	19.09	2.37
6/26/2012	20:01:00	20.77	0.29	3.57	21.11	2.38
6/26/2012	20:02:00	20.77	0.34	3.76	21.3	2.27
6/26/2012	20:03:00	20.78	0.29	3.66	19.24	2.14
6/26/2012	20:04:00	20.79	0.29	3.45	18.66	2.18
6/26/2012	20:05:00	20.78	0.3	3.54	19.84	2.26
6/26/2012	20:06:00	20.8	0.3	3.84	21.46	2.38
6/26/2012	20:07:00	20.78	0.31	3.75	20.89	2.34
6/26/2012	20:08:00	20.79	0.29	3.46	18.29	2.22
6/26/2012	20:09:00	20.76	0.29	3.05	16.7	2.1
6/26/2012	20:10:00	20.78	0.3	2.79	15.27	2.08
6/26/2012	20:11:00	20.78	0.29	2.66	13.62	2.14
6/26/2012	20:12:00	20.78	0.3	2.45	12.08	2.24
6/26/2012	20:13:00	20.76	0.29	2.48	11.41	2.21
6/26/2012	20:14:00	20.75	0.31	2.33	10.9	2.13
6/26/2012	20:15:00	20.78	0.3	2.28	11.77	2.08
6/26/2012	20:16:00	20.75	0.3	2.5	12.47	2.07
6/26/2012	20:17:00	20.78	0.3	2.56	12.23	2.18

AVERAGED CEM DATA

Job Number: *49349* **Start Time:** *18:05:00*
Run ID: *R2* **Start Date:** *06/26/12*

Date	Time	O2	CO2	NOx	CO	THC
6/26/2012	20:18:00	20.77	0.36	2.77	14.14	2.28
6/26/2012	20:19:00	20.79	0.31	2.77	13.1	2.27
6/26/2012	20:20:00	20.78	0.3	2.92	14.07	2.21
6/26/2012	20:21:00	20.78	0.3	3.1	14.53	2.11
6/26/2012	20:22:00	20.77	0.3	3.4	16.76	2.17
6/26/2012	20:23:00	20.78	0.3	3.41	15.71	2.16
6/26/2012	20:24:00	20.79	0.31	3.05	14.81	2.35
6/26/2012	20:25:00	20.78	0.32	3.38	17.69	2.41
6/26/2012	20:26:00	20.79	0.32	3.78	19.73	2.38
6/26/2012	20:27:00	20.78	0.31	3.94	20.51	2.32
6/26/2012	20:28:00	20.77	0.32	4.02	22.3	2.26
6/26/2012	20:29:00	20.75	0.31	4.04	21.92	2.36
6/26/2012	20:30:00	20.76	0.31	3.76	20.57	2.43
6/26/2012	20:31:00	20.78	0.31	3.75	22.49	2.52
6/26/2012	20:32:00	20.77	0.37	4.41	27.36	2.54
6/26/2012	20:33:00	20.78	0.31	4.53	25.88	2.35
6/26/2012	20:34:00	20.77	0.31	4.27	24.41	2.32
6/26/2012	20:35:00	20.78	0.31	4.4	28.3	2.49
6/26/2012	20:36:00	20.77	0.31	4.51	26.43	2.58
6/26/2012	20:37:00	20.77	0.33	4.3	26.18	2.6
6/26/2012	20:38:00	20.77	0.32	4.22	25.67	2.55
6/26/2012	20:39:00	20.77	0.32	4.18	24.93	2.45
6/26/2012	20:40:00	20.76	0.32	4.11	24.03	2.36
6/26/2012	20:41:00	20.76	0.31	4.01	23.01	2.42
6/26/2012	20:42:00	20.77	0.33	3.98	21.56	2.5
6/26/2012	20:43:00	20.77	0.37	3.75	19.39	2.47
6/26/2012	20:44:00	20.78	0.33	3.22	16.56	2.31
6/26/2012	20:45:00	20.77	0.32	3.06	15.53	2.19
6/26/2012	20:46:00	20.77	0.31	2.99	15.49	2.18
6/26/2012	20:47:00	20.78	0.31	2.99	15.1	2.24
6/26/2012	20:48:00	20.77	0.32	3.02	15.02	2.35
6/26/2012	20:49:00	20.78	0.32	2.96	14.12	2.33
6/26/2012	20:50:00	20.75	0.32	2.73	12.84	2.15

AVERAGED CEM DATA

Job Number: *49349*
Run ID: *R2*

Start Time: *18:05:00*
Start Date: *06/26/12*

Date	Time	O2	CO2	NOx	CO	THC
6/26/2012	20:51:00	20.79	0.33	2.76	12.9	2.1
6/26/2012	20:52:00	20.78	0.31	2.84	13.91	2.05
6/26/2012	20:53:00	20.77	0.31	2.89	15.02	2.14
6/26/2012	20:54:00	20.78	0.36	3.08	15.63	2.18
6/26/2012	20:55:00	20.78	0.31	3.09	15.7	2.24
6/26/2012	20:56:00	20.78	0.32	3.13	16.05	2.17
6/26/2012	20:57:00	20.78	0.31	3.18	16.38	2.05
6/26/2012	20:58:00	20.78	0.36	3.2	16.53	2.04
6/26/2012	20:59:00	20.78	0.31	3.38	16.25	2.08
6/26/2012	21:00:00	20.78	0.36	3.26	14.98	2.15
6/26/2012	21:01:00	20.79	0.31	2.96	13.66	2.19
6/26/2012	21:02:00	20.78	0.32	2.78	13.01	2.09
6/26/2012	21:03:00	20.76	0.36	2.74	13.13	1.99
6/26/2012	21:04:00	20.78	0.3	2.78	13.54	1.95
6/26/2012	21:05:00	20.78	0.3	2.82	13.41	2.01
Average Value:		**20.77**	**0.33**	**3.37**	**19.05**	**2.31**
Corrected Average:		**20.98**	**-.17**	**2.74**	**19.27**	**1.84**

AVERAGED CEM DATA

Job Number: *49349*
Run ID: *R3*

Start Time: *08:50:00*
Start Date: *06/27/12*

Date	Time	O2	CO2	NOx	CO	THC
6/27/2012	08:51:00	20.9	0.24	3.33	19.66	1.19
6/27/2012	08:52:00	20.91	0.23	3.21	18.11	1.2
6/27/2012	08:53:00	20.9	0.2	3.17	20.28	1.24
6/27/2012	08:54:00	20.92	0.19	3.52	21.38	1.24
6/27/2012	08:55:00	20.92	0.18	3.35	19.19	1.23
6/27/2012	08:56:00	20.92	0.19	3.49	22.52	1.32
6/27/2012	08:57:00	20.91	0.2	3.9	23.28	1.3
6/27/2012	08:58:00	20.92	0.19	3.83	23.59	1.29
6/27/2012	08:59:00	20.9	0.24	3.75	23.87	1.31
6/27/2012	09:00:00	20.9	0.2	3.61	21.9	1.29
6/27/2012	09:01:00	20.92	0.23	3.68	22.69	1.34
6/27/2012	09:02:00	20.9	0.2	3.79	22.82	1.34
6/27/2012	09:03:00	20.9	0.2	3.76	23.01	1.37
6/27/2012	09:04:00	20.92	0.2	3.77	22.7	1.34
6/27/2012	09:05:00	20.91	0.2	3.54	21.55	1.34
6/27/2012	09:06:00	20.91	0.19	3.43	20.76	1.32
6/27/2012	09:07:00	20.92	0.19	3.33	18.49	1.31
6/27/2012	09:08:00	20.91	0.2	3.33	18.12	1.33
6/27/2012	09:09:00	20.9	0.21	3.3	16.69	1.28
6/27/2012	09:10:00	20.91	0.2	3.05	16.17	1.32
6/27/2012	09:11:00	20.89	0.2	3.25	17.13	1.28
6/27/2012	09:12:00	20.92	0.21	3.35	17.49	1.29
6/27/2012	09:13:00	20.91	0.21	3.45	18.49	1.29
6/27/2012	09:14:00	20.91	0.2	3.38	18.03	1.3
6/27/2012	09:15:00	20.92	0.2	3.16	17.79	1.28
6/27/2012	09:16:00	20.91	0.25	3.07	17.26	1.25
6/27/2012	09:17:00	20.91	0.2	3.16	18.6	1.34
6/27/2012	09:18:00	20.89	0.2	3.38	18.77	1.33
6/27/2012	09:19:00	20.91	0.21	3.31	17.88	1.33
6/27/2012	09:20:00	20.91	0.22	3.29	17.5	1.29
6/27/2012	09:21:00	20.91	0.21	3.18	15.32	1.25
6/27/2012	09:22:00	20.91	0.21	3.06	15.76	1.27
6/27/2012	09:23:00	20.91	0.21	3.02	16.12	1.29

AVERAGED CEM DATA

Job Number: *49349*
Run ID: *R3*

Start Time: *08:50:00*
Start Date: *06/27/12*

Date	Time	O2	CO2	NOx	CO	THC
6/27/2012	09:24:00	20.91	0.22	3.04	17.15	1.31
6/27/2012	09:25:00	20.91	0.21	3.26	17.51	1.31
6/27/2012	09:26:00	20.9	0.21	3.39	17.04	1.28
6/27/2012	09:27:00	20.92	0.21	3.21	16.68	1.3
6/27/2012	09:28:00	20.9	0.21	3.23	18.66	1.36
6/27/2012	09:29:00	20.9	0.2	3.42	20.54	1.41
6/27/2012	09:30:00	20.9	0.21	3.6	21.41	1.4
6/27/2012	09:31:00	20.91	0.21	3.7	22.45	1.42
6/27/2012	09:32:00	20.9	0.21	3.86	23.09	1.44
6/27/2012	09:33:00	20.9	0.21	4.04	24.09	1.47
6/27/2012	09:34:00	20.89	0.21	4.31	25.56	1.49
6/27/2012	09:35:00	20.9	0.21	4.24	24.95	1.47
6/27/2012	09:36:00	20.92	0.21	4.16	25.07	1.47
6/27/2012	09:37:00	20.9	0.21	4.03	24.89	1.48
6/27/2012	09:38:00	20.9	0.22	4.04	24.69	1.49
6/27/2012	09:39:00	20.91	0.22	4.03	23.46	1.46
6/27/2012	09:40:00	20.9	0.22	3.83	21.99	1.42
6/27/2012	09:41:00	20.88	0.22	3.97	22.53	1.49
6/27/2012	09:42:00	20.9	0.27	4.3	22.38	1.47
6/27/2012	09:43:00	20.9	0.23	4.27	22.23	1.48
6/27/2012	09:44:00	20.91	0.27	4.19	21.8	1.48
6/27/2012	09:45:00	20.89	0.22	4.06	20.75	1.45
6/27/2012	09:46:00	20.91	0.22	3.87	19.	1.44
6/27/2012	09:47:00	20.91	0.22	3.56	17.72	1.4
6/27/2012	09:48:00	20.9	0.22	3.34	17.42	1.43
6/27/2012	09:49:00	20.9	0.21	3.56	18.78	1.46
6/27/2012	09:50:00	20.9	0.23	3.74	18.83	1.46
6/27/2012	09:51:00	20.91	0.21	3.74	18.33	1.44
6/27/2012	09:52:00	20.9	0.22	3.65	17.8	1.47
6/27/2012	09:53:00	20.9	0.27	3.91	19.28	1.49
6/27/2012	09:54:00	20.89	0.23	4.15	19.19	1.49
6/27/2012	09:55:00	20.9	0.24	3.92	18.48	1.47
6/27/2012	09:56:00	20.89	0.23	3.7	18.44	1.5

AVERAGED CEM DATA

Job Number: *49349*
Run ID: *R3*

Start Time: *08:50:00*
Start Date: *06/27/12*

Date	Time	O2	CO2	NOx	CO	THC
6/27/2012	09:57:00	20.89	0.23	3.72	19.01	1.54
6/27/2012	09:58:00	20.9	0.24	3.66	18.3	1.49
6/27/2012	09:59:00	20.9	0.24	3.47	18.35	1.53
6/27/2012	10:00:00	20.84	0.24	3.8	21.74	1.61
6/27/2012	10:01:00	20.89	0.23	4.46	24.09	1.64
6/27/2012	10:02:00	20.9	0.23	4.39	23.28	1.61
6/27/2012	10:03:00	20.89	0.24	4.25	22.69	1.6
6/27/2012	10:04:00	20.89	0.23	4.14	22.91	1.61
6/27/2012	10:05:00	20.89	0.23	3.94	23.37	1.62
6/27/2012	10:06:00	20.89	0.24	4.03	24.23	1.62
6/27/2012	10:07:00	20.89	0.24	4.02	23.7	1.64
6/27/2012	10:08:00	20.9	0.24	3.94	23.13	1.63
6/27/2012	10:09:00	20.89	0.23	3.76	21.56	1.6
6/27/2012	10:10:00	20.89	0.23	3.54	20.36	1.59
6/27/2012	10:11:00	20.87	0.24	3.59	20.06	1.61
6/27/2012	10:12:00	20.9	0.24	3.73	20.33	1.61
6/27/2012	10:13:00	20.89	0.29	3.67	20.09	1.62
6/27/2012	10:14:00	20.89	0.25	3.74	21.66	1.66
6/27/2012	10:15:00	20.89	0.3	3.85	20.69	1.65
6/27/2012	10:16:00	20.9	0.25	3.91	20.75	1.67
6/27/2012	10:17:00	20.88	0.25	4.05	20.29	1.66
6/27/2012	10:18:00	20.87	0.24	3.93	21.44	1.7
6/27/2012	10:19:00	20.89	0.3	4.04	22.1	1.72
6/27/2012	10:20:00	20.89	0.25	4.05	23.11	1.75
6/27/2012	10:21:00	20.89	0.24	4.05	22.84	1.71
6/27/2012	10:22:00	20.91	0.26	3.84	22.44	1.72
6/27/2012	10:23:00	20.89	0.25	3.92	22.45	1.73
6/27/2012	10:24:00	20.89	0.31	3.92	22.87	1.75
6/27/2012	10:25:00	20.87	0.25	4.1	24.04	1.77
6/27/2012	10:26:00	20.88	0.26	4.54	25.25	1.8
6/27/2012	10:27:00	20.89	0.27	4.71	26.43	1.79
6/27/2012	10:28:00	20.87	0.27	4.68	26.2	1.79
6/27/2012	10:29:00	20.9	0.27	4.38	25.06	1.81

AVERAGED CEM DATA

Job Number: *49349*
Run ID: *R3*

Start Time: *08:50:00*
Start Date: *06/27/12*

Date	Time	O2	CO2	NOx	CO	THC
6/27/2012	10:30:00	20.89	0.26	4.31	25.39	1.82
6/27/2012	10:31:00	20.87	0.28	4.29	27.49	1.83
6/27/2012	10:32:00	20.89	0.27	4.37	28.47	1.81
6/27/2012	10:33:00	20.88	0.27	4.52	29.68	1.85
6/27/2012	10:34:00	20.89	0.27	4.43	28.89	1.82
6/27/2012	10:35:00	20.89	0.27	4.14	27.7	1.84
6/27/2012	10:36:00	20.89	0.28	3.93	26.6	1.82
6/27/2012	10:37:00	20.88	0.27	4.1	27.55	1.87
6/27/2012	10:38:00	20.88	0.27	4.3	27.51	1.85
6/27/2012	10:39:00	20.87	0.27	4.48	27.46	1.86
6/27/2012	10:40:00	20.88	0.27	4.28	25.11	1.84
6/27/2012	10:41:00	20.9	0.28	4.2	25.55	1.83
6/27/2012	10:42:00	20.88	0.28	4.25	24.1	1.83
6/27/2012	10:43:00	20.88	0.28	3.98	22.28	1.78
6/27/2012	10:44:00	20.9	0.28	3.57	21.31	1.82
6/27/2012	10:45:00	20.88	0.28	3.82	22.35	1.78
6/27/2012	10:46:00	20.89	0.33	3.75	20.93	1.77
6/27/2012	10:47:00	20.89	0.28	3.79	21.61	1.78
6/27/2012	10:48:00	20.89	0.28	3.82	20.87	1.8
6/27/2012	10:49:00	20.89	0.33	3.55	20.	1.78
6/27/2012	10:50:00	20.89	0.34	3.57	20.71	1.79
6/27/2012	10:51:00	20.89	0.37	3.6	20.75	1.78
6/27/2012	10:52:00	20.89	0.34	3.72	20.92	1.78
6/27/2012	10:53:00	20.88	0.33	3.71	22.05	1.8
6/27/2012	10:54:00	20.89	0.3	3.69	21.29	1.77
6/27/2012	10:55:00	20.89	0.29	3.57	20.1	1.78
6/27/2012	10:56:00	20.88	0.3	3.41	19.17	1.73
6/27/2012	10:57:00	20.88	0.34	3.36	19.19	1.73
6/27/2012	10:58:00	20.89	0.3	3.33	18.08	1.71
6/27/2012	10:59:00	20.88	0.29	3.4	18.92	1.73
6/27/2012	11:00:00	20.89	0.3	3.81	21.17	1.79
6/27/2012	11:01:00	20.88	0.3	4.1	22.56	1.81
6/27/2012	11:02:00	20.88	0.3	4.01	23.46	1.82

AVERAGED CEM DATA

Job Number: *49349*
Run ID: *R3*

Start Time: *08:50:00*
Start Date: *06/27/12*

Date	Time	O2	CO2	NOx	CO	THC
6/27/2012	11:03:00	20.88	0.3	3.88	23.1	1.83
6/27/2012	11:04:00	20.88	0.31	3.87	21.92	1.8
6/27/2012	11:05:00	20.88	0.31	3.84	22.19	1.81
6/27/2012	11:06:00	20.86	0.32	3.8	22.24	1.82
6/27/2012	11:07:00	20.88	0.31	3.76	22.84	1.79
6/27/2012	11:08:00	20.87	0.3	3.9	22.92	1.81
6/27/2012	11:09:00	20.89	0.31	3.95	21.82	1.8
6/27/2012	11:10:00	20.89	0.31	3.72	21.58	1.79
6/27/2012	11:11:00	20.89	0.31	3.8	23.09	1.8
6/27/2012	11:12:00	20.88	0.31	3.86	23.73	1.83
6/27/2012	11:13:00	20.89	0.4	3.78	24.23	1.83
6/27/2012	11:14:00	20.87	0.32	3.72	23.57	1.81
6/27/2012	11:15:00	20.88	0.32	3.52	21.66	1.8
6/27/2012	11:16:00	20.87	0.32	3.42	21.27	1.81
6/27/2012	11:17:00	20.87	0.32	3.56	21.46	1.81
6/27/2012	11:18:00	20.88	0.32	3.51	21.75	1.8
6/27/2012	11:19:00	20.88	0.32	3.58	20.81	1.79
6/27/2012	11:20:00	20.86	0.37	3.52	20.73	1.76
6/27/2012	11:21:00	20.89	0.33	3.49	21.43	1.81
6/27/2012	11:22:00	20.88	0.31	3.66	21.91	1.82
6/27/2012	11:23:00	20.88	0.33	3.7	21.23	1.82
6/27/2012	11:24:00	20.89	0.33	3.67	20.36	1.79
6/27/2012	11:25:00	20.86	0.33	3.62	20.28	1.8
6/27/2012	11:26:00	20.87	0.32	3.31	19.62	1.79
6/27/2012	11:27:00	20.88	0.33	3.05	19.27	1.81
6/27/2012	11:28:00	20.87	0.33	3.17	19.98	1.81
6/27/2012	11:29:00	20.87	0.33	3.28	19.97	1.8
6/27/2012	11:30:00	20.87	0.34	3.67	22.57	1.85
6/27/2012	11:31:00	20.87	0.34	3.96	24.93	1.9
6/27/2012	11:32:00	20.88	0.36	4.12	26.49	1.91
6/27/2012	11:33:00	20.87	0.33	4.11	26.53	1.95
6/27/2012	11:34:00	20.88	0.33	4.04	26.09	1.93
6/27/2012	11:35:00	20.87	0.33	4.11	27.15	2.01

AVERAGED CEM DATA

Job Number: *49349*
Run ID: *R3*

Start Time: *08:50:00*
Start Date: *06/27/12*

Date	Time	O2	CO2	NOx	CO	THC
6/27/2012	11:36:00	20.86	0.34	4.29	29.06	2.03
6/27/2012	11:37:00	20.87	0.34	4.34	29.2	2.
6/27/2012	11:38:00	20.87	0.33	4.22	28.45	2.
6/27/2012	11:39:00	20.86	0.34	4.19	28.99	2.08
6/27/2012	11:40:00	20.86	0.34	4.01	29.27	2.01
6/27/2012	11:41:00	20.86	0.34	3.9	29.65	2.05
6/27/2012	11:42:00	20.86	0.33	4.12	30.24	2.07
6/27/2012	11:43:00	20.85	0.33	4.36	30.19	2.06
6/27/2012	11:44:00	20.87	0.33	4.61	31.38	2.14
6/27/2012	11:45:00	20.86	0.34	4.82	31.77	2.09
6/27/2012	11:46:00	20.86	0.37	4.73	31.19	2.06
6/27/2012	11:47:00	20.87	0.33	4.44	29.33	2.03
6/27/2012	11:48:00	20.87	0.34	4.27	28.03	2.03
6/27/2012	11:49:00	20.87	0.34	4.38	28.06	2.
6/27/2012	11:50:00	20.85	0.34	4.11	26.62	1.98
Average Value:		**20.89**	**0.27**	**3.81**	**22.27**	**1.64**
Corrected Average:		**21.04**	**-.1**	**3.51**	**22.38**	**1.36**

Thermal Treatment Units

Method 23/0010

Test Data Summary and Calculations
General Dynamics OTS Munition Services
Building 1 - TTU Exhaust
Joplin, MO

Parameter	Run 1	Run 2	Run 3
Run Date	27Jun12	27Jun12	28Jun12
Start/Stop Time	1527-1852	1952-2257	0850-1156
Duration of Run, Minutes	180	180	180
Ave. Nozzle Diameter, inches	0.218	0.218	0.218
Pitot Calibration Factor, CF	0.99	0.99	0.99
Meter Gamma	0.990	0.990	0.990
Meter Delta H, inches of H2O	2.01	2.01	2.01
Stack Diameter, inches	11	11	11
Rectangular Width, inches		0	0
Rectangular Length, inches		0	0
Stack Area, sq.ft.	0.66	0.66	0.66
Barometric Pressure, inches of Hg	28.93	28.93	29.01
Static Pressure, inches of H2O	0.56	0.56	0.62
Dry Gas Meter Sample Volume, (VM)ft3			
Initial	768.799	885.352	2.058
Final	885.001	1001.655	124.016
Difference	116.202	116.303	121.958
Ave. Stack Temperature, Ts(F)	154.8	171.0	190.0
Ave. Meter Temperature, Tm(F)	104.0	94.0	93.0
Ave. Run Delta H, inches of H2O	1.30	1.34	1.55
Ave. Square Root of Delta P	0.6360	0.6437	0.6981
Moisture Data			
Volume of water collected, mls	32	36	38
Silica Gel, grams	20.7	21.9	21.1
Total Collected, mls	52.7	57.9	59.1
ORSAT Data			
%O2	20.13	20.13	20.11
%CO2	1.32	0.86	0.96
%CO			

Calculations

Vw(std), scf =	2.481	2.725	2.782
Vm(std), dscf =	104.474	106.458	112.214
Bws=	0.023	0.025	0.024
Md=	29.02	28.94	28.96
Ms=	28.76	28.67	28.69
Vs, ft/sec =	46.2	47.5	52.2
Qs, acfm =	1,831	1,880	2,066
Qs(std), dscfm =	1,487	1,485	1,590
Isokinetic Sampling Rate, %	99.4	101.4	99.8

Where:

An = area of the nozzle
As = area of the stack
Vw(std) = volume of water vapor in gas, standard conditions = 0.04707*Vlc
Vm(std) = vol. of gas sampled, standard conditions = 17.647 x Vm x gamma x [Pb + (dH/13.6)]/Tm(R)
Bws = water vapor in gas stream, proportion by volume = Vw(std)/(Vm(std) + Vw(std))
Md = molecular weight of stack gas, dry basis = (0.44 x%CO2) + (0.32 x%O2) + [0.28 x (%N2 + %CO)]
Ms = molecular weight of stack gas, wet basis = [Md x (1-Bws)] + (18.0 x Bws)
Vs = stack gas velocity = 85.49 x Cp x (avg. Sq.Rt. dP) x [Sq.Rt. (Ts(R))/(Ms x Ps)]
Qs = stack gas flow rate = Vs x As x 60
Qs(std) = stack gas flow rate, standard conditions = Qs x (1-Bws) x (528/(Ts(R)) x (Ps/29.92)
Isokinetic sampling rate = {(Ts(R)) x [(0.00267 x Vlc) + (Vm(std)/17.647)] x 100}/(Time x vs x Ps x An x60)

Field Data Summary
General Dynamics OTS Munition Services
Building 1 - TTU Exhaust
Joplin, MO

	Run 1							Run 2							Run 3					
Traverse Point	Stack Temp(F)	Delta P	Delta H	Tm(F) in	Tm(F) out	SQRT Delta P		Stack Temp(F)	Delta P	Delta H	Tm(F) in	Tm(F) out	SQRT Delta P		Stack Temp(F)	Delta P	Delta H	Tm(F) in	Tm(F) out	SQRT Delta P
A1	141	0.32	1.01	98	97	0.5657		171	0.40	1.27	101	102	0.6325		187	0.36	1.14	83	83	0.6000
2	142	0.30	0.95	101	98	0.5477		171	0.40	1.27	102	102	0.6325		187	0.36	1.14	86	83	0.6000
3	143	0.30	0.95	102	99	0.5477		171	0.40	1.27	103	101	0.6325		187	0.40	1.26	90	85	0.6325
4	144	0.32	1.01	103	99	0.5657		171	0.40	1.27	103	100	0.6325		187	0.43	1.36	91	86	0.6557
5	145	0.36	1.11	104	100	0.6000		171	0.40	1.27	102	99	0.6325		187	0.47	1.49	92	87	0.6856
6	147	0.40	1.26	105	101	0.6325		171	0.42	1.33	98	99	0.6481		187	0.54	1.71	93	88	0.7348
7	148	0.40	1.26	105	101	0.6325		171	0.49	1.55	97	96	0.7000		187	0.58	1.84	95	90	0.7616
8	151	0.42	1.33	106	101	0.6481		171	0.48	1.52	96	96	0.6928		187	0.59	1.87	95	90	0.7681
9	152	0.46	1.46	106	102	0.6782		171	0.46	1.46	95	94	0.6782		187	0.62	1.97	96	91	0.7874
10	153	0.48	1.52	106	102	0.6928		171	0.48	1.52	95	93	0.6928		187	0.56	1.78	96	91	0.7483
11	154	0.52	1.65	107	102	0.7211		171	0.50	1.58	95	93	0.7071		187	0.64	2.03	96	91	0.8000
12	155	0.56	1.77	107	103	0.7483		171	0.54	1.71	96	93	0.7348		187	0.62	1.97	97	92	0.7874
B1	155	0.22	0.64	103	102	0.4690		171	0.22	0.69	92	91	0.4690		193	0.42	1.33	95	92	0.6481
2	156	0.22	0.64	105	103	0.4690		171	0.23	0.73	92	91	0.4796		193	0.43	1.36	95	93	0.6557
3	158	0.28	0.88	106	103	0.5292		171	0.26	0.82	92	91	0.5099		193	0.44	1.39	96	93	0.6633
4	158	0.28	0.88	107	103	0.5292		171	0.28	0.89	92	90	0.5292		193	0.45	1.43	97	93	0.6708
5	160	0.34	1.07	107	104	0.5831		171	0.28	0.89	92	90	0.5292		193	0.47	1.49	97	93	0.6856
6	162	0.38	1.20	108	104	0.6164		171	0.30	0.95	91	90	0.5477		193	0.47	1.49	98	94	0.6856
7	163	0.50	1.58	109	104	0.7071		171	0.38	1.20	91	89	0.6164		193	0.48	1.52	98	94	0.6928
8	166	0.54	1.71	109	105	0.7348		171	0.50	1.59	91	88	0.7071		193	0.47	1.49	97	94	0.6856
9	166	0.58	1.84	109	105	0.7616		171	0.54	1.71	91	88	0.7348		193	0.47	1.49	99	95	0.6856
10	166	0.58	1.84	109	105	0.7616		171	0.58	1.84	90	88	0.7616		193	0.46	1.46	99	95	0.6782
11	167	0.58	1.84	108	105	0.7616		171	0.60	1.90	90	87	0.7746		193	0.49	1.55	99	95	0.7000
12	162	0.58	1.84	110	105	0.7616		171	0.60	1.90	89	87	0.7746		193	0.55	1.74	100	96	0.7416
Average	155	0.41	1.30	106	102	0.6360		171	0.42	1.34	95	93	0.6437		190	0.49	1.55	95	91	0.6981

EPA Isokinetic Field Sheet

Methods Performed: Method 23

Client	General Dynamics	Run Number	Dioxin 1	Pitot Number	SP2-A Standard (2)
Location	Joplin, MO	Stack Diameter	11"	Pitot Coefficient	0.99
Source	TTU	Barometric Pres.	28.93	Stack TC I.D.	TC-3A
Date	06-27-2012	Static Pressure	~~0.05~~ 0.56	Oven Box I.D.	OB 5
Operators	CW/JS/SG	Meter Box #	MB 7	Impinger Out I.D.	IO-13
Start Time	1527	Meter delta H	2.010	Nozzle Size	.218
End Time	1852	Meter Gamma	0.990	XAD Trap I.D.	

K-Factor 3.17

Leak Check Rates	Sample Rate in.	Sample Rate cfm	Pitot +	Pitot -
Initial	10	.005	—	—
Mid	7			
Mid				
Final	12	.005	—	—

Sample Point	Sample Time (min)	Velocity Head (in. H_2O)	Orifice Setting (in. H_2O)	Meter Volume (ft³)	Temperature Readings in Degrees Farenheit: Stack	Probe	Oven Box	Impinger	Aux	Meter Inlet	Meter Outlet	Vacuum (in. hg)	Comments/Notes	
A 1	7.5	0.32	1.01	768.799	141	250	245	61	43	98	97	3.5	.4	160
2	15	0.30	0.95	773.50	142	253	250	52	38	101	98	3.5	.4	
3	22.5	0.30	0.95	777.30	143	256	249	51	37	102	99	3.5	.4	
4	30	0.32	1.01	781.44	144	255	251	51	37	103	99	4	.4	
5	37.5	0.36	1.14	787.75	145	251	244	52	38	104	100	4.5	.4	
6	45	0.40	1.26	790.18	147	247	250	51	37	105	101	4.5	.42	
7	52.5	0.40	1.26	794.35	148	246	250	52	39	105	101	5.0	.49	
8	60	0.42	1.33	798.85	151	256	247	50	39	105	101	5.0	.48	
9	67.5	0.46	1.46	803.83	152	246	246	50	41	106	102	6.0	.46	
10	75	0.48	1.52	808.985	153	252	246	51	41	106	102	6.0	.48	
11	82.5	0.52	1.65	814.08	154	251	245	53	43	106	102	6	.50	
12	90	0.56	1.77	819.33	155	250	247	56	45	107	102	7	.57	
				824.782						107	103		M/B 824.782	.22
B 1	7.5	0.22	0.69	824.914	155	252	248	57	~~58~~ 42	103	102	4	~~Meter After~~	.23
2	15	0.22	0.69	829.40	156	251	247	56	~~58~~ 39	105	103	5	~~Nozzle~~	.26
3	22.5	0.28	0.86	832.79	158	251	247	54	38	106	103	5	~~Change~~	.27
4	30	0.28	0.88	—	158	252	246	47	37	107	103	5	~~[illegible]~~	.28
5	37.5	0.34	1.07	841.38	160	252	247	45	36	107	104	5	M after	.30
6	45	0.38	1.20	845.96	162	251	243	43	37	108	104	6	Parts Nozzle	.35
7	52.5	0.50	1.58	851.24	163	252	247	43	37	109	104	7	Change	.5
8	60	0.54	1.71	—	166	251	241	44	37	109	105	7		.54
9	67.5	0.58	1.84	862.43	166	250	245	45	37	109	105	7	160°±10	.55
10	75	0.58	1.84	868.13	166	252	244	47	37	109	105	7		.58
11	82.5	0.58	1.84	873.777	167	252	244	49	38	108	105	7		.60
12	90	0.58	1.84	879.45	162	251	243	50	38	110	105	7		.60
				885.133										.60

Impinger Data (vol) #	Initial	Final
1		
2		
3		
4		
5		
6		

Silica Gel Data (gm) #	Initial	Final
1		
2		

Moisture Gain	
	ml.
	gm
	Total

Filter Data #	Number	Tare
1		
2		
3		

Molecular Weight Data (%) #	O_2	CO_2
1		
2		
3		
Avg		

GREENBERG

EPA Isokinetic Field Sheet

Methods Performed: Method 23

Client	General Dynamics	Run Number	Dioxins 2	Pitot Number	SP2-A Standard (2')
Location	Joplin, MO	Stack Diameter	11"	Pitot Coefficient	0.99
Source	TTU	Barometric Pres.	28.93	Stack TC I.D.	TC-3A
Date	06-27-2012	Static Pressure	0.56	Oven Box I.D.	~~[illegible]~~ OB-5
Operators	CW/JS/SG	Meter Box #	MB 7	Impinger Out I.D.	IO-13
Start Time	1952	Meter delta H	2.010	Nozzle Size	0.218
End Time	2257	Meter Gamma	0.990	XAD Trap I.D.	
		K Factor	3.17		

Leak Check Rates

	Sample Rate in.	Sample Rate cfm	Pitot +	Pitot -
Initial	11	0.005		
Mid				
Mid				
Final				

Sample Point	Sample Time (min)	Velocity Head (in. H_2O)	Orifice Setting (in. H_2O)	Meter Volume (ft³)	Stack	Probe	Oven Box	Impinger	Aux	Meter Inlet	Meter Outlet	Vacuum (in. hg)	Comments/Notes
A 1	7.5	.4	1.27	885.352	171	251	249	63	54	101	102	5	A1 0.4
2	15	.4	1.27	890.135	171	256	252	57	38	102	102	5	2 0.4
3	22.5	.4	1.27	—	171	251	246	52	38	103	101	5	3 0.4
4	30	.4	1.27	898.70	171	251	246	50	39	103	100	5	4 0.4
5	37.5	.4	1.27	903.483	171	251	246	50	43	102	99	5	5 0.4
6	45	.42	1.33	913.752	171	252	246	52	36	98	99	6	6 0.41
7	52.5	.49	1.55	~~923.82~~ 56	171	252	246	51	37	97	96	6	7 0.48
8	60	.48	1.52	924.01	171	253	246	52	38	96	96	6	8 0.48
9	67.5	.46	1.46	929.02	171	251	246	52	38	95	94	6	9 0.45
10	75	.48	1.52	934.145	171	252	247	53	38	95	93	6	10 0.48
11	82.5	.50	1.58	—	171	252	247	53	38	95	93	6	11 0.49
12	90	.54	1.71	939.33	171	253	246	52	38	96	93	6	12 0.54
				946.01									
B 1	7.5	.22	0.69	946.01	171	251	247	63	40	92	91	~~2.5~~ 4	B1 0.24
2	15	.23	0.73	948.555	171	253	246	52	39	92	91	4	2 0.23
3	22.5	.26	0.82	952.17	171	252	247	44	38	92	91	5	3 0.25
4	30	.28	0.89	—	171	252	247	43	38	92	90	5	4 0.28
5	37.5	.28	0.89	960.39	171	253	247	43	38	92	90	5	5 0.28
6	45	.30	0.95	964.36	171	252	246	45	39	91	90	5	6 0.30
7	52.5	.38	1.20	967.85	171	252	247	46	39	91	89	5	7 0.38
8	60	.5	1.59	971.56	171	252	249	45	39	91	88	5	8 0.48
9	67.5	.54	1.71	978.75	171	252	248	46	40	91	88	5	9 0.54
10	75	.58	1.84	—	171	253	247	46	40	90	88	6	10 0.58
11	82.5	.60	1.90	990.14	171	252	248	46	40	90	87	6	11 0.60
12	90	.60	1.90	996.01	171	252	246	46	36	89	87	6	12 0.60
				001.655									

Impinger Data (vol)

#	Initial	Final
1		
2		
3		
4		
5		
6		

Silica Gel Data (gm)

#	Initial	Final
1		
2		

Moisture Gain

	ml.
	gm
	Total

Filter Data

#	Number	Tare
1		
2		
3		

Molecular Weight Data (%)

#	O_2	CO_2
1		
2		
3		
Avg		

O'BRIEN & GERE

EPA Isokinetic Field Sheet

Methods Performed: Method 23

Client	General Dynamics	Run Number	Dioxins 3	Pitot Number	SP2-A Standard (2')
Location	Sapling MO	Stack Diameter	11"	Pitot Coefficient	0.99
Source	TTU	Barometric Pres.	~~30.01~~ 29.01	Stack TC I.D.	TC-3A.
Date	08-28-2012	Static Pressure	+0.62	Oven Box I.D.	GB5
Operators	CW/JS/SG	Meter Box #	MB7	Impinger Out I.D.	IO13
Start Time	0850	Meter delta H	2.010	Nozzle Size	0.248
End Time	1156	Meter Gamma	0.990	XAD Trap I.D.	

K = 3.17

Leak Check Rates	Sample Rate in.	Sample Rate cfm	Pitot +	Pitot -
Initial	12	0.004	✓	✓
Mid				
Mid				
Final	11	0.002	✓	✓

Sample Point	Sample Time (min)	Velocity Head (in. H_2O)	Orifice Setting (in. H_2O)	Meter Volume (ft³)	Stack	Probe	Oven Box	Impinger	Aux	Meter Inlet	Meter Outlet	Vacuum (in. hg)	Comments/Notes	Post Flows	
A1	7.5	0.36	1.14	002.058	187	256	250	60	40	83	83	2	A1	0.36	192
2	15	0.36	1.14	006.59	187	256	250	45	39	86	83	2	2	0.37	192
3	22.5	0.40	1.26	010.94	187	255	240	42	37	90	85	3	3	0.39	192
4	30	0.43	1.36	015.52	187	251	250	41	38	91	86	3	4	0.44	192
5	37.5	0.47	1.49	020.40	187	253	258	42	37	92	87	3	5	0.47	192
6	45	0.54	1.71	25.37	187	250	257	42	36	93	88	5	6	0.56	192
7	52.5	0.58	1.84	–	187	248	257	45	39	95	90	5	7	0.57	192
8	60	0.59	1.87	42.00	187	251	259	45	38	95	90	6	8	0.58	192
9	67.5	0.62	1.97	47.666	187	248	254	45	38	96	91	6	9	0.62	192
10	75	0.56	1.78	53.42	187	257	260	46	38	96	91	5	10	0.55	192
11	82.5	0.64	2.03	–	187	252	260	46	38	96	91	5	11	0.63	192
12	90	0.62	1.97	59.08	187	250	254	47	37	97	92	5	12	0.63	192
				64.698									B1	0.40	193
B1	7.5	0.42	1.33	64.698	193	240	240	61	47	95	92	4	2	0.44	193
2	15	0.43	1.36	69.342	193	251	256	53	43	95	93	4	3	0.44	193
3	22.5	0.44	1.39	74.222	193	253	257	54	42	96	93	5	4	0.44	193
4	30	0.45	1.43	–	193	255	251	56	45	97	93	5	5	0.47	193
5	37.5	0.47	1.49	83.600	193	253	257	59	48	97	93	5	6	0.48	193
6	45	0.47	1.44	88.333	193	251	257	59	47	98	94	5	7	0.48	193
7	52.5	0.48	1.52	93.485	193	254	255	52	42	98	94	5	8	0.48	193
8	60	0.47	1.49	98.700	193	258	252	51	38	97	94	5	9	0.49	193
9	67.5	0.47	1.49	103.91	193	258	252	52	39	99	95	5	10	0.46	193
10	75	0.46	1.46	109.880	193	252	255	53	39	99	95	5	11	0.50	193
11	82.5	0.49	1.55	113.80	193	250	257	54	46	99	95	5	12	0.54	193
12	90	0.55	1.74	118.76	193	257	257	56	41	100	96				
				124.016									Paused @		
													1020 Port Change		
													Restart @		
													1026		

Impinger Data (vol) #	Initial	Final
1	0	
2	100	
3	100	
4	0	
5	SG	
6		

Silica Gel Data (gm) #	Initial	Final
1		
2		

Moisture Gain	
	ml.
	gm
	Total

Filter Data #	Number	Tare
1		
2		
3		

Molecular Weight Data (%) #	O_2	CO_2
1		
2		
3		
Avg		

O'BRIEN & GERE

\\syracusesvr\Syracuse\Office-Ops\ENV\Div01\Source Testing\Field Data Forms\Isokinetic\Iso Field Sheet.xls

O'BRIEN & GERE

SAMPLE TRAIN MOISTURE RECOVERY DATA SHEET

Reference Method / Sampling Train : M23/0010

Recovered by : J. Gorman				**Recovered by :** J. Gorman				**Recovered by :** J. Gorman			
Run No. 1		**Date :** 06-27-12		**Run No.** 2		**Date :** 06-27-12		**Run No.** 3		**Date :** 06-28-12	
XAD Module No. :				**XAD Module No. :**				**XAD Module No. :**			
Filter No. :				**Filter No. :**				**Filter No. :**			
Impinger No. and Volume				**Impinger No. and Volume**				**Impinger No. and Volume**			
No.	Initial (mL)	Final (mL)	Rinse (mL)	No.	Initial (mL)	Final (mL)	Rinse (mL)	No.	Initial (mL)	Final (mL)	Rinse (mL)
1	0	32	412	1	0	34	48	1	0	36	34
2	100	100		2	100	100		2	100	100	
3	100	100		3	100	100		3	100	100	
4	0	0		4	0	2		4	0	2	
5				5				5			
6				6				6			
7				7				7			
			DIFF :				DIFF :				DIFF :
Totals	200	232	92	**Totals**		234	36	**Totals**	200	238	38
	Initial (g)	Final (g)	DIFF :		Initial (g)	Final (g)	DIFF :		Initial (g)	Final (g)	DIFF :
Silica Gel	306.7	327.4	20.7	Silica Gel	301.5	323.4	21.9	Silica Gel	282.5	303.6	21.1
Final Net Moisture Gain:			52.7	**Final Net Moisture Gain:**			57.9	**Final Net Moisture Gain:**			59.1

C:\Users\MiloSM\Desktop\[Moisture Recovery.xls]A

Method 5

Field Data Summary
General Dynamics OTS Munition Services
Building 1 - SK Exhaust
Joplin, MO

	Run 1						Run 2						Run 3					
Traverse Point	Stack Temp(F)	Delta P	Delta H	Tm(F) in	Tm(F) out	SQRT Delta P	Stack Temp(F)	Delta P	Delta H	Tm(F) in	Tm(F) out	SQRT Delta P	Stack Temp(F)	Delta P	Delta H	Tm(F) in	Tm(F) out	SQRT Delta P
A1	124	0.34	2.14	96	96	0.5831	124	0.40	2.36	99	98	0.6325	114	0.36	2.12	94	91	0.6000
1	124	0.34	2.14	101	96	0.5831	124	0.40	2.36	102	98	0.6325	114	0.36	2.12	95	91	0.6000
2	124	0.38	2.39	101	96	0.6164	124	0.40	2.36	105	98	0.6325	114	0.37	2.18	100	93	0.6083
2	124	0.38	2.39	102	96	0.6164	123	0.40	2.36	105	98	0.6325	114	0.37	2.18	103	94	0.6083
3	124	0.37	2.33	103	96	0.6083	123	0.38	2.24	106	98	0.6164	114	0.34	2.01	106	96	0.5831
3	124	0.37	2.33	103	97	0.6083	124	0.38	2.24	107	98	0.6164	114	0.34	2.01	107	97	0.5831
4	124	0.38	2.39	104	97	0.6164	124	0.38	2.24	107	98	0.6164	114	0.36	2.12	108	98	0.6000
4	124	0.38	2.24	105	97	0.6164	124	0.38	2.24	106	99	0.6164	114	0.36	2.12	110	100	0.6000
B1	125	0.39	2.30	105	97	0.6245	124	0.30	2.01	106	99	0.5477	118	0.36	2.12	106	100	0.6000
1	125	0.39	2.30	104	97	0.6245	124	0.34	2.01	106	99	0.5831	118	0.36	2.12	105	99	0.6000
2	125	0.38	2.24	104	98	0.6164	124	0.38	2.24	106	99	0.6164	118	0.35	2.07	106	99	0.5916
2	125	0.38	2.24	105	98	0.6164	124	0.38	2.24	106	99	0.6164	118	0.35	2.07	106	99	0.5916
3	125	0.40	2.36	104	98	0.6325	124	0.37	2.18	105	99	0.6083	118	0.37	2.18	106	99	0.6083
3	125	0.40	2.36	106	99	0.6325	124	0.37	2.18	105	98	0.6083	118	0.37	2.18	107	99	0.6083
4	125	0.40	2.36	107	99	0.6325	124	0.38	2.24	105	98	0.6164	118	0.39	2.30	108	100	0.6245
4	125	0.40	2.36	105	99	0.6325	124	0.38	2.24	105	98	0.6164	118	0.39	2.30	108	100	0.6245
Average	125	0.38	2.30	103	97	0.6163	124	0.38	2.23	105	98	0.6130	116	0.36	2.14	105	97	0.6020

Laboratory Results

	Run 1	Run 2	Run 3
Filter ID	xxx	xxx	xxx
Front Half Sample:			
Filter wt gain, g	<0.0005	0.0009	<0.0005
Acetone rinse volume, ml	77	96	100
Acetone wt gain, g	0.0016	0.004	0.0026
F.H. Total, g (uncorrected)	0.0021	0.0049	0.0031
Acetone Blank Sample:			
Acetone blank volume, ml	150	150	150
Acetone Blank wt, g	117.78	117.78	117.78
Acetone Blank wt gain (residue), g	<0.0005	<0.0005	<0.0005
Acetone Blank conc., g(residue)/g(acetone)	0.000004	0.000004	0.000004
0.001% (w/w) of Acetone Sample, g	0.0006	0.0008	0.0008
Weight of residue in Acetone Sample, g	0.0003	0.0003	0.0003
Acetone Blank Correction, g	0.0003	0.0003	0.0003
Front Half Total, g (corrected):	0.0018	0.0046	0.0028

Where:

Particulate Emission Concentration:

grains/dscf = (15.432 grains/gm x gms of particulate collected)/sample vol., standard cond. (29.92" Hg, 68°F, dry)

lb/dscf = grains/dscf/7000 grains per pound

Particulate Emission Rate:

lb/hr = lb/dscf x stack gas flow rate, standard conditions x 60 minutes/hr

O'BRIEN & GERE

Test Data Summary and Calculations
General Dynamics OTS Munition Services
Building 1 - TTU Exhaust
Joplin, MO

Parameter	Run 1	Run 2	Run 3
Run Date	6/27/12	6/27/12	6/28/12
Start/Stop Time	1527-1741	1952-2202	0850-1100
Duration of Run, Minutes	120	120	120
Ave. Nozzle Diameter, inches	0.215	0.215	0.218
Pitot Calibration Factor, CF	0.99	0.99	0.99
Meter Gamma	0.984	0.984	0.984
Meter Delta H, inches of H2O	1.67	1.67	1.67
Stack Diameter, inches	11	11	11
Rectangular Width, inches		0	0
Rectangular Length, inches		0	0
Stack Area, sq.ft.	0.66	0.66	0.66
Barometric Pressure, inches of Hg	28.95	28.95	29.01
Static Pressure, inches of H2O	0.56	0.56	0.62
Dry Gas Meter Sample Volume, (VM)ft3			
Initial	453.002	534.507	616.019
Final	533.6	615.644	697.244
Meter Volume	80.41	81.023	81.171
Ave. Stack Temperature, Ts(F)	170.4	178.6	180.0
Ave. Meter Temperature, Tm(F)	105.6	98.2	94.3
Ave. Run Delta H, inches of H2O	1.11	1.11	1.15
Ave. Square Root of Delta P	0.6642	0.6682	0.6773
Moisture Data			
Volume of water collected, mls	40	24	60
Silica Gel, grams	14.4	13	16.1
Total Collected, mls	54.4	37	76.1
ORSAT Data			
%O2	20.16	20.10	20.11
%CO2	1.27	0.93	0.96
%CO			

Calculations

Vw(std), scf =	2.561	1.742	3.582
Vm(std), dscf =	71.670	73.171	73.986
Bws=	0.034	0.023	0.046
Md=	29.01	28.95	28.96
Ms=	28.63	28.70	28.45
Vs, ft/sec =	49.0	49.5	50.4
Qs, acfm =	1,940	1,962	1,997
Qs(std), dscfm =	1,520	1,535	1,526
Isokinetic Sampling Rate, %	102.9	104.0	102.9

Where:

Vw(std) = volume of water vapor in gas, standard conditions = 0.04707*Vlc
Vm(std) = vol. of gas sampled, standard conditions = 17.647 x Vm x gamma x [Pb + (dH/13.6)]/Tm(R)
Bws = water vapor in gas stream, proportion by volume = Vw(std)/(Vm(std) + Vw(std))
Md = molecular weight of stack gas, dry basis = (0.44 x%CO2) + (0.32 x%O2) + [0.28 x (%N2 + %CO)]
Ms = molecular weight of stack gas, wet basis = [Md x (1-Bws)] + (18.0 x Bws)
Vs = stack gas velocity = 85.49 x Cp x (avg. Sq.Rt. dP) x [Sq.Rt. (Ts(R))/(Ms x Ps)]
Qs = stack gas flow rate = Vs x As x 60
Qs(std) = stack gas flow rate, standard conditions = Qs x (1-Bws) x (528/(Ts(R)) x (Ps/29.92)
Isokinetic sampling rate = {(Ts(R)) x [(0.00267 x Vlc) + (Vm(std)/17.647)] x 100}/(Time x vs x Ps x An x60)

EPA Isokinetic Field Sheet

Methods Performed: Method 5

Client	General Dynamics	Run Number	Particulate 1	Pitot Number	Standard (2') B3 SP2-A
Location	Joplin, MO	Stack Diameter	11"	Pitot Coefficient	0.99
Source	TTU	Barometric Pres.	28.95	Stack TC I.D.	TC-3A
Date	06-27-2012	Static Pressure	+0.56	Oven Box I.D.	OB 2
Operators	CW/JS/BG	Meter Box #	MB 4	Impinger Out I.D.	IO-5
Start Time	1527	Meter delta H	1.670	Nozzle Size	0.115
End Time	1741	Meter Gamma	0.984	XAD Trap I.D.	

K-Factor 2.5

Leak Check Rates	Sample Rate in.	Sample Rate cfm	Pitot +	Pitot -
Initial	12	0.003	✓	✓
Mid				
Mid				
Final	10	0.002	✓	✓

Sample Point	Sample Time (min)	Velocity Head (in. H_2O)	Orifice Setting (in. H_2O)	Meter Volume (ft³)	Temperature Readings in Degrees Farenheit: Stack	Probe	Oven Box	Impinger	Aux	Meter Inlet	Meter Outlet	Vacuum (in. hg)	Comments/Notes
A 1	7.5	0.40	1.00	453.002	168	251	253	67		100	100	2	
1	15	0.40	1.00	457.999	168	251	254	63		104	100	2	
2	22.5	0.40	1.00	462.742	168	251	254	61		106	101	2	
2	30	0.40	1.00	467.511	168	250	253	59		107	102	2	
3	37.5	0.50	1.25	472.287	171	250	252	59		108	103	2	
3	45	0.50	1.25	477.582	171	251	254	60		109	103	2	
4	52.5	0.46	1.15	482.971	171	248	254	64		108	103	2	
4	60	0.46	1.15	488.052	171	248	252	64		108	102	2	
													Paused @
B 1	7.5	0.38	0.95	493.197	171	249	252	64		109	104	2	35 minutes
1	15	0.38	0.95	497.805	171	249	253	58		108	104	2	@ 1714
2	22.5	0.40	1.00	502.403	172	250	253	57		109	105	2	Restart
2	30	0.40	1.00	507.297	172	249	252	56		109	105	2	@ 1717
3	37.5	0.50	1.25	—	171	250	253	60		109	105	2	
3	45	0.50	1.25	516.997	171	250	252	59		109	105	2	
4	52.5	0.50	1.25	522.555	171	251	253	55		111	105	2	
4	60	0.50	1.25	528.106	171	250	252	56		111	106	2	
				533.600									
Post													
A 1													
2													
3													
4													
B 1													
2													
3													
4													MEnd 533.600
													Total Volume
													80.598

Impinger Data (vol) #	~~Initial~~	~~Final~~
1	124	100
2	110	100
3	6	0
4		
5		
6		

Silica Gel Data (gm) #	Initial	Final
1	296.7	311.1
2		

Moisture Gain	
40	ml.
14.4	gm
54.4	Total

Filter Data #	Number	Tare
1	OBG-B61812-10	
2		
3		

Molecular Weight Data (%) #	O_2	CO_2
1		
2		
3		
Avg		

O'BRIEN & GERE

\\syracusesvr\Syracuse\Office-Ops\ENV\Div01\Source Testing\Field Data Forms\Isokinetic\Iso Field Sheet.xls

EPA Isokinetic Field Sheet

Methods Performed: Method 5

Client	General Dynamics	Run Number	Particulate 2	Pitot Number	SP2-A
Location	Joplin, MO	Stack Diameter	11"	Pitot Coefficient	Standard 0.99
Source	TTU	Barometric Pres.	28.95	Stack TC I.D.	TC-3A
Date	06-27-2012	Static Pressure	-.56	Oven Box I.D.	OB2
Operators	CW/JS/SG	Meter Box #	MB4	Impinger Out I.D.	IO5
Start Time	0952	Meter delta H	1.670	Nozzle Size	.215
End Time	2102	Meter Gamma	0.984	XAD Trap I.D.	
		K Factor	2.5		

Leak Check Rates	Sample Rate in.	Sample Rate cfm	Pitot +	Pitot -
Initial	10	0.003	✓	✓
Mid				
Mid				
Final	11	0.003	✓	✓

Sample Point	Sample Time (min)	Velocity Head (in. H_2O)	Orifice Setting (in. H_2O)	Meter Volume (ft³)	Temperature Readings in Degrees Farenheit: Stack	Probe	Oven Box	Impinger	Aux	Meter Inlet	Meter Outlet	Vacuum (in. hg)	Comments/Notes	ΔP	Temp
A 1	7.5	.40	1.00	534.507	177	250	252	59	215	102	100	1	A1	.38	188
1	15	.40	1.00	539.1	177	249	253	57	237	101	100	1	2	.41	189
2	22.5	.40	1.00	544.3	177	250	252	56	241	102	100	1	3	.50	190
2	30	.40	1.00	549.10	178	250	253	55	243	103	100	1	4	.45	190
3	37.5	.50	1.25	553.652	178	250	253	55	244	103	100	1			
3	45	.50	1.25	558.4	178	250	253	54	245	101	99	1	B1	.41	191
4	52.5	.44	1.10	563.6	178	249	253	53	245	99	99	1	2	.44	190
4	60	.44	1.10	568.693	178	250	253	53	245	100	97	1	3	.50	190
													4	.49	191
B 1	7.5	.40	1.00	573.792	176	250	253	53	242	99	96	1			
1	15	.40	1.00	578.561	176	250	253	47	243	97	95	1			
2	22.5	.44	1.10	583.672	179	251	253	44	245	98	95	1			
2	30	.44	1.10	588.9	179	250	253	45	244	98	94	1			
3	37.5	.50	1.25	593.978	180	250	253	45	245	98	94	1			
3	45	.50	1.25	599.411	180	250	255	46	246	98	94	1			
4	52.5	.50	1.25	604.854	183	250	253	45	246	98	93	1			
4	60	.50	1.25	610.3	183	250	252	47	246	98	94	1			
				615.644											
													Port Change @ 2052 Restart 2102		

Impinger Data (vol) #	Initial	Final
1	100	114
2	100	106
3	0	4
4		
5		
6		

Silica Gel Data (gm) #	Initial	Final
1	275.1	288.1
2		

Moisture Gain	
24	ml.
13	gm
37	Total

Filter Data #	Number	Tare
1	OB6061812-5	
2		
3		

Molecular Weight Data (%) #	O_2	CO_2
1		
2		
3		
Avg		

O'BRIEN & GERE

\\syracuse.wn\Syracuse\Office-Ops\ENV\Div01\Source Testing\Field Data Forms\Isokinetic\Iso Field Sheet.xls

EPA Isokinetic Field Sheet

Methods Performed: Method 5

Client	General Dynamic	Run Number	Particulate 3	Pitot Number	SP2-A
Location	Joplin, MO	Stack Diameter	11"	Pitot Coefficient	Standard (.99)
Source	TTU	Barometric Pres.	30.01	Stack TC I.D.	TC-3A
Date	06-28-2012	Static Pressure +	-0.02	Oven Box I.D.	OB2
Operators	CW/JS/SG	Meter Box #	MB 4	Impinger Out I.D.	IO-5
Start Time	0850	Meter delta H	1.670	Nozzle Size	.218
End Time	1100	Meter Gamma	0.984	XAD Trap I.D.	—

K Factor 2.5

Leak Check Rates	Sample Rate in.	Sample Rate cfm	Pitot +	Pitot -
Initial	10	0.005	✓	✓
Mid				
Mid				
Final	10	0.002	✓	✓

Sample Point	Sample Time (min)	Velocity Head (in. H_2O)	Orifice Setting (in. H_2O)	Meter Volume (ft³)	Temperature Readings in Degrees Farenheit: Stack	Probe	Oven Box	Impinger	Aux	Meter Inlet	Meter Outlet	Vacuum (in. hg)	Comments/Notes
A 1	7.5	0.42	1.05	616.019	180	248	253	66	205	88	87	2	Post Flows
1	15	0.42	1.05	620.671	180	247	253	57	232	91	87	2	AP Temp
2	22.5	0.44	1.10	625.432	180	250	253	59	238	93	88	2	A1 0.42 188
2	30	0.44	1.10	630.3	180	250	251	61	241	95	89	2	2 0.45 188
3	37.5	0.42	1.05	635.391	180	251	253	62	242	96	90	2	3 0.41 188
3	45	0.42	1.05	640.358	180	252	255	60	242	97	91	2	4 0.41 188
4	52.5	0.40	1.00	645.165	180	251	252	60	242	97	91	2	
4	60	0.40	1.00	649.963	180	252	254	55	243	97	92	2	B1 0.46 188
	CDW	0.44											2 0.51 188
B 1	7.5	0.42	1.10	654.724	180	250	252	54	242	97	92	2	3 0.51 188
1	15	0.44	1.10	659.682	180	250	253	44	239	97	93	2	4 0.55 188
2	22.5	0.52	1.30	664.622	180	249	253	40	242	99	93	2	
2	30	0.52	1.30	670.103	180	249	254	40	243	100	94	2	
3	37.5	0.50	1.25	675.626	180	249	253	39	242	100	94	2	Paused @
3	45	0.50	1.25	680.952	180	250	254	39	242	101	95	2	0920 For
4	52.5	0.54	1.35	686.282	180	249	255	40	243	101	95	2	Port Change
4	60	0.54	1.35	691.803	180	250	254	42	242	101	96	2	START
				697.244									1000

Start Meter @ 616.019
End Meter @ 697.244

Total Meter Volume 81.225

Impinger Data (vol) #	Initial	Final
1	100	140
2	100	120
3	0	0
4		
5		
6		

Silica Gel Data (gm) #	Initial	Final
1	294.3	310.4
2		

Moisture Gain	
60	ml.
16.1	gm
76.1	Total

Filter Data #	Number	Tare
1	08-06-1812-4	
2		
3		

Molecular Weight Data (%) #	O_2	CO_2
1		
2		
3		
Avg		

O'BRIEN & GERE

\\syracuse.wr\Syracuse\Office-Ops\ENV\Div01\Source Testing\Field Data Forms\Isokinetic\Iso Field Sheet.xls

STEM

Test Data Summary and Calculations
General Dynamics OTS Munition Services
Building 1 - TTU Exhaust
Joplin, MO

Parameter	Run 1	Run 2	Run 3
Run Date	6/27/12	6/27/12	6/28/12
Start/Stop Time	1527-1828	1952-2252	0850-1100
Duration of Run, Minutes	180	180	180
Ave. Nozzle Diameter, inches	0.216	0.216	0.216
Pitot Calibration Factor, CF	0.99	0.99	0.99
Meter Gamma	1.008	1.008	1.008
Meter Delta H, inches of H2O	1.83	1.83	1.83
Stack Diameter, inches	11	11	11
Rectangular Width, inches		0	0
Rectangular Length, inches		0	0
Stack Area, sq.ft.	0.66	0.66	0.66
Barometric Pressure, inches of Hg	28.96	28.96	29.01
Static Pressure, inches of H2O	0.56	0.48	0.62
Dry Gas Meter Sample Volume, (VM)ft3			
Initial	923.763	35.334	156.157
Final	1035.024	155.872	279.503
Meter Volume	111.073	120.424	123.292
Ave. Stack Temperature, Ts(F)	176.6	185.9	179.0
Ave. Meter Temperature, Tm(F)	106.7	96.2	95.1
Ave. Run Delta H, inches of H2O	1.29	1.52	1.61
Ave. Square Root of Delta P	0.6788	0.6878	0.7087
Moisture Data			
Volume of water collected, mls	40	42	36
Silica Gel, grams	17.7	15.5	29.9
Total Collected, mls	57.7	57.5	65.9
ORSAT Data			
%O2	20.13	20.13	20.11
%CO2	1.32	0.86	0.96
%CO			

Calculations

Vw(std), scf =	2.716	2.707	3.102
Vm(std), dscf =	101.299	111.973	115.091
Bws=	0.026	0.024	0.026
Md=	29.02	28.94	28.96
Ms=	28.73	28.68	28.67
Vs, ft/sec =	50.2	51.3	52.5
Qs, acfm =	1,989	2,031	2,080
Qs(std), dscfm =	1,557	1,571	1,625
Isokinetic Sampling Rate, %	93.8	102.7	102.0

Where:

Vw(std) = volume of water vapor in gas, standard conditions = 0.04707*Vlc
Vm(std) = vol. of gas sampled, standard conditions = 17.647 x Vm x gamma x [Pb + (dH/13.6)]/Tm(R)
Bws = water vapor in gas stream, proportion by volume = Vw(std)/(Vm(std) + Vw(std))
Md = molecular weight of stack gas, dry basis = (0.44 x%CO2) + (0.32 x%O2) + [0.28 x (%N2 + %CO)]
Ms = molecular weight of stack gas, wet basis = [Md x (1-Bws)] + (18.0 x Bws)
Vs = stack gas velocity = 85.49 x Cp x (avg. Sq.Rt. dP) x [Sq.Rt. (Ts(R))/(Ms x Ps)]
Qs = stack gas flow rate = Vs x As x 60
Qs(std) = stack gas flow rate, standard conditions = Qs x (1-Bws) x (528/(Ts(R)) x (Ps/29.92)
Isokinetic sampling rate = {(Ts(R)) x [(0.00267 x Vlc) + (Vm(std)/17.647)] x 100}/(Time x vs x Ps x An x60)

Field Data Summary
General Dynamics OTS Munition Services
Building 1 - TTU Exhaust
Joplin, MO

	Run 1						Run 2						Run 3					
Traverse Point	Stack Temp(F)	Delta P	Delta H	Tm(F) in	Tm(F) out	SQRT Delta P	Stack Temp(F)	Delta P	Delta H	Tm(F) in	Tm(F) out	SQRT Delta P	Stack Temp(F)	Delta P	Delta H	Tm(F) in	Tm(F) out	SQRT Delta P
A1	171	0.34	0.95	101	100	0.5831	178	0.34	1.09	106	105	0.5831	179	0.48	1.54	86	85	0.6928
1	171	0.34	0.95	103	100	0.5831	178	0.34	1.09	105	105	0.5831	179	0.48	1.54	87	85	0.6928
1	171	0.34	0.95	104	101	0.5831	178	0.34	1.09	105	105	0.5831	179	0.48	1.54	90	86	0.6928
2	174	0.46	1.29	105	102	0.6782	180	0.48	1.54	106	103	0.6928	179	0.54	1.73	91	87	0.7348
2	174	0.46	1.29	106	102	0.6782	180	0.48	1.54	105	103	0.6928	179	0.54	1.73	94	88	0.7348
2	174	0.46	1.29	107	103	0.6782	180	0.48	1.54	105	102	0.6928	179	0.54	1.73	95	89	0.7348
3	175	0.48	1.34	107	103	0.6928	183	0.52	1.66	103	102	0.7211	179	0.50	1.60	96	90	0.7071
3	175	0.48	1.34	107	104	0.6928	183	0.52	1.66	101	99	0.7211	179	0.50	1.60	96	91	0.7071
3	175	0.48	1.34	108	104	0.6928	185	0.52	1.66	99	97	0.7211	179	0.50	1.60	97	92	0.7071
4	174	0.44	1.23	107	105	0.6633	185	0.44	1.41	99	97	0.6633	179	0.50	1.60	98	93	0.7071
4	174	0.44	1.23	108	105	0.6633	185	0.44	1.41	99	96	0.6633	179	0.50	1.60	98	93	0.7071
4	174	0.44	1.23	109	105	0.6633	187	0.44	1.41	98	95	0.6633	179	0.50	1.60	99	94	0.7071
B1	178	0.48	1.34	109	106	0.6928	190	0.50	1.60	98	96	0.7071	179	0.54	1.73	99	94	0.7348
1	178	0.48	1.34	110	106	0.6928	190	0.50	1.60	98	95	0.7071	179	0.54	1.73	99	95	0.7348
1	178	0.48	1.34	110	106	0.6928	190	0.50	1.60	98	95	0.7071	179	0.54	1.73	100	95	0.7348
2	180	0.54	1.51	110	106	0.7348	190	0.54	1.73	98	4	0.7348	179	0.50	1.60	101	96	0.7071
2	180	0.54	1.51	111	107	0.7348	190	0.54	1.73	98	94	0.7348	179	0.50	1.60	101	96	0.7071
2	180	0.54	1.51	111	107	0.7348	190	0.54	1.73	97	94	0.7348	179	0.50	1.60	100	96	0.7071
3	181	0.50	1.40	111	107	0.7071	190	0.50	1.60	95	93	0.7071	179	0.48	1.54	101	97	0.6928
3	181	0.50	1.40	112	107	0.7071	190	0.50	1.60	95	92	0.7071	179	0.48	1.54	100	97	0.6928
3	181	0.50	1.40	112	108	0.7071	190	0.50	1.60	94	91	0.7071	179	0.48	1.54	101	97	0.6928
4	180	0.46	1.29	112	108	0.6782	190	0.48	1.54	94	91	0.6928	179	0.48	1.54	102	97	0.6928
4	180	0.46	1.29	112	108	0.6782	190	0.48	1.54	93	91	0.6928	179	0.48	1.54	102	98	0.6928
4	180	0.46	1.29	112	108	0.6782	190	0.48	1.54	92	90	0.6928	179	0.48	1.54	102	97	0.6928
Average	177	0.46	1.29	109	105	0.6788	186	0.48	1.52	99	93	0.6878	179	0.50	1.61	97	93	0.7087

EPA Isokinetic Field Sheet

Methods Performed STEM

Client	General Dynamic	Run Number	ExplosiveCompounds3	Pitot Number	SP2-A Standard (2')
Location	Joplin, MO	Stack Diameter	11"	Pitot Coefficient	0.99
Source	TTU	Barometric Pres.	~~30.01~~ @ 29.01	Stack TC I.D.	TC-3A 2' Standard Pitot
Date	06-28-2012	Static Pressure	± 0.62	Oven Box I.D.	OB 1
Operators	CW/JS/SG	Meter Box #	MB-5	Impinger Out I.D.	IO 3
Start Time	0850	Meter delta H	1.830	Nozzle Size	0.216
End Time	1100	Meter Gamma	1.008	XAD Trap I.D.	

K Factor 3.2

Leak Check Rates	Sample Rate in.	Sample Rate cfm	Pitot +	Pitot -
Initial	13	0.006	✓	✓
Mid				
Mid				
Final	15	0.004	✓	✓

Sample Point	Sample Time (min)	Velocity Head (in. H_2O)	Orifice Setting (in. H_2O)	Meter Volume (ft^3)	Temperature Readings in Degrees Farenheit: Stack	Probe	Oven Box	Impinger	Aux	Meter Inlet	Meter Outlet	Vacuum (in. hg)	Comments/Notes
A 1	7.5	0.48	1.54	156.157	179	251	247	66		86	85	2	Post Flows
1	15	0.48	1.54	161.151	179	260	255	54		87	85	2	ΔP
1	22.5	0.48	1.54	166.166	179	260	254	46		90	86	2	A 1 0.47 189
2	30	0.54	1.73	171.021	179	260	255	46		91	87	2	2 0.54 189
2	37.5	0.54	1.73	176.248	179	260	254	47		94	88	2	3 0.51 189
2	45	0.54	1.73	181.822	179	254	255	48		95	89	2	4 0.50 189
3	52.5	0.50	1.60	187.126	179	260	253	49		96	90	2	
3	60	0.50	1.60	192.272	179	260	255	51		96	91	2	B 1 0.54 189
3	67.5	0.50	1.60	197.346	179	260	254	51		97	92	2	2 0.52 189
4	75	0.50	1.60	202.581	179	260	255	51		98	93	3	3 0.47 189
4	82.5	0.50	1.60	207.727	179	260	254	53		98	93	3	4 0.47 189
4	90	0.50	1.60	212.854	179	260	255	54		99	94	3	
B 1	7.5	0.54	1.73	218.015	179	260	255	54		99	94	3	
1	15	0.54	1.73	223.387	179	260	256	56		99	95	3	
1	22.5	0.54	1.73	228.751	179	260	254	56		100	95	3	
2	30	0.50	1.60	234.161	179	260	254	58		101	96	3	
2	37.5	0.50	1.60	239.289	179	260	251	60		101	96	3	
2	45	0.50	1.60	244.414	179	260	254	59		100	96	3	
3	52.5	0.48	1.54	249.539	179	260	255	60		101	97	3	
3	60	0.48	1.54	254.478	179	260	254	60		100	97	3	Start Time
3	67.5	0.48	1.54	259.393	179	260	254	61		101	97	3	0850
4	75	0.48	1.54	264.337	179	260	253	60		102	97	3	End Time
4	82.5	0.48	1.54	269.397	179	261	255	62		102	98	3	1150
4	90	0.48	1.54	274.511	179	260	252	61		102	99	3	Start M
				274.503									@ 156.157
													End @
													Total M Volume
												CD4	~~118.354~~
													123.346

Impinger Data (vol) #	Initial	Final
1	50	
2	100	
3	100	
4		
5		
6		

Silica Gel Data (gm) #	Initial	Final
1		
2		

Moisture Gain	
	ml.
	gm
	Total

Filter Data #	Number	Tare
1		
2		
3		

Molecular Weight Data (%) #	O_2	CO_2
1		
2		
3		
Avg		

O'BRIEN & GERE

\\syracusesn\Syracuse\Office Ops\ENV\Div01\Source Testing\Field Data Forms\Isokinetic\Iso Field Sheet.xls

EPA Isokinetic Field Sheet

Methods Performed: STEM

Client	General Dynamics	Run Number	Explosive Compounds 1	Pitot Number	SP2-A Standard (2')
Location	Joplin, MO	Stack Diameter	11"	Pitot Coefficient	0.99
Source	TTU	Barometric Pres.	28.96	Stack TC I.D.	TC-3A
Date	06-27-2012	Static Pressure	+0.56	Oven Box I.D.	GB 1
Operators	CW/JS/SG	Meter Box #	MB5	Impinger Out I.D.	IO 3
Start Time	~~0850~~ 1527	Meter delta H	1.830	Nozzle Size	.216
End Time	1828	Meter Gamma	1.008	XAD Trap I.D.	
		K Factor	2.8		

Leak Check Rates	Sample Rate in.	Sample Rate cfm	Pitot +	Pitot -
Initial	10	0.003	✓	✓
Mid				
Mid				
Final	11	0.001	✓	✓

Sample Point	Sample Time (min)	Velocity Head (in. H_2O)	Orifice Setting (in. H_2O)	Meter Volume (ft³)	Temperature Readings in Degrees Farenheit: Stack	Probe	Oven Box	Impinger	Aux	Meter Inlet	Meter Outlet	Vacuum (in. hg)	Comments/Notes	ΔP	Temp
A 1	7.5	0.34	0.95	923.763	171	259	255	67		101	100	2	A 1	0.	
1	15	0.34	0.95	927.802	171	260	254	59		103	100	2	2		
1	22.5	0.34	0.95	931.86	171	260	253	52		104	101	2	3		
2	30	0.46	1.29	935.852	174	260	257	52		105	102	2	4		
2	37.5	0.46	1.29	940.098	174	260	255	53		106	102	2			
2	45	0.46	1.29	944.711	174	260	254	56		107	103	3	B 1		
3	52.5	0.48	1.34	949.334	175	260	255	56		107	103	2	2		
3	60	0.48	1.34	~~952.511~~	175	259	253	57		107	104	2	3		
3	67.5	0.48	1.34	958.200	175	260	254	54		108	104	2	4		
4	75	0.44	1.23	—	174	260	254	59		107	105	2			
4	82.5	0.44	1.23	—	174	259	255	59		108	105	2			
4	90	0.44	1.23	973.002	174	260	255	61		109	105	2			
B 1	7.5	0.48	1.34	977.833	178	260	254	51		109	106	2			
1	15	0.48	1.34	982.4-	178	260	254	49		110	106	2			
1	22.5	0.48	1.34	986.999	178	259	255	47		110	106	2			
2	30	0.54	1.51	991.886	180	260	255	48		110	106	2			
2	37.5	0.54	1.51	997—	180	261	254	50		111	107	2			
2	45	0.54	1.51	1001.9—	180	260	254	50		111	107	2			
3	52.5	.50	1.40	1006.7	181	260	252	53		111	107	2			
3	60	0.50	1.40	—	181	260	253	54		112	107	2	Paused @		
3	67.5	0.50	1.40	—	181	259	254	56		112	108	2	1657 For		
4	75	.46	1.29	~~1020~~ 1020.777	180	260	254	55		112	108	2	one minute		
4	82.5	0.46	1.29	1025.542	180	259	254	55		112	108	2	Restarted		
4	90	0.46	1.29	1030.2—	180	260	253	55		112	108	2	@ 1658		
				1035.02											
			Final	1035.024											

Impinger Data (vol) #	Initial	Final
1		
2		
3		
4		
5		
6		

Silica Gel Data (gm) #	Initial	Final
1		
2		

Moisture Gain	
	ml.
	gm
	Total

Filter Data #	Number	Tare
1		
2		
3		

Molecular Weight Data (%) #	O_2	CO_2
1		
2		
3		
Avg		

O'BRIEN & GERE

\\syracusewr\Syracuse\Office-Ops\ENV\DivO1\Source Testing\Field Data Forms\Isokinetic\Iso Field Sheet.xls

EPA Isokinetic Field Sheet

Methods Performed: STEM

Client	General Dynamic	Run Number	Explosive Cam 2	Pitot Number	SP2-A Standard (2')
Location	Joplin, MO	Stack Diameter	11"	Pitot Coefficient	0.99
Source	TTU	Barometric Pres.	28.96	Stack TC I.D.	TC-3A 2' Standard Pitot
Date	06-27-2012	Static Pressure	+.48	Oven Box I.D.	OB 1
Operators	CW/JS/SG	Meter Box #	MB-5	Impinger Out I.D.	IO3
Start Time	1952	Meter delta H	1.830	Nozzle Size	0.216
End Time	2252	Meter Gamma	1.008	XAD Trap I.D.	
		K Factor	3.2		

Leak Check Rates	Sample Rate in.	Sample Rate cfm	Pitot +	Pitot -
Initial	12	0.000	✓	✓
Mid				
Mid				
Final				

Sample Point	Sample Time (min)	Velocity Head (in. H_2O)	Orifice Setting (in. H_2O)	Meter Volume (ft³)	Stack	Probe	Oven Box	Impinger	Aux	Meter Inlet	Meter Outlet	Vacuum (in. hg)	Comments/Notes		
A 1	7.5	0.34	1.09	035.334	178	260	254	64		106	105	1	Post Flows		
1	15	0.34	1.09	039.378	178	260	254	62		105	105	1		ΔP	Temp
1	22.5	0.34	1.09	044.612	178	260	254	60		105	105	1	A1	0.35	186
2	30	0.48	1.54	047.90	180	261	254	56		106	103	1	2	0.46	189
2	37.5	0.48	1.54	051.777	180	260	253	54		105	103	1	3	0.53	192
2	45	0.48	1.54	056.9—	180	260	250	53		105	102	2	4	0.44	190
3	52.5	0.52	1.66	061.873	183	260	254	54		103	102	2			
3	60	0.52	1.66	066.993	183	261	254	53		101	99	2	B1	0.50	187
3	67.5	0.52	1.66	070.956	185	261	255	54		99	97	2	2	0.52	190
4	75	0.44	1.41	076—	185	259	254	55		99	97	2	3	0.51	190
4	82.5	0.44	1.41	081.467	185	260	254	54		99	96	2	4	0.48	192
4	90	0.44	1.41	087.123	188	260	254	53		98	95	2			
B 1	7.5	0.50	1.60	092.262	190	260	254	55		98	96	2			
1	15	0.50	1.60	097.678	190	260	255	55		98	95	2			
1	22.5	0.50	1.60	103.154	190	260	254	56		98	95	2			
2	30	0.54	1.73	108.652	190	260	255	57		98	94	2			
2	37.5	0.54	1.73	114.205	190	260	254	56		98	94	2			
2	45	0.54	1.73	119.221	190	261	255	56		97	94	2			
3	52.5	0.50	1.60	125.101	190	260	255	55		95	93	2			
3	60	0.50	1.60	130.233	190	260	254	54		95	92	2			
3	67.5	0.50	1.60	135.421	190	260	255	55		94	91	2			
4	75	0.48	1.54	140.562	190	260	254	55		94	91	2			
4	82.5	0.48	1.54	145.461	190	260	254	54		93	91	2			
4	90	0.48	1.54	150.773	190	260	252	55		92	90	2	Total Meter		
				155.872									Volume		
													120.538		

Impinger Data (vol) #	Initial	Final
1		
2		
3		
4		
5		
6		

Silica Gel Data (gm) #	Initial	Final
1		
2		

Moisture Gain

_____ ml.

_____ gm

_____ Total

Filter Data #	Number	Tare
1		
2		
3		

Molecular Weight Data (%) #	O_2	CO_2
1		
2		
3		
Avg		

O'BRIEN & GERE

\\syracuse\Syracuse\Office-Ops\ENV\Div01\Source Testing\Field Data Forms\Isokinetic Field Sheet.xls

O'BRIEN & GERE

SAMPLE TRAIN MOISTURE RECOVERY DATA SHEET

Reference Method / Sampling Train : STEM - TTU

Run 1				Run 2				Run 3			
Recovered by :	J. Gorman			Recovered by :	J. Gorman			Recovered by :	J. Gorman		
Run No. 1	Date : 06-27-12			Run No. 2	Date : 06-27-12			Run No. 3	Date : 06-28-12		
XAD Module No. : OBG062012-9				XAD Module No. : OBG062012-5				XAD Module No. : OBG062012-6			
Filter No. :				Filter No. :				Filter No. :			
Impinger No. and Volume				Impinger No. and Volume				Impinger No. and Volume			
No.	Initial (mL)	Final (mL)	Rinse (mL)	No.	Initial (mL)	Final (mL)	Rinse (mL)	No.	Initial (mL)	Final (mL)	Rinse (mL)
1	50	72	46	1	50	58	46	1	50	62	42
2	100	112	42	2	100	122	36	2	100	118	36
3	100	102	34	3	100	110	40	3	100	106	42
4	0	4		4	0	2		4	0	0	
5				5				5			
6				6				6			
7		290	DIFF :	7		292	DIFF :	7		286	DIFF :
Totals	250	~~40~~	40	Totals	250	~~42~~	42	Totals	250	~~36~~	36
	Initial (g)	Final (g)	DIFF :		Initial (g)	Final (g)	DIFF :		Initial (g)	Final (g)	DIFF :
Silica Gel	293.5	311.2	17.7	Silica Gel	294.1	310.6	15.5	Silica Gel	288.5	318.4	29.9
Final Net Moisture Gain:			57.7	Final Net Moisture Gain:			57.5	Final Net Moisture Gain:			65.9

C:\Users\MiloSM\Desktop\[Moisture Recovery.xls]A

VOST

O'BRIEN & GERE

VOST DATA SHEET

FACILITY GENERAL DYNAMICS	DATE 6.27.12
LOCATION CARTHAGE, MO.	OPERATOR W. HARDY
SOURCE TTU	BAR. PRESSURE, in. Hg 28.85
CONDITION 1	PROBE LENGTH (ft) 3
RUN NO. R1A	DESIRED PROBE TEMP. 125°C
METER CALIBRATION FACTOR (Y) 1.0711	PROBE PURGED ? YES
DRY GAS METER NO. VB3	DESIRED FLOW RATE (Lpm) 0.5
TENAX TUBE NO"S 1A1 1B1	DESIRED SAMPLE VOLUME (dsL) 20
TENAX/CHARCOAL TUBE NO"S 1C1	DGM PRESSURE, in. H_2O 0.8
Train Leak Check -- INITIAL VACUUM (in. Hg): 15	Leak Rate : 0.000 in. Hg in 60 sec.
Train Leak Check -- FINAL VACUUM (in. Hg): 10	Leak Rate : 0.000 in. Hg in 60 sec.

ACCEPTANCE CRITERIA : Leak Rate < 2.5 mm Hg (0.1 in. Hg) after 60 sec.

SAMPLING TIME (min)	CLOCK TIME (24-hr)	FLOW RATE (Lpm)	GAS METER READING (L)	TEMPERATURE READINGS PROBE (°C or °F)	DRY GAS METER (°C or °F)	TRAP (°C or °F)	PUMP VAC. (in. Hg)
0	1537	0.6	1660.24	128	41	17	10
5	1542	0.6	1662.70	128	41	17	10
10	1547	0.6	1665.25	128	42	18	9
15	1552	0.6	1667.77	128	42	13	8
20	1557	0.6	1670.35	128	43	13	8
25	1602	0.6	1672.65	128	44	13	8
30	1607	0.6	1675.24	128	44	13	8
35	1612	0.6	1677.60	128	45	12	8
40	1617	—	1680.12	—	—	—	—

COMMENTS :

Laboratory Lot #:

O'BRIEN & GERE

VOST DATA SHEET

FACILITY GENERAL DYNAMICS	DATE 6/27/12
LOCATION CARTHAGE, MO	OPERATOR W. HARDY
SOURCE TTU	BAR. PRESSURE, In. Hg 28.85
CONDITION 1	PROBE LENGTH (ft) 3
RUN NO. 1B	DESIRED PROBE TEMP. 125 °C
METER CALIBRATION FACTOR (Y) 1.0711	PROBE PURGED ? YES
DRY GAS METER NO. VB3	DESIRED FLOW RATE (Lpm) 0.5
TENAX TUBE NO"S 1A2 1B2	DESIRED SAMPLE VOLUME (dsL) 20.0
TENAX/CHARCOAL TUBE NO"S 1C2	DGM PRESSURE, In. H_2O
Train Leak Check -- INITIAL VACUUM (In. Hg): 13	Leak Rate : 0.000 In. Hg in 60 sec.
Train Leak Check -- FINAL VACUUM (In. Hg):	Leak Rate : In. Hg in 60 sec.

ACCEPTANCE CRITERIA : Leak Rate < 2.5 mm Hg (0.1 In. Hg) after 60 sec.

SAMPLING TIME (min)	CLOCK TIME (24-hr)	FLOW RATE (Lpm)	GAS METER READING (L)	TEMPERATURE READINGS PROBE (°C or °F)	DRY GAS METER (°C or °F)	TRAP (°C or °F)	PUMP VAC. (In. Hg)
0	1629	0.6	1680.42	128	46	16	5
5	1634	0.6	1682.—	128	46	13	5
10	1639	0.6	1685.32	127	46	13	5
15	1644	0.6	1688.00	127	47	12	5
20	1649	0.6	1690.31	128	47	11	5
25	1654	0.6	—	128	47	12	5
30	1659	0.6	1695.31	127	48	11	5
35	1704	0.6	1697.70	129	48	9	5
40	1709	—	1700.46	—	—	—	—

COMMENTS :

Laboratory Lot #:

3

O'BRIEN & GERE

VOST DATA SHEET

FACILITY GENERAL DYNAMICS	DATE 6.27.12
LOCATION CARTHAGE, MO	OPERATOR W. HARDY
SOURCE TTU	BAR. PRESSURE, in. Hg 28.85
CONDITION 1	PROBE LENGTH (ft) 3
RUN NO. 1C	DESIRED PROBE TEMP. 125°C
METER CALIBRATION FACTOR (Y) 1.0711	PROBE PURGED ? yes
DRY GAS METER NO. NB3	DESIRED FLOW RATE (Lpm) 0.5
TENAX TUBE NO"S 1A3 1B3	DESIRED SAMPLE VOLUME (dsL) 20.0
TENAX/CHARCOAL TUBE NO"S 1C3	DGM PRESSURE, in. H_2O 0.9
Train Leak Check -- INITIAL VACUUM (in. Hg): 13.5	Leak Rate : 0.000 in. Hg in 60 sec.
Train Leak Check -- FINAL VACUUM (in. Hg): 7.5	Leak Rate : 0.000 in. Hg in 60 sec.

ACCEPTANCE CRITERIA : Leak Rate < 2.5 mm Hg (0.1 in. Hg) after 60 sec.

SAMPLING TIME (min)	CLOCK TIME (24-hr)	FLOW RATE (Lpm)	GAS METER READING (L)	TEMPERATURE READINGS PROBE (°C or °F)	DRY GAS METER (°C or °F)	TRAP (°C or °F)	PUMP VAC. (in. Hg)
0	1727	0.6	1700.73	128	47	13	7
5	1732	0.6	1703.28	127	47	12	7
10	1737	0.6	1705.81	128	47	11	7
15	1742	0.6	1708.41	128	47	12	7
20	1747	0.6	1711.01	128	47	13	7
25	1752	0.6	1713.—	128	47	13	7
30	1757	0.6	1716.12	127	47	14	7
35	1802	0.6	1718.57	127	47	13	7
40	1807	—	1721.10	—	—	—	—

COMMENTS :

Laboratory Lot #:

O'BRIEN & GERE

VOST DATA SHEET

FACILITY GENERAL DYNAMICS	DATE 6.27.12
LOCATION CARTHAGE, MO.	OPERATOR W. HARDY
SOURCE TTU	BAR. PRESSURE, in. Hg 28.85
CONDITION 1	PROBE LENGTH (ft) 3
RUN NO. 2A	DESIRED PROBE TEMP. 125 °C
METER CALIBRATION FACTOR (Y) 1.0711	PROBE PURGED ? YES
DRY GAS METER NO. VB3	DESIRED FLOW RATE (Lpm) 0.5
TENAX TUBE NO"S 2A1 2B1	DESIRED SAMPLE VOLUME (dsL) 20.0
TENAX/CHARCOAL TUBE NO"S. 2C1	DGM PRESSURE, in. H_2O 0.9
Train Leak Check -- INITIAL VACUUM (in. Hg): 11	Leak Rate : 0.000 in. Hg in 60 sec.
Train Leak Check -- FINAL VACUUM (in. Hg): 12.5	Leak Rate : 0.000 in. Hg in 60 sec.

ACCEPTANCE CRITERIA : Leak Rate < 2.5 mm Hg (0.1 in. Hg) after 60 sec.

SAMPLING TIME (min)	CLOCK TIME (24-hr)	FLOW RATE (Lpm)	GAS METER READING (L)	TEMPERATURE READINGS PROBE (°C or °F)	DRY GAS METER (°C or °F)	TRAP (°C or °F)	PUMP VAC. (in. Hg)
0	1952	0.6	1721.32	129	43	19	8
5	1957	0.6	1724. —	128	43	18	8
10	2002	0.6	1726. —	128	43	16	8
15	2007	0.6	1728. —	129	43	13	8
20	2012	0.6	1731.57	128	43	12	8
25	2017	0.6	1734.20	128	43	14	8
30	2022	0.6	1736.92	128	43	12	8
35	2027	0.6	1739.39	128	43	11	8
40	2032	—	1741.04	—	—	—	—

COMMENTS :

Laboratory Lot #:

O'BRIEN & GERE

VOST DATA SHEET

FACILITY GENERAL DYNAMICS	DATE 6-27-12
LOCATION CARTHAGE, MO.	OPERATOR W. HANDY
SOURCE TTU	BAR. PRESSURE, In. Hg 28.85
CONDITION 1	PROBE LENGTH (ft) 3
RUN NO. 2B	DESIRED PROBE TEMP. 125 °C
METER CALIBRATION FACTOR (Y) 1.0711	PROBE PURGED ? YES
DRY GAS METER NO. VB3	DESIRED FLOW RATE (Lpm) 0.5
TENAX TUBE NO"S 2A2 2B2	DESIRED SAMPLE VOLUME (dsL) 20.0
TENAX/CHARCOAL TUBE NO"S 2C2	DGM PRESSURE, In. H_2O 0.9
Train Leak Check -- INITIAL VACUUM (In. Hg): 14	Leak Rate : 0.000 In. Hg In 60 sec.
Train Leak Check -- FINAL VACUUM (In. Hg): 13.5	Leak Rate : 0.000 In. Hg In 60 sec.

ACCEPTANCE CRITERIA : Leak Rate < 2.5 mm Hg (0.1 In. Hg) after 60 sec.

SAMPLING TIME (min)	CLOCK TIME (24-hr)	FLOW RATE (Lpm)	GAS METER READING (L)	TEMPERATURE READINGS PROBE (°C or °F)	DRY GAS METER (°C or °F)	TRAP (°C or °F)	PUMP VAC. (in. Hg)
0	2049	0.6	1741.89	127	42	13	8
5	2054	0.6	1744.45	127	42	12	8
10	2059	0.6	1747.—	127	42	12	8
15	2104	0.6	1749.57	127	41	12	8
20	2109	0.6	1751.9	128	41	12	8
25	2114	0.6	1754.29	128	41	12	8
30	2119	0.6	1756.—	128	41	12	8
35	2124	0.6	1758.91	128	41	12	8
40	2129	—	1761.25	—	—	—	—

COMMENTS :

Laboratory Lot #:

O'BRIEN & GERE

VOST DATA SHEET

FACILITY GENERAL DYNAMICS	DATE 6.27.12
LOCATION CARTHAGE, MO	OPERATOR N. HAEDY
SOURCE TTU	BAR. PRESSURE, in. Hg 28.85
CONDITION 1	PROBE LENGTH (ft) 3
RUN NO. 2C	DESIRED PROBE TEMP. 125 °C
METER CALIBRATION FACTOR (Y) 1.0711	PROBE PURGED ? YES
DRY GAS METER NO. VB3	DESIRED FLOW RATE (Lpm) 0.5
TENAX TUBE NO"S 2A3 2B3	DESIRED SAMPLE VOLUME (dsL) 20.0
TENAX/CHARCOAL TUBE NO"S 2C3	DGM PRESSURE, in. H_2O 1.1
Train Leak Check -- INITIAL VACUUM (in. Hg): 12	Leak Rate : 0.000 in. Hg in 60 sec.
Train Leak Check -- FINAL VACUUM (in. Hg): 10	Leak Rate : 0.000 in. Hg in 60 sec.

ACCEPTANCE CRITERIA : Leak Rate < 2.5 mm Hg (0.1 in. Hg) after 60 sec.

SAMPLING TIME (min)	CLOCK TIME (24-hr)	FLOW RATE (Lpm)	GAS METER READING (L)	TEMPERATURE READINGS PROBE (°C or °F)	DRY GAS METER (°C or °F)	TRAP (°C or °F)	PUMP VAC. (in. Hg)
0	2145	0.6	1761.57	128	40	16	9
5	2150	0.6	1764.03	129	40	16	9
10	2155	0.6	1767.81	128	40	16	9
15	2200	0.6	1770.12	128	40	17	10
20	2205	0.6	1771.59	128	40	17	10
25	2210	0.6	1774.25	128	40	18	10
30	2215	0.6	1776.69	129	39	18	10
35	2220	0.6	1779.42	128	39	18	10
40	2225	—	1781.77	—	—	—	—

COMMENTS :

Laboratory Lot #:

O'BRIEN & GERE

VOST DATA SHEET

FACILITY GENERAL DYNAMICS	DATE 6·28·12
LOCATION CARTHAGE, MO.	OPERATOR W. HARDY
SOURCE TTU	BAR. PRESSURE, in. Hg ~~30.01~~ 28.9
CONDITION 1	PROBE LENGTH (ft) 3
RUN NO. R3A	DESIRED PROBE TEMP. 125°C
METER CALIBRATION FACTOR (Y) 1.0711	PROBE PURGED ? YES
DRY GAS METER NO. VB3	DESIRED FLOW RATE (Lpm) 0.5
TENAX TUBE NO"S 3A1 3B1	DESIRED SAMPLE VOLUME (dsL) 20.0
TENAX/CHARCOAL TUBE NO"S 3C1	DGM PRESSURE, in. H_2O 1.0
Train Leak Check -- INITIAL VACUUM (in. Hg): 12.5	Leak Rate : 0.000 in. Hg in 60 sec.
Train Leak Check -- FINAL VACUUM (in. Hg): 9	Leak Rate : 0.000 in. Hg in 60 sec.

ACCEPTANCE CRITERIA : Leak Rate < 2.5 mm Hg (0.1 in. Hg) after 60 sec.

SAMPLING TIME (min)	CLOCK TIME (24-hr)	FLOW RATE (Lpm)	GAS METER READING (L)	TEMPERATURE READINGS PROBE (°C or °F)	DRY GAS METER (°C or °F)	TRAP (°C or °F)	PUMP VAC. (in. Hg)
0	8:50	0.6	1782.09	128	33	11	6
5	8:55	0.6	1784.60	127	34	11	4
10	9:00	0.6	1787.07	128	34	10	6
15	905	0.6	1789.45	127	35	11	6
20	910	0.6	1792.0	128	35	12	6
25	915	0.6	1794.42	128	36	12	6
30	920	0.6	1796.90	128	36	10	6
35	925	0.6	1799.35	128	37	10	6
40	9:30	—	1801.64	—	—	—	—

COMMENTS :

Laboratory Lot #:

O'BRIEN & GERE

VOST DATA SHEET

FACILITY GENERAL DYNAMICS	DATE 6.28.12
LOCATION CARTHAGE MO	OPERATOR W. HARDY
SOURCE TTU	BAR. PRESSURE, in. Hg 28.9
CONDITION 1	PROBE LENGTH (ft) 3
RUN NO. R3B	DESIRED PROBE TEMP. 125 °C
METER CALIBRATION FACTOR (Y) 1.0711	PROBE PURGED ? YES
DRY GAS METER NO. VB3	DESIRED FLOW RATE (Lpm) 0.5
TENAX TUBE NO"S 3A2 3B2	DESIRED SAMPLE VOLUME (dsL) 2.0
TENAX/CHARCOAL TUBE NO"S 3C2	DGM PRESSURE, in. H_2O 1.0
Train Leak Check -- INITIAL VACUUM (in. Hg): 12.5	Leak Rate : 0.500 in. Hg in 60 sec.
Train Leak Check -- FINAL VACUUM (in. Hg): 11	Leak Rate : 0.000 in. Hg in 60 sec.

ACCEPTANCE CRITERIA : Leak Rate < 2.5 mm Hg (0.1 in. Hg) after 60 sec.

SAMPLING TIME (min)	CLOCK TIME (24-hr)	FLOW RATE (Lpm)	GAS METER READING (L)	TEMPERATURE READINGS PROBE (°C or °F)	DRY GAS METER (°C or °F)	TRAP (°C or °F)	PUMP VAC. (in. Hg)
0	943	0.6	1801.79	127	37	13	8
5	948	0.6	1804.37	128	38	14	8
10	953	0.6	1807.95	128	39	13	8
15	958	0.6	1809.—	128	39	12	8
20	1003	0.6	1811.95	129	39	12	8
25	1008	0.6	1814.—	129	40	11	8
30	1013	0.6	1817.15	127	40	13	8
35	1018	0.6	1819.55	128	40	13	8
40	1023	—	1822.17	—	—	—	—

COMMENTS :

Laboratory Lot #:

O'BRIEN & GERE

VOST DATA SHEET

FACILITY GENERAL DYNAMICS	DATE 6.28.12
LOCATION CARTHAGE, MO	OPERATOR W. HARDY
SOURCE TTU	BAR. PRESSURE, in. Hg ~~30.01~~ 28.9
CONDITION 1	PROBE LENGTH (ft) 3
RUN NO. R 3C	DESIRED PROBE TEMP. 125°C
METER CALIBRATION FACTOR (Y) 1.0711	PROBE PURGED ? YES
DRY GAS METER NO. VB3	DESIRED FLOW RATE (Lpm) 0.5
TENAX TUBE NO"S 3A3 3B3	DESIRED SAMPLE VOLUME (dsL) 20.0
TENAX/CHARCOAL TUBE NO"S 3C3	DGM PRESSURE, in. H_2O 0.9
Train Leak Check -- INITIAL VACUUM (in. Hg): 13.5	Leak Rate : 0.000 in. Hg in 60 sec.
Train Leak Check -- FINAL VACUUM (in. Hg): 13.5	Leak Rate : 0.000 in. Hg in 60 sec.

ACCEPTANCE CRITERIA : Leak Rate < 2.5 mm Hg (0.1 in. Hg) after 60 sec.

SAMPLING TIME (min)	CLOCK TIME (24-hr)	FLOW RATE (Lpm)	GAS METER READING (L)	TEMPERATURE READINGS PROBE (°C or °F)	DRY GAS METER (°C or °F)	TRAP (°C or °F)	PUMP VAC. (in. Hg)
~~1040~~ 0	1042	0.6	1822.44	128	53	17	10
5	1047	0.6	1824.65	127	41	17	12
10	1052	0.6	1827.25	128	41	13	12
15	1057	0.6	1829.65	128	41	13	12
20	1102	0.6	1832.05	128	41	13	12
25	1107	0.6	1834.63	129	41	13	12
30	1112	0.6	1837.35	127	41	13	10
35	1117	0.6	1839.97	127	41	13	10
40	1122	—	1842.25	—	—	—	—

COMMENTS :

Laboratory Lot #:

CEMS

AVERAGED CEM DATA

Job Number: *49349* **Start Time:** *15:27:00*
Run ID: *R1* **Start Date:** *06/27/12*

Date	Time	O2	CO2	NOx	CO	THC
6/27/2012	15:28:00	19.97	1.47	99.28	8.53	34.13
6/27/2012	15:29:00	19.99	1.48	99.72	8.26	34.78
6/27/2012	15:30:00	19.97	1.48	98.46	8.15	34.51
6/27/2012	15:31:00	19.97	1.48	98.51	8.8	34.1
6/27/2012	15:32:00	19.96	1.48	99.86	8.5	32.71
6/27/2012	15:33:00	19.97	1.49	99.87	8.38	31.79
6/27/2012	15:34:00	19.98	1.48	98.97	8.17	32.73
6/27/2012	15:35:00	19.96	1.5	98.1	8.68	33.71
6/27/2012	15:36:00	19.98	1.49	99.44	8.22	32.48
6/27/2012	15:37:00	19.96	1.5	99.78	8.18	32.54
6/27/2012	15:38:00	24.3	1.83	121.57	9.91	39.64
6/27/2012	15:39:00	19.97	1.5	103.19	8.44	31.39
6/27/2012	15:40:00	19.99	1.5	99.58	8.23	34.29
6/27/2012	15:41:00	19.98	1.54	99.33	8.17	32.58
6/27/2012	15:42:00	19.97	1.51	101.07	8.12	32.67
6/27/2012	15:43:00	19.97	1.5	99.78	8.26	32.47
6/27/2012	15:44:00	19.98	1.49	98.76	8.02	30.71
6/27/2012	15:45:00	19.98	1.49	99.34	7.92	31.07
6/27/2012	15:46:00	19.97	1.49	99.5	7.96	34.77
6/27/2012	15:47:00	19.98	1.5	99.29	7.96	33.78
6/27/2012	15:48:00	19.98	1.53	100.23	7.82	32.79
6/27/2012	15:49:00	19.99	1.5	100.21	7.84	30.8
6/27/2012	15:50:00	19.97	1.5	99.27	7.68	29.3
6/27/2012	15:51:00	19.98	1.5	99.39	7.77	33.22
6/27/2012	15:52:00	19.97	1.51	99.12	8.07	33.44
6/27/2012	15:53:00	19.97	1.53	98.83	8.09	32.71
6/27/2012	15:54:00	19.98	1.52	100.38	7.83	30.83
6/27/2012	15:55:00	19.96	1.52	100.18	7.75	29.66
6/27/2012	15:56:00	19.97	1.5	99.26	7.65	31.76
6/27/2012	15:57:00	19.96	1.54	98.8	7.74	30.54
6/27/2012	15:58:00	19.98	1.52	100.2	7.71	32.82
6/27/2012	15:59:00	19.94	1.53	98.51	7.73	32.49
6/27/2012	16:00:00	20.02	1.48	101.23	7.58	21.54

AVERAGED CEM DATA

Job Number: *49349*
Run ID: *R1*

Start Time: *15:27:00*
Start Date: *06/27/12*

Date	Time	O2	CO2	NOx	CO	THC
6/27/2012	16:01:00	20.21	1.26	74.2	5.6	25.78
6/27/2012	16:02:00	20.09	1.38	79.15	7.12	30.14
6/27/2012	16:03:00	20.02	1.47	95.48	7.29	26.47
6/27/2012	16:04:00	20.	1.49	97.78	7.65	31.05
6/27/2012	16:05:00	20.	1.48	96.87	7.15	33.1
6/27/2012	16:06:00	19.99	1.56	98.82	7.37	30.27
6/27/2012	16:07:00	19.98	1.52	98.86	7.42	30.55
6/27/2012	16:08:00	19.98	1.53	98.65	7.56	31.39
6/27/2012	16:09:00	19.98	1.52	99.33	7.75	33.16
6/27/2012	16:10:00	20.	1.52	97.94	7.75	29.89
6/27/2012	16:11:00	19.98	1.57	98.81	7.57	31.53
6/27/2012	16:12:00	19.98	1.53	98.13	7.64	33.62
6/27/2012	16:13:00	19.95	1.56	98.35	7.72	30.18
6/27/2012	16:14:00	19.97	1.53	101.2	7.75	31.09
6/27/2012	16:15:00	19.97	1.55	99.3	7.66	30.33
6/27/2012	16:16:00	19.98	1.52	98.05	7.51	34.19
6/27/2012	16:17:00	19.96	1.54	97.9	7.66	32.9
6/27/2012	16:18:00	19.98	1.54	99.36	7.58	32.78
6/27/2012	16:19:00	19.99	1.58	98.94	7.53	30.73
6/27/2012	16:20:00	19.96	1.54	99.75	7.33	31.74
6/27/2012	16:21:00	19.97	1.55	101.12	7.85	32.14
6/27/2012	16:22:00	19.99	1.54	98.04	7.37	28.68
6/27/2012	16:23:00	19.96	1.54	98.36	7.85	30.29
6/27/2012	16:24:00	19.96	1.54	97.87	7.69	33.64
6/27/2012	16:25:00	19.97	1.55	97.32	7.55	29.85
6/27/2012	16:26:00	19.96	1.55	99.31	7.24	30.6
6/27/2012	16:27:00	19.96	1.57	100.45	7.45	29.56
6/27/2012	16:28:00	19.96	1.56	100.09	7.33	32.27
6/27/2012	16:29:00	19.96	1.61	99.72	7.63	31.91
6/27/2012	16:30:00	19.98	1.55	99.46	7.5	31.
6/27/2012	16:31:00	19.95	1.62	98.94	7.47	29.93
6/27/2012	16:32:00	19.97	1.56	101.19	7.26	30.69
6/27/2012	16:33:00	19.93	1.6	101.58	7.4	28.22

AVERAGED CEM DATA

Job Number: *49349* **Start Time:** *15:27:00*
Run ID: *R1* **Start Date:** *06/27/12*

Date	Time	O2	CO2	NOx	CO	THC
6/27/2012	16:34:00	19.92	1.62	100.15	7.48	28.47
6/27/2012	16:35:00	19.97	1.58	99.4	7.28	33.48
6/27/2012	16:36:00	19.95	1.59	100.39	7.19	29.58
6/27/2012	16:37:00	19.93	1.62	101.49	7.31	28.34
6/27/2012	16:38:00	19.93	1.6	100.52	7.15	25.99
6/27/2012	16:39:00	19.93	1.61	98.83	7.01	26.87
6/27/2012	16:40:00	19.94	1.61	99.46	7.02	30.01
6/27/2012	16:41:00	19.93	1.63	100.96	7.13	29.37
6/27/2012	16:42:00	19.93	1.62	100.71	7.07	29.61
6/27/2012	16:43:00	19.94	1.62	98.82	7.19	29.94
6/27/2012	16:44:00	19.94	1.61	99.2	7.06	29.54
6/27/2012	16:45:00	19.96	1.6	98.3	6.96	29.35
6/27/2012	16:46:00	19.95	1.61	98.22	6.8	30.37
6/27/2012	16:47:00	19.96	1.61	98.58	6.77	31.52
6/27/2012	16:48:00	19.95	1.65	97.76	6.83	30.59
6/27/2012	16:49:00	19.96	1.61	95.7	6.65	29.9
6/27/2012	16:50:00	19.96	1.67	97.58	6.76	29.88
6/27/2012	16:51:00	19.96	1.61	98.88	7.05	29.34
6/27/2012	16:52:00	19.97	1.59	94.61	6.76	30.93
6/27/2012	16:53:00	19.94	1.65	96.96	6.58	30.56
6/27/2012	16:54:00	19.94	1.66	98.5	6.96	29.71
6/27/2012	16:55:00	20.	1.59	98.56	6.95	35.6
6/27/2012	16:56:00	20.	1.58	98.29	6.77	31.97
6/27/2012	16:57:00	20.01	1.6	94.6	7.27	36.23
6/27/2012	16:58:00	20.04	1.56	91.19	7.12	33.78
6/27/2012	16:59:00	20.01	1.59	92.83	6.82	29.83
6/27/2012	17:00:00	20.	1.6	94.91	6.82	31.54
6/27/2012	17:01:00	20.	1.61	96.08	6.8	30.86
6/27/2012	17:02:00	19.98	1.61	95.54	7.	31.25
6/27/2012	17:03:00	20.	1.62	94.24	6.93	33.19
6/27/2012	17:04:00	19.98	1.63	95.93	6.89	31.23
6/27/2012	17:05:00	19.96	1.66	101.37	6.96	30.5
6/27/2012	17:06:00	19.96	1.7	100.12	7.12	32.82

AVERAGED CEM DATA

Job Number: *49349*
Run ID: *R1*

Start Time: *15:27:00*
Start Date: *06/27/12*

Date	Time	O2	CO2	NOx	CO	THC
6/27/2012	17:07:00	19.98	1.64	98.	6.94	30.93
6/27/2012	17:08:00	19.97	1.65	98.64	6.72	30.64
6/27/2012	17:09:00	19.96	1.66	99.92	6.83	29.44
6/27/2012	17:10:00	19.96	1.67	100.78	6.8	30.08
6/27/2012	17:11:00	19.97	1.68	99.88	6.96	31.67
6/27/2012	17:12:00	19.95	1.68	100.74	6.82	29.94
6/27/2012	17:13:00	19.94	1.68	101.84	6.99	30.58
6/27/2012	17:14:00	20.11	1.52	94.19	5.41	26.89
6/27/2012	17:15:00	20.31	1.32	61.77	4.13	28.02
6/27/2012	17:16:00	20.34	1.29	50.92	3.66	28.82
6/27/2012	17:17:00	20.34	1.29	49.48	3.5	29.18
6/27/2012	17:18:00	20.19	1.44	63.95	5.06	30.79
6/27/2012	17:19:00	20.06	1.59	90.16	6.67	31.23
6/27/2012	17:20:00	20.02	1.63	95.94	6.89	30.81
6/27/2012	17:21:00	19.99	1.65	97.08	6.94	30.6
6/27/2012	17:22:00	19.98	1.68	97.67	6.81	30.05
6/27/2012	17:23:00	19.95	1.71	98.73	6.9	28.33
6/27/2012	17:24:00	19.98	1.68	100.17	6.74	31.75
6/27/2012	17:25:00	20.	1.66	99.41	6.72	30.42
6/27/2012	17:26:00	19.98	1.73	99.48	6.57	29.97
6/27/2012	17:27:00	19.97	1.71	101.19	6.74	30.67
6/27/2012	17:28:00	19.98	1.7	101.26	6.57	31.28
6/27/2012	17:29:00	19.94	1.71	100.72	6.38	30.99
6/27/2012	17:30:00	19.96	1.74	102.51	6.72	30.71
6/27/2012	17:31:00	19.95	1.73	102.4	6.65	31.11
6/27/2012	17:32:00	19.98	1.7	102.77	6.52	30.44
6/27/2012	17:33:00	19.97	1.71	102.17	6.76	32.55
6/27/2012	17:34:00	19.96	1.73	102.12	8.38	39.31
6/27/2012	17:35:00	19.96	1.74	101.35	8.97	41.76
6/27/2012	17:36:00	19.95	1.74	103.83	9.78	42.83
6/27/2012	17:37:00	20.03	1.65	95.32	10.11	42.84
6/27/2012	17:38:00	20.	1.69	94.51	10.41	42.86
6/27/2012	17:39:00	19.98	1.72	100.96	11.15	42.74

AVERAGED CEM DATA

Job Number: *49349* **Start Time:** *15:27:00*
Run ID: *R1* **Start Date:** *06/27/12*

Date	Time	O2	CO2	NOx	CO	THC
6/27/2012	17:40:00	19.96	1.76	102.94	11.54	42.86
6/27/2012	17:41:00	19.96	1.73	102.11	11.89	42.86
6/27/2012	17:42:00	19.95	1.78	101.84	11.65	42.85
6/27/2012	17:43:00	19.96	1.72	103.17	11.38	42.83
6/27/2012	17:44:00	19.96	1.86	102.36	11.34	42.71
6/27/2012	17:45:00	19.96	1.72	101.33	11.27	42.87
6/27/2012	17:46:00	19.95	1.71	103.75	11.22	42.85
6/27/2012	17:47:00	19.95	1.73	105.59	11.28	42.84
6/27/2012	17:48:00	19.96	1.74	104.21	11.23	42.71
6/27/2012	17:49:00	19.96	1.72	101.71	11.02	42.87
6/27/2012	17:50:00	19.97	1.74	102.98	10.17	42.88
6/27/2012	17:51:00	19.97	1.71	102.66	10.28	42.83
6/27/2012	17:52:00	19.97	1.72	102.78	10.16	42.84
6/27/2012	17:53:00	19.98	1.69	99.63	9.9	42.85
6/27/2012	17:54:00	19.97	1.71	100.19	9.63	42.86
6/27/2012	17:55:00	19.96	1.72	101.57	9.73	42.84
6/27/2012	17:56:00	19.96	1.72	104.52	9.62	42.76
6/27/2012	17:57:00	19.95	1.71	103.81	9.69	42.73
6/27/2012	17:58:00	19.96	1.71	101.9	9.53	42.87
6/27/2012	17:59:00	19.94	1.73	104.42	9.34	42.82
6/27/2012	18:00:00	19.95	1.78	104.15	9.34	42.72
6/27/2012	18:01:00	19.95	1.73	102.07	9.25	42.67
6/27/2012	18:02:00	19.97	1.71	102.76	9.04	42.05
6/27/2012	18:03:00	19.97	1.7	100.31	9.	42.06
6/27/2012	18:04:00	19.96	1.75	101.46	8.83	41.93
6/27/2012	18:05:00	19.96	1.72	103.85	8.81	41.49
6/27/2012	18:06:00	19.98	1.7	102.71	8.67	40.93
6/27/2012	18:07:00	19.96	1.7	101.1	8.44	40.45
6/27/2012	18:08:00	19.95	1.76	102.18	8.74	39.23
6/27/2012	18:09:00	19.96	1.71	100.92	8.54	40.93
6/27/2012	18:10:00	19.94	1.71	99.69	8.49	42.08
6/27/2012	18:11:00	19.99	1.68	99.94	8.28	41.7
6/27/2012	18:12:00	20.2	1.46	81.34	6.08	41.54

AVERAGED CEM DATA

Job Number: *49349*
Run ID: *R1*

Start Time: *15:27:00*
Start Date: *06/27/12*

Date	Time	O2	CO2	NOx	CO	THC
6/27/2012	18:13:00	20.17	1.49	69.01	5.75	39.71
6/27/2012	18:14:00	20.1	1.58	86.61	7.34	40.04
6/27/2012	18:15:00	20.03	1.61	93.3	7.76	38.89
6/27/2012	18:16:00	19.99	1.7	97.03	7.91	41.28
6/27/2012	18:17:00	20.	1.66	100.32	8.07	40.52
6/27/2012	18:18:00	19.99	1.65	98.49	7.82	40.59
6/27/2012	18:19:00	19.97	1.72	99.62	8.	38.37
6/27/2012	18:20:00	19.96	1.69	103.7	8.43	39.11
6/27/2012	18:21:00	19.93	1.71	105.72	8.19	39.11
6/27/2012	18:22:00	19.94	1.69	104.57	8.23	37.9
6/27/2012	18:23:00	19.95	1.69	103.21	8.01	38.7
6/27/2012	18:24:00	19.93	1.68	105.14	7.81	37.09
6/27/2012	18:25:00	19.97	1.67	103.51	8.06	36.94
6/27/2012	18:26:00	19.97	1.65	102.37	7.86	37.65
6/27/2012	18:27:00	19.96	1.69	101.96	7.98	36.03
6/27/2012	18:28:00	19.95	1.69	103.23	8.11	37.41
6/27/2012	18:29:00	19.94	1.69	104.84	8.09	37.47
6/27/2012	18:30:00	19.94	1.7	105.52	7.94	38.39
6/27/2012	18:31:00	19.95	1.69	105.54	7.87	36.58
6/27/2012	18:32:00	19.93	1.69	106.37	8.04	35.77
6/27/2012	18:33:00	19.96	1.67	104.32	7.82	34.69
6/27/2012	18:34:00	19.97	1.67	102.57	7.64	36.6
6/27/2012	18:35:00	19.98	1.64	100.89	7.85	38.11
6/27/2012	18:36:00	19.97	1.66	104.31	7.85	36.53
6/27/2012	18:37:00	19.96	1.68	102.68	7.78	35.8
6/27/2012	18:38:00	19.99	1.65	102.77	7.98	35.18
6/27/2012	18:39:00	19.99	1.63	99.11	7.88	34.62
6/27/2012	18:40:00	19.94	1.66	102.19	7.87	35.67
6/27/2012	18:41:00	19.95	1.67	102.84	7.91	37.18
6/27/2012	18:42:00	19.97	1.64	100.64	8.05	37.08
6/27/2012	18:43:00	19.97	1.68	100.68	7.36	35.13
6/27/2012	18:44:00	19.93	1.7	101.48	7.47	34.95
6/27/2012	18:45:00	19.92	1.72	103.59	7.73	35.97

AVERAGED CEM DATA

Job Number: *49349* **Start Time:** *15:27:00*
Run ID: *R1* **Start Date:** *06/27/12*

Date	Time	O2	CO2	NOx	CO	THC
6/27/2012	18:46:00	19.94	1.67	103.55	7.74	35.29
6/27/2012	18:47:00	19.96	1.66	102.23	7.58	29.62
6/27/2012	18:48:00	20.18	1.43	81.76	5.26	36.02
6/27/2012	18:49:00	20.16	1.43	67.39	5.26	31.64
6/27/2012	18:50:00	19.99	1.61	94.02	6.97	33.36
6/27/2012	18:51:00	19.99	1.6	102.7	6.7	32.9
6/27/2012	18:52:00	20.02	1.58	92.63	6.69	37.04
Average Value:		**20.**	**1.61**	**98.52**	**7.81**	**34.33**
Corrected Average:		**20.13**	**1.32**	**101.21**	**8.24**	**35.36**

AVERAGED CEM DATA

Job Number: *49349* **Start Time:** *19:52:00*
Run ID: *R2* **Start Date:** *06/27/12*

Date	Time	O2	CO2	NOx	CO	THC
6/27/2012	19:53:00	19.92	1.18	109.24	8.16	28.37
6/27/2012	19:54:00	19.92	1.18	109.98	8.26	28.73
6/27/2012	19:55:00	19.92	1.17	108.51	8.2	28.05
6/27/2012	19:56:00	19.89	1.18	109.61	8.24	28.03
6/27/2012	19:57:00	19.87	1.2	111.26	8.36	29.75
6/27/2012	19:58:00	19.89	1.19	112.97	8.51	29.75
6/27/2012	19:59:00	19.89	1.2	112.54	8.19	29.3
6/27/2012	20:00:00	19.88	1.2	114.28	8.3	27.84
6/27/2012	20:01:00	19.9	1.19	113.28	8.29	27.07
6/27/2012	20:02:00	19.89	1.23	112.1	8.17	27.29
6/27/2012	20:03:00	19.91	1.18	111.69	8.27	28.81
6/27/2012	20:04:00	19.92	1.17	110.94	8.3	28.12
6/27/2012	20:05:00	19.92	1.16	109.37	8.17	29.47
6/27/2012	20:06:00	19.9	1.19	110.12	8.56	30.74
6/27/2012	20:07:00	19.89	1.16	112.72	8.42	28.76
6/27/2012	20:08:00	19.92	1.13	110.14	8.15	27.72
6/27/2012	20:09:00	19.94	1.13	107.37	8.3	30.19
6/27/2012	20:10:00	19.9	1.15	110.93	8.21	26.55
6/27/2012	20:11:00	19.92	1.16	113.11	8.15	29.32
6/27/2012	20:12:00	19.91	1.15	111.01	8.27	29.23
6/27/2012	20:13:00	19.91	1.18	110.43	8.08	28.04
6/27/2012	20:14:00	19.9	1.16	111.24	8.05	27.52
6/27/2012	20:15:00	19.9	1.18	109.53	8.14	27.77
6/27/2012	20:16:00	19.89	1.17	110.03	8.09	27.25
6/27/2012	20:17:00	19.89	1.18	111.81	8.01	27.52
6/27/2012	20:18:00	19.9	1.17	111.19	8.13	28.76
6/27/2012	20:19:00	19.89	1.18	111.79	7.94	27.41
6/27/2012	20:20:00	19.88	1.18	111.83	8.1	27.95
6/27/2012	20:21:00	19.88	1.19	112.77	8.02	28.47
6/27/2012	20:22:00	19.89	1.22	113.09	8.14	29.45
6/27/2012	20:23:00	19.87	1.18	113.23	8.21	28.86
6/27/2012	20:24:00	19.92	1.17	112.96	7.91	29.02
6/27/2012	20:25:00	20.12	1.	92.73	6.06	26.47

AVERAGED CEM DATA

Job Number: *49349* **Start Time:** *19:52:00*
Run ID: *R2* **Start Date:** *06/27/12*

Date	Time	O2	CO2	NOx	CO	THC
6/27/2012	20:26:00	20.13	0.92	77.73	5.76	27.03
6/27/2012	20:27:00	20.03	1.03	97.04	6.92	26.63
6/27/2012	20:28:00	20.02	1.04	96.9	7.02	26.55
6/27/2012	20:29:00	19.96	1.15	104.12	7.6	27.18
6/27/2012	20:30:00	19.95	1.16	106.58	7.7	26.58
6/27/2012	20:31:00	19.95	1.11	108.12	7.86	27.58
6/27/2012	20:32:00	19.92	1.14	107.96	7.79	25.52
6/27/2012	20:33:00	19.92	1.14	111.8	7.9	27.9
6/27/2012	20:34:00	19.91	1.14	113.13	8.02	27.
6/27/2012	20:35:00	19.91	1.15	112.54	7.93	28.3
6/27/2012	20:36:00	19.9	1.16	110.48	7.88	28.21
6/27/2012	20:37:00	19.89	1.18	112.23	8.17	27.38
6/27/2012	20:38:00	19.9	1.17	114.03	7.95	26.67
6/27/2012	20:39:00	19.9	1.2	114.05	7.83	27.07
6/27/2012	20:40:00	19.9	1.15	112.45	7.96	26.35
6/27/2012	20:41:00	19.91	1.16	111.48	7.97	26.5
6/27/2012	20:42:00	19.9	1.21	111.59	8.06	28.48
6/27/2012	20:43:00	19.91	1.14	111.89	8.12	27.77
6/27/2012	20:44:00	19.9	1.15	109.24	7.89	26.05
6/27/2012	20:45:00	19.91	1.25	110.2	7.89	27.47
6/27/2012	20:46:00	19.9	1.15	111.21	7.9	25.67
6/27/2012	20:47:00	19.92	1.14	110.49	7.9	27.31
6/27/2012	20:48:00	19.92	1.14	108.65	7.76	27.31
6/27/2012	20:49:00	19.92	1.15	110.79	7.71	28.01
6/27/2012	20:50:00	19.92	1.15	112.95	8.11	28.5
6/27/2012	20:51:00	19.92	1.14	113.95	8.31	28.48
6/27/2012	20:52:00	19.93	1.13	111.22	8.06	27.79
6/27/2012	20:53:00	19.92	1.14	110.77	7.92	28.24
6/27/2012	20:54:00	19.9	1.15	112.05	7.81	27.07
6/27/2012	20:55:00	19.92	1.18	111.8	7.82	27.67
6/27/2012	20:56:00	19.92	1.15	111.67	7.86	27.18
6/27/2012	20:57:00	19.91	1.17	110.57	8.04	25.04
6/27/2012	20:58:00	19.91	1.16	107.79	7.64	23.65

AVERAGED CEM DATA

Job Number: *49349* **Start Time:** *19:52:00*
Run ID: *R2* **Start Date:** *06/27/12*

Date	Time	O2	CO2	NOx	CO	THC
6/27/2012	20:59:00	19.91	1.14	107.23	7.77	25.9
6/27/2012	21:00:00	19.97	1.14	108.97	7.72	28.64
6/27/2012	21:01:00	19.98	1.07	107.84	7.96	28.18
6/27/2012	21:02:00	19.94	1.1	108.3	7.93	28.23
6/27/2012	21:03:00	19.9	1.13	109.42	8.07	27.92
6/27/2012	21:04:00	19.94	1.16	110.91	8.18	28.98
6/27/2012	21:05:00	19.96	1.1	110.06	8.29	28.27
6/27/2012	21:06:00	19.94	1.12	110.06	8.04	26.78
6/27/2012	21:07:00	19.91	1.13	112.06	8.51	27.87
6/27/2012	21:08:00	19.9	1.14	112.56	8.66	26.73
6/27/2012	21:09:00	19.93	1.11	111.33	8.53	28.22
6/27/2012	21:10:00	19.97	1.08	106.1	8.27	28.02
6/27/2012	21:11:00	19.94	1.11	107.67	8.15	27.23
6/27/2012	21:12:00	19.99	1.06	106.96	8.22	28.7
6/27/2012	21:13:00	20.09	0.96	94.	6.99	27.66
6/27/2012	21:14:00	20.08	0.95	94.26	7.45	28.
6/27/2012	21:15:00	20.13	0.91	89.63	6.99	27.61
6/27/2012	21:16:00	20.27	0.76	70.9	5.49	28.38
6/27/2012	21:17:00	20.32	0.75	60.79	4.56	26.11
6/27/2012	21:18:00	20.34	0.69	59.33	4.35	28.08
6/27/2012	21:19:00	20.28	0.73	58.45	4.68	28.53
6/27/2012	21:20:00	20.06	1.	88.39	7.27	27.23
6/27/2012	21:21:00	19.98	1.05	101.06	8.29	28.27
6/27/2012	21:22:00	20.01	1.02	102.4	8.21	30.39
6/27/2012	21:23:00	19.99	1.04	103.83	8.3	30.37
6/27/2012	21:24:00	19.97	1.06	106.29	9.26	33.81
6/27/2012	21:25:00	19.96	1.1	109.45	10.04	34.3
6/27/2012	21:26:00	19.93	1.13	112.7	10.52	37.98
6/27/2012	21:27:00	19.94	1.07	111.15	10.18	35.36
6/27/2012	21:28:00	19.95	1.07	110.	9.3	32.03
6/27/2012	21:29:00	19.94	1.08	109.96	9.13	32.99
6/27/2012	21:30:00	19.94	1.09	110.55	8.92	32.86
6/27/2012	21:31:00	19.94	1.08	112.57	8.96	31.11

AVERAGED CEM DATA

Job Number: *49349*
Run ID: *R2*

Start Time: *19:52:00*
Start Date: *06/27/12*

Date	Time	O2	CO2	NOx	CO	THC
6/27/2012	21:32:00	19.93	1.09	113.8	8.85	30.05
6/27/2012	21:33:00	19.93	1.1	113.27	8.82	29.9
6/27/2012	21:34:00	19.94	1.1	111.25	8.68	31.09
6/27/2012	21:35:00	19.91	1.16	110.73	8.59	30.49
6/27/2012	21:36:00	19.92	1.12	111.81	8.58	29.92
6/27/2012	21:37:00	19.92	1.09	111.98	8.41	29.89
6/27/2012	21:38:00	19.93	1.1	112.17	8.47	30.08
6/27/2012	21:39:00	19.94	1.09	111.12	8.36	29.22
6/27/2012	21:40:00	19.95	1.07	112.18	8.4	29.32
6/27/2012	21:41:00	19.95	1.08	109.92	8.55	30.51
6/27/2012	21:42:00	19.94	1.08	111.42	8.47	29.3
6/27/2012	21:43:00	19.93	1.1	113.33	8.23	29.12
6/27/2012	21:44:00	19.94	1.09	111.77	8.38	28.27
6/27/2012	21:45:00	19.94	1.14	111.74	8.19	28.28
6/27/2012	21:46:00	19.95	1.09	112.96	8.2	27.05
6/27/2012	21:47:00	20.09	0.94	106.92	6.96	9.9
6/27/2012	21:48:00	20.18	0.88	77.61	6.16	22.57
6/27/2012	21:49:00	20.02	1.	97.47	7.56	24.83
6/27/2012	21:50:00	19.99	1.03	108.44	7.66	23.74
6/27/2012	21:51:00	19.99	1.03	108.99	7.74	27.04
6/27/2012	21:52:00	19.97	1.06	109.62	7.88	27.64
6/27/2012	21:53:00	19.97	1.04	109.9	7.91	27.87
6/27/2012	21:54:00	19.94	1.05	108.77	7.84	26.71
6/27/2012	21:55:00	19.94	1.05	110.79	8.14	27.43
6/27/2012	21:56:00	19.95	1.06	111.28	8.05	28.43
6/27/2012	21:57:00	19.94	1.07	111.32	9.02	33.08
6/27/2012	21:58:00	19.95	1.07	110.43	9.78	30.9
6/27/2012	21:59:00	19.96	1.07	110.86	8.79	31.35
6/27/2012	22:00:00	19.96	1.05	113.51	8.76	30.09
6/27/2012	22:01:00	19.95	1.07	113.59	8.54	30.33
6/27/2012	22:02:00	19.95	1.05	111.83	8.53	29.22
6/27/2012	22:03:00	19.96	1.05	110.45	8.37	29.11
6/27/2012	22:04:00	20.15	0.85	104.66	7.18	28.73

AVERAGED CEM DATA

Job Number: *49349* **Start Time:** *19:52:00*
Run ID: *R2* **Start Date:** *06/27/12*

Date	Time	O2	CO2	NOx	CO	THC
6/27/2012	22:05:00	20.4	0.57	62.56	4.84	32.35
6/27/2012	22:06:00	20.38	0.59	55.52	4.03	26.02
6/27/2012	22:07:00	20.35	0.62	58.52	4.16	28.95
6/27/2012	22:08:00	20.34	0.62	67.66	4.61	28.06
6/27/2012	22:09:00	20.38	0.57	58.54	4.26	28.56
6/27/2012	22:10:00	20.28	0.66	61.71	4.82	29.85
6/27/2012	22:11:00	20.13	0.84	89.62	7.26	29.34
6/27/2012	22:12:00	20.06	0.96	101.62	7.72	29.44
6/27/2012	22:13:00	20.04	0.93	105.29	7.94	29.87
6/27/2012	22:14:00	20.04	0.93	108.04	7.51	26.73
6/27/2012	22:15:00	20.22	0.77	85.68	5.83	27.92
6/27/2012	22:16:00	20.18	0.77	77.87	6.43	30.26
6/27/2012	22:17:00	20.06	0.9	100.79	7.9	28.43
6/27/2012	22:18:00	20.04	0.91	103.48	8.05	30.93
6/27/2012	22:19:00	20.02	0.94	106.33	8.06	27.58
6/27/2012	22:20:00	20.	0.95	105.06	8.01	28.49
6/27/2012	22:21:00	19.99	0.96	106.34	8.08	29.87
6/27/2012	22:22:00	20.	0.96	108.66	8.11	28.46
6/27/2012	22:23:00	19.97	0.98	109.53	7.93	28.58
6/27/2012	22:24:00	19.98	0.98	111.41	8.21	28.68
6/27/2012	22:25:00	19.98	0.98	110.13	8.25	28.28
6/27/2012	22:26:00	19.97	0.99	109.95	8.12	28.03
6/27/2012	22:27:00	19.98	0.99	110.09	7.97	30.75
6/27/2012	22:28:00	19.96	0.99	110.26	8.02	28.26
6/27/2012	22:29:00	19.96	1.01	112.22	8.06	29.06
6/27/2012	22:30:00	19.97	0.99	112.37	8.	28.77
6/27/2012	22:31:00	19.97	0.99	111.03	7.99	27.27
6/27/2012	22:32:00	19.98	1.02	111.27	8.1	26.62
6/27/2012	22:33:00	19.98	0.97	108.94	7.94	29.46
6/27/2012	22:34:00	19.97	0.97	111.25	7.85	26.5
6/27/2012	22:35:00	19.97	0.99	111.35	7.81	28.02
6/27/2012	22:36:00	19.98	0.98	110.47	7.81	28.32
6/27/2012	22:37:00	19.97	1.	112.01	7.78	28.6

AVERAGED CEM DATA

Job Number: *49349*
Run ID: *R2*

Start Time: *19:52:00*
Start Date: *06/27/12*

Date	Time	O2	CO2	NOx	CO	THC
6/27/2012	22:38:00	19.97	0.99	112.07	7.85	28.8
6/27/2012	22:39:00	20.05	0.9	111.15	7.25	12.79
6/27/2012	22:40:00	20.27	0.74	80.78	5.49	6.39
6/27/2012	22:41:00	20.35	0.58	64.8	4.51	3.92
6/27/2012	22:42:00	20.37	0.56	61.9	4.34	3.25
6/27/2012	22:43:00	20.23	0.71	70.08	5.51	22.06
6/27/2012	22:44:00	20.1	0.85	97.24	7.09	24.25
6/27/2012	22:45:00	20.05	0.9	103.73	7.27	24.01
6/27/2012	22:46:00	20.03	0.92	106.09	7.59	26.25
6/27/2012	22:47:00	20.01	0.98	107.66	7.71	26.66
6/27/2012	22:48:00	19.99	0.95	106.	7.82	27.65
6/27/2012	22:49:00	19.99	0.99	106.68	7.66	26.87
6/27/2012	22:50:00	19.99	0.95	109.23	7.89	28.57
6/27/2012	22:51:00	19.99	0.95	109.53	7.85	27.02
6/27/2012	22:52:00	20.	0.96	108.23	7.89	27.32
6/27/2012	22:53:00	19.99	0.96	108.45	7.76	27.56
6/27/2012	22:54:00	20.01	0.95	109.9	8.08	27.33
6/27/2012	22:55:00	20.	0.94	107.83	7.91	29.12
6/27/2012	22:56:00	19.98	0.97	109.24	7.7	26.58
6/27/2012	22:57:00	19.98	0.96	109.64	7.91	26.64
Average Value:		**19.99**	**1.04**	**105.02**	**7.79**	**27.75**
Corrected Average:		**20.13**	**.86**	**108.41**	**8.19**	**28.**

AVERAGED CEM DATA

Job Number: *Day 3* **Start Time:** *08:50:00*
Run ID: *~~BT~~ R3* **Start Date:** *06/28/12*

Date	Time	O2	CO2	NOx	CO	THC
6/28/2012	08:51:00	19.97	1.32	106.23	7.07	27.36
6/28/2012	08:52:00	19.99	1.33	106.02	6.94	28.6
6/28/2012	08:53:00	19.94	1.31	104.69	6.94	27.41
6/28/2012	08:54:00	19.99	1.32	104.53	6.84	27.68
6/28/2012	08:55:00	19.99	1.32	105.06	6.85	30.06
6/28/2012	08:56:00	19.99	1.36	110.73	6.85	27.11
6/28/2012	08:57:00	19.98	1.33	112.52	6.85	27.93
6/28/2012	08:58:00	19.98	1.33	105.18	6.86	27.67
6/28/2012	08:59:00	19.97	1.36	105.31	6.97	27.2
6/28/2012	09:00:00	19.98	1.42	105.46	6.98	27.89
6/28/2012	09:01:00	19.99	1.33	102.83	7.14	28.85
6/28/2012	09:02:00	19.98	1.34	103.7	7.09	27.54
6/28/2012	09:03:00	19.97	1.35	106.12	7.13	28.28
6/28/2012	09:04:00	19.99	1.35	106.43	7.37	27.63
6/28/2012	09:05:00	19.99	1.33	103.94	7.16	28.
6/28/2012	09:06:00	20.	1.32	103.41	7.03	28.12
6/28/2012	09:07:00	20.	1.31	102.23	7.12	29.14
6/28/2012	09:08:00	20.01	1.34	104.06	7.	28.71
6/28/2012	09:09:00	19.98	1.33	104.26	6.98	28.21
6/28/2012	09:10:00	20.	1.37	105.7	7.09	29.1
6/28/2012	09:11:00	19.97	1.34	105.27	6.98	28.2
6/28/2012	09:12:00	19.98	1.35	106.54	7.17	27.13
6/28/2012	09:13:00	19.99	1.39	106.96	6.93	27.1
6/28/2012	09:14:00	19.98	1.34	104.62	7.12	26.84
6/28/2012	09:15:00	19.96	1.35	106.51	6.98	27.51
6/28/2012	09:16:00	19.99	1.33	111.11	6.84	27.83
6/28/2012	09:17:00	19.96	1.35	112.52	6.94	28.67
6/28/2012	09:18:00	19.96	1.36	105.79	6.92	26.65
6/28/2012	09:19:00	19.99	1.33	104.22	6.85	28.81
6/28/2012	09:20:00	20.	1.31	104.01	6.58	28.51
6/28/2012	09:21:00	19.98	1.34	104.29	6.88	27.
6/28/2012	09:22:00	19.97	1.38	104.37	6.83	27.52
6/28/2012	09:23:00	19.96	1.36	106.2	6.97	28.34

AVERAGED CEM DATA

Job Number: *Day 3* **Start Time:** *08:50:00*
Run ID: ~~R1~~ *R3* **Start Date:** *06/28/12*

Date	Time	O2	CO2	NOx	CO	THC
6/28/2012	09:24:00	20.01	1.32	107.87	6.78	28.69
6/28/2012	09:25:00	19.98	1.34	109.68	6.77	28.41
6/28/2012	09:26:00	20.01	1.31	106.48	6.75	30.44
6/28/2012	09:27:00	19.97	1.34	113.71	7.02	29.54
6/28/2012	09:28:00	20.03	1.31	103.98	6.8	28.3
6/28/2012	09:29:00	19.99	1.31	104.04	6.66	27.3
6/28/2012	09:30:00	19.96	1.36	102.26	6.76	26.93
6/28/2012	09:31:00	19.98	1.34	102.24	6.85	26.59
6/28/2012	09:32:00	19.99	1.37	101.36	6.72	27.67
6/28/2012	09:33:00	19.98	1.34	101.17	6.72	28.09
6/28/2012	09:34:00	19.97	1.36	101.94	6.71	26.65
6/28/2012	09:35:00	19.97	1.36	102.59	6.67	26.19
6/28/2012	09:36:00	19.97	1.39	103.32	6.88	28.01
6/28/2012	09:37:00	19.97	1.35	104.1	6.71	26.77
6/28/2012	09:38:00	20.02	1.3	104.2	6.49	27.8
6/28/2012	09:39:00	20.01	1.31	106.99	6.9	28.97
6/28/2012	09:40:00	19.99	1.34	102.47	6.84	28.34
6/28/2012	09:41:00	19.97	1.35	102.5	6.85	27.72
6/28/2012	09:42:00	19.95	1.36	103.16	6.98	26.62
6/28/2012	09:43:00	19.96	1.37	103.76	6.76	27.46
6/28/2012	09:44:00	19.96	1.36	104.95	6.71	27.44
6/28/2012	09:45:00	19.94	1.39	104.87	6.88	26.38
6/28/2012	09:46:00	19.96	1.39	104.7	6.62	26.38
6/28/2012	09:47:00	19.95	1.38	105.44	6.89	26.89
6/28/2012	09:48:00	19.95	1.4	105.32	6.83	27.26
6/28/2012	09:49:00	19.93	1.46	103.74	6.72	26.7
6/28/2012	09:50:00	19.96	1.38	102.94	6.64	28.08
6/28/2012	09:51:00	19.95	1.38	104.28	6.63	26.99
6/28/2012	09:52:00	19.94	1.37	105.23	6.59	28.21
6/28/2012	09:53:00	19.96	1.37	104.03	6.78	28.85
6/28/2012	09:54:00	19.97	1.37	102.42	6.7	26.78
6/28/2012	09:55:00	19.96	1.39	103.87	6.79	26.92
6/28/2012	09:56:00	19.96	1.39	103.94	6.92	28.45

AVERAGED CEM DATA

Job Number: *Day 3* **Start Time:** *08:50:00*
Run ID: *~~R1~~ R3* **Start Date:** *06/28/12*

Date	Time	O2	CO2	NOx	CO	THC
6/28/2012	09:57:00	19.97	1.37	103.28	6.97	26.28
6/28/2012	09:58:00	19.98	1.35	100.91	6.5	27.8
6/28/2012	09:59:00	19.99	1.35	101.03	6.61	28.94
6/28/2012	10:00:00	19.94	1.4	105.4	6.66	27.95
6/28/2012	10:01:00	19.97	1.38	110.02	6.87	28.58
6/28/2012	10:02:00	20.01	1.32	104.86	6.79	27.89
6/28/2012	10:03:00	19.99	1.35	105.76	6.64	27.23
6/28/2012	10:04:00	19.97	1.38	103.21	6.9	27.85
6/28/2012	10:05:00	19.96	1.38	104.02	6.87	27.
6/28/2012	10:06:00	19.95	1.42	104.77	6.76	27.07
6/28/2012	10:07:00	19.97	1.36	104.04	6.55	26.91
6/28/2012	10:08:00	19.95	1.44	103.17	6.67	25.97
6/28/2012	10:09:00	19.95	1.37	103.09	6.9	26.12
6/28/2012	10:10:00	19.98	1.38	101.05	6.92	27.09
6/28/2012	10:11:00	19.97	1.36	101.82	6.66	27.71
6/28/2012	10:12:00	19.97	1.38	102.05	6.58	27.17
6/28/2012	10:13:00	19.96	1.38	101.82	6.66	26.7
6/28/2012	10:14:00	19.96	1.4	103.87	6.63	28.46
6/28/2012	10:15:00	19.97	1.37	103.82	6.7	28.6
6/28/2012	10:16:00	19.95	1.43	102.01	6.58	28.16
6/28/2012	10:17:00	19.95	1.41	103.53	6.53	29.24
6/28/2012	10:18:00	19.95	1.41	104.71	6.76	27.37
6/28/2012	10:19:00	19.92	1.44	105.31	6.54	25.96
6/28/2012	10:20:00	19.92	1.44	105.13	6.7	25.49
6/28/2012	10:21:00	19.95	1.45	103.61	6.6	27.11
6/28/2012	10:22:00	19.95	1.45	102.68	6.59	27.14
6/28/2012	10:23:00	19.96	1.4	102.88	6.52	28.
6/28/2012	10:24:00	19.98	1.38	102.57	6.46	28.18
6/28/2012	10:25:00	20.	1.33	103.84	6.32	30.96
6/28/2012	10:26:00	19.98	1.38	106.71	6.59	29.23
6/28/2012	10:27:00	19.96	1.39	105.37	6.66	27.61
6/28/2012	10:28:00	19.93	1.41	102.48	6.63	25.28
6/28/2012	10:29:00	19.96	1.44	101.83	6.64	24.94

AVERAGED CEM DATA

Job Number: *Day 3* **Start Time:** *08:50:00*
Run ID: *R3* **Start Date:** *06/28/12*

Date	Time	O2	CO2	NOx	CO	THC
6/28/2012	10:30:00	19.97	1.38	101.95	6.41	26.8
6/28/2012	10:31:00	19.95	1.4	102.45	6.51	27.99
6/28/2012	10:32:00	19.97	1.45	102.7	6.57	27.55
6/28/2012	10:33:00	19.94	1.48	102.9	6.44	25.66
6/28/2012	10:34:00	19.93	1.42	104.39	6.59	28.52
6/28/2012	10:35:00	19.94	1.48	104.32	6.73	26.01
6/28/2012	10:36:00	19.93	1.41	103.56	6.35	25.86
6/28/2012	10:37:00	19.93	1.45	104.01	6.65	26.33
6/28/2012	10:38:00	19.92	1.44	104.92	6.65	25.63
6/28/2012	10:39:00	19.94	1.43	103.92	6.43	27.68
6/28/2012	10:40:00	19.95	1.42	102.85	6.42	26.87
6/28/2012	10:41:00	19.96	1.41	102.2	6.47	28.29
6/28/2012	10:42:00	19.96	1.41	103.43	6.5	28.02
6/28/2012	10:43:00	19.93	1.45	103.61	6.51	26.82
6/28/2012	10:44:00	19.93	1.45	104.66	6.73	27.08
6/28/2012	10:45:00	19.95	1.48	104.2	6.66	27.4
6/28/2012	10:46:00	19.94	1.44	101.77	6.6	25.58
6/28/2012	10:47:00	19.94	1.44	101.68	6.51	27.85
6/28/2012	10:48:00	19.97	1.42	102.25	6.54	27.27
6/28/2012	10:49:00	19.96	1.4	101.24	6.23	27.44
6/28/2012	10:50:00	19.97	1.41	103.7	6.33	28.76
6/28/2012	10:51:00	19.93	1.43	110.42	6.74	29.04
6/28/2012	10:52:00	19.94	1.43	107.65	6.59	26.96
6/28/2012	10:53:00	19.93	1.45	103.51	6.63	26.08
6/28/2012	10:54:00	19.92	1.47	103.98	6.77	25.55
6/28/2012	10:55:00	19.96	1.44	104.93	6.44	27.88
6/28/2012	10:56:00	19.92	1.46	104.71	6.82	27.48
6/28/2012	10:57:00	19.92	1.47	105.44	6.7	24.7
6/28/2012	10:58:00	20.07	1.32	101.23	5.5	9.97
6/28/2012	10:59:00	20.16	1.21	79.73	4.84	24.48
6/28/2012	11:00:00	20.01	1.35	99.55	6.19	24.
6/28/2012	11:01:00	20.01	1.38	106.3	6.11	24.2
6/28/2012	11:02:00	20.02	1.36	103.35	6.09	26.97

AVERAGED CEM DATA

Job Number: *Day 3* **Start Time:** *08:50:00*
Run ID: *R3* **Start Date:** *06/28/12*

Date	Time	O2	CO2	NOx	CO	THC
6/28/2012	11:03:00	19.98	1.4	105.66	6.43	28.6
6/28/2012	11:04:00	19.95	1.43	107.71	6.55	26.39
6/28/2012	11:05:00	19.93	1.5	104.03	6.5	25.43
6/28/2012	11:06:00	19.94	1.45	102.96	6.57	25.38
6/28/2012	11:07:00	19.91	1.48	102.48	6.49	26.4
6/28/2012	11:08:00	19.91	1.49	104.09	6.7	25.16
6/28/2012	11:09:00	19.95	1.49	104.81	6.4	25.29
6/28/2012	11:10:00	19.94	1.45	108.1	6.26	25.19
6/28/2012	11:11:00	19.92	1.44	102.76	6.46	26.98
6/28/2012	11:12:00	19.95	1.43	102.67	6.41	27.49
6/28/2012	11:13:00	19.97	1.46	106.85	6.16	28.86
6/28/2012	11:14:00	19.94	1.44	103.89	6.48	28.45
6/28/2012	11:15:00	19.94	1.45	104.27	6.53	27.49
6/28/2012	11:16:00	19.92	1.46	103.75	6.64	26.48
6/28/2012	11:17:00	19.93	1.46	102.75	6.6	25.87
6/28/2012	11:18:00	19.95	1.44	104.32	6.47	25.83
6/28/2012	11:19:00	19.97	1.47	105.13	6.42	27.1
6/28/2012	11:20:00	19.94	1.46	106.94	6.54	25.88
6/28/2012	11:21:00	19.95	1.45	106.22	6.5	27.58
6/28/2012	11:22:00	19.94	1.45	106.09	6.36	25.85
6/28/2012	11:23:00	19.97	1.41	99.62	6.31	28.48
6/28/2012	11:24:00	19.96	1.44	99.3	6.46	27.83
6/28/2012	11:25:00	19.94	1.44	100.57	6.43	26.24
6/28/2012	11:26:00	19.96	1.42	100.3	6.42	28.6
6/28/2012	11:27:00	19.92	1.46	101.93	6.51	26.46
6/28/2012	11:28:00	19.93	1.46	103.35	6.49	26.57
6/28/2012	11:29:00	19.92	1.46	102.35	6.47	26.85
6/28/2012	11:30:00	19.94	1.45	102.13	6.74	27.14
6/28/2012	11:31:00	19.93	1.47	102.67	6.44	26.43
6/28/2012	11:32:00	19.91	1.48	103.57	6.67	26.97
6/28/2012	11:33:00	19.89	1.54	104.08	6.82	26.09
6/28/2012	11:34:00	19.9	1.49	103.59	6.69	25.37
6/28/2012	11:35:00	19.9	1.48	102.22	6.68	25.18

AVERAGED CEM DATA

Job Number: *Day 3*
Run ID: *R1*

Start Time: *08:50:00*
Start Date: *06/28/12*

Date	Time	O2	CO2	NOx	CO	THC
6/28/2012	11:36:00	19.94	1.45	102.82	6.69	26.66
6/28/2012	11:37:00	19.92	1.46	107.	6.54	26.58
6/28/2012	11:38:00	19.91	1.47	103.23	6.48	26.97
6/28/2012	11:39:00	19.91	1.48	100.8	6.42	26.83
6/28/2012	11:40:00	19.93	1.49	100.41	6.49	28.48
6/28/2012	11:41:00	19.92	1.48	103.03	6.57	27.76
6/28/2012	11:42:00	19.9	1.47	103.13	6.6	26.48
6/28/2012	11:43:00	19.95	1.44	103.31	6.73	27.64
6/28/2012	11:44:00	19.94	1.42	106.41	6.89	30.39
6/28/2012	11:45:00	19.96	1.41	105.62	6.85	29.38
6/28/2012	11:46:00	19.93	1.45	100.12	6.87	30.32
6/28/2012	11:47:00	19.92	1.47	101.67	6.92	29.29
6/28/2012	11:48:00	19.99	1.4	102.99	6.32	16.26
6/28/2012	11:49:00	20.09	1.28	86.6	5.4	25.03
6/28/2012	11:50:00	19.99	1.39	98.41	6.46	25.5
Average Value:		**19.96**	**1.4**	**103.89**	**6.66**	**27.17**
Corrected Average:		**20.11**	**.96**	**104.5**	**6.8**	**27.95**

Calibration Records

Pretest Verifications

O'BRIEN & GERE

Analyzer Response Time

Pollutant O_2 Analyzer I.D. CAI 200

Analyzer Serial No. P06050 High Span Gas 20.87

Date 6/26/12 Time 10:00

Upscale Response		
Run 1	41	seconds
Run 2	41	seconds
Run 3	42	seconds
Average	41	seconds

Downscale Response		
Run 1	48	seconds
Run 2	48	seconds
Run 3	49	seconds
Average	48	seconds

Pollutant CO_2 Analyzer I.D. CAI 200

Analyzer Serial No. P06050 High Span Gas 17.87

Date 6/26/12 Time 1010

Upscale Response		
Run 1	46	seconds
Run 2	46	seconds
Run 3	47	seconds
Average	46	seconds

Downscale Response		
Run 1	49	seconds
Run 2	49	seconds
Run 3	49	seconds
Average	49	seconds

O'BRIEN & GERE

Analyzer Response Time

Pollutant NOx Analyzer I.D. API

Analyzer Serial No. 393 High Span Gas 91

Date 6/26/12 Time 1020

Upscale Response		
Run 1	49	seconds
Run 2	47	seconds
Run 3	53	seconds
Average	51	seconds

Downscale Response		
Run 1	59	seconds
Run 2	60	seconds
Run 3	64	seconds
Average	62	seconds

Pollutant CO Analyzer I.D. Thermo

Analyzer Serial No. 0594 High Span Gas 86.3

Date 6/26/12 Time 1030

Upscale Response		
Run 1	46	seconds
Run 2	47	seconds
Run 3	47	seconds
Average	47	seconds

Downscale Response		
Run 1	53	seconds
Run 2	54	seconds
Run 3	53	seconds
Average	53	seconds

O'BRIEN & GERE

Analyzer Response Time

Pollutant THC Analyzer I.D. CAI 300m - HFID

Analyzer Serial No. SK 06004 High Span Gas 30.3

Date 6/26/12 Time 10:40

Upscale Response		
Run 1	51	seconds
Run 2	52	seconds
Run 3	53	seconds
Average	52	seconds

Downscale Response		
Run 1	59	seconds
Run 2	59	seconds
Run 3	63	seconds
Average	61	seconds

Pollutant _____ Analyzer I.D. _____

Analyzer Serial No. _____ High Span Gas _____

Date _____ Time _____

Upscale Response		
Run 1		seconds
Run 2		seconds
Run 3		seconds
Average		seconds

Downscale Response		
Run 1		seconds
Run 2		seconds
Run 3		seconds
Average		seconds

O'BRIEN & GERE

NO2 to NO Conversion Efficiency

Analyzer I.D. API

Analyzer Span 91

Analyzer Serial No. 393

Mid Span Gas 45.3

Date 6/26/2012

Time 930

Clock Time	Analyzer Response	Clock Time	Analyzer Response
930	23	945	24
931	23	946	24
932	23	947	24
933	24	948	24
934	25	949	24
935	25	950	24
936	25	951	23
937	25	952	23
938	25	953	23
939	25	954	23
940	25	955	23
941	24	956	23
942	24	957	23
943	24	958	23
944	24	959	24

Peak Value 25

Note: analyzer response at the end of test must not be less than 2 percent of peak value.

On-site Daily Analyzer Calibrations

DAILY CALIBRATION REPORT

Date: *6/26/2012*

Start Time: *08:34:01*
End Time: *09:35:02*

Methods: 3A, 6C, 7E and 10
Job Number: 49349

Param	Span Value	Mid-Gas Standard	Analyzer Zero Response	Analyzer Mid Response	Zero Cal Error	Mid Cal Error	System Zero Response	System Mid Response	System Zero Bias	System Mid Bias
O2	21	11.97	0.03	12	0.2%	0.2%	0.06	11.95	0.1%	-0.3%
CO2	18	8.75	0.04	8.71	0.2%	-0.2%	0.26	8.75	1.2%	0.2%
NOx	91	45.30	0.37	45.61	0.4%	0.3%	0.38	44.96	0.0%	-0.7%
CO	86	44.10	0.24	44.16	0.3%	0.1%	0.35	44.05	0.1%	-0.1%
THC	31	14.73	N/A	N/A	0.4%	-1.0%	0.12	14.58	0.4%	-0.5%

Calibration Error = 100% x (Analyzer Response - Cylinder Gas Standard Value) / (Span Value)
System Bias = 100% x (System Response - Analyzer Response) / (Span Value)

For THC Measurements:

Calibration Error = 100% x (System Response - Cylinder Gas Standard Value) / (Cylinder Gas Standard Value)
System Bias = 100% x (System Response - Cylinder Gas Standard Value) / (Span Value)

O'BRIEN & GERE

Daily Analyzer Calibration

Plant I.D.	General Dynamics	Project No.	
Source I.D.	Static Kiln	Personnel	B.Garrett
Pollutant	O2	Analyzer I.D.	CAI 200
Analyzer Serial No.	P06050	Span Value	21
Date	6/26/2012 Time NA	Test Method	3A

	Cylinder Value (ppm or %)	Analyzer Response (ppm or %)	Calibration Error (% of Span) +/- 2%	System Response (ppm or %)	System Bias (% of Span) +/-5%
Zero Gas	0.0	0.03	0.1	0.06	0.1
	Cylinder ID				
Low Level Gas					
	Cylinder ID				
Mid Level Gas	11.97	12	0.1	11.95	-0.2
	Cylinder ID	CC11227			
High Level Gas	20.87	21.00	0.6	NA	NA
	Cylinder ID	SA020048A			

$$\text{Calibration Error} = \frac{(\text{Analyzer Response} - \text{Cylinder Value})}{\text{Span Value}} \times 100$$

$$\text{System Bias} = \frac{(\text{System Response} - \text{Analyzer Response})}{\text{Span Value}} \times 100$$

O'BRIEN & GERE

Daily Analyzer Calibration

Plant I.D.	General Dynamics	Project No.	0
Source I.D.	Static Kiln	Personnel	B.Garrett
Pollutant	CO2	Analyzer I.D.	CAI 200
Analyzer Serial No.	P06050	Span Value	18
Date 6/26/2012	Time NA	Test Method	3A

	Cylinder Value (ppm or %)	Analyzer Response (ppm or %)	Calibration Error (% of Span) +/- 2%	System Response (ppm or %)	System Bias (% of Span) +/-5%
Zero Gas	0.0	0.04	0.2	0.26	1.2
	Cylinder ID				
Low Level Gas					
	Cylinder ID				
Mid Level Gas	8.75	8.71	-0.2	8.75	0.2
	Cylinder ID	CC11227			
High Level Gas	17.82	18.00	1.0	NA	NA
	Cylinder ID	SA020048A			

$$\text{Calibration Error} = \frac{(\text{Analyzer Response} - \text{Cylinder Value})}{\text{Span Value}} \times 100$$

$$\text{System Bias} = \frac{(\text{System Response} - \text{Analyzer Response})}{\text{Span Value}} \times 100$$

O'BRIEN & GERE

Daily Analyzer Calibration

Plant I.D.	General Dynamics	Project No.	0
Source I.D.	Static Kiln	Personnel	B.Garrett
Pollutant	NOX	Analyzer I.D.	API
Analyzer Serial No.	393	Span Value	91
Date 6/26/2012	Time NA	Test Method	7E

	Cylinder Value (ppm or %)	Analyzer Response (ppm or %)	Calibration Error (% of Span) +/- 2%	System Response (ppm or %)	System Bias (% of Span) +/-5%
Zero Gas	0.0	0.37	0.4	0.38	0.0
	Cylinder ID				
Low Level Gas					
	Cylinder ID				
Mid Level Gas	45.3	45.61	0.3	44.96	-0.7
	Cylinder ID	CC303310			
High Level Gas	91	92.10	1.2	NA	NA
	Cylinder ID	CC72827			

$$\text{Calibration Error} = \frac{(\text{Analyzer Response} - \text{Cylinder Value})}{\text{Span Value}} \times 100$$

$$\text{System Bias} = \frac{(\text{System Response} - \text{Analyzer Response})}{\text{Span Value}} \times 100$$

O'BRIEN & GERE

Daily Analyzer Calibration

Plant I.D.	General Dynamics	Project No.	0
Source I.D.	Static Kiln	Personnel	B.Garrett
Pollutant	CO	Analyzer I.D.	Thermo
Analyzer Serial No.	Thermo 0594	Span Value	86
Date	6/26/2012	Time	NA
Test Method			

	Cylinder Value (ppm or %)	Analyzer Response (ppm or %)	Calibration Error (% of Span) +/- 2%	System Response (ppm or %)	System Bias (% of Span) +/-5%
Zero Gas	0.0	0.24	0.3	0.35	0.1
	Cylinder ID				
Low Level Gas					
	Cylinder ID				
Mid Level Gas	44.7	44.0	-0.8	44.05	0.06
	Cylinder ID CC108590				
High Level Gas	86.3	87.00	0.8	NA	NA
	Cylinder ID CC72848				

$$\text{Calibration Error} = \frac{(\text{Analyzer Response} - \text{Cylinder Value})}{\text{Span Value}} \times 100$$

$$\text{System Bias} = \frac{(\text{System Response} - \text{Analyzer Response})}{\text{Span Value}} \times 100$$

O'BRIEN & GERE

Daily THC Analyzer Calibration

Plant I.D.	General Dynamics	Project No.	
Source I.D.	Static Kiln	Personnel	B.Garrett
Pollutant	THC (as propane)	Analyzer I.D.	CAI 300M HFID
Analyzer Serial No.	5K06004	Span Value	30.6
Date	6/26/2012 Time	Test Method	25A

	Cylinder Value (ppm or %)	System Response (ppm)	Predicted Response (ppm)	Actual Response (ppm)	Calibration Error (% of Cal. Gas) +/-5%
Zero Gas	0.0	0.3			
	Cylinder ID				
Low Level Gas	8.0		7.98	7.7	-3.5
	Cylinder ID	SA20801			
Mid Level Gas	14.73		14.44	14.57	0.9
	Cylinder ID	SA4280			
High Level Gas	30.6	29.67			
	Cylinder ID	CC164580			

$$\text{Calibration Error} = \frac{(\text{Actual Response} - \text{Predicted Response})}{\text{Calibration Gas}} \times 100$$

$$\text{Predicted Value} = \left[\frac{(\text{High Response} - \text{Zero Response})}{\text{High Level Gas}} \times \text{Mid or Low Level Gas}\right] + \text{Zero Response}$$

DAILY CALIBRATION REPORT

Date: *6/27/2012*

Start Time: *07:15:21*
End Time: *07:54:27*

Methods: 3A, 6C, 7E and 10
Job Number: 49349

Param	Span Value	Mid-Gas Standard	Analyzer Zero Response	Analyzer Mid Response	Zero Cal Error	Mid Cal Error	System Zero Response	System Mid Response	System Zero Bias	System Mid Bias
O2	21	11.97	0.04	11.98	0.2%	0.1%	0.1	11.9	0.3%	-0.4%
CO2	18	8.75	0.02	8.78	0.2%	0.2%	0.32	8.78	1.6%	0.0%
NOx	91	45.30	0.42	45.49	0.5%	0.2%	0.28	43.83	-0.2%	-1.8%
CO	86	44.10	0.35	44.5	0.4%	0.5%	0.61	44.17	0.3%	-0.4%
THC	31	14.73	N/A	N/A	0.7%	0.4%	0.23	14.78	0.7%	0.2%

Calibration Error = 100% x (Analyzer Response - Cylinder Gas Standard Value) / (Span Value)
System Bias = 100% x (System Response - Analyzer Response) / (Span Value)

For THC Measurements:

Calibration Error = 100% x (System Response - Cylinder Gas Standard Value) / (Cylinder Gas Standard Value)
System Bias = 100% x (System Response - Cylinder Gas Standard Value) / (Span Value)

O'BRIEN & GERE

Daily Analyzer Calibration

Plant I.D.	General Dynamics	Project No.	
Source I.D.	Static Kiln	Personnel	B.Garrett
Pollutant	O2	Analyzer I.D.	CAI 200
Analyzer Serial No.	P06050	Span Value	21
Date 6/27/2012	Time NA	Test Method	3A

	Cylinder Value (ppm or %)	Analyzer Response (ppm or %)	Calibration Error (% of Span) +/- 2%	System Response (ppm or %)	System Bias (% of Span) +/-5%
Zero Gas	0.0	0.04	0.2	0.10	0.1
	Cylinder ID				
Low Level Gas					
	Cylinder ID				
Mid Level Gas	11.97	11.98	0.0	11.9	-0.4
	Cylinder ID CC11227				
High Level Gas	20.87	21.10	1.1	NA	NA
	Cylinder ID SA020048A				

$$\text{Calibration Error} = \frac{(\text{Analyzer Response} - \text{Cylinder Value})}{\text{Span Value}} \times 100$$

$$\text{System Bias} = \frac{(\text{System Response} - \text{Analyzer Response})}{\text{Span Value}} \times 100$$

O'BRIEN & GERE

Daily Analyzer Calibration

Plant I.D.	General Dynamics	Project No.	0
Source I.D.	Static Kiln	Personnel	B.Garrett
Pollutant	CO2	Analyzer I.D.	CAI 200
Analyzer Serial No.	P06050	Span Value	18
Date 6/27/2012	Time NA	Test Method	3A

	Cylinder Value (ppm or %)	Analyzer Response (ppm or %)	Calibration Error (% of Span) +/- 2%	System Response (ppm or %)	System Bias (% of Span) +/-5%
Zero Gas	0.0	0.04	0.2	0.32	1.6
	Cylinder ID				
Low Level Gas					
	Cylinder ID				
Mid Level Gas	8.75	8.78	0.2	8.78	0.0
	Cylinder ID CC11227				
High Level Gas	17.82	18.10	1.6	NA	NA
	Cylinder ID SA020048A				

$$\text{Calibration Error} = \frac{(\text{Analyzer Response} - \text{Cylinder Value})}{\text{Span Value}} \times 100$$

$$\text{System Bias} = \frac{(\text{System Response} - \text{Analyzer Response})}{\text{Span Value}} \times 100$$

O'BRIEN & GERE

Daily Analyzer Calibration

Plant I.D.	General Dynamics	Project No.	0
Source I.D.	Static Kiln	Personnel	B.Garrett
Pollutant	NOX	Analyzer I.D.	API
Analyzer Serial No.	393	Span Value	91
Date 6/27/2012	Time NA	Test Method	7E

	Cylinder Value (ppm or %)	Analyzer Response (ppm or %)	Calibration Error (% of Span) +/- 2%	System Response (ppm or %)	System Bias (% of Span) +/-5%
Zero Gas	0.0	0.42	0.5	0.28	-0.2
	Cylinder ID				
High Level Gas	174	173.2	-0.9	175.1	2.1
	Cylinder ID				
Mid Level Gas	45.3	45.49	0.2	43.83	-1.8
	Cylinder ID CC303310				
High Level Gas	91	92.10	1.2	NA	NA
	Cylinder ID CC72827				

$$\text{Calibration Error} = \frac{(\text{Analyzer Response} - \text{Cylinder Value})}{\text{Span Value}} \times 100$$

$$\text{System Bias} = \frac{(\text{System Response} - \text{Analyzer Response})}{\text{Span Value}} \times 100$$

O'BRIEN & GERE

Daily Analyzer Calibration

Plant I.D.	General Dynamics	Project No.	0
Source I.D.	Static Kiln	Personnel	B.Garrett
Pollutant	CO	Analyzer I.D.	Thermo
Analyzer Serial No.	Thermo 0594	Span Value	86
Date	6/27/2012	Time	NA
Test Method			

	Cylinder Value (ppm or %)	Analyzer Response (ppm or %)	Calibration Error (% of Span) +/- 2%	System Response (ppm or %)	System Bias (% of Span) +/-5%
Zero Gas	0.0	0.35	0.4	0.61	0.3
Cylinder ID					
Low Level Gas					
Cylinder ID					
Mid Level Gas	44.7	44.5	-0.2	44.17	-0.4
CC108590					
High Level Gas	86.3	86.90	0.7	NA	NA
Cylinder ID CC72848					

$$\text{Calibration Error} = \frac{(\text{Analyzer Response} - \text{Cylinder Value})}{\text{Span Value}} \times 100$$

$$\text{System Bias} = \frac{(\text{System Response} - \text{Analyzer Response})}{\text{Span Value}} \times 100$$

O'BRIEN & GERE

Daily THC Analyzer Calibration

Plant I.D.	General Dynamics	Project No.	
Source I.D.	Static Kiln	Personnel	B.Garrett
Pollutant	THC (as propane)	Analyzer I.D.	CAI 300M HFID
Analyzer Serial No.	5K06004	Span Value	30.6
Date	6/27/2012 Time	Test Method	25A

	Cylinder Value (ppm or %)	System Response (ppm)	Predicted Response (ppm)	Actual Response (ppm)	Calibration Error (% of Cal. Gas) +/-5%
Zero Gas	0.0	0.2			
	Cylinder ID				
Low Level Gas	8		8.02	8	-0.2
	Cylinder ID	SA20801			
Mid Level Gas	14.73		14.59	14.43	-1.1
	Cylinder ID	SA4280			
High Level Gas	30.6	30.1			
	Cylinder ID	CC164580			

$$\text{Calibration Error} = \frac{(\text{Actual Response} - \text{Predicted Response})}{\text{Calibration Gas}} \times 100$$

$$\text{Predicted Value} = \left[\frac{(\text{High Response} - \text{Zero Response})}{\text{High Level Gas}} \times \text{Mid or Low Level Gas}\right] + \text{Zero Response}$$

DAILY CALIBRATION REPORT

Date: *6/28/2012*

Start Time: *07:24:28*
End Time: *08:15:04*

Methods: 3A, 6C, 7E and 10
Job Number: Day 3

Param	Span Value	Mid-Gas Standard	Analyzer Zero Response	Analyzer Mid Response	Zero Cal Error	Mid Cal Error	System Zero Response	System Mid Response	System Zero Bias	System Mid Bias
O2	21	11.97	0.05	11.99	0.3%	0.1%	0.19	11.99	0.6%	0.0%
CO2	18	8.75	0.02	8.69	0.2%	-0.3%	0.43	8.59	2.2%	-0.6%
NOx	174	91.00	0.71	90.83	0.4%	-0.1%	0.56	88.72	-0.1%	-1.2%
CO	86	44.10	0.51	44.57	0.6%	0.6%	-0.14	43.97	-0.8%	-0.7%
THC	85	31.00	N/A	N/A	1.0%	-1.8%	0.86	30.46	1.0%	-0.6%

Calibration Error = 100% x (Analyzer Response - Cylinder Gas Standard Value) / (Span Value)
System Bias = 100% x (System Response - Analyzer Response) / (Span Value)

. For THC Measurements:
Calibration Error = 100% x (System Response - Cylinder Gas Standard Value) / (Cylinder Gas Standard Value)
System Bias = 100% x (System Response - Cylinder Gas Standard Value) / (Span Value)

O'BRIEN & GERE

Daily Analyzer Calibration

Plant I.D.	General Dynamics	Project No.	
Source I.D.	Static Kiln	Personnel	B.Garrett
Pollutant	O2	Analyzer I.D.	CAI 200
Analyzer Serial No.	P06050	Span Value	21
Date	6/28/2012 Time NA	Test Method	3A

	Cylinder Value (ppm or %)	Analyzer Response (ppm or %)	Calibration Error (% of Span) +/- 2%	System Response (ppm or %)	System Bias (% of Span) +/-5%
Zero Gas	0.0	0.05	0.2	0.10	0.1
	Cylinder ID				
Low Level Gas					
	Cylinder ID				
Mid Level Gas	11.97	11.99	0.1	11.99	0.0
	Cylinder ID CC11227				
High Level Gas	20.87	21.00	0.6	NA	NA
	Cylinder ID SA020048				

$$\text{Calibration Error} = \frac{(\text{Analyzer Response} - \text{Cylinder Value})}{\text{Span Value}} \times 100$$

$$\text{System Bias} = \frac{(\text{System Response} - \text{Analyzer Response})}{\text{Span Value}} \times 100$$

O'BRIEN & GERE

Daily Analyzer Calibration

Plant I.D.	General Dynamics	Project No.	0
Source I.D.	Static Kiln	Personnel	B.Garrett
Pollutant	CO2	Analyzer I.D.	CAI 200
Analyzer Serial No.	P06050	Span Value	18
Date 6/28/2012	Time NA	Test Method	3A

	Cylinder Value (ppm or %)	Analyzer Response (ppm or %)	Calibration Error (% of Span) +/- 2%	System Response (ppm or %)	System Bias (% of Span) +/-5%
Zero Gas	0.0	0.02	0.1	0.43	2.3
Cylinder ID					
Low Level Gas					
Cylinder ID					
Mid Level Gas	8.75	8.69	-0.3	8.59	-0.6
Cylinder ID CC11227					
High Level Gas	17.82	17.88	0.3	NA	NA
Cylinder ID SA020048					

$$\text{Calibration Error} = \frac{(\text{Analyzer Response} - \text{Cylinder Value})}{\text{Span Value}} \times 100$$

$$\text{System Bias} = \frac{(\text{System Response} - \text{Analyzer Response})}{\text{Span Value}} \times 100$$

O'BRIEN & GERE

Daily Analyzer Calibration

Plant I.D.	General Dynamics	Project No.	0
Source I.D.	Static Kiln	Personnel	B.Garrett
Pollutant	NOX	Analyzer I.D.	API
Analyzer Serial No.	393	Span Value	174
Date 6/28/2012	Time NA	Test Method	7E

	Cylinder Value (ppm or %)	Analyzer Response (ppm or %)	Calibration Error (% of Span) +/- 2%	System Response (ppm or %)	System Bias (% of Span) +/-5%
Zero Gas	0.0	0.71	0.4	0.56	-0.1
	Cylinder ID				
High Level Gas					
	Cylinder ID				
Mid Level Gas	91	90.83	-0.1	88.72	-1.2
	Cylinder ID	CC72827			
High Level Gas	174	173.20	-0.5	NA	NA
	Cylinder ID	CC2465956			

$$\text{Calibration Error} = \frac{(\text{Analyzer Response} - \text{Cylinder Value})}{\text{Span Value}} \times 100$$

$$\text{System Bias} = \frac{(\text{System Response} - \text{Analyzer Response})}{\text{Span Value}} \times 100$$

O'BRIEN & GERE

Daily Analyzer Calibration

Plant I.D.	General Dynamics	Project No.	0
Source I.D.	Static Kiln	Personnel	B.Garrett
Pollutant	CO	Analyzer I.D.	Thermo
Analyzer Serial No.	Thermo 0594	Span Value	86.3
Date	6/28/2012	Time	NA	Test Method	

	Cylinder Value (ppm or %)	Analyzer Response (ppm or %)	Calibration Error (% of Span) +/- 2%	System Response (ppm or %)	System Bias (% of Span) +/-5%
Zero Gas	0.0	0.35	0.4	0.61	0.3
	Cylinder ID				
Low Level Gas					
	Cylinder ID				
Mid Level Gas	44.7	44.5	-0.2	44.17	-0.4
	Cylinder ID	CC108590			
High Level Gas	86.3	86.90	0.7	NA	NA
	Cylinder ID	CC72848			

$$\text{Calibration Error} = \frac{(\text{Analyzer Response} - \text{Cylinder Value})}{\text{Span Value}} \times 100$$

$$\text{System Bias} = \frac{(\text{System Response} - \text{Analyzer Response})}{\text{Span Value}} \times 100$$

O'BRIEN & GERE

Daily THC Analyzer Calibration

Plant I.D.	General Dynamics	Project No.	
Source I.D.	Static Kiln	Personnel	B.Garrett
Pollutant	THC (as propane)	Analyzer I.D.	CAI 300M HFID
Analyzer Serial No.	5K06004	Span Value	85.9
Date	6/28/2012	Time	
		Test Method	25A

	Cylinder Value (ppm or %)	System Response (ppm)	Predicted Response (ppm)	Actual Response (ppm)	Calibration Error (% of Cal. Gas) +/-5%
Zero Gas	0.0	0.1			
	Cylinder ID				
Low Level Gas	14.41		14.22	14.2	-0.2
	Cylinder ID	SA4280			
Mid Level Gas	30.6		30.09	29.88	-0.7
	Cylinder ID	CC164580			
High Level Gas	85.9	84.3			
	Cylinder ID	CC35496			

$$\text{Calibration Error} = \frac{(\text{Actual Response} - \text{Predicted Response})}{\text{Calibration Gas}} \times 100$$

$$\text{Predicted Value} = \frac{[(\text{High Response} - \text{Zero Response}) \times \text{Mid or Low Level Gas}]}{\text{High Level Gas}} + \text{Zero Response}$$

EPA Protocol
Cylinder Gas Certifications

PRAXAIR

Praxair Distribution Mid-Atlantic
145 Shimersville Rd.
Bethlehem, PA 18015
Telephone: (610) 317-1608
Facsimile: (610) 758-8382

DocNumber: 000014880

CERTIFICATE OF ANALYSIS / EPA PROTOCOL GAS

Customer & Order Information:

OBRIEN AND GERE ENGIN*MS*
JOB SITE
EAST NORRITON PA 194030

Praxair Order Number: 03323225
Customer P. O. Number: 10056170
Customer Reference Number:

Fill Date: 12/8/2011
Part Number: EV NICDOXE136AS
Lot Number: 917134252
Cylinder Style & Outlet: AS CGA 590
Cylinder Pressure & Volume: 2000 psig 140 cu. ft.

Certified Concentration:

Expiration Date:	12/17/2014	NIST Traceable
Cylinder Number:	CC11227	Analytical Uncertainty:
8.75 %	CARBON DIOXIDE	± 1 %
11.97 %	OXYGEN	± 1 %
Balance	NITROGEN	

Certification Information: *Certification Date:* 12/17/2011 *Term:* 36 Months *Expiration Date:* 12/17/2014

This cylinder was certified according to the 1997 EPA Traceability Protocol, Document #EPA-600/R-97/121, using Procedure G1

Do Not Use this Standard if Pressure is less than 150 PSIG

PGVP ID#F12011

Analytical Data: *(R=Reference Standard, Z=Zero Gas, C=Gas Candidate)*

1. Component: CARBON DIOXIDE

Requested Concentration: 8.5 %
Certified Concentration: 8.75 %
Instrument Used: SIEMENS ULTRAMAT 5E SN: D2-412
Analytical Method: NON-DISPERSIVE INFRARED
Last Multipoint Calibration: 12/8/2011

First Analysis Data:						Date:	12/17/2011
Z:	0	R:	12.2	C:	8.75	Conc:	8.743
R:	12.2	Z:	0	C:	8.76	Conc:	8.753
Z:	0	C:	8.76	R:	12.2	Conc:	8.753
UOM:	%			Mean Test Assay:			8.749 %

Reference Standard Type: GMIS
Ref. Std. Cylinder # : SGAL3547
Ref. Std. Conc: 12.19 %
Ref. Std. Traceable to SRM # : 2745
SRM Sample # : 9-C-34
SRM Cylinder # : CAL016129

Second Analysis Data:						Date:	
Z:	0	R:	0	C:	0	Conc:	0
R:	0	Z:	0	C:	0	Conc:	0
Z:	0	C:	0	R:	0	Conc:	0
UOM:	%			Mean Test Assay:			0 %

2. Component: OXYGEN

Requested Concentration: 12 %
Certified Concentration: 11.97 %
Instrument Used: SIEMENS OXYMAT 5E S/N F1-111
Analytical Method: PARAMAGNETIC
Last Multipoint Calibration: 11/17/2011

First Analysis Data:						Date:	12/15/2011
Z:	0	R:	9.98	C:	11.96	Conc:	11.968
R:	9.98	Z:	0	C:	11.96	Conc:	11.968
Z:	0	C:	11.96	R:	9.96	Conc:	11.968
UOM:	%			Mean Test Assay:			11.968 %

Reference Standard Type: GMIS
Ref. Std. Cylinder # : CC272689
Ref. Std. Conc: 9.98 %
Ref. Std. Traceable to SRM # : 2659a
SRM Sample # : 71-D-07
SRM Cylinder # : CAL015449

Second Analysis Data:						Date:	
Z:	0	R:	0	C:	0	Conc:	0
R:	0	Z:	0	C:	0	Conc:	0
Z:	0	C:	0	R:	0	Conc:	0
UOM:	%			Mean Test Assay:			0 %

Analyzed by: Robin Morgan

Certified by: Michelle Kostik

Information contained herein has been prepared at your request by qualified experts within Praxair Distribution, Inc. While we believe that the information is accurate within the limits of the analytical methods employed and is complete to the extent of the specific analyses performed, we make no warranty or representation as to the suitability of the use of the information for any purpose. The information is offered with the understanding that any use of the information is at the sole discretion and risk of the user. In no event shall the liability of Praxair Distribution, Inc., arising out of the use of the information con tained herein exceed the fee established for providing such information.

PRAXAIR

Praxair Distribution Mid-Atlantic
145 Shimersville Rd.
Bethlehem, PA 18015
Telephone: (610) 317-1608
Facsimile: (610) 758-8382

DocNumber: 000010458

CERTIFICATE OF ANALYSIS / EPA PROTOCOL GAS

Customer & Order Information:

GTS-WELCO SYRACUSE
4560 MORGAN PL
LIVERPOOL NY 130900

Praxair Order Number: 02895710
Customer P. O. Number: 00332549
Customer Reference Number:

Fill Date: 4/8/2011
Part Number: NI CD18O8E-AS
Lot Number: 917109866
Cylinder Style & Outlet: AS CGA 590
Cylinder Pressure & Volume: 2000 psig 140 cu. ft.

Certified Concentration:

Expiration Date:	4/13/2014		NIST Traceable
Cylinder Number:	SA020048A		Analytical Uncertainty:
17.82	%	CARBON DIOXIDE	± 1 %
20.87	%	OXYGEN	± 1 %
Balance		NITROGEN	

Certification Information: *Certification Date:* 4/13/2011 *Term:* 36 Months *Expiration Date:* 4/13/2014

This cylinder was certified according to the 1997 EPA Traceability Protocol, Document #EPA-600/R-97/121, using Procedure G1

Do Not Use this Standard if Pressure is less than 150 PSIG

Analytical Data: *(R=Reference Standard, Z=Zero Gas, C=Gas Candidate)*

1. Component: CARBON DIOXIDE

Requested Concentration: 18 %
Certified Concentration: 17.82 %
Instrument Used: SIEMENS ULTRAMAT 5E SN: D2-412
Analytical Method: NON-DISPERSIVE INFRARED
Last Multipoint Calibration: 3/31/2011

Reference Standard Type: GMIS
Ref. Std. Cylinder # : SA16907
Ref. Std. Conc: 18.09 %
Ref. Std. Traceable to SRM # : 2745
SRM Sample # : 9-C-34
SRM Cylinder # : CAL016063

First Analysis Data:						Date:	4/13/2011
Z:	0	R:	18.1	C:	17.84	Conc:	17.817
R:	18.12	Z:	0	C:	17.84	Conc:	17.817
Z:	0	C:	17.84	R:	18.12	Conc:	17.817
UOM:	%			Mean Test Assay:			17.817 %

Second Analysis Data:						Date:	
Z:	0	R:	0	C:	0	Conc:	0
R:	0	Z:	0	C:	0	Conc:	0
Z:	0	C:	0	R:	0	Conc:	0
UOM:	%			Mean Test Assay:			0 %

2. Component: OXYGEN

Requested Concentration: 21 %
Certified Concentration: 20.87 %
Instrument Used: SIEMENS OXYMAT 5E S/N F1-111
Analytical Method: PARAMAGNETIC
Last Multipoint Calibration: 4/7/2011

Reference Standard Type: GMIS
Ref. Std. Cylinder # : CC14600
Ref. Std. Conc: 22.94%
Ref. Std. Traceable to SRM # : 2659a
SRM Sample # : 71-D-27
SRM Cylinder # : CAL015750

First Analysis Data:						Date:	4/12/2011
Z:	0	R:	23.02	C:	20.94	Conc:	20.873
R:	23.02	Z:	0	C:	20.94	Conc:	20.873
Z:	0	C:	20.92	R:	23	Conc:	20.853
UOM:	%			Mean Test Assay:			20.867 %

Second Analysis Data:						Date:	
Z:	0	R:	0	C:	0	Conc:	0
R:	0	Z:	0	C:	0	Conc:	0
Z:	0	C:	0	R:	0	Conc:	0
UOM:	%			Mean Test Assay:			0 %

Analyzed by: Robin Morgan

Certified by: MK 4/27/11 Michelle Kostik

Information contained herein has been prepared at your request by qualified experts within Praxair Distribution, Inc. While we believe that the information is accurate within the limits of the analytical methods employed and is complete to the extent of the specific analyses performed, we make no warranty or representation as to the suitability of the use of the information for any purpose. The information is offered with the understanding that any use of the information is at the sole discretion and risk of the user. In no event shall the liability of Praxair Distribution, Inc., arising out of the use of the information contained herein exceed the fee established for providing such information.

PRAXAIR

Praxair Distribution Mid-Atlantic
145 Shimersville Rd.
Bethlehem, PA 18015
Telephone: (610) 317-1608
Facsimile: (610) 758-8382

DocNumber: 000013612

CERTIFICATE OF ANALYSIS / EPA PROTOCOL GAS

Customer & Order Information:

GTS-WELCO SYRACUSE
4560 MORGAN PL
LIVERPOOL NY 130900

Praxair Order Number: 03184534
Customer P. O. Number: 00380397
Customer Reference Number:

Fill Date: 9/19/2011
Part Number: NI CO45ME-AS
Lot Number: 917126235
Cylinder Style & Outlet: AS CGA 350
Cylinder Pressure & Volume: 2000 psig 140 cu. ft.

Certified Concentration:

Expiration Date:	9/30/2014		NIST Traceable
Cylinder Number:	CC108590		Analytical Uncertainty:
44.7	ppm	CARBON MONOXIDE	± 1 %
	Balance	NITROGEN	

Certification Information: *Certification Date:* 9/30/2011 *Term:* 36 Months *Expiration Date:* 9/30/2014

This cylinder was certified according to the 1997 EPA Traceability Protocol, Document #EPA-600/R-97/121, using Procedure G1

Do Not Use this Standard if Pressure is less than 150 PSIG

PGVP ID# F12011

Analytical Data: *(R=Reference Standard, Z=Zero Gas, C=Gas Candidate)*

1. Component: CARBON MONOXIDE

Requested Concentration: 45 ppm
Certified Concentration: 44.7 ppm
Instrument Used: HORIBA VIA-3000 S/N Y9EY78L6
Analytical Method: NDIR
Last Multipoint Calibration: 9/22/2011

Reference Standard Type: GMIS
Ref. Std. Cylinder #: CC148163
Ref. Std. Conc: 50.1 PPM
Ref. Std. Traceable to SRM #: 1679c
SRM Sample #: 3-I-37
SRM Cylinder #: FF28502

First Analysis Data: Date: 9/23/2011

Z:	0	R:	49.7	C:	44.3	Conc:	44.747
R:	49.5	Z:	0	C:	44.2	Conc:	44.646
Z:	0	C:	44	R:	49.6	Conc:	44.444

UOM: PPM Mean Test Assay: 44.612 PPM

Second Analysis Data: Date: 9/30/2011

Z:	0	R:	50.1	C:	44.4	Conc:	44.667
R:	49.7	Z:	0	C:	44.6	Conc:	44.869
Z:	0	C:	44.5	R:	49.6	Conc:	44.768

UOM: PPM Mean Test Assay: 44.768 PPM

Analyzed by: Ashley Davila
Ashley Davila

Certified by:
Robin Morgan

Information contained herein has been prepared at your request by qualified experts within Praxair Distribution, Inc. While we believe that the information is accurate within the limits of the analytical methods employed and is complete to the extent of the specific analyses performed, we make no warranty or representation as to the suitability of the use of the information for any purpose. The information is offered with the understanding that any use of the information is at the sole discretion and risk of the user. In no event shall the liability of Praxair Distribution, Inc., arising out of the use of the information contained herein exceed the fee established for providing such information.

PRAXAIR

Praxair Distribution Mid-Atlantic
145 Shimersville Rd.
Bethlehem, PA 18015
Telephone: (610) 317-1608
Facsimile: (610) 758-8382

DocNumber: 000016896

CERTIFICATE OF ANALYSIS / EPA PROTOCOL GAS

Customer & Order Information:

GTS-WELCO SYRACUSE
4560 MORGAN PL
LIVERPOOL NY 130900

Praxair Order Number: 03524052
Customer P. O. Number: 00432531
Customer Reference Number:

Fill Date: 3/21/2012
Part Number: NI CO85ME-AS
Lot Number: 917208132
Cylinder Style & Outlet: AS CGA 350
Cylinder Pressure & Volume: 2000 psig 140 cu. ft.

Certified Concentration:

Expiration Date:	4/2/2015		NIST Traceable
Cylinder Number:	CC72848		Analytical Uncertainty:
86.3	ppm	CARBON MONOXIDE	± 1 %
	Balance	NITROGEN	

Certification Information: *Certification Date:* 4/2/2012 *Term:* 36 Months *Expiration Date:* 4/2/2015

This cylinder was certified according to the 1997 EPA Traceability Protocol, Document #EPA-600/R-97/121, using Procedure G1
Do Not Use this Standard if Pressure is less than 150 PSIG
PGVP ID#F12012

Analytical Data: *(R=Reference Standard, Z=Zero Gas, C=Gas Candidate)*

1. Component: CARBON MONOXIDE

Requested Concentration: 85 ppm
Certified Concentration: 86.3 ppm
Instrument Used: SIEMENS ULTRAMAT 6E S/N N1-04-0196
Analytical Method: NON-DISPERSIVE INFRARED
Last Multipoint Calibration: 4/2/2012

Reference Standard Type: GMIS
Ref. Std. Cylinder # : ND19304
Ref. Std. Conc: 76.6 PPM
Ref. Std. Traceable to SRM # : 1679c
SRM Sample # : 3-I-37
SRM Cylinder # : FF28502

First Analysis Data:						Date:	3/26/2012
Z:	0	R:	78.6	C:	88.4	Conc:	86.187
R:	78.4	Z:	0	C:	88.4	Conc:	86.187
Z:	0	C:	88.6	R:	78.7	Conc:	86.382
UOM:	PPM			Mean Test Assay:			86.252 PPM

Second Analysis Data:						Date:	4/2/2012
Z:	0	R:	77.1	C:	86.8	Conc:	86.349
R:	77.4	Z:	0	C:	86.7	Conc:	86.25
Z:	0	C:	86.7	R:	76.5	Conc:	86.25
UOM:	PPM			Mean Test Assay:			86.283 PPM

Analyzed by: John Priblsh

Certified by: Robin Morgan

Information contained herein has been prepared at your request by qualified experts within Praxair Distribution, Inc. While we believe that the information is accurate within the limits of the analytical methods employed and is complete to the extent of the specific analyses performed, we make no warranty or representation as to the suitability of the use of the information for any purpose. The information is offered with the understanding that any use of the information is at the sole discretion and risk of the user. In no event shall the liability of Praxair Distribution, Inc., arising out of the use of the information contained herein exceed the fee established for providing such information

PRAXAIR

Praxair Distribution Mid-Atlantic
145 Shimersville Rd.
Bethlehem, PA 18015
Telephone: (610) 317-1608
Facsimile: (610) 758-8382

DocNumber: 000017410

CERTIFICATE OF ANALYSIS / EPA PROTOCOL GAS

Customer & Order Information:

GTS-WELCO SYRACUSE
4560 MORGAN PL
LIVERPOOL NY 130900

Praxair Order Number: 03570882
Customer P. O. Number: 00439287
Customer Reference Number:

Fill Date: 4/23/2012
Part Number: NI NO45ME-AS
Lot Number: 917211464
Cylinder Style & Outlet: AS CGA 660
Cylinder Pressure & Volume: 2000 psig 140 cu. ft.

Certified Concentration:

Expiration Date:	5/4/2014		NIST Traceable
Cylinder Number:	CC303310		Analytical Uncertainty:
45.3	ppm	NITRIC OXIDE	± 1 %
	Balance	NITROGEN	

NOx = 45.3 NOx for Reference Only

Certification Information: *Certification Date:* 5/4/2012 *Term:* 24 Months *Expiration Date:* 5/4/2014

This cylinder was certified according to the 1997 EPA Traceability Protocol, Document #EPA-600/R-97/121, using Procedure G1

Do Not Use this Standard if Pressure is less than 150 PSIG

PGVP ID#F12012

Analytical Data: *(R=Reference Standard, Z=Zero Gas, C=Gas Candidate)*

1. Component: NITRIC OXIDE

Requested Concentration: 45 ppm
Certified Concentration: 45.3 ppm
Instrument Used: TECO MODEL 42C 42CHL-55533-304
Analytical Method: CHEMILUMINESCENCE
Last Multipoint Calibration: 4/26/2012

Reference Standard Type: GMIS
Ref. Std. Cylinder # : SA4841
Ref. Std. Conc: 76.6PPM
Ref. Std. Traceable to SRM # : 1684b
SRM Sample # : 44-S-78
SRM Cylinder # : CAL015512

First Analysis Data: Date: 4/27/2012

Z:	0	R:	77.1	C:	45.5	Conc:	45.204
R:	77.1	Z:	0	C:	45.6	Conc:	45.304
Z:	0	C:	45.5	R:	77.1	Conc:	45.204

UOM: PPM Mean Test Assay: 45.238 PPM

Second Analysis Data: Date: 5/4/2012

Z:	0	R:	76.4	C:	45.2	Conc:	45.254
R:	76.6	Z:	0	C:	45.3	Conc:	45.359
Z:	0	C:	45.3	R:	76.5	Conc:	45.359

UOM: PPM Mean Test Assay: 45.324 PPM

Analyzed by: Robin Morgan

Certified by: Michelle Kostik

Information contained herein has been prepared at your request by qualified experts within Praxair Distribution, Inc. While we believe that the information is accurate within the limits of the analytical methods employed and is complete to the extent of the specific analyses performed, we make no warranty or representation as to the suitability of the use of the information for any purpose. The information is offered with the understanding that any use of the information is at the sole discretion and risk of the user. In no event shall the liability of Praxair Distribution, Inc., arising out of the use of the information con tained herein exceed the fee established for providing such information.

145 Shimersville Rd.
Bethlehem, PA 18015
Telephone: (610) 317-1608
Facsimile: (610) 758-8382

DocNumber: 000015248

CERTIFICATE OF ANALYSIS / EPA PROTOCOL GAS

Customer & Order Information:

GTS-WELCO SYRACUSE
4560 MORGAN PL
LIVERPOOL NY 130900

Praxair Order Number: 03354039
Customer P. O. Number: 00406779
Customer Reference Number:

Fill Date: 12/28/2011
Part Number: NI NO90ME-AS
Lot Number: 917136220
Cylinder Style & Outlet: AS CGA 660
Cylinder Pressure & Volume: 2000 psig 140 cu. ft.

Certified Concentration:

Expiration Date:	1/10/2014		NIST Traceable
Cylinder Number:	CC72827		Analytical Uncertainty:
91	ppm	NITRIC OXIDE	± 1 %
	Balance	NITROGEN	

NOx = 91 NOx for Reference Only

Certification Information: *Certification Date:* 1/10/2012 *Term:* 24 Months *Expiration Date:* 1/10/2014

This cylinder was certified according to the 1997 EPA Traceability Protocol, Document #EPA-600/R-97/121, using Procedure G1
Do Not Use this Standard if Pressure is less than 150 PSIG
PGVP ID#F12012

Analytical Data: *(R=Reference Standard, Z=Zero Gas, C=Gas Candidate)*

1. Component: NITRIC OXIDE

Requested Concentration: 90 ppm
Certified Concentration: 91 ppm
Instrument Used: TECO MODEL 42I 0936539561
Analytical Method: CHEMILUMINESCENCE
Last Multipoint Calibration: 12/21/2011

Reference Standard Type: GMIS
Ref. Std. Cylinder # : CC27479
Ref. Std. Conc: 108 PPM
Ref. Std. Traceable to SRM # : 1685b
SRM Sample # : 43-L-45
SRM Cylinder # : CAL016526

First Analysis Data:						Date:	1/3/2011
Z:	0	R:	108.2	C:	91.4	Conc:	91.231
R:	108.2	Z:	0	C:	91.4	Conc:	91.231
Z:	0	C:	91.4	R:	108.2	Conc:	91.231
UOM:	PPM			Mean Test Assay:			91.231 PPM

Second Analysis Data:						Date:	1/10/2012
Z:	0	R:	106.3	C:	89.7	Conc:	91.306
R:	106	Z:	0	C:	89.7	Conc:	91.306
Z:	0	C:	89.7	R:	106	Conc:	91.306
UOM:	PPM			Mean Test Assay:			91.306 PPM

Analyzed by: Michelle Kostik

Certified by: Robin Morgan

Information contained herein has been prepared at your request by qualified experts within Praxair Distribution, Inc. While we believe that the information is accurate within the limits of the analytical methods employed and is complete to the extent of the specific analyses performed, we make no warranty or representation as to the suitability of the use of the information for any purpose. The information is offered with the understanding that any use of the information is at the sole discretion and risk of the user. In no event shall the Fability of Praxair Distribution, Inc., arising out of the use of the information con tained herein exceed the fee established for providing such information.

PRAXAIR

Praxair Distribution Mid-Atlantic
145 Shimersville Rd.
Bethlehem, PA 18015
Telephone: (610) 317-1608
Facsimile: (610) 758-8382

DocNumber: 000007432

CERTIFICATE OF ANALYSIS / EPA PROTOCOL GAS

Customer & Order Information:

OBRIEN AND GERE ENGI*MMS*
555 E GENESEE STREET
FAYETTEVILLE NY 130660

Praxair Order Number: 02626321
Customer P. O. Number: VERBAL PAT
Customer Reference Number:

Fill Date: 11/4/2010
Part Number: NI NO180E-AS
Lot Number: 917030849
Cylinder Style & Outlet: AS CGA 660
Cylinder Pressure & Volume: 2000 psig 140 cu. ft.

Certified Concentration:

Expiration Date:	11/16/2012		NIST Traceable
Cylinder Number:	CC246956		Analytical Uncertainty:
174.1	ppm	NITRIC OXIDE	± 1 %
	Balance	NITROGEN	

NOx = 174.1 NOx for Reference Only

Certification Information: *Certification Date:* 11/16/2010 *Term:* 24 Months *Expiration Date:* 11/16/2012

This cylinder was certified according to the 1997 EPA Traceability Protocol, Document #EPA-600/R-97/121, using Procedure G1

Do Not Use this Standard if Pressure is less than 150 PSIG

Analytical Data: *(R=Reference Standard, Z=Zero Gas, C=Gas Candidate)*

1. Component: NITRIC OXIDE

Requested Concentration: 180 ppm
Certified Concentration: 174.1 ppm
Instrument Used: TECO MODEL 42I 0938539561
Analytical Method: CHEMILUMINESCENCE
Last Multipoint Calibration: 10/29/2010

Reference Standard Type: GMIS
Ref. Std. Cylinder #: CC13281
Ref. Std. Conc: 138.8 PPM
Ref. Std. Traceable to SRM #: 1685b
SRM Sample #: 43-L-70
SRM Cylinder #: CAL016526

First Analysis Data:						Date:	11/9/2010
Z:	0	R:	141.7	C:	177.5	Conc:	174.24
R:	141.3	Z:	0	C:	178	Conc:	174.73
Z:	0	C:	178	R:	141.2	Conc:	174.73
UOM:	PPM			Mean Test Assay:			174.56 PPM

Second Analysis Data:						Date:	11/16/2010
Z:	0	R:	141.4	C:	176.9	Conc:	173.57
R:	141.7	Z:	0	C:	177.2	Conc:	173.88
Z:	0	C:	177.3	R:	141.3	Conc:	173.96
UOM:	PPM			Mean Test Assay:			173.79 PPM

Analyzed by: 11/18/10 Michelle Kostik

Certified by: Robin Morgan

Information contained herein has been prepared at your request by qualified experts within Praxair Distribution, Inc. While we believe that the information is accurate within the limits of the analytical methods employed and is complete to the extent of the specific analyses performed, we make no warranty or representation as to the suitability of the use of the information for any purpose. The information is offered with the understanding that any use of the information is at the sole discretion and risk of the user. In no event shall the liability of Praxair Distribution, Inc., arising out of the use of the information contained herein exceed the fee established for providing such information.

PRAXAIR

Praxair Distribution Mid-Atlantic
145 Shimersville Rd.
Bethlehem, PA 18015
Telephone: (610) 317-1608
Facsimile: (610) 758-8382

DocNumber: 000004411

CERTIFICATE OF ANALYSIS / EPA PROTOCOL GAS

Customer & Order Information:

GTS WELCO WAREHOUSE FAIRL
ONE STEEL RD E
MORRISVILLE PA .190670

Praxair Order Number: 02322594
Customer P. O. Number: 00241387
Customer Reference Number:

Fill Date: 5/14/2010
Part Number: EV NIPR8ME-AS
Lot Number: 917013446
Cylinder Style & Outlet: AS CGA 350
Cylinder Pressure & Volume: 2000 psig 140 cu. ft.

Certified Concentration:

Expiration Date:		5/19/2013	NIST Traceable
Cylinder Number:		SA20801	Analytical Uncertainty:
8.00	ppm	PROPANE	± 1 %
	Balance	NITROGEN	

Certification Information: *Certification Date:* 5/19/2010 *Term:* 36 Months *Expiration Date:* 5/19/2013

This cylinder was certified according to the 1997 EPA Traceability Protocol, Document #EPA-600/R-97/121, using Procedure G1

Do Not Use this Standard if Pressure is less than 150 PSIG

Analytical Data: *(R=Reference Standard, Z=Zero Gas, C=Gas Candidate)*

1. Component: PROPANE

Requested Concentration: 8 ppm
Certified Concentration: 8.00 ppm
Instrument Used: VARIAN 3300 INST 023 (PROPANE)
Analytical Method: FID
Last Multipoint Calibration: 4/20/2010

Reference Standard Type: GMIS
Ref. Std. Cylinder # : CC154784
Ref. Std. Conc: 10.05 PPM
Ref. Std. Traceable to SRM # : 1667b
SRM Sample # : 83-I-52
SRM Cylinder # : XF004079B

First Analysis Data:								Date:	5/19/2010
Z:	0	R:	10.02	C:	8.02	Conc:	8.036		
R:	10.04	Z:	0	C:	8.04	Conc:	8.056		
Z:	0	C:	7.9	R:	10.03	Conc:	7.916		
UOM:	PPM					Mean Test Assay:			8.003 PPM

Second Analysis Data:								Date:	
Z:	0	R:	0	C:	0	Conc:	0		
R:	0	Z:	0	C:	0	Conc:	0		
Z:	0	C:	0	R:	0	Conc:	0		
UOM:	PPM					Mean Test Assay:			0 PPM

Analyzed by:

John Pribish

Certified by: 5/24/10
Michelle Kostik

Information contained herein has been prepared at your request by qualified experts within Praxair Distribution, Inc. While we believe that the information is accurate within the limits of the analytical methods employed and is complete to the extent of the specific analyses performed, we make no warranty or representation as to the suitability of the use of the information for any purpose. The information is offered with the understanding that any use of the information is at the sole discretion and risk of the user. In no event shall the liability of Praxair Distribution, Inc., arising out of the use of the information con tained herein exceed the fee established for providing such information.

PRAXAIR

Praxair Distribution Mid-Atlantic
145 Shimersville Rd.
Bethlehem, PA 18015
Telephone: (610) 317-1608
Facsimile: (610) 758-8382

DocNumber: 000004407

CERTIFICATE OF ANALYSIS / EPA PROTOCOL GAS

Customer & Order Information:

GTS WELCO WAREHOUSE FAIRL
ONE STEEL RD E
MORRISVILLE PA 190670

Praxair Order Number: 02322594
Customer P. O. Number: 00241387
Customer Reference Number:

Fill Date: 5/14/2010
Part Number: EV NIPR15ME-AS
Lot Number: 917013447
Cylinder Style & Outlet: AS CGA 350
Cylinder Pressure & Volume: 2000 psig 140 cu. ft.

Certified Concentration:

Expiration Date:	5/19/2013		NIST Traceable
Cylinder Number:	SA4280		Analytical Uncertainty:
14.73	ppm	PROPANE	± 1 %
	Balance	NITROGEN	

Certification Information: *Certification Date:* 5/19/2010 *Term:* 36 Months *Expiration Date:* 5/19/2013

This cylinder was certified according to the 1997 EPA Traceability Protocol, Document #EPA-600/R-97/121, using Procedure G1

Do Not Use this Standard if Pressure is less than 150 PSIG

Analytical Data: *(R=Reference Standard, Z=Zero Gas, C=Gas Candidate)*

1. Component: PROPANE

Requested Concentration: 15 ppm
Certified Concentration: 14.73 ppm
Instrument Used: VARIAN 3300 INST 023 (PROPANE)
Analytical Method: FID
Last Multipoint Calibration: 4/20/2010

Reference Standard Type: GMIS
Ref. Std. Cylinder #: CC154784
Ref. Std. Conc: 10.05 PPM
Ref. Std. Traceable to SRM #: 1667b
SRM Sample #: 83-I-52
SRM Cylinder #: XF004079B

First Analysis Data:							Date:	5/19/2010
Z:	0	R:	10.02	C:	14.71	Conc:	14.739	
R:	10.04	Z:	0	C:	14.64	Conc:	14.669	
Z:	0	C:	14.74	R:	10.03	Conc:	14.769	
UOM:	PPM			Mean Test Assay:			14.726 PPM	

Second Analysis Data:							Date:	
Z:	0	R:	0	C:	0	Conc:	0	
R:	0	Z:	0	C:	0	Conc:	0	
Z:	0	C:	0	R:	0	Conc:	0	
UOM:	PPM			Mean Test Assay:			0 PPM	

Analyzed by: John Pribish

Certified by: MK 5/21/10 Michelle Kostik

Information contained herein has been prepared at your request by qualified experts within Praxair Distribution, Inc. While we believe that the information is accurate within the limits of the analytical methods employed and is complete to the extent of the specific analyses performed, we make no warranty or representation as to the suitability of the use of the information for any purpose. The information is offered with the understanding that any use of the information is at the sole discretion and risk of the user. In no event shall the liability of Praxair Distribution, Inc., arising out of the use of the information con tained herein exceed the fee established for providing such information.

PRAXAIR

Praxair Distribution Mid Atlantic
145 Shimersville Road
Bethlehem, PA 18015
Tel:(610)317-1608 Fax:(610)758-8382

DocNumber: 000006879

CERTIFICATE OF ANALYSIS / EPA PROTOCOL GAS

Customer & Order Information:

OBRIEN AND GERE ENGIN*MS*
JOB SITE
EAST NORRITON PA 194030000

Praxair Order Number: 02563767
Customer PO Number: 10055011
Customer Reference Number:

Fill Date: 9/29/2010
Part Number: AI PR30ME-AS
Lot Number: 917027262
Cylinder Style and Outlet: AS CGA 590
Cylinder Pressure and Volume: 2000 psig 140 cu. ft.

Certified Concentration:

Expiration Date: 10/04/2013 Cylinder Number: CC164580			NIST Traceable Analytical Uncertainty:
30.6	ppm	PROPANE	± 1 %
	Balance	AIR	± 0 %

NOx ppm = NOX for Reference Only

Certification Information:

Certification Date : 10/4/2010 *Term :* 36 Months *Expiration Date :* 10/04/2013

This cylinder was certified according to the 1997 EPA Traceability Protocol, Document # EPA-600/R-97/121, using Procedure G1
Do not use this standard if pressure is less than 150 psig.

Analytical Data:

(R=Reference Standard, Z=Zero Gas, C=Gas Candidate)

1. Component: PROPANE

Requested Concentration: 30 ppm
Certified Concentration: 30.6 ppm
Instrument Used: VARIAN 3300 INST 023 (PROPANE)
Analytical Method: FID
Last Multipoint Calibration: 09/27/2010

Reference Standard Type: GMIS
Ref. Std. Cylinder #: SA15897
Ref. Std. Conc: 50.24 PPM
Ref. Std. traceable to SRM #: 1667b
SRM Sample #: 83-I-52
SRM Cylinder #: XF004079B

First Analysis Data:						Date:	10/04/2010	
Z:	0	R:	50.29	C:	30.53	Conc:	30.5	
R:	50.34	Z:	0	C:	30.91	Conc:	30.9	
Z:	0	C:	30.91	R:	50.34	Conc:	30.5	
UOM:	PPM				Mean Test Assay:		30.6	PPM

Second Analysis Data:						Date:		
Z:	0	R:	0	C:	0	Conc:	0	
R:	0	Z:	0	C:	0	Conc:	0	
Z:	0	C:	0	R:	0	Conc:	0	
UOM:	PPM				Mean Test Assay:		0	PPM

Analyzed by: John Pribish

Certified by: Michelle Kostik

Information contained herein has been prepared at your request by qualified experts within Praxair Distribution, Inc. While we believe that the information is accurate within the limits of the analytical methods employed and is complete to the extent of the specified analyses performed, we make no warranty or representation as to the suitability of the use of the information for any purpose. The information is offered with the understanding that any use of the information is at the sole discretion and risk of the user. In no event shall the liability of Praxair Distribution, Inc. arising out of the use of the information contained herein exceed the fee established for providing such information.

Making Our Planet More Productive

PRAXAIR

Praxair Distribution Mid Atlantic
145 Shimersville Road
Bethlehem, PA 18015
Tel:(610)317-1608 Fax:(610)758-8382

DocNumber: 000006877

CERTIFICATE OF ANALYSIS / EPA PROTOCOL GAS

Customer & Order Information:

OBRIEN AND GERE ENGIN*MS*
JOB SITE
EAST NORRITON PA 194030000

Praxair Order Number: 02563767
Customer PO Number: 10055011
Customer Reference Number:

Fill Date: 9/29/2010
Part Number: EV AIPR85ME-AS
Lot Number: 917027265
Cylinder Style and Outlet: AS CGA 590
Cylinder Pressure and Volume: 2000 psig 140 cu. ft.

Certified Concentration:

Expiration Date:	10/04/2013	NIST Traceable Analytical Uncertainty:
Cylinder Number:	CC39496	
85.9 ppm	PROPANE	± 1 %
Balance	AIR	± 0 %

NOx ppm = NOX for Reference Only

Certification Information:

Certification Date : 10/4/2010 Term : 36 Months Expiration Date : 10/04/2013

This cylinder was certified according to the 1997 EPA Traceability Protocol, Document # EPA-600/R-97/121, using Procedure G1
Do not use this standard if pressure is less than 150 psig.

Analytical Data:

(R=Reference Standard, Z=Zero Gas, C=Gas Candidate)

1. Component: PROPANE

Requested Concentration: 85 ppm
Certified Concentration: 85.9 ppm
Instrument Used: VARIAN 3300 INST 023 (PROPANE)
Analytical Method: FID
Last Multipoint Calibration: 09/27/2010

Reference Standard Type: GMIS
Ref. Std. Cylinder #: SA15897
Ref. Std. Conc: 50.24 PPM
Ref. Std. traceable to SRM #: 1667b
SRM Sample #: 83-I-52
SRM Cylinder #: XF004079B

First Analysis Data:						Date:	10/04/2010	
Z:	0	R:	50.29	C:	85.85	Conc:	85.8	
R:	50.34	Z:	0	C:	86.11	Conc:	86	
Z:	0	C:	86.11	R:	50.34	Conc:	86	
UOM:	PPM					Mean Test Assay:	85.9	PPM

Second Analysis Data:						Date:		
Z:	0	R:	0	C:	0	Conc:	0	
R:	0	Z:	0	C:	0	Conc:	0	
Z:	0	C:	0	R:	0	Conc:	0	
UOM:	PPM					Mean Test Assay:	0	PPM

Analyzed by: John Pribish

Certified by: Ashley Davila

Information contained herein has been prepared at your request by qualified experts within Praxair Distribution, Inc. While we believe that the information is accurate within the limits of the analytical methods employed and is complete to the extent of the specified analyses performed, we make no warranty or representation as to the suitability of the use of the information for any purpose. The information is offered with the understanding that any use of the information is at the sole discretion and risk of the user. In no event shall the liability of Praxair Distribution, Inc. arising out of the use of the information contained herein exceed the fee established for providing such information.

Making Our Planet More Productive

Pre-run and Post-run System Calibration Checks

Static Kilns

CALIBRATION CHECK REPORT

Start Time: *09:23:54* **EPA Methods: 3A, 6C, 7E and 10**

Run ID: *R1* **Date:** *6/26/2012* **End Time:** *17:10:23* **Job Number:** 49349

Param	Analyzer Zero Response	Analyzer Mid Response	System Pre-Zero Response	System Pre-Mid Response	System Pre-Zero Bias	System Pre-Mid Bias	System Post-Zero Response	System Post-Mid Response	System Post-Zero Bias	System Post-Mid Bias	Zero Drift	Mid Drift	System Avg-Zero Response	System Avg-Mid Response
O2	0.03	12	0.06	11.95	0.1%	-0.3%	0.08	11.87	0.2%	-0.7%	0.1%	-0.4%	0.07	11.91
CO2	0.04	8.71	0.26	8.75	1.2%	0.2%	0.57	8.64	2.9%	-0.4%	1.7%	-0.6%	0.42	8.7
NOx	0.37	45.61	0.38	44.96	0.0%	-0.7%	0.88	43.97	0.5%	-1.8%	0.5%	-1.1%	0.63	44.46
CO	0.24	44.16	0.35	44.05	0.1%	-0.1%	-0.39	44.8	-0.7%	0.7%	-0.9%	0.9%	-0.02	44.43
THC	N/A	N/A	0.12	14.58	0.4%	-0.5%	0.57	14.44	1.8%	-1.0%	1.4%	-0.5%	0.35	14.51

System Bias= **100% x (System Response - Analyzer Response) / (Span Value)**

System Drift= **100% x (System Post Response - System Pre Response) / (Span Value)**

For THC Measurements:

System Bias= **100% x (System Response - Cylinder Gas Standard Value) / (Span Value)**

CALIBRATION CHECK REPORT

Run ID: *R2* **Date:** *6/26/2012*

Start Time: *17:03:00* **End Time:** *21:19:16*

EPA Methods: 3A, 6C, 7E and 10

Job Number: 49349

Param	Analyzer Zero Response	Analyzer Mid Response	System Pre-Zero Response	System Pre-Mid Response	System Pre-Zero Bias	System Pre-Mid Bias	System Post-Zero Response	System Post-Mid Response	System Post-Zero Bias	System Post-Mid Bias	Zero Drift	Mid Drift	System Avg-Zero Response	System Avg-Mid Response
O2	0.03	12	0.08	11.87	0.2%	-0.7%	0.08	11.9	0.2%	-0.5%	0.0%	0.1%	0.08	11.88
CO2	0.04	8.71	0.57	8.64	2.9%	-0.4%	0.41	8.77	2.0%	0.3%	-0.9%	0.7%	0.49	8.71
NOx	0.37	45.61	0.88	43.97	0.5%	-1.8%	0.62	44.21	0.3%	-1.5%	-0.3%	0.3%	0.75	44.09
CO	0.24	44.16	-0.39	44.8	-0.7%	0.7%	-0.7	43.8	-1.1%	-0.4%	-0.4%	-1.2%	-0.55	44.3
THC	N/A	N/A	0.57	14.44	1.8%	-1.0%	0.51	15.02	1.7%	0.9%	-0.2%	1.9%	0.54	14.73

System Bias= **100% x (System Response - Analyzer Response) / (Span Value)**

System Drift= **100% x (System Post Response - System Pre Response) / (Span Value)**

For THC Measurements:

System Bias= **100% x (System Response - Cylinder Gas Standard Value) / (Span Value)**

CALIBRATION CHECK REPORT

Start Time: *07:40:55* **EPA Methods: 3A, 6C, 7E and 10**

Run ID: *R3* **Date:** *6/27/2012* **End Time:** *12:40:09* **Job Number:** 49349

Param	Analyzer Zero Response	Analyzer Mid Response	System Pre-Zero Response	System Pre-Mid Response	System Pre-Zero Bias	System Pre-Mid Bias	System Post-Zero Response	System Post-Mid Response	System Post-Zero Bias	System Post-Mid Bias	Zero Drift	Mid Drift	System Avg-Zero Response	System Avg-Mid Response
O2	0.04	11.98	0.1	11.9	0.3%	-0.4%	0.06	11.94	0.1%	-0.2%	-0.2%	0.2%	0.08	11.92
CO2	0.02	8.78	0.32	8.78	1.6%	0.0%	0.4	8.67	2.1%	-0.6%	0.4%	-0.6%	0.36	8.73
NOx	0.42	45.49	0.28	43.83	-0.2%	-1.8%	0.57	44.36	0.2%	-1.2%	0.3%	0.6%	0.43	44.1
CO	0.35	44.5	0.61	44.17	0.3%	-0.4%	0.11	42.89	-0.3%	-1.9%	-0.6%	-1.5%	0.36	43.53
THC	N/A	N/A	0.23	14.78	0.7%	0.2%	0.42	14.35	1.3%	-1.2%	0.6%	-1.4%	0.33	14.57

System Bias= 100% x (System Response - Analyzer Response) / (Span Value)

System Drift= 100% x (System Post Response - System Pre Response) / (Span Value)

For THC Measurements:

System Bias= 100% x (System Response - Cylinder Gas Standard Value) / (Span Value)

Thermal Treatment Units

CALIBRATION CHECK REPORT

Run ID: *R1* **Date:** *6/27/2012*

Start Time: *12:28:52* **End Time:** *19:08:32*

EPA Methods: 3A, 6C, 7E and 10

Job Number: 49349

Param	Analyzer Zero Response	Analyzer Mid Response	System Pre-Zero Response	System Pre-Mid Response	System Pre-Zero Bias	System Pre-Mid Bias	System Post-Zero Response	System Post-Mid Response	System Post-Zero Bias	System Post-Mid Bias	Zero Drift	Mid Drift	System Avg-Zero Response	System Avg-Mid Response
O2	0.04	11.98	0.06	11.94	0.1%	-0.2%	0.07	11.9	0.1%	-0.4%	0.0%	-0.2%	0.07	11.92
CO2	0.02	8.78	0.4	8.67	2.1%	-0.6%	0.28	8.84	1.4%	0.3%	-0.7%	0.9%	0.34	8.75
NOx	0.42	45.49	0.57	44.36	0.2%	-1.2%	1.49	44.97	1.2%	-0.6%	1.0%	0.7%	1.03	44.67
CO	0.35	44.5	0.11	42.89	-0.3%	-1.9%	-0.93	44.33	-1.5%	-0.2%	-1.2%	1.7%	-0.41	43.61
THC	N/A	N/A	0.42	14.35	1.3%	-1.2%	-0.18	14.39	-0.6%	-1.1%	-1.9%	0.1%	0.12	14.37

System Bias= **100% x (System Response - Analyzer Response) / (Span Value)**

System Drift= **100% x (System Post Response - System Pre Response) / (Span Value)**

For THC Measurements:

System Bias= **100% x (System Response - Cylinder Gas Standard Value) / (Span Value)**

CALIBRATION CHECK REPORT

Start Time: *18:53:32* **EPA Methods: 3A, 6C, 7E and 10**

Run ID: *R2* **Date:** *6/27/2012* **End Time:** *23:19:29* **Job Number:** 49349

Param	Analyzer Zero Response	Analyzer Mid Response	System Pre-Zero Response	System Pre-Mid Response	System Pre-Zero Bias	System Pre-Mid Bias	System Post-Zero Response	System Post-Mid Response	System Post-Zero Bias	System Post-Mid Bias	Zero Drift	Mid Drift	System Avg-Zero Response	System Avg-Mid Response
O2	0.04	11.98	0.07	11.9	0.1%	-0.4%	0.12	11.95	0.4%	-0.2%	0.2%	0.2%	0.1	11.92
CO2	0.02	8.78	0.28	8.84	1.4%	0.3%	0.11	8.73	0.5%	-0.3%	-0.9%	-0.6%	0.19	8.79
NOx	0.42	45.49	1.49	44.97	1.2%	-0.6%	2.58	45.16	2.4%	-0.4%	1.2%	0.2%	2.04	45.07
CO	0.35	44.5	-0.93	44.33	-1.5%	-0.2%	-0.2	44.51	-0.7%	0.0%	0.9%	0.2%	-0.57	44.42
THC	N/A	N/A	-0.18	14.39	-0.6%	-1.1%	-0.48	14.49	-1.6%	-0.8%	-1.0%	0.3%	-0.33	14.44

System Bias= **100% x (System Response - Analyzer Response) / (Span Value)**

System Drift= **100% x (System Post Response - System Pre Response) / (Span Value)**

For THC Measurements:

System Bias= **100% x (System Response - Cylinder Gas Standard Value) / (Span Value)**

CALIBRATION CHECK REPORT

Start Time: *07:54:49* **EPA Methods: 3A, 6C, 7E and 10**

Run ID: *R3* **Date:** *6/28/2012* **End Time:** *12:13:43* **Job Number: Day 3**

Param	Analyzer Zero Response	Analyzer Mid Response	System Pre-Zero Response	System Pre-Mid Response	System Pre-Zero Bias	System Pre-Mid Bias	System Post-Zero Response	System Post-Mid Response	System Post-Zero Bias	System Post-Mid Bias	Zero Drift	Mid Drift	System Avg-Zero Response	System Avg-Mid Response
O2	0.05	11.99	0.19	11.99	0.6%	0.0%	0.09	11.89	0.2%	-0.5%	-0.5%	-0.5%	0.14	11.94
CO2	0.02	8.69	0.43	8.59	2.2%	-0.6%	0.59	8.65	3.1%	-0.2%	0.9%	0.3%	0.51	8.62
NOx	0.71	90.83	0.56	88.72	-0.1%	-1.2%	2.29	92.58	0.9%	1.0%	1.0%	2.2%	1.42	90.65
CO	0.51	44.57	-0.14	43.97	-0.8%	-0.7%	0.17	42.24	-0.4%	-2.7%	0.4%	-2.0%	0.02	43.1
THC	N/A	N/A	0.86	30.46	1.0%	-0.6%	1.08	29.61	1.3%	-1.6%	0.3%	-1.0%	0.97	30.03

System Bias= **100% x (System Response - Analyzer Response) / (Span Value)**

System Drift= **100% x (System Post Response - System Pre Response) / (Span Value)**

For THC Measurements:

System Bias= **100% x (System Response - Cylinder Gas Standard Value) / (Span Value)**

Cyclonic Flow Test Summary

General Dynamics
Static Kiln Flow Results
Joplin, MO

5/31/2012	Velocity ft/sec	% Deviation from Baseline	Cyclonic Flow Result
Procedure 1 Baseline (Average of all three levels)	38.31	NA	**PASS**
Procedure 2A Flow Probe in Level F is in Tandem with Sample Probe in Level C CEMS and VOST Probes in Level A	37.53	2%	**PASS**
Procedure 2B Flow Probe in Level F is Opposite with Sample Probe in Level C CEMS and VOST Probes in Level A	36.97	4%	**PASS**
Procedure 2C Flow Probe in Level D is in Tandem with Sample Probe Level C CEMS and VOST Probes in Level A	35.44	7%	**PASS**
Procedure 2D Flow Probe in Level D is in Opposite with Sample Probe Level C CEMS and VOST Probes in Level A	35.67	7%	**PASS**
Procedure 3A Flow Probe in Level F is in Tandem with Sample Probes in Level C and D CEMS and VOST Probes in Level A	36.56	5%	**PASS**
Procedure 3B Flow Probe in Level F is in Opposite with Sample Probes in Level C and D CEMS and VOST Probes in Level A	36.26	5%	**PASS**
Procedure 3C Flow Probe in Level F is in Tandem with Sample Probe Level C and Opposite with Sample Probe in Level D CEMS and VOST Probes in Level A	37.28	3%	**PASS**
Procedure 3D Flow Probe in Level F is Opposite with Sample Probe in Level C and Tandem with Sample Probe in Level D CEMS and VOST Probes in Level A	36.70	4%	**PASS**

General Dynamics
TTU Flow Results
Joplin, MO

05/31/12 - 06/01/12	Velocity (ft/sec)	% Deviation from Baseline	Cyclonic Flow Result
Procedure 1 Baseline (Average of all three levels)	53.8	NA	**PASS**
Procedure 2A Flow Probe in Level F is in Tandem with Sample Probe in Level C CEMS and VOST Probes in Level A	54.3	-1%	**PASS**
Procedure 2B Flow Probe in Level F is Opposite with Sample Probe in Level C CEMS and VOST Probes in Level A	55.3	-3%	**PASS**
Procedure 2C Flow Probe in Level E is in Tandem with Sample Probe in Level C CEMS and VOST Probes in Level A	54.4	-1%	**PASS**
Procedure 2D Flow Probe in Level E is Opposite with Sample Probe in Level C CEMS and VOST Probes in Level A	54.9	-2%	**PASS**
Procedure 3A Flow Probe in Level F is in Tandem with Sample Probes in Level C and E CEMS and VOST Probes in Level A	53.8	>1%	**PASS**
Procedure 3B Flow Probe in Level F is Opposite with Sample Probes in Level C and E CEMS and VOST Probes in Level A	54.3	-1%	**PASS**
Procedure 3C Flow Probe in Level F is in Tandem with Sample Probe in Level C and Opposite with Sample Probe in Level E CEMS and VOST Probes in Level A	54.2	-1%	**PASS**
Procedure 3D Flow Probe in Level F is Opposite with Sample Probes in Level C and in Tandem with Sample Probe in Level E CEMS and VOST Probes in Level A	53.6	>1%	**PASS**

Reference Method Manual Equipment
Pretest Calibrations, Verifications, and Checks

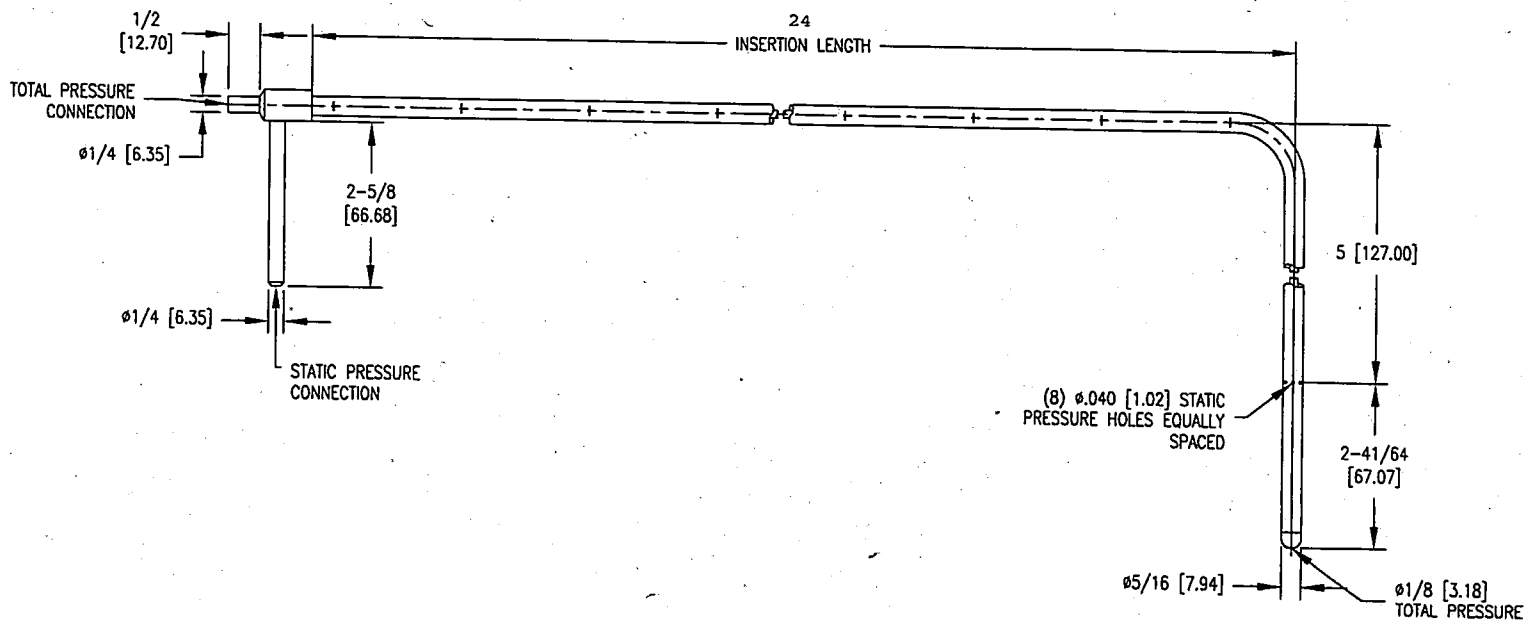

(CD) = CRITICAL DIMENSION
STANDARD TOLERANCES UNLESS NOTED:
ALL DECIMAL DIMENSIONS ± .005
ALL ANGLES ± 1°

SCALE 1:2

	SP-2-A		DATE 04/12	NAME 160 SERIES PITOT TUBE	MATERIAL SS
			DWN BY		FINISH
			CHKD JS		DWYER INSTRUMENTS, INC. MICHIGAN CITY, INDIANA 46360 U.S.A.
NO.	CHANGES	BY/DATE	APPD JG		
				ACAD2002	3 FR. NO.

NOTICE: This drawing and the principles and elements of design embodied therein are the exclusive property of DWYER INSTRUMENTS, INC. and are not to be communicated, disclosed, reproduced or used except as previously authorized in writing by such corporation and must not be submitted to outside parties for examination without the written consent of said corporation.

O'BRIEN & GERE ENGINEERS, INC

Initial Sample Probe Calibration Form

Probe ID: TC-3A Date: 05/31/12 Technician: JLS

"S" Type Pitot Calibration

Is the Pitot Level and Perpindicular?	NA
Is There any Obstruction?	NA
Is the Pitot Damaged	NA
α_1 ($-10° = a_1 = +10°$)	NA
α_2 ($-10° = a_2 = +10°$)	NA
β_1 ($-5° = \beta_1 = +5°$)	NA
β_2 ($-5° = \beta_2 = +5°$)	NA
γ	NA
Θ	NA
z = A Tan γ (< 0.125")	NA
W = A Tan Θ (< 0.03125")	NA
D_t (3/16 = D_t = 3/8")	NA
A	NA
$A/2D_t$ (1.05 = P_A/D_t = 1.5)	NA

Source: Quality Assurance Handbook for Air Pollution Measurement Systems: Volume III, Stationary Source-Specific Methods. EPA/600/R-94/038c, September 30, 1994

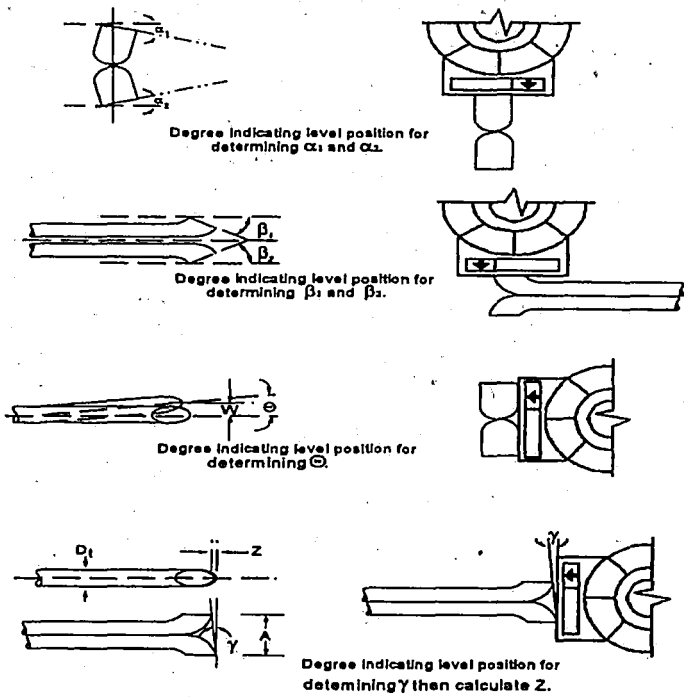

Verification of "S" Type Pitot, Thermocouple and Nozzle Placement

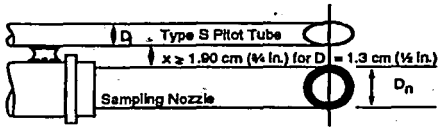

A. Bottom View; showing minimum pitot tube-nozzle separation.

Does X Exceed 0.75 inches? NA

Does Y Exceed 3 inches? NA

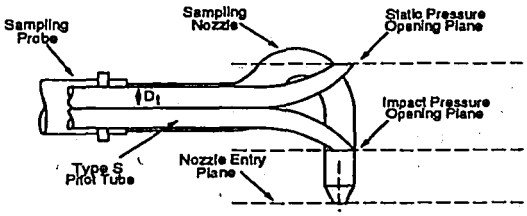

B. Side View; to prevent pitot tube from interfering with gas flow streamlines approaching the nozzle, the impact pressure opening plane of the pitot tube shall be even with or above the nozzle entry plane.

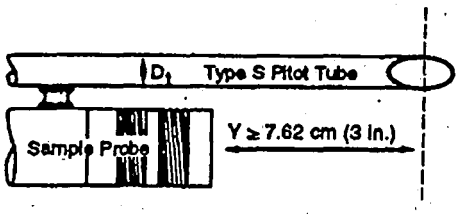

Thermocouple Calibration

	Ice Bath °R			Ambient °R			Boiling Water °R		
	1	2	3	1	2	3	1	2	3
Reference Temp	492	492	492	536	536	536	671	671	671
Thermocouple Temp	492	492	492	535	535	535	671	671	671
Difference (%)	0.0	0.0	0.0	-0.2	-0.2	-0.2	0.0	0.0	0.0

Temperature values must be within 1.5% of reference temperature

I certify that the probe ID TC-3A meets or exceeds all specifications, criteria and/or applicable design features and is herby assigned a pitot tube calibration factor C_P of 0.84.

Certified By: STG Date: 05/31/12

METHOD 5 DRY GAS METER CALIBRATION USING CRITICAL ORIFICES

ES Quality - Service - Reliability

1) Select three critical orifices to calibrate the dry gas meter which bracket the expected operating range.
2) Record barometric pressure before and after calibration procedure.
3) Run at tested vacuum (from Orifice Calibration Report), for a period of time necessary to achieve a minimum total volume of 5 cubic feet.
4) Record data and information in the GREEN cells, YELLOW cells are calculated.

					INITIAL	FINAL	AVG (P_{bar})
DATE:	2/2/2012	METER SERIAL #:	7	BAROMETRIC PRESSURE (in Hg):	29.9	29.9	29.9
METER PART #:	MB-7	CRITICAL ORIFICE SET SERIAL #:	1393				

ORIFICE #	RUN #	K' FACTOR (AVG)	TESTED VACUUM (in Hg)	DGM READINGS (FT^3) INITIAL	DGM READINGS (FT^3) FINAL	DGM READINGS (FT^3) NET (V_m)	TEMPERATURES °F AMBIENT	DGM INLET INITIAL	DGM INLET FINAL	DGM OUTLET INITIAL	DGM OUTLET FINAL	DGM AVG	ELAPSED TIME (MIN) θ	DGM ΔH (in H_2O)	(1) V_m (STD)	(2) V_{cr} (STD)	(3) Y	Y % Diff to Average Y	Y % Diff with other orifices	$\Delta H_@$
11	1	0.306				.0						0								
	2	0.306	20	635.897	641.480	5.583	62	66	66	66	66	66	14.00	0.54	5.6090	5.6081	1.000			1.90
	3	0.306				.0						0								
																AVG =	1.000	0.96	2.00	
16	1	0.4268				.0						0								
	2	0.4268	19	627.954	635.897	7.943	62	67	68	66	66	66.75	14.00	1.1	7.9796	7.8220	0.980			1.99
	3	0.4268				.0						0								
																AVG =	0.980	-1.02	-1.27	
18	1	0.4961				.0						0								
	2	0.4961	18	618.856	627.954	9.098	61	67	67	64	65	65.75	14.00	1.5	9.1662	9.1008	0.993			2.01
	3	0.4961				.0						0								
																AVG =	0.993	0.25	1.29	
26	1	0.7131				.0						0								
	2	0.7131	17	605.778	618.856	13.078	61	65	68	63	64	65	14.00	3.2	13.2499	13.0816	0.987			2.09
	3	0.7131				.0						0								
																AVG =	0.987	-0.31	-0.43	
31	1	0.8358				.0						0								
	2	0.8358	16	590.60	605.778	15.178	61	63	66	62	63	63.5	14.00	4.3	15.4630	15.3325	0.992			2.05
	3	0.8358				.0						0								
																AVG =	0.992	0.12	0.43	

USING THE CRITICAL ORIFICES AS CALIBRATION STANDARDS:
The following equations are used to calculate the standard volumes of air passed through the DGM, V_m (std), and the critical orifice, V_{cr} (std), and the DGM calibration factor, Y. These equations are automatically calculated in the spreadsheet above.

AVERAGE DRY GAS METER CALIBRATION FACTOR, Y = **0.990**

AVERAGE $\Delta H_@$ = **2.01**

(1) $$Vm_{(std)} = K_1 * Vm * \frac{Pbar + (\Delta H / 13.6)}{Tm}$$

= Net volume of gas sample passed through DGM, corrected to standard conditions
K_1 = 17.64 °R/in. Hg (English), 0.3858 °K/mm Hg (Metric)
T_m = Absolute DGM avg. temperature (°R - English, °K - Metric)

(2) $$Vcr_{(std)} = K' * \frac{Pbar * \Theta}{\sqrt{Tamb}}$$

= Volume of gas sample passed through the critical orifice, corrected to standard conditions
T_{amb} = Absolute ambient temperature (°R - English, °K - Metric)
K' = Average K' factor from Critical Orifice Calibration

(3) $$Y = \frac{Vcr_{(std)}}{Vm_{(std)}}$$

= DGM calibration factor

$$\Delta H_@ = \left(\frac{0.75\,\theta}{V_{cr}(std)}\right)^2 \Delta H \left(\frac{V_m(std)}{V_m}\right)$$

O'BRIEN & GERE

Initial Impinger Outlet Thermocouple Calibration

ID Number	Ice Bath			Ambient			Hot Water Bath			Technician	Date Performed
	Reference Temperature (°Rk)	Thermocouple Temperature (°Rk)	Deviation*	Reference Temperature (°Rk)	Thermocouple Temperature (°Rk)	Deviation*	Reference Temperature (°Rk)	Thermocouple Temperature (°Rk)	Deviation*		
IO-1	493	492	-0.2%	515	515	0.0%	672	670	-0.3%	MAS	01/18/12
IO-2	493	492	-0.2%	515	514	-0.2%	672	670	-0.3%	MAS	01/18/12
IO-3	493	493	0.0%	515	514	-0.2%	672	670	-0.3%	MAS	01/18/12
IO-4	493	492	-0.2%	515	515	0.0%	672	670	-0.3%	MAS	01/18/12
IO-5	493	492	-0.2%	515	513	-0.4%	672	670	-0.3%	MAS	01/18/12
IO-6	493	493	0.0%	515	513	-0.4%	672	670	-0.3%	MAS	01/18/12
IO-8	493	493	0.0%	515	513	-0.4%	672	670	-0.3%	MAS	01/18/12
IO-10	493	492	-0.2%	515	514	-0.2%	672	670	-0.3%	MAS	01/18/12
IO-11	493	488	-1.0%	515	514	-0.2%	672	670	-0.3%	MAS	01/18/12
IO-12	493	488	-1.0%	515	514	-0.2%	672	670	-0.3%	MAS	01/18/12

Reference Thermocouple: Fluke S/N: 83450033 or S/N 90460057 traceable to the Untied States National Institute of Standards and Technology
*Acceptable Deviation: 1.5%

O'BRIEN & GERE

Initial Oven Box Thermocouple Calibration

ID Number	Ice Bath			Ambient			Hot Water Bath				
	Reference Temperature (°R)	Thermocouple Temperature (°R)	Deviation*	Reference Temperature (°R)	Thermocouple Temperature (°R)	Deviation*	Reference Temperature (°R)	Thermocouple Temperature (°R)	Deviation*	Technician	Date Performed
OB-1	493	493	0.0%	515	515	0.0%	672	672	0.0%	JLS	02/09/11
OB-2	492	492	0.0%	515	515	0.0%	672	670	-0.3%	JLS	02/22/11
OB-3	492	491	-0.2%	515	514	-0.2%	672	670	-0.3%	JLS	02/22/11
OB-4	492	488	-0.8%	515	512	-0.6%	672	672	0.0%	JLS	02/22/11
OB-A	492	492	0.0%	515	515	0.0%	672	672	0.0%	JLS	02/22/11
OB-B	492	492	0.0%	533	534	0.2%	671	668	-0.4%	NAG	05/19/07
OB-5	492	488	-0.8%	515	515	0.0%	672	670	-0.3%	JLS	02/22/11
OB-C	492	492	0.0%	533	530	-0.6%	670	670	0.0%	NAG	05/19/07
OB-6	492	493	0.2%	536	535	-0.2%	670	670	0.0%	BPG	12/13/05
OB-7	492	492	0.0%	536	536	0.0%	670	670	0.0%	BPG	12/13/05
OB-D	492	492	0.1%	524	525	0.1%	668	668	0.0%	BAG	04/27/06

Reference Thermocouple: Fluke S/N: 83450033 or S/N 90460057 traceable to the Untied States National Institute of Standards and Technology
*Acceptable Deviation: 1.5%

DRY GAS METER CALIBRATION USING LOW FLOW CRITICAL ORIFICES

1) Select the orifice closest to the expected operating flow rate and insert in meterbox inlet.
2) For pretest calibration, leak check the system. Leak checking is not necessary for post-test calibrations.
3) Set vacuum as close as possible to the Orifice Calibration Report tested vacuum.
4) Observe the DGM dial, start timing as the needle passes the zero reference. Allow a minimum of 5 revolutions (pretest) or 3 revolutions (post-test) and stop timing again at the zero reference.
5) Record readings in outlined boxes below, other columns are automatically calculated.

###

DATE: 6/22/2012
METER PART #: 967303
METER SERIAL #: VB3
CRITICAL ORIFICE SET SERIAL #: 2646

	INITIAL	FINAL	AVG (P_{bar})
Bar. Pressure (in Hg.)	29.4	29.4	29.4

Each Y must be ± 2.0% from the average (pretest) or ± 5.0% from the average (post-test).

ORIFICE NOMINAL FLOW (LPM)	RUN #	K' FACTOR (AVG)	TESTED VACUUM (in Hg)	DGM READINGS (Liters) INITIAL	DGM READINGS (Liters) FINAL	NET (V_m)	TEMPERATURES °C AMBIENT	DGM INLET INITIAL	DGM INLET FINAL	DGM OUTLET INITIAL	DGM OUTLET FINAL	DGM AVG	ELAPSED TIME θ (Min.00)	DGM PRESSURE P_m (in H_2O)	(1) V_m (STD)	(2) V_{cr} (STD)	(3) Y	Y VARIATION
0.57	1	0.4466	16.5	1,465.0	1,470.0	5.0	21	25	27	25	26	25.75	9.43	1	4.8315	5.3808	1.1137	0.48
	2	0.4466	16.5	1,470.0	1,475.0	5.0	21	27	28	26	27	27	9.40	1	4.8114	5.3637	1.1148	0.58
	3	0.4466	16.5	1,475.0	1,481.0	6.0	21	28	29	27	28	28	11.06	1	5.7545	6.3109	1.0967	-1.06
															AVG Y @ 0.57 LPM =		1.1084	
1.10	1	0.811	16	1,435.0	1,440.0	5.0	21	24	25	24	24	24.25	5.10	1.4	4.8608	5.2846	1.0872	-0.69
	2	0.811	16	1,440.0	1,445.0	5.0	21	24	25	24	24	24.25	5.16	1.3	4.8595	5.3467	1.1003	0.51
	3	0.811	16	1,445.0	1,450.0	5.0	21	25	25	24	24	24.5	5.14	1.4	4.8567	5.3260	1.0966	0.18
															AVG Y @ 1.10 LPM =		1.0947	
2.00	1	1.128	14	1,450.0	1,455.0	5.0	21	25	26	25	25	25.25	3.44	1.6	4.8469	4.9578	1.0229	1.26
	2	1.128	14	1,455.0	1,460.0	5.0	21	26	26	25	25	25.5	3.41	1.6	4.8428	4.9145	1.0148	0.46
	3	1.128	14	1,460.0	1,465.0	5.0	21	26	27	25	26	26	3.33	1.6	4.8347	4.7992	0.9927	-1.73
															AVG Y @ 2.00 LPM =		1.0101	

AVG Y - 1.0711

USING THE CRITICAL ORIFICES AS CALIBRATION STANDARDS:14

The following equations are used to calculate the standard volumes of air passed through the DGM, V_m (std), and the critical orifice, V_{cr} (std), and the DGM calibration factor, Y. These equations are automatically calculated in the spreadsheet above.

(1) $V_m\,(std) = K_1\, V_m \dfrac{P_{bar} + (P_m/13.6)}{T_m}$ = Net volume of gas sample passed through DGM, corrected to standard conditions

K_1 = 17.64 °R/in. Hg (English), 0.3858 °K/mm Hg (Metric)

T_m = Absolute DGM avg. temperature (°R - English, °K - Metric)

(2) $V_{cr}\,(std) = K' \sqrt{\dfrac{P_{bar}\,\theta}{T_{amb}}}$ = Volume of gas sample passed through the critical orifice, corrected to standard conditions

T_{amb} = Absolute ambient temperature (°R - English, °K - Metric)

K' = Average K' factor from Critical Orifice Calibration

(3) $Y = \dfrac{V_{cr}\,(std)}{V_m\,(std)}$ = DGM calibration factor

Reference Method Manual Equipment
Post-Test Calibration Checks

O'BRIEN & GERE

POST TEST DRY GAS METER CALIBRATION

DATE:	7/19/2012	METER BOX #:	MB7	BAROMETRIC PRESSURE (in Hg):	INITIAL 29.75 / FINAL 29.75 / AVG (P_{bar}) 29.75
TECHNICIAN:	STG	CRITICAL ORIFICE SET SERIAL #:	1393		

ORIFICE #	RUN #	K' FACTOR (AVG)	TESTED VACUUM (in Hg)	DGM READINGS (FT^3) INITIAL	DGM READINGS (FT^3) FINAL	DGM READINGS (FT^3) NET (V_m)	TEMPERATURES °F AMBIENT	DGM INLET INITIAL	DGM INLET FINAL	DGM OUTLET INITIAL	DGM OUTLET FINAL	DGM AVG	ELAPSED TIME (MIN) θ	DGM ΔH (in H_2O)	(1) V_m (STD)	(2) V_{cr} (STD)	(3) Y		
18	1	0.4961	19	124.50	132.738	8.238	70	73	73	73	73	73	13.00	1.5	8.1459	8.3366	1.023		2.03
	2	0.4961	19	132.738	140.960	8.222	70	73	74	73	73	73.25	13.00	1.5	8.1263	8.3366	1.026		2.03
	3	0.4961	19	140.960	149.165	8.205	70	75	75	73	73	73.125	13.00	1.5	8.1114	8.3366	1.028		2.03
																AVG =	1.026	0.00	
	1																		
	2																		
	3																		
	1																		
	2																		
	3																		

AVERAGE DRY GAS METER CALIBRATION FACTOR, Y = 1.026

PRE-DETERMINED DRY GAS METER CALIBRATION FACTOR, Y = 0.990

PERCENT DIFFERENCE = 3.6

POST TEST DRY GAS METER CALIBRATION

DATE:	7/19/2012	METER BOX #:	MB5	BAROMETRIC PRESSURE (in Hg):	INITIAL 29.5 / FINAL 29.5 / AVG (P_{bar}) 29.5
TECHNICIAN:	STG	CRITICAL ORIFICE SET SERIAL #:	1393		

ORIFICE #	RUN #	K' FACTOR (AVG)	TESTED VACUUM (in Hg)	DGM READINGS (FT^3) INITIAL	DGM READINGS (FT^3) FINAL	NET (V_m)	TEMPERATURES °F AMBIENT	DGM INLET INITIAL	DGM INLET FINAL	DGM OUTLET INITIAL	DGM OUTLET FINAL	DGM AVG	ELAPSED TIME (MIN) θ	DGM ΔH (in H_2O)	(1) V_m (STD)	(2) V_{cr} (STD)	(3) Y	
	1					.0						0						
	2					.0						0						
	3					.0						0						
																AVG =		
18	1	0.4961	19.5	725.602	733.635	8.033	69	70	71	71	71	70.75	13.00	1.4	7.9082	8.2744	1.046	1.91
	2	0.4961	19.5	740.144	748.166	8.022	69	74	74	72	72	73	13.00	1.4	7.8640	8.2744	1.052	1.91
	3	0.4961	19.5	748.166	756.188	8.022	69	74	74	73	73	73.5	13.00	1.4	7.8566	8.2744	1.053	1.90
																AVG =	1.051	0.00
	1					.0						0						
	2					.0						0						
	3					.0						0						
																AVG =		

AVERAGE DRY GAS METER CALIBRATION FACTOR, Y = 1.051

PRE-DETERMINED DRY GAS METER CALIBRATION FACTOR, Y = 1.008

PERCENT DIFFERENCE = 4.2

POST TEST DRY GAS METER CALIBRATION

DATE:	7/18/2012	METER BOX #:	MB4	BAROMETRIC PRESSURE (in Hg):	INITIAL 29.2 / FINAL 29.2 / AVG (P_{bar}) 29.2
TECHNICIAN:	STG	CRITICAL ORIFICE SET SERIAL #:	1393		

ORIFICE #	RUN #	K' FACTOR (AVG)	TESTED VACUUM (in Hg)	DGM READINGS (FT^3) INITIAL	DGM READINGS (FT^3) FINAL	NET (V_m)	TEMPERATURES °F AMBIENT	DGM INLET INITIAL	DGM INLET FINAL	DGM OUTLET INITIAL	DGM OUTLET FINAL	DGM AVG	ELAPSED TIME (MIN) θ	DGM ΔH (in H_2O)	(1) V_m (STD)	(2) V_{cr} (STD)	(3) Y	
	1					.0						0						
	2					.0						0						
	3					.0						0						
																AVG =		
18	1	0.4961	18	721.516	730.030	8.514	72	75	75	75	75	75	13.00	1.15	8.2256	8.1671	0.993	1.58
	2	0.4961	18	730.030	738.685	8.655	72	75	75	77	75	75.5	13.00	1.15	8.3540	8.1671	0.978	1.58
	3	0.4961	18	738.685	747.185	8.50	72	76	77	76	77	76.5	13.00	1.15	8.1891	8.1671	0.997	1.58
																AVG =	0.989	0.00
	1					.0						0						
	2					.0						0						
	3					.0						0						
																AVG =		

AVERAGE DRY GAS METER CALIBRATION FACTOR, Y = 0.989

PRE-DETERMINED DRY GAS METER CALIBRATION FACTOR, Y = 0.984

PERCENT DIFFERENCE = 0.5

DRY GAS METER CALIBRATION USING LOW FLOW CRITICAL ORIFICES

1) Select the orifice closest to the expected operating flow rate and insert in meterbox inlet.
2) For pretest calibration, leak check the system. Leak checking is not necessary for post-test calibrations.
3) Set vacuum as close as possible to the Orifice Calibration Report tested vacuum.
4) Observe the DGM dial, start timing as the needle passes the zero reference. Allow a minimum of 5 revolutions (pretest) or 3 revolutions (post-test) and stop timing again at the zero reference.
5) Record readings in outlined boxes below, other columns are automatically calculated.

DATE: 7/19/2012
METER PART #: 967303
METER SERIAL #: VB3
CRITICAL ORIFICE SET SERIAL #: 2646

Bar. Pressure (in Hg.)	INITIAL	FINAL	AVG (P_{bar})
	29.5	29.5	29.5

Each Y must be ± 2.0% from the average (pretest) or ± 5.0% from the average (post-test).

ORIFICE NOMINAL FLOW (LPM)	RUN #	K' FACTOR (AVG)	TESTED VACUUM (in Hg)	DGM READINGS (Liters) INITIAL	DGM READINGS (Liters) FINAL	DGM READINGS (Liters) NET (V_m)	TEMPERATURES °C AMBIENT	DGM INLET INITIAL	DGM INLET FINAL	DGM OUTLET INITIAL	DGM OUTLET FINAL	DGM AVG	ELAPSED TIME θ (Min.00)	DGM PRESSURE P_m (in H_2O)	(1) V_m (STD)	(2) V_{cr} (STD)	(3) Y	Y VARIATION
0.57	1	0.4466	16.5			.0						0			0.0	0.0	#DIV/0!	#DIV/0!
	2	0.4466	16.5			.0						0			0.0	0.0	#DIV/0!	#DIV/0!
	3	0.4466	16.5			.0						0			0.0	0.0	#DIV/0!	#DIV/0!
															AVG Y @ 0.57 LPM =		#DIV/0!	
1.10	1	0.811	16	1,968.0	1,973.0	5.0	22	23	23	23	23	23	5.04	1	4.8930	5.2313	1.0691	0.15
	2	0.811	16	1,977.0	1,982.0	5.0	22	23	23	23	23	23	5.03	1.1	4.8942	5.2209	1.0668	-0.07
	3	0.811	16	1,992.0	1,997.0	5.0	22	23	23	23	23	23	5.03	1.1	4.8942	5.2209	1.0668	-0.07
															AVG Y @ 1.10 LPM =		1.0676	
2.00	1	1.128	14			.0						0			0.0	0.0	#DIV/0!	#DIV/0!
	2	1.128	14			.0						0			0.0	0.0	#DIV/0!	#DIV/0!
	3	1.128	14			.0						0			0.0	0.0	#DIV/0!	#DIV/0!
															AVG Y @ 2.00 LPM =		#DIV/0!	

USING THE CRITICAL ORIFICES AS CALIBRATION STANDARDS:
The following equations are used to calculate the standard volumes of air passed through the DGM, V_m (std), and the critical orifice, V_{cr} (std), and the DGM calibration factor, Y. These equations are automatically calculated in the spreadsheet above.

(1) $V_m\,(std) = K_1\, V_m \dfrac{P_{bar} + (P_m/13.6)}{T_m}$ = Net volume of gas sample passed through DGM, corrected to standard conditions

K_1 = 17.64 °R/in. Hg (English), 0.3858 °K/mm Hg (Metric)

T_m = Absolute DGM avg. temperature (°R - English, °K - Metric)

(2) $V_{cr}\,(std) = K' \sqrt{\dfrac{P_{bar}\,\theta}{T_{amb}}}$ = Volume of gas sample passed through the critical orifice, corrected to standard conditions

T_{amb} = Absolute ambient temperature (°R - English, °K - Metric)

K' = Average K' factor from Critical Orifice Calibration

(3) $Y = \dfrac{V_{cr}\,(std)}{V_m\,(std)}$ = DGM calibration factor

Average Dry Gas Meter Calibration Factor, Y =	1.0676
Pre-determined Dry Gas Meter Calibration Factor, Y =	1.0711
Percent Difference =	-0.3

Laboratory Reports

Method 23/0010

PCDD/PCDF

O'Brien & Gere Inc of North America

Sample ID: M23/0010-SK-R1-COMBINED

Trace Level Organic Compounds

Lot - Sample #....:	H2G020403 - 001	Work Order #....:	MVELG1AA	Matrix....:	AIR
Date Sampled....:	06/26/12	Date Received....:	06/29/12	Dilution Factor:	1
Prep Date....:	07/02/12	Analysis Date....:	07/17/12		
Prep Batch # ....:	2184046				
Initial Wgt/Vol :	1 Sample	Instrument ID....:	M2A	Method:	SW846 0023A/8290
Analyst ID....:	Kathryn B. Lay				

PARAMETER	RESULT		MINIMUM LEVEL	ESTIMATED DETECTION LIMIT	UNITS
2,3,7,8-TCDD	ND		20	2.9	pg/sample
Total TCDD	**11**	**Q J**	**20**	**2.9**	**pg/sample**
1,2,3,7,8-PeCDD	ND		100	1.9	pg/sample
Total PeCDD	**1.7**	**Q J**	**100**	**1.9**	**pg/sample**
1,2,3,4,7,8-HxCDD	ND		100	1.5	pg/sample
1,2,3,6,7,8-HxCDD	ND		100	1.4	pg/sample
1,2,3,7,8,9-HxCDD	ND		100	1.4	pg/sample
Total HxCDD	**8.9**	**Q J**	**100**	**1.4**	**pg/sample**
1,2,3,4,6,7,8-HpCDD	**5.3**	**Q B J**	**100**	**1.7**	**pg/sample**
Total HpCDD	**9.6**	**J Q B**	**100**	**1.7**	**pg/sample**
OCDD	**18**	**B J**	**200**	**1.7**	**pg/sample**
2,3,7,8-TCDF	**14**	**J**	**20**	**2.3**	**pg/sample**
Total TCDF	**110**	**Q**	**20**	**2.3**	**pg/sample**
1,2,3,7,8-PeCDF	**5.6**	**Q J**	**100**	**1.7**	**pg/sample**
2,3,4,7,8-PeCDF	**3.1**	**Q J**	**100**	**1.8**	**pg/sample**
Total PeCDF	**39**	**Q J**	**100**	**1.7**	**pg/sample**
1,2,3,4,7,8-HxCDF	**8.8**	**J**	**100**	**1.2**	**pg/sample**
1,2,3,6,7,8-HxCDF	**2.2**	**J**	**100**	**1.1**	**pg/sample**
2,3,4,6,7,8-HxCDF	ND		100	1.1	pg/sample
1,2,3,7,8,9-HxCDF	ND		100	1.3	pg/sample
Total HxCDF	**18**	**J Q**	**100**	**1.2**	**pg/sample**
1,2,3,4,6,7,8-HpCDF	**7.5**	**Q J**	**100**	**1.2**	**pg/sample**
1,2,3,4,7,8,9-HpCDF	ND		100	1.6	pg/sample
Total HpCDF	**9.9**	**J Q**	**100**	**1.4**	**pg/sample**
OCDF	**15**	**Q B J**	**200**	**2.0**	**pg/sample**

O'Brien & Gere Inc of North America

Sample ID: M23/0010-SK-R1-COMBINED

Trace Level Organic Compounds

Lot - Sample #....:	H2G020403 - 001	**Work Order #....:**	MVELG1AA	**Matrix....:**	AIR
Date Sampled....:	06/26/12	**Date Received....:**	06/29/12	**Dilution Factor:**	1
Prep Date....:	07/02/12	**Analysis Date....:**	07/17/12		
Prep Batch # ....:	2184046				
Initial Wgt/Vol :	1 Sample	**Instrument ID....:**	M2A	**Method:**	SW846 0023A/8290
Analyst ID....:	Kathryn B. Lay				

INTERNAL STANDARDS	PERCENT RECOVERY	RECOVERY LIMITS
13C-2,3,7,8-TCDD	82	40 - 135
13C-1,2,3,7,8-PeCDD	78	40 - 135
13C-1,2,3,6,7,8-HxCDD	85	40 - 135
13C-1,2,3,4,6,7,8-HpCDD	85	40 - 135
13C-OCDD	84	40 - 135
13C-2,3,7,8-TCDF	86	40 - 135
13C-1,2,3,7,8-PeCDF	76	40 - 135
13C-1,2,3,6,7,8-HxCDF	76	40 - 135
13C-1,2,3,4,6,7,8-HpCDF	78	40 - 135

SURROGATE	PERCENT RECOVERY	RECOVERY LIMITS
37Cl4-2,3,7,8-TCDD	95	70 - 130
13C-1,2,3,4,7,8-HxCDD	101	70 - 130
13C-2,3,4,7,8-PeCDF	102	70 - 130
13C-1,2,3,4,7,8-HxCDF	101	70 - 130
13C-1,2,3,4,7,8,9-HpCDF	117	70 - 130

QUALIFIERS

B Method blank contamination. The associated method blank contains the target analyte at a reportable level.

J Estimated Result.

Q Estimated maximum possible concentration (EMPC).

O'Brien & Gere Inc of North America

Sample ID: M23/0010-SK-R2-COMBINED

Trace Level Organic Compounds

Lot - Sample #....:	H2G020403 - 002	**Work Order #....:**	MVELK1AA	**Matrix....:**	AIR
Date Sampled....:	06/26/12	**Date Received....:**	06/29/12	**Dilution Factor:**	1
Prep Date....:	07/02/12	**Analysis Date....:**	07/17/12		
Prep Batch # ....:	2184046				
Initial Wgt/Vol :	1 Sample	**Instrument ID....:**	M2A	**Method:**	SW846 0023A/8290
Analyst ID....:	Kathryn B. Lay				

PARAMETER	RESULT		MINIMUM LEVEL	ESTIMATED DETECTION LIMIT	UNITS
2,3,7,8-TCDD	ND		20	3.4	pg/sample
Total TCDD	**4.2**	**Q J**	**20**	**3.4**	**pg/sample**
1,2,3,7,8-PeCDD	ND		100	2.0	pg/sample
Total PeCDD	**1.4**	**Q J**	**100**	**2.0**	**pg/sample**
1,2,3,4,7,8-HxCDD	ND		100	1.7	pg/sample
1,2,3,6,7,8-HxCDD	ND		100	1.6	pg/sample
1,2,3,7,8,9-HxCDD	ND		100	1.7	pg/sample
Total HxCDD	**12**	**Q J**	**100**	**1.7**	**pg/sample**
1,2,3,4,6,7,8-HpCDD	**4.1**	**Q B J**	**100**	**2.4**	**pg/sample**
Total HpCDD	**9.9**	**J Q B**	**100**	**2.4**	**pg/sample**
OCDD	**24**	**B J**	**200**	**1.8**	**pg/sample**
2,3,7,8-TCDF	**7.3**	**Q J**	**20**	**2.4**	**pg/sample**
Total TCDF	**29**	**Q J**	**20**	**2.4**	**pg/sample**
1,2,3,7,8-PeCDF	ND		100	1.7	pg/sample
2,3,4,7,8-PeCDF	ND		100	1.7	pg/sample
Total PeCDF	**8.7**	**Q J**	**100**	**1.7**	**pg/sample**
1,2,3,4,7,8-HxCDF	**3.9**	**J**	**100**	**1.1**	**pg/sample**
1,2,3,6,7,8-HxCDF	ND		100	1.0	pg/sample
2,3,4,6,7,8-HxCDF	**2.4**	**J**	**100**	**1.1**	**pg/sample**
1,2,3,7,8,9-HxCDF	ND		100	1.2	pg/sample
Total HxCDF	**8.8**	**Q J**	**100**	**1.1**	**pg/sample**
1,2,3,4,6,7,8-HpCDF	**7.9**	**Q J**	**100**	**1.4**	**pg/sample**
1,2,3,4,7,8,9-HpCDF	ND		100	1.8	pg/sample
Total HpCDF	**7.9**	**Q J**	**100**	**1.6**	**pg/sample**
OCDF	**9.0**	**B J**	**200**	**2.3**	**pg/sample**

O'Brien & Gere Inc of North America

Sample ID: M23/0010-SK-R2-COMBINED

Trace Level Organic Compounds

Lot - Sample #....:	H2G020403 - 002	**Work Order #....:**	MVELK1AA	**Matrix....:**	AIR
Date Sampled....:	06/26/12	**Date Received....:**	06/29/12	**Dilution Factor:**	1
Prep Date....:	07/02/12	**Analysis Date....:**	07/17/12		
Prep Batch # ....:	2184046				
Initial Wgt/Vol :	1 Sample	**Instrument ID....:**	M2A	**Method:**	SW846 0023A/8290
Analyst ID....:	Kathryn B. Lay				

INTERNAL STANDARDS	PERCENT RECOVERY	RECOVERY LIMITS
13C-2,3,7,8-TCDD	86	40 - 135
13C-1,2,3,7,8-PeCDD	82	40 - 135
13C-1,2,3,6,7,8-HxCDD	91	40 - 135
13C-1,2,3,4,6,7,8-HpCDD	84	40 - 135
13C-OCDD	76	40 - 135
13C-2,3,7,8-TCDF	90	40 - 135
13C-1,2,3,7,8-PeCDF	79	40 - 135
13C-1,2,3,6,7,8-HxCDF	83	40 - 135
13C-1,2,3,4,6,7,8-HpCDF	76	40 - 135

SURROGATE	PERCENT RECOVERY	RECOVERY LIMITS
37Cl4-2,3,7,8-TCDD	95	70 - 130
13C-1,2,3,4,7,8-HxCDD	103	70 - 130
13C-2,3,4,7,8-PeCDF	106	70 - 130
13C-1,2,3,4,7,8-HxCDF	102	70 - 130
13C-1,2,3,4,7,8,9-HpCDF	110	70 - 130

QUALIFIERS

B Method blank contamination. The associated method blank contains the target analyte at a reportable level.

J Estimated Result.

Q Estimated maximum possible concentration (EMPC).

O'Brien & Gere Inc of North America

Sample ID: M23/0010-SK-R3-COMBINED

Trace Level Organic Compounds

Lot - Sample #....:	H2G020403 - 003	**Work Order #....:**	MVELL1AA	**Matrix....:**	AIR
Date Sampled....:	06/27/12	**Date Received....:**	06/29/12	**Dilution Factor:**	1
Prep Date....:	07/02/12	**Analysis Date....:**	07/17/12		
Prep Batch # ....:	2184046				
Initial Wgt/Vol :	1 Sample	**Instrument ID....:**	M2A	**Method:**	SW846 0023A/8290
Analyst ID....:	Kathryn B. Lay				

PARAMETER	RESULT		MINIMUM LEVEL	ESTIMATED DETECTION LIMIT	UNITS
2,3,7,8-TCDD	ND		20	3.4	pg/sample
Total TCDD	**10**	**Q J**	**20**	**3.4**	**pg/sample**
1,2,3,7,8-PeCDD	ND		100	2.1	pg/sample
Total PeCDD	**3.4**	**Q J**	**100**	**2.1**	**pg/sample**
1,2,3,4,7,8-HxCDD	ND		100	1.7	pg/sample
1,2,3,6,7,8-HxCDD	ND		100	1.6	pg/sample
1,2,3,7,8,9-HxCDD	ND		100	1.6	pg/sample
Total HxCDD	**7.2**	**Q J**	**100**	**1.6**	**pg/sample**
1,2,3,4,6,7,8-HpCDD	**4.9**	**B J**	**100**	**2.3**	**pg/sample**
Total HpCDD	**9.8**	**Q J B**	**100**	**2.3**	**pg/sample**
OCDD	**20**	**B J**	**200**	**2.2**	**pg/sample**
2,3,7,8-TCDF	**9.5**	**Q J**	**20**	**2.5**	**pg/sample**
Total TCDF	**37**	**J Q**	**20**	**2.5**	**pg/sample**
1,2,3,7,8-PeCDF	ND		100	1.8	pg/sample
2,3,4,7,8-PeCDF	ND		100	1.8	pg/sample
Total PeCDF	**2.3**	**Q J**	**100**	**1.8**	**pg/sample**
1,2,3,4,7,8-HxCDF	**3.6**	**Q J**	**100**	**1.2**	**pg/sample**
1,2,3,6,7,8-HxCDF	**1.3**	**Q J**	**100**	**1.0**	**pg/sample**
2,3,4,6,7,8-HxCDF	ND		100	1.1	pg/sample
1,2,3,7,8,9-HxCDF	ND		100	1.3	pg/sample
Total HxCDF	**7.1**	**J Q**	**100**	**1.1**	**pg/sample**
1,2,3,4,6,7,8-HpCDF	**5.0**	**Q J**	**100**	**1.3**	**pg/sample**
1,2,3,4,7,8,9-HpCDF	ND		100	1.6	pg/sample
Total HpCDF	**5.0**	**Q J**	**100**	**1.4**	**pg/sample**
OCDF	**8.4**	**B J**	**200**	**1.9**	**pg/sample**

O'Brien & Gere Inc of North America

Sample ID: M23/0010-SK-R3-COMBINED

Trace Level Organic Compounds

Lot - Sample #....:	H2G020403 - 003	**Work Order #....:**	MVELL1AA	**Matrix....:**	AIR
Date Sampled....:	06/27/12	**Date Received....:**	06/29/12	**Dilution Factor:**	1
Prep Date....:	07/02/12	**Analysis Date....:**	07/17/12		
Prep Batch # ....:	2184046				
Initial Wgt/Vol :	1 Sample	**Instrument ID....:**	M2A	**Method:**	SW846 0023A/8290
Analyst ID....:	Kathryn B. Lay				

INTERNAL STANDARDS	PERCENT RECOVERY	RECOVERY LIMITS
13C-2,3,7,8-TCDD	85	40 - 135
13C-1,2,3,7,8-PeCDD	84	40 - 135
13C-1,2,3,6,7,8-HxCDD	91	40 - 135
13C-1,2,3,4,6,7,8-HpCDD	88	40 - 135
13C-OCDD	79	40 - 135
13C-2,3,7,8-TCDF	87	40 - 135
13C-1,2,3,7,8-PeCDF	81	40 - 135
13C-1,2,3,6,7,8-HxCDF	83	40 - 135
13C-1,2,3,4,6,7,8-HpCDF	82	40 - 135

SURROGATE	PERCENT RECOVERY	RECOVERY LIMITS
37Cl4-2,3,7,8-TCDD	95	70 - 130
13C-1,2,3,4,7,8-HxCDD	102	70 - 130
13C-2,3,4,7,8-PeCDF	105	70 - 130
13C-1,2,3,4,7,8-HxCDF	102	70 - 130
13C-1,2,3,4,7,8,9-HpCDF	103	70 - 130

QUALIFIERS

B Method blank contamination. The associated method blank contains the target analyte at a reportable level.

J Estimated Result.

Q Estimated maximum possible concentration (EMPC).

O'Brien & Gere Inc of North America

Sample ID: M23/0010-TTU-R1-COMBINED

Trace Level Organic Compounds

Lot - Sample #....:	H2G020403 - 004	Work Order #....:	MVELM1AA	Matrix....:	AIR
Date Sampled....:	06/27/12	Date Received....:	06/29/12	Dilution Factor:	1
Prep Date....:	07/02/12	Analysis Date....:	07/17/12		
Prep Batch # ....:	2184046				
Initial Wgt/Vol :	1 Sample	Instrument ID....:	M2A	Method:	SW846 0023A/8290
Analyst ID....:	Kathryn B. Lay				

PARAMETER	RESULT		MINIMUM LEVEL	ESTIMATED DETECTION LIMIT	UNITS
2,3,7,8-TCDD	ND		20	2.8	pg/sample
Total TCDD	8.0	J Q	20	2.8	pg/sample
1,2,3,7,8-PeCDD	4.4	Q J	100	2.1	pg/sample
Total PeCDD	18	Q J	100	2.1	pg/sample
1,2,3,4,7,8-HxCDD	2.9	Q J	100	1.6	pg/sample
1,2,3,6,7,8-HxCDD	12	Q J	100	1.5	pg/sample
1,2,3,7,8,9-HxCDD	10	J	100	1.6	pg/sample
Total HxCDD	85	Q J	100	1.6	pg/sample
1,2,3,4,6,7,8-HpCDD	370	B	100	2.2	pg/sample
Total HpCDD	570	B	100	2.2	pg/sample
OCDD	1300	B	200	2.3	pg/sample
2,3,7,8-TCDF	9.8	J	20	2.3	pg/sample
Total TCDF	52	Q J	20	2.3	pg/sample
1,2,3,7,8-PeCDF	ND		100	1.7	pg/sample
2,3,4,7,8-PeCDF	4.2	Q J	100	1.7	pg/sample
Total PeCDF	47	Q J	100	1.7	pg/sample
1,2,3,4,7,8-HxCDF	14	C J	100	1.3	pg/sample
1,2,3,6,7,8-HxCDF	4.1	Q J	100	1.1	pg/sample
2,3,4,6,7,8-HxCDF	5.3	Q J	100	1.2	pg/sample
1,2,3,7,8,9-HxCDF	ND		100	1.4	pg/sample
Total HxCDF	60	J Q	100	1.2	pg/sample
1,2,3,4,6,7,8-HpCDF	23	Q J	100	1.3	pg/sample
1,2,3,4,7,8,9-HpCDF	ND		100	1.7	pg/sample
Total HpCDF	43	J Q	100	1.4	pg/sample
OCDF	21	B J	200	1.7	pg/sample

O'Brien & Gere Inc of North America

Sample ID: M23/0010-TTU-R1-COMBINED

Trace Level Organic Compounds

Lot - Sample #....:	H2G020403 - 004	**Work Order #....:**	MVELM1AA	**Matrix....:**	AIR
Date Sampled....:	06/27/12	**Date Received....:**	06/29/12	**Dilution Factor:**	1
Prep Date....:	07/02/12	**Analysis Date....:**	07/17/12		
Prep Batch # ....:	2184046				
Initial Wgt/Vol :	1 Sample	**Instrument ID....:**	M2A	**Method:**	SW846 0023A/8290
Analyst ID....:	Kathryn B. Lay				

INTERNAL STANDARDS	PERCENT RECOVERY	RECOVERY LIMITS
13C-2,3,7,8-TCDD	84	40 - 135
13C-1,2,3,7,8-PeCDD	83	40 - 135
13C-1,2,3,6,7,8-HxCDD	88	40 - 135
13C-1,2,3,4,6,7,8-HpCDD	88	40 - 135
13C-OCDD	83	40 - 135
13C-2,3,7,8-TCDF	85	40 - 135
13C-1,2,3,7,8-PeCDF	79	40 - 135
13C-1,2,3,6,7,8-HxCDF	86	40 - 135
13C-1,2,3,4,6,7,8-HpCDF	81	40 - 135

SURROGATE	PERCENT RECOVERY	RECOVERY LIMITS
37Cl4-2,3,7,8-TCDD	93	70 - 130
13C-1,2,3,4,7,8-HxCDD	107	70 - 130
13C-2,3,4,7,8-PeCDF	107	70 - 130
13C-1,2,3,4,7,8-HxCDF	101	70 - 130
13C-1,2,3,4,7,8,9-HpCDF	108	70 - 130

QUALIFIERS

B Method blank contamination. The associated method blank contains the target analyte at a reportable level.

C Co-eluting isomer.

J Estimated Result.

Q Estimated maximum possible concentration (EMPC).

O'Brien & Gere Inc of North America

Sample ID: M23/0010-TTU-R2-COMBINED

Trace Level Organic Compounds

Lot - Sample #....:	H2G020403 - 005	Work Order #....:	MVELN1AA	Matrix....:	AIR
Date Sampled....:	06/27/12	Date Received....:	06/29/12	Dilution Factor:	1
Prep Date....:	07/02/12	Analysis Date....:	07/17/12		
Prep Batch # ....:	2184046				
Initial Wgt/Vol :	1 Sample	Instrument ID....:	M2A	Method:	SW846 0023A/8290
Analyst ID....:	Kathryn B. Lay				

PARAMETER	RESULT		MINIMUM LEVEL	ESTIMATED DETECTION LIMIT	UNITS
2,3,7,8-TCDD	ND		20	2.9	pg/sample
Total TCDD	6.3	J	20	2.9	pg/sample
1,2,3,7,8-PeCDD	6.9	J	100	1.9	pg/sample
Total PeCDD	26	Q J	100	1.9	pg/sample
1,2,3,4,7,8-HxCDD	8.1	J	100	1.9	pg/sample
1,2,3,6,7,8-HxCDD	25	J	100	1.8	pg/sample
1,2,3,7,8,9-HxCDD	19	Q J	100	1.8	pg/sample
Total HxCDD	150	J Q	100	1.8	pg/sample
1,2,3,4,6,7,8-HpCDD	840	B	100	2.5	pg/sample
Total HpCDD	1300	B	100	2.5	pg/sample
OCDD	2700	B	200	2.3	pg/sample
2,3,7,8-TCDF	7.4	Q J	20	2.4	pg/sample
Total TCDF	43	Q J	20	2.4	pg/sample
1,2,3,7,8-PeCDF	3.2	Q J	100	1.8	pg/sample
2,3,4,7,8-PeCDF	3.9	Q J	100	1.8	pg/sample
Total PeCDF	50	Q J	100	1.8	pg/sample
1,2,3,4,7,8-HxCDF	3.9	Q J	100	1.3	pg/sample
1,2,3,6,7,8-HxCDF	5.8	J	100	1.1	pg/sample
2,3,4,6,7,8-HxCDF	5.5	Q J	100	1.2	pg/sample
1,2,3,7,8,9-HxCDF	ND		100	1.4	pg/sample
Total HxCDF	90	J Q	100	1.2	pg/sample
1,2,3,4,6,7,8-HpCDF	34	Q J	100	1.4	pg/sample
1,2,3,4,7,8,9-HpCDF	5.1	J	100	1.8	pg/sample
Total HpCDF	89	Q J	100	1.6	pg/sample
OCDF	43	B J	200	2.0	pg/sample

O'Brien & Gere Inc of North America

Sample ID: M23/0010-TTU-R2-COMBINED

Trace Level Organic Compounds

Lot - Sample #....:	H2G020403 - 005	**Work Order #....:**	MVELN1AA	**Matrix....:**	AIR
Date Sampled....:	06/27/12	**Date Received....:**	06/29/12	**Dilution Factor:**	1
Prep Date....:	07/02/12	**Analysis Date....:**	07/17/12		
Prep Batch # ....:	2184046				
Initial Wgt/Vol :	1 Sample	**Instrument ID....:**	M2A	**Method:**	SW846 0023A/8290
Analyst ID....:	Kathryn B. Lay				

INTERNAL STANDARDS	PERCENT RECOVERY	RECOVERY LIMITS
13C-2,3,7,8-TCDD	85	40 - 135
13C-1,2,3,7,8-PeCDD	85	40 - 135
13C-1,2,3,6,7,8-HxCDD	87	40 - 135
13C-1,2,3,4,6,7,8-HpCDD	87	40 - 135
13C-OCDD	81	40 - 135
13C-2,3,7,8-TCDF	87	40 - 135
13C-1,2,3,7,8-PeCDF	81	40 - 135
13C-1,2,3,6,7,8-HxCDF	85	40 - 135
13C-1,2,3,4,6,7,8-HpCDF	81	40 - 135

SURROGATE	PERCENT RECOVERY	RECOVERY LIMITS
37Cl4-2,3,7,8-TCDD	95	70 - 130
13C-1,2,3,4,7,8-HxCDD	104	70 - 130
13C-2,3,4,7,8-PeCDF	107	70 - 130
13C-1,2,3,4,7,8-HxCDF	101	70 - 130
13C-1,2,3,4,7,8,9-HpCDF	106	70 - 130

QUALIFIERS

B Method blank contamination. The associated method blank contains the target analyte at a reportable level.

J Estimated Result.

Q Estimated maximum possible concentration (EMPC).

O'Brien & Gere Inc of North America

Sample ID: M23/0010-TTU-R3-COMBINED

Trace Level Organic Compounds

Lot - Sample #....:	H2G020403 - 006	Work Order #....:	MVELP1AA	Matrix....:	AIR
Date Sampled....:	06/28/12	Date Received....:	06/29/12	Dilution Factor:	1
Prep Date....:	07/02/12	Analysis Date....:	07/17/12		
Prep Batch # ....:	2184046				
Initial Wgt/Vol :	1 Sample	Instrument ID....:	M2A	Method:	SW846 0023A/8290
Analyst ID....:	Kathryn B. Lay				

PARAMETER	RESULT		MINIMUM LEVEL	ESTIMATED DETECTION LIMIT	UNITS
2,3,7,8-TCDD	ND		20	2.9	pg/sample
Total TCDD	5.0	J	20	2.9	pg/sample
1,2,3,7,8-PeCDD	4.0	Q J	100	2.0	pg/sample
Total PeCDD	6.9	Q J	100	2.0	pg/sample
1,2,3,4,7,8-HxCDD	3.6	Q J	100	1.6	pg/sample
1,2,3,6,7,8-HxCDD	19	J	100	1.6	pg/sample
1,2,3,7,8,9-HxCDD	13	Q J	100	1.6	pg/sample
Total HxCDD	97	J Q	100	1.6	pg/sample
1,2,3,4,6,7,8-HpCDD	690	B	100	2.9	pg/sample
Total HpCDD	1100	B	100	2.9	pg/sample
OCDD	2600	B	200	2.3	pg/sample
2,3,7,8-TCDF	10	Q J	20	2.4	pg/sample
Total TCDF	35	Q J B	20	2.4	pg/sample
1,2,3,7,8-PeCDF	1.7	Q J	100	1.7	pg/sample
2,3,4,7,8-PeCDF	3.7	Q J	100	1.7	pg/sample
Total PeCDF	32	Q J	100	1.7	pg/sample
1,2,3,4,7,8-HxCDF	8.8	Q J	100	1.2	pg/sample
1,2,3,6,7,8-HxCDF	4.2	Q J	100	1.0	pg/sample
2,3,4,6,7,8-HxCDF	3.7	J	100	1.1	pg/sample
1,2,3,7,8,9-HxCDF	ND		100	1.2	pg/sample
Total HxCDF	50	J Q	100	1.1	pg/sample
1,2,3,4,6,7,8-HpCDF	27	Q J	100	1.2	pg/sample
1,2,3,4,7,8,9-HpCDF	2.8	J	100	1.5	pg/sample
Total HpCDF	68	J Q	100	1.3	pg/sample
OCDF	37	B J	200	1.9	pg/sample

O'Brien & Gere Inc of North America

Sample ID: M23/0010-TTU-R3-COMBINED

Trace Level Organic Compounds

Lot - Sample #....:	H2G020403 - 006	**Work Order #....:**	MVELP1AA	**Matrix....:**	AIR
Date Sampled....:	06/28/12	**Date Received....:**	06/29/12	**Dilution Factor:**	1
Prep Date....:	07/02/12	**Analysis Date....:**	07/17/12		
Prep Batch # ....:	2184046				
Initial Wgt/Vol :	1 Sample	**Instrument ID....:**	M2A	**Method:**	SW846 0023A/8290
Analyst ID....:	Kathryn B. Lay				

INTERNAL STANDARDS	PERCENT RECOVERY	RECOVERY LIMITS
13C-2,3,7,8-TCDD	84	40 - 135
13C-1,2,3,7,8-PeCDD	86	40 - 135
13C-1,2,3,6,7,8-HxCDD	87	40 - 135
13C-1,2,3,4,6,7,8-HpCDD	92	40 - 135
13C-OCDD	86	40 - 135
13C-2,3,7,8-TCDF	89	40 - 135
13C-1,2,3,7,8-PeCDF	82	40 - 135
13C-1,2,3,6,7,8-HxCDF	87	40 - 135
13C-1,2,3,4,6,7,8-HpCDF	85	40 - 135

SURROGATE	PERCENT RECOVERY	RECOVERY LIMITS
37Cl4-2,3,7,8-TCDD	97	70 - 130
13C-1,2,3,4,7,8-HxCDD	109	70 - 130
13C-2,3,4,7,8-PeCDF	107	70 - 130
13C-1,2,3,4,7,8-HxCDF	100	70 - 130
13C-1,2,3,4,7,8,9-HpCDF	108	70 - 130

QUALIFIERS

B Method blank contamination. The associated method blank contains the target analyte at a reportable level.

J Estimated Result.

Q Estimated maximum possible concentration (EMPC).

O'Brien & Gere Inc of North America

Sample ID: M23/0010-SK/TTU-RB-COMBINED

Trace Level Organic Compounds

Lot - Sample #....:	H2G020403 - 007	**Work Order #....:**	MVELQ1AA	**Matrix....:**	AIR
Date Sampled....:	06/28/12	**Date Received....:**	06/29/12	**Dilution Factor:**	1
Prep Date....:	07/02/12	**Analysis Date....:**	07/17/12		
Prep Batch # ....:	2184046				
Initial Wgt/Vol :	1 Sample	**Instrument ID....:**	M2A	**Method:**	SW846 0023A/8290
Analyst ID....:	Patricia(Trish) M. Parsly				

PARAMETER	RESULT		MINIMUM LEVEL	ESTIMATED DETECTION LIMIT	UNITS
2,3,7,8-TCDD	ND		20	2.7	pg/sample
Total TCDD	ND		20	2.7	pg/sample
1,2,3,7,8-PeCDD	ND		100	1.6	pg/sample
Total PeCDD	**0.81**	**Q J**	**100**	**1.6**	**pg/sample**
1,2,3,4,7,8-HxCDD	ND		100	1.4	pg/sample
1,2,3,6,7,8-HxCDD	ND		100	1.3	pg/sample
1,2,3,7,8,9-HxCDD	ND		100	1.3	pg/sample
Total HxCDD	**2.5**	**Q J**	**100**	**1.3**	**pg/sample**
1,2,3,4,6,7,8-HpCDD	ND		100	2.1	pg/sample
Total HpCDD	ND		100	2.1	pg/sample
OCDD	**2.8**	**Q B J**	**200**	**1.7**	**pg/sample**
2,3,7,8-TCDF	ND		20	2.1	pg/sample
Total TCDF	ND		20	2.1	pg/sample
1,2,3,7,8-PeCDF	ND		100	1.2	pg/sample
2,3,4,7,8-PeCDF	ND		100	1.2	pg/sample
Total PeCDF	ND		100	1.2	pg/sample
1,2,3,4,7,8-HxCDF	ND		100	0.79	pg/sample
1,2,3,6,7,8-HxCDF	ND		100	0.70	pg/sample
2,3,4,6,7,8-HxCDF	ND		100	0.74	pg/sample
1,2,3,7,8,9-HxCDF	ND		100	0.85	pg/sample
Total HxCDF	ND		100	0.77	pg/sample
1,2,3,4,6,7,8-HpCDF	ND		100	0.87	pg/sample
1,2,3,4,7,8,9-HpCDF	ND		100	1.1	pg/sample
Total HpCDF	ND		100	0.99	pg/sample
OCDF	ND		200	1.7	pg/sample

O'Brien & Gere Inc of North America

Sample ID: M23/0010-SK/TTU-RB-COMBINED

Trace Level Organic Compounds

Lot - Sample #....:	H2G020403 - 007	Work Order #....:	MVELQ1AA	Matrix....:	AIR
Date Sampled....:	06/28/12	Date Received....:	06/29/12	Dilution Factor:	1
Prep Date....:	07/02/12	Analysis Date....:	07/17/12		
Prep Batch # ....:	2184046				
Initial Wgt/Vol :	1 Sample	Instrument ID....:	M2A	Method:	SW846 0023A/8290
Analyst ID....:	Patricia(Trish) M. Parsly				

INTERNAL STANDARDS	PERCENT RECOVERY	RECOVERY LIMITS
13C-2,3,7,8-TCDD	87	40 - 135
13C-1,2,3,7,8-PeCDD	86	40 - 135
13C-1,2,3,6,7,8-HxCDD	87	40 - 135
13C-1,2,3,4,6,7,8-HpCDD	86	40 - 135
13C-OCDD	82	40 - 135
13C-2,3,7,8-TCDF	90	40 - 135
13C-1,2,3,7,8-PeCDF	83	40 - 135
13C-1,2,3,6,7,8-HxCDF	85	40 - 135
13C-1,2,3,4,6,7,8-HpCDF	81	40 - 135

SURROGATE	PERCENT RECOVERY	RECOVERY LIMITS
37Cl4-2,3,7,8-TCDD	95	70 - 130
13C-1,2,3,4,7,8-HxCDD	109	70 - 130
13C-2,3,4,7,8-PeCDF	104	70 - 130
13C-1,2,3,4,7,8-HxCDF	101	70 - 130
13C-1,2,3,4,7,8,9-HpCDF	107	70 - 130

QUALIFIERS

B Method blank contamination. The associated method blank contains the target analyte at a reportable level.

J Estimated Result.

Q Estimated maximum possible concentration (EMPC).

O'Brien & Gere Inc of North America

Sample ID: A-6745,A-6746 MEDIA CHECK

Trace Level Organic Compounds

Lot - Sample #....:	H2G020403 - 008	**Work Order #....:**	MVELR1AA	**Matrix....:**	AIR
Date Sampled....:	06/26/12	**Date Received....:**	06/29/12	**Dilution Factor:**	1
Prep Date....:	07/02/12	**Analysis Date....:**	07/17/12		
Prep Batch # ....:	2184046				
Initial Wgt/Vol :	1 Sample	**Instrument ID....:**	M2A	**Method:**	SW846 0023A/8290
Analyst ID....:	Patricia(Trish) M. Parsly				

PARAMETER	RESULT		MINIMUM LEVEL	ESTIMATED DETECTION LIMIT	UNITS
2,3,7,8-TCDD	ND		20	1.8	pg/sample
Total TCDD	**1.8**	**Q J**	**20**	**1.8**	**pg/sample**
1,2,3,7,8-PeCDD	ND		100	0.92	pg/sample
Total PeCDD	ND		100	0.92	pg/sample
1,2,3,4,7,8-HxCDD	ND		100	0.82	pg/sample
1,2,3,6,7,8-HxCDD	ND		100	0.79	pg/sample
1,2,3,7,8,9-HxCDD	ND		100	0.81	pg/sample
Total HxCDD	ND		100	0.81	pg/sample
1,2,3,4,6,7,8-HpCDD	ND		100	0.98	pg/sample
Total HpCDD	ND		100	0.98	pg/sample
OCDD	**2.0**	**Q B J**	**200**	**0.91**	**pg/sample**
2,3,7,8-TCDF	ND		20	1.3	pg/sample
Total TCDF	**3.3**	**J B**	**20**	**1.3**	**pg/sample**
1,2,3,7,8-PeCDF	ND		100	0.75	pg/sample
2,3,4,7,8-PeCDF	ND		100	0.76	pg/sample
Total PeCDF	ND		100	0.75	pg/sample
1,2,3,4,7,8-HxCDF	ND		100	0.55	pg/sample
1,2,3,6,7,8-HxCDF	ND		100	0.49	pg/sample
2,3,4,6,7,8-HxCDF	ND		100	0.51	pg/sample
1,2,3,7,8,9-HxCDF	ND		100	0.59	pg/sample
Total HxCDF	ND		100	0.53	pg/sample
1,2,3,4,6,7,8-HpCDF	ND		100	0.52	pg/sample
1,2,3,4,7,8,9-HpCDF	ND		100	0.68	pg/sample
Total HpCDF	ND		100	0.59	pg/sample
OCDF	**1.6**	**Q B J**	**200**	**0.93**	**pg/sample**

O'Brien & Gere Inc of North America

Sample ID: A-6745,A-6746 MEDIA CHECK

Trace Level Organic Compounds

Lot - Sample #....:	H2G020403 - 008	**Work Order #....:**	MVELR1AA	**Matrix....:**	AIR
Date Sampled....:	06/26/12	**Date Received....:**	06/29/12	**Dilution Factor:**	1
Prep Date....:	07/02/12	**Analysis Date....:**	07/17/12		
Prep Batch # ....:	2184046				
Initial Wgt/Vol :	1 Sample	**Instrument ID....:**	M2A	**Method:**	SW846 0023A/8290
Analyst ID....:	Patricia(Trish) M. Parsly				

INTERNAL STANDARDS	PERCENT RECOVERY	RECOVERY LIMITS
13C-2,3,7,8-TCDD	83	40 - 135
13C-1,2,3,7,8-PeCDD	85	40 - 135
13C-1,2,3,6,7,8-HxCDD	82	40 - 135
13C-1,2,3,4,6,7,8-HpCDD	84	40 - 135
13C-OCDD	78	40 - 135
13C-2,3,7,8-TCDF	86	40 - 135
13C-1,2,3,7,8-PeCDF	83	40 - 135
13C-1,2,3,6,7,8-HxCDF	74	40 - 135
13C-1,2,3,4,6,7,8-HpCDF	79	40 - 135

QUALIFIERS

B Method blank contamination. The associated method blank contains the target analyte at a reportable level.

J Estimated Result.

Q Estimated maximum possible concentration (EMPC).

Method Blank Report

Trace Level Organic Compounds

Lot - Sample #....:	H2G020000 - 046B	**Work Order #....:**	MVEL81AA	**Matrix....:**	AIR
Dilution Factor:	1				
Prep Date....:	07/02/12	**Analysis Date....:**	07/17/12		
Prep Batch # ....:	2184046				
Initial Wgt/Vol :	1 Sample	**Instrument ID....:**	M2A	**Method:**	SW846 0023A/8290
Analyst ID....:	Patricia(Trish) M. Parsly				

PARAMETER	RESULT		MINIMUM LEVEL	ESTIMATED DETECTION LIMIT	UNITS
2,3,7,8-TCDD	ND		20	2.8	pg/sample
Total TCDD	ND		20	2.8	pg/sample
1,2,3,7,8-PeCDD	ND		100	1.6	pg/sample
Total PeCDD	ND		100	1.6	pg/sample
1,2,3,4,7,8-HxCDD	ND		100	1.3	pg/sample
1,2,3,6,7,8-HxCDD	ND		100	1.2	pg/sample
1,2,3,7,8,9-HxCDD	ND		100	1.2	pg/sample
Total HxCDD	ND		100	1.2	pg/sample
1,2,3,4,6,7,8-HpCDD	**2.2**	**Q J**	**100**	**1.5**	**pg/sample**
Total HpCDD	**2.2**	**Q J**	**100**	**1.5**	**pg/sample**
OCDD	**4.5**	**Q J**	**200**	**1.4**	**pg/sample**
2,3,7,8-TCDF	ND		20	1.9	pg/sample
Total TCDF	**3.1**	**J**	**20**	**1.9**	**pg/sample**
1,2,3,7,8-PeCDF	ND		100	1.1	pg/sample
2,3,4,7,8-PeCDF	ND		100	1.2	pg/sample
Total PeCDF	ND		100	1.1	pg/sample
1,2,3,4,7,8-HxCDF	ND		100	0.78	pg/sample
1,2,3,6,7,8-HxCDF	ND		100	0.70	pg/sample
2,3,4,6,7,8-HxCDF	ND		100	0.74	pg/sample
1,2,3,7,8,9-HxCDF	ND		100	0.85	pg/sample
Total HxCDF	ND		100	0.76	pg/sample
1,2,3,4,6,7,8-HpCDF	ND		100	0.69	pg/sample
1,2,3,4,7,8,9-HpCDF	ND		100	0.90	pg/sample
Total HpCDF	ND		100	0.78	pg/sample
OCDF	**2.9**	**J**	**200**	**1.4**	**pg/sample**

Method Blank Report

Trace Level Organic Compounds

Lot - Sample #....:	H2G020000 - 046B	**Work Order #....:**	MVEL81AA	**Matrix....:**	AIR
Dilution Factor:	1				
Prep Date....:	07/02/12	**Analysis Date....:**	07/17/12		
Prep Batch # ....:	2184046				
Initial Wgt/Vol :	1 Sample	**Instrument ID....:**	M2A	**Method:**	SW846 0023A/8290
Analyst ID....:	Patricia(Trish) M. Parsly				

INTERNAL STANDARDS	PERCENT RECOVERY	RECOVERY LIMITS
13C-2,3,7,8-TCDD	82	40 - 135
13C-1,2,3,7,8-PcCDD	83	40 - 135
13C-1,2,3,6,7,8-HxCDD	84	40 - 135
13C-1,2,3,4,6,7,8-HpCDD	87	40 - 135
13C-OCDD	82	40 - 135
13C-2,3,7,8-TCDF	86	40 - 135
13C-1,2,3,7,8-PcCDF	80	40 - 135
13C-1,2,3,6,7,8-HxCDF	78	40 - 135
13C-1,2,3,4,6,7,8-HpCDF	85	40 - 135

QUALIFIERS

J Estimated Result.

Q Estimated maximum possible concentration (EMPC).

LABORATORY CONTROL SAMPLE DATA REPORT

Trace Level Organic Compounds

Client Lot # ...:	H2G020403	**Work Order # ...:**	MVEL81AC-LCS MVEL81AD-LCSD	**Matrix .....:**	AIR
LCS Lot-Sample# :	H2G020000 - 046				
Prep Date .....:	07/02/12	**Analysis Date ..:**	07/17/12		
Prep Batch # ...:	2184046				
Dilution Factor :	1				
Analyst ID.....:	Patricia(Trish) M. Parsl	**Instrument ID..:**	M2A	**Method.....:**	SW846 0023A/8290
Initial Wgt/Vol:	1 Sample				

PARAMETER	SPIKE AMOUNT	MEASURED AMOUNT	UNITS	PERCENT RECOVERY		RECOVERY LIMITS	RPD	RPD LIMITS
2,3,7,8-TCDD	**400**	**402**	**pg/sample**	**101**		**(70 - 130)**		
	400	**414**	**pg/sample**	**104**		**(70 - 130)**	**3.0**	**(0 - 50)**
1,2,3,7,8-PeCDD	**2000**	**1950**	**pg/sample**	**98**		**(70 - 130)**		
	2000	**1930**	**pg/sample**	**97**		**(70 - 130)**	**1.1**	**(0 - 50)**
1,2,3,4,7,8-HxCDD	**2000**	**1950**	**pg/sample**	**98**		**(70 - 130)**		
	2000	**1890**	**pg/sample**	**95**		**(70 - 130)**	**3.0**	**(0 - 50)**
1,2,3,6,7,8-HxCDD	**2000**	**1870**	**pg/sample**	**94**		**(70 - 130)**		
	2000	**1870**	**pg/sample**	**93**		**(70 - 130)**	**0.25**	**(0 - 50)**
1,2,3,7,8,9-HxCDD	**2000**	**2100**	**pg/sample**	**105**		**(70 - 130)**		
	2000	**2010**	**pg/sample**	**100**		**(70 - 130)**	**4.7**	**(0 - 50)**
1,2,3,4,6,7,8-HpCDD	**2000**	**1980**	**pg/sample**	**99**	**B**	**(70 - 130)**		
	2000	**1960**	**pg/sample**	**98**	**B**	**(70 - 130)**	**0.97**	**(0 - 50)**
OCDD	**4000**	**3790**	**pg/sample**	**95**	**B**	**(70 - 130)**		
	4000	**3790**	**pg/sample**	**95**	**B**	**(70 - 130)**	**0.010**	**(0 - 50)**
2,3,7,8-TCDF	**400**	**368**	**pg/sample**	**92**		**(70 - 130)**		
	400	**380**	**pg/sample**	**95**		**(70 - 130)**	**3.3**	**(0 - 50)**
1,2,3,7,8-PeCDF	**2000**	**2030**	**pg/sample**	**101**		**(70 - 130)**		
	2000	**2010**	**pg/sample**	**100**		**(70 - 130)**	**1.2**	**(0 - 50)**
2,3,4,7,8-PeCDF	**2000**	**1890**	**pg/sample**	**95**		**(70 - 130)**		
	2000	**1890**	**pg/sample**	**95**		**(70 - 130)**	**0.020**	**(0 - 50)**
1,2,3,4,7,8-HxCDF	**2000**	**2090**	**pg/sample**	**105**		**(70 - 130)**		
	2000	**2110**	**pg/sample**	**105**		**(70 - 130)**	**0.76**	**(0 - 50)**
1,2,3,6,7,8-HxCDF	**2000**	**2040**	**pg/sample**	**102**		**(70 - 130)**		
	2000	**2040**	**pg/sample**	**102**		**(70 - 130)**	**0.28**	**(0 - 50)**
2,3,4,6,7,8-HxCDF	**2000**	**1950**	**pg/sample**	**98**		**(70 - 130)**		
	2000	**2070**	**pg/sample**	**104**		**(70 - 130)**	**5.9**	**(0 - 50)**
1,2,3,7,8,9-HxCDF	**2000**	**2100**	**pg/sample**	**105**		**(70 - 130)**		
	2000	**2060**	**pg/sample**	**103**		**(70 - 130)**	**1.7**	**(0 - 50)**
1,2,3,4,6,7,8-HpCDF	**2000**	**1780**	**pg/sample**	**89**		**(70 - 130)**		
	2000	**1800**	**pg/sample**	**90**		**(70 - 130)**	**0.97**	**(0 - 50)**
1,2,3,4,7,8,9-HpCDF	**2000**	**1990**	**pg/sample**	**99**		**(70 - 130)**		
	2000	**2010**	**pg/sample**	**101**		**(70 - 130)**	**1.1**	**(0 - 50)**
OCDF	**4000**	**4060**	**pg/sample**	**102**	**B**	**(70 - 130)**		
	4000	**3970**	**pg/sample**	**99**	**B**	**(70 - 130)**	**2.4**	**(0 - 50)**

INTERNAL STANDARD	PERCENT RECOVERY	RECOVERY LIMITS
13C-2,3,7,8-TCDD	78	(40 - 135)
13C-1,2,3,7,8-PeCDD	84	(40 - 135)
	79	(40 - 135)
	87	(40 - 135)
13C-1,2,3,6,7,8-HxCDD	80	(40 - 135)

LABORATORY CONTROL SAMPLE DATA REPORT

Trace Level Organic Compounds

Client Lot # ...: H2G020403
LCS Lot-Sample# : H2G020000 - 046

Work Order # ...: MVEL81AC-LCS
MVEL81AD-LCSD

Matrix .....: AIR

INTERNAL STANDARD	PERCENT RECOVERY	RECOVERY LIMITS
13C-1,2,3,4,6,7,8-HpCDD	87	(40 - 135)
	83	(40 - 135)
13C-OCDD	89	(40 - 135)
	76	(40 - 135)
13C-2,3,7,8-TCDF	84	(40 - 135)
	81	(40 - 135)
13C-1,2,3,7,8-PeCDF	88	(40 - 135)
	77	(40 - 135)
13C-1,2,3,6,7,8-HxCDF	83	(40 - 135)
	74	(40 - 135)
13C-1,2,3,4,6,7,8-HpCDF	76	(40 - 135)
	79	(40 - 135)
	85	(40 - 135)

Notes:

Calculations are performed before rounding to avoid round-off errors in calculated results.

Bold print denotes control parameters

B Method blank contamination. The associated method blank contains the target analyte at a reportable level.

SVOC

SAMPLE SUMMARY

H2G020403

WO #	SAMPLE#	CLIENT SAMPLE ID	SAMPLED DATE	SAMP TIME
MVELG	001	M23/0010-SK-R1-COMBINED	06/26/12	
MVELK	002	M23/0010-SK-R2-COMBINED	06/26/12	
MVELL	003	M23/0010-SK-R3-COMBINED	06/27/12	
MVELM	004	M23/0010-TTU-R1-COMBINED	06/27/12	
MVELN	005	M23/0010-TTU-R2-COMBINED	06/27/12	
MVELP	006	M23/0010-TTU-R3-COMBINED	06/28/12	
MVELQ	007	M23/0010-SK/TTU-RB-COMBINED	06/28/12	
MVELR	008	A-6745,A-6746 MEDIA CHECK	06/26/12	

NOTE(S):

- The analytical results of the samples listed above are presented on the following pages.
- All calculations are performed before rounding to avoid round-off errors in calculated results.
- Results noted as "ND" were not detected at or above the stated limit.
- This report must not be reproduced, except in full, without the written approval of the laboratory.
- Results for the following parameters are never reported on a dry weight basis: color, corrosivity, density, flashpoint, ignitability, layers, odor, paint filter test, pH, porosity pressure, reactivity, redox potential, specific gravity, spot tests, solids, solubility, temperature, viscosity, and weight.

O'Brien & Gere Inc of North America

Client Sample ID: M23/0010-SK-R1-COMBINED

GC/MS Semivolatiles

Lot-Sample #...: H2G020403-001 **Work Order #...:** MVELG1AC **Matrix.....:** AIR
Date Sampled...: 06/26/12 **Date Received..:** 06/29/12
Prep Date.....: 07/02/12 **Analysis Date..:** 07/11/12
Prep Batch #...: 2184047
Dilution Factor: 2 **Method.....:** SW846 8270C

PARAMETER	RESULT	REPORTING LIMIT	UNITS	MDL
Acenaphthene	ND	20	ug	5.4
Acenaphthylene	ND	20	ug	5.6
Acetophenone	**16 J**	**20**	**ug**	**5.0**
Aniline	ND	40	ug	17
Anthracene	ND	20	ug	6.4
Benzidine	ND	200	ug	120
Benzo(a)anthracene	ND	20	ug	6.2
Benzo(b)fluoranthene	ND	20	ug	8.2
Benzo(k)fluoranthene	ND	20	ug	9.8
Benzoic acid	ND	200	ug	120
Benzo(ghi)perylene	ND	20	ug	6.4
Benzo(a)pyrene	ND	20	ug	7.6
Benzyl alcohol	**260**	**200**	**ug**	**11**
bis(2-Chloroethoxy) methane	ND	20	ug	5.2
bis(2-Chloroethyl)-ether	ND	20	ug	6.4
bis(2-Ethylhexyl) phthalate	**63**	**40**	**ug**	**22**
4-Bromophenyl phenyl ether	ND	20	ug	7.8
Butyl benzyl phthalate	ND	20	ug	9.0
Carbazole	ND	20	ug	6.0
4-Chloroaniline	ND	40	ug	15
4-Chloro-3-methylphenol	ND	20	ug	8.0
2-Chloronaphthalene	ND	20	ug	6.2
2-Chlorophenol	ND	20	ug	6.0
4-Chlorophenyl phenyl ether	ND	20	ug	6.4
Chrysene	ND	20	ug	6.2
Dibenz(a,h)anthracene	ND	20	ug	6.0
Dibenzofuran	ND	20	ug	5.6
Di-n-butyl phthalate	ND	40	ug	9.4
1,2-Dichlorobenzene	ND	20	ug	6.8
1,3-Dichlorobenzene	ND	20	ug	6.6
1,4-Dichlorobenzene	ND	20	ug	6.4
3,3'-Dichlorobenzidine	ND	100	ug	17
2,4-Dichlorophenol	ND	20	ug	6.0
Diethyl phthalate	ND	20	ug	6.6

(Continued on next page)

O'Brien & Gere Inc of North America

Client Sample ID: M23/0010-SK-R1-COMBINED

GC/MS Semivolatiles

Lot-Sample #...: H2G020403-001 **Work Order #...:** MVELG1AC **Matrix.....:** AIR

PARAMETER	RESULT	REPORTING LIMIT	UNITS	MDL
2,4-Dimethylphenol	ND	20	ug	13
Dimethyl phthalate	ND	20	ug	5.8
4,6-Dinitro-2-methylphenol	ND	100	ug	20
2,4-Dinitrophenol	ND	100	ug	86
2,4-Dinitrotoluene	ND	20	ug	13
2,6-Dinitrotoluene	ND	20	ug	13
Di-n-octyl phthalate	**9.9 J**	**20**	**ug**	**9.2**
1,2-Diphenylhydrazine	ND	20	ug	5.6
Fluoranthene	ND	20	ug	7.2
Fluorene	ND	20	ug	6.0
Hexachlorobenzene	ND	20	ug	6.6
Hexachlorobutadiene	ND	20	ug	5.6
Hexachlorocyclopentadiene	ND	100	ug	48
Hexachloroethane	ND	20	ug	6.0
Indeno(1,2,3-cd)pyrene	ND	20	ug	6.2
Isophorone	ND	20	ug	5.6
2-Methylnaphthalene	ND	20	ug	5.8
2-Methylphenol	ND	20	ug	5.2
3-Methylphenol & 4-Methylphenol	ND	20	ug	11
Naphthalene	**7.4 J**	**20**	**ug**	**6.2**
2-Nitroaniline	ND	100	ug	8.2
3-Nitroaniline	ND	100	ug	32
4-Nitroaniline	ND	100	ug	20
Nitrobenzene	ND	20	ug	5.8
2-Nitrophenol	ND	20	ug	8.2
4-Nitrophenol	ND	100	ug	36
N-Nitrosodimethylamine	ND	20	ug	6.4
N-Nitrosodiphenylamine	ND	20	ug	7.2
N-Nitrosodi-n-propylamine	ND	20	ug	6.4
Pentachlorobenzene	ND	20	ug	6.4
Pentachloronitrobenzene	ND	100	ug	13
Pentachlorophenol	ND	100	ug	17
Phenanthrene	ND	20	ug	6.0
Phenol	**16 J**	**20**	**ug**	**6.2**
2,2'-oxybis(1-Chloropropane)	ND	20	ug	6.8
Pyrene	ND	20	ug	7.0
Pyridine	ND	40	ug	17
1,2,4-Trichlorobenzene	ND	20	ug	6.6

(Continued on next page)

O'Brien & Gere Inc of North America

Client Sample ID: M23/0010-SK-R1-COMBINED

GC/MS Semivolatiles

Lot-Sample #...: H2G020403-001 **Work Order #...:** MVELG1AC **Matrix.....:** AIR

PARAMETER	RESULT	REPORTING LIMIT	UNITS	MDL
2,4,5-Trichloro-phenol	ND	20	ug	5.4
2,4,6-Trichloro-phenol	ND	20	ug	5.8

SURROGATE	PERCENT RECOVERY	RECOVERY LIMITS
2-Fluorophenol	55	(22 - 105)
Phenol-d5	76	(48 - 118)
Nitrobenzene-d5	84	(43 - 110)
2-Fluorobiphenyl	82	(48 - 111)
2,4,6-Tribromophenol	89	(34 - 125)
Terphenyl-d14	114 *	(67 - 112)
13C6-Naphthalene	82	(50 - 150)

NOTE(S):

* Surrogate recovery is outside stated control limits.

J Estimated result. Result is less than RL.

O'Brien & Gere Inc of North America

Client Sample ID: M23/0010-SK-R2-COMBINED

GC/MS Semivolatiles

Lot-Sample #...: H2G020403-002 **Work Order #...:** MVELK1AC **Matrix.....:** AIR
Date Sampled...: 06/26/12 **Date Received..:** 06/29/12
Prep Date.....: 07/02/12 **Analysis Date..:** 07/11/12
Prep Batch #...: 2184047
Dilution Factor: 2 **Method.....:** SW846 8270C

PARAMETER	RESULT	REPORTING LIMIT	UNITS	MDL
Acenaphthene	ND	20	ug	5.4
Acenaphthylene	ND	20	ug	5.6
Acetophenone	**9.1 J**	**20**	**ug**	**5.0**
Aniline	ND	40	ug	17
Anthracene	ND	20	ug	6.4
Benzidine	ND	200	ug	120
Benzo(a)anthracene	ND	20	ug	6.2
Benzo(b)fluoranthene	ND	20	ug	8.2
Benzo(k)fluoranthene	ND	20	ug	9.8
Benzoic acid	ND	200	ug	120
Benzo(ghi)perylene	ND	20	ug	6.4
Benzo(a)pyrene	ND	20	ug	7.6
Benzyl alcohol	**180 J**	**200**	**ug**	**11**
bis(2-Chloroethoxy) methane	ND	20	ug	5.2
bis(2-Chloroethyl)-ether	ND	20	ug	6.4
bis(2-Ethylhexyl) phthalate	ND	40	ug	22
4-Bromophenyl phenyl ether	ND	20	ug	7.8
Butyl benzyl phthalate	ND	20	ug	9.0
Carbazole	ND	20	ug	6.0
4-Chloroaniline	ND	40	ug	15
4-Chloro-3-methylphenol	ND	20	ug	8.0
2-Chloronaphthalene	ND	20	ug	6.2
2-Chlorophenol	ND	20	ug	6.0
4-Chlorophenyl phenyl ether	ND	20	ug	6.4
Chrysene	ND	20	ug	6.2
Dibenz(a,h)anthracene	ND	20	ug	6.0
Dibenzofuran	ND	20	ug	5.6
Di-n-butyl phthalate	ND	40	ug	9.4
1,2-Dichlorobenzene	ND	20	ug	6.8
1,3-Dichlorobenzene	ND	20	ug	6.6
1,4-Dichlorobenzene	ND	20	ug	6.4
3,3'-Dichlorobenzidine	ND	100	ug	17
2,4-Dichlorophenol	ND	20	ug	6.0
Diethyl phthalate	ND	20	ug	6.6

(Continued on next page)

O'Brien & Gere Inc of North America

Client Sample ID: M23/0010-SK-R2-COMBINED

GC/MS Semivolatiles

Lot-Sample #...: H2G020403-002 **Work Order #...:** MVELK1AC **Matrix.....:** AIR

PARAMETER	RESULT	REPORTING LIMIT	UNITS	MDL
2,4-Dimethylphenol	ND	20	ug	13
Dimethyl phthalate	ND	20	ug	5.8
4,6-Dinitro-2-methylphenol	ND	100	ug	20
2,4-Dinitrophenol	ND	100	ug	86
2,4-Dinitrotoluene	ND	20	ug	13
2,6-Dinitrotoluene	ND	20	ug	13
Di-n-octyl phthalate	ND	20	ug	9.2
1,2-Diphenylhydrazine	ND	20	ug	5.6
Fluoranthene	ND	20	ug	7.2
Fluorene	ND	20	ug	6.0
Hexachlorobenzene	ND	20	ug	6.6
Hexachlorobutadiene	ND	20	ug	5.6
Hexachlorocyclopentadiene	ND	100	ug	48
Hexachloroethane	ND	20	ug	6.0
Indeno(1,2,3-cd)pyrene	ND	20	ug	6.2
Isophorone	ND	20	ug	5.6
2-Methylnaphthalene	ND	20	ug	5.8
2-Methylphenol	ND	20	ug	5.2
3-Methylphenol & 4-Methylphenol	ND	20	ug	11
Naphthalene	**6.9 J**	**20**	**ug**	**6.2**
2-Nitroaniline	ND	100	ug	8.2
3-Nitroaniline	ND	100	ug	32
4-Nitroaniline	ND	100	ug	20
Nitrobenzene	ND	20	ug	5.8
2-Nitrophenol	ND	20	ug	8.2
4-Nitrophenol	ND	100	ug	36
N-Nitrosodimethylamine	ND	20	ug	6.4
N-Nitrosodiphenylamine	ND	20	ug	7.2
N-Nitrosodi-n-propylamine	ND	20	ug	6.4
Pentachlorobenzene	ND	20	ug	6.4
Pentachloronitrobenzene	ND	100	ug	13
Pentachlorophenol	ND	100	ug	17
Phenanthrene	ND	20	ug	6.0
Phenol	**8.8 J**	**20**	**ug**	**6.2**
2,2'-oxybis(1-Chloropropane)	ND	20	ug	6.8
Pyrene	ND	20	ug	7.0
Pyridine	ND	40	ug	17
1,2,4-Trichlorobenzene	ND	20	ug	6.6

(Continued on next page)

O'Brien & Gere Inc of North America

Client Sample ID: M23/0010-SK-R2-COMBINED

GC/MS Semivolatiles

Lot-Sample #...: H2G020403-002 Work Order #...: MVELK1AC Matrix.....: AIR

PARAMETER	RESULT	REPORTING LIMIT	UNITS	MDL
2,4,5-Trichloro-phenol	ND	20	ug	5.4
2,4,6-Trichloro-phenol	ND	20	ug	5.8

SURROGATE	PERCENT RECOVERY	RECOVERY LIMITS
2-Fluorophenol	32	(22 - 105)
Phenol-d5	58	(48 - 118)
Nitrobenzene-d5	74	(43 - 110)
2-Fluorobiphenyl	75	(48 - 111)
2,4,6-Tribromophenol	75	(34 - 125)
Terphenyl-d14	109	(67 - 112)
13C6-Naphthalene	74	(50 - 150)

NOTE(S):

J Estimated result. Result is less than RL.

O'Brien & Gere Inc of North America

Client Sample ID: M23/0010-SK-R3-COMBINED

GC/MS Semivolatiles

Lot-Sample #...: H2G020403-003 **Work Order #...:** MVELL1AC **Matrix.....:** AIR
Date Sampled...: 06/27/12 **Date Received..:** 06/29/12
Prep Date.....: 07/02/12 **Analysis Date..:** 07/11/12
Prep Batch #...: 2184047
Dilution Factor: 2 **Method.....:** SW846 8270C

PARAMETER	RESULT	REPORTING LIMIT	UNITS	MDL
Acenaphthene	ND	20	ug	5.4
Acenaphthylene	ND	20	ug	5.6
Acetophenone	**12 J**	**20**	**ug**	**5.0**
Aniline	ND	40	ug	17
Anthracene	ND	20	ug	6.4
Benzidine	ND	200	ug	120
Benzo(a)anthracene	ND	20	ug	6.2
Benzo(b)fluoranthene	ND	20	ug	8.2
Benzo(k)fluoranthene	ND	20	ug	9.8
Benzoic acid	ND	200	ug	120
Benzo(ghi)perylene	ND	20	ug	6.4
Benzo(a)pyrene	ND	20	ug	7.6
Benzyl alcohol	**160 J**	**200**	**ug**	**11**
bis(2-Chloroethoxy) methane	ND	20	ug	5.2
bis(2-Chloroethyl)-ether	ND	20	ug	6.4
bis(2-Ethylhexyl) phthalate	ND	40	ug	22
4-Bromophenyl phenyl ether	ND	20	ug	7.8
Butyl benzyl phthalate	ND	20	ug	9.0
Carbazole	ND	20	ug	6.0
4-Chloroaniline	ND	40	ug	15
4-Chloro-3-methylphenol	ND	20	ug	8.0
2-Chloronaphthalene	ND	20	ug	6.2
2-Chlorophenol	ND	20	ug	6.0
4-Chlorophenyl phenyl ether	ND	20	ug	6.4
Chrysene	ND	20	ug	6.2
Dibenz(a,h)anthracene	ND	20	ug	6.0
Dibenzofuran	ND	20	ug	5.6
Di-n-butyl phthalate	ND	40	ug	9.4
1,2-Dichlorobenzene	ND	20	ug	6.8
1,3-Dichlorobenzene	ND	20	ug	6.6
1,4-Dichlorobenzene	ND	20	ug	6.4
3,3'-Dichlorobenzidine	ND	100	ug	17
2,4-Dichlorophenol	ND	20	ug	6.0
Diethyl phthalate	ND	20	ug	6.6

(Continued on next page)

O'Brien & Gere Inc of North America

Client Sample ID: M23/0010-SK-R3-COMBINED

GC/MS Semivolatiles

Lot-Sample #...: H2G020403-003 Work Order #...: MVELL1AC Matrix.....: AIR

PARAMETER	RESULT	REPORTING LIMIT	UNITS	MDL
2,4-Dimethylphenol	ND	20	ug	13
Dimethyl phthalate	ND	20	ug	5.8
4,6-Dinitro-2-methylphenol	ND	100	ug	20
2,4-Dinitrophenol	ND	100	ug	86
2,4-Dinitrotoluene	ND	20	ug	13
2,6-Dinitrotoluene	ND	20	ug	13
Di-n-octyl phthalate	ND	20	ug	9.2
1,2-Diphenylhydrazine	ND	20	ug	5.6
Fluoranthene	ND	20	ug	7.2
Fluorene	ND	20	ug	6.0
Hexachlorobenzene	ND	20	ug	6.6
Hexachlorobutadiene	ND	20	ug	5.6
Hexachlorocyclopentadiene	ND	100	ug	48
Hexachloroethane	ND	20	ug	6.0
Indeno(1,2,3-cd)pyrene	ND	20	ug	6.2
Isophorone	ND	20	ug	5.6
2-Methylnaphthalene	ND	20	ug	5.8
2-Methylphenol	ND	20	ug	5.2
3-Methylphenol & 4-Methylphenol	ND	20	ug	11
Naphthalene	ND	20	ug	6.2
2-Nitroaniline	ND	100	ug	8.2
3-Nitroaniline	ND	100	ug	32
4-Nitroaniline	ND	100	ug	20
Nitrobenzene	ND	20	ug	5.8
2-Nitrophenol	ND	20	ug	8.2
4-Nitrophenol	ND	100	ug	36
N-Nitrosodimethylamine	ND	20	ug	6.4
N-Nitrosodiphenylamine	ND	20	ug	7.2
N-Nitrosodi-n-propylamine	ND	20	ug	6.4
Pentachlorobenzene	ND	20	ug	6.4
Pentachloronitrobenzene	ND	100	ug	13
Pentachlorophenol	ND	100	ug	17
Phenanthrene	ND	20	ug	6.0
Phenol	**14 J**	**20**	**ug**	**6.2**
2,2'-oxybis(1-Chloropropane)	ND	20	ug	6.8
Pyrene	ND	20	ug	7.0
Pyridine	ND	40	ug	17
1,2,4-Trichlorobenzene	ND	20	ug	6.6

(Continued on next page)

O'Brien & Gere Inc of North America

Client Sample ID: M23/0010-SK-R3-COMBINED

GC/MS Semivolatiles

Lot-Sample #...: H2G020403-003 **Work Order #...:** MVELL1AC **Matrix.....:** AIR

PARAMETER	RESULT	REPORTING LIMIT	UNITS	MDL
2,4,5-Trichloro-phenol	ND	20	ug	5.4
2,4,6-Trichloro-phenol	ND	20	ug	5.8

SURROGATE	PERCENT RECOVERY	RECOVERY LIMITS
2-Fluorophenol	58	(22 - 105)
Phenol-d5	74	(48 - 118)
Nitrobenzene-d5	78	(43 - 110)
2-Fluorobiphenyl	81	(48 - 111)
2,4,6-Tribromophenol	91	(34 - 125)
Terphenyl-d14	116 *	(67 - 112)
13C6-Naphthalene	78	(50 - 150)

NOTE(S):

* Surrogate recovery is outside stated control limits.

J Estimated result. Result is less than RL.

O'Brien & Gere Inc of North America

Client Sample ID: M23/0010-TTU-R1-COMBINED

GC/MS Semivolatiles

Lot-Sample #...: H2G020403-004 **Work Order #...:** MVELM1AC **Matrix.....:** AIR
Date Sampled...: 06/27/12 **Date Received..:** 06/29/12
Prep Date.....: 07/02/12 **Analysis Date..:** 07/11/12
Prep Batch #...: 2184047
Dilution Factor: 2 **Method.....:** SW846 8270C

PARAMETER	RESULT	REPORTING LIMIT	UNITS	MDL
Acenaphthene	ND	20	ug	5.4
Acenaphthylene	ND	20	ug	5.6
Acetophenone	ND	20	ug	5.0
Aniline	ND	40	ug	17
Anthracene	ND	20	ug	6.4
Benzidine	ND	200	ug	120
Benzo(a)anthracene	ND	20	ug	6.2
Benzo(b)fluoranthene	ND	20	ug	8.2
Benzo(k)fluoranthene	ND	20	ug	9.8
Benzoic acid	ND	200	ug	120
Benzo(ghi)perylene	ND	20	ug	6.4
Benzo(a)pyrene	ND	20	ug	7.6
Benzyl alcohol	**53 J**	**200**	**ug**	**11**
bis(2-Chloroethoxy) methane	ND	20	ug	5.2
bis(2-Chloroethyl)-ether	ND	20	ug	6.4
bis(2-Ethylhexyl) phthalate	**38 J**	**40**	**ug**	**22**
4-Bromophenyl phenyl ether	ND	20	ug	7.8
Butyl benzyl phthalate	ND	20	ug	9.0
Carbazole	ND	20	ug	6.0
4-Chloroaniline	ND	40	ug	15
4-Chloro-3-methylphenol	ND	20	ug	8.0
2-Chloronaphthalene	ND	20	ug	6.2
2-Chlorophenol	ND	20	ug	6.0
4-Chlorophenyl phenyl ether	ND	20	ug	6.4
Chrysene	ND	20	ug	6.2
Dibenz(a,h)anthracene	ND	20	ug	6.0
Dibenzofuran	ND	20	ug	5.6
Di-n-butyl phthalate	**13 J**	**40**	**ug**	**9.4**
1,2-Dichlorobenzene	ND	20	ug	6.8
1,3-Dichlorobenzene	ND	20	ug	6.6
1,4-Dichlorobenzene	ND	20	ug	6.4
3,3'-Dichlorobenzidine	ND	100	ug	17
2,4-Dichlorophenol	ND	20	ug	6.0
Diethyl phthalate	ND	20	ug	6.6

(Continued on next page)

O'Brien & Gere Inc of North America

Client Sample ID: M23/0010-TTU-R1-COMBINED

GC/MS Semivolatiles

Lot-Sample #...: H2G020403-004 Work Order #...: MVELM1AC Matrix.....: AIR

PARAMETER	RESULT	REPORTING LIMIT	UNITS	MDL
2,4-Dimethylphenol	ND	20	ug	13
Dimethyl phthalate	ND	20	ug	5.8
4,6-Dinitro-2-methylphenol	ND	100	ug	20
2,4-Dinitrophenol	ND	100	ug	86
2,4-Dinitrotoluene	ND	20	ug	13
2,6-Dinitrotoluene	ND	20	ug	13
Di-n-octyl phthalate	ND	20	ug	9.2
1,2-Diphenylhydrazine	ND	20	ug	5.6
Fluoranthene	ND	20	ug	7.2
Fluorene	ND	20	ug	6.0
Hexachlorobenzene	ND	20	ug	6.6
Hexachlorobutadiene	ND	20	ug	5.6
Hexachlorocyclopentadiene	ND	100	ug	48
Hexachloroethane	ND	20	ug	6.0
Indeno(1,2,3-cd)pyrene	ND	20	ug	6.2
Isophorone	ND	20	ug	5.6
2-Methylnaphthalene	ND	20	ug	5.8
2-Methylphenol	**7.2 J**	**20**	**ug**	**5.2**
3-Methylphenol & 4-Methylphenol	ND	20	ug	11
Naphthalene	ND	20	ug	6.2
2-Nitroaniline	ND	100	ug	8.2
3-Nitroaniline	ND	100	ug	32
4-Nitroaniline	ND	100	ug	20
Nitrobenzene	ND	20	ug	5.8
2-Nitrophenol	ND	20	ug	8.2
4-Nitrophenol	ND	100	ug	36
N-Nitrosodimethylamine	ND	20	ug	6.4
N-Nitrosodiphenylamine	ND	20	ug	7.2
N-Nitrosodi-n-propylamine	ND	20	ug	6.4
Pentachlorobenzene	ND	20	ug	6.4
Pentachloronitrobenzene	ND	100	ug	13
Pentachlorophenol	ND	100	ug	17
Phenanthrene	ND	20	ug	6.0
Phenol	**27**	**20**	**ug**	**6.2**
2,2'-oxybis(1-Chloropropane)	ND	20	ug	6.8
Pyrene	ND	20	ug	7.0
Pyridine	ND	40	ug	17
1,2,4-Trichlorobenzene	ND	20	ug	6.6

(Continued on next page)

O'Brien & Gere Inc of North America

Client Sample ID: M23/0010-TTU-R1-COMBINED

GC/MS Semivolatiles

Lot-Sample #...: H2G020403-004 **Work Order #...:** MVELM1AC **Matrix.....:** AIR

PARAMETER	RESULT	REPORTING LIMIT	UNITS	MDL
2,4,5-Trichloro-phenol	ND	20	ug	5.4
2,4,6-Trichloro-phenol	ND	20	ug	5.8

SURROGATE	PERCENT RECOVERY	RECOVERY LIMITS
2-Fluorophenol	51	(22 - 105)
Phenol-d5	71	(48 - 118)
Nitrobenzene-d5	88	(43 - 110)
2-Fluorobiphenyl	78	(48 - 111)
2,4,6-Tribromophenol	93	(34 - 125)
Terphenyl-d14	116 *	(67 - 112)
13C6-Naphthalene	78	(50 - 150)

NOTE(S):

* Surrogate recovery is outside stated control limits.

J Estimated result. Result is less than RL.

O'Brien & Gere Inc of North America

Client Sample ID: M23/0010-TTU-R2-COMBINED

GC/MS Semivolatiles

Lot-Sample #...: H2G020403-005 **Work Order #...:** MVELN1AC **Matrix.....:** AIR
Date Sampled...: 06/27/12 **Date Received..:** 06/29/12
Prep Date.....: 07/02/12 **Analysis Date..:** 07/11/12
Prep Batch #...: 2184047
Dilution Factor: 2 **Method.....:** SW846 8270C

PARAMETER	RESULT	REPORTING LIMIT	UNITS	MDL
Acenaphthene	ND	20	ug	5.4
Acenaphthylene	ND	20	ug	5.6
Acetophenone	ND	20	ug	5.0
Aniline	ND	40	ug	17
Anthracene	ND	20	ug	6.4
Benzidine	ND	200	ug	120
Benzo(a)anthracene	ND	20	ug	6.2
Benzo(b)fluoranthene	ND	20	ug	8.2
Benzo(k)fluoranthene	ND	20	ug	9.8
Benzoic acid	ND	200	ug	120
Benzo(ghi)perylene	ND	20	ug	6.4
Benzo(a)pyrene	ND	20	ug	7.6
Benzyl alcohol	**80 J**	**200**	**ug**	**11**
bis(2-Chloroethoxy) methane	ND	20	ug	5.2
bis(2-Chloroethyl)-ether	ND	20	ug	6.4
bis(2-Ethylhexyl) phthalate	**27 J**	**40**	**ug**	**22**
4-Bromophenyl phenyl ether	ND	20	ug	7.8
Butyl benzyl phthalate	ND	20	ug	9.0
Carbazole	ND	20	ug	6.0
4-Chloroaniline	ND	40	ug	15
4-Chloro-3-methylphenol	ND	20	ug	8.0
2-Chloronaphthalene	ND	20	ug	6.2
2-Chlorophenol	ND	20	ug	6.0
4-Chlorophenyl phenyl ether	ND	20	ug	6.4
Chrysene	ND	20	ug	6.2
Dibenz(a,h)anthracene	ND	20	ug	6.0
Dibenzofuran	ND	20	ug	5.6
Di-n-butyl phthalate	ND	40	ug	9.4
1,2-Dichlorobenzene	ND	20	ug	6.8
1,3-Dichlorobenzene	ND	20	ug	6.6
1,4-Dichlorobenzene	ND	20	ug	6.4
3,3'-Dichlorobenzidine	ND	100	ug	17
2,4-Dichlorophenol	ND	20	ug	6.0
Diethyl phthalate	ND	20	ug	6.6

(Continued on next page)

O'Brien & Gere Inc of North America

Client Sample ID: M23/0010-TTU-R2-COMBINED

GC/MS Semivolatiles

Lot-Sample #...: H2G020403-005 **Work Order #...:** MVELN1AC **Matrix.....:** AIR

PARAMETER	RESULT	REPORTING LIMIT	UNITS	MDL
2,4-Dimethylphenol	ND	20	ug	13
Dimethyl phthalate	ND	20	ug	5.8
4,6-Dinitro-2-methylphenol	ND	100	ug	20
2,4-Dinitrophenol	ND	100	ug	86
2,4-Dinitrotoluene	ND	20	ug	13
2,6-Dinitrotoluene	ND	20	ug	13
Di-n-octyl phthalate	ND	20	ug	9.2
1,2-Diphenylhydrazine	ND	20	ug	5.6
Fluoranthene	ND	20	ug	7.2
Fluorene	ND	20	ug	6.0
Hexachlorobenzene	ND	20	ug	6.6
Hexachlorobutadiene	ND	20	ug	5.6
Hexachlorocyclopentadiene	ND	100	ug	48
Hexachloroethane	ND	20	ug	6.0
Indeno(1,2,3-cd)pyrene	ND	20	ug	6.2
Isophorone	ND	20	ug	5.6
2-Methylnaphthalene	ND	20	ug	5.8
2-Methylphenol	**8.0 J**	**20**	**ug**	**5.2**
3-Methylphenol & 4-Methylphenol	ND	20	ug	11
Naphthalene	ND	20	ug	6.2
2-Nitroaniline	ND	100	ug	8.2
3-Nitroaniline	ND	100	ug	32
4-Nitroaniline	ND	100	ug	20
Nitrobenzene	ND	20	ug	5.8
2-Nitrophenol	ND	20	ug	8.2
4-Nitrophenol	ND	100	ug	36
N-Nitrosodimethylamine	ND	20	ug	6.4
N-Nitrosodiphenylamine	ND	20	ug	7.2
N-Nitrosodi-n-propylamine	ND	20	ug	6.4
Pentachlorobenzene	ND	20	ug	6.4
Pentachloronitrobenzene	ND	100	ug	13
Pentachlorophenol	ND	100	ug	17
Phenanthrene	ND	20	ug	6.0
Phenol	**28**	**20**	**ug**	**6.2**
2,2'-oxybis(1-Chloropropane)	ND	20	ug	6.8
Pyrene	ND	20	ug	7.0
Pyridine	ND	40	ug	17
1,2,4-Trichlorobenzene	ND	20	ug	6.6

(Continued on next page)

O'Brien & Gere Inc of North America

Client Sample ID: M23/0010-TTU-R2-COMBINED

GC/MS Semivolatiles

Lot-Sample #...: H2G020403-005 **Work Order #...:** MVELN1AC **Matrix.....:** AIR

PARAMETER	RESULT	REPORTING LIMIT	UNITS	MDL
2,4,5-Trichloro-phenol	ND	20	ug	5.4
2,4,6-Trichloro-phenol	ND	20	ug	5.8

SURROGATE	PERCENT RECOVERY	RECOVERY LIMITS
2-Fluorophenol	47	(22 - 105)
Phenol-d5	69	(48 - 118)
Nitrobenzene-d5	83	(43 - 110)
2-Fluorobiphenyl	82	(48 - 111)
2,4,6-Tribromophenol	88	(34 - 125)
Terphenyl-d14	114 *	(67 - 112)
13C6-Naphthalene	80	(50 - 150)

NOTE(S):

* Surrogate recovery is outside stated control limits.

J Estimated result. Result is less than RL.

O'Brien & Gere Inc of North America

Client Sample ID: M23/0010-TTU-R3-COMBINED

GC/MS Semivolatiles

Lot-Sample #...: H2G020403-006 **Work Order #...:** MVELP1AC **Matrix.....:** AIR
Date Sampled...: 06/28/12 **Date Received..:** 06/29/12
Prep Date.....: 07/02/12 **Analysis Date..:** 07/11/12
Prep Batch #...: 2184047
Dilution Factor: 2 **Method.....:** SW846 8270C

PARAMETER	RESULT	REPORTING LIMIT	UNITS	MDL
Acenaphthene	ND	20	ug	5.4
Acenaphthylene	ND	20	ug	5.6
Acetophenone	ND	20	ug	5.0
Aniline	ND	40	ug	17
Anthracene	ND	20	ug	6.4
Benzidine	ND	200	ug	120
Benzo(a)anthracene	ND	20	ug	6.2
Benzo(b)fluoranthene	ND	20	ug	8.2
Benzo(k)fluoranthene	ND	20	ug	9.8
Benzoic acid	ND	200	ug	120
Benzo(ghi)perylene	ND	20	ug	6.4
Benzo(a)pyrene	ND	20	ug	7.6
Benzyl alcohol	**73 J**	**200**	**ug**	**11**
bis(2-Chloroethoxy) methane	ND	20	ug	5.2
bis(2-Chloroethyl)-ether	ND	20	ug	6.4
bis(2-Ethylhexyl) phthalate	**25 J**	**40**	**ug**	**22**
4-Bromophenyl phenyl ether	ND	20	ug	7.8
Butyl benzyl phthalate	ND	20	ug	9.0
Carbazole	ND	20	ug	6.0
4-Chloroaniline	ND	40	ug	15
4-Chloro-3-methylphenol	ND	20	ug	8.0
2-Chloronaphthalene	ND	20	ug	6.2
2-Chlorophenol	ND	20	ug	6.0
4-Chlorophenyl phenyl ether	ND	20	ug	6.4
Chrysene	ND	20	ug	6.2
Dibenz(a,h)anthracene	ND	20	ug	6.0
Dibenzofuran	ND	20	ug	5.6
Di-n-butyl phthalate	ND	40	ug	9.4
1,2-Dichlorobenzene	ND	20	ug	6.8
1,3-Dichlorobenzene	ND	20	ug	6.6
1,4-Dichlorobenzene	ND	20	ug	6.4
3,3'-Dichlorobenzidine	ND	100	ug	17
2,4-Dichlorophenol	ND	20	ug	6.0
Diethyl phthalate	ND	20	ug	6.6

(Continued on next page)

O'Brien & Gere Inc of North America

Client Sample ID: M23/0010-TTU-R3-COMBINED

GC/MS Semivolatiles

Lot-Sample #...: H2G020403-006 **Work Order #...:** MVELP1AC **Matrix.....:** AIR

PARAMETER	RESULT	REPORTING LIMIT	UNITS	MDL
2,4-Dimethylphenol	ND	20	ug	13
Dimethyl phthalate	ND	20	ug	5.8
4,6-Dinitro-2-methylphenol	ND	100	ug	20
2,4-Dinitrophenol	ND	100	ug	86
2,4-Dinitrotoluene	ND	20	ug	13
2,6-Dinitrotoluene	ND	20	ug	13
Di-n-octyl phthalate	ND	20	ug	9.2
1,2-Diphenylhydrazine	ND	20	ug	5.6
Fluoranthene	ND	20	ug	7.2
Fluorene	ND	20	ug	6.0
Hexachlorobenzene	ND	20	ug	6.6
Hexachlorobutadiene	ND	20	ug	5.6
Hexachlorocyclopentadiene	ND	100	ug	48
Hexachloroethane	ND	20	ug	6.0
Indeno(1,2,3-cd)pyrene	ND	20	ug	6.2
Isophorone	ND	20	ug	5.6
2-Methylnaphthalene	ND	20	ug	5.8
2-Methylphenol	**8.8 J**	**20**	**ug**	**5.2**
3-Methylphenol & 4-Methylphenol	ND	20	ug	11
Naphthalene	ND	20	ug	6.2
2-Nitroaniline	ND	100	ug	8.2
3-Nitroaniline	ND	100	ug	32
4-Nitroaniline	ND	100	ug	20
Nitrobenzene	ND	20	ug	5.8
2-Nitrophenol	ND	20	ug	8.2
4-Nitrophenol	ND	100	ug	36
N-Nitrosodimethylamine	ND	20	ug	6.4
N-Nitrosodiphenylamine	ND	20	ug	7.2
N-Nitrosodi-n-propylamine	ND	20	ug	6.4
Pentachlorobenzene	ND	20	ug	6.4
Pentachloronitrobenzene	ND	100	ug	13
Pentachlorophenol	ND	100	ug	17
Phenanthrene	ND	20	ug	6.0
Phenol	**27**	**20**	**ug**	**6.2**
2,2'-oxybis(1-Chloropropane)	ND	20	ug	6.8
Pyrene	ND	20	ug	7.0
Pyridine	ND	40	ug	17
1,2,4-Trichlorobenzene	ND	20	ug	6.6

(Continued on next page)

O'Brien & Gere Inc of North America

Client Sample ID: M23/0010-TTU-R3-COMBINED

GC/MS Semivolatiles

Lot-Sample #...: H2G020403-006 **Work Order #...:** MVELP1AC **Matrix.....:** AIR

PARAMETER	RESULT	REPORTING LIMIT	UNITS	MDL
2,4,5-Trichloro-phenol	ND	20	ug	5.4
2,4,6-Trichloro-phenol	ND	20	ug	5.8

SURROGATE	PERCENT RECOVERY	RECOVERY LIMITS
2-Fluorophenol	47	(22 - 105)
Phenol-d5	67	(48 - 118)
Nitrobenzene-d5	73	(43 - 110)
2-Fluorobiphenyl	76	(48 - 111)
2,4,6-Tribromophenol	87	(34 - 125)
Terphenyl-d14	108	(67 - 112)
13C6-Naphthalene	74	(50 - 150)

NOTE(S):

J Estimated result. Result is less than RL.

O'Brien & Gere Inc of North America

Client Sample ID: M23/0010-SK/TTU-RB-COMBINED

GC/MS Semivolatiles

Lot-Sample #...: H2G020403-007 **Work Order #...:** MVELQ1AC **Matrix.....:** AIR
Date Sampled...: 06/28/12 **Date Received..:** 06/29/12
Prep Date.....: 07/02/12 **Analysis Date..:** 07/11/12
Prep Batch #...: 2184047
Dilution Factor: 2 **Method.....:** SW846 8270C

PARAMETER	RESULT	REPORTING LIMIT	UNITS	MDL
Acenaphthene	ND	20	ug	5.4
Acenaphthylene	ND	20	ug	5.6
Acetophenone	ND	20	ug	5.0
Aniline	ND	40	ug	17
Anthracene	ND	20	ug	6.4
Benzidine	ND	200	ug	120
Benzo(a)anthracene	ND	20	ug	6.2
Benzo(b)fluoranthene	ND	20	ug	8.2
Benzo(k)fluoranthene	ND	20	ug	9.8
Benzoic acid	ND	200	ug	120
Benzo(ghi)perylene	ND	20	ug	6.4
Benzo(a)pyrene	ND	20	ug	7.6
Benzyl alcohol	ND	200	ug	11
bis(2-Chloroethoxy) methane	ND	20	ug	5.2
bis(2-Chloroethyl)-ether	ND	20	ug	6.4
bis(2-Ethylhexyl) phthalate	ND	40	ug	22
4-Bromophenyl phenyl ether	ND	20	ug	7.8
Butyl benzyl phthalate	ND	20	ug	9.0
Carbazole	ND	20	ug	6.0
4-Chloroaniline	ND	40	ug	15
4-Chloro-3-methylphenol	ND	20	ug	8.0
2-Chloronaphthalene	ND	20	ug	6.2
2-Chlorophenol	ND	20	ug	6.0
4-Chlorophenyl phenyl ether	ND	20	ug	6.4
Chrysene	ND	20	ug	6.2
Dibenz(a,h)anthracene	ND	20	ug	6.0
Dibenzofuran	ND	20	ug	5.6
Di-n-butyl phthalate	ND	40	ug	9.4
1,2-Dichlorobenzene	ND	20	ug	6.8
1,3-Dichlorobenzene	ND	20	ug	6.6
1,4-Dichlorobenzene	ND	20	ug	6.4
3,3'-Dichlorobenzidine	ND	100	ug	17
2,4-Dichlorophenol	ND	20	ug	6.0
Diethyl phthalate	ND	20	ug	6.6

(Continued on next page)

O'Brien & Gere Inc of North America

Client Sample ID: M23/0010-SK/TTU-RB-COMBINED

GC/MS Semivolatiles

Lot-Sample #...: H2G020403-007 Work Order #...: MVELQ1AC Matrix.....: AIR

PARAMETER	RESULT	REPORTING LIMIT	UNITS	MDL
2,4-Dimethylphenol	ND	20	ug	13
Dimethyl phthalate	ND	20	ug	5.8
4,6-Dinitro-2-methylphenol	ND	100	ug	20
2,4-Dinitrophenol	ND	100	ug	86
2,4-Dinitrotoluene	ND	20	ug	13
2,6-Dinitrotoluene	ND	20	ug	13
Di-n-octyl phthalate	ND	20	ug	9.2
1,2-Diphenylhydrazine	ND	20	ug	5.6
Fluoranthene	ND	20	ug	7.2
Fluorene	ND	20	ug	6.0
Hexachlorobenzene	ND	20	ug	6.6
Hexachlorobutadiene	ND	20	ug	5.6
Hexachlorocyclopentadiene	ND	100	ug	48
Hexachloroethane	ND	20	ug	6.0
Indeno(1,2,3-cd)pyrene	ND	20	ug	6.2
Isophorone	ND	20	ug	5.6
2-Methylnaphthalene	ND	20	ug	5.8
2-Methylphenol	ND	20	ug	5.2
3-Methylphenol & 4-Methylphenol	ND	20	ug	11
Naphthalene	ND	20	ug	6.2
2-Nitroaniline	ND	100	ug	8.2
3-Nitroaniline	ND	100	ug	32
4-Nitroaniline	ND	100	ug	20
Nitrobenzene	ND	20	ug	5.8
2-Nitrophenol	ND	20	ug	8.2
4-Nitrophenol	ND	100	ug	36
N-Nitrosodimethylamine	ND	20	ug	6.4
N-Nitrosodiphenylamine	ND	20	ug	7.2
N-Nitrosodi-n-propylamine	ND	20	ug	6.4
Pentachlorobenzene	ND	20	ug	6.4
Pentachloronitrobenzene	ND	100	ug	13
Pentachlorophenol	ND	100	ug	17
Phenanthrene	ND	20	ug	6.0
Phenol	ND	20	ug	6.2
2,2'-oxybis(1-Chloropropane)	ND	20	ug	6.8
Pyrene	ND	20	ug	7.0
Pyridine	ND	40	ug	17
1,2,4-Trichlorobenzene	ND	20	ug	6.6

(Continued on next page)

O'Brien & Gere Inc of North America

Client Sample ID: M23/0010-SK/TTU-RB-COMBINED

GC/MS Semivolatiles

Lot-Sample #...: H2G020403-007 Work Order #...: MVELQ1AC Matrix.....: AIR

PARAMETER	RESULT	REPORTING LIMIT	UNITS	MDL
2,4,5-Trichloro-phenol	ND	20	ug	5.4
2,4,6-Trichloro-phenol	ND	20	ug	5.8

SURROGATE	PERCENT RECOVERY	RECOVERY LIMITS
2-Fluorophenol	59	(22 - 105)
Phenol-d5	77	(48 - 118)
Nitrobenzene-d5	85	(43 - 110)
2-Fluorobiphenyl	85	(48 - 111)
2,4,6-Tribromophenol	86	(34 - 125)
Terphenyl-d14	110	(67 - 112)
13C6-Naphthalene	83	(50 - 150)

O'Brien & Gere Inc of North America

Client Sample ID: A-6745,A-6746 MEDIA CHECK

GC/MS Semivolatiles

Lot-Sample #...: H2G020403-008 **Work Order #...:** MVELR1AC **Matrix.....:** AIR
Date Sampled...: 06/26/12 **Date Received..:** 06/29/12
Prep Date.....: 07/02/12 **Analysis Date..:** 07/11/12
Prep Batch #...: 2184047
Dilution Factor: 2 **Method.....:** SW846 8270C

PARAMETER	RESULT	REPORTING LIMIT	UNITS	MDL
Acenaphthene	ND	20	ug	5.4
Acenaphthylene	ND	20	ug	5.6
Acetophenone	ND	20	ug	5.0
Aniline	ND	40	ug	17
Anthracene	ND	20	ug	6.4
Benzidine	ND	200	ug	120
Benzo(a)anthracene	ND	20	ug	6.2
Benzo(b)fluoranthene	ND	20	ug	8.2
Benzo(k)fluoranthene	ND	20	ug	9.8
Benzoic acid	ND	200	ug	120
Benzo(ghi)perylene	ND	20	ug	6.4
Benzo(a)pyrene	ND	20	ug	7.6
Benzyl alcohol	ND	200	ug	11
bis(2-Chloroethoxy) methane	ND	20	ug	5.2
bis(2-Chloroethyl)-ether	ND	20	ug	6.4
bis(2-Ethylhexyl) phthalate	ND	40	ug	22
4-Bromophenyl phenyl ether	ND	20	ug	7.8
Butyl benzyl phthalate	ND	20	ug	9.0
Carbazole	ND	20	ug	6.0
4-Chloroaniline	ND	40	ug	15
4-Chloro-3-methylphenol	ND	20	ug	8.0
2-Chloronaphthalene	ND	20	ug	6.2
2-Chlorophenol	ND	20	ug	6.0
4-Chlorophenyl phenyl ether	ND	20	ug	6.4
Chrysene	ND	20	ug	6.2
Dibenz(a,h)anthracene	ND	20	ug	6.0
Dibenzofuran	ND	20	ug	5.6
Di-n-butyl phthalate	ND	40	ug	9.4
1,2-Dichlorobenzene	ND	20	ug	6.8
1,3-Dichlorobenzene	ND	20	ug	6.6
1,4-Dichlorobenzene	ND	20	ug	6.4
3,3'-Dichlorobenzidine	ND	100	ug	17
2,4-Dichlorophenol	ND	20	ug	6.0
Diethyl phthalate	ND	20	ug	6.6

(Continued on next page)

O'Brien & Gere Inc of North America

Client Sample ID: A-6745,A-6746 MEDIA CHECK

GC/MS Semivolatiles

Lot-Sample #...: H2G020403-008 Work Order #...: MVELR1AC Matrix.....: AIR

PARAMETER	RESULT	REPORTING LIMIT	UNITS	MDL
2,4-Dimethylphenol	ND	20	ug	13
Dimethyl phthalate	ND	20	ug	5.8
4,6-Dinitro-2-methylphenol	ND	100	ug	20
2,4-Dinitrophenol	ND	100	ug	86
2,4-Dinitrotoluene	ND	20	ug	13
2,6-Dinitrotoluene	ND	20	ug	13
Di-n-octyl phthalate	ND	20	ug	9.2
1,2-Diphenylhydrazine	ND	20	ug	5.6
Fluoranthene	ND	20	ug	7.2
Fluorene	ND	20	ug	6.0
Hexachlorobenzene	ND	20	ug	6.6
Hexachlorobutadiene	ND	20	ug	5.6
Hexachlorocyclopentadiene	ND	100	ug	48
Hexachloroethane	ND	20	ug	6.0
Indeno(1,2,3-cd)pyrene	ND	20	ug	6.2
Isophorone	ND	20	ug	5.6
2-Methylnaphthalene	ND	20	ug	5.8
2-Methylphenol	ND	20	ug	5.2
3-Methylphenol & 4-Methylphenol	ND	20	ug	11
Naphthalene	ND	20	ug	6.2
2-Nitroaniline	ND	100	ug	8.2
3-Nitroaniline	ND	100	ug	32
4-Nitroaniline	ND	100	ug	20
Nitrobenzene	ND	20	ug	5.8
2-Nitrophenol	ND	20	ug	8.2
4-Nitrophenol	ND	100	ug	36
N-Nitrosodimethylamine	ND	20	ug	6.4
N-Nitrosodiphenylamine	ND	20	ug	7.2
N-Nitrosodi-n-propylamine	ND	20	ug	6.4
Pentachlorobenzene	ND	20	ug	6.4
Pentachloronitrobenzene	ND	100	ug	13
Pentachlorophenol	ND	100	ug	17
Phenanthrene	ND	20	ug	6.0
Phenol	ND	20	ug	6.2
2,2'-oxybis(1-Chloropropane)	ND	20	ug	6.8
Pyrene	ND	20	ug	7.0
Pyridine	ND	40	ug	17
1,2,4-Trichlorobenzene	ND	20	ug	6.6

(Continued on next page)

O'Brien & Gere Inc of North America

Client Sample ID: A-6745,A-6746 MEDIA CHECK

GC/MS Semivolatiles

Lot-Sample #...: H2G020403-008 **Work Order #...:** MVELR1AC **Matrix.....:** AIR

PARAMETER	RESULT	REPORTING LIMIT	UNITS	MDL
2,4,5-Trichloro-phenol	ND	20	ug	5.4
2,4,6-Trichloro-phenol	ND	20	ug	5.8

SURROGATE	PERCENT RECOVERY	RECOVERY LIMITS
2-Fluorophenol	76	(22 - 105)
Phenol-d5	80	(48 - 118)
Nitrobenzene-d5	84	(43 - 110)
2-Fluorobiphenyl	83	(48 - 111)
2,4,6-Tribromophenol	94	(34 - 125)
Terphenyl-d14	116 *	(67 - 112)

NOTE(S):

* Surrogate recovery is outside stated control limits.

METHOD BLANK REPORT

GC/MS Semivolatiles

Client Lot #...: H2G020403 **Work Order #...:** MVEMJ1AA **Matrix.....:** AIR
MB Lot-Sample #: H2G020000-047

Prep Date.....: 07/02/12
Analysis Date..: 07/11/12 **Prep Batch #...:** 2184047
Dilution Factor: 2

PARAMETER	RESULT	REPORTING LIMIT	UNITS	METHOD
Acenaphthene	ND	20	ug	SW846 8270C
Acenaphthylene	ND	20	ug	SW846 8270C
Acetophenone	ND	20	ug	SW846 8270C
Aniline	ND	40	ug	SW846 8270C
Anthracene	ND	20	ug	SW846 8270C
Benzidine	ND	200	ug	SW846 8270C
Benzo(a)anthracene	ND	20	ug	SW846 8270C
Benzo(b)fluoranthene	ND	20	ug	SW846 8270C
Benzo(k)fluoranthene	ND	20	ug	SW846 8270C
Benzoic acid	ND	200	ug	SW846 8270C
Benzo(ghi)perylene	ND	20	ug	SW846 8270C
Benzo(a)pyrene	ND	20	ug	SW846 8270C
Benzyl alcohol	ND	200	ug	SW846 8270C
bis(2-Chloroethoxy) methane	ND	20	ug	SW846 8270C
bis(2-Chloroethyl)-ether	ND	20	ug	SW846 8270C
bis(2-Ethylhexyl) phthalate	ND	40	ug	SW846 8270C
4-Bromophenyl phenyl ether	ND	20	ug	SW846 8270C
Butyl benzyl phthalate	ND	20	ug	SW846 8270C
Carbazole	ND	20	ug	SW846 8270C
4-Chloroaniline	ND	40	ug	SW846 8270C
4-Chloro-3-methylphenol	ND	20	ug	SW846 8270C
2-Chloronaphthalene	ND	20	ug	SW846 8270C
2-Chlorophenol	ND	20	ug	SW846 8270C
4-Chlorophenyl phenyl ether	ND	20	ug	SW846 8270C
Chrysene	ND	20	ug	SW846 8270C
Dibenz(a,h)anthracene	ND	20	ug	SW846 8270C
Dibenzofuran	ND	20	ug	SW846 8270C
Di-n-butyl phthalate	ND	40	ug	SW846 8270C
1,2-Dichlorobenzene	ND	20	ug	SW846 8270C
1,3-Dichlorobenzene	ND	20	ug	SW846 8270C
1,4-Dichlorobenzene	ND	20	ug	SW846 8270C
3,3'-Dichlorobenzidine	ND	100	ug	SW846 8270C
2,4-Dichlorophenol	ND	20	ug	SW846 8270C
Diethyl phthalate	ND	20	ug	SW846 8270C
2,4-Dimethylphenol	ND	20	ug	SW846 8270C
Dimethyl phthalate	ND	20	ug	SW846 8270C

(Continued on next page)

METHOD BLANK REPORT

GC/MS Semivolatiles

Client Lot #...: H2G020403 Work Order #...: MVEMJ1AA Matrix.....: AIR

PARAMETER	RESULT	REPORTING LIMIT	UNITS	METHOD
4,6-Dinitro-2-methylphenol	ND	100	ug	SW846 8270C
2,4-Dinitrophenol	ND	100	ug	SW846 8270C
2,4-Dinitrotoluene	ND	20	ug	SW846 8270C
2,6-Dinitrotoluene	ND	20	ug	SW846 8270C
Di-n-octyl phthalate	ND	20	ug	SW846 8270C
1,2-Diphenylhydrazine	ND	20	ug	SW846 8270C
Fluoranthene	ND	20	ug	SW846 8270C
Fluorene	ND	20	ug	SW846 8270C
Hexachlorobenzene	ND	20	ug	SW846 8270C
Hexachlorobutadiene	ND	20	ug	SW846 8270C
Hexachlorocyclopentadiene	ND	100	ug	SW846 8270C
Hexachloroethane	ND	20	ug	SW846 8270C
Indeno(1,2,3-cd)pyrene	ND	20	ug	SW846 8270C
Isophorone	ND	20	ug	SW846 8270C
2-Methylnaphthalene	ND	20	ug	SW846 8270C
2-Methylphenol	ND	20	ug	SW846 8270C
3-Methylphenol & 4-Methylphenol	ND	20	ug	SW846 8270C
Naphthalene	ND	20	ug	SW846 8270C
2-Nitroaniline	ND	100	ug	SW846 8270C
3-Nitroaniline	ND	100	ug	SW846 8270C
4-Nitroaniline	ND	100	ug	SW846 8270C
Nitrobenzene	ND	20	ug	SW846 8270C
2-Nitrophenol	ND	20	ug	SW846 8270C
4-Nitrophenol	ND	100	ug	SW846 8270C
N-Nitrosodimethylamine	ND	20	ug	SW846 8270C
N-Nitrosodiphenylamine	ND	20	ug	SW846 8270C
N-Nitrosodi-n-propylamine	ND	20	ug	SW846 8270C
Pentachlorobenzene	ND	20	ug	SW846 8270C
Pentachloronitrobenzene	ND	100	ug	SW846 8270C
Pentachlorophenol	ND	100	ug	SW846 8270C
Phenanthrene	ND	20	ug	SW846 8270C
Phenol	ND	20	ug	SW846 8270C
2,2'-oxybis(1-Chloropropane)	ND	20	ug	SW846 8270C
Pyrene	ND	20	ug	SW846 8270C
Pyridine	ND	40	ug	SW846 8270C
1,2,4-Trichlorobenzene	ND	20	ug	SW846 8270C
2,4,5-Trichlorophenol	ND	20	ug	SW846 8270C
2,4,6-Trichlorophenol	ND	20	ug	SW846 8270C

(Continued on next page)

METHOD BLANK REPORT

GC/MS Semivolatiles

Client Lot #...: H2G020403 Work Order #...: MVEMJ1AA Matrix.....: AIR

PARAMETER	RESULT	REPORTING LIMIT	UNITS	METHOD

SURROGATE	PERCENT RECOVERY	RECOVERY LIMITS
2-Fluorophenol	45	(22 - 105)
Phenol-d5	63	(48 - 118)
Nitrobenzene-d5	82	(43 - 110)
2-Fluorobiphenyl	80	(48 - 111)
2,4,6-Tribromophenol	83	(34 - 125)
Terphenyl-d14	117 *	(67 - 112)

NOTE(S):

Calculations are performed before rounding to avoid round-off errors in calculated results.

* Surrogate recovery is outside stated control limits.

LABORATORY CONTROL SAMPLE EVALUATION REPORT

GC/MS Semivolatiles

Client Lot #...: H2G020403 Work Order #...: MVEMJ1AC-LCS Matrix.....: AIR
LCS Lot-Sample#: H2G020000-047 MVEMJ1AD-LCSD
Prep Date.....: 07/02/12 Analysis Date..: 07/11/12
Prep Batch #...: 2184047
Dilution Factor: 1

PARAMETER	PERCENT RECOVERY	RECOVERY LIMITS	RPD	RPD LIMITS	METHOD
Acenaphthene	82	(63 - 107)			SW846 8270C
	86	(63 - 107)	3.9	(0-25)	SW846 8270C
Acenaphthylene	80	(64 - 112)			SW846 8270C
	84	(64 - 112)	3.9	(0-25)	SW846 8270C
Aniline	60	(48 - 109)			SW846 8270C
	60	(48 - 109)	0.66	(0-31)	SW846 8270C
Anthracene	88	(59 - 114)			SW846 8270C
	91	(59 - 114)	2.8	(0-25)	SW846 8270C
Benzo(a)anthracene	94	(74 - 117)			SW846 8270C
	94	(74 - 117)	0.21	(0-25)	SW846 8270C
Benzo(b)fluoranthene	99	(63 - 122)			SW846 8270C
	99	(63 - 122)	0.0	(0-42)	SW846 8270C
Benzo(k)fluoranthene	85	(69 - 118)			SW846 8270C
	88	(69 - 118)	3.3	(0-26)	SW846 8270C
Benzoic acid	78	(10 - 170)			SW846 8270C
	97	(10 - 170)	22	(0-50)	SW846 8270C
Benzo(ghi)perylene	93	(71 - 122)			SW846 8270C
	99	(71 - 122)	6.0	(0-28)	SW846 8270C
Benzo(a)pyrene	101	(67 - 122)			SW846 8270C
	103	(67 - 122)	2.0	(0-25)	SW846 8270C
Benzyl alcohol	83	(54 - 122)			SW846 8270C
	85	(54 - 122)	1.4	(0-28)	SW846 8270C
bis(2-Chloroethoxy) methane	82	(60 - 109)			SW846 8270C
	82	(60 - 109)	0.12	(0-26)	SW846 8270C
bis(2-Chloroethyl)-ether	78	(59 - 109)			SW846 8270C
	78	(59 - 109)	0.51	(0-26)	SW846 8270C
bis(2-Ethylhexyl) phthalate	107	(77 - 128)			SW846 8270C
	106	(77 - 128)	0.93	(0-25)	SW846 8270C
4-Bromophenyl phenyl ether	90	(67 - 125)			SW846 8270C
	92	(67 - 125)	2.8	(0-25)	SW846 8270C
Butyl benzyl phthalate	111	(76 - 127)			SW846 8270C
	107	(76 - 127)	3.7	(0-25)	SW846 8270C

(Continued on next page)

LABORATORY CONTROL SAMPLE EVALUATION REPORT

GC/MS Semivolatiles

Client Lot #...: H2G020403 Work Order #...: MVEMJ1AC-LCS Matrix.....: AIR
LCS Lot-Sample#: H2G020000-047 MVEMJ1AD-LCSD

PARAMETER	PERCENT RECOVERY	RECOVERY LIMITS	RPD	RPD LIMITS	METHOD
Carbazole	86	(55 - 113)			SW846 8270C
	88	(55 - 113)	2.5	(0-25)	SW846 8270C
4-Chloroaniline	74	(58 - 110)			SW846 8270C
	77	(58 - 110)	3.8	(0-50)	SW846 8270C
4-Chloro-3-methylphenol	94	(63 - 123)			SW846 8270C
	98	(63 - 123)	4.4	(0-25)	SW846 8270C
2-Chloronaphthalene	82	(58 - 106)			SW846 8270C
	84	(58 - 106)	2.5	(0-25)	SW846 8270C
2-Chlorophenol	61	(51 - 108)			SW846 8270C
	69	(51 - 108)	12	(0-25)	SW846 8270C
4-Chlorophenyl phenyl ether	85	(64 - 111)			SW846 8270C
	89	(64 - 111)	4.5	(0-25)	SW846 8270C
Chrysene	83	(67 - 114)			SW846 8270C
	83	(67 - 114)	0.12	(0-25)	SW846 8270C
Dibenz(a,h)anthracene	99	(67 - 122)			SW846 8270C
	105	(67 - 122)	6.1	(0-27)	SW846 8270C
Dibenzofuran	82	(60 - 108)			SW846 8270C
	84	(60 - 108)	2.2	(0-25)	SW846 8270C
Di-n-butyl phthalate	97	(70 - 122)			SW846 8270C
	99	(70 - 122)	1.5	(0-25)	SW846 8270C
1,2-Dichlorobenzene	78	(50 - 105)			SW846 8270C
	79	(50 - 105)	2.0	(0-25)	SW846 8270C
1,3-Dichlorobenzene	76	(50 - 103)			SW846 8270C
	78	(50 - 103)	3.0	(0-25)	SW846 8270C
1,4-Dichlorobenzene	76	(50 - 104)			SW846 8270C
	78	(50 - 104)	1.8	(0-25)	SW846 8270C
3,3'-Dichlorobenzidine	95	(42 - 123)			SW846 8270C
	96	(42 - 123)	0.20	(0-34)	SW846 8270C
2,4-Dichlorophenol	79	(59 - 114)			SW846 8270C
	84	(59 - 114)	6.7	(0-25)	SW846 8270C
Diethyl phthalate	92	(69 - 116)			SW846 8270C
	94	(69 - 116)	1.1	(0-25)	SW846 8270C
2,4-Dimethylphenol	80	(10 - 125)			SW846 8270C
	82	(10 - 125)	3.1	(0-26)	SW846 8270C
Dimethyl phthalate	89	(72 - 113)			SW846 8270C
	90	(72 - 113)	1.0	(0-25)	SW846 8270C
4,6-Dinitro-2-methylphenol	94	(47 - 120)			SW846 8270C
	97	(47 - 120)	3.9	(0-34)	SW846 8270C

(Continued on next page)

LABORATORY CONTROL SAMPLE EVALUATION REPORT

GC/MS Semivolatiles

Client Lot #...: H2G020403 Work Order #...: MVEMJ1AC-LCS Matrix.....: AIR
LCS Lot-Sample#: H2G020000-047 MVEMJ1AD-LCSD

PARAMETER	PERCENT RECOVERY	RECOVERY LIMITS	RPD	RPD LIMITS	METHOD
2,4-Dinitrophenol	82	(27 - 139)			SW846 8270C
	92	(27 - 139)	12	(0-50)	SW846 8270C
2,4-Dinitrotoluene	94	(62 - 118)			SW846 8270C
	96	(62 - 118)	1.8	(0-25)	SW846 8270C
2,6-Dinitrotoluene	93	(73 - 122)			SW846 8270C
	96	(73 - 122)	2.6	(0-25)	SW846 8270C
Di-n-octyl phthalate	107	(73 - 123)			SW846 8270C
	104	(73 - 123)	2.8	(0-25)	SW846 8270C
1,2-Diphenylhydrazine	85	(64 - 115)			SW846 8270C
	88	(64 - 115)	3.5	(0-25)	SW846 8270C
Fluoranthene	90	(55 - 120)			SW846 8270C
	91	(55 - 120)	2.0	(0-25)	SW846 8270C
Fluorene	88	(64 - 114)			SW846 8270C
	89	(64 - 114)	1.9	(0-25)	SW846 8270C
Hexachlorobenzene	86	(56 - 109)			SW846 8270C
	88	(56 - 109)	2.6	(0-25)	SW846 8270C
Hexachlorobutadiene	82	(48 - 105)			SW846 8270C
	83	(48 - 105)	0.60	(0-29)	SW846 8270C
Hexachlorocyclopenta-diene	53	(10 - 100)			SW846 8270C
	57	(10 - 100)	8.0	(0-33)	SW846 8270C
Hexachloroethane	80	(49 - 110)			SW846 8270C
	82	(49 - 110)	1.5	(0-29)	SW846 8270C
Indeno(1,2,3-cd)pyrene	99	(72 - 126)			SW846 8270C
	104	(72 - 126)	5.2	(0-28)	SW846 8270C
Isophorone	80	(56 - 111)			SW846 8270C
	82	(56 - 111)	2.6	(0-25)	SW846 8270C
2-Methylnaphthalene	86	(56 - 111)			SW846 8270C
	87	(56 - 111)	1.3	(0-25)	SW846 8270C
2-Methylphenol	80	(55 - 118)			SW846 8270C
	80	(55 - 118)	0.50	(0-25)	SW846 8270C
3-Methylphenol & 4-Methylphenol	75	(56 - 116)			SW846 8270C
	80	(56 - 116)	6.8	(0-25)	SW846 8270C
Naphthalene	80	(59 - 120)			SW846 8270C
	81	(59 - 120)	1.1	(0-25)	SW846 8270C
2-Nitroaniline	94	(67 - 126)			SW846 8270C
	97	(67 - 126)	3.7	(0-25)	SW846 8270C
3-Nitroaniline	88	(66 - 121)			SW846 8270C
	89	(66 - 121)	1.0	(0-25)	SW846 8270C

(Continued on next page)

LABORATORY CONTROL SAMPLE EVALUATION REPORT

GC/MS Semivolatiles

Client Lot #...: H2G020403 Work Order #...: MVEMJ1AC-LCS Matrix.....: AIR
LCS Lot-Sample#: H2G020000-047 MVEMJ1AD-LCSD

PARAMETER	PERCENT RECOVERY	RECOVERY LIMITS	RPD	RPD LIMITS	METHOD
4-Nitroaniline	95	(62 - 122)			SW846 8270C
	93	(62 - 122)	1.9	(0-27)	SW846 8270C
Nitrobenzene	82	(58 - 109)			SW846 8270C
	82	(58 - 109)	0.73	(0-25)	SW846 8270C
2-Nitrophenol	80	(52 - 112)			SW846 8270C
	87	(52 - 112)	8.5	(0-26)	SW846 8270C
4-Nitrophenol	86	(60 - 119)			SW846 8270C
	90	(60 - 119)	4.2	(0-33)	SW846 8270C
N-Nitrosodimethylamine	73	(53 - 104)			SW846 8270C
	76	(53 - 104)	3.8	(0-25)	SW846 8270C
N-Nitrosodiphenylamine	88	(76 - 128)			SW846 8270C
	90	(76 - 128)	2.4	(0-25)	SW846 8270C
N-Nitrosodi-n-propyl-amine	82	(57 - 118)			SW846 8270C
	84	(57 - 118)	1.7	(0-25)	SW846 8270C
Pentachlorophenol	84	(19 - 145)			SW846 8270C
	89	(19 - 145)	5.1	(0-30)	SW846 8270C
Phenanthrene	83	(58 - 109)			SW846 8270C
	85	(58 - 109)	2.5	(0-25)	SW846 8270C
Phenol	64	(54 - 114)			SW846 8270C
	70	(54 - 114)	9.8	(0-25)	SW846 8270C
bis(2-Chloroisopropyl) ether	77	(48 - 131)			SW846 8270C
	78	(48 - 131)	1.8	(0-27)	SW846 8270C
Pyrene	95	(76 - 118)			SW846 8270C
	93	(76 - 118)	2.2	(0-25)	SW846 8270C
Pyridine	62	(31 - 106)			SW846 8270C
	61	(31 - 106)	1.1	(0-29)	SW846 8270C
1,2,4-Trichloro-benzene	80	(52 - 105)			SW846 8270C
	81	(52 - 105)	0.49	(0-26)	SW846 8270C
2,4,5-Trichloro-phenol	86	(60 - 118)			SW846 8270C
	94	(60 - 118)	8.7	(0-25)	SW846 8270C
2,4,6-Trichloro-phenol	83	(66 - 117)			SW846 8270C
	92	(66 - 117)	10	(0-25)	SW846 8270C

(Continued on next page)

LABORATORY CONTROL SAMPLE EVALUATION REPORT

GC/MS Semivolatiles

Client Lot #...: H2G020403 **Work Order #...:** MVEMJ1AC-LCS **Matrix.....:** AIR
LCS Lot-Sample#: H2G020000-047 MVEMJ1AD-LCSD

SURROGATE	PERCENT RECOVERY	RECOVERY LIMITS
2-Fluorophenol	36	(22 - 105)
	46	(22 - 105)
Phenol-d5	66	(48 - 118)
	70	(48 - 118)
Nitrobenzene-d5	86	(43 - 110)
	85	(43 - 110)
2-Fluorobiphenyl	86	(48 - 111)
	86	(48 - 111)
2,4,6-Tribromophenol	97	(34 - 125)
	102	(34 - 125)
Terphenyl-d14	129 *	(67 - 112)
	120 *	(67 - 112)

NOTE(S):

Calculations are performed before rounding to avoid round-off errors in calculated results.

Bold print denotes control parameters

* Surrogate recovery is outside stated control limits.

LABORATORY CONTROL SAMPLE EVALUATION REPORT

GC/MS Semivolatiles

Client Lot #...: H2G020403 **Work Order #...:** MVEMJ1AC-LCS **Matrix.....:** AIR
LCS Lot-Sample#: H2G020000-047 MVEMJ1AD-LCSD

SURROGATE	PERCENT RECOVERY	RECOVERY LIMITS
2-Fluorophenol	36	(22 - 105)
	46	(22 - 105)
Phenol-d5	66	(48 - 118)
	70	(48 - 118)
Nitrobenzene-d5	86	(43 - 110)
	85	(43 - 110)
2-Fluorobiphenyl	86	(48 - 111)
	86	(48 - 111)
2,4,6-Tribromophenol	97	(34 - 125)
	102	(34 - 125)
Terphenyl-d14	129 *	(67 - 112)
	120 *	(67 - 112)

NOTE(S):

Calculations are performed before rounding to avoid round-off errors in calculated results.

Bold print denotes control parameters

* Surrogate recovery is outside stated control limits.

LABORATORY CONTROL SAMPLE DATA REPORT

GC/MS Semivolatiles

Client Lot #...: H2G020403 Work Order #...: MVEMJ1AC-LCS Matrix.....: AIR
LCS Lot-Sample#: H2G020000-047 MVEMJ1AD-LCSD
Prep Date.....: 07/02/12 Analysis Date..: 07/11/12
Prep Batch #...: 2184047
Dilution Factor: 1

PARAMETER	SPIKE AMOUNT	MEASURED AMOUNT	UNITS	PERCENT RECOVERY	RPD	METHOD
Acenaphthene	100	82.4	ug	82		SW846 8270C
	100	85.7	ug	86	3.9	SW846 8270C
Acenaphthylene	100	80.5	ug	80		SW846 8270C
	100	83.7	ug	84	3.9	SW846 8270C
Aniline	100	59.6	ug	60		SW846 8270C
	100	60.0	ug	60	0.66	SW846 8270C
Anthracene	100	88.5	ug	88		SW846 8270C
	100	91.0	ug	91	2.8	SW846 8270C
Benzo(a)anthracene	100	93.7	ug	94		SW846 8270C
	100	93.9	ug	94	0.21	SW846 8270C
Benzo(b)fluoranthene	100	99.0	ug	99		SW846 8270C
	100	99.0	ug	99	0.0	SW846 8270C
Benzo(k)fluoranthene	100	85.4	ug	85		SW846 8270C
	100	88.3	ug	88	3.3	SW846 8270C
Benzoic acid	100	77.6	ug	78		SW846 8270C
	100	97.0	ug	97	22	SW846 8270C
Benzo(ghi)perylene	100	92.9	ug	93		SW846 8270C
	100	98.6	ug	99	6.0	SW846 8270C
Benzo(a)pyrene	100	101	ug	101		SW846 8270C
	100	103	ug	103	2.0	SW846 8270C
Benzyl alcohol	100	83.4	ug	83		SW846 8270C
	100	84.6	ug	85	1.4	SW846 8270C
bis(2-Chloroethoxy) methane	100	82.2	ug	82		SW846 8270C
	100	82.3	ug	82	0.12	SW846 8270C
bis(2-Chloroethyl)-ether	100	78.0	ug	78		SW846 8270C
	100	78.4	ug	78	0.51	SW846 8270C
bis(2-Ethylhexyl) phthalate	100	107	ug	107		SW846 8270C
	100	106	ug	106	0.93	SW846 8270C
4-Bromophenyl phenyl ether	100	89.6	ug	90		SW846 8270C
	100	92.1	ug	92	2.8	SW846 8270C
Butyl benzyl phthalate	100	111	ug	111		SW846 8270C
	100	107	ug	107	3.7	SW846 8270C

(Continued on next page)

LABORATORY CONTROL SAMPLE DATA REPORT

GC/MS Semivolatiles

Client Lot #...: H2G020403 Work Order #...: MVEMJ1AC-LCS Matrix.....: AIR
LCS Lot-Sample#: H2G020000-047 MVEMJ1AD-LCSD

PARAMETER	SPIKE AMOUNT	MEASURED AMOUNT	UNITS	PERCENT RECOVERY	RPD	METHOD
Carbazole	100	86.2	ug	86		SW846 8270C
	100	88.4	ug	88	2.5	SW846 8270C
4-Chloroaniline	100	74.1	ug	74		SW846 8270C
	100	77.0	ug	77	3.8	SW846 8270C
4-Chloro-3-methylphenol	100	94.0	ug	94		SW846 8270C
	100	98.2	ug	98	4.4	SW846 8270C
2-Chloronaphthalene	100	82.4	ug	82		SW846 8270C
	100	84.5	ug	84	2.5	SW846 8270C
2-Chlorophenol	100	61.4	ug	61		SW846 8270C
	100	69.1	ug	69	12	SW846 8270C
4-Chlorophenyl phenyl ether	100	84.9	ug	85		SW846 8270C
	100	88.8	ug	89	4.5	SW846 8270C
Chrysene	100	82.7	ug	83		SW846 8270C
	100	82.8	ug	83	0.12	SW846 8270C
Dibenz(a,h)anthracene	100	98.8	ug	99		SW846 8270C
	100	105	ug	105	6.1	SW846 8270C
Dibenzofuran	100	82.2	ug	82		SW846 8270C
	100	84.0	ug	84	2.2	SW846 8270C
Di-n-butyl phthalate	100	97.1	ug	97		SW846 8270C
	100	98.6	ug	99	1.5	SW846 8270C
1,2-Dichlorobenzene	100	77.6	ug	78		SW846 8270C
	100	79.2	ug	79	2.0	SW846 8270C
1,3-Dichlorobenzene	100	75.9	ug	76		SW846 8270C
	100	78.2	ug	78	3.0	SW846 8270C
1,4-Dichlorobenzene	100	76.1	ug	76		SW846 8270C
	100	77.5	ug	78	1.8	SW846 8270C
3,3'-Dichlorobenzidine	100	95.4	ug	95		SW846 8270C
	100	95.6	ug	96	0.20	SW846 8270C
2,4-Dichlorophenol	100	79.0	ug	79		SW846 8270C
	100	84.5	ug	84	6.7	SW846 8270C
Diethyl phthalate	100	92.5	ug	92		SW846 8270C
	100	93.5	ug	94	1.1	SW846 8270C
2,4-Dimethylphenol	100	79.5	ug	80		SW846 8270C
	100	82.0	ug	82	3.1	SW846 8270C
Dimethyl phthalate	100	89.1	ug	89		SW846 8270C
	100	90.0	ug	90	1.0	SW846 8270C
4,6-Dinitro-2-methylphenol	100	93.7	ug	94		SW846 8270C
	100	97.4	ug	97	3.9	SW846 8270C

(Continued on next page)

LABORATORY CONTROL SAMPLE DATA REPORT

GC/MS Semivolatiles

Client Lot #...: H2G020403 Work Order #...: MVEMJ1AC-LCS Matrix.....: AIR
LCS Lot-Sample#: H2G020000-047 MVEMJ1AD-LCSD

PARAMETER	SPIKE AMOUNT	MEASURED AMOUNT	UNITS	PERCENT RECOVERY	RPD	METHOD
2,4-Dinitrophenol	100	81.6	ug	82		SW846 8270C
	100	92.4	ug	92	12	SW846 8270C
2,4-Dinitrotoluene	100	93.9	ug	94		SW846 8270C
	100	95.6	ug	96	1.8	SW846 8270C
2,6-Dinitrotoluene	100	93.0	ug	93		SW846 8270C
	100	95.5	ug	96	2.6	SW846 8270C
Di-n-octyl phthalate	100	107	ug	107		SW846 8270C
	100	104	ug	104	2.8	SW846 8270C
1,2-Diphenylhydrazine	100	85.2	ug	85		SW846 8270C
	100	88.2	ug	88	3.5	SW846 8270C
Fluoranthene	100	89.6	ug	90		SW846 8270C
	100	91.4	ug	91	2.0	SW846 8270C
Fluorene	100	87.7	ug	88		SW846 8270C
	100	89.4	ug	89	1.9	SW846 8270C
Hexachlorobenzene	100	85.7	ug	86		SW846 8270C
	100	88.0	ug	88	2.6	SW846 8270C
Hexachlorobutadiene	100	82.4	ug	82		SW846 8270C
	100	82.9	ug	83	0.60	SW846 8270C
Hexachlorocyclopenta-diene	100	53.0	ug	53		SW846 8270C
	100	57.4	ug	57	8.0	SW846 8270C
Hexachloroethane	100	80.4	ug	80		SW846 8270C
	100	81.6	ug	82	1.5	SW846 8270C
Indeno(1,2,3-cd)pyrene	100	98.7	ug	99		SW846 8270C
	100	104	ug	104	5.2	SW846 8270C
Isophorone	100	80.2	ug	80		SW846 8270C
	100	82.3	ug	82	2.6	SW846 8270C
2-Methylnaphthalene	100	86.0	ug	86		SW846 8270C
	100	87.1	ug	87	1.3	SW846 8270C
2-Methylphenol	100	79.6	ug	80		SW846 8270C
	100	80.0	ug	80	0.50	SW846 8270C
3-Methylphenol & 4-Methylphenol	100	74.9	ug	75		SW846 8270C
	100	80.2	ug	80	6.8	SW846 8270C
Naphthalene	100	79.9	ug	80		SW846 8270C
	100	80.8	ug	81	1.1	SW846 8270C
2-Nitroaniline	100	93.7	ug	94		SW846 8270C
	100	97.2	ug	97	3.7	SW846 8270C
3-Nitroaniline	100	88.4	ug	88		SW846 8270C
	100	89.3	ug	89	1.0	SW846 8270C

(Continued on next page)

LABORATORY CONTROL SAMPLE DATA REPORT

GC/MS Semivolatiles

Client Lot #...: H2G020403 Work Order #...: MVEMJ1AC-LCS Matrix.....: AIR
LCS Lot-Sample#: H2G020000-047 MVEMJ1AD-LCSD

PARAMETER	SPIKE AMOUNT	MEASURED AMOUNT	UNITS	PERCENT RECOVERY	RPD	METHOD
4-Nitroaniline	100	95.0	ug	95		SW846 8270C
	100	93.2	ug	93	1.9	SW846 8270C
Nitrobenzene	100	81.7	ug	82		SW846 8270C
	100	82.3	ug	82	0.73	SW846 8270C
2-Nitrophenol	100	80.0	ug	80		SW846 8270C
	100	87.1	ug	87	8.5	SW846 8270C
4-Nitrophenol	100	86.4	ug	86		SW846 8270C
	100	90.1	ug	90	4.2	SW846 8270C
N-Nitrosodimethylamine	100	72.8	ug	73		SW846 8270C
	100	75.6	ug	76	3.8	SW846 8270C
N-Nitrosodiphenylamine	100	88.1	ug	88		SW846 8270C
	100	90.2	ug	90	2.4	SW846 8270C
N-Nitrosodi-n-propyl-amine	100	82.2	ug	82		SW846 8270C
	100	83.6	ug	84	1.7	SW846 8270C
Pentachlorophenol	100	84.4	ug	84		SW846 8270C
	100	88.8	ug	89	5.1	SW846 8270C
Phenanthrene	100	82.8	ug	83		SW846 8270C
	100	84.9	ug	85	2.5	SW846 8270C
Phenol	100	63.9	ug	64		SW846 8270C
	100	70.5	ug	70	9.8	SW846 8270C
bis(2-Chloroisopropyl) ether	100	76.7	ug	77		SW846 8270C
	100	78.1	ug	78	1.8	SW846 8270C
Pyrene	100	95.0	ug	95		SW846 8270C
	100	92.9	ug	93	2.2	SW846 8270C
Pyridine	100	61.5	ug	62		SW846 8270C
	100	60.8	ug	61	1.1	SW846 8270C
1,2,4-Trichloro-benzene	100	80.3	ug	80		SW846 8270C
	100	80.7	ug	81	0.49	SW846 8270C
2,4,5-Trichloro-phenol	100	86.0	ug	86		SW846 8270C
	100	93.8	ug	94	8.7	SW846 8270C
2,4,6-Trichloro-phenol	100	83.2	ug	83		SW846 8270C
	100	92.1	ug	92	10	SW846 8270C

(Continued on next page)

LABORATORY CONTROL SAMPLE DATA REPORT

GC/MS Semivolatiles

Client Lot #...: H2G020403 **Work Order #...:** MVEMJ1AC-LCS **Matrix.....:** AIR
LCS Lot-Sample#: H2G020000-047 MVEMJ1AD-LCSD

SURROGATE	PERCENT RECOVERY	RECOVERY LIMITS
2-Fluorophenol	36	(22 - 105)
	46	(22 - 105)
Phenol-d5	66	(48 - 118)
	70	(48 - 118)
Nitrobenzene-d5	86	(43 - 110)
	85	(43 - 110)
2-Fluorobiphenyl	86	(48 - 111)
	86	(48 - 111)
2,4,6-Tribromophenol	97	(34 - 125)
	102	(34 - 125)
Terphenyl-d14	129 *	(67 - 112)
	120 *	(67 - 112)

NOTE(S):

Calculations are performed before rounding to avoid round-off errors in calculated results.

Bold print denotes control parameters

* Surrogate recovery is outside stated control limits.

Method 29/5

SAMPLE SUMMARY

G2G110441

WO #	SAMPLE#	CLIENT SAMPLE ID	SAMPLED DATE	SAMP TIME
MVJMF	001	M29-SK-R1	06/26/12	
MVJML	002	M29-SK-R2	06/26/12	
MVJMM	003	M29-SK-R3	06/27/12	
MVJMN	004	M29-SK-FB	06/28/12	
MVJMP	005	M5-TTU-R1	06/27/12	
MVJMQ	006	M5-TTU-R2	06/27/12	
MVJMR	007	M5-TTU-R3	06/28/12	

NOTE(S):

- The analytical results of the samples listed above are presented on the following pages.
- All calculations are performed before rounding to avoid round-off errors in calculated results.
- Results noted as "ND" were not detected at or above the stated limit.
- This report must not be reproduced, except in full, without the written approval of the laboratory.
- Results for the following parameters are never reported on a dry weight basis: color, corrosivity, density, flashpoint, ignitability, layers, odor, paint filter test, pH, porosity pressure, reactivity, redox potential, specific gravity, spot tests, solids, solubility, temperature, viscosity, and weight.

EXECUTIVE SUMMARY - Detection Highlights

G2G110441

PARAMETER	RESULT	REPORTING LIMIT	UNITS	ANALYTICAL METHOD
M29-SK-R1 06/26/12 001				
Beryllium	0.25 B	1.5	ug	SW846 6020
Cadmium	0.40 B	1.5	ug	SW846 6020
Chromium	2.5 B	3.0	ug	SW846 6020
Lead	3.4 J	1.5	ug	SW846 6020
Particulates (Acetone)	0.0016	0.00050	g	CFR60A 5
M29-SK-R2 06/26/12 002				
Cadmium	0.11 B	1.5	ug	SW846 6020
Chromium	4.3	3.0	ug	SW846 6020
Lead	3.2 J	1.5	ug	SW846 6020
Particulates (Filter)	0.0009	0.0005	g	CFR60A 5
Particulates (Acetone)	0.0040	0.00050	g	CFR60A 5
M29-SK-R3 06/27/12 003				
Cadmium	0.12 B	1.5	ug	SW846 6020
Chromium	4.8	3.0	ug	SW846 6020
Lead	2.2 J	1.5	ug	SW846 6020
Particulates (Acetone)	0.0026	0.00050	g	CFR60A 5
M29-SK-FB 06/28/12 004				
Lead	0.71 B,J	1.5	ug	SW846 6020
Particulates (Filter)	0.0012	0.0005	g	CFR60A 5
M5-TTU-R1 06/27/12 005				
Particulates (Filter)	0.0006	0.0005	g	CFR60A 5
Particulates (Acetone)	0.0019	0.00050	g	CFR60A 5
M5-TTU-R2 06/27/12 006				
Particulates (Filter)	0.0008	0.0005	g	CFR60A 5
Particulates (Acetone)	0.0018	0.00050	g	CFR60A 5
M5-TTU-R3 06/28/12 007				
Particulates (Filter)	0.0006	0.0005	g	CFR60A 5
Particulates (Acetone)	0.0020	0.00050	g	CFR60A 5

ANALYTICAL METHODS SUMMARY

G2G110441

PARAMETER	ANALYTICAL METHOD
ICP-MS (6020)	SW846 6020
Particulate Emissions	CFR60A 5
Particulates (Acetone) EPA Method 5	CFR60A 5

References:

CFR60A "Test Methods", 40 CFR, Part 60, Appendix A, July 1, 1993.

SW846 "Test Methods for Evaluating Solid Waste, Physical/Chemical Methods", Third Edition, November 1986 and its updates.

METHOD / ANALYST SUMMARY

G2G110441

ANALYTICAL METHOD	ANALYST	ANALYST ID
CFR60A 5	Cheng Vue	001467
SW846 6020	Sabine Hargrave	000071
SW846 6020	Sabine Hargrave	71

References:

CFR60A "Test Methods", 40 CFR, Part 60, Appendix A, July 1, 1993.

SW846 "Test Methods for Evaluating Solid Waste, Physical/Chemical Methods", Third Edition; November 1986 and its updates.

O'Brien & Gere Inc of North America

Client Sample ID: M29-SK-R1

TOTAL Metals

Lot-Sample #...: G2G110441-001 Matrix.....: AIR
Date Sampled...: 06/26/12 Date Received..: 07/10/12

PARAMETER	RESULT	REPORTING LIMIT	UNITS	METHOD	PREPARATION-ANALYSIS DATE	WORK ORDER #
Prep Batch #...: 2206113						
Arsenic	ND	3.0	ug	SW846 6020	07/24-08/02/12	MVJMF1AA
		Dilution Factor: 5				
Beryllium	0.25 B	1.5	ug	SW846 6020	07/24-08/02/12	MVJMF1AC
		Dilution Factor: 5				
Cadmium	0.40 B	1.5	ug	SW846 6020	07/24-08/02/12	MVJMF1AD
		Dilution Factor: 5				
Chromium	2.5 B	3.0	ug	SW846 6020	07/24-08/02/12	MVJMF1AE
		Dilution Factor: 5				
Lead	3.4 J	1.5	ug	SW846 6020	07/24-08/02/12	MVJMF1AF
		Dilution Factor: 5				

NOTE(S):

B Estimated result. Result is less than RL.

J Method blank contamination. The associated method blank contains the target analyte at a reportable level.

O'Brien & Gere Inc of North America

Client Sample ID: M29-SK-R2

TOTAL Metals

Lot-Sample #...: G2G110441-002 Matrix.....: AIR
Date Sampled...: 06/26/12 Date Received..: 07/10/12

PARAMETER	RESULT	REPORTING LIMIT	UNITS	METHOD	PREPARATION-ANALYSIS DATE	WORK ORDER #
Prep Batch #...: 2206113						
Arsenic	ND	3.0	ug	SW846 6020	07/24-08/02/12	MVJML1AA
		Dilution Factor: 5				
Beryllium	ND	1.5	ug	SW846 6020	07/24-08/02/12	MVJML1AC
		Dilution Factor: 5				
Cadmium	0.11 B	1.5	ug	SW846 6020	07/24-08/02/12	MVJML1AD
		Dilution Factor: 5				
Chromium	4.3	3.0	ug	SW846 6020	07/24-08/02/12	MVJML1AE
		Dilution Factor: 5				
Lead	3.2 J	1.5	ug	SW846 6020	07/24-08/02/12	MVJML1AF
		Dilution Factor: 5				

NOTE(S):

B Estimated result. Result is less than RL.

J Method blank contamination. The associated method blank contains the target analyte at a reportable level.

O'Brien & Gere Inc of North America

Client Sample ID: M29-SK-R3

TOTAL Metals

Lot-Sample #...: G2G110441-003 Matrix.....: AIR
Date Sampled...: 06/27/12 Date Received..: 07/10/12

PARAMETER	RESULT	REPORTING LIMIT	UNITS	METHOD	PREPARATION-ANALYSIS DATE	WORK ORDER #
Prep Batch #...: 2206113						
Arsenic	ND	3.0	ug	SW846 6020	07/24-08/02/12	MVJMM1AA
		Dilution Factor: 5				
Beryllium	ND	1.5	ug	SW846 6020	07/24-08/02/12	MVJMM1AC
		Dilution Factor: 5				
Cadmium	0.12 B	1.5	ug	SW846 6020	07/24-08/02/12	MVJMM1AD
		Dilution Factor: 5				
Chromium	4.8	3.0	ug	SW846 6020	07/24-08/02/12	MVJMM1AE
		Dilution Factor: 5				
Lead	2.2 J	1.5	ug	SW846 6020	07/24-08/02/12	MVJMM1AF
		Dilution Factor: 5				

NOTE(S):

B Estimated resuk. Resuk is less than RL.

J Method blank contamination. The associated method blank contains the target analyte at a reportable level.

O'Brien & Gere Inc of North America

Client Sample ID: M29-SK-FB

TOTAL Metals

Lot-Sample #...: G2G110441-004 Matrix.....: AIR
Date Sampled...: 06/28/12 Date Received..: 07/10/12

PARAMETER	RESULT	REPORTING LIMIT	UNITS	METHOD	PREPARATION-ANALYSIS DATE	WORK ORDER #
Prep Batch #...: 2206113						
Arsenic	ND	3.0	ug	SW846 6020	07/24-08/02/12	MVJMN1AA
		Dilution Factor: 5				
Beryllium	ND	1.5	ug	SW846 6020	07/24-08/02/12	MVJMN1AC
		Dilution Factor: 5				
Cadmium	ND	1.5	ug	SW846 6020	07/24-08/02/12	MVJMN1AD
		Dilution Factor: 5				
Chromium	ND	3.0	ug	SW846 6020	07/24-08/02/12	MVJMN1AE
		Dilution Factor: 5				
Lead	0.71 B,J	1.5	ug	SW846 6020	07/24-08/02/12	MVJMN1AF
		Dilution Factor: 5				

NOTE(S):

B Estimated result. Result is less than RL.

J Method blank contamination. The associated method blank contains the target analyte at a reportable level.

SAMPLE DUPLICATE EVALUATION REPORT

Metals

Client Lot #...: G2G110441 Work Order #...: MVJMF-SMP MVJMF-DUP Matrix.....: AIR

Date Sampled...: 06/26/12 Date Received..: 07/10/12

PARAM	RESULT	DUPLICATE RESULT	UNITS	RPD	RPD LIMIT	METHOD	PREPARATION-ANALYSIS DATE	PREP BATCH #
Arsenic						SD Lot-Sample #:	G2G110441-001	
	ND	ND	ug	200	(0-15)	SW846 6020	07/24-08/02/12	2206113
			Dilution Factor: 5					
Beryllium						SD Lot-Sample #:	G2G110441-001	
	0.25 B	ND	ug	199	(0-15)	SW846 6020	07/24-08/02/12	2206113
			Dilution Factor: 5					
Cadmium						SD Lot-Sample #:	G2G110441-001	
	0.40 B	0.14 B	ug	93	(0-16)	SW846 6020	07/24-08/02/12	2206113
			Dilution Factor: 5					
Chromium						SD Lot-Sample #:	G2G110441-001	
	2.5 B	2.1 B	ug	14	(0-15)	SW846 6020	07/24-08/02/12	2206113
			Dilution Factor: 5					
Lead						SD Lot-Sample #:	G2G110441-001	
	3.4 J	3.2	ug	7.8	(0-15)	SW846 6020	07/24-08/02/12	2206113
			Dilution Factor: 5					

NOTE(S):

Calculations are performed before rounding to avoid round-off errors in calculated results.

B Estimated result. Result is less than RL.

J Method blank contamination. The associated method blank contains the target analyte at a reportable level.

O'Brien & Gere Inc of North America

Client Sample ID: M29-SK-R1

General Chemistry

Lot-Sample #...: G2G110441-001 Work Order #...: MVJMF Matrix.....: AIR
Date Sampled...: 06/26/12 Date Received..: 07/10/12

PARAMETER	RESULT	RL	UNITS	METHOD	PREPARATION-ANALYSIS DATE	PREP BATCH #
Particulates (Acetone)	0.0016	0.00050	g	CFR60A 5	07/16-07/17/12	2199080
	Dilution Factor: 1					
Particulates (Filter)	ND	0.0005	g	CFR60A 5	07/16-07/25/12	2207125
	Dilution Factor: 1					

O'Brien & Gere Inc of North America

Client Sample ID: M29-SK-R2

General Chemistry

Lot-Sample #...: G2G110441-002 Work Order #...: MVJML Matrix.....: AIR
Date Sampled...: 06/26/12 Date Received..: 07/10/12

PARAMETER	RESULT	RL	UNITS	METHOD	PREPARATION-ANALYSIS DATE	PREP BATCH #
Particulates (Acetone)	0.0040	0.00050	g	CFR60A 5	07/16-07/17/12	2199080
		Dilution Factor: 1				
Particulates (Filter)	0.0009	0.0005	g	CFR60A 5	07/16-07/25/12	2207125
		Dilution Factor: 1				

O'Brien & Gere Inc of North America

Client Sample ID: M29-SK-R3

General Chemistry

Lot-Sample #...: G2G110441-003 Work Order #...: MVJMM Matrix.....: AIR
Date Sampled...: 06/27/12 Date Received..: 07/10/12

PARAMETER	RESULT	RL	UNITS	METHOD	PREPARATION-ANALYSIS DATE	PREP BATCH #
Particulates (Acetone)	0.0026	0.00050	g	CFR60A 5	07/16-07/17/12	2199080
		Dilution Factor: 1				
Particulates (Filter)	ND	0.0005	g	CFR60A 5	07/16-07/25/12	2207125
		Dilution Factor: 1				

O'Brien & Gere Inc of North America

Client Sample ID: M29-SK-FB

General Chemistry

Lot-Sample #...: G2G110441-004 Work Order #...: MVJMN Matrix.....: AIR
Date Sampled...: 06/28/12 Date Received...: 07/10/12

PARAMETER	RESULT	RL	UNITS	METHOD	PREPARATION-ANALYSIS DATE	PREP BATCH #
Particulates (Acetone)	ND	0.00050	g	CFR60A 5	07/16-07/17/12	2199080
		Dilution Factor: 1				
Particulates (Filter)	0.0012	0.0005	g	CFR60A 5	07/16-07/25/12	2207125
		Dilution Factor: 1				

O'Brien & Gere Inc of North America

Client Sample ID: M5-TTU-R1

General Chemistry

Lot-Sample #...: G2G110441-005 Work Order #...: MVJMP Matrix.....: AIR
Date Sampled...: 06/27/12 Date Received..: 07/10/12

PARAMETER	RESULT	RL	UNITS	METHOD	PREPARATION-ANALYSIS DATE	PREP BATCH #
Particulates (Acetone)	0.0019	0.00050	g	CFR60A 5	07/16-07/17/12	2199080
	Dilution Factor: 1					
Particulates (Filter)	0.0006	0.0005	g	CFR60A 5	07/16-07/25/12	2207125
	Dilution Factor: 1					

O'Brien & Gere Inc of North America

Client Sample ID: M5-TTU-R2

General Chemistry

Lot-Sample #...: G2G110441-006 Work Order #...: MVJMQ Matrix.....: AIR
Date Sampled...: 06/27/12 Date Received..: 07/10/12

PARAMETER	RESULT	RL	UNITS	METHOD	PREPARATION-ANALYSIS DATE	PREP BATCH #
Particulates (Acetone)	0.0018	0.00050	g	CFR60A 5	07/16-07/17/12	2199080
	Dilution Factor: 1					
Particulates (Filter)	0.0008	0.0005	g	CFR60A 5	07/16-07/25/12	2207125
	Dilution Factor: 1					

O'Brien & Gere Inc of North America

Client Sample ID: M5-TTU-R3

General Chemistry

Lot-Sample #...: G2G110441-007 Work Order #...: MVJMR Matrix.....: AIR
Date Sampled...: 06/28/12 Date Received..: 07/10/12

PARAMETER	RESULT	RL	UNITS	METHOD	PREPARATION-ANALYSIS DATE	PREP BATCH #
Particulates (Acetone)	0.0020	0.00050	g	CFR60A 5	07/16-07/17/12	2199080
		Dilution Factor: 1				
Particulates (Filter)	0.0006	0.0005	g	CFR60A 5	07/16-07/25/12	2207125
		Dilution Factor: 1				

QC DATA ASSOCIATION SUMMARY

G2G110441

Sample Preparation and Analysis Control Numbers

SAMPLE#	MATRIX	ANALYTICAL METHOD	LEACH BATCH #	PREP BATCH #	MS RUN#
001	AIR	CFR60A 5		2207125	
	AIR	SW846 6020		2206113	2216044
	AIR	CFR60A 5		2199080	
002	AIR	CFR60A 5		2207125	
	AIR	SW846 6020		2206113	2212061
	AIR	CFR60A 5		2199080	
003	AIR	CFR60A 5		2207125	
	AIR	SW846 6020		2206113	2212061
	AIR	CFR60A 5		2199080	
004	AIR	CFR60A 5		2207125	
	AIR	SW846 6020		2206113	2212061
	AIR	CFR60A 5		2199080	
005	AIR	CFR60A 5		2207125	
	AIR	CFR60A 5		2199080	
006	AIR	CFR60A 5		2207125	
	AIR	CFR60A 5		2199080	
007	AIR	CFR60A 5		2207125	
	AIR	CFR60A 5		2199080	

METHOD BLANK REPORT

TOTAL Metals

Client Lot #...: G2G110441 Matrix.....: AIR

PARAMETER	RESULT	REPORTING LIMIT	UNITS	METHOD	PREPARATION-ANALYSIS DATE	WORK ORDER #
MB Lot-Sample #: G2G240000-113 **Prep Batch #...:** 2206113						
Arsenic	ND	0.60	ug	SW846 6020	07/24-08/02/12	MVQ451AA
		Dilution Factor: 1				
Beryllium	ND	0.30	ug	SW846 6020	07/24-08/02/12	MVQ451AC
		Dilution Factor: 1				
Cadmium	ND	0.30	ug	SW846 6020	07/24-08/02/12	MVQ451AD
		Dilution Factor: 1				
Chromium	ND	0.60	ug	SW846 6020	07/24-08/02/12	MVQ451AE
		Dilution Factor: 1				
Lead	**0.033 B**	**0.30**	**ug**	**SW846 6020**	**07/24-08/02/12**	**MVQ451AF**
		Dilution Factor: 1				

NOTE(S):

Calculations are performed before rounding to avoid round-off errors in calculated results.

B Estimated result. Result is less than RL.

LABORATORY CONTROL SAMPLE EVALUATION REPORT

TOTAL Metals

Lot-Sample #...: G2G110441 Matrix.....: AIR

PARAMETER	PERCENT RECOVERY	RECOVERY LIMITS	RPD	RPD LIMITS	METHOD	PREPARATION-ANALYSIS DATE	PREP-BATCH #
Arsenic	90	(79 - 110)			SW846 6020	07/24-08/02/12	2206113
	92	(79 - 110)	1.8	(0-15)	SW846 6020	07/24-08/02/12	2206113
		Dilution Factor: 1					
Beryllium	90	(70 - 110)			SW846 6020	07/24-08/02/12	2206113
	91	(70 - 110)	1.9	(0-15)	SW846 6020	07/24-08/02/12	2206113
		Dilution Factor: 1					
Cadmium	88	(79 - 110)			SW846 6020	07/24-08/02/12	2206113
	89	(79 - 110)	1.7	(0-16)	SW846 6020	07/24-08/02/12	2206113
		Dilution Factor: 1					
Chromium	93	(84 - 110)			SW846 6020	07/24-08/02/12	2206113
	95	(84 - 110)	1.8	(0-15)	SW846 6020	07/24-08/02/12	2206113
		Dilution Factor: 1					
Lead	93	(86 - 110)			SW846 6020	07/24-08/02/12	2206113
	95	(86 - 110)	3.0	(0-15)	SW846 6020	07/24-08/02/12	2206113
		Dilution Factor: 1					

NOTE(S):

Calculations are performed before rounding to avoid round-off errors in calculated results.

LABORATORY CONTROL SAMPLE DATA REPORT

TOTAL Metals

Lot-Sample #...: G2G110441 Matrix.....: AIR

PARAMETER	SPIKE AMOUNT	MEASURED AMOUNT	UNITS	PERCNT RECVRY	RPD	METHOD	PREPARATION-ANALYSIS DATE	PREP BATCH #
Arsenic	60.0	54.2	ug	90		SW846 6020	07/24-08/02/12	2206113
	60.0	55.2	ug	92	1.8	SW846 6020	07/24-08/02/12	2206113
			Dilution Factor: 1					
Beryllium	60.0	53.7	ug	90		SW846 6020	07/24-08/02/12	2206113
	60.0	54.7	ug	91	1.9	SW846 6020	07/24-08/02/12	2206113
			Dilution Factor: 1					
Cadmium	60.0	52.6	ug	88		SW846 6020	07/24-08/02/12	2206113
	60.0	53.5	ug	89	1.7	SW846 6020	07/24-08/02/12	2206113
			Dilution Factor: 1					
Chromium	60.0	55.7	ug	93		SW846 6020	07/24-08/02/12	2206113
	60.0	56.8	ug	95	1.8	SW846 6020	07/24-08/02/12	2206113
			Dilution Factor: 1					
Lead	60.0	55.6	ug	93		SW846 6020	07/24-08/02/12	2206113
	60.0	57.3	ug	95	3.0	SW846 6020	07/24-08/02/12	2206113
			Dilution Factor: 1					

NOTE(S):

Calculations are performed before rounding to avoid round-off errors in calculated results.

MATRIX SPIKE SAMPLE EVALUATION REPORT

TOTAL Metals

Client Lot #...: G2G110441 Matrix.....: AIR
Date Sampled...: 06/26/12 Date Received..: 07/10/12

PARAMETER	PERCENT RECOVERY	RECOVERY LIMITS	METHOD	PREPARATION-ANALYSIS DATE	WORK ORDER #
MS Lot-Sample #: G2G110441-001 **Prep Batch #...:** 2206113					
Arsenic	113 N	(79 - 110)	SW846 6020	07/24-08/02/12	MVJMF1AJ
		Dilution Factor: 5			
Beryllium	113 N	(70 - 110)	SW846 6020	07/24-08/02/12	MVJMF1AL
		Dilution Factor: 5			
Cadmium	110	(79 - 110)	SW846 6020	07/24-08/02/12	MVJMF1AN
		Dilution Factor: 5			
Chromium	118 N	(84 - 110)	SW846 6020	07/24-08/02/12	MVJMF1AQ
		Dilution Factor: 5			
Lead	120 N	(86 - 110)	SW846 6020	07/24-08/02/12	MVJMF1AT
		Dilution Factor: 5			

NOTE(S):

Calculations are performed before rounding to avoid round-off errors in calculated results.

N Spiked analyte recovery is outside stated control limits.

MATRIX SPIKE SAMPLE DATA REPORT

TOTAL Metals

Client Lot #...: G2G110441 **Matrix.....:** AIR
Date Sampled...: 06/26/12 **Date Received..:** 07/10/12

PARAMETER	SAMPLE AMOUNT	SPIKE AMT	MEASURED AMOUNT	UNITS	PERCENT RECOVERY	METHOD	PREPARATION-ANALYSIS DATE	WORK ORDER #
MS Lot-Sample #: G2G110441-001 **Prep Batch #...:** 2206113								
Arsenic	ND	60.0	67.9 N	ug	113	SW846 6020	07/24-08/02/12	MVJMF1AJ
			Dilution Factor: 5					
Beryllium	0.25	60.0	68.3 N	ug	113	SW846 6020	07/24-08/02/12	MVJMF1AL
			Dilution Factor: 5					
Cadmium	0.40	60.0	66.5	ug	110	SW846 6020	07/24-08/02/12	MVJMF1AN
			Dilution Factor: 5					
Chromium	2.5	60.0	73.1 N	ug	118	SW846 6020	07/24-08/02/12	MVJMF1AQ
			Dilution Factor: 5					
Lead	3.4	60.0	75.3 N	ug	120	SW846 6020	07/24-08/02/12	MVJMF1AT
			Dilution Factor: 5					

NOTE(S):

Calculations are performed before rounding to avoid round-off errors in calculated results.

N Spiked analyte recovery is outside stated control limits.

STEM

Sample Summary

TestAmerica West Sacramento Project Number G2F290450

WO#	Sample #	Client Sample ID	Sampling Date	Received Date
MVD8D	1	EC-SK-XAD-R1-TOP	6/26/2012	6/29/2012 09:10 AM
MVD8F	2	EC-SK-XAD-R1-BOTTOM	6/26/2012	6/29/2012 09:10 AM
MVD8G	3	EC-SK-IMP1-3-R1	6/26/2012	6/29/2012 09:10 AM
MVD8H	4	EC-SK-XAD-R2-TOP	6/26/2012	6/29/2012 09:10 AM
MVD8M	5	EC-SK-XAD-R2-BOTTOM	6/26/2012	6/29/2012 09:10 AM
MVD8N	6	EC-SK-IMP1-3-R2	6/26/2012	6/29/2012 09:10 AM
MVD8R	7	EC-SK-XAD-R3-TOP	6/26/2012	6/29/2012 09:10 AM
MVD8V	8	EC-SK-XAD-R3-BOTTOM	6/26/2012	6/29/2012 09:10 AM
MVD8W	9	EC-SK-IMP1-3-R3	6/26/2012	6/29/2012 09:10 AM
MVD8X	10	EC-TTU-XAD-R1-TOP	6/27/2012	6/29/2012 09:10 AM
MVD80	11	EC-TTU-XAD-R1-BOTTOM	6/27/2012	6/29/2012 09:10 AM
MVD81	12	EC-TTU-IMP1-3-R1	6/27/2012	6/29/2012 09:10 AM
MVD85	13	EC-TTU-XAD-R2-TOP	6/27/2012	6/29/2012 09:10 AM
MVD86	14	EC-TTU-XAD-R2-BOTTOM	6/27/2012	6/29/2012 09:10 AM
MVD88	15	EC-TTU-IMP1-3-R2	6/27/2012	6/29/2012 09:10 AM
MVD89	16	EC-TTU-XAD-R3-TOP	6/27/2012	6/29/2012 09:10 AM
MVD9A	17	EC-TTU-XAD-R3-BOTTOM	6/27/2012	6/29/2012 09:10 AM
MVD9C	18	EC-TTU-IMP1-3-R3	6/27/2012	6/29/2012 09:10 AM
MVD9D	19	EC-XAD-RB-TOP	6/28/2012	6/29/2012 09:10 AM
MVD9E	20	EC-XAD-RB-BOTTOM	6/28/2012	6/29/2012 09:10 AM
MVD9F	21	EC-WATER-RB	6/28/2012	6/29/2012 09:10 AM
MVD9G	22	EC-TB-XAD-TOP	6/27/2012	6/29/2012 09:10 AM
MVD9J	23	EC-TB-XAD-BOTTOM	6/27/2012	6/29/2012 09:10 AM
MVD9K	24	EC-TB-IMP1-3	6/27/2012	6/29/2012 09:10 AM
MVH6C	25	EC-SK-FHACNIT-R1	6/26/2012	7/10/2012 04:15 PM
MVH6D	26	EC-SK-FHACNIT-R2	6/26/2012	7/10/2012 04:15 PM
MVH6E	27	EC-SK-FHACNIT-R3	6/26/2012	7/10/2012 04:15 PM
MVH6F	28	EC-TTU-FHACNIT-R1	6/27/2012	7/10/2012 04:15 PM
MVH6H	29	EC-TTU-FHACNIT-R2	6/27/2012	7/10/2012 04:15 PM
MVH6J	30	EC-TTU-FHACNIT-R3	6/27/2012	7/10/2012 04:15 PM
MVH6K	31	EC-FHACNIT-RB	6/28/2012	7/10/2012 04:15 PM
MVH6L	32	EC-TB-FHACNIT	6/27/2012	7/10/2012 04:15 PM

Notes(s):

- The analytical results of the samples listed above are presented on the following pages.
- All calculations are performed before rounding to avoid round-off errors in calculated results.
- Results noted as "ND" were not detected at or above the stated limit.
- This report must not be reproduced, except in full, without the written approval of the laboratory.
- Results for the following parameters are never reported on a dry weight basis: color, corrosivity, density, flashpoint, ignitability, layers, odor, paint filter test, pH, porosity, pressure, reactivity, redox potential, specific gravity, spot tests, solids, solubility, temperature, viscosity, and weight.

EXECUTIVE SUMMARY - Detection Highlights

G2F290450

PARAMETER	RESULT	REPORTING LIMIT	UNITS	ANALYTICAL METHOD
EC-SK-XAD-R2-TOP 06/26/12 004				
2,6-Dinitrotoluene	1.8 PG	0.77	ug/sample	SW846 8330/8330A
EC-SK-XAD-R3-TOP 06/26/12 007				
2,6-Dinitrotoluene	2.0	0.76	ug/sample	SW846 8330/8330A
EC-TTU-XAD-R1-TOP 06/27/12 010				
2,6-Dinitrotoluene	3.0 PG	0.74	ug/sample	SW846 8330/8330A
HMX	0.48 J,PG	0.74	ug/sample	SW846 8330/8330A
EC-TTU-IMP1-3-R1 06/27/12 012				
RDX	67 E	0.050	ug/sample	SW846 8330/8330A
RDX	71 Q	0.25	ug/sample	SW846 8330/8330A
2,4,6-Trinitrotoluene	0.33	0.050	ug/sample	SW846 8330/8330A
EC-TTU-XAD-R2-TOP 06/27/12 013				
2,6-Dinitrotoluene	3.0 PG	0.77	ug/sample	SW846 8330/8330A
HMX	0.39 J,PG	0.77	ug/sample	SW846 8330/8330A
EC-TTU-IMP1-3-R2 06/27/12 015				
RDX	340 E	0.050	ug/sample	SW846 8330/8330A
RDX	400 Q	1.2	ug/sample	SW846 8330/8330A
2,4,6-Trinitrotoluene	0.44	0.050	ug/sample	SW846 8330/8330A
EC-TTU-XAD-R3-TOP 06/27/12 016				
HMX	0.48 J,PG	0.76	ug/sample	SW846 8330/8330A
EC-TTU-IMP1-3-R3 06/27/12 018				
RDX	350 E	0.050	ug/sample	SW846 8330/8330A
RDX	440 Q	1.2	ug/sample	SW846 8330/8330A
2,4,6-Trinitrotoluene	0.72	0.050	ug/sample	SW846 8330/8330A
EC-TTU-FHACNIT-R1 06/27/12 028				
RDX	2.1	0.60	ug/sample	SW846 8330/8330A

(Continued on next page)

EXECUTIVE SUMMARY - Detection Highlights

G2F290450

PARAMETER	RESULT	REPORTING LIMIT	UNITS	ANALYTICAL METHOD
EC-TTU-FHACNIT-R2 06/27/12 029				
RDX	2.3	0.85	ug/sample	SW846 8330/8330A
EC-TTU-FHACNIT-R3 06/28/12 030				
HMX	0.57	0.57	ug/sample	SW846 8330/8330A
RDX	2.1	0.57	ug/sample	SW846 8330/8330A

ANALYTICAL METHODS SUMMARY

G2F290450

PARAMETER	ANALYTICAL METHOD
Nitroaromatics and Nitramines by HPLC	SW846 8330/8330A

References:

SW846 "Test Methods for Evaluating Solid Waste, Physical/Chemical Methods", Third Edition, November 1986 and its updates.

METHOD / ANALYST SUMMARY

G2F290450

ANALYTICAL METHOD	ANALYST	ANALYST ID
SW846 8330/8330A	Robyn Noonan	003024

References:

SW846 "Test Methods for Evaluating Solid Waste, Physical/Chemical Methods", Third Edition, November 1986 and its updates.

O'Brien & Gere Inc of North America

Client Sample ID: EC-SK-XAD-R1-TOP

HPLC

Lot-Sample #...: G2F290450-001 Work Order #...: MVD8D1AA Matrix.....: AIR
Date Sampled...: 06/26/12 Date Received..: 06/29/12
Prep Date.....: 07/02/12 Analysis Date..: 07/17/12
Prep Batch #...: 2184063
Dilution Factor: 0.63 Method.....: SW846 8330/8330A

PARAMETER	RESULT	REPORTING LIMIT	UNITS
2,4-Dinitrotoluene	ND	0.76	ug/sample
2,6-Dinitrotoluene	ND	0.76	ug/sample
HMX	ND	0.76	ug/sample
Nitroglycerin	ND	3.0	ug/sample
RDX	ND	0.76	ug/sample
2,4,6-Trinitrotoluene	ND	0.76	ug/sample

SURROGATE	PERCENT RECOVERY	RECOVERY LIMITS
3,4-Dinitrotoluene	73	(50 - 150)

O'Brien & Gere Inc of North America

Client Sample ID: EC-SK-IMP1-3-R1

HPLC

Lot-Sample #...: G2F290450-003 Work Order #...: MVD8G1AA Matrix.....: AIR
Date Sampled...: 06/26/12 Date Received..: 06/29/12
Prep Date.....: 07/02/12 Analysis Date..: 07/17/12
Prep Batch #...: 2184030
Dilution Factor: 1 Method.....: SW846 8330/8330A

PARAMETER	RESULT	REPORTING LIMIT	UNITS
2,4-Dinitrotoluene	ND	0.050	ug/sample
2,6-Dinitrotoluene	ND	0.050	ug/sample
HMX	ND	0.050	ug/sample
Nitroglycerin	ND	0.20	ug/sample
RDX	ND	0.050	ug/sample
2,4,6-Trinitrotoluene	ND	0.050	ug/sample

SURROGATE	PERCENT RECOVERY	RECOVERY LIMITS
3,4-Dinitrotoluene	101	(50 - 150)

O'Brien & Gere Inc of North America

Client Sample ID: EC-SK-XAD-R2-TOP

HPLC

Lot-Sample #...: G2F290450-004 Work Order #...: MVD8H1AA Matrix.....: AIR
Date Sampled...: 06/26/12 Date Received..: 06/29/12
Prep Date.....: 07/02/12 Analysis Date..: 07/17/12
Prep Batch #...: 2184063
Dilution Factor: 0.64 Method.....: SW846 8330/8330A

PARAMETER	RESULT	REPORTING LIMIT	UNITS
2,4-Dinitrotoluene	ND	0.77	ug/sample
2,6-Dinitrotoluene	**1.8 PG**	**0.77**	**ug/sample**
HMX	ND	0.77	ug/sample
Nitroglycerin	ND	3.1	ug/sample
RDX	ND	0.77	ug/sample
2,4,6-Trinitrotoluene	ND	0.77	ug/sample

SURROGATE	PERCENT RECOVERY	RECOVERY LIMITS
3,4-Dinitrotoluene	74	(50 - 150)

NOTE(S):

PG The percent difference between the original and confirmation analyses is greater than 40%.

O'Brien & Gere Inc of North America

Client Sample ID: EC-SK-IMP1-3-R2

HPLC

Lot-Sample #...: G2F290450-006 Work Order #...: MVD8N1AA Matrix.....: AIR
Date Sampled...: 06/26/12 Date Received..: 06/29/12
Prep Date.....: 07/02/12 Analysis Date..: 07/17/12
Prep Batch #...: 2184030
Dilution Factor: 1 Method.....: SW846 8330/8330A

PARAMETER	RESULT	REPORTING LIMIT	UNITS
2,4-Dinitrotoluene	ND	0.050	ug/sample
2,6-Dinitrotoluene	ND	0.050	ug/sample
HMX	ND	0.050	ug/sample
Nitroglycerin	ND	0.20	ug/sample
RDX	ND	0.050	ug/sample
2,4,6-Trinitrotoluene	ND	0.050	ug/sample

SURROGATE	PERCENT RECOVERY	RECOVERY LIMITS
3,4-Dinitrotoluene	103	(50 - 150)

O'Brien & Gere Inc of North America

Client Sample ID: EC-SK-XAD-R3-TOP

HPLC

Lot-Sample #...: G2F290450-007 Work Order #...: MVD8R1AA Matrix.....: AIR
Date Sampled...: 06/26/12 Date Received..: 06/29/12
Prep Date.....: 07/02/12 Analysis Date..: 07/17/12
Prep Batch #...: 2184063
Dilution Factor: 0.63 Method.....: SW846 8330/8330A

PARAMETER	RESULT	REPORTING LIMIT	UNITS
2,4-Dinitrotoluene	ND	0.76	ug/sample
2,6-Dinitrotoluene	2.0	0.76	ug/sample
HMX	ND	0.76	ug/sample
Nitroglycerin	ND	3.0	ug/sample
RDX	ND	0.76	ug/sample
2,4,6-Trinitrotoluene	ND	0.76	ug/sample

SURROGATE	PERCENT RECOVERY	RECOVERY LIMITS
3,4-Dinitrotoluene	72	(50 - 150)

O'Brien & Gere Inc of North America

Client Sample ID: EC-SK-IMP1-3-R3

HPLC

Lot-Sample #...: G2F290450-009
Date Sampled...: 06/26/12
Prep Date.....: 07/02/12
Prep Batch #...: 2184030
Dilution Factor: 1

Work Order #...: MVD8W1AA
Date Received..: 06/29/12
Analysis Date..: 07/17/12

Matrix.....: AIR

Method.....: SW846 8330/8330A

PARAMETER	RESULT	REPORTING LIMIT	UNITS
2,4-Dinitrotoluene	ND	0.050	ug/sample
2,6-Dinitrotoluene	ND	0.050	ug/sample
HMX	ND	0.050	ug/sample
Nitroglycerin	ND	0.20	ug/sample
RDX	ND	0.050	ug/sample
2,4,6-Trinitrotoluene	ND	0.050	ug/sample

SURROGATE	PERCENT RECOVERY	RECOVERY LIMITS
3,4-Dinitrotoluene	105	(50 - 150)

O'Brien & Gere Inc of North America

Client Sample ID: EC-TTU-XAD-R1-TOP

HPLC

Lot-Sample #...: G2F290450-010 Work Order #...: MVD8X1AA Matrix.....: AIR
Date Sampled...: 06/27/12 Date Received..: 06/29/12
Prep Date.....: 07/02/12 Analysis Date..: 07/17/12
Prep Batch #...: 2184063
Dilution Factor: 0.62 Method.....: SW846 8330/8330A

PARAMETER	RESULT	REPORTING LIMIT	UNITS
2,4-Dinitrotoluene	ND	0.74	ug/sample
2,6-Dinitrotoluene	3.0 PG	0.74	ug/sample
HMX	0.48 J,PG	0.74	ug/sample
Nitroglycerin	ND	3.0	ug/sample
RDX	ND	0.74	ug/sample
2,4,6-Trinitrotoluene	ND	0.74	ug/sample

SURROGATE	PERCENT RECOVERY	RECOVERY LIMITS
3,4-Dinitrotoluene	70	(50 - 150)

NOTE(S):

PG The percent difference between the original and confirmation analyses is greater than 40%.

J Estimated result. Result is less than RL.

O'Brien & Gere Inc of North America

Client Sample ID: EC-TTU-IMP1-3-R1

HPLC

Lot-Sample #...: G2F290450-012 Work Order #...: MVD811AA Matrix.....: AIR
Date Sampled...: 06/27/12 Date Received..: 06/29/12
Prep Date.....: 07/02/12 Analysis Date..: 07/17/12
Prep Batch #...: 2184030
Dilution Factor: 1 Method.....: SW846 8330/8330A

PARAMETER	RESULT	REPORTING LIMIT	UNITS
2,4-Dinitrotoluene	ND	0.050	ug/sample
2,6-Dinitrotoluene	ND	0.050	ug/sample
HMX	ND	0.050	ug/sample
Nitroglycerin	ND	0.20	ug/sample
RDX	67 E	0.050	ug/sample
2,4,6-Trinitrotoluene	0.33	0.050	ug/sample

SURROGATE	PERCENT RECOVERY	RECOVERY LIMITS
3,4-Dinitrotoluene	98	(50 - 150)

NOTE(S):

E Estimated result. Result concentration exceeds the calibration range.

O'Brien & Gere Inc of North America

Client Sample ID: EC-TTU-IMP1-3-R1

HPLC

Lot-Sample #...:	G2F290450-012	Work Order #...:	MVD812AA	Matrix.....:	AIR
Date Sampled...:	06/27/12	Date Received..:	06/29/12		
Prep Date.....:	07/02/12	Analysis Date..:	07/18/12		
Prep Batch #...:	2184030				
Dilution Factor:	5	Method.....:	SW846 8330/8330A		

PARAMETER	RESULT	REPORTING LIMIT	UNITS
RDX	71 Q	0.25	ug/sample

SURROGATE	PERCENT RECOVERY	RECOVERY LIMITS
3,4-Dinitrotoluene	86	(50 - 150)

NOTE(S):

Q Elevated reporting limit. The reporting limit is elevated due to high analyte levels.

O'Brien & Gere Inc of North America

Client Sample ID: EC-TTU-XAD-R2-TOP

HPLC

Lot-Sample #...: G2F290450-013 Work Order #...: MVD851AA Matrix.....: AIR
Date Sampled...: 06/27/12 Date Received..: 06/29/12
Prep Date.....: 07/02/12 Analysis Date..: 07/17/12
Prep Batch #...: 2184063
Dilution Factor: 0.64 Method.....: SW846 8330/8330A

PARAMETER	RESULT	REPORTING LIMIT	UNITS
2,4-Dinitrotoluene	ND	0.77	ug/sample
2,6-Dinitrotoluene	**3.0 PG**	**0.77**	**ug/sample**
HMX	**0.39 J,PG**	**0.77**	**ug/sample**
Nitroglycerin	ND	3.1	ug/sample
RDX	ND	0.77	ug/sample
2,4,6-Trinitrotoluene	ND	0.77	ug/sample

SURROGATE	PERCENT RECOVERY	RECOVERY LIMITS
3,4-Dinitrotoluene	70	(50 - 150)

NOTE(S):

PG The percent difference between the original and confirmation analyses is greater than 40%.

J Estimated result. Result is less than RL.

O'Brien & Gere Inc of North America

Client Sample ID: EC-TTU-IMP1-3-R2

HPLC

Lot-Sample #...: G2F290450-015 Work Order #...: MVD881AA Matrix.....: AIR
Date Sampled...: 06/27/12 Date Received..: 06/29/12
Prep Date.....: 07/02/12 Analysis Date..: 07/17/12
Prep Batch #...: 2184030
Dilution Factor: 1 Method.....: SW846 8330/8330A

PARAMETER	RESULT	REPORTING LIMIT	UNITS
2,4-Dinitrotoluene	ND	0.050	ug/sample
2,6-Dinitrotoluene	ND	0.050	ug/sample
HMX	ND	0.050	ug/sample
Nitroglycerin	ND	0.20	ug/sample
RDX	**340 E**	**0.050**	**ug/sample**
2,4,6-Trinitrotoluene	**0.44**	**0.050**	**ug/sample**

SURROGATE	PERCENT RECOVERY	RECOVERY LIMITS
3,4-Dinitrotoluene	86	(50 - 150)

NOTE(S):

E Estimated result. Result concentration exceeds the calibration range.

O'Brien & Gere Inc of North America

Client Sample ID: EC-TTU-IMP1-3-R2

HPLC

Lot-Sample #...:	G2F290450-015	Work Order #...:	MVD882AA	Matrix.....:	AIR
Date Sampled...:	06/27/12	Date Received..:	06/29/12		
Prep Date.....:	07/02/12	Analysis Date..:	07/27/12		
Prep Batch #...:	2184030				
Dilution Factor:	25	Method.....:	SW846 8330/8330A		

PARAMETER	RESULT	REPORTING LIMIT	UNITS
RDX	400 Q	1.2	ug/sample

SURROGATE	PERCENT RECOVERY	RECOVERY LIMITS
3,4-Dinitrotoluene	0.0 SRD,*	(50 - 150)

NOTE(S):

SRD The surrogate recovery was not calculated because the extract was diluted beyond the ability to quantitate a recovery.

* Surrogate recovery is outside stated control limits.

Q Elevated reporting limit. The reporting limit is elevated due to high analyte levels.

O'Brien & Gere Inc of North America

Client Sample ID: EC-TTU-XAD-R3-TOP

HPLC

Lot-Sample #...: G2F290450-016 Work Order #...: MVD891AA Matrix.....: AIR
Date Sampled...: 06/27/12 Date Received..: 06/29/12
Prep Date.....: 07/02/12 Analysis Date..: 07/18/12
Prep Batch #...: 2184063
Dilution Factor: 0.63 Method.....: SW846 8330/8330A

PARAMETER	RESULT	REPORTING LIMIT	UNITS
2,4-Dinitrotoluene	ND	0.76	ug/sample
2,6-Dinitrotoluene	ND	0.76	ug/sample
HMX	0.48 J,PG	0.76	ug/sample
Nitroglycerin	ND	3.0	ug/sample
RDX	ND	0.76	ug/sample
2,4,6-Trinitrotoluene	ND	0.76	ug/sample

SURROGATE	PERCENT RECOVERY	RECOVERY LIMITS
3,4-Dinitrotoluene	71	(50 - 150)

NOTE(S):

J Estimated result. Result is less than RL.

PG The percent difference between the original and confirmation analyses is greater than 40%.

O'Brien & Gere Inc of North America

Client Sample ID: EC-TTU-IMP1-3-R3

HPLC

Lot-Sample #...: G2F290450-018 Work Order #...: MVD9C1AA Matrix.....: AIR
Date Sampled...: 06/27/12 Date Received..: 06/29/12
Prep Date.....: 07/02/12 Analysis Date..: 07/17/12
Prep Batch #...: 2184030
Dilution Factor: 1 Method.....: SW846 8330/8330A

PARAMETER	RESULT	REPORTING LIMIT	UNITS
2,4-Dinitrotoluene	ND	0.050	ug/sample
2,6-Dinitrotoluene	ND	0.050	ug/sample
HMX	ND	0.050	ug/sample
Nitroglycerin	ND	0.20	ug/sample
RDX	350 E	0.050	ug/sample
2,4,6-Trinitrotoluene	0.72	0.050	ug/sample

SURROGATE	PERCENT RECOVERY	RECOVERY LIMITS
3,4-Dinitrotoluene	79	(50 - 150)

NOTE(S):

E Estimated result. Result concentration exceeds the calibration range.

O'Brien & Gere Inc of North America

Client Sample ID: EC-TTU-IMP1-3-R3

HPLC

Lot-Sample #...: G2F290450-018 Work Order #...: MVD9C2AA Matrix.....: AIR
Date Sampled...: 06/27/12 Date Received..: 06/29/12
Prep Date.....: 07/02/12 Analysis Date..: 07/18/12
Prep Batch #...: 2184030
Dilution Factor: 25 Method.....: SW846 8330/8330A

PARAMETER	RESULT	REPORTING LIMIT	UNITS
RDX	440 Q	1.2	ug/sample

SURROGATE	PERCENT RECOVERY	RECOVERY LIMITS
3,4-Dinitrotoluene	0.0 SRD,*	(50 - 150)

NOTE(S):

SRD The surrogate recovery was not calculated because the extract was diluted beyond the ability to quantitate a recovery.

* Surrogate recovery is outside stated control limits.

Q Elevated reporting limit. The reporting limit is elevated due to high analyte levels.

O'Brien & Gere Inc of North America

Client Sample ID: EC-XAD-RB-TOP

HPLC

Lot-Sample #...: G2F290450-019
Date Sampled...: 06/28/12
Prep Date.....: 07/02/12
Prep Batch #...: 2184063
Dilution Factor: 0.63

Work Order #...: MVD9D1AA
Date Received..: 06/29/12
Analysis Date..: 07/18/12
Method.....: SW846 8330/8330A

Matrix.....: AIR

PARAMETER	RESULT	REPORTING LIMIT	UNITS
2,4-Dinitrotoluene	ND	0.76	ug/sample
2,6-Dinitrotoluene	ND	0.76	ug/sample
HMX	ND	0.76	ug/sample
Nitroglycerin	ND	3.0	ug/sample
RDX	ND	0.76	ug/sample
2,4,6-Trinitrotoluene	ND	0.76	ug/sample

SURROGATE	PERCENT RECOVERY	RECOVERY LIMITS
3,4-Dinitrotoluene	72	(50 - 150)

O'Brien & Gere Inc of North America

Client Sample ID: EC-WATER-RB

HPLC

Lot-Sample #...: G2F290450-021 Work Order #...: MVD9F1AA Matrix.....: AIR
Date Sampled...: 06/28/12 Date Received..: 06/29/12
Prep Date.....: 07/02/12 Analysis Date..: 07/17/12
Prep Batch #...: 2184030
Dilution Factor: 1 Method.....: SW846 8330/8330A

PARAMETER	RESULT	REPORTING LIMIT	UNITS
2,4-Dinitrotoluene	ND	0.050	ug/sample
2,6-Dinitrotoluene	ND	0.050	ug/sample
HMX	ND	0.050	ug/sample
Nitroglycerin	ND	0.20	ug/sample
RDX	ND	0.050	ug/sample
2,4,6-Trinitrotoluene	ND	0.050	ug/sample

SURROGATE	PERCENT RECOVERY	RECOVERY LIMITS
3,4-Dinitrotoluene	100	(50 - 150)

O'Brien & Gere Inc of North America

Client Sample ID: EC-TB-XAD-TOP

HPLC

Lot-Sample #...: G2F290450-022 Work Order #...: MVD9G1AA Matrix.....: AIR
Date Sampled...: 06/27/12 Date Received..: 06/29/12
Prep Date.....: 07/02/12 Analysis Date..: 07/18/12
Prep Batch #...: 2184063
Dilution Factor: 0.66 Method.....: SW846 8330/8330A

PARAMETER	RESULT	REPORTING LIMIT	UNITS
2,4-Dinitrotoluene	ND	0.79	ug/sample
2,6-Dinitrotoluene	ND	0.79	ug/sample
HMX	ND	0.79	ug/sample
Nitroglycerin	ND	3.2	ug/sample
RDX	ND	0.79	ug/sample
2,4,6-Trinitrotoluene	ND	0.79	ug/sample

SURROGATE	PERCENT RECOVERY	RECOVERY LIMITS
3,4-Dinitrotoluene	76	(50 - 150)

O'Brien & Gere Inc of North America

Client Sample ID: EC-TB-IMP1-3

HPLC

Lot-Sample #...: G2F290450-024 Work Order #...: MVD9K1AA Matrix.....: AIR
Date Sampled...: 06/27/12 Date Received..: 06/29/12
Prep Date.....: 07/02/12 Analysis Date..: 07/17/12
Prep Batch #...: 2184030
Dilution Factor: 1 Method.....: SW846 8330/8330A

PARAMETER	RESULT	REPORTING LIMIT	UNITS
2,4-Dinitrotoluene	ND	0.050	ug/sample
2,6-Dinitrotoluene	ND	0.050	ug/sample
HMX	ND	0.050	ug/sample
Nitroglycerin	ND	0.20	ug/sample
RDX	ND	0.050	ug/sample
2,4,6-Trinitrotoluene	ND	0.050	ug/sample

SURROGATE	PERCENT RECOVERY	RECOVERY LIMITS
3,4-Dinitrotoluene	102	(50 - 150)

O'Brien & Gere Inc of North America

Client Sample ID: EC-SK-FHACNIT-R1

Dissolved HPLC

Lot-Sample #...: G2F290450-025 Work Order #...: MVH6C1AA Matrix.....: AIR
Date Sampled...: 06/26/12 Date Received..: 07/10/12
Prep Date.....: 07/16/12 Analysis Date..: 07/18/12
Prep Batch #...: 2198112
Dilution Factor: 0.71 Method.....: SW846 8330/8330A

PARAMETER	RESULT	REPORTING LIMIT	UNITS
2,4-Dinitrotoluene	ND	0.53	ug/sample
2,6-Dinitrotoluene	ND	0.53	ug/sample
HMX	ND	0.53	ug/sample
Nitroglycerin	ND	2.1	ug/sample
RDX	ND	0.53	ug/sample
2,4,6-Trinitrotoluene	ND	0.53	ug/sample

O'Brien & Gere Inc of North America

Client Sample ID: EC-SK-FHACNIT-R2

Dissolved HPLC

Lot-Sample #...: G2F290450-026 Work Order #...: MVH6D1AA Matrix.....: AIR
Date Sampled...: 06/26/12 Date Received..: 07/10/12
Prep Date.....: 07/16/12 Analysis Date..: 07/18/12
Prep Batch #...: 2198112
Dilution Factor: 0.67 Method.....: SW846 8330/8330A

PARAMETER	RESULT	REPORTING LIMIT	UNITS
2,4-Dinitrotoluene	ND	0.50	ug/sample
2,6-Dinitrotoluene	ND	0.50	ug/sample
HMX	ND	0.50	ug/sample
Nitroglycerin	ND	2.0	ug/sample
RDX	ND	0.50	ug/sample
2,4,6-Trinitrotoluene	ND	0.50	ug/sample

O'Brien & Gere Inc of North America

Client Sample ID: EC-SK-FHACNIT-R3

Dissolved HPLC

Lot-Sample #...: G2F290450-027 Work Order #...: MVH6E1AA Matrix.....: AIR
Date Sampled...: 06/26/12 Date Received..: 07/10/12
Prep Date.....: 07/16/12 Analysis Date..: 07/18/12
Prep Batch #...: 2198112
Dilution Factor: 0.64 Method.....: SW846 8330/8330A

PARAMETER	RESULT	REPORTING LIMIT	UNITS
2,4-Dinitrotoluene	ND	0.48	ug/sample
2,6-Dinitrotoluene	ND	0.48	ug/sample
HMX	ND	0.48	ug/sample
Nitroglycerin	ND	1.9	ug/sample
RDX	ND	0.48	ug/sample
2,4,6-Trinitrotoluene	ND	0.48	ug/sample

O'Brien & Gere Inc of North America

Client Sample ID: EC-TTU-FHACNIT-R1

Dissolved HPLC

Lot-Sample #...: G2F290450-028 Work Order #...: MVH6F1AA Matrix.....: AIR
Date Sampled...: 06/27/12 Date Received..: 07/10/12
Prep Date.....: 07/16/12 Analysis Date..: 07/18/12
Prep Batch #...: 2198112
Dilution Factor: 0.8 Method.....: SW846 8330/8330A

PARAMETER	RESULT	REPORTING LIMIT	UNITS
2,4-Dinitrotoluene	ND	0.60	ug/sample
2,6-Dinitrotoluene	ND	0.60	ug/sample
HMX	ND	0.60	ug/sample
Nitroglycerin	ND	2.4	ug/sample
RDX	**2.1**	**0.60**	**ug/sample**
2,4,6-Trinitrotoluene	ND	0.60	ug/sample

O'Brien & Gere Inc of North America

Client Sample ID: EC-TTU-FHACNIT-R2

Dissolved HPLC

Lot-Sample #...: G2F290450-029 Work Order #...: MVH6H1AA Matrix.....: AIR
Date Sampled...: 06/27/12 Date Received..: 07/10/12
Prep Date.....: 07/16/12 Analysis Date..: 07/18/12
Prep Batch #...: 2198112
Dilution Factor: 1.13 Method.....: SW846 8330/8330A

PARAMETER	RESULT	REPORTING LIMIT	UNITS
2,4-Dinitrotoluene	ND	0.85	ug/sample
2,6-Dinitrotoluene	ND	0.85	ug/sample
HMX	ND	0.85	ug/sample
Nitroglycerin	ND	3.4	ug/sample
RDX	2.3	0.85	ug/sample
2,4,6-Trinitrotoluene	ND	0.85	ug/sample

O'Brien & Gere Inc of North America

Client Sample ID: EC-TTU-FHACNIT-R3

Dissolved HPLC

Lot-Sample #...: G2F290450-030 Work Order #...: MVH6J1AA Matrix.....: AIR
Date Sampled...: 06/27/12 Date Received..: 07/10/12
Prep Date.....: 07/16/12 Analysis Date..: 07/18/12
Prep Batch #...: 2198112
Dilution Factor: 0.76 Method.....: SW846 8330/8330A

PARAMETER	RESULT	REPORTING LIMIT	UNITS
2,4-Dinitrotoluene	ND	0.57	ug/sample
2,6-Dinitrotoluene	ND	0.57	ug/sample
HMX	**0.57**	**0.57**	**ug/sample**
Nitroglycerin	ND	2.3	ug/sample
RDX	**2.1**	**0.57**	**ug/sample**
2,4,6-Trinitrotoluene	ND	0.57	ug/sample

O'Brien & Gere Inc of North America

Client Sample ID: EC-FHACNIT-RB

Dissolved HPLC

Lot-Sample #...: G2F290450-031 Work Order #...: MVH6K1AA Matrix.....: AIR
Date Sampled...: 06/28/12 Date Received..: 07/10/12
Prep Date.....: 07/16/12 Analysis Date..: 07/18/12
Prep Batch #...: 2198112
Dilution Factor: 0.84 Method.....: SW846 8330/8330A

PARAMETER	RESULT	REPORTING LIMIT	UNITS
2,4-Dinitrotoluene	ND	0.63	ug/sample
2,6-Dinitrotoluene	ND	0.63	ug/sample
HMX	ND	0.63	ug/sample
Nitroglycerin	ND	2.5	ug/sample
RDX	ND	0.63	ug/sample
2,4,6-Trinitrotoluene	ND	0.63	ug/sample

O'Brien & Gere Inc of North America

Client Sample ID: EC-TB-FHACNIT

Dissolved HPLC

Lot-Sample #...: G2F290450-032 Work Order #...: MVH6L1AA Matrix.....: AIR
Date Sampled...: 06/27/12 Date Received..: 07/10/12
Prep Date.....: 07/16/12 Analysis Date..: 07/18/12
Prep Batch #...: 2198112
Dilution Factor: 0.68 Method.....: SW846 8330/8330A

PARAMETER	RESULT	REPORTING LIMIT	UNITS
2,4-Dinitrotoluene	ND	0.51	ug/sample
2,6-Dinitrotoluene	ND	0.51	ug/sample
HMX	ND	0.51	ug/sample
Nitroglycerin	ND	2.0	ug/sample
RDX	ND	0.51	ug/sample
2,4,6-Trinitrotoluene	ND	0.51	ug/sample

QC DATA ASSOCIATION SUMMARY

G2F290450

Sample Preparation and Analysis Control Numbers

SAMPLE#	MATRIX	ANALYTICAL METHOD	LEACH BATCH #	PREP BATCH #	MS RUN#
001	AIR	SW846 8330/8330A		2184063	
003	AIR	SW846 8330/8330A		2184030	
004	AIR	SW846 8330/8330A		2184063	
006	AIR	SW846 8330/8330A		2184030	
007	AIR	SW846 8330/8330A		2184063	
009	AIR	SW846 8330/8330A		2184030	
010	AIR	SW846 8330/8330A		2184063	
012	AIR	SW846 8330/8330A		2184030	
013	AIR	SW846 8330/8330A		2184063	
015	AIR	SW846 8330/8330A		2184030	
016	AIR	SW846 8330/8330A		2184063	
018	AIR	SW846 8330/8330A		2184030	
019	AIR	SW846 8330/8330A		2184063	
021	AIR	SW846 8330/8330A		2184030	
022	AIR	SW846 8330/8330A		2184063	
024	AIR	SW846 8330/8330A		2184030	
025	AIR	SW846 8330/8330A		2198112	
026	AIR	SW846 8330/8330A		2198112	
027	AIR	SW846 8330/8330A		2198112	
028	AIR	SW846 8330/8330A		2198112	
029	AIR	SW846 8330/8330A		2198112	

(Continued on next page)

QC DATA ASSOCIATION SUMMARY

G2F290450

Sample Preparation and Analysis Control Numbers

SAMPLE#	MATRIX	ANALYTICAL METHOD	LEACH BATCH #	PREP BATCH #	MS RUN#
030	AIR	SW846 8330/8330A		2198112	
031	AIR	SW846 8330/8330A		2198112	
032	AIR	SW846 8330/8330A		2198112	

METHOD BLANK REPORT

HPLC

Client Lot #...: G2F290450 Work Order #...: MVEK91AA Matrix.....: AIR
MB Lot-Sample #: G2G020000-030

Prep Date.....: 07/02/12
Analysis Date..: 07/17/12 Prep Batch #...: 2184030
Dilution Factor: 1

PARAMETER	RESULT	REPORTING LIMIT	UNITS	METHOD
2,4-Dinitrotoluene	ND	0.050	ug/sample	SW846 8330/8330A
2,6-Dinitrotoluene	ND	0.050	ug/sample	SW846 8330/8330A
HMX	ND	0.050	ug/sample	SW846 8330/8330A
Nitroglycerin	ND	0.20	ug/sample	SW846 8330/8330A
RDX	ND	0.050	ug/sample	SW846 8330/8330A
2,4,6-Trinitrotoluene	ND	0.050	ug/sample	SW846 8330/8330A

SURROGATE	PERCENT RECOVERY	RECOVERY LIMITS
3,4-Dinitrotoluene	103	(50 - 150)

NOTE(S):

Calculations are performed before rounding to avoid round-off errors in calculated results.

METHOD BLANK REPORT

HPLC

Client Lot #...: G2F290450 **Work Order #...:** MVEQG1AA **Matrix.....:** AIR
MB Lot-Sample #: G2G020000-063

Prep Date.....: 07/02/12
Analysis Date..: 07/17/12 **Prep Batch #...:** 2184063
Dilution Factor: 1

PARAMETER	RESULT	REPORTING LIMIT	UNITS	METHOD
2,4-Dinitrotoluene	ND	1.2	ug/sample	SW846 8330/8330A
2,6-Dinitrotoluene	ND	1.2	ug/sample	SW846 8330/8330A
HMX	ND	1.2	ug/sample	SW846 8330/8330A
Nitroglycerin	ND	4.8	ug/sample	SW846 8330/8330A
RDX	ND	1.2	ug/sample	SW846 8330/8330A
2,4,6-Trinitrotoluene	ND	1.2	ug/sample	SW846 8330/8330A

SURROGATE	PERCENT RECOVERY	RECOVERY LIMITS
3,4-Dinitrotoluene	75	(50 - 150)

NOTE(S):

Calculations are performed before rounding to avoid round-off errors in calculated results.

METHOD BLANK REPORT

HPLC

Client Lot #...: G2F290450 **Work Order #...:** MVLGX1AA **Matrix.....:** AIR
MB Lot-Sample #: G2G160000-112

Prep Date.....: 07/16/12
Analysis Date..: 07/18/12 **Prep Batch #...:** 2198112
Dilution Factor: 1

PARAMETER	RESULT	REPORTING LIMIT	UNITS	METHOD
2,4-Dinitrotoluene	ND	0.75	ug/sample	SW846 8330/8330A
2,6-Dinitrotoluene	ND	0.75	ug/sample	SW846 8330/8330A
HMX	ND	0.75	ug/sample	SW846 8330/8330A
Nitroglycerin	ND	3.0	ug/sample	SW846 8330/8330A
RDX	ND	0.75	ug/sample	SW846 8330/8330A
2,4,6-Trinitrotoluene	ND	0.75	ug/sample	SW846 8330/8330A

NOTE(S):

Calculations are performed before rounding to avoid round-off errors in calculated results.

LABORATORY CONTROL SAMPLE EVALUATION REPORT

HPLC

Client Lot #...: G2F290450 Work Order #...: MVEK91AC-LCS Matrix.....: AIR
LCS Lot-Sample#: G2G020000-030 MVEK91AD-LCSD
Prep Date.....: 07/02/12 Analysis Date..: 07/17/12
Prep Batch #...: 2184030
Dilution Factor: 1

PARAMETER	PERCENT RECOVERY	RECOVERY LIMITS	RPD	RPD LIMITS	METHOD
2,4-Dinitrotoluene	104	(50 - 150)			SW846 8330/8330A
	104	(50 - 150)	0.24	(0-50)	SW846 8330/8330A
2,6-Dinitrotoluene	103	(50 - 150)			SW846 8330/8330A
	104	(50 - 150)	0.19	(0-50)	SW846 8330/8330A
HMX	100	(50 - 150)			SW846 8330/8330A
	100	(50 - 150)	0.0	(0-50)	SW846 8330/8330A
Nitroglycerin	113	(50 - 150)			SW846 8330/8330A
	139	(50 - 150)	21	(0-50)	SW846 8330/8330A
RDX	112	(50 - 150)			SW846 8330/8330A
	111	(50 - 150)	1.1	(0-50)	SW846 8330/8330A
2,4,6-Trinitrotoluene	93	(50 - 150)			SW846 8330/8330A
	93	(50 - 150)	0.050	(0-50)	SW846 8330/8330A

SURROGATE	PERCENT RECOVERY	RECOVERY LIMITS
3,4-Dinitrotoluene	104	(50 - 150)
	104	(50 - 150)

NOTE(S):

Calculations are performed before rounding to avoid round-off errors in calculated results.

Bold print denotes control parameters

LABORATORY CONTROL SAMPLE DATA REPORT

HPLC

Client Lot #...: G2F290450
LCS Lot-Sample#: G2G020000-030
Prep Date.....: 07/02/12
Prep Batch #...: 2184030
Dilution Factor: 1

Work Order #...: MVEK91AC-LCS
MVEK91AD-LCSD
Analysis Date..: 07/17/12

Matrix.....: AIR

PARAMETER	SPIKE AMOUNT	MEASURED AMOUNT	UNITS	PERCENT RECOVERY	RPD	METHOD
2,4-Dinitrotoluene	2.00	2.08	ug/sample	104		SW846 8330/8330A
	2.00	2.09	ug/sample	104	0.24	SW846 8330/8330A
2,6-Dinitrotoluene	2.00	2.07	ug/sample	103		SW846 8330/8330A
	2.00	2.07	ug/sample	104	0.19	SW846 8330/8330A
HMX	2.00	2.00	ug/sample	100		SW846 8330/8330A
	2.00	2.00	ug/sample	100	0.0	SW846 8330/8330A
Nitroglycerin	2.00	2.26	ug/sample	113		SW846 8330/8330A
	2.00	2.78	ug/sample	139	21	SW846 8330/8330A
RDX	2.00	2.24	ug/sample	112		SW846 8330/8330A
	2.00	2.22	ug/sample	111	1.1	SW846 8330/8330A
2,4,6-Trinitrotoluene	2.00	1.85	ug/sample	93		SW846 8330/8330A
	2.00	1.86	ug/sample	93	0.050	SW846 8330/8330A

SURROGATE	PERCENT RECOVERY	RECOVERY LIMITS
3,4-Dinitrotoluene	104	(50 - 150)
	104	(50 - 150)

NOTE(S):

Calculations are performed before rounding to avoid round-off errors in calculated results.

Bold print denotes control parameters

LABORATORY CONTROL SAMPLE EVALUATION REPORT

HPLC

Client Lot #...: G2F290450 Work Order #...: MVEQG1AC-LCS Matrix.....: AIR
LCS Lot-Sample#: G2G020000-063 MVEQG1AD-LCSD
Prep Date.....: 07/02/12 Analysis Date..: 07/17/12
Prep Batch #...: 2184063
Dilution Factor: 1

PARAMETER	PERCENT RECOVERY	RECOVERY LIMITS	RPD	RPD LIMITS	METHOD
2,4-Dinitrotoluene	76	(50 - 150)			SW846 8330/8330A
	76	(50 - 150)	0.070	(0-50)	SW846 8330/8330A
2,6-Dinitrotoluene	77	(50 - 150)			SW846 8330/8330A
	77	(50 - 150)	0.23	(0-50)	SW846 8330/8330A
HMX	75	(50 - 150)			SW846 8330/8330A
	75	(50 - 150)	0.18	(0-50)	SW846 8330/8330A
Nitroglycerin	84	(50 - 150)			SW846 8330/8330A
	84	(50 - 150)	0.76	(0-50)	SW846 8330/8330A
RDX	80	(50 - 150)			SW846 8330/8330A
	80	(50 - 150)	0.10	(0-50)	SW846 8330/8330A
2,4,6-Trinitrotoluene	68	(50 - 150)			SW846 8330/8330A
	68	(50 - 150)	0.050	(0-50)	SW846 8330/8330A

SURROGATE	PERCENT RECOVERY	RECOVERY LIMITS
3,4-Dinitrotoluene	78	(50 - 150)
	77	(50 - 150)

NOTE(S):

Calculations are performed before rounding to avoid round-off errors in calculated results.

Bold print denotes control parameters

LABORATORY CONTROL SAMPLE DATA REPORT

HPLC

Client Lot #...: G2F290450 Work Order #...: MVEQG1AC-LCS Matrix.....: AIR
LCS Lot-Sample#: G2G020000-063 MVEQG1AD-LCSD
Prep Date.....: 07/02/12 Analysis Date..: 07/17/12
Prep Batch #...: 2184063
Dilution Factor: 1

PARAMETER	SPIKE AMOUNT	MEASURED AMOUNT	UNITS	PERCENT RECOVERY	RPD	METHOD
2,4-Dinitrotoluene	50.0	38.2	ug/sample	76		SW846 8330/8330A
	50.0	38.2	ug/sample	76	0.070	SW846 8330/8330A
2,6-Dinitrotoluene	50.0	38.4	ug/sample	77		SW846 8330/8330A
	50.0	38.3	ug/sample	77	0.23	SW846 8330/8330A
HMX	50.0	37.5	ug/sample	75		SW846 8330/8330A
	50.0	37.6	ug/sample	75	0.18	SW846 8330/8330A
Nitroglycerin	50.0	41.8	ug/sample	84		SW846 8330/8330A
	50.0	42.1	ug/sample	84	0.76	SW846 8330/8330A
RDX	50.0	39.8	ug/sample	80		SW846 8330/8330A
	50.0	39.8	ug/sample	80	0.10	SW846 8330/8330A
2,4,6-Trinitrotoluene	50.0	33.9	ug/sample	68		SW846 8330/8330A
	50.0	33.9	ug/sample	68	0.050	SW846 8330/8330A

SURROGATE	PERCENT RECOVERY	RECOVERY LIMITS
3,4-Dinitrotoluene	78	(50 - 150)
	77	(50 - 150)

NOTE(S):

Calculations are performed before rounding to avoid round-off errors in calculated results.

Bold print denotes control parameters

LABORATORY CONTROL SAMPLE EVALUATION REPORT

HPLC

Client Lot #...: G2F290450 Work Order #...: MVLGX1AC-LCS Matrix.....: AIR
LCS Lot-Sample#: G2G160000-112 MVLGX1AD-LCSD
Prep Date.....: 07/16/12 Analysis Date..: 07/18/12
Prep Batch #...: 2198112
Dilution Factor: 1

PARAMETER	PERCENT RECOVERY	RECOVERY LIMITS	RPD	RPD LIMITS	METHOD
2,4-Dinitrotoluene	104	(50 - 150)			SW846 8330/8330A
	106	(50 - 150)	1.6	(0-50)	SW846 8330/8330A
2,6-Dinitrotoluene	104	(50 - 150)			SW846 8330/8330A
	105	(50 - 150)	0.67	(0-50)	SW846 8330/8330A
HMX	100	(50 - 150)			SW846 8330/8330A
	101	(50 - 150)	1.1	(0-50)	SW846 8330/8330A
Nitroglycerin	112	(50 - 150)			SW846 8330/8330A
	113	(50 - 150)	1.5	(0-50)	SW846 8330/8330A
RDX	105	(50 - 150)			SW846 8330/8330A
	106	(50 - 150)	0.85	(0-50)	SW846 8330/8330A
2,4,6-Trinitrotoluene	90	(50 - 150)			SW846 8330/8330A
	91	(50 - 150)	1.3	(0-50)	SW846 8330/8330A

NOTE(S):

Calculations are performed before rounding to avoid round-off errors in calculated results.

Bold print denotes control parameters

LABORATORY CONTROL SAMPLE DATA REPORT

HPLC

Client Lot #...: G2F290450 Work Order #...: MVLGX1AC-LCS Matrix.....: AIR
LCS Lot-Sample#: G2G160000-112 MVLGX1AD-LCSD
Prep Date.....: 07/16/12 Analysis Date..: 07/18/12
Prep Batch #...: 2198112
Dilution Factor: 1

PARAMETER	SPIKE AMOUNT	MEASURED AMOUNT	UNITS	PERCENT RECOVERY	RPD	METHOD
2,4-Dinitrotoluene	2.00	2.08	ug/sample	104		SW846 8330/8330A
	2.00	2.12	ug/sample	106	1.6	SW846 8330/8330A
2,6-Dinitrotoluene	2.00	2.08	ug/sample	104		SW846 8330/8330A
	2.00	2.09	ug/sample	105	0.67	SW846 8330/8330A
HMX	2.00	2.00	ug/sample	100		SW846 8330/8330A
	2.00	2.02	ug/sample	101	1.1	SW846 8330/8330A
Nitroglycerin	2.00	2.23	ug/sample	112		SW846 8330/8330A
	2.00	2.27	ug/sample	113	1.5	SW846 8330/8330A
RDX	2.00	2.11	ug/sample	105		SW846 8330/8330A
	2.00	2.12	ug/sample	106	0.85	SW846 8330/8330A
2,4,6-Trinitrotoluene	2.00	1.80	ug/sample	90		SW846 8330/8330A
	2.00	1.82	ug/sample	91	1.3	SW846 8330/8330A

NOTE(S):

Calculations are performed before rounding to avoid round-off errors in calculated results.

Bold print denotes control parameters

VOST

SAMPLE SUMMARY

H2F290431

WO #	SAMPLE#	CLIENT SAMPLE ID	SAMPLED DATE	SAMP TIME
MVD4R	001	SK-VOST-TX1/2-R1A	06/26/12	
MVD4T	002	SK-VOST-ASB-R1A	06/26/12	
MVD4V	003	SK-VOST-TX1/2-R1B	06/26/12	
MVD4W	004	SK-VOST-ASB-R1B	06/26/12	
MVD4X	005	SK-VOST-TX1/2-R1C	06/26/12	
MVD40	006	SK-VOST-ASB-R1C	06/26/12	
MVD41	007	SK-VOST-TX1/2-R2A	06/26/12	
MVD42	008	SK-VOST-ASB-R2A	06/26/12	
MVD43	009	SK-VOST-TX1/2-R2B	06/26/12	
MVD44	010	SK-VOST-ASB-R2B	06/26/12	
MVD45	011	SK-VOST-TX1/2-R2C	06/26/12	
MVD46	012	SK-VOST-ASB-R2C	06/26/12	
MVD47	013	SK-VOST-TX1/2-R3A	06/27/12	
MVD48	014	SK-VOST-ASB-R3A	06/27/12	
MVD49	015	SK-VOST-TX1/2-R3B	06/27/12	
MVD5A	016	SK-VOST-ASB-R3B	06/27/12	
MVD5C	017	SK-VOST-TX1/2-R3C	06/27/12	
MVD5D	018	SK-VOST-ASB-R3C	06/27/12	
MVD5E	019	SK-VOST-TX1/2-FB	06/26/12	
MVD5F	020	SK-VOST-ASB-FB	06/26/12	

NOTE(S):

- The analytical results of the samples listed above are presented on the following pages.
- All calculations are performed before rounding to avoid round-off errors in calculated results.
- Results noted as "ND" were not detected at or above the stated limit.
- This report must not be reproduced, except in full, without the written approval of the laboratory.
- Results for the following parameters are never reported on a dry weight basis: color, corrosivity, density, flashpoint, ignitability, layers, odor, paint filter test, pH, porosity pressure, reactivity, redox potential, specific gravity, spot tests, solids, solubility, temperature, viscosity, and weight.

O'Brien & Gere Inc of North America

Client Sample ID: SK-VOST-TX1/2-R1A

GC/MS Volatiles

Lot-Sample #...: H2F290431-001 **Work Order #...:** MVD4R1AA **Matrix.....:** AIR
Date Sampled...: 06/26/12 **Date Received..:** 06/29/12
Prep Date.....: 07/03/12 **Analysis Date..:** 07/03/12
Prep Batch #...: 2184061
Dilution Factor: 1 **Method.....:** SW846 VOST

PARAMETER	RESULT	REPORTING LIMIT	UNITS	MDL
Acetone	**0.34**	**0.10**	**ug**	**0.030**
Benzene	**0.23**	**0.010**	**ug**	**0.0035**
Bromobenzene	ND	0.010	ug	0.0020
Bromochloromethane	ND	0.025	ug	0.0028
Bromodichloromethane	ND	0.010	ug	0.0013
Bromoform	ND	0.025	ug	0.010
Bromomethane	ND	0.050	ug	0.0059
2-Butanone	**0.13**	**0.10**	**ug**	**0.10**
n-Butylbenzene	**0.0011 J**	**0.010**	**ug**	**0.0010**
sec-Butylbenzene	**0.0014 J**	**0.010**	**ug**	**0.0010**
tert-Butylbenzene	ND	0.010	ug	0.0011
Carbon disulfide	**0.037**	**0.010**	**ug**	**0.0019**
Carbon tetrachloride	**0.011**	**0.010**	**ug**	**0.0012**
Chlorobenzene	**0.0035 J**	**0.010**	**ug**	**0.0010**
Chlorodibromomethane	ND	0.025	ug	0.0020
Chloroethane	ND	0.050	ug	0.0062
Chloroform	**0.0037 J**	**0.010**	**ug**	**0.0011**
Chloromethane	**0.011 J,B**	**0.050**	**ug**	**0.0025**
2-Chlorotoluene	ND	0.010	ug	0.0012
4-Chlorotoluene	ND	0.010	ug	0.0014
1,2-Dibromo-3-chloro-propane	ND	0.050	ug	0.013
1,2-Dibromoethane	ND	0.025	ug	0.0014
Dibromomethane	ND	0.025	ug	0.0021
1,2-Dichlorobenzene	ND	0.010	ug	0.0018
1,3-Dichlorobenzene	ND	0.010	ug	0.0014
1,4-Dichlorobenzene	ND	0.010	ug	0.0015
Dichlorodifluoromethane	ND	0.025	ug	0.0024
1,1-Dichloroethane	**0.0018 J**	**0.010**	**ug**	**0.0010**
1,2-Dichloroethane	ND	0.010	ug	0.0017
cis-1,2-Dichloroethene	ND	0.010	ug	0.0010
trans-1,2-Dichloroethene	ND	0.010	ug	0.0020
1,1-Dichloroethene	**0.0048 J**	**0.010**	**ug**	**0.0015**
1,2-Dichloropropane	ND	0.010	ug	0.0017
1,3-Dichloropropane	ND	0.010	ug	0.0014
2,2-Dichloropropane	ND	0.010	ug	0.0010
cis-1,3-Dichloropropene	ND	0.010	ug	0.0017
trans-1,3-Dichloropropene	ND	0.010	ug	0.0012
1,1-Dichloropropene	**0.0044 J**	**0.010**	**ug**	**0.0010**

(Continued on next page)

O'Brien & Gere Inc of North America

Client Sample ID: SK-VOST-TX1/2-R1A

GC/MS Volatiles

Lot-Sample #...: H2F290431-001 Work Order #...: MVD4R1AA Matrix.....: AIR

PARAMETER	RESULT	REPORTING LIMIT	UNITS	MDL
Ethylbenzene	**0.068**	**0.010**	**ug**	**0.0010**
Hexachlorobutadiene	ND	0.025	ug	0.0025
2-Hexanone	**0.0094 J**	**0.10**	**ug**	**0.0068**
Isopropylbenzene	**0.0087 J**	**0.010**	**ug**	**0.0010**
p-Isopropyltoluene	**0.0019 J**	**0.010**	**ug**	**0.0010**
Methylene chloride	**0.023 J,B**	**0.025**	**ug**	**0.0022**
4-Methyl-2-pentanone	ND	0.10	ug	0.10
Naphthalene	ND	0.025	ug	0.010
n-Propylbenzene	**0.0038 J**	**0.010**	**ug**	**0.0010**
Styrene	**0.0069 J**	**0.010**	**ug**	**0.0013**
1,1,1,2-Tetrachloroethane	ND	0.010	ug	0.0011
1,1,2,2-Tetrachloroethane	ND	0.025	ug	0.024
Tetrachloroethene	**0.023**	**0.010**	**ug**	**0.0011**
Toluene	**0.43 B**	**0.010**	**ug**	**0.0010**
1,2,3-Trichlorobenzene	ND	0.025	ug	0.0010
1,2,4-Trichloro-benzene	ND	0.025	ug	0.0016
1,1,1-Trichloroethane	**0.0038 J**	**0.025**	**ug**	**0.0010**
1,1,2-Trichloroethane	ND	0.025	ug	0.010
Trichloroethene	**0.026**	**0.010**	**ug**	**0.0022**
Trichlorofluoromethane	**0.10**	**0.050**	**ug**	**0.0017**
1,2,3-Trichloropropane	ND	0.025	ug	0.025
1,2,4-Trimethylbenzene	**0.0091 J**	**0.010**	**ug**	**0.0015**
1,3,5-Trimethylbenzene	**0.0090 J**	**0.010**	**ug**	**0.0018**
Vinyl chloride	ND	0.010	ug	0.0021
m-Xylene & p-Xylene	**0.20**	**0.020**	**ug**	**0.0020**
o-Xylene	**0.11**	**0.010**	**ug**	**0.0010**

SURROGATE	PERCENT RECOVERY	RECOVERY LIMITS
Dibromofluoromethane	87	(50 - 134)
1,2-Dichloroethane-d4	81	(50 - 127)
Toluene-d8	84	(57 - 134)
Bromofluorobenzene	40 *	(50 - 122)

NOTE(S):

* Surrogate recovery is outside stated control limits.

J Estimated result. Result is less than RL.

B Method blank contamination. The associated method blank contains the target analyte at a reportable level.

O'Brien & Gere Inc of North America

Client Sample ID: SK-VOST-ASB-R1A

GC/MS Volatiles

Lot-Sample #...: H2F290431-002 **Work Order #...:** MVD4T1AA **Matrix.....:** AIR
Date Sampled...: 06/26/12 **Date Received..:** 06/29/12
Prep Date.....: 07/03/12 **Analysis Date..:** 07/03/12
Prep Batch #...: 2184061
Dilution Factor: 1 **Method.....:** SW846 VOST

PARAMETER	RESULT	REPORTING LIMIT	UNITS	MDL
Acetone	**0.40**	**0.10**	**ug**	**0.030**
Benzene	ND	0.010	ug	0.0035
Bromobenzene	ND	0.010	ug	0.0020
Bromochloromethane	ND	0.025	ug	0.0028
Bromodichloromethane	ND	0.010	ug	0.0013
Bromoform	ND	0.025	ug	0.010
Bromomethane	**0.0063 J,B**	**0.050**	**ug**	**0.0059**
2-Butanone	ND	0.10	ug	0.10
n-Butylbenzene	ND	0.010	ug	0.0010
sec-Butylbenzene	ND	0.010	ug	0.0010
tert-Butylbenzene	ND	0.010	ug	0.0011
Carbon disulfide	**0.012**	**0.010**	**ug**	**0.0019**
Carbon tetrachloride	ND	0.010	ug	0.0012
Chlorobenzene	ND	0.010	ug	0.0010
Chlorodibromomethane	ND	0.025	ug	0.0020
Chloroethane	**0.0068 J**	**0.050**	**ug**	**0.0062**
Chloroform	**0.0024 J**	**0.010**	**ug**	**0.0011**
Chloromethane	**0.041 J,B**	**0.050**	**ug**	**0.0025**
2-Chlorotoluene	ND	0.010	ug	0.0012
4-Chlorotoluene	ND	0.010	ug	0.0014
1,2-Dibromo-3-chloro-propane	ND	0.050	ug	0.013
1,2-Dibromoethane	ND	0.025	ug	0.0014
Dibromomethane	ND	0.025	ug	0.0021
1,2-Dichlorobenzene	ND	0.010	ug	0.0018
1,3-Dichlorobenzene	ND	0.010	ug	0.0014
1,4-Dichlorobenzene	ND	0.010	ug	0.0015
Dichlorodifluoromethane	**0.082**	**0.025**	**ug**	**0.0024**
1,1-Dichloroethane	ND	0.010	ug	0.0010
1,2-Dichloroethane	ND	0.010	ug	0.0017
cis-1,2-Dichloroethene	ND	0.010	ug	0.0010
trans-1,2-Dichloroethene	ND	0.010	ug	0.0020
1,1-Dichloroethene	**0.091**	**0.010**	**ug**	**0.0015**
1,2-Dichloropropane	ND	0.010	ug	0.0017
1,3-Dichloropropane	ND	0.010	ug	0.0014
2,2-Dichloropropane	ND	0.010	ug	0.0010
cis-1,3-Dichloropropene	ND	0.010	ug	0.0017
trans-1,3-Dichloropropene	ND	0.010	ug	0.0012
1,1-Dichloropropene	ND	0.010	ug	0.0010

(Continued on next page)

O'Brien & Gere Inc of North America

Client Sample ID: SK-VOST-ASB-R1A

GC/MS Volatiles

Lot-Sample #...: H2F290431-002 **Work Order #...:** MVD4T1AA **Matrix.....:** AIR

PARAMETER	RESULT	REPORTING LIMIT	UNITS	MDL
Ethylbenzene	**0.0043 J**	**0.010**	**ug**	**0.0010**
Hexachlorobutadiene	ND	0.025	ug	0.0025
2-Hexanone	ND	0.10	ug	0.0068
Isopropylbenzene	ND	0.010	ug	0.0010
p-Isopropyltoluene	ND	0.010	ug	0.0010
Methylene chloride	**0.098 B**	**0.025**	**ug**	**0.0022**
4-Methyl-2-pentanone	ND	0.10	ug	0.10
Naphthalene	ND	0.025	ug	0.010
n-Propylbenzene	**0.0012 J**	**0.010**	**ug**	**0.0010**
Styrene	**0.0052 J**	**0.010**	**ug**	**0.0013**
1,1,1,2-Tetrachloroethane	ND	0.010	ug	0.0011
1,1,2,2-Tetrachloroethane	ND	0.025	ug	0.024
Tetrachloroethene	**0.0015 J**	**0.010**	**ug**	**0.0011**
Toluene	**0.035 B**	**0.010**	**ug**	**0.0010**
1,2,3-Trichlorobenzene	ND	0.025	ug	0.0010
1,2,4-Trichloro-benzene	ND	0.025	ug	0.0016
1,1,1-Trichloroethane	ND	0.025	ug	0.0010
1,1,2-Trichloroethane	ND	0.025	ug	0.010
Trichloroethene	ND	0.010	ug	0.0022
Trichlorofluoromethane	**0.14**	**0.050**	**ug**	**0.0017**
1,2,3-Trichloropropane	ND	0.025	ug	0.025
1,2,4-Trimethylbenzene	**0.0066 J**	**0.010**	**ug**	**0.0015**
1,3,5-Trimethylbenzene	**0.0019 J**	**0.010**	**ug**	**0.0018**
Vinyl chloride	**0.0069 J**	**0.010**	**ug**	**0.0021**
m-Xylene & p-Xylene	**0.015 J**	**0.020**	**ug**	**0.0020**
o-Xylene	**0.0062 J**	**0.010**	**ug**	**0.0010**

SURROGATE	PERCENT RECOVERY	RECOVERY LIMITS
Dibromofluoromethane	92	(50 - 134)
1,2-Dichloroethane-d4	80	(50 - 127)
Toluene-d8	91	(57 - 134)
Bromofluorobenzene	83	(50 - 122)

NOTE(S):

J Estimated result. Result is less than RL.

B Method blank contamination. The associated method blank contains the target analyte at a reportable level.

O'Brien & Gere Inc of North America

Client Sample ID: SK-VOST-TX1/2-R1B

GC/MS Volatiles

Lot-Sample #...: H2F290431-003 Work Order #...: MVD4V1AA Matrix.....: AIR
Date Sampled...: 06/26/12 Date Received..: 06/29/12
Prep Date.....: 07/03/12 Analysis Date..: 07/03/12
Prep Batch #...: 2184061
Dilution Factor: 1 Method.....: SW846 VOST

PARAMETER	RESULT	REPORTING LIMIT	UNITS	MDL
Acetone	**0.34**	**0.10**	**ug**	**0.030**
Benzene	**0.29**	**0.010**	**ug**	**0.0035**
Bromobenzene	ND	0.010	ug	0.0020
Bromochloromethane	ND	0.025	ug	0.0028
Bromodichloromethane	ND	0.010	ug	0.0013
Bromoform	ND	0.025	ug	0.010
Bromomethane	ND	0.050	ug	0.0059
2-Butanone	**0.11**	**0.10**	**ug**	**0.10**
n-Butylbenzene	**0.0060 J**	**0.010**	**ug**	**0.0010**
sec-Butylbenzene	**0.0035 J**	**0.010**	**ug**	**0.0010**
tert-Butylbenzene	ND	0.010	ug	0.0011
Carbon disulfide	**0.036**	**0.010**	**ug**	**0.0019**
Carbon tetrachloride	**0.0098 J**	**0.010**	**ug**	**0.0012**
Chlorobenzene	**0.0074 J**	**0.010**	**ug**	**0.0010**
Chlorodibromomethane	ND	0.025	ug	0.0020
Chloroethane	ND	0.050	ug	0.0062
Chloroform	**0.0015 J**	**0.010**	**ug**	**0.0011**
Chloromethane	**0.0050 J,B**	**0.050**	**ug**	**0.0025**
2-Chlorotoluene	ND	0.010	ug	0.0012
4-Chlorotoluene	ND	0.010	ug	0.0014
1,2-Dibromo-3-chloro-propane	ND	0.050	ug	0.013
1,2-Dibromoethane	ND	0.025	ug	0.0014
Dibromomethane	ND	0.025	ug	0.0021
1,2-Dichlorobenzene	**0.021**	**0.010**	**ug**	**0.0018**
1,3-Dichlorobenzene	ND	0.010	ug	0.0014
1,4-Dichlorobenzene	**0.0037 J**	**0.010**	**ug**	**0.0015**
Dichlorodifluoromethane	ND	0.025	ug	0.0024
1,1-Dichloroethane	ND	0.010	ug	0.0010
1,2-Dichloroethane	ND	0.010	ug	0.0017
cis-1,2-Dichloroethene	ND	0.010	ug	0.0010
trans-1,2-Dichloroethene	ND	0.010	ug	0.0020
1,1-Dichloroethene	ND	0.010	ug	0.0015
1,2-Dichloropropane	ND	0.010	ug	0.0017
1,3-Dichloropropane	ND	0.010	ug	0.0014
2,2-Dichloropropane	ND	0.010	ug	0.0010
cis-1,3-Dichloropropene	ND	0.010	ug	0.0017
trans-1,3-Dichloropropene	ND	0.010	ug	0.0012
1,1-Dichloropropene	ND	0.010	ug	0.0010

(Continued on next page)

O'Brien & Gere Inc of North America

Client Sample ID: SK-VOST-TX1/2-R1B

GC/MS Volatiles

Lot-Sample #...: H2F290431-003 Work Order #...: MVD4V1AA Matrix.....: AIR

PARAMETER	RESULT	REPORTING LIMIT	UNITS	MDL
Ethylbenzene	**0.093**	**0.010**	**ug**	**0.0010**
Hexachlorobutadiene	ND	0.025	ug	0.0025
2-Hexanone	**0.025 J**	**0.10**	**ug**	**0.0068**
Isopropylbenzene	**0.019**	**0.010**	**ug**	**0.0010**
p-Isopropyltoluene	**0.0040 J**	**0.010**	**ug**	**0.0010**
Methylene chloride	**0.016 J,B**	**0.025**	**ug**	**0.0022**
4-Methyl-2-pentanone	ND	0.10	ug	0.10
Naphthalene	ND	0.025	ug	0.010
n-Propylbenzene	**0.016**	**0.010**	**ug**	**0.0010**
Styrene	**0.074**	**0.010**	**ug**	**0.0013**
1,1,1,2-Tetrachloroethane	ND	0.010	ug	0.0011
1,1,2,2-Tetrachloroethane	ND	0.025	ug	0.024
Tetrachloroethene	**0.0076 J**	**0.010**	**ug**	**0.0011**
Toluene	**0.19 B**	**0.010**	**ug**	**0.0010**
1,2,3-Trichlorobenzene	ND	0.025	ug	0.0010
1,2,4-Trichloro-benzene	ND	0.025	ug	0.0016
1,1,1-Trichloroethane	**0.0013 J**	**0.025**	**ug**	**0.0010**
1,1,2-Trichloroethane	ND	0.025	ug	0.010
Trichloroethene	**0.0046 J**	**0.010**	**ug**	**0.0022**
Trichlorofluoromethane	**0.070**	**0.050**	**ug**	**0.0017**
1,2,3-Trichloropropane	ND	0.025	ug	0.025
1,2,4-Trimethylbenzene	**0.056**	**0.010**	**ug**	**0.0015**
1,3,5-Trimethylbenzene	**0.017**	**0.010**	**ug**	**0.0018**
Vinyl chloride	ND	0.010	ug	0.0021
m-Xylene & p-Xylene	**0.32**	**0.020**	**ug**	**0.0020**
o-Xylene	**0.20**	**0.010**	**ug**	**0.0010**

SURROGATE	PERCENT RECOVERY	RECOVERY LIMITS
Dibromofluoromethane	88	(50 - 134)
1,2-Dichloroethane-d4	82	(50 - 127)
Toluene-d8	95	(57 - 134)
Bromofluorobenzene	81	(50 - 122)

NOTE(S):

J Estimated result. Result is less than RL.

B Method blank contamination. The associated method blank contains the target analyte at a reportable level.

O'Brien & Gere Inc of North America

Client Sample ID: SK-VOST-ASB-R1B

GC/MS Volatiles

Lot-Sample #...: H2F290431-004 **Work Order #...:** MVD4W1AA **Matrix.....:** AIR
Date Sampled...: 06/26/12 **Date Received..:** 06/29/12
Prep Date.....: 07/03/12 **Analysis Date..:** 07/03/12
Prep Batch #...: 2184061
Dilution Factor: 1 **Method.....:** SW846 VOST

PARAMETER	RESULT	REPORTING LIMIT	UNITS	MDL
Acetone	**0.16**	**0.10**	**ug**	**0.030**
Benzene	ND	0.010	ug	0.0035
Bromobenzene	ND	0.010	ug	0.0020
Bromochloromethane	ND	0.025	ug	0.0028
Bromodichloromethane	ND	0.010	ug	0.0013
Bromoform	ND	0.025	ug	0.010
Bromomethane	ND	0.050	ug	0.0059
2-Butanone	ND	0.10	ug	0.10
n-Butylbenzene	ND	0.010	ug	0.0010
sec-Butylbenzene	ND	0.010	ug	0.0010
tert-Butylbenzene	ND	0.010	ug	0.0011
Carbon disulfide	**0.011**	**0.010**	**ug**	**0.0019**
Carbon tetrachloride	ND	0.010	ug	0.0012
Chlorobenzene	ND	0.010	ug	0.0010
Chlorodibromomethane	ND	0.025	ug	0.0020
Chloroethane	**0.0092 J**	**0.050**	**ug**	**0.0062**
Chloroform	ND	0.010	ug	0.0011
Chloromethane	**0.053 B**	**0.050**	**ug**	**0.0025**
2-Chlorotoluene	ND	0.010	ug	0.0012
4-Chlorotoluene	ND	0.010	ug	0.0014
1,2-Dibromo-3-chloro-propane	ND	0.050	ug	0.013
1,2-Dibromoethane	ND	0.025	ug	0.0014
Dibromomethane	ND	0.025	ug	0.0021
1,2-Dichlorobenzene	ND	0.010	ug	0.0018
1,3-Dichlorobenzene	ND	0.010	ug	0.0014
1,4-Dichlorobenzene	ND	0.010	ug	0.0015
Dichlorodifluoromethane	**0.074**	**0.025**	**ug**	**0.0024**
1,1-Dichloroethane	ND	0.010	ug	0.0010
1,2-Dichloroethane	ND	0.010	ug	0.0017
cis-1,2-Dichloroethene	ND	0.010	ug	0.0010
trans-1,2-Dichloroethene	ND	0.010	ug	0.0020
1,1-Dichloroethene	ND	0.010	ug	0.0015
1,2-Dichloropropane	ND	0.010	ug	0.0017
1,3-Dichloropropane	ND	0.010	ug	0.0014
2,2-Dichloropropane	ND	0.010	ug	0.0010
cis-1,3-Dichloropropene	ND	0.010	ug	0.0017
trans-1,3-Dichloropropene	ND	0.010	ug	0.0012
1,1-Dichloropropene	**0.0017 J**	**0.010**	**ug**	**0.0010**

(Continued on next page)

O'Brien & Gere Inc of North America

Client Sample ID: SK-VOST-ASB-R1B

GC/MS Volatiles

Lot-Sample #...: H2F290431-004 **Work Order #...:** MVD4W1AA **Matrix.....:** AIR

PARAMETER	RESULT	REPORTING LIMIT	UNITS	MDL
Ethylbenzene	ND	0.010	ug	0.0010
Hexachlorobutadiene	ND	0.025	ug	0.0025
2-Hexanone	ND	0.10	ug	0.0068
Isopropylbenzene	ND	0.010	ug	0.0010
p-Isopropyltoluene	ND	0.010	ug	0.0010
Methylene chloride	**0.011 J,B**	**0.025**	**ug**	**0.0022**
4-Methyl-2-pentanone	ND	0.10	ug	0.10
Naphthalene	ND	0.025	ug	0.010
n-Propylbenzene	ND	0.010	ug	0.0010
Styrene	**0.0015 J**	**0.010**	**ug**	**0.0013**
1,1,1,2-Tetrachloroethane	ND	0.010	ug	0.0011
1,1,2,2-Tetrachloroethane	ND	0.025	ug	0.024
Tetrachloroethene	ND	0.010	ug	0.0011
Toluene	**0.0045 J,B**	**0.010**	**ug**	**0.0010**
1,2,3-Trichlorobenzene	ND	0.025	ug	0.0010
1,2,4-Trichloro-benzene	ND	0.025	ug	0.0016
1,1,1-Trichloroethane	ND	0.025	ug	0.0010
1,1,2-Trichloroethane	ND	0.025	ug	0.010
Trichloroethene	ND	0.010	ug	0.0022
Trichlorofluoromethane	**0.13**	**0.050**	**ug**	**0.0017**
1,2,3-Trichloropropane	ND	0.025	ug	0.025
1,2,4-Trimethylbenzene	ND	0.010	ug	0.0015
1,3,5-Trimethylbenzene	ND	0.010	ug	0.0018
Vinyl chloride	**0.0068 J**	**0.010**	**ug**	**0.0021**
m-Xylene & p-Xylene	**0.0030 J**	**0.020**	**ug**	**0.0020**
o-Xylene	**0.0014 J**	**0.010**	**ug**	**0.0010**

SURROGATE	PERCENT RECOVERY	RECOVERY LIMITS
Dibromofluoromethane	86	(50 - 134)
1,2-Dichloroethane-d4	81	(50 - 127)
Toluene-d8	92	(57 - 134).
Bromofluorobenzene	79	(50 - 122)

NOTE(S):

J Estimated result. Result is less than RL.

B Method blank contamination. The associated method blank contains the target analyte at a reportable level.

O'Brien & Gere Inc of North America

Client Sample ID: SK-VOST-TX1/2-R1C

GC/MS Volatiles

Lot-Sample #...: H2F290431-005 **Work Order #...:** MVD4X1AA **Matrix.....:** AIR
Date Sampled...: 06/26/12 **Date Received..:** 06/29/12
Prep Date.....: 07/03/12 **Analysis Date..:** 07/03/12
Prep Batch #...: 2184061
Dilution Factor: 1 **Method.....:** SW846 VOST

PARAMETER	RESULT	REPORTING LIMIT	UNITS	MDL
Acetone	**0.42**	**0.10**	**ug**	**0.030**
Benzene	**0.32**	**0.010**	**ug**	**0.0035**
Bromobenzene	ND	0.010	ug	0.0020
Bromochloromethane	ND	0.025	ug	0.0028
Bromodichloromethane	ND	0.010	ug	0.0013
Bromoform	ND	0.025	ug	0.010
Bromomethane	ND	0.050	ug	0.0059
2-Butanone	**0.12**	**0.10**	**ug**	**0.10**
n-Butylbenzene	**0.011**	**0.010**	**ug**	**0.0010**
sec-Butylbenzene	**0.0049 J**	**0.010**	**ug**	**0.0010**
tert-Butylbenzene	ND	0.010	ug	0.0011
Carbon disulfide	**0.028**	**0.010**	**ug**	**0.0019**
Carbon tetrachloride	**0.0085 J**	**0.010**	**ug**	**0.0012**
Chlorobenzene	**0.0083 J**	**0.010**	**ug**	**0.0010**
Chlorodibromomethane	ND	0.025	ug	0.0020
Chloroethane	ND	0.050	ug	0.0062
Chloroform	**0.0019 J**	**0.010**	**ug**	**0.0011**
Chloromethane	**0.0048 J,B**	**0.050**	**ug**	**0.0025**
2-Chlorotoluene	ND	0.010	ug	0.0012
4-Chlorotoluene	ND	0.010	ug	0.0014
1,2-Dibromo-3-chloro-propane	ND	0.050	ug	0.013
1,2-Dibromoethane	ND	0.025	ug	0.0014
Dibromomethane	ND	0.025	ug	0.0021
1,2-Dichlorobenzene	**0.021**	**0.010**	**ug**	**0.0018**
1,3-Dichlorobenzene	**0.0016 J**	**0.010**	**ug**	**0.0014**
1,4-Dichlorobenzene	**0.0046 J**	**0.010**	**ug**	**0.0015**
Dichlorodifluoromethane	ND	0.025	ug	0.0024
1,1-Dichloroethane	ND	0.010	ug	0.0010
1,2-Dichloroethane	ND	0.010	ug	0.0017
cis-1,2-Dichloroethene	ND	0.010	ug	0.0010
trans-1,2-Dichloroethene	ND	0.010	ug	0.0020
1,1-Dichloroethene	ND	0.010	ug	0.0015
1,2-Dichloropropane	ND	0.010	ug	0.0017
1,3-Dichloropropane	ND	0.010	ug	0.0014
2,2-Dichloropropane	ND	0.010	ug	0.0010
cis-1,3-Dichloropropene	ND	0.010	ug	0.0017
trans-1,3-Dichloropropene	ND	0.010	ug	0.0012
1,1-Dichloropropene	**0.0023 J**	**0.010**	**ug**	**0.0010**

(Continued on next page)

O'Brien & Gere Inc of North America

Client Sample ID: SK-VOST-TX1/2-R1C

GC/MS Volatiles

Lot-Sample #...: H2F290431-005 Work Order #...: MVD4X1AA Matrix.....: AIR

PARAMETER	RESULT	REPORTING LIMIT	UNITS	MDL
Ethylbenzene	**0.092**	**0.010**	**ug**	**0.0010**
Hexachlorobutadiene	ND	0.025	ug	0.0025
2-Hexanone	**0.022 J**	**0.10**	**ug**	**0.0068**
Isopropylbenzene	**0.027**	**0.010**	**ug**	**0.0010**
p-Isopropyltoluene	**0.0049 J**	**0.010**	**ug**	**0.0010**
Methylene chloride	**0.019 J,B**	**0.025**	**ug**	**0.0022**
4-Methyl-2-pentanone	ND	0.10	ug	0.10
Naphthalene	**0.014 J**	**0.025**	**ug**	**0.010**
n-Propylbenzene	**0.018**	**0.010**	**ug**	**0.0010**
Styrene	**0.066**	**0.010**	**ug**	**0.0013**
1,1,1,2-Tetrachloroethane	ND	0.010	ug	0.0011
1,1,2,2-Tetrachloroethane	ND	0.025	ug	0.024
Tetrachloroethene	**0.0049 J**	**0.010**	**ug**	**0.0011**
Toluene	**0.20 B**	**0.010**	**ug**	**0.0010**
1,2,3-Trichlorobenzene	ND	0.025	ug	0.0010
1,2,4-Trichloro-benzene	ND	0.025	ug	0.0016
1,1,1-Trichloroethane	**0.0015 J**	**0.025**	**ug**	**0.0010**
1,1,2-Trichloroethane	ND	0.025	ug	0.010
Trichloroethene	ND	0.010	ug	0.0022
Trichlorofluoromethane	**0.069**	**0.050**	**ug**	**0.0017**
1,2,3-Trichloropropane	ND	0.025	ug	0.025
1,2,4-Trimethylbenzene	**0.065**	**0.010**	**ug**	**0.0015**
1,3,5-Trimethylbenzene	**0.019**	**0.010**	**ug**	**0.0018**
Vinyl chloride	ND	0.010	ug	0.0021
m-Xylene & p-Xylene	**0.31**	**0.020**	**ug**	**0.0020**
o-Xylene	**0.18**	**0.010**	**ug**	**0.0010**

SURROGATE	PERCENT RECOVERY	RECOVERY LIMITS
Dibromofluoromethane	86	(50 - 134)
1,2-Dichloroethane-d4	82	(50 - 127)
Toluene-d8	93	(57 - 134)
Bromofluorobenzene	83	(50 - 122)

NOTE(S):

J Estimated result. Result is less than RL.

B Method blank contamination. The associated method blank contains the target analyte at a reportable level.

O'Brien & Gere Inc of North America

Client Sample ID: SK-VOST-ASB-R1C

GC/MS Volatiles

Lot-Sample #...: H2F290431-006 **Work Order #...:** MVD401AA **Matrix.....:** AIR
Date Sampled...: 06/26/12 **Date Received..:** 06/29/12
Prep Date.....: 07/03/12 **Analysis Date..:** 07/03/12
Prep Batch #...: 2184061
Dilution Factor: 1 **Method.....:** SW846 VOST

PARAMETER	RESULT	REPORTING LIMIT	UNITS	MDL
Acetone	**0.19**	**0.10**	**ug**	**0.030**
Benzene	ND	0.010	ug	0.0035
Bromobenzene	ND	0.010	ug	0.0020
Bromochloromethane	ND	0.025	ug	0.0028
Bromodichloromethane	ND	0.010	ug	0.0013
Bromoform	ND	0.025	ug	0.010
Bromomethane	ND	0.050	ug	0.0059
2-Butanone	ND	0.10	ug	0.10
n-Butylbenzene	ND	0.010	ug	0.0010
sec-Butylbenzene	ND	0.010	ug	0.0010
tert-Butylbenzene	ND	0.010	ug	0.0011
Carbon disulfide	**0.0086 J**	**0.010**	**ug**	**0.0019**
Carbon tetrachloride	ND	0.010	ug	0.0012
Chlorobenzene	ND	0.010	ug	0.0010
Chlorodibromomethane	ND	0.025	ug	0.0020
Chloroethane	ND	0.050	ug	0.0062
Chloroform	ND	0.010	ug	0.0011
Chloromethane	**0.035 J,B**	**0.050**	**ug**	**0.0025**
2-Chlorotoluene	ND	0.010	ug	0.0012
4-Chlorotoluene	ND	0.010	ug	0.0014
1,2-Dibromo-3-chloro-propane	ND	0.050	ug	0.013
1,2-Dibromoethane	ND	0.025	ug	0.0014
Dibromomethane	ND	0.025	ug	0.0021
1,2-Dichlorobenzene	ND	0.010	ug	0.0018
1,3-Dichlorobenzene	ND	0.010	ug	0.0014
1,4-Dichlorobenzene	ND	0.010	ug	0.0015
Dichlorodifluoromethane	**0.072**	**0.025**	**ug**	**0.0024**
1,1-Dichloroethane	ND	0.010	ug	0.0010
1,2-Dichloroethane	ND	0.010	ug	0.0017
cis-1,2-Dichloroethene	ND	0.010	ug	0.0010
trans-1,2-Dichloroethene	ND	0.010	ug	0.0020
1,1-Dichloroethene	ND	0.010	ug	0.0015
1,2-Dichloropropane	ND	0.010	ug	0.0017
1,3-Dichloropropane	ND	0.010	ug	0.0014
2,2-Dichloropropane	ND	0.010	ug	0.0010
cis-1,3-Dichloropropene	ND	0.010	ug	0.0017
trans-1,3-Dichloropropene	ND	0.010	ug	0.0012
1,1-Dichloropropene	**0.0017 J**	**0.010**	**ug**	**0.0010**

(Continued on next page)

O'Brien & Gere Inc of North America

Client Sample ID: SK-VOST-ASB-R1C

GC/MS Volatiles

Lot-Sample #...: H2F290431-006 **Work Order #...:** MVD401AA **Matrix.....:** AIR

PARAMETER	RESULT	REPORTING LIMIT	UNITS	MDL
Ethylbenzene	ND	0.010	ug	0.0010
Hexachlorobutadiene	ND	0.025	ug	0.0025
2-Hexanone	ND	0.10	ug	0.0068
Isopropylbenzene	ND	0.010	ug	0.0010
p-Isopropyltoluene	ND	0.010	ug	0.0010
Methylene chloride	**0.012 J,B**	**0.025**	**ug**	**0.0022**
4-Methyl-2-pentanone	ND	0.10	ug	0.10
Naphthalene	ND	0.025	ug	0.010
n-Propylbenzene	ND	0.010	ug	0.0010
Styrene	ND	0.010	ug	0.0013
1,1,1,2-Tetrachloroethane	ND	0.010	ug	0.0011
1,1,2,2-Tetrachloroethane	ND	0.025	ug	0.024
Tetrachloroethene	ND	0.010	ug	0.0011
Toluene	**0.0047 J,B**	**0.010**	**ug**	**0.0010**
1,2,3-Trichlorobenzene	ND	0.025	ug	0.0010
1,2,4-Trichloro-benzene	ND	0.025	ug	0.0016
1,1,1-Trichloroethane	ND	0.025	ug	0.0010
1,1,2-Trichloroethane	ND	0.025	ug	0.010
Trichloroethene	ND	0.010	ug	0.0022
Trichlorofluoromethane	**0.13**	**0.050**	**ug**	**0.0017**
1,2,3-Trichloropropane	ND	0.025	ug	0.025
1,2,4-Trimethylbenzene	ND	0.010	ug	0.0015
1,3,5-Trimethylbenzene	ND	0.010	ug	0.0018
Vinyl chloride	**0.0059 J**	**0.010**	**ug**	**0.0021**
m-Xylene & p-Xylene	**0.0032 J**	**0.020**	**ug**	**0.0020**
o-Xylene	**0.0017 J**	**0.010**	**ug**	**0.0010**

SURROGATE	PERCENT RECOVERY	RECOVERY LIMITS
Dibromofluoromethane	87	(50 - 134)
1,2-Dichloroethane-d4	77	(50 - 127)
Toluene-d8	96	(57 - 134)
Bromofluorobenzene	82	(50 - 122)

NOTE(S):

J Estimated result. Result is less than RL.

B Method blank contamination. The associated method blank contains the target analyte at a reportable level.

O'Brien & Gere Inc of North America

Client Sample ID: SK-VOST-TX1/2-R2A

GC/MS Volatiles

Lot-Sample #...: H2F290431-007 **Work Order #...:** MVD411AA **Matrix.....:** AIR
Date Sampled...: 06/26/12 **Date Received..:** 06/29/12
Prep Date.....: 07/03/12 **Analysis Date..:** 07/03/12
Prep Batch #...: 2184061
Dilution Factor: 1 **Method.....:** SW846 VOST

PARAMETER	RESULT	REPORTING LIMIT	UNITS	MDL
Acetone	**0.25**	**0.10**	**ug**	**0.030**
Benzene	**0.21**	**0.010**	**ug**	**0.0035**
Bromobenzene	ND	0.010	ug	0.0020
Bromochloromethane	ND	0.025	ug	0.0028
Bromodichloromethane	ND	0.010	ug	0.0013
Bromoform	ND	0.025	ug	0.010
Bromomethane	ND	0.050	ug	0.0059
2-Butanone	ND	0.10	ug	0.10
n-Butylbenzene	**0.0038 J**	**0.010**	**ug**	**0.0010**
sec-Butylbenzene	**0.0019 J**	**0.010**	**ug**	**0.0010**
tert-Butylbenzene	ND	0.010	ug	0.0011
Carbon disulfide	**0.018**	**0.010**	**ug**	**0.0019**
Carbon tetrachloride	**0.0080 J**	**0.010**	**ug**	**0.0012**
Chlorobenzene	**0.0044 J**	**0.010**	**ug**	**0.0010**
Chlorodibromomethane	ND	0.025	ug	0.0020
Chloroethane	ND	0.050	ug	0.0062
Chloroform	**0.0019 J**	**0.010**	**ug**	**0.0011**
Chloromethane	**0.0043 J,B**	**0.050**	**ug**	**0.0025**
2-Chlorotoluene	ND	0.010	ug	0.0012
4-Chlorotoluene	ND	0.010	ug	0.0014
1,2-Dibromo-3-chloro-propane	ND	0.050	ug	0.013
1,2-Dibromoethane	ND	0.025	ug	0.0014
Dibromomethane	ND	0.025	ug	0.0021
1,2-Dichlorobenzene	**0.0082 J**	**0.010**	**ug**	**0.0018**
1,3-Dichlorobenzene	ND	0.010	ug	0.0014
1,4-Dichlorobenzene	**0.0019 J**	**0.010**	**ug**	**0.0015**
Dichlorodifluoromethane	ND	0.025	ug	0.0024
1,1-Dichloroethane	ND	0.010	ug	0.0010
1,2-Dichloroethane	ND	0.010	ug	0.0017
cis-1,2-Dichloroethene	ND	0.010	ug	0.0010
trans-1,2-Dichloroethene	ND	0.010	ug	0.0020
1,1-Dichloroethene	ND	0.010	ug	0.0015
1,2-Dichloropropane	ND	0.010	ug	0.0017
1,3-Dichloropropane	ND	0.010	ug	0.0014
2,2-Dichloropropane	ND	0.010	ug	0.0010
cis-1,3-Dichloropropene	ND	0.010	ug	0.0017
trans-1,3-Dichloropropene	ND	0.010	ug	0.0012
1,1-Dichloropropene	**0.0017 J**	**0.010**	**ug**	**0.0010**

(Continued on next page)

O'Brien & Gere Inc of North America

Client Sample ID: SK-VOST-TX1/2-R2A

GC/MS Volatiles

Lot-Sample #...: H2F290431-007 Work Order #...: MVD411AA Matrix.....: AIR

PARAMETER	RESULT	REPORTING LIMIT	UNITS	MDL
Ethylbenzene	**0.059**	**0.010**	**ug**	**0.0010**
Hexachlorobutadiene	ND	0.025	ug	0.0025
2-Hexanone	**0.012 J**	**0.10**	**ug**	**0.0068**
Isopropylbenzene	**0.011**	**0.010**	**ug**	**0.0010**
p-Isopropyltoluene	**0.0018 J**	**0.010**	**ug**	**0.0010**
Methylene chloride	**0.013 J,B**	**0.025**	**ug**	**0.0022**
4-Methyl-2-pentanone	ND	0.10	ug	0.10
Naphthalene	**0.019 J**	**0.025**	**ug**	**0.010**
n-Propylbenzene	**0.0092 J**	**0.010**	**ug**	**0.0010**
Styrene	**0.038**	**0.010**	**ug**	**0.0013**
1,1,1,2-Tetrachloroethane	ND	0.010	ug	0.0011
1,1,2,2-Tetrachloroethane	ND	0.025	ug	0.024
Tetrachloroethene	**0.0015 J**	**0.010**	**ug**	**0.0011**
Toluene	**0.11 B**	**0.010**	**ug**	**0.0010**
1,2,3-Trichlorobenzene	ND	0.025	ug	0.0010
1,2,4-Trichloro-benzene	ND	0.025	ug	0.0016
1,1,1-Trichloroethane	ND	0.025	ug	0.0010
1,1,2-Trichloroethane	ND	0.025	ug	0.010
Trichloroethene	ND	0.010	ug	0.0022
Trichlorofluoromethane	**0.045 J**	**0.050**	**ug**	**0.0017**
1,2,3-Trichloropropane	ND	0.025	ug	0.025
1,2,4-Trimethylbenzene	**0.034**	**0.010**	**ug**	**0.0015**
1,3,5-Trimethylbenzene	**0.011**	**0.010**	**ug**	**0.0018**
Vinyl chloride	ND	0.010	ug	0.0021
m-Xylene & p-Xylene	**0.21**	**0.020**	**ug**	**0.0020**
o-Xylene	**0.13**	**0.010**	**ug**	**0.0010**

SURROGATE	PERCENT RECOVERY	RECOVERY LIMITS
Dibromofluoromethane	84	(50 - 134)
1,2-Dichloroethane-d4	79	(50 - 127)
Toluene-d8	93	(57 - 134)
Bromofluorobenzene	80	(50 - 122)

NOTE(S):

J Estimated result. Result is less than RL.

B Method blank contamination. The associated method blank contains the target analyte at a reportable level.

O'Brien & Gere Inc of North America

Client Sample ID: SK-VOST-ASB-R2A

GC/MS Volatiles

Lot-Sample #...: H2F290431-008 **Work Order #...:** MVD421AA **Matrix.....:** AIR
Date Sampled...: 06/26/12 **Date Received..:** 06/29/12
Prep Date.....: 07/03/12 **Analysis Date..:** 07/03/12
Prep Batch #...: 2184061
Dilution Factor: 1 **Method.....:** SW846 VOST

PARAMETER	RESULT	REPORTING LIMIT	UNITS	MDL
Acetone	**0.13**	**0.10**	**ug**	**0.030**
Benzene	**0.0056 J**	**0.010**	**ug**	**0.0035**
Bromobenzene	ND	0.010	ug	0.0020
Bromochloromethane	ND	0.025	ug	0.0028
Bromodichloromethane	ND	0.010	ug	0.0013
Bromoform	ND	0.025	ug	0.010
Bromomethane	ND	0.050	ug	0.0059
2-Butanone	ND	0.10	ug	0.10
n-Butylbenzene	ND	0.010	ug	0.0010
sec-Butylbenzene	ND	0.010	ug	0.0010
tert-Butylbenzene	ND	0.010	ug	0.0011
Carbon disulfide	**0.0064 J**	**0.010**	**ug**	**0.0019**
Carbon tetrachloride	**0.0013 J**	**0.010**	**ug**	**0.0012**
Chlorobenzene	ND	0.010	ug	0.0010
Chlorodibromomethane	ND	0.025	ug	0.0020
Chloroethane	ND	0.050	ug	0.0062
Chloroform	ND	0.010	ug	0.0011
Chloromethane	**0.025 J,B**	**0.050**	**ug**	**0.0025**
2-Chlorotoluene	ND	0.010	ug	0.0012
4-Chlorotoluene	ND	0.010	ug	0.0014
1,2-Dibromo-3-chloro-propane	ND	0.050	ug	0.013
1,2-Dibromoethane	ND	0.025	ug	0.0014
Dibromomethane	ND	0.025	ug	0.0021
1,2-Dichlorobenzene	ND	0.010	ug	0.0018
1,3-Dichlorobenzene	ND	0.010	ug	0.0014
1,4-Dichlorobenzene	ND	0.010	ug	0.0015
Dichlorodifluoromethane	**0.073**	**0.025**	**ug**	**0.0024**
1,1-Dichloroethane	ND	0.010	ug	0.0010
1,2-Dichloroethane	ND	0.010	ug	0.0017
cis-1,2-Dichloroethene	ND	0.010	ug	0.0010
trans-1,2-Dichloroethene	ND	0.010	ug	0.0020
1,1-Dichloroethene	ND	0.010	ug	0.0015
1,2-Dichloropropane	ND	0.010	ug	0.0017
1,3-Dichloropropane	ND	0.010	ug	0.0014
2,2-Dichloropropane	ND	0.010	ug	0.0010
cis-1,3-Dichloropropene	ND	0.010	ug	0.0017
trans-1,3-Dichloropropene	ND	0.010	ug	0.0012
1,1-Dichloropropene	ND	0.010	ug	0.0010

(Continued on next page)

O'Brien & Gere Inc of North America

Client Sample ID: SK-VOST-ASB-R2A

GC/MS Volatiles

Lot-Sample #...: H2F290431-008 **Work Order #...:** MVD421AA **Matrix.....:** AIR

PARAMETER	RESULT	REPORTING LIMIT	UNITS	MDL
Ethylbenzene	**0.0015 J**	**0.010**	**ug**	**0.0010**
Hexachlorobutadiene	ND	0.025	ug	0.0025
2-Hexanone	ND	0.10	ug	0.0068
Isopropylbenzene	ND	0.010	ug	0.0010
p-Isopropyltoluene	ND	0.010	ug	0.0010
Methylene chloride	**0.015 J,B**	**0.025**	**ug**	**0.0022**
4-Methyl-2-pentanone	ND	0.10	ug	0.10
Naphthalene	ND	0.025	ug	0.010
n-Propylbenzene	ND	0.010	ug	0.0010
Styrene	**0.0017 J**	**0.010**	**ug**	**0.0013**
1,1,1,2-Tetrachloroethane	ND	0.010	ug	0.0011
1,1,2,2-Tetrachloroethane	ND	0.025	ug	0.024
Tetrachloroethene	ND	0.010	ug	0.0011
Toluene	**0.0072 J,B**	**0.010**	**ug**	**0.0010**
1,2,3-Trichlorobenzene	ND	0.025	ug	0.0010
1,2,4-Trichloro-benzene	ND	0.025	ug	0.0016
1,1,1-Trichloroethane	ND	0.025	ug	0.0010
1,1,2-Trichloroethane	ND	0.025	ug	0.010
Trichloroethene	ND	0.010	ug	0.0022
Trichlorofluoromethane	**0.081**	**0.050**	**ug**	**0.0017**
1,2,3-Trichloropropane	ND	0.025	ug	0.025
1,2,4-Trimethylbenzene	**0.0021 J**	**0.010**	**ug**	**0.0015**
1,3,5-Trimethylbenzene	ND	0.010	ug	0.0018
Vinyl chloride	**0.0051 J**	**0.010**	**ug**	**0.0021**
m-Xylene & p-Xylene	**0.0041 J**	**0.020**	**ug**	**0.0020**
o-Xylene	**0.0021 J**	**0.010**	**ug**	**0.0010**

SURROGATE	PERCENT RECOVERY	RECOVERY LIMITS
Dibromofluoromethane	89	(50 - 134)
1,2-Dichloroethane-d4	81	(50 - 127)
Toluene-d8	95	(57 - 134)
Bromofluorobenzene	78	(50 - 122)

NOTE(S):

J Estimated result. Result is less than RL.

B Method blank contamination. The associated method blank contains the target analyte at a reportable level.

O'Brien & Gere Inc of North America

Client Sample ID: SK-VOST-TX1/2-R2B

GC/MS Volatiles

Lot-Sample #...: H2F290431-009 **Work Order #...:** MVD431AA **Matrix.....:** AIR
Date Sampled...: 06/26/12 **Date Received..:** 06/29/12
Prep Date.....: 07/03/12 **Analysis Date..:** 07/03/12
Prep Batch #...: 2184061
Dilution Factor: 1 **Method.....:** SW846 VOST

PARAMETER	RESULT	REPORTING LIMIT	UNITS	MDL
Acetone	**0.30**	**0.10**	**ug**	**0.030**
Benzene	**0.29**	**0.010**	**ug**	**0.0035**
Bromobenzene	ND	0.010	ug	0.0020
Bromochloromethane	ND	0.025	ug	0.0028
Bromodichloromethane	ND	0.010	ug	0.0013
Bromoform	ND	0.025	ug	0.010
Bromomethane	ND	0.050	ug	0.0059
2-Butanone	ND	0.10	ug	0.10
n-Butylbenzene	**0.0069 J**	**0.010**	**ug**	**0.0010**
sec-Butylbenzene	**0.0032 J**	**0.010**	**ug**	**0.0010**
tert-Butylbenzene	ND	0.010	ug	0.0011
Carbon disulfide	**0.041**	**0.010**	**ug**	**0.0019**
Carbon tetrachloride	**0.0097 J**	**0.010**	**ug**	**0.0012**
Chlorobenzene	**0.0069 J**	**0.010**	**ug**	**0.0010**
Chlorodibromomethane	ND	0.025	ug	0.0020
Chloroethane	ND	0.050	ug	0.0062
Chloroform	**0.0016 J**	**0.010**	**ug**	**0.0011**
Chloromethane	**0.0050 J,B**	**0.050**	**ug**	**0.0025**
2-Chlorotoluene	ND	0.010	ug	0.0012
4-Chlorotoluene	ND	0.010	ug	0.0014
1,2-Dibromo-3-chloro-propane	ND	0.050	ug	0.013
1,2-Dibromoethane	ND	0.025	ug	0.0014
Dibromomethane	ND	0.025	ug	0.0021
1,2-Dichlorobenzene	**0.0076 J**	**0.010**	**ug**	**0.0018**
1,3-Dichlorobenzene	ND	0.010	ug	0.0014
1,4-Dichlorobenzene	**0.0025 J**	**0.010**	**ug**	**0.0015**
Dichlorodifluoromethane	**0.0025 J**	**0.025**	**ug**	**0.0024**
1,1-Dichloroethane	ND	0.010	ug	0.0010
1,2-Dichloroethane	ND	0.010	ug	0.0017
cis-1,2-Dichloroethene	ND	0.010	ug	0.0010
trans-1,2-Dichloroethene	ND	0.010	ug	0.0020
1,1-Dichloroethene	ND	0.010	ug	0.0015
1,2-Dichloropropane	ND	0.010	ug	0.0017
1,3-Dichloropropane	ND	0.010	ug	0.0014
2,2-Dichloropropane	ND	0.010	ug	0.0010
cis-1,3-Dichloropropene	ND	0.010	ug	0.0017
trans-1,3-Dichloropropene	ND	0.010	ug	0.0012
1,1-Dichloropropene	**0.0031 J**	**0.010**	**ug**	**0.0010**

(Continued on next page)

O'Brien & Gere Inc of North America

Client Sample ID: SK-VOST-TX1/2-R2B

GC/MS Volatiles

Lot-Sample #...: H2F290431-009 **Work Order #...:** MVD431AA **Matrix.....:** AIR

PARAMETER	RESULT	REPORTING LIMIT	UNITS	MDL
Ethylbenzene	**0.065**	**0.010**	**ug**	**0.0010**
Hexachlorobutadiene	ND	0.025	ug	0.0025
2-Hexanone	**0.013 J**	**0.10**	**ug**	**0.0068**
Isopropylbenzene	**0.017**	**0.010**	**ug**	**0.0010**
p-Isopropyltoluene	**0.0025 J**	**0.010**	**ug**	**0.0010**
Methylene chloride	**0.016 J,B**	**0.025**	**ug**	**0.0022**
4-Methyl-2-pentanone	ND	0.10	ug	0.10
Naphthalene	**0.023 J**	**0.025**	**ug**	**0.010**
n-Propylbenzene	**0.011**	**0.010**	**ug**	**0.0010**
Styrene	**0.054**	**0.010**	**ug**	**0.0013**
1,1,1,2-Tetrachloroethane	ND	0.010	ug	0.0011
1,1,2,2-Tetrachloroethane	ND	0.025	ug	0.024
Tetrachloroethene	ND	0.010	ug	0.0011
Toluene	**0.16 B**	**0.010**	**ug**	**0.0010**
1,2,3-Trichlorobenzene	ND	0.025	ug	0.0010
1,2,4-Trichloro-benzene	ND	0.025	ug	0.0016
1,1,1-Trichloroethane	ND	0.025	ug	0.0010
1,1,2-Trichloroethane	ND	0.025	ug	0.010
Trichloroethene	ND	0.010	ug	0.0022
Trichlorofluoromethane	**0.050**	**0.050**	**ug**	**0.0017**
1,2,3-Trichloropropane	ND	0.025	ug	0.025
1,2,4-Trimethylbenzene	**0.040**	**0.010**	**ug**	**0.0015**
1,3,5-Trimethylbenzene	**0.013**	**0.010**	**ug**	**0.0018**
Vinyl chloride	ND	0.010	ug	0.0021
m-Xylene & p-Xylene	**0.22**	**0.020**	**ug**	**0.0020**
o-Xylene	**0.14**	**0.010**	**ug**	**0.0010**

SURROGATE	PERCENT RECOVERY	RECOVERY LIMITS
Dibromofluoromethane	88	(50 - 134)
1,2-Dichloroethane-d4	79	(50 - 127)
Toluene-d8	95	(57 - 134)
Bromofluorobenzene	80	(50 - 122)

NOTE(S):

J Estimated result. Result is less than RL.

B Method blank contamination. The associated method blank contains the target analyte at a reportable level.

O'Brien & Gere Inc of North America

Client Sample ID: SK-VOST-ASB-R2B

GC/MS Volatiles

Lot-Sample #...: H2F290431-010 Work Order #...: MVD441AA Matrix.....: AIR
Date Sampled...: 06/26/12 Date Received..: 06/29/12
Prep Date.....: 07/03/12 Analysis Date..: 07/03/12
Prep Batch #...: 2184061
Dilution Factor: 1 Method.....: SW846 VOST

PARAMETER	RESULT	REPORTING LIMIT	UNITS	MDL
Acetone	**0.16**	**0.10**	**ug**	**0.030**
Benzene	ND	0.010	ug	0.0035
Bromobenzene	ND	0.010	ug	0.0020
Bromochloromethane	ND	0.025	ug	0.0028
Bromodichloromethane	ND	0.010	ug	0.0013
Bromoform	ND	0.025	ug	0.010
Bromomethane	**0.011 J,B**	**0.050**	**ug**	**0.0059**
2-Butanone	ND	0.10	ug	0.10
n-Butylbenzene	ND	0.010	ug	0.0010
sec-Butylbenzene	ND	0.010	ug	0.0010
tert-Butylbenzene	ND	0.010	ug	0.0011
Carbon disulfide	**0.0063 J**	**0.010**	**ug**	**0.0019**
Carbon tetrachloride	ND	0.010	ug	0.0012
Chlorobenzene	ND	0.010	ug	0.0010
Chlorodibromomethane	ND	0.025	ug	0.0020
Chloroethane	ND	0.050	ug	0.0062
Chloroform	ND	0.010	ug	0.0011
Chloromethane	**0.026 J,B**	**0.050**	**ug**	**0.0025**
2-Chlorotoluene	ND	0.010	ug	0.0012
4-Chlorotoluene	ND	0.010	ug	0.0014
1,2-Dibromo-3-chloro-propane	ND	0.050	ug	0.013
1,2-Dibromoethane	ND	0.025	ug	0.0014
Dibromomethane	ND	0.025	ug	0.0021
1,2-Dichlorobenzene	ND	0.010	ug	0.0018
1,3-Dichlorobenzene	ND	0.010	ug	0.0014
1,4-Dichlorobenzene	ND	0.010	ug	0.0015
Dichlorodifluoromethane	**0.067**	**0.025**	**ug**	**0.0024**
1,1-Dichloroethane	ND	0.010	ug	0.0010
1,2-Dichloroethane	ND	0.010	ug	0.0017
cis-1,2-Dichloroethene	ND	0.010	ug	0.0010
trans-1,2-Dichloroethene	ND	0.010	ug	0.0020
1,1-Dichloroethene	ND	0.010	ug	0.0015
1,2-Dichloropropane	ND	0.010	ug	0.0017
1,3-Dichloropropane	ND	0.010	ug	0.0014
2,2-Dichloropropane	ND	0.010	ug	0.0010
cis-1,3-Dichloropropene	ND	0.010	ug	0.0017
trans-1,3-Dichloropropene	ND	0.010	ug	0.0012
1,1-Dichloropropene	**0.0011 J**	**0.010**	**ug**	**0.0010**

(Continued on next page)

O'Brien & Gere Inc of North America

Client Sample ID: SK-VOST-ASB-R2B

GC/MS Volatiles

Lot-Sample #...: H2F290431-010 **Work Order #...:** MVD441AA **Matrix.....:** AIR

PARAMETER	RESULT	REPORTING LIMIT	UNITS	MDL
Ethylbenzene	ND	0.010	ug	0.0010
Hexachlorobutadiene	ND	0.025	ug	0.0025
2-Hexanone	ND	0.10	ug	0.0068
Isopropylbenzene	ND	0.010	ug	0.0010
p-Isopropyltoluene	ND	0.010	ug	0.0010
Methylene chloride	**0.011 J,B**	**0.025**	**ug**	**0.0022**
4-Methyl-2-pentanone	ND	0.10	ug	0.10
Naphthalene	ND	0.025	ug	0.010
n-Propylbenzene	ND	0.010	ug	0.0010
Styrene	ND	0.010	ug	0.0013
1,1,1,2-Tetrachloroethane	ND	0.010	ug	0.0011
1,1,2,2-Tetrachloroethane	ND	0.025	ug	0.024
Tetrachloroethene	ND	0.010	ug	0.0011
Toluene	**0.0035 J,B**	**0.010**	**ug**	**0.0010**
1,2,3-Trichlorobenzene	ND	0.025	ug	0.0010
1,2,4-Trichloro-benzene	ND	0.025	ug	0.0016
1,1,1-Trichloroethane	ND	0.025	ug	0.0010
1,1,2-Trichloroethane	ND	0.025	ug	0.010
Trichloroethene	ND	0.010	ug	0.0022
Trichlorofluoromethane	**0.076**	**0.050**	**ug**	**0.0017**
1,2,3-Trichloropropane	ND	0.025	ug	0.025
1,2,4-Trimethylbenzene	**0.0015 J**	**0.010**	**ug**	**0.0015**
1,3,5-Trimethylbenzene	ND	0.010	ug	0.0018
Vinyl chloride	**0.0051 J**	**0.010**	**ug**	**0.0021**
m-Xylene & p-Xylene	**0.0022 J**	**0.020**	**ug**	**0.0020**
o-Xylene	ND	0.010	ug	0.0010

SURROGATE	PERCENT RECOVERY	RECOVERY LIMITS
Dibromofluoromethane	86	(50 - 134)
1,2-Dichloroethane-d4	79	(50 - 127)
Toluene-d8	92	(57 - 134)
Bromofluorobenzene	78	(50 - 122)

NOTE(S):

J Estimated result. Result is less than RL.

B Method blank contamination. The associated method blank contains the target analyte at a reportable level.

O'Brien & Gere Inc of North America

Client Sample ID: SK-VOST-TX1/2-R2C

GC/MS Volatiles

Lot-Sample #...: H2F290431-011 Work Order #...: MVD451AA Matrix.....: AIR
Date Sampled...: 06/26/12 Date Received..: 06/29/12
Prep Date.....: 07/03/12 Analysis Date..: 07/03/12
Prep Batch #...: 2184061
Dilution Factor: 1 Method.....: SW846 VOST

PARAMETER	RESULT	REPORTING LIMIT	UNITS	MDL
Acetone	**0.26**	**0.10**	**ug**	**0.030**
Benzene	**0.38**	**0.010**	**ug**	**0.0035**
Bromobenzene	ND	0.010	ug	0.0020
Bromochloromethane	ND	0.025	ug	0.0028
Bromodichloromethane	ND	0.010	ug	0.0013
Bromoform	ND	0.025	ug	0.010
Bromomethane	ND	0.050	ug	0.0059
2-Butanone	ND	0.10	ug	0.10
n-Butylbenzene	**0.0085 J**	**0.010**	**ug**	**0.0010**
sec-Butylbenzene	**0.0041 J**	**0.010**	**ug**	**0.0010**
tert-Butylbenzene	ND	0.010	ug	0.0011
Carbon disulfide	**0.045**	**0.010**	**ug**	**0.0019**
Carbon tetrachloride	**0.0093 J**	**0.010**	**ug**	**0.0012**
Chlorobenzene	**0.0079 J**	**0.010**	**ug**	**0.0010**
Chlorodibromomethane	ND	0.025	ug	0.0020
Chloroethane	ND	0.050	ug	0.0062
Chloroform	**0.0019 J**	**0.010**	**ug**	**0.0011**
Chloromethane	**0.0040 J,B**	**0.050**	**ug**	**0.0025**
2-Chlorotoluene	ND	0.010	ug	0.0012
4-Chlorotoluene	ND	0.010	ug	0.0014
1,2-Dibromo-3-chloro-propane	ND	0.050	ug	0.013
1,2-Dibromoethane	ND	0.025	ug	0.0014
Dibromomethane	ND	0.025	ug	0.0021
1,2-Dichlorobenzene	**0.0060 J**	**0.010**	**ug**	**0.0018**
1,3-Dichlorobenzene	ND	0.010	ug	0.0014
1,4-Dichlorobenzene	**0.0018 J**	**0.010**	**ug**	**0.0015**
Dichlorodifluoromethane	ND	0.025	ug	0.0024
1,1-Dichloroethane	ND	0.010	ug	0.0010
1,2-Dichloroethane	ND	0.010	ug	0.0017
cis-1,2-Dichloroethene	ND	0.010	ug	0.0010
trans-1,2-Dichloroethene	ND	0.010	ug	0.0020
1,1-Dichloroethene	ND	0.010	ug	0.0015
1,2-Dichloropropane	ND	0.010	ug	0.0017
1,3-Dichloropropane	ND	0.010	ug	0.0014
2,2-Dichloropropane	ND	0.010	ug	0.0010
cis-1,3-Dichloropropene	ND	0.010	ug	0.0017
trans-1,3-Dichloropropene	ND	0.010	ug	0.0012
1,1-Dichloropropene	**0.0046 J**	**0.010**	**ug**	**0.0010**

(Continued on next page)

O'Brien & Gere Inc of North America

Client Sample ID: SK-VOST-TX1/2-R2C

GC/MS Volatiles

Lot-Sample #...: H2F290431-011 Work Order #...: MVD451AA Matrix.....: AIR

PARAMETER	RESULT	REPORTING LIMIT	UNITS	MDL
Ethylbenzene	**0.067**	**0.010**	**ug**	**0.0010**
Hexachlorobutadiene	ND	0.025	ug	0.0025
2-Hexanone	ND	0.10	ug	0.0068
Isopropylbenzene	**0.024**	**0.010**	**ug**	**0.0010**
p-Isopropyltoluene	**0.0033 J**	**0.010**	**ug**	**0.0010**
Methylene chloride	**0.015 J,B**	**0.025**	**ug**	**0.0022**
4-Methyl-2-pentanone	ND	0.10	ug	0.10
Naphthalene	**0.035**	**0.025**	**ug**	**0.010**
n-Propylbenzene	**0.013**	**0.010**	**ug**	**0.0010**
Styrene	**0.046**	**0.010**	**ug**	**0.0013**
1,1,1,2-Tetrachloroethane	ND	0.010	ug	0.0011
1,1,2,2-Tetrachloroethane	ND	0.025	ug	0.024
Tetrachloroethene	**0.0012 J**	**0.010**	**ug**	**0.0011**
Toluene	**0.19 B**	**0.010**	**ug**	**0.0010**
1,2,3-Trichlorobenzene	ND	0.025	ug	0.0010
1,2,4-Trichloro-benzene	ND	0.025	ug	0.0016
1,1,1-Trichloroethane	ND	0.025	ug	0.0010
1,1,2-Trichloroethane	ND	0.025	ug	0.010
Trichloroethene	ND	0.010	ug	0.0022
Trichlorofluoromethane	**0.048 J**	**0.050**	**ug**	**0.0017**
1,2,3-Trichloropropane	ND	0.025	ug	0.025
1,2,4-Trimethylbenzene	**0.042**	**0.010**	**ug**	**0.0015**
1,3,5-Trimethylbenzene	**0.013**	**0.010**	**ug**	**0.0018**
Vinyl chloride	ND	0.010	ug	0.0021
m-Xylene & p-Xylene	**0.23**	**0.020**	**ug**	**0.0020**
o-Xylene	**0.14**	**0.010**	**ug**	**0.0010**

SURROGATE	PERCENT RECOVERY	RECOVERY LIMITS
Dibromofluoromethane	84	(50 - 134)
1,2-Dichloroethane-d4	76	(50 - 127)
Toluene-d8	96	(57 - 134)
Bromofluorobenzene	80	(50 - 122)

NOTE(S):

J Estimated result. Result is less than RL.

B Method blank contamination. The associated method blank contains the target analyte at a reportable level.

O'Brien & Gere Inc of North America

Client Sample ID: SK-VOST-ASB-R2C

GC/MS Volatiles

Lot-Sample #...: H2F290431-012 **Work Order #...:** MVD461AA **Matrix.....:** AIR
Date Sampled...: 06/26/12 **Date Received..:** 06/29/12
Prep Date.....: 07/03/12 **Analysis Date..:** 07/03/12
Prep Batch #...: 2184061
Dilution Factor: 1 **Method.....:** SW846 VOST

PARAMETER	RESULT	REPORTING LIMIT	UNITS	MDL
Acetone	**0.094 J**	**0.10**	**ug**	**0.030**
Benzene	**0.0051 J**	**0.010**	**ug**	**0.0035**
Bromobenzene	ND	0.010	ug	0.0020
Bromochloromethane	ND	0.025	ug	0.0028
Bromodichloromethane	ND	0.010	ug	0.0013
Bromoform	ND	0.025	ug	0.010
Bromomethane	ND	0.050	ug	0.0059
2-Butanone	ND	0.10	ug	0.10
n-Butylbenzene	ND	0.010	ug	0.0010
sec-Butylbenzene	ND	0.010	ug	0.0010
tert-Butylbenzene	ND	0.010	ug	0.0011
Carbon disulfide	**0.0060 J**	**0.010**	**ug**	**0.0019**
Carbon tetrachloride	ND	0.010	ug	0.0012
Chlorobenzene	ND	0.010	ug	0.0010
Chlorodibromomethane	ND	0.025	ug	0.0020
Chloroethane	ND	0.050	ug	0.0062
Chloroform	ND	0.010	ug	0.0011
Chloromethane	**0.028 J,B**	**0.050**	**ug**	**0.0025**
2-Chlorotoluene	ND	0.010	ug	0.0012
4-Chlorotoluene	ND	0.010	ug	0.0014
1,2-Dibromo-3-chloro-propane	ND	0.050	ug	0.013
1,2-Dibromoethane	ND	0.025	ug	0.0014
Dibromomethane	ND	0.025	ug	0.0021
1,2-Dichlorobenzene	ND	0.010	ug	0.0018
1,3-Dichlorobenzene	ND	0.010	ug	0.0014
1,4-Dichlorobenzene	ND	0.010	ug	0.0015
Dichlorodifluoromethane	**0.073**	**0.025**	**ug**	**0.0024**
1,1-Dichloroethane	ND	0.010	ug	0.0010
1,2-Dichloroethane	ND	0.010	ug	0.0017
cis-1,2-Dichloroethene	ND	0.010	ug	0.0010
trans-1,2-Dichloroethene	ND	0.010	ug	0.0020
1,1-Dichloroethene	ND	0.010	ug	0.0015
1,2-Dichloropropane	ND	0.010	ug	0.0017
1,3-Dichloropropane	ND	0.010	ug	0.0014
2,2-Dichloropropane	ND	0.010	ug	0.0010
cis-1,3-Dichloropropene	ND	0.010	ug	0.0017
trans-1,3-Dichloropropene	ND	0.010	ug	0.0012
1,1-Dichloropropene	**0.0021 J**	**0.010**	**ug**	**0.0010**

(Continued on next page)

O'Brien & Gere Inc of North America

Client Sample ID: SK-VOST-ASB-R2C

GC/MS Volatiles

Lot-Sample #...: H2F290431-012 Work Order #...: MVD461AA Matrix.....: AIR

PARAMETER	RESULT	REPORTING LIMIT	UNITS	MDL
Ethylbenzene	ND	0.010	ug	0.0010
Hexachlorobutadiene	ND	0.025	ug	0.0025
2-Hexanone	ND	0.10	ug	0.0068
Isopropylbenzene	ND	0.010	ug	0.0010
p-Isopropyltoluene	ND	0.010	ug	0.0010
Methylene chloride	**0.011 J,B**	**0.025**	**ug**	**0.0022**
4-Methyl-2-pentanone	ND	0.10	ug	0.10
Naphthalene	ND	0.025	ug	0.010
n-Propylbenzene	ND	0.010	ug	0.0010
Styrene	ND	0.010	ug	0.0013
1,1,1,2-Tetrachloroethane	ND	0.010	ug	0.0011
1,1,2,2-Tetrachloroethane	ND	0.025	ug	0.024
Tetrachloroethene	ND	0.010	ug	0.0011
Toluene	**0.0031 J,B**	**0.010**	**ug**	**0.0010**
1,2,3-Trichlorobenzene	ND	0.025	ug	0.0010
1,2,4-Trichloro-benzene	ND	0.025	ug	0.0016
1,1,1-Trichloroethane	ND	0.025	ug	0.0010
1,1,2-Trichloroethane	ND	0.025	ug	0.010
Trichloroethene	ND	0.010	ug	0.0022
Trichlorofluoromethane	**0.071**	**0.050**	**ug**	**0.0017**
1,2,3-Trichloropropane	ND	0.025	ug	0.025
1,2,4-Trimethylbenzene	ND	0.010	ug	0.0015
1,3,5-Trimethylbenzene	ND	0.010	ug	0.0018
Vinyl chloride	**0.0046 J**	**0.010**	**ug**	**0.0021**
m-Xylene & p-Xylene	**0.0025 J**	**0.020**	**ug**	**0.0020**
o-Xylene	**0.0013 J**	**0.010**	**ug**	**0.0010**

SURROGATE	PERCENT RECOVERY	RECOVERY LIMITS
Dibromofluoromethane	84	(50 - 134)
1,2-Dichloroethane-d4	76	(50 - 127)
Toluene-d8	93	(57 - 134)
Bromofluorobenzene	78	(50 - 122)

NOTE(S):

J Estimated result. Result is less than RL.

B Method blank contamination. The associated method blank contains the target analyte at a reportable level.

O'Brien & Gere Inc of North America

Client Sample ID: SK-VOST-TX1/2-R3A

GC/MS Volatiles

Lot-Sample #...: H2F290431-013 **Work Order #...:** MVD471AA **Matrix.....:** AIR
Date Sampled...: 06/27/12 **Date Received..:** 06/29/12
Prep Date.....: 07/03/12 **Analysis Date..:** 07/03/12
Prep Batch #...: 2184061
Dilution Factor: 1 **Method.....:** SW846 VOST

PARAMETER	RESULT	REPORTING LIMIT	UNITS	MDL
Acetone	**0.27**	**0.10**	**ug**	**0.030**
Benzene	**0.47**	**0.010**	**ug**	**0.0035**
Bromobenzene	ND	0.010	ug	0.0020
Bromochloromethane	ND	0.025	ug	0.0028
Bromodichloromethane	ND	0.010	ug	0.0013
Bromoform	ND	0.025	ug	0.010
Bromomethane	ND	0.050	ug	0.0059
2-Butanone	ND	0.10	ug	0.10
n-Butylbenzene	**0.0034 J**	**0.010**	**ug**	**0.0010**
sec-Butylbenzene	**0.0016 J**	**0.010**	**ug**	**0.0010**
tert-Butylbenzene	ND	0.010	ug	0.0011
Carbon disulfide	**0.043**	**0.010**	**ug**	**0.0019**
Carbon tetrachloride	**0.010**	**0.010**	**ug**	**0.0012**
Chlorobenzene	**0.0049 J**	**0.010**	**ug**	**0.0010**
Chlorodibromomethane	ND	0.025	ug	0.0020
Chloroethane	ND	0.050	ug	0.0062
Chloroform	**0.0020 J**	**0.010**	**ug**	**0.0011**
Chloromethane	**0.0050 J,B**	**0.050**	**ug**	**0.0025**
2-Chlorotoluene	ND	0.010	ug	0.0012
4-Chlorotoluene	ND	0.010	ug	0.0014
1,2-Dibromo-3-chloro-propane	ND	0.050	ug	0.013
1,2-Dibromoethane	ND	0.025	ug	0.0014
Dibromomethane	ND	0.025	ug	0.0021
1,2-Dichlorobenzene	**0.043**	**0.010**	**ug**	**0.0018**
1,3-Dichlorobenzene	**0.0030 J**	**0.010**	**ug**	**0.0014**
1,4-Dichlorobenzene	**0.0079 J**	**0.010**	**ug**	**0.0015**
Dichlorodifluoromethane	ND	0.025	ug	0.0024
1,1-Dichloroethane	ND	0.010	ug	0.0010
1,2-Dichloroethane	ND	0.010	ug	0.0017
cis-1,2-Dichloroethene	ND	0.010	ug	0.0010
trans-1,2-Dichloroethene	ND	0.010	ug	0.0020
1,1-Dichloroethene	**0.0021 J**	**0.010**	**ug**	**0.0015**
1,2-Dichloropropane	ND	0.010	ug	0.0017
1,3-Dichloropropane	ND	0.010	ug	0.0014
2,2-Dichloropropane	ND	0.010	ug	0.0010
cis-1,3-Dichloropropene	ND	0.010	ug	0.0017
trans-1,3-Dichloropropene	ND	0.010	ug	0.0012
1,1-Dichloropropene	**0.0036 J**	**0.010**	**ug**	**0.0010**

(Continued on next page)

O'Brien & Gere Inc of North America

Client Sample ID: SK-VOST-TX1/2-R3A

GC/MS Volatiles

Lot-Sample #...: H2F290431-013 **Work Order #...:** MVD471AA **Matrix.....:** AIR

PARAMETER	RESULT	REPORTING LIMIT	UNITS	MDL
Ethylbenzene	**0.072**	**0.010**	**ug**	**0.0010**
Hexachlorobutadiene	ND	0.025	ug	0.0025
2-Hexanone	**0.021 J**	**0.10**	**ug**	**0.0068**
Isopropylbenzene	**0.0092 J**	**0.010**	**ug**	**0.0010**
p-Isopropyltoluene	**0.0025 J**	**0.010**	**ug**	**0.0010**
Methylene chloride	**0.015 J,B**	**0.025**	**ug**	**0.0022**
4-Methyl-2-pentanone	ND	0.10	ug	0.10
Naphthalene	**0.019 J**	**0.025**	**ug**	**0.010**
n-Propylbenzene	**0.010**	**0.010**	**ug**	**0.0010**
Styrene	**0.054**	**0.010**	**ug**	**0.0013**
1,1,1,2-Tetrachloroethane	ND	0.010	ug	0.0011
1,1,2,2-Tetrachloroethane	ND	0.025	ug	0.024
Tetrachloroethene	**0.0063 J**	**0.010**	**ug**	**0.0011**
Toluene	**0.11 B**	**0.010**	**ug**	**0.0010**
1,2,3-Trichlorobenzene	ND	0.025	ug	0.0010
1,2,4-Trichloro-benzene	ND	0.025	ug	0.0016
1,1,1-Trichloroethane	**0.0017 J**	**0.025**	**ug**	**0.0010**
1,1,2-Trichloroethane	ND	0.025	ug	0.010
Trichloroethene	**0.0038 J**	**0.010**	**ug**	**0.0022**
Trichlorofluoromethane	**0.074**	**0.050**	**ug**	**0.0017**
1,2,3-Trichloropropane	ND	0.025	ug	0.025
1,2,4-Trimethylbenzene	**0.035**	**0.010**	**ug**	**0.0015**
1,3,5-Trimethylbenzene	**0.011**	**0.010**	**ug**	**0.0018**
Vinyl chloride	ND	0.010	ug	0.0021
m-Xylene & p-Xylene	**0.23**	**0.020**	**ug**	**0.0020**
o-Xylene	**0.13**	**0.010**	**ug**	**0.0010**

SURROGATE	PERCENT RECOVERY	RECOVERY LIMITS
Dibromofluoromethane	87	(50 - 134)
1,2-Dichloroethane-d4	80	(50 - 127)
Toluene-d8	96	(57 - 134)
Bromofluorobenzene	84	(50 - 122)

NOTE(S):

J Estimated result. Result is less than RL.

B Method blank contamination. The associated method blank contains the target analyte at a reportable level.

O'Brien & Gere Inc of North America

Client Sample ID: SK-VOST-ASB-R3A

GC/MS Volatiles

Lot-Sample #...: H2F290431-014 **Work Order #...:** MVD481AA **Matrix.....:** AIR
Date Sampled...: 06/27/12 **Date Received..:** 06/29/12
Prep Date.....: 07/03/12 **Analysis Date..:** 07/03/12
Prep Batch #...: 2184061
Dilution Factor: 1 **Method.....:** SW846 VOST

PARAMETER	RESULT	REPORTING LIMIT	UNITS	MDL
Acetone	**0.11**	**0.10**	**ug**	**0.030**
Benzene	**0.0041 J**	**0.010**	**ug**	**0.0035**
Bromobenzene	ND	0.010	ug	0.0020
Bromochloromethane	ND	0.025	ug	0.0028
Bromodichloromethane	ND	0.010	ug	0.0013
Bromoform	ND	0.025	ug	0.010
Bromomethane	**0.010 J,B**	**0.050**	**ug**	**0.0059**
2-Butanone	ND	0.10	ug	0.10
n-Butylbenzene	ND	0.010	ug	0.0010
sec-Butylbenzene	ND	0.010	ug	0.0010
tert-Butylbenzene	ND	0.010	ug	0.0011
Carbon disulfide	**0.0091 J**	**0.010**	**ug**	**0.0019**
Carbon tetrachloride	ND	0.010	ug	0.0012
Chlorobenzene	ND	0.010	ug	0.0010
Chlorodibromomethane	ND	0.025	ug	0.0020
Chloroethane	ND	0.050	ug	0.0062
Chloroform	**0.0021 J**	**0.010**	**ug**	**0.0011**
Chloromethane	**0.021 J,B**	**0.050**	**ug**	**0.0025**
2-Chlorotoluene	ND	0.010	ug	0.0012
4-Chlorotoluene	ND	0.010	ug	0.0014
1,2-Dibromo-3-chloro-propane	ND	0.050	ug	0.013
1,2-Dibromoethane	ND	0.025	ug	0.0014
Dibromomethane	ND	0.025	ug	0.0021
1,2-Dichlorobenzene	ND	0.010	ug	0.0018
1,3-Dichlorobenzene	ND	0.010	ug	0.0014
1,4-Dichlorobenzene	ND	0.010	ug	0.0015
Dichlorodifluoromethane	**0.057**	**0.025**	**ug**	**0.0024**
1,1-Dichloroethane	ND	0.010	ug	0.0010
1,2-Dichloroethane	ND	0.010	ug	0.0017
cis-1,2-Dichloroethene	ND	0.010	ug	0.0010
trans-1,2-Dichloroethene	ND	0.010	ug	0.0020
1,1-Dichloroethene	**0.0019 J**	**0.010**	**ug**	**0.0015**
1,2-Dichloropropane	ND	0.010	ug	0.0017
1,3-Dichloropropane	ND	0.010	ug	0.0014
2,2-Dichloropropane	ND	0.010	ug	0.0010
cis-1,3-Dichloropropene	ND	0.010	ug	0.0017
trans-1,3-Dichloropropene	ND	0.010	ug	0.0012
1,1-Dichloropropene	ND	0.010	ug	0.0010

(Continued on next page)

O'Brien & Gere Inc of North America

Client Sample ID: SK-VOST-ASB-R3A

GC/MS Volatiles

Lot-Sample #...: H2F290431-014 Work Order #...: MVD481AA Matrix.....: AIR

PARAMETER	RESULT	REPORTING LIMIT	UNITS	MDL
Ethylbenzene	**0.0021 J**	**0.010**	**ug**	**0.0010**
Hexachlorobutadiene	ND	0.025	ug	0.0025
2-Hexanone	ND	0.10	ug	0.0068
Isopropylbenzene	ND	0.010	ug	0.0010
p-Isopropyltoluene	ND	0.010	ug	0.0010
Methylene chloride	**0.0091 J,B**	**0.025**	**ug**	**0.0022**
4-Methyl-2-pentanone	ND	0.10	ug	0.10
Naphthalene	ND	0.025	ug	0.010
n-Propylbenzene	ND	0.010	ug	0.0010
Styrene	**0.0026 J**	**0.010**	**ug**	**0.0013**
1,1,1,2-Tetrachloroethane	ND	0.010	ug	0.0011
1,1,2,2-Tetrachloroethane	ND	0.025	ug	0.024
Tetrachloroethene	ND	0.010	ug	0.0011
Toluene	**0.014 B**	**0.010**	**ug**	**0.0010**
1,2,3-Trichlorobenzene	ND	0.025	ug	0.0010
1,2,4-Trichloro-benzene	ND	0.025	ug	0.0016
1,1,1-Trichloroethane	ND	0.025	ug	0.0010
1,1,2-Trichloroethane	ND	0.025	ug	0.010
Trichloroethene	ND	0.010	ug	0.0022
Trichlorofluoromethane	**0.078**	**0.050**	**ug**	**0.0017**
1,2,3-Trichloropropane	ND	0.025	ug	0.025
1,2,4-Trimethylbenzene	**0.0029 J**	**0.010**	**ug**	**0.0015**
1,3,5-Trimethylbenzene	ND	0.010	ug	0.0018
Vinyl chloride	**0.0039 J**	**0.010**	**ug**	**0.0021**
m-Xylene & p-Xylene	**0.0061 J**	**0.020**	**ug**	**0.0020**
o-Xylene	**0.0033 J**	**0.010**	**ug**	**0.0010**

SURROGATE	PERCENT RECOVERY	RECOVERY LIMITS
Dibromofluoromethane	88	(50 - 134)
1,2-Dichloroethane-d4	78	(50 - 127)
Toluene-d8	100	(57 - 134)
Bromofluorobenzene	80	(50 - 122)

NOTE(S):

J Estimated result. Result is less than RL.

B Method blank contamination. The associated method blank contains the target analyte at a reportable level.

O'Brien & Gere Inc of North America

Client Sample ID: SK-VOST-TX1/2-R3B

GC/MS Volatiles

Lot-Sample #...: H2F290431-015 Work Order #...: MVD491AA Matrix.....: AIR
Date Sampled...: 06/27/12 Date Received..: 06/29/12
Prep Date.....: 07/03/12 Analysis Date..: 07/03/12
Prep Batch #...: 2184061
Dilution Factor: 1 Method.....: SW846 VOST

PARAMETER	RESULT	REPORTING LIMIT	UNITS	MDL
Acetone	**0.28**	**0.10**	**ug**	**0.030**
Benzene	**0.39**	**0.010**	**ug**	**0.0035**
Bromobenzene	ND	0.010	ug	0.0020
Bromochloromethane	ND	0.025	ug	0.0028
Bromodichloromethane	ND	0.010	ug	0.0013
Bromoform	ND	0.025	ug	0.010
Bromomethane	ND	0.050	ug	0.0059
2-Butanone	ND	0.10	ug	0.10
n-Butylbenzene	**0.0046 J**	**0.010**	**ug**	**0.0010**
sec-Butylbenzene	**0.0021 J**	**0.010**	**ug**	**0.0010**
tert-Butylbenzene	ND	0.010	ug	0.0011
Carbon disulfide	**0.064**	**0.010**	**ug**	**0.0019**
Carbon tetrachloride	**0.0079 J**	**0.010**	**ug**	**0.0012**
Chlorobenzene	**0.0051 J**	**0.010**	**ug**	**0.0010**
Chlorodibromomethane	ND	0.025	ug	0.0020
Chloroethane	ND	0.050	ug	0.0062
Chloroform	**0.0019 J**	**0.010**	**ug**	**0.0011**
Chloromethane	**0.0045 J,B**	**0.050**	**ug**	**0.0025**
2-Chlorotoluene	ND	0.010	ug	0.0012
4-Chlorotoluene	ND	0.010	ug	0.0014
1,2-Dibromo-3-chloro-propane	ND	0.050	ug	0.013
1,2-Dibromoethane	ND	0.025	ug	0.0014
Dibromomethane	ND	0.025	ug	0.0021
1,2-Dichlorobenzene	**0.027**	**0.010**	**ug**	**0.0018**
1,3-Dichlorobenzene	**0.0025 J**	**0.010**	**ug**	**0.0014**
1,4-Dichlorobenzene	**0.0054 J**	**0.010**	**ug**	**0.0015**
Dichlorodifluoromethane	ND	0.025	ug	0.0024
1,1-Dichloroethane	ND	0.010	ug	0.0010
1,2-Dichloroethane	ND	0.010	ug	0.0017
cis-1,2-Dichloroethene	ND	0.010	ug	0.0010
trans-1,2-Dichloroethene	ND	0.010	ug	0.0020
1,1-Dichloroethene	ND	0.010	ug	0.0015
1,2-Dichloropropane	ND	0.010	ug	0.0017
1,3-Dichloropropane	ND	0.010	ug	0.0014
2,2-Dichloropropane	ND	0.010	ug	0.0010
cis-1,3-Dichloropropene	ND	0.010	ug	0.0017
trans-1,3-Dichloropropene	ND	0.010	ug	0.0012
1,1-Dichloropropene	**0.0035 J**	**0.010**	**ug**	**0.0010**

(Continued on next page)

O'Brien & Gere Inc of North America

Client Sample ID: SK-VOST-TX1/2-R3B

GC/MS Volatiles

Lot-Sample #...: H2F290431-015 Work Order #...: MVD491AA Matrix.....: AIR

PARAMETER	RESULT	REPORTING LIMIT	UNITS	MDL
Ethylbenzene	**0.072**	**0.010**	**ug**	**0.0010**
Hexachlorobutadiene	ND	0.025	ug	0.0025
2-Hexanone	**0.016 J**	**0.10**	**ug**	**0.0068**
Isopropylbenzene	**0.012**	**0.010**	**ug**	**0.0010**
p-Isopropyltoluene	**0.0029 J**	**0.010**	**ug**	**0.0010**
Methylene chloride	**0.015 J,B**	**0.025**	**ug**	**0.0022**
4-Methyl-2-pentanone	ND	0.10	ug	0.10
Naphthalene	**0.018 J**	**0.025**	**ug**	**0.010**
n-Propylbenzene	**0.012**	**0.010**	**ug**	**0.0010**
Styrene	**0.049**	**0.010**	**ug**	**0.0013**
1,1,1,2-Tetrachloroethane	ND	0.010	ug	0.0011
1,1,2,2-Tetrachloroethane	ND	0.025	ug	0.024
Tetrachloroethene	**0.0077 J**	**0.010**	**ug**	**0.0011**
Toluene	**0.12 B**	**0.010**	**ug**	**0.0010**
1,2,3-Trichlorobenzene	ND	0.025	ug	0.0010
1,2,4-Trichloro-benzene	ND	0.025	ug	0.0016
1,1,1-Trichloroethane	ND	0.025	ug	0.0010
1,1,2-Trichloroethane	ND	0.025	ug	0.010
Trichloroethene	**0.0032 J**	**0.010**	**ug**	**0.0022**
Trichlorofluoromethane	**0.063**	**0.050**	**ug**	**0.0017**
1,2,3-Trichloropropane	ND	0.025	ug	0.025
1,2,4-Trimethylbenzene	**0.033**	**0.010**	**ug**	**0.0015**
1,3,5-Trimethylbenzene	**0.011**	**0.010**	**ug**	**0.0018**
Vinyl chloride	ND	0.010	ug	0.0021
m-Xylene & p-Xylene	**0.21**	**0.020**	**ug**	**0.0020**
o-Xylene	**0.13**	**0.010**	**ug**	**0.0010**

SURROGATE	PERCENT RECOVERY	RECOVERY LIMITS
Dibromofluoromethane	85	(50 - 134)
1,2-Dichloroethane-d4	77	(50 - 127)
Toluene-d8	94	(57 - 134)
Bromofluorobenzene	78	(50 - 122)

NOTE(S):

J Estimated result. Result is less than RL.

B Method blank contamination. The associated method blank contains the target analyte at a reportable level.

O'Brien & Gere Inc of North America

Client Sample ID: SK-VOST-ASB-R3B

GC/MS Volatiles

Lot-Sample #...: H2F290431-016 **Work Order #...:** MVD5A1AA **Matrix.....:** AIR
Date Sampled...: 06/27/12 **Date Received..:** 06/29/12
Prep Date.....: 07/03/12 **Analysis Date..:** 07/03/12
Prep Batch #...: 2184061
Dilution Factor: 1 **Method.....:** SW846 VOST

PARAMETER	RESULT	REPORTING LIMIT	UNITS	MDL
Acetone	**0.14**	**0.10**	**ug**	**0.030**
Benzene	ND	0.010	ug	0.0035
Bromobenzene	ND	0.010	ug	0.0020
Bromochloromethane	ND	0.025	ug	0.0028
Bromodichloromethane	ND	0.010	ug	0.0013
Bromoform	ND	0.025	ug	0.010
Bromomethane	ND	0.050	ug	0.0059
2-Butanone	ND	0.10	ug	0.10
n-Butylbenzene	ND	0.010	ug	0.0010
sec-Butylbenzene	ND	0.010	ug	0.0010
tert-Butylbenzene	ND	0.010	ug	0.0011
Carbon disulfide	**0.0097 J**	**0.010**	**ug**	**0.0019**
Carbon tetrachloride	ND	0.010	ug	0.0012
Chlorobenzene	ND	0.010	ug	0.0010
Chlorodibromomethane	ND	0.025	ug	0.0020
Chloroethane	ND	0.050	ug	0.0062
Chloroform	ND	0.010	ug	0.0011
Chloromethane	**0.021 J,B**	**0.050**	**ug**	**0.0025**
2-Chlorotoluene	ND	0.010	ug	0.0012
4-Chlorotoluene	ND	0.010	ug	0.0014
1,2-Dibromo-3-chloro-propane	ND	0.050	ug	0.013
1,2-Dibromoethane	ND	0.025	ug	0.0014
Dibromomethane	ND	0.025	ug	0.0021
1,2-Dichlorobenzene	ND	0.010	ug	0.0018
1,3-Dichlorobenzene	ND	0.010	ug	0.0014
1,4-Dichlorobenzene	ND	0.010	ug	0.0015
Dichlorodifluoromethane	**0.074**	**0.025**	**ug**	**0.0024**
1,1-Dichloroethane	ND	0.010	ug	0.0010
1,2-Dichloroethane	ND	0.010	ug	0.0017
cis-1,2-Dichloroethene	ND	0.010	ug	0.0010
trans-1,2-Dichloroethene	ND	0.010	ug	0.0020
1,1-Dichloroethene	ND	0.010	ug	0.0015
1,2-Dichloropropane	ND	0.010	ug	0.0017
1,3-Dichloropropane	ND	0.010	ug	0.0014
2,2-Dichloropropane	ND	0.010	ug	0.0010
cis-1,3-Dichloropropene	ND	0.010	ug	0.0017
trans-1,3-Dichloropropene	ND	0.010	ug	0.0012
1,1-Dichloropropene	ND	0.010	ug	0.0010

(Continued on next page)

O'Brien & Gere Inc of North America

Client Sample ID: SK-VOST-ASB-R3B

GC/MS Volatiles

Lot-Sample #...: H2F290431-016 Work Order #...: MVD5A1AA Matrix.....: AIR

PARAMETER	RESULT	REPORTING LIMIT	UNITS	MDL
Ethylbenzene	ND	0.010	ug	0.0010
Hexachlorobutadiene	ND	0.025	ug	0.0025
2-Hexanone	ND	0.10	ug	0.0068
Isopropylbenzene	ND	0.010	ug	0.0010
p-Isopropyltoluene	ND	0.010	ug	0.0010
Methylene chloride	**0.011 J,B**	**0.025**	**ug**	**0.0022**
4-Methyl-2-pentanone	ND	0.10	ug	0.10
Naphthalene	ND	0.025	ug	0.010
n-Propylbenzene	ND	0.010	ug	0.0010
Styrene	ND	0.010	ug	0.0013
1,1,1,2-Tetrachloroethane	ND	0.010	ug	0.0011
1,1,2,2-Tetrachloroethane	ND	0.025	ug	0.024
Tetrachloroethene	ND	0.010	ug	0.0011
Toluene	**0.0042 J,B**	**0.010**	**ug**	**0.0010**
1,2,3-Trichlorobenzene	ND	0.025	ug	0.0010
1,2,4-Trichloro-benzene	ND	0.025	ug	0.0016
1,1,1-Trichloroethane	ND	0.025	ug	0.0010
1,1,2-Trichloroethane	ND	0.025	ug	0.010
Trichloroethene	ND	0.010	ug	0.0022
Trichlorofluoromethane	**0.091**	**0.050**	**ug**	**0.0017**
1,2,3-Trichloropropane	ND	0.025	ug	0.025
1,2,4-Trimethylbenzene	ND	0.010	ug	0.0015
1,3,5-Trimethylbenzene	ND	0.010	ug	0.0018
Vinyl chloride	**0.0069 J**	**0.010**	**ug**	**0.0021**
m-Xylene & p-Xylene	ND	0.020	ug	0.0020
o-Xylene	**0.0015 J**	**0.010**	**ug**	**0.0010**

SURROGATE	PERCENT RECOVERY	RECOVERY LIMITS
Dibromofluoromethane	91	(50 - 134)
1,2-Dichloroethane-d4	84	(50 - 127)
Toluene-d8	99	(57 - 134)
Bromofluorobenzene	79	(50 - 122)

NOTE(S):

J Estimated result. Result is less than RL.

B Method blank contamination. The associated method blank contains the target analyte at a reportable level.

O'Brien & Gere Inc of North America

Client Sample ID: SK-VOST-TX1/2-R3C

GC/MS Volatiles

Lot-Sample #...: H2F290431-017 **Work Order #...:** MVD5C1AA **Matrix.....:** AIR
Date Sampled...: 06/27/12 **Date Received..:** 06/29/12
Prep Date.....: 07/03/12 **Analysis Date..:** 07/03/12
Prep Batch #...: 2184061
Dilution Factor: 1 **Method.....:** SW846 VOST

PARAMETER	RESULT	REPORTING LIMIT	UNITS	MDL
Acetone	**0.24**	**0.10**	**ug**	**0.030**
Benzene	**0.38**	**0.010**	**ug**	**0.0035**
Bromobenzene	ND	0.010	ug	0.0020
Bromochloromethane	ND	0.025	ug	0.0028
Bromodichloromethane	ND	0.010	ug	0.0013
Bromoform	ND	0.025	ug	0.010
Bromomethane	ND	0.050	ug	0.0059
2-Butanone	ND	0.10	ug	0.10
n-Butylbenzene	**0.0064 J**	**0.010**	**ug**	**0.0010**
sec-Butylbenzene	**0.0032 J**	**0.010**	**ug**	**0.0010**
tert-Butylbenzene	ND	0.010	ug	0.0011
Carbon disulfide	**0.027**	**0.010**	**ug**	**0.0019**
Carbon tetrachloride	**0.0095 J**	**0.010**	**ug**	**0.0012**
Chlorobenzene	**0.0066 J**	**0.010**	**ug**	**0.0010**
Chlorodibromomethane	ND	0.025	ug	0.0020
Chloroethane	ND	0.050	ug	0.0062
Chloroform	**0.0022 J**	**0.010**	**ug**	**0.0011**
Chloromethane	**0.0060 J,B**	**0.050**	**ug**	**0.0025**
2-Chlorotoluene	ND	0.010	ug	0.0012
4-Chlorotoluene	ND	0.010	ug	0.0014
1,2-Dibromo-3-chloro-propane	ND	0.050	ug	0.013
1,2-Dibromoethane	ND	0.025	ug	0.0014
Dibromomethane	ND	0.025	ug	0.0021
1,2-Dichlorobenzene	**0.027**	**0.010**	**ug**	**0.0018**
1,3-Dichlorobenzene	**0.0020 J**	**0.010**	**ug**	**0.0014**
1,4-Dichlorobenzene	**0.0044 J**	**0.010**	**ug**	**0.0015**
Dichlorodifluoromethane	ND	0.025	ug	0.0024
1,1-Dichloroethane	ND	0.010	ug	0.0010
1,2-Dichloroethane	ND	0.010	ug	0.0017
cis-1,2-Dichloroethene	ND	0.010	ug	0.0010
trans-1,2-Dichloroethene	ND	0.010	ug	0.0020
1,1-Dichloroethene	ND	0.010	ug	0.0015
1,2-Dichloropropane	ND	0.010	ug	0.0017
1,3-Dichloropropane	ND	0.010	ug	0.0014
2,2-Dichloropropane	ND	0.010	ug	0.0010
cis-1,3-Dichloropropene	ND	0.010	ug	0.0017
trans-1,3-Dichloropropene	ND	0.010	ug	0.0012
1,1-Dichloropropene	**0.0038 J**	**0.010**	**ug**	**0.0010**

(Continued on next page)

O'Brien & Gere Inc of North America

Client Sample ID: SK-VOST-TX1/2-R3C

GC/MS Volatiles

Lot-Sample #...: H2F290431-017 Work Order #...: MVD5C1AA Matrix.....: AIR

PARAMETER	RESULT	REPORTING LIMIT	UNITS	MDL
Ethylbenzene	**0.074**	**0.010**	**ug**	**0.0010**
Hexachlorobutadiene	ND	0.025	ug	0.0025
2-Hexanone	**0.023 J**	**0.10**	**ug**	**0.0068**
Isopropylbenzene	**0.016**	**0.010**	**ug**	**0.0010**
p-Isopropyltoluene	**0.0039 J**	**0.010**	**ug**	**0.0010**
Methylene chloride	**0.016 J,B**	**0.025**	**ug**	**0.0022**
4-Methyl-2-pentanone	ND	0.10	ug	0.10
Naphthalene	**0.027**	**0.025**	**ug**	**0.010**
n-Propylbenzene	**0.012**	**0.010**	**ug**	**0.0010**
Styrene	**0.062**	**0.010**	**ug**	**0.0013**
1,1,1,2-Tetrachloroethane	ND	0.010	ug	0.0011
1,1,2,2-Tetrachloroethane	ND	0.025	ug	0.024
Tetrachloroethene	**0.0036 J**	**0.010**	**ug**	**0.0011**
Toluene	**0.17 B**	**0.010**	**ug**	**0.0010**
1,2,3-Trichlorobenzene	ND	0.025	ug	0.0010
1,2,4-Trichloro-benzene	ND	0.025	ug	0.0016
1,1,1-Trichloroethane	**0.0013 J**	**0.025**	**ug**	**0.0010**
1,1,2-Trichloroethane	ND	0.025	ug	0.010
Trichloroethene	ND	0.010	ug	0.0022
Trichlorofluoromethane	**0.057**	**0.050**	**ug**	**0.0017**
1,2,3-Trichloropropane	ND	0.025	ug	0.025
1,2,4-Trimethylbenzene	**0.042**	**0.010**	**ug**	**0.0015**
1,3,5-Trimethylbenzene	**0.013**	**0.010**	**ug**	**0.0018**
Vinyl chloride	ND	0.010	ug	0.0021
m-Xylene & p-Xylene	**0.23**	**0.020**	**ug**	**0.0020**
o-Xylene	**0.14**	**0.010**	**ug**	**0.0010**

SURROGATE	PERCENT RECOVERY	RECOVERY LIMITS
Dibromofluoromethane	85	(50 - 134)
1,2-Dichloroethane-d4	77	(50 - 127)
Toluene-d8	95	(57 - 134)
Bromofluorobenzene	80	(50 - 122)

NOTE(S):

J Estimated result. Result is less than RL.

B Method blank contamination. The associated method blank contains the target analyte at a reportable level.

O'Brien & Gere Inc of North America

Client Sample ID: SK-VOST-ASB-R3C

GC/MS Volatiles

Lot-Sample #...: H2F290431-018 **Work Order #...:** MVD5D1AA **Matrix.....:** AIR
Date Sampled...: 06/27/12 **Date Received..:** 06/29/12
Prep Date.....: 07/03/12 **Analysis Date..:** 07/03/12
Prep Batch #...: 2184061
Dilution Factor: 1 **Method.....:** SW846 VOST

PARAMETER	RESULT	REPORTING LIMIT	UNITS	MDL
Acetone	**0.17**	**0.10**	**ug**	**0.030**
Benzene	ND	0.010	ug	0.0035
Bromobenzene	ND	0.010	ug	0.0020
Bromochloromethane	ND	0.025	ug	0.0028
Bromodichloromethane	ND	0.010	ug	0.0013
Bromoform	ND	0.025	ug	0.010
Bromomethane	ND	0.050	ug	0.0059
2-Butanone	ND	0.10	ug	0.10
n-Butylbenzene	ND	0.010	ug	0.0010
sec-Butylbenzene	ND	0.010	ug	0.0010
tert-Butylbenzene	ND	0.010	ug	0.0011
Carbon disulfide	**0.0086 J**	**0.010**	**ug**	**0.0019**
Carbon tetrachloride	ND	0.010	ug	0.0012
Chlorobenzene	**0.0081 J**	**0.010**	**ug**	**0.0010**
Chlorodibromomethane	ND	0.025	ug	0.0020
Chloroethane	ND	0.050	ug	0.0062
Chloroform	ND	0.010	ug	0.0011
Chloromethane	**0.017 J,B**	**0.050**	**ug**	**0.0025**
2-Chlorotoluene	ND	0.010	ug	0.0012
4-Chlorotoluene	ND	0.010	ug	0.0014
1,2-Dibromo-3-chloro-propane	ND	0.050	ug	0.013
1,2-Dibromoethane	ND	0.025	ug	0.0014
Dibromomethane	ND	0.025	ug	0.0021
1,2-Dichlorobenzene	ND	0.010	ug	0.0018
1,3-Dichlorobenzene	ND	0.010	ug	0.0014
1,4-Dichlorobenzene	ND	0.010	ug	0.0015
Dichlorodifluoromethane	**0.068**	**0.025**	**ug**	**0.0024**
1,1-Dichloroethane	ND	0.010	ug	0.0010
1,2-Dichloroethane	ND	0.010	ug	0.0017
cis-1,2-Dichloroethene	ND	0.010	ug	0.0010
trans-1,2-Dichloroethene	ND	0.010	ug	0.0020
1,1-Dichloroethene	ND	0.010	ug	0.0015
1,2-Dichloropropane	ND	0.010	ug	0.0017
1,3-Dichloropropane	ND	0.010	ug	0.0014
2,2-Dichloropropane	ND	0.010	ug	0.0010
cis-1,3-Dichloropropene	ND	0.010	ug	0.0017
trans-1,3-Dichloropropene	ND	0.010	ug	0.0012
1,1-Dichloropropene	**0.0014 J**	**0.010**	**ug**	**0.0010**

(Continued on next page)

O'Brien & Gere Inc of North America

Client Sample ID: SK-VOST-ASB-R3C

GC/MS Volatiles

Lot-Sample #...: H2F290431-018 **Work Order #...:** MVD5D1AA **Matrix.....:** AIR

PARAMETER	RESULT	REPORTING LIMIT	UNITS	MDL
Ethylbenzene	ND	0.010	ug	0.0010
Hexachlorobutadiene	ND	0.025	ug	0.0025
2-Hexanone	ND	0.10	ug	0.0068
Isopropylbenzene	ND	0.010	ug	0.0010
p-Isopropyltoluene	ND	0.010	ug	0.0010
Methylene chloride	**0.018 J,B**	**0.025**	**ug**	**0.0022**
4-Methyl-2-pentanone	ND	0.10	ug	0.10
Naphthalene	ND	0.025	ug	0.010
n-Propylbenzene	ND	0.010	ug	0.0010
Styrene	ND	0.010	ug	0.0013
1,1,1,2-Tetrachloroethane	ND	0.010	ug	0.0011
1,1,2,2-Tetrachloroethane	ND	0.025	ug	0.024
Tetrachloroethene	ND	0.010	ug	0.0011
Toluene	**0.011 B**	**0.010**	**ug**	**0.0010**
1,2,3-Trichlorobenzene	ND	0.025	ug	0.0010
1,2,4-Trichloro-benzene	ND	0.025	ug	0.0016
1,1,1-Trichloroethane	ND	0.025	ug	0.0010
1,1,2-Trichloroethane	ND	0.025	ug	0.010
Trichloroethene	ND	0.010	ug	0.0022
Trichlorofluoromethane	**0.082**	**0.050**	**ug**	**0.0017**
1,2,3-Trichloropropane	ND	0.025	ug	0.025
1,2,4-Trimethylbenzene	ND	0.010	ug	0.0015
1,3,5-Trimethylbenzene	ND	0.010	ug	0.0018
Vinyl chloride	**0.0048 J**	**0.010**	**ug**	**0.0021**
m-Xylene & p-Xylene	**0.0027 J**	**0.020**	**ug**	**0.0020**
o-Xylene	**0.0013 J**	**0.010**	**ug**	**0.0010**

SURROGATE	PERCENT RECOVERY	RECOVERY LIMITS
Dibromofluoromethane	86	(50 - 134)
1,2-Dichloroethane-d4	77	(50 - 127)
Toluene-d8	92	(57 - 134)
Bromofluorobenzene	79	(50 - 122)

NOTE(S):

J Estimated result. Result is less than RL.

B Method blank contamination. The associated method blank contains the target analyte at a reportable level.

O'Brien & Gere Inc of North America

Client Sample ID: SK-VOST-TX1/2-FB

GC/MS Volatiles

Lot-Sample #...: H2F290431-019 **Work Order #...:** MVD5E1AA **Matrix.....:** AIR
Date Sampled...: 06/26/12 **Date Received..:** 06/29/12
Prep Date.....: 07/03/12 **Analysis Date..:** 07/03/12
Prep Batch #...: 2184061
Dilution Factor: 1 **Method.....:** SW846 VOST

PARAMETER	RESULT	REPORTING LIMIT	UNITS	MDL
Acetone	**0.031 J**	**0.10**	**ug**	**0.030**
Benzene	ND	0.010	ug	0.0035
Bromobenzene	ND	0.010	ug	0.0020
Bromochloromethane	ND	0.025	ug	0.0028
Bromodichloromethane	ND	0.010	ug	0.0013
Bromoform	ND	0.025	ug	0.010
Bromomethane	ND	0.050	ug	0.0059
2-Butanone	ND	0.10	ug	0.10
n-Butylbenzene	ND	0.010	ug	0.0010
sec-Butylbenzene	ND	0.010	ug	0.0010
tert-Butylbenzene	ND	0.010	ug	0.0011
Carbon disulfide	ND	0.010	ug	0.0019
Carbon tetrachloride	ND	0.010	ug	0.0012
Chlorobenzene	ND	0.010	ug	0.0010
Chlorodibromomethane	ND	0.025	ug	0.0020
Chloroethane	ND	0.050	ug	0.0062
Chloroform	ND	0.010	ug	0.0011
Chloromethane	**0.0029 J,B**	**0.050**	**ug**	**0.0025**
2-Chlorotoluene	ND	0.010	ug	0.0012
4-Chlorotoluene	ND	0.010	ug	0.0014
1,2-Dibromo-3-chloro-propane	ND	0.050	ug	0.013
1,2-Dibromoethane	ND	0.025	ug	0.0014
Dibromomethane	ND	0.025	ug	0.0021
1,2-Dichlorobenzene	ND	0.010	ug	0.0018
1,3-Dichlorobenzene	ND	0.010	ug	0.0014
1,4-Dichlorobenzene	ND	0.010	ug	0.0015
Dichlorodifluoromethane	ND	0.025	ug	0.0024
1,1-Dichloroethane	**0.0012 J**	**0.010**	**ug**	**0.0010**
1,2-Dichloroethane	ND	0.010	ug	0.0017
cis-1,2-Dichloroethene	ND	0.010	ug	0.0010
trans-1,2-Dichloroethene	ND	0.010	ug	0.0020
1,1-Dichloroethene	ND	0.010	ug	0.0015
1,2-Dichloropropane	ND	0.010	ug	0.0017
1,3-Dichloropropane	ND	0.010	ug	0.0014
2,2-Dichloropropane	**0.0012 J**	**0.010**	**ug**	**0.0010**
cis-1,3-Dichloropropene	ND	0.010	ug	0.0017
trans-1,3-Dichloropropene	ND	0.010	ug	0.0012
1,1-Dichloropropene	**0.0012 J**	**0.010**	**ug**	**0.0010**

(Continued on next page)

O'Brien & Gere Inc of North America

Client Sample ID: SK-VOST-TX1/2-FB

GC/MS Volatiles

Lot-Sample #...: H2F290431-019 **Work Order #...:** MVD5E1AA **Matrix.....:** AIR

PARAMETER	RESULT	REPORTING LIMIT	UNITS	MDL
Ethylbenzene	**0.0013 J**	**0.010**	**ug**	**0.0010**
Hexachlorobutadiene	ND	0.025	ug	0.0025
2-Hexanone	ND	0.10	ug	0.0068
Isopropylbenzene	ND	0.010	ug	0.0010
p-Isopropyltoluene	ND	0.010	ug	0.0010
Methylene chloride	**0.0087 J,B**	**0.025**	**ug**	**0.0022**
4-Methyl-2-pentanone	ND	0.10	ug	0.10
Naphthalene	ND	0.025	ug	0.010
n-Propylbenzene	ND	0.010	ug	0.0010
Styrene	ND	0.010	ug	0.0013
1,1,1,2-Tetrachloroethane	ND	0.010	ug	0.0011
1,1,2,2-Tetrachloroethane	ND	0.025	ug	0.024
Tetrachloroethene	**0.0011 J**	**0.010**	**ug**	**0.0011**
Toluene	**0.0022 J,B**	**0.010**	**ug**	**0.0010**
1,2,3-Trichlorobenzene	**0.0012 J,B**	**0.025**	**ug**	**0.0010**
1,2,4-Trichloro-benzene	ND	0.025	ug	0.0016
1,1,1-Trichloroethane	**0.0011 J**	**0.025**	**ug**	**0.0010**
1,1,2-Trichloroethane	ND	0.025	ug	0.010
Trichloroethene	ND	0.010	ug	0.0022
Trichlorofluoromethane	**0.0025 J**	**0.050**	**ug**	**0.0017**
1,2,3-Trichloropropane	ND	0.025	ug	0.025
1,2,4-Trimethylbenzene	ND	0.010	ug	0.0015
1,3,5-Trimethylbenzene	ND	0.010	ug	0.0018
Vinyl chloride	**0.0023 J**	**0.010**	**ug**	**0.0021**
m-Xylene & p-Xylene	ND	0.020	ug	0.0020
o-Xylene	**0.0012 J**	**0.010**	**ug**	**0.0010**

SURROGATE	PERCENT RECOVERY	RECOVERY LIMITS
Dibromofluoromethane	85	(50 - 134)
1,2-Dichloroethane-d4	78	(50 - 127)
Toluene-d8	94	(57 - 134)
Bromofluorobenzene	74	(50 - 122)

NOTE(S):

J Estimated result. Result is less than RL.

B Method blank contamination. The associated method blank contains the target analyte at a reportable level.

O'Brien & Gere Inc of North America

Client Sample ID: SK-VOST-ASB-FB

GC/MS Volatiles

Lot-Sample #...: H2F290431-020 **Work Order #...:** MVD5F1AA **Matrix.....:** AIR
Date Sampled...: 06/26/12 **Date Received..:** 06/29/12
Prep Date.....: 07/03/12 **Analysis Date..:** 07/03/12
Prep Batch #...: 2184061
Dilution Factor: 1 **Method.....:** SW846 VOST

PARAMETER	RESULT	REPORTING LIMIT	UNITS	MDL
Acetone	**0.056 J**	**0.10**	**ug**	**0.030**
Benzene	ND	0.010	ug	0.0035
Bromobenzene	ND	0.010	ug	0.0020
Bromochloromethane	ND	0.025	ug	0.0028
Bromodichloromethane	ND	0.010	ug	0.0013
Bromoform	ND	0.025	ug	0.010
Bromomethane	ND	0.050	ug	0.0059
2-Butanone	ND	0.10	ug	0.10
n-Butylbenzene	ND	0.010	ug	0.0010
sec-Butylbenzene	ND	0.010	ug	0.0010
tert-Butylbenzene	ND	0.010	ug	0.0011
Carbon disulfide	ND	0.010	ug	0.0019
Carbon tetrachloride	ND	0.010	ug	0.0012
Chlorobenzene	ND	0.010	ug	0.0010
Chlorodibromomethane	ND	0.025	ug	0.0020
Chloroethane	ND	0.050	ug	0.0062
Chloroform	ND	0.010	ug	0.0011
Chloromethane	ND	0.050	ug	0.0025
2-Chlorotoluene	ND	0.010	ug	0.0012
4-Chlorotoluene	ND	0.010	ug	0.0014
1,2-Dibromo-3-chloro-propane	ND	0.050	ug	0.013
1,2-Dibromoethane	ND	0.025	ug	0.0014
Dibromomethane	ND	0.025	ug	0.0021
1,2-Dichlorobenzene	ND	0.010	ug	0.0018
1,3-Dichlorobenzene	ND	0.010	ug	0.0014
1,4-Dichlorobenzene	ND	0.010	ug	0.0015
Dichlorodifluoromethane	ND	0.025	ug	0.0024
1,1-Dichloroethane	ND	0.010	ug	0.0010
1,2-Dichloroethane	ND	0.010	ug	0.0017
cis-1,2-Dichloroethene	ND	0.010	ug	0.0010
trans-1,2-Dichloroethene	ND	0.010	ug	0.0020
1,1-Dichloroethene	ND	0.010	ug	0.0015
1,2-Dichloropropane	ND	0.010	ug	0.0017
1,3-Dichloropropane	ND	0.010	ug	0.0014
2,2-Dichloropropane	ND	0.010	ug	0.0010
cis-1,3-Dichloropropene	ND	0.010	ug	0.0017
trans-1,3-Dichloropropene	ND	0.010	ug	0.0012
1,1-Dichloropropene	ND	0.010	ug	0.0010

(Continued on next page)

O'Brien & Gere Inc of North America

Client Sample ID: SK-VOST-ASB-FB

GC/MS Volatiles

Lot-Sample #...: H2F290431-020 **Work Order #...:** MVD5F1AA **Matrix.....:** AIR

PARAMETER	RESULT	REPORTING LIMIT	UNITS	MDL
Ethylbenzene	ND	0.010	ug	0.0010
Hexachlorobutadiene	ND	0.025	ug	0.0025
2-Hexanone	ND	0.10	ug	0.0068
Isopropylbenzene	ND	0.010	ug	0.0010
p-Isopropyltoluene	ND	0.010	ug	0.0010
Methylene chloride	**0.0091 J,B**	**0.025**	**ug**	**0.0022**
4-Methyl-2-pentanone	ND	0.10	ug	0.10
Naphthalene	ND	0.025	ug	0.010
n-Propylbenzene	ND	0.010	ug	0.0010
Styrene	ND	0.010	ug	0.0013
1,1,1,2-Tetrachloroethane	ND	0.010	ug	0.0011
1,1,2,2-Tetrachloroethane	ND	0.025	ug	0.024
Tetrachloroethene	ND	0.010	ug	0.0011
Toluene	**0.0021 J,B**	**0.010**	**ug**	**0.0010**
1,2,3-Trichlorobenzene	ND	0.025	ug	0.0010
1,2,4-Trichloro-benzene	ND	0.025	ug	0.0016
1,1,1-Trichloroethane	ND	0.025	ug	0.0010
1,1,2-Trichloroethane	ND	0.025	ug	0.010
Trichloroethene	ND	0.010	ug	0.0022
Trichlorofluoromethane	ND	0.050	ug	0.0017
1,2,3-Trichloropropane	ND	0.025	ug	0.025
1,2,4-Trimethylbenzene	ND	0.010	ug	0.0015
1,3,5-Trimethylbenzene	ND	0.010	ug	0.0018
Vinyl chloride	ND	0.010	ug	0.0021
m-Xylene & p-Xylene	ND	0.020	ug	0.0020
o-Xylene	ND	0.010	ug	0.0010

SURROGATE	PERCENT RECOVERY	RECOVERY LIMITS
Dibromofluoromethane	86	(50 - 134)
1,2-Dichloroethane-d4	79	(50 - 127)
Toluene-d8	95	(57 - 134)
Bromofluorobenzene	80	(50 - 122)

NOTE(S):

J Estimated result. Result is less than RL.

B Method blank contamination. The associated method blank contains the target analyte at a reportable level.

METHOD BLANK REPORT

GC/MS Volatiles

Client Lot #...: H2F290431 **Work Order #...:** MVEM81AA **Matrix.....:** AIR
MB Lot-Sample #: H2G020000-061

Prep Date.....: 07/03/12
Analysis Date..: 07/03/12 **Prep Batch #...:** 2184061
Dilution Factor: 1

PARAMETER	RESULT	REPORTING LIMIT	UNITS	METHOD
Acetone	ND	0.10	ug	SW846 VOST
Benzene	ND	0.010	ug	SW846 VOST
Bromobenzene	ND	0.010	ug	SW846 VOST
Bromochloromethane	ND	0.025	ug	SW846 VOST
Bromodichloromethane	ND	0.010	ug	SW846 VOST
Bromoform	ND	0.025	ug	SW846 VOST
Bromomethane	**0.0084 J**	**0.050**	**ug**	**SW846 VOST**
2-Butanone	ND	0.10	ug	SW846 VOST
n-Butylbenzene	ND	0.010	ug	SW846 VOST
sec-Butylbenzene	ND	0.010	ug	SW846 VOST
tert-Butylbenzene	ND	0.010	ug	SW846 VOST
Carbon disulfide	ND	0.010	ug	SW846 VOST
Carbon tetrachloride	ND	0.010	ug	SW846 VOST
Chlorobenzene	ND	0.010	ug	SW846 VOST
Chlorodibromomethane	ND	0.025	ug	SW846 VOST
Chloroethane	ND	0.050	ug	SW846 VOST
Chloroform	ND	0.010	ug	SW846 VOST
Chloromethane	**0.0048 J**	**0.050**	**ug**	**SW846 VOST**
2-Chlorotoluene	ND	0.010	ug	SW846 VOST
4-Chlorotoluene	ND	0.010	ug	SW846 VOST
1,2-Dibromo-3-chloro-propane	ND	0.050	ug	SW846 VOST
1,2-Dibromoethane	ND	0.025	ug	SW846 VOST
Dibromomethane	ND	0.025	ug	SW846 VOST
1,2-Dichlorobenzene	ND	0.010	ug	SW846 VOST
1,3-Dichlorobenzene	ND	0.010	ug	SW846 VOST
1,4-Dichlorobenzene	ND	0.010	ug	SW846 VOST
Dichlorodifluoromethane	ND	0.025	ug	SW846 VOST
1,1-Dichloroethane	ND	0.010	ug	SW846 VOST
1,2-Dichloroethane	ND	0.010	ug	SW846 VOST
cis-1,2-Dichloroethene	ND	0.010	ug	SW846 VOST
trans-1,2-Dichloroethene	ND	0.010	ug	SW846 VOST
1,1-Dichloroethene	ND	0.010	ug	SW846 VOST
1,2-Dichloropropane	ND	0.010	ug	SW846 VOST
1,3-Dichloropropane	ND	0.010	ug	SW846 VOST
2,2-Dichloropropane	ND	0.010	ug	SW846 VOST
cis-1,3-Dichloropropene	ND	0.010	ug	SW846 VOST
trans-1,3-Dichloropropene	ND	0.010	ug	SW846 VOST
1,1-Dichloropropene	ND	0.010	ug	SW846 VOST
Ethylbenzene	ND	0.010	ug	SW846 VOST
Hexachlorobutadiene	ND	0.025	ug	SW846 VOST

(Continued on next page)

METHOD BLANK REPORT

GC/MS Volatiles

Client Lot #...: H2F290431 **Work Order #...:** MVEM81AA **Matrix.....:** AIR

PARAMETER	RESULT	REPORTING LIMIT	UNITS	METHOD
2-Hexanone	ND	0.10	ug	SW846 VOST
Isopropylbenzene	ND	0.010	ug	SW846 VOST
p-Isopropyltoluene	ND	0.010	ug	SW846 VOST
Methylene chloride	**0.0053 J**	**0.025**	**ug**	**SW846 VOST**
4-Methyl-2-pentanone	ND	0.10	ug	SW846 VOST
Naphthalene	ND	0.025	ug	SW846 VOST
n-Propylbenzene	ND	0.010	ug	SW846 VOST
Styrene	ND	0.010	ug	SW846 VOST
1,1,1,2-Tetrachloroethane	ND	0.010	ug	SW846 VOST
1,1,2,2-Tetrachloroethane	ND	0.025	ug	SW846 VOST
Tetrachloroethene	ND	0.010	ug	SW846 VOST
Toluene	**0.0013 J**	**0.010**	**ug**	**SW846 VOST**
1,2,3-Trichlorobenzene	**0.0013 J**	**0.025**	**ug**	**SW846 VOST**
1,2,4-Trichloro-benzene	ND	0.025	ug	SW846 VOST
1,1,1-Trichloroethane	ND	0.025	ug	SW846 VOST
1,1,2-Trichloroethane	ND	0.025	ug	SW846 VOST
Trichloroethene	ND	0.010	ug	SW846 VOST
Trichlorofluoromethane	ND	0.050	ug	SW846 VOST
1,2,3-Trichloropropane	ND	0.025	ug	SW846 VOST
1,2,4-Trimethylbenzene	ND	0.010	ug	SW846 VOST
1,3,5-Trimethylbenzene	ND	0.010	ug	SW846 VOST
Vinyl chloride	ND	0.010	ug	SW846 VOST
m-Xylene & p-Xylene	ND	0.020	ug	SW846 VOST
o-Xylene	ND	0.010	ug	SW846 VOST

SURROGATE	PERCENT RECOVERY	RECOVERY LIMITS
Dibromofluoromethane	93	(50 - 134)
1,2-Dichloroethane-d4	86	(50 - 127)
Toluene-d8	99	(57 - 134)
Bromofluorobenzene	81	(50 - 122)

NOTE(S):

Calculations are performed before rounding to avoid round-off errors in calculated results.

J Estimated result. Result is less than RL.

LABORATORY CONTROL SAMPLE EVALUATION REPORT

GC/MS Volatiles

Client Lot #...: H2F290431 Work Order #...: MVEM81AC-LCS Matrix.....: AIR
LCS Lot-Sample#: H2G020000-061 MVEM81AD-LCSD
Prep Date.....: 07/03/12 Analysis Date..: 07/03/12
Prep Batch #...: 2184061
Dilution Factor: 1

PARAMETER	PERCENT RECOVERY	RECOVERY LIMITS	RPD	RPD LIMITS	METHOD
Acetone	64	(20 - 191)			SW846 VOST
	85	(20 - 191)	28	(0-50)	SW846 VOST
Benzene	97	(68 - 128)			SW846 VOST
	99	(68 - 128)	1.7	(0-22)	SW846 VOST
Bromobenzene	88	(53 - 120)			SW846 VOST
	89	(53 - 120)	0.73	(0-38)	SW846 VOST
Bromochloromethane	85	(53 - 120)			SW846 VOST
	85	(53 - 120)	0.13	(0-36)	SW846 VOST
Bromodichloromethane	84	(52 - 122)			SW846 VOST
	85	(52 - 122)	1.7	(0-35)	SW846 VOST
Bromoform	71	(40 - 120)			SW846 VOST
	72	(40 - 120)	1.4	(0-50)	SW846 VOST
Bromomethane	96	(40 - 187)			SW846 VOST
	95	(40 - 187)	1.4	(0-35)	SW846 VOST
2-Butanone	52	(20 - 150)			SW846 VOST
	57	(20 - 150)	9.0	(0-50)	SW846 VOST
n-Butylbenzene	98	(57 - 140)			SW846 VOST
	100	(57 - 140)	1.7	(0-31)	SW846 VOST
sec-Butylbenzene	104	(70 - 128)			SW846 VOST
	106	(70 - 128)	2.1	(0-26)	SW846 VOST
tert-Butylbenzene	104	(67 - 122)			SW846 VOST
	104	(67 - 122)	0.72	(0-26)	SW846 VOST
Carbon disulfide	102	(40 - 157)			SW846 VOST
	103	(40 - 157)	1.2	(0-23)	SW846 VOST
Carbon tetrachloride	109	(67 - 135)			SW846 VOST
	110	(67 - 135)	0.96	(0-23)	SW846 VOST
Chlorobenzene	93	(65 - 120)			SW846 VOST
	94	(65 - 120)	1.6	(0-26)	SW846 VOST
Chlorodibromomethane	77	(50 - 120)			SW846 VOST
	81	(50 - 120)	4.9	(0-43)	SW846 VOST
Chloroethane	114	(43 - 163)			SW846 VOST
	112	(43 - 163)	2.5	(0-32)	SW846 VOST
Chloroform	96	(63 - 123)			SW846 VOST
	97	(63 - 123)	1.1	(0-27)	SW846 VOST
Chloromethane	84	(44 - 176)			SW846 VOST
	79	(44 - 176)	6.7	(0-50)	SW846 VOST
2-Chlorotoluene	91	(59 - 120)			SW846 VOST
	93	(59 - 120)	1.8	(0-29)	SW846 VOST
4-Chlorotoluene	93	(57 - 120)			SW846 VOST
	93	(57 - 120)	0.56	(0-30)	SW846 VOST

(Continued on next page)

LABORATORY CONTROL SAMPLE EVALUATION REPORT

GC/MS Volatiles

Client Lot #...: H2F290431 Work Order #...: MVEM81AC-LCS Matrix.....: AIR
LCS Lot-Sample#: H2G020000-061 MVEM81AD-LCSD

PARAMETER	PERCENT RECOVERY	RECOVERY LIMITS	RPD	RPD LIMITS	METHOD
1,2-Dibromo-3-chloro-propane	50	(10 - 120)			SW846 VOST
	45	(10 - 120)	11	(0-50)	SW846 VOST
1,2-Dibromoethane	73	(20 - 120)			SW846 VOST
	75	(20 - 120)	2.8	(0-43)	SW846 VOST
Dibromomethane	75	(50 - 120)			SW846 VOST
	76	(50 - 120)	1.9	(0-42)	SW846 VOST
1,2-Dichlorobenzene	81	(20 - 124)			SW846 VOST
	85	(20 - 124)	4.6	(0-49)	SW846 VOST
1,3-Dichlorobenzene	90	(30 - 132)			SW846 VOST
	92	(30 - 132)	2.2	(0-39)	SW846 VOST
1,4-Dichlorobenzene	86	(30 - 129)			SW846 VOST
	92	(30 - 129)	6.8	(0-42)	SW846 VOST
Dichlorodifluoromethane	87	(25 - 146)			SW846 VOST
	85	(25 - 146)	2.8	(0-42)	SW846 VOST
1,1-Dichloroethane	100	(66 - 128)			SW846 VOST
	98	(66 - 128)	2.5	(0-24)	SW846 VOST
1,2-Dichloroethane	81	(36 - 124)			SW846 VOST
	84	(36 - 124)	3.6	(0-37)	SW846 VOST
cis-1,2-Dichloroethene	93	(67 - 123)			SW846 VOST
	93	(67 - 123)	0.87	(0-27)	SW846 VOST
trans-1,2-Dichloroethene	104	(78 - 128)			SW846 VOST
	109	(78 - 128)	4.3	(0-23)	SW846 VOST
1,1-Dichloroethene	112	(77 - 131)			SW846 VOST
	110	(77 - 131)	1.3	(0-22)	SW846 VOST
1,2-Dichloropropane	92	(55 - 124)			SW846 VOST
	93	(55 - 124)	1.0	(0-31)	SW846 VOST
1,3-Dichloropropane	76	(50 - 120)			SW846 VOST
	77	(50 - 120)	0.66	(0-38)	SW846 VOST
2,2-Dichloropropane	108	(59 - 141)			SW846 VOST
	108	(59 - 141)	0.18	(0-25)	SW846 VOST
cis-1,3-Dichloropropene	83	(45 - 125)			SW846 VOST
	86	(45 - 125)	3.4	(0-36)	SW846 VOST
trans-1,3-Dichloropropene	75	(40 - 120)			SW846 VOST
	76	(40 - 120)	2.0	(0-40)	SW846 VOST
1,1-Dichloropropene	112	(70 - 136)			SW846 VOST
	109	(70 - 136)	2.8	(0-21)	SW846 VOST
Ethylbenzene	99	(72 - 127)			SW846 VOST
	99	(72 - 127)	0.30	(0-23)	SW846 VOST
Hexachlorobutadiene	118	(52 - 167)			SW846 VOST
	119	(52 - 167)	0.82	(0-50)	SW846 VOST

(Continued on next page)

LABORATORY CONTROL SAMPLE EVALUATION REPORT

GC/MS Volatiles

Client Lot #...: H2F290431 Work Order #...: MVEM81AC-LCS Matrix.....: AIR
LCS Lot-Sample#: H2G020000-061 MVEM81AD-LCSD

PARAMETER	PERCENT RECOVERY	RECOVERY LIMITS	RPD	RPD LIMITS	METHOD
2-Hexanone	52	(30 - 151)			SW846 VOST
	56	(30 - 151)	7.2	(0-50)	SW846 VOST
Isopropylbenzene	106	(40 - 152)			SW846 VOST
	104	(40 - 152)	1.2	(0-28)	SW846 VOST
p-Isopropyltoluene	102	(66 - 126)			SW846 VOST
	103	(66 - 126)	1.2	(0-28)	SW846 VOST
Methylene chloride	96	(60 - 134)			SW846 VOST
	92	(60 - 134)	4.4	(0-41)	SW846 VOST
4-Methyl-2-pentanone	56	(30 - 175)			SW846 VOST
	60	(30 - 175)	7.6	(0-50)	SW846 VOST
Naphthalene	49	(20 - 120)			SW846 VOST
	51	(20 - 120)	5.1	(0-50)	SW846 VOST
n-Propylbenzene	101	(69 - 123)			SW846 VOST
	102	(69 - 123)	0.97	(0-25)	SW846 VOST
Styrene	87	(57 - 120)			SW846 VOST
	88	(57 - 120)	0.51	(0-39)	SW846 VOST
1,1,1,2-Tetrachloroethane	83	(53 - 120)			SW846 VOST
	87	(53 - 120)	4.7	(0-35)	SW846 VOST
1,1,2,2-Tetrachloroethane	63	(30 - 120)			SW846 VOST
	60	(30 - 120)	5.3	(0-50)	SW846 VOST
Tetrachloroethene	107	(80 - 133)			SW846 VOST
	109	(80 - 133)	1.9	(0-24)	SW846 VOST
Toluene	98	(70 - 120)			SW846 VOST
	97	(70 - 120)	0.91	(0-22)	SW846 VOST
1,2,3-Trichlorobenzene	61	(20 - 123)			SW846 VOST
	66	(20 - 123)	7.8	(0-50)	SW846 VOST
1,2,4-Trichloro-benzene	70	(20 - 140)			SW846 VOST
	77	(20 - 140)	10	(0-50)	SW846 VOST
1,1,1-Trichloroethane	103	(65 - 131)			SW846 VOST
	103	(65 - 131)	0.070	(0-23)	SW846 VOST
1,1,2-Trichloroethane	76	(41 - 120)			SW846 VOST
	77	(41 - 120)	1.5	(0-38)	SW846 VOST
Trichloroethene	107	(80 - 141)			SW846 VOST
	124	(80 - 141)	14	(0-32)	SW846 VOST
Trichlorofluoromethane	110	(58 - 147)			SW846 VOST
	108	(58 - 147)	2.1	(0-26)	SW846 VOST
1,2,3-Trichloropropane	60	(30 - 120)			SW846 VOST
	70	(30 - 120)	14	(0-50)	SW846 VOST
1,2,4-Trimethylbenzene	91	(56 - 120)			SW846 VOST
	92	(56 - 120)	1.6	(0-35)	SW846 VOST

(Continued on next page)

LABORATORY CONTROL SAMPLE EVALUATION REPORT

GC/MS Volatiles

Client Lot #...: H2F290431 **Work Order #...:** MVEM81AC-LCS **Matrix.....:** AIR
LCS Lot-Sample#: H2G020000-061 MVEM81AD-LCSD

PARAMETER	PERCENT RECOVERY	RECOVERY LIMITS	RPD	RPD LIMITS	METHOD
1,3,5-Trimethylbenzene	**97**	**(62 - 121)**			**SW846 VOST**
	100	**(62 - 121)**	**3.2**	**(0-30)**	**SW846 VOST**
Vinyl chloride	**125**	**(64 - 142)**			**SW846 VOST**
	120	**(64 - 142)**	**3.8**	**(0-33)**	**SW846 VOST**
m-Xylene & p-Xylene	**103**	**(74 - 126)**			**SW846 VOST**
	100	**(74 - 126)**	**2.3**	**(0-38)**	**SW846 VOST**
o-Xylene	**96**	**(64 - 120)**			**SW846 VOST**
	96	**(64 - 120)**	**0.43**	**(0-37)**	**SW846 VOST**

SURROGATE	PERCENT RECOVERY	RECOVERY LIMITS
Dibromofluoromethane	84	(50 - 134)
	90	(50 - 134)
1,2-Dichloroethane-d4	75	(50 - 127)
	78	(50 - 127)
Toluene-d8	93	(57 - 134)
	98	(57 - 134)
Bromofluorobenzene	76	(50 - 122)
	82	(50 - 122)

NOTE(S):

Calculations are performed before rounding to avoid round-off errors in calculated results.

Bold print denotes control parameters

LABORATORY CONTROL SAMPLE DATA REPORT

GC/MS Volatiles

Client Lot #...: H2F290431 Work Order #...: MVEM81AC-LCS Matrix.....: AIR
LCS Lot-Sample#: H2G020000-061 MVEM81AD-LCSD
Prep Date.....: 07/03/12 Analysis Date..: 07/03/12
Prep Batch #...: 2184061
Dilution Factor: 1

PARAMETER	SPIKE AMOUNT	MEASURED AMOUNT	UNITS	PERCENT RECOVERY	RPD	METHOD
Acetone	1.00	0.636	ug	64		SW846 VOST
	1.00	0.846	ug	85	28	SW846 VOST
Benzene	0.250	0.242	ug	97		SW846 VOST
	0.250	0.246	ug	99	1.7	SW846 VOST
Bromobenzene	0.250	0.221	ug	88		SW846 VOST
	0.250	0.222	ug	89	0.73	SW846 VOST
Bromochloromethane	0.250	0.212	ug	85		SW846 VOST
	0.250	0.212	ug	85	0.13	SW846 VOST
Bromodichloromethane	0.250	0.209	ug	84		SW846 VOST
	0.250	0.213	ug	85	1.7	SW846 VOST
Bromoform	0.250	0.177	ug	71		SW846 VOST
	0.250	0.180	ug	72	1.4	SW846 VOST
Bromomethane	0.250	0.240	ug	96		SW846 VOST
	0.250	0.237	ug	95	1.4	SW846 VOST
2-Butanone	1.00	0.519	ug	52		SW846 VOST
	1.00	0.568	ug	57	9.0	SW846 VOST
n-Butylbenzene	0.250	0.246	ug	98		SW846 VOST
	0.250	0.250	ug	100	1.7	SW846 VOST
sec-Butylbenzene	0.250	0.259	ug	104		SW846 VOST
	0.250	0.265	ug	106	2.1	SW846 VOST
tert-Butylbenzene	0.250	0.259	ug	104		SW846 VOST
	0.250	0.261	ug	104	0.72	SW846 VOST
Carbon disulfide	0.250	0.255	ug	102		SW846 VOST
	0.250	0.258	ug	103	1.2	SW846 VOST
Carbon tetrachloride	0.250	0.272	ug	109		SW846 VOST
	0.250	0.275	ug	110	0.96	SW846 VOST
Chlorobenzene	0.250	0.232	ug	93		SW846 VOST
	0.250	0.236	ug	94	1.6	SW846 VOST
Chlorodibromomethane	0.250	0.192	ug	77		SW846 VOST
	0.250	0.202	ug	81	4.9	SW846 VOST
Chloroethane	0.250	0.286	ug	114		SW846 VOST
	0.250	0.279	ug	112	2.5	SW846 VOST
Chloroform	0.250	0.240	ug	96		SW846 VOST
	0.250	0.242	ug	97	1.1	SW846 VOST
Chloromethane	0.250	0.211	ug	84		SW846 VOST
	0.250	0.197	ug	79	6.7	SW846 VOST
2-Chlorotoluene	0.250	0.229	ug	91		SW846 VOST
	0.250	0.233	ug	93	1.8	SW846 VOST
4-Chlorotoluene	0.250	0.232	ug	93		SW846 VOST
	0.250	0.233	ug	93	0.56	SW846 VOST

(Continued on next page)

LABORATORY CONTROL SAMPLE DATA REPORT

GC/MS Volatiles

Client Lot #...: H2F290431 Work Order #...: MVEM81AC-LCS Matrix.....: AIR
LCS Lot-Sample#: H2G020000-061 MVEM81AD-LCSD

PARAMETER	SPIKE AMOUNT	MEASURED AMOUNT	UNITS	PERCENT RECOVERY	RPD	METHOD
1,2-Dibromo-3-chloro-propane	0.250	0.125	ug	50		SW846 VOST
	0.250	0.112	ug	45	11	SW846 VOST
1,2-Dibromoethane	0.250	0.182	ug	73		SW846 VOST
	0.250	0.188	ug	75	2.8	SW846 VOST
Dibromomethane	0.250	0.187	ug	75		SW846 VOST
	0.250	0.190	ug	76	1.9	SW846 VOST
1,2-Dichlorobenzene	0.250	0.202	ug	81		SW846 VOST
	0.250	0.212	ug	85	4.6	SW846 VOST
1,3-Dichlorobenzene	0.250	0.224	ug	90		SW846 VOST
	0.250	0.230	ug	92	2.2	SW846 VOST
1,4-Dichlorobenzene	0.250	0.215	ug	86		SW846 VOST
	0.250	0.230	ug	92	6.8	SW846 VOST
Dichlorodifluoromethane	0.250	0.218	ug	87		SW846 VOST
	0.250	0.212	ug	85	2.8	SW846 VOST
1,1-Dichloroethane	0.250	0.250	ug	100		SW846 VOST
	0.250	0.244	ug	98	2.5	SW846 VOST
1,2-Dichloroethane	0.250	0.203	ug	81		SW846 VOST
	0.250	0.211	ug	84	3.6	SW846 VOST
cis-1,2-Dichloroethene	0.250	0.232	ug	93		SW846 VOST
	0.250	0.234	ug	93	0.87	SW846 VOST
trans-1,2-Dichloroethene	0.250	0.260	ug	104		SW846 VOST
	0.250	0.271	ug	109	4.3	SW846 VOST
1,1-Dichloroethene	0.250	0.279	ug	112		SW846 VOST
	0.250	0.275	ug	110	1.3	SW846 VOST
1,2-Dichloropropane	0.250	0.231	ug	92		SW846 VOST
	0.250	0.233	ug	93	1.0	SW846 VOST
1,3-Dichloropropane	0.250	0.191	ug	76		SW846 VOST
	0.250	0.192	ug	77	0.66	SW846 VOST
2,2-Dichloropropane	0.250	0.269	ug	108		SW846 VOST
	0.250	0.269	ug	108	0.18	SW846 VOST
cis-1,3-Dichloropropene	0.250	0.208	ug	83		SW846 VOST
	0.250	0.215	ug	86	3.4	SW846 VOST
trans-1,3-Dichloropropene	0.250	0.186	ug	75		SW846 VOST
	0.250	0.190	ug	76	2.0	SW846 VOST
1,1-Dichloropropene	0.250	0.281	ug	112		SW846 VOST
	0.250	0.273	ug	109	2.8	SW846 VOST
Ethylbenzene	0.250	0.249	ug	99		SW846 VOST
	0.250	0.248	ug	99	0.30	SW846 VOST
Hexachlorobutadiene	0.250	0.294	ug	118		SW846 VOST
	0.250	0.296	ug	119	0.82	SW846 VOST

(Continued on next page)

LABORATORY CONTROL SAMPLE DATA REPORT

GC/MS Volatiles

Client Lot #...: H2F290431 Work Order #...: MVEM81AC-LCS Matrix.....: AIR
LCS Lot-Sample#: H2G020000-061 MVEM81AD-LCSD

PARAMETER	SPIKE AMOUNT	MEASURED AMOUNT	UNITS	PERCENT RECOVERY	RPD	METHOD
2-Hexanone	1.00	0.518	ug	52		SW846 VOST
	1.00	0.556	ug	56	7.2	SW846 VOST
Isopropylbenzene	0.250	0.264	ug	106		SW846 VOST
	0.250	0.261	ug	104	1.2	SW846 VOST
p-Isopropyltoluene	0.250	0.255	ug	102		SW846 VOST
	0.250	0.258	ug	103	1.2	SW846 VOST
Methylene chloride	0.250	0.241	ug	96		SW846 VOST
	0.250	0.231	ug	92	4.4	SW846 VOST
4-Methyl-2-pentanone	1.00	0.555	ug	56		SW846 VOST
	1.00	0.599	ug	60	7.6	SW846 VOST
Naphthalene	0.250	0.122	ug	49		SW846 VOST
	0.250	0.129	ug	51	5.1	SW846 VOST
n-Propylbenzene	0.250	0.253	ug	101		SW846 VOST
	0.250	0.255	ug	102	0.97	SW846 VOST
Styrene	0.250	0.218	ug	87		SW846 VOST
	0.250	0.219	ug	88	0.51	SW846 VOST
1,1,1,2-Tetrachloroethane	0.250	0.209	ug	83		SW846 VOST
	0.250	0.219	ug	87	4.7	SW846 VOST
1,1,2,2-Tetrachloroethane	0.250	0.157	ug	63		SW846 VOST
	0.250	0.149	ug	60	5.3	SW846 VOST
Tetrachloroethene	0.250	0.268	ug	107		SW846 VOST
	0.250	0.273	ug	109	1.9	SW846 VOST
Toluene	0.250	0.246	ug	98		SW846 VOST
	0.250	0.244	ug	97	0.91	SW846 VOST
1,2,3-Trichlorobenzene	0.250	0.153	ug	61		SW846 VOST
	0.250	0.165	ug	66	7.8	SW846 VOST
1,2,4-Trichloro-benzene	0.250	0.174	ug	70		SW846 VOST
	0.250	0.192	ug	77	10	SW846 VOST
1,1,1-Trichloroethane	0.250	0.257	ug	103		SW846 VOST
	0.250	0.257	ug	103	0.070	SW846 VOST
1,1,2-Trichloroethane	0.250	0.191	ug	76		SW846 VOST
	0.250	0.193	ug	77	1.5	SW846 VOST
Trichloroethene	0.250	0.269	ug	107		SW846 VOST
	0.250	0.310	ug	124	14	SW846 VOST
Trichlorofluoromethane	0.250	0.276	ug	110		SW846 VOST
	0.250	0.271	ug	108	2.1	SW846 VOST
1,2,3-Trichloropropane	0.250	0.151	ug	60		SW846 VOST
	0.250	0.174	ug	70	14	SW846 VOST
1,2,4-Trimethylbenzene	0.250	0.227	ug	91		SW846 VOST
	0.250	0.231	ug	92	1.6	SW846 VOST

(Continued on next page)

LABORATORY CONTROL SAMPLE DATA REPORT

GC/MS Volatiles

Client Lot #...: H2F290431 **Work Order #...:** MVEM81AC-LCS **Matrix.....:** AIR
LCS Lot-Sample#: H2G020000-061 MVEM81AD-LCSD

PARAMETER	SPIKE AMOUNT	MEASURED AMOUNT	UNITS	PERCENT RECOVERY	RPD	METHOD
1,3,5-Trimethylbenzene	**0.250**	**0.242**	**ug**	**97**		**SW846 VOST**
	0.250	**0.250**	**ug**	**100**	**3.2**	**SW846 VOST**
Vinyl chloride	**0.250**	**0.313**	**ug**	**125**		**SW846 VOST**
	0.250	**0.301**	**ug**	**120**	**3.8**	**SW846 VOST**
m-Xylene & p-Xylene	**0.500**	**0.513**	**ug**	**103**		**SW846 VOST**
	0.500	**0.501**	**ug**	**100**	**2.3**	**SW846 VOST**
o-Xylene	**0.250**	**0.240**	**ug**	**96**		**SW846 VOST**
	0.250	**0.241**	**ug**	**96**	**0.43**	**SW846 VOST**

SURROGATE	PERCENT RECOVERY	RECOVERY LIMITS
Dibromofluoromethane	84	(50 - 134)
	90	(50 - 134)
1,2-Dichloroethane-d4	75	(50 - 127)
	78	(50 - 127)
Toluene-d8	93	(57 - 134)
	98	(57 - 134)
Bromofluorobenzene	76	(50 - 122)
	82	(50 - 122)

NOTE(S):

Calculations are performed before rounding to avoid round-off errors in calculated results.

Bold print denotes control parameters.

SAMPLE SUMMARY

H2F290439

WO #	SAMPLE#	CLIENT SAMPLE ID	SAMPLED DATE	SAMP TIME
MVD5T	001	TTU-VOST-TX1/2-R1A	06/27/12	
MVD5W	002	TTU-VOST-ASB-R1A	06/27/12	
MVD5X	003	TTU-VOST-TX1/2-R1B	06/27/12	
MVD50	004	TTU-VOST-ASB-R1B	06/27/12	
MVD52	005	TTU-VOST-TX1/2-R1C	06/27/12	
MVD55	006	TTU-VOST-ASB-R1C	06/27/12	
MVD58	007	TTU-VOST-TX1/2-R2A	06/27/12	
MVD6C	008	TTU-VOST-ASB-R2A	06/27/12	
MVD6D	009	TTU-VOST-TX1/2-R2B	06/27/12	
MVD6F	010	TTU-VOST-ASB-R2B	06/27/12	
MVD6G	011	TTU-VOST-TX1/2-R2C	06/27/12	
MVD6H	012	TTU-VOST-ASB-R2C	06/27/12	
MVD6K	013	TTU-VOST-TX1/2-R3A	06/28/12	
MVD6L	014	TTU-VOST-ASB-R3A	06/28/12	
MVD6N	015	TTU-VOST-TX1/2-R3B	06/28/12	
MVD6T	016	TTU-VOST-ASB-R3B	06/28/12	
MVD6W	017	TTU-VOST-TX1/2-R3C	06/28/12	
MVD6X	018	TTU-VOST-ASB-R3C	06/28/12	
MVD60	019	TTU-VOST-TX1/2-FB	06/27/12	
MVD61	020	TTU-VOST-ASB-FB	06/27/12	
MVD62	021	TTU-VOST-TX1/2-TB	06/27/12	
MVD63	022	TTU-VOST-ASB-TB	06/27/12	
MVD64	023	A-6747 MEDIA CHECK TENAX	06/27/12	
MVD66	024	A-6748 MEDIA CHECK TENAX/CHAR	06/27/12	

NOTE(S):

- The analytical results of the samples listed above are presented on the following pages.
- All calculations are performed before rounding to avoid round-off errors in calculated results.
- Results noted as "ND" were not detected at or above the stated limit.
- This report must not be reproduced, except in full, without the written approval of the laboratory.
- Results for the following parameters are never reported on a dry weight basis: color, corrosivity, density, flashpoint, ignitability, layers, odor, paint filter test, pH, porosity pressure, reactivity, redox potential, specific gravity, spot tests, solids, solubility, temperature, viscosity, and weight.

O'Brien & Gere Inc of North America

Client Sample ID: TTU-VOST-TX1/2-R1A

GC/MS Volatiles

Lot-Sample #...: H2F290439-001 **Work Order #...:** MVD5T1AA **Matrix.....:** AIR
Date Sampled...: 06/27/12 **Date Received..:** 06/29/12
Prep Date.....: 07/06/12 **Analysis Date..:** 07/06/12
Prep Batch #...: 2185072
Dilution Factor: 1 **Method.....:** SW846 VOST

PARAMETER	RESULT	REPORTING LIMIT	UNITS	MDL
Acetone	**0.36**	**0.10**	**ug**	**0.030**
Benzene	**0.11**	**0.010**	**ug**	**0.0035**
Bromobenzene	ND	0.010	ug	0.0020
Bromochloromethane	ND	0.025	ug	0.0028
Bromodichloromethane	ND	0.010	ug	0.0013
Bromoform	ND	0.025	ug	0.010
Bromomethane	ND	0.050	ug	0.0059
2-Butanone	ND	0.10	ug	0.10
n-Butylbenzene	**0.0023 J**	**0.010**	**ug**	**0.0010**
sec-Butylbenzene	ND	0.010	ug	0.0010
tert-Butylbenzene	ND	0.010	ug	0.0011
Carbon disulfide	ND	0.010	ug	0.0019
Carbon tetrachloride	**0.0088 J**	**0.010**	**ug**	**0.0012**
Chlorobenzene	**0.0011 J**	**0.010**	**ug**	**0.0010**
Chlorodibromomethane	ND	0.025	ug	0.0020
Chloroethane	ND	0.050	ug	0.0062
Chloroform	**0.0044 J**	**0.010**	**ug**	**0.0011**
Chloromethane	**0.0039 J**	**0.050**	**ug**	**0.0025**
2-Chlorotoluene	ND	0.010	ug	0.0012
4-Chlorotoluene	ND	0.010	ug	0.0014
1,2-Dibromo-3-chloro-propane	ND	0.050	ug	0.013
1,2-Dibromoethane	ND	0.025	ug	0.0014
Dibromomethane	ND	0.025	ug	0.0021
1,2-Dichlorobenzene	**0.021**	**0.010**	**ug**	**0.0018**
1,3-Dichlorobenzene	ND	0.010	ug	0.0014
1,4-Dichlorobenzene	**0.0035 J**	**0.010**	**ug**	**0.0015**
Dichlorodifluoromethane	ND	0.025	ug	0.0024
1,1-Dichloroethane	ND	0.010	ug	0.0010
1,2-Dichloroethane	ND	0.010	ug	0.0017
cis-1,2-Dichloroethene	ND	0.010	ug	0.0010
trans-1,2-Dichloroethene	ND	0.010	ug	0.0020
1,1-Dichloroethene	ND	0.010	ug	0.0015
1,2-Dichloropropane	ND	0.010	ug	0.0017
1,3-Dichloropropane	ND	0.010	ug	0.0014
2,2-Dichloropropane	ND	0.010	ug	0.0010
cis-1,3-Dichloropropene	ND	0.010	ug	0.0017
trans-1,3-Dichloropropene	ND	0.010	ug	0.0012
1,1-Dichloropropene	ND	0.010	ug	0.0010

(Continued on next page)

O'Brien & Gere Inc of North America

Client Sample ID: TTU-VOST-TX1/2-R1A

GC/MS Volatiles

Lot-Sample #...: H2F290439-001 Work Order #...: MVD5T1AA Matrix.....: AIR

PARAMETER	RESULT	REPORTING LIMIT	UNITS	MDL
Ethylbenzene	0.010	0.010	ug	0.0010
Hexachlorobutadiene	ND	0.025	ug	0.0025
2-Hexanone	0.025 J	0.10	ug	0.0068
Isopropylbenzene	0.0013 J	0.010	ug	0.0010
p-Isopropyltoluene	0.0013 J	0.010	ug	0.0010
Methylene chloride	0.0075 J,B	0.025	ug	0.0022
4-Methyl-2-pentanone	ND	0.10	ug	0.10
Naphthalene	0.029	0.025	ug	0.010
n-Propylbenzene	0.0029 J	0.010	ug	0.0010
Styrene	0.0072 J	0.010	ug	0.0013
1,1,1,2-Tetrachloroethane	ND	0.010	ug	0.0011
1,1,2,2-Tetrachloroethane	ND	0.025	ug	0.024
Tetrachloroethene	0.0063 J	0.010	ug	0.0011
Toluene	0.082	0.010	ug	0.0010
1,2,3-Trichlorobenzene	ND	0.025	ug	0.0010
1,2,4-Trichloro-benzene	ND	0.025	ug	0.0016
1,1,1-Trichloroethane	0.0014 J	0.025	ug	0.0010
1,1,2-Trichloroethane	ND	0.025	ug	0.010
Trichloroethene	0.0028 J	0.010	ug	0.0022
Trichlorofluoromethane	0.018 J	0.050	ug	0.0017
1,2,3-Trichloropropane	ND	0.025	ug	0.025
1,2,4-Trimethylbenzene	0.014	0.010	ug	0.0015
1,3,5-Trimethylbenzene	0.0058 J	0.010	ug	0.0018
Vinyl chloride	ND	0.010	ug	0.0021
m-Xylene & p-Xylene	0.048	0.020	ug	0.0020
o-Xylene	0.019	0.010	ug	0.0010

SURROGATE	PERCENT RECOVERY	RECOVERY LIMITS
Dibromofluoromethane	89	(50 - 134)
1,2-Dichloroethane-d4	84	(50 - 127)
Toluene-d8	93	(57 - 134)
Bromofluorobenzene	83	(50 - 122)

NOTE(S):

J Estimated result. Result is less than RL.

B Method blank contamination. The associated method blank contains the target analyte at a reportable level.

O'Brien & Gere Inc of North America

Client Sample ID: TTU-VOST-ASB-R1A

GC/MS Volatiles

Lot-Sample #...: H2F290439-002 **Work Order #...:** MVD5W1AA **Matrix.....:** AIR
Date Sampled...: 06/27/12 **Date Received..:** 06/29/12
Prep Date.....: 07/06/12 **Analysis Date..:** 07/06/12
Prep Batch #...: 2185072
Dilution Factor: 1 **Method.....:** SW846 VOST

PARAMETER	RESULT	REPORTING LIMIT	UNITS	MDL
Acetone	**0.14**	**0.10**	**ug**	**0.030**
Benzene	**0.0064 J**	**0.010**	**ug**	**0.0035**
Bromobenzene	ND	0.010	ug	0.0020
Bromochloromethane	ND	0.025	ug	0.0028
Bromodichloromethane	ND	0.010	ug	0.0013
Bromoform	ND	0.025	ug	0.010
Bromomethane	**0.038 J**	**0.050**	**ug**	**0.0059**
2-Butanone	ND	0.10	ug	0.10
n-Butylbenzene	ND	0.010	ug	0.0010
sec-Butylbenzene	ND	0.010	ug	0.0010
tert-Butylbenzene	ND	0.010	ug	0.0011
Carbon disulfide	ND	0.010	ug	0.0019
Carbon tetrachloride	**0.0013 J**	**0.010**	**ug**	**0.0012**
Chlorobenzene	ND	0.010	ug	0.0010
Chlorodibromomethane	ND	0.025	ug	0.0020
Chloroethane	ND	0.050	ug	0.0062
Chloroform	ND	0.010	ug	0.0011
Chloromethane	**0.14**	**0.050**	**ug**	**0.0025**
2-Chlorotoluene	ND	0.010	ug	0.0012
4-Chlorotoluene	ND	0.010	ug	0.0014
1,2-Dibromo-3-chloro-propane	ND	0.050	ug	0.013
1,2-Dibromoethane	ND	0.025	ug	0.0014
Dibromomethane	ND	0.025	ug	0.0021
1,2-Dichlorobenzene	ND	0.010	ug	0.0018
1,3-Dichlorobenzene	ND	0.010	ug	0.0014
1,4-Dichlorobenzene	ND	0.010	ug	0.0015
Dichlorodifluoromethane	**0.055**	**0.025**	**ug**	**0.0024**
1,1-Dichloroethane	ND	0.010	ug	0.0010
1,2-Dichloroethane	ND	0.010	ug	0.0017
cis-1,2-Dichloroethene	ND	0.010	ug	0.0010
trans-1,2-Dichloroethene	ND	0.010	ug	0.0020
1,1-Dichloroethene	ND	0.010	ug	0.0015
1,2-Dichloropropane	ND	0.010	ug	0.0017
1,3-Dichloropropane	ND	0.010	ug	0.0014
2,2-Dichloropropane	ND	0.010	ug	0.0010
cis-1,3-Dichloropropene	ND	0.010	ug	0.0017
trans-1,3-Dichloropropene	ND	0.010	ug	0.0012
1,1-Dichloropropene	**0.049**	**0.010**	**ug**	**0.0010**

(Continued on next page)

O'Brien & Gere Inc of North America

Client Sample ID: TTU-VOST-ASB-R1A

GC/MS Volatiles

Lot-Sample #...: H2F290439-002 Work Order #...: MVD5W1AA Matrix.....: AIR

PARAMETER	RESULT	REPORTING LIMIT	UNITS	MDL
Ethylbenzene	**0.0017 J**	**0.010**	**ug**	**0.0010**
Hexachlorobutadiene	ND	0.025	ug	0.0025
2-Hexanone	ND	0.10	ug	0.0068
Isopropylbenzene	ND	0.010	ug	0.0010
p-Isopropyltoluene	ND	0.010	ug	0.0010
Methylene chloride	**0.011 J,B**	**0.025**	**ug**	**0.0022**
4-Methyl-2-pentanone	ND	0.10	ug	0.10
Naphthalene	ND	0.025	ug	0.010
n-Propylbenzene	ND	0.010	ug	0.0010
Styrene	**0.0023 J**	**0.010**	**ug**	**0.0013**
1,1,1,2-Tetrachloroethane	ND	0.010	ug	0.0011
1,1,2,2-Tetrachloroethane	ND	0.025	ug	0.024
Tetrachloroethene	ND	0.010	ug	0.0011
Toluene	**0.014**	**0.010**	**ug**	**0.0010**
1,2,3-Trichlorobenzene	ND	0.025	ug	0.0010
1,2,4-Trichloro-benzene	ND	0.025	ug	0.0016
1,1,1-Trichloroethane	ND	0.025	ug	0.0010
1,1,2-Trichloroethane	ND	0.025	ug	0.010
Trichloroethene	ND	0.010	ug	0.0022
Trichlorofluoromethane	**0.038 J**	**0.050**	**ug**	**0.0017**
1,2,3-Trichloropropane	ND	0.025	ug	0.025
1,2,4-Trimethylbenzene	**0.0029 J**	**0.010**	**ug**	**0.0015**
1,3,5-Trimethylbenzene	ND	0.010	ug	0.0018
Vinyl chloride	ND	0.010	ug	0.0021
m-Xylene & p-Xylene	**0.0052 J**	**0.020**	**ug**	**0.0020**
o-Xylene	**0.0020 J**	**0.010**	**ug**	**0.0010**

SURROGATE	PERCENT RECOVERY	RECOVERY LIMITS
Dibromofluoromethane	88	(50 - 134)
1,2-Dichloroethane-d4	80	(50 - 127)
Toluene-d8	93	(57 - 134)
Bromofluorobenzene	80	(50 - 122)

NOTE(S):

J Estimated result. Result is less than RL.

B Method blank contamination. The associated method blank contains the target analyte at a reportable level.

O'Brien & Gere Inc of North America

Client Sample ID: TTU-VOST-TX1/2-R1B

GC/MS Volatiles

Lot-Sample #...: H2F290439-003 **Work Order #...:** MVD5X1AA **Matrix.....:** AIR
Date Sampled...: 06/27/12 **Date Received..:** 06/29/12
Prep Date.....: 07/06/12 **Analysis Date..:** 07/06/12
Prep Batch #...: 2185072
Dilution Factor: 1 **Method.....:** SW846 VOST

PARAMETER	RESULT	REPORTING LIMIT	UNITS	MDL
Acetone	**0.27**	**0.10**	**ug**	**0.030**
Benzene	**0.086**	**0.010**	**ug**	**0.0035**
Bromobenzene	ND	0.010	ug	0.0020
Bromochloromethane	ND	0.025	ug	0.0028
Bromodichloromethane	ND	0.010	ug	0.0013
Bromoform	ND	0.025	ug	0.010
Bromomethane	ND	0.050	ug	0.0059
2-Butanone	ND	0.10	ug	0.10
n-Butylbenzene	ND	0.010	ug	0.0010
sec-Butylbenzene	ND	0.010	ug	0.0010
tert-Butylbenzene	ND	0.010	ug	0.0011
Carbon disulfide	**0.0021 J**	**0.010**	**ug**	**0.0019**
Carbon tetrachloride	**0.0087 J**	**0.010**	**ug**	**0.0012**
Chlorobenzene	**0.0011 J**	**0.010**	**ug**	**0.0010**
Chlorodibromomethane	ND	0.025	ug	0.0020
Chloroethane	ND	0.050	ug	0.0062
Chloroform	**0.0041 J**	**0.010**	**ug**	**0.0011**
Chloromethane	**0.0057 J**	**0.050**	**ug**	**0.0025**
2-Chlorotoluene	ND	0.010	ug	0.0012
4-Chlorotoluene	ND	0.010	ug	0.0014
1,2-Dibromo-3-chloro-propane	ND	0.050	ug	0.013
1,2-Dibromoethane	ND	0.025	ug	0.0014
Dibromomethane	ND	0.025	ug	0.0021
1,2-Dichlorobenzene	**0.018**	**0.010**	**ug**	**0.0018**
1,3-Dichlorobenzene	ND	0.010	ug	0.0014
1,4-Dichlorobenzene	**0.0027 J**	**0.010**	**ug**	**0.0015**
Dichlorodifluoromethane	**0.0026 J**	**0.025**	**ug**	**0.0024**
1,1-Dichloroethane	ND	0.010	ug	0.0010
1,2-Dichloroethane	ND	0.010	ug	0.0017
cis-1,2-Dichloroethene	ND	0.010	ug	0.0010
trans-1,2-Dichloroethene	ND	0.010	ug	0.0020
1,1-Dichloroethene	ND	0.010	ug	0.0015
1,2-Dichloropropane	ND	0.010	ug	0.0017
1,3-Dichloropropane	ND	0.010	ug	0.0014
2,2-Dichloropropane	ND	0.010	ug	0.0010
cis-1,3-Dichloropropene	ND	0.010	ug	0.0017
trans-1,3-Dichloropropene	ND	0.010	ug	0.0012
1,1-Dichloropropene	ND	0.010	ug	0.0010

(Continued on next page)

O'Brien & Gere Inc of North America

Client Sample ID: TTU-VOST-TX1/2-R1B

GC/MS Volatiles

Lot-Sample #...: H2F290439-003 **Work Order #...:** MVD5X1AA **Matrix.....:** AIR

PARAMETER	RESULT	REPORTING LIMIT	UNITS	MDL
Ethylbenzene	**0.0070 J**	**0.010**	**ug**	**0.0010**
Hexachlorobutadiene	ND	0.025	ug	0.0025
2-Hexanone	**0.015 J**	**0.10**	**ug**	**0.0068**
Isopropylbenzene	ND	0.010	ug	0.0010
p-Isopropyltoluene	ND	0.010	ug	0.0010
Methylene chloride	**0.013 J,B**	**0.025**	**ug**	**0.0022**
4-Methyl-2-pentanone	ND	0.10	ug	0.10
Naphthalene	**0.013 J**	**0.025**	**ug**	**0.010**
n-Propylbenzene	**0.0023 J**	**0.010**	**ug**	**0.0010**
Styrene	**0.0062 J**	**0.010**	**ug**	**0.0013**
1,1,1,2-Tetrachloroethane	ND	0.010	ug	0.0011
1,1,2,2-Tetrachloroethane	ND	0.025	ug	0.024
Tetrachloroethene	**0.0076 J**	**0.010**	**ug**	**0.0011**
Toluene	**0.063**	**0.010**	**ug**	**0.0010**
1,2,3-Trichlorobenzene	ND	0.025	ug	0.0010
1,2,4-Trichloro-benzene	ND	0.025	ug	0.0016
1,1,1-Trichloroethane	ND	0.025	ug	0.0010
1,1,2-Trichloroethane	ND	0.025	ug	0.010
Trichloroethene	ND	0.010	ug	0.0022
Trichlorofluoromethane	**0.020 J**	**0.050**	**ug**	**0.0017**
1,2,3-Trichloropropane	ND	0.025	ug	0.025
1,2,4-Trimethylbenzene	**0.012**	**0.010**	**ug**	**0.0015**
1,3,5-Trimethylbenzene	**0.0047 J**	**0.010**	**ug**	**0.0018**
Vinyl chloride	ND	0.010	ug	0.0021
m-Xylene & p-Xylene	**0.042**	**0.020**	**ug**	**0.0020**
o-Xylene	**0.016**	**0.010**	**ug**	**0.0010**

SURROGATE	PERCENT RECOVERY	RECOVERY LIMITS
Dibromofluoromethane	92	(50 - 134)
1,2-Dichloroethane-d4	84	(50 - 127)
Toluene-d8	93	(57 - 134)
Bromofluorobenzene	77	(50 - 122)

NOTE(S):

J Estimated result. Result is less than RL.

B Method blank contamination. The associated method blank contains the target analyte at a reportable level.

O'Brien & Gere Inc of North America

Client Sample ID: TTU-VOST-ASB-R1B

GC/MS Volatiles

Lot-Sample #...: H2F290439-004 **Work Order #...:** MVD501AA **Matrix.....:** AIR
Date Sampled...: 06/27/12 **Date Received..:** 06/29/12
Prep Date.....: 07/06/12 **Analysis Date..:** 07/06/12
Prep Batch #...: 2185072
Dilution Factor: 1 **Method.....:** SW846 VOST

PARAMETER	RESULT	REPORTING LIMIT	UNITS	MDL
Acetone	**0.14**	**0.10**	**ug**	**0.030**
Benzene	**0.0035 J**	**0.010**	**ug**	**0.0035**
Bromobenzene	ND	0.010	ug	0.0020
Bromochloromethane	ND	0.025	ug	0.0028
Bromodichloromethane	ND	0.010	ug	0.0013
Bromoform	ND	0.025	ug	0.010
Bromomethane	**0.049 J**	**0.050**	**ug**	**0.0059**
2-Butanone	ND	0.10	ug	0.10
n-Butylbenzene	ND	0.010	ug	0.0010
sec-Butylbenzene	ND	0.010	ug	0.0010
tert-Butylbenzene	ND	0.010	ug	0.0011
Carbon disulfide	ND	0.010	ug	0.0019
Carbon tetrachloride	ND	0.010	ug	0.0012
Chlorobenzene	ND	0.010	ug	0.0010
Chlorodibromomethane	ND	0.025	ug	0.0020
Chloroethane	ND	0.050	ug	0.0062
Chloroform	ND	0.010	ug	0.0011
Chloromethane	**0.084**	**0.050**	**ug**	**0.0025**
2-Chlorotoluene	ND	0.010	ug	0.0012
4-Chlorotoluene	ND	0.010	ug	0.0014
1,2-Dibromo-3-chloro-propane	ND	0.050	ug	0.013
1,2-Dibromoethane	ND	0.025	ug	0.0014
Dibromomethane	ND	0.025	ug	0.0021
1,2-Dichlorobenzene	ND	0.010	ug	0.0018
1,3-Dichlorobenzene	ND	0.010	ug	0.0014
1,4-Dichlorobenzene	ND	0.010	ug	0.0015
Dichlorodifluoromethane	**0.060**	**0.025**	**ug**	**0.0024**
1,1-Dichloroethane	ND	0.010	ug	0.0010
1,2-Dichloroethane	ND	0.010	ug	0.0017
cis-1,2-Dichloroethene	ND	0.010	ug	0.0010
trans-1,2-Dichloroethene	ND	0.010	ug	0.0020
1,1-Dichloroethene	ND	0.010	ug	0.0015
1,2-Dichloropropane	ND	0.010	ug	0.0017
1,3-Dichloropropane	ND	0.010	ug	0.0014
2,2-Dichloropropane	ND	0.010	ug	0.0010
cis-1,3-Dichloropropene	ND	0.010	ug	0.0017
trans-1,3-Dichloropropene	ND	0.010	ug	0.0012
1,1-Dichloropropene	ND	0.010	ug	0.0010

(Continued on next page)

O'Brien & Gere Inc of North America

Client Sample ID: TTU-VOST-ASB-R1B

GC/MS Volatiles

Lot-Sample #...: H2F290439-004 Work Order #...: MVD501AA Matrix.....: AIR

PARAMETER	RESULT	REPORTING LIMIT	UNITS	MDL
Ethylbenzene	ND	0.010	ug	0.0010
Hexachlorobutadiene	ND	0.025	ug	0.0025
2-Hexanone	ND	0.10	ug	0.0068
Isopropylbenzene	ND	0.010	ug	0.0010
p-Isopropyltoluene	ND	0.010	ug	0.0010
Methylene chloride	**0.014 J,B**	**0.025**	**ug**	**0.0022**
4-Methyl-2-pentanone	ND	0.10	ug	0.10
Naphthalene	ND	0.025	ug	0.010
n-Propylbenzene	ND	0.010	ug	0.0010
Styrene	ND	0.010	ug	0.0013
1,1,1,2-Tetrachloroethane	ND	0.010	ug	0.0011
1,1,2,2-Tetrachloroethane	ND	0.025	ug	0.024
Tetrachloroethene	ND	0.010	ug	0.0011
Toluene	**0.0033 J**	**0.010**	**ug**	**0.0010**
1,2,3-Trichlorobenzene	ND	0.025	ug	0.0010
1,2,4-Trichloro-benzene	ND	0.025	ug	0.0016
1,1,1-Trichloroethane	ND	0.025	ug	0.0010
1,1,2-Trichloroethane	ND	0.025	ug	0.010
Trichloroethene	ND	0.010	ug	0.0022
Trichlorofluoromethane	**0.044 J**	**0.050**	**ug**	**0.0017**
1,2,3-Trichloropropane	ND	0.025	ug	0.025
1,2,4-Trimethylbenzene	ND	0.010	ug	0.0015
1,3,5-Trimethylbenzene	ND	0.010	ug	0.0018
Vinyl chloride	ND	0.010	ug	0.0021
m-Xylene & p-Xylene	ND	0.020	ug	0.0020
o-Xylene	ND	0.010	ug	0.0010

SURROGATE	PERCENT RECOVERY	RECOVERY LIMITS
Dibromofluoromethane	90	(50 - 134)
1,2-Dichloroethane-d4	80	(50 - 127)
Toluene-d8	89	(57 - 134)
Bromofluorobenzene	74	(50 - 122)

NOTE(S):

J Estimated result. Result is less than RL.

B Method blank contamination. The associated method blank contains the target analyte at a reportable level.

O'Brien & Gere Inc of North America

Client Sample ID: TTU-VOST-TX1/2-R1C

GC/MS Volatiles

Lot-Sample #...: H2F290439-005 **Work Order #...:** MVD521AA **Matrix.....:** AIR
Date Sampled...: 06/27/12 **Date Received..:** 06/29/12
Prep Date.....: 07/06/12 **Analysis Date..:** 07/06/12
Prep Batch #...: 2185072
Dilution Factor: 1 **Method.....:** SW846 VOST

PARAMETER	RESULT	REPORTING LIMIT	UNITS	MDL
Acetone	**0.44**	**0.10**	**ug**	**0.030**
Benzene	**0.44**	**0.010**	**ug**	**0.0035**
Bromobenzene	ND	0.010	ug	0.0020
Bromochloromethane	ND	0.025	ug	0.0028
Bromodichloromethane	ND	0.010	ug	0.0013
Bromoform	ND	0.025	ug	0.010
Bromomethane	ND	0.050	ug	0.0059
2-Butanone	**0.19**	**0.10**	**ug**	**0.10**
n-Butylbenzene	**0.010**	**0.010**	**ug**	**0.0010**
sec-Butylbenzene	**0.0028 J**	**0.010**	**ug**	**0.0010**
tert-Butylbenzene	ND	0.010	ug	0.0011
Carbon disulfide	ND	0.010	ug	0.0019
Carbon tetrachloride	**0.0090 J**	**0.010**	**ug**	**0.0012**
Chlorobenzene	**0.0014 J**	**0.010**	**ug**	**0.0010**
Chlorodibromomethane	ND	0.025	ug	0.0020
Chloroethane	ND	0.050	ug	0.0062
Chloroform	**0.0058 J**	**0.010**	**ug**	**0.0011**
Chloromethane	**0.0046 J**	**0.050**	**ug**	**0.0025**
2-Chlorotoluene	ND	0.010	ug	0.0012
4-Chlorotoluene	ND	0.010	ug	0.0014
1,2-Dibromo-3-chloro-propane	ND	0.050	ug	0.013
1,2-Dibromoethane	ND	0.025	ug	0.0014
Dibromomethane	ND	0.025	ug	0.0021
1,2-Dichlorobenzene	**0.024**	**0.010**	**ug**	**0.0018**
1,3-Dichlorobenzene	ND	0.010	ug	0.0014
1,4-Dichlorobenzene	**0.0042 J**	**0.010**	**ug**	**0.0015**
Dichlorodifluoromethane	ND	0.025	ug	0.0024
1,1-Dichloroethane	ND	0.010	ug	0.0010
1,2-Dichloroethane	ND	0.010	ug	0.0017
cis-1,2-Dichloroethene	ND	0.010	ug	0.0010
trans-1,2-Dichloroethene	ND	0.010	ug	0.0020
1,1-Dichloroethene	ND	0.010	ug	0.0015
1,2-Dichloropropane	ND	0.010	ug	0.0017
1,3-Dichloropropane	ND	0.010	ug	0.0014
2,2-Dichloropropane	ND	0.010	ug	0.0010
cis-1,3-Dichloropropene	ND	0.010	ug	0.0017
trans-1,3-Dichloropropene	ND	0.010	ug	0.0012
1,1-Dichloropropene	ND	0.010	ug	0.0010

(Continued on next page)

O'Brien & Gere Inc of North America

Client Sample ID: TTU-VOST-TX1/2-R1C

GC/MS Volatiles

Lot-Sample #...: H2F290439-005 Work Order #...: MVD521AA Matrix.....: AIR

PARAMETER	RESULT	REPORTING LIMIT	UNITS	MDL
Ethylbenzene	**0.038**	**0.010**	**ug**	**0.0010**
Hexachlorobutadiene	ND	0.025	ug	0.0025
2-Hexanone	**0.075 J**	**0.10**	**ug**	**0.0068**
Isopropylbenzene	**0.0051 J**	**0.010**	**ug**	**0.0010**
p-Isopropyltoluene	**0.0048 J**	**0.010**	**ug**	**0.0010**
Methylene chloride	**0.014 J,B**	**0.025**	**ug**	**0.0022**
4-Methyl-2-pentanone	ND	0.10	ug	0.10
Naphthalene	**0.026**	**0.025**	**ug**	**0.010**
n-Propylbenzene	**0.010**	**0.010**	**ug**	**0.0010**
Styrene	**0.020**	**0.010**	**ug**	**0.0013**
1,1,1,2-Tetrachloroethane	ND	0.010	ug	0.0011
1,1,2,2-Tetrachloroethane	ND	0.025	ug	0.024
Tetrachloroethene	**0.0064 J**	**0.010**	**ug**	**0.0011**
Toluene	**0.27**	**0.010**	**ug**	**0.0010**
1,2,3-Trichlorobenzene	ND	0.025	ug	0.0010
1,2,4-Trichloro-benzene	ND	0.025	ug	0.0016
1,1,1-Trichloroethane	**0.0012 J**	**0.025**	**ug**	**0.0010**
1,1,2-Trichloroethane	ND	0.025	ug	0.010
Trichloroethene	**0.040**	**0.010**	**ug**	**0.0022**
Trichlorofluoromethane	**0.015 J**	**0.050**	**ug**	**0.0017**
1,2,3-Trichloropropane	ND	0.025	ug	0.025
1,2,4-Trimethylbenzene	**0.039**	**0.010**	**ug**	**0.0015**
1,3,5-Trimethylbenzene	**0.016**	**0.010**	**ug**	**0.0018**
Vinyl chloride	ND	0.010	ug	0.0021
m-Xylene & p-Xylene	**0.17**	**0.020**	**ug**	**0.0020**
o-Xylene	**0.055**	**0.010**	**ug**	**0.0010**

SURROGATE	PERCENT RECOVERY	RECOVERY LIMITS
Dibromofluoromethane	87	(50 - 134)
1,2-Dichloroethane-d4	81	(50 - 127)
Toluene-d8	97	(57 - 134)
Bromofluorobenzene	76	(50 - 122)

NOTE(S):

J Estimated result. Result is less than RL.

B Method blank contamination. The associated method blank contains the target analyte at a reportable level.

O'Brien & Gere Inc of North America

Client Sample ID: TTU-VOST-ASB-R1C

GC/MS Volatiles

Lot-Sample #...: H2F290439-006 **Work Order #...:** MVD551AA **Matrix.....:** AIR
Date Sampled...: 06/27/12 **Date Received..:** 06/29/12
Prep Date.....: 07/06/12 **Analysis Date..:** 07/06/12
Prep Batch #...: 2185072
Dilution Factor: 1 **Method.....:** SW846 VOST

PARAMETER	RESULT	REPORTING LIMIT	UNITS	MDL
Acetone	**0.20**	**0.10**	**ug**	**0.030**
Benzene	**0.0048 J**	**0.010**	**ug**	**0.0035**
Bromobenzene	ND	0.010	ug	0.0020
Bromochloromethane	ND	0.025	ug	0.0028
Bromodichloromethane	ND	0.010	ug	0.0013
Bromoform	ND	0.025	ug	0.010
Bromomethane	**0.046 J**	**0.050**	**ug**	**0.0059**
2-Butanone	ND	0.10	ug	0.10
n-Butylbenzene	ND	0.010	ug	0.0010
sec-Butylbenzene	ND	0.010	ug	0.0010
tert-Butylbenzene	ND	0.010	ug	0.0011
Carbon disulfide	ND	0.010	ug	0.0019
Carbon tetrachloride	ND	0.010	ug	0.0012
Chlorobenzene	ND	0.010	ug	0.0010
Chlorodibromomethane	ND	0.025	ug	0.0020
Chloroethane	ND	0.050	ug	0.0062
Chloroform	ND	0.010	ug	0.0011
Chloromethane	**0.067**	**0.050**	**ug**	**0.0025**
2-Chlorotoluene	ND	0.010	ug	0.0012
4-Chlorotoluene	ND	0.010	ug	0.0014
1,2-Dibromo-3-chloro-propane	ND	0.050	ug	0.013
1,2-Dibromoethane	ND	0.025	ug	0.0014
Dibromomethane	ND	0.025	ug	0.0021
1,2-Dichlorobenzene	ND	0.010	ug	0.0018
1,3-Dichlorobenzene	ND	0.010	ug	0.0014
1,4-Dichlorobenzene	ND	0.010	ug	0.0015
Dichlorodifluoromethane	**0.049**	**0.025**	**ug**	**0.0024**
1,1-Dichloroethane	ND	0.010	ug	0.0010
1,2-Dichloroethane	ND	0.010	ug	0.0017
cis-1,2-Dichloroethene	ND	0.010	ug	0.0010
trans-1,2-Dichloroethene	ND	0.010	ug	0.0020
1,1-Dichloroethene	ND	0.010	ug	0.0015
1,2-Dichloropropane	ND	0.010	ug	0.0017
1,3-Dichloropropane	ND	0.010	ug	0.0014
2,2-Dichloropropane	ND	0.010	ug	0.0010
cis-1,3-Dichloropropene	ND	0.010	ug	0.0017
trans-1,3-Dichloropropene	ND	0.010	ug	0.0012
1,1-Dichloropropene	ND	0.010	ug	0.0010

(Continued on next page)

O'Brien & Gere Inc of North America

Client Sample ID: TTU-VOST-ASB-R1C

GC/MS Volatiles

Lot-Sample #...: H2F290439-006 **Work Order #...:** MVD551AA **Matrix.....:** AIR

PARAMETER	RESULT	REPORTING LIMIT	UNITS	MDL
Ethylbenzene	ND	0.010	ug	0.0010
Hexachlorobutadiene	ND	0.025	ug	0.0025
2-Hexanone	ND	0.10	ug	0.0068
Isopropylbenzene	ND	0.010	ug	0.0010
p-Isopropyltoluene	ND	0.010	ug	0.0010
Methylene chloride	**0.016 J,B**	**0.025**	**ug**	**0.0022**
4-Methyl-2-pentanone	ND	0.10	ug	0.10
Naphthalene	ND	0.025	ug	0.010
n-Propylbenzene	ND	0.010	ug	0.0010
Styrene	ND	0.010	ug	0.0013
1,1,1,2-Tetrachloroethane	ND	0.010	ug	0.0011
1,1,2,2-Tetrachloroethane	ND	0.025	ug	0.024
Tetrachloroethene	ND	0.010	ug	0.0011
Toluene	**0.0033 J**	**0.010**	**ug**	**0.0010**
1,2,3-Trichlorobenzene	ND	0.025	ug	0.0010
1,2,4-Trichloro-benzene	ND	0.025	ug	0.0016
1,1,1-Trichloroethane	ND	0.025	ug	0.0010
1,1,2-Trichloroethane	ND	0.025	ug	0.010
Trichloroethene	ND	0.010	ug	0.0022
Trichlorofluoromethane	**0.040 J**	**0.050**	**ug**	**0.0017**
1,2,3-Trichloropropane	ND	0.025	ug	0.025
1,2,4-Trimethylbenzene	ND	0.010	ug	0.0015
1,3,5-Trimethylbenzene	ND	0.010	ug	0.0018
Vinyl chloride	**0.0027 J**	**0.010**	**ug**	**0.0021**
m-Xylene & p-Xylene	ND	0.020	ug	0.0020
o-Xylene	**0.0011 J**	**0.010**	**ug**	**0.0010**

SURROGATE	PERCENT RECOVERY	RECOVERY LIMITS
Dibromofluoromethane	86	(50 - 134)
1,2-Dichloroethane-d4	78	(50 - 127)
Toluene-d8	89	(57 - 134)
Bromofluorobenzene	76	(50 - 122)

NOTE(S):

J Estimated result. Result is less than RL.

B Method blank contamination. The associated method blank contains the target analyte at a reportable level.

O'Brien & Gere Inc of North America

Client Sample ID: TTU-VOST-TX1/2-R2A

GC/MS Volatiles

Lot-Sample #...: H2F290439-007 Work Order #...: MVD581AA Matrix.....: AIR
Date Sampled...: 06/27/12 Date Received..: 06/29/12
Prep Date.....: 07/06/12 Analysis Date..: 07/06/12
Prep Batch #...: 2185072
Dilution Factor: 1 Method.....: SW846 VOST

PARAMETER	RESULT	REPORTING LIMIT	UNITS	MDL
Acetone	**0.31**	**0.10**	**ug**	**0.030**
Benzene	**0.12**	**0.010**	**ug**	**0.0035**
Bromobenzene	ND	0.010	ug	0.0020
Bromochloromethane	ND	0.025	ug	0.0028
Bromodichloromethane	ND	0.010	ug	0.0013
Bromoform	ND	0.025	ug	0.010
Bromomethane	**0.015 J**	**0.050**	**ug**	**0.0059**
2-Butanone	**0.12**	**0.10**	**ug**	**0.10**
n-Butylbenzene	**0.0027 J**	**0.010**	**ug**	**0.0010**
sec-Butylbenzene	ND	0.010	ug	0.0010
tert-Butylbenzene	ND	0.010	ug	0.0011
Carbon disulfide	**0.0032 J**	**0.010**	**ug**	**0.0019**
Carbon tetrachloride	**0.0082 J**	**0.010**	**ug**	**0.0012**
Chlorobenzene	**0.0017 J**	**0.010**	**ug**	**0.0010**
Chlorodibromomethane	ND	0.025	ug	0.0020
Chloroethane	ND	0.050	ug	0.0062
Chloroform	**0.0045 J**	**0.010**	**ug**	**0.0011**
Chloromethane	**0.0072 J**	**0.050**	**ug**	**0.0025**
2-Chlorotoluene	**0.0023 J**	**0.010**	**ug**	**0.0012**
4-Chlorotoluene	ND	0.010	ug	0.0014
1,2-Dibromo-3-chloro-propane	ND	0.050	ug	0.013
1,2-Dibromoethane	ND	0.025	ug	0.0014
Dibromomethane	ND	0.025	ug	0.0021
1,2-Dichlorobenzene	**0.026**	**0.010**	**ug**	**0.0018**
1,3-Dichlorobenzene	**0.0018 J**	**0.010**	**ug**	**0.0014**
1,4-Dichlorobenzene	**0.0045 J**	**0.010**	**ug**	**0.0015**
Dichlorodifluoromethane	**0.0050 J**	**0.025**	**ug**	**0.0024**
1,1-Dichloroethane	ND	0.010	ug	0.0010
1,2-Dichloroethane	ND	0.010	ug	0.0017
cis-1,2-Dichloroethene	ND	0.010	ug	0.0010
trans-1,2-Dichloroethene	ND	0.010	ug	0.0020
1,1-Dichloroethene	ND	0.010	ug	0.0015
1,2-Dichloropropane	ND	0.010	ug	0.0017
1,3-Dichloropropane	ND	0.010	ug	0.0014
2,2-Dichloropropane	ND	0.010	ug	0.0010
cis-1,3-Dichloropropene	ND	0.010	ug	0.0017
trans-1,3-Dichloropropene	ND	0.010	ug	0.0012
1,1-Dichloropropene	ND	0.010	ug	0.0010

(Continued on next page)

O'Brien & Gere Inc of North America

Client Sample ID: TTU-VOST-TX1/2-R2A

GC/MS Volatiles

Lot-Sample #...: H2F290439-007 Work Order #...: MVD581AA Matrix.....: AIR

PARAMETER	RESULT	REPORTING LIMIT	UNITS	MDL
Ethylbenzene	**0.011**	**0.010**	**ug**	**0.0010**
Hexachlorobutadiene	ND	0.025	ug	0.0025
2-Hexanone	**0.023 J**	**0.10**	**ug**	**0.0068**
Isopropylbenzene	**0.0011 J**	**0.010**	**ug**	**0.0010**
p-Isopropyltoluene	**0.0019 J**	**0.010**	**ug**	**0.0010**
Methylene chloride	**0.015 J,B**	**0.025**	**ug**	**0.0022**
4-Methyl-2-pentanone	ND	0.10	ug	0.10
Naphthalene	**0.017 J**	**0.025**	**ug**	**0.010**
n-Propylbenzene	**0.0036 J**	**0.010**	**ug**	**0.0010**
Styrene	**0.027**	**0.010**	**ug**	**0.0013**
1,1,1,2-Tetrachloroethane	ND	0.010	ug	0.0011
1,1,2,2-Tetrachloroethane	ND	0.025	ug	0.024
Tetrachloroethene	**0.0048 J**	**0.010**	**ug**	**0.0011**
Toluene	**0.075**	**0.010**	**ug**	**0.0010**
1,2,3-Trichlorobenzene	ND	0.025	ug	0.0010
1,2,4-Trichloro-benzene	ND	0.025	ug	0.0016
1,1,1-Trichloroethane	**0.0014 J**	**0.025**	**ug**	**0.0010**
1,1,2-Trichloroethane	ND	0.025	ug	0.010
Trichloroethene	ND	0.010	ug	0.0022
Trichlorofluoromethane	**0.023 J**	**0.050**	**ug**	**0.0017**
1,2,3-Trichloropropane	ND	0.025	ug	0.025
1,2,4-Trimethylbenzene	**0.014**	**0.010**	**ug**	**0.0015**
1,3,5-Trimethylbenzene	**0.0066 J**	**0.010**	**ug**	**0.0018**
Vinyl chloride	ND	0.010	ug	0.0021
m-Xylene & p-Xylene	**0.056**	**0.020**	**ug**	**0.0020**
o-Xylene	**0.023**	**0.010**	**ug**	**0.0010**

SURROGATE	PERCENT RECOVERY	RECOVERY LIMITS
Dibromofluoromethane	89	(50 - 134)
1,2-Dichloroethane-d4	82	(50 - 127)
Toluene-d8	94	(57 - 134)
Bromofluorobenzene	83	(50 - 122)

NOTE(S):

J Estimated result. Result is less than RL.

B Method blank contamination. The associated method blank contains the target analyte at a reportable level.

O'Brien & Gere Inc of North America

Client Sample ID: TTU-VOST-ASB-R2A

GC/MS Volatiles

Lot-Sample #...: H2F290439-008 **Work Order #...:** MVD6C1AA **Matrix.....:** AIR
Date Sampled...: 06/27/12 **Date Received..:** 06/29/12
Prep Date.....: 07/06/12 **Analysis Date..:** 07/06/12
Prep Batch #...: 2185072
Dilution Factor: 1 **Method.....:** SW846 VOST

PARAMETER	RESULT	REPORTING LIMIT	UNITS	MDL
Acetone	**0.18**	**0.10**	**ug**	**0.030**
Benzene	**0.0043 J**	**0.010**	**ug**	**0.0035**
Bromobenzene	ND	0.010	ug	0.0020
Bromochloromethane	ND	0.025	ug	0.0028
Bromodichloromethane	ND	0.010	ug	0.0013
Bromoform	ND	0.025	ug	0.010
Bromomethane	**0.086**	**0.050**	**ug**	**0.0059**
2-Butanone	ND	0.10	ug	0.10
n-Butylbenzene	ND	0.010	ug	0.0010
sec-Butylbenzene	ND	0.010	ug	0.0010
tert-Butylbenzene	ND	0.010	ug	0.0011
Carbon disulfide	ND	0.010	ug	0.0019
Carbon tetrachloride	ND	0.010	ug	0.0012
Chlorobenzene	ND	0.010	ug	0.0010
Chlorodibromomethane	ND	0.025	ug	0.0020
Chloroethane	ND	0.050	ug	0.0062
Chloroform	ND	0.010	ug	0.0011
Chloromethane	**0.058**	**0.050**	**ug**	**0.0025**
2-Chlorotoluene	ND	0.010	ug	0.0012
4-Chlorotoluene	ND	0.010	ug	0.0014
1,2-Dibromo-3-chloro-propane	ND	0.050	ug	0.013
1,2-Dibromoethane	ND	0.025	ug	0.0014
Dibromomethane	ND	0.025	ug	0.0021
1,2-Dichlorobenzene	ND	0.010	ug	0.0018
1,3-Dichlorobenzene	ND	0.010	ug	0.0014
1,4-Dichlorobenzene	ND	0.010	ug	0.0015
Dichlorodifluoromethane	**0.047**	**0.025**	**ug**	**0.0024**
1,1-Dichloroethane	ND	0.010	ug	0.0010
1,2-Dichloroethane	ND	0.010	ug	0.0017
cis-1,2-Dichloroethene	ND	0.010	ug	0.0010
trans-1,2-Dichloroethene	ND	0.010	ug	0.0020
1,1-Dichloroethene	ND	0.010	ug	0.0015
1,2-Dichloropropane	ND	0.010	ug	0.0017
1,3-Dichloropropane	ND	0.010	ug	0.0014
2,2-Dichloropropane	ND	0.010	ug	0.0010
cis-1,3-Dichloropropene	ND	0.010	ug	0.0017
trans-1,3-Dichloropropene	ND	0.010	ug	0.0012
1,1-Dichloropropene	ND	0.010	ug	0.0010

(Continued on next page)

O'Brien & Gere Inc of North America

Client Sample ID: TTU-VOST-ASB-R2A

GC/MS Volatiles

Lot-Sample #...: H2F290439-008 **Work Order #...:** MVD6C1AA **Matrix.....:** AIR

PARAMETER	RESULT	REPORTING LIMIT	UNITS	MDL
Ethylbenzene	ND	0.010	ug	0.0010
Hexachlorobutadiene	ND	0.025	ug	0.0025
2-Hexanone	ND	0.10	ug	0.0068
Isopropylbenzene	ND	0.010	ug	0.0010
p-Isopropyltoluene	ND	0.010	ug	0.0010
Methylene chloride	**0.013 J,B**	**0.025**	**ug**	**0.0022**
4-Methyl-2-pentanone	ND	0.10	ug	0.10
Naphthalene	ND	0.025	ug	0.010
n-Propylbenzene	ND	0.010	ug	0.0010
Styrene	**0.0014 J**	**0.010**	**ug**	**0.0013**
1,1,1,2-Tetrachloroethane	ND	0.010	ug	0.0011
1,1,2,2-Tetrachloroethane	ND	0.025	ug	0.024
Tetrachloroethene	ND	0.010	ug	0.0011
Toluene	**0.0059 J**	**0.010**	**ug**	**0.0010**
1,2,3-Trichlorobenzene	ND	0.025	ug	0.0010
1,2,4-Trichloro-benzene	ND	0.025	ug	0.0016
1,1,1-Trichloroethane	ND	0.025	ug	0.0010
1,1,2-Trichloroethane	ND	0.025	ug	0.010
Trichloroethene	ND	0.010	ug	0.0022
Trichlorofluoromethane	**0.038 J**	**0.050**	**ug**	**0.0017**
1,2,3-Trichloropropane	ND	0.025	ug	0.025
1,2,4-Trimethylbenzene	**0.0022 J**	**0.010**	**ug**	**0.0015**
1,3,5-Trimethylbenzene	ND	0.010	ug	0.0018
Vinyl chloride	ND	0.010	ug	0.0021
m-Xylene & p-Xylene	**0.0032 J**	**0.020**	**ug**	**0.0020**
o-Xylene	**0.0016 J**	**0.010**	**ug**	**0.0010**

SURROGATE	PERCENT RECOVERY	RECOVERY LIMITS
Dibromofluoromethane	89	(50 - 134)
1,2-Dichloroethane-d4	83	(50 - 127)
Toluene-d8	93	(57 - 134)
Bromofluorobenzene	81	(50 - 122)

NOTE(S):

J Estimated result. Result is less than RL.

B Method blank contamination. The associated method blank contains the target analyte at a reportable level.

O'Brien & Gere Inc of North America

Client Sample ID: TTU-VOST-TX1/2-R2B

GC/MS Volatiles

Lot-Sample #...: H2F290439-009 Work Order #...: MVD6D1AA Matrix.....: AIR
Date Sampled...: 06/27/12 Date Received..: 06/29/12
Prep Date.....: 07/06/12 Analysis Date..: 07/06/12
Prep Batch #...: 2185072
Dilution Factor: 1 Method.....: SW846 VOST

PARAMETER	RESULT	REPORTING LIMIT	UNITS	MDL
Acetone	**0.49**	**0.10**	**ug**	**0.030**
Benzene	**0.13**	**0.010**	**ug**	**0.0035**
Bromobenzene	ND	0.010	ug	0.0020
Bromochloromethane	ND	0.025	ug	0.0028
Bromodichloromethane	ND	0.010	ug	0.0013
Bromoform	ND	0.025	ug	0.010
Bromomethane	**0.015 J**	**0.050**	**ug**	**0.0059**
2-Butanone	**0.14**	**0.10**	**ug**	**0.10**
n-Butylbenzene	**0.0030 J**	**0.010**	**ug**	**0.0010**
sec-Butylbenzene	ND	0.010	ug	0.0010
tert-Butylbenzene	ND	0.010	ug	0.0011
Carbon disulfide	**0.0044 J**	**0.010**	**ug**	**0.0019**
Carbon tetrachloride	**0.0094 J**	**0.010**	**ug**	**0.0012**
Chlorobenzene	**0.0019 J**	**0.010**	**ug**	**0.0010**
Chlorodibromomethane	ND	0.025	ug	0.0020
Chloroethane	ND	0.050	ug	0.0062
Chloroform	**0.0045 J**	**0.010**	**ug**	**0.0011**
Chloromethane	**0.0035 J**	**0.050**	**ug**	**0.0025**
2-Chlorotoluene	ND	0.010	ug	0.0012
4-Chlorotoluene	ND	0.010	ug	0.0014
1,2-Dibromo-3-chloro-propane	ND	0.050	ug	0.013
1,2-Dibromoethane	ND	0.025	ug	0.0014
Dibromomethane	ND	0.025	ug	0.0021
1,2-Dichlorobenzene	**0.029**	**0.010**	**ug**	**0.0018**
1,3-Dichlorobenzene	**0.0021 J**	**0.010**	**ug**	**0.0014**
1,4-Dichlorobenzene	**0.0049 J**	**0.010**	**ug**	**0.0015**
Dichlorodifluoromethane	ND	0.025	ug	0.0024
1,1-Dichloroethane	ND	0.010	ug	0.0010
1,2-Dichloroethane	ND	0.010	ug	0.0017
cis-1,2-Dichloroethene	ND	0.010	ug	0.0010
trans-1,2-Dichloroethene	ND	0.010	ug	0.0020
1,1-Dichloroethene	ND	0.010	ug	0.0015
1,2-Dichloropropane	ND	0.010	ug	0.0017
1,3-Dichloropropane	ND	0.010	ug	0.0014
2,2-Dichloropropane	ND	0.010	ug	0.0010
cis-1,3-Dichloropropene	ND	0.010	ug	0.0017
trans-1,3-Dichloropropene	ND	0.010	ug	0.0012
1,1-Dichloropropene	ND	0.010	ug	0.0010

(Continued on next page)

O'Brien & Gere Inc of North America

Client Sample ID: TTU-VOST-TX1/2-R2B

GC/MS Volatiles

Lot-Sample #...: H2F290439-009 Work Order #...: MVD6D1AA Matrix.....: AIR

PARAMETER	RESULT	REPORTING LIMIT	UNITS	MDL
Ethylbenzene	**0.014**	**0.010**	**ug**	**0.0010**
Hexachlorobutadiene	ND	0.025	ug	0.0025
2-Hexanone	**0.020 J**	**0.10**	**ug**	**0.0068**
Isopropylbenzene	**0.0016 J**	**0.010**	**ug**	**0.0010**
p-Isopropyltoluene	**0.0020 J**	**0.010**	**ug**	**0.0010**
Methylene chloride	**0.016 J,B**	**0.025**	**ug**	**0.0022**
4-Methyl-2-pentanone	ND	0.10	ug	0.10
Naphthalene	**0.012 J**	**0.025**	**ug**	**0.010**
n-Propylbenzene	**0.0038 J**	**0.010**	**ug**	**0.0010**
Styrene	**0.019**	**0.010**	**ug**	**0.0013**
1,1,1,2-Tetrachloroethane	ND	0.010	ug	0.0011
1,1,2,2-Tetrachloroethane	ND	0.025	ug	0.024
Tetrachloroethene	**0.0046 J**	**0.010**	**ug**	**0.0011**
Toluene	**0.076**	**0.010**	**ug**	**0.0010**
1,2,3-Trichlorobenzene	ND	0.025	ug	0.0010
1,2,4-Trichloro-benzene	ND	0.025	ug	0.0016
1,1,1-Trichloroethane	**0.0015 J**	**0.025**	**ug**	**0.0010**
1,1,2-Trichloroethane	ND	0.025	ug	0.010
Trichloroethene	**0.0038 J**	**0.010**	**ug**	**0.0022**
Trichlorofluoromethane	**0.032 J**	**0.050**	**ug**	**0.0017**
1,2,3-Trichloropropane	ND	0.025	ug	0.025
1,2,4-Trimethylbenzene	**0.015**	**0.010**	**ug**	**0.0015**
1,3,5-Trimethylbenzene	**0.0061 J**	**0.010**	**ug**	**0.0018**
Vinyl chloride	ND	0.010	ug	0.0021
m-Xylene & p-Xylene	**0.063**	**0.020**	**ug**	**0.0020**
o-Xylene	**0.025**	**0.010**	**ug**	**0.0010**

SURROGATE	PERCENT RECOVERY	RECOVERY LIMITS
Dibromofluoromethane	86	(50 - 134)
1,2-Dichloroethane-d4	83	(50 - 127)
Toluene-d8	91	(57 - 134)
Bromofluorobenzene	76	(50 - 122)

NOTE(S):

J Estimated result. Result is less than RL.

B Method blank contamination. The associated method blank contains the target analyte at a reportable level.

O'Brien & Gere Inc of North America

Client Sample ID: TTU-VOST-ASB-R2B

GC/MS Volatiles

Lot-Sample #...: H2F290439-010 **Work Order #...:** MVD6F1AA **Matrix.....:** AIR
Date Sampled...: 06/27/12 **Date Received..:** 06/29/12
Prep Date.....: 07/06/12 **Analysis Date..:** 07/06/12
Prep Batch #...: 2185072
Dilution Factor: 1 **Method.....:** SW846 VOST

PARAMETER	RESULT	REPORTING LIMIT	UNITS	MDL
Acetone	**0.20**	**0.10**	**ug**	**0.030**
Benzene	ND	0.010	ug	0.0035
Bromobenzene	ND	0.010	ug	0.0020
Bromochloromethane	ND	0.025	ug	0.0028
Bromodichloromethane	ND	0.010	ug	0.0013
Bromoform	ND	0.025	ug	0.010
Bromomethane	**0.029 J**	**0.050**	**ug**	**0.0059**
2-Butanone	ND	0.10	ug	0.10
n-Butylbenzene	ND	0.010	ug	0.0010
sec-Butylbenzene	ND	0.010	ug	0.0010
tert-Butylbenzene	ND	0.010	ug	0.0011
Carbon disulfide	ND	0.010	ug	0.0019
Carbon tetrachloride	ND	0.010	ug	0.0012
Chlorobenzene	ND	0.010	ug	0.0010
Chlorodibromomethane	ND	0.025	ug	0.0020
Chloroethane	ND	0.050	ug	0.0062
Chloroform	ND	0.010	ug	0.0011
Chloromethane	**0.020 J**	**0.050**	**ug**	**0.0025**
2-Chlorotoluene	ND	0.010	ug	0.0012
4-Chlorotoluene	ND	0.010	ug	0.0014
1,2-Dibromo-3-chloro-propane	ND	0.050	ug	0.013
1,2-Dibromoethane	ND	0.025	ug	0.0014
Dibromomethane	ND	0.025	ug	0.0021
1,2-Dichlorobenzene	ND	0.010	ug	0.0018
1,3-Dichlorobenzene	ND	0.010	ug	0.0014
1,4-Dichlorobenzene	ND	0.010	ug	0.0015
Dichlorodifluoromethane	**0.033**	**0.025**	**ug**	**0.0024**
1,1-Dichloroethane	ND	0.010	ug	0.0010
1,2-Dichloroethane	ND	0.010	ug	0.0017
cis-1,2-Dichloroethene	ND	0.010	ug	0.0010
trans-1,2-Dichloroethene	ND	0.010	ug	0.0020
1,1-Dichloroethene	ND	0.010	ug	0.0015
1,2-Dichloropropane	ND	0.010	ug	0.0017
1,3-Dichloropropane	ND	0.010	ug	0.0014
2,2-Dichloropropane	ND	0.010	ug	0.0010
cis-1,3-Dichloropropene	ND	0.010	ug	0.0017
trans-1,3-Dichloropropene	ND	0.010	ug	0.0012
1,1-Dichloropropene	ND	0.010	ug	0.0010

(Continued on next page)

O'Brien & Gere Inc of North America

Client Sample ID: TTU-VOST-ASB-R2B

GC/MS Volatiles

Lot-Sample #...: H2F290439-010 **Work Order #...:** MVD6F1AA **Matrix.....:** AIR

PARAMETER	RESULT	REPORTING LIMIT	UNITS	MDL
Ethylbenzene	ND	0.010	ug	0.0010
Hexachlorobutadiene	ND	0.025	ug	0.0025
2-Hexanone	ND	0.10	ug	0.0068
Isopropylbenzene	ND	0.010	ug	0.0010
p-Isopropyltoluene	ND	0.010	ug	0.0010
Methylene chloride	**0.012 J,B**	**0.025**	**ug**	**0.0022**
4-Methyl-2-pentanone	ND	0.10	ug	0.10
Naphthalene	ND	0.025	ug	0.010
n-Propylbenzene	ND	0.010	ug	0.0010
Styrene	ND	0.010	ug	0.0013
1,1,1,2-Tetrachloroethane	ND	0.010	ug	0.0011
1,1,2,2-Tetrachloroethane	ND	0.025	ug	0.024
Tetrachloroethene	ND	0.010	ug	0.0011
Toluene	**0.0022 J**	**0.010**	**ug**	**0.0010**
1,2,3-Trichlorobenzene	ND	0.025	ug	0.0010
1,2,4-Trichloro-benzene	ND	0.025	ug	0.0016
1,1,1-Trichloroethane	ND	0.025	ug	0.0010
1,1,2-Trichloroethane	ND	0.025	ug	0.010
Trichloroethene	ND	0.010	ug	0.0022
Trichlorofluoromethane	**0.030 J**	**0.050**	**ug**	**0.0017**
1,2,3-Trichloropropane	ND	0.025	ug	0.025
1,2,4-Trimethylbenzene	ND	0.010	ug	0.0015
1,3,5-Trimethylbenzene	ND	0.010	ug	0.0018
Vinyl chloride	ND	0.010	ug	0.0021
m-Xylene & p-Xylene	ND	0.020	ug	0.0020
o-Xylene	ND	0.010	ug	0.0010

SURROGATE	PERCENT RECOVERY	RECOVERY LIMITS
Dibromofluoromethane	85	(50 - 134)
1,2-Dichloroethane-d4	77	(50 - 127)
Toluene-d8	90	(57 - 134)
Bromofluorobenzene	77	(50 - 122)

NOTE(S):

J Estimated result. Result is less than RL.

B Method blank contamination. The associated method blank contains the target analyte at a reportable level.

O'Brien & Gere Inc of North America

Client Sample ID: TTU-VOST-TX1/2-R2C

GC/MS Volatiles

Lot-Sample #...: H2F290439-011 Work Order #...: MVD6G1AA Matrix.....: AIR
Date Sampled...: 06/27/12 Date Received..: 06/29/12
Prep Date.....: 07/06/12 Analysis Date..: 07/06/12
Prep Batch #...: 2185072
Dilution Factor: 1 Method.....: SW846 VOST

PARAMETER	RESULT	REPORTING LIMIT	UNITS	MDL
Acetone	**0.45**	**0.10**	**ug**	**0.030**
Benzene	**0.12**	**0.010**	**ug**	**0.0035**
Bromobenzene	ND	0.010	ug	0.0020
Bromochloromethane	ND	0.025	ug	0.0028
Bromodichloromethane	ND	0.010	ug	0.0013
Bromoform	ND	0.025	ug	0.010
Bromomethane	ND	0.050	ug	0.0059
2-Butanone	**0.13**	**0.10**	**ug**	**0.10**
n-Butylbenzene	**0.0039 J**	**0.010**	**ug**	**0.0010**
sec-Butylbenzene	ND	0.010	ug	0.0010
tert-Butylbenzene	ND	0.010	ug	0.0011
Carbon disulfide	ND	0.010	ug	0.0019
Carbon tetrachloride	**0.0093 J**	**0.010**	**ug**	**0.0012**
Chlorobenzene	**0.0016 J**	**0.010**	**ug**	**0.0010**
Chlorodibromomethane	ND	0.025	ug	0.0020
Chloroethane	ND	0.050	ug	0.0062
Chloroform	**0.0050 J**	**0.010**	**ug**	**0.0011**
Chloromethane	**0.0045 J**	**0.050**	**ug**	**0.0025**
2-Chlorotoluene	ND	0.010	ug	0.0012
4-Chlorotoluene	ND	0.010	ug	0.0014
1,2-Dibromo-3-chloro-propane	ND	0.050	ug	0.013
1,2-Dibromoethane	ND	0.025	ug	0.0014
Dibromomethane	ND	0.025	ug	0.0021
1,2-Dichlorobenzene	**0.047**	**0.010**	**ug**	**0.0018**
1,3-Dichlorobenzene	**0.0029 J**	**0.010**	**ug**	**0.0014**
1,4-Dichlorobenzene	**0.0078 J**	**0.010**	**ug**	**0.0015**
Dichlorodifluoromethane	**0.0024 J**	**0.025**	**ug**	**0.0024**
1,1-Dichloroethane	ND	0.010	ug	0.0010
1,2-Dichloroethane	ND	0.010	ug	0.0017
cis-1,2-Dichloroethene	ND	0.010	ug	0.0010
trans-1,2-Dichloroethene	ND	0.010	ug	0.0020
1,1-Dichloroethene	ND	0.010	ug	0.0015
1,2-Dichloropropane	ND	0.010	ug	0.0017
1,3-Dichloropropane	ND	0.010	ug	0.0014
2,2-Dichloropropane	ND	0.010	ug	0.0010
cis-1,3-Dichloropropene	ND	0.010	ug	0.0017
trans-1,3-Dichloropropene	ND	0.010	ug	0.0012
1,1-Dichloropropene	ND	0.010	ug	0.0010

(Continued on next page)

O'Brien & Gere Inc of North America

Client Sample ID: TTU-VOST-TX1/2-R2C

GC/MS Volatiles

Lot-Sample #...: H2F290439-011 Work Order #...: MVD6G1AA Matrix.....: AIR

PARAMETER	RESULT	REPORTING LIMIT	UNITS	MDL
Ethylbenzene	0.014	0.010	ug	0.0010
Hexachlorobutadiene	ND	0.025	ug	0.0025
2-Hexanone	0.021 J	0.10	ug	0.0068
Isopropylbenzene	0.0016 J	0.010	ug	0.0010
p-Isopropyltoluene	0.0017 J	0.010	ug	0.0010
Methylene chloride	0.011 J,B	0.025	ug	0.0022
4-Methyl-2-pentanone	ND	0.10	ug	0.10
Naphthalene	0.017 J	0.025	ug	0.010
n-Propylbenzene	0.0041 J	0.010	ug	0.0010
Styrene	0.018	0.010	ug	0.0013
1,1,1,2-Tetrachloroethane	ND	0.010	ug	0.0011
1,1,2,2-Tetrachloroethane	ND	0.025	ug	0.024
Tetrachloroethene	0.0051 J	0.010	ug	0.0011
Toluene	0.072	0.010	ug	0.0010
1,2,3-Trichlorobenzene	ND	0.025	ug	0.0010
1,2,4-Trichloro-benzene	ND	0.025	ug	0.0016
1,1,1-Trichloroethane	0.0016 J	0.025	ug	0.0010
1,1,2-Trichloroethane	ND	0.025	ug	0.010
Trichloroethene	ND	0.010	ug	0.0022
Trichlorofluoromethane	0.032 J	0.050	ug	0.0017
1,2,3-Trichloropropane	ND	0.025	ug	0.025
1,2,4-Trimethylbenzene	0.016	0.010	ug	0.0015
1,3,5-Trimethylbenzene	0.0077 J	0.010	ug	0.0018
Vinyl chloride	ND	0.010	ug	0.0021
m-Xylene & p-Xylene	0.062	0.020	ug	0.0020
o-Xylene	0.028	0.010	ug	0.0010

SURROGATE	PERCENT RECOVERY	RECOVERY LIMITS
Dibromofluoromethane	91	(50 - 134)
1,2-Dichloroethane-d4	84	(50 - 127)
Toluene-d8	94	(57 - 134)
Bromofluorobenzene	88	(50 - 122)

NOTE(S):

J Estimated result. Result is less than RL.

B Method blank contamination. The associated method blank contains the target analyte at a reportable level.

O'Brien & Gere Inc of North America

Client Sample ID: TTU-VOST-ASB-R2C

GC/MS Volatiles

Lot-Sample #...: H2F290439-012 **Work Order #...:** MVD6H1AA **Matrix.....:** AIR
Date Sampled...: 06/27/12 **Date Received..:** 06/29/12
Prep Date.....: 07/06/12 **Analysis Date..:** 07/06/12
Prep Batch #...: 2185072
Dilution Factor: 1 **Method.....:** SW846 VOST

PARAMETER	RESULT	REPORTING LIMIT	UNITS	MDL
Acetone	**0.14**	**0.10**	**ug**	**0.030**
Benzene	ND	0.010	ug	0.0035
Bromobenzene	ND	0.010	ug	0.0020
Bromochloromethane	ND	0.025	ug	0.0028
Bromodichloromethane	ND	0.010	ug	0.0013
Bromoform	ND	0.025	ug	0.010
Bromomethane	**0.066**	**0.050**	**ug**	**0.0059**
2-Butanone	ND	0.10	ug	0.10
n-Butylbenzene	ND	0.010	ug	0.0010
sec-Butylbenzene	ND	0.010	ug	0.0010
tert-Butylbenzene	ND	0.010	ug	0.0011
Carbon disulfide	ND	0.010	ug	0.0019
Carbon tetrachloride	ND	0.010	ug	0.0012
Chlorobenzene	ND	0.010	ug	0.0010
Chlorodibromomethane	ND	0.025	ug	0.0020
Chloroethane	ND	0.050	ug	0.0062
Chloroform	ND	0.010	ug	0.0011
Chloromethane	**0.031 J**	**0.050**	**ug**	**0.0025**
2-Chlorotoluene	ND	0.010	ug	0.0012
4-Chlorotoluene	ND	0.010	ug	0.0014
1,2-Dibromo-3-chloro-propane	ND	0.050	ug	0.013
1,2-Dibromoethane	ND	0.025	ug	0.0014
Dibromomethane	ND	0.025	ug	0.0021
1,2-Dichlorobenzene	ND	0.010	ug	0.0018
1,3-Dichlorobenzene	ND	0.010	ug	0.0014
1,4-Dichlorobenzene	ND	0.010	ug	0.0015
Dichlorodifluoromethane	**0.050**	**0.025**	**ug**	**0.0024**
1,1-Dichloroethane	ND	0.010	ug	0.0010
1,2-Dichloroethane	ND	0.010	ug	0.0017
cis-1,2-Dichloroethene	ND	0.010	ug	0.0010
trans-1,2-Dichloroethene	ND	0.010	ug	0.0020
1,1-Dichloroethene	ND	0.010	ug	0.0015
1,2-Dichloropropane	ND	0.010	ug	0.0017
1,3-Dichloropropane	ND	0.010	ug	0.0014
2,2-Dichloropropane	ND	0.010	ug	0.0010
cis-1,3-Dichloropropene	ND	0.010	ug	0.0017
trans-1,3-Dichloropropene	ND	0.010	ug	0.0012
1,1-Dichloropropene	ND	0.010	ug	0.0010

(Continued on next page)

O'Brien & Gere Inc of North America

Client Sample ID: TTU-VOST-ASB-R2C

GC/MS Volatiles

Lot-Sample #...: H2F290439-012 Work Order #...: MVD6H1AA Matrix.....: AIR

PARAMETER	RESULT	REPORTING LIMIT	UNITS	MDL
Ethylbenzene	ND	0.010	ug	0.0010
Hexachlorobutadiene	ND	0.025	ug	0.0025
2-Hexanone	ND	0.10	ug	0.0068
Isopropylbenzene	ND	0.010	ug	0.0010
p-Isopropyltoluene	ND	0.010	ug	0.0010
Methylene chloride	**0.0075 J,B**	**0.025**	**ug**	**0.0022**
4-Methyl-2-pentanone	ND	0.10	ug	0.10
Naphthalene	ND	0.025	ug	0.010
n-Propylbenzene	ND	0.010	ug	0.0010
Styrene	ND	0.010	ug	0.0013
1,1,1,2-Tetrachloroethane	ND	0.010	ug	0.0011
1,1,2,2-Tetrachloroethane	ND	0.025	ug	0.024
Tetrachloroethene	ND	0.010	ug	0.0011
Toluene	**0.0023 J**	**0.010**	**ug**	**0.0010**
1,2,3-Trichlorobenzene	ND	0.025	ug	0.0010
1,2,4-Trichloro-benzene	ND	0.025	ug	0.0016
1,1,1-Trichloroethane	ND	0.025	ug	0.0010
1,1,2-Trichloroethane	ND	0.025	ug	0.010
Trichloroethene	ND	0.010	ug	0.0022
Trichlorofluoromethane	**0.035 J**	**0.050**	**ug**	**0.0017**
1,2,3-Trichloropropane	ND	0.025	ug	0.025
1,2,4-Trimethylbenzene	ND	0.010	ug	0.0015
1,3,5-Trimethylbenzene	ND	0.010	ug	0.0018
Vinyl chloride	ND	0.010	ug	0.0021
m-Xylene & p-Xylene	ND	0.020	ug	0.0020
o-Xylene	ND	0.010	ug	0.0010

SURROGATE	PERCENT RECOVERY	RECOVERY LIMITS
Dibromofluoromethane	90	(50 - 134)
1,2-Dichloroethane-d4	83	(50 - 127)
Toluene-d8	94	(57 - 134)
Bromofluorobenzene	84	(50 - 122)

NOTE(S):

J Estimated result. Result is less than RL.

B Method blank contamination. The associated method blank contains the target analyte at a reportable level.

O'Brien & Gere Inc of North America

Client Sample ID: TTU-VOST-TX1/2-R3A

GC/MS Volatiles

Lot-Sample #...: H2F290439-013 **Work Order #...:** MVD6K1AA **Matrix.....:** AIR
Date Sampled...: 06/28/12 **Date Received..:** 06/29/12
Prep Date.....: 07/05/12 **Analysis Date..:** 07/05/12
Prep Batch #...: 2185071
Dilution Factor: 1 **Method.....:** SW846 VOST

PARAMETER	RESULT	REPORTING LIMIT	UNITS	MDL
Acetone	**0.37**	**0.10**	**ug**	**0.030**
Benzene	**0.087**	**0.010**	**ug**	**0.0035**
Bromobenzene	ND	0.010	ug	0.0020
Bromochloromethane	ND	0.025	ug	0.0028
Bromodichloromethane	ND	0.010	ug	0.0013
Bromoform	ND	0.025	ug	0.010
Bromomethane	ND	0.050	ug	0.0059
2-Butanone	**0.10**	**0.10**	**ug**	**0.10**
n-Butylbenzene	ND	0.010	ug	0.0010
sec-Butylbenzene	ND	0.010	ug	0.0010
tert-Butylbenzene	ND	0.010	ug	0.0011
Carbon disulfide	**0.0034 J**	**0.010**	**ug**	**0.0019**
Carbon tetrachloride	**0.0094 J**	**0.010**	**ug**	**0.0012**
Chlorobenzene	**0.0011 J**	**0.010**	**ug**	**0.0010**
Chlorodibromomethane	ND	0.025	ug	0.0020
Chloroethane	ND	0.050	ug	0.0062
Chloroform	**0.0049 J**	**0.010**	**ug**	**0.0011**
Chloromethane	**0.0040 J**	**0.050**	**ug**	**0.0025**
2-Chlorotoluene	**0.0027 J**	**0.010**	**ug**	**0.0012**
4-Chlorotoluene	ND	0.010	ug	0.0014
1,2-Dibromo-3-chloro-propane	ND	0.050	ug	0.013
1,2-Dibromoethane	ND	0.025	ug	0.0014
Dibromomethane	ND	0.025	ug	0.0021
1,2-Dichlorobenzene	**0.017**	**0.010**	**ug**	**0.0018**
1,3-Dichlorobenzene	ND	0.010	ug	0.0014
1,4-Dichlorobenzene	**0.0030 J**	**0.010**	**ug**	**0.0015**
Dichlorodifluoromethane	ND	0.025	ug	0.0024
1,1-Dichloroethane	ND	0.010	ug	0.0010
1,2-Dichloroethane	ND	0.010	ug	0.0017
cis-1,2-Dichloroethene	ND	0.010	ug	0.0010
trans-1,2-Dichloroethene	ND	0.010	ug	0.0020
1,1-Dichloroethene	ND	0.010	ug	0.0015
1,2-Dichloropropane	ND	0.010	ug	0.0017
1,3-Dichloropropane	ND	0.010	ug	0.0014
2,2-Dichloropropane	ND	0.010	ug	0.0010
cis-1,3-Dichloropropene	ND	0.010	ug	0.0017
trans-1,3-Dichloropropene	ND	0.010	ug	0.0012
1,1-Dichloropropene	ND	0.010	ug	0.0010

(Continued on next page)

O'Brien & Gere Inc of North America

Client Sample ID: TTU-VOST-TX1/2-R3A

GC/MS Volatiles

Lot-Sample #...: H2F290439-013 Work Order #...: MVD6K1AA Matrix.....: AIR

PARAMETER	RESULT	REPORTING LIMIT	UNITS	MDL
Ethylbenzene	**0.0077 J**	**0.010**	**ug**	**0.0010**
Hexachlorobutadiene	ND	0.025	ug	0.0025
2-Hexanone	**0.014 J**	**0.10**	**ug**	**0.0068**
Isopropylbenzene	ND	0.010	ug	0.0010
p-Isopropyltoluene	**0.0013 J**	**0.010**	**ug**	**0.0010**
Methylene chloride	**0.017 J,B**	**0.025**	**ug**	**0.0022**
4-Methyl-2-pentanone	ND	0.10	ug	0.10
Naphthalene	ND	0.025	ug	0.010
n-Propylbenzene	**0.0026 J**	**0.010**	**ug**	**0.0010**
Styrene	**0.0088 J**	**0.010**	**ug**	**0.0013**
1,1,1,2-Tetrachloroethane	ND	0.010	ug	0.0011
1,1,2,2-Tetrachloroethane	ND	0.025	ug	0.024
Tetrachloroethene	**0.0018 J**	**0.010**	**ug**	**0.0011**
Toluene	**0.050**	**0.010**	**ug**	**0.0010**
1,2,3-Trichlorobenzene	**0.013 J,B**	**0.025**	**ug**	**0.0010**
1,2,4-Trichloro-benzene	ND	0.025	ug	0.0016
1,1,1-Trichloroethane	ND	0.025	ug	0.0010
1,1,2-Trichloroethane	ND	0.025	ug	0.010
Trichloroethene	ND	0.010	ug	0.0022
Trichlorofluoromethane	**0.033 J**	**0.050**	**ug**	**0.0017**
1,2,3-Trichloropropane	ND	0.025	ug	0.025
1,2,4-Trimethylbenzene	**0.0084 J**	**0.010**	**ug**	**0.0015**
1,3,5-Trimethylbenzene	**0.0031 J**	**0.010**	**ug**	**0.0018**
Vinyl chloride	ND	0.010	ug	0.0021
m-Xylene & p-Xylene	**0.043**	**0.020**	**ug**	**0.0020**
o-Xylene	**0.017**	**0.010**	**ug**	**0.0010**

SURROGATE	PERCENT RECOVERY	RECOVERY LIMITS
Dibromofluoromethane	92	(50 - 134)
1,2-Dichloroethane-d4	82	(50 - 127)
Toluene-d8	94	(57 - 134)
Bromofluorobenzene	78	(50 - 122)

NOTE(S):

J Estimated result. Result is less than RL.

B Method blank contamination. The associated method blank contains the target analyte at a reportable level.

O'Brien & Gere Inc of North America

Client Sample ID: TTU-VOST-ASB-R3A

GC/MS Volatiles

Lot-Sample #...: H2F290439-014 Work Order #...: MVD6L1AA Matrix.....: AIR
Date Sampled...: 06/28/12 Date Received..: 06/29/12
Prep Date.....: 07/05/12 Analysis Date..: 07/05/12
Prep Batch #...: 2185071
Dilution Factor: 1 Method.....: SW846 VOST

PARAMETER	RESULT	REPORTING LIMIT	UNITS	MDL
Acetone	**0.14**	**0.10**	**ug**	**0.030**
Benzene	**0.0048 J**	**0.010**	**ug**	**0.0035**
Bromobenzene	ND	0.010	ug	0.0020
Bromochloromethane	ND	0.025	ug	0.0028
Bromodichloromethane	ND	0.010	ug	0.0013
Bromoform	ND	0.025	ug	0.010
Bromomethane	**0.014 J**	**0.050**	**ug**	**0.0059**
2-Butanone	ND	0.10	ug	0.10
n-Butylbenzene	ND	0.010	ug	0.0010
sec-Butylbenzene	ND	0.010	ug	0.0010
tert-Butylbenzene	ND	0.010	ug	0.0011
Carbon disulfide	ND	0.010	ug	0.0019
Carbon tetrachloride	ND	0.010	ug	0.0012
Chlorobenzene	ND	0.010	ug	0.0010
Chlorodibromomethane	ND	0.025	ug	0.0020
Chloroethane	ND	0.050	ug	0.0062
Chloroform	ND	0.010	ug	0.0011
Chloromethane	**0.016 J**	**0.050**	**ug**	**0.0025**
2-Chlorotoluene	ND	0.010	ug	0.0012
4-Chlorotoluene	ND	0.010	ug	0.0014
1,2-Dibromo-3-chloro-propane	ND	0.050	ug	0.013
1,2-Dibromoethane	ND	0.025	ug	0.0014
Dibromomethane	ND	0.025	ug	0.0021
1,2-Dichlorobenzene	ND	0.010	ug	0.0018
1,3-Dichlorobenzene	ND	0.010	ug	0.0014
1,4-Dichlorobenzene	ND	0.010	ug	0.0015
Dichlorodifluoromethane	**0.042**	**0.025**	**ug**	**0.0024**
1,1-Dichloroethane	ND	0.010	ug	0.0010
1,2-Dichloroethane	ND	0.010	ug	0.0017
cis-1,2-Dichloroethene	ND	0.010	ug	0.0010
trans-1,2-Dichloroethene	ND	0.010	ug	0.0020
1,1-Dichloroethene	ND	0.010	ug	0.0015
1,2-Dichloropropane	ND	0.010	ug	0.0017
1,3-Dichloropropane	ND	0.010	ug	0.0014
2,2-Dichloropropane	ND	0.010	ug	0.0010
cis-1,3-Dichloropropene	ND	0.010	ug	0.0017
trans-1,3-Dichloropropene	ND	0.010	ug	0.0012
1,1-Dichloropropene	ND	0.010	ug	0.0010

(Continued on next page)

O'Brien & Gere Inc of North America

Client Sample ID: TTU-VOST-ASB-R3A

GC/MS Volatiles

Lot-Sample #...: H2F290439-014 Work Order #...: MVD6L1AA Matrix.....: AIR

PARAMETER	RESULT	REPORTING LIMIT	UNITS	MDL
Ethylbenzene	**0.0012 J**	**0.010**	**ug**	**0.0010**
Hexachlorobutadiene	ND	0.025	ug	0.0025
2-Hexanone	ND	0.10	ug	0.0068
Isopropylbenzene	ND	0.010	ug	0.0010
p-Isopropyltoluene	ND	0.010	ug	0.0010
Methylene chloride	**0.013 J,B**	**0.025**	**ug**	**0.0022**
4-Methyl-2-pentanone	ND	0.10	ug	0.10
Naphthalene	ND	0.025	ug	0.010
n-Propylbenzene	ND	0.010	ug	0.0010
Styrene	ND	0.010	ug	0.0013
1,1,1,2-Tetrachloroethane	ND	0.010	ug	0.0011
1,1,2,2-Tetrachloroethane	ND	0.025	ug	0.024
Tetrachloroethene	ND	0.010	ug	0.0011
Toluene	**0.0074 J**	**0.010**	**ug**	**0.0010**
1,2,3-Trichlorobenzene	ND	0.025	ug	0.0010
1,2,4-Trichloro-benzene	ND	0.025	ug	0.0016
1,1,1-Trichloroethane	ND	0.025	ug	0.0010
1,1,2-Trichloroethane	ND	0.025	ug	0.010
Trichloroethene	ND	0.010	ug	0.0022
Trichlorofluoromethane	**0.030 J**	**0.050**	**ug**	**0.0017**
1,2,3-Trichloropropane	ND	0.025	ug	0.025
1,2,4-Trimethylbenzene	**0.0018 J**	**0.010**	**ug**	**0.0015**
1,3,5-Trimethylbenzene	ND	0.010	ug	0.0018
Vinyl chloride	ND	0.010	ug	0.0021
m-Xylene & p-Xylene	**0.0036 J**	**0.020**	**ug**	**0.0020**
o-Xylene	**0.0017 J**	**0.010**	**ug**	**0.0010**

SURROGATE	PERCENT RECOVERY	RECOVERY LIMITS
Dibromofluoromethane	97	(50 - 134)
1,2-Dichloroethane-d4	90	(50 - 127)
Toluene-d8	99	(57 - 134)
Bromofluorobenzene	87	(50 - 122)

NOTE(S):

J Estimated result. Result is less than RL.

B Method blank contamination. The associated method blank contains the target analyte at a reportable level.

O'Brien & Gere Inc of North America

Client Sample ID: TTU-VOST-TX1/2-R3B

GC/MS Volatiles

Lot-Sample #...: H2F290439-015 **Work Order #...:** MVD6N1AA **Matrix.....:** AIR
Date Sampled...: 06/28/12 **Date Received..:** 06/29/12
Prep Date.....: 07/05/12 **Analysis Date..:** 07/05/12
Prep Batch #...: 2185071
Dilution Factor: 1 **Method.....:** SW846 VOST

PARAMETER	RESULT	REPORTING LIMIT	UNITS	MDL
Acetone	**0.40**	**0.10**	**ug**	**0.030**
Benzene	**0.085**	**0.010**	**ug**	**0.0035**
Bromobenzene	ND	0.010	ug	0.0020
Bromochloromethane	ND	0.025	ug	0.0028
Bromodichloromethane	ND	0.010	ug	0.0013
Bromoform	ND	0.025	ug	0.010
Bromomethane	ND	0.050	ug	0.0059
2-Butanone	**0.10**	**0.10**	**ug**	**0.10**
n-Butylbenzene	ND	0.010	ug	0.0010
sec-Butylbenzene	ND	0.010	ug	0.0010
tert-Butylbenzene	ND	0.010	ug	0.0011
Carbon disulfide	**0.0029 J**	**0.010**	**ug**	**0.0019**
Carbon tetrachloride	**0.0097 J**	**0.010**	**ug**	**0.0012**
Chlorobenzene	**0.0012 J**	**0.010**	**ug**	**0.0010**
Chlorodibromomethane	ND	0.025	ug	0.0020
Chloroethane	ND	0.050	ug	0.0062
Chloroform	**0.0050 J**	**0.010**	**ug**	**0.0011**
Chloromethane	ND	0.050	ug	0.0025
2-Chlorotoluene	**0.0022 J**	**0.010**	**ug**	**0.0012**
4-Chlorotoluene	ND	0.010	ug	0.0014
1,2-Dibromo-3-chloro-propane	ND	0.050	ug	0.013
1,2-Dibromoethane	ND	0.025	ug	0.0014
Dibromomethane	ND	0.025	ug	0.0021
1,2-Dichlorobenzene	**0.020**	**0.010**	**ug**	**0.0018**
1,3-Dichlorobenzene	ND	0.010	ug	0.0014
1,4-Dichlorobenzene	**0.0035 J**	**0.010**	**ug**	**0.0015**
Dichlorodifluoromethane	ND	0.025	ug	0.0024
1,1-Dichloroethane	ND	0.010	ug	0.0010
1,2-Dichloroethane	ND	0.010	ug	0.0017
cis-1,2-Dichloroethene	ND	0.010	ug	0.0010
trans-1,2-Dichloroethene	ND	0.010	ug	0.0020
1,1-Dichloroethene	ND	0.010	ug	0.0015
1,2-Dichloropropane	ND	0.010	ug	0.0017
1,3-Dichloropropane	ND	0.010	ug	0.0014
2,2-Dichloropropane	ND	0.010	ug	0.0010
cis-1,3-Dichloropropene	ND	0.010	ug	0.0017
trans-1,3-Dichloropropene	ND	0.010	ug	0.0012
1,1-Dichloropropene	ND	0.010	ug	0.0010

(Continued on next page)

O'Brien & Gere Inc of North America

Client Sample ID: TTU-VOST-TX1/2-R3B

GC/MS Volatiles

Lot-Sample #...: H2F290439-015 **Work Order #...:** MVD6N1AA **Matrix.....:** AIR

PARAMETER	RESULT	REPORTING LIMIT	UNITS	MDL
Ethylbenzene	**0.0080 J**	**0.010**	**ug**	**0.0010**
Hexachlorobutadiene	ND	0.025	ug	0.0025
2-Hexanone	**0.016 J**	**0.10**	**ug**	**0.0068**
Isopropylbenzene	ND	0.010	ug	0.0010
p-Isopropyltoluene	ND	0.010	ug	0.0010
Methylene chloride	**0.015 J,B**	**0.025**	**ug**	**0.0022**
4-Methyl-2-pentanone	ND	0.10	ug	0.10
Naphthalene	ND	0.025	ug	0.010
n-Propylbenzene	**0.0021 J**	**0.010**	**ug**	**0.0010**
Styrene	**0.025**	**0.010**	**ug**	**0.0013**
1,1,1,2-Tetrachloroethane	ND	0.010	ug	0.0011
1,1,2,2-Tetrachloroethane	ND	0.025	ug	0.024
Tetrachloroethene	**0.0036 J**	**0.010**	**ug**	**0.0011**
Toluene	**0.047**	**0.010**	**ug**	**0.0010**
1,2,3-Trichlorobenzene	ND	0.025	ug	0.0010
1,2,4-Trichloro-benzene	ND	0.025	ug	0.0016
1,1,1-Trichloroethane	**0.0020 J**	**0.025**	**ug**	**0.0010**
1,1,2-Trichloroethane	ND	0.025	ug	0.010
Trichloroethene	ND	0.010	ug	0.0022
Trichlorofluoromethane	**0.027 J**	**0.050**	**ug**	**0.0017**
1,2,3-Trichloropropane	ND	0.025	ug	0.025
1,2,4-Trimethylbenzene	**0.0084 J**	**0.010**	**ug**	**0.0015**
1,3,5-Trimethylbenzene	**0.0043 J**	**0.010**	**ug**	**0.0018**
Vinyl chloride	ND	0.010	ug	0.0021
m-Xylene & p-Xylene	**0.045**	**0.020**	**ug**	**0.0020**
o-Xylene	**0.019**	**0.010**	**ug**	**0.0010**

SURROGATE	PERCENT RECOVERY	RECOVERY LIMITS
Dibromofluoromethane	91	(50 - 134)
1,2-Dichloroethane-d4	86	(50 - 127)
Toluene-d8	87	(57 - 134)
Bromofluorobenzene	75	(50 - 122)

NOTE(S):

J Estimated result. Result is less than RL.

B Method blank contamination. The associated method blank contains the target analyte at a reportable level.

O'Brien & Gere Inc of North America

Client Sample ID: TTU-VOST-ASB-R3B

GC/MS Volatiles

Lot-Sample #...: H2F290439-016 **Work Order #...:** MVD6T1AA **Matrix.....:** AIR
Date Sampled...: 06/28/12 **Date Received..:** 06/29/12
Prep Date.....: 07/05/12 **Analysis Date..:** 07/05/12
Prep Batch #...: 2185071
Dilution Factor: 1 **Method.....:** SW846 VOST

PARAMETER	RESULT	REPORTING LIMIT	UNITS	MDL
Acetone	**0.15**	**0.10**	**ug**	**0.030**
Benzene	ND	0.010	ug	0.0035
Bromobenzene	ND	0.010	ug	0.0020
Bromochloromethane	ND	0.025	ug	0.0028
Bromodichloromethane	ND	0.010	ug	0.0013
Bromoform	ND	0.025	ug	0.010
Bromomethane	**0.082**	**0.050**	**ug**	**0.0059**
2-Butanone	ND	0.10	ug	0.10
n-Butylbenzene	ND	0.010	ug	0.0010
sec-Butylbenzene	ND	0.010	ug	0.0010
tert-Butylbenzene	ND	0.010	ug	0.0011
Carbon disulfide	ND	0.010	ug	0.0019
Carbon tetrachloride	ND	0.010	ug	0.0012
Chlorobenzene	ND	0.010	ug	0.0010
Chlorodibromomethane	ND	0.025	ug	0.0020
Chloroethane	ND	0.050	ug	0.0062
Chloroform	ND	0.010	ug	0.0011
Chloromethane	**0.059**	**0.050**	**ug**	**0.0025**
2-Chlorotoluene	ND	0.010	ug	0.0012
4-Chlorotoluene	ND	0.010	ug	0.0014
1,2-Dibromo-3-chloro-propane	ND	0.050	ug	0.013
1,2-Dibromoethane	ND	0.025	ug	0.0014
Dibromomethane	ND	0.025	ug	0.0021
1,2-Dichlorobenzene	ND	0.010	ug	0.0018
1,3-Dichlorobenzene	ND	0.010	ug	0.0014
1,4-Dichlorobenzene	ND	0.010	ug	0.0015
Dichlorodifluoromethane	**0.058**	**0.025**	**ug**	**0.0024**
1,1-Dichloroethane	ND	0.010	ug	0.0010
1,2-Dichloroethane	ND	0.010	ug	0.0017
cis-1,2-Dichloroethene	ND	0.010	ug	0.0010
trans-1,2-Dichloroethene	ND	0.010	ug	0.0020
1,1-Dichloroethene	ND	0.010	ug	0.0015
1,2-Dichloropropane	ND	0.010	ug	0.0017
1,3-Dichloropropane	ND	0.010	ug	0.0014
2,2-Dichloropropane	ND	0.010	ug	0.0010
cis-1,3-Dichloropropene	ND	0.010	ug	0.0017
trans-1,3-Dichloropropene	ND	0.010	ug	0.0012
1,1-Dichloropropene	ND	0.010	ug	0.0010

(Continued on next page)

O'Brien & Gere Inc of North America

Client Sample ID: TTU-VOST-ASB-R3B

GC/MS Volatiles

Lot-Sample #...: H2F290439-016 **Work Order #...:** MVD6T1AA **Matrix.....:** AIR

PARAMETER	RESULT	REPORTING LIMIT	UNITS	MDL
Ethylbenzene	ND	0.010	ug	0.0010
Hexachlorobutadiene	ND	0.025	ug	0.0025
2-Hexanone	ND	0.10	ug	0.0068
Isopropylbenzene	ND	0.010	ug	0.0010
p-Isopropyltoluene	ND	0.010	ug	0.0010
Methylene chloride	**0.011 J,B**	**0.025**	**ug**	**0.0022**
4-Methyl-2-pentanone	ND	0.10	ug	0.10
Naphthalene	ND	0.025	ug	0.010
n-Propylbenzene	ND	0.010	ug	0.0010
Styrene	ND	0.010	ug	0.0013
1,1,1,2-Tetrachloroethane	ND	0.010	ug	0.0011
1,1,2,2-Tetrachloroethane	ND	0.025	ug	0.024
Tetrachloroethene	ND	0.010	ug	0.0011
Toluene	**0.0021 J**	**0.010**	**ug**	**0.0010**
1,2,3-Trichlorobenzene	ND	0.025	ug	0.0010
1,2,4-Trichloro-benzene	ND	0.025	ug	0.0016
1,1,1-Trichloroethane	ND	0.025	ug	0.0010
1,1,2-Trichloroethane	ND	0.025	ug	0.010
Trichloroethene	ND	0.010	ug	0.0022
Trichlorofluoromethane	**0.037 J**	**0.050**	**ug**	**0.0017**
1,2,3-Trichloropropane	ND	0.025	ug	0.025
1,2,4-Trimethylbenzene	ND	0.010	ug	0.0015
1,3,5-Trimethylbenzene	ND	0.010	ug	0.0018
Vinyl chloride	ND	0.010	ug	0.0021
m-Xylene & p-Xylene	ND	0.020	ug	0.0020
o-Xylene	ND	0.010	ug	0.0010

SURROGATE	PERCENT RECOVERY	RECOVERY LIMITS
Dibromofluoromethane	89	(50 - 134)
1,2-Dichloroethane-d4	83	(50 - 127)
Toluene-d8	90	(57 - 134)
Bromofluorobenzene	82	(50 - 122)

NOTE(S):

J Estimated result. Result is less than RL.

B Method blank contamination. The associated method blank contains the target analyte at a reportable level.

O'Brien & Gere Inc of North America

Client Sample ID: TTU-VOST-TX1/2-R3C

GC/MS Volatiles

Lot-Sample #...: H2F290439-017 **Work Order #...:** MVD6W1AA **Matrix.....:** AIR
Date Sampled...: 06/28/12 **Date Received..:** 06/29/12
Prep Date.....: 07/05/12 **Analysis Date..:** 07/05/12
Prep Batch #...: 2185071
Dilution Factor: 1 **Method.....:** SW846 VOST

PARAMETER	RESULT	REPORTING LIMIT	UNITS	MDL
Acetone	**0.34**	**0.10**	**ug**	**0.030**
Benzene	**0.079**	**0.010**	**ug**	**0.0035**
Bromobenzene	ND	0.010	ug	0.0020
Bromochloromethane	ND	0.025	ug	0.0028
Bromodichloromethane	ND	0.010	ug	0.0013
Bromoform	ND	0.025	ug	0.010
Bromomethane	**0.011 J**	**0.050**	**ug**	**0.0059**
2-Butanone	**0.12**	**0.10**	**ug**	**0.10**
n-Butylbenzene	**0.0024 J**	**0.010**	**ug**	**0.0010**
sec-Butylbenzene	ND	0.010	ug	0.0010
tert-Butylbenzene	ND	0.010	ug	0.0011
Carbon disulfide	**0.0028 J**	**0.010**	**ug**	**0.0019**
Carbon tetrachloride	**0.0087 J**	**0.010**	**ug**	**0.0012**
Chlorobenzene	**0.0012 J**	**0.010**	**ug**	**0.0010**
Chlorodibromomethane	ND	0.025	ug	0.0020
Chloroethane	ND	0.050	ug	0.0062
Chloroform	**0.0048 J**	**0.010**	**ug**	**0.0011**
Chloromethane	**0.0034 J**	**0.050**	**ug**	**0.0025**
2-Chlorotoluene	ND	0.010	ug	0.0012
4-Chlorotoluene	ND	0.010	ug	0.0014
1,2-Dibromo-3-chloro-propane	ND	0.050	ug	0.013
1,2-Dibromoethane	ND	0.025	ug	0.0014
Dibromomethane	ND	0.025	ug	0.0021
1,2-Dichlorobenzene	**0.020**	**0.010**	**ug**	**0.0018**
1,3-Dichlorobenzene	ND	0.010	ug	0.0014
1,4-Dichlorobenzene	**0.0040 J**	**0.010**	**ug**	**0.0015**
Dichlorodifluoromethane	ND	0.025	ug	0.0024
1,1-Dichloroethane	ND	0.010	ug	0.0010
1,2-Dichloroethane	ND	0.010	ug	0.0017
cis-1,2-Dichloroethene	ND	0.010	ug	0.0010
trans-1,2-Dichloroethene	ND	0.010	ug	0.0020
1,1-Dichloroethene	ND	0.010	ug	0.0015
1,2-Dichloropropane	ND	0.010	ug	0.0017
1,3-Dichloropropane	ND	0.010	ug	0.0014
2,2-Dichloropropane	ND	0.010	ug	0.0010
cis-1,3-Dichloropropene	ND	0.010	ug	0.0017
trans-1,3-Dichloropropene	ND	0.010	ug	0.0012
1,1-Dichloropropene	ND	0.010	ug	0.0010

(Continued on next page)

O'Brien & Gere Inc of North America

Client Sample ID: TTU-VOST-TX1/2-R3C

GC/MS Volatiles

Lot-Sample #...: H2F290439-017 Work Order #...: MVD6W1AA Matrix.....: AIR

PARAMETER	RESULT	REPORTING LIMIT	UNITS	MDL
Ethylbenzene	**0.0086 J**	**0.010**	**ug**	**0.0010**
Hexachlorobutadiene	ND	0.025	ug	0.0025
2-Hexanone	**0.015 J**	**0.10**	**ug**	**0.0068**
Isopropylbenzene	ND	0.010	ug	0.0010
p-Isopropyltoluene	**0.0010 J**	**0.010**	**ug**	**0.0010**
Methylene chloride	**0.012 J,B**	**0.025**	**ug**	**0.0022**
4-Methyl-2-pentanone	ND	0.10	ug	0.10
Naphthalene	ND	0.025	ug	0.010
n-Propylbenzene	**0.0019 J**	**0.010**	**ug**	**0.0010**
Styrene	**0.011**	**0.010**	**ug**	**0.0013**
1,1,1,2-Tetrachloroethane	ND	0.010	ug	0.0011
1,1,2,2-Tetrachloroethane	ND	0.025	ug	0.024
Tetrachloroethene	**0.0024 J**	**0.010**	**ug**	**0.0011**
Toluene	**0.046**	**0.010**	**ug**	**0.0010**
1,2,3-Trichlorobenzene	ND	0.025	ug	0.0010
1,2,4-Trichloro-benzene	ND	0.025	ug	0.0016
1,1,1-Trichloroethane	**0.0013 J**	**0.025**	**ug**	**0.0010**
1,1,2-Trichloroethane	ND	0.025	ug	0.010
Trichloroethene	ND	0.010	ug	0.0022
Trichlorofluoromethane	**0.024 J**	**0.050**	**ug**	**0.0017**
1,2,3-Trichloropropane	ND	0.025	ug	0.025
1,2,4-Trimethylbenzene	**0.0091 J**	**0.010**	**ug**	**0.0015**
1,3,5-Trimethylbenzene	**0.0045 J**	**0.010**	**ug**	**0.0018**
Vinyl chloride	ND	0.010	ug	0.0021
m-Xylene & p-Xylene	**0.048**	**0.020**	**ug**	**0.0020**
o-Xylene	**0.022**	**0.010**	**ug**	**0.0010**

SURROGATE	PERCENT RECOVERY	RECOVERY LIMITS
Dibromofluoromethane	91	(50 - 134)
1,2-Dichloroethane-d4	83	(50 - 127)
Toluene-d8	94	(57 - 134)
Bromofluorobenzene	79	(50 - 122)

NOTE(S):

J Estimated result. Result is less than RL.

B Method blank contamination. The associated method blank contains the target analyte at a reportable level.

O'Brien & Gere Inc of North America

Client Sample ID: TTU-VOST-ASB-R3C

GC/MS Volatiles

Lot-Sample #...: H2F290439-018 **Work Order #...:** MVD6X1AA **Matrix.....:** AIR
Date Sampled...: 06/28/12 **Date Received..:** 06/29/12
Prep Date.....: 07/05/12 **Analysis Date..:** 07/05/12
Prep Batch #...: 2185071
Dilution Factor: 1 **Method.....:** SW846 VOST

PARAMETER	RESULT	REPORTING LIMIT	UNITS	MDL
Acetone	**0.14**	**0.10**	**ug**	**0.030**
Benzene	ND	0.010	ug	0.0035
Bromobenzene	ND	0.010	ug	0.0020
Bromochloromethane	ND	0.025	ug	0.0028
Bromodichloromethane	ND	0.010	ug	0.0013
Bromoform	ND	0.025	ug	0.010
Bromomethane	**0.048 J**	**0.050**	**ug**	**0.0059**
2-Butanone	ND	0.10	ug	0.10
n-Butylbenzene	ND	0.010	ug	0.0010
sec-Butylbenzene	ND	0.010	ug	0.0010
tert-Butylbenzene	ND	0.010	ug	0.0011
Carbon disulfide	ND	0.010	ug	0.0019
Carbon tetrachloride	ND	0.010	ug	0.0012
Chlorobenzene	ND	0.010	ug	0.0010
Chlorodibromomethane	ND	0.025	ug	0.0020
Chloroethane	ND	0.050	ug	0.0062
Chloroform	ND	0.010	ug	0.0011
Chloromethane	**0.043 J**	**0.050**	**ug**	**0.0025**
2-Chlorotoluene	ND	0.010	ug	0.0012
4-Chlorotoluene	ND	0.010	ug	0.0014
1,2-Dibromo-3-chloro-propane	ND	0.050	ug	0.013
1,2-Dibromoethane	ND	0.025	ug	0.0014
Dibromomethane	ND	0.025	ug	0.0021
1,2-Dichlorobenzene	ND	0.010	ug	0.0018
1,3-Dichlorobenzene	ND	0.010	ug	0.0014
1,4-Dichlorobenzene	ND	0.010	ug	0.0015
Dichlorodifluoromethane	**0.048**	**0.025**	**ug**	**0.0024**
1,1-Dichloroethane	ND	0.010	ug	0.0010
1,2-Dichloroethane	ND	0.010	ug	0.0017
cis-1,2-Dichloroethene	ND	0.010	ug	0.0010
trans-1,2-Dichloroethene	ND	0.010	ug	0.0020
1,1-Dichloroethene	ND	0.010	ug	0.0015
1,2-Dichloropropane	ND	0.010	ug	0.0017
1,3-Dichloropropane	ND	0.010	ug	0.0014
2,2-Dichloropropane	ND	0.010	ug	0.0010
cis-1,3-Dichloropropene	ND	0.010	ug	0.0017
trans-1,3-Dichloropropene	ND	0.010	ug	0.0012
1,1-Dichloropropene	ND	0.010	ug	0.0010

(Continued on next page)

O'Brien & Gere Inc of North America

Client Sample ID: TTU-VOST-ASB-R3C

GC/MS Volatiles

Lot-Sample #...: H2F290439-018 Work Order #...: MVD6X1AA Matrix.....: AIR

PARAMETER	RESULT	REPORTING LIMIT	UNITS	MDL
Ethylbenzene	ND	0.010	ug	0.0010
Hexachlorobutadiene	ND	0.025	ug	0.0025
2-Hexanone	ND	0.10	ug	0.0068
Isopropylbenzene	ND	0.010	ug	0.0010
p-Isopropyltoluene	ND	0.010	ug	0.0010
Methylene chloride	**0.011 J,B**	**0.025**	**ug**	**0.0022**
4-Methyl-2-pentanone	ND	0.10	ug	0.10
Naphthalene	ND	0.025	ug	0.010
n-Propylbenzene	ND	0.010	ug	0.0010
Styrene	ND	0.010	ug	0.0013
1,1,1,2-Tetrachloroethane	ND	0.010	ug	0.0011
1,1,2,2-Tetrachloroethane	ND	0.025	ug	0.024
Tetrachloroethene	ND	0.010	ug	0.0011
Toluene	**0.0022 J**	**0.010**	**ug**	**0.0010**
1,2,3-Trichlorobenzene	ND	0.025	ug	0.0010
1,2,4-Trichloro-benzene	ND	0.025	ug	0.0016
1,1,1-Trichloroethane	ND	0.025	ug	0.0010
1,1,2-Trichloroethane	ND	0.025	ug	0.010
Trichloroethene	ND	0.010	ug	0.0022
Trichlorofluoromethane	**0.037 J**	**0.050**	**ug**	**0.0017**
1,2,3-Trichloropropane	ND	0.025	ug	0.025
1,2,4-Trimethylbenzene	ND	0.010	ug	0.0015
1,3,5-Trimethylbenzene	ND	0.010	ug	0.0018
Vinyl chloride	**0.0021 J**	**0.010**	**ug**	**0.0021**
m-Xylene & p-Xylene	ND	0.020	ug	0.0020
o-Xylene	**0.0012 J**	**0.010**	**ug**	**0.0010**

SURROGATE	PERCENT RECOVERY	RECOVERY LIMITS
Dibromofluoromethane	92	(50 - 134)
1,2-Dichloroethane-d4	83	(50 - 127)
Toluene-d8	97	(57 - 134)
Bromofluorobenzene	80	(50 - 122)

NOTE(S):

J Estimated result. Result is less than RL.

B Method blank contamination. The associated method blank contains the target analyte at a reportable level.

O'Brien & Gere Inc of North America

Client Sample ID: TTU-VOST-TX1/2-FB

GC/MS Volatiles

Lot-Sample #...: H2F290439-019 Work Order #...: MVD601AA Matrix.....: AIR
Date Sampled...: 06/27/12 Date Received..: 06/29/12
Prep Date.....: 07/05/12 Analysis Date..: 07/05/12
Prep Batch #...: 2185071
Dilution Factor: 1 Method.....: SW846 VOST

PARAMETER	RESULT	REPORTING LIMIT	UNITS	MDL
Acetone	ND	0.10	ug	0.030
Benzene	ND	0.010	ug	0.0035
Bromobenzene	ND	0.010	ug	0.0020
Bromochloromethane	ND	0.025	ug	0.0028
Bromodichloromethane	ND	0.010	ug	0.0013
Bromoform	ND	0.025	ug	0.010
Bromomethane	ND	0.050	ug	0.0059
2-Butanone	ND	0.10	ug	0.10
n-Butylbenzene	ND	0.010	ug	0.0010
sec-Butylbenzene	ND	0.010	ug	0.0010
tert-Butylbenzene	ND	0.010	ug	0.0011
Carbon disulfide	ND	0.010	ug	0.0019
Carbon tetrachloride	ND	0.010	ug	0.0012
Chlorobenzene	ND	0.010	ug	0.0010
Chlorodibromomethane	ND	0.025	ug	0.0020
Chloroethane	ND	0.050	ug	0.0062
Chloroform	ND	0.010	ug	0.0011
Chloromethane	ND	0.050	ug	0.0025
2-Chlorotoluene	ND	0.010	ug	0.0012
4-Chlorotoluene	ND	0.010	ug	0.0014
1,2-Dibromo-3-chloro-propane	ND	0.050	ug	0.013
1,2-Dibromoethane	ND	0.025	ug	0.0014
Dibromomethane	ND	0.025	ug	0.0021
1,2-Dichlorobenzene	ND	0.010	ug	0.0018
1,3-Dichlorobenzene	ND	0.010	ug	0.0014
1,4-Dichlorobenzene	ND	0.010	ug	0.0015
Dichlorodifluoromethane	ND	0.025	ug	0.0024
1,1-Dichloroethane	ND	0.010	ug	0.0010
1,2-Dichloroethane	ND	0.010	ug	0.0017
cis-1,2-Dichloroethene	ND	0.010	ug	0.0010
trans-1,2-Dichloroethene	ND	0.010	ug	0.0020
1,1-Dichloroethene	ND	0.010	ug	0.0015
1,2-Dichloropropane	ND	0.010	ug	0.0017
1,3-Dichloropropane	ND	0.010	ug	0.0014
2,2-Dichloropropane	ND	0.010	ug	0.0010
cis-1,3-Dichloropropene	ND	0.010	ug	0.0017
trans-1,3-Dichloropropene	ND	0.010	ug	0.0012
1,1-Dichloropropene	ND	0.010	ug	0.0010

(Continued on next page)

O'Brien & Gere Inc of North America

Client Sample ID: TTU-VOST-TX1/2-FB

GC/MS Volatiles

Lot-Sample #...: H2F290439-019 Work Order #...: MVD601AA Matrix.....: AIR

PARAMETER	RESULT	REPORTING LIMIT	UNITS	MDL
Ethylbenzene	ND	0.010	ug	0.0010
Hexachlorobutadiene	ND	0.025	ug	0.0025
2-Hexanone	ND	0.10	ug	0.0068
Isopropylbenzene	ND	0.010	ug	0.0010
p-Isopropyltoluene	ND	0.010	ug	0.0010
Methylene chloride	**0.0080 J,B**	**0.025**	**ug**	**0.0022**
4-Methyl-2-pentanone	ND	0.10	ug	0.10
Naphthalene	ND	0.025	ug	0.010
n-Propylbenzene	ND	0.010	ug	0.0010
Styrene	ND	0.010	ug	0.0013
1,1,1,2-Tetrachloroethane	ND	0.010	ug	0.0011
1,1,2,2-Tetrachloroethane	ND	0.025	ug	0.024
Tetrachloroethene	ND	0.010	ug	0.0011
Toluene	**0.0014 J**	**0.010**	**ug**	**0.0010**
1,2,3-Trichlorobenzene	ND	0.025	ug	0.0010
1,2,4-Trichloro-benzene	ND	0.025	ug	0.0016
1,1,1-Trichloroethane	ND	0.025	ug	0.0010
1,1,2-Trichloroethane	ND	0.025	ug	0.010
Trichloroethene	ND	0.010	ug	0.0022
Trichlorofluoromethane	ND	0.050	ug	0.0017
1,2,3-Trichloropropane	ND	0.025	ug	0.025
1,2,4-Trimethylbenzene	ND	0.010	ug	0.0015
1,3,5-Trimethylbenzene	ND	0.010	ug	0.0018
Vinyl chloride	ND	0.010	ug	0.0021
m-Xylene & p-Xylene	ND	0.020	ug	0.0020
o-Xylene	ND	0.010	ug	0.0010

SURROGATE	PERCENT RECOVERY	RECOVERY LIMITS
Dibromofluoromethane	88	(50 - 134)
1,2-Dichloroethane-d4	82	(50 - 127)
Toluene-d8	94	(57 - 134)
Bromofluorobenzene	80	(50 - 122)

NOTE(S):

J Estimated result. Result is less than RL.

B Method blank contamination. The associated method blank contains the target analyte at a reportable level.

O'Brien & Gere Inc of North America

Client Sample ID: TTU-VOST-ASB-FB

GC/MS Volatiles

Lot-Sample #...: H2F290439-020 **Work Order #...:** MVD611AA **Matrix.....:** AIR
Date Sampled...: 06/27/12 **Date Received..:** 06/29/12
Prep Date.....: 07/05/12 **Analysis Date..:** 07/05/12
Prep Batch #...: 2185071
Dilution Factor: 1 **Method.....:** SW846 VOST

PARAMETER	RESULT	REPORTING LIMIT	UNITS	MDL
Acetone	**0.041 J**	**0.10**	**ug**	**0.030**
Benzene	ND	0.010	ug	0.0035
Bromobenzene	ND	0.010	ug	0.0020
Bromochloromethane	ND	0.025	ug	0.0028
Bromodichloromethane	ND	0.010	ug	0.0013
Bromoform	ND	0.025	ug	0.010
Bromomethane	ND	0.050	ug	0.0059
2-Butanone	ND	0.10	ug	0.10
n-Butylbenzene	ND	0.010	ug	0.0010
sec-Butylbenzene	ND	0.010	ug	0.0010
tert-Butylbenzene	ND	0.010	ug	0.0011
Carbon disulfide	ND	0.010	ug	0.0019
Carbon tetrachloride	ND	0.010	ug	0.0012
Chlorobenzene	ND	0.010	ug	0.0010
Chlorodibromomethane	ND	0.025	ug	0.0020
Chloroethane	ND	0.050	ug	0.0062
Chloroform	ND	0.010	ug	0.0011
Chloromethane	**0.0025 J**	**0.050**	**ug**	**0.0025**
2-Chlorotoluene	ND	0.010	ug	0.0012
4-Chlorotoluene	ND	0.010	ug	0.0014
1,2-Dibromo-3-chloro-propane	ND	0.050	ug	0.013
1,2-Dibromoethane	ND	0.025	ug	0.0014
Dibromomethane	ND	0.025	ug	0.0021
1,2-Dichlorobenzene	ND	0.010	ug	0.0018
1,3-Dichlorobenzene	ND	0.010	ug	0.0014
1,4-Dichlorobenzene	ND	0.010	ug	0.0015
Dichlorodifluoromethane	ND	0.025	ug	0.0024
1,1-Dichloroethane	ND	0.010	ug	0.0010
1,2-Dichloroethane	ND	0.010	ug	0.0017
cis-1,2-Dichloroethene	ND	0.010	ug	0.0010
trans-1,2-Dichloroethene	ND	0.010	ug	0.0020
1,1-Dichloroethene	ND	0.010	ug	0.0015
1,2-Dichloropropane	ND	0.010	ug	0.0017
1,3-Dichloropropane	ND	0.010	ug	0.0014
2,2-Dichloropropane	ND	0.010	ug	0.0010
cis-1,3-Dichloropropene	ND	0.010	ug	0.0017
trans-1,3-Dichloropropene	ND	0.010	ug	0.0012
1,1-Dichloropropene	ND	0.010	ug	0.0010

(Continued on next page)

O'Brien & Gere Inc of North America

Client Sample ID: TTU-VOST-ASB-FB

GC/MS Volatiles

Lot-Sample #...: H2F290439-020 **Work Order #...:** MVD611AA **Matrix.....:** AIR

PARAMETER	RESULT	REPORTING LIMIT	UNITS	MDL
Ethylbenzene	ND	0.010	ug	0.0010
Hexachlorobutadiene	ND	0.025	ug	0.0025
2-Hexanone	ND	0.10	ug	0.0068
Isopropylbenzene	ND	0.010	ug	0.0010
p-Isopropyltoluene	ND	0.010	ug	0.0010
Methylene chloride	**0.0047 J,B**	**0.025**	**ug**	**0.0022**
4-Methyl-2-pentanone	ND	0.10	ug	0.10
Naphthalene	ND	0.025	ug	0.010
n-Propylbenzene	ND	0.010	ug	0.0010
Styrene	ND	0.010	ug	0.0013
1,1,1,2-Tetrachloroethane	ND	0.010	ug	0.0011
1,1,2,2-Tetrachloroethane	ND	0.025	ug	0.024
Tetrachloroethene	ND	0.010	ug	0.0011
Toluene	ND	0.010	ug	0.0010
1,2,3-Trichlorobenzene	ND	0.025	ug	0.0010
1,2,4-Trichloro-benzene	ND	0.025	ug	0.0016
1,1,1-Trichloroethane	ND	0.025	ug	0.0010
1,1,2-Trichloroethane	ND	0.025	ug	0.010
Trichloroethene	ND	0.010	ug	0.0022
Trichlorofluoromethane	ND	0.050	ug	0.0017
1,2,3-Trichloropropane	ND	0.025	ug	0.025
1,2,4-Trimethylbenzene	ND	0.010	ug	0.0015
1,3,5-Trimethylbenzene	ND	0.010	ug	0.0018
Vinyl chloride	ND	0.010	ug	0.0021
m-Xylene & p-Xylene	ND	0.020	ug	0.0020
o-Xylene	ND	0.010	ug	0.0010

SURROGATE	PERCENT RECOVERY	RECOVERY LIMITS
Dibromofluoromethane	91	(50 - 134)
1,2-Dichloroethane-d4	80	(50 - 127)
Toluene-d8	91	(57 - 134)
Bromofluorobenzene	79	(50 - 122)

NOTE(S):

J Estimated result. Result is less than RL.

B Method blank contamination. The associated method blank contains the target analyte at a reportable level.

O'Brien & Gere Inc of North America

Client Sample ID: TTU-VOST-TX1/2-TB

GC/MS Volatiles

Lot-Sample #...: H2F290439-021 **Work Order #...:** MVD621AA **Matrix.....:** AIR
Date Sampled...: 06/27/12 **Date Received..:** 06/29/12
Prep Date.....: 07/05/12 **Analysis Date..:** 07/05/12
Prep Batch #...: 2185071
Dilution Factor: 1 **Method.....:** SW846 VOST

PARAMETER	RESULT	REPORTING LIMIT	UNITS	MDL
Acetone	**0.073 J**	**0.10**	**ug**	**0.030**
Benzene	ND	0.010	ug	0.0035
Bromobenzene	ND	0.010	ug	0.0020
Bromochloromethane	ND	0.025	ug	0.0028
Bromodichloromethane	ND	0.010	ug	0.0013
Bromoform	ND	0.025	ug	0.010
Bromomethane	ND	0.050	ug	0.0059
2-Butanone	ND	0.10	ug	0.10
n-Butylbenzene	ND	0.010	ug	0.0010
sec-Butylbenzene	ND	0.010	ug	0.0010
tert-Butylbenzene	ND	0.010	ug	0.0011
Carbon disulfide	ND	0.010	ug	0.0019
Carbon tetrachloride	ND	0.010	ug	0.0012
Chlorobenzene	ND	0.010	ug	0.0010
Chlorodibromomethane	ND	0.025	ug	0.0020
Chloroethane	ND	0.050	ug	0.0062
Chloroform	ND	0.010	ug	0.0011
Chloromethane	**0.0032 J**	**0.050**	**ug**	**0.0025**
2-Chlorotoluene	ND	0.010	ug	0.0012
4-Chlorotoluene	ND	0.010	ug	0.0014
1,2-Dibromo-3-chloro-propane	ND	0.050	ug	0.013
1,2-Dibromoethane	ND	0.025	ug	0.0014
Dibromomethane	ND	0.025	ug	0.0021
1,2-Dichlorobenzene	ND	0.010	ug	0.0018
1,3-Dichlorobenzene	ND	0.010	ug	0.0014
1,4-Dichlorobenzene	ND	0.010	ug	0.0015
Dichlorodifluoromethane	ND	0.025	ug	0.0024
1,1-Dichloroethane	ND	0.010	ug	0.0010
1,2-Dichloroethane	ND	0.010	ug	0.0017
cis-1,2-Dichloroethene	ND	0.010	ug	0.0010
trans-1,2-Dichloroethene	ND	0.010	ug	0.0020
1,1-Dichloroethene	ND	0.010	ug	0.0015
1,2-Dichloropropane	ND	0.010	ug	0.0017
1,3-Dichloropropane	ND	0.010	ug	0.0014
2,2-Dichloropropane	ND	0.010	ug	0.0010
cis-1,3-Dichloropropene	ND	0.010	ug	0.0017
trans-1,3-Dichloropropene	ND	0.010	ug	0.0012
1,1-Dichloropropene	ND	0.010	ug	0.0010

(Continued on next page)

O'Brien & Gere Inc of North America

Client Sample ID: TTU-VOST-TX1/2-TB

GC/MS Volatiles

Lot-Sample #...: H2F290439-021 Work Order #...: MVD621AA Matrix.....: AIR

PARAMETER	RESULT	REPORTING LIMIT	UNITS	MDL
Ethylbenzene	ND	0.010	ug	0.0010
Hexachlorobutadiene	ND	0.025	ug	0.0025
2-Hexanone	ND	0.10	ug	0.0068
Isopropylbenzene	ND	0.010	ug	0.0010
p-Isopropyltoluene	ND	0.010	ug	0.0010
Methylene chloride	**0.0082 J,B**	**0.025**	**ug**	**0.0022**
4-Methyl-2-pentanone	ND	0.10	ug	0.10
Naphthalene	ND	0.025	ug	0.010
n-Propylbenzene	ND	0.010	ug	0.0010
Styrene	ND	0.010	ug	0.0013
1,1,1,2-Tetrachloroethane	ND	0.010	ug	0.0011
1,1,2,2-Tetrachloroethane	ND	0.025	ug	0.024
Tetrachloroethene	ND	0.010	ug	0.0011
Toluene	**0.0013 J**	**0.010**	**ug**	**0.0010**
1,2,3-Trichlorobenzene	ND	0.025	ug	0.0010
1,2,4-Trichloro-benzene	ND	0.025	ug	0.0016
1,1,1-Trichloroethane	ND	0.025	ug	0.0010
1,1,2-Trichloroethane	ND	0.025	ug	0.010
Trichloroethene	ND	0.010	ug	0.0022
Trichlorofluoromethane	ND	0.050	ug	0.0017
1,2,3-Trichloropropane	ND	0.025	ug	0.025
1,2,4-Trimethylbenzene	ND	0.010	ug	0.0015
1,3,5-Trimethylbenzene	ND	0.010	ug	0.0018
Vinyl chloride	ND	0.010	ug	0.0021
m-Xylene & p-Xylene	ND	0.020	ug	0.0020
o-Xylene	ND	0.010	ug	0.0010

SURROGATE	PERCENT RECOVERY	RECOVERY LIMITS
Dibromofluoromethane	93	(50 - 134)
1,2-Dichloroethane-d4	81	(50 - 127)
Toluene-d8	94	(57 - 134)
Bromofluorobenzene	82	(50 - 122)

NOTE(S):

J Estimated result. Result is less than RL.

B Method blank contamination. The associated method blank contains the target analyte at a reportable level.

O'Brien & Gere Inc of North America

Client Sample ID: TTU-VOST-ASB-TB

GC/MS Volatiles

Lot-Sample #...: H2F290439-022 **Work Order #...:** MVD631AA **Matrix.....:** AIR
Date Sampled...: 06/27/12 **Date Received..:** 06/29/12
Prep Date.....: 07/05/12 **Analysis Date..:** 07/05/12
Prep Batch #...: 2185071
Dilution Factor: 1 **Method.....:** SW846 VOST

PARAMETER	RESULT	REPORTING LIMIT	UNITS	MDL
Acetone	ND	0.10	ug	0.030
Benzene	ND	0.010	ug	0.0035
Bromobenzene	ND	0.010	ug	0.0020
Bromochloromethane	ND	0.025	ug	0.0028
Bromodichloromethane	ND	0.010	ug	0.0013
Bromoform	ND	0.025	ug	0.010
Bromomethane	ND	0.050	ug	0.0059
2-Butanone	ND	0.10	ug	0.10
n-Butylbenzene	ND	0.010	ug	0.0010
sec-Butylbenzene	ND	0.010	ug	0.0010
tert-Butylbenzene	ND	0.010	ug	0.0011
Carbon disulfide	ND	0.010	ug	0.0019
Carbon tetrachloride	ND	0.010	ug	0.0012
Chlorobenzene	ND	0.010	ug	0.0010
Chlorodibromomethane	ND	0.025	ug	0.0020
Chloroethane	ND	0.050	ug	0.0062
Chloroform	ND	0.010	ug	0.0011
Chloromethane	**0.0028 J**	**0.050**	**ug**	**0.0025**
2-Chlorotoluene	ND	0.010	ug	0.0012
4-Chlorotoluene	ND	0.010	ug	0.0014
1,2-Dibromo-3-chloro-propane	ND	0.050	ug	0.013
1,2-Dibromoethane	ND	0.025	ug	0.0014
Dibromomethane	ND	0.025	ug	0.0021
1,2-Dichlorobenzene	ND	0.010	ug	0.0018
1,3-Dichlorobenzene	ND	0.010	ug	0.0014
1,4-Dichlorobenzene	ND	0.010	ug	0.0015
Dichlorodifluoromethane	ND	0.025	ug	0.0024
1,1-Dichloroethane	ND	0.010	ug	0.0010
1,2-Dichloroethane	ND	0.010	ug	0.0017
cis-1,2-Dichloroethene	ND	0.010	ug	0.0010
trans-1,2-Dichloroethene	ND	0.010	ug	0.0020
1,1-Dichloroethene	ND	0.010	ug	0.0015
1,2-Dichloropropane	ND	0.010	ug	0.0017
1,3-Dichloropropane	ND	0.010	ug	0.0014
2,2-Dichloropropane	ND	0.010	ug	0.0010
cis-1,3-Dichloropropene	ND	0.010	ug	0.0017
trans-1,3-Dichloropropene	ND	0.010	ug	0.0012
1,1-Dichloropropene	ND	0.010	ug	0.0010

(Continued on next page)

O'Brien & Gere Inc of North America

Client Sample ID: TTU-VOST-ASB-TB

GC/MS Volatiles

Lot-Sample #...: H2F290439-022 **Work Order #...:** MVD631AA **Matrix.....:** AIR

PARAMETER	RESULT	REPORTING LIMIT	UNITS	MDL
Ethylbenzene	ND	0.010	ug	0.0010
Hexachlorobutadiene	ND	0.025	ug	0.0025
2-Hexanone	ND	0.10	ug	0.0068
Isopropylbenzene	ND	0.010	ug	0.0010
p-Isopropyltoluene	ND	0.010	ug	0.0010
Methylene chloride	**0.0048 J,B**	**0.025**	**ug**	**0.0022**
4-Methyl-2-pentanone	ND	0.10	ug	0.10
Naphthalene	ND	0.025	ug	0.010
n-Propylbenzene	ND	0.010	ug	0.0010
Styrene	ND	0.010	ug	0.0013
1,1,1,2-Tetrachloroethane	ND	0.010	ug	0.0011
1,1,2,2-Tetrachloroethane	ND	0.025	ug	0.024
Tetrachloroethene	ND	0.010	ug	0.0011
Toluene	ND	0.010	ug	0.0010
1,2,3-Trichlorobenzene	ND	0.025	ug	0.0010
1,2,4-Trichloro-benzene	ND	0.025	ug	0.0016
1,1,1-Trichloroethane	ND	0.025	ug	0.0010
1,1,2-Trichloroethane	ND	0.025	ug	0.010
Trichloroethene	ND	0.010	ug	0.0022
Trichlorofluoromethane	ND	0.050	ug	0.0017
1,2,3-Trichloropropane	ND	0.025	ug	0.025
1,2,4-Trimethylbenzene	ND	0.010	ug	0.0015
1,3,5-Trimethylbenzene	ND	0.010	ug	0.0018
Vinyl chloride	ND	0.010	ug	0.0021
m-Xylene & p-Xylene	ND	0.020	ug	0.0020
o-Xylene	ND	0.010	ug	0.0010

SURROGATE	PERCENT RECOVERY	RECOVERY LIMITS
Dibromofluoromethane	86	(50 - 134)
1,2-Dichloroethane-d4	80	(50 - 127)
Toluene-d8	96	(57 - 134)
Bromofluorobenzene	81	(50 - 122)

NOTE(S):

J Estimated result. Result is less than RL.

B Method blank contamination. The associated method blank contains the target analyte at a reportable level.

O'Brien & Gere Inc of North America

Client Sample ID: A-6747 MEDIA CHECK TENAX

GC/MS Volatiles

Lot-Sample #...: H2F290439-023 **Work Order #...:** MVD641AA **Matrix.....:** AIR
Date Sampled...: 06/27/12 **Date Received..:** 06/29/12
Prep Date.....: 07/03/12 **Analysis Date..:** 07/03/12
Prep Batch #...: 2184061
Dilution Factor: 1 **Method.....:** SW846 VOST

PARAMETER	RESULT	REPORTING LIMIT	UNITS	MDL
Acetone	ND	0.10	ug	0.030
Benzene	ND	0.010	ug	0.0035
Bromobenzene	ND	0.010	ug	0.0020
Bromochloromethane	ND	0.025	ug	0.0028
Bromodichloromethane	ND	0.010	ug	0.0013
Bromoform	ND	0.025	ug	0.010
Bromomethane	ND	0.050	ug	0.0059
2-Butanone	ND	0.10	ug	0.10
n-Butylbenzene	ND	0.010	ug	0.0010
sec-Butylbenzene	ND	0.010	ug	0.0010
tert-Butylbenzene	ND	0.010	ug	0.0011
Carbon disulfide	ND	0.010	ug	0.0019
Carbon tetrachloride	ND	0.010	ug	0.0012
Chlorobenzene	ND	0.010	ug	0.0010
Chlorodibromomethane	ND	0.025	ug	0.0020
Chloroethane	ND	0.050	ug	0.0062
Chloroform	ND	0.010	ug	0.0011
Chloromethane	ND	0.050	ug	0.0025
2-Chlorotoluene	ND	0.010	ug	0.0012
4-Chlorotoluene	ND	0.010	ug	0.0014
1,2-Dibromo-3-chloro-propane	ND	0.050	ug	0.013
1,2-Dibromoethane	ND	0.025	ug	0.0014
Dibromomethane	ND	0.025	ug	0.0021
1,2-Dichlorobenzene	ND	0.010	ug	0.0018
1,3-Dichlorobenzene	ND	0.010	ug	0.0014
1,4-Dichlorobenzene	ND	0.010	ug	0.0015
Dichlorodifluoromethane	ND	0.025	ug	0.0024
1,1-Dichloroethane	ND	0.010	ug	0.0010
1,2-Dichloroethane	ND	0.010	ug	0.0017
cis-1,2-Dichloroethene	ND	0.010	ug	0.0010
trans-1,2-Dichloroethene	ND	0.010	ug	0.0020
1,1-Dichloroethene	ND	0.010	ug	0.0015
1,2-Dichloropropane	ND	0.010	ug	0.0017
1,3-Dichloropropane	ND	0.010	ug	0.0014
2,2-Dichloropropane	ND	0.010	ug	0.0010
cis-1,3-Dichloropropene	ND	0.010	ug	0.0017
trans-1,3-Dichloropropene	ND	0.010	ug	0.0012
1,1-Dichloropropene	ND	0.010	ug	0.0010

(Continued on next page)

O'Brien & Gere Inc of North America

Client Sample ID: A-6747 MEDIA CHECK TENAX

GC/MS Volatiles

Lot-Sample #...: H2F290439-023 **Work Order #...:** MVD641AA **Matrix.....:** AIR

PARAMETER	RESULT	REPORTING LIMIT	UNITS	MDL
Ethylbenzene	ND	0.010	ug	0.0010
Hexachlorobutadiene	ND	0.025	ug	0.0025
2-Hexanone	ND	0.10	ug	0.0068
Isopropylbenzene	ND	0.010	ug	0.0010
p-Isopropyltoluene	ND	0.010	ug	0.0010
Methylene chloride	**0.0067 J,B**	**0.025**	**ug**	**0.0022**
4-Methyl-2-pentanone	ND	0.10	ug	0.10
Naphthalene	ND	0.025	ug	0.010
n-Propylbenzene	ND	0.010	ug	0.0010
Styrene	ND	0.010	ug	0.0013
1,1,1,2-Tetrachloroethane	ND	0.010	ug	0.0011
1,1,2,2-Tetrachloroethane	ND	0.025	ug	0.024
Tetrachloroethene	ND	0.010	ug	0.0011
Toluene	**0.0012 J,B**	**0.010**	**ug**	**0.0010**
1,2,3-Trichlorobenzene	ND	0.025	ug	0.0010
1,2,4-Trichloro-benzene	ND	0.025	ug	0.0016
1,1,1-Trichloroethane	ND	0.025	ug	0.0010
1,1,2-Trichloroethane	ND	0.025	ug	0.010
Trichloroethene	ND	0.010	ug	0.0022
Trichlorofluoromethane	ND	0.050	ug	0.0017
1,2,3-Trichloropropane	ND	0.025	ug	0.025
1,2,4-Trimethylbenzene	ND	0.010	ug	0.0015
1,3,5-Trimethylbenzene	ND	0.010	ug	0.0018
Vinyl chloride	ND	0.010	ug	0.0021
m-Xylene & p-Xylene	ND	0.020	ug	0.0020
o-Xylene	ND	0.010	ug	0.0010

SURROGATE	PERCENT RECOVERY	RECOVERY LIMITS
Dibromofluoromethane	90	(50 - 134)
1,2-Dichloroethane-d4	78	(50 - 127)
Toluene-d8	99	(57 - 134)
Bromofluorobenzene	81	(50 - 122)

NOTE(S):

J Estimated result. Result is less than RL.

B Method blank contamination. The associated method blank contains the target analyte at a reportable level.

O'Brien & Gere Inc of North America

Client Sample ID: A-6748 MEDIA CHECK TENAX/CHAR

GC/MS Volatiles

Lot-Sample #...: H2F290439-024 **Work Order #...:** MVD661AA **Matrix.....:** AIR
Date Sampled...: 06/27/12 **Date Received..:** 06/29/12
Prep Date.....: 07/06/12 **Analysis Date..:** 07/06/12
Prep Batch #...: 2185072
Dilution Factor: 1 **Method.....:** SW846 VOST

PARAMETER	RESULT	REPORTING LIMIT	UNITS	MDL
Acetone	ND	0.10	ug	0.030
Benzene	ND	0.010	ug	0.0035
Bromobenzene	ND	0.010	ug	0.0020
Bromochloromethane	ND	0.025	ug	0.0028
Bromodichloromethane	ND	0.010	ug	0.0013
Bromoform	ND	0.025	ug	0.010
Bromomethane	ND	0.050	ug	0.0059
2-Butanone	ND	0.10	ug	0.10
n-Butylbenzene	ND	0.010	ug	0.0010
sec-Butylbenzene	ND	0.010	ug	0.0010
tert-Butylbenzene	ND	0.010	ug	0.0011
Carbon disulfide	ND	0.010	ug	0.0019
Carbon tetrachloride	ND	0.010	ug	0.0012
Chlorobenzene	ND	0.010	ug	0.0010
Chlorodibromomethane	ND	0.025	ug	0.0020
Chloroethane	ND	0.050	ug	0.0062
Chloroform	ND	0.010	ug	0.0011
Chloromethane	**0.0032 J**	**0.050**	**ug**	**0.0025**
2-Chlorotoluene	ND	0.010	ug	0.0012
4-Chlorotoluene	ND	0.010	ug	0.0014
1,2-Dibromo-3-chloro-propane	ND	0.050	ug	0.013
1,2-Dibromoethane	ND	0.025	ug	0.0014
Dibromomethane	ND	0.025	ug	0.0021
1,2-Dichlorobenzene	ND	0.010	ug	0.0018
1,3-Dichlorobenzene	ND	0.010	ug	0.0014
1,4-Dichlorobenzene	ND	0.010	ug	0.0015
Dichlorodifluoromethane	ND	0.025	ug	0.0024
1,1-Dichloroethane	ND	0.010	ug	0.0010
1,2-Dichloroethane	ND	0.010	ug	0.0017
cis-1,2-Dichloroethene	ND	0.010	ug	0.0010
trans-1,2-Dichloroethene	ND	0.010	ug	0.0020
1,1-Dichloroethene	ND	0.010	ug	0.0015
1,2-Dichloropropane	ND	0.010	ug	0.0017
1,3-Dichloropropane	ND	0.010	ug	0.0014
2,2-Dichloropropane	ND	0.010	ug	0.0010
cis-1,3-Dichloropropene	ND	0.010	ug	0.0017
trans-1,3-Dichloropropene	ND	0.010	ug	0.0012
1,1-Dichloropropene	ND	0.010	ug	0.0010

(Continued on next page)

O'Brien & Gere Inc of North America

Client Sample ID: A-6748 MEDIA CHECK TENAX/CHAR

GC/MS Volatiles

Lot-Sample #...: H2F290439-024 **Work Order #...:** MVD661AA **Matrix.....:** AIR

PARAMETER	RESULT	REPORTING LIMIT	UNITS	MDL
Ethylbenzene	ND	0.010	ug	0.0010
Hexachlorobutadiene	ND	0.025	ug	0.0025
2-Hexanone	ND	0.10	ug	0.0068
Isopropylbenzene	ND	0.010	ug	0.0010
p-Isopropyltoluene	ND	0.010	ug	0.0010
Methylene chloride	**0.0043 J,B**	**0.025**	**ug**	**0.0022**
4-Methyl-2-pentanone	ND	0.10	ug	0.10
Naphthalene	ND	0.025	ug	0.010
n-Propylbenzene	ND	0.010	ug	0.0010
Styrene	ND	0.010	ug	0.0013
1,1,1,2-Tetrachloroethane	ND	0.010	ug	0.0011
1,1,2,2-Tetrachloroethane	ND	0.025	ug	0.024
Tetrachloroethene	ND	0.010	ug	0.0011
Toluene	ND	0.010	ug	0.0010
1,2,3-Trichlorobenzene	ND	0.025	ug	0.0010
1,2,4-Trichloro-benzene	ND	0.025	ug	0.0016
1,1,1-Trichloroethane	ND	0.025	ug	0.0010
1,1,2-Trichloroethane	ND	0.025	ug	0.010
Trichloroethene	ND	0.010	ug	0.0022
Trichlorofluoromethane	ND	0.050	ug	0.0017
1,2,3-Trichloropropane	ND	0.025	ug	0.025
1,2,4-Trimethylbenzene	ND	0.010	ug	0.0015
1,3,5-Trimethylbenzene	ND	0.010	ug	0.0018
Vinyl chloride	ND	0.010	ug	0.0021
m-Xylene & p-Xylene	ND	0.020	ug	0.0020
o-Xylene	ND	0.010	ug	0.0010

SURROGATE	PERCENT RECOVERY	RECOVERY LIMITS
Dibromofluoromethane	91	(50 - 134)
1,2-Dichloroethane-d4	82	(50 - 127)
Toluene-d8	93	(57 - 134)
Bromofluorobenzene	79	(50 - 122)

NOTE(S):

J Estimated result. Result is less than RL.

B Method blank contamination. The associated method blank contains the target analyte at a reportable level.

METHOD BLANK REPORT

GC/MS Volatiles

Client Lot #...: H2F290439 **Work Order #...:** MVEM81AA **Matrix.....:** AIR
MB Lot-Sample #: H2G020000-061

Prep Date.....: 07/03/12
Analysis Date..: 07/03/12 **Prep Batch #...:** 2184061
Dilution Factor: 1

PARAMETER	RESULT	REPORTING LIMIT	UNITS	METHOD
Acetone	ND	0.10	ug	SW846 VOST
Benzene	ND	0.010	ug	SW846 VOST
Bromobenzene	ND	0.010	ug	SW846 VOST
Bromochloromethane	ND	0.025	ug	SW846 VOST
Bromodichloromethane	ND	0.010	ug	SW846 VOST
Bromoform	ND	0.025	ug	SW846 VOST
Bromomethane	**0.0084 J**	**0.050**	**ug**	**SW846 VOST**
2-Butanone	ND	0.10	ug	SW846 VOST
n-Butylbenzene	ND	0.010	ug	SW846 VOST
sec-Butylbenzene	ND	0.010	ug	SW846 VOST
tert-Butylbenzene	ND	0.010	ug	SW846 VOST
Carbon disulfide	ND	0.010	ug	SW846 VOST
Carbon tetrachloride	ND	0.010	ug	SW846 VOST
Chlorobenzene	ND	0.010	ug	SW846 VOST
Chlorodibromomethane	ND	0.025	ug	SW846 VOST
Chloroethane	ND	0.050	ug	SW846 VOST
Chloroform	ND	0.010	ug	SW846 VOST
Chloromethane	**0.0048 J**	**0.050**	**ug**	**SW846 VOST**
2-Chlorotoluene	ND	0.010	ug	SW846 VOST
4-Chlorotoluene	ND	0.010	ug	SW846 VOST
1,2-Dibromo-3-chloro-propane	ND	0.050	ug	SW846 VOST
1,2-Dibromoethane	ND	0.025	ug	SW846 VOST
Dibromomethane	ND	0.025	ug	SW846 VOST
1,2-Dichlorobenzene	ND	0.010	ug	SW846 VOST
1,3-Dichlorobenzene	ND	0.010	ug	SW846 VOST
1,4-Dichlorobenzene	ND	0.010	ug	SW846 VOST
Dichlorodifluoromethane	ND	0.025	ug	SW846 VOST
1,1-Dichloroethane	ND	0.010	ug	SW846 VOST
1,2-Dichloroethane	ND	0.010	ug	SW846 VOST
cis-1,2-Dichloroethene	ND	0.010	ug	SW846 VOST
trans-1,2-Dichloroethene	ND	0.010	ug	SW846 VOST
1,1-Dichloroethene	ND	0.010	ug	SW846 VOST
1,2-Dichloropropane	ND	0.010	ug	SW846 VOST
1,3-Dichloropropane	ND	0.010	ug	SW846 VOST
2,2-Dichloropropane	ND	0.010	ug	SW846 VOST
cis-1,3-Dichloropropene	ND	0.010	ug	SW846 VOST
trans-1,3-Dichloropropene	ND	0.010	ug	SW846 VOST
1,1-Dichloropropene	ND	0.010	ug	SW846 VOST
Ethylbenzene	ND	0.010	ug	SW846 VOST
Hexachlorobutadiene	ND	0.025	ug	SW846 VOST

(Continued on next page)

METHOD BLANK REPORT

GC/MS Volatiles

Client Lot #...: H2F290439 **Work Order #...:** MVEM81AA **Matrix.....:** AIR

PARAMETER	RESULT	REPORTING LIMIT	UNITS	METHOD
2-Hexanone	ND	0.10	ug	SW846 VOST
Isopropylbenzene	ND	0.010	ug	SW846 VOST
p-Isopropyltoluene	ND	0.010	ug	SW846 VOST
Methylene chloride	**0.0053 J**	**0.025**	**ug**	**SW846 VOST**
4-Methyl-2-pentanone	ND	0.10	ug	SW846 VOST
Naphthalene	ND	0.025	ug	SW846 VOST
n-Propylbenzene	ND	0.010	ug	SW846 VOST
Styrene	ND	0.010	ug	SW846 VOST
1,1,1,2-Tetrachloroethane	ND	0.010	ug	SW846 VOST
1,1,2,2-Tetrachloroethane	ND	0.025	ug	SW846 VOST
Tetrachloroethene	ND	0.010	ug	SW846 VOST
Toluene	**0.0013 J**	**0.010**	**ug**	**SW846 VOST**
1,2,3-Trichlorobenzene	**0.0013 J**	**0.025**	**ug**	**SW846 VOST**
1,2,4-Trichloro-benzene	ND	0.025	ug	SW846 VOST
1,1,1-Trichloroethane	ND	0.025	ug	SW846 VOST
1,1,2-Trichloroethane	ND	0.025	ug	SW846 VOST
Trichloroethene	ND	0.010	ug	SW846 VOST
Trichlorofluoromethane	ND	0.050	ug	SW846 VOST
1,2,3-Trichloropropane	ND	0.025	ug	SW846 VOST
1,2,4-Trimethylbenzene	ND	0.010	ug	SW846 VOST
1,3,5-Trimethylbenzene	ND	0.010	ug	SW846 VOST
Vinyl chloride	ND	0.010	ug	SW846 VOST
m-Xylene & p-Xylene	ND	0.020	ug	SW846 VOST
o-Xylene	ND	0.010	ug	SW846 VOST

SURROGATE	PERCENT RECOVERY	RECOVERY LIMITS
Dibromofluoromethane	93	(50 - 134)
1,2-Dichloroethane-d4	86	(50 - 127)
Toluene-d8	99	(57 - 134)
Bromofluorobenzene	81	(50 - 122)

NOTE(S):

Calculations are performed before rounding to avoid round-off errors in calculated results.

J Estimated result. Result is less than RL.

LABORATORY CONTROL SAMPLE EVALUATION REPORT

GC/MS Volatiles

Client Lot #...: H2F290439 Work Order #...: MVEM81AC-LCS Matrix.....: AIR
LCS Lot-Sample#: H2G020000-061 MVEM81AD-LCSD
Prep Date.....: 07/03/12 Analysis Date..: 07/03/12
Prep Batch #...: 2184061
Dilution Factor: 1

PARAMETER	PERCENT RECOVERY	RECOVERY LIMITS	RPD	RPD LIMITS	METHOD
Acetone	64	(20 - 191)			SW846 VOST
	85	(20 - 191)	28	(0-50)	SW846 VOST
Benzene	97	(68 - 128)			SW846 VOST
	99	(68 - 128)	1.7	(0-22)	SW846 VOST
Bromobenzene	88	(53 - 120)			SW846 VOST
	89	(53 - 120)	0.73	(0-38)	SW846 VOST
Bromochloromethane	85	(53 - 120)			SW846 VOST
	85	(53 - 120)	0.13	(0-36)	SW846 VOST
Bromodichloromethane	84	(52 - 122)			SW846 VOST
	85	(52 - 122)	1.7	(0-35)	SW846 VOST
Bromoform	71	(40 - 120)			SW846 VOST
	72	(40 - 120)	1.4	(0-50)	SW846 VOST
Bromomethane	96	(40 - 187)			SW846 VOST
	95	(40 - 187)	1.4	(0-35)	SW846 VOST
2-Butanone	52	(20 - 150)			SW846 VOST
	57	(20 - 150)	9.0	(0-50)	SW846 VOST
n-Butylbenzene	98	(57 - 140)			SW846 VOST
	100	(57 - 140)	1.7	(0-31)	SW846 VOST
sec-Butylbenzene	104	(70 - 128)			SW846 VOST
	106	(70 - 128)	2.1	(0-26)	SW846 VOST
tert-Butylbenzene	104	(67 - 122)			SW846 VOST
	104	(67 - 122)	0.72	(0-26)	SW846 VOST
Carbon disulfide	102	(40 - 157)			SW846 VOST
	103	(40 - 157)	1.2	(0-23)	SW846 VOST
Carbon tetrachloride	109	(67 - 135)			SW846 VOST
	110	(67 - 135)	0.96	(0-23)	SW846 VOST
Chlorobenzene	93	(65 - 120)			SW846 VOST
	94	(65 - 120)	1.6	(0-26)	SW846 VOST
Chlorodibromomethane	77	(50 - 120)			SW846 VOST
	81	(50 - 120)	4.9	(0-43)	SW846 VOST
Chloroethane	114	(43 - 163)			SW846 VOST
	112	(43 - 163)	2.5	(0-32)	SW846 VOST
Chloroform	96	(63 - 123)			SW846 VOST
	97	(63 - 123)	1.1	(0-27)	SW846 VOST
Chloromethane	84	(44 - 176)			SW846 VOST
	79	(44 - 176)	6.7	(0-50)	SW846 VOST
2-Chlorotoluene	91	(59 - 120)			SW846 VOST
	93	(59 - 120)	1.8	(0-29)	SW846 VOST
4-Chlorotoluene	93	(57 - 120)			SW846 VOST
	93	(57 - 120)	0.56	(0-30)	SW846 VOST

(Continued on next page)

LABORATORY CONTROL SAMPLE EVALUATION REPORT

GC/MS Volatiles

Client Lot #...: H2F290439 Work Order #...: MVEM81AC-LCS Matrix.....: AIR
LCS Lot-Sample#: H2G020000-061 MVEM81AD-LCSD

PARAMETER	PERCENT RECOVERY	RECOVERY LIMITS	RPD	RPD LIMITS	METHOD
1,2-Dibromo-3-chloro-propane	50	(10 - 120)			SW846 VOST
	45	(10 - 120)	11	(0-50)	SW846 VOST
1,2-Dibromoethane	73	(20 - 120)			SW846 VOST
	75	(20 - 120)	2.8	(0-43)	SW846 VOST
Dibromomethane	75	(50 - 120)			SW846 VOST
	76	(50 - 120)	1.9	(0-42)	SW846 VOST
1,2-Dichlorobenzene	81	(20 - 124)			SW846 VOST
	85	(20 - 124)	4.6	(0-49)	SW846 VOST
1,3-Dichlorobenzene	90	(30 - 132)			SW846 VOST
	92	(30 - 132)	2.2	(0-39)	SW846 VOST
1,4-Dichlorobenzene	86	(30 - 129)			SW846 VOST
	92	(30 - 129)	6.8	(0-42)	SW846 VOST
Dichlorodifluoromethane	87	(25 - 146)			SW846 VOST
	85	(25 - 146)	2.8	(0-42)	SW846 VOST
1,1-Dichloroethane	100	(66 - 128)			SW846 VOST
	98	(66 - 128)	2.5	(0-24)	SW846 VOST
1,2-Dichloroethane	81	(36 - 124)			SW846 VOST
	84	(36 - 124)	3.6	(0-37)	SW846 VOST
cis-1,2-Dichloroethene	93	(67 - 123)			SW846 VOST
	93	(67 - 123)	0.87	(0-27)	SW846 VOST
trans-1,2-Dichloroethene	104	(78 - 128)			SW846 VOST
	109	(78 - 128)	4.3	(0-23)	SW846 VOST
1,1-Dichloroethene	112	(77 - 131)			SW846 VOST
	110	(77 - 131)	1.3	(0-22)	SW846 VOST
1,2-Dichloropropane	92	(55 - 124)			SW846 VOST
	93	(55 - 124)	1.0	(0-31)	SW846 VOST
1,3-Dichloropropane	76	(50 - 120)			SW846 VOST
	77	(50 - 120)	0.66	(0-38)	SW846 VOST
2,2-Dichloropropane	108	(59 - 141)			SW846 VOST
	108	(59 - 141)	0.18	(0-25)	SW846 VOST
cis-1,3-Dichloropropene	83	(45 - 125)			SW846 VOST
	86	(45 - 125)	3.4	(0-36)	SW846 VOST
trans-1,3-Dichloropropene	75	(40 - 120)			SW846 VOST
	76	(40 - 120)	2.0	(0-40)	SW846 VOST
1,1-Dichloropropene	112	(70 - 136)			SW846 VOST
	109	(70 - 136)	2.8	(0-21)	SW846 VOST
Ethylbenzene	99	(72 - 127)			SW846 VOST
	99	(72 - 127)	0.30	(0-23)	SW846 VOST
Hexachlorobutadiene	118	(52 - 167)			SW846 VOST
	119	(52 - 167)	0.82	(0-50)	SW846 VOST

(Continued on next page)

LABORATORY CONTROL SAMPLE EVALUATION REPORT

GC/MS Volatiles

Client Lot #...: H2F290439 Work Order #...: MVEM81AC-LCS Matrix.....: AIR
LCS Lot-Sample#: H2G020000-061 MVEM81AD-LCSD

PARAMETER	PERCENT RECOVERY	RECOVERY LIMITS	RPD	RPD LIMITS	METHOD
2-Hexanone	52	(30 - 151)			SW846 VOST
	56	(30 - 151)	7.2	(0-50)	SW846 VOST
Isopropylbenzene	106	(40 - 152)			SW846 VOST
	104	(40 - 152)	1.2	(0-28)	SW846 VOST
p-Isopropyltoluene	102	(66 - 126)			SW846 VOST
	103	(66 - 126)	1.2	(0-28)	SW846 VOST
Methylene chloride	96	(60 - 134)			SW846 VOST
	92	(60 - 134)	4.4	(0-41)	SW846 VOST
4-Methyl-2-pentanone	56	(30 - 175)			SW846 VOST
	60	(30 - 175)	7.6	(0-50)	SW846 VOST
Naphthalene	49	(20 - 120)			SW846 VOST
	51	(20 - 120)	5.1	(0-50)	SW846 VOST
n-Propylbenzene	101	(69 - 123)			SW846 VOST
	102	(69 - 123)	0.97	(0-25)	SW846 VOST
Styrene	87	(57 - 120)			SW846 VOST
	88	(57 - 120)	0.51	(0-39)	SW846 VOST
1,1,1,2-Tetrachloroethane	83	(53 - 120)			SW846 VOST
	87	(53 - 120)	4.7	(0-35)	SW846 VOST
1,1,2,2-Tetrachloroethane	63	(30 - 120)			SW846 VOST
	60	(30 - 120)	5.3	(0-50)	SW846 VOST
Tetrachloroethene	107	(80 - 133)			SW846 VOST
	109	(80 - 133)	1.9	(0-24)	SW846 VOST
Toluene	98	(70 - 120)			SW846 VOST
	97	(70 - 120)	0.91	(0-22)	SW846 VOST
1,2,3-Trichlorobenzene	61	(20 - 123)			SW846 VOST
	66	(20 - 123)	7.8	(0-50)	SW846 VOST
1,2,4-Trichloro-benzene	70	(20 - 140)			SW846 VOST
	77	(20 - 140)	10	(0-50)	SW846 VOST
1,1,1-Trichloroethane	103	(65 - 131)			SW846 VOST
	103	(65 - 131)	0.070	(0-23)	SW846 VOST
1,1,2-Trichloroethane	76	(41 - 120)			SW846 VOST
	77	(41 - 120)	1.5	(0-38)	SW846 VOST
Trichloroethene	107	(80 - 141)			SW846 VOST
	124	(80 - 141)	14	(0-32)	SW846 VOST
Trichlorofluoromethane	110	(58 - 147)			SW846 VOST
	108	(58 - 147)	2.1	(0-26)	SW846 VOST
1,2,3-Trichloropropane	60	(30 - 120)			SW846 VOST
	70	(30 - 120)	14	(0-50)	SW846 VOST
1,2,4-Trimethylbenzene	91	(56 - 120)			SW846 VOST
	92	(56 - 120)	1.6	(0-35)	SW846 VOST

(Continued on next page)

LABORATORY CONTROL SAMPLE EVALUATION REPORT

GC/MS Volatiles

Client Lot #...: H2F290439 **Work Order #...:** MVEM81AC-LCS **Matrix.....:** AIR
LCS Lot-Sample#: H2G020000-061 MVEM81AD-LCSD

PARAMETER	PERCENT RECOVERY	RECOVERY LIMITS	RPD	RPD LIMITS	METHOD
1,3,5-Trimethylbenzene	**97**	**(62 - 121)**			**SW846 VOST**
	100	**(62 - 121)**	**3.2**	**(0-30)**	**SW846 VOST**
Vinyl chloride	**125**	**(64 - 142)**			**SW846 VOST**
	120	**(64 - 142)**	**3.8**	**(0-33)**	**SW846 VOST**
m-Xylene & p-Xylene	**103**	**(74 - 126)**			**SW846 VOST**
	100	**(74 - 126)**	**2.3**	**(0-38)**	**SW846 VOST**
o-Xylene	**96**	**(64 - 120)**			**SW846 VOST**
	96	**(64 - 120)**	**0.43**	**(0-37)**	**SW846 VOST**

SURROGATE	PERCENT RECOVERY	RECOVERY LIMITS
Dibromofluoromethane	84	(50 - 134)
	90	(50 - 134)
1,2-Dichloroethane-d4	75	(50 - 127)
	78	(50 - 127)
Toluene-d8	93	(57 - 134)
	98	(57 - 134)
Bromofluorobenzene	76	(50 - 122)
	82	(50 - 122)

NOTE(S):

Calculations are performed before rounding to avoid round-off errors in calculated results.

Bold print denotes control parameters

LABORATORY CONTROL SAMPLE DATA REPORT

GC/MS Volatiles

Client Lot #...: H2F290439 Work Order #...: MVEM81AC-LCS Matrix.....: AIR
LCS Lot-Sample#: H2G020000-061 MVEM81AD-LCSD
Prep Date.....: 07/03/12 Analysis Date..: 07/03/12
Prep Batch #...: 2184061
Dilution Factor: 1

PARAMETER	SPIKE AMOUNT	MEASURED AMOUNT	UNITS	PERCENT RECOVERY	RPD	METHOD
Acetone	1.00	0.636	ug	64		SW846 VOST
	1.00	0.846	ug	85	28	SW846 VOST
Benzene	0.250	0.242	ug	97		SW846 VOST
	0.250	0.246	ug	99	1.7	SW846 VOST
Bromobenzene	0.250	0.221	ug	88		SW846 VOST
	0.250	0.222	ug	89	0.73	SW846 VOST
Bromochloromethane	0.250	0.212	ug	85		SW846 VOST
	0.250	0.212	ug	85	0.13	SW846 VOST
Bromodichloromethane	0.250	0.209	ug	84		SW846 VOST
	0.250	0.213	ug	85	1.7	SW846 VOST
Bromoform	0.250	0.177	ug	71		SW846 VOST
	0.250	0.180	ug	72	1.4	SW846 VOST
Bromomethane	0.250	0.240	ug	96		SW846 VOST
	0.250	0.237	ug	95	1.4	SW846 VOST
2-Butanone	1.00	0.519	ug	52		SW846 VOST
	1.00	0.568	ug	57	9.0	SW846 VOST
n-Butylbenzene	0.250	0.246	ug	98		SW846 VOST
	0.250	0.250	ug	100	1.7	SW846 VOST
sec-Butylbenzene	0.250	0.259	ug	104		SW846 VOST
	0.250	0.265	ug	106	2.1	SW846 VOST
tert-Butylbenzene	0.250	0.259	ug	104		SW846 VOST
	0.250	0.261	ug	104	0.72	SW846 VOST
Carbon disulfide	0.250	0.255	ug	102		SW846 VOST
	0.250	0.258	ug	103	1.2	SW846 VOST
Carbon tetrachloride	0.250	0.272	ug	109		SW846 VOST
	0.250	0.275	ug	110	0.96	SW846 VOST
Chlorobenzene	0.250	0.232	ug	93		SW846 VOST
	0.250	0.236	ug	94	1.6	SW846 VOST
Chlorodibromomethane	0.250	0.192	ug	77		SW846 VOST
	0.250	0.202	ug	81	4.9	SW846 VOST
Chloroethane	0.250	0.286	ug	114		SW846 VOST
	0.250	0.279	ug	112	2.5	SW846 VOST
Chloroform	0.250	0.240	ug	96		SW846 VOST
	0.250	0.242	ug	97	1.1	SW846 VOST
Chloromethane	0.250	0.211	ug	84		SW846 VOST
	0.250	0.197	ug	79	6.7	SW846 VOST
2-Chlorotoluene	0.250	0.229	ug	91		SW846 VOST
	0.250	0.233	ug	93	1.8	SW846 VOST
4-Chlorotoluene	0.250	0.232	ug	93		SW846 VOST
	0.250	0.233	ug	93	0.56	SW846 VOST

(Continued on next page)

LABORATORY CONTROL SAMPLE DATA REPORT

GC/MS Volatiles

Client Lot #...: H2F290439 Work Order #...: MVEM81AC-LCS Matrix.....: AIR
LCS Lot-Sample#: H2G020000-061 MVEM81AD-LCSD

PARAMETER	SPIKE AMOUNT	MEASURED AMOUNT	UNITS	PERCENT RECOVERY	RPD	METHOD
1,2-Dibromo-3-chloro-propane	0.250	0.125	ug	50		SW846 VOST
	0.250	0.112	ug	45	11	SW846 VOST
1,2-Dibromoethane	0.250	0.182	ug	73		SW846 VOST
	0.250	0.188	ug	75	2.8	SW846 VOST
Dibromomethane	0.250	0.187	ug	75		SW846 VOST
	0.250	0.190	ug	76	1.9	SW846 VOST
1,2-Dichlorobenzene	0.250	0.202	ug	81		SW846 VOST
	0.250	0.212	ug	85	4.6	SW846 VOST
1,3-Dichlorobenzene	0.250	0.224	ug	90		SW846 VOST
	0.250	0.230	ug	92	2.2	SW846 VOST
1,4-Dichlorobenzene	0.250	0.215	ug	86		SW846 VOST
	0.250	0.230	ug	92	6.8	SW846 VOST
Dichlorodifluoromethane	0.250	0.218	ug	87		SW846 VOST
	0.250	0.212	ug	85	2.8	SW846 VOST
1,1-Dichloroethane	0.250	0.250	ug	100		SW846 VOST
	0.250	0.244	ug	98	2.5	SW846 VOST
1,2-Dichloroethane	0.250	0.203	ug	81		SW846 VOST
	0.250	0.211	ug	84	3.6	SW846 VOST
cis-1,2-Dichloroethene	0.250	0.232	ug	93		SW846 VOST
	0.250	0.234	ug	93	0.87	SW846 VOST
trans-1,2-Dichloroethene	0.250	0.260	ug	104		SW846 VOST
	0.250	0.271	ug	109	4.3	SW846 VOST
1,1-Dichloroethene	0.250	0.279	ug	112		SW846 VOST
	0.250	0.275	ug	110	1.3	SW846 VOST
1,2-Dichloropropane	0.250	0.231	ug	92		SW846 VOST
	0.250	0.233	ug	93	1.0	SW846 VOST
1,3-Dichloropropane	0.250	0.191	ug	76		SW846 VOST
	0.250	0.192	ug	77	0.66	SW846 VOST
2,2-Dichloropropane	0.250	0.269	ug	108		SW846 VOST
	0.250	0.269	ug	108	0.18	SW846 VOST
cis-1,3-Dichloropropene	0.250	0.208	ug	83		SW846 VOST
	0.250	0.215	ug	86	3.4	SW846 VOST
trans-1,3-Dichloropropene	0.250	0.186	ug	75		SW846 VOST
	0.250	0.190	ug	76	2.0	SW846 VOST
1,1-Dichloropropene	0.250	0.281	ug	112		SW846 VOST
	0.250	0.273	ug	109	2.8	SW846 VOST
Ethylbenzene	0.250	0.249	ug	99		SW846 VOST
	0.250	0.248	ug	99	0.30	SW846 VOST
Hexachlorobutadiene	0.250	0.294	ug	118		SW846 VOST
	0.250	0.296	ug	119	0.82	SW846 VOST

(Continued on next page)

LABORATORY CONTROL SAMPLE DATA REPORT

GC/MS Volatiles

Client Lot #...: H2F290439 Work Order #...: MVEM81AC-LCS Matrix.....: AIR
LCS Lot-Sample#: H2G020000-061 MVEM81AD-LCSD

PARAMETER	SPIKE AMOUNT	MEASURED AMOUNT	UNITS	PERCENT RECOVERY	RPD	METHOD
2-Hexanone	1.00	0.518	ug	52		SW846 VOST
	1.00	0.556	ug	56	7.2	SW846 VOST
Isopropylbenzene	0.250	0.264	ug	106		SW846 VOST
	0.250	0.261	ug	104	1.2	SW846 VOST
p-Isopropyltoluene	0.250	0.255	ug	102		SW846 VOST
	0.250	0.258	ug	103	1.2	SW846 VOST
Methylene chloride	0.250	0.241	ug	96		SW846 VOST
	0.250	0.231	ug	92	4.4	SW846 VOST
4-Methyl-2-pentanone	1.00	0.555	ug	56		SW846 VOST
	1.00	0.599	ug	60	7.6	SW846 VOST
Naphthalene	0.250	0.122	ug	49		SW846 VOST
	0.250	0.129	ug	51	5.1	SW846 VOST
n-Propylbenzene	0.250	0.253	ug	101		SW846 VOST
	0.250	0.255	ug	102	0.97	SW846 VOST
Styrene	0.250	0.218	ug	87		SW846 VOST
	0.250	0.219	ug	88	0.51	SW846 VOST
1,1,1,2-Tetrachloroethane	0.250	0.209	ug	83		SW846 VOST
	0.250	0.219	ug	87	4.7	SW846 VOST
1,1,2,2-Tetrachloroethane	0.250	0.157	ug	63		SW846 VOST
	0.250	0.149	ug	60	5.3	SW846 VOST
Tetrachloroethene	0.250	0.268	ug	107		SW846 VOST
	0.250	0.273	ug	109	1.9	SW846 VOST
Toluene	0.250	0.246	ug	98		SW846 VOST
	0.250	0.244	ug	97	0.91	SW846 VOST
1,2,3-Trichlorobenzene	0.250	0.153	ug	61		SW846 VOST
	0.250	0.165	ug	66	7.8	SW846 VOST
1,2,4-Trichloro-benzene	0.250	0.174	ug	70		SW846 VOST
	0.250	0.192	ug	77	10	SW846 VOST
1,1,1-Trichloroethane	0.250	0.257	ug	103		SW846 VOST
	0.250	0.257	ug	103	0.070	SW846 VOST
1,1,2-Trichloroethane	0.250	0.191	ug	76		SW846 VOST
	0.250	0.193	ug	77	1.5	SW846 VOST
Trichloroethene	0.250	0.269	ug	107		SW846 VOST
	0.250	0.310	ug	124	14	SW846 VOST
Trichlorofluoromethane	0.250	0.276	ug	110		SW846 VOST
	0.250	0.271	ug	108	2.1	SW846 VOST
1,2,3-Trichloropropane	0.250	0.151	ug	60		SW846 VOST
	0.250	0.174	ug	70	14	SW846 VOST
1,2,4-Trimethylbenzene	0.250	0.227	ug	91		SW846 VOST
	0.250	0.231	ug	92	1.6	SW846 VOST

(Continued on next page)

LABORATORY CONTROL SAMPLE DATA REPORT

GC/MS Volatiles

Client Lot #...: H2F290439 **Work Order #...:** MVEM81AC-LCS **Matrix.....:** AIR
LCS Lot-Sample#: H2G020000-061 MVEM81AD-LCSD

PARAMETER	SPIKE AMOUNT	MEASURED AMOUNT	UNITS	PERCENT RECOVERY	RPD	METHOD
1,3,5-Trimethylbenzene	**0.250**	**0.242**	**ug**	**97**		**SW846 VOST**
	0.250	**0.250**	**ug**	**100**	**3.2**	**SW846 VOST**
Vinyl chloride	**0.250**	**0.313**	**ug**	**125**		**SW846 VOST**
	0.250	**0.301**	**ug**	**120**	**3.8**	**SW846 VOST**
m-Xylene & p-Xylene	**0.500**	**0.513**	**ug**	**103**		**SW846 VOST**
	0.500	**0.501**	**ug**	**100**	**2.3**	**SW846 VOST**
o-Xylene	**0.250**	**0.240**	**ug**	**96**		**SW846 VOST**
	0.250	**0.241**	**ug**	**96**	**0.43**	**SW846 VOST**

SURROGATE	PERCENT RECOVERY	RECOVERY LIMITS
Dibromofluoromethane	84	(50 - 134)
	90	(50 - 134)
1,2-Dichloroethane-d4	75	(50 - 127)
	78	(50 - 127)
Toluene-d8	93	(57 - 134)
	98	(57 - 134)
Bromofluorobenzene	76	(50 - 122)
	82	(50 - 122)

NOTE(S):

Calculations are performed before rounding to avoid round-off errors in calculated results.

Bold print denotes control parameters

METHOD BLANK REPORT

GC/MS Volatiles

Client Lot #...: H2F290439 **Work Order #...:** MVFQ31AA **Matrix.....:** AIR
MB Lot-Sample #: H2G030000-071

Prep Date.....: 07/05/12
Analysis Date..: 07/05/12 **Prep Batch #...:** 2185071
Dilution Factor: 1

PARAMETER	RESULT	REPORTING LIMIT	UNITS	METHOD
Acetone	ND	0.10	ug	SW846 VOST
Benzene	ND	0.010	ug	SW846 VOST
Bromobenzene	ND	0.010	ug	SW846 VOST
Bromochloromethane	ND	0.025	ug	SW846 VOST
Bromodichloromethane	ND	0.010	ug	SW846 VOST
Bromoform	ND	0.025	ug	SW846 VOST
Bromomethane	ND	0.050	ug	SW846 VOST
2-Butanone	ND	0.10	ug	SW846 VOST
n-Butylbenzene	ND	0.010	ug	SW846 VOST
sec-Butylbenzene	ND	0.010	ug	SW846 VOST
tert-Butylbenzene	ND	0.010	ug	SW846 VOST
Carbon disulfide	ND	0.010	ug	SW846 VOST
Carbon tetrachloride	ND	0.010	ug	SW846 VOST
Chlorobenzene	ND	0.010	ug	SW846 VOST
Chlorodibromomethane	ND	0.025	ug	SW846 VOST
Chloroethane	ND	0.050	ug	SW846 VOST
Chloroform	ND	0.010	ug	SW846 VOST
Chloromethane	ND	0.050	ug	SW846 VOST
2-Chlorotoluene	ND	0.010	ug	SW846 VOST
4-Chlorotoluene	ND	0.010	ug	SW846 VOST
1,2-Dibromo-3-chloro-propane	ND	0.050	ug	SW846 VOST
1,2-Dibromoethane	ND	0.025	ug	SW846 VOST
Dibromomethane	ND	0.025	ug	SW846 VOST
1,2-Dichlorobenzene	ND	0.010	ug	SW846 VOST
1,3-Dichlorobenzene	ND	0.010	ug	SW846 VOST
1,4-Dichlorobenzene	ND	0.010	ug	SW846 VOST
Dichlorodifluoromethane	ND	0.025	ug	SW846 VOST
1,1-Dichloroethane	ND	0.010	ug	SW846 VOST
1,2-Dichloroethane	ND	0.010	ug	SW846 VOST
cis-1,2-Dichloroethene	ND	0.010	ug	SW846 VOST
trans-1,2-Dichloroethene	ND	0.010	ug	SW846 VOST
1,1-Dichloroethene	ND	0.010	ug	SW846 VOST
1,2-Dichloropropane	ND	0.010	ug	SW846 VOST
1,3-Dichloropropane	ND	0.010	ug	SW846 VOST
2,2-Dichloropropane	ND	0.010	ug	SW846 VOST
cis-1,3-Dichloropropene	ND	0.010	ug	SW846 VOST
trans-1,3-Dichloropropene	ND	0.010	ug	SW846 VOST
1,1-Dichloropropene	ND	0.010	ug	SW846 VOST
Ethylbenzene	ND	0.010	ug	SW846 VOST
Hexachlorobutadiene	ND	0.025	ug	SW846 VOST

(Continued on next page)

METHOD BLANK REPORT

GC/MS Volatiles

Client Lot #...: H2F290439 **Work Order #...:** MVFQ31AA **Matrix.....:** AIR

PARAMETER	RESULT	REPORTING LIMIT	UNITS	METHOD
2-Hexanone	ND	0.10	ug	SW846 VOST
Isopropylbenzene	ND	0.010	ug	SW846 VOST
p-Isopropyltoluene	ND	0.010	ug	SW846 VOST
Methylene chloride	**0.0053 J**	**0.025**	**ug**	**SW846 VOST**
4-Methyl-2-pentanone	ND	0.10	ug	SW846 VOST
Naphthalene	ND	0.025	ug	SW846 VOST
n-Propylbenzene	ND	0.010	ug	SW846 VOST
Styrene	ND	0.010	ug	SW846 VOST
1,1,1,2-Tetrachloroethane	ND	0.010	ug	SW846 VOST
1,1,2,2-Tetrachloroethane	ND	0.025	ug	SW846 VOST
Tetrachloroethene	ND	0.010	ug	SW846 VOST
Toluene	ND	0.010	ug	SW846 VOST
1,2,3-Trichlorobenzene	**0.0010 J**	**0.025**	**ug**	**SW846 VOST**
1,2,4-Trichloro-benzene	ND	0.025	ug	SW846 VOST
1,1,1-Trichloroethane	ND	0.025	ug	SW846 VOST
1,1,2-Trichloroethane	ND	0.025	ug	SW846 VOST
Trichloroethene	ND	0.010	ug	SW846 VOST
Trichlorofluoromethane	ND	0.050	ug	SW846 VOST
1,2,3-Trichloropropane	ND	0.025	ug	SW846 VOST
1,2,4-Trimethylbenzene	ND	0.010	ug	SW846 VOST
1,3,5-Trimethylbenzene	ND	0.010	ug	SW846 VOST
Vinyl chloride	ND	0.010	ug	SW846 VOST
m-Xylene & p-Xylene	ND	0.020	ug	SW846 VOST
o-Xylene	ND	0.010	ug	SW846 VOST

SURROGATE	PERCENT RECOVERY	RECOVERY LIMITS
Dibromofluoromethane	89	(50 - 134)
1,2-Dichloroethane-d4	83	(50 - 127)
Toluene-d8	95	(57 - 134)
Bromofluorobenzene	82	(50 - 122)

NOTE(S):

Calculations are performed before rounding to avoid round-off errors in calculated results.

J Estimated result. Result is less than RL.

LABORATORY CONTROL SAMPLE EVALUATION REPORT

GC/MS Volatiles

Client Lot #...: H2F290439 Work Order #...: MVFQ31AC-LCS Matrix.....: AIR
LCS Lot-Sample#: H2G030000-071 MVFQ31AD-LCSD
Prep Date.....: 07/05/12 Analysis Date..: 07/05/12
Prep Batch #...: 2185071
Dilution Factor: 1

PARAMETER	PERCENT RECOVERY	RECOVERY LIMITS	RPD	RPD LIMITS	METHOD
Acetone	138	(20 - 191)			SW846 VOST
	177	(20 - 191)	25	(0-50)	SW846 VOST
Benzene	92	(68 - 128)			SW846 VOST
	102	(68 - 128)	11	(0-22)	SW846 VOST
Bromobenzene	83	(53 - 120)			SW846 VOST
	98	(53 - 120)	16	(0-38)	SW846 VOST
Bromochloromethane	80	(53 - 120)			SW846 VOST
	96	(53 - 120)	18	(0-36)	SW846 VOST
Bromodichloromethane	80	(52 - 122)			SW846 VOST
	94	(52 - 122)	15	(0-35)	SW846 VOST
Bromoform	69	(40 - 120)			SW846 VOST
	82	(40 - 120)	18	(0-50)	SW846 VOST
Bromomethane	91	(40 - 187)			SW846 VOST
	90	(40 - 187)	1.2	(0-35)	SW846 VOST
2-Butanone	72	(20 - 150)			SW846 VOST
	85	(20 - 150)	16	(0-50)	SW846 VOST
n-Butylbenzene	98	(57 - 140)			SW846 VOST
	102	(57 - 140)	4.9	(0-31)	SW846 VOST
sec-Butylbenzene	102	(70 - 128)			SW846 VOST
	108	(70 - 128)	5.5	(0-26)	SW846 VOST
tert-Butylbenzene	101	(67 - 122)			SW846 VOST
	107	(67 - 122)	6.4	(0-26)	SW846 VOST
Carbon disulfide	96	(40 - 157)			SW846 VOST
	107	(40 - 157)	11	(0-23)	SW846 VOST
Carbon tetrachloride	105	(67 - 135)			SW846 VOST
	112	(67 - 135)	6.8	(0-23)	SW846 VOST
Chlorobenzene	90	(65 - 120)			SW846 VOST
	102	(65 - 120)	13	(0-26)	SW846 VOST
Chlorodibromomethane	74	(50 - 120)			SW846 VOST
	84	(50 - 120)	13	(0-43)	SW846 VOST
Chloroethane	101	(43 - 163)			SW846 VOST
	112	(43 - 163)	10	(0-32)	SW846 VOST
Chloroform	91	(63 - 123)			SW846 VOST
	103	(63 - 123)	12	(0-27)	SW846 VOST
Chloromethane	73	(44 - 176)			SW846 VOST
	76	(44 - 176)	4.1	(0-50)	SW846 VOST
2-Chlorotoluene	92	(59 - 120)			SW846 VOST
	97	(59 - 120)	5.3	(0-29)	SW846 VOST
4-Chlorotoluene	89	(57 - 120)			SW846 VOST
	95	(57 - 120)	6.4	(0-30)	SW846 VOST

(Continued on next page)

LABORATORY CONTROL SAMPLE EVALUATION REPORT

GC/MS Volatiles

Client Lot #...: H2F290439 Work Order #...: MVFQ31AC-LCS Matrix.....: AIR
LCS Lot-Sample#: H2G030000-071 MVFQ31AD-LCSD

PARAMETER	PERCENT RECOVERY	RECOVERY LIMITS	RPD	RPD LIMITS	METHOD
1,2-Dibromo-3-chloro-propane	49	(10 - 120)			SW846 VOST
	66	(10 - 120)	29	(0-50)	SW846 VOST
1,2-Dibromoethane	68	(20 - 120)			SW846 VOST
	81	(20 - 120)	17	(0-43)	SW846 VOST
Dibromomethane	71	(50 - 120)			SW846 VOST
	83	(50 - 120)	16	(0-42)	SW846 VOST
1,2-Dichlorobenzene	78	(20 - 124)			SW846 VOST
	87	(20 - 124)	10	(0-49)	SW846 VOST
1,3-Dichlorobenzene	87	(30 - 132)			SW846 VOST
	97	(30 - 132)	10	(0-39)	SW846 VOST
1,4-Dichlorobenzene	82	(30 - 129)			SW846 VOST
	95	(30 - 129)	14	(0-42)	SW846 VOST
Dichlorodifluoromethane	74	(25 - 146)			SW846 VOST
	77	(25 - 146)	3.9	(0-42)	SW846 VOST
1,1-Dichloroethane	94	(66 - 128)			SW846 VOST
	104	(66 - 128)	10	(0-24)	SW846 VOST
1,2-Dichloroethane	79	(36 - 124)			SW846 VOST
	92	(36 - 124)	16	(0-37)	SW846 VOST
cis-1,2-Dichloroethene	92	(67 - 123)			SW846 VOST
	107	(67 - 123)	15	(0-27)	SW846 VOST
trans-1,2-Dichloroethene	99	(78 - 128)			SW846 VOST
	114	(78 - 128)	13	(0-23)	SW846 VOST
1,1-Dichloroethene	104	(77 - 131)			SW846 VOST
	116	(77 - 131)	11	(0-22)	SW846 VOST
1,2-Dichloropropane	88	(55 - 124)			SW846 VOST
	99	(55 - 124)	12	(0-31)	SW846 VOST
1,3-Dichloropropane	72	(50 - 120)			SW846 VOST
	82	(50 - 120)	13	(0-38)	SW846 VOST
2,2-Dichloropropane	102	(59 - 141)			SW846 VOST
	113	(59 - 141)	10	(0-25)	SW846 VOST
cis-1,3-Dichloropropene	82	(45 - 125)			SW846 VOST
	94	(45 - 125)	13	(0-36)	SW846 VOST
trans-1,3-Dichloropropene	73	(40 - 120)			SW846 VOST
	82	(40 - 120)	12	(0-40)	SW846 VOST
1,1-Dichloropropene	106	(70 - 136)			SW846 VOST
	114	(70 - 136)	7.4	(0-21)	SW846 VOST
Ethylbenzene	96	(72 - 127)			SW846 VOST
	105	(72 - 127)	9.2	(0-23)	SW846 VOST
Hexachlorobutadiene	117	(52 - 167)			SW846 VOST
	122	(52 - 167)	4.1	(0-50)	SW846 VOST

(Continued on next page)

LABORATORY CONTROL SAMPLE EVALUATION REPORT

GC/MS Volatiles

Client Lot #...: H2F290439 Work Order #...: MVFQ31AC-LCS Matrix.....: AIR
LCS Lot-Sample#: H2G030000-071 MVFQ31AD-LCSD

PARAMETER	PERCENT RECOVERY	RECOVERY LIMITS	RPD	RPD LIMITS	METHOD
2-Hexanone	61	(30 - 151)			SW846 VOST
	71	(30 - 151)	14	(0-50)	SW846 VOST
Isopropylbenzene	102	(40 - 152)			SW846 VOST
	109	(40 - 152)	6.6	(0-28)	SW846 VOST
p-Isopropyltoluene	100	(66 - 126)			SW846 VOST
	106	(66 - 126)	6.0	(0-28)	SW846 VOST
Methylene chloride	91	(60 - 134)			SW846 VOST
	99	(60 - 134)	8.2	(0-41)	SW846 VOST
4-Methyl-2-pentanone	54	(30 - 175)			SW846 VOST
	67	(30 - 175)	21	(0-50)	SW846 VOST
Naphthalene	49	(20 - 120)			SW846 VOST
	60	(20 - 120)	19	(0-50)	SW846 VOST
n-Propylbenzene	99	(69 - 123)			SW846 VOST
	104	(69 - 123)	4.4	(0-25)	SW846 VOST
Styrene	84	(57 - 120)			SW846 VOST
	94	(57 - 120)	11	(0-39)	SW846 VOST
1,1,1,2-Tetrachloroethane	82	(53 - 120)			SW846 VOST
	94	(53 - 120)	13	(0-35)	SW846 VOST
1,1,2,2-Tetrachloroethane	64	(30 - 120)			SW846 VOST
	76	(30 - 120)	16	(0-50)	SW846 VOST
Tetrachloroethene	101	(80 - 133)			SW846 VOST
	110	(80 - 133)	8.1	(0-24)	SW846 VOST
Toluene	94	(70 - 120)			SW846 VOST
	103	(70 - 120)	9.1	(0-22)	SW846 VOST
1,2,3-Trichlorobenzene	62	(20 - 123)			SW846 VOST
	73	(20 - 123)	16	(0-50)	SW846 VOST
1,2,4-Trichloro-benzene	70	(20 - 140)			SW846 VOST
	81	(20 - 140)	14	(0-50)	SW846 VOST
1,1,1-Trichloroethane	98	(65 - 131)			SW846 VOST
	108	(65 - 131)	10	(0-23)	SW846 VOST
1,1,2-Trichloroethane	69	(41 - 120)			SW846 VOST
	82	(41 - 120)	17	(0-38)	SW846 VOST
Trichloroethene	103	(80 - 141)			SW846 VOST
	115	(80 - 141)	11	(0-32)	SW846 VOST
Trichlorofluoromethane	101	(58 - 147)			SW846 VOST
	112	(58 - 147)	10	(0-26)	SW846 VOST
1,2,3-Trichloropropane	59	(30 - 120)			SW846 VOST
	67	(30 - 120)	13	(0-50)	SW846 VOST
1,2,4-Trimethylbenzene	89	(56 - 120)			SW846 VOST
	95	(56 - 120)	6.9	(0-35)	SW846 VOST

(Continued on next page)

LABORATORY CONTROL SAMPLE EVALUATION REPORT

GC/MS Volatiles

Client Lot #...: H2F290439 Work Order #...: MVFQ31AC-LCS Matrix.....: AIR
LCS Lot-Sample#: H2G030000-071 MVFQ31AD-LCSD

PARAMETER	PERCENT RECOVERY	RECOVERY LIMITS	RPD	RPD LIMITS	METHOD
1,3,5-Trimethylbenzene	**95**	**(62 - 121)**			**SW846 VOST**
	101	**(62 - 121)**	**6.3**	**(0-30)**	**SW846 VOST**
Vinyl chloride	**106**	**(64 - 142)**			**SW846 VOST**
	115	**(64 - 142)**	**7.5**	**(0-33)**	**SW846 VOST**
m-Xylene & p-Xylene	**98**	**(74 - 126)**			**SW846 VOST**
	107	**(74 - 126)**	**9.1**	**(0-38)**	**SW846 VOST**
o-Xylene	**91**	**(64 - 120)**			**SW846 VOST**
	101	**(64 - 120)**	**11**	**(0-37)**	**SW846 VOST**

SURROGATE	PERCENT RECOVERY	RECOVERY LIMITS
Dibromofluoromethane	87	(50 - 134)
	97	(50 - 134)
1,2-Dichloroethane-d4	77	(50 - 127)
	87	(50 - 127)
Toluene-d8	96	(57 - 134)
	100	(57 - 134)
Bromofluorobenzene	79	(50 - 122)
	86	(50 - 122)

NOTE(S):

Calculations are performed before rounding to avoid round-off errors in calculated results.

Bold print denotes control parameters

LABORATORY CONTROL SAMPLE DATA REPORT

GC/MS Volatiles

Client Lot #...: H2F290439 Work Order #...: MVFQ31AC-LCS Matrix.....: AIR
LCS Lot-Sample#: H2G030000-071 MVFQ31AD-LCSD
Prep Date.....: 07/05/12 Analysis Date..: 07/05/12
Prep Batch #...: 2185071
Dilution Factor: 1

PARAMETER	SPIKE AMOUNT	MEASURED AMOUNT	UNITS	PERCENT RECOVERY	RPD	METHOD
Acetone	1.00	1.38	ug	138		SW846 VOST
	1.00	1.77	ug	177	25	SW846 VOST
Benzene	0.250	0.230	ug	92		SW846 VOST
	0.250	0.256	ug	102	11	SW846 VOST
Bromobenzene	0.250	0.208	ug	83		SW846 VOST
	0.250	0.245	ug	98	16	SW846 VOST
Bromochloromethane	0.250	0.199	ug	80		SW846 VOST
	0.250	0.239	ug	96	18	SW846 VOST
Bromodichloromethane	0.250	0.201	ug	80		SW846 VOST
	0.250	0.234	ug	94	15	SW846 VOST
Bromoform	0.250	0.172	ug	69		SW846 VOST
	0.250	0.205	ug	82	18	SW846 VOST
Bromomethane	0.250	0.229	ug	91		SW846 VOST
	0.250	0.226	ug	90	1.2	SW846 VOST
2-Butanone	1.00	0.723	ug	72		SW846 VOST
	1.00	0.848	ug	85	16	SW846 VOST
n-Butylbenzene	0.250	0.244	ug	98		SW846 VOST
	0.250	0.256	ug	102	4.9	SW846 VOST
sec-Butylbenzene	0.250	0.255	ug	102		SW846 VOST
	0.250	0.269	ug	108	5.5	SW846 VOST
tert-Butylbenzene	0.250	0.252	ug	101		SW846 VOST
	0.250	0.268	ug	107	6.4	SW846 VOST
Carbon disulfide	0.250	0.239	ug	96		SW846 VOST
	0.250	0.267	ug	107	11	SW846 VOST
Carbon tetrachloride	0.250	0.261	ug	105		SW846 VOST
	0.250	0.280	ug	112	6.8	SW846 VOST
Chlorobenzene	0.250	0.225	ug	90		SW846 VOST
	0.250	0.255	ug	102	13	SW846 VOST
Chlorodibromomethane	0.250	0.184	ug	74		SW846 VOST
	0.250	0.210	ug	84	13	SW846 VOST
Chloroethane	0.250	0.252	ug	101		SW846 VOST
	0.250	0.279	ug	112	10	SW846 VOST
Chloroform	0.250	0.228	ug	91		SW846 VOST
	0.250	0.258	ug	103	12	SW846 VOST
Chloromethane	0.250	0.182	ug	73		SW846 VOST
	0.250	0.190	ug	76	4.1	SW846 VOST
2-Chlorotoluene	0.250	0.229	ug	92		SW846 VOST
	0.250	0.242	ug	97	5.3	SW846 VOST
4-Chlorotoluene	0.250	0.224	ug	89		SW846 VOST
	0.250	0.239	ug	95	6.4	SW846 VOST

(Continued on next page)

LABORATORY CONTROL SAMPLE DATA REPORT

GC/MS Volatiles

Client Lot #...: H2F290439 Work Order #...: MVFQ31AC-LCS Matrix.....: AIR
LCS Lot-Sample#: H2G030000-071 MVFQ31AD-LCSD

PARAMETER	SPIKE AMOUNT	MEASURED AMOUNT	UNITS	PERCENT RECOVERY	RPD	METHOD
1,2-Dibromo-3-chloro-propane	0.250	0.123	ug	49		SW846 VOST
	0.250	0.164	ug	66	29	SW846 VOST
1,2-Dibromoethane	0.250	0.171	ug	68		SW846 VOST
	0.250	0.203	ug	81	17	SW846 VOST
Dibromomethane	0.250	0.178	ug	71		SW846 VOST
	0.250	0.208	ug	83	16	SW846 VOST
1,2-Dichlorobenzene	0.250	0.195	ug	78		SW846 VOST
	0.250	0.217	ug	87	10	SW846 VOST
1,3-Dichlorobenzene	0.250	0.218	ug	87		SW846 VOST
	0.250	0.241	ug	97	10	SW846 VOST
1,4-Dichlorobenzene	0.250	0.205	ug	82		SW846 VOST
	0.250	0.236	ug	95	14	SW846 VOST
Dichlorodifluoromethane	0.250	0.186	ug	74		SW846 VOST
	0.250	0.193	ug	77	3.9	SW846 VOST
1,1-Dichloroethane	0.250	0.235	ug	94		SW846 VOST
	0.250	0.260	ug	104	10	SW846 VOST
1,2-Dichloroethane	0.250	0.197	ug	79		SW846 VOST
	0.250	0.230	ug	92	16	SW846 VOST
cis-1,2-Dichloroethene	0.250	0.230	ug	92		SW846 VOST
	0.250	0.267	ug	107	15	SW846 VOST
trans-1,2-Dichloroethene	0.250	0.248	ug	99		SW846 VOST
	0.250	0.284	ug	114	13	SW846 VOST
1,1-Dichloroethene	0.250	0.260	ug	104		SW846 VOST
	0.250	0.290	ug	116	11	SW846 VOST
1,2-Dichloropropane	0.250	0.219	ug	88		SW846 VOST
	0.250	0.246	ug	99	12	SW846 VOST
1,3-Dichloropropane	0.250	0.180	ug	72		SW846 VOST
	0.250	0.205	ug	82	13	SW846 VOST
2,2-Dichloropropane	0.250	0.255	ug	102		SW846 VOST
	0.250	0.282	ug	113	10	SW846 VOST
cis-1,3-Dichloropropene	0.250	0.205	ug	82		SW846 VOST
	0.250	0.234	ug	94	13	SW846 VOST
trans-1,3-Dichloropropene	0.250	0.181	ug	73		SW846 VOST
	0.250	0.205	ug	82	12	SW846 VOST
1,1-Dichloropropene	0.250	0.265	ug	106		SW846 VOST
	0.250	0.285	ug	114	7.4	SW846 VOST
Ethylbenzene	0.250	0.240	ug	96		SW846 VOST
	0.250	0.263	ug	105	9.2	SW846 VOST
Hexachlorobutadiene	0.250	0.292	ug	117		SW846 VOST
	0.250	0.305	ug	122	4.1	SW846 VOST

(Continued on next page)

LABORATORY CONTROL SAMPLE DATA REPORT

GC/MS Volatiles

Client Lot #...: H2F290439 Work Order #...: MVFQ31AC-LCS Matrix.....: AIR
LCS Lot-Sample#: H2G030000-071 MVFQ31AD-LCSD

PARAMETER	SPIKE AMOUNT	MEASURED AMOUNT	UNITS	PERCENT RECOVERY	RPD	METHOD
2-Hexanone	1.00	0.614	ug	61		SW846 VOST
	1.00	0.706	ug	71	14	SW846 VOST
Isopropylbenzene	0.250	0.256	ug	102		SW846 VOST
	0.250	0.273	ug	109	6.6	SW846 VOST
p-Isopropyltoluene	0.250	0.249	ug	100		SW846 VOST
	0.250	0.265	ug	106	6.0	SW846 VOST
Methylene chloride	0.250	0.228	ug	91		SW846 VOST
	0.250	0.248	ug	99	8.2	SW846 VOST
4-Methyl-2-pentanone	1.00	0.542	ug	54		SW846 VOST
	1.00	0.669	ug	67	21	SW846 VOST
Naphthalene	0.250	0.123	ug	49		SW846 VOST
	0.250	0.150	ug	60	19	SW846 VOST
n-Propylbenzene	0.250	0.248	ug	99		SW846 VOST
	0.250	0.259	ug	104	4.4	SW846 VOST
Styrene	0.250	0.210	ug	84		SW846 VOST
	0.250	0.236	ug	94	11	SW846 VOST
1,1,1,2-Tetrachloroethane	0.250	0.206	ug	82		SW846 VOST
	0.250	0.235	ug	94	13	SW846 VOST
1,1,2,2-Tetrachloroethane	0.250	0.161	ug	64		SW846 VOST
	0.250	0.190	ug	76	16	SW846 VOST
Tetrachloroethene	0.250	0.254	ug	101		SW846 VOST
	0.250	0.275	ug	110	8.1	SW846 VOST
Toluene	0.250	0.235	ug	94		SW846 VOST
	0.250	0.258	ug	103	9.1	SW846 VOST
1,2,3-Trichlorobenzene	0.250	0.156	ug	62		SW846 VOST
	0.250	0.182	ug	73	16	SW846 VOST
1,2,4-Trichloro-benzene	0.250	0.176	ug	70		SW846 VOST
	0.250	0.202	ug	81	14	SW846 VOST
1,1,1-Trichloroethane	0.250	0.244	ug	98		SW846 VOST
	0.250	0.270	ug	108	10	SW846 VOST
1,1,2-Trichloroethane	0.250	0.173	ug	69		SW846 VOST
	0.250	0.205	ug	82	17	SW846 VOST
Trichloroethene	0.250	0.258	ug	103		SW846 VOST
	0.250	0.287	ug	115	11	SW846 VOST
Trichlorofluoromethane	0.250	0.252	ug	101		SW846 VOST
	0.250	0.279	ug	112	10	SW846 VOST
1,2,3-Trichloropropane	0.250	0.148	ug	59		SW846 VOST
	0.250	0.168	ug	67	13	SW846 VOST
1,2,4-Trimethylbenzene	0.250	0.222	ug	89		SW846 VOST
	0.250	0.238	ug	95	6.9	SW846 VOST

(Continued on next page)

LABORATORY CONTROL SAMPLE DATA REPORT

GC/MS Volatiles

Client Lot #...: H2F290439 **Work Order #...:** MVFQ31AC-LCS **Matrix.....:** AIR
LCS Lot-Sample#: H2G030000-071 MVFQ31AD-LCSD

PARAMETER	SPIKE AMOUNT	MEASURED AMOUNT	UNITS	PERCENT RECOVERY	RPD	METHOD
1,3,5-Trimethylbenzene	**0.250**	**0.238**	**ug**	**95**		**SW846 VOST**
	0.250	**0.253**	**ug**	**101**	**6.3**	**SW846 VOST**
Vinyl chloride	**0.250**	**0.266**	**ug**	**106**		**SW846 VOST**
	0.250	**0.287**	**ug**	**115**	**7.5**	**SW846 VOST**
m-Xylene & p-Xylene	**0.500**	**0.489**	**ug**	**98**		**SW846 VOST**
	0.500	**0.535**	**ug**	**107**	**9.1**	**SW846 VOST**
o-Xylene	**0.250**	**0.228**	**ug**	**91**		**SW846 VOST**
	0.250	**0.253**	**ug**	**101**	**11**	**SW846 VOST**

SURROGATE	PERCENT RECOVERY	RECOVERY LIMITS
Dibromofluoromethane	87	(50 - 134)
	97	(50 - 134)
1,2-Dichloroethane-d4	77	(50 - 127)
	87	(50 - 127)
Toluene-d8	96	(57 - 134)
	100	(57 - 134)
Bromofluorobenzene	79	(50 - 122)
	86	(50 - 122)

NOTE(S):

Calculations are performed before rounding to avoid round-off errors in calculated results.

Bold print denotes control parameters

METHOD BLANK REPORT

GC/MS Volatiles

Client Lot #...: H2F290439 **Work Order #...:** MVFQ51AA **Matrix.....:** AIR
MB Lot-Sample #: H2G030000-072

Prep Date.....: 07/06/12
Analysis Date..: 07/06/12 **Prep Batch #...:** 2185072
Dilution Factor: 1

PARAMETER	RESULT	REPORTING LIMIT	UNITS	METHOD
Acetone	ND	0.10	ug	SW846 VOST
Benzene	ND	0.010	ug	SW846 VOST
Bromobenzene	ND	0.010	ug	SW846 VOST
Bromochloromethane	ND	0.025	ug	SW846 VOST
Bromodichloromethane	ND	0.010	ug	SW846 VOST
Bromoform	ND	0.025	ug	SW846 VOST
Bromomethane	ND	0.050	ug	SW846 VOST
2-Butanone	ND	0.10	ug	SW846 VOST
n-Butylbenzene	ND	0.010	ug	SW846 VOST
sec-Butylbenzene	ND	0.010	ug	SW846 VOST
tert-Butylbenzene	ND	0.010	ug	SW846 VOST
Carbon disulfide	ND	0.010	ug	SW846 VOST
Carbon tetrachloride	ND	0.010	ug	SW846 VOST
Chlorobenzene	ND	0.010	ug	SW846 VOST
Chlorodibromomethane	ND	0.025	ug	SW846 VOST
Chloroethane	ND	0.050	ug	SW846 VOST
Chloroform	ND	0.010	ug	SW846 VOST
Chloromethane	ND	0.050	ug	SW846 VOST
2-Chlorotoluene	ND	0.010	ug	SW846 VOST
4-Chlorotoluene	ND	0.010	ug	SW846 VOST
1,2-Dibromo-3-chloro-propane	ND	0.050	ug	SW846 VOST
1,2-Dibromoethane	ND	0.025	ug	SW846 VOST
Dibromomethane	ND	0.025	ug	SW846 VOST
1,2-Dichlorobenzene	ND	0.010	ug	SW846 VOST
1,3-Dichlorobenzene	ND	0.010	ug	SW846 VOST
1,4-Dichlorobenzene	ND	0.010	ug	SW846 VOST
Dichlorodifluoromethane	ND	0.025	ug	SW846 VOST
1,1-Dichloroethane	ND	0.010	ug	SW846 VOST
1,2-Dichloroethane	ND	0.010	ug	SW846 VOST
cis-1,2-Dichloroethene	ND	0.010	ug	SW846 VOST
trans-1,2-Dichloroethene	ND	0.010	ug	SW846 VOST
1,1-Dichloroethene	ND	0.010	ug	SW846 VOST
1,2-Dichloropropane	ND	0.010	ug	SW846 VOST
1,3-Dichloropropane	ND	0.010	ug	SW846 VOST
2,2-Dichloropropane	ND	0.010	ug	SW846 VOST
cis-1,3-Dichloropropene	ND	0.010	ug	SW846 VOST
trans-1,3-Dichloropropene	ND	0.010	ug	SW846 VOST
1,1-Dichloropropene	ND	0.010	ug	SW846 VOST
Ethylbenzene	ND	0.010	ug	SW846 VOST
Hexachlorobutadiene	ND	0.025	ug	SW846 VOST

(Continued on next page)

METHOD BLANK REPORT

GC/MS Volatiles

Client Lot #...: H2F290439 **Work Order #...:** MVFQ51AA **Matrix.....:** AIR

PARAMETER	RESULT	REPORTING LIMIT	UNITS	METHOD
2-Hexanone	ND	0.10	ug	SW846 VOST
Isopropylbenzene	ND	0.010	ug	SW846 VOST
p-Isopropyltoluene	ND	0.010	ug	SW846 VOST
Methylene chloride	**0.0047 J**	**0.025**	**ug**	**SW846 VOST**
4-Methyl-2-pentanone	ND	0.10	ug	SW846 VOST
Naphthalene	ND	0.025	ug	SW846 VOST
n-Propylbenzene	ND	0.010	ug	SW846 VOST
Styrene	ND	0.010	ug	SW846 VOST
1,1,1,2-Tetrachloroethane	ND	0.010	ug	SW846 VOST
1,1,2,2-Tetrachloroethane	ND	0.025	ug	SW846 VOST
Tetrachloroethene	ND	0.010	ug	SW846 VOST
Toluene	ND	0.010	ug	SW846 VOST
1,2,3-Trichlorobenzene	ND	0.025	ug	SW846 VOST
1,2,4-Trichloro-benzene	ND	0.025	ug	SW846 VOST
1,1,1-Trichloroethane	ND	0.025	ug	SW846 VOST
1,1,2-Trichloroethane	ND	0.025	ug	SW846 VOST
Trichloroethene	ND	0.010	ug	SW846 VOST
Trichlorofluoromethane	ND	0.050	ug	SW846 VOST
1,2,3-Trichloropropane	ND	0.025	ug	SW846 VOST
1,2,4-Trimethylbenzene	ND	0.010	ug	SW846 VOST
1,3,5-Trimethylbenzene	ND	0.010	ug	SW846 VOST
Vinyl chloride	ND	0.010	ug	SW846 VOST
m-Xylene & p-Xylene	ND	0.020	ug	SW846 VOST
o-Xylene	ND	0.010	ug	SW846 VOST

SURROGATE	PERCENT RECOVERY	RECOVERY LIMITS
Dibromofluoromethane	88	(50 - 134)
1,2-Dichloroethane-d4	80	(50 - 127)
Toluene-d8	90	(57 - 134)
Bromofluorobenzene	74	(50 - 122)

NOTE(S):

Calculations are performed before rounding to avoid round-off errors in calculated results.

J Estimated result. Result is less than RL.

LABORATORY CONTROL SAMPLE EVALUATION REPORT

GC/MS Volatiles

Client Lot #...: H2F290439 Work Order #...: MVFQ51AC-LCS Matrix.....: AIR
LCS Lot-Sample#: H2G030000-072 MVFQ51AD-LCSD
Prep Date.....: 07/06/12 Analysis Date..: 07/06/12
Prep Batch #...: 2185072
Dilution Factor: 1

PARAMETER	PERCENT RECOVERY	RECOVERY LIMITS	RPD	RPD LIMITS	METHOD
Acetone	187	(20 - 191)			SW846 VOST
	152	(20 - 191)	21	(0-50)	SW846 VOST
Benzene	93	(68 - 128)			SW846 VOST
	97	(68 - 128)	4.1	(0-22)	SW846 VOST
Bromobenzene	85	(53 - 120)			SW846 VOST
	97	(53 - 120)	13	(0-38)	SW846 VOST
Bromochloromethane	84	(53 - 120)			SW846 VOST
	91	(53 - 120)	8.2	(0-36)	SW846 VOST
Bromodichloromethane	81	(52 - 122)			SW846 VOST
	87	(52 - 122)	6.9	(0-35)	SW846 VOST
Bromoform	69	(40 - 120)			SW846 VOST
	76	(40 - 120)	8.8	(0-50)	SW846 VOST
Bromomethane	86	(40 - 187)			SW846 VOST
	79	(40 - 187)	8.8	(0-35)	SW846 VOST
2-Butanone	87	(20 - 150)			SW846 VOST
	83	(20 - 150)	4.6	(0-50)	SW846 VOST
n-Butylbenzene	93	(57 - 140)			SW846 VOST
	94	(57 - 140)	0.81	(0-31)	SW846 VOST
sec-Butylbenzene	97	(70 - 128)			SW846 VOST
	99	(70 - 128)	1.6	(0-26)	SW846 VOST
tert-Butylbenzene	98	(67 - 122)			SW846 VOST
	98	(67 - 122)	0.31	(0-26)	SW846 VOST
Carbon disulfide	98	(40 - 157)			SW846 VOST
	98	(40 - 157)	0.090	(0-23)	SW846 VOST
Carbon tetrachloride	101	(67 - 135)			SW846 VOST
	105	(67 - 135)	3.6	(0-23)	SW846 VOST
Chlorobenzene	90	(65 - 120)			SW846 VOST
	97	(65 - 120)	7.6	(0-26)	SW846 VOST
Chlorodibromomethane	72	(50 - 120)			SW846 VOST
	82	(50 - 120)	14	(0-43)	SW846 VOST
Chloroethane	99	(43 - 163)			SW846 VOST
	96	(43 - 163)	2.8	(0-32)	SW846 VOST
Chloroform	93	(63 - 123)			SW846 VOST
	96	(63 - 123)	3.3	(0-27)	SW846 VOST
Chloromethane	72	(44 - 176)			SW846 VOST
	71	(44 - 176)	0.37	(0-50)	SW846 VOST
2-Chlorotoluene	87	(59 - 120)			SW846 VOST
	90	(59 - 120)	3.7	(0-29)	SW846 VOST
4-Chlorotoluene	85	(57 - 120)			SW846 VOST
	88	(57 - 120)	3.5	(0-30)	SW846 VOST

(Continued on next page)

LABORATORY CONTROL SAMPLE EVALUATION REPORT

GC/MS Volatiles

Client Lot #...: H2F290439 Work Order #...: MVFQ51AC-LCS Matrix.....: AIR
LCS Lot-Sample#: H2G030000-072 MVFQ51AD-LCSD

PARAMETER	PERCENT RECOVERY	RECOVERY LIMITS	RPD	RPD LIMITS	METHOD
1,2-Dibromo-3-chloro-propane	44	(10 - 120)			SW846 VOST
	55	(10 - 120)	23	(0-50)	SW846 VOST
1,2-Dibromoethane	70	(20 - 120)			SW846 VOST
	77	(20 - 120)	8.4	(0-43)	SW846 VOST
Dibromomethane	74	(50 - 120)			SW846 VOST
	84	(50 - 120)	13	(0-42)	SW846 VOST
1,2-Dichlorobenzene	73	(20 - 124)			SW846 VOST
	81	(20 - 124)	11	(0-49)	SW846 VOST
1,3-Dichlorobenzene	84	(30 - 132)			SW846 VOST
	90	(30 - 132)	7.4	(0-39)	SW846 VOST
1,4-Dichlorobenzene	80	(30 - 129)			SW846 VOST
	91	(30 - 129)	12	(0-42)	SW846 VOST
Dichlorodifluoromethane	75	(25 - 146)			SW846 VOST
	75	(25 - 146)	0.75	(0-42)	SW846 VOST
1,1-Dichloroethane	96	(66 - 128)			SW846 VOST
	100	(66 - 128)	3.6	(0-24)	SW846 VOST
1,2-Dichloroethane	80	(36 - 124)			SW846 VOST
	86	(36 - 124)	6.8	(0-37)	SW846 VOST
cis-1,2-Dichloroethene	95	(67 - 123)			SW846 VOST
	96	(67 - 123)	1.2	(0-27)	SW846 VOST
trans-1,2-Dichloroethene	101	(78 - 128)			SW846 VOST
	101	(78 - 128)	0.26	(0-23)	SW846 VOST
1,1-Dichloroethene	109	(77 - 131)			SW846 VOST
	105	(77 - 131)	3.7	(0-22)	SW846 VOST
1,2-Dichloropropane	88	(55 - 124)			SW846 VOST
	93	(55 - 124)	6.2	(0-31)	SW846 VOST
1,3-Dichloropropane	70	(50 - 120)			SW846 VOST
	79	(50 - 120)	11	(0-38)	SW846 VOST
2,2-Dichloropropane	103	(59 - 141)			SW846 VOST
	104	(59 - 141)	0.99	(0-25)	SW846 VOST
cis-1,3-Dichloropropene	79	(45 - 125)			SW846 VOST
	88	(45 - 125)	10	(0-36)	SW846 VOST
trans-1,3-Dichloropropene	72	(40 - 120)			SW846 VOST
	79	(40 - 120)	9.4	(0-40)	SW846 VOST
1,1-Dichloropropene	105	(70 - 136)			SW846 VOST
	105	(70 - 136)	0.41	(0-21)	SW846 VOST
Ethylbenzene	97	(72 - 127)			SW846 VOST
	99	(72 - 127)	1.6	(0-23)	SW846 VOST
Hexachlorobutadiene	102	(52 - 167)			SW846 VOST
	105	(52 - 167)	2.9	(0-50)	SW846 VOST

(Continued on next page)

LABORATORY CONTROL SAMPLE EVALUATION REPORT

GC/MS Volatiles

Client Lot #...: H2F290439 Work Order #...: MVFQ51AC-LCS Matrix.....: AIR
LCS Lot-Sample#: H2G030000-072 MVFQ51AD-LCSD

PARAMETER	PERCENT RECOVERY	RECOVERY LIMITS	RPD	RPD LIMITS	METHOD
2-Hexanone	54	(30 - 151)			SW846 VOST
	70	(30 - 151)	25	(0-50)	SW846 VOST
Isopropylbenzene	101	(40 - 152)			SW846 VOST
	105	(40 - 152)	3.4	(0-28)	SW846 VOST
p-Isopropyltoluene	98	(66 - 126)			SW846 VOST
	97	(66 - 126)	0.43	(0-28)	SW846 VOST
Methylene chloride	92	(60 - 134)			SW846 VOST
	97	(60 - 134)	5.2	(0-41)	SW846 VOST
4-Methyl-2-pentanone	57	(30 - 175)			SW846 VOST
	68	(30 - 175)	17	(0-50)	SW846 VOST
Naphthalene	38	(20 - 120)			SW846 VOST
	57	(20 - 120)	41	(0-50)	SW846 VOST
n-Propylbenzene	94	(69 - 123)			SW846 VOST
	93	(69 - 123)	0.42	(0-25)	SW846 VOST
Styrene	84	(57 - 120)			SW846 VOST
	92	(57 - 120)	10	(0-39)	SW846 VOST
1,1,1,2-Tetrachloroethane	81	(53 - 120)			SW846 VOST
	90	(53 - 120)	11	(0-35)	SW846 VOST
1,1,2,2-Tetrachloroethane	67	(30 - 120)			SW846 VOST
	71	(30 - 120)	6.6	(0-50)	SW846 VOST
Tetrachloroethene	101	(80 - 133)			SW846 VOST
	104	(80 - 133)	2.6	(0-24)	SW846 VOST
Toluene	93	(70 - 120)			SW846 VOST
	95	(70 - 120)	2.4	(0-22)	SW846 VOST
1,2,3-Trichlorobenzene	50	(20 - 123)			SW846 VOST
	66	(20 - 123)	28	(0-50)	SW846 VOST
1,2,4-Trichloro-benzene	61	(20 - 140)			SW846 VOST
	73	(20 - 140)	18	(0-50)	SW846 VOST
1,1,1-Trichloroethane	100	(65 - 131)			SW846 VOST
	103	(65 - 131)	3.1	(0-23)	SW846 VOST
1,1,2-Trichloroethane	69	(41 - 120)			SW846 VOST
	79	(41 - 120)	13	(0-38)	SW846 VOST
Trichloroethene	104	(80 - 141)			SW846 VOST
	120	(80 - 141)	14	(0-32)	SW846 VOST
Trichlorofluoromethane	103	(58 - 147)			SW846 VOST
	103	(58 - 147)	0.040	(0-26)	SW846 VOST
1,2,3-Trichloropropane	62	(30 - 120)			SW846 VOST
	67	(30 - 120)	7.7	(0-50)	SW846 VOST
1,2,4-Trimethylbenzene	86	(56 - 120)			SW846 VOST
	89	(56 - 120)	3.6	(0-35)	SW846 VOST

(Continued on next page)

LABORATORY CONTROL SAMPLE EVALUATION REPORT

GC/MS Volatiles

Client Lot #...: H2F290439 Work Order #...: MVFQ51AC-LCS Matrix.....: AIR
LCS Lot-Sample#: H2G030000-072 MVFQ51AD-LCSD

PARAMETER	PERCENT RECOVERY	RECOVERY LIMITS	RPD	RPD LIMITS	METHOD
1,3,5-Trimethylbenzene	91	(62 - 121)			SW846 VOST
	92	(62 - 121)	1.8	(0-30)	SW846 VOST
Vinyl chloride	106	(64 - 142)			SW846 VOST
	103	(64 - 142)	2.6	(0-33)	SW846 VOST
m-Xylene & p-Xylene	98	(74 - 126)			SW846 VOST
	103	(74 - 126)	4.7	(0-38)	SW846 VOST
o-Xylene	92	(64 - 120)			SW846 VOST
	98	(64 - 120)	6.8	(0-37)	SW846 VOST

SURROGATE	PERCENT RECOVERY	RECOVERY LIMITS
Dibromofluoromethane	82	(50 - 134)
	91	(50 - 134)
1,2-Dichloroethane-d4	74	(50 - 127)
	82	(50 - 127)
Toluene-d8	89	(57 - 134)
	97	(57 - 134)
Bromofluorobenzene	73	(50 - 122)
	80	(50 - 122)

NOTE(S):

Calculations are performed before rounding to avoid round-off errors in calculated results.

Bold print denotes control parameters

LABORATORY CONTROL SAMPLE DATA REPORT

GC/MS Volatiles

Client Lot #...: H2F290439 Work Order #...: MVFQ51AC-LCS Matrix.....: AIR
LCS Lot-Sample#: H2G030000-072 MVFQ51AD-LCSD
Prep Date.....: 07/06/12 Analysis Date..: 07/06/12
Prep Batch #...: 2185072
Dilution Factor: 1

PARAMETER	SPIKE AMOUNT	MEASURED AMOUNT	UNITS	PERCENT RECOVERY	RPD	METHOD
Acetone	1.00	1.87	ug	187		SW846 VOST
	1.00	1.52	ug	152	21	SW846 VOST
Benzene	0.250	0.234	ug	93		SW846 VOST
	0.250	0.244	ug	97	4.1	SW846 VOST
Bromobenzene	0.250	0.213	ug	85		SW846 VOST
	0.250	0.242	ug	97	13	SW846 VOST
Bromochloromethane	0.250	0.210	ug	84		SW846 VOST
	0.250	0.228	ug	91	8.2	SW846 VOST
Bromodichloromethane	0.250	0.202	ug	81		SW846 VOST
	0.250	0.216	ug	87	6.9	SW846 VOST
Bromoform	0.250	0.173	ug	69		SW846 VOST
	0.250	0.189	ug	76	8.8	SW846 VOST
Bromomethane	0.250	0.216	ug	86		SW846 VOST
	0.250	0.198	ug	79	8.8	SW846 VOST
2-Butanone	1.00	0.867	ug	87		SW846 VOST
	1.00	0.828	ug	83	4.6	SW846 VOST
n-Butylbenzene	0.250	0.232	ug	93		SW846 VOST
	0.250	0.234	ug	94	0.81	SW846 VOST
sec-Butylbenzene	0.250	0.243	ug	97		SW846 VOST
	0.250	0.247	ug	99	1.6	SW846 VOST
tert-Butylbenzene	0.250	0.246	ug	98		SW846 VOST
	0.250	0.245	ug	98	0.31	SW846 VOST
Carbon disulfide	0.250	0.244	ug	98		SW846 VOST
	0.250	0.244	ug	98	0.090	SW846 VOST
Carbon tetrachloride	0.250	0.253	ug	101		SW846 VOST
	0.250	0.262	ug	105	3.6	SW846 VOST
Chlorobenzene	0.250	0.224	ug	90		SW846 VOST
	0.250	0.242	ug	97	7.6	SW846 VOST
Chlorodibromomethane	0.250	0.179	ug	72		SW846 VOST
	0.250	0.205	ug	82	14	SW846 VOST
Chloroethane	0.250	0.247	ug	99		SW846 VOST
	0.250	0.240	ug	96	2.8	SW846 VOST
Chloroform	0.250	0.231	ug	93		SW846 VOST
	0.250	0.239	ug	96	3.3	SW846 VOST
Chloromethane	0.250	0.179	ug	72		SW846 VOST
	0.250	0.178	ug	71	0.37	SW846 VOST
2-Chlorotoluene	0.250	0.218	ug	87		SW846 VOST
	0.250	0.226	ug	90	3.7	SW846 VOST
4-Chlorotoluene	0.250	0.212	ug	85		SW846 VOST
	0.250	0.220	ug	88	3.5	SW846 VOST

(Continued on next page)

LABORATORY CONTROL SAMPLE DATA REPORT

GC/MS Volatiles

Client Lot #...: H2F290439 Work Order #...: MVFQ51AC-LCS Matrix.....: AIR
LCS Lot-Sample#: H2G030000-072 MVFQ51AD-LCSD

PARAMETER	SPIKE AMOUNT	MEASURED AMOUNT	UNITS	PERCENT RECOVERY	RPD	METHOD
1,2-Dibromo-3-chloro-propane	0.250	0.110	ug	44		SW846 VOST
	0.250	0.139	ug	55	23	SW846 VOST
1,2-Dibromoethane	0.250	0.176	ug	70		SW846 VOST
	0.250	0.191	ug	77	8.4	SW846 VOST
Dibromomethane	0.250	0.184	ug	74		SW846 VOST
	0.250	0.210	ug	84	13	SW846 VOST
1,2-Dichlorobenzene	0.250	0.183	ug	73		SW846 VOST
	0.250	0.203	ug	81	11	SW846 VOST
1,3-Dichlorobenzene	0.250	0.209	ug	84		SW846 VOST
	0.250	0.225	ug	90	7.4	SW846 VOST
1,4-Dichlorobenzene	0.250	0.201	ug	80		SW846 VOST
	0.250	0.227	ug	91	12	SW846 VOST
Dichlorodifluoromethane	0.250	0.187	ug	75		SW846 VOST
	0.250	0.188	ug	75	0.75	SW846 VOST
1,1-Dichloroethane	0.250	0.240	ug	96		SW846 VOST
	0.250	0.249	ug	100	3.6	SW846 VOST
1,2-Dichloroethane	0.250	0.200	ug	80		SW846 VOST
	0.250	0.215	ug	86	6.8	SW846 VOST
cis-1,2-Dichloroethene	0.250	0.236	ug	95		SW846 VOST
	0.250	0.239	ug	96	1.2	SW846 VOST
trans-1,2-Dichloroethene	0.250	0.252	ug	101		SW846 VOST
	0.250	0.253	ug	101	0.26	SW846 VOST
1,1-Dichloroethene	0.250	0.271	ug	109		SW846 VOST
	0.250	0.261	ug	105	3.7	SW846 VOST
1,2-Dichloropropane	0.250	0.220	ug	88		SW846 VOST
	0.250	0.234	ug	93	6.2	SW846 VOST
1,3-Dichloropropane	0.250	0.176	ug	70		SW846 VOST
	0.250	0.196	ug	79	11	SW846 VOST
2,2-Dichloropropane	0.250	0.257	ug	103		SW846 VOST
	0.250	0.260	ug	104	0.99	SW846 VOST
cis-1,3-Dichloropropene	0.250	0.199	ug	79		SW846 VOST
	0.250	0.220	ug	88	10	SW846 VOST
trans-1,3-Dichloropropene	0.250	0.179	ug	72		SW846 VOST
	0.250	0.196	ug	79	9.4	SW846 VOST
1,1-Dichloropropene	0.250	0.262	ug	105		SW846 VOST
	0.250	0.263	ug	105	0.41	SW846 VOST
Ethylbenzene	0.250	0.243	ug	97		SW846 VOST
	0.250	0.247	ug	99	1.6	SW846 VOST
Hexachlorobutadiene	0.250	0.256	ug	102		SW846 VOST
	0.250	0.264	ug	105	2.9	SW846 VOST

(Continued on next page)

LABORATORY CONTROL SAMPLE DATA REPORT

GC/MS Volatiles

Client Lot #...: H2F290439 Work Order #...: MVFQ51AC-LCS Matrix.....: AIR
LCS Lot-Sample#: H2G030000-072 MVFQ51AD-LCSD

PARAMETER	SPIKE AMOUNT	MEASURED AMOUNT	UNITS	PERCENT RECOVERY	RPD	METHOD
2-Hexanone	1.00	0.545	ug	54		SW846 VOST
	1.00	0.698	ug	70	25	SW846 VOST
Isopropylbenzene	0.250	0.253	ug	101		SW846 VOST
	0.250	0.262	ug	105	3.4	SW846 VOST
p-Isopropyltoluene	0.250	0.244	ug	98		SW846 VOST
	0.250	0.243	ug	97	0.43	SW846 VOST
Methylene chloride	0.250	0.230	ug	92		SW846 VOST
	0.250	0.242	ug	97	5.2	SW846 VOST
4-Methyl-2-pentanone	1.00	0.573	ug	57		SW846 VOST
	1.00	0.682	ug	68	17	SW846 VOST
Naphthalene	0.250	0.0943	ug	38		SW846 VOST
	0.250	0.143	ug	57	41	SW846 VOST
n-Propylbenzene	0.250	0.234	ug	94		SW846 VOST
	0.250	0.233	ug	93	0.42	SW846 VOST
Styrene	0.250	0.209	ug	84		SW846 VOST
	0.250	0.231	ug	92	10	SW846 VOST
1,1,1,2-Tetrachloroethane	0.250	0.202	ug	81		SW846 VOST
	0.250	0.224	ug	90	11	SW846 VOST
1,1,2,2-Tetrachloroethane	0.250	0.167	ug	67		SW846 VOST
	0.250	0.178	ug	71	6.6	SW846 VOST
Tetrachloroethene	0.250	0.254	ug	101		SW846 VOST
	0.250	0.260	ug	104	2.6	SW846 VOST
Toluene	0.250	0.232	ug	93		SW846 VOST
	0.250	0.237	ug	95	2.4	SW846 VOST
1,2,3-Trichlorobenzene	0.250	0.125	ug	50		SW846 VOST
	0.250	0.166	ug	66	28	SW846 VOST
1,2,4-Trichloro-benzene	0.250	0.152	ug	61		SW846 VOST
	0.250	0.183	ug	73	18	SW846 VOST
1,1,1-Trichloroethane	0.250	0.250	ug	100		SW846 VOST
	0.250	0.258	ug	103	3.1	SW846 VOST
1,1,2-Trichloroethane	0.250	0.174	ug	69		SW846 VOST
	0.250	0.198	ug	79	13	SW846 VOST
Trichloroethene	0.250	0.260	ug	104		SW846 VOST
	0.250	0.299	ug	120	14	SW846 VOST
Trichlorofluoromethane	0.250	0.258	ug	103		SW846 VOST
	0.250	0.258	ug	103	0.040	SW846 VOST
1,2,3-Trichloropropane	0.250	0.154	ug	62		SW846 VOST
	0.250	0.166	ug	67	7.7	SW846 VOST
1,2,4-Trimethylbenzene	0.250	0.215	ug	86		SW846 VOST
	0.250	0.223	ug	89	3.6	SW846 VOST

(Continued on next page)

LABORATORY CONTROL SAMPLE DATA REPORT

GC/MS Volatiles

Client Lot #...: H2F290439 **Work Order #...:** MVFQ51AC-LCS **Matrix.....:** AIR
LCS Lot-Sample#: H2G030000-072 MVFQ51AD-LCSD

PARAMETER	SPIKE AMOUNT	MEASURED AMOUNT	UNITS	PERCENT RECOVERY	RPD	METHOD
1,3,5-Trimethylbenzene	**0.250**	**0.227**	**ug**	**91**		**SW846 VOST**
	0.250	**0.231**	**ug**	**92**	**1.8**	**SW846 VOST**
Vinyl chloride	**0.250**	**0.265**	**ug**	**106**		**SW846 VOST**
	0.250	**0.259**	**ug**	**103**	**2.6**	**SW846 VOST**
m-Xylene & p-Xylene	**0.500**	**0.491**	**ug**	**98**		**SW846 VOST**
	0.500	**0.515**	**ug**	**103**	**4.7**	**SW846 VOST**
o-Xylene	**0.250**	**0.229**	**ug**	**92**		**SW846 VOST**
	0.250	**0.245**	**ug**	**98**	**6.8**	**SW846 VOST**

SURROGATE	PERCENT RECOVERY	RECOVERY LIMITS
Dibromofluoromethane	82	(50 - 134)
	91	(50 - 134)
1,2-Dichloroethane-d4	74	(50 - 127)
	82	(50 - 127)
Toluene-d8	89	(57 - 134)
	97	(57 - 134)
Bromofluorobenzene	73	(50 - 122)
	80	(50 - 122)

NOTE(S):

Calculations are performed before rounding to avoid round-off errors in calculated results.

Bold print denotes control parameters