REPORT

Comprehensive Performance Testing of a Propellant Thermal Treatment System

General Dynamics Ordnance and Tactical Systems
Munition Services
Joplin, Missouri

July 2012

O'BRIEN & GERE

RCRA
517128

GENERAL DYNAMICS
Ordnance and Tactical Systems
Munition Services

RECEIVED
JUL 30 2012
AWMD/WRAP-MIRP

July 25, 2012

Gary Bertram
US EPA Region 7
901 North 5th Street
Kansas City, KS 66101

P.O. Box 1386
Joplin, MO 64801
Tel (417)-624-0212
Fax (417)-782-6366

Re: EBV Explosives Environmental Company
Administrative Compliance Order on Consent
Docket No. CAA-07-2012-0005

Dear Mr. Bertram:

EBV Explosives Environmental Company dba General Dynamics Ordnance and Tactical Systems Munitions Services (GD-OTS MS) is submitting the Comprehensive Performance Test Report for Building #3. The CPT report documents compliance Source Testing requirements paragraphs 32 and the *de minimis* emissions limits of the Administrative Compliance Order on Consent.

If you have any questions regarding this report, please contact me at (610) 298-3085.

Very truly yours,

David R. Zoghby
Senior Director of Marketing
& Commercial Contracts

Attachments CPT Report
CPT Operating Data on CD

cc. Sara Hertz Wu, US EPA Region 7
Ken Herstowski, US EPA Region 7

REPORT

Comprehensive Performance Testing of a Propellant Thermal Treatment System

General Dynamics Ordnance and Tactical Systems
Munition Services
Joplin, Missouri

July 2012

RECEIVED
JUL 30 2012
AWMD/WRAP-MIRP

O'BRIEN & GERE

REPORT

3374 | 49064

Comprehensive Performance Testing of a Propellant Thermal Treatment Unit

General Dynamics Ordnance and Tactical Systems
Munition Services
Joplin, Missouri

JEFF GORMAN, PROJECT ASSOCIATE
AUTHOR
O'Brien & Gere Engineers, Inc.

DAVID OSTASZEWSKI, P.E., SENIOR MANAGING ENGINEER
REVIEWER
O'Brien & Gere Engineers, Inc.

TABLE OF CONTENTS

List of Tables iii
List of Figures iii
List of Appendices iii
List of Acronyms and Abbreviations iv
1. Executive Summary 1
2. Introduction 3
2.1 Project Scope 3
2.2 Facility ID, Mailing Address, and Primary Contacts 3
2.3 Purpose and Objective of the Comprehensive Performance Test 4
3. Process Description 5
3.1 Waste Feed System 5
3.2 PTTU Manufacturer and Model 5
3.3 Air Pollution Control Equipment 5
3.3.1 Quench Chamber 5
3.3.2 Reaction Chamber 6
3.3.3 Baghouse 6
3.3.4 Wet Scrubber 6
3.3.5 Blowdown Storage Tank 7
3.3.6 Induced Draft Fan 8
3.3.7 Stack 8
3.4 Continuous Emissions Monitoring 8
3.5 Automatic Waste Feed Cut-off System 8
4. Sampling Program Overview 10
4.1 Sampling Summary 10
4.2 Sampling Location 10
4.3 Sampling Procedures 10
4.3.1 HCl/Cl_2 10
4.3.2 Metals 10
4.3.3 PCDD/PCDF and Semi-Volatile Organics 11
4.3.4 Volatile Organic Sampling Train (VOST) 11
4.3.5 Particulate Matter 11
4.3.6 Continuous Emissions Monitoring 12
4.4 Analytical Procedures 13
4.4.1 Metals 13
4.4.2 HCl/Cl_2 13
4.4.3 Particulate Matter 13
4.4.4 Votatile Organic Compounds 13

4.4.5 PCDDs/PCDFs and Semi-volatile Organic Compounds 13
5. Program Results 16
5.1 Process Operating Conditions 16
5.2 Dioxins and Furans (PCCD/PCDF) Results 16
5.2.1 Week of April 23-27, 2012 (Initial CPT) 16
5.2.2 Week of May 28-June 1, 2012 (PCDD/PCDF Retest No. 1) 16
5.2.3 Week of June 18-22, 2012 (PCDD/PCDF Retest No. 2) 16
5.3 HCl and Cl_2 Results 16
5.4 Particulate Matter Results 17
5.5 Metals Results 17
5.6 Carbon Monoxide Results 17
5.7 Nitrogen Oxides Results 17
5.8 Risk Assessment Test Results 17
5.8.1 Total Hydrocarbon Results 17
5.8.2 Semi-volatile Organic Compound Results 17
5.8.3 Volatile Organic Compound Results 17
6. Quality Assurance/Quality Control 35
6.1 Sample Collection QA/QC 35
6.1.1 Sample Custody 36
6.2 Stack Gas Analyses 36
6.2.1 Volatile Organics 36
6.2.2 PCDDs/PCDFs 36
6.2.3 Semi-volatile Organics 37
6.2.4 Particulate Matter 37
6.2.5 Hydrogen Chloride and Chlorine 37
6.2.6 Metals 38

LIST OF TABLES

1-1 Summary of CPT Emission Results – Permit Requirements 1
1-2 Summary of CPT Emission Results – Air De Minimis2 2
2-1 Summary of Applicable Emission Standards 4
4-1 Traverse Point Locations 14
5-1 Automatic Waste Feed Cut-offs 18
5-2 Additional Instrumentation and Alarms 19
5-3 Summary of Process Operating Data 20
5-4 Summary of PCDD/PCDF Results - Retest No. 1 21
5-5 Summary of PCDD/PCDF Results -Initial CPT 25
5-6 Summary of PCDD/PCDF Results - Retest No. 1 26
5-7 Summary of PCDD/PCDF Results - Retest No. 2 – Condition 1 27
5-8 Summary of PCDD/PCDF Results - Retest No. 2 – Condition 2 28
5-9 Summary of HCl/Cl_2 Results 29
5-10 Summary of Particulate Matter Results 30
5-11 Summary of Metals Results 31
5-12 Summary of NO_X and CO Results 32
5-13 Summary of SVOC Results 33
5-14 Summary of VOC Results 34
6-1 QC Summary for Volatile Organics in Stack Gas Samples 36
6-2 QC Summary for PCDDs/PCDFs in Stack Gas Samples – June 2012 Test Program 36
6-3 QC Summary for Semi-volatile Organics in Stack Gas Samples 37
6-4 QC Summary for HCl and Cl_2 in Stack Gas Samples 38
6-5 QC Summary for Metals in Stack Gas Samples 38

LIST OF FIGURES

4-1 Exhaust Stack Schematic 15

LIST OF APPENDICES

A Process Data (Included on CD)
B Field Data Sheets and Calculations
C Calibration Records
D Laboratory Reports

LIST OF ACRONYMS AND ABBREVIATIONS

ACFM	Actual Cubic Feet per Minute
AC	Activated Carbon
APCS	Air Pollution Control System
APS	Acid Polar Solvents
CEMS	Continuous Emission Monitoring System
CFR	Code of Federal Regulations
Cl_2	Chlorine
CO	Carbon Monoxide
CO_2	Carbon Dioxide
CPT	Comprehensive Performance Test
dscm	Dry standard cubic meter
DP	Differential Pressure
EPA	Environmental Protection Agency
ft	feet
FRC	Fiberglass Reinforced Plastic
GC/FID	Gas Chromatograph/Flame Ionization Detector
GC/MS	Gas Chromatograph/Mass Spectrometer
gr/dscf	grains per dry standard cubic foot
H_2O_2	Hydrogen Peroxide
H_2SO_4	Sulfuric Acid
HCl	Hydrogen Chloride
HHV	Higher Heating Value
HNO_3	Nitric Acid
IC/PCR	Ion Chromatography/Post column Reactor
ID	Induced Draft
in	inches
in. vac.	Inches vacuum
IWS	Ionizing Wet Scrubbers
lpm	liters per minutes
lb/hr	pounds per hour
mg/dscm	milligram per dry standard cubic meter
MMBtu/hr	million British Thermal Units per hour
MDNR	Missouri Department of Natural Resources
ng	Nanogram

NEW	Net Explosive Weight
NO_x	Oxides of Nitrogen
PAH	Polynuclear Aromatic Hydrocarbons
PCB	Polychlorinated biphenyl
PCDD	Polychlorinated Dibenzo-p-dioxin
PCDF	Polychlorinated Dibenzo-p-furan
PLC	Programmable Logic Control System
PTTU	Propellant Thermal Treatment Unit
O_2	Oxygen
PM	Particulate Matter
POHCs	Principal Organic Hazardous Constituents
ppmv	Part per million volume
QA/QC	Quality Assurance/Quality Control
RCRA	Resource Conservation and Recovery Act
SCC	Secondary Combustion Chamber
SBC	Sodium Bicarbonate
TCO	Total Chromatograph Organics
TEQ	Toxic Equivalent
THC	Total Hydrocarbons
VFD	Variable Frequency Drive
VOST	Volatile Organic Sampling Train
µg/dscm	Microgram per dry standard cubic meter

1. EXECUTIVE SUMMARY

O'Brien & Gere was retained by General Dynamics Ordnance and Tactical Systems Munition Services (GD-OTS MS) to conduct a Comprehensive Performance Test (CPT) at the GD-OTS MS facility located in Joplin, Missouri on the Propellant Thermal Treatment Unit (PTTU). The PTTU consists of pretreatment units and combustion units that treat rocket motors. The purpose of the test program was to demonstrate compliance with the conditions of the Missouri Hazardous Waste Management Facility Permit #MOD985798164 (RCRA Permit) and the Permit to Construct #012012-001 (PTC).

The initial CPT was conducted during the week of April 23-27, 2012 for all parameters. Results from the initial CPT showed that all emission standards were met with the exception of PCDDs/PCDFs emissions which exceeded the RCRA Permit emission limit. Accordingly, a retest was performed during the week of May 28–June 1, 2012 and again test results were above the RCRA Permit limit. A third PCDD/PCDF test program was conducted during the week of June 18-22, 2012. Triplicate test runs were conducted at two conditions that involved operating the newly installed activated carbon system at two different injection rates. PCDD/PCDF emissions at both test conditions were within the RCRA Permit limits. All test programs were conducted in accordance with an approved CPT Plan and under full oversight of EPA Region 7 and the Missouri Department of Natural Resources (MDNR).

The CPT was conducted at a single set of operating condition that included feeding the maximum quantities of the specified waste into the thermal treatment system while operating the Air Pollution Control System (APCS) at worst case conditions.

Results of the CPT can be found in Section 5.0 of this document. An overall summary of emission results and/or performance criteria for all regulated parameters is provided in Table 1-1 and 1-2. All test parameters for the CPT ultimately complied with all relevant emission standards.

Table 1-1 Summary of CPT Emission Results – Permit Requirements

Test Method and Emission Parameter	Units	Test Results		RCRA Permit Standards	Air Permit to Construct Standards
		Condition 1[a]	Condition 2[a]		
EPA Method 23 PCDD/PCDF (TEQs)	ng/dscm	0.024	0.017	0.11	---
EPA Method 26A HCl/Cl_2	lb/hr	0.29		---	2.64
	ppm, dry	3.81		21	---
EPA Method 5 PM	lb/hr	0.32 [e]		---	0.30 [b]
	gr/dscf	0.0007		0.0015 [c]	---
EPA Method 29 LVM [d]	µg/dscm	0.48		10	---
SVM [d]	µg/dscm	0.84		23	---

[a] Week of June 18-22, 2012 results. Previous results detailed in Section 5.
[b] Filterable and condensable particulate.
[c] Filterable particulate only.
[d] LVM – Pb and Cd, SVM - As, Be, and Cr.
[e] Permit to be amended, see Section 5.4.

Table 1-2 Summary of CPT Emission Results – Air De Minimis

Test Method and Emission Parameter	Units	Test Result [a]		Air De Minimis
EPA Method 23	tons/yr	Condition 1[b]	Condition 2[b]	6.0E-07
PCDD/PCDF (TEQs)		7.28E-09	6.53E-09	
EPA Method 26A	tons/yr	1.25		10.0
HCl/Cl_2				
EPA Method 5	tons/yr	0.57		25.0
PM				
EPA Method 29				
Cadmium	tons/yr	0.00005		0.01
Lead	tons/yr	0.00014		0.01
Chromium	tons/yr	0.00008		0.002
EPA Method 10	tons/yr	2.45		100.0
CO				
EPA Method 7E	tons/yr	46.4[c]		40.0
NO_X				

[a] Based on 24 hour/day and 365 days/year for 8,760 hour/year.
[b] Week of June 18-22, 2012 results. Previous results detailed in Section 5.
[c] On-stream time of 85% (7,446 hrs/yr) reduces level to 39.4 tons/yr.

2. INTRODUCTION

2.1 PROJECT SCOPE

O'Brien & Gere was retained by General Dynamics Ordnance and Tactical Systems Munition Services (GD-OTS MS) to conduct a Comprehensive Performance Test (CPT) at the GD-OTS MS facility located in Joplin, Missouri on the Propellant Thermal Treatment Unit (PTTU). The PTTU consists of pretreatment units and combustion units that treat rocket motors that are classified as hazardous under state and/or federal regulations.

The initial CPT was conducted during the week of April 23-27, 2012. Results from the initial CPT showed that all emission standards were met with the exception of PCDDs/PCDFs emissions. (see Section 5.1 for additional details). Accordingly, a retest was performed the week of May 28–June 1, 2012 and again the week of June 18-22, 2012 during which PCDDs/PCDFs was retested. All test programs were conducted in accordance with an approved CPT Plan and under full oversight of EPA Region 7 and the Missouri Department of Natural Resources (MDNR) for the following parameters:

- Dioxins and furans
- Particulate matter
- Hydrogen chloride and chlorine
- Arsenic, beryllium, chromium, cadmium, mercury, and lead
- Volatile and semi-volatile organic compounds
- Carbon monoxide
- Nitrogen oxides
- Total hydrocarbons (THC)

Testing was conducted during a single PTTU operating condition while feeding maximum quantities of rocket motor segments to the PTTU. Dave Zoghby of GD-OTS MS was present to coordinate facility operations with the field testing. Scott Postma of EPA Region 7, Steve Jaques of MDNR, Peter Yronwode of MDNR and Richard Swartz of MDNR were present on various days to witness the field testing.

A summary of the test results can be found in Section 5 of this report. The remaining sections of the report include a process description, summary of the scope of work conducted, sampling methods used, test equipment and analytical QA/QC procedures.

2.2 FACILITY ID, MAILING ADDRESS, AND PRIMARY CONTACTS

Facility:
Mr. David Zoghby
Phone: 610-298-3085
Email: dave.zoghby@gd-ots.com.com
GD-OTS Munition Services
4174 County Road 180
Carthage, MO 64836
Facility ID#: MOD 985 798 164

Testing Firm:
O'Brien & Gere Engineers
7600 Morgan Rd.
Liverpool, New York 13090
Contact: Mr. Jeff Gorman, Senior Project Manager
Phone: (315) 956-6022
Email: Jeffrey.Gorman@obg.com

Laboratory:
Maxxam Analytics, Inc.
6740 Campobello Rd.
Mississauga, ON L5N 2L8
Contact: Mike Challis, Lab Manager
Phone: (905) 817-5790
Email: mike.challis@maxxamanalytics.com

2.3 PURPOSE AND OBJECTIVE OF THE COMPREHENSIVE PERFORMANCE TEST

The CPT was designed to demonstrate compliance with the conditions of the Missouri Hazardous Waste Management Facility Permit #MOD985798164 (RCRA Permit) and the Permit to Construct #012012-001 (PTC).

The emissions standards that the PTTU is evaluated against during this CPT are summarized in Table 2-1 below. In addition, process monitoring data was collected in order to set PTTU and APCS operating limits for the following parameters:

The following PTTC operating parameters were evaluated:

- Maximum feed weight;
- Maximum Chlorine feed rate,
- Maximum ash feed rate; and
- Maximum LV and SV Metals feed rates

The following APCS operating parameters were evaluated:

- Minimum Sodium Bicarbonate feed rate;
- Minimum pH HRA to Wet Scrubber Packed Bed,
- Maximum Wet Scrubber Packed Bed Sodium Chloride %; and
- Maximum flue gas flow rate

Table 2-1 Summary of Applicable Emission Standards

Emissions Parameter	RCRA Permit	Air Permit to Construct	Air De Minimis
Dioxins and Furans (D/Fs)	≤0.11 ng/dscm TEQ basis	---	6.0E-07 tons/yr
HCl/Cl_2	≤ 21 ppmv dry as HCl	2.64 lb/hr	10.0 tons/yr
Particulate Matter (PM)	≤ 0.0015 gr/dscf (filterable particulate)	0.30 lb/hr (filterable & condensable particulate)	25.0 tons/yr
Semi-Volatile Metals (As, Cr & Be)	≤ 23 mg/dscm	---	Chromium 0.002 tons/yr
Low Volatile Metals (Pb & Cd)	≤ 10 mg/dscm	---	Cadmium 0.01 tons/yr Lead 0.01 tons/yr
CO	---	---	100.0 tons/yr
NOx	---	---	40.0 tons/yr

3. PROCESS DESCRIPTION

This section presents a summary description of the GD-OTS MS Propellant Thermal Treatment Unit (PTTU). Process Flow Diagrams (PFD) are provided in Appendix A of this Plan. The main parts of the PTTU consist of a Receiving Bay, two Safety Cells, a Transfer Bay, two Propellant Thermal Treatment Chambers (PTTC), a Scrap Metal Handling Area, an Air Pollution Control System (APCS), Runoff Water Sump, Runoff Water Tank and Plant Support Systems. The process is monitored and controlled by a programmable logic control system (PLC) capable of continuously monitoring the process to assure all operational parameters are within regulatory and permit limits while waste is being fed to either unit. The PLC operates on an Uninterruptible Power Supply (UPS) in the event of commercial electrical power failure.

3.1 WASTE FEED SYSTEM

The rocket motors are brought on site by truck or removed from rockets in the MLRS Disassembly Building and taken to one of four storage magazines on the facility site. The magazines are sited and designed for 100,000 pounds Net Explosive Weight (NEW) of Class 1.1 Explosives each. The rocket motors are brought to the PTTU and are removed from their shipping container. Motors are fed into the Safety cells by a conveyor for cutting into segments exposing the propellant. The segments are fed one at a time to one of the PTTC via Transfer Bay and input conveyors. The maximum feed rate to each PTTC is designed to be 2,020 pounds per hour total rocket motor weight (1,300 pounds per hour of propellant) with only one PTTC operating at any time. The feed rate is controlled by the input conveyors, which move each segment thru a set of double doors on the PTTC.

3.2 PTTU MANUFACTURER AND MODEL

The PTTU treatment unit is specially designed by GD-OTS MS and SAB, Elmshorn, Germany. It incorporates the design of the chambers and underwater saws used by EBV GmbH in Germany from 1996 thru 2002, to thermally treat thousands of rocket motors and explosive filled projectiles that are similar to the rocket motors that GD-OTS MS is cutting and thermally treating. The chamber or enclosures are designed by GD-OTS MS. The equipment in the PTTC is manufactured by GD-OTS MS and SAB. The chambers are steel coated with high temperature epoxy. The segment is loaded onto the input conveyer in the Transfer Bay and passes through a double door system for safety and containment of emissions. Once a segment is inside PTTC, the propellant in the segment is ignited by a natural gas fired torch. The segment moves into ignition position and the torch flame impinges on the propellant filler for 3 seconds to ensure the propellant is ignited. Flame sensors verify the torch is lit. The operator watches the segment to verify that the propellant has been ignited and is burning and transfers the segment into the rotary conveying system. The propellant is completely consumed in approximately 20 seconds. There is a residence time of about two minutes in the rotary conveying system which is sufficient time to ensure that the propellant is completely burned before the treated segment exits the PTTC by a discharge conveyor and is collected in a container.

3.3 AIR POLLUTION CONTROL EQUIPMENT

3.3.1 Quench Chamber

The APCS has two Quench Chambers, one for each PTTC. Each Quench Chamber receives the gases generated from its PTTC and cools the pulse of gases from the burning of each rocket motor segment to <600°F. Sodium Bicarbonate (SBC) is injected into the Quench Chamber, after the water spray, to neutralize the Chlorine and Hydrogen Chloride formed during the burning of the rocket motor segment.

Each Quench Chamber is sized for a gas flow of 47,000 acfm at 1,200°F. The Quench Chamber is 6' in diameter and 11' tall and is constructed of 3/8" thick stainless steel to withstand the temperature, corrosion and abrasion. The outside surface is protected from human contact since the temperature of the chamber could reach 300°F during normal operation.

There are four water spray lances in each Quench Chamber to reduce the gases to <600°F. When a rocket motor segment is ignited inside the PTTC, the water spray is started for a preset time, typically 20 seconds, and sprays approximately three gallons of water. Compressed air is added to the spray lances to achieve optimal atomization of the water. This quantity and timeframe will be optimized during the debug and startup phase.

Water for the lances can come from the plant water system, from the water in Run-off Water Tank or from the blowdown water from the wet scrubber.

The SBC is dry injected into the Quench Chamber gas stream after the water injection. A measured weight per minute of SBC is fed from the storage silo to a pin mill grinder to reduce the particle size of the SBC from 150μ to 15 μ. The SBC is transported from the grinder to the Quench Chamber injection lance by compressed air from a dedicated blower. The SBC feed rate to the Quench Chamber is controlled by the feeder on the SBC silo.

3.3.2 Reaction Chamber

The next stage of this system is the Reaction Chamber (former Spray Dryer). The exhaust gases from the Quench Chamber enter the top of the Reaction Chamber where they impact a baffle plate and travel to the bottom. Activated carbon (AC) is injected at the bottom of the baffle to aid in the capture of organic. The Reaction Chamber increases turbulence and residence time to improve the neutralization reaction efficiency. Some particulate matter entering the Reaction Chamber settle out in the bottom of the chamber as the gases travel back to the top of the chamber. The rotary valve on the bottom of the Reaction Chamber transfers the dry solids, which are a non-hazardous waste, to the ash collection system for removal by roll-off containers to a solid waste landfill.

3.3.3 Baghouse

The next stage of the pollution control system is six Baghouses which operate in parallel. The APCS is sized to operate with five Baghouses with one as a spare. Unreacted acidic components, SBC and the remaining portion of the total particulate matter are carried over to the Baghouse in the exhaust gases leaving the Reaction Chamber. Although the primary function of the Baghouse is to remove particulates, additional neutralization reaction takes place in the Baghouse. Unreacted SBC, which collects on the bags, reacts with unreacted hydrochloric acid in the effluent gases from the Reaction Chamber. As a result, a conversion in excess of 99.9 percent for chlorides has been shown. AC also collects on the bags and captures organics that might otherwise pass through the bags.

Each Baghouse has a pulse-jet cleaning system which uses compressed air to clean the bags. The ash composed of the reaction products, fly ash and unreacted SBC, is collected in the bottom section of the Baghouse. The Rotary Valves on the bottom of the Baghouse chambers transfers the dry solids, which are a non-hazardous waste, to the ash collection system for removal by roll-off containers to a solid waste landfill.

Each Baghouse is sized to accommodate approximately 5,200 acfm of flue gas at 400°F. Each Baghouse is 4' wide x 11'deep x 21' high, constructed of carbon steel and has 80 PTFE bags which are 16' long x 6" diameter. The air to cloth ratio in the Baghouse, which is defined as the actual gas flow divided by the cloth area available for filtration, is approximately 2.5 : 1 ft3/min-ft2. The pressure drop across the Baghouse is controlled between 2" to 7" water column (WC).

3.3.4 Wet Scrubber

The next stage of the pollution control system is the Wet Scrubber which completes the removal of the acid gases and particulates. The Wet Scrubber consists of a Quench Venturi, a Quench Vessel and a Packed Bed Scrubber and is designed to remove 99%+ of the HCl and 90% of the particulate in the gas stream. The gases from the Baghouse pass through the Quench Venturi and Quench Vessel to the bottom of the Scrubber and are pulled through the Packed Bed to the ID Fan. The Quench Venturi and Quench Vessel are designed for a gas flow rate of 31,000 acfm at 400°F and the Packed Bed Scrubber is designed for a gas flow rate of 24,000 acfm at 170°F.

The Quench Venturi is constructed of stainless steel and is 3' in diameter by 3' high. The Quench Venturi is mounted on top of the Quench Vessel and contains the water quench lances. The Quench Vessel is constructed of fiberglass reinforced plastic (FRP) and is 8' in diameter and 10'8" high. The Quench Vessel outlet has a FRP demister to remove water droplets from the gas stream before it enters the Scrubber. The Scrubber is 8' in diameter and 28' high and is made of FRP. The Scrubber contains a 12' high bed of RPT 2" Hiflow Rings type 50-6 polypropylene packing material, a mesh pad demister and water spray headers. The Pump House Enclosure

constructed of FRP and polyethylene panels, houses the three recycle pumps, two metering pumps, NaOH tote, control valves and instruments. The Pump House Enclosure also contains a safety shower and heaters/ventilation fan for temperature control.

The gas stream enters the Quench Venturi from the Baghouse at 250°F to 300°F and is cooled with a water/NaOH quench to 140°F to 170°F by the fresh water quench lance and a recycle water quench lance. The Quench Vessel, below the venturi, is the catch tank for the excess quench water sprayed in the venturi. The Quench Vessel holds 750 gallons of recycle water/NaOH solution, which is pumped back to the recycle water quench lance by one of the Quench Recycle Pumps. The Quench Recycle Pumps are designed for 150 gpm flow with one pump being an inline spare which can be automatically started. The Quench Vessel also contains a 2KW heater to protect the system from freezing in the winter if it is down for a period of time.

The differential pressure (DP) across the Quench Venturi, Quench Vessel and demister is monitored and runs 1" to 2" WC. If the DP increases above this, the recycle water flow to the Quench Spray Lance is manually started to clean the demister. If this does not reduce the DP, then the demister is replaced. The gas temperature at the outlet of the Quench Vessel is monitored and if the temperature goes above set point the fresh water quench lance is opened until the temperature is reduced. The water level in the Quench Vessel is monitored and if the level goes below set point then water is added by opening the blowdown water valve on the scrubber.

The pH is monitored in the quench recycle flow and if it drops below a pH of 8, the NaOH Metering Pump adds 25% NaOH solution to the Quench Vessel to increase the pH. The conductivity is monitored in the quench recycle flow and if it increases over 15% NaCl, the blowdown valve opens for a set time to purge quench recycle water from the Quench Vessel to the Blowdown Storage Tank. This lowers the Quench Vessel water level, causing blowdown water from the Scrubber to be added to the Quench Vessel to reduce the NaCl levels.

The 25% NaOH solution is received in 330 gallon portable totes to supply the Metering Pumps for the Quench and Scrubber. A low level alarm on the tote signals when a tote needs to be replaced. With the alarm and the significant quantity of water/NaOH solution maintained in the Quench Vessel and the Scrubber, there is sufficient time to replace the tote. The tote has a dedicated secondary containment system with a leak detection sensor to monitor for any leakage and contain minor spills.

The gases from the Quench enter the bottom of the Packed Bed Scrubber and flow up through the packing material. The water/NaOH solution is sprayed on the top of the packing material by atomization nozzles on the recycle water header to keep the packing material clean and adsorb HCl in the gas stream. The Scrubber holds 1,000 gallons of water/NaOH solution, which is pumped back to the recycle water header by the Scrubber Recycle Pump. The Scrubber Recycle Pump is designed for 400 gpm flow. The Scrubber contains a 2KW heater to protect the system from freezing in the winter if it is down for a period of time. The gases exit the packing material through a mesh pad demister to remove any entrapped water droplets. The demister has a clean water spray header to periodically clean demister pad.

The water level in the Scrubber is monitored and if the level goes below the set point, the fresh water is added. The DP across the packing material and demister pad is monitored and runs 2" to 4" WC. If the DP increases above set point, the demister pad and/or packing material are cleaned or replaced.

The pH in the recycle water flow is monitored and when it drops below 8, the Scrubber Metering Pump adds a 25% NaOH solution to the recycle water flow. The conductivity in the recycle water flow is monitored and when it increases to 10% NaCl, the blowdown valve opens for a set time to purge recycle water over to the Quench Vessel. This lowers the Scrubber water level causing fresh water to be added, reducing the NaCl level.

3.3.5 Blowdown Storage Tank

Blowdown water is pumped from the Quench Vessel to the Blowdown Storage Tank. The Blowdown Storage Tank is a 5,500 gallon FRP tank with a flat bottom and flat top and is 10' diameter and 11' tall. The Blowdown Storage Tank has a high and low level alarm. The blowdown rate is expected to be <0.5 gpm or about 720 gallons per day with the tank designed to hold about seven days of operation. The blowdown water contains ~ 15 %

NaCl and a small quantity of particulates. The blowdown water will be tested and disposed of as required, but based on the pilot test it should be non-hazardous and should be disposed of at a local POTW.

3.3.6 Induced Draft Fan

The exhaust gases from the Scrubber enter the Induced Draft (ID) Fan at 100°F to 150°F. The ID Fan draws the gases out of the operating PTTC and through the downstream air pollution control equipment. The ID Fan is sized for 24,000 acfm with a 200 hp motor to prevent any fugitive emission from the operating PTTC.

3.3.7 Stack

The exhaust gases from the APCS enter a Stack where they are released to the atmosphere. The Stack for this APCS is 100 feet tall, with the lower 60 feet being 40.5 inches in internal diameter and the upper 37 feet being 33 inches in internal diameter. The Stack is positioned on a concrete pad 27' by 30' by 30" high with guy wires to provide additional tie down capability. The Stack is constructed of corrosion resistant carbon steel with a galvanized coating. Condensed water from the Stack, if any, drains to the APCS pad sump.

3.4 CONTINUOUS EMISSIONS MONITORING

Stack gas flow is monitored on a continuous basis to ensure the requirements of Procedure T for the facial velocities of the PTTC openings are maintained. The facial velocity of air at the openings of the PTTC is calculated and interlocked to the segment feed system as part of the Automatic Waste Feed Cutoff System (AWFCO) discussed in Section 3.6 below.

Stack gases are monitored on a continuous basis for hydrogen chloride, moisture, carbon monoxide, and oxygen via a Continuous Emissions Monitoring System (CEMS). Responses from the CEMS are fed to the Programmable Logic Controller (PLC), where the HCl and CO hourly rolling averages are calculated. The HCl hourly rolling average is interlocked to the PTTC input conveyors as part of the AWFCO discussed in Section 3.5 below. The following provides a brief description of the CEMS instruments including the operating range and measurement principle.

Parameter	Mfg.	Range	Current Level	Principle
Carbon Dioxide	EcoChem MC3 Analyzer	0-25%	<1%	Infrared
Carbon Monoxide	EcoChem MC3 Analyzer	0-600 ppm	5 – 300 ppm	Infrared
Hydrogen Chloride	EcoChem MC3 Analyzer	0-600 ppm	10 ppm	Infrared
Moisture	EcoChem MC3 Analyzer	0-40%	6%	Infrared

In addition, the gases from the Baghouses to the Wet Scrubber are monitored for HCl levels by a second identical CEMS unit. This is used to determine the effectiveness of the sorbent neutralization of the HCl. The HCl levels are recorded and there is a high level alarm. This is not an AWFCO since the Wet Scrubber is the final HCl removal device and the Stack HCl level is the permit required monitoring location.

Four sample ports, 90 degrees apart, are located at 39' height and four sample ports, 90 degrees apart, are located at 38'6" height. The inlet duct is located at 10'6" height. All sample ports are at least 8 pipe diameters of straight flow after the inlet duct and at least 2 pipe diameters before the end of the stack as required by EPA Method 1. A pitot style Flow Meter is installed in the stack to monitor flow through the system. The flow meter is installed on the stack platform at 38' height, based on manufacturers' specification and EPA Method 01. The EcoChem MC3 Analyzer heated sample probe and line is installed on the stack platform at 38' height, based on manufacturers' specification and EPA Method 1.

3.5 AUTOMATIC WASTE FEED CUT-OFF SYSTEM

The PTTU have an AWFCO System that shut off the feeding of segments into the PTTC in the event certain operating parameters deviate from allowable set limits. The PLC continuously monitors operating parameters,

making adjustments to the process as needed for proper control. Alarm logic is incorporated into the PLC to automatically initiate an AWFCO. Table 2-1 summarizes current AWFCO set points. Table 2-2 summarizes the additional instrumentation on the APCS, current alarm levels or ranges and instrument types. The data from all the instruments on Table 2-1 and 2-2 is sent from the PLC to the data historian for recording and trending.

AWFCO limits have been established based on regulatory or permit limits that are summarized below.

» Regulatory/permit limits – established to comply with existing permits. An example of this type of limit is the PTTC maximum pressure AWFCO, below which segment ignition and movement stops until the proper minimum pressure is re-established.

In addition to the AWFCO system, operators can manually shutdown waste feed or the entire process should this be needed. The PLC has also been programmed to stop the waste feed based on other factors summarized below.

» Process safety limits – established to assure process equipment is protected and unsafe operating conditions do not occur. An example of this is failure of segment to ignite which would result in unburned propellants exiting the PTTC.

» Utility or Power failure – established to facilitate a controlled shutdown of the process during loss of process air, or electricity. An example of this is the loss of compressed air that is necessary for cleaning of the baghouse bags. Wastes will not be re-introduced into the PTTC until proper operation is re-established.

4. SAMPLING PROGRAM OVERVIEW

This section provides a summary of the PTTU CPT program and a discussion of the sampling methods used during the field testing. Test equipment calibration and QA/QC procedures are detailed in Section 5.0.

4.1 SAMPLING SUMMARY

O'Brien & Gere conducted source emission testing at the exhaust of APCS serving the PTTU during a single operating condition. Testing was conducted to determine emissions of the following pollutants:

- Dioxins and furans
- Filterable and condensable particulate matter
- Hydrogen chloride and chlorine
- Arsenic, beryllium, chromium, cadmium, and lead
- Volatile and semi-volatile organic compounds
- Carbon monoxide
- Nitrogen oxides
- Total hydrocarbons (THC)

Testing for each pollutant was conducted in triplicate during each operating condition.

4.2 SAMPLING LOCATION

Test ports in the 40.5-inch inside diameter exhaust stack are located approximately 28 feet (8.3 diameters) downstream of the inlet breaching and approximately 20 feet (5.9 diameters) upstream of a change in the stack diameter. In accordance with EPA RM 1, isokinetic sampling was performed at 12 traverse points from the test ports at Level A. The VOST and CEMS samples were collected at a single point in the stack at level C. Actual traverse point locations are shown in **Table 4-1**. A schematic of the exhaust stack can be found in **Figure 4-1**.

4.3 SAMPLING PROCEDURES

4.3.1 HCl/Cl_2

A combined particulate and halogens (HCl and Cl_2) sample train was utilized for this CPT, in accordance with USEPA Method 26A procedures. The sample train consisted of a glass button-hook nozzle attached to a heated glass lined probe (248 °F – 273 °F). A thermocouple and S-type pitot tube was attached to the probe for measurement of temperature and velocity.

Sample gas was drawn through the nozzle and probe isokinetically and then passed through a heated, Teflon Mat filter (248 °F - 273 °F). Upon exiting the filter, the gas was drawn through a series of five impingers containing the halogen absorbing solutions and silica gel. The first and second impingers each contained 100 mls of 0.1N H2SO4 solution to capture the HCl, in the flue gas stream. The third and the fourth impingers each contained 100 mls of a 0.1N NaOH solution to remove the Cl_2. The fifth impinger contained a pre-weighed amount of silica gel to remove any residual moisture present in the gas stream. Following the impinger system, the gas was drawn through a dry gas meter, a calibrated orifice, and a leak-free pump.

Sampling was conducted isokinetically from 12 points (6 points on each traverse) for ten minutes per point. Each test run was 120 minutes in duration. Sampling was conducted across two perpendicular stack diameters at the points indicated in **Table 4-1**.

4.3.2 Metals

Multiple metals sampling was conducted in accordance with USEPA Method 29 procedures. The sample train consisted of a glass button-hook nozzle attached to a heated glass lined probe (248 °F ± 25 °F). A thermocouple and S-type pitot tube was attached to the probe for measurement of flue gas temperature and velocity.

Sample gas was drawn through the nozzle and probe isokinetically and then passed through a heated, glass fiber filter (248 °F ± 25 °F). Upon exiting the filter, the gas was drawn through a series of six impingers containing the reagents prescribed by the method. The first and second impingers each contained 100 mls of 5% HNO3/10% H_2O_2 solution to enhance the collection of metals of interest. The third impinger was empty to catch any overflow from the first two impingers. The fourth impinger contained a pre-weighed amount of silica gel to remove any residual moisture present in the gas stream. Following the impinger system, the gas was drawn through a dry gas meter, a calibrated orifice, and a leak-free pump.

Sampling was conducted isokinetically from 12 points (six points on each traverse) for ten minutes per point. Each test run was 120 minutes in duration. Sampling was conducted across two perpendicular stack diameters at the points indicated in **Table 4-1**.

4.3.3 PCDD/PCDF and Semi-Volatile Organics

PCDD/PCDF and SVOC emissions were determined simultaneously by combining Method 23 and Method 0010 into a single sample train. The sample train consisted of a heat-traced probe with a borosilicate buttonhook nozzle, and an attached thermocouple and S type pitot tube. The glass probe was maintained at a temperature of 250°F ± 25°F. After the probe, the gas passed through a heated glass fiber filter. Downstream of the heated filter, the sample gas passed through a water-cooled module, then through a sorbent module containing the XAD-2 sorbent resin. The XAD module, which was kept at a temperature below 20°C, was followed by a series of four impingers. The XAD inlet temperature was monitored to ensure that the proper temperature is maintained. The first impinger, which acted as a condensate reservoir was connected to the outlet of the XAD module and was modified with a short stem so that the sample gas would not bubble through the collected condensate. Condensate collected in the first impinger was collected and analyzed for SVOCS. The first and fourth impingers were both empty. The second and third impingers each contained 100 mls of HPLC Grade or better water and the fifth impinger contained a pre-weighed amount of silica gel. All connections within the train were either glass or Teflon; no sealant greases were used. The impingers were followed by a pump, dry gas meter, and a calibrated orifice meter. Condensate collected in the first impinger was collected and analyzed for SVOCS.

Sampling was conducted isokinetically with readings of the flue gas parameters recorded at every sampling point during the traverse. Sampling was conducted at 12 sampling points (six points on each traverse) for 15 minutes per point to ensure that a minimum of 3 cubic meters were collected during each run. Each test run had a duration of 180 minutes.

4.3.4 Volatile Organic Sampling Train (VOST)

VOST sampling was conducted in accordance with procedures outlined in SW-846 Method 0031 to determine the standard analytical list of volatile organic compounds.

The VOST system was operated at a flow of 0.5 lpm for a period of 40 minutes. This rate and sampling time yields a 20 liter sample. Three samples constituted one VOST run. The VOST sampling was conducted at a single point in the PTTU exhaust stack using a heated sampling probe. The sample train consisted of a glass-lined probe with a glass wool plug to remove particulate, followed by an assembly of condensers and organic resin traps. The gas stream was cooled by a water-cooled condenser and VOCs were collected on a set of sorbent traps (Tenax-GC/Tenax-GC/Anasorb-747). Liquid condensate was collected in an impinger that was placed between the two Tenax-GC traps and Anasorb-747 trap.

The sample temperature was monitored at the outlet of the sample probe and at the inlet to the first Tenax cartridge using thermocouples. The gas temperature through the probe was maintained above 135°C to prevent premature volatile condensation. The temperature of the gas when it passes through the resin cartridges was maintained at less than 20°C.

4.3.5 Particulate Matter

Filterable PM and CPM emissions were determined in accordance with USEPA RM 5/202. The front-half of the sample train consisted of a stainless steel nozzle, a heated glass-lined probe with a Type-S Pitot tube attached. Each PM sample was collected on a quartz fiber filter maintained at a temperature of 248°F (+/- 25°F).

The back-half sample train consisted of a coil condenser, two glass impingers, an unheated filter (meeting the requirements of RM 202, Section 7.1.1) followed by two additional impingers and a metering console. The first and second impingers were empty. The first impinger did not have a stem attached and the second impinger was of the modified Greenburg-Smith design.

The CPM filter was a nonreactive, non-disintegrating polymer filter without organic binder. The CPM filter was maintained between 65°F and 85°F. The third impinge contained 100 ml of deionized ultra-filtered water. The fourth impinger contained a known weight of indicating type silica gel.

At the completion of each test run the front-half of the sample train was recovered in accordance with RM 5. The heated filter is removed from the housing, placed in a petri dish and labeled. The nozzle, probe, and front half of the filter housing of the RM 5 train was brushed and rinsed a minimum of three times with acetone and placed in a sample container.

The CPM sample train remained chilled and was purged with ultra high purity nitrogen at a rate of 20 liters per minute for 60 minutes. Water was re-circulated in the coil condenser during the purge and the sample train was iced down.

Sample recovery of the impinger train consisted of measuring the contents of impingers 1 and 2 and placing the sample in container #3. The back half of the heated filter holder, the first two impingers, front half of the CPM filter and connecting glassware were rinsed a minimum of two times with water and collected in container #3. Following the water rinse, the previously mentioned glassware was rinsed with acetone and then rinsed two times with hexane and placed in container #4. The CPM filter was placed in a petri dish and labeled.

The contents of impinger three were measured and discarded. The dessicant in impinger 4 was placed into its original container and re-weighed.

Sampling was conducted isokinetically from 12 points (6 points on each traverse) for ten minutes per point. Each test run was 120 minutes in duration. Sampling was conducted across two perpendicular stack diameters at the points indicated in **Table 4-1**.

4.3.6 Continuous Emissions Monitoring

A transportable CEMS was used to monitor the stack flue gas for NO_X, CO, THC, O_2 and CO_2, in accordance with USEPA Methods 7E, 10, 25A and 3A, respectively.

The CEMS consisted of three subsystems: sample acquisition/conditioning, sample analysis, and a data acquisition system. The sample acquisition/conditioning unit was designed to deliver a representative sample of the stack gas stream to the sample analysis subsystem. A heated probe was placed at a representative point in the stack. The probe was attached to a heated filter box (300-350°F), which contains a Gellman type filter to remove any heavy particulate matter present in the gas stream. After passing through the filter, the flue gas was passed through a heated sample line to a condenser to remove any moisture present in the gas stream. The flue gas was then directed to a manifold system, which in turn will direct a portion of the gas to all of the analyzers with the exception of the THC analyzer. Just upstream of the condenser, a "T" was placed in the line and a second heated sample line (300-350°F) was attached at this point. This heated line was connected directly to the back of the THC analyzer. This modification was used to avoid the possibility of some organic compounds condensing out in the condenser, resulting in a reduced THC concentration.

A data acquisition system was used to continuously monitor analyzer outputs. A laptop computer was linked to the instruments via an input/output (I/O) circuit board and PCMCIA interface. The PC polls data from the analyzers five times per second and displays instantaneous data as 2-second averages. Thirty-second averages are also displayed and written to a data file from which the 1-minute averages were calculated. The 1-minute averages were printed out for each test run.

At the beginning of each sampling day, direct instrument calibrations for zero and two upscale gases was performed prior to initiation of testing. Following these direct calibrations, system calibrations were performed

both prior to and following each run using a zero and one upscale gas concentration. Following completion of the runs, one complete system calibration was performed.

4.4 ANALYTICAL PROCEDURES

This section delineates the analytical protocols that were used to analyze samples during this test program. Samples of stack gas were collected and analyzed for the parameters previously discussed using the appropriate laboratory protocols detailed in this section.

4.4.1 Metals

The sampling train generated two individual samples for analysis. The first sample, labeled Fraction 1A consisted of the digested sample from the front half of the train, particulate filter and the front-half nitric acid probe rinse. Fraction 2A consists of digestates from the HNO_3/H_2O_2 impingers 1, and 2.

Analyses for metals were performed using Inductively Coupled Argon Plasma Mass Spectroscopy (ICP-MS) as described in EPA Method 6020 (SW-846, 3rd Edition).

All quality control procedures, including the interference check standard, were followed as described in the respective method.

4.4.2 HCl/Cl_2

Impinger samples from stack gas sampling were analyzed by ion chromatography in accordance with EPA Method 9057 without any further preparation.

4.4.3 Particulate Matter

Gravimetric analyses were performed on samples collected from the Method 5 sampling train. Weights were obtained on the front-half acetone rinse and particulate filter using a Mettler H35 analytical balance. Aqueous impingers solutions were extracted by DI water and were dried down in tared glass beakers to a constant weight. The organic impinger solution was extracted by hexane and dried down. Condensable particulate was recovered from the CPM filter through desiccation and extraction using DI water and hexane. Total particulate matter collected is the sum of the weights obtained from the procedures above.

4.4.4 Votatile Organic Compounds

The samples collected from each VOST run consisted of two Tenax cartridge, a Tenax/charcoal backup cartridge, and a condensate sample. All three cartridges were combined and desorbed together and analyzed for the standard list of VOCs using the thermal desorption GC/MS procedures specified in SW-846 Method 5041A. Condensate samples were analyzed using SW-846 Method 8260B.

4.4.5 PCDDs/PCDFs and Semi-volatile Organic Compounds

Stack gas samples collected using the Method 23/0010 sampling train were analyzed for polychlorinated dibenzo-p-dioxins and polychlorinated dibenzofurans (PCDDs/PCDFs) using a high resolution GC/MS as per SW-846 Method 8290. Analysis of SVOCs collected in the sampling train, were performed by low-resolution mass spectrometry following the analytical protocol of SW-846 Method 8270C.

All components of the combined sampling train were submitted to the laboratory for extraction and analysis. The acetone and toluene rinses were concentrated and combined with the XAD and filter for Soxhlet extraction. Sample fractions were combined so as to yield one analysis.

Table 4-1 Traverse Point Locations

STACK DIAMETER:	40.5	inches
SAMPLING LOCATIONS:	8.3	diameters downstream
	5.9	diameters upstream
MINIMUM NUMBER OF TRAVERSE POINTS AS SPECIFIED BY EPA METHOD 1:	12	
NUMBER OF TRAVERSE POINTS SAMPLED:	12	

Traverse Point Number	Percent of Stack Diameter From Inside Wall	Distance in Inches From Inside Wall
1	4.4	1.8
2	14.6	5.9
3	29.6	12.0
4	70.4	28.5
5	85.4	34.6
6	95.6	38.7

Figure 4-1 Exhaust Stack Schematic

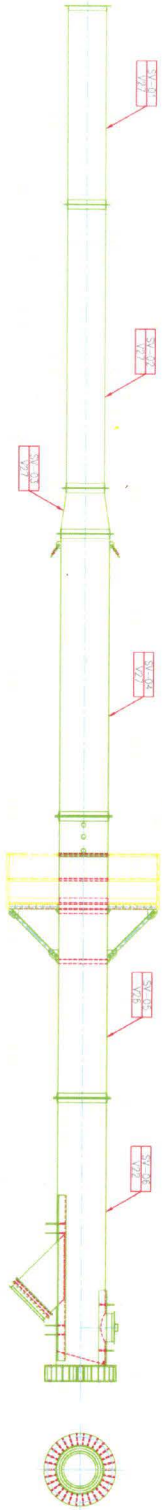

5. PROGRAM RESULTS

The following section briefly discusses the results of this test program. Field data sheets and supporting emission calculations are presented in **Appendix B**. Laboratory analytical data is summarized in **Appendix D**. The CPT was conducted at a single operating condition that included feeding the maximum quantities of the specified waste into the thermal treatment system while operating the Air Pollution Control System (APCS) at worst case conditions.

5.1 PROCESS OPERATING CONDITIONS

This comprehensive performance test program was designed to meet the applicable emission standards and also to gather critical emission measurement data to be used as input to the risk assessment. A single operating condition was designed to accommodate all required testing. The updated table of Automatic Waste Feed Cut-off setpoints is provided in **Table 5-1** and the Additional Instrumentation and Alarms is provided in **Table 5-2**.

A summary of the waste feed data collected during the testing is provided in **Table 5-3**. The waste feed rate is summarized on an hourly rolling average basis and on thirty minute rolling average basis times two for an hourly quantity. This was done since we currently replace saw blades every 75 minute but did not have many 60 minute periods without a blade change. Throughout the test program, detailed process information was collected continuously by the facility's process control computers and data historian. **Table 5-4** provides a summary of process data including minimum, maximum and average values for key process variables recorded during all sampling run periods. Detailed one-minute process data summaries are included in **Appendix A**.

5.2 DIOXINS AND FURANS (PCCD/PCDF) RESULTS

5.2.1 Week of April 23-27, 2012 (Initial CPT)

A summary of the dioxins and furans emissions is provided in **Table 5-5**. The dioxins and furans concentrations for the PTTU exhaust averaged 0.345 ng/dscm, not within the RCRA Permit limit of 0.11 ng/dscm. The corresponding mass emission rates averaged approximately 3.02E-08 lb/hr. The water sprays on the quench chamber were on and controlling at a lower than normal setpoint for this test.

5.2.2 Week of May 28-June 1, 2012 (PCDD/PCDF Retest No. 1)

A summary of the dioxins and furans emissions is provided in **Table 5-6**. The dioxins and furans concentrations for the PTTU exhaust averaged 0.277 ng/dscm, not within the RCRA Permit limit of 0.11 ng/dscm. The corresponding mass emission rates averaged approximately 2.50E-08 lb/hr. The water sprays on the quench chamber were off, typical for normal operation for this test.

5.2.3 Week of June 18-22, 2012 (PCDD/PCDF Retest No. 2)

- Test Condition 1 – Activated Carbon Injection at 18 lbs/hr.

A summary of the dioxins and furans emissions determined during Test Condition 1 is provided in **Table 5-7**. The dioxins and furans concentrations for the PTTU exhaust averaged 0.024 ng/dscm, within the RCRA Permit limit of 0.11 ng/dscm. The corresponding mass emission rates averaged approximately 2.06E-09 lb/hr.

- Test Condition 2 – Activated Carbon Injection at 25 lbs/hr.

A summary of the dioxins and furans emissions determined during Test Condition 2 is provided in **Table 5-8**. The dioxins and furans concentrations for the PTTU exhaust averaged 0.017 ng/dscm, within the RCRA Permit limit of 0.11 ng/dscm. The corresponding mass emission rates averaged approximately 1.51E-09 lb/hr.

5.3 HCl AND Cl_2 RESULTS

A summary of the HCl and Cl_2 emissions is provided in **Table 5-9**. The combined HCl and Cl_2 concentrations for the PTTU exhaust averaged approximately 3.81 ppm, within the RCRA Permit limit of 21 ppmv, dry. HCl mass emission rates averaged approximately 0.29 lb/hr, within the MDNR Air Permit limit of 2.64 lb/hr.

5.4 PARTICULATE MATTER RESULTS

A summary of the PM emissions is provided in **Table 5-10**. The filterable PM concentrations for the PTTU exhaust averaged approximately 0.0007 gr/dscf, within the RCRA Permit limit of 0.0015 gr/dscf. The combined filterable and condensable PM mass emission rates averaged approximately 0.32 lb/hr, not within the MDNR Air Permit limit of 0.30 lb/hr. Based on Special Condition 4.J, an amendment to the Air Permit to Construct will be submitted.

5.5 METALS RESULTS

A summary of the metals emissions categorized by semi-volatile metals (SVM) and low-volatile metals (LVM) is provided in **Table 5-11**. The SVM emissions averaged approximately 0.84 µg/dscm, within the RCRA Permit limit of 23 ug/dscm and the LVM emissions averaged 0.48 µg/dscm, within the RCRA Permit limit of 10 ug/dscm.

5.6 CARBON MONOXIDE RESULTS

A summary of the CO data can be found in **Table 5-12**. The CO emissions averaged approximately 5.48 ppm, dry and the corresponding mass emission rates averaged approximately 0.56 lb/hr.

5.7 NITROGEN OXIDES RESULTS

A summary of the NO_X data can be found in **Table 5-12**. The NO_X emissions averaged approximately 63.2 ppm, dry and the corresponding mass emission rates averaged approximately 10.6 lb/hr.

5.8 RISK ASSESSMENT TEST RESULTS

This section presents a summary of the test parameters that were measured to serve as input to the risk assessment modeling process.

5.8.1 Total Hydrocarbon Results

A summary of the THC data can be found in **Table 5-12**. The THC emissions averaged approximately 2.35 ppm, dry.

5.8.2 Semi-volatile Organic Compound Results

Emission data were determined for a target list of SVOCs (a total of 72 compounds). Emission results for detected SVOCs are provided in **Table 5-13**. Additional detailed information is provided with the analytical data report in **Appendix D**.

5.8.3 Volatile Organic Compound Results

Emission data were determined for a target list of VOCs (a total of 45 compounds). Emission results for detected VOCs are provided in **Table 5-14**. Additional detailed information is provided with the analytical data report in **Appendix D**.

Table 5-1 Automatic Waste Feed Cut-offs

Parameter	Setpoint	Units	Tag #	Equipment Model	Basis
High Waste Feed Weight to PTTC	2,020 HRA	Lb/hr	PLC Calc		AMHRA All
High PTTC Pressure	-0.20 OMA	in. w.c.	PT-117 PT-118	Foxboro 863DP	MS
SBC Blower Operating	On	On/Off	M-4		MS
Low SBC Feed rate	25 HRA	Lbs/min	M-2 PLC Calc		MS
Low AC Feed rate	18 HRA	Lbs/hr	M-10 PLC Calc		ATRA D/F
High Baghouse Inlet Temperature	400	° F	TT-124	Type K Thermocouple & Foxboro Transmitter RIS	MS D/F & Metal
Low Baghouse DP	1.5	in. w.c.	DPT-154 DPT-160 DPT-166 DPT-205 DPT-211 DPT-217	Foxboro 863DP	MS
Broken Bag Detectors	On	On/off	BBD-153 BBD-159 BBD-165 BBD-204 BBD-210 BBD-216	Tyco EMP6	MS PM
High Quench Vessel NaCl Level	12	% NaCl	CON-100-2	Rosemount 3900	MS
Low Quench Vessel pH	4	pH	CON-100-1	Rosemount 3900	MS
Low Quench Vessel Recycle Water Flow Rate	100	gpm	FIT-200	Toshiba GF63210/LF622	MS
Low Packed Bed Recycle Water Flow Rate	200	gpm	FIT-300	Toshiba GF63215/LF622	MS
Low Packed Bed DP	2.5	in. w.c.	DPIT-200	Rosemount 2051	MS
Low Packed Bed pH	6.5	pH	pH-200-1	Rosemount 3900	MS
High Packed Bed NaCl Level	13.7	% NaCl	CON-200-2	Rosemount 3900	ATRA PM
Low Stack Gas Flow Rate	18,000 OMA	acfm	FT-173	Tyco OPAL 300DP	MS
High Stack Gas Flow Rate	24,590 HRA	acfm	FT-173	Tyco OPAL 300DP	ATRA All
High Stack HCl Level	21 HRA 2.640 HRA	ppm lbs/hr	CEMS-2	EcoChem MC3	PL HCl

HRA – Hourly Rolling Average
OMA – One Minute Average
MS – Manufacturers or Engineering Specification
ATRA – Average of the Test Run Averages
D/F – Dioxins and Furnas
Metal – LVM & SVM
PM – Particulate Matter
HCl – Hydrogen Chloride

AMHRA – Average of the Maximum Hourly Run Averages
PL – Permit Limit
OPLs for compliance with:
All – All emissions below

Table 5-2 Additional Instrumentation and Alarms

Parameter	Alarm Setpoint or Normal Range	Value	Tag #	Equipment Model	Action Performed
Flame Sensor	No Signal	No Signal	Sensor	UV Detector	A
PTTC Chamber Temperature	0 - 500	° F	TT-117 TT-118	Type K Thermocouple & Foxboro Transmitter RIS	R
PTTC Exit Temperature	1,200	° F	TT-120 TT-122	Type K Thermocouple & Foxboro Transmitter RIS	R
Quench Chamber Water Low Flow	0 to 12	gpm	FIT-101	Clark Sonic Model CSLFB	R
SBC Particulate Sensor	Off	On/Off	FS-101 FS-102	Auburn Tribo.dsp Model U3400	A
Reaction Chamber High Inlet Temperature	550	° F	TT-119	Type K Thermocouple & Foxboro Transmitter RIS	R
Baghouse High DP	8	in. w.c.	DPT-154 DPT-160 DPT-166 DPT-205 DPT-211 DPT-217	Foxboro 863DP	A
Wet Scrubber High Inlet HCl Level	750 HRA	ppm	CEMS-1	EcoChem MC3	A
Quench Vessel High Temperature	180	° F	TIT-200	Rosemount 68 RTD Rosemount 644 Transmitter	A
Quench Vessel Fresh Water Flow Rate	0 – 50	gpm	FIT-100	Toshiba GF63201 LF622	R
Quench Vessel High DP	5	in. w.c.	DPIT-100	Rosemount 2051	A
Quench Vessel Level Low / High	20 / 38	in	LIT-100	Rosemount 2051	A
High Quench Vessel pH	11.5	pH	CON-100-1	Rosemount 3900	A
High Packed Bed pH	11.5	pH	pH-200-1	Rosemount 3900	A
Packed Bed High DP	5	in. w.c.	DPIT-200	Rosemount 2051	A
Packed Bed Level Low / High	20 / 40	in	LIT-200	Rosemount 2051	A
Blowdown Water Flow Rate	0 – 10	gpm	FIT-400	Toshiba GF63201 LF622	R
Blowdown Tank High Level	90	%	LT-102	Flowline DL34-01	A
High Stack CO Level	0 – 600	ppm	CEMS-2	EcoChem MC3	R
High Stack Moisture Level	0 – 10	%	CEMS-2	EcoChem MC3	R
High Stack Temperature	0 - 200	° F	TT-173	Tyco OPAL 300DP	R
High Stack Pressure	0 – 2	in. w.c.	DPT-173	Tyco OPAL 300DP	R

Note: A = Alarm; R = Record

Table 5-3 Summary of Waste Feed Data

Building #3 CPT Summary of Feed Rate Data

Average of Maximum Hourly Rolling Averages				
7/20/2012				
	lbs	**Segments**		
Max Hourly HW Feed Rate HRA 30 Min Basis	**2,076**	**49.4**		
Max Hourly HW Feed Rate HRA	**1,983**	**47.2**		
Average of Methods	**2,030**	**48.3**		
	4/25/2012			
	Run 1	**Run 2**		
Max Hourly HW Feed Rate HRA 30 Min Basis	2,020	2,020		
Max Hourly HW Feed Rate HRA	1,936	1,978		
	4/26/2012			
	Run 3	**Run 4**	**Run 5**	**Run 6**
Max Hourly HW Feed Rate HRA 30 Min Basis	2,104	2,022	2,186	2,104
Max Hourly HW Feed Rate HRA	1,979	1,937	1,978	2,020
	6/19/2012			
	Run 1	**Run 2**	**Run 3**	
Max Hourly HW Feed Rate HRA 30 Min Basis	2,022	2,104	2,106	
Max Hourly HW Feed Rate HRA	1,979	2,021	2,021	

Table 5-4 Summary of Process Operating Data

Building #3 CPT Summary of Operating Data

	Test Average			Run 1 - 4/25/2012			Run 2 - 4/25/2012		
	Average	Min	Max	Average	Min	Max	Average	Min	Max
PTTC East Exit Temp °F TT-120	467	265	619	284	207	348	Not Operating		
PTTC West Exit Temp °F TT-122	370	153	617	Not Operating			231	87	427
PTTC East Pressure PT-118 "H20	-0.63	-1.00	-0.14	-0.68	-1.08	-0.22	Not Operating		
PTTC West Pressure PT-119 "H20	-0.44	-0.77	-0.02	Not Operating			-0.56	-0.98	-0.04
PTTC East Pressure "H2O OMA	-0.64	-0.76	-0.54	-0.68	-0.84	-0.60	Not Operating		
PTTC West Pressure "H2O OMA	-0.44	-0.58	-0.36	Not Operating			-0.54	-0.78	-0.43
Quench Chamber Water Flow Rate gpm	0.6	0.0	4.5	2.1	0.0	11.0	0.0	0.0	0.0
Sorbent Feed Rate lbs/min	35	35	35	32.0	32.0	32.0	32.0	32.0	32.0
Sorbent Feed Rate lb/min HRA	35	35	35	32.0	32.0	32.9	32.0	32.0	32.0
Baghouse Inlet Temp °F TT-124	276	204	350	243	183	309	228	158	295
Baghouse Inlet Temp °F HRA TT-124	272	252	287	241	226	249	225	200	242
BH #1 DP "H2O	3.3	2.8	4.0	3.3	2.8	4.0	3.2	2.7	3.9
BH #2 DP "H2O	3.4	2.9	4.0	3.3	2.8	3.8	3.3	2.9	3.9
BH #3 DP "H2O	3.2	2.3	3.8	3.1	2.0	3.7	3.1	1.8	3.8
BH #4 DP "H2O	3.3	2.3	3.9	3.2	2.3	4.1	3.1	0.1	3.8
BH #5 DP "H2O	3.3	2.5	4.0	3.2	2.3	3.8	3.1	2.3	3.9
BH #6 DP "H2O	2.0	1.5	2.7	0.0	0.0	0.0	3.4	1.2	4.1
Baghouse Total DP "H2O	3.3	2.8	3.7	3.2	2.7	3.6	3.2	2.6	3.5
Packed Bed Recycle Water Flow gpm	232	229	235	229	226	231	229	226	234
Packed Bed Recycle Water Flow gpm HRA	232	231	234	229	228	231	229	229	230
Packed Bed PH	8.6	8.5	8.7	8.0	7.9	8.2	8.2	7.9	8.6
Packed Bed pH HRA	8.6	8.5	8.6	8.0	8.0	8.1	8.2	8.0	8.4
Packed Bed NaCl %	13.5	12.9	14.3	14.9	14.0	15.7	14.8	14.2	15.3
Packed Bed NaCl % HRA	13.7	13.2	14.3	14.7	14.3	15.3	14.9	14.7	15.3
Packed Bed DP "H2O	2.7	2.1	3.0	2.7	2.2	3.0	2.9	2.2	3.3
Packed Bed DP "H2O HRA	2.7	2.6	2.8	2.7	2.5	2.8	2.8	2.7	3.1
Quench Fresh Water Flow gpm	1.5	0.0	4.6	1.5	0.0	3.5	0.9	0.0	3.4
Quench Recycle Water Flow gpm	136	135	137	145	144	146	145	144	146
Quench Recycle Water Flow gpm HRA	136	136	137	145	145	145	145	145	145
Quench Vessel NaCl %	5.4	4.5	6.2	5.9	5.2	6.8	6.2	5.2	8.3
Quench Vessel NaCl % HRA	5.7	5.2	6.2	5.8	5.5	6.3	6.2	5.8	7.0
Quench Vessel pH	8.3	7.4	8.6	7.6	6.1	8.2	7.6	6.7	8.2
Quench Vessel pH HRA	8.3	8.1	8.4	7.6	7.5	7.9	7.6	7.5	7.9
Quench Vessel DP "H2O	3.2	2.7	3.4	2.7	2.3	3.0	2.9	2.3	3.2
Quench Vessel DP "H2O HRA	2.2	1.9	3.7	2.7	2.5	2.8	2.8	2.7	3.1
Blow Down Water Flow gpm	1.7	1.2	2.4	0.0	0.0	0.0	0.0	0.0	0.0
HCL Level ppm	5.7	3.7	8.5	0.4	-0.1	2.8	4.3	0.0	15.7
HCL Level ppm HRA	5.4	4.4	6.6	0.0	0.0	0.0	3.1	0.0	8.2
CO Level ppm	15.0	0.0	126.0	7.9	0.0	34.0	36.1	0.0	553.9
Stack Moisture Level %	7.2	5.8	8.1	7.2	6.0	8.4	5.7	0.0	8.5
Stack Flow acfm	24,665	23,205	26,158	24,920	23,118	26,990	25,160	23,366	26,941
Stack Flow acfm OMA	24,658	23,841	25,242	24,894	24,002	25,369	25,185	24,020	26,272
Stack Flow acfm HRA	24,590	24,241	24,819	24,894	24,354	25,041	25,086	24,750	25,558
Stack Flow dscfm	20,239	19,008	21,670	20,448	19,079	22,363	20,997	19,110	23,581
Stack Temp °F	137	132	141	137	132	142	137	132	143
Stack Pressure "H20	0.0	0.0	0.0	0.0	0.0	0.0	0.0	0.0	0.0
HCl Emission lb/min	0.013	0.008	0.027	0.001	0.000	0.007	0.012	0.000	0.093
HCl Emission lb/hr	0.81	0.46	1.65	0.06	-0.01	0.42	0.71	0.00	5.56

Table 5-4 Continued

Building #3 CPT Summary of Operating Data

	Run 3 - 4/26/2012			Run 4 - 4/26/2013			Run 5 - 4/26/2014		
	Average	Min	Max	Average	Min	Max	Average	Min	Max
PTTC East Exit Temp °F TT-120	297	161	430	Not Operating			498	289	644
PTTC West Exit Temp °F TT-122	Not Operating			343	152	619	Not Operating		
PTTC East Pressure PT-118 "H20	-0.72	-1.02	-0.18	Not Operating			-0.69	-0.99	-0.18
PTTC West Pressure PT-119 "H20	Not Operating			-0.51	-0.82	-0.09	Not Operating		
PTTC East Pressure "H2O OMA	-0.75	-0.86	-0.68	Not Operating			-0.69	-0.85	-0.59
PTTC West Pressure "H2O OMA	Not Operating			-0.51	-0.60	-0.42	Not Operating		
Quench Chamber Water Flow Rate gpm	2.4	0.0	10.0	0.0	0.0	0.0	0.3	0.0	9.7
Sorbent Feed Rate lbs/min	32.0	32.0	32.0	35.0	32.0	36.5	36.5	36.5	36.5
Sorbent Feed Rate lb/min HRA	32.0	32.0	32.0	34.1	32.0	36.5	36.5	36.5	36.5
Baghouse Inlet Temp °F TT-124	247	205	310	261	165	355	291	212	377
Baghouse Inlet Temp °F HRA TT-124	248	240	254	252	235	281	282	255	300
BH #1 DP "H2O	3.2	2.9	3.6	3.3	2.8	3.8	3.5	2.9	4.2
BH #2 DP "H2O	3.3	2.9	3.9	3.3	2.7	3.9	3.5	3.1	4.1
BH #3 DP "H2O	3.1	2.1	3.6	3.1	2.1	3.8	3.4	2.4	3.9
BH #4 DP "H2O	3.1	2.5	3.5	3.2	2.5	3.8	3.5	2.8	4.1
BH #5 DP "H2O	3.1	2.4	3.7	3.1	2.2	4.1	3.4	2.8	4.5
BH #6 DP "H2O	3.4	3.1	3.9	0.1	0.0	3.7	0.0	0.0	0.0
Baghouse Total DP "H2O	3.2	2.8	3.5	3.2	2.7	3.7	3.5	2.9	3.9
Packed Bed Recycle Water Flow gpm	232	229	234	231	229	234	234	231	236
Packed Bed Recycle Water Flow gpm HRA	232	231	232	231	231	233	234	233	234
Packed Bed PH	8.2	8.0	8.4	8.3	8.2	8.5	8.5	8.4	8.6
Packed Bed pH HRA	8.2	8.1	8.3	8.3	8.3	8.4	8.5	8.5	8.6
Packed Bed NaCl %	13.3	12.7	14.3	13.3	11.9	14.6	10.7	10.2	11.4
Packed Bed NaCl % HRA	13.7	13.0	14.3	13.7	12.5	14.3	10.9	10.4	11.5
Packed Bed DP "H2O	3.0	2.5	3.3	2.6	2.1	3.1	2.6	2.0	2.8
Packed Bed DP "H2O HRA	3.0	2.9	3.0	2.7	2.6	3.0	2.6	2.5	2.8
Quench Fresh Water Flow gpm	0.3	0.0	3.3	0.2	0.0	3.3	0.3	0.0	3.2
Quench Recycle Water Flow gpm	145	143	146	144	143	146	145	144	146
Quench Recycle Water Flow gpm HRA	145	145	145	144	144	145	145	145	145
Quench Vessel NaCl %	6.5	4.9	8.0	7.0	5.7	7.9	7.0	6.2	7.8
Quench Vessel NaCl % HRA	6.2	5.9	6.8	6.8	6.6	7.2	7.1	6.9	7.3
Quench Vessel pH	7.6	6.1	8.3	7.4	4.8	8.2	7.6	7.4	8.0
Quench Vessel pH HRA	7.6	7.4	7.7	7.4	7.0	7.6	7.6	7.5	7.8
Quench Vessel DP "H2O	3.2	2.8	3.4	3.0	2.5	3.3	3.1	2.5	3.4
Quench Vessel DP "H2O HRA	3.1	3.0	3.2	3.1	2.8	3.2	3.0	2.9	3.2
Blow Down Water Flow gpm	0.0	0.0	0.0	0.0	0.0	0.0	0.0	0.0	0.0
HCL Level ppm	8.6	6.6	11.0	8.3	4.3	11.2	5.2	3.6	7.1
HCL Level ppm HRA	8.7	8.5	8.8	7.9	6.3	9.3	5.1	4.8	5.7
CO Level ppm	7.8	0.0	38.0	9.6	0.0	43.9	9.5	0.0	60.1
Stack Moisture Level %	7.3	6.7	8.1	7.1	5.7	7.7	6.8	6.1	7.8
Stack Flow acfm	25,222	23,907	26,543	25,420	23,856	27,084	25,818	24,699	26,943
Stack Flow acfm OMA	25,197	24,651	25,643	25,419	24,675	26,061	25,782	25,174	26,181
Stack Flow acfm HRA	25,138	24,993	25,276	25,335	25,119	25,540	25,742	25,472	25,888
Stack Flow dscfm	20,635	19,401	21,682	20,844	19,417	22,396	21,299	20,423	22,460
Stack Temp °F	138	136	141	138	132	141	136	134	139
Stack Pressure "H20	0.0	0.0	0.0	0.0	0.0	0.0	0.0	0.0	0.0
HCl Emission lb/min	0.021	0.015	0.027	0.020	0.011	0.027	0.013	0.009	0.018
HCl Emission lb/hr	1.23	0.91	1.59	1.20	0.64	1.61	0.76	0.51	1.06

Table 5-4 Continued

Building #3 CPT Summary of Operating Data

	Run 6 - 4/26/2015			Run 1 - 6/19/2012		
	Average	Min	Max	Average	Min	Max
PTTC East Exit Temp °F TT-120	522	311	697	Not Operating		
PTTC West Exit Temp °F TT-122	Not Operating			537	218	806
PTTC East Pressure PT-118 "H20	-0.65	-1.00	-0.21	Not Operating		
PTTC West Pressure PT-119 "H20	Not Operating			-0.27	-0.52	0.078
PTTC East Pressure "H2O OMA	-0.64	-0.72	-0.55	Not Operating		
PTTC West Pressure "H2O OMA	Not Operating			-0.27	-0.37	-0.22
Quench Chamber Water Flow Rate gpm	0.8	0.0	10.0	0.0	0.0	0.0
Sorbent Feed Rate lbs/min	36.5	36.5	36.5	37.6	37.6	37.6
Sorbent Feed Rate lb/min HRA	36.5	36.5	36.5	37.6	37.6	37.6
Baghouse Inlet Temp °F TT-124	299	240	368	303	208	383
Baghouse Inlet Temp °F HRA TT-124	290	264	305	302	274	320
BH #1 DP "H2O	3.5	2.9	4.0	3.4	2.6	4.0
BH #2 DP "H2O	3.5	2.9	4.3	3.4	2.8	4.1
BH #3 DP "H2O	3.3	2.4	4.1	3.4	2.7	3.8
BH #4 DP "H2O	3.4	2.8	4.3	3.4	2.6	4.1
BH #5 DP "H2O	3.4	2.5	3.8	3.4	2.7	4.1
BH #6 DP "H2O	0.0	0.0	0.0	3.6	3.2	4.2
Baghouse Total DP "H2O	3.4	2.9	3.9	3.4	2.9	3.8
Packed Bed Recycle Water Flow gpm	233	230	235	235	229	239
Packed Bed Recycle Water Flow gpm HRA	233	233	234	234	230	237
Packed Bed PH	8.6	8.6	8.7	9.1	9.0	9.2
Packed Bed pH HRA	8.6	8.6	8.6	9.1	9.0	9.1
Packed Bed NaCl %	10.0	9.7	10.2	15.2	14.5	17.4
Packed Bed NaCl % HRA	10.1	9.9	10.2	15.6	14.8	17.8
Packed Bed DP "H2O	2.7	2.1	3.1	2.4	2.0	2.9
Packed Bed DP "H2O HRA	2.6	2.6	2.8	2.4	2.4	2.5
Quench Fresh Water Flow gpm	0.6	0.0	3.2	2.7	0.0	6.8
Quench Recycle Water Flow gpm	145	143	146	119	118	120
Quench Recycle Water Flow gpm HRA	145	145	145	119	119	119
Quench Vessel NaCl %	8.8	7.0	9.9	2.5	2.4	2.6
Quench Vessel NaCl % HRA	8.4	7.3	9.4	3.3	2.7	3.8
Quench Vessel pH	7.9	7.8	8.1	9.6	9.5	9.7
Quench Vessel pH HRA	8.0	7.9	8.1	9.6	9.5	9.6
Quench Vessel DP "H2O	3.0	2.3	3.4	3.3	3.2	3.3
Quench Vessel DP "H2O HRA	3.1	2.9	3.2	1.8	0.0	7.0
Blow Down Water Flow gpm	0.0	0.0	0.0	5.1	3.5	6.7
HCL Level ppm	8.5	4.6	11.2	5.2	4.8	5.6
HCL Level ppm HRA	7.8	5.1	10.0	5.3	4.9	6.0
CO Level ppm	10.7	0.0	49.8	20.5	0.0	145.5
Stack Moisture Level %	7.3	6.7	7.7	7.5	6.6	8.1
Stack Flow acfm	25,844	24,572	26,941	22,242	20,845	23,850
Stack Flow acfm OMA	25,831	25,203	26,612	22,266	21,582	22,735
Stack Flow acfm HRA	25,766	25,601	25,933	22,250	22,057	22,448
Stack Flow dscfm	21,219	20,267	22,219	18,221	17,109	19,470
Stack Temp °F	136	127	138	136	128	139
Stack Pressure "H20	0.0	0.0	0.0	0.0	0.0	0.0
HCl Emission lb/min	0.021	0.012	0.028	0.011	0.008	0.015
HCl Emission lb/hr	1.25	0.70	1.68	0.65	0.45	0.91

Table 5-4 Continued

Building #3 CPT Summary of Operating Data

	Run 2 - 6/19/2013			Run 3 - 6/19/2014		
	Average	Min	Max	Average	Min	Max
PTTC East Exit Temp °F TT-120	584	303	795	619	319	798
PTTC West Exit Temp °F TT-122	Not Operating			Not Operating		
PTTC East Pressure PT-118 "H20	-0.53	-0.95	-0.05	-0.53	-0.98	-0.003
PTTC West Pressure PT-119 "H20	Not Operating			Not Operating		
PTTC East Pressure "H2O OMA	-0.54	-0.67	-0.39	-0.52	-0.61	-0.42
PTTC West Pressure "H2O OMA	Not Operating			Not Operating		
Quench Chamber Water Flow Rate gpm	0.0	0.0	0.0	0.0	0.0	0.0
Sorbent Feed Rate lbs/min	37.6	37.6	37.6	37.6	37.6	37.6
Sorbent Feed Rate lb/min HRA	37.6	37.6	37.6	37.6	37.6	37.6
Baghouse Inlet Temp °F TT-124	296	222	365	320	244	389
Baghouse Inlet Temp °F HRA TT-124	289	266	304	320	311	328
BH #1 DP "H2O	3.3	2.6	4.3	3.4	2.6	3.9
BH #2 DP "H2O	3.4	2.9	3.9	3.4	2.8	3.9
BH #3 DP "H2O	3.3	2.7	3.8	3.3	2.7	3.8
BH #4 DP "H2O	3.4	2.7	3.9	3.4	2.7	3.8
BH #5 DP "H2O	3.4	2.6	3.8	3.4	2.7	3.9
BH #6 DP "H2O	3.6	3.1	4.0	3.6	3.2	4.2
Baghouse Total DP "H2O	3.4	3.0	3.7	3.4	2.9	3.7
Packed Bed Recycle Water Flow gpm	235	233	239	234	231	237
Packed Bed Recycle Water Flow gpm HRA	235	235	236	234	234	234
Packed Bed PH	9.0	9.0	9.1	9.1	9.1	9.1
Packed Bed pH HRA	9.1	9.0	9.1	9.1	9.1	9.1
Packed Bed NaCl %	14.9	14.5	15.1	14.8	14.4	15.1
Packed Bed NaCl % HRA	14.8	14.8	14.9	14.8	14.8	14.9
Packed Bed DP "H2O	2.6	2.0	3.0	2.6	2.1	3.0
Packed Bed DP "H2O HRA	2.6	2.4	2.7	2.6	2.6	2.6
Quench Fresh Water Flow gpm	2.9	0.0	6.8	3.5	0.0	7.5
Quench Recycle Water Flow gpm	119	118	120	119	118	121
Quench Recycle Water Flow gpm HRA	119	119	119	119	119	119
Quench Vessel NaCl %	2.3	2.3	2.4	2.1	2.0	2.3
Quench Vessel NaCl % HRA	3.7	2.8	4.1	3.7	3.1	4.1
Quench Vessel pH	9.4	9.0	9.6	9.6	9.5	9.6
Quench Vessel pH HRA	9.5	9.3	9.6	9.6	9.6	9.6
Quench Vessel DP "H2O	3.6	3.3	3.7	3.7	3.6	3.8
Quench Vessel DP "H2O HRA	0.3	0.0	3.9	0.1	0.0	3.9
Blow Down Water Flow gpm	5.8	3.7	9.0	4.6	3.4	6.0
HCL Level ppm	5.9	4.9	6.9	4.7	4.5	5.0
HCL Level ppm HRA	5.9	5.1	6.6	4.7	4.6	5.0
CO Level ppm	17.1	0.0	141.0	15.4	0.0	67.6
Stack Moisture Level %	7.4	6.5	8.1	8.0	7.4	8.4
Stack Flow acfm	23,495	21,772	25,009	23,860	22,708	25,121
Stack Flow acfm OMA	23,509	21,971	24,092	23,837	23,286	24,211
Stack Flow acfm HRA	23,279	22,213	23,624	23,819	23,611	24,068
Stack Flow dscfm	19,199	17,921	20,477	19,293	18,343	20,384
Stack Temp °F	138	133	142	141	134	143
Stack Pressure "H20	0.0	0.0	0.0	0.0	0.0	0.0
HCl Emission lb/min	0.013	0.008	0.020	0.010	0.007	0.014
HCl Emission lb/hr	0.77	0.48	1.19	0.63	0.45	0.82

Table 5-5 Summary of PCDD/PCDF Results -Initial CPT

Run Identification	Run 1	Run 2	Run 3	Average
Run Date	25Apr12	25Apr12	26Apr12	
Start/Stop Time	0833-1150	1300-1634	0815-1130	
Run Duration (min.)	180	180	180	
Exhaust Gas Conditions				
Temperature (deg. F)	121	122	123	122
Moisture (volume %)	8.0	7.5	7.9	7.8
Oxygen (dry volume %)	20.4	20.6	20.5	20.5
Carbon Dioxide (dry volume %)	0.74	0.63	0.68	0.68
Exhaust Gas Flow Rate Data				
acfm	28,753	29,364	29,348	29,155
dscfm	23,016	23,518	23,636	23,390
Dioxin/Furan Results				
PCDD/DF TEQ (ng/dscm)	0.326	0.288	0.420	0.345
PCDD/DF TEQ (lb/hr)	2.81E-08	2.53E-08	3.72E-08	3.02E-08

[a] PCDD/DF RCRA Permit limit = 0.11 ng/dscm

Table 5-6 Summary of PCDD/PCDF Results - Retest No. 1

Run Identification	Run 1	Run 2	Run 3	Average
Run Date	31May12	01Jun12	01Jun12	
Start/Stop Time	1733-2040	1141-1447	1519-1825	
Run Duration (min.)	180	180	180	
Exhaust Gas Conditions				
Temperature (deg. F)	109	112	112	111
Moisture (volume %)	6.2	6.4	6.5	6.4
Oxygen (dry volume %)	20.3	20.3	20.3	20.3
Carbon Dioxide (dry volume %)	0.70	0.70	0.70	0.70
Exhaust Gas Flow Rate Data				
acfm	28,555	28,529	28,565	28,549
dscfm	24,066	24,054	24,061	24,060
Dioxin/Furan Results				
PCDD/DF TEQ (ng/dscm)	0.279	0.319	0.234	0.277
PCDD/DF TEQ (lb/hr)	2.51E-08	2.88E-08	2.11E-08	2.50E-08

[a] PCDD/DF RCRA Permit limit = 0.11 ng/dscm

Table 5-7 Summary of PCDD/PCDF Results - Retest No. 2 – Condition 1

Run Identification	Run 1	Run 2	Run 3	Average
Run Date	19Jun12	19Jun12	19Jun12	
Start/Stop Time	0949-1308	1343-1650	1725-2030	
Run Duration (min.)	180	180	180	
Exhaust Gas Conditions				
Temperature (deg. F)	121	123	126	123
Moisture (volume %)	8.0	8.0	8.6	8.2
Oxygen (dry volume %)	20.2	20.4	20.4	20.3
Carbon Dioxide (dry volume %)	0.80	0.60	0.70	0.70
Exhaust Gas Flow Rate Data				
acfm	28,701	28,863	29,649	29,071
dscfm	23,222	23,281	23,679	23,394
Dioxin/Furan Results				
PCDD/DF TEQ (ng/dscm)	0.024	0.023	0.024	0.024
PCDD/DF TEQ (lb/hr)	2.07E-09	1.98E-09	2.13E-09	2.06E-09

[a] PCDD/DF RCRA Permit limit = 0.11 ng/dscm

Table 5-8 Summary of PCDD/PCDF Results - Retest No. 2 – Condition 2

Run Identification	Run 1	Run 2	Run 3	Average
Run Date	20Jun12	20Jun12	20Jun12	
Start/Stop Time	0900-1205	1244-1550	1650-1954	
Run Duration (min.)	180	180	180	
Exhaust Gas Conditions				
Temperature (deg. F)	121	124	120	122
Moisture (volume %)	8.0	8.4	6.9	7.8
Oxygen (dry volume %)	20.1	19.9	20.1	20.0
Carbon Dioxide (dry volume %)	0.80	0.80	0.80	0.80
Exhaust Gas Flow Rate Data				
acfm	28,863	28,672	29,811	29,115
dscfm	23,382	22,998	24,452	23,611
Dioxin/Furan Results				
PCDD/DF TEQ (ng/dscm)	0.019	0.019	0.014	0.017
PCDD/DF TEQ (lb/hr)	1.63E-09	1.63E-09	1.29E-09	1.51E-09

[a] PCDD/DF emission limit is 0.11 ng/dscm

Table 5-9 Summary of HCl/Cl_2 Results

Run Identification	Run 1	Run 2	Run 3	Average
Run Date	25Apr12	25Apr12	26Apr12	
Start/Stop Time	0904-1150	1335-1635	0850-1130	
Exhaust Gas Conditions				
Temperature (deg. F)	120	120	120	120
Moisture (volume %)	7.4	7.4	7.8	7.6
Oxygen (dry volume %)	20.44	20.59	20.48	20.50
Carbon Dioxide (dry volume %)	0.74	0.63	0.68	0.68
Volumetric Flow Rate				
acfm	29,799	29,923	30,979	30,234
dscfm	24,054	24,058	25,066	24,392
HCl				
ppm	2.13	1.78	2.25	2.05
lb/hr	0.292	0.244	0.321	0.285
Cl_2				
ppm	1.53	1.67	2.06	1.75
lb/hr	0.402	0.440	0.563	0.469
Combined HCl/Cl_2				
ppm	3.66	3.45	4.30	3.81
lb/hr	0.694	0.684	0.884	0.754

[a] RCRA Permit total combined HCl/Cl_2 limit = 21 ppmv, dry

[b] MDNR Air Permit HCl limit = 2.64 lb/hr

Table 5-10 Summary of Particulate Matter Results

Run Identification	Run 1	Run 2	Run 3	Average
Run Date	26Apr12	26Apr12	26Apr12	
Start/Stop Time	1312-1535	1650-1905	2000-2213	
Exhaust Gas Conditions				
Temperature (deg. F)	123	121	122	**122**
Moisture (volume %)	6.1	6.3	7.2	**6.5**
Oxygen (dry volume %)	20.5	20.4	20.4	**20.4**
Carbon Dioxide (dry volume %)	0.7	0.9	0.9	**0.8**
Volumetric Flow Rate				
acfm	28,852	26,685	28,017	**27,851**
dscfm	23,673	21,916	22,761	**22,784**
Filterable Particulate Matter Emissions				
gr/dscf	0.0006	0.0011	0.0003	**0.0007**
lb/hr	0.13	0.20	0.05	**0.13**
Condensible Particulate Matter Emissions				
gr/dscf	0.0010	0.0012	0.0006	**0.0010**
lb/hr	0.20	0.23	0.12	**0.19**
Total Particulate Matter Emissions				
gr/dscf	0.0016	0.0023	0.0009	**0.0016**
lb/hr	0.33	0.44	0.18	**0.32**

[a] Filterable PM RCRA Permit limit = 0.0015 gr/dscf

[b] Combined filterable and condensable PM MDNR Air Permit limit = 0.30 lb/hr

Table 5-11 Summary of Metals Results

Run Identification	Run 1		Run 2		Run 3		Average	
Run Date	26Apr12		26Apr12		26Apr12			
Start/Stop Time	1312-1535		1650-1905		2000-2213			
Exhaust Gas Conditions								
Temperature (deg. F)	120		118		119		**119**	
Moisture (volume %)	7.4		7.2		8.1		**7.6**	
Oxygen (dry volume %)	20.52		20.40		20.36		**20.43**	
Carbon Dioxide (dry volume %)	0.71		0.86		0.92		**0.83**	
Volumetric Flow Rate								
acfm	29,726		31,256		28,851		**29,944**	
dscfm	24,150		25,567		23,329		**24,349**	
Metals Emissions	ug/dscm	lb/hr	ug/dscm	lb/hr	ug/dscm	lb/hr	**ug/dscm**	**lb/hr**
Arsenic	<0.51	<4.61E-05	<0.49	<4.72E-05	<0.53	<4.59E-05	**<0.51**	**<4.64E-05**
Beryllium	<0.13	<1.15E-05	<0.12	<1.18E-05	<0.13	<1.15E-05	**<0.13**	**<1.16E-05**
Chromium	0.23	2.10E-05	0.26	2.45E-05	0.11	9.47E-06	**0.20**	**1.83E-05**
SVM Totals	**0.87**	**7.87E-05**	**0.87**	**8.35E-05**	**0.77**	**6.69E-05**	**0.84**	**7.64E-05**
Cadmium	<0.13	<1.15E-05	<0.12	<1.18E-05	<0.13	<1.15E-05	**<0.13**	**<1.16E-05**
Lead	0.26	2.36E-05	0.41	3.90E-05	0.40	3.50E-05	**0.36**	**3.25E-05**
LVM Totals	**0.39**	**3.52E-05**	**0.53**	**5.08E-05**	**0.53**	**4.65E-05**	**0.48**	**4.41E-05**

[a] SVM RCRA Permit Limit = 23 ug/dscm

[b] LVM RCRA Permit limit = 10 ug/dscm

Table 5-12 Summary of NO_X, CO and THC Results

Run Identification	Run 1	Run 2	Run 3	Average
Run Date	25Apr12	25Apr12	26Apr12	
Start/Stop Time	0833-1150	1300-1634	815-1130	
Exhaust Gas Conditions				
Temperature (deg. F)	121	122	123	122
Moisture (volume %)	8.0	7.4	7.8	7.8
Oxygen (dry volume %)	20.44	20.59	20.48	20.50
Carbon Dioxide (dry volume %)	0.74	0.63	0.68	0.68
Volumetric Flow Rate				
acfm	28,753	29,364	29,348	29,155
dscfm	23,016	23,518	23,636	23,390
Carbon Monoxide				
ppm, dry	4.51	6.58	5.36	5.48
lb/hr	0.453	0.675	0.553	0.560
Nitrogen Oxide				
ppm, dry	63.9	57.6	68.0	63.2
lb/hr	10.5	9.7	11.5	10.6
Total Hydrocarbons (as Propane)				
ppm, dry	1.76	3.45	1.84	2.35
lb/hr	0.101	0.203	0.109	0.138

Table 5-13 Summary of SVOC Results.

Run Identification	Run 1		Run 2		Run 3		Average	
Run Date	25Apr12		25Apr12		26Apr12			
Start/Stop Time	0833-1150		1300-1634		0815-1130			
Exhaust Gas Conditions								
Temperature (deg. F)	121		122		123		**122**	
Moisture (volume %)	8.0		7.5		7.9		**7.8**	
Oxygen (dry volume %)	20.40		20.59		20.48		**20.49**	
Carbon Dioxide (dry volume %)	0.74		0.63		0.68		**0.68**	
Volumetric Flow Rate								
acfm	28,753		29,364		29,348		**29,155**	
dscfm	23,016		23,518		23,636		**23,390**	
SVOCs Emissions	ug/dscm	lb/hr	ug/dscm	lb/hr	ug/dscm	lb/hr	**ug/dscm**	**lb/hr**
Benzoic Acid	229	1.98E-02	138	1.21E-02	193	1.71E-02	**187**	**1.63E-02**
Benzyl Alcohol	73.5	6.33E-03	58.0	5.11E-03	74.4	6.59E-03	**68.6**	**6.01E-03**
Hexachlorocyclopentadiene	8.70	7.50E-04	9.89	8.71E-04	8.27	7.32E-04	**8.95**	**7.84E-04**
Naphthalene	30.0	9.00E-04	5.27	4.64E-04	11.1	9.85E-04	**15.5**	**7.83E-04**
Phenol	6.00	1.80E-04	2.31	2.03E-04	2.54	2.25E-04	**3.62**	**2.03E-04**

Table 5-14 Summary of VOC Results.

	Run No.	Run 1	Run No.	Run 2	Run No.	Run 3
	Date	4/26/2012	Date	4/26/2012	Date	4/26/2012
	Start Time	1005	Start Time	1647	Start Time	2000
	Stop Time	1405	Stop Time	1927	Stop Time	2230
	Units		Units		Units	
VOST Sample Volume	dsL	56.57	dsL	57.51	dsL	57.31
Exhaust Flow Rate	dscfm	24,351	dscfm	23,741	dscfm	23,045
Volatile Organics	µg/dscm	lb/hr	µg/dscm	lb/hr	µg/dscm	lb/hr
Dichlorodifluoromethane (FREON 12)	2.94	2.68E-04	2.47	2.20E-04	2.52	2.18E-04
Chloromethane	77.2	7.04E-03	20.4	1.82E-03	23.1	1.99E-03
Vinyl Chloride	5.15	4.70E-04	5.72	5.08E-04	5.82	5.02E-04
Bromomethane	2.01	1.84E-04	0.99	8.80E-05	0.88	7.62E-05
Chloroethane	1.05	9.58E-05	0.84	7.45E-05	0.95	8.19E-05
Trichlorofluoromethane (FREON 11)	3.35	3.06E-04	4.12	3.67E-04	3.23	2.79E-04
Acetone (2-Propanone)	425.0	3.88E-02	673.4	5.99E-02	601.8	5.20E-02
1,1-Dichloroethylene	3.17	2.89E-04	3.88	3.45E-04	4.39	3.79E-04
Carbon Disulfide	10.4	9.50E-04	18.3	1.62E-03	12.3	1.06E-03
Methylene Chloride(Dichloromethane)	14.2	1.30E-03	9.12	8.11E-04	9.47	8.18E-04
1,1-Dichloroethane	1.70	1.55E-04	0.91	8.12E-05	1.06	9.17E-05
Chloroform	163	1.48E-02	163	1.45E-02	182	1.57E-02
Methyl Ethyl Ketone (2-Butanone)	2.65	2.41E-04	2.99	2.66E-04	3.18	2.74E-04
1,1,1-Trichloroethane	1.51	1.37E-04	0.80	7.10E-05	0.77	6.66E-05
Carbon Tetrachloride	70.5	6.43E-03	60.8	5.41E-03	67.1	5.79E-03
Benzene	60.9	5.55E-03	70.9	6.31E-03	72.4	6.25E-03
1,2-Dichloropropane	2.18	1.99E-04	1.10	9.79E-05	0.96	8.25E-05
Trichloroethylene	1.76	1.60E-04	2.79	2.48E-04	2.77	2.39E-04
Bromodichloromethane	13.5	1.23E-03	6.83	6.07E-04	7.07	6.11E-04
cis-1,3-Dichloropropene	2.00	1.83E-04	0.86	7.61E-05	0.94	8.08E-05
trans-1,3-Dichloropropene	1.80	1.64E-04	0.87	7.71E-05	0.83	7.15E-05
Dibromochloromethane	1.15	1.05E-04	0.51	4.56E-05	0.50	4.28E-05
Methyl Isobutyl Ketone	3.16	2.88E-04	3.52	3.13E-04	1.70	1.47E-04
Toluene	26.9	2.46E-03	26.4	2.35E-03	25.8	2.23E-03
Tetrachloroethylene	2.61	2.38E-04	3.78	3.36E-04	3.90	3.36E-04
Chlorobenzene	4.35	3.96E-04	3.88	3.45E-04	4.15	3.59E-04
Ethylbenzene	8.26	7.53E-04	6.56	5.84E-04	5.87	5.07E-04
m / p-Xylene	24.0	2.19E-03	18.2	1.62E-03	16.1	1.39E-03
o-Xylene	12.4	1.13E-03	8.60	7.64E-04	7.34	6.34E-04
1,2-Dichlorobenzene	1.38	1.26E-04	2.44	2.17E-04	2.33	2.01E-04

6. QUALITY ASSURANCE/QUALITY CONTROL

This test program incorporated a variety of QA/QC measures to ensure the validity of the final results. These measures were based upon routine field and laboratory practices as well as specific requirements delineated in the approved CPT Plan and the applicable sampling and analytical methods.

This section presents the results of all QA/QC measures evaluated during all sampling programs and during all phases of sample analysis. Data generated for the program are judged to be completely valid since overall accuracy and precision goals consistent with general program objectives were achieved. Analytical QA/QC data are presented to support all sample results used for determining compliance with performance criteria and/or emission standards.

6.1 SAMPLE COLLECTION QA/QC

One set of reagent blanks for each isokinetic sampling train was submitted for analysis. For the VOST methodology, one field blank for each day of testing and one trip blank per sample shipment were also submitted along with program samples. In addition, one field sampling train blank was submitted for the EPA RM 5/202 train.

Sampling QA/QC measures for this program included the calibration of all applicable sampling equipment used as described below. Field equipment were calibrated according to EPA procedures specified in EPA/600/R-94/038e (September 1994) and 40 CFR 60, Methods 1-5, as well as manufacturer's specifications.

» Dry Gas Meters and Orifice Meters:

Dry gas meters for all sampling trains were calibrated using critical orifices. The procedure entails five runs using four separate critical orifices running at an actual vacuum 1-2 in. greater than the theoretical critical vacuum. The minimum sample volume required per orifice is 5 ft^3. Meter boxes are calibrated annually and then verified by use of the alternative Method 5 post-test calibration procedure. Copies of the annual and post-test calibration forms are presented in **Appendix C**.

» Sampling Nozzles:

Each glass nozzle was calibrated with a micrometer prior to testing and identified with a unique ID number. These data are then checked onsite prior to use. Any stainless steel nozzles used during the program are calibrated onsite prior to testing. The internal diameter of each nozzle used is measured to 0.001 inches along three points of the circumference with a dial vernier caliper and the three measurements are then averaged. Nozzle calibration data are provided in **Appendix C**

» Balance:

The analytical balance used in the field to determine initial and final silica gel weights is calibrated against Class M weights provided by the Mettler Corporation.

» Thermocouples:

The Type K thermocouples in each meter control box, heated sample box, impinger umbilical connector, XAD resin trap and sample probe were calibrated against ASTM mercury-in-glass thermometers at two or more points: an ice bath, ambient temperature and/or boiling water bath. Calibration data are provided in **Appendix C**.

» Pitot Tubes:

Each S-type stainless steel pitot tube used is designed to meet geometric configurations as defined in EPA Method 2. Sample probe calibration data forms are provided in **Appendix C**

6.1.1 Sample Custody

Chain of custody procedures followed during the test program were as outlined in the PTTU CPT plan. Chain of custody forms were computer generated by O'Brien & Gere along with the majority of sample labels. PTTU exhaust stack samples were either picked up on site by Maxxam Analytics, or were delivered to a Maxxam courier for transport to the Maxxam facility in Burlington, Ontario.

6.2 STACK GAS ANALYSES

6.2.1 Volatile Organics

Evaluation of the validity of the data resultant from the analysis of the VOST samples for the CPT was based on the following indicators:

- Recoveries of 4 surrogate compounds added to the VOST samples prior to analysis;
- Recoveries of the matrix spike
- Results of analyses of field, trip and lab blank samples.

A few compounds (bromomethane, acetone, toluene) were observed in the field and trip blanks. No target compounds were detected in any of the method blanks. One compound (acetone) did exhibit significant concentrations in the all three test run condensate samples indicating the possibility of a false positive. Based on the overall results summarized in **Table 6-1**, completeness was therefore determined to be 100% for all VOST analyses.

Table 6-1 QC Summary for Volatile Organics in Stack Gas Samples

QC Parameter	Target Criteria	Program Results
Field and Trip Blanks	Below detection limit	Bromomethane, acetone, and/or toluene detected in one or more blanks
Method Blanks	Below detection limit	No compounds detected
Matrix Spike Recoveries	50%-150% recovery	All recoveries within defined limits
Accuracy-Surrogate Recoveries	50%-150% recovery	All surrogate recoveries within defined limits

6.2.2 PCDDs/PCDFs

Evaluation of the validity of the PCDD/PCDF data resultant from the analysis of the Method 23 sampling train samples was based on the following criteria:

- Recoveries of surrogate recovery standards added to the samples prior to sampling or sample extraction.
- Recoveries of spiked blank for evaluation of analyte recovery.
- Results of duplicate paired analysis of separate section of same sample.
- Results of analyses of field and method blank samples.

On the basis of the QC results summarized in **Table 6-2**, no sample analyses were rejected, and all data were determined to be valid.

Table 6-2 QC Summary for PCDDs/PCDFs in Stack Gas Samples – June 2012 Test Program

QC Parameter	Target Criteria	Program Results
Field Blank	Below detection limit	ND for all but four of 17 congeners
Method Blank	Below detection limit	ND for all 17 congeners
Accuracy for surrogate recovery standards	70 – 130% recovery	All labeled standards within limits
Results of duplicate analyses	< 20% RPD	All samples within limits
Accuracy for spiked blank recovery standards	80 – 140% recovery	All labeled standards within limits

6.2.3 Semi-volatile Organics

Evaluation of the validity of the data resultant from the analysis of the SVOC samples for the CPT was based on the following indicators:

- Recoveries of 8 surrogate compounds added to the SVOC samples prior to analysis;
- Recoveries of the spiked blanks
- Results of duplicate paired analysis of separate section of same sample.
- Results of analyses of field and method blank samples.

On the basis of the QC results summarized in **Table 6-3**, no sample analyses were rejected, and all data were determined to be valid.

Table 6-3 QC Summary for Semi-volatile Organics in Stack Gas Samples

QC Parameter	Target Criteria	Program Results
Field blank	Below detection limit	No compounds detected except Bis(2-ethylhexyl)phthalate
Method Blank	Below detection limit	All analytes ND or below reporting limit
Accuracy for spiked blank recovery standards	Different % recovery range for each of the compounds spiked	All within specified limits
Results of duplicate analyses	< 50% RPD	All RPD values within specified limits
Accuracy – Surrogates Recoveries	Different % recovery range for each compound spiked	All within specified limits

6.2.4 Particulate Matter

Evaluation of results of gravimetric analysis of the Method 5/202 samples was based on routine laboratory practices and processing of method blank and field blank samples. For the Method 5 samples, no contamination was noted in either the lab acetone blank or the field blank and thus no blank correction was performed. For the Method 202 samples, minor contamination was noted in field blank for both the inorganic and organic sample fractions and thus blank correction was performed to the extent allowed by the method. Additional QC measures followed by the gravimetric lab, such as maintenance of proper ambient conditions and use of standard weights, ensured valid data.

6.2.5 Hydrogen Chloride and Chlorine

Evaluation of the validity of chloride analysis of Method 26A train samples was based on three sets of objectives. These were:

- Results of analysis of matrix spikes and spiked blanks.
- Results from the duplicate analysis of all samples.
- Results of analysis of field and method blank samples.

Target criteria and results are shown in **Table 6-4**. All results met trial burn data quality objectives and completeness was therefore determined to be 100% for these parameters.

Table 6-4 QC Summary for HCl and Cl_2 in Stack Gas Samples

QC Parameter	Target Criteria	Program Results
Field Blank	Below detection limit	All parameters ND
Method Blank	Below detection limit	All parameters ND
Matrix Spike Recoveries	80%-120% recovery	All samples within limits
Spiked Blank Recoveries	80%-120% recovery	All samples within limits
Duplicate Analyses (All samples)	0-20% RPD	All samples within limits.

6.2.6 Metals

Evaluation of the validity of the metals data resultant from the analysis of the Method 29 sampling trains was based on the following data quality objectives:

- Results of analysis of matrix spikes and spiked blank recoveries for all target metals.
- Results of analysis of samples analyzed in duplicate.
- Results of analyses of field and method blank samples.

Minor contamination was noted in field blank as chromium and lead were detected and thus blank correction was performed to the extent allowed by the method. Data summarized in **Table 6-5** show that no other problems were encountered during sample analysis and all metals train data were therefore judged to be completely acceptable.

Table 6-5 QC Summary for Metals in Stack Gas Samples

QC Parameter	Target Criteria	Program Results
Field Blank	Below detection limit	Chromium and lead all reported above the reporting limit. Final results have been blank-corrected to the maximum extent allowed in accordance with method specific procedures.
Method Blank	Below Detection Limit	No metals detected above the reporting limit
Matrix spike Recoveries	70%-130% Recovery	All recoveries within limits
Spiked Blank Recoveries	85%-115% Recovery	All metals within limits
Duplicate Analyses	0-20% RPD	All results within limits

Field Data Sheets and Calculations

Method 5/202

Particulate Results Summary
General Dynamics OTS Munition Services
Building 3 Main Exhaust
Joplin, MO

Test Results:	Run 1	Run 2	Run 3	Average
Filterable PM (EPA RM 5) Emissions:				
grains/dscf	0.00063	0.00109	0.00027	0.00066
lb/hr	0.127	0.205	0.054	0.129
Condensible PM (EPA RM 202) Emissions:				
grains/dscf	0.0010	0.0012	0.0006	0.0010
lb/hr	0.204	0.232	0.123	0.1865

Where:

Particulate Emission Concentration:

grains/dscf = (15.432 grains/gm x gms of particulate collected)/sample vol., standard cond. (29.92" Hg, 68°F, dry)

lb/dscf = grains/dscf/7000 grains per pound

Particulate Emission Rate:

lb/hr = lb/dscf x stack gas flow rate, standard conditions x 60 minutes/hr

Test Data Summary and Calculations
General Dynamics OTS Munition Services
Building 3 Main Exhaust
Joplin, MO

Parameter	Run 1	Run 2	Run 3
Run Date	4/26/12	4/26/12	4/26/12
Start/Stop Time	1312-1535	1650-1905	2000-2213
Duration of Run, Minutes	120	120	120
Ave. Nozzle Diameter, inches	0.203	0.203	0.203
Pitot Calibration Factor, CF	0.84	0.84	0.84
Meter Gamma	1.008	1.008	1.008
Meter Delta H, inches of H2O	1.83	1.83	1.83
Stack Diameter, inches	40.5	40.5	40.5
Rectangular Width, inches		0	0
Rectangular Length, inches		0	0
Stack Area, sq.ft.	8.95	8.95	8.95
Barometric Pressure, inches of Hg	28.8	28.8	28.8
Static Pressure, inches of H2O	0.75	0.75	0.75
Dry Gas Meter Sample Volume, (VM)ft3			
Initial	433.813	506.938	577.53
Final	506.823	577.398	653.677
Meter Volume	72.822	70.346	76.093
Ave. Stack Temperature, Ts(F)	122.8	121.1	121.8
Ave. Meter Temperature, Tm(F)	95.2	97.2	89.3
Ave. Run Delta H, inches of H2O	1.27	1.16	1.35
Ave. Square Root of Delta P	0.8856	0.8202	0.8592
Moisture Data			
Volume of water collected, mls	75	71	94
Silica Gel, grams	18	21.2	23
Total Collected, mls	93	92.2	117
ORSAT Data			
%O2	20.52	20.40	20.36
%CO2	0.71	0.86	0.92
%CO			

Calculations

Vw(std), scf =	4.378	4.340	5.507
Vm(std), dscf =	67.410	64.866	71.211
Bws=	0.061	0.063	0.072
Md=	28.93	28.95	28.96
Ms=	28.27	28.27	28.17
Vs, ft/sec =	53.8	49.7	52.2
Qs, acfm =	28,852	26,685	28,017
Qs(std), dscfm =	23,673	21,916	22,761
Isokinetic Sampling Rate, %	94.5	98.2	103.8

Where:

Vw(std) = volume of water vapor in gas, standard conditions = 0.04707*Vlc
Vm(std) = vol. of gas sampled, standard conditions = 17.647 x Vm x gamma x [Pb + (dH/13.6)]/Tm(R)
Bws = water vapor in gas stream, proportion by volume = Vw(std)/(Vm(std) + Vw(std))
Md = molecular weight of stack gas, dry basis = (0.44 x%CO2) + (0.32 x%O2) + [0.28 x (%N2 + %CO)]
Ms = molecular weight of stack gas, wet basis = [Md x (1-Bws)] + (18.0 x Bws)
Vs = stack gas velocity = 85.49 x Cp x (avg. Sq.Rt. dP) x [Sq.Rt. (Ts(R))/(Ms x Ps)]
Qs = stack gas flow rate = Vs x As x 60
Qs(std) = stack gas flow rate, standard conditions = Qs x (1-Bws) x (528/(Ts(R)) x (Ps/29.92)
Isokinetic sampling rate = {(Ts(R)) x [(0.00267 x Vlc) + (Vm(std)/17.647)] x 100}/(Time x vs x Ps x An x60)

Field Data Summary
General Dynamics OTS Munition Services
Building 3 Main Exhaust
Joplin, MO

	Run 1						Run 2						Run 3					
Traverse Point	Stack Temp(F)	Delta P	Delta H	Tm(F) In	Tm(F) out	SQRT Delta P	Stack Temp(F)	Delta P	Delta H	Tm(F) In	Tm(F) out	SQRT Delta P	Stack Temp(F)	Delta P	Delta H	Tm(F) In	Tm(F) out	SQRT Delta P
A1	123	0.80	1.44	93	90	0.8944	118	0.80	1.28	100	96	0.8944	120	0.75	1.35	89	89	0.8660
1	123	0.74	1.18	96	90	0.8602	118	0.80	1.28	101	96	0.8944	121	0.72	1.30	91	89	0.8485
2	123	0.76	1.21	96	91	0.8718	119	0.76	1.21	101	96	0.8718	122	0.74	1.33	91	88	0.8602
2	122	0.72	1.15	97	91	0.8485	119	0.70	1.12	101	96	0.8367	120	0.75	1.35	93	88	0.8660
3	124	0.45	0.72	98	91	0.6708	119	0.70	1.12	100	96	0.8367	122	0.54	0.97	93	88	0.7348
3	125	0.70	1.12	98	92	0.8367	120	0.68	1.10	100	96	0.8246	122	0.58	1.04	93	88	0.7616
4	124	0.84	1.34	99	92	0.9165	120	0.54	0.86	100	96	0.7348	123	0.71	1.28	93	88	0.8426
4	121	0.72	1.15	100	93	0.8485	120	0.54	0.86	99	96	0.7348	122	0.71	1.28	93	87	0.8426
5	121	0.95	1.52	100	93	0.9747	121	0.65	1.04	99	95	0.8062	121	0.78	1.76	94	88	0.8832
5	120	0.92	1.47	100	93	0.9592	121	0.63	1.00	100	95	0.7937	122	0.92	1.66	94	87	0.9592
6	121	1.10	1.76	100	93	1.0488	121	0.76	1.37	102	95	0.8718	122	0.97	1.75	94	87	0.9849
6	122	1.10	1.76	99	93	1.0488	121	0.76	1.37	102	95	0.8718	123	0.90	1.62	94	87	0.9487
B1	123	0.74	1.18	94	93	0.8602	121	0.65	1.17	99	96	0.8062	122	0.71	1.27	88	86	0.8426
1	124	0.80	1.28	96	93	0.8944	122	0.65	1.17	100	96	0.8062	123	0.71	1.27	90	86	0.8426
2	124	0.80	1.28	97	93	0.8944	122	0.65	1.17	99	96	0.8062	123	0.71	1.27	91	86	0.8426
2	123	0.80	1.28	98	93	0.8944	121	0.64	1.15	98	96	0.8000	121	0.71	1.27	92	86	0.8426
3	124	0.85	1.36	98	93	0.9220	121	0.42	0.75	97	95	0.6481	123	0.50	0.90	92	86	0.7071
3	123	0.77	1.23	98	93	0.8775	122	0.42	0.75	96	95	0.6481	123	0.50	0.90	92	86	0.7071
4	123	0.63	1.01	98	93	0.7937	123	0.72	1.30	97	94	0.8485	121	0.85	1.53	91	85	0.9220
4	123	0.56	0.90	98	93	0.7483	122	0.68	1.27	98	94	0.8246	122	0.85	1.53	91	85	0.9220
5	122	0.66	1.06	99	93	0.8124	123	0.85	1.53	98	94	0.9220	120	0.81	1.45	92	85	0.9000
5	123	0.66	1.06	99	93	0.8124	127	0.72	1.30	98	94	0.8485	122	0.81	1.45	92	85	0.9000
6	123	0.98	1.57	100	94	0.9899	123	0.82	1.47	98	94	0.9055	121	0.81	1.45	92	85	0.9000
6	122	0.95	1.52	100	94	0.9747	123	0.72	1.30	98	94	0.8485	122	0.80	1.44	92	85	0.8944
Average	123	0.79	1.27	98	93	0.8856	121	0.68	1.16	99	95	0.8202	122	0.74	1.35	92	87	0.8592

Laboratory Results	Run 1	Run 2	Run 3
Filter ID	xxx	xxx	xxx
Front Half Sample:			
Filter wt gain, g	<0.0003	<0.0003	<0.0003
Acetone rinse volume, ml	77	96	100
Acetone wt gain, g	0.0027	0.0046	0.0013
F.H. Total, g (uncorrected)	0.0030	0.0049	0.0016
Acetone Blank Sample:			
Acetone blank volume, ml	150	150	150
Acetone Blank wt, g	117.78	117.78	117.78
Acetone Blank wt gain (residue), g	0.0005	0.0005	0.0005
Acetone Blank conc., g(residue)/g(acetone)	0.000004	0.000004	0.000004
0.001% (w/w) of Acetone Sample, g	0.0006	0.0008	0.0008
Weight of residue in Acetone Sample, g	0.0003	0.0003	0.0003
Acetone Blank Correction, g	0.0003	0.0003	0.0003
Front Half Total, g (corrected):	0.0027	0.0046	0.0013
Back Half Sample:			
Hexane/Acetone Sample wt gain, g	0.0010	0.0020	0.0010
Water Sample wt gain, g	0.0054	0.0052	0.0039
B.H. Total wt gain, g (uncorrected)	0.0064	0.0072	0.0049
Field Train Blank Sample:			
Mass of inorganic CPM, g (Water) M_i:	0.0019	0.0019	0.0019
Mass of organic CPM, g (Acetone/Hexane) M_o:	0.0010	0.0010	0.0010
Mass of Total CPM, g in Field Train Blank M_{fb}:	0.0029	0.0029	0.0029
Field blank correction, g	0.0020	0.0020	0.0020
B.H. Total,g (corrected) M_{cpm}:	0.0044	0.0052	0.0029

O'BRIEN & GERE

SAMPLE TRAIN MOISTURE RECOVERY DATA SHEET

Reference Method / Sampling Train : M5/202

Recovered by : J. Gorman				**Recovered by :** J. Gorman				**Recovered by :** J. Gorman			
Run No. 1		**Date :** 04-26-12		**Run No.** 2		**Date :** 04-26-12		**Run No.** 3		**Date :** 04-26-12	
XAD Module No. :				**XAD Module No. :**				**XAD Module No. :**			
Filter No. : 1120103				**Filter No. :**				**Filter No. :**			
Impinger No. and Volume				**Impinger No. and Volume**				**Impinger No. and Volume**			
No.	Initial (mL)	Final (mL)	Rinse (mL)	No.	Initial (mL)	Final (mL)	Rinse (mL)	No.	Initial (mL)	Final (mL)	Rinse (mL)
1	0	48 JG ~~126~~	66	1	0	48	66	1	0	64	62
2	0	1	62	2	0	1	86	2	0	2	58
3	100	126		3	100	122		3	100	128	
4	SG			4	SG			4	SG		
5				5				5			
6				6				6			
7				7				7			
			DIFF :				DIFF :				DIFF :
Totals	100	175	75	**Totals**	100	171	71	**Totals**	100	194	94
	Initial (g)	Final (g)	DIFF :		Initial (g)	Final (g)	DIFF :		Initial (g)	Final (g)	DIFF :
Silica Gel	274.4	292.4	18.0	Silica Gel	281.3	302.5	21.2	Silica Gel	276.5	299.5	23
Final Net Moisture Gain:			93	**Final Net Moisture Gain:**			92.2	**Final Net Moisture Gain:**			117

E:\AECOM laptop transfer 2012\My Docs\EBV\Test Data\[M23 Moisture Recovery.xls]A

Purge start: 1640
Purge End: 1710
14 LPM

Purge start: 1930
Purge stop: 2030
@ 14 LPM

Purge start: 2230
Purge stop: 2330
@ 14 LPM

EPA Isokinetic Field Sheet

SP 1-8

Methods Performed M5/M202

Client	GEN DYN	Run Number	R1	Pitot Number	P4B
Location	JOPLIN MO	Stack Diameter	40.5	Pitot Coefficient	.84
Source	BUILDING 3 STACK EXH.	Barometric Pres.	28.8	Stack TC I.D.	P7B
Date	4-26-12	Static Pressure	+.75	Oven Box I.D.	5
Operators	JLS, BH, MS, BG	Meter Box #	5	Impinger Out I.D.	1
Start Time	~~1312~~ 1313	Meter delta H	1.83	Nozzle Size	.203
End Time	1535	Meter Gamma	1.008	XAD Trap I.D.	—

Leak Check Rates				
	Sample Rate in.	Sample Rate cfm	Pitot +	Pitot -
Initial	10	.001	✓	✓
Mid				
Mid				
Final	8	.002	✓	✓

Sample Point	Sample Time (min)	Velocity Head (in. H_2O)	Orifice Setting (in. H_2O)	Meter Volume (ft³)	Temperature Readings in Degrees Farenheit: Stack	Probe	Oven Box	Impinger	BH Filter Aux	Meter Inlet	Meter Outlet	Vacuum (in. hg)	Comments/Notes	M5 Filter Field Aux
A1	5	.80	1.44	433.812	123	251	245	68	84	93	90	4	ΔH	187
1	10	.74	~~1.33~~	437.01	123	254	253	56	76	96	90	4	1.18	190
2	15	.76	1.21	439.40	123	257	250	55	73	96	91	4		220
2	20	.72	1.15	442.70	122	258	252	56	71	97	91	4		225
3	25	.45	.72	445.20	124	254	251	57	70	98	91	4		238
3	30	.70	1.12	447.80	125	254	254	58	71	98	92	4		238
4	35	.84	1.34	450.70	124	257	256	56	71	99	92	4		235
4	40	.72	1.15	453.90	121	257	253	55	70	100	93	4		230
5	45	.95	1.52	456.70	121	255	248	57	72	100	93	4		230
5	50	.92	1.47	459.90	120	255	256	57	72	100	93	4		231
6	55	1.1	1.76	462.89	121	254	250	57	73	100	93	4		235
6	60	1.1	1.76	466.50	122	254	250	58	73	99	93	5		235
				470.497									@1413	
B1	1.05	.74	1.18	470.688	123	254	249	68	74	94	93	4		
1	1.10	.80	1.28	473.60	124	252	253	51	74	96	93	4	@1435	
2	1.15	.80	1.28	—	124	249	250	51	74	97	93	4		
2	1.20	.80	1.28	—	123	252	254	51	76	98	93	4		
3	1.25	.85	1.36	483.20	124	257	256	51	75	98	93	4		
3	1.30	.77	1.23	485.9	123	259	250	51	75	98	93	4	216	
4	1.35	.63	1.01	489.0	123	257	251	51	75	98	93	4	216	
4	1.40	.56	0.90	491.7	123	255	251	51	76	98	93	4	216	
5	1.45	.66	1.06	494.5	122	253	249	52	77	99	93	4	214	
5	1.50	.66	1.06	497.2	123	254	254	52	78	99	93	4	214	
6	1.55	.98	1.57	500.0	123	248	249	52	78	100	94	5	214	
6	2	.95	1.52	503.5	122	246	254	52	87	100	94	5	218	
				506.823										

Impinger Data (vol)		
#	Initial	Final
1	0	48
2	0	1
3	100	126
4	SG	
5		
6		

Silica Gel Data (gm)		
#	Initial	Final
1	274.4	292.4
2		

Moisture Gain	
75	ml.
18	gm
93	Total

Filter Data		
#	Number	Tare
1	11120103	
2		
3		

Molecular Weight Data (%)		
#	O_2	CO_2
1	20.52	0.71
2		
3		
Avg		

O'BRIEN & GERE

V:\Office-Ops\ENV\Div01\Source Testing\Field Data Forms\Isokinetic\Iso Field Sheet.xls

EPA Isokinetic Field Sheet

Methods Performed: MS/M202

Client	Gen Dyn	Run Number	R2	Pitot Number	P4B
Location	Joplin Mo	Stack Diameter	40.5	Pitot Coefficient	.84
Source	Buildings Stack Exh.	Barometric Pres.	28.8	Stack TC I.D.	P4B
Date	4-26-12	Static Pressure	+.75	Oven Box I.D.	5
Operators	JLS, JOH, MS, BG	Meter Box #	5	Impinger Out I.D.	1
Start Time	1650	Meter delta H	1.83	Nozzle Size	.203
End Time	1905	Meter Gamma	1.008	XAD Trap I.D.	—

Leak Check Rates	Sample Rate in.	Sample Rate cfm	Pitot +	Pitot -
Initial	10	.002	✓	✓
Mid				
Mid				
Final	10	.001	✓	✓

Sample Point	Sample Time (min)	Velocity Head (in. H_2O)	Orifice Setting (in. H_2O)	Meter Volume (ft³)	Temperature Readings in Degrees Farenheit: Stack	Probe	Oven Box	Impinger	Aux	Meter Inlet	Meter Outlet	Vacuum (in. hg)	Comments/Notes
A 1	5	.80	1.28	506.938	118	255	254	62	74	100	96	4	
1	10	.80	1.28	—	118	254	254	60	72	101	96	4	
A 2	15	.76	1.21	513.40	119	255	251	60	72	101	96	4	
2	20	.70	1.12	515.80	119	255	256	63	72	101	96	4	
A 3	25	.70	1.12	518.996	119	251	252	66	72	100	96	4	
3	30	.68	1.10	521.70	120	258	252	66	75	100	96	4	
A 4	35	.54	.86	524.40	120	260	254	67	75	100	96	3	
4	40	.54	.86	526.99	120	256	251	61	75	99	96	3	
A 5	45	.65	1.04	529.30	121	255	253	58	75	99	95	3	
5	50	.63	1.00	532.60	121	252	250	57	75	100	95	3	
A 6	55	.76	1.37	536 —	121	255	248	57	76	102	95	4	
6	60	.76	1.37	537.80	121	255	254	58	76	102	95	4	
				541.334									@1750
B 1	1.05	.65	1.17	541.448	121	249	254	61	75	99	96	4	@1805
1	1.10	.65	1.17	544.30	122	256	252	52	77	100	96	4	
B 2	1.15	.65	1.17	547.7	122	257	253	52	77	99	96	4	
2	1.20	.64	1.15	550.6	121	254	251	54	77	98	96	4	
B 3	1.25	.42	.75	554.10	121	256	250	59	77	97	95	4	
3	1.30	.42	.75	556.60	122	254	253	59	76	96	95	4	
B 4	1.35	.72	1.30	559.20	123	254	253	60	74	97	94	4	
4	1.40	.68	1.22	561.40	122	256	251	60	75	98	94	4	
B 5	1.45	.85	1.53	565.60	123	255	253	59	76	98	94	4	
5	1.50	.72	1.30	568.80	122	256	252	58	76	98	94	4	
B 6	1.55	.82	1.47	571.30	123	254	251	58	77	98	94	4	
6	2	.72	1.30	574.56	123	253	253	60	78	98	94	4	
				577.398									
													@1905

Impinger Data (vol) #	Initial	Final
1	0	48
2	0	1
3	100	122
4	SG	
5		
6		

Silica Gel Data (gm) #	Initial	Final
1	281.3	302.5
2		

Moisture Gain	
71	ml.
21.2	gm
92.2	Total

Filter Data #	Number	Tare
1		
2		
3		

Molecular Weight Data (%) #	O_2	CO_2
1	20.4	0.86
2		
3		
Avg		

O'BRIEN & GERE

EPA Isokinetic Field Sheet

Methods Performed M5/M202

Client	Gen Dyn.	Run Number	R3	Pitot Number	P4B
Location	Joplin Mo	Stack Diameter	40.5	Pitot Coefficient	.84
Source	Building 3 Stack Exh.	Barometric Pres.	28.8	Stack TC I.D.	P4B
Date	4-26-12	Static Pressure	+.75	Oven Box I.D.	5
Operators	JLS, MS, BG	Meter Box #	5	Impinger Out I.D.	075 10 = 1
Start Time	2000	Meter delta H	1.83	Nozzle Size	.203
End Time	2213	Meter Gamma	1.008	XAD Trap I.D.	—

Leak Check Rates	Sample Rate in.	Sample Rate cfm	Pitot +	Pitot -
Initial	10	.001	✓	✓
Mid				
Mid				
Final	8	.007	✓	✓

Sample Point	Sample Time (min)	Velocity Head (in. H_2O)	Orifice Setting (in. H_2O)	Meter Volume (ft^3)	Stack	Probe	Oven Box	Impinger	Aux	Meter Inlet	Meter Outlet	Vacuum (in. hg)	Comments/Notes
A 1	5	.75	1.35	577.530	120	254	253	66	73	89	89	4	
1	10	.72	1.30	581.90	121	254	252	64	72	91	89	4	
A 2	15	.74	1.33	583.9	122	255	253	64	71	91	88	4	
2	20	.75	1.35	587.0	120	257	252	62	71	93	88	4	
A 3	25	.54	0.97	—	122	254	254	62	71	93	88	4	
3	30	.58	1.04	593.3	122	255	254	62	72	93	88	4	
A 4	35	.71	1.28	596.1	123	256	254	61	72	93	88	4	
4	40	.71	1.28	598.9	122	255	253	60	73	93	87	5	
A 5	45	.98	1.76	602.2	121	253	254	60	74	94	88	5	
5	50	.92	1.66	605.5	122	258	252	60	75	94	87	4	
A 6	55	.97	1.75	609.1	122	256	253	63	76	94	87	5	
C	60	.90	1.62	612.6	123	255	251	63	75	94	87	5	
				616.161									Stop 2100
B 1	5	.71	1.27	616.215	122	255	251	60	71	88	86	5	Start 2113
1	10	.71	1.27	619.4	123	255	252	53	71	90	86	5	
B 2	15	.71	1.27	622.5	123	254	251	50	71	91	86	4	
2	20	.71	1.27	625.7	121	254	254	51	71	92	86	4	
B 3	25	.50	.90	—	123	258	252	51	72	92	86	4	
3	30	.50	.90	631.5	123	254	254	52	72	92	86	4	
B 4	35	.85	1.53	634.2	121	255	252	52	72	91	85	4	
4	40	.85	1.53	637.3	122	256	251	52	72	91	85	4	
B 5	45	.81	1.45	640.6	120	255	254	51	74	92	85	5	
5	50	.81	1.45	643.9	122	255	252	52	74	92	85	4	
B 6	55	.81	1.45	647.1	121	255	251	52	74	92	85	4	
6	60	.80	1.44	650.4	122	254	253	53	75	92	85	5	
				658.677									

Impinger Data (vol) #	Initial	Final
1	0	64
2	0	2
3	100	128
4		
5		
6		

Silica Gel Data (gm) #	Initial	Final
1	276.5	299.5
2		

Moisture Gain	
74	ml.
23	gm
117	Total

Filter Data #	Number	Tare
1		
2		
3		

Molecular Weight Data (%) #	O_2	CO_2
1	20.36	0.92
2		
3		
Avg		

O'BRIEN & GERE

V:\Office-Ops\ENV\Inv01\Source Testing\Field Data Forms\Isokinetic\Iso Field Sheet.xls

Method 26A

HCL/Cl_2 Results Summary
General Dynamics OTS Munition Services
Building 3 Main Exhaust
Joplin, MO

Parameter:	Run 1			Run 2			Run 3			Average		
	µg	ppm	lb/hr	µg	ppm	lb/hr	µg	ppm	lb/hr	µg	ppm	lb/hr
HCl	7,250	2.13	0.292	6,100	1.78	0.244	7,400	2.25	0.321	6,917	2.05	0.285
Cl_2	10,000	1.53	0.402	11,000	1.67	0.440	13,000	2.06	0.563	11,333	1.75	0.469

Where:

Pollutant Emission Concentration:

mg= total sample collected, milligrams

mg/dscm = milligrams of pollutant per dry standard cubic meter sampled = (mg/dscf) x (35.314 cubic feet/cubic meter)

ppm = parts per million =((mg/dscm x 24.04 liters/mol)/mol.wt))

Pollutant Emission Rate:

lb/hr = pounds of pollutant emitted per hour = mg/1000/[(453.59 g/lb)/(dscf)] x dscfm x 60 min/hr

Test Data Summary and Calculations
General Dynamics OTS Munition Services
Building 3 Main Exhaust
Joplin, MO

Parameter	Run 1	Run 2	Run 3
Run Date	25Apr12	25Apr12	26Apr12
Start/Stop Time	0904-1150	1335-1635	0850-1130
Duration of Run, Minutes	120	120	120
Ave. Nozzle Diameter, inches	0.212	0.212	0.203
Pitot Calibration Factor, CF	0.84	0.84	0.84
Meter Gamma	0.990	0.990	0.990
Meter Delta H, inches of H2O	2.01	2.01	2.01
Stack Diameter, inches	40.5	40.5	40.5
Rectangular Width, inches	0	0	0
Rectangular Length, inches	0	0	0
Stack Area, sq.ft.	8.95	8.95	8.95
Barometric Pressure, inches of Hg	28.6	28.5	28.8
Static Pressure, inches of H2O	0.75	0.75	0.75
Dry Gas Meter Sample Volume, (VM)ft3			
Initial	159.128	245.168	349.527
Final	244.701	332.76	431.456
Difference	85.573	87.592	81.929
Ave. Stack Temperature, Ts(F)	120.0	120.1	120.1
Ave. Meter Temperature, Tm(F)	83.0	90.6	80.9
Ave. Run Delta H, inches of H2O	1.71	1.74	1.54
Ave. Square Root of Delta P	0.9113	0.9132	0.9497
Moisture Data			
Volume of water collected, mls	120	120	124
Silica Gel, grams	14.6	15.9	14
Total Collected, mls	134.6	135.9	138
ORSAT Data			
%O2	20.44	20.59	20.48
%CO2	0.74	0.63	0.68
%CO			

Calculations

Vw(std), scf =	6.336	6.397	6.496
Vm(std), dscf =	79.088	79.567	76.512
Bws=	0.074	0.074	0.078
Md=	28.94	28.92	28.93
Ms=	28.12	28.11	28.07
Vs, ft/sec =	55.5	55.7	57.7
Qs, acfm =	29,799	29,923	30,979
Qs(std), dscfm =	24,054	24,058	25,066
Isokinetic Sampling Rate, %	100.0	100.6	101.3

Where:

An = area of the nozzle
As = area of the stack
Vw(std) = volume of water vapor in gas, standard conditions = 0.04707*Vlc
Vm(std) = vol. of gas sampled, standard conditions = 17.647 x Vm x gamma x [Pb + (dH/13.6)]/Tm(R)
Bws = water vapor in gas stream, proportion by volume = Vw(std)/(Vm(std) + Vw(std))
Md = molecular weight of stack gas, dry basis = (0.44 x%CO2) + (0.32 x%O2) + [0.28 x (%N2 + %CO)]
Ms = molecular weight of stack gas, wet basis = [Md x (1-Bws)] + (18.0 x Bws)
Vs = stack gas velocity = 85.49 x Cp x (avg. Sq.Rt. dP) x [Sq.Rt. (Ts(R))/(Ms x Ps)]
Qs = stack gas flow rate = Vs x As x 60
Qs(std) = stack gas flow rate, standard conditions = Qs x (1-Bws) x (528/(Ts(R)) x (Ps/29.92)
Isokinetic sampling rate = {(Ts(R)) x [(0.00267 x Vlc) + (Vm(std)/17.647)] x 100}/(Time x vs x Ps x An x60)

Field Data Summary
General Dynamics OTS Munition Services
Building 3 Main Exhaust
Joplin, MO

	Run 1							Run 2							Run 3					
Traverse Point	Stack Temp(F)	Delta P	Delta H	Tm(F) in	Tm(F) out	SQRT Delta P		Stack Temp(F)	Delta P	Delta H	Tm(F) in	Tm(F) out	SQRT Delta P		Stack Temp(F)	Delta P	Delta H	Tm(F) in	Tm(F) out	SQRT Delta P
A1	119	0.80	1.64	77	76	0.8944		119	1.00	2.05	87	86	1.0000		121	0.60	1.02	75	75	0.7746
1	114	0.85	1.74	77	76	0.9220		120	1.00	2.05	87	86	1.0000		121	0.84	1.42	81	76	0.9165
2	117	0.75	1.53	78	77	0.8660		117	1.10	2.26	89	86	1.0488		120	0.84	1.42	82	77	0.9165
2	116	0.85	1.74	79	77	0.9220		118	1.10	2.26	89	86	1.0488		120	0.84	1.42	83	77	0.9165
3	120	0.80	1.64	80	78	0.8944		120	0.95	1.95	90	86	0.9747		121	0.72	1.22	83	77	0.8485
3	119	0.77	1.58	81	78	0.8775		121	0.88	1.80	90	86	0.9381		120	0.72	1.22	83	77	0.8485
4	117	0.75	1.54	82	78	0.8660		120	0.40	0.82	91	87	0.6325		121	0.90	1.53	82	77	0.9487
4	119	0.70	1.43	82	78	0.8367		123	0.35	0.72	91	87	0.5916		118	0.92	1.56	82	77	0.9592
5	120	0.80	1.64	83	79	0.8944		125	0.62	1.27	92	88	0.7874		119	1.10	1.87	81	77	1.0488
5	120	0.85	1.74	84	80	0.9220		121	0.90	1.85	92	88	0.9487		120	1.10	1.87	82	77	1.0488
6	120	0.90	1.84	84	80	0.9487		120	0.80	1.64	91	88	0.8944		119	1.10	1.87	82	77	1.0488
6	119	0.95	1.94	84	80	0.9747		120	0.55	1.13	93	89	0.7416		117	1.10	1.87	82	77	1.0488
B1	120	1.00	2.05	84	82	1.0000		119	0.87	1.78	93	91	0.9327		120	0.98	1.67	82	78	0.9899
1	119	1.00	2.05	86	83	1.0000		118	0.87	1.78	93	91	0.9327		120	0.98	1.67	83	78	0.9899
2	120	0.92	1.88	87	83	0.9592		120	0.92	1.89	94	91	0.9592		120	0.96	1.63	84	79	0.9798
2	120	0.94	1.92	88	83	0.9695		121	0.92	1.89	95	91	0.9592		119	0.91	1.55	85	79	0.9539
3	122	0.92	1.88	89	83	0.9592		122	0.92	1.89	95	91	0.9592		118	0.93	1.58	86	79	0.9644
3	122	0.90	1.84	90	85	0.9487		122	0.92	1.89	95	91	0.9592		121	0.93	1.58	86	80	0.9644
4	122	0.78	1.60	90	86	0.8832		117	0.80	1.64	95	91	0.8944		123	0.65	1.10	87	80	0.8062
4	122	0.50	1.02	90	85	0.7071		119	0.68	1.39	95	91	0.8246		122	0.70	1.19	87	80	0.8367
5	123	0.97	1.98	90	85	0.9849		119	0.94	1.93	95	91	0.9695		120	0.89	1.51	87	80	0.9434
5	124	0.70	1.43	90	85	0.8367		119	0.94	1.93	95	91	0.9695		121	0.89	1.51	87	80	0.9434
6	123	0.88	1.80	90	86	0.9381		120	0.94	1.93	94	90	0.9695		121	1.10	1.87	87	81	1.0488
6	123	0.75	1.53	90	86	0.8660		123	0.96	1.97	94	90	0.9798		120	1.10	1.87	88	81	1.0488
Average	120	0.83	1.71	85	81	0.9113		120	0.85	1.74	92	89	0.9132		120	0.91	1.54	84	78	0.9497

O'BRIEN & GERE

SAMPLE TRAIN MOISTURE RECOVERY DATA SHEET

Reference Method / Sampling Train : M 26A

Recovered by : J. Gorman				**Recovered by :** J. Gorman				**Recovered by :** J. Gorman			
Run No. 1		**Date :** 04-25-12		**Run No.** 2		**Date :** 04-25-12		**Run No.** 3		**Date :** 04-26-12	
XAD Module No. : —				**XAD Module No. :** —				**XAD Module No. :** —			
Filter No. : M26A				**Filter No. :** M26A				**Filter No. :** M26A			
Impinger No. and Volume				**Impinger No. and Volume**				**Impinger No. and Volume**			
No.	Initial (mL)	Final (mL)	Rinse (mL)	No.	Initial (mL)	Final (mL)	Rinse (mL)	No.	Initial (mL)	Final (mL)	Rinse (mL)
1	100	206	110	1	100	204	52	1	100	196	72
2	100	114	55	2	100	116	72	2	100	124	68
3	100	104	62	3	100	104	54	3	100	104	72
4	100	96	58	4	100	96	56	4	100	100	76
5	SG			5	SG			5	SG		
6				6				6			
7				7				7			
			DIFF :				DIFF :				DIFF :
Totals	400	520	120	**Totals**	400	520	120	**Totals**	400	524	124
	Initial (g)	Final (g)	DIFF :		Initial (g)	Final (g)	DIFF :		Initial (g)	Final (g)	DIFF :
Silica Gel	275.0	289.6	14.6	Silica Gel	275.1	291.0	15.9	Silica Gel	278.5	292.5	14
Final Net Moisture Gain:			134.9	**Final Net Moisture Gain:**			135.9	**Final Net Moisture Gain:**			138

E:\AECOM laptop transfer 2012\My Docs\EBV\Test Data\[M23 Moisture Recovery.xls]A

EPA Isokinetic Field Sheet

Methods Performed: M26A

Client	GEN. D	Run Number	R1	Pitot Number	P4A
Location	JOPLIN MO.	Stack Diameter	40.25	Pitot Coefficient	.84
Source	BUILDING 3 STACK EXH.	Barometric Pres.	28.6	Stack TC I.D.	P4A
Date	4-25-12	Static Pressure	+.75	Oven Box I.D.	OB3
Operators	JLS, BH, MS	Meter Box #	7	Impinger Out I.D.	15
Start Time	0904	Meter delta H	2.01	Nozzle Size	.212
End Time	1150	Meter Gamma	.990	XAD Trap I.D.	—

Leak Check Rates	Sample Rate in.	Sample Rate cfm	Pitot +	Pitot -
Initial	15	.003	✓	✓
Mid	10	.001		
Mid				
Final	4	.002	✓	✓

Sample Point	Sample Time (min)	Velocity Head (in. H_2O)	Orifice Setting (in. H_2O)	Meter Volume (ft³)	Stack	Probe	Oven Box	Impinger	Aux	Meter Inlet	Meter Outlet	Vacuum (in. hg)	Comments/Notes
A1	5	.80	1.64	159.128	119	255	256	64	—	77	76	2	
1	10	.85	1.74	162.80	114	255	254	61	—	77	76	2	
A2	15	.75	1.53	166.80	117	256	258	63	—	78	77	2	
2	20	.85	1.74	169.80	116	255	259	61	—	79	77	2	
A3	25	.80	1.64	173.30	120	254	251	62	—	80	78	2	
3	30	.77	1.58	176.80	119	254	251	63	—	81	78	2	
A4	35	.75	1.53	179.50	117	255	256	63	—	82	78	2	
4	40	.70	1.43	184.00	119	256	256	63	—	82	78	2	
A5	45	.80	1.64	187.20	120	256	258	64	—	83	79	2	
5	50	.85	1.74	190.40	120	256	255	65	—	84	80	2	
A6	55	.90	1.84	194.10	120	256	255	64	—	84	80	2	
6	60	.95	1.94	197.00	119	256	254	63	—	84	80	2	1004
				201.270									
B1	1.05	1.0	2.05	206.655	120	256	253	67	—	84	82	2	1050
1	1.10	1.0	2.05	206.20	119	254	253	66	—	86	83	2	
2	1.15	.92	1.88	209.60	120	256	253	67	—	87	83	2	
2	1.20	.94	1.92	213.30	120	257	258	67	—	88	83	2	
3	1.25	.92	1.88	216.50	122	256	256	67	—	89	83	2	
3	1.30	.90	1.84	220.30	122	255	256	67	—	90	85	2	
4	1.35	.78	1.60	224.30	122	254	255	67	—	90	86	2	
4	1.40	.50	1.02	227.90	122	256	255	48	—	90	85	2	
5	1.45	.97	1.98	231.60	123	256	255	47	—	90	85	2	
5	1.50	.70	1.43	234.20	124	256	257	47	—	90	85	2	
6	1.55	.88	1.80	238.10	123	254	256	47	—	90	86	2	
6	2.00	.75	1.53	243.10	123	256	252	47	—	90	86	2	1150
				245.086									

Impinger Data (vol) #	Initial	Final
1	100	206
2	100	114
3	100	104
4	100	96
5	SG	
6		

Silica Gel Data (gm) #	Initial	Final
1	275.0	289.6
2		

Moisture Gain	
120	ml.
14.6	gm
134.9	Total

Filter Data #	Number	Tare
1	M26A	untared
2		
3		

Molecular Weight Data (%) #	O_2	CO_2
1	20.44	0.74
2		
3		
Avg		

V:\Office-Op\ENV\Div01\Source Testing\Field Data Forms\Isokinetic\Iso Field Sheet.xls

2.05

O'BRIEN & GERE

EPA Isokinetic Field Sheet

Methods Performed: M26A

Client	GEN D	Run Number	P2	Pitot Number	P4A
Location	BUILDING 3	Stack Diameter	40.5	Pitot Coefficient	.84
Source	STACK EXH.	Barometric Pres.	28.5	Stack TC I.D.	P4A
Date	4-25-12	Static Pressure	+.75	Oven Box I.D.	3
Operators	JLS	Meter Box #	7	Impinger Out I.D.	15
Start Time	1335	Meter delta H	2.01	Nozzle Size	.212
End Time	1635	Meter Gamma	.990	XAD Trap I.D.	—

Leak Check Rates

	Sample Rate in.	Sample Rate cfm	Pitot +	Pitot -
Initial	10	.000	✓	✓
Mid	8	.001		
Mid				
Final	5	.002	✓	✓

Sample Point	Sample Time (min)	Velocity Head (in. H_2O)	Orifice Setting (in. H_2O)	Meter Volume (ft³)	Temperature Readings in Degrees Farenheit: Stack	Probe	Oven Box	Impinger	Aux	Meter Inlet	Meter Outlet	Vacuum (in. hg)	Comments/Notes
A1	5	1.0	2.05	245.168	119	256	255	47	~~47~~	87	86	3	
1	10	1.0	2.05	248.40	120	257	255	42	—	87	86	3	
A2	15	1.1	2.25	252.90	117	256	251	44	—	89	86	4	
2	20	1.1	2.25	256.80	118	256	252	45	—	89	86	4	
A3	25	.95	1.94	260.99	120	250	258	45	—	90	86	4	
3	30	.88	1.80	264.30	121	255	259	46	—	90	86	4	
A4	35	.40	.82	268.10	120	252	257	46	—	91	87	4	
4	40	.35	.71	271.60	123	256	257	46	—	91	87	4	
A5	45	.62	1.27	274.10	125	256	254	46	—	92	88	4	
5	50	.90	1.84	277.10	121	254	254	48	—	92	88	4	@1424
A6	55	.80	1.64	280.90	120	254	254	56	—	91	88	4	280.358
6	60	.55	1.12	284.70	120	256	256	49	—	93	89	4	@1435
				287.697									@1446
B1	1.05	.87	1.78	287.760	119	256	253	69	—	93	91	4	287.697
1	1.10	.87	1.78	291.40	118	256	256	51	—	93	91	4	@~~1528~~ 1535
B2	1.15	.92	1.88	294.20	120	256	258	52	—	94	91	4	
2	1.20	.92	1.88	297.90	121	256	254	56	—	95	91	4	
B3	1.25	.92	1.88	302.30	122	257	255	56	—	95	91	4	
3	1.30	.92	1.88	306.40	122	255	253	57	—	95	91	4	
B4	1.35	.80	1.64	309.90	117	256	256	56	—	95	91	4	
4	1.40	.68	1.40	314.01	119	255	252	58	—	95	91	4	
B5	1.45	.94	1.92	316.70	119	256	252	58	—	95	91	4	
5	1.50	.94	1.92	321.30	119	254	254	58	—	95	91	4	
B6	1.55	.94	1.92	324.50	120	256	254	59	—	94	90	4	
6	2.00	.96	1.97	329.40	123	256	254	61	—	94	90	4	1635
				332.823									

Impinger Data (vol)

#	Initial	Final
1	100	204
2	100	116
3	100	104
4	100	96
5	SG	
6		

Silica Gel Data (gm)

#	Initial	Final
1	275.1	291.0
2		

Moisture Gain

120	ml.
15.9	gm
135.9	Total

Filter Data

#	Number	Tare
1	M26A	untared
2		
3		

Molecular Weight Data (%)

#	O_2	CO_2
1	20.59	0.63
2		
3		
Avg		

O'BRIEN & GERE

V:\Office-Op\[illegible]\Source Testing\Field Data Forms\Isokinetic\Iso Field Sheet.xls

EPA Isokinetic Field Sheet

Methods Performed: M26A

Client	Gen Dyn	Run Number	R3	Pitot Number	P4A
Location	Joplin, MO	Stack Diameter	40.5	Pitot Coefficient	.84
Source	Building 3 Stack Exh.	Barometric Pres.	28.8	Stack TC I.D.	P4A
Date	4-26-12	Static Pressure	+.75	Oven Box I.D.	3
Operators	JLS, BH, MS, BG	Meter Box #	7	Impinger Out I.D.	15
Start Time	0850	Meter delta H	2.01	Nozzle Size	.203
End Time	1130	Meter Gamma	.990	XAD Trap I.D.	—

Leak Check Rates	Sample Rate in.	Sample Rate cfm	Pitot +	Pitot -
Initial	10	.002	✓	✓
Mid				
Mid				
Final	5	.002	✓	✓

Sample Point	Sample Time (min)	Velocity Head (in. H_2O)	Orifice Setting (in. H_2O)	Meter Volume (ft³)	Stack	Probe	Oven Box	Impinger	Aux	Meter Inlet	Meter Outlet	Vacuum (in. hg)	Comments/Notes
A1	5	.60	1.02	349.527	121	249	253	57	—	75	75	2	
1	10	.84	1.42	353.70	121	255	257	39	—	81	76	2	
2	15	.84	1.42	355.60	120	254	256	38	—	82	77	2	
2	20	.84	1.42	358.90	120	256	257	39	—	83	77	2	
3	25	.72	1.22	361.99	121	252	254	40	—	83	77	2	
3	30	.72	1.22	364.90	120	255	254	42	—	83	77	2	
4	35	.90	1.53	367.01	121	256	256	42	—	82	77	2	
4	40	.92	1.56	371.40	118	254	255	42	—	82	77	2	
5	45	1.1	1.87	374.80	119	254	255	42	—	81	77	2	
5	50	1.1	1.87	378.20	120	256	256	42	—	82	77	2	
6	55	1.1	1.87	381.60	119	256	254	43	—	82	77	2	
6	60	1.1	1.87	385.90	117	255	256	43	—	82	77	2	@950
													389.555
B1	1.05	0.98	1.67	389.638	120	251	251	63	—	82	78	2	START 1030
1	1.10	0.98	1.67	393.3	120	253	252	49	—	83	78	2	
2	1.15	0.96	1.63	396.9	120	253	249	49	—	84	79	2	
2	1.20	0.91	1.55	400.3	119	251	252	50	—	85	79	2	
3	1.25	0.93	1.58	403.9	118	252	252	51	—	86	79	2	
3	1.30	0.93	1.58	407.3	121	252	254	51	—	86	80	2	
4	1.35	0.65	1.10	410.8	123	254	251	52	—	87	80	2	
4	1.40	0.70	1.19	414.0	122	252	252	53	—	87	80	2	
5	1.45	0.88	1.51	417.0	120	256	250	54	—	87	80	2	
5	1.50	0.89	1.51	420.5	121	252	251	53	—	87	80	2	
6	1.55	1.1	1.87	423.9	121	252	251	54	—	87	81	2	
6	2	1.1	1.87	427.7	120	252	251	53	—	88	81	2	
				431.589					—				

Impinger Data (vol) #	Initial	Final
1	100	196
2	100	124
3	100	104
4	100	100
5	SG	
6		

Silica Gel Data (gm) #	Initial	Final
1	278.5	292.5
2		

Moisture Gain	
124	ml.
14	gm
138	Total

Filter Data #	Number	Tare
1	M26A	untared
2		
3		

Molecular Weight Data (%) #	O_2	CO_2
1	20.48	0.68
2		
3		
Avg		

O'BRIEN & GERE

V:\Office-Ops\ENV\Dn01\Source Testing\Field Data Forms\Isokinetic\iso Field Sheet.xls

Method 29

Multi-metals Results Summary
Total of Front-Half and Back-Half Analyses
General Dynamics OTS Munition Services
Building 3 Main Exhaust
Joplin, MO

Parameter:	Run 1				Run 2				Run 3				Average		
	(Total ug)	(ug/dscm)	(g/min)	(lb/hr)	(Total ug)	(ug/dscm)	(g/min)	(lb/hr)	(Total ug)	(ug/dscm)	(g/min)	(lb/hr)	(ug/dscm)	(g/min)	(lb/hr)
Arsenic	1.60	0.51	3.49E-04	4.61E-05	1.60	0.49	3.57E-04	4.72E-05	1.60	0.53	3.47E-04	4.59E-05	0.51	3.51E-04	4.64E-05
Beryllium	0.40	0.13	8.71E-05	1.15E-05	0.40	0.12	8.92E-05	1.18E-05	0.40	0.13	8.68E-05	1.15E-05	0.13	8.77E-05	1.16E-05
Cadium	0.40	0.13	8.71E-05	1.15E-05	0.40	0.12	8.92E-05	1.18E-05	0.40	0.13	8.68E-05	1.15E-05	0.13	8.77E-05	1.16E-05
Chromium	0.73	0.23	1.59E-04	2.10E-05	0.83	0.26	1.85E-04	2.45E-05	0.33	0.11	7.16E-05	9.47E-06	0.20	1.39E-04	1.83E-05
Lead	0.82	0.26	1.79E-04	2.36E-05	1.32	0.41	2.95E-04	3.90E-05	1.22	0.40	2.65E-04	3.50E-05	0.36	2.46E-04	3.25E-05

Where:

Total ug= Total sample collected, micrograms
ug/dscm = grams of pollutant per dry standard cubic meter = (ug/dscf) x (35.314 cubic feet/cubic meter)
g/min = grams per minute, emission rate = ug/dscf x DSCFM x 1 gram/1.00E+06 ug
lb/hr = pounds per hour emission rate = g/min x 60 min/hour/(453.59 g/lb)

O'BRIEN & GERE

Test Data Summary and Calculations
General Dynamics OTS Munition Services
Building 3 Main Exhaust
Joplin, MO

Parameter	Run 1	Run 2	Run 3
Run Date	26Apr12	26Apr12	26Apr12
Start/Stop Time	1312-1535	1650-1905	2000-2213
Duration of Run, Minutes	120	120	120
Ave. Nozzle Diameter, inches	0.252	0.252	0.252
Pitot Calibration Factor, CF	0.84	0.84	0.84
Meter Gamma	0.990	0.990	0.990
Meter Delta H, inches of H2O	2.01	2.01	2.01
Stack Diameter, inches	40.5	40.5	40.5
Rectangular Width, inches	0	0	0
Rectangular Length, inches	0	0	0
Stack Area, sq.ft.	8.95	8.95	8.95
Barometric Pressure, inches of Hg	28.8	28.8	28.8
Static Pressure, inches of H2O	0.75	0.75	0.75
Dry Gas Meter Sample Volume, (VM)ft3			
Initial	431.732	552.477	677.560
Final	552.29	677.267	793.09
Difference	120.558	124.790	115.53
Ave. Stack Temperature, Ts(F)	120.1	117.9	118.8
Ave. Meter Temperature, Tm(F)	91.9	93.1	85.1
Ave. Run Delta H, inches of H2O	3.35	3.74	3.17
Ave. Square Root of Delta P	0.9121	0.9617	0.8855
Moisture Data			
Volume of water collected, mls	166	165	179
Silica Gel, grams	23.5	23	22.3
Total Collected, mls	189.5	188	201.3
ORSAT Data			
%O2	20.52	20.40	20.36
%CO2	0.71	0.86	0.92
%CO			

Calculations

Vw(std), scf =	8.920	8.849	9.475
Vm(std), dscf =	110.851	114.594	107.505
Bws=	0.074	0.072	0.081
Md=	28.93	28.95	28.96
Ms=	28.12	28.17	28.07
Vs, ft/sec =	55.4	58.2	53.8
Qs, acfm =	29,726	31,256	28,851
Qs(std), dscfm =	24,150	25,567	23,329
Isokinetic Sampling Rate, %	98.8	96.5	99.2

Where:

Vw(std) = volume of water vapor in gas, standard conditions = 0.04707*Vlc
Vm(std) = vol. of gas sampled, standard conditions = 17.647 x Vm x gamma x [Pb + (dH/13.6)]/Tm(R)
Bws = water vapor in gas stream, proportion by volume = Vw(std)/(Vm(std) + Vw(std))
Md = molecular weight of stack gas, dry basis = (0.44 x%CO2) + (0.32 x%O2) + (0.28 x (%N2 + %CO)]
Ms = molecular weight of stack gas, wet basis = [Md x (1-Bws)] + (18.0 x Bws)
Vs = stack gas velocity = 85.49 x Cp x (avg. Sq.Rt. dP) x [Sq.Rt. (Ts(R))/(Ms x Ps)]
Qs = stack gas flow rate = Vs x As x 60
Qs(std) = stack gas flow rate, standard conditions = Qs x (1-Bws) x (528/(Ts(R)) x (Ps/29.92)
Isokinetic sampling rate = {(Ts(R)) x [(0.00267 x Vlc) + (Vm(std)/17.647)] x 100}/(Time x vs x Ps x An x60)

Field Data Summary
General Dynamics OTS Munition Services
Building 3 Main Exhaust
Joplin, MO

	Run 1							Run 2							Run 3					
Traverse Point	Stack Temp(F)	Delta P	Delta H	Tm(F) in	Tm(F) out	SQRT Delta P		Stack Temp(F)	Delta P	Delta H	Tm(F) in	Tm(F) out	SQRT Delta P		Stack Temp(F)	Delta P	Delta H	Tm(F) in	Tm(F) out	SQRT Delta P
A1	120	0.80	3.20	90	87	0.8944		116	1.10	4.40	94	91	1.0488		118	0.69	2.76	83	83	0.8307
1	122	0.77	3.08	92	87	0.8775		117	1.10	4.40	96	91	1.0488		119	0.69	2.76	84	82	0.8307
2	121	0.65	2.60	94	87	0.8062		116	1.10	4.40	96	91	1.0488		119	0.70	2.80	86	82	0.8367
2	121	0.62	2.48	94	88	0.7874		117	1.10	4.40	96	91	1.0488		117	0.70	2.80	88	82	0.8367
3	121	0.55	2.20	95	88	0.7416		118	0.74	2.96	95	91	0.8602		119	0.48	1.92	88	82	0.6928
3	122	0.55	2.20	95	89	0.7416		117	0.74	2.96	95	90	0.8602		118	0.48	1.92	89	82	0.6928
4	121	0.92	3.68	95	89	0.9592		117	0.74	2.96	95	90	0.8602		119	0.92	3.68	90	82	0.9592
4	120	0.92	3.68	96	90	0.9592		117	0.74	2.96	95	90	0.8602		118	0.93	3.72	91	82	0.9644
5	115	0.95	3.80	96	90	0.9747		117	0.99	3.96	95	90	0.9950		117	0.87	3.48	91	83	0.9327
5	116	0.95	3.80	96	90	0.9747		117	0.98	3.92	95	90	0.9899		118	0.90	3.60	92	83	0.9487
6	117	0.96	3.84	95	90	0.9798		118	1.10	4.40	97	90	1.0488		119	0.87	3.48	92	83	0.9327
6	119	0.96	3.84	95	90	0.9798		117	1.10	4.40	97	90	1.0488		119	0.87	3.48	92	83	0.9327
B1	121	1.10	4.40	91	89	1.0488		119	1.10	4.40	95	91	1.0488		120	0.68	2.72	86	82	0.8246
1	122	1.00	4.00	94	89	1.0000		120	1.10	4.40	95	91	1.0488		119	0.83	3.32	86	82	0.9110
2	122	0.94	3.76	94	89	0.9695		119	1.10	4.40	96	91	1.0488		119	0.82	3.28	88	82	0.9055
2	121	0.94	3.76	95	89	0.9695		119	1.10	4.40	97	91	1.0488		119	0.87	3.48	88	81	0.9327
3	121	0.75	3.00	95	89	0.8660		118	0.54	2.16	96	91	0.7348		120	0.68	2.72	88	81	0.8246
3	121	0.69	2.76	96	89	0.8307		119	0.54	2.16	96	90	0.7348		119	0.68	2.72	88	81	0.8246
4	120	0.78	3.12	95	89	0.8832		119	0.89	3.56	96	90	0.9434		119	0.68	2.72	88	81	0.8246
4	120	0.78	3.12	95	89	0.8832		118	0.89	3.56	96	90	0.9434		119	0.68	2.72	89	81	0.8246
5	119	0.88	3.52	95	90	0.9381		118	0.87	3.48	96	90	0.9327		118	0.99	3.96	89	81	0.9950
5	120	0.88	3.52	96	90	0.9381		118	0.91	3.64	97	90	0.9539		120	0.99	3.96	89	81	0.9950
6	120	0.88	3.52	97	90	0.9381		119	0.91	3.64	97	90	0.9539		119	1.00	4.00	88	81	1.0000
6	120	0.90	3.60	97	91	0.9487		119	0.94	3.76	98	90	0.9695		119	1.00	4.00	87	81	1.0000
Average	120	0.84	3.35	95	89	0.9121		118	0.93	3.74	96	90	0.9617		119	0.79	3.17	88	82	0.8855

O'BRIEN & GERE

SAMPLE TRAIN MOISTURE RECOVERY DATA SHEET

Reference Method / Sampling Train : M29

Recovered by : J. Gorman				Recovered by : J. Gorman				Recovered by : J. Gorman			
Run No. 1		Date : 04-26-12		Run No. 2		Date : 04-26-12		Run No. 3		Date : 04-26-12	
XAD Module No. : —				XAD Module No. : —				XAD Module No. : —			
Filter No. : M29-R1				Filter No. : M29-R2				Filter No. : M29-R3			
Impinger No. and Volume				Impinger No. and Volume				Impinger No. and Volume			
No.	Initial (mL)	Final (mL)	Rinse (mL)	No.	Initial (mL)	Final (mL)	Rinse (mL)	No.	Initial (mL)	Final (mL)	Rinse (mL)
1	100	210	31	1	100	220	32	1	100	240	33
2	100	148	35	2	100	138	34	2	100	134	31
3	0	8	34	3	0	7	34	3	0	5	36
4	SG			4	SG			4	SG		
5				5				5			
6				6				6			
7				7				7			
			DIFF :				DIFF :				DIFF :
Totals	200	366	166	Totals	200	365	165	Totals	200	379	179
	Initial (g)	Final (g)	DIFF :		Initial (g)	Final (g)	DIFF :		Initial (g)	Final (g)	DIFF :
Silica Gel	282.6	306.1	23.5	Silica Gel	~~281.3~~ 274.8	~~302.5~~ 297.8	23	Silica Gel	278.9	301.2	22.3
Final Net Moisture Gain:			189.5	Final Net Moisture Gain:			188	Final Net Moisture Gain:			201.3

E:\AECOM laptop transfer 2012\My Docs\EBV\Test Data\[M23 Moisture Recovery.xls]A

EPA Isokinetic Field Sheet

Methods Performed: M29

Client	General Dynamics	Run Number	R1	Pitot Number	P4 - A
Location	Joplin, MO	Stack Diameter	40.5"	Pitot Coefficient	.84
Source	Stack Exit	Barometric Pres.	28.80	Stack TC I.D.	P4 - A
Date	4-26-12	Static Pressure	+.75	Oven Box I.D.	OB-3
Operators	JS, BG, BH, MS	Meter Box #	MB-17	Impinger Out I.D.	IO-15
Start Time	1312	Meter delta H	2.01	Nozzle Size	.252 (I)
End Time	1535	Meter Gamma	.990	XAD Trap I.D.	—

Leak Check Rates	Sample Rate in.	Sample Rate cfm	Pitot +	Pitot -
Initial	10	0.002	✓	✓
Mid	12	.000		
Mid				
Final	5	.001	✓	✓

Sample Point	Sample Time (min)	Velocity Head (in. H_2O)	Orifice Setting (in. H_2O)	Meter Volume (ft³)	Temperature Readings in Degrees Farenheit: Stack	Probe	Oven Box	Impinger	Aux	Meter Inlet	Meter Outlet	Vacuum (in. hg)	Comments/Notes
A 1	5	.80	3.20	431.732	120	251	248	64	—	90	87	4	
1	10	.77	3.08	436.6	122	254	253	46	—	92	87	4	
2	15	.65	2.60	441.3	121	250	254	46	—	94	87	4	
2	20	.62	2.48	445.7	121	256	254	47	—	94	88	3	
3	25	.55	2.20	450.0	121	254	256	49	—	95	88	3	
3	30	.55	2.20	454.1	122	255	255	50	—	95	89	3	
4	35	.92	3.68	458.4	121	255	255	51	—	95	89	~~3~~ 5	
4	40	.92	3.68	463.6	120	255	255	52	—	96	90	5	
5	45	.95	3.80	469.0	115	254	254	54	—	96	90	5	
5	50	.95	3.80	474.4	116	256	254	55	—	96	90	5	
6	55	.96	3.84	479.7	117	256	254	53	—	95	90	5	
6	60	.96	3.84	485.2	119	256	256	53	—	95	90	5	Stop @ 1412
													490.495
			4.40										
B 1	105	1.10	~~4.40~~	490.568	121	254	256	54	—	91	89	5	Start @ 1435
1	110	1.00	4.00	496.1	122	254	255	45	—	94	89	5	
2	115	.94	3.76	—	122	254	255	45	—	94	89	5	
2	120	.94	3.76	—	121	253	253	48	—	95	89	5	
3	125	.75	3.00	512.6	121	254	256	48	—	95	89	5	
3	130	.69	2.76	517.0	121	255	254	49	—	96	89	5	
4	135	.78	3.12	521.6	120	255	256	49	—	95	89	4	
4	140	.78	3.12	526.6	120	252	253	49	—	95	89	4	
5	145	.88	3.52	532.40	119	254	256	48	—	95	90	5	
5	150	.88	3.52	537.10	120	255	256	48	—	96	90	5	
6	155	.88	3.52	542.30	120	254	255	49	—	97	90	5	
6	160	.90	3.60	547.60	120	256	254	50	—	97	91	5	1535
				552.363									

Impinger Data (vol) #	Initial	Final
1	100	210
2	100	148
3	0	8
4	SG	
5		
6		

Silica Gel Data (gm) #	Initial	Final
1	282.6	306.1
2		

Moisture Gain	
166	ml.
23.5	gm
189.5	Total

Filter Data #	Number	Tare
1	M29-R1	untared
2		
3		

Molecular Weight Data (%) #	O_2	CO_2
1	20.52	0.71
2		
3		
Avg		

O'BRIEN & GERE

V:\Office-Ops\ENV\Div01\Source Testing\Field Data Forms\Isokinetic\Iso Field Sheet.xls

EPA Isokinetic Field Sheet

Methods Performed: M29

Client	General Dynamics.	Run Number	R2	Pitot Number	P4-A
Location	Joplin, MO	Stack Diameter	40.5"	Pitot Coefficient	.84
Source	Main Stack Bld. 3.	Barometric Pres.	28.80	Stack TC I.D.	P4-A
Date	4-26-12	Static Pressure	+.75	Oven Box I.D.	OB-3
Operators	BAG, BH, JLS, MAS	Meter Box #	MB-7	Impinger Out I.D.	IO-15
Start Time	1650	Meter delta H	2.01	Nozzle Size	.25002 (50)
End Time	1905	Meter Gamma	.990	XAD Trap I.D.	—

Leak Check Rates	Sample Rate in.	Sample Rate cfm	Pitot +	Pitot -
Initial	10	0.000	✓	✓
Mid	12	.002		
Mid				
Final	12	.001	✓	✓

Sample Point	Sample Time (min)	Velocity Head (in. H_2O)	Orifice Setting (in. H_2O)	Meter Volume (ft³)	Stack	Probe	Oven Box	Impinger	Aux	Meter Inlet	Meter Outlet	Vacuum (in. hg)	Comments/Notes
A 1	5	1.10	4.40	552.477	116	252	255	59	—	94	91	4	
1	10	1.10	4.40	557.9	117	251	255	49	—	96	91	4	
2	15	1.10	4.40	563.3	116	252	258	50	—	96	91	4	
2	20	1.10	4.40	569.0	117	252	253	54	—	96	91	4	
3	25	.74	2.96	574.3	118	256	256	53	—	95	91	3	
3	30	.74	2.96	579.1	117	256	256	49	—	95	90	3	
4	35	.74	2.96	583.8	117	253	254	48	—	95	90	3	
4	40	.74	2.96	588.5	117	252	252	47	—	95	90	3	
5	45	.99	3.96	593.3	117	252	251	47	—	95	90	4	
5	50	.98	3.92	598.8	117	250	251	47	—	95	90	4	
6	55	1.10	4.40	604.3	118	250	252	49	—	97	90	5	
6	60	1.10	4.40	—	117	251	252	51	—	97	90	5	Stop @ 1750
													615.341
B 1	105	1.10	4.40	615.416	119	251	248	58	—	95	91	4	Start @ 1805
1	110	1.10	4.40	621.0	120	255	255	46	—	95	91	5	
2	115	1.10	4.40	626.5	119	255	255	46	—	96	91	5	
2	120	1.10	4.40	632.1	119	255	255	49	—	97	91	5	
3	125	.54	2.16	—	118	256	254	49	—	96	91	5	
3	130	.54	2.16	639.7	119	252	252	50	—	96	90	5	
4	135	.89	3.56	646.7	119	253	250	49	—	96	90	5	
4	140	.89	3.56	651.2	118	251	251	49	—	96	90	5	
5	145	.87	3.48	657.3	118	252	251	50	—	96	90	5	
5	150	.91	3.64	662.3	118	251	252	51	—	97	90	5	
6	155	.91	3.64	668.8	119	252	250	51	—	97	90	5	
6	160	.94	3.76	672.3	119	252	252	52	—	98	90	5	
				677.342									

Impinger Data (vol) #	Initial	Final
1	100	220
2	100	138
3	0	7
4	SG	
5		
6		

Silica Gel Data (gm) #	Initial	Final
1	274.8	297.8
2		

Moisture Gain	
165	ml.
23	gm
188	Total

Filter Data #	Number	Tare
1	M29-R2	untared
2		
3		

Molecular Weight Data (%) #	O_2	CO_2
1	20.4	0.86
2		
3		
Avg		

O'BRIEN & GERE

V:\Office-Ops\ENV\Div01\Source Testing\Field Data Forms\Isokinetic\Iso Field Sheet.xls

EPA Isokinetic Field Sheet

Methods Performed: M 29

Client	General Dynamics	Run Number	R3	Pitot Number	P4-A
Location	Joplin, MO	Stack Diameter	40.5"	Pitot Coefficient	.84
Source	Stack Exit Bld. 3.	Barometric Pres.	28.80	Stack TC I.D.	P4-A
Date	4-26-12	Static Pressure	+.75	Oven Box I.D.	OB-3
Operators	BAG, JLS, BH, MAS	Meter Box #	MB-7	Impinger Out I.D.	IO-15
Start Time	2000	Meter delta H	2.01	Nozzle Size	.25D2 (SG)
End Time	2213	Meter Gamma	.990	XAD Trap I.D.	—

Leak Check Rates				
	Sample Rate in.	Sample Rate cfm	Pitot +	Pitot -
Initial	10	0.000	✓	✓
Mid				
Mid				
Final	8	0.000	✓	✓

Sample Point	Sample Time (min)	Velocity Head (in. H_2O)	Orifice Setting (in. H_2O)	Meter Volume (ft³)	Temperature Readings in Degrees Farenheit: Stack	Probe	Oven Box	Impinger	Aux	Meter Inlet	Meter Outlet	Vacuum (in. hg)	Comments/Notes
A 1	5	.69	2.76	677.560	118	254	248	54	—	83	83	3	Ps 14.1
1	10	.69	2.76	682.1	119	255	253	43	—	84	82	3	
2	15	.70	2.80	—	119	255	257	42	—	86	82	3	
2	20	.70	2.80	691.3	117	255	256	42	—	88	82	3	
3	25	.48	1.92	—	119	255	256	42	—	88	82	3	
3	30	.48	1.92	700.0	118	255	256	43	—	89	82	3	
4	35	.92	3.68	704.60	119	255	255	44	—	90	82	3	
4	40	.93	3.72	709.50	118	256	256	44	—	91	82	3	
5	45	.87	3.48	715.10	117	254	254	46	—	91	83	3	
5	50	.90	3.60	719.20	118	256	255	47	—	92	83	3	
6	55	.87	3.48	723.50	119	255	255	48	—	92	83	4	
6	60	.87	3.48	728.10	119	254	253	49	—	92	83	4	Stop @ 2100
				734.159									
B 1	105	.68	2.72	734.240	120	254	254	58	—	86	82	3	Start @ 2113
1	110	.83	3.32	739.60	119	256	256	42	—	86	82	3	
2	115	.82	3.28	744.70	119	255	256	42	—	88	82	3	
2	120	.87	3.48	748.70	119	255	254	42	—	88	81	3	
3	125	.68	2.72	753.40	120	255	255	43	—	88	81	4	
3	130	.68	2.72	758.20	119	255	253	44	—	88	81	4	
4	135	.68	2.72	761.20	119	256	257	44	—	88	81	4	
4	140	.68	2.72	766.8	119	251	247	45	—	89	81	4	
5	145	.99	3.96	771.5	118	250	244	46	—	89	81	4	
5	150	.99	3.96	776.8	120	251	246	46	—	89	81	5	
6	155	1.00	4.00	782.2	119	251	251	47	—	88	81	5	
6	160	1.00	4.00	787.7	119	250	248	47	—	87	81	5	
				793.171									

Impinger Data (vol)		
#	Initial	Final
1	100	240
2	100	134
3	0	5
4	SG	
5		
6		

Silica Gel Data (gm)		
#	Initial	Final
1	278.9	301.2
2		

Moisture Gain	
179	ml.
22.3	gm
201.3	Total

Filter Data		
#	Number	Tare
1	M29-R3	untared
2		
3		

Molecular Weight Data (%)		
#	O_2	CO_2
1	20.36	0.92
2		
3		
Avg		

O'BRIEN & GERE

V:\Office-Ops\ENV\Div01\Source Testing\Field Data Forms\Isokinetic\Iso Field Sheet.xls

Method 23/0010 – Initial CPT

PCDD / PCDF Emission Results Summary - TEQ Basis
General Dynamics OTS Munition Services
Building 3 Main Exhaust
Joplin, MO

	Run No.	1			2			3			Average
PCDD / PCDF Parameters	TEF (a)	pg	ng/m³ TEQ	lb/hr TEQ	pg	ng/m³ TEQ	lb/hr TEQ	pg	ng/m³ TEQ	lb/hr TEQ	
2,3,7,8-TCDD	1.00	37.0	1.29E-02	1.11E-09	42.0	1.38E-02	1.22E-09	54.0	1.72E-02	1.52E-09	
1,2,3,7,8-PeCDD	0.50	27.8	4.84E-03	4.17E-10	25.1	4.14E-03	3.64E-10	36.0	5.72E-03	5.07E-10	
1,2,3,4,7,8-HxCDD	0.10	3.7	1.29E-04	1.11E-11	2.7	8.90E-05	7.84E-12	4.6	1.46E-04	1.30E-11	
1,2,3,6,7,8-HxCDD	0.10	3.1	1.08E-04	9.30E-12	3.5	1.15E-04	1.02E-11	4.6	1.46E-04	1.30E-11	
1,2,3,7,8,9-HxCDD	0.10	2.2	7.66E-05	6.60E-12	1.5	4.94E-05	4.35E-12	2.0	6.36E-05	5.63E-12	
1,2,3,4,6,7,8-HpCDD	0.01	3.3	1.15E-05	9.90E-13	3.2	1.05E-05	9.29E-13	4.7	1.49E-05	1.32E-12	
OCDD	0.001	11.1	3.86E-06	3.33E-13	10.6	3.49E-06	3.08E-13	13.5	4.29E-06	3.80E-13	
2,3,7,8-TCDF	0.10	4,940	1.72E-01	1.48E-08	4,310	1.42E-01	1.25E-08	6,730	2.14E-01	1.89E-08	
1,2,3,7,8-PeCDF	0.05	957	1.67E-02	1.44E-09	906	1.49E-02	1.31E-09	1,450	2.31E-02	2.04E-09	
2,3,4,7,8-PeCDF	0.50	559.0	9.73E-02	8.39E-09	560.0	9.23E-02	8.13E-09	809.0	1.29E-01	1.14E-08	
1,2,3,4,7,8-HxCDF	0.10	455	1.58E-02	1.37E-09	436	1.44E-02	1.27E-09	696	2.21E-02	1.96E-09	
1,2,3,6,7,8-HxCDF	0.10	136.0	4.73E-03	4.08E-10	130.0	4.28E-03	3.77E-10	210.0	6.68E-03	5.91E-10	
2,3,4,6,7,8-HxCDF	0.10	24.2	8.42E-04	7.26E-11	24.5	8.07E-04	7.11E-11	41.0	1.30E-03	1.15E-10	
1,2,3,7,8,9-HxCDF	0.10	14.1	4.91E-04	4.23E-11	13.2	4.35E-04	3.83E-11	19.0	6.04E-04	5.35E-11	
1,2,3,4,6,7,8-HpCDF	0.01	62.0	2.16E-04	1.86E-11	52.0	1.71E-04	1.51E-11	84.0	2.67E-04	2.36E-11	
1,2,3,4,7,8,9-HpCDF	0.01	17.2	5.99E-05	5.16E-12	15.5	5.11E-05	4.50E-12	24.2	7.70E-05	6.81E-12	
OCDF	0.001	14.1	4.91E-06	4.23E-13	11.3	3.72E-06	3.28E-13	19.4	6.17E-06	5.46E-13	Average
TOTAL TEQs (ng/m³)		=	0.326			0.288			0.420		0.345
TOTAL TEQs (lb/hr)		=	2.81E-08			2.53E-08			3.72E-08		3.02E-08

Test Data Summary and Calculations
General Dynamics OTS Munition Services
Building 3 Main Exhaust
Joplin, MO

Parameter	Run 1	Run 2	Run 3
Run Date	25Apr12	25Apr12	26Apr12
Start/Stop Time	0833-1150	1300-1634	0815-1130
Duration of Run, Minutes	180	180	180
Ave. Nozzle Diameter, inches	0.203	0.203	0.213
Pitot Calibration Factor, CF	0.84	0.84	0.84
Meter Gamma	1.008	1.008	1.008
Meter Delta H, inches of H2O	1.83	1.83	1.83
Stack Diameter, inches	40.5	40.5	40.5
Rectangular Width, inches		0	0
Rectangular Length, inches		0	0
Stack Area, sq.ft.	8.95	8.95	8.95
Barometric Pressure, inches of Hg	28.6	28.5	28.8
Static Pressure, inches of H2O	0.75	0.75	0.75
Dry Gas Meter Sample Volume, (VM)ft3			
Initial	56.4	164.526	315.532
Final	164.208	280.847	433.001
Difference	107.808	116.321	117.469
Ave. Stack Temperature, Ts(F)	121.1	122.1	122.5
Ave. Meter Temperature, Tm(F)	82.4	92.2	83.9
Ave. Run Delta H, inches of H2O	1.24	1.37	1.47
Ave. Square Root of Delta P	0.8775	0.8945	0.8978
Moisture Data			
Volume of water collected, mls	166	158	180
Silica Gel, grams	21.9	25.9	21.5
Total Collected, mls	187.9	183.9	201.5
ORSAT Data			
%O2	20.40	20.59	20.48
%CO2	0.74	0.63	0.68
%CO			

Calculations

Vw(std), scf =	8.844	8.656	9.485
Vm(std), dscf =	101.446	107.168	111.053
Bws=	0.080	0.075	0.079
Md=	28.93	28.92	28.93
Ms=	28.06	28.11	28.07
Vs, ft/sec =	53.6	54.7	54.7
Qs, acfm =	28,753	29,364	29,348
Qs(std), dscfm =	23,016	23,518	23,636
Isokinetic Sampling Rate, %	97.5	100.8	94.4

Where:

An = area of the nozzle
As = area of the stack
Vw(std) = volume of water vapor in gas, standard conditions = 0.04707*Vlc
Vm(std) = vol. of gas sampled, standard conditions = 17.647 x Vm x gamma x [Pb + (dH/13.6)]/Tm(R)
Bws = water vapor in gas stream, proportion by volume = Vw(std)/(Vm(std) + Vw(std))
Md = molecular weight of stack gas, dry basis = (0.44 x%CO2) + (0.32 x%O2) + [0.28 x (%N2 + %CO)]
Ms = molecular weight of stack gas, wet basis = [Md x (1-Bws)] + (18.0 x Bws)
Vs = stack gas velocity = 85.49 x Cp x (avg. Sq.Rt. dP) x [Sq.Rt. (Ts(R))/(Ms x Ps)]
Qs = stack gas flow rate = Vs x As x 60
Qs(std) = stack gas flow rate, standard conditions = Qs x (1-Bws) x (528/(Ts(R)) x (Ps/29.92)
Isokinetic sampling rate = {(Ts(R)) x [(0.00267 x Vlc) + (Vm(std)/17.647)] x 100}/(Time x vs x Ps x An x60)

Field Data Summary
General Dynamics OTS Munition Services
Building 3 Main Exhaust
Joplin, MO

	Run 1						Run 2						Run 3					
Traverse Point	Stack Temp(F)	Delta P	Delta H	Tm(F) in	Tm(F) out	SQRT Delta P	Stack Temp(F)	Delta P	Delta H	Tm(F) in	Tm(F) out	SQRT Delta P	Stack Temp(F)	Delta P	Delta H	Tm(F) in	Tm(F) out	SQRT Delta P
A1	118	0.87	1.39	74	74	0.9327	120	1.00	1.60	86	84	1.0000	120	0.94	1.70	74	73	0.9695
1	120	0.88	1.41	75	74	0.9381	120	1.00	1.60	88	84	1.0000	119	0.84	1.51	79	74	0.9165
1	121	0.86	1.38	76	74	0.9274	122	1.00	1.60	89	85	1.0000	121	0.81	1.45	81	75	0.9000
2	118	0.68	1.09	78	74	0.8246	123	0.85	1.36	90	85	0.9220	122	0.53	0.95	83	76	0.7280
2	120	0.68	1.09	80	76	0.8246	123	0.85	1.36	91	86	0.9220	124	0.45	0.81	84	77	0.6708
2	120	0.68	1.09	81	76	0.8246	121	0.85	1.36	92	86	0.9220	123	0.46	0.82	84	77	0.6782
3	122	0.44	0.70	81	77	0.6633	122	0.70	1.12	92	87	0.8367	124	0.46	0.82	85	78	0.6782
3	119	0.50	0.80	81	77	0.7071	122	0.71	1.14	92	87	0.8426	126	0.46	0.82	85	78	0.6782
3	118	0.40	0.64	82	78	0.6325	124	0.70	1.12	93	87	0.8367	124	0.50	0.90	86	79	0.7071
4	117	0.82	1.31	83	79	0.9055	120	0.80	1.28	93	88	0.8944	123	0.87	1.56	86	79	0.9327
4	119	0.80	1.28	83	79	0.8944	122	0.78	1.25	92	88	0.8832	123	0.87	1.56	86	79	0.9327
4	121	0.82	1.31	84	79	0.9055	123	0.78	1.25	93	88	0.8832	124	0.87	1.56	87	80	0.9327
5	118	0.84	1.34	84	80	0.9165	123	0.73	1.17	93	88	0.8544	122	0.87	1.56	86	80	0.9327
5	119	0.80	1.28	84	80	0.8944	123	0.73	1.17	93	88	0.8544	121	0.87	1.56	85	80	0.9327
5	119	0.84	1.34	84	80	0.9165	125	0.73	1.17	94	89	0.8544	120	0.87	1.56	85	80	0.9327
6	120	0.80	1.28	85	81	0.8944	126	0.68	1.04	94	89	0.8246	122	0.85	1.53	85	80	0.9220
6	121	0.84	1.34	85	81	0.9165	124	0.85	1.36	95	89	0.9220	123	0.85	1.53	86	80	0.9220
6	119	0.80	1.28	85	81	0.8944	122	0.85	1.50	94	90	0.9220	121	0.85	1.53	86	80	0.9220
B1	122	1.10	1.76	83	81	1.0488	121	0.87	1.60	94	91	0.9327	123	1.05	1.89	87	81	1.0247
1	121	1.10	1.76	84	81	1.0488	121	0.92	1.65	96	91	0.9592	121	1.05	1.89	86	81	1.0247
1	122	1.10	1.76	85	82	1.0488	118	0.92	1.65	97	92	0.9592	122	1.05	1.89	86	81	1.0247
2	122	0.85	1.36	86	82	0.9220	117	0.85	1.50	98	92	0.9220	124	0.97	1.74	88	82	0.9849
2	121	0.92	1.47	86	82	0.9592	121	0.75	1.35	98	92	0.8660	121	0.97	1.74	88	82	0.9849
2	122	0.85	1.36	87	82	0.9220	122	0.52	0.93	98	93	0.7211	122	0.97	1.74	89	83	0.9849
3	124	0.80	1.28	87	83	0.8944	123	0.77	1.40	97	92	0.8775	123	0.97	1.74	90	83	0.9849
3	124	0.68	1.09	87	83	0.8246	123	0.63	1.10	98	93	0.7937	124	0.75	1.35	90	84	0.8660
3	121	0.80	1.28	87	83	0.8944	123	0.63	1.10	98	93	0.7937	122	0.82	1.47	90	84	0.9055
4	123	0.72	1.15	88	83	0.8485	125	0.87	1.60	97	93	0.9327	123	0.85	1.53	90	84	0.9220
4	124	0.68	1.09	88	83	0.8246	123	0.87	1.60	98	93	0.9327	121	0.68	1.22	90	84	0.8246
4	124	0.70	1.12	89	84	0.8367	125	0.87	1.60	98	93	0.9327	123	0.64	1.15	91	85	0.8000
5	123	0.71	1.14	89	84	0.8426	120	0.84	1.50	98	93	0.9165	124	0.90	1.62	91	85	0.9487
5	123	0.71	1.14	89	84	0.8426	121	0.82	1.50	98	93	0.9055	124	0.78	1.40	92	85	0.8832
5	124	0.71	1.14	89	84	0.8426	121	0.82	1.50	98	93	0.9055	122	0.94	1.70	92	85	0.9695
6	124	0.71	1.14	89	84	0.8426	122	0.82	1.50	97	93	0.9055	122	0.94	1.70	92	86	0.9695
6	124	0.75	1.20	89	85	0.8660	122	0.82	1.50	97	93	0.9055	124	0.94	1.70	93	86	0.9695
6	121	0.75	1.20	89	85	0.8660	124	0.75	1.35	96	93	0.8660	124	0.92	1.66	93	86	0.9592
Average	121	0.78	1.24	84	80	0.8775	122	0.80	1.37	95	90	0.8945	123	0.82	1.47	87	81	0.8978

O'BRIEN & GERE

SAMPLE TRAIN MOISTURE RECOVERY DATA SHEET

Reference Method / Sampling Train : M23/0010

Recovered by : J. Gorman				**Recovered by :** J. Gorman				**Recovered by :** J. Gorman			
Run No. 1		**Date :** 4-25-12		**Run No.** 2		**Date :** 4-25-12		**Run No.** 3		**Date :** 04-26-12	
XAD Module No. : XAD#1 NC2575-01				**XAD Module No. :** XAD #2 NC2576-01				**XAD Module No. :** #3 NC2577-01			
Filter No. : M23-R1				**Filter No. :** M23-R2				**Filter No. :** M23-R3			
Impinger No. and Volume				**Impinger No. and Volume**				**Impinger No. and Volume**			
No.	Initial (mL)	Final (mL)	Rinse (mL)	No.	Initial (mL)	Final (mL)	Rinse (mL)	No.	Initial (mL)	Final (mL)	Rinse (mL)
1	0	166	92	1	0	164	94	1	0	180	94
2	100	100	~~96~~ JG	2	100	96		2	100	100	
3	100	100	~~98~~ JG 0	3	100	98		3	100	100	
4	SG			4	SG			4	SG		
5				5				5			
6				6				6			
7				7				7			
			DIFF :				DIFF :				DIFF :
Totals	200	366	166	**Totals**	200	358	158	**Totals**	200	380	180
	Initial (g)	Final (g)	DIFF :		Initial (g)	Final (g)	DIFF :		Initial (g)	Final (g)	DIFF :
Silica Gel	285.1	307.0	21.9	Silica Gel	284.1	310.0	25.9	Silica Gel	284.0	305.5	21.5
Final Net Moisture Gain:			187.9	**Final Net Moisture Gain:**			183.9	**Final Net Moisture Gain:**			201.5

E:\AECOM laptop transfer 2012\My Docs\EBV\Test Data\[M23 Moisture Recovery.xls]A

EPA Isokinetic Field Sheet

Methods Performed: M23

Client	General Dynamics	Run Number	1	Pitot Number	P4-B
Location	Joplin, MO	Stack Diameter	40.5"	Pitot Coefficient	.84
Source	Building 3 Stack Outlet	Barometric Pres.	28.60	Stack TC I.D.	P4-B
Date	4-25-12	Static Pressure	.75	Oven Box I.D.	OB-5
Operators	BH, SS, MS	Meter Box #	MB-5	Impinger Out I.D.	IO-2
Start Time	0833	Meter delta H	1.83	Nozzle Size	.203
End Time	1150	Meter Gamma	1.008	XAD Trap I.D.	1 NC 2575-01

Leak Check Rates	Sample Rate in.	Sample Rate cfm	Pitot +	Pitot -
Initial	15	.003	✓	✓
Mid	7	.001		
Mid				
Final	7	0.000	✓	✓

Sample Point	Sample Time (min)	Velocity Head (in. H_2O)	Orifice Setting (in. H_2O)	Meter Volume (ft³)	Temperature Readings in Degrees Farenheit: Stack	Probe	Oven Box	Impinger	Aux	Meter Inlet	Meter Outlet	Vacuum (in. hg)	Comments/Notes
A 1	5	.87	1.39	056.40	118	248	250	55	44	74	74	4	Pg. 1 of 2
1	10	.88	1.40	059.6	120	248	250	45	44	75	74	4	
1	15	.86	1.37	62.4	121	251	251	43	40	76	74	6	
A 2	20	.68	1.08	65.5	118	251	250	42	40	78	74	5	
2	25	.68	1.08	68.4	120	251	252	43	40	80	76	5	
2	30	.68	1.08	71.2	120	252	251	43	40	81	76	5	
A 3	35	.44	.70	74.0	122	249	251	46	42	81	77	4	
3	40	.50	.80	76.4	119	248	254	45	41	81	77	4	
3	45	.40	.64	78.8	118	249	252	45	41	82	78	4	
A 4	50	.82	1.31	81.2	117	250	251	45	41	83	79	4	
4	55	.80	1.28	84.2	119	252	252	44	41	83	79	5	
4	60	.82	1.31	87.2	121	249	250	47	42	84	79	5	
A 5	65	.84	1.34	90.2	118	250	251	48	44	84	80	5	
5	70	.80	1.28	93.3	119	252	250	48	44	84	80	5	
5	75	.84	1.34	96.3	119	251	248	50	43	84	80	5	
A 6	80	.80	1.28	99.4	120	252	251	51	45	85	81	5	
6	85	.84	1.34	102.5	121	251	251	52	45	85	81	5	
6	90	.80	1.28	105.7	119	255	254	53	44	85	81	5	Stop @ 1003
B 1	95	1.10	1.76	~~108.668~~	122	250	251	51	44	83	81	6	Start @ 1020
1	100	1.10	1.76	~~112.8~~ 112.3	121	254	254	41	42	84	81	7	108.797
1	105	1.10	1.76	115.8	122	252	255	40	42	85	82	7	
B 2	110	.85	1.36	119.40	122	254	255	42	43	86	82	7	
2	115	.92	1.47	122.20	121	252	251	43	43	86	82	7	
2	120	.85	1.36	125.9	122	251	251	44	42	87	82	7	
B 3	125	.80	1.28	129.1	124	250	250	45	43	87	83	6	
3	130	.68	1.08	132.5	124	250	253	47	44	87	83	5	
3	135	.80	1.28	135.3	121	250	250	47	44	87	83	5	
B 4	140	.72	1.15	138.2	123	250	251	47	43	88	83	5	
4	145	.68	1.08	141.2	124	252	253	48	44	88	83	5	
4	150	.70	1.12	144.0	124	253	253	48	45	89	84	5	

Impinger Data (vol) #	Initial	Final
1	0	166
2	100	100
3	100	100
4	SG	
5		
6		

Silica Gel Data (gm) #	Initial	Final
1	285.1	307.0
2		

Moisture Gain	
166	ml.
21.9	gm
187.9	Total

Filter Data #	Number	Tare
1	M23-R1	untared
2		
3		

Molecular Weight Data (%) #	O_2	CO_2
1	20.44	0.74
2		
3		
Avg		

O'BRIEN & GERE

V:\Office-Ops\ENV\Div01\Source Testing\Field Data Forms\Isokinetic\Iso Field Sheet.xls

EPA Isokinetic Field Sheet

Methods Performed: M23

Client	General Dynamics	Run Number	1	Pitot Number	P4-B
Location	Joplin, MO	Stack Diameter	40.5"	Pitot Coefficient	.84
Source	Building 3 Stack Exit	Barometric Pres.	28.60	Stack TC I.D.	P4-B
Date	4-25-18	Static Pressure	.75	Oven Box I.D.	OB-5
Operators	BH, JS, MS	Meter Box #	MB-5	Impinger Out I.D.	IO-2
Start Time	0833	Meter delta H	1.93	Nozzle Size	.203
End Time	1150	Meter Gamma	1.008	XAD Trap I.D.	1 NC2575-01

Leak Check Rates	Sample Rate in.	Sample Rate cfm	Pitot +	Pitot -
Initial	15	0.003	✓	✓
Mid	7	0.001		
Mid				
Final	7	.000	✓	✓

Sample Point	Sample Time (min)	Velocity Head (in. H_2O)	Orifice Setting (in. H_2O)	Meter Volume (ft³)	Temperature Readings in Degrees Farenheit: Stack	Probe	Oven Box	Impinger	Aux	Meter Inlet	Meter Outlet	Vacuum (in. hg)	Comments/Notes
B5	155	.71	1.13	146.9	123	252	251	48	44	89	84	5	Ps 2.42
5	160	.71	1.13	149.8	123	253	252	49	44	89	84	5	
5	165	.71	1.13	152.6	124	253	252	50	45	89	84	5	
B6	170	.71	1.13	155.5	124	252	255	51	44	89	84	5	
6	175	.75	1.2	158.5	124	251	251	53	46	89	85	5	
6	180	.75	1.2	161.4	121	250	251	53	46	89	85	5	
				164.338									

Impinger Data (vol) #	Initial	Final
1	0	166
2	100	100
3	100	100
4	56	
5		
6		

Silica Gel Data (gm) #	Initial	Final
1	285.1	307.0
2		

Moisture Gain	
166	ml.
21.9	gm
187.9	Total

Filter Data #	Number	Tare
1	M23-R1	untared
2		
3		

Molecular Weight Data (%) #	O_2	CO_2
1	20.44	0.74
2		
3		
Avg		

O'BRIEN [redacted]ERE

EPA Isokinetic Field Sheet

Methods Performed: M23

Client	General Dynamics	Run Number	2	Pitot Number	P4-B
Location	Joplin, MO	Stack Diameter	40.5"	Pitot Coefficient	.84
Source	Building 3, Stack Exhaust	Barometric Pres.	28.50	Stack TC I.D.	P4-B
Date	4-29-12	Static Pressure	.75	Oven Box I.D.	OB-5
Operators	BH, JS, MS, BG	Meter Box #	MB-5	Impinger Out I.D.	IO-1
Start Time	1200	Meter delta H	1.83	Nozzle Size	.203
End Time	1634	Meter Gamma	1.008	XAD Trap I.D.	#2 NC0576-01

Leak Check Rates	Sample Rate in.	Sample Rate cfm	Pitot +	Pitot -
Initial	12	.007	✓	✓
Mid	8	.000		
Mid				
Final	10	0.001	✓	✓

Sample Point	Sample Time (min)	Velocity Head (in. H_2O)	Orifice Setting (in. H_2O)	Meter Volume (ft³)	Temperature Readings in Degrees Farenheit: Stack	Probe	Oven Box	Impinger	Aux	Meter Inlet	Meter Outlet	Vacuum (in. hg)	Comments/Notes
A 1	5	1.0	1.6	164.526	120	251	251	49	43	86	84	6	Pg. 1 of 2
1	10	1.0	1.6	167.9	120	251	253	50	40	88	84	6	
1	15	1.0	1.6	171.3	122	254	254	50	40	89	85	7	
A 2	20	.85	1.36	174.6	123	252	253	51	41	90	85	7	
2	25	.85	1.36	177.9	123	251	254	52	41	91	86	7	
2	30	.85	1.36	181.1	121	250	252	52	42	92	86	7	
A 3	35	.70	1.12	184.1	122	251	248	53	42	92	87	7	
3	40	.71	1.14	187.6	122	251	254	56	44	92	87	7	
3	45	.70	1.12	190.2	124	253	251	56	44	93	87	7	
A 4	50	.80	1.28	193.3	120	253	255	57	44	93	88	7	
4	55	.78	1.25	196.4	122	252	255	58	45	92	88	7	
4	60	.78	1.25	199.7	123	251	250	59	46	93	88	7	
A 5	105	.73	1.17	203.0	123	251	252	59	46	93	88	7	
5	110	.73	1.17	205.7	123	252	251	60	46	93	88	7	
5	115	.73	1.17	208.8	125	253	251	60	47	94	89	7	
A 6	120	.68	1.09	212.0	126	252	254	60	47	94	89	7	
6	125	.85	1.36	214.6	124	251	250	61	47	95	89	7	Stop 1424
6	130	.85	1.5	217.0	122	252	252	63	49	94	90	8	Restart 1435
				221.102									Stop 1442 pch.
B 1	135	.87	1.6	221.159	121	253	243	68	55	94	91	8	Restart 15:05
1	140	.92	1.65	224.41	121	254	251	65	56	96	91	8	
1	145	.92	1.65	227.95	118	252	252	68	58	97	92	8	
B 2	150	.85	1.5	231.56	117	253	252	62	47	98	92	8	
2	155	.75	1.35	234.96	121	251	251	54	44	98	92	7	
2	200	.52	.93	238.35	122	251	253	54	43	98	93	6	
B 3	205	.77	1.4	240.93	123	250	254	53	42	97	92	6	
3	210	.63	1.1	244.4	123	252	252	54	44	98	93	7	
3	215	.63	1.1	247.22	123	254	249	54	43	98	93	7	

Impinger Data (vol) #	Initial	Final
1	0	164
2	100	96
3	100	98
4	SG	
5		
6		

Silica Gel Data (gm) #	Initial	Final
1	284.1	310.0
2		

Moisture Gain	
158	ml.
25.9	gm
183.9	Total

Filter Data #	Number	Tare
1	M23-R2	untared
2		
3		

Molecular Weight Data (%) #	O_2	CO_2
1	20.59	0.63
2		
3		
Avg		

O'BRIEN & GERE

V:\Office-Ops\ENV\DnQ1\Source Testing\Field Data Forms\Isokinetic\Iso Field Sheet.xls

EPA Isokinetic Field Sheet

Methods Performed: M23

Client	GENERAL DYNAMICS	Run Number	2	Pitot Number	P4-B
Location	JOPLIN MO	Stack Diameter	40.5	Pitot Coefficient	.84
Source	BLDG 3 Stack	Barometric Pres.	28.50	Stack TC I.D.	P4-B
Date	4.25.12	Static Pressure	-.75	Oven Box I.D.	OB5
Operators	BH SS MS BG	Meter Box #	MB5	Impinger Out I.D.	IO.1
Start Time	1300	Meter delta H	1.83	Nozzle Size	.203
End Time	1634	Meter Gamma	1.008	XAD Trap I.D.	#2 NC 2576-01

Leak Check Rates	Sample Rate in.	Sample Rate cfm	Pitot +	Pitot -
Initial	12	.007	/	/
Mid	8	.000		
Mid				
Final	10	.001	/	/

Sample Point	Sample Time (min)	Velocity Head (in. H_2O)	Orifice Setting (in. H_2O)	Meter Volume (ft³)	Temperature Readings in Degrees Farenheit: Stack	Probe	Oven Box	Impinger	Aux	Meter Inlet	Meter Outlet	Vacuum (in. hg)	Comments/Notes
B 4	220	.87	1.6	250.52	125	255	250	56	44	97	93	8	
4	225	.87	1.6	253.61	123	254	252	55	45	98	93	8	
4	230	.87	1.6	257.11	125	252	253	56	44	98	93	8	
B 5	235	.84	1.5	260.66	120	251	253	56	45	98	93	8	
5	240	.82	1.5	264.02	121	253	249	57	46	98	93	8	
5	245	.82	1.5	267.47	121	252	253	58	46	98	93	8	
B 6	250	.82	1.5	270.74	122	250	254	58	45	97	93	8	
6	255	.82	1.5	274.21	122	254	251	59	45	97	93	8	
6	300	.75	1.35	277.32	124	251	251	60	45	96	93	7	
				280.904									

Impinger Data (vol) #	Initial	Final
1	0	164
2	100	96
3	100	98
4	SG	
5		
6		

Silica Gel Data (gm) #	Initial	Final
1	284.1	310.0
2		

Moisture Gain	
158	ml.
25.9	gm
183.9	Total

Filter Data #	Number	Tare
1	M23-R2	untared
2		
3		

Molecular Weight Data (%) #	O_2	CO_2
1	20.59	0.63
2		
3		
Avg		

O'BRIEN ERE

EPA Isokinetic Field Sheet

Methods Performed: M23

Client	GEN DYN.	Run Number	R3	Pitot Number	P4B
Location	BUILDING 3 JOPLIN MO	Stack Diameter	40.5	Pitot Coefficient	.84
Source	STACK EX	Barometric Pres.	28.8	Stack TC I.D.	P4B
Date	4-26-12	Static Pressure	+.75	Oven Box I.D.	5
Operators	JLS, BH, MS	Meter Box #	5	Impinger Out I.D.	IO-1
Start Time	0815	Meter delta H	1.83	Nozzle Size	.213
End Time	1130	Meter Gamma	1.008	XAD Trap I.D.	3 NC2577-01

Leak Check Rates	Sample Rate in.	Sample Rate cfm	Pitot +	Pitot -
Initial	15	.003	✓	✓
Mid	9	.004		
Mid				
Final	11	0.0025	✓	✓

Sample Point	Sample Time (min)	Velocity Head (in. H_2O)	Orifice Setting (in. H_2O)	Meter Volume (ft³)	Temperature Readings in Degrees Farenheit: Stack	Probe	Oven Box	Impinger	Aux	Meter Inlet	Meter Outlet	Vacuum (in. hg)	Comments/Notes
A1	5	.94	1.70	315.532	120	252	252	68	48	74	73	7	R. 14.2
1	10	.84	1.51	318.40	119	255	254	41	35	79	74	7	
1	15	.81	1.45	321.50	121	250	254	40.	35	81	75	9	
2	20	.53	.95	324.60	122	252	253	41	35	83	76	7	
2	25	.45	.81	327.20	124	254	253	42	35	84	77	6	
2	30	.46	.82	329.80	123	252	253	42	35	84	77	6	
3	35	.46	.82	332.30	124	253	256	42	35	85	78	6	
3	40	.46	.82	334.80	126	254	253	42	35	85	78	6	
3	45	.50	.90	337.40	124	251	252	42	35	86	79	6	
4	50	.87	1.56	340.20	123	251	252	42	35	86	79	9	
4	55	.87	1.56	343.60	123	251	251	42	35	86	79	9	
4	60	.87	1.56	347.00	124	251	251	42	35	87	80	9	
5	105	.87	1.56	350.50	122	253	255	43	35	86	80	9	
5	110	.87	1.56	———	121	252	248	44	35	85	80	9	
5	115	.87	1.56	~~357.00~~	120	250	250	44	35	85	80	9	357.3
6	120	.85	1.53	360.60	122	251	251	44	35	85	80	9	
6	125	.85	1.53	364.00	123	253	256	45	36	86	80	9	
6	130	.85	1.53	367.30	121	255	251	45	36	86	80	9	Stop @ 0945
B1	5	1.05	1.89	370.906	123	253	249	52	39	84	81	11	370.747
1	10	1.05	1.89	374.50	121	250	251	45	36	86	81	11	Start @ 1000
1	15	1.05	1.89	378.30	122	251	252	45	36	86	81	11	
2	20	.97	1.74	382.00	124	256	256	46	37	88	82	10	
2	25	.97	1.74	385.60	121	252	250	48	36	88	82	10	
2	30	.97	1.74	388.80	122	254	253	48	36	89	83	10	
3	35	.97	1.74	392.50	123	254	258	49	37	90	83	10	
3	40	.75	1.35	396.70	124	255	256	49	36	90	84	9	
3	45	.82	1.47	399.10	122	257	258	49	36	90	84	9	
4	50	.85	1.53	402.70	123	255	247	49	36	90	84	9	
4	55	.68	1.22	406.00	121	255	251	49	36	90	84	9	
4	60	.64	1.15	409.20	123	256	249	48	36	91	85	8.5	

Impinger Data (vol) #	Initial	Final
1	0	180
2	100	100
3	100	100
4	SG	
5		
6		

Silica Gel Data (gm) #	Initial	Final
1	284.0	305.5
2		

Moisture Gain	
180	ml.
21.5	gm
201.5	Total

Filter Data #	Number	Tare
1	M23-R3	untared
2		
3		

Molecular Weight Data (%) #	O_2	CO_2
1	20.48	0.68
2		
3		
Avg		

EPA Isokinetic Field Sheet

Methods Performed: M 23

Client	GEN DYN	Run Number	R3	Pitot Number	P4B
Location	JOPLIN MO	Stack Diameter	40.58	Pitot Coefficient	.84
Source	BUILDING 3 STACK EXH.	Barometric Pres.	28.8	Stack TC I.D.	P4B
Date	4-26-12	Static Pressure	-.75	Oven Box I.D.	5
Operators	JLS, MS, BH, RG	Meter Box #	5	Impinger Out I.D.	1
Start Time	0815	Meter delta H	1.83	Nozzle Size	.213
End Time	1130	Meter Gamma	1.008	XAD Trap I.D.	3NC2577-01

Leak Check Rates	Sample Rate in.	Sample Rate cfm	Pitot +	Pitot -
Initial	15	0.003	✓	✓
Mid	9	0.004		
Mid				
Final	11	.0025	✓	✓

Sample Point	Sample Time (min)	Velocity Head (in. H_2O)	Orifice Setting (in. H_2O)	Meter Volume (ft³)	Temperature Readings in Degrees Farenheit: Stack	Probe	Oven Box	Impinger	Aux	Meter Inlet	Meter Outlet	Vacuum (in. hg)	Comments/Notes
5	1.05	.90	1.62	412.01	124	254	252	50	36	91	85	9	
5	1.10	.78	1.40	415.60	124	254	248	49	36	92	85	9	
5	1.15	.94	1.70	418.90	122	256	252	50	36	92	85	10	
6	1.20	.94	1.70	422.10	122	256	252	49	37	92	86	10	
6	1.25	.94	1.70	426.20	124	256	257	50	37	93	86	10	
6	1.30	.92	1.66	430.00	124	257	254	50	37	93	86	10	
				433.160									

Impinger Data (vol) #	Initial	Final
1	0	180
2	100	100
3	100	100
4	SG	
5		
6		

Silica Gel Data (gm) #	Initial	Final
1	284.0	305.5
2		

Moisture Gain	
180	ml.
21.5	gm
201.5	Total

Filter Data #	Number	Tare
1	M23-R3	untared
2		
3		

Molecular Weight Data (%) #	O_2	CO_2
1	20.48	0.68
2		
3		
Avg		

O'BRIEN [redacted]ERE

Method 23 – Retest No. 1

PCDD / PCDF Emission Results - TEQ Basis
General Dynamics OTS Munition Services
Building 3 Main Exhaust
Joplin, MO

	Run No.	1			2			3			Average
PCDD / PCDF Parameters	TEF (a)	pg	ng/m³ TEQ	lb/hr TEQ	pg	ng/m³ TEQ	lb/hr TEQ	pg	ng/m³ TEQ	lb/hr TEQ	
2,3,7,8-TCDD	1.00	58.0	1.63E-02	1.47E-09	116.0	3.25E-02	2.93E-09	52.0	1.46E-02	1.31E-09	
1,2,3,7,8-PeCDD	0.50	23.0	3.24E-03	2.92E-10	46.0	6.45E-03	5.81E-10	20.0	2.80E-03	2.53E-10	
1,2,3,4,7,8-HxCDD	0.10	3.6	1.01E-04	9.14E-12	6.5	1.82E-04	1.64E-11	2.3	6.45E-05	5.81E-12	
1,2,3,6,7,8-HxCDD	0.10	3.2	9.02E-05	8.13E-12	7.3	2.05E-04	1.85E-11	2.2	6.17E-05	5.56E-12	
1,2,3,7,8,9-HxCDD	0.10	2.2	6.11E-05	5.51E-12	9.69	2.72E-04	2.45E-11	1.7	4.88E-05	4.40E-12	
1,2,3,4,6,7,8-HpCDD	0.01	3.3	9.30E-06	8.38E-13	11.3	3.17E-05	2.86E-12	2.1	5.89E-06	5.31E-13	
OCDD	0.001	11.2	3.16E-06	2.85E-13	13.3	3.73E-06	3.36E-13	7.3	2.05E-06	1.84E-13	
2,3,7,8-TCDF	0.10	4,990	1.41E-01	1.27E-08	5,670	1.59E-01	1.43E-08	4,630	1.30E-01	1.17E-08	
1,2,3,7,8-PeCDF	0.05	1,070	1.51E-02	1.36E-09	1,130	1.59E-02	1.43E-09	835	1.17E-02	1.05E-09	
2,3,4,7,8-PeCDF	0.50	553.0	7.79E-02	7.02E-09	557.0	7.81E-02	7.04E-09	411.0	5.76E-02	5.19E-09	
1,2,3,4,7,8-HxCDF	0.10	693	1.95E-02	1.76E-09	697	1.96E-02	1.76E-09	475	1.33E-02	1.20E-09	
1,2,3,6,7,8-HxCDF	0.10	157.0	4.42E-03	3.99E-10	176.0	4.94E-03	4.45E-10	105.0	2.94E-03	2.65E-10	
2,3,4,6,7,8-HxCDF	0.10	20.0	5.64E-04	5.08E-11	43.0	1.21E-03	1.09E-10	14.5	4.07E-04	3.66E-11	
1,2,3,7,8,9-HxCDF	0.10	12.7	3.58E-04	3.23E-11	13.1	3.68E-04	3.31E-11	8.9	2.50E-04	2.25E-11	
1,2,3,4,6,7,8-HpCDF	0.01	72.0	2.03E-04	1.83E-11	114.0	3.20E-04	2.88E-11	47.0	1.32E-04	1.19E-11	
1,2,3,4,7,8,9-HpCDF	0.01	22.0	6.20E-05	5.59E-12	24.0	6.73E-05	6.07E-12	14.0	3.92E-05	3.54E-12	
OCDF	0.001	13.0	3.66E-06	3.30E-13	16.9	4.74E-06	4.27E-13	7.6	2.13E-06	1.92E-13	Average
TOTAL TEQs (ng/m³)		=	0.279			0.319			0.234		0.277
TOTAL TEQs (lb/hr)		=	2.51E-08			2.88E-08			2.11E-08		2.50E-08

Test Data Summary and Calculations
General Dynamics OTS Munition Services
Building 3 Main Exhaust
Joplin, MO

Parameter	Run 1	Run 2	Run 3
Run Date	31May12	01Jun12	01Jun12
Start/Stop Time	1733-2040	1141-1447	1519-1825
Duration of Run, Minutes	180	180	180
Ave. Nozzle Diameter, inches	0.218	0.218	0.218
Pitot Calibration Factor, CF	0.84	0.84	0.84
Meter Gamma	0.990	0.990	0.990
Meter Delta H, inches of H2O	2.01	2.01	2.01
Stack Diameter, inches	40.5	40.5	40.5
Rectangular Width, inches		0	0
Rectangular Length, inches		0	0
Stack Area, sq.ft.	8.95	8.95	8.95
Barometric Pressure, inches of Hg	28.9	29.1	29.1
Static Pressure, inches of H2O	1.2	1.6	1.7
Dry Gas Meter Sample Volume, (VM)ft3			
Initial	73.125	204.058	335.136
Final	203.653	334.872	465.474
Difference	130.528	130.814	130.338
Ave. Stack Temperature, Ts(F)	109.3	112.1	112.2
Ave. Meter Temperature, Tm(F)	68.2	70.8	68.4
Ave. Run Delta H, inches of H2O	1.75	1.76	1.76
Ave. Square Root of Delta P	0.8884	0.8885	0.8895
Moisture Data			
Volume of water collected, mls	154	158	166
Silica Gel, grams	22.1	26.1	21.4
Total Collected, mls	176.1	184.1	187.4
ORSAT Data			
%O2	20.30	20.30	20.30
%CO2	0.70	0.70	0.70
%CO			

Calculations

Vw(std), scf =	8.289	8.666	8.821
Vm(std), dscf =	125.317	125.855	125.963
Bws=	0.062	0.064	0.065
Md=	28.92	28.92	28.92
Ms=	28.25	28.22	28.21
Vs, ft/sec =	53.2	53.2	53.2
Qs, acfm =	28,555	28,529	28,565
Qs(std), dscfm =	24,066	24,054	24,061
Isokinetic Sampling Rate, %	99.9	100.3	100.4

Where:

An = area of the nozzle
As = area of the stack
Vw(std) = volume of water vapor in gas, standard conditions = 0.04707*Vlc
Vm(std) = vol. of gas sampled, standard conditions = 17.647 x Vm x gamma x [Pb + (dH/13.6)]/Tm(R)
Bws = water vapor in gas stream, proportion by volume = Vw(std)/(Vm(std) + Vw(std))
Md = molecular weight of stack gas, dry basis = (0.44 x%CO2) + (0.32 x%O2) + [0.28 x (%N2 + %CO)]
Ms = molecular weight of stack gas, wet basis = [Md x (1-Bws)] + (18.0 x Bws)
Vs = stack gas velocity = 85.49 x Cp x (avg. Sq.Rt. dP) x [Sq.Rt. (Ts(R))/(Ms x Ps)]
Qs = stack gas flow rate = Vs x As x 60
Qs(std) = stack gas flow rate, standard conditions = Qs x (1-Bws) x (528/(Ts(R)) x (Ps/29.92)
Isokinetic sampling rate = {(Ts(R)) x [(0.00267 x Vlc) + (Vm(std)/17.647)] x 100}/(Time x vs x Ps x An x60)

Field Data Summary
General Dynamics OTS Munition Services
Building 3 Main Exhaust
Joplin, MO

	Run 1							Run 2							Run 3					
Traverse Point	Stack Temp(F)	Delta P	Delta H	Tm(F) in	Tm(F) out	SQRT Delta P		Stack Temp(F)	Delta P	Delta H	Tm(F) in	Tm(F) out	SQRT Delta P		Stack Temp(F)	Delta P	Delta H	Tm(F) in	Tm(F) out	SQRT Delta P
A1	112	1.10	2.42	70	70	1.0488		106	0.97	2.10	63	64	0.9849		108	0.89	2.00	66	68	0.9434
1	112	1.10	2.40	68	71	1.0488		109	1.00	2.20	65	64	1.0000		110	0.89	2.00	68	66	0.9434
1	112	1.10	2.40	70	70	1.0488		110	0.98	2.20	67	64	0.9899		111	0.91	2.00	68	66	0.9539
2	113	0.86	1.90	71	71	0.9274		111	1.00	2.20	69	65	1.0000		109	0.90	2.00	70	66	0.9487
2	110	0.92	2.00	70	71	0.9592		111	0.98	2.20	70	65	0.9899		111	0.91	2.00	71	66	0.9539
2	110	0.92	2.00	71	70	0.9592		110	0.95	2.10	69	67	0.9747		110	0.90	2.00	71	66	0.9487
3	109	0.83	1.80	70	70	0.9110		111	0.75	1.70	69	67	0.8660		111	0.68	1.50	71	65	0.8246
3	109	0.83	1.80	70	70	0.9110		112	0.77	1.70	70	67	0.8775		111	0.78	1.70	70	65	0.8832
3	108	0.83	1.80	70	69	0.9110		112	0.76	1.70	71	68	0.8718		111	0.81	1.80	71	65	0.9000
4	108	0.75	1.65	70	68	0.8660		112	0.72	1.60	70	70	0.8485		112	0.74	1.60	71	65	0.8602
4	109	0.72	1.60	70	68	0.8485		112	0.73	1.60	70	69	0.8544		112	0.72	1.60	72	66	0.8485
4	108	0.72	1.60	71	69	0.8485		112	0.74	1.60	71	69	0.8602		112	0.74	1.60	73	66	0.8602
5	109	0.68	1.50	71	69	0.8246		113	0.69	1.50	72	69	0.8307		112	0.74	1.60	73	66	0.8602
5	109	0.68	1.50	70	69	0.8246		112	0.72	1.60	72	69	0.8485		113	0.72	1.60	73	66	0.8485
5	109	0.68	1.50	71	70	0.8246		112	0.70	1.50	71	70	0.8367		113	0.75	1.70	73	67	0.8660
6	109	0.68	1.50	73	71	0.8246		111	0.66	1.50	73	72	0.8124		112	0.74	1.60	73	67	0.8602
6	109	0.64	1.40	74	72	0.8000		112	0.66	1.50	73	72	0.8124		113	0.75	1.70	73	66	0.8660
6	108	0.64	1.40	74	72	0.8000		112	0.57	1.30	72	72	0.7550		113	0.75	1.70	72	67	0.8660
B1	107	1.10	2.40	70	72	1.0488		112	0.95	2.10	69	70	0.9747		113	1.00	2.20	69	67	1.0000
1	108	1.10	2.40	70	72	1.0488		113	0.95	2.10	71	71	0.9747		113	1.00	2.20	71	67	1.0000
1	108	1.10	2.40	71	71	1.0488		112	0.95	2.10	72	71	0.9747		113	1.00	2.20	71	66	1.0000
2	108	0.90	2.00	70	70	0.9487		112	0.85	1.90	74	71	0.9220		113	0.95	2.10	72	67	0.9747
2	109	0.90	2.00	69	69	0.9487		112	0.85	1.90	76	71	0.9220		113	1.00	2.20	72	66	1.0000
2	108	0.90	2.00	68	67	0.9487		113	0.85	1.90	77	73	0.9220		112	0.95	2.10	71	67	0.9747
3	109	0.85	1.90	68	66	0.9220		114	0.85	1.90	77	72	0.9220		113	0.72	1.60	72	66	0.8485
3	109	0.90	2.00	68	66	0.9487		113	0.85	1.90	77	74	0.9220		113	0.72	1.60	71	66	0.8485
3`	109	0.85	1.90	68	65	0.9220		114	0.85	1.90	72	72	0.9220		113	0.75	1.70	71	66	0.8660
4	110	0.50	1.10	67	64	0.7071		113	0.72	1.60	74	72	0.8485		113	0.72	1.60	71	66	0.8485
4	111	0.50	1.10	65	64	0.7071		114	0.72	1.60	74	72	0.8485		113	0.72	1.60	71	66	0.8485
4	110	0.50	1.10	64	63	0.7071		114	0.72	1.60	74	72	0.8485		114	0.72	1.60	69	67	0.8485
5	110	0.50	1.10	64	63	0.7071		114	0.68	1.50	73	71	0.8246		114	0.68	1.50	69	67	0.8246
5	110	0.70	1.50	64	62	0.8367		113	0.68	1.50	74	72	0.8246		113	0.68	1.50	70	66	0.8246
5	109	0.70	1.50	64	62	0.8367		113	0.68	1.50	74	72	0.8246		113	0.68	1.50	70	66	0.8246
6	109	0.70	1.50	63	62	0.8367		113	0.68	1.50	74	72	0.8246		113	0.68	1.50	68	66	0.8246
6	109	0.70	1.50	63	61	0.8367		114	0.72	1.60	72	71	0.8485		113	0.68	1.50	68	65	0.8246
6	109	0.70	1.50	63	61	0.8367		114	0.68	1.50	72	71	0.8246		113	0.65	1.40	68	65	0.8062
Average	109	0.80	1.75	69	68	0.8884		112	0.79	1.76	72	70	0.8885		112	0.80	1.76	71	66	0.8895

EPA Isokinetic Field Sheet

Methods Performed M23

Client	GEN. DYNAMICS	Run Number	1	Pitot Number	4FT.EFF 4B
Location	CARTHAGE	Stack Diameter	40.5	Pitot Coefficient	0.84
Source	STACK EXHAUST	Barometric Pres.	28.9	Stack TC I.D.	4FT.EFF 4B
Date	5.31.12	Static Pressure	+1.2	Oven Box I.D.	0861
Operators	W. HARDY	Meter Box #	7	Impinger Out I.D.	4
Start Time	1733 1910	Meter delta H	2.01	Nozzle Size	0.218
End Time	1903 2040	Meter Gamma	0.990	XAD Trap I.D.	XAD#1

2.2

Leak Check Rates	Sample Rate in.	Sample Rate cfm	Pitot +	Pitot -
Initial	15	0.008	✓	✓
Mid	7	0.004	✓	✓
Mid				
Final	7	0.004	✓	✓

Sample Point	Sample Time (min)	Velocity Head (in. H_2O)	Orifice Setting (in. H_2O)	Meter Volume (ft^3)	Temperature Readings in Degrees Farenheit: Stack	Probe	Oven Box	Impinger	Aux	Meter Inlet	Meter Outlet	Vacuum (in. hg)	Comments/Notes
A1	0	1.1	2.42	073.125	112	262	253	55	42	70	70	4	
1	5	1.1	2.4	077.43	112	254	250	41	40	68	71	4	
1	10	1.1	2.4	081.82	112	253	252	40	38	70	70	6	
2	15	0.86	1.9	085.89	113	253	254	40	35	71	71	4	
2	20	0.92	2.0	089.72	110	254	255	40	35	70	71	4	
2	25	0.92	2.0	093.92	110	256	257	41	35	71	70	4	
3	30	0.83	1.8	097.62	109	257	257	41	35	70	70	4	
3	35	0.83	1.8	101.10	109	258	260	42	35	70	70	4	
3	40	0.83	1.8	104.91	108	264	252	41	35	70	69	4	
4	45	0.75	1.65	108.71	108	264	255	40	35	70	68	4	
4	50	0.72	1.6	112.14	109	265	259	40	35	70	68	4	
4	55	0.72	1.6	115.63	108	264	256	40	35	71	69	4	
5	60	0.68	1.5	119.32	109	264	254	41	35	71	69	4	
5	65	0.68	1.5	—	109	264	254	42	35	70	69	4	
5	70	0.68	1.5	125.91	109	264	253	41	35	71	70	3	
6	75	0.68	1.5	129.27	109	263	257	41	35	73	71	4	
6	80	0.64	1.4	132.67	109	263	256	42	35	74	72	3	
6	85	0.64	1.4	136.10	108	263	257	42	36	74	72	3	
1.1 7	90	1.1	2.4	139.307	107	261	255	48	36	70	72	6	IK CHK 139.434
7	95	1.1	2.4	143.87	108	263	254	42	36	70	72	6	
7	100	1.1	2.4	148.01	108	264	254	43	36	71	71	6	
8	105	0.90	2.0	152.22	108	260	253	42	36	70	70	5	
8	110	0.90	2.0	156.12	109	263	254	41	35	69	69	5	
8	115	0.90	2.0	160.12	108	264	253	41	36	68	67	5	
9	120	0.85	1.9	164.01	109	264	254	41	35	68	66	5	
9	125	0.90	2.0	167.81	109	265	254	42	36	68	66	5	
9	130	0.85	1.9	171.82	109	264	253	41	35	68	65	5	
10	135	0.50	1.1	—	110	264	260	42	36	67	64	2	
10	140	0.50	1.1	178.52	111	264	253	42	36	65	64	2	
10	145	0.50	1.1	181.32	110	265	255	42	35	64	63	2	

Impinger Data (vol) #	Initial	Final
1	0	154
2	100	100
3	100	100
4		
5		
6		

Silica Gel Data (gm) #	Initial	Final
1	294.9	317.0
2		

Moisture Gain	
154	ml.
22.1	gm
176.1	Total

Filter Data #	Number	Tare
1	M23-R1	untared
2		
3		

Molecular Weight Data (%) #	O_2	CO_2
1	20.2	0.8
2	20.3	0.7
3	20.3	0.7
Avg	20.3	0.7

V:\Office-Ops\ENV\DN01\Source Testing\Field Data Forms\Isokinetic\Iso Field Sheet.xls

O'BRIEN & GERE

EPA Isokinetic Field Sheet

Methods Performed: M 23

Client	GEN. DYNAMICS	Run Number	1 (CONT)	Pitot Number	4 Ft. EFF 4-B
Location	CARTHAGE	Stack Diameter	40.5	Pitot Coefficient	0.84
Source	STACK EXHAUST BG3	Barometric Pres.	28.9	Stack TC I.D.	4 Ft EFF 4-B
Date	5-31-12	Static Pressure	1.2	Oven Box I.D.	OBG1
Operators	W. HARDY	Meter Box #	7	Impinger Out I.D.	4
Start Time	1733	Meter delta H	2.01	Nozzle Size	0.218
End Time	2080	Meter Gamma	0.990	XAD Trap I.D.	XAD#1

Leak Check Rates	Sample Rate in.	Sample Rate cfm	Pitot +	Pitot -
Initial	15	0.008	✓	✓
Mid	7	0.004	✓	✓
Mid				
Final	7	0.004	✓	✓

Sample Point	Sample Time (min)	Velocity Head (in. H_2O)	Orifice Setting (in. H_2O)	Meter Volume (ft^3)	Temperature Readings in Degrees Farenheit: Stack	Probe	Oven Box	Impinger	Aux	Meter Inlet	Meter Outlet	Vacuum (in. hg)	Comments/Notes
11	050	0.50	1.5	184.32	110	264	253	42	36	64	63	2	
11	055	0.70	1.5	187.12	110	264	255	42	35	64	62	3	
11	060	0.70	1.5	190.4-	109	264	255	42	36	64	62	3	
12	065	0.70	1.5	193.82	109	265	254	42	36	63	62	3	
12	070	0.70	1.5	197.21	109	265	257	42	36	63	61	3	
12	075	0.70	1.5	200.44	109	265	254	42	36	63	61	3	
END	1800	—	—	203.980	—	—	—	—	—	—	—	—	

Impinger Data (vol) #	Initial	Final
1	0	154
2	100	100
3	100	100
4	SG	
5		
6		

Silica Gel Data (gm) #	Initial	Final
1	294.9	317.0
2		

Moisture Gain	
154	ml.
22.1	gm
176.1	Total

Filter Data #	Number	Tare
1	M23-R1	untared
2		
3		

Molecular Weight Data (%) #	O_2	CO_2
1	20.3	0.7
2	20.3	0.7
3	20.3	0.7
Avg	20.3	0.7

O'BRIEN & GERE

EPA Isokinetic Field Sheet

Methods Performed: M23

Client	General Dynamics	Run Number	2	Pitot Number	4-B
Location	Carthage MO	Stack Diameter	40.5	Pitot Coefficient	0.84
Source	Bldg 3 Stack	Barometric Pres.	~~30.05~~ 29.1	Stack TC I.D.	4-B
Date	6/10/12	Static Pressure	1.6	Oven Box I.D.	036-1
Operators	SM / WH	Meter Box #	7	Impinger Out I.D.	4
Start Time	1141 1317	Meter delta H	2.01	Nozzle Size	0.218
End Time	1310 1447	Meter Gamma	0.990	XAD Trap I.D.	XAD-2

Leak Check Rates	Sample Rate in.	Sample Rate cfm	Pitot +	Pitot -
Initial	15	0.006	✓	✓
Mid	8	0.002	✓	✓
Mid				
Final	10	0.007	✓	✓

Sample Point	Sample Time (min)	Velocity Head (in. H_2O)	Orifice Setting (in. H_2O)	Meter Volume (ft³)	Temperature Readings in Degrees Farenheit: Stack	Probe	Oven Box	Impinger	Aux	Meter Inlet	Meter Outlet	Vacuum (in. hg)	Comments/Notes
B1	0	0.97	2.1	204.058	106	262	252	57	44	63	64	4.5	K=2.2
1	5	1.0	2.2	208.03	109	256	254	44	38	65	64	6.0	
1	10	0.98	2.2	212.01	110	258	254	44	41	67	64	6.5	
2	15	1.0	2.2	216.03	111	259	255	46	42	69	65	7.0	
2	20	0.98	2.2	220.07	111	260	254	46	41	70	65	7.0	
2	25	0.95	2.1	224.15	110	259	251	47	38	69	67	6.5	
3	30	0.75	1.7	228.04	111	258	253	46	36	69	67	5.5	
3	35	0.77	1.7	231.64	112	258	253	45	35	70	67	5.5	
3	40	0.76	1.7	235.21	112	258	247	45	36	71	68	5.5	
4	45	0.72	1.6	238.82	112	259	249	46	37	70	70	5.0	
4	50	0.73	1.6	242.26	112	259	253	44	35	70	69	5.0	
4	55	0.74	1.6	245.75	112	258	254	43	34	71	69	5.0	
0.69 5	60 1:00	~~0.77~~	1.5	249.26	113	259	255	43	35	72	69	5.0	ΔP: 0.69
5	1:05	0.72	1.6	252.62	112	257	252	44	35	72	69	5.5	
5	1:10	0.70	1.5	256.16	112	259	251	45	35	71	70	5.0	
6	1:15	0.66	1.5	259.38	111	257	246	47	37	73	72	5.0	
6	1:20	0.66	1.5	262.77	112	257	252	47	37	73	72	5.0	
6	1:25	0.57	1.3	266.16	112	258	253	47	36	72	72	4.0	
				269.227									
A1	1:30	0.95	2.1	269.280	112	254	253	53	36	69	70	7.0	
1	1:35	0.95	2.1	273.26	113	258	251	44	36	71	71	7.0	
1	1:40	0.95	2.1	277.20	112	259	254	45	36	72	71	7.0	
2	1:45	0.85	1.9	281.21	112	260	254	44	36	74	71	6.5	
2	1:50	0.85	1.9	285.15	112	257	254	43	35	76	71	6.5	
2	1:55	0.85	1.9	288.77	113	258	252	43	35	77	73	6.5	
3	2:00	0.85	1.9	292.56	114	258	254	44	35	77	72	6.5	
3	2:05	0.85	1.9	296.39	113	258	252	45	37	77	74	6.5	
3	2:10	0.85	1.9	300.22	114	259	253	46	37	72	72	6.5	
4	2:15	0.72	1.6	303.99	113	259	254	45	36	74	72	6.0	
4	2:20	0.72	1.6	307.62	114	259	254	45	35	74	72	6.0	

Impinger Data (vol) #	Initial	Final
1	0	162
2	100	98
3	100	98
4	56	
5		
6		

Silica Gel Data (gm) #	Initial	Final
1	295.8	
2	321.9	

Moisture Gain	
158	ml.
26.1	gm
184.1	Total

Filter Data #	Number	Tare
1	M23-R2	untared
2		
3		

Molecular Weight Data (%) #	O_2	CO_2
1	20.3	0.7
2	20.3	0.7
3	20.3	0.7
Avg	20.3	0.7

O'BRIEN & GERE

EPA Isokinetic Field Sheet

Methods Performed: M23

Client	General Dynamics	Run Number	2 (cont)	Pitot Number	4-B
Location	Carthage MO	Stack Diameter	40.5	Pitot Coefficient	0.84
Source	Bldg 3	Barometric Pres.	~~30.05~~ 29.1	Stack TC I.D.	4-B
Date	6/1/12	Static Pressure	1.6	Oven Box I.D.	OBG-1
Operators	SM / WH	Meter Box #	7	Impinger Out I.D.	4
Start Time	1141	Meter delta H	2.01	Nozzle Size	0.218
End Time	1447	Meter Gamma	0.990	XAD Trap I.D.	#2

Leak Check Rates	Sample Rate in.	Sample Rate cfm	Pitot +	Pitot -
Initial	15	0.006	✓	✓
Mid	8	0.002	✓	✓
Mid				
Final	10	0.007	✓	✓

Sample Point	Sample Time (min)	Velocity Head (in. H_2O)	Orifice Setting (in. H_2O)	Meter Volume (ft³)	Temperature Readings in Degrees Farenheit: Stack	Probe	Oven Box	Impinger	Aux	Meter Inlet	Meter Outlet	Vacuum (in. hg)	Comments/Notes
4	2:25	0.72	1.6	311.11	114	258	252	45	35	74	72	5.5	
5	2:30	0.68	1.5	314.53	114	258	258	44	34	73	71	5.0	
5	2:35	0.68	1.5	318.01	113	258	258	45	35	74	72	5.0	
5	2:40	0.68	1.5	321.28	113	258	254	45	35	74	72	5.0	
6	2:45	0.68	1.5	324.71	113	258	253	46	36	74	72	5.0	
6	2:50	0.72	1.6	328.9 -	114	258	250	45	36	72	71	5.5	ΔH = 1.6
6	2:55	0.68	1.5	331.52	114	258	255	46	36	72	71	5.0	
	3:00	—	—	334.925	—	—	—	—	—	—	—	—	

Impinger Data (vol) #	Initial	Final
1	0	162
2	100	98
3	100	98
4	SG	
5		
6		

Silica Gel Data (gm) #	Initial	Final
1	295.8	321.9
2		

Moisture Gain	
158	ml.
26.1	gm
184.1	Total

Filter Data #	Number	Tare
1	M23-R2	untared
2		
3		

Molecular Weight Data (%) #	O_2	CO_2
1	20.3	0.7
2	20.3	0.7
3	20.3	0.7
Avg	20.3	0.7

O'BRIEN & GERE

V:\Office-Ops\ENV\Div01\Source Testing\Field Data Forms\Isokinetic\Iso Field Sheet.xls

EPA Isokinetic Field Sheet

Methods Performed: M23

Client	GEN. DYNAMICS	Run Number	3	Pitot Number	4-B
Location	CARTHAGE, MO.	Stack Diameter	40.5	Pitot Coefficient	0.84
Source	BLDG. #3 STACK	Barometric Pres.	30.05 29.1	Stack TC I.D.	4-B
Date	6-1-12	Static Pressure	1.7	Oven Box I.D.	OB6-1
Operators	S. MILO W. HARDY	Meter Box #	7	Impinger Out I.D.	4
Start Time	1519 / 1655	Meter delta H	2.01	Nozzle Size	0.218
End Time	1649 / 1825	Meter Gamma	0.990	XAD Trap I.D.	TRAP #5

Leak Check Rates	Sample Rate in.	Sample Rate cfm	Pitot +	Pitot -
Initial	16	0.006	✓	✓
Mid	7	0.003	✓	✓
Mid				
Final	7	0.002	✓	✓

Sample Point	Sample Time (min)	Velocity Head (in. H_2O)	Orifice Setting (in. H_2O)	Meter Volume (ft^3)	Temperature Readings in Degrees Farenheit: Stack	Probe	Oven Box	Impinger	Aux	Meter Inlet	Meter Outlet	Vacuum (in. hg)	Comments/Notes
A1	0	0.89	2.0	335.136	108	258	254	52	49	66	68	3.0	
1	5	0.89	2.0	338.92	110	258	256	36	43	68	66	4.0	
1	10	0.91	2.0	342.76	111	258	256	37	43	68	66	4.0	
2	15	0.90	2.0	346.56	109	261	258	37	43	70	66	4.0	
2	20	0.91	2.0	350.42	111	260	254	38	42	71	66	4.0	
2	25	0.90	2.0	354.26	110	260	254	38	43	71	66	4.0	
3	30	0.68	1.5	358.11	111	260	256	37	42	71	65	3.6	
3	35	0.78	1.7	361.47	111	261	256	36	43	70	65	3.0	
3	40	0.81	1.8	364.99	111	259	255	36	42	71	65	3.0	
4	45	0.74	1.6	368.65	112	260	254	36	43	71	65	3.0	
4	50	0.72	1.6	372.14	112	260	256	37	42	72	66	3.0	
4	55	0.74	1.6	375.64	112	260	256	37	42	73	66	3.0	
5	60	0.74	1.6	379.11	112	260	255	36	41	73	66	3.0	
5	105	0.72	1.6	382.58	113	260	254	36	43	73	66	3.0	
5	110	0.75	1.7	386.16	113	260	254	36	42	73	67	3.0	
6	115	0.74	1.6	389.60	112	260	255	36	43	73	67	3.0	
6	120	0.75	1.7	393.07	113	261	255	37	44	73	66	3.0	
6	125	0.75	1.7	396.65	113	260	256	37	42	72	67	3.0	
				400.154									
B1	130	1.0	2.2	400.225	113	254	254	41	36	69	67	5.0	
1	135	1.0	2.2	404.31	113	251	256	33	36	71	67	5.0	
1	140	1.0	2.2	408.41	113	250	252	33	37	71	66	5.0	
2	145	0.95	2.1	412.51	113	253	253	33	38	72	67	4.5	
2	150	1.0	2.2	416.47	113	258	254	33	35	72	66	5.0	
2	155	0.95	2.1	420.62	112	258	253	33	35	71	69	4.5	
3	200	0.72	1.6	424.62	113	259	256	34	37	72	66	3.0	
3	205	0.72	1.6	428.37	113	259	254	34	37	71	66	3.0	
3	210	0.78	1.7	431.51	113	258	254	34	39	71	66	3.0	0.75 ΔP
4	215	0.72	1.6	435.79	113	259	253	35	39	71	66	3.0	
4	220	0.72	1.6	438.55	113	259	253	35	39	71	66	3.0	

Impinger Data (vol) #	Initial	Final
1	0	
2	100	
3	100	
4	56.	
5		
6		

Silica Gel Data (gm) #	Initial	Final
1	295.9	317.3
2		

Moisture Gain	
166	ml.
21.4	gm
187.4	Total

Filter Data #	Number	Tare
1	M23-R3	unbagged
2		
3		

Molecular Weight Data (%) #	O_2	CO_2
1	20.3	0.7
2	20.3	0.7
3	20.3	0.7
Avg	20.3	0.7

O'BRIEN & GERE

V:\Office-Oo\ENV\Div01\Source Testing\Field Data Forms\Isokinetic\Iso Field Sheet.xls

EPA Isokinetic Field Sheet

Methods Performed: M23

Client	GENERAL DYNAMICS	Run Number	3 (CONT).	Pitot Number	4-B
Location	CARTHAGE MO.	Stack Diameter	40.5	Pitot Coefficient	0.84
Source	BLDG #3 Stack	Barometric Pres.	~~29.05~~ 29.1	Stack TC I.D.	4-B
Date	6.1.12	Static Pressure	1.7	Oven Box I.D.	OB6-1
Operators	S MILO W. Warby	Meter Box #	7	Impinger Out I.D.	4
Start Time	1519	Meter delta H	2.01	Nozzle Size	0.218
End Time	1825	Meter Gamma	0.990	XAD Trap I.D.	XAD #5

Leak Check Rates	Sample Rate in.	Sample Rate cfm	Pitot +	Pitot -
Initial	16	0.006	✓	✓
Mid	7	0.003	✓	✓
Mid				
Final	7	0.002	✓	✓

Sample Point	Sample Time (min)	Velocity Head (in. H_2O)	Orifice Setting (in. H_2O)	Meter Volume (ft^3)	Temperature Readings in Degrees Farenheit: Stack	Probe	Oven Box	Impinger	Aux	Meter Inlet	Meter Outlet	Vacuum (in. hg)	Comments/Notes
B4	225	0.72	1.6	442.02	114	258	252	36	40	69	67	3.0	
5	230	0.68	1.5	445.57	114	258	253	37	41	69	67	3.0	
5	235	0.68	1.5	448.28	113	257	251	36	42	70	66	3.0	
5	240	0.68	1.5	452.21	113	257	252	36	42	70	66	3.0	
6	245	0.68	1.5	459.2	113	260	252	39	43	68	66	3.0	
6	250	0.68	1.45	460.28	113	260	252	38	42	68	65	3.0	
6	255	0.65	1.4	462.28	113	260	252	38	42	68	65	3.0	
END	300	—	—	465.545	—	—	—	—	—	—	—	—	

Impinger Data (vol) #	Initial	Final
1	0	166
2	100	100
3	100	100
4	SG	
5		
6		

Silica Gel Data (gm) #	Initial	Final
1	295.9	317.3
2		

Moisture Gain	
166	ml.
21.4	gm
187.4	Total

Filter Data #	Number	Tare
1	M23-R3	untared
2		
3		

Molecular Weight Data (%) #	O_2	CO_2
1	20.3	0.7
2	20.3	0.7
3	20.3	0.7
Avg	20.3	0.7

O'BRIEN & GERE

V:\Office Ops\ENV\Div01\Source Testing\Field Data Forms\Isokinetic\Iso Field Sheet.xls

O'BRIEN & GERE

SAMPLE TRAIN MOISTURE RECOVERY DATA SHEET

Reference Method / Sampling Train : M23

Recovered by : J. Gorman				**Recovered by :** W Hardy				**Recovered by :** W Hardy			
Run No. 1		**Date :** 05-31-12		**Run No.** 2		**Date :** 06-1-12		**Run No.** 3		**Date :** 6/1/12	
XAD Module No. : XAD #1-N05081-01				**XAD Module No. :** XAD #2				**XAD Module No. :** XAD # 5			
Filter No. :				**Filter No. :**				**Filter No. :**			
Impinger No. and Volume				**Impinger No. and Volume**				**Impinger No. and Volume**			
No.	Initial (mL)	Final (mL)	Rinse (mL)	No.	Initial (mL)	Final (mL)	Rinse (mL)	No.	Initial (mL)	Final (mL)	Rinse (mL)
1	0	154		1	0	162		1	0	166	
2	100	100		2	100	98		2	100	100	
3	100	100		3	100	98		3	100	100	
4	SG			4	SG			4	SG		
5				5				5			
6				6				6			
7				7				7			
			DIFF :				DIFF :				DIFF :
Totals	200	354	154	**Totals**	200	358	158	**Totals**	200	366	166
	Initial (g)	Final (g)	DIFF :		Initial (g)	Final (g)	DIFF :		Initial (g)	Final (g)	DIFF :
Silica Gel	294.9	317.0	22.1	Silica Gel	295.8	321.9	26.1	Silica Gel	295.9	317.3	21.4
Final Net Moisture Gain:			176.1	**Final Net Moisture Gain:**			184.1	**Final Net Moisture Gain:**			187.4

E:\Field Data Sheets\[M23 Moisture Recovery.xls]A

Method 23 – Retest No. 2

Test Condition No. 1

PCDD / PCDF Emission Results - TEQ Basis
General Dynamics OTS Munition Services
Building 3 Main Exhaust
Joplin, MO

	Run No.	1			2			3			Average
PCDD / PCDF Parameters	TEF (a)	pg	ng/m³ TEQ	lb/hr TEQ	pg	ng/m³ TEQ	lb/hr TEQ	pg	ng/m³ TEQ	lb/hr TEQ	
2,3,7,8-TCDD	1.00	1.2	3.52E-04	3.07E-11	2.0	6.04E-04	5.27E-11	2.0	5.87E-04	5.20E-11	
1,2,3,7,8-PeCDD	0.50	3.0	4.41E-04	3.83E-11	3.0	4.53E-04	3.95E-11	3.0	4.40E-04	3.90E-11	
1,2,3,4,7,8-HxCDD	0.10	2.0	5.87E-05	5.11E-12	1.4	4.23E-05	3.69E-12	1.3	3.81E-05	3.38E-12	
1,2,3,6,7,8-HxCDD	0.10	8.0	2.35E-04	2.04E-11	1.3	3.93E-05	3.42E-12	1.2	3.52E-05	3.12E-12	
1,2,3,7,8,9-HxCDD	0.10	5.0	1.47E-04	1.28E-11	1.3	3.93E-05	3.42E-12	1.2	3.52E-05	3.12E-12	
1,2,3,4,6,7,8-HpCDD	0.01	12.0	3.52E-05	3.07E-12	2.0	6.04E-06	5.27E-13	2.0	5.87E-06	5.20E-13	
OCDD	0.001	28.0	8.22E-06	7.15E-13	6.0	1.81E-06	1.58E-13	4.0	1.17E-06	1.04E-13	
2,3,7,8-TCDF	0.10	135	3.97E-03	3.45E-10	191	5.77E-03	5.03E-10	216	6.34E-03	5.62E-10	
1,2,3,7,8-PeCDF	0.05	127	1.87E-03	1.62E-10	108	1.63E-03	1.42E-10	120	1.76E-03	1.56E-10	
2,3,4,7,8-PeCDF	0.50	53.0	7.78E-03	6.77E-10	57.0	8.61E-03	7.51E-10	60.0	8.80E-03	7.81E-10	
1,2,3,4,7,8-HxCDF	0.10	230	6.76E-03	5.88E-10	135	4.08E-03	3.56E-10	150	4.40E-03	3.90E-10	
1,2,3,6,7,8-HxCDF	0.10	49.0	1.44E-03	1.25E-10	33.0	9.97E-04	8.69E-11	37.0	1.09E-03	9.63E-11	
2,3,4,6,7,8-HxCDF	0.10	11.0	3.23E-04	2.81E-11	7.0	2.11E-04	1.84E-11	7.0	2.05E-04	1.82E-11	
1,2,3,7,8,9-HxCDF	0.10	5.0	1.47E-04	1.28E-11	4.0	1.21E-04	1.05E-11	5.0	1.47E-04	1.30E-11	
1,2,3,4,6,7,8-HpCDF	0.01	68.0	2.00E-04	1.74E-11	29.0	8.76E-05	7.64E-12	30.0	8.80E-05	7.81E-12	
1,2,3,4,7,8,9-HpCDF	0.01	25.0	7.34E-05	6.39E-12	9.0	2.72E-05	2.37E-12	12.0	3.52E-05	3.12E-12	
OCDF	0.001	37.0	1.09E-05	9.45E-13	5.0	1.51E-06	1.32E-13	6.0	1.76E-06	1.56E-13	Average
TOTAL TEQs (ng/m³)		=	0.024			0.023			0.024		0.024
TOTAL TEQs (lb/hr)		=	2.07E-09			1.98E-09			2.13E-09		2.06E-09

Test Data Summary and Calculations
General Dynamics OTS Munition Services
Building 3 Main Exhaust
Joplin, MO

Parameter	Run 1	Run 2	Run 3
Run Date	19Jun12	19Jun12	19Jun12
Start/Stop Time	0949-1308	1343-1650	1725-2030
Duration of Run, Minutes	180	180	180
Ave. Nozzle Diameter, inches	0.218	0.218	0.218
Pitot Calibration Factor, CF	0.84	0.84	0.84
Meter Gamma	1.008	1.008	1.008
Meter Delta H, inches of H2O	1.83	1.83	1.83
Stack Diameter, inches	40.5	40.5	40.5
Rectangular Width, inches		0	0
Rectangular Length, inches		0	0
Stack Area, sq.ft.	8.95	8.95	8.95
Barometric Pressure, inches of Hg	28.9	28.9	28.9
Static Pressure, inches of H2O	1.2	1.2	1.2
Dry Gas Meter Sample Volume, (VM)ft3			
Initial	736.128	863.067	987.559
Final	862.865	987.381	1116.569
Difference	126.737	124.314	129.01
Ave. Stack Temperature, Ts(F)	121.4	123.3	125.6
Ave. Meter Temperature, Tm(F)	84.2	89.0	93.4
Ave. Run Delta H, inches of H2O	1.68	1.65	1.73
Ave. Square Root of Delta P	0.8807	0.8839	0.9054
Moisture Data			
Volume of water collected, mls	200	194	215
Silica Gel, grams	23.2	23	24.7
Total Collected, mls	223.2	217	239.7
ORSAT Data			
%O2	20.20	20.40	20.40
%CO2	0.80	0.60	0.70
%CO			

Calculations

Vw(std), scf =	10.506	10.214	11.283
Vm(std), dscf =	120.234	116.886	120.367
Bws=	0.080	0.080	0.086
Md=	28.94	28.91	28.93
Ms=	28.06	28.04	27.99
Vs, ft/sec =	53.5	53.8	55.2
Qs, acfm =	28,701	28,863	29,649
Qs(std), dscfm =	23,222	23,281	23,679
Isokinetic Sampling Rate, %	99.3	96.3	97.5

Where:

An = area of the nozzle
As = area of the stack
Vw(std) = volume of water vapor in gas, standard conditions = 0.04707*Vlc
Vm(std) = vol. of gas sampled, standard conditions = 17.647 x Vm x gamma x [Pb + (dH/13.6)]/Tm(R)
Bws = water vapor in gas stream, proportion by volume = Vw(std)/(Vm(std) + Vw(std))
Md = molecular weight of stack gas, dry basis = (0.44 x%CO2) + (0.32 x%O2) + [0.28 x (%N2 + %CO)]
Ms = molecular weight of stack gas, wet basis = [Md x (1-Bws)] + (18.0 x Bws)
Vs = stack gas velocity = 85.49 x Cp x (avg. Sq.Rt. dP) x [Sq.Rt. (Ts(R))/(Ms x Ps)]
Qs = stack gas flow rate = Vs x As x 60
Qs(std) = stack gas flow rate, standard conditions = Qs x (1-Bws) x (528/(Ts(R)) x (Ps/29.92)
Isokinetic sampling rate = {(Ts(R)) x [(0.00267 x Vlc) + (Vm(std)/17.647)] x 100}/(Time x vs x Ps x An x60)

Field Data Summary
General Dynamics OTS Munition Services
Building 3 Main Exhaust
Joplin, MO

	Run 1							Run 2							Run 3					
Traverse Point	Stack Temp(F)	Delta P	Delta H	Tm(F) in	Tm(F) out	SQRT Delta P		Stack Temp(F)	Delta P	Delta H	Tm(F) in	Tm(F) out	SQRT Delta P		Stack Temp(F)	Delta P	Delta H	Tm(F) in	Tm(F) out	SQRT Delta P
A1	122	1.10	2.30	84	83	1.0488		120	0.74	1.60	86	85	0.8602		126	1.10	2.30	91	90	1.0488
1	123	1.10	2.30	82	83	1.0488		121	0.78	1.70	87	86	0.8832		125	1.10	2.30	93	91	1.0488
1	122	1.10	2.30	83	82	1.0488		121	0.76	1.60	87	86	0.8718		125	1.10	2.30	96	93	1.0488
2	122	0.90	1.90	83	82	0.9487		122	0.76	1.60	88	86	0.8718		126	0.92	1.90	96	94	0.9592
2	122	0.91	1.90	83	82	0.9539		122	0.76	1.60	88	87	0.8718		127	0.93	2.00	96	94	0.9644
2	122	0.90	1.90	84	83	0.9487		122	0.80	1.68	88	87	0.8944		126	0.88	1.80	97	94	0.9381
3	122	0.75	1.60	84	83	0.8660		122	0.56	1.17	89	87	0.7483		126	0.95	2.00	98	95	0.9747
3	122	0.69	1.50	84	83	0.8307		124	0.60	1.26	89	88	0.7746		127	0.98	2.10	97	95	0.9899
3	122	0.77	1.60	84	83	0.8775		124	0.80	1.26	89	87	0.8944		127	0.85	1.80	96	94	0.9220
4	122	0.54	1.20	85	83	0.7348		121	0.82	1.76	90	87	0.9055		126	0.79	1.70	97	94	0.8888
4	122	0.56	1.20	84	83	0.7483		122	0.82	1.76	90	88	0.9055		126	0.71	1.50	97	94	0.8426
4	122	0.65	1.40	86	83	0.8062		123	0.82	1.76	91	88	0.9055		127	0.75	1.60	97	94	0.8660
5	122	0.67	1.40	85	84	0.8185		122	0.84	1.77	91	89	0.9165		126	0.73	1.50	96	94	0.8544
5	122	0.65	1.40	85	84	0.8062		122	0.84	1.77	90	89	0.9165		125	0.72	1.50	97	95	0.8485
5	122	0.66	1.40	86	84	0.8124		123	0.84	1.77	90	88	0.9165		126	0.78	1.60	96	93	0.8832
6	121	0.76	1.60	87	84	0.8718		123	0.82	1.76	90	88	0.9055		126	0.74	1.60	94	93	0.8602
6	121	0.74	1.60	86	85	0.8602		123	0.82	1.76	90	88	0.9055		125	0.76	1.60	94	92	0.8718
6	122	0.67	1.50	86	84	0.8185		123	0.82	1.76	90	88	0.9055		124	0.78	1.60	95	93	0.8832
B1	121	1.10	2.30	83	83	1.0488		125	0.94	1.97	89	88	0.9695		126	0.85	1.80	96	93	0.9220
1	121	0.96	2.00	85	83	0.9798		123	0.95	2.00	89	88	0.9747		127	0.87	1.80	96	94	0.9327
1	121	0.97	2.10	85	84	0.9849		124	0.95	2.00	89	88	0.9747		126	0.85	1.80	96	93	0.9220
2	120	0.82	1.80	86	84	0.9055		125	0.79	1.70	90	88	0.8888		126	0.90	1.90	95	94	0.9487
2	120	0.81	1.80	86	84	0.9000		125	0.83	1.70	89	88	0.9110		126	0.88	1.80	95	93	0.9381
2	120	0.82	1.80	86	84	0.9055		125	0.80	1.70	89	88	0.8944		126	0.84	1.80	94	92	0.9165
3	120	0.54	1.20	84	83	0.7348		125	0.65	1.40	89	88	0.8062		125	0.64	1.30	93	92	0.8000
3	120	0.60	1.30	84	83	0.7746		124	0.75	1.60	90	88	0.8660		127	0.53	1.10	93	92	0.7280
3	120	0.65	1.40	85	83	0.8062		125	0.76	1.60	90	88	0.8718		126	0.53	1.10	94	91	0.7280
4	121	0.74	1.60	85	83	0.8602		124	0.60	1.30	91	88	0.7746		125	0.84	1.80	93	92	0.9165
4	121	0.74	1.60	85	83	0.8602		124	0.72	1.50	91	89	0.8485		125	0.78	1.60	93	91	0.8832
4	121	0.73	1.60	85	83	0.8544		124	0.77	1.60	91	89	0.8775		125	0.83	1.70	93	91	0.9110
5	121	0.68	1.50	86	83	0.8246		124	0.70	1.50	92	89	0.8367		125	0.80	1.70	93	91	0.8944
5	122	0.74	1.60	86	84	0.8602		124	0.74	1.60	92	89	0.8602		124	0.82	1.70	92	91	0.9055
5	122	0.76	1.60	87	84	0.8718		124	0.69	1.40	93	90	0.8307		125	0.77	1.60	92	89	0.8775
6	121	0.79	1.70	86	84	0.8888		124	0.84	1.80	94	90	0.9165		125	0.79	1.70	90	89	0.8888
6	123	0.81	1.80	87	85	0.9000		124	0.85	1.80	94	91	0.9220		124	0.68	1.40	90	88	0.8246
6	122	0.80	1.70	87	85	0.8944		124	0.89	1.90	95	92	0.9434		124	0.93	2.00	89	88	0.9644
Average	121	0.78	1.68	85	83	0.8807		123	0.78	1.65	90	88	0.8839		126	0.83	1.73	94	92	0.9054

O'BRIEN & GERE

SAMPLE TRAIN MOISTURE RECOVERY DATA SHEET

Reference Method / Sampling Train : M23 OUTLET COND. 1

Recovered by : H. HARDY				Recovered by :				Recovered by :			
Run No. 1		Date : 6/19/12		Run No. 2		Date : 6/19/12		Run No. 3		Date :	
XAD Module No. : #5				XAD Module No. : #8				XAD Module No. : #6			
Filter No. : R1 C1 outlet				Filter No. : R2 C1 outlet				Filter No. :			
Impinger No. and Volume				Impinger No. and Volume				Impinger No. and Volume			
No.	Initial (mL)	Final (mL)	Rinse (mL)	No.	Initial (mL)	Final (mL)	Rinse (mL)	No.	Initial (mL)	Final (mL)	Rinse (mL)
1	0	204		1	0	194		1	0	217	
2	100	98		2	100	100		2	100	98	
3	100	98		3	100	100		3	100	100	
4				4				4			
5				5				5			
6				6				6			
7				7				7			
			DIFF :				DIFF :				DIFF :
Totals	200	400	200	Totals	200	394	194	Totals	200	415	215
	Initial (g)	Final (g)	DIFF :		Initial (g)	Final (g)	DIFF :		Initial (g)	Final (g)	DIFF :
Silica Gel	276.7	299.9	23.2	Silica Gel	~~267.3~~ 273.7	296.7	23.0	Silica Gel	267.3	292.0	24.7
Final Net Moisture Gain:			223.2	Final Net Moisture Gain:			217	Final Net Moisture Gain:			239.7

E:\Field Data Sheets\[M23 Moisture Recovery.xls]A

EPA Isokinetic Field Sheet

Methods Performed: M23

Client	General Dynamics	Run Number	1-C1	Pitot Number	P4B
Location	Joplin MO	Stack Diameter	40.5	Pitot Coefficient	0.84
Source	Bldg3 main stack	Barometric Pres.	28.9	Stack TC I.D.	P4B
Date	6/19/12	Static Pressure	+1.2	Oven Box I.D.	OB-3
Operators	SM/WH	Meter Box #	5	Impinger Out I.D.	ID-15
Start Time	0949 / 1124 / 1202	Meter delta H	1.83	Nozzle Size	0.218
End Time	1119 / 1149 / 1308	Meter Gamma	1.008	XAD Trap I.D.	5

Leak Check Rates	Sample Rate in.	Sample Rate cfm	Pitot +	Pitot -
Initial	13.5	0.002	✓	✓
Mid				
Mid				
Final	11	0.002	✓	✓

Sample Point	Sample Time (min)	Velocity Head (in. H_2O)	Orifice Setting (in. H_2O)	Meter Volume (ft³)	Temperature Readings in Degrees Farenheit: Stack	Probe	Oven Box	Impinger	Aux	Meter Inlet	Meter Outlet	Vacuum (in. hg)	Comments/Notes
B1	0	1.05	2.3	736.128	122	229	258	61	49	84	83	8.5	
1	5	1.1	2.3	740.75	123	229	255	58	48	82	83	10.0	
1	10	1.1	2.3	744.93	122	231	253	61	49	83	82	10.0	
2	15	0.90	1.9	749.00	122	239	257	58	49	83	82	8.5	
2	20	0.91	1.9	752.72	122	247	251	55	47	83	82	8.5	
2	25	0.90	1.9	756.43	122	257	257	55	48	84	83	8.5	
3	30	0.75	1.6	760.16	122	260	257	55	48	84	83	7.5	
3	35	0.69	1.5	763.57	122	261	254	55	49	84	83	7.5	
3	40	0.77	1.6	766.90	122	259	254	56	49	84	83	7.5	
4	45	0.654	1.2	770.40	122	259	257	56	49	85	83	6.0	
4	50	0.56	1.2	773.37	122	252	251	54	48	84	83	6.5	
4	55	0.65	1.4	776.38	122	259	251	55	49	86	83	7.0	
5	1:00	0.67	1.4	779.63	122	262	257	56	46	85	84	7.0	
5	105	0.65	1.4	782.77	122	260	251	56	46	85	84	7.0	
5	1:10	0.66	1.4	785.97	122	260	255	56	45	86	84	7.0	
6	1:15	0.76	1.6	789.23	121	260	255	57	46	87	84	8.0	
6	1:20	0.74	1.6	792.56	121	261	252	58	47	86	85	8.0	
6	1:25	0.67	1.5	796.00	122	260	253	58	47	86	84	7.5	
				799.311									
A1	1:30	1.1	2.3	799.311	121	249	253	60	48	85	83	10.0	
1	1:35	0.96	2.0	803.84	121	243	254	60	46	85	83	9.5	
1	1:40	0.97	2.1	807.76	121	247	253	61	45	85	84	9.5	
2	1:45	0.82	1.8	811.61	120	255	257	59	45	86	84	8.5	
2	150	0.81	1.8	815.25	120	258	253	59	45	86	84	8.5	
2	1:55	0.82	1.8	818.93	120	260	249	58	44	86	84	8.5	1149-1202
3	2:00	0.54	1.2	822.52	120	257	252	60	45	84	83	7.0	lost a few blade
3	2:05	0.60	1.3	825.52	120	261	256	63	45	84	83	7.0	
3	2:10	0.65	1.4	828.64	120	261	257	58	45	85	83	7.5	
4	2:15	0.74	1.6	831.84	121	261	250	58	44	85	83	8.0	
4	2:20	0.74	1.6	835.26	121	262	252	58	43	85	83	8.0	

Impinger Data (vol) #	Initial	Final
1	0	
2	100	
3	100	
4	SG	
5		
6		

Silica Gel Data (gm) #	Initial	Final
1	276.7	
2		

Moisture Gain	
	ml.
	gm
	Total

Filter Data #	Number	Tare
1	M23	untared
2		
3		

Molecular Weight Data (%) #	O_2	CO_2
1	20.2	0.8
2	20.2	0.8
3	20.2	0.8
Avg	20.2	0.8

C:\Users\hardybr\Desktop\Field Data Forms\Isokinetic\Iso Field Sheet.xls

O'BRIEN & GERE

EPA Isokinetic Field Sheet

Methods Performed: M23

Client	General Dynamics	Run Number	1-C1	Pitot Number	P4B
Location	Joplin MO	Stack Diameter	40.5	Pitot Coefficient	0.84
Source	Bldg 3 main Stack	Barometric Pres.	28.9	Stack TC I.D.	P4B
Date	6/19/12	Static Pressure	+1.2	Oven Box I.D.	OB-3
Operators	SM/WH	Meter Box #	5	Impinger Out I.D.	IO-15
Start Time	0949 / 1124 / 1202	Meter delta H	1.83	Nozzle Size	0.218
End Time	1119 / 1149 / 1308	Meter Gamma	1.008	XAD Trap I.D.	5

Leak Check Rates				
	Sample Rate		Pitot	
	in.	cfm	+	-
Initial	13.5	0.002	✓	✓
Mid				
Mid				
Final	11.0	0.002		

Sample Point	Sample Time (min)	Velocity Head (in. H_2O)	Orifice Setting (in. H_2O)	Meter Volume (ft³)	Temperature Readings in Degrees Farenheit							Vacuum (in. hg)	Comments/Notes
					Stack	Probe	Oven Box	Impinger	Aux	Meter Inlet	Meter Outlet		
A 4	2:25	0.73	1.6	838.68	121	259	253	53	43	85	83	8.0	
5	2:30	0.68	1.5	842.10	121	261	257	59	44	86	83	7.5	
5	2:35	0.74	1.6	845.43	122	259	255	60	46	86	84	8.0	
5	2:40	0.76	1.6	848.86	122	259	255	60	44	87	84	8.0	
6	2:45	0.79	1.7	852.26	121	262	257	61	45	86	84	8.0	
6	2:50	0.81	1.8	855.75	123	260	255	61	45	87	85	8.5	
6	2:55	0.80	1.7	859.32	122	260	255	58	45	87	85	8.0	
	3:00			862.865									

Impinger Data (vol)		
#	Initial	Final
1	0	
2	100	
3	100	
4	SG	
5		
6		

Silica Gel Data (gm)		
#	Initial	Final
1	276.7	
2		

Moisture Gain	
	ml.
	gm
	Total

Filter Data		
#	Number	Tare
1	M23	untared
2		
3		

Molecular Weight Data (%)		
#	O_2	CO_2
1		
2		
3		
Avg		

C:\Users\hardybr\Desktop\Field Data Forms\Isokinetic\Iso Field Sheet.xls

O'BRIEN & GERE

EPA Isokinetic Field Sheet

Methods Performed: M23

Client	General Dynamics	Run Number	2-C1	Pitot Number	P4B
Location	Joplin MO	Stack Diameter	40.5	Pitot Coefficient	0.84
Source	Bldg3 main stack	Barometric Pres.	28.9	Stack TC I.D.	P4B
Date	6/19/12	Static Pressure	+1.2	Oven Box I.D.	OB-3
Operators	SM/WH	Meter Box #	5	Impinger Out I.D.	IO-15
Start Time	1343	Meter delta H	1.83	Nozzle Size	0.218
End Time	1650	Meter Gamma	1.008	XAD Trap I.D.	XAD

Leak Check Rates	Sample Rate in.	Sample Rate cfm	Pitot +	Pitot -
Initial	17	0.003	✓	✓
Mid				
Mid				
Final	10	0.002	✓	✓

Sample Point	Sample Time (min)	Velocity Head (in. H_2O)	Orifice Setting (in. H_2O)	Meter Volume (ft³)	Temperature Readings in Degrees Farenheit: Stack	Probe	Oven Box	Impinger	Aux	Meter Inlet	Meter Outlet	Vacuum (in. hg)	Comments/Notes
A1	0	0.74	1.6	863.067	120	259	243	60	61	86	85	6.5	
1	5	0.78	1.7	866.43	121	262	250	51	58	87	86	8.0	
1	10	0.76	1.6	869.95	121	264	253	50	60	87	86	7.5	
2	15	0.76	1.6	873.60	122	259	255	53	63	88	86	7.0	
2	20	0.76	1.6	—	122	259	254	54	62	88	87	7.0	
2	25	0.80	1.68	880.60	122	259	254	55	60	88	87	7.0	
3	30	.56	1.17	885 —	122	258	254	57	55	89	87	7.0	
3	35	.60	1.26	886.90	124	258	252	58	56	89	88	7.0	
3	40	.60	1.26	890.70	124	257	250	60	58	89	87	7.0	
4	45	.82	1.76	—	121	259	257	62	55	90	87	7.0	
4	50	.82	1.76	896.70	122	259	255	63	57	90	88	7.0	
4	55	.82	1.76	900.0	123	259	254	64	58	91	88	7.0	
5	1:00	.84	1.77	903.—	122	261	254	61	55	91	89	7.0	
5	1:05	.84	1.77	907.00	122	259	254	59	53	90	89	7.0	
5	1:10	.84	1.77	910.60	123	257	253	60	54	90	88	7.0	
6	1:15	.82	1.76	913.90	123	260	255	60	54	90	88	7.0	
6	120	.82	1.76	917.30	123	258	253	62	55	90	88	7.0	
6	1:25	.82	1.76	920.90	123	258	256	63	56	90	88	7.0	
~~6~~	~~1:30~~			~~924.70~~									
B1	130	.94	~~1.6~~ 1.97	925 —	125	258	256	64	56	89	88	9	1579
1	135	.95	2.00	929 —	123	262	253	63	54	89	88	9	
1	140	.95	2.00	—	124	255	253	65	58	89	88	9	
2	145	0.79	1.7	—	125	264	253	62	54	90	88	7.5	
2	150	0.83	1.7	939.12	125	257	258	61	54	89	88	7.5	
2	155	0.80	1.7	942.68	125	261	254	60	53	89	88	7.5	
3	2:00	0.65	1.4	946.25	125	260	263	57	52	89	88	7.5	
3	2:05	0.75	1.6	949.53	124	260	255	56	50	90	88	8.0	
3	2:10	0.76	1.6	952.96	125	259	255	57	51	90	88	8.0	
4	2:15	0.60	1.3	956.41	124	259	253	58	52	91	88	7.0	

Impinger Data (vol) #	Initial	Final
1	0	
2	100	
3	100	
4	SG	
5		
6		

Silica Gel Data (gm) #	Initial	Final
1		
2		

Moisture Gain	
	ml.
	gm
	Total

Filter Data #	Number	Tare
1	M23	autared
2		
3		

Molecular Weight Data (%) #	O_2	CO_2
1	20.4	0.60
2	20.4	0.60
3	20.4	0.60
Avg	20.4	0.60

O'BRIEN & GERE

C:\Users\hardybr\Desktop\Field Data Forms\Isokinetic\Iso Field Sheet.xls

EPA Isokinetic Field Sheet

Methods Performed: M23

Client	General Dynamics	Run Number	2-C1	Pitot Number	P4B
Location	Joplin MO	Stack Diameter	40.5	Pitot Coefficient	0.84
Source	Bldg 3 main stack	Barometric Pres.	28.9	Stack TC I.D.	P4B
Date	6/19/12	Static Pressure	+1.2	Oven Box I.D.	OB-3
Operators	SH / WH	Meter Box #	5	Impinger Out I.D.	I0-15
Start Time	1343	Meter delta H	1.83	Nozzle Size	0.218
End Time	1650	Meter Gamma	1.008	XAD Trap I.D.	

Leak Check Rates				
	Sample Rate in.	Sample Rate cfm	Pitot +	Pitot -
Initial	17	0.003	✓	✓
Mid				
Mid				
Final	10	0.002	✓	✓

Sample Point	Sample Time (min)	Velocity Head (in. H_2O)	Orifice Setting (in. H_2O)	Meter Volume (ft³)	Temperature Readings in Degrees Farenheit: Stack	Probe	Oven Box	Impinger	Aux	Meter Inlet	Meter Outlet	Vacuum (in. hg)	Comments/Notes
B4	220	0.72	1.5	959.54	124	258	253	59	52	91	89	8.0	
4	225	0.77	1.6	962.90	124	263	257	59	52	91	89	8.0	
5	230	0.70	1.5	966.28	124	261	253	57	51	92	89	8.0	
5	235	0.74	1.6	969.73	124	261	254	55	52	92	89	8.0	
5	240	0.69	1.4	973.6	124	258	257	56	53	93	90	7.0	
6	245	0.84	1.8	976.33	124	262	258	57	52	94	90	9.0	
6	250	0.85	1.8	979.99	124	260	255	59	52	94	91	9.0	
6	255	0.89	1.9	983.65	124	259	256	60	54	95	92	9.0	
	300	–	–	987.381	–	–	–	–	–	–	–	–	

Impinger Data (vol)		
#	Initial	Final
1	0	
2	100	
3	100	
4	SG	
5		
6		

Silica Gel Data (gm)		
#	Initial	Final
1		
2		

Moisture Gain	
	ml.
	gm
	Total

Filter Data		
#	Number	Tare
1	M23	untared
2		
3		

Molecular Weight Data (%)		
#	O_2	CO_2
1		
2		
3		
Avg		

C:\Users\hardybr\Desktop\Field Data Forms\Isokinetic\Isa Field Sheet.xls

O'BRIEN & GERE

EPA Isokinetic Field Sheet

Methods Performed: M23

Client	General Dynamics	Run Number	3-C1	Pitot Number	P4B
Location	Joplin Mo	Stack Diameter	40.5	Pitot Coefficient	0.84
Source	Bldg 3 main Stack	Barometric Pres.	28.9	Stack TC I.D.	P4B
Date	6/19/12	Static Pressure	+1.2	Oven Box I.D.	OB-3
Operators	SM / WH	Meter Box #	5	Impinger Out I.D.	IO-15
Start Time	1725 / 1900	Meter delta H	1.83	Nozzle Size	0.218
End Time	1855 / 2030	Meter Gamma	1.008	XAD Trap I.D.	

Leak Check Rates	Sample Rate in.	Sample Rate cfm	Pitot +	Pitot -
Initial	15.5	0.003	✓	✓
Mid				
Mid				
Final	11.	.005	✓	✓

Sample Point	Sample Time (min)	Velocity Head (in. H_2O)	Orifice Setting (in. H_2O)	Meter Volume (ft³)	Temperature Readings in Degrees Farenheit: Stack	Probe	Oven Box	Impinger	Aux	Meter Inlet	Meter Outlet	Vacuum (in. hg)	Comments/Notes
B1	0	1.1	2.3	987.559	126	259	231	54	48	91	90	9.5	
1	5	1.1	2.3	991.66	125	257	236	47	53	93	91	10.5	
1	10	1.1	2.3	995.88	125	261	249	50	56	96	93	10.5	
2	15	0.92	1.9	999.90	126	263	249	53	56	96	94	9.5	
2	20	0.93	2.0	1003.70	127	258	253	55	55	96	94	10.0	
2	25	0.88	1.8	1007.55	126	260	253	55	57	97	94	9.0	
3	30	0.95	2.0	1011.26	126	259	253	52	45	98	95	9.5	
3	35	0.98	2.1	1015.11	127	260	253	52	45	97	95	10.0	
3	40	0.85	1.8	1019.03	127	259	254	53	46	96	94	9.0	
4	45	0.79	1.7	1022.73	126	263	254	54	46	97	94	7.5	
4	50	0.69	1.5	1026.32	126	259	253	53	45	97	94	8.0	
4	55	0.75	1.6	1029.75	127	259	254	56	46	96	94	8.0	
5	1:00	0.73	1.5	1033.16	126	260	255	56	47	97	94	8.0	
5	1:05	0.72	1.5	1036.63	125	260	250	57	46	96	95	8.0	
5	1:10	0.78	1.6	1039.90	126	261	253	58	48	94	93	8.0	
6	1:15	0.74	1.6	1043.30	126	260	254	59	49	94	93	8.0	
6	1:20	0.76	1.6	1046.79	125	259	255	59	50	95	92	8.0	
6	1:25	0.78	1.6	1050.20	124	260	255	61	51	96	93	8.5	
				1053.638									
A1	1:30	0.85	1.8	1053.688	126	257	255	64	53	96	93	9.5	
1	1:35	0.87	1.8	1057.32	127	260	251	58	50	96	94	9.5	
1	1:40	0.85	1.8	1060.93	126	257	252	57	49	95	93	9.5	
2	1:45	0.90	1.9	1064.58	126	259	254	59	50	95	94	10.0	
2	1:50	0.88	1.8	1068.33	126	260	254	59	50	94	93	9.5	
2	1:55	0.84	1.8	1072.05	126	259	251	57	51	93	92	9.5	
3	2:00	0.64	1.3	1075.73	125	262	254	60	50	93	92	7.5	
3	2:05	0.53	1.1	1079.1	127	261	255	59	49	94	92	7.0	
3	2:10	0.53	1.1	1081.76	126	257	254	61	49	93	91	7.0	
4	2:15	0.84	1.8	1084.66	125	262	254	57	46	93	92	9.0	
4	2:20	0.78	1.6	1088.27	125	257	253	56	46	93	91	8.5	

Impinger Data (vol) #	Initial	Final
1	0	
2	100	
3	100	
4	SG	
5		
6		

Silica Gel Data (gm) #	Initial	Final
1	267.	
2		

Moisture Gain	
	ml.
	gm
	Total

Filter Data #	Number	Tare
1	M23	untared
2		
3		

Molecular Weight Data (%) #	O_2	CO_2
1	20.4	.70
2	20.4	.70
3	20.4	.80
Avg	20.4	0.7

C:\Users\hardybr\Desktop\Field Data Forms\Isokinetic\Iso Field Sheet.xls

O'BRIEN & GERE

EPA Isokinetic Field Sheet

Methods Performed: M23

Client	General Dynamics	Run Number	3-C1	Pitot Number	P4B
Location	Joplin MO	Stack Diameter	40.5	Pitot Coefficient	0.84
Source	Bldg 3 Main stack	Barometric Pres.	28.9	Stack TC I.D.	P4B
Date	6/19/12	Static Pressure	+1.2	Oven Box I.D.	OB3
Operators	SM/WH	Meter Box #	MB5	Impinger Out I.D.	I0-15
Start Time	1725/1900	Meter delta H	1.83	Nozzle Size	0.218
End Time	1855/2030	Meter Gamma	1.008	XAD Trap I.D.	

Leak Check Rates	Sample Rate in.	Sample Rate cfm	Pitot +	Pitot -
Initial	15.5	0.003	✓	✓
Mid				
Mid				
Final			✓	✓

Sample Point	Sample Time (min)	Velocity Head (in. H_2O)	Orifice Setting (in. H_2O)	Meter Volume (ft³)	Temperature Readings in Degrees Farenheit: Stack	Probe	Oven Box	Impinger	Aux	Meter Inlet	Meter Outlet	Vacuum (in. hg)	Comments/Notes
A4	2:25	0.83	1.7	1091.74	125	260	256	55	45	93	91	9.0	
5	2:30	0.80	1.7	1095.28	125	262	255	55	45	92	91	9.0	
5	2:35	0.82	1.7	1098.82	124	261	253	55	46	92	91	9.0	
5	2:40	0.77	1.6	1102.54	125	260	253	56	47	90	89	8.5	
6	2:45	0.79	1.7	1105.88	125	260	254	59	47	90	89	9.0	
6	2:50	0.68	1.4	1109.44	124	260	252	56	46	89	88	8.0	
6	2:55	0.93	2.0	1112.74	124	257	255	55	45	89	88	10.0	
	3:00			~~111~~ 1116.569									

Impinger Data (vol) #	Initial	Final
1	0	
2	100	
3	100	
4	SG	
5		
6		

Silica Gel Data (gm) #	Initial	Final
1	267.	
2		

Moisture Gain	
	ml.
	gm
	Total

Filter Data #	Number	Tare
1	M23	untared
2		
3		

Molecular Weight Data (%) #	O_2	CO_2
1		
2		
3		
Avg		

C:\Users\hardybr\Desktop\Field Data Forms\Isokinetic\Iso Field Sheet.xls

O'BRIEN & GERE

Test Condition No. 2

PCDD / PCDF Emission Results - TEQ Basis
General Dynamics OTS Munition Services
Building 3 Main Exhaust
Joplin, MO

	Run No.	1			2			3			Average
PCDD / PCDF Parameters	TEF (a)	pg	ng/m³ TEQ	lb/hr TEQ	pg	ng/m³ TEQ	lb/hr TEQ	pg	ng/m³ TEQ	lb/hr TEQ	
2,3,7,8-TCDD	1.00	2.0	6.4E-04	5.6E-11	1.0	3.2E-04	2.7E-11	1.0	3.0E-04	2.8E-11	
1,2,3,7,8-PeCDD	0.50	1.4	2.2E-04	2.0E-11	1.2	1.9E-04	1.6E-11	1.3	2.0E-04	1.8E-11	
1,2,3,4,7,8-HxCDD	0.10	1.3	4.1E-05	3.6E-12	1.2	3.8E-05	3.3E-12	1.3	3.9E-05	3.6E-12	
1,2,3,6,7,8-HxCDD	0.10	1.3	4.1E-05	3.6E-12	1.1	3.5E-05	3.0E-12	1.3	3.9E-05	3.6E-12	
1,2,3,7,8,9-HxCDD	0.10	1.2	3.8E-05	3.3E-12	1.1	3.5E-05	3.0E-12	1.2	3.6E-05	3.3E-12	
1,2,3,4,6,7,8-HpCDD	0.01	1.1	3.5E-06	3.1E-13	1.2	3.8E-06	3.3E-13	2.0	6.0E-06	5.5E-13	
OCDD	0.001	3.0	9.6E-07	8.4E-14	4.0	1.3E-06	1.1E-13	7.0	2.1E-06	1.9E-13	
2,3,7,8-TCDF	0.10	161	5.1E-03	4.5E-10	183	5.8E-03	5.0E-10	128	3.9E-03	3.5E-10	
1,2,3,7,8-PeCDF	0.05	90	1.4E-03	1.3E-10	92	1.5E-03	1.3E-10	70	1.1E-03	9.7E-11	
2,3,4,7,8-PeCDF	0.50	41.0	6.5E-03	5.7E-10	43.0	6.8E-03	5.9E-10	33.0	5.0E-03	4.6E-10	
1,2,3,4,7,8-HxCDF	0.10	106	3.4E-03	3.0E-10	98	3.1E-03	2.7E-10	89	2.7E-03	2.5E-10	
1,2,3,6,7,8-HxCDF	0.10	25.0	8.0E-04	7.0E-11	23.0	7.3E-04	6.3E-11	20.0	6.0E-04	5.5E-11	
2,3,4,6,7,8-HxCDF	0.10	4.0	1.3E-04	1.1E-11	5.0	1.6E-04	1.4E-11	3.0	9.1E-05	8.3E-12	
1,2,3,7,8,9-HxCDF	0.10	3.0	9.6E-05	8.4E-12	3.0	9.5E-05	8.2E-12	3.0	9.1E-05	8.3E-12	
1,2,3,4,6,7,8-HpCDF	0.01	19.0	6.1E-05	5.3E-12	19.0	6.0E-05	5.2E-12	18.0	5.4E-05	5.0E-12	
1,2,3,4,7,8,9-HpCDF	0.01	7.0	2.2E-05	2.0E-12	7.0	2.2E-05	1.9E-12	7.0	2.1E-05	1.9E-12	
OCDF	0.001	3.0	9.6E-07	8.4E-14	4.0	1.3E-06	1.1E-13	5.0	1.5E-06	1.4E-13	Average
TOTAL TEQs (ng/m³)		=	0.019			0.019			0.014		0.017
TOTAL TEQs (lb/hr)		=	1.63E-09			1.63E-09			1.29E-09		1.51E-09

Test Data Summary and Calculations
General Dynamics OTS Munition Services
Building 3 Main Exhaust
Joplin, MO

Parameter	Run 1	Run 2	Run 3
Run Date	20Jun12	20Jun12	20Jun12
Start/Stop Time	0900-1205	1244-1550	1650-1954
Duration of Run, Minutes	180	180	180
Ave. Nozzle Diameter, inches	0.210	0.210	0.210
Pitot Calibration Factor, CF	0.84	0.84	0.84
Meter Gamma	1.008	1.008	1.008
Meter Delta H, inches of H2O	1.83	1.83	1.83
Stack Diameter, inches	40.5	40.5	40.5
Rectangular Width, inches		0	0
Rectangular Length, inches		0	0
Stack Area, sq.ft.	8.95	8.95	8.95
Barometric Pressure, inches of Hg	28.9	28.9	28.9
Static Pressure, inches of H2O	1.2	1.2	1.2
Dry Gas Meter Sample Volume, (VM)ft3			
Initial	116.785	233.968	353.07
Final	233.777	352.867	478.543
Difference	116.992	118.899	125.473
Ave. Stack Temperature, Ts(F)	120.8	124.2	120.4
Ave. Meter Temperature, Tm(F)	84.6	91.4	93.6
Ave. Run Delta H, inches of H2O	1.40	1.39	1.50
Ave. Square Root of Delta P	0.8861	0.8769	0.9175
Moisture Data			
Volume of water collected, mls	185	194	165
Silica Gel, grams	20.4	22.6	20.5
Total Collected, mls	205.4	216.6	185.5
ORSAT Data			
%O2	20.10	19.90	20.10
%CO2	0.80	0.80	0.80
%CO			

Calculations

Vw(std), scf =	9.668	10.195	8.731
Vm(std), dscf =	110.833	111.245	116.964
Bws=	0.080	0.084	0.069
Md=	28.93	28.92	28.93
Ms=	28.05	28.01	28.17
Vs, ft/sec =	53.8	53.4	55.5
Qs, acfm =	28,863	28,672	29,811
Qs(std), dscfm =	23,382	22,998	24,452
Isokinetic Sampling Rate, %	98.0	100.0	98.8

Where:

An = area of the nozzle
As = area of the stack
Vw(std) = volume of water vapor in gas, standard conditions = 0.04707*Vlc
Vm(std) = vol. of gas sampled, standard conditions = 17.647 x Vm x gamma x [Pb + (dH/13.6)]/Tm(R)
Bws = water vapor in gas stream, proportion by volume = Vw(std)/(Vm(std) + Vw(std))
Md = molecular weight of stack gas, dry basis = (0.44 x%CO2) + (0.32 x%O2) + [0.28 x (%N2 + %CO)]
Ms = molecular weight of stack gas, wet basis = [Md x (1-Bws)] + (18.0 x Bws)
Vs = stack gas velocity = 85.49 x Cp x (avg. Sq.Rt. dP) x [Sq.Rt. (Ts(R))/(Ms x Ps)]
Qs = stack gas flow rate = Vs x As x 60
Qs(std) = stack gas flow rate, standard conditions = Qs x (1-Bws) x (528/(Ts(R)) x (Ps/29.92)
Isokinetic sampling rate = {(Ts(R)) x [(0.00267 x Vlc) + (Vm(std)/17.647)] x 100}/(Time x vs x Ps x An x60)

Field Data Summary
General Dynamics OTS Munition Services
Building 3 Main Exhaust
Joplin, MO

	Run 1						Run 2						Run 3					
Traverse Point	Stack Temp(F)	Delta P	Delta H	Tm(F) in	Tm(F) out	SQRT Delta P	Stack Temp(F)	Delta P	Delta H	Tm(F) in	Tm(F) out	SQRT Delta P	Stack Temp(F)	Delta P	Delta H	Tm(F) in	Tm(F) out	SQRT Delta P
A1	113	1.00	1.70	79	79	1.0000	121	1.05	1.90	90	89	1.0247	113	0.96	1.70	98	101	0.9798
1	114	1.00	1.80	80	79	1.0000	124	1.10	2.00	89	89	1.0488	114	0.92	1.70	98	101	0.9592
1	115	0.99	1.80	80	79	0.9950	124	0.95	1.70	90	89	0.9747	114	0.86	1.50	98	101	0.9274
2	117	0.86	1.50	81	79	0.9274	125	0.99	1.80	90	90	0.9950	114	0.90	1.60	99	101	0.9487
2	118	0.83	1.50	82	80	0.9110	124	0.90	1.62	90	90	0.9487	114	0.91	1.60	99	101	0.9539
2	118	0.88	1.60	82	80	0.9381	124	0.95	1.70	90	90	0.9747	115	0.90	1.60	96	98	0.9487
3	117	0.76	1.40	82	81	0.8718	125	0.72	1.30	90	90	0.8485	116	0.70	1.30	95	96	0.8367
3	118	0.76	1.40	82	81	0.8718	125	0.72	1.30	90	90	0.8485	117	0.74	1.30	96	96	0.8602
3	120	0.64	1.10	83	81	0.8000	125	0.72	1.30	90	90	0.8485	117	0.67	1.20	96	96	0.8185
4	120	0.78	1.30	84	82	0.8832	125	0.75	1.36	90	90	0.8660	118	0.81	1.50	96	95	0.9000
4	120	0.78	1.30	85	82	0.8832	125	0.75	1.36	90	90	0.8660	119	0.80	1.40	98	96	0.8944
4	121	0.75	1.30	85	83	0.8660	126	0.68	1.23	90	90	0.8246	120	0.82	1.50	97	96	0.9055
5	121	0.78	1.30	85	83	0.8832	123	0.68	1.23	90	90	0.8246	121	0.83	1.50	96	94	0.9110
5	122	0.78	1.40	86	83	0.8832	123	0.68	1.23	90	90	0.8246	121	0.83	1.50	95	94	0.9110
5	121	0.79	1.40	86	84	0.8888	124	0.68	1.23	92	91	0.8246	120	0.82	1.50	95	94	0.9055
6	120	0.80	1.40	85	84	0.8944	124	0.68	1.23	92	91	0.8246	119	0.94	1.70	95	93	0.9695
6	121	0.81	1.50	85	84	0.9000	124	0.68	1.23	91	91	0.8246	120	0.95	1.70	95	93	0.9747
6	121	0.81	1.50	85	84	0.9000	123	0.68	1.23	91	91	0.8246	120	0.91	1.60	94	92	0.9539
B1	120	0.95	1.70	85	84	0.9747	123	0.80	1.44	91	91	0.8944	121	1.10	2.00	90	90	1.0488
1	123	0.97	1.70	85	84	0.9849	125	0.81	1.40	91	91	0.9000	122	1.10	2.00	91	90	1.0488
1	124	0.90	1.60	85	85	0.9487	125	0.78	1.40	92	91	0.8832	121	1.10	1.60	92	90	1.0488
2	123	0.80	1.40	87	85	0.8944	125	0.69	1.20	92	91	0.8307	123	0.91	1.80	93	91	0.9539
2	122	0.86	1.50	87	86	0.9274	126	0.69	1.20	93	91	0.8307	123	1.00	1.70	93	91	1.0000
2	122	0.80	1.40	87	86	0.8944	126	0.68	1.20	93	92	0.8246	123	0.96	1.20	93	91	0.9798
3	123	0.67	1.20	88	86	0.8185	126	0.59	1.10	93	92	0.7681	123	0.68	1.20	92	90	0.8246
3	124	0.67	1.20	88	86	0.8185	125	0.60	1.10	94	93	0.7746	123	0.69	1.30	92	90	0.8307
3	123	0.74	1.30	88	86	0.8602	125	0.59	1.10	94	93	0.7681	124	0.70	1.40	93	91	0.8367
4	123	0.73	1.30	88	87	0.8544	125	0.73	1.30	93	93	0.8544	124	0.75	1.40	93	90	0.8660
4	124	0.72	1.30	88	87	0.8485	124	0.76	1.40	93	93	0.8718	125	0.76	1.40	92	90	0.8718
4	124	0.71	1.30	88	87	0.8426	124	0.78	1.40	94	93	0.8832	124	0.76	1.40	91	90	0.8718
5	123	0.69	1.30	89	87	0.8307	123	0.75	1.30	93	93	0.8660	124	0.76	1.40	90	89	0.8718
5	124	0.70	1.30	88	87	0.8367	123	0.77	1.40	93	93	0.8775	124	0.75	1.40	91	89	0.8660
5	123	0.70	1.30	88	87	0.8367	124	0.80	1.40	93	93	0.8944	124	0.69	1.20	91	89	0.8307
6	123	0.64	1.10	88	87	0.8000	123	0.92	1.60	93	93	0.9592	125	0.76	1.40	90	89	0.8718
6	122	0.62	1.10	88	87	0.7874	123	0.91	1.60	93	93	0.9539	125	0.78	1.40	91	88	0.8832
6	122	0.71	1.30	89	87	0.8426	123	0.84	1.50	94	93	0.9165	123	0.93	1.40	90	88	0.9644
Average	121	0.79	1.40	85	84	0.8861	124	0.77	1.39	92	91	0.8769	120	0.85	1.50	94	93	0.9175

O'BRIEN & GERE

SAMPLE TRAIN MOISTURE RECOVERY DATA SHEET

Reference Method / Sampling Train : M23 OUTLET COND. 2

Recovered by : W. HARDY				Recovered by : W. HARDY				Recovered by : W. HARDY			
Run No. 1		Date : 6.20.12		Run No. 2		Date :		Run No. 3		Date :	
XAD Module No. : #3				XAD Module No. : #13				XAD Module No. : #10			
Filter No. : R1-C2 OUTLET				Filter No. :				Filter No. :			
Impinger No. and Volume				Impinger No. and Volume				Impinger No. and Volume			
No.	Initial (mL)	Final (mL)	Rinse (mL)	No.	Initial (mL)	Final (mL)	Rinse (mL)	No.	Initial (mL)	Final (mL)	Rinse (mL)
1	0	185		1	0	197		1	0	185	
2	100	100		2	100	100		2	100	100	
3	100	100		3	100	97		3	100	108	
4				4				4			
5				5				5			
6				6				6			
7				7				7			
			DIFF :				DIFF :				DIFF :
Totals	200	385	185	Totals	200	394	194	Totals			
	Initial (g)	Final (g)	DIFF :		Initial (g)	Final (g)	DIFF :		Initial (g)	Final (g)	DIFF :
Silica Gel	262.7	283.1	20.4	Silica Gel	287.0	309.6	22.6	Silica Gel	264.8	285.3	20.5
Final Net Moisture Gain:			205.4	Final Net Moisture Gain:			216.6	Final Net Moisture Gain:			185.5

E:\Field Data Sheets\[M23 Moisture Recovery.xls]A

EPA Isokinetic Field Sheet

Methods Performed: M23

Client	General Dynamics	Run Number	1-C2	Pitot Number	P4B
Location	Joplin MO	Stack Diameter	40.5	Pitot Coefficient	0.84
Source	Bldg 3 Main Stack	Barometric Pres.	28.9	Stack TC I.D.	P4B
Date	6/20/12	Static Pressure	+1.2	Oven Box I.D.	OB-3
Operators	SM / WH	Meter Box #	5	Impinger Out I.D.	IO-15
Start Time	0900 / 1035	Meter delta H	1.83	Nozzle Size	0.210
End Time	1030 / 1205	Meter Gamma	1.008	XAD Trap I.D.	

Leak Check Rates				
	Sample Rate in.	Sample Rate cfm	Pitot +	Pitot -
Initial	16.5	0.003	✓	✓
Mid				
Mid				
Final	10	0.003	✓	✓

Sample Point	Sample Time (min)	Velocity Head (in. H_2O)	Orifice Setting (in. H_2O)	Meter Volume (ft³)	Temperature Readings in Degrees Farenheit: Stack	Probe	Oven Box	Impinger	Aux	Meter Inlet	Meter Outlet	Vacuum (in. hg)	Comments/Notes
A1	0	1.0	1.7	116.785	113	256	254	62	52	79	79	7.5	
1	5	1.0	1.8	–	114	245	251	57	52	80	79	9.0	
1	10	0.99	1.8	123.95	115	250	255	58	51	80	79	9.5	
2	15	0.86	1.5	127.65	117	259	251	56	50	81	79	8.5	
2	20	0.83	1.5	131.01	118	260	252	55	48	82	80	8.5	
2	25	0.88	1.6	134.38	118	257	253	57	48	82	80	9.0	
3	30	0.76	1.4	137.85	117	256	252	58	49	82	81	8.0	
3	35	0.76	1.4	141.12	118	255	254	58	50	82	81	8.0	
3	40	0.64	1.1	144.38	120	259	257	58	50	83	81	7.0	
4	45	0.78	1.3	147.28	120	257	254	61	51	84	82	~~8.0~~ 8.0	
4	50	0.78	1.3	150.25	120	251	254	57	50	85	82	8.0	
4	55	0.75	1.3	153.43	121	246	253	59	51	85	83	8.0	
5	1:00	0.78	1.3	156.54	121	246	254	60	50	85	83	8.0	
5	1:05	0.78	1.4	159.65	122	249	254	61	51	86	83	8.0	
5	1:10	0.79	1.4	162.90	121	247	253	61	51	86	84	8.0	
6	1:15	0.80	1.4	166.22	120	245	252	61	51	85	84	8.0	
6	1:20	0.81	1.5	169.41	121	243	252	61	51	85	84	8.5	
6	1:25	0.80	1.5	172.76	121	245	252	62	52	85	84	8.5	
				176.069									
B1	1:30	0.95	1.7	176.069	120	262	252	54	52	85	84	10.0	
1	1:35	0.97	1.7	179.90	123	262	257	52	46	85	84	10.0	
1	1:40	0.90	1.6	183.27	124	257	250	52	48	85	85	9.5	
2	1:45	0.80	1.4	186.72	123	258	250	52	46	87	85	8.5	
2	1:50	0.86	1.5	190.02	122	259	252	54	47	87	86	9.0	
2	1:55	0.80	1.4	193.32	122	261	255	53	47	87	86	8.5	
3	2:00	0.67	1.2	196.55	123	260	253	55	47	88	86	8.0	
3	2:05	0.67	1.2	199.61	124	261	251	56	47	88	86	8.0	
3	2:10	0.74	1.3	202.66	123	262	255	56	47	88	86	8.5	
4	2:15	0.73	1.3	205.82	123	260	255	56	47	88	87	8.5	
4	2:20	0.72	1.3	208.95	124	259	253	56	48	88	87	8.5	

Impinger Data (vol)		
#	Initial	Final
1	0	
2	100	
3	100	
4	SG	
5		
6		

Silica Gel Data (gm)		
#	Initial	Final
1		
2		

Moisture Gain	
	ml.
	gm
	Total

Filter Data		
#	Number	Tare
1	M23	untared
2		
3		

Molecular Weight Data (%)		
#	O_2	CO_2
1	20.1	0.8
2	20.1	0.8
3	20.1	0.7
Avg	20.1	0.8

C:\Users\hardybr\Desktop\Field Data Forms\Isokinetic\Iso Field Sheet.xls

O'BRIEN & GERE

EPA Isokinetic Field Sheet

Methods Performed: M23

Client	General Dynamics	Run Number	1 C2	Pitot Number	P4-B
Location	Joplin MO	Stack Diameter	40.5	Pitot Coefficient	0.84
Source	Bldg 3 Main Stack	Barometric Pres.	28.9	Stack TC I.D.	P4-B
Date	6/20/12	Static Pressure	+1.2	Oven Box I.D.	OB-3
Operators	SM/WH	Meter Box #	05	Impinger Out I.D.	IO-15
Start Time	0900 / 1035	Meter delta H	1.83	Nozzle Size	0.210
End Time	1030 / 1205	Meter Gamma	1.008	XAD Trap I.D.	

Leak Check Rates				
	Sample Rate		Pitot	
	in.	cfm	+	-
Initial	16.5	0.003	✓	✓
Mid				
Mid				
Final	10	0.003	✓	✓

Sample Point	Sample Time (min)	Velocity Head (in. H_2O)	Orifice Setting (in. H_2O)	Meter Volume (ft³)	Temperature Readings in Degrees Farenheit							Vacuum (in. hg)	Comments/Notes
					Stack	Probe	Oven Box	Impinger	Aux	Meter Inlet	Meter Outlet		
B7	225	0.71	1.3	212.11	124	259	253	56	50	88	87	8.5	
5	230	0.69	1.3	215.27	123	257	254	57	49	89	87	8.5	
5	235	0.70	1.3	218.52	124	261	253	57	50	88	87	8.5	
5	240	0.70	1.3	221.58	123	261	257	58	50	88	87	8.5	
6	245	0.64	1.1	224.77	123	262	257	60	50	88	87	7.5	
6	250	0.62	1.1	227.66	122	260	254	62	50	88	87	7.5	
6	255	0.71	1.3	230.73	122	259	254	63	51	89	87	8.5	
	3:00	—	—	233.777	—	—	—	—	—	—	—	—	

Impinger Data (vol)		
#	Initial	Final
1	0	
2	100	
3	100	
4	SG	
5		
6		

Silica Gel Data (gm)		
#	Initial	Final
1		
2		

Moisture Gain	
	ml.
	gm
	Total

Filter Data		
#	Number	Tare
1	M23	untared
2		
3		

Molecular Weight Data (%)		
#	O_2	CO_2
1	~~19.1~~ 16	~~0.8~~ 16
2	~~19.6~~	~~0.9~~
3	~~20.0~~	~~0.8~~
Avg	~~19.6~~	~~0.8~~

C:\Users\ha[redacted]op\Field Data Forms\Isokinetic\Iso Field Sheet.xls

O'BRIEN & GERE

EPA Isokinetic Field Sheet

Methods Performed: M23

Client	General Dynamics	Run Number	2 C2	Pitot Number	P4B
Location	Joplin Mo	Stack Diameter	40.5	Pitot Coefficient	0.84
Source	Bldg3 Main Stack	Barometric Pres.	28.9	Stack TC I.D.	P4B
Date	6/28/12	Static Pressure	+1.2	Oven Box I.D.	OB3
Operators	SM/WH	Meter Box #	5	Impinger Out I.D.	IO-15
Start Time	1244 / 1420	Meter delta H	1.83	Nozzle Size	0.210
End Time	1417 / 1550	Meter Gamma	1.008	XAD Trap I.D.	

Leak Check Rates	Sample Rate in.	Sample Rate cfm	Pitot +	Pitot -
Initial	15.5	0.003	✓	✓
Mid				
Mid				
Final	10	0.003	✓	✓

Sample Point	Sample Time (min)	Velocity Head (in. H_2O)	Orifice Setting (in. H_2O)	Meter Volume (ft³)	Temperature Readings in Degrees Farenheit: Stack	Probe	Oven Box	Impinger	Aux	Meter Inlet	Meter Outlet	Vacuum (in. hg)	Comments/Notes
B1	0	1.05	1.9	233.968	121	245	243	58	45	90	89	8.0	
1	5	1.01	2.0 ~~1.8~~	237.67	124	240	251	51	44	89	89	9.5	
1	10	0.95	1.7	241.57	124	237	255	51	42	90	89	8.5	
2	15	0.99	1.8	245.16	125	238	252	52	42	90	90	8	
2	20	.90	1.62	249.20	124	239	253	54	40	91	90	8	
2	25	.95	1.70	252.10	124	241	258	54	40	91	90	8	
3	30	.72	1.30	256.60	125	248	254	54	39	91	90	7	
3	35	.72	1.30	259.50	125	258	253	54	39	91	90	7	
3	40	.72	1.30	262.20	125	259	256	55	40	91	90	7	
4	45	.75	1.36	266.40	125	263	254	56	40	91	90	7	
4	50	.75	1.36	268.99	125	259	254	57	39	91	90	7	
4	55	.68	1.23	271.99	126	259	256	57	40	91	90	7	
5	1:00	.68	1.23	275.90	123	260	254	55	39	90	90	7	
5	1:05	.68	1.23	278.30	123	259	258	56	40	91	90	7	
5	1:10	.68	1.23	281.20	124	259	254	56	41	92	91	7	
6	1:15	.68	1.23	284.20	124	259	255	57	40	92	91	7	
6	1:20	.68	1.23	287.80	124	260	253	58	40	91	91	7	
6	1:25	.68	1.23	290.40	123	260	254	59	41	91	91	7	
				~~293.9~~									293.979
A1	1:30	.80	1.44	293.979	123	251	254	64	41	91	91	7	1417
1	1:35	0.81	1.4	298.53	125	247	251	54	41	91	91	7	
1	1:40	0.78	1.4	301.78	125	247	250	55	41	92	91	7	
2	1:45	0.69	1.2	305.02	125	250	257	56	43	92	91	7	
2	1:50	0.69	1.2	308.12	126	259	254	58	42	93	91	7.5	
2	1:55	0.68	1.2	311.15	126	259	256	58	43	93	92	7.5	
3	2:00	0.59	1.1	314.21	126	261	252	58	43	93	92	7	
3	2:05	0.60	1.1	317.40	125	259	254	61	43	94	93	7	
3	2:10	0.59	1.1	320.22	125	259	252	57	41	94	93	7	
4	2:15	0.73	1.3	323.11	125	261	255	56	40	93	93	7.5	
4	2:20	0.76	1.4	326.26	124	260	251	56	40	93	93	8.0	

Impinger Data (vol) #	Initial	Final
1	0	
2	100	
3	100	
4	SG	
5		
6		

Silica Gel Data (gm) #	Initial	Final
1	287.0	
2		

Moisture Gain	
	ml.
	gm
	Total

Filter Data #	Number	Tare
1	M23	tentared
2		
3		

Molecular Weight Data (%) #	O_2	CO_2
1	19.9	0.8
2	19.9	0.9
3	20.0	0.8
Avg	19.9	0.8

O'BRIEN & GERE

C:\Users\hardybr\Desktop\Field Data Forms\Isokinetic\Iso Field Sheet.xls

EPA Isokinetic Field Sheet

Methods Performed: M23

Client	General Dynamics	Run Number	2-C2	Pitot Number	P4B
Location	Joplin Mo	Stack Diameter	40.5	Pitot Coefficient	0.84
Source	Bldg 3 main stack	Barometric Pres.	28.9	Stack TC I.D.	P4B
Date	6/20/12	Static Pressure	+1.2	Oven Box I.D.	OB3
Operators	SM/WH	Meter Box #	5	Impinger Out I.D.	IO-15
Start Time	1244 / 1420	Meter delta H	1.83	Nozzle Size	0.210
End Time	1417 / 1550	Meter Gamma	1.008	XAD Trap I.D.	

Leak Check Rates				
	Sample Rate in.	Sample Rate cfm	Pitot +	Pitot -
Initial	15.5	0.003	✓	✓
Mid				
Mid				
Final	10	0.003	✓	✓

Sample Point	Sample Time (min)	Velocity Head (in. H_2O)	Orifice Setting (in. H_2O)	Meter Volume (ft³)	Temperature Readings in Degrees Farenheit: Stack	Probe	Oven Box	Impinger	Aux	Meter Inlet	Meter Outlet	Vacuum (in. hg)	Comments/Notes
A4	225	0.78	1.4	329.53	124	261	252	55	42	93	93	8.0	
5	2:30	0.75	1.3	332.80	123	259	255	53	40	94	93	7.5	
5	2:35	0.77	1.4	335.98	123	258	255	53	41	93	93	8.0	
5	2:40	0.80	1.4	339.25	124	258	259	53	40	93	93	8.0	
6	2:45	0.92	1.6	342.52	123	261	255	53	42	93	93	8.5	
6	2:50	0.91	1.6	345.99	123	258	257	52	41	93	93	8.5	
6	2:55	0.84	1.5	349.47	123	260	258	54	42	94	93	8.5	
	3:00	—	—	352.867	—	—	—	—	—	—	—	—	

Impinger Data (vol)		
#	Initial	Final
1	0	
2	100	
3	100	
4	SG	
5		
6		

Silica Gel Data (gm)		
#	Initial	Final
1	287.0	
2		

Moisture Gain	
	ml.
	gm
	Total

Filter Data		
#	Number	Tare
1		
2		
3		

Molecular Weight Data (%)		
#	O_2	CO_2
1		
2		
3		
Avg		

O'BRIEN & GERE

EPA Isokinetic Field Sheet

Methods Performed: M23

Client	General Dynamics	Run Number	3-C2	Pitot Number	P4B
Location	Joplin MO	Stack Diameter	40.5	Pitot Coefficient	0.84
Source	Bldg 3 main stack	Barometric Pres.	28.9	Stack TC I.D.	P4B
Date	6/20/12	Static Pressure	+1.2	Oven Box I.D.	OB3
Operators	SM/WH	Meter Box #	5	Impinger Out I.D.	IO-15
Start Time	1650 1824	Meter delta H	1.83	Nozzle Size	0.210
End Time	1820 1954	Meter Gamma	1.008	XAD Trap I.D.	

Leak Check Rates	Sample Rate in.	Sample Rate cfm	Pitot +	Pitot -
Initial	17	0.002	✓	✓
Mid				
Mid				
Final	10	0.012	✓	✓

Sample Point	Sample Time (min)	Velocity Head (in. H_2O)	Orifice Setting (in. H_2O)	Meter Volume (ft^3)	Stack	Probe	Oven Box	Impinger	Aux	Meter Inlet	Meter Outlet	Vacuum (in. hg)	Comments/Notes
A1	0	0.96	1.7	353.070	113	256	252	61	57	98	101	7.5	
1	5	0.92	1.7	356.72	114	254	254	59	59	98	101	8.5	
1	10	0.86	1.5	360.28	114	252	251	49	49	98	101	7.5	
2	15	0.90	1.6	363.65	114	256	249	49	52	99	101	8.0	
2	20	0.91	1.6	367.13	114	260	257	55	52	99	101	8.0	
2	25	0.90	1.6	370.62	115	260	254	57	51	96	98	8.0	
3	30	0.70	1.3	374.12	116	262	255	59	53	95	96	7.0	
3	35	0.74	1.3	377.37	117	260	255	57	49	96	96	7.0	
3	40	0.67	1.2	380.48	117	261	252	57	50	96	96	6.5	
4	45	0.81	1.5	383.52	118	261	253	57	50	96	95	7.5	
4	50	0.80	1.4	386.90	119	261	252	57	50	98	96	7.0	
4	55	0.82	1.5	390.11	120	259	253	58	51	97	96	7.5	
5	1:00	0.83	1.5	393.50	121	257	257	57	50	96	94	7.5	
5	1:05	0.83	1.5	396.89	121	262	251	56	48	95	94	7.5	
5	1:10	0.82	1.5	400.28	120	261	253	57	49	95	94	7.5	
6	1:15	0.94	1.7	403.66	119	260	251	57	50	95	93	8.0	
6	1:20	0.95	1.7	407.24	120	260	253	57	50	95	93	8.0	
6	1:25	0.91	1.6	410.78	120	263	253	58	50	94	92	8.0	
				414.275									
B1	1:30	1.1	2.0	414.275	121	242	252	59	49	90	90	9.5	
1	1:35	1.1	2.0	418.11	122	229	254	51	42	91	90	9.5	
1	1:40	1.1	2.0	422.04	121	228	255	47	41	92	90	9.5	
2	1:45	0.91	1.6	425.85	123	233	256	47	41	93	91	8.0	
2	1:50	1.0	1.8	429.36	123	253	254	47	42	93	91	9.0	
2	1:55	0.96	1.7	433.31	123	260	253	50	52	93	91	8.5	
3	2:00	0.68	1.2	436.62	123	261	254	50	53	92	90	7.0	
3	2:05	0.69	1.2	439.68	123	261	256	50	54	92	90	7.0	
3	2:10	0.70	1.3	442.73	124	259	255	49	55	93	91	7.5	
4	2:15	0.75	1.4	445.89	124	258	258	44	45	93	90	7.5	
4	2:20	~~0.62~~	~~1.1~~	449.14	125	259	252	42	43	92	90	7.5	
		0.76	1.4										

Impinger Data (vol) #	Initial	Final
1	0	
2	100	
3	100	
4	SG	
5		
6		

Silica Gel Data (gm) #	Initial	Final
1		
2		

Moisture Gain	
	ml.
	gm
	Total

Filter Data #	Number	Tare
1		
2		
3		

Molecular Weight Data (%) #	O_2	CO_2
1	20.1	0.8
2	20.1	0.8
3	20.1	0.8
Avg	20.1	0.8

O'BRIEN & GERE

C:\Users\hardybr\Desktop\Field Data Forms\Isokinetic\Iso Field Sheet.xls

EPA Isokinetic Field Sheet

Methods Performed: M23

Client	General Dynamics	Run Number	3-C2	Pitot Number	P4B
Location	Joplin MO	Stack Diameter	~~28.9~~ 40.5	Pitot Coefficient	0.84
Source	Bldg 3 Main Stack	Barometric Pres.	28.9	Stack TC I.D.	P4B
Date	6/20/12	Static Pressure	+1.2	Oven Box I.D.	OB3
Operators	SM/WH	Meter Box #	5	Impinger Out I.D.	IO-15
Start Time	1650 / 1824	Meter delta H	1.83	Nozzle Size	0.210
End Time	1820 / ~~2000~~ 1954	Meter Gamma	1.008	XAD Trap I.D.	

Leak Check Rates				
	Sample Rate in.	Sample Rate cfm	Pitot +	Pitot -
Initial	17	0.002	✓	✓
Mid			✓	
Mid				
Final	10	0.012	✓	✓

Sample Point	Sample Time (min)	Velocity Head (in. H_2O)	Orifice Setting (in. H_2O)	Meter Volume (ft^3)	Temperature Readings in Degrees Farenheit: Stack	Probe	Oven Box	Impinger	Aux	Meter Inlet	Meter Outlet	Vacuum (in. hg)	Comments/Notes
B4	2:25	0.76	1.4	452.44	124	259	253	41	42	91	90	7.5	
5	2:30	0.76	1.4	455.64	124	258	256	42	42	90	89	7.5	
5	2:35	0.75	1.4	458.89	124	261	254	43	41	91	89	7.5	
5	2:40	0.69	1.2	462.15	124	260	254	43	41	91	89	7.0	
6	2:45	0.76	1.4	468.77	125	261	255	42	37	90	89	7.5	
6	2:50	0.78	1.4	472.12	125	260	257	41	42	91	88	7.5	
6	2:55	0.80	1.4	475.28	123	258	254	41	43	90	88	7.5	
	3:00	–	–	478.543	–	–	–	–	–	–	–	–	

Impinger Data (vol)		
#	Initial	Final
1	0	
2	100	
3	100	
4	SG	
5		
6		

Silica Gel Data (gm)		
#	Initial	Final
1		
2		

Moisture Gain	
	ml.
	gm
	Total

Filter Data		
#	Number	Tare
1	M23	untared
2		
3		

Molecular Weight Data (%)		
#	O_2	CO_2
1		
2		
3		
Avg		

O'BRIEN [redacted]ERE

VOST

VOST Sampling Train - Method 0031
General Dynamics
BLDG. No. 3 Stack Outlet
Joplin, MO.

Run 1 - Pair 1

Test Data

Start Time	1005	Test Date	04/26/12	Exhaust Gas Flow (dscfm)	24,351	Meter Gamma	0.9958
End Time	1045	Baro. Press.	28.8	Test Duration (min.)	40	Fuel F-factor	NA

Test Data

Time Min	Flow Rate (lpm)	Meter Temp Inlet (^{o}C)	Meter Temp Outlet (^{o}C)		Time Min	Flow Rate (lpm)	Meter Temp Inlet (^{o}C)	Meter Temp Outlet (^{o}C)
5	0.5	24			65			
10	0.5	24			70			
15	0.5	25			75			
20	0.5	25			80			
25	0.5	26			85			
30	0.5	26			90			
35	0.5	27			95			
40	0.5	27			100			
45					105			
50					110			
55					115			
60					120			

Volume Data

Initial (L)	Final (L)
789.060	807.250
Total Volume Collected (L)	
18.190	

Calculations

Sample flow rate at test conditions (lpm)
0.5
Average meter temperature (^{o}C)
26
Volume sampled at test conditions (dscf)
0.604

Pollutant Emissions

Pollutant	ug	ug/dscm	lb/hr
Dichlorodifluoromethane (FREON 12)	0.073	4.27	3.89E-04
Chloromethane	1.07	62.5	5.70E-03
Vinyl Chloride	0.132	7.71	7.04E-04
Bromomethane	0.047	2.75	2.51E-04
Chloroethane	0.0288	1.68	1.54E-04
Trichlorofluoromethane (FREON 11)	0.072	4.21	3.84E-04
Acetone (2-Propanone)	0.374	21.9	1.99E-03
1,1-Dichloroethylene	0.06	3.51	3.20E-04
Carbon Disulfide	0.182	10.64	9.70E-04
Methylene Chloride(Dichloromethane)	0.294	17.18	1.57E-03
1,1-Dichloroethane	0.032	1.87	1.71E-04
Chloroform	2.80	164	1.49E-02
Methyl Ethyl Ketone (2-Butanone)	0.062	3.62	3.30E-04
1,1,1-Trichloroethane	0.023	1.34	1.23E-04
Carbon Tetrachloride	0.96	56.1	5.12E-03
Benzene	1.31	76.5	6.98E-03
1,2-Dichloropropane	0.042	2.45	2.24E-04
Trichloroethylene	0.029	1.69	1.55E-04
Bromodichloromethane	0.222	13.0	1.18E-03
cis-1,3-Dichloropropene	0.031	1.81	1.65E-04
trans-1,3-Dichloropropene	0.0317	1.85	1.69E-04
Dibromochloromethane	0.0171	1.00	9.11E-05
Methyl Isobutyl Ketone	0.041	2.40	2.19E-04
Toluene	0.592	34.6	3.16E-03
Tetrachloroethylene	0.032	1.87	1.71E-04
Chlorobenzene	0.091	5.32	4.85E-04
Ethylbenzene	0.134	7.83	7.14E-04
m / p-Xylene	0.413	24.1	2.20E-03
o-Xylene	0.193	11.3	1.03E-03
1,2-Dichlorobenzene	0.023	1.34	1.23E-04

VOST Sampling Train - Method 0031
General Dynamics
BLDG. No. 3 Stack Outlet
Joplin, MO.

Run 1 - Pair 2

Test Data

Start Time	1218	Test Date	04/26/12	Exhaust Gas Flow (dscfm)	24,351	Meter Gamma	0.9958
End Time	1258	Baro. Press.	28.8	Test Duration (min.)	40	Fuel F-factor	NA

Test Data

Time Min	Flow Rate (lpm)	Meter Temp Inlet (°C)	Meter Temp Outlet (°C)		Time Min	Flow Rate (lpm)	Meter Temp Inlet (°C)	Meter Temp Outlet (°C)
5	0.5	31			65			
10	0.6	31			70			
15	0.6	31			75			
20	0.6	32			80			
25	0.6	32			85			
30	0.6	32			90			
35	0.6	33			95			
40	0.5	33			100			
45					105			
50					110			
55					115			
60					120			

Volume Data

Initial (L)	Final (L)
807.760	827.710
Total Volume Collected (L)	
19.950	

Calculations

Sample flow rate at test conditions (lpm)
0.6
Average meter temperature (°C)
32
Volume sampled at test conditions (dscf)
0.649

Pollutant Emissions

Pollutant	ug	ug/dscm	lb/hr
Dichlorodifluoromethane (FREON 12)	0.062	3.37	3.08E-04
Chloromethane	2.16	118	1.07E-02
Vinyl Chloride	0.116	6.31	5.76E-04
Bromomethane	0.042	2.29	2.08E-04
Chloroethane	0.0172	0.94	8.54E-05
Trichlorofluoromethane (FREON 11)	0.063	3.43	3.13E-04
Acetone (2-Propanone)	0.146	7.94	7.25E-04
1,1-Dichloroethylene	0.059	3.21	2.93E-04
Carbon Disulfide	0.169	9.20	8.39E-04
Methylene Chloride(Dichloromethane)	0.266	14.5	1.32E-03
1,1-Dichloroethane	0.029	1.58	1.44E-04
Chloroform	2.82	153	1.40E-02
Methyl Ethyl Ketone (2-Butanone)	0.038	2.07	1.89E-04
1,1,1-Trichloroethane	0.029	1.58	1.44E-04
Carbon Tetrachloride	1.77	96.3	8.79E-03
Benzene	0.708	38.5	3.51E-03
1,2-Dichloropropane	0.038	2.07	1.89E-04
Trichloroethylene	0.032	1.74	1.59E-04
Bromodichloromethane	0.174	9.47	8.64E-04
cis-1,3-Dichloropropene	0.038	2.07	1.89E-04
trans-1,3-Dichloropropene	0.0316	1.72	1.57E-04
Dibromochloromethane	0.013	0.71	6.45E-05
Methyl Isobutyl Ketone	0.055	2.99	2.73E-04
Toluene	0.298	16.2	1.48E-03
Tetrachloroethylene	0.054	2.94	2.68E-04
Chlorobenzene	0.069	3.75	3.42E-04
Ethylbenzene	0.133	7.24	6.60E-04
m / p-Xylene	0.362	19.7	1.80E-03
o-Xylene	0.206	11.2	1.02E-03
1,2-Dichlorobenzene	0.024	1.31	1.19E-04

VOST Sampling Train - Method 0031
General Dynamics
BLDG. No. 3 Stack Outlet
Joplin, MO.

Run 1 - Pair 3

Test Data

Start Time	1325	Test Date	04/26/12	Exhaust Gas Flow (dscfm)	24,351	Meter Gamma	0.9958
End Time	1405	Baro. Press.	28.8	Test Duration (min.)	40	Fuel F-factor	NA

Test Data

Time Min	Flow Rate (lpm)	Meter Temp Inlet (°C)	Meter Temp Outlet (°C)		Time Min	Flow Rate (lpm)	Meter Temp Inlet (°C)	Meter Temp Outlet (°C)
5	0.5	34			65			
10	0.5	33			70			
15	0.5	33			75			
20	0.5	33			80			
25	0.5	34			85			
30	0.5	34			90			
35	0.5	34			95			
40	0.5	33			100			
45					105			
50					110			
55					115			
60					120			

Volume Data

Initial (L)	Final (L)
828.940	847.370
Total Volume Collected (L)	
18.430	

Calculations

Sample flow rate at test conditions (lpm)
0.5
Average meter temperature (°C)
34
Volume sampled at test conditions (dscf)
0.596

Pollutant Emissions

Pollutant	ug	ug/dscm	lb/hr	Condensate ug	ug/dscm	lb/hr
Dichlorodifluoromethane (FREON 12)	<0.020	<1.18	<1.08E-04	ND	--	--
Chloromethane	0.868	51.4	4.69E-03	ND	--	--
Vinyl Chloride	0.024	1.42	1.30E-04	ND	--	--
Bromomethane	0.017	1.01	9.18E-05	ND	--	--
Chloroethane	<0.009	<0.53	<4.86E-05	ND	--	--
Trichlorofluoromethane (FREON 11)	0.041	2.43	2.21E-04	ND	--	--
Acetone (2-Propanone)	0.135	7.99	7.29E-04	21.6	412.4	3.76E-02
1,1-Dichloroethylene	0.047	2.78	2.54E-04	ND	--	--
Carbon Disulfide	0.193	11.4	1.04E-03	ND	--	--
Methylene Chloride(Dichloromethane)	0.185	11.0	9.99E-04	ND	--	--
1,1-Dichloroethane	0.028	1.66	1.51E-04	ND	--	--
Chloroform	2.89	171	1.56E-02	ND	--	--
Methyl Ethyl Ketone (2-Butanone)	0.038	2.25	2.05E-04	ND	--	--
1,1,1-Trichloroethane	0.027	1.60	1.46E-04	ND	--	--
Carbon Tetrachloride	1.00	59.2	5.40E-03	ND	--	--
Benzene	1.14	67.5	6.16E-03	ND	--	--
1,2-Dichloropropane	0.034	2.01	1.84E-04	ND	--	--
Trichloroethylene	0.031	1.84	1.67E-04	ND	--	--
Bromodichloromethane	0.303	17.9	1.64E-03	ND	--	--
cis-1,3-Dichloropropene	0.036	2.13	1.94E-04	ND	--	--
trans-1,3-Dichloropropene	0.0309	1.83	1.67E-04	ND	--	--
Dibromochloromethane	0.0296	1.75	1.60E-04	ND	--	--
Methyl Isobutyl Ketone	0.069	4.09	3.73E-04	ND	--	--
Toluene	0.507	30.0	2.74E-03	ND	--	--
Tetrachloroethylene	0.051	3.02	2.75E-04	ND	--	--
Chlorobenzene	0.067	3.97	3.62E-04	ND	--	--
Ethylbenzene	0.164	9.71	8.86E-04	ND	--	--
m / p-Xylene	0.477	28.2	2.58E-03	ND	--	--
o-Xylene	0.246	14.6	1.33E-03	ND	--	--
1,2-Dichlorobenzene	0.025	1.48	1.35E-04	ND	--	--

VOST Sampling Train - Method 0031
General Dynamics
BLDG. No. 3 Stack Outlet
Joplin, MO.

Run 2 - Pair 1

Test Data

Start Time	1647	Test Date	04/26/12	Exhaust Gas Flow (dscfm)	23,741	Meter Gamma	0.9958
End Time	1727	Baro. Press.	28.8	Test Duration (min.)	40	Fuel F-factor	NA

Test Data

Time Min	Flow Rate (lpm)	Meter Temp Inlet (°C)	Meter Temp Outlet (°C)		Time Min	Flow Rate (lpm)	Meter Temp Inlet (°C)	Meter Temp Outlet (°C)
5	0.5	35			65			
10	0.5	34			70			
15	0.5	34			75			
20	0.5	34			80			
25	0.5	34			85			
30	0.5	34			90			
35	0.5	34			95			
40	0.5	34			100			
45					105			
50					110			
55					115			
60					120			

Volume Data

Initial (L)	Final (L)
847.830	867.270
Total Volume Collected (L)	
19.440	

Calculations

Sample flow rate at test conditions (lpm)
0.5
Average meter temperature (°C)
34
Volume sampled at test conditions (dscf)
0.628

Pollutant Emissions

Pollutant	ug	ug/dscm	lb/hr
Dichlorodifluoromethane (FREON 12)	0.045	2.53	2.25E-04
Chloromethane	0.351	19.7	1.76E-03
Vinyl Chloride	0.112	6.30	5.60E-04
Bromomethane	<0.015	<0.84	<7.50E-05
Chloroethane	<0.009	<0.51	<4.50E-05
Trichlorofluoromethane (FREON 11)	0.073	4.11	3.65E-04
Acetone (2-Propanone)	0.165	9.28	8.25E-04
1,1-Dichloroethylene	0.072	4.05	3.60E-04
Carbon Disulfide	0.327	18.4	1.64E-03
Methylene Chloride(Dichloromethane)	0.168	9.45	8.40E-04
1,1-Dichloroethane	0.015	0.84	7.50E-05
Chloroform	2.37	133.3	1.19E-02
Methyl Ethyl Ketone (2-Butanone)	<0.036	<2.03	<1.80E-04
1,1,1-Trichloroethane	<0.014	<0.79	<7.00E-05
Carbon Tetrachloride	1.08	60.8	5.40E-03
Benzene	0.997	56.1	4.99E-03
1,2-Dichloropropane	0.022	1.24	1.10E-04
Trichloroethylene	0.052	2.93	2.60E-04
Bromodichloromethane	0.11	6.19	5.50E-04
cis-1,3-Dichloropropene	0.014	0.79	7.00E-05
trans-1,3-Dichloropropene	0.0133	0.75	6.65E-05
Dibromochloromethane	<0.009	<0.51	<4.50E-05
Methyl Isobutyl Ketone	0.05	2.81	2.50E-04
Toluene	0.364	20.5	1.82E-03
Tetrachloroethylene	0.07	3.94	3.50E-04
Chlorobenzene	0.053	2.98	2.65E-04
Ethylbenzene	0.088	4.95	4.40E-04
m / p-Xylene	0.279	15.7	1.40E-03
o-Xylene	0.125	7.03	6.25E-04
1,2-Dichlorobenzene	0.029	1.63	1.45E-04

VOST Sampling Train - Method 0031
General Dynamics
BLDG. No. 3 Stack Outlet
Joplin, MO.

Run 2 - Pair 2

Test Data

Start Time	1743	Test Date	04/26/12	Exhaust Gas Flow (dscfm)	23,741	Meter Gamma	0.9958
End Time	1823	Baro. Press.	28.8	Test Duration (min.)	40	Fuel F-factor	NA

Test Data

Time Min	Flow Rate (lpm)	Meter Temp Inlet (°C)	Meter Temp Outlet (°C)		Time Min	Flow Rate (lpm)	Meter Temp Inlet (°C)	Meter Temp Outlet (°C)
5	0.5	34			65			
10	0.5	34			70			
15	0.5	34			75			
20	0.5	35			80			
25	0.5	35			85			
30	0.5	35			90			
35	0.5	35			95			
40	0.5	35			100			
45					105			
50					110			
55					115			
60					120			

Volume Data

Initial (L)	Final (L)
866.650	885.650
Total Volume Collected (L)	
19.000	

Calculations

Sample flow rate at test conditions (lpm)
0.5
Average meter temperature (°C)
35
Volume sampled at test conditions (dscf)
0.613

Pollutant Emissions

Pollutant	ug	ug/dscm	lb/hr
Dichlorodifluoromethane (FREON 12)	0.044	2.54	2.26E-04
Chloromethane	0.333	19.2	1.71E-03
Vinyl Chloride	0.101	5.82	5.18E-04
Bromomethane	0.017	0.98	8.72E-05
Chloroethane	0.0163	0.94	8.36E-05
Trichlorofluoromethane (FREON 11)	0.069	3.98	3.54E-04
Acetone (2-Propanone)	0.134	7.73	6.87E-04
1,1-Dichloroethylene	0.063	3.63	3.23E-04
Carbon Disulfide	0.351	20.2	1.80E-03
Methylene Chloride(Dichloromethane)	0.144	8.30	7.38E-04
1,1-Dichloroethane	0.017	0.98	8.72E-05
Chloroform	3.00	173.0	1.54E-02
Methyl Ethyl Ketone (2-Butanone)	0.036	2.08	1.85E-04
1,1,1-Trichloroethane	<0.014	<0.81	<7.18E-05
Carbon Tetrachloride	1.02	58.8	5.23E-03
Benzene	1.24	71.5	6.36E-03
1,2-Dichloropropane	0.018	1.04	9.23E-05
Trichloroethylene	0.048	2.77	2.46E-04
Bromodichloromethane	0.125	7.21	6.41E-04
cis-1,3-Dichloropropene	0.013	0.75	6.66E-05
trans-1,3-Dichloropropene	0.0131	0.76	6.72E-05
Dibromochloromethane	<0.009	<0.52	<4.61E-05
Methyl Isobutyl Ketone	0.05	2.88	2.56E-04
Toluene	0.447	25.8	2.29E-03
Tetrachloroethylene	0.065	3.75	3.33E-04
Chlorobenzene	0.062	3.57	3.18E-04
Ethylbenzene	0.103	5.94	5.28E-04
m / p-Xylene	0.295	17.0	1.51E-03
o-Xylene	0.135	7.78	6.92E-04
1,2-Dichlorobenzene	0.037	2.13	1.90E-04

VOST Sampling Train - Method 0031
General Dynamics
BLDG. No. 3 Stack Outlet
Joplin, MO.

Run 2 - Pair 3

Test Data

Start Time	1847	Test Date	04/26/12	Exhaust Gas Flow (dscfm)	23,741	Meter Gamma	0.9958
End Time	1927	Baro. Press.	28.8	Test Duration (min.)	40	Fuel F-factor	NA

Test Data

Time Min	Flow Rate (lpm)	Meter Temp Inlet (°C)	Meter Temp Outlet (°C)	Time Min	Flow Rate (lpm)	Meter Temp Inlet (°C)	Meter Temp Outlet (°C)
5	0.5	33		65			
10	0.5	33		70			
15	0.5	33		75			
20	0.5	34		80			
25	0.5	33		85			
30	0.5	33		90			
35	0.5	33		95			
40	0.5	33		100			
45				105			
50				110			
55				115			
60				120			

Volume Data

Initial (L)	Final (L)
885.900	904.970
Total Volume Collected (L)	
19.070	

Calculations

Sample flow rate at test conditions (lpm)
0.5
Average meter temperature (°C)
33
Volume sampled at test conditions (dscf)
0.618

Pollutant Emissions

Pollutant	ug	ug/dscm	lb/hr	Condensate ug	ug/dscm	lb/hr
Dichlorodifluoromethane (FREON 12)	0.041	2.34	2.08E-04	ND	--	--
Chloromethane	0.391	22.3	1.99E-03	ND	--	--
Vinyl Chloride	0.088	5.03	4.47E-04	ND	--	--
Bromomethane	0.02	1.14	1.02E-04	ND	--	--
Chloroethane	0.0187	1.07	9.51E-05	ND	--	--
Trichlorofluoromethane (FREON 11)	0.075	4.29	3.81E-04	ND	--	--
Acetone (2-Propanone)	0.334	19.1	1.70E-03	34.8	661.4	5.88E-02
1,1-Dichloroethylene	0.069	3.94	3.51E-04	ND	--	--
Carbon Disulfide	0.283	16.2	1.44E-03	ND	--	--
Methylene Chloride(Dichloromethane)	0.168	9.60	8.54E-04	ND	--	--
1,1-Dichloroethane	0.016	0.91	8.13E-05	ND	--	--
Chloroform	3.19	182.3	1.62E-02	ND	--	--
Methyl Ethyl Ketone (2-Butanone)	0.085	4.86	4.32E-04	ND	--	--
1,1,1-Trichloroethane	<0.014	<0.80	<7.12E-05	ND	--	--
Carbon Tetrachloride	1.1	62.9	5.59E-03	ND	--	--
Benzene	1.49	85.2	7.57E-03	ND	--	--
1,2-Dichloropropane	0.018	1.03	9.15E-05	ND	--	--
Trichloroethylene	0.047	2.69	2.39E-04	ND	--	--
Bromodichloromethane	0.124	7.09	6.30E-04	ND	--	--
cis-1,3-Dichloropropene	0.018	1.03	9.15E-05	ND	--	--
trans-1,3-Dichloropropene	0.0192	1.10	9.76E-05	ND	--	--
Dibromochloromethane	<0.0090	<0.51	<4.57E-05	ND	--	--
Methyl Isobutyl Ketone	0.085	4.9	4.32E-04	ND	--	--
Toluene	0.575	32.9	2.92E-03	ND	--	--
Tetrachloroethylene	0.064	3.66	3.25E-04	ND	--	--
Chlorobenzene	0.089	5.09	4.52E-04	ND	--	--
Ethylbenzene	0.154	8.80	7.83E-04	ND	--	--
m / p-Xylene	0.382	21.8	1.94E-03	ND	--	--
o-Xylene	0.192	11.0	9.76E-04	ND	--	--
1,2-Dichlorobenzene	0.062	3.54	3.15E-04	ND	--	--

VOST Sampling Train - Method 0031
General Dynamics
BLDG. No. 3 Stack Outlet
Joplin, MO.

Run 3 - Pair 1

Test Data

Start Time	2000	Test Date	04/26/12	Exhaust Gas Flow (dscfm)	23,045	Meter Gamma	0.9958
End Time	2040	Baro. Press.	28.8	Test Duration (min.)	40	Fuel F-factor	NA

Test Data

Time Min	Flow Rate (lpm)	Meter Temp Inlet (°C)	Meter Temp Outlet (°C)	Time Min	Flow Rate (lpm)	Meter Temp Inlet (°C)	Meter Temp Outlet (°C)
5	0.5	30		65			
10	0.5	30		70			
15	0.5	29		75			
20	0.5	29		80			
25	0.5	30		85			
30	0.5	30		90			
35	0.5	30		95			
40	0.5	29		100			
45				105			
50				110			
55				115			
60				120			

Volume Data

Initial (L)	Final (L)
905.220	924.460
Total Volume Collected (L)	
19.240	

Calculations

Sample flow rate at test conditions (lpm)
0.5
Average meter temperature (°C)
30
Volume sampled at test conditions (dscf)
0.631

Pollutant Emissions

Pollutant	ug	ug/dscm	lb/hr
Dichlorodifluoromethane (FREON 12)	0.051	2.86	2.47E-04
Chloromethane	0.345	19.3	1.67E-03
Vinyl Chloride	0.118	6.61	5.70E-04
Bromomethane	<0.015	<0.84	<7.25E-05
Chloroethane	0.0159	0.89	7.69E-05
Trichlorofluoromethane (FREON 11)	0.053	2.97	2.56E-04
Acetone (2-Propanone)	0.226	12.7	1.09E-03
1,1-Dichloroethylene	0.071	3.98	3.43E-04
Carbon Disulfide	0.227	12.7	1.10E-03
Methylene Chloride(Dichloromethane)	0.174	9.75	8.41E-04
1,1-Dichloroethane	0.016	0.90	7.74E-05
Chloroform	3.24	181	1.57E-02
Methyl Ethyl Ketone (2-Butanone)	0.042	2.35	2.03E-04
1,1,1-Trichloroethane	<0.014	<0.78	<6.77E-05
Carbon Tetrachloride	1.27	71.1	6.14E-03
Benzene	1.44	80.7	6.96E-03
1,2-Dichloropropane	0.016	0.90	7.74E-05
Trichloroethylene	0.05	2.80	2.42E-04
Bromodichloromethane	0.139	7.79	6.72E-04
cis-1,3-Dichloropropene	0.016	0.90	7.74E-05
trans-1,3-Dichloropropene	0.0127	0.71	6.14E-05
Dibromochloromethane	<0.009	<0.50	<4.35E-05
Methyl Isobutyl Ketone	0.039	2.18	1.89E-04
Toluene	0.486	27.2	2.35E-03
Tetrachloroethylene	0.067	3.75	3.24E-04
Chlorobenzene	0.069	3.86	3.34E-04
Ethylbenzene	0.112	6.27	5.41E-04
m / p-Xylene	0.318	17.8	1.54E-03
o-Xylene	0.141	7.90	6.82E-04
1,2-Dichlorobenzene	0.059	3.30	2.85E-04

VOST Sampling Train - Method 0031
General Dynamics
BLDG. No. 3 Stack Outlet
Joplin, MO.

Run 3 - Pair 2

Test Data

Start Time	2055	Test Date	04/26/12	Exhaust Gas Flow (dscfm)	23,045	Meter Gamma	0.9958
End Time	2135	Baro. Press.	28.8	Test Duration (min.)	40	Fuel F-factor	NA

Test Data

Time Min	Flow Rate (lpm)	Meter Temp Inlet (^{o}C)	Meter Temp Outlet (^{o}C)		Time Min	Flow Rate (lpm)	Meter Temp Inlet (^{o}C)	Meter Temp Outlet (^{o}C)
5	0.5	29			65			
10	0.5	30			70			
15	0.5	29			75			
20	0.6	29			80			
25	0.6	29			85			
30	0.6	28			90			
35	0.6	28			95			
40	0.6	28			100			
45					105			
50					110			
55					115			
60					120			

Volume Data

Initial (L)	Final (L)
924.730	943.910
Total Volume Collected (L)	
19.180	

Calculations

Sample flow rate at test conditions (lpm)
0.6
Average meter temperature (^{o}C)
29
Volume sampled at test conditions (dscf)
0.630

Pollutant Emissions

Pollutant	ug	ug/dscm	lb/hr
Dichlorodifluoromethane (FREON 12)	0.045	2.52	2.18E-04
Chloromethane	0.50	28.0	2.42E-03
Vinyl Chloride	0.101	5.66	4.88E-04
Bromomethane	0.017	0.95	8.22E-05
Chloroethane	0.0189	1.06	9.14E-05
Trichlorofluoromethane (FREON 11)	0.055	3.08	2.66E-04
Acetone (2-Propanone)	0.250	14.0	1.21E-03
1,1-Dichloroethylene	0.083	4.65	4.01E-04
Carbon Disulfide	0.244	13.7	1.18E-03
Methylene Chloride(Dichloromethane)	0.158	8.85	7.64E-04
1,1-Dichloroethane	0.018	1.01	8.70E-05
Chloroform	3.25	182	1.57E-02
Methyl Ethyl Ketone (2-Butanone)	0.068	3.81	3.29E-04
1,1,1-Trichloroethane	<0.014	<0.78	<6.77E-05
Carbon Tetrachloride	1.17	65.5	5.66E-03
Benzene	1.38	77.3	6.67E-03
1,2-Dichloropropane	0.018	1.01	8.70E-05
Trichloroethylene	0.049	2.75	2.37E-04
Bromodichloromethane	0.134	7.51	6.48E-04
cis-1,3-Dichloropropene	0.016	0.90	7.74E-05
trans-1,3-Dichloropropene	0.0147	0.82	7.11E-05
Dibromochloromethane	<0.009	<0.50	<4.35E-05
Methyl Isobutyl Ketone	0.034	1.90	1.64E-04
Toluene	0.479	26.8	2.32E-03
Tetrachloroethylene	0.073	4.09	3.53E-04
Chlorobenzene	0.082	4.59	3.97E-04
Ethylbenzene	0.109	6.11	5.27E-04
m / p-Xylene	0.299	16.8	1.45E-03
o-Xylene	0.135	7.56	6.53E-04
1,2-Dichlorobenzene	0.044	2.46	2.13E-04

VOST Sampling Train - Method 0031
General Dynamics
BLDG. No. 3 Stack Outlet
Joplin, MO.

Run 3 - Pair 3

Test Data

Start Time	2150	Test Date	04/26/12	Exhaust Gas Flow (dscfm)	23,045	Meter Gamma	0.9958
End Time	2230	Baro. Press.	28.8	Test Duration (min.)	40	Fuel F-factor	NA

Test Data

Time Min	Flow Rate (lpm)	Meter Temp Inlet (°C)	Meter Temp Outlet (°C)		Time Min	Flow Rate (lpm)	Meter Temp Inlet (°C)	Meter Temp Outlet (°C)
5	0.5	28			65			
10	0.5	28			70			
15	0.5	27			75			
20	0.5	27			80			
25	0.5	27			85			
30	0.5	27			90			
35	0.5	27			95			
40	0.5	27			100			
45					105			
50					110			
55					115			
60					120			

Volume Data

Initial (L)	Final (L)
944.200	964.220
Total Volume Collected (L)	
20.020	

Calculations

Sample flow rate at test conditions (lpm)
0.5
Average meter temperature (°C)
27
Volume sampled at test conditions (dscf)
0.661

Pollutant Emissions

Pollutant	ug	ug/dscm	lb/hr	Condensate ug	ug/dscm	lb/hr
Dichlorodifluoromethane (FREON 12)	0.041	2.19	1.89E-04	ND	--	--
Chloromethane	0.411	21.9	1.89E-03	ND	--	--
Vinyl Chloride	0.097	5.18	4.47E-04	ND	--	--
Bromomethane	0.016	0.85	7.38E-05	ND	--	--
Chloroethane	0.0168	0.90	7.74E-05	ND	--	--
Trichlorofluoromethane (FREON 11)	0.068	3.63	3.13E-04	ND	--	--
Acetone (2-Propanone)	0.278	14.8	1.28E-03	32	587.9	5.08E-02
1,1-Dichloroethylene	0.085	4.54	3.92E-04	ND	--	--
Carbon Disulfide	0.199	10.6	9.17E-04	ND	--	--
Methylene Chloride(Dichloromethane)	0.184	9.83	8.48E-04	ND	--	--
1,1-Dichloroethane	0.024	1.28	1.11E-04	ND	--	--
Chloroform	3.42	183	1.58E-02	ND	--	--
Methyl Ethyl Ketone (2-Butanone)	0.063	3.36	2.90E-04	ND	--	--
1,1,1-Trichloroethane	<0.014	<0.75	<6.45E-05	ND	--	--
Carbon Tetrachloride	1.21	64.6	5.58E-03	ND	--	--
Benzene	1.11	59.3	5.12E-03	ND	--	--
1,2-Dichloropropane	0.018	0.96	8.30E-05	ND	--	--
Trichloroethylene	0.052	2.78	2.40E-04	ND	--	--
Bromodichloromethane	0.111	5.93	5.12E-04	ND	--	--
cis-1,3-Dichloropropene	0.019	1.01	8.76E-05	ND	--	--
trans-1,3-Dichloropropene	0.0178	0.95	8.21E-05	ND	--	--
Dibromochloromethane	<0.009	<0.48	<4.15E-05	ND	--	--
Methyl Isobutyl Ketone	<0.019	<1.01	<8.76E-05	ND	--	--
Toluene	0.438	23.4	2.02E-03	ND	--	--
Tetrachloroethylene	0.072	3.85	3.32E-04	ND	--	--
Chlorobenzene	0.075	4.01	3.46E-04	ND	--	--
Ethylbenzene	0.098	5.23	4.52E-04	ND	--	--
m / p-Xylene	0.256	13.7	1.18E-03	ND	--	--
o-Xylene	0.123	6.57	5.67E-04	ND	--	--
1,2-Dichlorobenzene	0.023	1.23	1.06E-04	ND	--	--

O'BRIEN & GERE

VOST DATA SHEET

FACILITY GENERAL DYNAMICS	DATE 4/26/12
LOCATION JOPLIN, MO.	OPERATOR W. HARDY
SOURCE BLDG. #3 STACK OUTLET	BAR. PRESSURE, in. Hg 28.80
CONDITION	PROBE LENGTH (ft) 4 ft
RUN NO. 1A	DESIRED PROBE TEMP. 130+
METER CALIBRATION FACTOR (Y) 0.9958	PROBE PURGED ? YES
DRY GAS METER NO. VB4	DESIRED FLOW RATE (Lpm) 0.5
TENAX TUBE NO"S 1A1 1B1	DESIRED SAMPLE VOLUME (dsL) 20
~~TENAX/CHARCOAL~~ ANASORB TUBE NO"S 1C1	DGM PRESSURE, in. H_2O 0.8
Train Leak Check -- INITIAL VACUUM (in. Hg): 27	Leak Rate : 0.000 in. Hg in 60 sec.
Train Leak Check -- FINAL VACUUM (in. Hg): 25	Leak Rate : 0.000 in. Hg in 60 sec.

ACCEPTANCE CRITERIA : Leak Rate < 2.5 mm Hg (0.1 in. Hg) after 60 sec.

SAMPLING TIME (min)	CLOCK TIME (24-hr)	FLOW RATE (Lpm)	GAS METER READING (L)	TEMPERATURE READINGS PROBE (°C or °F)	DRY GAS METER (°C or °F)	TRAP (°C or °F)	PUMP VAC. (in. Hg)
0	1005	0.5	0789.06	135	24	13	1
5	1010	0.5	0791.17	136	24	14	1
10	1015	0.5	0793.32	140	25	14	1
15	1020	0.5	0795.41	140	25	13	1
20	1025	0.5	0797.55	136	26	14	1
25	1030	0.5	0800.89	136	26	14	1
30	1035	0.5	0802.33	139	27	15	1
35	1040	0.5	0804.75	137	27	14	1
40	1045	—	0807.25	—	—	—	—

COMMENTS :

Laboratory Lot #:

O'BRIEN & GERE

VOST DATA SHEET

FACILITY GENERAL DYNAMICS	DATE 4/26/12
LOCATION JOPLIN MO.	OPERATOR W. HARDY
SOURCE BLDG #3 STACK OUTLET	BAR. PRESSURE, in. Hg 28.80
CONDITION	PROBE LENGTH (ft) 4
RUN NO. 1B	DESIRED PROBE TEMP. 130+
METER CALIBRATION FACTOR (Y) 0.9958	PROBE PURGED ? YES
DRY GAS METER NO. VB4	DESIRED FLOW RATE (Lpm) 0.5
TENAX TUBE NO"S 1A2 1B2	DESIRED SAMPLE VOLUME (dsL) 20
TENAX/CHARCOAL TUBE NO"S 1C2	DGM PRESSURE, in. H_2O 0.80
Train Leak Check -- INITIAL VACUUM (in. Hg): 17	Leak Rate : 0.000 in. Hg in 60 sec.
Train Leak Check -- FINAL VACUUM (in. Hg): 2	Leak Rate : 0.000 in. Hg in 60 sec.

ACCEPTANCE CRITERIA : Leak Rate < 2.5 mm Hg (0.1 in. Hg) after 60 sec.

SAMPLING TIME (min)	CLOCK TIME (24-hr)	FLOW RATE (Lpm)	GAS METER READING (L)	TEMPERATURE READINGS PROBE (°C or °F)	DRY GAS METER (°C or °F)	TRAP (°C or °F)	PUMP VAC. (in. Hg)
0	1218	0.5	0807.76	138	31	15	2
5	1223	0.6	0810.51	139	31	14	2
10	1228	0.6	0813.22	137	31	15	2
15	1233	0.6	0815.98	138	32	15	2
20	1238	0.6	0818.56	138	32	16	2
25	1243	0.6	0821.27	138	32	15	2
30	1248	0.6	0823.49	136	33	16	2
35	1253	0.5	0825.57	137	33	15	2
40	1258	—	0827.71	—	—	—	—

COMMENTS :

Laboratory Lot #:

O'BRIEN & GERE

VOST DATA SHEET

FACILITY GENERAL DYNAMICS	DATE 4/26/12
LOCATION JOPLIN MO.	OPERATOR W. HARDY
SOURCE BLDG #3 Stack outlet	BAR. PRESSURE, in. Hg 28.80
CONDITION	PROBE LENGTH (ft) 4
RUN NO. 1C	DESIRED PROBE TEMP. 130+
METER CALIBRATION FACTOR (Y) 0.9958	PROBE PURGED ? YES
DRY GAS METER NO. VB4	DESIRED FLOW RATE (Lpm) 0.5
TENAX TUBE NO"S 1A3 1B3	DESIRED SAMPLE VOLUME (dsL) 20
TENAX/CHARCOAL TUBE NO"S 1C3	DGM PRESSURE, in. H_2O 0.80
Train Leak Check -- INITIAL VACUUM (in. Hg): 15	Leak Rate : 0.000 in. Hg in 60 sec.
Train Leak Check -- FINAL VACUUM (in. Hg): 5	Leak Rate : 0.000 in. Hg in 60 sec.

ACCEPTANCE CRITERIA : Leak Rate < 2.5 mm Hg (0.1 in. Hg) after 60 sec.

SAMPLING TIME (min)	CLOCK TIME (24-hr)	FLOW RATE (Lpm)	GAS METER READING (L)	TEMPERATURE READINGS PROBE (°C or °F)	DRY GAS METER (°C or °F)	TRAP (°C or °F)	PUMP VAC. (In. Hg)
0	1325	0.5	0828.94	138	~~1834~~ 33	18	2
5	1330	0.5	0830.05	138	33	17	2
10	1335	0.5	0832.35	139	33	17	2
15	1340	0.5	0834.52	139	33	18	2
20	1345	0.5	0836.75	136	34	17	4
25	1350	0.5	0839.40	138	34	18	4
30	1355	0.5	0841.95	139	34	18	5
35	1400	0.5	0844.62	139	33	17	5
40	1405	—	0847.37	—	—	—	—

COMMENTS :

Laboratory Lot #:

O'BRIEN & GERE

VOST DATA SHEET

FACILITY GENERAL DYNAMICS	DATE 4/26/12
LOCATION Joplin MO.	OPERATOR W. Hardy
SOURCE Bldg. #3 Stack outlet	BAR. PRESSURE, in. Hg 28.80
CONDITION	PROBE LENGTH (ft) 4
RUN NO. 2A	DESIRED PROBE TEMP. 130+
METER CALIBRATION FACTOR (Y) 0.9958	PROBE PURGED ? yes
DRY GAS METER NO. VB4	DESIRED FLOW RATE (Lpm) 0.5
TENAX TUBE NO"S 2A1 2B1	DESIRED SAMPLE VOLUME (dsL) 20
TENAX/CHARCOAL TUBE NO"S 2C1	DGM PRESSURE, in. H_2O 0.80
Train Leak Check -- INITIAL VACUUM (In. Hg): 25	Leak Rate : 0.000 in. Hg in 60 sec.
Train Leak Check -- FINAL VACUUM (In. Hg): 15	Leak Rate : 0.000 in. Hg in 60 sec.

ACCEPTANCE CRITERIA : Leak Rate < 2.5 mm Hg (0.1 in. Hg) after 60 sec.

SAMPLING TIME (min)	CLOCK TIME (24-hr)	FLOW RATE (Lpm)	GAS METER READING (L)	TEMPERATURE READINGS PROBE (°C or °F)	DRY GAS METER (°C or °F)	TRAP (°C or °F)	PUMP VAC. (in. Hg)
0	1647	0.5	0847.83	139	35	15	3
5	1652	0.5	0850.45	136	34	16	3
10	1657	0.5	0852.80	136	34	16	3
15	1702	0.5	0855.21	135	34	16	3
20	1707	0.5	0857.30	135	34	14	3
25	1712	0.5	0859.74	137	34	14	3
30	1717	0.5	0862.15	136	34	14	3
35	1722	0.5	0864.44	135	34	14	4
40	1727	—	0867.27	—	—	—	—

COMMENTS :

Laboratory Lot #:

O'BRIEN & GERE

VOST DATA SHEET

FACILITY GENERAL DYNAMICS	DATE 4/26/12
LOCATION Joplin MO.	OPERATOR W. HARDY
SOURCE BLDG #3 Stack outlet	BAR. PRESSURE, in. Hg 28.80
CONDITION	PROBE LENGTH (ft) 4
RUN NO. 2B	DESIRED PROBE TEMP. 130+
METER CALIBRATION FACTOR (Y) 0.9958	PROBE PURGED ? YES
DRY GAS METER NO. VB4	DESIRED FLOW RATE (Lpm) 0.5
TENAX TUBE NO"S 2A2 2B2	DESIRED SAMPLE VOLUME (dsL) 20.0
TENAX/CHARCOAL TUBE NO"S 2C2	DGM PRESSURE, in. H_2O 0.80
Train Leak Check -- INITIAL VACUUM (in. Hg): 15	Leak Rate : 0.000 in. Hg in 60 sec.
Train Leak Check -- FINAL VACUUM (in. Hg): 4	Leak Rate : 0.000 in. Hg in 60 sec.

ACCEPTANCE CRITERIA : Leak Rate < 2.5 mm Hg (0.1 in. Hg) after 60 sec.

SAMPLING TIME (min)	CLOCK TIME (24-hr)	FLOW RATE (Lpm)	GAS METER READING (L)	TEMPERATURE READINGS PROBE (°C or °F)	DRY GAS METER (°C or °F)	TRAP (°C or °F)	PUMP VAC. (in. Hg)
0	1743	0.5	0866.65	135	34	17	2
5	1748	0.5	0869.65	134	34	16	2
10	1753	0.5	0872.41	137	34	15	4
15	1758	0.5	0874.23	138	35	14	4
20	1803	0.5	0876.56	135	35	14	4
25	1808	0.5	—	135	35	14	4
30	1813	0.5	0881.09	138	35	14	4
35	1818	0.5	0883.47	136	35	14	4
40	1823	—	0885.65	—	—	—	—

COMMENTS :

Laboratory Lot #:

O'BRIEN & GERE

VOST DATA SHEET

FACILITY GENERAL DYNAMICS	DATE 4/26/12
LOCATION JOPLIN MO.	OPERATOR W. HARDY
SOURCE BLDG #3 stack outlet	BAR. PRESSURE, in. Hg 28.80
CONDITION	PROBE LENGTH (ft) 4
RUN NO. 2C	DESIRED PROBE TEMP. 130 +
METER CALIBRATION FACTOR (Y) 0.9958	PROBE PURGED ? YES
DRY GAS METER NO. VB4	DESIRED FLOW RATE (Lpm) 0.5
TENAX TUBE NO"S 2A3 2B3	DESIRED SAMPLE VOLUME (dsL) 20
TENAX/CHARCOAL TUBE NO"S 2C3	DGM PRESSURE, in. H_2O 0.80
Train Leak Check -- INITIAL VACUUM (in. Hg): 15	Leak Rate : 0.000 in. Hg in 60 sec.
Train Leak Check -- FINAL VACUUM (in. Hg): 5	Leak Rate : 0.000 in. Hg in 60 sec.

ACCEPTANCE CRITERIA : Leak Rate < 2.5 mm Hg (0.1 in. Hg) after 60 sec.

SAMPLING TIME (min)	CLOCK TIME (24-hr)	FLOW RATE (Lpm)	GAS METER READING (L)	TEMPERATURE READINGS PROBE (°C or °F)	DRY GAS METER (°C or °F)	TRAP (°C or °F)	PUMP VAC. (in. Hg)
0	1847	0.5	0885.90	137	33	15	4
5	1852	0.5	0888.30	136	33	15	4
10	1857	0.5	0890.80	135	33	14	4
15	1902	0.5	0893.50	137	34	14	4
20	1907	0.5	0895.61	135	33	14	5
25	1912	0.5	0898.05	135	33	14	5
30	1917	0.5	0900.21	134	33	13	5
35	1922	0.5	0902.64	137	33	14	5
40	1927	—	0904.97	—	—	—	—

COMMENTS :

Laboratory Lot #:

O'BRIEN & GERE

VOST DATA SHEET

FACILITY GENERAL DYNAMICS	DATE 4/26/12
LOCATION JOPLIN MO.	OPERATOR W. HARDY
SOURCE BLDG. #3 STACK OUTLET	BAR. PRESSURE, in. Hg 28.80
CONDITION	PROBE LENGTH (ft) 4
RUN NO. 3A	DESIRED PROBE TEMP. 130+
METER CALIBRATION FACTOR (Y) 0.9958	PROBE PURGED ? YES
DRY GAS METER NO. VB4	DESIRED FLOW RATE (Lpm) 0.5
TENAX TUBE NO"S 3A1 3B1	DESIRED SAMPLE VOLUME (dsL) 20
TENAX/CHARCOAL TUBE NO"S 3C1	DGM PRESSURE, in. H_2O 0.80
Train Leak Check -- INITIAL VACUUM (in. Hg): 15	Leak Rate : 0.000 in. Hg in 60 sec.
Train Leak Check -- FINAL VACUUM (in. Hg): 10	Leak Rate : 0.000 in. Hg in 60 sec.

ACCEPTANCE CRITERIA : Leak Rate < 2.5 mm Hg (0.1 in. Hg) after 60 sec.

SAMPLING TIME (min)	CLOCK TIME (24-hr)	FLOW RATE (Lpm)	GAS METER READING (L)	TEMPERATURE READINGS PROBE (°C or °F)	DRY GAS METER (°C or °F)	TRAP (°C or °F)	PUMP VAC. (in. Hg)
0	2000	0.5	0905.22	136	30	17	5
5	20.05	0.5	0907.54	136	30	15	5
10	2010	0.5	0910.10	137	29	15	5
15	2015	0.5	—	137	29	15	5
20	2020	0.5	0914.90	137	30	16	5
25	2025	0.5	0917.37	137	30	15	5
30	2030	0.5	0919.64	135	30	16	5
35	2035	0.5	0922.01	134	29	15	5
40	2040	—	0924.46	—	—	—	—

COMMENTS :

Laboratory Lot #:

O'BRIEN & GERE

VOST DATA SHEET

FACILITY GENERAL DYNAMICS	DATE 4/26/12
LOCATION Joplin MO.	OPERATOR W. HARDY
SOURCE BLDG #3 Stack Outlet	BAR. PRESSURE, In. Hg 28.80
CONDITION	PROBE LENGTH (ft) 4
RUN NO. 3B	DESIRED PROBE TEMP. 130+
METER CALIBRATION FACTOR (Y) 0.9958	PROBE PURGED ? YES
DRY GAS METER NO. VB4	DESIRED FLOW RATE (Lpm) 0.5
TENAX TUBE NO"S 3A2 3B2	DESIRED SAMPLE VOLUME (dsL) 20.0
TENAX/CHARCOAL TUBE NO"S 3C2	DGM PRESSURE, In. H_2O 0.80
Train Leak Check -- INITIAL VACUUM (In. Hg): 15	Leak Rate : 0.000 In. Hg in 60 sec.
Train Leak Check -- FINAL VACUUM (In. Hg): 5	Leak Rate : 0.000 In. Hg in 60 sec.

ACCEPTANCE CRITERIA : Leak Rate < 2.5 mm Hg (0.1 In. Hg) after 60 sec.

SAMPLING TIME (min)	CLOCK TIME (24-hr)	FLOW RATE (Lpm)	GAS METER READING (L)	TEMPERATURE READINGS PROBE (°C or °F)	DRY GAS METER (°C or °F)	TRAP (°C or °F)	PUMP VAC. (In. Hg)
0	2055	0.5	0924.73	135	29	16	4
5	2100	0.5	0927.-	134	30	17	4
10	2105	0.5	0929.25	134	29	18	5
15	2110	0.6	0931.45	138	29	17	5
20	2115	0.6	—	136	29	17	5
25	2120	0.6	0935.91	134	28	17	5
30	2125	0.6	0938.35	135	28	17	5
35	2130	0.6	0940.34	134	28	17	5
40	2135	—	0943.91	—	—	—	—

COMMENTS :

Laboratory Lot #:

O'BRIEN & GERE

VOST DATA SHEET

FACILITY GENERAL DYNAMICS	DATE 4/26/12
LOCATION Joplin MO.	OPERATOR W. HANOY
SOURCE BLDG #3 Stack outlet	BAR. PRESSURE, in. Hg 28.8
CONDITION	PROBE LENGTH (ft) 4
RUN NO. 3C	DESIRED PROBE TEMP. 130+
METER CALIBRATION FACTOR (Y) 0.9958	PROBE PURGED ? YES
DRY GAS METER NO. VB4	DESIRED FLOW RATE (Lpm) 0.5
TENAX TUBE NO"S 343 353	DESIRED SAMPLE VOLUME (dsL) 20.0
TENAX/CHARCOAL TUBE NO"S 3C3	DGM PRESSURE, in. H_2O 0.80
Train Leak Check -- INITIAL VACUUM (in. Hg): 15	Leak Rate : 0.000 in. Hg in 60 sec.
Train Leak Check -- FINAL VACUUM (in. Hg): 5	Leak Rate : 0.000 in. Hg in 60 sec.

ACCEPTANCE CRITERIA : Leak Rate < 2.5 mm Hg (0.1 in. Hg) after 60 sec.

SAMPLING TIME (min)	CLOCK TIME (24-hr)	FLOW RATE (Lpm)	GAS METER READING (L)	TEMPERATURE READINGS PROBE (°C or °F)	DRY GAS METER (°C or °F)	TRAP (°C or °F)	PUMP VAC. (in. Hg)
0	2150	0.5	0944.20	134	28	18	2
5	2155	0.5	0946.56	136	28	18	2
10	2200	0.5	—	138	27	18	2
15	2205	0.5	0952.65	136	27	18	3
20	2210	0.5	0954.25	137	27	17	3
25	2215	0.5	0956.61	136	27	18	3
30	2220	0.5	0959.30	137	27	18	3
35	2225	0.5	0962.01	137	27	18	3
40	2230	—	0964.22	—	—	—	—

COMMENTS :

Laboratory Lot #:

CEMS

General Dynamics
Bldg 3
Joplin, MO
Carbon Monoxide Emissions Data

Run I.D.	Run 1	Run 2	Run 3
Date	25Apr12	25Apr12	26Apr12
Time	0833-1150	1300-1634	815-1130
Stack Gas Volumetric Flow Rate			
DSCFM	23,016	23,518	23,636
Stack Gas Oxygen and Carbon Dioxide Concentrations			
% O2	20.44	20.59	20.48
% CO2	0.74	0.63	0.68
Emission Concentration			
ppmv, dry (actual)	4.51	6.58	5.36
Emission Rate			
lb / hr	0.45	0.68	0.55

General Dynamics
Bldg 3
Joplin, MO
Nitrogen Oxides Emissions Data

Run I.D.	Run 1	Run 2	Run 3
Date	25Apr12	25Apr12	26Apr12
Time	0833-1150	1300-1634	815-1130
Stack Gas Volumetric Flow Rate			
DSCFM	23,016	23,518	23,636
% O2	20.44	20.59	20.48
Emission Concentration			
ppmv, dry (actual)	63.9	57.6	68.0
Emission Rate			
lb / hr	10.5	9.71	11.5

General Dynamics
Bldg 3
Joplin, MO
Total Hydrocarbons (as Propane) Emissions Data

Run I.D.	Run 1	Run 2	Run 3
Date	25Apr12	25Apr12	26Apr12
Time	0833-1150	1300-1634	815-1130
Stack Gas Volumetric Flow Rate			
Volumetric Flow Rate, DSCFM	23,016	23,518	23,636
% O2	20.44	20.59	20.48
% H2O	8.0	7.4	7.8
Emission Concentration			
ppmv, wet	1.62	3.19	1.70
ppmv,dry (calculated)	1.76	3.45	1.84
Emission Rate			
lb / hr	0.101	0.203	0.109

General Dynamics
Bldg 3
Joplin, MO
Summary of Calculations

Concentration

ppmv, dry = ppmv, actual / [1 - (%H2O / 100)]

Emission Rate

$$\text{lb / hr} = \frac{\text{ppmv, dry} \times \text{molecular weight} \times 1{,}000 \text{ liters/cubic meter} \times \text{dscfm} \times 60 \text{ min/hr} \times 1.00\text{E-06 grams/microgram}}{24.04 \text{ liters/mole} \times 35.314 \text{ cubic feet/cubic meter} \times 453.59 \text{ g/lb}}$$

AVERAGED CEM DATA

Job Number: *49064*
Run ID: *RUN1*

Start Time: *08:33:00*
Start Date: *04/25/12*

Date	Time	O2	CO2	CO	THC	NOx
4/25/2012	08:34:00	20.54	0.48	9.89	1.46	12.44
4/25/2012	08:35:00	20.12	0.95	8.36	1.4	81.02
4/25/2012	08:36:00	20.21	0.81	3.63	1.27	117.06
4/25/2012	08:37:00	20.15	0.97	6.51	1.26	12.64
4/25/2012	08:38:00	20.61	0.32	3.92	1.2	60.41
4/25/2012	08:39:00	20.12	0.93	6.38	1.29	78.82
4/25/2012	08:40:00	20.06	1.11	5.2	1.33	101.03
4/25/2012	08:41:00	20.07	1.03	5.49	1.25	106.4
4/25/2012	08:42:00	20.52	0.48	2.66	1.26	39.24
4/25/2012	08:43:00	20.11	0.99	6.92	1.59	47.11
4/25/2012	08:44:00	20.41	0.43	7.25	1.66	28.84
4/25/2012	08:45:00	20.63	0.24	3.56	1.6	24.11
4/25/2012	08:46:00	20.73	0.16	0.79	1.19	-1.78
4/25/2012	08:47:00	20.74	0.16	0.19	1.27	-1.64
4/25/2012	08:48:00	20.18	0.9	8.41	1.87	89.34
4/25/2012	08:49:00	20.26	0.85	6.49	1.64	41.08
4/25/2012	08:50:00	20.4	0.61	5.5	1.53	46.57
4/25/2012	08:51:00	20.32	0.67	3.16	1.16	70.68
4/25/2012	08:52:00	20.14	0.93	3.38	1.13	68.03
4/25/2012	08:53:00	20.14	0.96	4.25	1.09	29.28
4/25/2012	08:54:00	20.38	0.63	2.37	1.1	59.65
4/25/2012	08:55:00	20.31	0.56	2.33	1.08	109.99
4/25/2012	08:56:00	20.06	0.99	6.7	1.16	60.43
4/25/2012	08:57:00	20.14	0.98	3.88	1.12	29.22
4/25/2012	08:58:00	20.43	0.63	2.98	1.21	57.27
4/25/2012	08:59:00	20.3	0.59	1.65	1.05	89.24
4/25/2012	09:00:00	20.01	1.	3.07	1.19	71.56
4/25/2012	09:01:00	20.1	1.01	7.63	1.15	43.96
4/25/2012	09:02:00	20.19	0.97	6.1	1.19	60.34
4/25/2012	09:03:00	20.07	1.08	11.31	1.1	125.58
4/25/2012	09:04:00	20.39	0.53	12.51	1.08	67.95
4/25/2012	09:05:00	20.34	0.75	9.49	1.56	36.02
4/25/2012	09:06:00	20.19	0.74	10.23	1.63	100.53

AVERAGED CEM DATA

Job Number: *49064* **Start Time:** *08:33:00*
Run ID: *RUN1* **Start Date:** *04/25/12*

Date	Time	O2	CO2	CO	THC	NOx
4/25/2012	09:07:00	20.51	0.38	9.62	2.22	53.43
4/25/2012	09:08:00	20.71	0.19	4.41	2.01	2.76
4/25/2012	09:09:00	20.73	0.19	2.97	1.94	-0.33
4/25/2012	09:10:00	20.73	0.19	3.01	2.29	-0.6
4/25/2012	09:11:00	20.75	0.19	2.43	2.01	-1.9
4/25/2012	09:12:00	20.23	0.9	12.57	1.98	37.99
4/25/2012	09:13:00	20.46	0.6	10.62	1.4	58.53
4/25/2012	09:14:00	20.3	0.69	9.1	1.57	110.33
4/25/2012	09:15:00	20.16	0.9	6.28	1.22	63.75
4/25/2012	09:16:00	20.13	0.98	5.98	1.11	69.7
4/25/2012	09:17:00	20.37	0.87	3.35	1.07	25.12
4/25/2012	09:18:00	20.44	0.47	2.41	0.95	55.48
4/25/2012	09:19:00	20.72	0.2	-1.97	0.95	-0.4
4/25/2012	09:20:00	20.03	1.02	6.73	1.12	40.13
4/25/2012	09:21:00	20.11	1.05	12.24	1.34	99.13
4/25/2012	09:22:00	20.66	0.28	3.76	1.07	32.79
4/25/2012	09:23:00	20.12	0.96	4.31	1.03	72.54
4/25/2012	09:24:00	20.14	1.04	3.02	1.09	20.79
4/25/2012	09:25:00	20.01	1.05	3.6	1.08	83.7
4/25/2012	09:26:00	20.31	0.96	2.	1.08	80.89
4/25/2012	09:27:00	20.08	0.92	2.62	1.12	94.19
4/25/2012	09:28:00	20.09	1.07	4.66	1.12	132.86
4/25/2012	09:29:00	20.23	0.81	9.6	1.07	103.27
4/25/2012	09:30:00	20.53	0.51	6.93	1.33	30.16
4/25/2012	09:31:00	20.06	1.1	10.51	1.77	48.16
4/25/2012	09:32:00	20.51	0.51	7.08	1.58	39.08
4/25/2012	09:33:00	20.68	0.25	4.75	1.79	7.08
4/25/2012	09:34:00	20.72	0.24	2.89	1.96	-0.6
4/25/2012	09:35:00	20.16	1.01	12.	2.05	44.45
4/25/2012	09:36:00	20.47	0.68	6.64	1.55	18.34
4/25/2012	09:37:00	20.21	0.98	6.07	1.58	114.88
4/25/2012	09:38:00	20.3	0.68	10.7	1.17	48.66
4/25/2012	09:39:00	20.13	1.12	6.67	1[illegible]	82.78

AVERAGED CEM DATA

Job Number: *49064*
Run ID: *RUN1*

Start Time: *08:33:00*
Start Date: *04/25/12*

Date	Time	O2	CO2	CO	THC	NOx
4/25/2012	09:40:00	20.12	1.05	6.49	1.15	56.18
4/25/2012	09:41:00	20.54	0.57	1.14	1.06	46.03
4/25/2012	09:42:00	20.19	0.86	2.88	1.11	149.1
4/25/2012	09:43:00	20.11	1.04	8.18	1.13	52.14
4/25/2012	09:44:00	20.2	1.01	5.5	1.09	17.41
4/25/2012	09:45:00	20.29	0.84	3.87	1.14	94.48
4/25/2012	09:46:00	20.37	0.56	4.75	1.04	42.98
4/25/2012	09:47:00	20.06	1.06	4.19	1.09	89.07
4/25/2012	09:48:00	20.06	1.11	5.01	1.14	68.29
4/25/2012	09:49:00	20.18	1.09	3.1	1.16	54.91
4/25/2012	09:50:00	20.06	1.1	3.95	1.15	127.71
4/25/2012	09:51:00	20.48	0.49	0.96	1.09	100.92
4/25/2012	09:52:00	20.53	0.51	6.21	1.55	31.74
4/25/2012	09:53:00	20.09	1.07	5.95	1.67	131.42
4/25/2012	09:54:00	20.5	0.54	4.21	1.59	53.25
4/25/2012	09:55:00	20.69	0.29	1.26	2.59	5.08
4/25/2012	09:56:00	20.69	0.29	-0.17	2.84	-0.21
4/25/2012	09:57:00	20.17	0.98	3.58	2.08	59.11
4/25/2012	09:58:00	20.14	1.	10.85	1.6	44.11
4/25/2012	09:59:00	20.16	1.01	7.78	1.3	29.46
4/25/2012	10:00:00	20.31	0.81	3.05	1.18	85.83
4/25/2012	10:01:00	20.36	0.58	1.08	1.14	75.72
4/25/2012	10:02:00	20.1	1.08	13.67	1.27	45.69
4/25/2012	10:03:00	20.08	1.11	8.78	1.21	88.4
4/25/2012	10:04:00	20.32	0.99	2.94	1.2	41.7
4/25/2012	10:05:00	20.26	0.81	1.01	1.22	125.23
4/25/2012	10:06:00	20.22	0.81	1.22	1.17	144.83
4/25/2012	10:07:00	20.08	1.08	7.65	1.2	62.59
4/25/2012	10:08:00	20.11	1.07	4.39	1.21	67.39
4/25/2012	10:09:00	20.3	0.93	2.43	1.21	63.02
4/25/2012	10:10:00	20.26	0.82	3.25	1.23	65.9
4/25/2012	10:11:00	20.07	1.08	13.63	1.32	110.13
4/25/2012	10:12:00	20.13	0.97	6.72	1.34	145.15

AVERAGED CEM DATA

Job Number: *49064*
Run ID: *RUN1*

Start Time: *08:33:00*
Start Date: *04/25/12*

Date	Time	O2	CO2	CO	THC	NOx
4/25/2012	10:13:00	20.08	1.15	4.22	1.27	88.51
4/25/2012	10:14:00	20.49	0.56	2.6	1.52	52.08
4/25/2012	10:15:00	20.54	0.52	1.16	1.95	12.26
4/25/2012	10:16:00	20.65	0.35	0.28	1.83	31.41
4/25/2012	10:17:00	20.64	0.31	-1.19	1.47	-0.4
4/25/2012	10:18:00	20.74	0.26	-0.74	1.57	-2.68
4/25/2012	10:19:00	20.26	0.93	4.03	1.56	8.32
4/25/2012	10:20:00	20.38	0.72	4.82	1.61	97.13
4/25/2012	10:21:00	20.11	1.05	5.25	1.83	142.89
4/25/2012	10:22:00	20.22	0.78	2.08	1.35	87.45
4/25/2012	10:23:00	20.18	0.91	-0.75	1.23	91.85
4/25/2012	10:24:00	19.95	1.06	3.2	1.64	86.22
4/25/2012	10:25:00	20.11	1.04	6.36	1.46	45.38
4/25/2012	10:26:00	20.41	0.73	4.47	1.53	42.91
4/25/2012	10:27:00	20.23	0.77	6.48	1.51	81.79
4/25/2012	10:28:00	20.14	0.93	1.92	1.43	96.69
4/25/2012	10:29:00	20.03	1.04	1.9	1.49	91.55
4/25/2012	10:30:00	20.12	1.	5.82	1.48	47.05
4/25/2012	10:31:00	20.34	0.77	7.44	1.65	44.83
4/25/2012	10:32:00	20.23	0.77	8.38	1.57	56.99
4/25/2012	10:33:00	20.06	0.98	8.88	1.53	97.57
4/25/2012	10:34:00	20.03	1.08	2.8	1.55	76.91
4/25/2012	10:35:00	20.01	1.08	2.06	1.48	103.29
4/25/2012	10:36:00	20.5	0.55	0.03	1.56	46.94
4/25/2012	10:37:00	20.53	0.5	1.75	2.28	25.42
4/25/2012	10:38:00	20.66	0.24	0.81	2.17	32.92
4/25/2012	10:39:00	20.71	0.21	-2.07	2.32	-1.45
4/25/2012	10:40:00	20.72	0.21	-2.82	2.04	-3.54
4/25/2012	10:41:00	20.16	0.98	4.43	2.09	90.6
4/25/2012	10:42:00	20.14	1.02	2.31	2.84	86.7
4/25/2012	10:43:00	20.23	0.97	2.18	2.03	35.99
4/25/2012	10:44:00	20.1	0.99	3.17	1.71	75.9
4/25/2012	10:45:00	20.52	0.33	-4.99	1.[illegible]	86.95

AVERAGED CEM DATA

Job Number: *49064*
Run ID: *RUN1*

Start Time: *08:33:00*
Start Date: *04/25/12*

Date	Time	O2	CO2	CO	THC	NOx
4/25/2012	10:46:00	20.08	1.02	4.8	1.66	48.49
4/25/2012	10:47:00	20.08	1.03	3.11	1.99	87.43
4/25/2012	10:48:00	20.21	0.96	4.34	1.97	20.59
4/25/2012	10:49:00	20.09	1.09	5.35	2.05	75.27
4/25/2012	10:50:00	20.49	0.37	-0.91	1.87	96.33
4/25/2012	10:51:00	20.08	1.01	1.8	1.99	75.35
4/25/2012	10:52:00	20.06	1.06	0.8	1.79	81.48
4/25/2012	10:53:00	20.14	1.02	-0.78	1.68	25.93
4/25/2012	10:54:00	20.07	1.15	4.83	1.54	118.79
4/25/2012	10:55:00	20.07	1.06	4.41	1.61	117.57
4/25/2012	10:56:00	20.41	0.5	1.03	1.41	113.54
4/25/2012	10:57:00	20.57	0.38	-0.78	1.57	38.35
4/25/2012	10:58:00	20.43	0.77	-0.74	1.59	4.42
4/25/2012	10:59:00	20.29	0.65	0.87	1.76	94.19
4/25/2012	11:00:00	20.48	0.49	-2.2	1.99	37.52
4/25/2012	11:01:00	20.72	0.22	-3.55	2.6	4.28
4/25/2012	11:02:00	20.59	0.46	-0.69	2.09	-1.71
4/25/2012	11:03:00	20.27	0.72	2.94	2.24	109.36
4/25/2012	11:04:00	20.09	0.92	27.99	2.07	60.45
4/25/2012	11:05:00	20.09	1.04	12.77	1.56	121.3
4/25/2012	11:06:00	20.11	0.99	4.08	1.48	62.25
4/25/2012	11:07:00	20.33	0.82	6.34	1.48	31.69
4/25/2012	11:08:00	20.23	0.75	13.7	1.46	36.44
4/25/2012	11:09:00	20.22	0.8	4.34	1.33	109.17
4/25/2012	11:10:00	20.05	1.09	4.47	1.39	69.02
4/25/2012	11:11:00	20.09	1.06	7.04	1.37	41.25
4/25/2012	11:12:00	20.32	0.88	4.46	1.36	31.11
4/25/2012	11:13:00	20.41	0.52	-0.53	1.24	67.11
4/25/2012	11:14:00	20.09	1.03	2.67	1.34	47.96
4/25/2012	11:15:00	20.4	0.74	0.36	1.33	38.42
4/25/2012	11:16:00	20.21	0.8	-0.61	1.31	91.27
4/25/2012	11:17:00	20.05	1.06	1.32	1.41	114.72
4/25/2012	11:18:00	20.09	0.93	2.07	1.41	55.01

AVERAGED CEM DATA

Job Number: *49064* **Start Time:** *08:33:00*
Run ID: *RUN1* **Start Date:** *04/25/12*

Date	Time	O2	CO2	CO	THC	NOx
4/25/2012	11:19:00	20.06	1.08	4.07	1.46	51.
4/25/2012	11:20:00	20.48	0.52	2.5	1.56	53.01
4/25/2012	11:21:00	20.53	0.46	3.46	2.13	31.66
4/25/2012	11:22:00	20.67	0.23	-1.21	1.89	14.36
4/25/2012	11:23:00	20.7	0.23	-2.06	1.73	-1.31
4/25/2012	11:24:00	20.15	1.01	7.99	1.98	22.79
4/25/2012	11:25:00	20.23	0.89	8.58	1.83	13.74
4/25/2012	11:26:00	20.13	0.98	6.66	1.71	60.41
4/25/2012	11:27:00	20.28	0.77	1.78	1.46	107.06
4/25/2012	11:28:00	20.31	0.59	-0.5	1.37	103.89
4/25/2012	11:29:00	20.08	1.06	1.52	1.62	73.33
4/25/2012	11:30:00	20.02	1.02	1.31	1.97	134.43
4/25/2012	11:31:00	20.14	1.01	1.41	1.84	51.52
4/25/2012	11:32:00	20.24	0.89	-0.13	1.81	116.06
4/25/2012	11:33:00	20.37	0.58	-0.9	1.58	123.66
4/25/2012	11:34:00	20.08	1.07	2.22	2.	83.46
4/25/2012	11:35:00	20.05	1.06	1.52	2.12	84.93
4/25/2012	11:36:00	20.06	1.	1.37	2.15	31.11
4/25/2012	11:37:00	20.19	0.99	0.34	2.26	101.86
4/25/2012	11:38:00	20.05	1.06	0.74	2.29	94.09
4/25/2012	11:39:00	20.26	0.66	-1.25	2.32	106.26
4/25/2012	11:40:00	20.43	0.59	2.21	2.95	42.72
4/25/2012	11:41:00	20.09	0.94	4.16	3.03	144.85
4/25/2012	11:42:00	20.48	0.48	2.55	2.91	27.18
4/25/2012	11:43:00	20.67	0.3	-1.27	2.72	4.34
4/25/2012	11:44:00	20.62	0.32	-1.65	3.05	-1.68
4/25/2012	11:45:00	20.16	0.97	18.36	3.36	23.45
4/25/2012	11:46:00	20.67	0.23	5.5	2.89	1.75
4/25/2012	11:47:00	20.16	0.96	2.71	3.04	17.72
4/25/2012	11:48:00	20.04	1.09	2.13	2.98	101.12
4/25/2012	11:49:00	20.31	0.88	0.12	2.79	39.09

AVERAGED CEM DATA

Job Number: *49064*
Run ID: *RUN1*

Start Time: *08:33:00*
Start Date: *04/25/12*

Date	Time	O2	CO2	CO	THC	NOx
4/25/2012	11:50:00	20.06	1.1	0.83	2.58	93.07
Average Value:		**20.29**	**0.78**	**4.14**	**1.61**	**61.1**
Corrected Average:		**20.44**	**.74**	**4.51**	**1.62**	**63.89**

AVERAGED CEM DATA

Job Number: *49064* **Start Time:** *13:00:00*
Run ID: *RUN2* **Start Date:** *04/25/12*

Date	Time	O2	CO2	CO	THC	NOx
4/25/2012	13:01:00	20.5	0.35	3.33	4.9	24.96
4/25/2012	13:02:00	20.56	0.44	-2.64	4.19	8.32
4/25/2012	13:03:00	20.24	0.7	7.	4.7	107.11
4/25/2012	13:04:00	20.21	0.88	7.48	4.01	70.71
4/25/2012	13:05:00	20.14	0.91	15.93	4.02	52.62
4/25/2012	13:06:00	20.43	0.5	11.74	3.5	51.31
4/25/2012	13:07:00	20.24	0.73	27.37	1.98	38.03
4/25/2012	13:08:00	20.14	0.86	9.27	3.71	77.5
4/25/2012	13:09:00	20.12	0.93	13.26	3.57	45.11
4/25/2012	13:10:00	20.15	0.93	7.73	2.8	40.19
4/25/2012	13:11:00	20.34	0.57	1.25	1.86	128.14
4/25/2012	13:12:00	20.18	0.75	13.4	2.19	46.82
4/25/2012	13:13:00	20.08	0.96	4.43	1.87	95.4
4/25/2012	13:14:00	20.11	1.04	6.54	2.94	61.28
4/25/2012	13:15:00	20.05	0.98	11.19	3.58	42.44
4/25/2012	13:16:00	20.43	0.5	15.44	3.54	62.66
4/25/2012	13:17:00	20.18	0.79	57.63	3.92	49.99
4/25/2012	13:18:00	20.05	0.99	15.35	3.26	77.87
4/25/2012	13:19:00	20.12	0.97	6.56	2.5	65.67
4/25/2012	13:20:00	20.49	0.31	1.71	1.69	111.7
4/25/2012	13:21:00	20.55	0.32	2.47	1.93	39.3
4/25/2012	13:22:00	20.53	0.42	2.79	2.04	21.8
4/25/2012	13:23:00	20.7	0.11	-2.08	2.88	2.2
4/25/2012	13:24:00	20.45	0.69	1.57	2.24	15.94
4/25/2012	13:25:00	20.33	0.51	2.8	1.98	195.08
4/25/2012	13:26:00	20.21	0.71	5.58	4.18	128.55
4/25/2012	13:27:00	20.13	0.87	25.21	2.28	37.73
4/25/2012	13:28:00	20.04	0.9	15.97	1.83	39.79
4/25/2012	13:29:00	20.36	0.77	5.45	1.73	49.52
4/25/2012	13:30:00	20.19	0.64	3.03	1.75	110.46
4/25/2012	13:31:00	20.19	0.79	11.23	1.74	59.67
4/25/2012	13:32:00	20.1	0.94	5.32	1.7	71.73
4/25/2012	13:33:00	20.13	0.92	12.69	1.57	46.85

AVERAGED CEM DATA

Job Number: *49064*
Run ID: *RUN2*

Start Time: *13:00:00*
Start Date: *04/25/12*

Date	Time	O2	CO2	CO	THC	NOx
4/25/2012	13:34:00	20.65	0.15	6.94	18.6	24.61
4/25/2012	13:35:00	20.52	0.48	2.33	25.02	2.09
4/25/2012	13:36:00	20.19	0.77	3.84	3.3	90.23
4/25/2012	13:37:00	20.15	0.74	9.63	1.76	110.41
4/25/2012	13:38:00	20.08	0.96	4.35	1.69	140.8
4/25/2012	13:39:00	20.1	0.98	9.69	1.68	66.52
4/25/2012	13:40:00	20.18	0.84	21.49	2.04	51.61
4/25/2012	13:41:00	20.3	0.49	40.73	3.42	38.15
4/25/2012	13:42:00	20.11	0.88	10.76	1.93	118.32
4/25/2012	13:43:00	20.5	0.36	3.08	1.9	35.2
4/25/2012	13:44:00	20.56	0.43	2.72	2.04	10.21
4/25/2012	13:45:00	20.66	0.19	0.74	3.32	39.45
4/25/2012	13:46:00	20.73	0.16	-0.18	2.51	-2.62
4/25/2012	13:47:00	20.7	0.12	-4.8	1.83	-3.93
4/25/2012	13:48:00	20.18	0.81	26.99	3.42	42.22
4/25/2012	13:49:00	20.16	0.88	32.61	3.34	98.06
4/25/2012	13:50:00	20.29	0.78	14.54	3.2	64.95
4/25/2012	13:51:00	20.29	0.77	5.69	3.34	113.97
4/25/2012	13:52:00	20.14	0.54	8.57	3.81	80.3
4/25/2012	13:53:00	20.12	0.89	22.91	2.1	37.26
4/25/2012	13:54:00	20.14	0.91	17.09	1.66	34.41
4/25/2012	13:55:00	20.39	0.66	17.18	1.68	35.28
4/25/2012	13:56:00	20.24	0.71	59.51	1.71	53.43
4/25/2012	13:57:00	20.1	0.85	13.19	1.61	141.15
4/25/2012	13:58:00	20.	0.97	3.36	1.62	104.02
4/25/2012	13:59:00	20.28	0.87	1.92	1.54	49.
4/25/2012	14:00:00	20.4	0.42	0.24	1.63	156.57
4/25/2012	14:01:00	20.12	0.91	8.41	3.48	82.2
4/25/2012	14:02:00	20.07	0.97	20.84	3.66	44.04
4/25/2012	14:03:00	20.26	0.86	17.59	3.3	12.32
4/25/2012	14:04:00	20.26	0.81	22.85	3.25	29.93
4/25/2012	14:05:00	20.3	0.61	4.63	3.71	78.86
4/25/2012	14:06:00	20.49	0.45	4.19	3.91	29.23

AVERAGED CEM DATA

Job Number: *49064* **Start Time:** *13:00:00*
Run ID: *RUN2* **Start Date:** *04/25/12*

Date	Time	O2	CO2	CO	THC	NOx
4/25/2012	14:07:00	20.54	0.33	4.71	4.25	28.33
4/25/2012	14:08:00	20.34	0.6	2.32	3.93	24.62
4/25/2012	14:09:00	20.3	0.58	3.84	4.94	107.54
4/25/2012	14:10:00	20.12	0.86	3.77	4.45	223.22
4/25/2012	14:11:00	20.12	0.89	13.	2.68	38.53
4/25/2012	14:12:00	20.07	0.88	10.82	1.82	32.37
4/25/2012	14:13:00	20.35	0.6	6.63	1.74	42.68
4/25/2012	14:14:00	20.24	0.63	15.03	1.73	39.48
4/25/2012	14:15:00	20.13	0.8	5.35	1.68	159.21
4/25/2012	14:16:00	20.08	0.99	2.69	1.74	117.87
4/25/2012	14:17:00	20.09	0.93	1.44	1.69	70.32
4/25/2012	14:18:00	20.4	0.61	0.83	1.73	75.4
4/25/2012	14:19:00	20.22	0.64	3.59	28.71	83.96
4/25/2012	14:20:00	20.15	0.89	2.6	4.07	173.88
4/25/2012	14:21:00	20.08	1.02	2.87	2.3	85.96
4/25/2012	14:22:00	20.65	0.19	-0.64	1.47	46.33
4/25/2012	14:23:00	20.75	0.2	-1.17	1.45	-0.8
4/25/2012	14:24:00	20.75	0.14	-4.89	1.46	-2.1
4/25/2012	14:25:00	20.73	0.14	-0.8	1.48	-2.51
4/25/2012	14:26:00	20.78	0.08	-1.51	1.39	-5.16
4/25/2012	14:27:00	20.73	0.12	-1.5	6.72	-3.61
4/25/2012	14:28:00	20.24	0.81	2.85	12.89	11.23
4/25/2012	14:29:00	20.26	0.75	6.19	3.52	119.86
4/25/2012	14:30:00	20.3	0.37	16.99	3.9	61.7
4/25/2012	14:31:00	20.54	0.41	3.72	3.83	27.94
4/25/2012	14:32:00	20.14	0.93	6.68	3.78	108.5
4/25/2012	14:33:00	20.4	0.6	3.23	3.61	55.68
4/25/2012	14:34:00	20.44	0.36	0.59	4.52	90.93
4/25/2012	14:35:00	20.5	0.35	0.72	4.61	34.16
4/25/2012	14:36:00	20.15	0.82	8.39	4.46	53.76
4/25/2012	14:37:00	20.24	0.82	7.55	4.06	25.69
4/25/2012	14:38:00	20.37	0.5	5.87	4.36	65.59
4/25/2012	14:39:00	20.28	0.59	2.32	[illegible]	100.16

AVERAGED CEM DATA

Job Number: *49064*
Run ID: *RUN2*

Start Time: *13:00:00*
Start Date: *04/25/12*

Date	Time	O2	CO2	CO	THC	NOx
4/25/2012	14:40:00	20.7	0.12	-0.27	3.92	5.75
4/25/2012	14:41:00	19.77	1.41	28.14	3.37	21.24
4/25/2012	14:42:00	20.46	0.4	12.31	3.6	43.55
4/25/2012	14:43:00	20.24	0.7	13.43	2.18	47.29
4/25/2012	14:44:00	20.35	0.71	2.15	1.9	12.98
4/25/2012	14:45:00	20.26	0.7	0.85	2.12	90.2
4/25/2012	14:46:00	20.26	0.58	8.62	3.92	52.43
4/25/2012	14:47:00	20.07	0.96	5.86	3.86	87.55
4/25/2012	14:48:00	20.13	0.91	3.74	2.8	111.61
4/25/2012	14:49:00	20.67	0.15	-1.53	2.22	54.28
4/25/2012	14:50:00	20.71	0.16	-0.93	2.17	1.09
4/25/2012	14:51:00	20.71	0.11	-2.26	2.14	-2.35
4/25/2012	14:52:00	20.73	0.14	-2.66	1.81	-3.92
4/25/2012	14:53:00	20.74	0.13	-0.8	1.55	-3.68
4/25/2012	14:54:00	20.74	0.08	-3.58	1.57	-3.86
4/25/2012	14:55:00	20.66	0.08	-0.82	1.13	-4.32
4/25/2012	14:56:00	20.79	0.07	-2.43	1.97	-3.1
4/25/2012	14:57:00	20.24	0.76	12.77	5.75	17.11
4/25/2012	14:58:00	20.4	0.64	5.46	3.76	29.16
4/25/2012	14:59:00	20.32	0.6	-2.01	4.21	68.43
4/25/2012	15:00:00	20.24	0.75	1.77	4.08	84.21
4/25/2012	15:01:00	20.15	0.86	3.06	2.48	74.02
4/25/2012	15:02:00	20.14	0.88	6.18	2.43	37.97
4/25/2012	15:03:00	20.34	0.75	4.76	2.37	40.88
4/25/2012	15:04:00	20.35	0.4	4.11	2.45	81.42
4/25/2012	15:05:00	20.52	0.34	2.42	2.88	46.88
4/25/2012	15:06:00	20.15	0.85	5.1	3.21	54.07
4/25/2012	15:07:00	20.27	0.79	9.26	3.05	26.86
4/25/2012	15:08:00	20.37	0.41	13.1	2.6	45.7
4/25/2012	15:09:00	20.22	0.7	30.44	2.59	35.12
4/25/2012	15:10:00	20.68	0.17	0.07	2.47	3.32
4/25/2012	15:11:00	20.13	0.95	0.51	2.53	69.33
4/25/2012	15:12:00	20.54	0.4	0.74	2.39	24.16

AVERAGED CEM DATA

Job Number: *49064* **Start Time:** *13:00:00*
Run ID: *RUN2* **Start Date:** *04/25/12*

Date	Time	O2	CO2	CO	THC	NOx
4/25/2012	15:13:00	20.67	0.12	-0.27	2.46	37.75
4/25/2012	15:14:00	20.71	0.09	-1.02	2.37	-1.17
4/25/2012	15:15:00	20.55	0.09	-2.86	2.51	-1.38
4/25/2012	15:16:00	20.73	0.09	-1.52	2.5	-2.36
4/25/2012	15:17:00	20.74	0.23	-0.61	6.57	-5.3
4/25/2012	15:18:00	20.35	0.51	1.08	17.13	8.72
4/25/2012	15:19:00	20.41	0.46	2.26	4.02	158.3
4/25/2012	15:20:00	20.54	0.41	0.21	3.61	6.78
4/25/2012	15:21:00	20.35	0.47	1.63	4.3	87.29
4/25/2012	15:22:00	20.19	0.87	3.03	4.35	55.8
4/25/2012	15:23:00	20.14	0.86	17.82	4.43	43.17
4/25/2012	15:24:00	20.2	0.87	11.25	3.64	22.61
4/25/2012	15:25:00	20.31	0.65	6.43	2.85	68.52
4/25/2012	15:26:00	20.35	0.46	5.35	2.69	52.46
4/25/2012	15:27:00	20.16	0.93	13.39	4.21	35.75
4/25/2012	15:28:00	20.14	0.89	9.49	4.42	59.24
4/25/2012	15:29:00	20.54	0.47	-2.35	4.04	26.9
4/25/2012	15:30:00	20.27	0.69	1.05	4.6	125.12
4/25/2012	15:31:00	20.49	0.58	2.14	3.84	10.36
4/25/2012	15:32:00	20.33	0.46	8.79	4.48	43.46
4/25/2012	15:33:00	20.1	0.9	6.79	2.99	38.51
4/25/2012	15:34:00	20.57	0.3	0.24	2.64	12.02
4/25/2012	15:35:00	20.41	0.65	3.45	3.16	37.27
4/25/2012	15:36:00	20.31	0.54	3.65	4.47	61.71
4/25/2012	15:37:00	20.19	0.73	0.1	3.46	8.37
4/25/2012	15:38:00	20.3	0.61	3.48	3.11	59.02
4/25/2012	15:39:00	20.26	0.63	12.7	3.62	61.51
4/25/2012	15:40:00	20.53	0.4	1.98	3.23	28.28
4/25/2012	15:41:00	20.19	0.91	6.29	3.36	65.85
4/25/2012	15:42:00	20.38	0.72	10.56	3.42	71.42
4/25/2012	15:43:00	20.46	0.38	25.89	2.87	38.27
4/25/2012	15:44:00	20.57	0.34	4.08	2.75	-0.31
4/25/2012	15:45:00	20.18	0.76	4.5	[illegible]	98.93

AVERAGED CEM DATA

Job Number: *49064*
Run ID: *RUN2*

Start Time: *13:00:00*
Start Date: *04/25/12*

Date	Time	O2	CO2	CO	THC	NOx
4/25/2012	15:46:00	20.17	0.86	3.1	2.82	123.43
4/25/2012	15:47:00	20.19	0.89	2.01	2.89	42.98
4/25/2012	15:48:00	20.25	0.89	2.97	2.78	66.47
4/25/2012	15:49:00	20.39	0.37	-1.67	2.66	103.61
4/25/2012	15:50:00	20.15	0.91	3.92	2.67	110.63
4/25/2012	15:51:00	20.09	0.9	3.52	2.73	75.1
4/25/2012	15:52:00	20.2	0.97	2.6	2.68	27.54
4/25/2012	15:53:00	20.42	0.62	7.84	2.66	42.49
4/25/2012	15:54:00	20.22	0.7	10.05	2.82	41.26
4/25/2012	15:55:00	20.14	0.96	2.83	2.76	140.25
4/25/2012	15:56:00	20.53	0.33	0.38	2.78	42.8
4/25/2012	15:57:00	20.47	0.63	2.41	2.77	21.5
4/25/2012	15:58:00	20.27	0.67	9.46	3.21	43.43
4/25/2012	15:59:00	20.1	0.84	15.31	3.69	33.54
4/25/2012	16:00:00	20.07	0.98	6.02	4.37	74.48
4/25/2012	16:01:00	20.13	0.84	5.76	4.3	37.32
4/25/2012	16:02:00	20.56	0.22	1.32	4.77	168.33
4/25/2012	16:03:00	20.72	0.12	-4.02	4.4	1.33
4/25/2012	16:04:00	20.75	0.13	-1.3	4.06	-1.38
4/25/2012	16:05:00	20.73	0.12	-2.26	3.79	-1.41
4/25/2012	16:06:00	20.73	0.12	-4.79	3.1	-3.99
4/25/2012	16:07:00	20.72	0.21	-0.6	6.18	-3.21
4/25/2012	16:08:00	20.44	0.33	0.29	5.13	34.37
4/25/2012	16:09:00	20.14	0.89	2.07	4.88	64.21
4/25/2012	16:10:00	20.2	0.78	10.16	4.25	27.03
4/25/2012	16:11:00	20.47	0.35	9.64	4.04	36.18
4/25/2012	16:12:00	20.19	0.81	11.27	4.25	39.16
4/25/2012	16:13:00	20.68	0.13	-1.38	3.93	5.26
4/25/2012	16:14:00	20.12	0.85	7.13	2.46	44.51
4/25/2012	16:15:00	20.17	0.94	5.85	2.27	25.46
4/25/2012	16:16:00	20.45	0.55	1.82	2.21	55.74
4/25/2012	16:17:00	20.26	0.69	4.65	2.39	52.82
4/25/2012	16:18:00	20.17	0.87	3.71	2.43	133.65

AVERAGED CEM DATA

Job Number: *49064*
Run ID: *RUN2*

Start Time: *13:00:00*
Start Date: *04/25/12*

Date	Time	O2	CO2	CO	THC	NOx
4/25/2012	16:19:00	20.54	0.37	0.23	2.34	34.09
4/25/2012	16:20:00	20.34	0.86	1.84	3.06	26.26
4/25/2012	16:21:00	20.5	0.26	-0.07	2.82	115.92
4/25/2012	16:22:00	20.72	0.12	-3.96	2.54	4.13
4/25/2012	16:23:00	20.09	0.9	25.93	2.42	32.55
4/25/2012	16:24:00	20.25	0.79	10.01	3.39	19.75
4/25/2012	16:25:00	20.27	0.8	2.1	3.46	71.44
4/25/2012	16:26:00	20.35	0.45	-1.3	2.3	111.33
4/25/2012	16:27:00	20.15	0.75	1.61	2.33	67.72
4/25/2012	16:28:00	20.1	0.97	5.49	2.35	54.17
4/25/2012	16:29:00	20.15	0.88	1.43	2.31	32.
4/25/2012	16:30:00	20.22	1.	2.07	2.33	63.32
4/25/2012	16:31:00	20.35	0.43	1.18	2.26	68.99
4/25/2012	16:32:00	20.16	0.82	-0.67	2.3	101.06
4/25/2012	16:33:00	20.05	0.94	1.7	3.74	118.84
4/25/2012	16:34:00	20.39	0.77	0.88	3.53	45.7
4/25/2012	16:35:00	20.39	0.46	-2.36	2.22	91.15
Average Value:		**20.33**	**0.62**	**6.31**	**3.42**	**53.94**
Corrected Average:		**20.59**	**.63**	**6.58**	**3.19**	**57.59**

AVERAGED CEM DATA

Job Number: *49064*
Run ID: *RUN3*

Start Time: *08:15:00*
Start Date: *04/26/12*

Date	Time	O2	CO2	CO	THC	NOx
4/26/2012	08:16:00	20.57	0.36	0.48	20.78	-2.98
4/26/2012	08:17:00	20.07	0.78	3.88	1.5	73.43
4/26/2012	08:18:00	20.09	0.93	11.07	1.66	38.1
4/26/2012	08:19:00	20.41	0.4	8.77	1.77	29.34
4/26/2012	08:20:00	20.03	0.99	6.65	2.	36.17
4/26/2012	08:21:00	20.05	0.96	8.82	2.12	45.32
4/26/2012	08:22:00	20.15	0.86	10.19	2.13	38.72
4/26/2012	08:23:00	20.16	0.86	6.37	1.63	108.22
4/26/2012	08:24:00	20.03	1.	7.46	1.19	56.01
4/26/2012	08:25:00	20.29	0.47	2.4	1.28	116.
4/26/2012	08:26:00	20.02	1.	7.3	1.79	50.36
4/26/2012	08:27:00	20.6	0.22	0.39	1.48	20.55
4/26/2012	08:28:00	20.04	0.93	7.84	1.45	55.37
4/26/2012	08:29:00	19.97	0.99	2.36	1.52	103.94
4/26/2012	08:30:00	19.99	1.02	1.8	1.48	134.69
4/26/2012	08:31:00	20.01	1.02	1.29	1.3	84.1
4/26/2012	08:32:00	20.31	0.55	-3.15	1.23	49.76
4/26/2012	08:33:00	20.21	0.62	0.12	1.08	121.67
4/26/2012	08:34:00	20.43	0.43	1.22	1.31	42.47
4/26/2012	08:35:00	20.	0.98	7.04	1.61	88.47
4/26/2012	08:36:00	20.	1.	16.2	1.76	46.78
4/26/2012	08:37:00	20.08	1.02	9.5	1.96	93.2
4/26/2012	08:38:00	20.37	0.46	3.63	1.99	108.73
4/26/2012	08:39:00	20.1	0.96	3.54	1.87	44.94
4/26/2012	08:40:00	20.49	0.24	-0.57	1.68	72.28
4/26/2012	08:41:00	20.07	0.94	2.28	2.62	46.44
4/26/2012	08:42:00	20.51	0.25	-5.8	2.56	53.28
4/26/2012	08:43:00	20.09	0.86	15.79	1.92	92.78
4/26/2012	08:44:00	20.01	0.93	8.58	1.34	83.23
4/26/2012	08:45:00	20.05	0.9	17.8	1.1	53.62
4/26/2012	08:46:00	20.09	0.94	10.89	1.26	31.43
4/26/2012	08:47:00	20.28	0.59	2.14	1.58	97.68
4/26/2012	08:48:00	20.12	0.77	1.23	1.45	93.75

AVERAGED CEM DATA

Job Number: *49064* **Start Time:** *08:15:00*
Run ID: *RUN3* **Start Date:** *04/26/12*

Date	Time	O2	CO2	CO	THC	NOx
4/26/2012	08:49:00	20.	0.95	6.37	1.52	54.91
4/26/2012	08:50:00	19.95	1.05	4.33	1.56	73.81
4/26/2012	08:51:00	19.95	1.	10.77	1.57	64.67
4/26/2012	08:52:00	20.43	0.45	4.13	1.48	48.86
4/26/2012	08:53:00	20.56	0.25	0.56	1.9	25.
4/26/2012	08:54:00	20.04	0.95	1.54	1.38	115.68
4/26/2012	08:55:00	20.49	0.49	0.08	1.2	9.86
4/26/2012	08:56:00	20.03	0.98	6.32	1.32	72.38
4/26/2012	08:57:00	20.08	0.8	10.53	1.53	38.73
4/26/2012	08:58:00	20.04	0.9	22.82	1.74	62.91
4/26/2012	08:59:00	20.4	0.48	13.75	2.17	39.05
4/26/2012	09:00:00	20.	0.96	7.33	2.15	62.38
4/26/2012	09:01:00	20.56	0.21	0.89	1.95	30.01
4/26/2012	09:02:00	20.	1.03	6.92	1.89	45.93
4/26/2012	09:03:00	20.51	0.16	1.26	2.01	7.93
4/26/2012	09:04:00	20.63	0.15	-2.09	1.42	0.13
4/26/2012	09:05:00	19.58	1.65	36.08	1.48	24.65
4/26/2012	09:06:00	20.03	1.02	18.23	1.15	31.91
4/26/2012	09:07:00	20.42	0.29	2.89	0.95	83.18
4/26/2012	09:08:00	20.	0.97	10.19	1.68	95.5
4/26/2012	09:09:00	19.99	0.93	21.15	1.42	42.96
4/26/2012	09:10:00	19.98	0.98	18.29	1.41	64.43
4/26/2012	09:11:00	20.1	0.91	7.73	1.42	49.72
4/26/2012	09:12:00	20.2	0.79	3.67	1.51	48.97
4/26/2012	09:13:00	20.3	0.46	1.25	1.45	120.18
4/26/2012	09:14:00	20.5	0.31	-0.56	1.33	7.78
4/26/2012	09:15:00	19.96	0.92	21.11	1.69	47.15
4/26/2012	09:16:00	20.62	0.17	6.88	1.45	14.01
4/26/2012	09:17:00	20.02	0.96	3.19	1.23	118.62
4/26/2012	09:18:00	20.01	0.96	3.4	1.47	82.03
4/26/2012	09:19:00	20.41	0.39	1.93	1.67	47.53
4/26/2012	09:20:00	20.09	0.89	4.73	2.17	68.63
4/26/2012	09:21:00	20.58	0.23	3.57	1.76	38.84

AVERAGED CEM DATA

Job Number: *49064*
Run ID: *RUN3*

Start Time: *08:15:00*
Start Date: *04/26/12*

Date	Time	O2	CO2	CO	THC	NOx
4/26/2012	09:22:00	20.29	0.69	4.3	1.85	0.63
4/26/2012	09:23:00	20.35	0.35	3.69	1.79	135.52
4/26/2012	09:24:00	20.58	0.16	0.55	1.82	4.13
4/26/2012	09:25:00	20.04	0.88	2.4	1.23	74.3
4/26/2012	09:26:00	20.12	0.8	12.63	1.31	46.13
4/26/2012	09:27:00	20.17	0.83	6.74	1.1	24.81
4/26/2012	09:28:00	20.07	0.89	6.17	1.03	47.59
4/26/2012	09:29:00	20.42	0.32	0.5	1.38	99.51
4/26/2012	09:30:00	20.06	0.9	1.55	1.41	110.06
4/26/2012	09:31:00	20.04	0.91	1.26	1.43	135.24
4/26/2012	09:32:00	20.06	0.93	1.3	1.54	110.67
4/26/2012	09:33:00	20.	0.95	3.95	1.49	125.44
4/26/2012	09:34:00	20.13	0.9	4.19	1.73	54.12
4/26/2012	09:35:00	20.02	0.92	11.64	1.53	154.37
4/26/2012	09:36:00	20.36	0.41	14.64	1.28	49.04
4/26/2012	09:37:00	20.32	0.55	4.61	1.48	26.72
4/26/2012	09:38:00	20.12	0.76	5.25	1.5	78.51
4/26/2012	09:39:00	20.55	0.35	-0.43	1.16	5.3
4/26/2012	09:40:00	20.11	0.78	2.28	1.15	76.31
4/26/2012	09:41:00	20.45	0.42	4.31	1.62	43.94
4/26/2012	09:42:00	20.3	0.55	11.25	2.21	44.97
4/26/2012	09:43:00	20.55	0.23	5.22	1.41	57.69
4/26/2012	09:44:00	20.69	0.12	0.86	2.42	5.89
4/26/2012	09:45:00	20.2	0.83	3.8	1.48	25.17
4/26/2012	09:46:00	20.21	0.82	3.38	1.28	55.97
4/26/2012	09:47:00	20.17	0.71	3.18	1.	108.75
4/26/2012	09:48:00	20.21	0.7	10.34	0.91	36.8
4/26/2012	09:49:00	20.	0.8	4.18	0.76	75.68
4/26/2012	09:50:00	20.13	0.78	1.6	0.7	100.22
4/26/2012	09:51:00	19.99	0.89	1.76	0.68	97.24
4/26/2012	09:52:00	20.09	0.88	1.79	0.64	59.01
4/26/2012	09:53:00	20.19	0.86	0.33	0.64	41.2
4/26/2012	09:54:00	20.2	0.75	0.4	0.59	122.2

AVERAGED CEM DATA

Job Number: *49064* **Start Time:** *08:15:00*
Run ID: *RUN3* **Start Date:** *04/26/12*

Date	Time	O2	CO2	CO	THC	NOx
4/26/2012	09:55:00	19.97	0.96	2.23	0.59	92.96
4/26/2012	09:56:00	20.24	0.51	1.25	0.59	99.31
4/26/2012	09:57:00	20.38	0.52	2.04	1.07	60.61
4/26/2012	09:58:00	20.11	0.92	3.73	1.31	71.33
4/26/2012	09:59:00	20.64	0.18	-1.65	0.97	5.66
4/26/2012	10:00:00	20.02	0.98	1.62	1.05	62.73
4/26/2012	10:01:00	20.03	0.92	3.87	1.23	138.44
4/26/2012	10:02:00	20.12	0.85	31.56	1.34	43.41
4/26/2012	10:03:00	20.4	0.41	11.12	1.38	40.76
4/26/2012	10:04:00	20.04	0.92	5.97	1.76	89.47
4/26/2012	10:05:00	20.57	0.2	1.94	1.77	50.29
4/26/2012	10:06:00	20.07	0.9	7.94	1.72	35.03
4/26/2012	10:07:00	20.55	0.2	4.19	1.47	37.2
4/26/2012	10:08:00	20.15	0.81	4.45	1.52	106.63
4/26/2012	10:09:00	20.03	0.9	3.27	1.18	130.49
4/26/2012	10:10:00	20.29	0.71	0.7	1.3	79.51
4/26/2012	10:11:00	20.29	0.45	0.54	1.21	112.31
4/26/2012	10:12:00	20.08	0.9	3.03	1.24	70.17
4/26/2012	10:13:00	20.07	0.9	3.01	1.37	118.65
4/26/2012	10:14:00	20.08	0.91	1.85	1.36	78.21
4/26/2012	10:15:00	20.14	0.79	2.64	1.44	92.81
4/26/2012	10:16:00	19.98	0.96	5.04	1.36	108.6
4/26/2012	10:17:00	20.23	0.54	-2.28	1.07	142.35
4/26/2012	10:18:00	20.44	0.38	3.23	1.58	42.12
4/26/2012	10:19:00	20.07	0.93	16.86	1.4	20.65
4/26/2012	10:20:00	20.55	0.23	12.81	1.86	18.8
4/26/2012	10:21:00	20.	0.98	6.92	2.08	54.01
4/26/2012	10:22:00	19.99	1.	4.64	1.9	105.93
4/26/2012	10:23:00	20.09	0.93	11.5	2.9	55.8
4/26/2012	10:24:00	20.31	0.43	10.24	2.31	29.11
4/26/2012	10:25:00	20.25	0.76	7.82	2.1	22.63
4/26/2012	10:26:00	20.37	0.4	7.95	2.65	49.15
4/26/2012	10:27:00	20.17	0.81	5.76	2.08	1.49

AVERAGED CEM DATA

Job Number: *49064*
Run ID: *RUN3*

Start Time: *08:15:00*
Start Date: *04/26/12*

Date	Time	O2	CO2	CO	THC	NOx
4/26/2012	10:28:00	20.45	0.29	5.66	1.68	55.78
4/26/2012	10:29:00	20.22	0.71	1.91	1.78	2.7
4/26/2012	10:30:00	20.13	0.83	2.68	1.4	82.71
4/26/2012	10:31:00	20.29	0.49	-1.31	1.4	140.98
4/26/2012	10:32:00	20.1	0.87	0.89	1.41	121.37
4/26/2012	10:33:00	20.21	0.87	1.28	1.44	14.62
4/26/2012	10:34:00	20.	0.94	4.37	1.45	57.81
4/26/2012	10:35:00	20.21	0.68	0.76	1.52	82.36
4/26/2012	10:36:00	20.01	0.84	1.44	1.59	97.41
4/26/2012	10:37:00	20.11	0.75	2.94	1.43	94.7
4/26/2012	10:38:00	20.03	0.96	1.96	1.3	79.32
4/26/2012	10:39:00	20.37	0.4	1.2	1.37	55.02
4/26/2012	10:40:00	20.42	0.5	1.71	1.86	25.88
4/26/2012	10:41:00	20.2	0.6	1.99	1.76	109.51
4/26/2012	10:42:00	20.34	0.68	-0.94	1.71	10.82
4/26/2012	10:43:00	19.93	1.06	2.18	1.57	114.02
4/26/2012	10:44:00	20.24	0.54	1.94	1.53	102.69
4/26/2012	10:45:00	20.43	0.39	6.8	2.17	42.52
4/26/2012	10:46:00	20.07	0.89	7.83	2.65	88.52
4/26/2012	10:47:00	20.59	0.2	4.02	2.24	14.19
4/26/2012	10:48:00	19.98	0.93	8.22	2.18	77.6
4/26/2012	10:49:00	20.61	0.17	1.28	1.45	40.44
4/26/2012	10:50:00	20.31	0.72	0.18	1.18	2.17
4/26/2012	10:51:00	20.08	0.81	0.82	1.08	119.21
4/26/2012	10:52:00	20.3	0.48	1.47	0.81	76.63
4/26/2012	10:53:00	20.	0.94	2.83	1.47	62.78
4/26/2012	10:54:00	20.03	0.93	1.67	1.45	113.91
4/26/2012	10:55:00	20.19	0.81	8.99	1.5	34.94
4/26/2012	10:56:00	20.01	0.94	15.68	1.61	46.71
4/26/2012	10:57:00	20.36	0.42	0.99	1.62	124.23
4/26/2012	10:58:00	19.99	0.97	2.93	1.47	93.01
4/26/2012	10:59:00	20.04	0.87	1.22	1.33	106.28
4/26/2012	11:00:00	20.	0.97	6.62	1.26	49.81

AVERAGED CEM DATA

Job Number: *49064*
Run ID: *RUN3*

Start Time: *08:15:00*
Start Date: *04/26/12*

Date	Time	O2	CO2	CO	THC	NOx
4/26/2012	11:01:00	20.04	0.92	2.82	1.02	89.31
4/26/2012	11:02:00	20.43	0.43	0.87	1.04	62.84
4/26/2012	11:03:00	20.61	0.19	0.43	1.72	26.21
4/26/2012	11:04:00	20.53	0.33	0.77	1.62	1.22
4/26/2012	11:05:00	19.96	0.93	14.17	1.93	51.57
4/26/2012	11:06:00	19.95	0.9	8.07	1.83	120.73
4/26/2012	11:07:00	20.	0.95	6.48	2.69	112.82
4/26/2012	11:08:00	20.4	0.43	2.75	2.23	67.53
4/26/2012	11:09:00	20.08	0.98	7.29	2.2	46.65
4/26/2012	11:10:00	20.61	0.19	0.75	1.42	22.48
4/26/2012	11:11:00	20.09	0.9	6.88	1.23	24.17
4/26/2012	11:12:00	20.53	0.18	1.88	0.92	19.57
4/26/2012	11:13:00	20.12	0.86	1.24	1.26	86.39
4/26/2012	11:14:00	20.04	0.89	5.17	1.56	75.81
4/26/2012	11:15:00	20.22	0.82	6.88	1.35	29.
4/26/2012	11:16:00	20.43	0.29	3.64	1.39	56.95
4/26/2012	11:17:00	20.03	0.92	2.25	1.5	44.68
4/26/2012	11:18:00	19.97	0.9	1.49	1.8	115.67
4/26/2012	11:19:00	20.04	0.97	4.51	1.61	75.39
4/26/2012	11:20:00	20.17	0.88	3.95	1.43	38.85
4/26/2012	11:21:00	20.	0.95	4.87	1.32	110.81
4/26/2012	11:22:00	20.35	0.38	2.26	0.99	82.45
4/26/2012	11:23:00	20.49	0.31	1.16	1.12	31.88
4/26/2012	11:24:00	20.04	0.96	2.61	1.61	64.53
4/26/2012	11:25:00	20.57	0.18	-1.16	1.62	37.41
4/26/2012	11:26:00	19.88	0.96	2.61	1.81	62.51
4/26/2012	11:27:00	19.98	0.97	4.19	2.	110.23
4/26/2012	11:28:00	20.08	0.86	2.58	2.16	127.26
4/26/2012	11:29:00	20.29	0.44	4.08	2.6	98.47
4/26/2012	11:30:00	20.08	0.93	4.41	2.87	37.73
Average Value:		**20.2**	**0.71**	**5.**	**1.64**	**65.22**
Corrected Average:		**20.48**	**.68**	**5.36**	**1.7**	**68.02**

Calibration Records

Reference Method
Instrumental Measurement System Data

Pretest Verifications

Analyzer Response Time

Pollutant CO Analyzer I.D. CAI Model 600

Analyzer Serial No. _____ High Span Gas 454

Date 4/24/2012 Time 1300

Upscale Response		
Run 1	46	seconds
Run 2	46	seconds
Run 3	48	seconds
Average	47	seconds

Downscale Response		
Run 1	47	seconds
Run 2	48	seconds
Run 3	46	seconds
Average	47	seconds

Pollutant _____ Analyzer I.D. _____

Analyzer Serial No. _____ High Span Gas _____

Date _____ Time _____

Upscale Response		
Run 1		seconds
Run 2		seconds
Run 3		seconds
Average		seconds

Downscale Response		
Run 1		seconds
Run 2		seconds
Run 3		seconds
Average		seconds

NO2 Converter Efficiency

Plant I.D.	General Dynamics	Project No.	49064
Source I.D	Building 3	Personnel	BAG
Pollutant	NO2	Analyzer I.D.	Thermo Model 42i
Analyzer Serial No.	0611616411	Span Value	500
Date 4/26/2012	Time 720	Test Method	7E

	Cylinder Value (ppm)	Analyzer Response (ppm)	Converter Efficiency (%) > 90%	Converter Check Pass/Fail
Nitrogen Dioxide Gas	45.0	44.7	99.3	**PASS**
	Cylinder ID CC313844			

$$\text{Converter Efficiency} = \frac{\text{Analyzer Response}}{\text{Cylinder Value}} \times 100$$

NO2 Converter Efficiency

Plant I.D.	General Dynamics	Project No.	49064
Source I.D	Building 3	Personnel	BAG
Pollutant	NO2	Analyzer I.D.	Thermo Model 42i
Analyzer Serial No.	0611616411	Span Value	500
Date 4/25/2012	Time 715	Test Method	7E

	Cylinder Value (ppm)	Analyzer Response (ppm)	Converter Efficiency (%) > 90%	Converter Check Pass/Fail
Nitrogen Dioxide Gas	45.0	45.4	100.9	**PASS**
Cylinder ID CC313844				

$$\text{Converter Efficiency} = \frac{\text{Analyzer Response}}{\text{Cylinder Value}} \times 100$$

On-site Daily Analyzer Calibrations

DAILY CALIBRATION REPORT

Date: *4/25/2012*

Start Time: *07:15:35*
End Time: *08:30:05*

Methods: 3A, 6C, 7E and 10
Job Number: 49064

Param	Span Value	Mid-Gas Standard	Analyzer Zero Response	Analyzer Mid Response	Zero Cal Error	Mid Cal Error	System Zero Response	System Mid Response	System Zero Bias	System Mid Bias
O2	21	11.98	-0.02	12.02	-0.1%	0.2%	0.15	12.	0.8%	-0.1%
CO2	18	8.75	-0.08	8.86	-0.4%	0.7%	0.05	8.67	0.7%	-1.1%
CO	454	248.50	0.16	247.86	0.0%	-0.1%	-0.6	242.29	-0.2%	-1.2%
THC	17	8.00	N/A	N/A	-1.0%	-1.9%	-0.18	7.85	-1.0%	-0.9%
NOx	500	251.00	-0.96	250.92	-0.2%	0.0%	-1.85	244.93	-0.2%	-1.2%

Calibration Error = **100% x (Analyzer Response - Cylinder Gas Standard Value) / (Span Value)**
System Bias = **100% x (System Response - Analyzer Response) / (Span Value)**

For THC Measurements:

Calibration Error = **100% x (System Response - Cylinder Gas Standard Value) / (Cylinder Gas Standard Value)**
System Bias = **100% x (System Response - Cylinder Gas Standard Value) / (Span Value)**

DAILY CALIBRATION REPORT

Start Time: *07:07:11* **Methods: 3A, 6C, 7E and 10**

Date: *4/26/2012* **End Time:** *07:38:09* **Job Number: 49064**

Param	Span Value	Mid-Gas Standard	Analyzer Zero Response	Analyzer Mid Response	Zero Cal Error	Mid Cal Error	System Zero Response	System Mid Response	System Zero Bias	System Mid Bias
O2	21	11.98	0	11.97	0.0%	0.0%	0.13	11.88	0.6%	-0.5%
CO2	18	8.75	0.02	8.72	0.1%	-0.1%	0.03	8.66	0.1%	-0.4%
CO	454	248.50	-0.52	248.87	-0.1%	0.1%	-0.28	244.31	0.1%	-1.0%
THC	17	8.00	N/A	N/A	-0.6%	-0.3%	-0.11	7.98	-0.6%	-0.1%
NOx	500	251.00	-2.87	250.72	-0.6%	-0.1%	-2.12	246.12	0.1%	-0.9%

Calibration Error = **100% x (Analyzer Response - Cylinder Gas Standard Value) / (Span Value)**

System Bias = **100% x (System Response - Analyzer Response) / (Span Value)**

For THC Measurements:

Calibration Error = **100% x (System Response - Cylinder Gas Standard Value) / (Cylinder Gas Standard Value)**

System Bias = **100% x (System Response - Cylinder Gas Standard Value) / (Span Value)**

Daily Analyzer Calibration

Plant I.D.	General Dynamics	Project No.	49064
Source I.D	Building 3	Personnel	BAG
Pollutant	O2	Analyzer I.D.	CAI 600
Analyzer Serial No.	T03021	Span Value	20.95
Date 4/25/2012	Time 715	Test Method	3A

	Cylinder Value (ppm or %)	Analyzer Response (ppm or %)	Calibration Error (% of Span) +/- 2%	System Response (ppm or %)	System Bias (% of Span) +/-5%
Zero Gas	0	-0.02	-0.1	0.15	0.8
Cylinder ID					
Low Level Gas					
Cylinder ID					
Mid Level Gas	11.98	12.02	0.2	12	-0.1
Cylinder ID CC17036					
High Level Gas	20.95	21.01	0.3	NA	NA
Cylinder ID CC350224					

Calibration Error $= \frac{(\text{Analyzer Response - Cylinder Value})}{\text{Span Value}} \times 100$

System Bias $= \frac{(\text{System Response - Analyzer Response})}{\text{Span Value}} \times 100$

Daily Analyzer Calibration

Plant I.D.	General Dynamics	Project No.	49064
Source I.D	Building 3	Personnel	BAG
Pollutant	CO2	Analyzer I.D.	CAI 600
Analyzer Serial No.	T03021	Span Value	17.83
Date 4/25/2012	Time 715	Test Method	3A

	Cylinder Value (ppm or %)	Analyzer Response (ppm or %)	Calibration Error (% of Span) +/- 2%	System Response (ppm or %)	System Bias (% of Span) +/-5%
Zero Gas	0	-0.08	-0.4	0.05	0.7
	Cylinder ID				
Low Level Gas					
	Cylinder ID				
Mid Level Gas	8.75	8.86	0.6	8.67	-1.1
	Cylinder ID CC17036				
High Level Gas	17.83	17.95	0.7	NA	NA
	Cylinder ID CC350224				

Calibration Error $\frac{(\text{Analyzer Response - Cylinder Value})}{\text{Span Value}} \times 100$

System Bias = $\frac{(\text{System Response - Analyzer Response})}{\text{Span Value}} \times 100$

Daily Analyzer Calibration

Plant I.D.	General Dynamics	Project No.	49064
Source I.D	Building 3	Personnel	BAG
Pollutant	NOx	Analyzer I.D.	CAI 600
Analyzer Serial No.	0611616411	Span Value	500
Date 4/25/2012	Time 715	Test Method	7E

	Cylinder Value (ppm or %)	Analyzer Response (ppm or %)	Calibration Error (% of Span) +/- 2%	System Response (ppm or %)	System Bias (% of Span) +/-5%
Zero Gas	0	-0.96	-0.2	-1.85	-0.2
	Cylinder ID				
Low Level Gas					
	Cylinder ID				
Mid Level Gas	251	250.92	0.0	244.93	-1.2
	Cylinder ID	CC108462			
High Level Gas	500	499.4	-0.1	NA	NA
	Cylinder ID	CC350213			

Calibration Error $= \frac{(\text{Analyzer Response} - \text{Cylinder Value})}{\text{Span Value}} \times 100$

System Bias $= \frac{(\text{System Response} - \text{Analyzer Response})}{\text{Span Value}} \times 100$

Daily Analyzer Calibration

Plant I.D.	General Dynamics	Project No.	49064
Source I.D	Building 3	Personnel	BAG
Pollutant	CO	Analyzer I.D.	CAI 600
Analyzer Serial No.	T03021	Span Value	454
Date 4/25/2012	Time 715	Test Method	10

	Cylinder Value (ppm or %)	Analyzer Response (ppm or %)	Calibration Error (% of Span) +/- 2%	System Response (ppm or %)	System Bias (% of Span) +/-5%
Zero Gas	0	0.16	0.0	-0.6	-0.2
	Cylinder ID				
Low Level Gas					
	Cylinder ID				
Mid Level Gas	248.5	247.86	-0.1	242.29	-1.2
	Cylinder ID	CC16078			
High Level Gas	454	455.7	0.4	NA	NA
	Cylinder ID	CC258411			

Calibration Error $\frac{(\text{Analyzer Response - Cylinder Value})}{\text{Span Value}} \times 100$

System Bias = $\frac{(\text{System Response - Analyzer Response})}{\text{Span Value}} \times 100$

Daily THC Analyzer Calibration

Plant I.D.	General Dynamics	Project No.	49064
Source I.D	Building 3	Personnel	BAG
Pollutant	THC	Analyzer I.D.	CAI 300-HFID
Analyzer Serial No.		Span Value	17
Date	4/25/2012 Time 715	Test Method	25A

	Cylinder Value (ppm or %)	System Response (ppm)	Predicted Response (ppm)	Actual Response (ppm)	Calibration Error (% of Cal. Gas) +/-5%
Zero Gas	0	-0.24			
	Cylinder ID				
Low Level Gas	5		4.8	4.88	1.0
	Cylinder ID SA20801				
Mid Level Gas	8		7.9	7.85	-0.3
	Cylinder ID CC22710				
High Level Gas	14.73	14.7			
	Cylinder ID SA4280				

Calibration Error $= \frac{\text{(Actual Response - Predicted Response)}}{\text{Calibration Gas}} \times 100$

Predicted Value = $\left[\frac{\text{(High Response - Zero Response)}}{\text{High Level Gas}} \times \text{Mid or Low Level Gas}\right] + \text{Zero Response}$

Daily Analyzer Calibration

Plant I.D.	General Dynamics	Project No.	49064
Source I.D	Building 3	Personnel	BAG
Pollutant	O2	Analyzer I.D.	CAI 600
Analyzer Serial No.	T03021	Span Value	20.95
Date 4/26/2012	Time	Test Method	3A

	Cylinder Value (ppm or %)	Analyzer Response (ppm or %)	Calibration Error (% of Span) +/- 2%	System Response (ppm or %)	System Bias (% of Span) +/-5%
Zero Gas	0	0	0.0	0.13	0.6
Cylinder ID					
Low Level Gas					
Cylinder ID					
Mid Level Gas	11.98	11.97	0.0	11.88	-0.4
Cylinder ID CC17036					
High Level Gas	20.95	20.89	-0.3	NA	NA
Cylinder ID CC350224					

Calibration Error $\frac{(\text{Analyzer Response - Cylinder Value})}{\text{Span Value}} \times 100$

System Bias = $\frac{(\text{System Response - Analyzer Response})}{\text{Span Value}} \times 100$

Daily Analyzer Calibration

Plant I.D.	General Dynamics	Project No.	49064
Source I.D	Building 3	Personnel	BAG
Pollutant	CO2	Analyzer I.D.	CAI 600
Analyzer Serial No.	T03021	Span Value	17.83
Date 4/26/2012	Time 0	Test Method	3A

	Cylinder Value (ppm or %)	Analyzer Response (ppm or %)	Calibration Error (% of Span) +/- 2%	System Response (ppm or %)	System Bias (% of Span) +/-5%
Zero Gas	0	0.02	0.1	0.03	0.1
	Cylinder ID				
Low Level Gas					
	Cylinder ID				
Mid Level Gas	8.75	8.72	-0.2	8.66	-0.3
	Cylinder ID	CC17036			
High Level Gas	17.83	17.97	0.8	NA	NA
	Cylinder ID	CC350224			

Calibration Error $\frac{(\text{Analyzer Response - Cylinder Value})}{\text{Span Value}} \times 100$

System Bias = $\frac{(\text{System Response - Analyzer Response})}{\text{Span Value}} \times 100$

Daily Analyzer Calibration

Plant I.D.	General Dynamics	Project No.	49064
Source I.D	Building 3	Personnel	BAG
Pollutant	NOx	Analyzer I.D.	CAI 600
Analyzer Serial No.	0611616411	Span Value	500
Date 4/26/2012	Time 0	Test Method	7E

	Cylinder Value (ppm or %)	Analyzer Response (ppm or %)	Calibration Error (% of Span) +/- 2%	System Response (ppm or %)	System Bias (% of Span) +/-5%
Zero Gas	0	-2.87	-0.6	-2.12	0.2
	Cylinder ID				
Low Level Gas					
	Cylinder ID				
Mid Level Gas	251	250.72	-0.1	246.12	-0.9
	Cylinder ID CC108462				
High Level Gas	500	501.1	0.2	NA	NA
	Cylinder ID CC350213				

Calibration Error $\frac{(\text{Analyzer Response - Cylinder Value})}{\text{Span Value}} \times 100$

System Bias = $\frac{(\text{System Response - Analyzer Response})}{\text{Span Value}} \times 100$

O'BRIEN & GERE

Daily Analyzer Calibration

Plant I.D.	General Dynamics	Project No.	49064
Source I.D	Building 3	Personnel	BAG
Pollutant	CO	Analyzer I.D.	CAI 600
Analyzer Serial No.	T03021	Span Value	454
Date 4/26/2012	Time 0	Test Method	10

	Cylinder Value (ppm or %)	Analyzer Response (ppm or %)	Calibration Error (% of Span) +/- 2%	System Response (ppm or %)	System Bias (% of Span) +/-5%
Zero Gas	0	-0.52	-0.1	-0.28	0.1
	Cylinder ID				
Low Level Gas					
	Cylinder ID				
Mid Level Gas	248.5	248.87	0.1	244.31	-1.0
	Cylinder ID	CC16078			
High Level Gas	454	455.3	0.3	NA	NA
	Cylinder ID	CC258411			

$$\text{Calibration Error} = \frac{(\text{Analyzer Response} - \text{Cylinder Value})}{\text{Span Value}} \times 100$$

$$\text{System Bias} = \frac{(\text{System Response} - \text{Analyzer Response})}{\text{Span Value}} \times 100$$

Daily THC Analyzer Calibration

Plant I.D.	General Dynamics	Project No.	49064
Source I.D	Building 3	Personnel	BAG
Pollutant	THC	Analyzer I.D.	CAI 300-HFID
Analyzer Serial No.		Span Value	17
Date	4/26/2012 Time 0	Test Method	25A

	Cylinder Value (ppm or %)	System Response (ppm)	Predicted Response (ppm)	Actual Response (ppm)	Calibration Error (% of Cal. Gas) +/-5%
Zero Gas	0	-0.11			
Cylinder ID					
Low Level Gas	5		5.1	4.89	-3.5
Cylinder ID SA20801					
Mid Level Gas	8		8.2	7.98	-2.3
Cylinder ID CC22710					
High Level Gas	14.73	15.13			
Cylinder ID SA4280					

Calibration Error $\frac{\text{(Actual Response - Predicted Response)}}{\text{Calibration Gas}} \times 100$

Predicted Value = $\left[\frac{\text{(High Response - Zero Response)}}{\text{High Level Gas}} \times \text{Mid or Low Level Gas}\right] + \text{Zero Response}$

EPA Protocol
Cylinder Gas Certifications

PRAXAIR

Praxair Distribution Mid-Atlantic
145 Shimersville Rd.
Bethlehem, PA 18015
Telephone: (610) 317-1608
Facsimile: (610) 758-8382

DocNumber: 000014879

CERTIFICATE OF ANALYSIS / EPA PROTOCOL GAS

Customer & Order Information:

OBRIEN AND GERE ENGIN*MS*
JOB SITE
EAST NORRITON PA 194030

Praxair Order Number: 03323225
Customer P. O. Number: 10056170
Customer Reference Number:

Fill Date: 12/8/2011
Part Number: EV NICDOXE136AS
Lot Number: 917134252
Cylinder Style & Outlet: AS CGA 590
Cylinder Pressure & Volume: 2000 psig 140 cu. ft.

Certified Concentration:

Expiration Date:		12/17/2014	NIST Traceable
Cylinder Number:		CC170306	Analytical Uncertainty:
8.75	%	CARBON DIOXIDE	± 1 %
11.98	%	OXYGEN	± 1 %
	Balance	NITROGEN	

Certification Information: *Certification Date:* 12/17/2011 *Term:* 36 Months *Expiration Date:* 12/17/2014

This cylinder was certified according to the 1997 EPA Traceability Protocol, Document #EPA-600/R-97/121, using Procedure G1
Do Not Use this Standard if Pressure is less than 150 PSIG
PGVP ID#F12011

Analytical Data: *(R=Reference Standard, Z=Zero Gas, C=Gas Candidate)*

1. Component: CARBON DIOXIDE

Requested Concentration: 8.5 %
Certified Concentration: 8.75 %
Instrument Used: SIEMENS ULTRAMAT 5E SN: D2-412
Analytical Method: NON-DISPERSIVE INFRARED
Last Multipoint Calibration: 12/8/2011

Reference Standard Type: GMIS
Ref. Std. Cylinder # : SGAL3547
Ref. Std. Conc: 12.19 %
Ref. Std. Traceable to SRM # : 2745
SRM Sample # : 9-C-34
SRM Cylinder # : CAL016129

First Analysis Data:						Date:	12/17/2011
Z:	0	R:	12.2	C:	8.76	Conc:	8.753
R:	12.2	Z:	0	C:	8.76	Conc:	8.753
Z:	0	C:	8.76	R:	12.2	Conc:	8.753
UOM:	%			Mean Test Assay:			8.753 %

Second Analysis Data:						Date:	
Z:	0	R:	0	C:	0	Conc:	0
R:	0	Z:	0	C:	0	Conc:	0
Z:	0	C:	0	R:	0	Conc:	0
UOM:	%			Mean Test Assay:			0 %

2. Component: OXYGEN

Requested Concentration: 12 %
Certified Concentration: 11.98 %
Instrument Used: SIEMENS OXYMAT 5E S/N F1-111
Analytical Method: PARAMAGNETIC
Last Multipoint Calibration: 11/17/2011

Reference Standard Type: GMIS
Ref. Std. Cylinder # : CC272689
Ref. Std. Conc: 9.98 %
Ref. Std. Traceable to SRM # : 2659a
SRM Sample # : 71-D-07
SRM Cylinder # : CAL015449

First Analysis Data:						Date:	12/15/2011
Z:	0	R:	9.98	C:	11.98	Conc:	11.988
R:	9.98	Z:	0	C:	11.98	Conc:	11.988
Z:	0	C:	11.96	R:	9.96	Conc:	11.968
UOM:	%			Mean Test Assay:			11.981 %

Second Analysis Data:						Date:	
Z:	0	R:	0	C:	0	Conc:	0
R:	0	Z:	0	C:	0	Conc:	0
Z:	0	C:	0	R:	0	Conc:	0
UOM:	%			Mean Test Assay:			0 %

Analyzed by: Robin Morgan

Certified by: Michelle Kostik

Information contained herein has been prepared at your request by qualified experts within Praxair Distribution, Inc. While we believe that the information is accurate within the limits of the analytical methods employed and is complete to the extent of the specific analyses performed, we make no warranty or representation as to the suitability of the use of the information for any purpose. The information is offered with the understanding that any use of the information is at the sole discretion and risk of the user. In no event shall the liability of Praxair Distribution, Inc., arising out of the use of the information con tained herein exceed the fee established for providing such information.

PRAXAIR

Praxair Distribution Mid-Atlantic
145 Shimersville Rd.
Bethlehem, PA 18015
Telephone: (610) 317-1608
Facsimile: (610) 758-8382

DocNumber: 000010142

CERTIFICATE OF ANALYSIS / EPA PROTOCOL GAS

Customer & Order Information:

OBRIEN AND GERE ENGIN*MS*
JOB SITE
EAST NORRITON PA 194030

Praxair Order Number: 02858002
Customer P. O. Number: 10056154
Customer Reference Number:

Fill Date: 3/21/2011
Part Number: EV NICDOXE146AS
Lot Number: 917106034
Cylinder Style & Outlet: AS CGA 590
Cylinder Pressure & Volume: 2000 psig 140 cu. ft.

Certified Concentration:

Expiration Date:		4/3/2014	NIST Traceable
Cylinder Number:		CC350224	Analytical Uncertainty:
17.83	%	CARBON DIOXIDE	± 1 %
20.95	%	OXYGEN	± 1 %
	Balance	NITROGEN	

Certification Information: *Certification Date:* 4/3/2011 *Term:* 36 Months *Expiration Date:* 4/3/2014

This cylinder was certified according to the 1997 EPA Traceability Protocol, Document #EPA-600/R-97/121, using Procedure G1

Do Not Use this Standard if Pressure is less than 150 PSIG

Analytical Data: *(R=Reference Standard, Z=Zero Gas, C=Gas Candidate)*

1. Component: CARBON DIOXIDE

Requested Concentration: 18 %
Certified Concentration: 17.83 %
Instrument Used: SIEMENS ULTRAMAT 5E SN: D2-412
Analytical Method: NON-DISPERSIVE INFRARED
Last Multipoint Calibration: 3/3/2011

First Analysis Data:						Date:	3/25/2011
Z:	0	R:	18.1	C:	17.84	Conc:	17.83
R:	18.1	Z:	0	C:	17.84	Conc:	17.83
Z:	0	C:	17.84	R:	18.1	Conc:	17.83
UOM:	%			Mean Test Assay:			17.83 %

Reference Standard Type: GMIS
Ref. Std. Cylinder #: SA18907
Ref. Std. Conc: 18.09 %
Ref. Std. Traceable to SRM #: 2745
SRM Sample #: 9-C-34
SRM Cylinder #: CAL016063

Second Analysis Data:						Date:	
Z:	0	R:	0	C:	0	Conc:	0
R:	0	Z:	0	C:	0	Conc:	0
Z:	0	C:	0	R:	0	Conc:	0
UOM:	%			Mean Test Assay:			0 %

2. Component: OXYGEN

Requested Concentration: 21 %
Certified Concentration: 20.95 %
Instrument Used: SIEMENS OXYMAT 5E S/N F1-111
Analytical Method: PARAMAGNETIC
Last Multipoint Calibration: 3/10/2011

First Analysis Data:						Date:	4/3/2011
Z:	0	R:	22.98	C:	20.98	Conc:	20.95
R:	22.98	Z:	0	C:	20.98	Conc:	20.95
Z:	0	C:	20.98	R:	22.98	Conc:	20.95
UOM:	%			Mean Test Assay:			20.95 %

Reference Standard Type: GMIS
Ref. Std. Cylinder #: CC14600
Ref. Std. Conc: 22.94%
Ref. Std. Traceable to SRM #: 2659a
SRM Sample #: 71-D-27
SRM Cylinder #: CAL015750

Second Analysis Data:						Date:	
Z:	0	R:	0	C:	0	Conc:	0
R:	0	Z:	0	C:	0	Conc:	0
Z:	0	C:	0	R:	0	Conc:	0
UOM:	%			Mean Test Assay:			0 %

Analyzed by: Robin Morgan

Certified by: 4/11/11 Michelle Kostik

Information contained herein has been prepared at your request by qualified experts within Praxair Distribution, Inc. While we believe that the information is accurate within the limits of the analytical methods employed and is complete to the extent of the specific analyses performed, we make no warranty or representation as to the suitability of the use of the information for any purpose. The information is offered with the understanding that any use of the information is at the sole discretion and risk of the user. In no event shall the liability of Praxair Distribution, Inc., arising out of the use of the information con tained herein exceed the fee established for providing such information.

PRAXAIR

Praxair Distribution Mid-Atlantic
145 Shimersville Rd.
Bethlehem, PA 18015
Telephone: (610) 317-1608
Facsimile: (610) 758-8382

DocNumber: 000016373

CERTIFICATE OF ANALYSIS / EPA PROTOCOL GAS

Customer & Order Information:

OBRIEN AND GERE ENGIN*MS*
JOB SITE
EAST NORRITON PA 194030

Praxair Order Number: 03445673
Customer P. O. Number: 10056174
Customer Reference Number:

Fill Date: 2/22/2012
Part Number: NI NO250E-AS
Lot Number: 917204817
Cylinder Style & Outlet: AS CGA 660
Cylinder Pressure & Volume: 2000 psig 140 cu. ft.

Certified Concentration:

Expiration Date:		3/5/2014	NIST Traceable
Cylinder Number:		CC108462	Analytical Uncertainty:
251	ppm	NITRIC OXIDE	± 1 %
	Balance	NITROGEN	

NOx = 251 NOx for Reference Only

Certification Information: *Certification Date:* 3/5/2012 *Term:* 24 Months *Expiration Date:* 3/5/2014

This cylinder was certified according to the 1997 EPA Traceability Protocol, Document #EPA-600/R-97/121, using Procedure G1
Do Not Use this Standard if Pressure is less than 150 PSIG
PGVP ID#F12012

Analytical Data: *(R=Reference Standard, Z=Zero Gas, C=Gas Candidate)*

1. Component: NITRIC OXIDE

Requested Concentration: 250 ppm
Certified Concentration: 251 ppm
Instrument Used: TECO MODEL 42I 0936539561
Analytical Method: CHEMILUMINESCENCE
Last Multipoint Calibration: 2/16/2012

Reference Standard Type: GMIS
Ref. Std. Cylinder # : CC138675
Ref. Std. Conc: 289 PPM
Ref. Std. Traceable to SRM # : 1685b
SRM Sample # : 43-L-70
SRM Cylinder # : CAL016528

First Analysis Data:						Date:	2/27/2012
Z:	0	R:	283	C:	246	Conc:	251.51
R:	283	Z:	0	C:	247	Conc:	252.53
Z:	0	C:	247	R:	282	Conc:	252.53
UOM:	PPM			Mean Test Assay:			252.19 PPM

Second Analysis Data:						Date:	3/5/2012
Z:	0	R:	297	C:	257	Conc:	250.08
R:	298	Z:	0	C:	257	Conc:	250.08
Z:	0	C:	258	R:	296	Conc:	251.05
UOM:	PPM			Mean Test Assay:			250.40 PPM

Analyzed by: Robin Morgan

Certified by: John Pribish

Information contained herein has been prepared at your request by qualified experts within Praxair Distribution, Inc. While we believe that the information is accurate within the limits of the analytical methods employed and is complete to the extent of the specific analyses performed, we make no warranty or representation as to the suitability of the use of the information for any purpose. The information is offered with the understanding that any use of the information is at the sole discretion and risk of the user. In no event shall the liability of Praxair Distribution, Inc., arising out of the use of the information con tained herein exceed the fee established for providing such information.

PRAXAIR

Praxair Distribution Mid-Atlantic
145 Shimersville Rd.
Bethlehem, PA 18015
Telephone: (610) 317-1608
Facsimile: (610) 758-8382

DocNumber: 000010141

CERTIFICATE OF ANALYSIS / EPA PROTOCOL GAS

Customer & Order Information:

OBRIEN AND GERE ENGIN*MS*
JOB SITE
EAST NORRITON PA 194030

Praxair Order Number: 02858002
Customer P. O. Number: 10056154
Customer Reference Number:

Fill Date: 3/24/2011
Part Number: NI NO450E-AS
Lot Number: 917108321
Cylinder Style & Outlet: AS CGA 660
Cylinder Pressure & Volume: 2000 psig 140 cu. ft.

Certified Concentration:

Expiration Date:	4/4/2013		NIST Traceable Analytical Uncertainty:
Cylinder Number:	CC350213		
500	ppm	NITRIC OXIDE	± 1 %
Balance		NITROGEN	

NOx = 500

NOx for Reference Only

Certification Information: *Certification Date:* 4/4/2011 *Term:* 24 Months *Expiration Date:* 4/4/2013

This cylinder was certified according to the 1997 EPA Traceability Protocol, Document #EPA-600/R-97/121, using Procedure G1

Do Not Use this Standard if Pressure is less than 150 PSIG

Analytical Data: *(R=Reference Standard, Z=Zero Gas, C=Gas Candidate)*

1. Component: NITRIC OXIDE

Requested Concentration: 450 ppm
Certified Concentration: 500 ppm
Instrument Used: TECO MODEL 42I 0938539561
Analytical Method: CHEMILUMINESCENCE
Last Multipoint Calibration: 3/19/2011

First Analysis Data: Date: 3/28/2011

Z:	0	R:	582	C:	436	Conc:	447.49
R:	582	Z:	0	C:	438	Conc:	449.55
Z:	0	C:	438	R:	581	Conc:	449.55

UOM: PPM Mean Test Assay: 448.86 PPM

Reference Standard Type: GMIS
Ref. Std. Cylinder # : CC83189
Ref. Std. Conc: 597 PPM
Ref. Std. Traceable to SRM # : 1687b
SRM Sample # : 41-K-51
SRM Cylinder # : FF31354

Second Analysis Data: Date: 4/4/2011

Z:	0	R:	588	C:	443	Conc:	450.55
R:	587	Z:	0	C:	442	Conc:	449.53
Z:	0	C:	443	R:	586	Conc:	450.55

UOM: PPM Mean Test Assay: 450.21 PPM

Analyzed by: MK 4/11/11
Michelle Kostik

Certified by: Ashley Davila
Ashley Davila

Information contained herein has been prepared at your request by qualified experts within Praxair Distribution, Inc. While we believe that the information is accurate within the limits of the analytical methods employed and is complete to the extent of the specific analyses performed, we make no warranty or representation as to the suitability of the use of the information for any purpose. The information is offered with the understanding that any use of the information is at the sole discretion and risk of the user. In no event shall the liability of Praxair Distribution, Inc., arising out of the use of the information con tained herein exceed the fee established for providing such information.

PRAXAIR

Praxair Distribution Mid-Atlantic
145 Shimersville Rd.
Bethlehem, PA 18015
Telephone: (610) 317-1608
Facsimile: (610) 758-8382

DocNumber: 000005164

CERTIFICATE OF ANALYSIS / EPA PROTOCOL GAS

Customer & Order Information:

OBRIEN AND GERE ENGIN*MS*
JOB SITE
EAST NORRITON PA 194030

Praxair Order Number: 02379167
Customer P. O. Number: BRIAN GOODHIL
Customer Reference Number:

Fill Date: 6/18/2010
Part Number: NI CO250E-AS
Lot Number: 917016935
Cylinder Style & Outlet: AS CGA 350
Cylinder Pressure & Volume: 2000 psig 140 cu. ft.

Certified Concentration:

Expiration Date:	6/29/2013	NIST Traceable
Cylinder Number:	CC16078	Analytical Uncertainty:
248.5 ppm	CARBON MONOXIDE	± 1 %
Balance	NITROGEN	

Certification Information: *Certification Date:* 6/29/2010 *Term:* 36 Months *Expiration Date:* 6/29/2013

This cylinder was certified according to the 1997 EPA Traceability Protocol, Document #EPA-600/R-97/121, using Procedure G1

Do Not Use this Standard If Pressure is less than 150 PSIG

Analytical Data: *(R=Reference Standard, Z=Zero Gas, C=Gas Candidate)*

1. Component: CARBON MONOXIDE

Requested Concentration: 250 ppm
Certified Concentration: 248.5 ppm
Instrument Used: HORIBA VIA-3000 S/N Y9EY78L6
Analytical Method: NDIR
Last Multipoint Calibration: 6/25/2010

Reference Standard Type: GMIS
Ref. Std. Cylinder #: CC41977
Ref. Std. Conc: 401.2 PPM
Ref. Std. Traceable to SRM #: 1660b
SRM Sample #: 2-I-05
SRM Cylinder #: CAL015744

First Analysis Data:						Date:	6/22/2010
Z:	0	R:	401	C:	248	Conc:	248.12
R:	401	Z:	0	C:	249	Conc:	249.12
Z:	0	C:	248	R:	401	Conc:	248.12
UOM:	PPM			Mean Test Assay:			248.46 PPM

Second Analysis Data:						Date:	6/29/2010
Z:	0	R:	400	C:	248	Conc:	248.12
R:	401	Z:	0	C:	249	Conc:	249.12
Z:	0	C:	248	R:	402	Conc:	248.12
UOM:	PPM			Mean Test Assay:			248.46 PPM

Analyzed by: Ashley Davila

Certified by: Robin Morgan

Information contained herein has been prepared at your request by qualified experts within Praxair Distribution, Inc. While we believe that the information is accurate within the limits of the analytical methods employed and is complete to the extent of the specific analyses performed, we make no warranty or representation as to the suitability of the use of the information for any purpose. The information is offered with the understanding that any use of the information is at the sole discretion and risk of the user. In no event shall the liability of Praxair Distribution, Inc., arising out of the use of the information con tained herein exceed the fee established for providing such information.

PRAXAIR

Praxair Distribution Mid-Atlantic
145 Shimersville Rd.
Bethlehem, PA 18015
Telephone: (610) 317-1608
Facsimile: (610) 758-8382

DocNumber: 000007969

CERTIFICATE OF ANALYSIS / EPA PROTOCOL GAS

Customer & Order Information:

CHEROKEE INSTRUMENTS INC *
901 BRIDGE ST
FUQUAY VARINA NC 275260 *

Praxair Order Number: 15303079
Customer P. O. Number: 11036
Customer Reference Number:

Fill Date: 12/3/2010
Part Number: NI CO450E-AS
Lot Number: 917033732
Cylinder Style & Outlet: AS CGA 350
Cylinder Pressure & Volume: 2000 psig 140 cu. ft.

Certified Concentration:

Expiration Date:	12/15/2013		NIST Traceable
Cylinder Number:	CC258411		Analytical Uncertainty:
454	ppm	CARBON MONOXIDE	± 1 %
	Balance	NITROGEN	

Certification Information: *Certification Date:* 12/15/2010 *Term:* 36 Months *Expiration Date:* 12/15/2013

This cylinder was certified according to the 1997 EPA Traceability Protocol, Document #EPA-600/R-97/121, using Procedure G1

Do Not Use this Standard if Pressure is less than 150 PSIG

Analytical Data: *(R=Reference Standard, Z=Zero Gas, C=Gas Candidate)*

1. Component: CARBON MONOXIDE

Requested Concentration: 450 ppm
Certified Concentration 454 ppm
Instrument Used: HORIBA VIA-510,S/N:577172041
Analytical Method: NON-DISPERSIVE INFRARED
Last Multipoint Calibration: 12/3/2010

Reference Standard Type: GMIS
Ref. Std. Cylinder # : SA13841
Ref. Std. Conc: 504 PPM
Ref. Std. Traceable to SRM # : 1680b
SRM Sample # : 2-I-05
SRM Cylinder # : CAL015744

First Analysis Data:						Date:	12/8/2010
Z:	0	R:	504	C:	455	Conc:	454.7
R:	505	Z:	0	C:	455	Conc:	454.7
Z:	0	C:	455	R:	504	Conc:	454.7
UOM:	PPM			Mean Test Assay:			454.7 PPM

Second Analysis Data:						Date:	12/15/2010
Z:	0	R:	509	C:	458	Conc:	453.50
R:	509	Z:	0	C:	458	Conc:	453.50
Z:	0	C:	459	R:	509	Conc:	454.49
UOM:	PPM			Mean Test Assay:			453.83 PPM

Analyzed by: Robin Morgan

Certified by: MK 12/21/10 Michelle Kostik

Information contained herein has been prepared at your request by qualified experts within Praxair Distribution, Inc. While we believe that the information is accurate within the limits of the analytical methods employed and is complete to the extent of the specific analyses performed, we make no warranty or representation as to the suitability of the use of the information for any purpose. The information is offered with the understanding that any use of the information is at the sole discretion and risk of the user. In no event shall the liability of Praxair Distribution, Inc., arising out of the use of the information contained herein exceed the fee established for providing such information.

PRAXAIR

Praxair Distribution Mid-Atlantic
145 Shimersville Rd.
Bethlehem, PA 18015
Telephone: (610) 317-1608
Facsimile: (610) 758-8382

DocNumber: 000007497

CERTIFICATE OF ANALYSIS / EPA PROTOCOL GAS

Customer & Order Information:

GTS-WELCO SYRACUSE
4560 MORGAN PL
LIVERPOOL NY 130900

Praxair Order Number: 02626812
Customer P. O. Number: 00288364
Customer Reference Number:

Fill Date: 11/3/2010
Part Number: EV NIPR5ME-AS
Lot Number: 917030735
Cylinder Style & Outlet: AS CGA 350
Cylinder Pressure & Volume: 2000 psig 140 cu. ft.

Certified Concentration:

Expiration Date:	11/8/2013	NIST Traceable
Cylinder Number:	CC22710	Analytical Uncertainty:
5.00 ppm	PROPANE	± 1 %
Balance	NITROGEN	

Certification Information: *Certification Date:* 11/8/2010 *Term:* 36 Months *Expiration Date:* 11/8/2013

This cylinder was certified according to the 1997 EPA Traceability Protocol, Document #EPA-600/R-97/121, using Procedure G1

Do Not Use this Standard if Pressure is less than 150 PSIG

Analytical Data: *(R=Reference Standard, Z=Zero Gas, C=Gas Candidate)*

1. Component: PROPANE

Requested Concentration: 5 ppm
Certified Concentration: 5.00 ppm
Instrument Used: VARIAN 3300 INST 023 (PROPANE)
Analytical Method: FID
Last Multipoint Calibration: 10/22/2010

Reference Standard Type: GMIS
Ref. Std. Cylinder # : CC154784
Ref. Std. Conc: 10.05 PPM
Ref. Std. Traceable to SRM # : 1667b
SRM Sample # : 83-I-52
SRM Cylinder # : XF004079B

First Analysis Data:						Date:	11/8/2010
Z:	0	R:	10.02	C:	4.97	Conc:	4.96
R:	10.11	Z:	0	C:	5.06	Conc:	5.05
Z:	0	C:	5	R:	10.08	Conc:	4.99
UOM:	PPM			Mean Test Assay:			5 PPM

Second Analysis Data:						Date:	
Z:	0	R:	0	C:	0	Conc:	0
R:	0	Z:	0	C:	0	Conc:	0
Z:	0	C:	0	R:	0	Conc:	0
UOM:	PPM			Mean Test Assay:			0 PPM

Analyzed by: John Pribish 11/19/10

Certified by: Michelle Kostik 11/19/10

Information contained herein has been prepared at your request by qualified experts within Praxair Distribution, Inc. While we believe that the information is accurate within the limits of the analytical methods employed and is complete to the extent of the specific analyses performed, we make no warranty or representation as to the suitability of the use of the information for any purpose. The information is offered with the understanding that any use of the information is at the sole discretion and risk of the user. In no event shall the liability of Praxair Distribution, Inc., arising out of the use of the information con tained herein exceed the fee established for providing such information.

PRAXAIR

Praxair Distribution Mid-Atlantic
145 Shimersville Rd.
Bethlehem, PA 18015
Telephone: (610) 317-1608
Facsimile: (610) 758-8382

DocNumber: 000004411

CERTIFICATE OF ANALYSIS / EPA PROTOCOL GAS

Customer & Order Information:

GTS WELCO WAREHOUSE FAIRL
ONE STEEL RD E
MORRISVILLE PA .190670

Praxair Order Number: 02322594
Customer P. O. Number: 00241387
Customer Reference Number:

Fill Date: 5/14/2010
Part Number: EV NIPR8ME-AS
Lot Number: 917013446
Cylinder Style & Outlet: AS CGA 350
Cylinder Pressure & Volume: 2000 psig 140 cu. ft.

Certified Concentration:

Expiration Date:	5/19/2013		NIST Traceable
Cylinder Number:	SA20801		Analytical Uncertainty:
8.00	ppm	PROPANE	± 1 %
	Balance	NITROGEN	

Certification Information: *Certification Date:* 5/19/2010 *Term:* 36 Months *Expiration Date:* 5/19/2013

This cylinder was certified according to the 1997 EPA Traceability Protocol, Document #EPA-600/R-97/121, using Procedure G1

Do Not Use this Standard if Pressure is less than 150 PSIG

Analytical Data: *(R=Reference Standard, Z=Zero Gas, C=Gas Candidate)*

1. Component: PROPANE

Requested Concentration: 8 ppm
Certified Concentration: 8.00 ppm
Instrument Used: VARIAN 3300 INST 023 (PROPANE)
Analytical Method: FID
Last Multipoint Calibration: 4/20/2010

Reference Standard Type: GMIS
Ref. Std. Cylinder #: CC154784
Ref. Std. Conc: 10.05 PPM
Ref. Std. Traceable to SRM #: 1667b
SRM Sample #: 83-I-52
SRM Cylinder #: XF004079B

First Analysis Data:						Date:	5/19/2010
Z:	0	R:	10.02	C:	8.02	Conc:	8.036
R:	10.04	Z:	0	C:	8.04	Conc:	8.056
Z:	0	C:	7.9	R:	10.03	Conc:	7.916
UOM:	PPM			Mean Test Assay:			8.003 PPM

Second Analysis Data:						Date:	
Z:	0	R:	0	C:	0	Conc:	0
R:	0	Z:	0	C:	0	Conc:	0
Z:	0	C:	0	R:	0	Conc:	0
UOM:	PPM			Mean Test Assay:			0 PPM

Analyzed by:

John Pribish

Certified by: 05/26/10
Michelle Kostik

Information contained herein has been prepared at your request by qualified experts within Praxair Distribution, Inc. While we believe that the information is accurate within the limits of the analytical methods employed and is complete to the extent of the specific analyses performed, we make no warranty or representation as to the suitability of the use of the information for any purpose. The information is offered with the understanding that any use of the information is at the sole discretion and risk of the user. In no event shall the liability of Praxair Distribution, Inc., arising out of the use of the information con tained herein exceed the fee established for providing such information.

PRAXAIR

Praxair Distribution Mid-Atlantic
145 Shimersville Rd.
Bethlehem, PA 18015
Telephone: (610) 317-1608
Facsimile: (610) 758-8382

DocNumber: 000004407

CERTIFICATE OF ANALYSIS / EPA PROTOCOL GAS

Customer & Order Information:

GTS WELCO WAREHOUSE FAIRL
ONE STEEL RD E
MORRISVILLE PA 190670

Praxair Order Number: 02322594
Customer P. O. Number: 00241387
Customer Reference Number:

Fill Date: 5/14/2010
Part Number: EV NIPR15ME-AS
Lot Number: 917013447
Cylinder Style & Outlet: AS CGA 350
Cylinder Pressure & Volume: 2000 psig 140 cu. ft.

Certified Concentration:

Expiration Date:		5/19/2013	NIST Traceable
Cylinder Number:		SA4280	Analytical Uncertainty:
14.73	ppm	PROPANE	± 1 %
	Balance	NITROGEN	

Certification Information: *Certification Date:* 5/19/2010 *Term:* 36 Months *Expiration Date:* 5/19/2013

This cylinder was certified according to the 1997 EPA Traceability Protocol, Document #EPA-600/R-97/121, using Procedure G1

Do Not Use this Standard if Pressure is less than 150 PSIG

Analytical Data: *(R=Reference Standard, Z=Zero Gas, C=Gas Candidate)*

1. Component: PROPANE

Requested Concentration: 15 ppm
Certified Concentration: 14.73 ppm
Instrument Used: VARIAN 3300 INST 023 (PROPANE)
Analytical Method: FID
Last Multipoint Calibration: 4/20/2010

Reference Standard Type: GMIS
Ref. Std. Cylinder # : CC154784
Ref. Std. Conc: 10.05 PPM
Ref. Std. Traceable to SRM # : 1667b
SRM Sample # : 83-I-52
SRM Cylinder # : XF004079B

First Analysis Data: Date: 5/19/2010

Z:	0	R:	10.02	C:	14.71	Conc:	14.739
R:	10.04	Z:	0	C:	14.64	Conc:	14.669
Z:	0	C:	14.74	R:	10.03	Conc:	14.769

UOM: PPM Mean Test Assay: 14.726 PPM

Second Analysis Data: Date:

Z:	0	R:	0	C:	0	Conc:	0
R:	0	Z:	0	C:	0	Conc:	0
Z:	0	C:	0	R:	0	Conc:	0

UOM: PPM Mean Test Assay: 0 PPM

Analyzed by:

John Pribish

Certified by: MK 5/24/10
Michelle Kostik

Information contained herein has been prepared at your request by qualified experts within Praxair Distribution, Inc. While we believe that the information is accurate within the limits of the analytical methods employed and is complete to the extent of the specific analyses performed, we make no warranty or representation as to the suitability of the use of the information for any purpose. The information is offered with the understanding that any use of the information is at the sole discretion and risk of the user. In no event shall the liability of Praxair Distribution, Inc., arising out of the use of the information con tained herein exceed the fee established for providing such information.

Pre-run and Post-run System Calibration Checks

CALIBRATION CHECK REPORT

Run ID: *RUN1* **Date:** *4/25/2012*

Start Time: *08:22:34*
End Time: *12:03:51*

EPA Methods: 3A, 6C, 7E and 10
Job Number: 49064

Param	Analyzer Zero Response	Analyzer Mid Response	System Pre-Zero Response	System Pre-Mid Response	System Pre-Zero Bias	System Pre-Mid Bias	System Post-Zero Response	System Post-Mid Response	System Post-Zero Bias	System Post-Mid Bias	Zero Drift	Mid Drift	System Avg-Zero Response	System Avg-Mid Response
O2	-0.02	12.02	0.15	12.	0.8%	-0.1%	0.18	11.91	0.9%	-0.5%	0.1%	-0.4%	0.16	11.96
CO2	-0.08	8.86	0.05	8.67	0.7%	-1.1%	0.06	8.67	0.8%	-1.1%	0.1%	0.0%	0.05	8.67
CO	0.16	247.86	-0.6	242.29	-0.2%	-1.2%	0.07	243.	0.0%	-1.1%	0.1%	0.2%	-0.26	242.65
THC	N/A	N/A	-0.18	7.85	-1.0%	-0.9%	0.12	8.26	0.7%	1.5%	1.8%	2.4%	-0.03	8.05
NOx	-0.96	250.92	-1.85	244.93	-0.2%	-1.2%	-3.48	250.71	-0.5%	0.0%	-0.3%	1.2%	-2.67	247.82

System Bias= 100% x (System Response - Analyzer Response) / (Span Value)
System Drift= 100% x (System Post Response - System Pre Response) / (Span Value)

For THC Measurements:
System Bias= 100% x (System Response - Cylinder Gas Standard Value) / (Span Value)

CALIBRATION CHECK REPORT

Start Time: *11:54:58* **EPA Methods: 3A, 6C, 7E and 10**

Run ID: *RUN2* **Date:** *4/25/2012* **End Time:** *16:48:52* **Job Number: 49064**

Param	Analyzer Zero Response	Analyzer Mid Response	System Pre-Zero Response	System Pre-Mid Response	System Pre-Zero Bias	System Pre-Mid Bias	System Post-Zero Response	System Post-Mid Response	System Post-Zero Bias	System Post-Mid Bias	Zero Drift	Mid Drift	System Avg-Zero Response	System Avg-Mid Response
O2	-0.02	12.02	0.18	11.91	0.9%	-0.5%	0.08	11.86	0.5%	-0.8%	-0.4%	-0.3%	0.13	11.89
CO2	-0.08	8.86	0.06	8.67	0.8%	-1.1%	-0.06	8.55	0.1%	-1.8%	-0.7%	-0.6%	0.	8.61
CO	0.16	247.86	0.07	243.	0.0%	-1.1%	-0.29	241.4	-0.1%	-1.4%	-0.1%	-0.4%	-0.11	242.2
THC	N/A	N/A	0.12	8.26	0.7%	1.5%	0.19	8.43	1.1%	2.5%	0.4%	1.0%	0.16	8.35
NOx	-0.96	250.92	-3.48	250.71	-0.5%	0.0%	-3.95	244.44	-0.6%	-1.3%	-0.1%	-1.3%	-3.71	247.57

System Bias= **100% x (System Response - Analyzer Response) / (Span Value)**

System Drift= **100% x (System Post Response - System Pre Response) / (Span Value)**

For THC Measurements:

System Bias= **100% x (System Response - Cylinder Gas Standard Value) / (Span Value)**

CALIBRATION CHECK REPORT

Run ID: *RUN3* **Date:** *4/26/2012*

Start Time: *07:29:37*
End Time: *11:51:08*

EPA Methods: 3A, 6C, 7E and 10
Job Number: 49064

Param	Analyzer Zero Response	Analyzer Mid Response	System Pre-Zero Response	System Pre-Mid Response	System Pre-Zero Bias	System Pre-Mid Bias	System Post-Zero Response	System Post-Mid Response	System Post-Zero Bias	System Post-Mid Bias	Zero Drift	Mid Drift	System Avg-Zero Response	System Avg-Mid Response
O2	0	11.97	0.13	11.88	0.6%	-0.5%	0.12	11.86	0.5%	-0.6%	-0.1%	-0.1%	0.13	11.87
CO2	0.02	8.72	0.03	8.66	0.1%	-0.4%	0.06	8.63	0.2%	-0.5%	0.2%	-0.2%	0.05	8.65
CO	-0.52	248.87	-0.28	244.31	0.1%	-1.0%	-0.2	240.67	0.1%	-1.8%	0.0%	-0.8%	-0.24	242.49
THC	N/A	N/A	-0.11	7.98	-0.6%	-0.1%	-0.01	7.93	0.0%	-0.4%	0.6%	-0.3%	-0.06	7.95
NOx	-2.87	250.72	-2.12	246.12	0.1%	-0.9%	-1.58	245.18	0.3%	-1.1%	0.1%	-0.2%	-1.85	245.65

System Bias= 100% x (System Response - Analyzer Response) / (Span Value)
System Drift= 100% x (System Post Response - System Pre Response) / (Span Value)

For THC Measurements:
System Bias= 100% x (System Response - Cylinder Gas Standard Value) / (Span Value)

Reference Method Manual Equipment
Pretest Calibrations, Verifications, and Checks

O'BRIEN & GERE

NOZZLE CALIBRATION FORM

Client: General Dynamics Project #: 41064

Date: 04-25-12 Calibrated by: J. Gorman

Nozzle ID #	D_1, in.	D_2, in.	D_3, in.	Delta D, in.	D_{avg}, in.
M 23 / M5/202	.202	.203	.203	.001	.203
M 26A	.210	.213	.212	.003	.212
M 29	.252	.252	.253	.001	.252

Where:

$D_{1,2,3}$ = Nozzle diameter measured on a different diameter to the nearest 0.001 in.
Delta D = Maximum difference between any two measurements, in.
Tolerance = 0.004 in.
D_{avg} = Average of $D_{1,2,3}$

O'BRIEN & GERE

NOZZLE CALIBRATION FORM

Client: General Dynamics Project #: 49064

Date: 05-31-12 Calibrated by: J. Gorman

Nozzle ID #	D_1, in.	D_2, in.	D_3, in.	Delta D, in.	D_{avg}, in.
M23	.218	.218	.219	.004	0.218

Where:

$D_{1,2,3}$ = Nozzle diameter measured on a different diameter to the nearest 0.001 in.

Delta D = Maximum difference between any two measurements, in.
Tolerance = 0.004 in.

D_{avg} = Average of $D_{1,2,3}$

O'BRIEN & GERE

NOZZLE CALIBRATION FORM

Client: GENERAL DYNAMICS Project #: 49064

Date: 6-18-12 Calibrated by: JN. HARDY

Nozzle ID #	D_1, in.	D_2, in.	D_3, in.	Delta D, in.	D_{avg}, in.
~~INLET~~ OUTLET	.218	.218	.217	.001	.218
	.210	.210	.209	.001	.210
INLET	.191	.191	.192	.001	.191

Where:

$D_{1,2,3}$ = Nozzle diameter measured on a different diameter to the nearest 0.001 in.
Delta D = Maximum difference between any two measurements, in.
Tolerance = 0.004 in.
D_{avg} = Average of $D_{1,2,3}$

METHOD 5 DRY GAS METER CALIBRATION USING CRITICAL ORIFICES

1) Select three critical orifices to calibrate the dry gas meter which bracket the expected operating range.
2) Record barometric pressure before and after calibration procedure.
3) Run at tested vacuum (from Orifice Calibration Report), for a period of time necessary to achieve a minimum total volume of 5 cubic feet.
4) Record data and information in the GREEN cells, YELLOW cells are calculated.

DATE: 2/2/2012
METER PART #: MB-7
METER SERIAL #: 7
CRITICAL ORIFICE SET SERIAL #: 1393

BAROMETRIC PRESSURE (in Hg):	INITIAL	FINAL	AVG (P_{bar})
	29.9	29.9	29.9

ORIFICE #	RUN #	K' FACTOR (AVG)	TESTED VACUUM (in Hg)	DGM READINGS (FT^3) INITIAL	DGM READINGS (FT^3) FINAL	DGM READINGS (FT^3) NET (V_m)	TEMPERATURES °F AMBIENT	DGM INLET INITIAL	DGM INLET FINAL	DGM OUTLET INITIAL	DGM OUTLET FINAL	DGM AVG	ELAPSED TIME (MIN) θ	DGM ΔH (in H_2O)	(1) V_m (STD)	(2) V_{cr} (STD)	(3) Y	Y % Diff to Average Y	Y % Diff with other orifices	$\Delta H_@$
11	1	0.306				.0						0								
	2	0.306	20	635.897	641.480	5.583	62	66	66	66	66	66	14.00	0.54	5.6090	5.6081	1.000			1.90
	3	0.306				.0						0								
																AVG =	1.000	0.96	2.00	
16	1	0.4268				.0						0								
	2	0.4268	19	627.954	635.897	7.943	62	67	68	66	66	66.75	14.00	1.1	7.9796	7.8220	0.980			1.99
	3	0.4268				.0						0								
																AVG =	0.980	-1.02	-1.27	
18	1	0.4961				.0						0								
	2	0.4961	18	618.856	627.954	9.098	61	67	67	64	65	65.75	14.00	1.5	9.1662	9.1008	0.993			2.01
	3	0.4961				.0						0								
																AVG =	0.993	0.25	1.29	
26	1	0.7131				.0						0								
	2	0.7131	17	605.778	618.856	13.078	61	65	68	63	64	65	14.00	3.2	13.2499	13.0816	0.987			2.09
	3	0.7131				.0						0								
																AVG =	0.987	-0.31	-0.43	
31	1	0.8358				.0						0								
	2	0.8358	16	590.60	605.778	15.178	61	63	66	62	63	63.5	14.00	4.3	15.4630	15.3325	0.992			2.05
	3	0.8358				.0						0								
																AVG =	0.992	0.12	0.43	

AVERAGE DRY GAS METER CALIBRATION FACTOR, Y = **0.990**

AVERAGE $\Delta H_@$ = **2.01**

$$\Delta H_@ = \left(\frac{0.75\,\theta}{V_{cr}(std)}\right)^2 \Delta H \left(\frac{V_m(std)}{V_m}\right)$$

USING THE CRITICAL ORIFICES AS CALIBRATION STANDARDS:
The following equations are used to calculate the standard volumes of air passed through the DGM, V_m (std), and the critical orifice, V_{cr} (std), and the DGM calibration factor, Y. These equations are automatically calculated in the spreadsheet above.

(1) $$Vm_{(std)} = K_1 * Vm * \frac{Pbar + (\Delta H / 13.6)}{Tm}$$

= Net volume of gas sample passed through DGM, corrected to standard conditions
K_1 = 17.64 °R/in. Hg (English), 0.3858 °K/mm Hg (Metric)
T_m = Absolute DGM avg. temperature (°R - English, °K - Metric)

(2) $$Vcr_{(std)} = K' * \frac{Pbar * \Theta}{\sqrt{Tamb}}$$

= Volume of gas sample passed through the critical orifice, corrected to standard conditions
T_{amb} = Absolute ambient temperature (°R - English, °K - Metric)
K' = Average K' factor from Critical Orifice Calibration

(3) $$Y = \frac{Vcr_{(std)}}{Vm_{(std)}}$$

= DGM calibration factor

METHOD 5 DRY GAS METER CALIBRATION USING CRITICAL ORIFICES

1) Select three critical orifices to calibrate the dry gas meter which bracket the expected operating range.
2) Record barometric pressure before and after calibration procedure.
3) Run at tested vacuum (from Orifice Calibration Report), for a period of time necessary to achieve a minimum total volume of 5 cubic feet.
4) Record data and information in the GREEN cells, YELLOW cells are calculated.

					INITIAL	FINAL	AVG (P_{bar})
DATE:	2.27.2012	METER SERIAL #:	5	BAROMETRIC PRESSURE (in Hg):	29.5	29.5	29.5
METER PART #:		CRITICAL ORIFICE SET SERIAL #:	1393				

ORIFICE #	RUN #	K' FACTOR (AVG)	TESTED VACUUM (in Hg)	DGM READINGS (FT^3) INITIAL	DGM READINGS (FT^3) FINAL	DGM READINGS (FT^3) NET (V_m)	TEMPERATURES °F AMBIENT	DGM INLET INITIAL	DGM INLET FINAL	DGM OUTLET INITIAL	DGM OUTLET FINAL	DGM AVG	ELAPSED TIME (MIN) θ	DGM ΔH (in H_2O)	(1) V_m (STD)	(2) V_{cr} (STD)	(3) Y	Y % Diff to Average Y	Y % Diff with other orifices	$\Delta H_@$
11	1	0.306				.0						0								
	2	0.306	22	918.302	924.237	5.935	62	68	69	67	68	68	15.00	0.53	5.8605	5.9283	1.012			1.88
	3	0.306				.0						0								
																AVG =	1.012	0.35	0.37	
16	1	0.4268				.0						0								
	2	0.4268	20	910.601	918.302	7.701	62	67	68	67	67	67.25	14.00	1	7.6241	7.7174	1.012			1.83
	3	0.4268				.0						0								
																AVG =	1.012	0.42	0.43	
18	1	0.4961				.0						0								
	2	0.4961	17	893.585	902.558	8.973	62	67	68	65	66	66.5	14.00	1.2	8.9005	8.9704	1.008			1.63
	3	0.4961				.0						0								
																AVG =	1.008	-0.02	0.99	
26	1	0.7131				.0						0								
	2	0.7131	14	924.237	938.111	13.874	64	67	68	65	66	66.5	15.00	2.8	13.8166	13.7888	0.998			1.86
	3	0.7131				.0						0								
																AVG =	0.998	-1.00	-0.98	
31	1	0.8358				.0						0								
	2	0.8358	12	938.111	954.20	16.089	64	69	70	68	69	69	15.00	4	15.9940	16.1614	1.010			1.93
	3	0.8358				.0						0								
																AVG =	1.010	0.24	1.25	

USING THE CRITICAL ORIFICES AS CALIBRATION STANDARDS:
The following equations are used to calculate the standard volumes of air passed through the DGM, V_m (std), and the critical orifice, V_{cr} (std), and the DGM calibration factor, Y. These equations are automatically calculated in the spreadsheet above.

AVERAGE DRY GAS METER CALIBRATION FACTOR, Y = **1.008**

AVERAGE $\Delta H_@$ = **1.83**

(1) $$Vm_{(std)} = K_1 * Vm * \frac{Pbar + (\Delta H / 13.6)}{Tm}$$

= Net volume of gas sample passed through DGM, corrected to standard conditions
K_1 = 17.64 °R/in. Hg (English), 0.3858 °K/mm Hg (Metric)
T_m = Absolute DGM avg. temperature (°R - English, °K - Metric)

(2) $$Vcr_{(std)} = K' * \frac{Pbar * \Theta}{\sqrt{Tamb}}$$

= Volume of gas sample passed through the critical orifice, corrected to standard conditions
T_{amb} = Absolute ambient temperature (°R - English, °K - Metric)
K' = Average K' factor from Critical Orifice Calibration

(3) $$Y = \frac{Vcr_{(std)}}{Vm_{(std)}}$$

= DGM calibration factor

$$\Delta H_@ = \left(\frac{0.75\,\theta}{V_{cr}(std)}\right)^2 \Delta H \left(\frac{V_m(std)}{V_m}\right)$$

DRY GAS METER CALIBRATION USING LOW FLOW CRITICAL ORIFICES

1) Select the orifice closest to the expected operating flow rate and insert in meterbox inlet.
2) For pretest calibration, leak check the system. Leak checking is not necessary for post-test calibrations.
3) Set vacuum as close as possible to the Orifice Calibration Report tested vacuum.
4) Observe the DGM dial, start timing as the needle passes the zero reference. Allow a minimum of 5 revolutions (pretest) or 3 revolutions (post-test) and stop timing again at the zero reference.
5) Record readings in outlined boxes below, other columns are automatically calculated.

DATE: 4/19/2011
METER PART #: 351357
METER SERIAL #: VB 4
CRITICAL ORIFICE SET SERIAL #: 2649

	INITIAL	FINAL	AVG (P_{bar})
Bar. Pressure (in Hg.)	30.12	30.09	30.105

Each Y must be ± 2.0% from the average (pretest) or ± 5.0% from the average (post-test).

ORIFICE NOMINAL FLOW (LPM)	RUN #	K' FACTOR (AVG)	TESTED VACUUM (in Hg)	DGM READINGS (Liters) INITIAL	DGM READINGS (Liters) FINAL	NET (V_m)	TEMPERATURES °C AMBIENT	DGM INLET INITIAL	DGM INLET FINAL	DGM OUTLET INITIAL	DGM OUTLET FINAL	DGM AVG	ELAPSED TIME θ (Min.00)	DGM PRESSURE P_m (in H_2O)	(1) V_m (STD)	(2) V_{cr} (STD)	(3) Y	Y VARIATION
0.57	1	0.4544	20	738.0	743.0	5.0	18	18	19	18	19	18.5	9.08	0.8	5.5636	5.6832	1.0215	0.70
	2	0.4544	20	743.0	748.0	5.0	18	19	21	19	19	19.5	9.02	0.8	5.5520	5.6456	1.0169	0.24
	3	0.4544	20	748.0	753.0	5.0	18	20	21	19	21	20.25	8.90	0.8	5.5433	5.5705	1.0049	-0.94
															AVG Y @ 0.57 LPM =		1.0144	
1.10	1	0.8607	18	754.0	759.0	5.0	18	21	22	21	21	21.25	4.60	1.4	5.5399	5.4535	0.9844	0.24
	2	0.8607	18	759.0	764.0	5.0	18	22	22	21	22	21.75	4.60	1.4	5.5341	5.4535	0.9854	0.35
	3	0.8607	18	764.0	769.0	5.0	18	22	23	22	23	22.5	4.55	1.4	5.5255	5.3942	0.9762	-0.59
															AVG Y @ 1.10 LPM =		0.9820	
1.60	1	1.175	16	770.0	775.0	5.0	18	23	23	22	23	22.75	3.40	1.8	5.5280	5.5028	0.9954	0.46
	2	1.175	16	775.0	780.0	5.0	18	23	23	23	23	23	3.40	1.8	5.5251	5.5028	0.9960	0.51
	3	1.175	16	780.0	785.0	5.0	18	23	23	23	23	23	3.35	1.8	5.5251	5.4219	0.9813	-0.97
															AVG Y @ 1.60 LPM =		0.9909	

USING THE CRITICAL ORIFICES AS CALIBRATION STANDARDS:
The following equations are used to calculate the standard volumes of air passed through the DGM, V_m (std), and the critical orifice, V_{cr} (std), and the DGM calibration factor, Y. These equations are automatically calculated in the spreadsheet above.

Average Dry Gas Meter Calibration Factor, Y = **0.9958**

(1) $V_m\,(std) = K_1\, V_m \dfrac{P_{bar} + (P_m/13.6)}{T_m}$ = Net volume of gas sample passed through DGM, corrected to standard conditions

K_1 = 17.64 °R/in. Hg (English), 0.3858 °K/mm Hg (Metric)

T_m = Absolute DGM avg. temperature (°R - English, °K - Metric)

(2) $V_{cr}\,(std) = K' \sqrt{\dfrac{P_{bar}\,\theta}{T_{amb}}}$ = Volume of gas sample passed through the critical orifice, corrected to standard conditions

T_{amb} = Absolute ambient temperature (°R - English, °K - Metric)

K' = Average K' factor from Critical Orifice Calibration

(3) $Y = \dfrac{V_{cr}\,(std)}{V_m\,(std)}$ = DGM calibration factor

O'BRIEN & GERE

Initial Meterbox Thermocouple Calibration

ID Number	Ice Bath			Ambient			Hot Water Bath			Technician	Date Performed
	Reference Temperature (°R)	Thermocouple Temperature (°R)	Deviation*	Reference Temperature (°R)	Thermocouple Temperature (°R)	Deviation*	Reference Temperature (°R)	Thermocouple Temperature (°R)	Deviation*		
MB1 Inlet	492	493	0.2%	532	532	0.0%	672	674	0.3%	JLS	08/25/03
MB1 Outlet	492	492	0.0%	532	530	-0.4%	672	673	0.1%	JLS	08/25/03
MB2 Inlet	492	493	0.2%	531	532	0.2%	672	671	-0.1%	EMA	06/16/03
MB2 Outlet	492	492	0.0%	531	532	0.2%	672	672	0.0%	EMA	06/16/03
MB3 Inlet	492	493	0.2%	532	533	0.2%	672	673	0.1%	EMA	06/19/03
MB3 Outlet	492	492	0.0%	532	532	0.0%	672	671	-0.1%	EMA	06/19/03
MB4 Inlet	492	491	-0.2%	532	532	0.0%	672	670	-0.3%	JLS	08/25/03
MB4 Outlet	492	492	0.0%	532	531	-0.2%	672	671	-0.1%	JLS	08/25/03
MB5 Inlet	492	493	0.2%	515	515	0.0%	672	672	0.0%	JLS	02/22/11
MB5 Outlet	492	493	0.2%	515	515	0.0%	672	672	0.0%	JLS	02/22/11
MB6 Inlet	492	494	0.4%	532	533	0.2%	672	670	-0.3%	JLS	09/17/04
MB6 Outlet	492	493	0.2%	532	533	0.2%	672	671	-0.1%	JLS	09/17/04
MB7 Inlet	492	493	0.2%	535	535	0.0%	672	673	0.1%	EMA	07/15/05
MB7 Outlet	492	493	0.2%	535	536	0.2%	672	672	0.0%	EMA	07/15/05
MB8 Inlet	492	493	0.2%	528	527	-0.2%	672	675	0.4%	BPG	12/27/05
MB8 Outlet	492	495	0.6%	528	529	0.2%	672	673	0.1%	BPG	12/27/05
MB9 Inlet	492	497	1.0%	528	526	-0.4%	672	676	0.6%	BPG	12/27/05
MB9 Outlet	492	496	0.8%	528	529	0.2%	672	671	-0.1%	BPG	12/27/05
MB10 Inlet	492	493	0.1%	524	525	0.2%	669	669	0.0%	BAG	04/27/06
MB10 Outlet	493	494	0.2%	524	525	0.2%	668	668	0.0%	BAG	04/27/06
MB11 Inlet	492	493	0.2%	539	543	0.7%	670	668	-0.3%	BAG	08/23/06
MB11 Outlet	492	493	0.1%	539	539	0.0%	670	669	-0.2%	BAG	08/23/06

Reference Thermocouple: Fluke S/N: 83450033 or S/N 90460057 traceable to the Untied States National Institute of Standards and Technology
*Acceptable Deviation: 1.5%

O'BRIEN & GERE ENGINEERS, INC

Initial Sample Probe Calibration Form

Probe ID: P4-A Date: 05/30/12 Technician: JLS

"S" Type Pitot Calibration

Is the Pitot Level and Perpindicular?	Yes
Is There any Obstruction?	No
Is the Pitot Damaged	No
α_1 ($-10^\circ = a_1 = +10^\circ$)	0
α_2 ($-10^\circ = a_2 = +10^\circ$)	0
β_1 ($-5^\circ = \beta_1 = +5^\circ$)	1
β_2 ($-5^\circ = \beta_2 = +5^\circ$)	1
γ	0
Θ	1
z = A Tan γ (< 0.125")	0.000
W = A Tan Θ (< 0.03125")	0.0166
D_t (3/16 = D_t = 3/8")	0.375
A	0.951
$A/2D_t$ (1.05 = P_A/D_t = 1.5)	1.268

Source: Quality Assurance Handbook for Air Pollution Measurement Systems: Volume III, Stationary Source-Specific Methods. EPA/600/R-94/038c, September 30, 1994

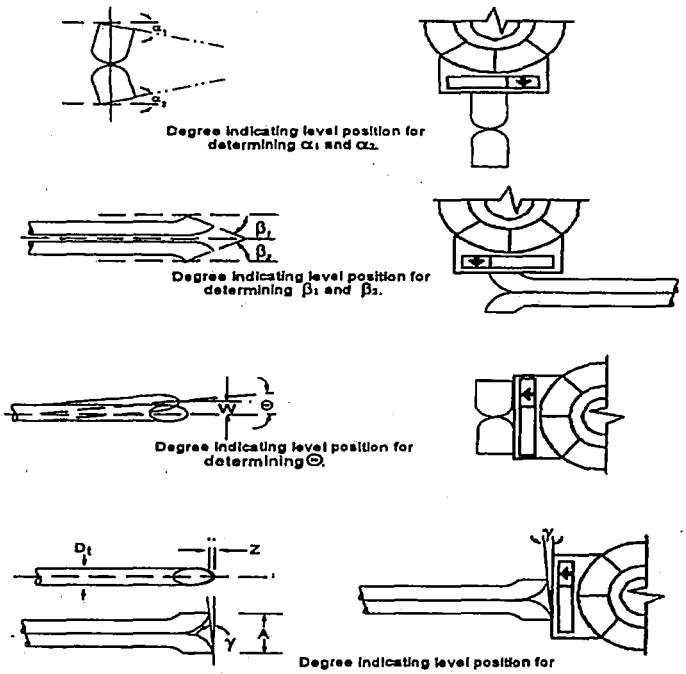

Verification of "S" Type Pitot, Thermocouple and Nozzle Placement

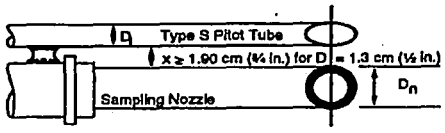

A. Bottom View; showing minimum pitot tube-nozzle separation.

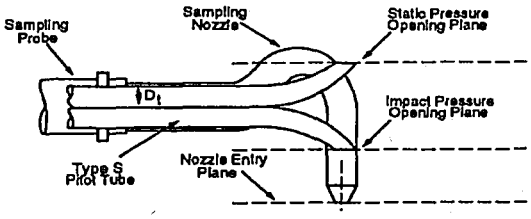

B. Side View; to prevent pitot tube from interfering with gas flow streamlines approaching the nozzle, the impact pressure opening plane of the pitot tube shall be even with or above the nozzle entry plane.

Does X Exceed 0.75 inches? Yes

Does Y Exceed 3 inches? Yes

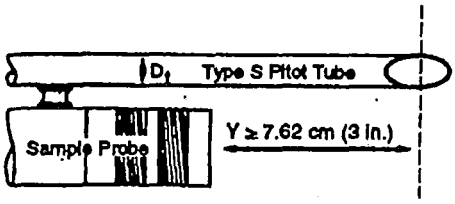

Thermocouple Calibration

	Ice Bath °R			Ambient °R			Boiling Water °R		
	1	2	3	1	2	3	1	2	3
Reference Temp	492	492	492	538.2	538.2	538.2	668	668	668
Thermocouple Temp	493	493	493	538.4	538.4	538.4	668	668	668
Difference (%)	0.2	0.2	0.2	0.0	0.0	0.0	0.0	0.0	0.0

Temperature values must be within 1.5% of reference temperature

I certify that the probe ID P4-A meets or exceeds all specifications, criteria and/or applicable design features and is herby assigned a pitot tube calibration factor C_P of 0.84.

Certified By: STG Date: 05/31/12

O'BRIEN & GERE ENGINEERS, INC

Initial Sample Probe Calibration Form

Probe ID: P4-B Date: 02/22/11 Technician: JLS

"S" Type Pitot Calibration

Is the Pitot Level and Perpindicular?	Yes
Is There any Obstruction?	No
Is the Pitot Damaged	No
α_1 ($-10° = a_1 = +10°$)	0
α_2 ($-10° = a_2 = +10°$)	0
β_1 ($-5° = \beta_1 = +5°$)	1
β_2 ($-5° = \beta_2 = +5°$)	1
γ	0
Θ	1
z = A Tan γ (< 0.125")	0.000
W = A Tan Θ (< 0.03125")	0.0167
D_t ($3/16 = D_t = 3/8$")	0.374
A	0.955
$A/2D_t$ ($1.05 = P_A/D_t = 1.5$)	1.277

Source: Quality Assurance Handbook for Air Pollution Measurement Systems: Volume III, Stationary Source-Specific Methods. EPA/600/R-94/038c, September 30, 1994

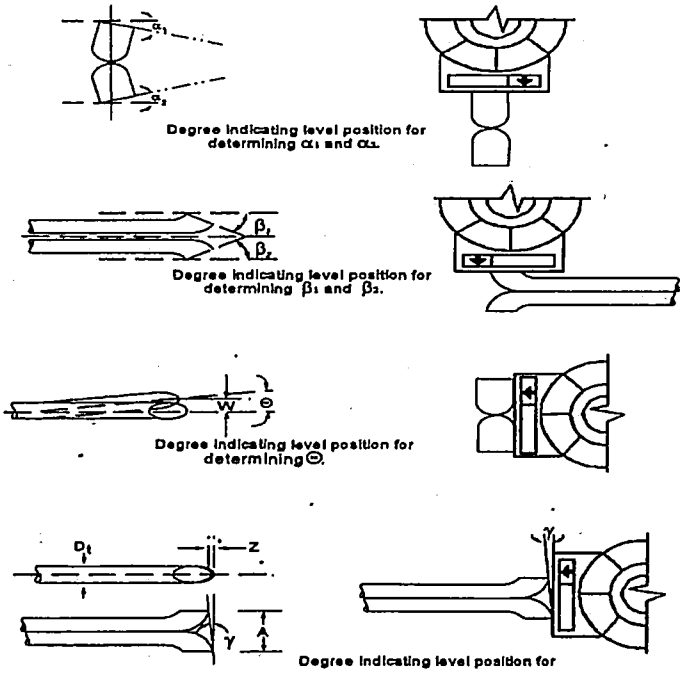

Verification of "S" Type Pitot, Thermocouple and Nozzle Placement

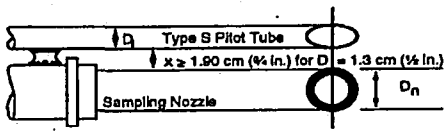

A. Bottom View; showing minimum pitot tube-nozzle separation.

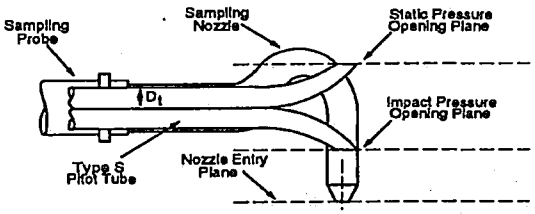

B. Side View; to prevent pitot tube from interfering with gas flow streamlines approaching the nozzle, the impact pressure opening plane of the pitot tube shall be even with or above the nozzle entry plane.

Does X Exceed 0.75 inches? Yes

Does Y Exceed 3 inches? Yes

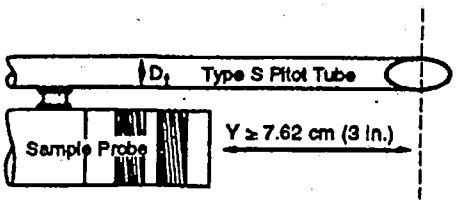

Thermocouple Calibration

	Ice Bath °R			Ambient °R			Boiling Water °R		
	1	2	3	1	2	3	1	2	3
Reference Temp	492	492	492	515	515	515	672	672	672
Thermocouple Temp	495	495	495	517	517	517	670	670	670
Difference (%)	0.6	0.6	0.6	0.4	0.4	0.4	-0.3	-0.3	-0.3

Temperature values must be within 1.5% of reference temperature

I certify that the probe ID P4-B meets or exceeds all specifications, criteria and/or applicable design features and is herby assigned a pitot tube calibration factor C_P of 0.84.

Certified By: JLS Date: 02/22/11

O'BRIEN & GERE

Initial Oven Box Thermocouple Calibration

ID Number	Ice Bath			Ambient			Hot Water Bath				
	Reference Temperature (°R)	Thermocouple Temperature (°R)	Deviation*	Reference Temperature (°R)	Thermocouple Temperature (°R)	Deviation*	Reference Temperature (°R)	Thermocouple Temperature (°R)	Deviation*	Technician	Date Performed
OB-1	493	493	0.0%	515	515	0.0%	672	672	0.0%	JLS	02/09/11
OB-2	492	492	0.0%	515	515	0.0%	672	670	-0.3%	JLS	02/22/11
OB-3	492	491	-0.2%	515	514	-0.2%	672	670	-0.3%	JLS	02/22/11
OB-4	492	488	-0.8%	515	512	-0.6%	672	672	0.0%	JLS	02/22/11
OB-A	492	492	0.0%	515	515	0.0%	672	672	0.0%	JLS	02/22/11
OB-B	492	492	0.0%	533	534	0.2%	671	668	-0.4%	NAG	05/19/07
OB-5	492	488	-0.8%	515	515	0.0%	672	670	-0.3%	JLS	02/22/11
OB-C	492	492	0.0%	533	530	-0.6%	670	670	0.0%	NAG	05/19/07
OB-6	492	493	0.2%	536	535	-0.2%	670	670	0.0%	BPG	12/13/05
OB-7	492	492	0.0%	536	536	0.0%	670	670	0.0%	BPG	12/13/05
OB-D	492	492	0.1%	524	525	0.1%	668	668	0.0%	BAG	04/27/06

Reference Thermocouple: Fluke S/N: 83450033 or S/N 90460057 traceable to the Untied States National Institute of Standards and Technology
*Acceptable Deviation: 1.5%

O'BRIEN & GERE

Initial Impinger Outlet Thermocouple Calibration

ID Number	Ice Bath			Ambient			Hot Water Bath			Technician	Date Performed
	Reference Temperature (°Rk)	Thermocouple Temperature (°Rk)	Deviation*	Reference Temperature (°Rk)	Thermocouple Temperature (°Rk)	Deviation*	Reference Temperature (°Rk)	Thermocouple Temperature (°Rk)	Deviation*		
IO-1	493	492	-0.2%	515	515	0.0%	672	670	-0.3%	MAS	01/18/12
IO-2	493	492	-0.2%	515	514	-0.2%	672	670	-0.3%	MAS	01/18/12
IO-3	493	493	0.0%	515	514	-0.2%	672	670	-0.3%	MAS	01/18/12
IO-4	493	492	-0.2%	515	515	0.0%	672	670	-0.3%	MAS	01/18/12
IO-5	493	492	-0.2%	515	513	-0.4%	672	670	-0.3%	MAS	01/18/12
IO-6	493	493	0.0%	515	513	-0.4%	672	670	-0.3%	MAS	01/18/12
IO-8	493	493	0.0%	515	513	-0.4%	672	670	-0.3%	MAS	01/18/12
IO-10	493	492	-0.2%	515	514	-0.2%	672	670	-0.3%	MAS	01/18/12
IO-11	493	488	-1.0%	515	514	-0.2%	672	670	-0.3%	MAS	01/18/12
IO-12	493	488	-1.0%	515	514	-0.2%	672	670	-0.3%	MAS	01/18/12

Reference Thermocouple: Fluke S/N: 83450033 or S/N 90460057 traceable to the Untied States National Institute of Standards and Technology
*Acceptable Deviation: 1.5%

Reference Method Manual Equipment
Post-Test Calibration Checks

POST TEST DRY GAS METER CALIBRATION

DATE: 7/19/2012
TECHNICIAN: STG

METER BOX #: MB5
CRITICAL ORIFICE SET SERIAL #: 1393

BAROMETRIC PRESSURE (in Hg):	INITIAL	FINAL	AVG (P_{bar})
	29.5	29.5	29.5

ORIFICE #	RUN #	K' FACTOR (AVG)	TESTED VACUUM (in Hg)	DGM READINGS (FT^3) INITIAL	DGM READINGS (FT^3) FINAL	DGM READINGS (FT^3) NET (V_m)	TEMPERATURES °F AMBIENT	TEMPERATURES °F DGM INLET INITIAL	TEMPERATURES °F DGM INLET FINAL	TEMPERATURES °F DGM OUTLET INITIAL	TEMPERATURES °F DGM OUTLET FINAL	TEMPERATURES °F DGM AVG	ELAPSED TIME (MIN) θ	DGM ΔH (in H_2O)	(1) V_m (STD)	(2) V_{cr} (STD)	(3) Y	
	1					.0						0						
	2					.0						0						
	3					.0						0						
																AVG =		
18	1	0.4961	19.5	725.602	733.635	8.033	69	70	71	71	71	70.75	13.00	1.4	7.9082	8.2744	1.046	1.91
	2	0.4961	19.5	740.144	748.166	8.022	69	74	74	72	72	73	13.00	1.4	7.8640	8.2744	1.052	1.91
	3	0.4961	19.5	748.166	756.188	8.022	69	74	74	73	73	73.5	13.00	1.4	7.8566	8.2744	1.053	1.90
																AVG =	1.051	0.00
	1					.0						0						
	2					.0						0						
	3					.0						0						
																AVG =		

AVERAGE DRY GAS METER CALIBRATION FACTOR, Y = 1.051

PRE-DETERMINED DRY GAS METER CALIBRATION FACTOR, Y = 1.008

PERCENT DIFFERENCE = 4.2

O'BRIEN & GERE

POST TEST DRY GAS METER CALIBRATION

DATE:	7/19/2012	METER BOX #:	MB7	BAROMETRIC PRESSURE (in Hg):	INITIAL 29.75 / FINAL 29.75 / AVG (P_{bar}) 29.75
TECHNICIAN:	STG	CRITICAL ORIFICE SET SERIAL #:	1393		

ORIFICE #	RUN #	K' FACTOR (AVG)	TESTED VACUUM (in Hg)	DGM READINGS (FT^3) INITIAL	DGM READINGS (FT^3) FINAL	DGM READINGS (FT^3) NET (V_m)	TEMPERATURES °F AMBIENT	DGM INLET INITIAL	DGM INLET FINAL	DGM OUTLET INITIAL	DGM OUTLET FINAL	DGM AVG	ELAPSED TIME (MIN) θ	DGM ΔH (in H_2O)	(1) V_m (STD)	(2) V_{cr} (STD)	(3) Y		
18	1	0.4961	19	124.50	132.738	8.238	70	73	73	73	73	73	13.00	1.5	8.1459	8.3366	1.023		2.03
	2	0.4961	19	132.738	140.960	8.222	70	73	74	73	73	73.25	13.00	1.5	8.1263	8.3366	1.026		2.03
	3	0.4961	19	140.960	149.165	8.205	70	75	75	73	73	73.125	13.00	1.5	8.1114	8.3366	1.028		2.03
																AVG =	1.026	0.00	
	1																		
	2																		
	3																		
	1																		
	2																		
	3																		

AVERAGE DRY GAS METER CALIBRATION FACTOR, Y = 1.026

PRE-DETERMINED DRY GAS METER CALIBRATION FACTOR, Y = 0.990

PERCENT DIFFERENCE = 3.6

O'BRIEN & GERE ENGINEERS, INC

Post-Test Sample Probe Calibration Form

Probe ID P4-A

Visual Inspection

Do pitot tips appear to be damaged?	N
Do thermocouple wires appear broken or shorted?	N
Do all components appear to be in good condition?	Y

Post-Test Thermocouple Calibration

Reference Temperature °F	Thermocouple Temperature °F	Difference °F
77.2	77.4	0.2

Reference Thermocouple: Fluke S/N. 83450033 traceable to the Untied States National Institute of Standards and Technology

Accepatable Deviation +/- 2 °F

X Acceptable

____ Unacceptable

Date 07/20/12

Technician STG

O'BRIEN & GERE

Post-Test Sample Probe Calibration Form

Probe ID P4-B

Visual Inspection

Do pitot tips appear to be damaged?	N
Do thermocouple wires appear broken or shorted?	N
Do all components appear to be in good condition?	Y

Post-Test Thermocouple Calibration

Reference Temperature °F	Thermocouple Temperature °F	Difference °F
77.6	78.0	0.4

Reference Thermocouple: Fluke S/N: 83450033 traceable to the Untied States National Institute of Standards and Technology

Accepatable Deviation +/- 2 °F

X Acceptable

____ Unacceptable

Date 07/20/12

Technician STG

DRY GAS METER CALIBRATION USING LOW FLOW CRITICAL ORIFICES

1) Select the orifice closest to the expected operating flow rate and insert in meterbox inlet.
2) For pretest calibration, leak check the system. Leak checking is not necessary for post-test calibrations.
3) Set vacuum as close as possible to the Orifice Calibration Report tested vacuum.
4) Observe the DGM dial, start timing as the needle passes the zero reference. Allow a minimum of 5 revolutions (pretest) or 3 revolutions (post-test) and stop timing again at the zero reference.
5) Record readings in outlined boxes below, other columns are automatically calculated.

					INITIAL	FINAL	AVG (P_{bar})
DATE:	6/28/2012	METER SERIAL #:	351357	Bar. Pressure (in Hg.)	30.15	30.15	30.15
METER PART #:	VB 4	CRITICAL ORIFICE SET SERIAL #:	2649				

Each Y must be ± 2.0% from the average (pretest) or ± 5.0% from the average (post-test).

ORIFICE NOMINAL FLOW (LPM)	RUN #	K' FACTOR (AVG)	TESTED VACUUM (in Hg)	DGM READINGS (Liters) INITIAL	DGM READINGS (Liters) FINAL	DGM READINGS (Liters) NET (V_m)	TEMPERATURES °F AMBIENT	DGM INLET INITIAL	DGM INLET FINAL	DGM OUTLET INITIAL	DGM OUTLET FINAL	DGM AVG	ELAPSED TIME θ (Min.00)	DGM PRESSURE P_m (in H_2O)	(1) V_m (STD)	(2) V_{cr} (STD)	(3) Y	Y VARIATION
0.57	1	0.4544	18	1,276.940	1,281.940	5.0	24	25	25	25	25	25	8.64	1	5.4998	5.3822	0.9786	-0.15
	2	0.4544	18	1,281.940	1,286.940	5.0	24	25	25	25	25	25	8.62	1	5.4998	5.3697	0.9763	-0.39
	3	0.4544	18	1,286.940	1,291.940	5.0	24	25	25	25	25	25	8.70	1	5.4998	5.4195	0.9854	0.54
																AVG Y @ 0.57 LPM =	0.9801	
1.10	1	0.8607	18	1,291.940	1,296.940	5.0	24	25	25	25	25	25	4.75	1.4	5.5052	5.6047	1.0181	-0.90
	2	0.8607	18	1,296.940	1,301.940	5.0	24	25	25	25	25	25	4.78	1.4	5.5052	5.6401	1.0245	-0.28
	3	0.8607	18	1,301.940	1,306.940	5.0	25	26	26	25	25	25.5	4.85	1.4	5.4995	5.7167	1.0395	1.18
																AVG Y @ 1.10 LPM =	1.0274	
1.60	1	1.175	16	1,306.940	1,311.940	5.0	25	26	26	25	26	25.75	3.35	1.8	5.5020	5.3906	0.9798	0.47
	2	1.175	16	1,311.940	1,316.940	5.0	25	26	26	26	26	26	3.33	1.8	5.4992	5.3584	0.9744	-0.08
	3	1.175	16	1,316.940	1,321.940	5.0	25	26	26	26	26	26	3.32	1.8	5.4992	5.3423	0.9715	-0.38
																AVG Y @ 1.60 LPM =	0.9752	

USING THE CRITICAL ORIFICES AS CALIBRATION STANDARDS:

The following equations are used to calculate the standard volumes of air passed through the DGM, V_m (std), and the critical orifice, V_{cr} (std), and the DGM calibration factor, Y. These equations are automatically calculated in the spreadsheet above.

Average Dry Gas Meter Calibration Factor, Y = 0.9942

Pre-determined Dry Gas Meter Calibration Factor, Y = 0.9958

Percent Difference = -0.2

(1) $V_m\,(std) = K_1\, V_m \dfrac{P_{bar} + (P_m/13.6)}{T_m}$ = Net volume of gas sample passed through DGM, corrected to standard conditions

K_1 = 17.64 °R/in. Hg (English), 0.3858 °K/mm Hg (Metric)

T_m = Absolute DGM avg. temperature (°R - English, °K - Metric)

(2) $V_{cr}\,(std) = K' \sqrt{\dfrac{P_{bar}\,\theta}{T_{amb}}}$ = Volume of gas sample passed through the critical orifice, corrected to standard conditions

T_{amb} = Absolute ambient temperature (°R - English, °K - Metric)

K' = Average K' factor from Critical Orifice Calibration

(3) $Y = \dfrac{V_{cr}\,(std)}{V_m\,(std)}$ = DGM calibration factor

Laboratory Reports

Method 5/202

Maxxam

Success Through Science®

Your Project #: 49064-001.001
Site Location: GENERAL DYNAMICS - JOPLIN, MO
Your C.O.C. #: N/A

Attention: Jeff Gorman
O'Brien & Gere Engineers Inc
7600 Morgan Rd.
Liverpool, NY
USA 13090

Report Date: 2012/05/14

CERTIFICATE OF ANALYSIS

MAXXAM JOB #: B262174
Received: 2012/05/01, 18:00

Sample Matrix: Stack Sampling Train
Samples Received: 11

Analyses	Quantity	Date Extracted	Date Analyzed	Laboratory Method	Method Reference
Extractable Condensables (M202)	6	2012/05/07	2012/05/07	BRL SOP-00118	EPA 202
Non Extractable Condensibles (M202)	5	2012/05/09	2012/05/09	BRL SOP-00118 / BRL SOP-00109	EPA 202
Particulates/Acetone Rinse (M5/315/M201)	4	2012/05/03	2012/05/07	BRL SOP-00109	EPA 5/315
Particulates/Filter (M5/315/NJATM1/M201)	3	N/A	2012/05/07	BRL SOP-00109	EPA 5/315/NJATM1
Final Volume of Acetone Probe Rinse	4	N/A	2012/05/03	BRL SOP-00109	
Weight of Solvent from Impingers	6	N/A	2012/05/07		
Weight of Water from Impingers	5	N/A	2012/05/07		

* RPDs calculated using raw data. The rounding of final results may result in the apparent difference.

Encryption Key

Please direct all questions regarding this Certificate of Analysis to your Project Manager.

MIKE CHALLIS, CET, B.Sc, C.Chem, Customer Service Manager, US Air Toxics
Email: MChallis@maxxam.ca
Phone# (905) 817-5790

==========
Maxxam has procedures in place to guard against improper use of the electronic signature and have the required "signatories", as per section 5.10.2 of ISO/IEC 17025:2005(E), signing the reports. For Service Group specific validation please refer to the Validation Signature Page.

Total cover pages: 1

Maxxam Analytics International Corporation o/a Maxxam Analytics 6740 Campobello Road, Mississauga, Ontario, L5N 2L8 Tel: (905) 817-5700 Toll-Free: 800-563-6266 Fax: (905) 817-5777 www.maxxam.ca

Maxxam

Success Through Science®

Maxxam Job #: B262174
Report Date: 2012/05/14

O'Brien & Gere Engineers Inc
Client Project #: 49064-001.001
Site Location: GENERAL DYNAMICS - JOPLIN, MO

RESULTS OF ANALYSES OF STACK SAMPLING TRAIN

Maxxam ID		NH6490	NH6491	NH6492	NH6493		
Sampling Date		2012/04/26	2012/04/26	2012/04/26	2012/04/26		
COC Number			N/A	N/A	N/A		
	Units	**RB-M5-ACETONE**	**R1-BLDG3-M5**	**R2-BLDG3-M5**	**R3-BLDG3-M5**	**RDL**	**QC Batch**
Acetone Rinse Particulate Weight in Acetone Rinse	mg	<0.5	2.7	4.6	1.3	0.5	2837736
Front Half Particulate Weight on Filter	mg	N/A	<0.30	<0.30	<0.30	0.30	2837735
Acetone Rinse Volume	ml	150	77	96	100	1	2837738

N/A = Not Applicable
RDL = Reportable Detection Limit
QC Batch = Quality Control Batch

Maxxam ID		NH6494	NH6495	NH6496		
Sampling Date		2012/04/26	2012/04/26	2012/04/26		
COC Number						
	Units	**RB-M202-WATER**	**RB-M202-ACETONE**	**RB-M202-HEXANE**	**RDL**	**QC Batch**
Weight	g	210	N/A	N/A	0.1	2839900
Weight of Solvent	g	N/A	160	140	0.1	2839897
Inorganic Condensibles	mg	0.6	N/A	N/A	0.5	2843286
Organic Condensibles	mg	N/A	<1	<1	1	2839896

N/A = Not Applicable
RDL = Reportable Detection Limit
QC Batch = Quality Control Batch

Maxxam ID		NH6497	NH6498	NH6500		
Sampling Date		2012/04/26	2012/04/26	2012/04/26		
COC Number		N/A	N/A	N/A		
	Units	**FB-BLDG3-M202**	**R1-BLDG3-M202**	**R2-BLDG3-M202**	**RDL**	**QC Batch**
Weight	g	230	230	210	0.1	2839900
Weight of Solvent	g	98	140	110	0.1	2839897
Inorganic Condensibles	mg	1.9	5.4	5.2	0.5	2843286
Organic Condensibles	mg	1	1	2	1	2839896

N/A = Not Applicable
RDL = Reportable Detection Limit
QC Batch = Quality Control Batch

Maxxam Analytics International Corporation o/a Maxxam Analytics 6740 Campobello Road, Mississauga, Ontario, L5N 2L8 Tel: (905) 817-5700 Toll-Free: 800-563-6266 Fax: (905) 817-5777 www.maxxam.ca

Maxxam Job #: B262174
Report Date: 2012/05/14

O'Brien & Gere Engineers Inc
Client Project #: 49064-001.001
Site Location: GENERAL DYNAMICS - JOPLIN, MO

RESULTS OF ANALYSES OF STACK SAMPLING TRAIN

Maxxam ID		NH6501		
Sampling Date		2012/04/26		
COC Number		N/A		
	Units	**R3-BLDG3-M202**	**RDL**	**QC Batch**
Weight	g	210	0.1	2839900
Weight of Solvent	g	120	0.1	2839897
Inorganic Condensibles	mg	3.9	0.5	2843286
Organic Condensibles	mg	1	1	2839896

N/A = Not Applicable
RDL = Reportable Detection Limit
QC Batch = Quality Control Batch

Maxxam Analytics International Corporation o/a Maxxam Analytics 6740 Campobello Road, Mississauga, Ontario, L5N 2L8 Tel: (905) 817-5700 Toll-Free: 800-563-6266 Fax: (905) 817-5777 www.maxxam.ca

Maxxam

Success Through Science®

Maxxam Job #: B262174
Report Date: 2012/05/14

O'Brien & Gere Engineers Inc
Client Project #: 49064-001.001
Site Location: GENERAL DYNAMICS - JOPLIN, MO

Test Summary

Maxxam ID NH6490 **Collected** 2012/04/26
Sample ID RB-M5-ACETONE **Shipped**
Matrix Stack Sampling Train **Received** 2012/05/01

Test Description	Instrumentation	Batch	Extracted	Analyzed	Analyst
Particulates/Acetone Rinse (M5/315/M201)	BAL	2837736	2012/05/03	2012/05/07	RUPINDER SIHOTA
Final Volume of Acetone Probe Rinse		2837738	N/A	2012/05/03	RUPINDER SIHOTA

Maxxam ID NH6491 **Collected** 2012/04/26
Sample ID R1-BLDG3-M5 **Shipped**
Matrix Stack Sampling Train **Received** 2012/05/01

Test Description	Instrumentation	Batch	Extracted	Analyzed	Analyst
Particulates/Acetone Rinse (M5/315/M201)	BAL	2837736	2012/05/03	2012/05/07	RUPINDER SIHOTA
Particulates/Filter (M5/315/NJATM1/M201)	BAL	2837735	N/A	2012/05/07	BRENDA MOORE
Final Volume of Acetone Probe Rinse		2837738	N/A	2012/05/03	RUPINDER SIHOTA

Maxxam ID NH6492 **Collected** 2012/04/26
Sample ID R2-BLDG3-M5 **Shipped**
Matrix Stack Sampling Train **Received** 2012/05/01

Test Description	Instrumentation	Batch	Extracted	Analyzed	Analyst
Particulates/Acetone Rinse (M5/315/M201)	BAL	2837736	2012/05/03	2012/05/07	RUPINDER SIHOTA
Particulates/Filter (M5/315/NJATM1/M201)	BAL	2837735	N/A	2012/05/07	BRENDA MOORE
Final Volume of Acetone Probe Rinse		2837738	N/A	2012/05/03	RUPINDER SIHOTA

Maxxam ID NH6493 **Collected** 2012/04/26
Sample ID R3-BLDG3-M5 **Shipped**
Matrix Stack Sampling Train **Received** 2012/05/01

Test Description	Instrumentation	Batch	Extracted	Analyzed	Analyst
Particulates/Acetone Rinse (M5/315/M201)	BAL	2837736	2012/05/03	2012/05/07	RUPINDER SIHOTA
Particulates/Filter (M5/315/NJATM1/M201)	BAL	2837735	N/A	2012/05/07	BRENDA MOORE
Final Volume of Acetone Probe Rinse		2837738	N/A	2012/05/03	RUPINDER SIHOTA

Maxxam ID NH6494 **Collected** 2012/04/26
Sample ID RB-M202-WATER **Shipped**
Matrix Stack Sampling Train **Received** 2012/05/01

Test Description	Instrumentation	Batch	Extracted	Analyzed	Analyst
Non Extractable Condensibles (M202)		2843286	2012/05/09	2012/05/09	FRANK MO
Weight of Water from Impingers		2839900	N/A	2012/05/07	FRANK MO

Maxxam ID NH6495 **Collected** 2012/04/26
Sample ID RB-M202-ACETONE **Shipped**
Matrix Stack Sampling Train **Received** 2012/05/01

Test Description	Instrumentation	Batch	Extracted	Analyzed	Analyst
Extractable Condensables (M202)		2839896	2012/05/07	2012/05/07	MANOJ GERA
Weight of Solvent from Impingers		2839897	N/A	2012/05/07	FRANK MO

Maxxam Analytics International Corporation o/a Maxxam Analytics 6740 Campobello Road, Mississauga, Ontario, L5N 2L8 Tel: (905) 817-5700 Toll-Free: 800-563-6266 Fax: (905) 817-5777 www.maxxam.ca

Maxxam Job #: B262174
Report Date: 2012/05/14

O'Brien & Gere Engineers Inc
Client Project #: 49064-001.001
Site Location: GENERAL DYNAMICS - JOPLIN, MO

Test Summary

Maxxam ID NH6496 **Collected** 2012/04/26
Sample ID RB-M202-HEXANE **Shipped**
Matrix Stack Sampling Train **Received** 2012/05/01

Test Description	Instrumentation	Batch	Extracted	Analyzed	Analyst
Extractable Condensables (M202)		2839896	2012/05/07	2012/05/07	MANOJ GERA
Weight of Solvent from Impingers		2839897	N/A	2012/05/07	FRANK MO

Maxxam ID NH6497 **Collected** 2012/04/26
Sample ID FB-BLDG3-M202 **Shipped**
Matrix Stack Sampling Train **Received** 2012/05/01

Test Description	Instrumentation	Batch	Extracted	Analyzed	Analyst
Extractable Condensables (M202)		2839896	2012/05/07	2012/05/07	MANOJ GERA
Non Extractable Condensibles (M202)		2843286	2012/05/09	2012/05/09	FRANK MO
Weight of Solvent from Impingers		2839897	N/A	2012/05/07	FRANK MO
Weight of Water from Impingers		2839900	N/A	2012/05/07	FRANK MO

Maxxam ID NH6498 **Collected** 2012/04/26
Sample ID R1-BLDG3-M202 **Shipped**
Matrix Stack Sampling Train **Received** 2012/05/01

Test Description	Instrumentation	Batch	Extracted	Analyzed	Analyst
Extractable Condensables (M202)		2839896	2012/05/07	2012/05/07	MANOJ GERA
Non Extractable Condensibles (M202)		2843286	2012/05/09	2012/05/09	FRANK MO
Weight of Solvent from Impingers		2839897	N/A	2012/05/07	FRANK MO
Weight of Water from Impingers		2839900	N/A	2012/05/07	FRANK MO

Maxxam ID NH6500 **Collected** 2012/04/26
Sample ID R2-BLDG3-M202 **Shipped**
Matrix Stack Sampling Train **Received** 2012/05/01

Test Description	Instrumentation	Batch	Extracted	Analyzed	Analyst
Extractable Condensables (M202)		2839896	2012/05/07	2012/05/07	MANOJ GERA
Non Extractable Condensibles (M202)		2843286	2012/05/09	2012/05/09	FRANK MO
Weight of Solvent from Impingers		2839897	N/A	2012/05/07	FRANK MO
Weight of Water from Impingers		2839900	N/A	2012/05/07	FRANK MO

Maxxam ID NH6501 **Collected** 2012/04/26
Sample ID R3-BLDG3-M202 **Shipped**
Matrix Stack Sampling Train **Received** 2012/05/01

Test Description	Instrumentation	Batch	Extracted	Analyzed	Analyst
Extractable Condensables (M202)		2839896	2012/05/07	2012/05/07	MANOJ GERA
Non Extractable Condensibles (M202)		2843286	2012/05/09	2012/05/09	FRANK MO
Weight of Solvent from Impingers		2839897	N/A	2012/05/07	FRANK MO
Weight of Water from Impingers		2839900	N/A	2012/05/07	FRANK MO

Maxxam Analytics International Corporation o/a Maxxam Analytics 6740 Campobello Road, Mississauga, Ontario, L5N 2L8 Tel: (905) 817-5700 Toll-Free: 800-563-6266 Fax: (905) 817-5777 www.maxxam.ca

Maxxam Job #: B262174
Report Date: 2012/05/14

O'Brien & Gere Engineers Inc
Client Project #: 49064-001.001
Site Location: GENERAL DYNAMICS - JOPLIN, MO

GENERAL COMMENTS

FILTERS : Untared filters were received.

Sample NH6494-01: REAGENT BLANK : Reagent blank result reported as per in 150 ml according to M-202.
REAGENT BLANK : Whitish residue found in Teflon Dish.

Sample NH6495-01: REAGENT BLANK : Reagent blank result reported as per in 150 ml according to M-202.
REAGENT BLANK : Whitish residue found in vial.

Sample NH6496-01: REAGENT BLANK : Reagent blank result reported as per in 150 ml according to M-202.

Sample NH6497-01: ORGANIC EXTRACTION : Oily material found in vial.
INORGANIC EXTRACTION : Whitish residue found in Teflon dish.

Sample NH6498-01: ORGANIC EXTRACTION : Whitish residue found in vial.
INORGANIC EXTRACTION : Whitish residue with black particles found in Teflon dish.

Sample NH6500-01: ORGANIC EXTRACTION : Whitish residue found in vial.
INORGANIC EXTRACTION : Brownish residue found in Teflon dish.

Sample NH6501-01: ORGANIC EXTRACTION : Whitish residue found in vial.
INORGANIC EXTRACTION : Greenish residue found in Teflon dish.

Results relate only to the items tested.

Maxxam Analytics International Corporation o/a Maxxam Analytics 6740 Campobello Road, Mississauga, Ontario, L5N 2L8 Tel: (905) 817-5700 Toll-Free: 800-563-6266 Fax: (905) 817-5777 www.maxxam.ca

Maxxam

Success Through Science®

O'Brien & Gere Engineers Inc
Attention: Jeff Gorman
Client Project #: 49064-001.001
P.O. #:
Site Location: GENERAL DYNAMICS - JOPLIN, MO

Quality Assurance Report

Maxxam Job Number: GB262174

QA/QC Batch Num Init	QC Type	Parameter	Date Analyzed yyyy/mm/dd	Value	%Recovery	Units	QC Limits
2837736 RSU	Method Blank	Acetone Rinse Particulate Weight in Acetone	2012/05/07	<0.5		mg	
2839896 MGE	Spiked Blank	Organic Condensibles	2012/05/07		90	%	70 - 130
	Spiked Blank DUP	Organic Condensibles	2012/05/07		92	%	70 - 130
	RPD	Organic Condensibles	2012/05/07	1.4		%	20
	Method Blank	Organic Condensibles	2012/05/07	<1		mg	
2843286 MGE	Method Blank	Inorganic Condensibles	2012/05/09	<0.5		mg	

Duplicate: Paired analysis of a separate portion of the same sample. Used to evaluate the variance in the measurement.
Spiked Blank: A blank matrix to which a known amount of the analyte has been added. Used to evaluate analyte recovery.
Method Blank: A blank matrix containing all reagents used in the analytical procedure. Used to identify laboratory contamination.

Maxxam Analytics International Corporation o/a Maxxam Analytics 6740 Campobello Road, Mississauga, Ontario, L5N 2L8 Tel: (905) 817-5700 Toll-Free: 800-563-6266 Fax: (905) 817-5777 www.maxxam.ca

Validation Signature Page

Maxxam Job #: B262174

The analytical data and all QC contained in this report were reviewed and validated by the following individual(s).

FRANK MO, B.Sc., Inorganic Lab. Manager

Maxxam has procedures in place to guard against improper use of the electronic signature and have the required "signatories", as per section 5.10.2 of ISO/IEC 17025:2005(E), signing the reports. For Service Group specific validation please refer to the Validation Signature Page.

Maxxam Analytics International Corporation o/a Maxxam Analytics 6740 Campobello Road, Mississauga, Ontario, L5N 2L8 Tel: (905) 817-5700 Toll-Free: 800-563-6266 Fax: (905) 817-5777 www.maxxam.ca

Method 29

Maxxam

Success Through Science®

Your Project #: 49064-001.001
Site Location: GENERAL DYNAMICS - JOPLIN, MO
Your C.O.C. #: 007

Attention: Jeff Gorman
O'Brien & Gere Engineers Inc
7600 Morgan Rd.
Liverpool, NY
USA 13090

Report Date: 2012/05/14

CERTIFICATE OF ANALYSIS

MAXXAM JOB #: B262138
Received: 2012/05/01, 18:00

Sample Matrix: Stack Sampling Train
Samples Received: 4

Analyses	Quantity	Date Extracted	Date Analyzed	Laboratory Method	Method Reference
Metals in Combined Train (6020)	4	2012/05/04	2012/05/08	BRL SOP-00103/ BRL SOP-00102	EPA 6020 / M29

RPDs calculated using raw data. The rounding of final results may result in the apparent difference.

Encryption Key

Please direct all questions regarding this Certificate of Analysis to your Project Manager.

MIKE CHALLIS, CET, B.Sc, C.Chem, Customer Service Manager, US Air Toxics
Email: MChallis@maxxam.ca
Phone# (905) 817-5790

==========

Maxxam has procedures in place to guard against improper use of the electronic signature and have the required "signatories", as per section 5.10.2 of ISO/IEC 17025:2005(E), signing the reports. For Service Group specific validation please refer to the Validation Signature Page.

Total cover pages: 1

Maxxam Analytics International Corporation o/a Maxxam Analytics 6740 Campobello Road, Mississauga, Ontario, L5N 2L8 Tel: (905) 817-5700 Toll-Free: 800-563-6266 Fax: (905) 817-5777 www.maxxam.ca

Maxxam

Success Through Science®

Maxxam Job #: B262138
Report Date: 2012/05/14

O'Brien & Gere Engineers Inc
Client Project #: 49064-001.001
Site Location: GENERAL DYNAMICS - JOPLIN, MO

ELEMENTS BY ICP/MS (STACK SAMPLING TRAIN)

Maxxam ID		NH6299		NH6300	NH6300	NH6301	NH6302		
Sampling Date		2012/04/26		2012/04/26	2012/04/26	2012/04/26	2012/04/26		
COC Number		007		007	007	007	007		
	Units	**BLANK-M29**	**RDL**	**R1-BLDG3-M29**	**R1-BLDG3-M29 Lab-Dup**	**R2-BLDG3-M29**	**R3-BLDG3-M29**	**RDL**	**QC Batch**
Combined Train Arsenic (As)	ug	<0.40	0.40	<2.0	<2.0	<2.0	<2.0	2.0	2839839
Combined Train Beryllium (Be)	ug	<0.10	0.10	<0.50	<0.50	<0.50	<0.50	0.50	2839839
Combined Train Cadmium (Cd)	ug	<0.10	0.10	<0.50	<0.50	<0.50	<0.50	0.50	2839839
Combined Train Chromium (Cr)	ug	2.57	0.30	3.3	3.0	3.4	2.9	1.5	2839839
Combined Train Lead (Pb)	ug	0.58	0.20	1.4	1.4	1.9	1.8	1.0	2839839

RDL = Reportable Detection Limit
QC Batch = Quality Control Batch

Maxxam Analytics International Corporation o/a Maxxam Analytics 6740 Campobello Road, Mississauga, Ontario, L5N 2L8 Tel: (905) 817-5700 Toll-Free: 800-563-6266 Fax: (905) 817-5777 www.maxxam.ca

Maxxam Job #: B262138
Report Date: 2012/05/14

O'Brien & Gere Engineers Inc
Client Project #: 49064-001.001
Site Location: GENERAL DYNAMICS - JOPLIN, MO

Test Summary

Maxxam ID NH6299 **Collected** 2012/04/26
Sample ID BLANK-M29 **Shipped**
Matrix Stack Sampling Train **Received** 2012/05/01

Test Description	Instrumentation	Batch	Extracted	Analyzed	Analyst
Metals in Combined Train (6020)	ICP1/MS	2839839	2012/05/04	2012/05/08	NAN RAYKHA

Maxxam ID NH6300 **Collected** 2012/04/26
Sample ID R1-BLDG3-M29 **Shipped**
Matrix Stack Sampling Train **Received** 2012/05/01

Test Description	Instrumentation	Batch	Extracted	Analyzed	Analyst
Metals in Combined Train (6020)	ICP1/MS	2839839	2012/05/04	2012/05/08	NAN RAYKHA

Maxxam ID NH6300 Dup **Collected** 2012/04/26
Sample ID R1-BLDG3-M29 **Shipped**
Matrix Stack Sampling Train **Received** 2012/05/01

Test Description	Instrumentation	Batch	Extracted	Analyzed	Analyst
Metals in Combined Train (6020)	ICP1/MS	2839839	2012/05/04	2012/05/08	NAN RAYKHA

Maxxam ID NH6301 **Collected** 2012/04/26
Sample ID R2-BLDG3-M29 **Shipped**
Matrix Stack Sampling Train **Received** 2012/05/01

Test Description	Instrumentation	Batch	Extracted	Analyzed	Analyst
Metals in Combined Train (6020)	ICP1/MS	2839839	2012/05/04	2012/05/08	NAN RAYKHA

Maxxam ID NH6302 **Collected** 2012/04/26
Sample ID R3-BLDG3-M29 **Shipped**
Matrix Stack Sampling Train **Received** 2012/05/01

Test Description	Instrumentation	Batch	Extracted	Analyzed	Analyst
Metals in Combined Train (6020)	ICP1/MS	2839839	2012/05/04	2012/05/08	NAN RAYKHA

Maxxam Analytics International Corporation o/a Maxxam Analytics 6740 Campobello Road, Mississauga, Ontario, L5N 2L8 Tel: (905) 817-5700 Toll-Free: 800-563-6266 Fax: (905) 817-5777 www.maxxam.ca

Maxxam Job #: B262138
Report Date: 2012/05/14

O'Brien & Gere Engineers Inc
Client Project #: 49064-001.001
Site Location: GENERAL DYNAMICS - JOPLIN, MO

ELEMENTS BY ICP/MS (STACK SAMPLING TRAIN)

Metals in Combined Train (6020): Extra 5x dilution was required for all samples except NH6299, due to the matrix
Post digestion duplicate and spike was done on sample NH6300.

Results relate only to the items tested.

Maxxam Analytics International Corporation o/a Maxxam Analytics 6740 Campobello Road, Mississauga, Ontario, L5N 2L8 Tel: (905) 817-5700 Toll-Free: 800-563-6266 Fax: (905) 817-5777 www.maxxam.ca

Maxxam

Success Through Science®

O'Brien & Gere Engineers Inc
Attention: Jeff Gorman
Client Project #: 49064-001.001
P.O. #:
Site Location: GENERAL DYNAMICS - JOPLIN, MO

Quality Assurance Report

Maxxam Job Number: GB262138

QA/QC Batch Num Init	QC Type	Parameter	Date Analyzed yyyy/mm/dd	Value	%Recovery	Units	QC Limits
2839839 N_R	Matrix Spike (NH6300)	Combined Train Arsenic (As)	2012/05/08		95	%	70 - 130
	Matrix Spike DUP (NH6300)	Combined Train Arsenic (As)	2012/05/08		96	%	70 - 130
	MS/MSD RPD	Combined Train Arsenic (As)	2012/05/08	1.0		%	20
	Matrix Spike (NH6300)	Combined Train Beryllium (Be)	2012/05/08		93	%	70 - 130
	Matrix Spike DUP (NH6300)	Combined Train Beryllium (Be)	2012/05/08		94	%	70 - 130
	MS/MSD RPD	Combined Train Beryllium (Be)	2012/05/08	1.1		%	20
	Matrix Spike (NH6300)	Combined Train Cadmium (Cd)	2012/05/08		100	%	70 - 130
	Matrix Spike DUP (NH6300)	Combined Train Cadmium (Cd)	2012/05/08		100	%	70 - 130
	MS/MSD RPD	Combined Train Cadmium (Cd)	2012/05/08	0		%	20
	Matrix Spike (NH6300)	Combined Train Chromium (Cr)	2012/05/08		97	%	70 - 130
	Matrix Spike DUP (NH6300)	Combined Train Chromium (Cr)	2012/05/08		100	%	70 - 130
	MS/MSD RPD	Combined Train Chromium (Cr)	2012/05/08	3.0		%	20
	Matrix Spike (NH6300)	Combined Train Lead (Pb)	2012/05/08		100	%	70 - 130
	Matrix Spike DUP (NH6300)	Combined Train Lead (Pb)	2012/05/08		101	%	70 - 130
	MS/MSD RPD	Combined Train Lead (Pb)	2012/05/08	1		%	20
	Spiked Blank	Combined Train Arsenic (As)	2012/05/08		101	%	85 - 115
	Spiked Blank DUP	Combined Train Arsenic (As)	2012/05/08		99	%	85 - 115
	RPD	Combined Train Arsenic (As)	2012/05/08	1.7		%	20
	Spiked Blank	Combined Train Beryllium (Be)	2012/05/08		97	%	85 - 115
	Spiked Blank DUP	Combined Train Beryllium (Be)	2012/05/08		98	%	85 - 115
	RPD	Combined Train Beryllium (Be)	2012/05/08	0.8		%	20
	Spiked Blank	Combined Train Cadmium (Cd)	2012/05/08		99	%	85 - 115
	Spiked Blank DUP	Combined Train Cadmium (Cd)	2012/05/08		102	%	85 - 115
	RPD	Combined Train Cadmium (Cd)	2012/05/08	3.0		%	20
	Spiked Blank	Combined Train Chromium (Cr)	2012/05/08		106	%	85 - 115
	Spiked Blank DUP	Combined Train Chromium (Cr)	2012/05/08		100	%	85 - 115
	RPD	Combined Train Chromium (Cr)	2012/05/08	5.3		%	20
	Spiked Blank	Combined Train Lead (Pb)	2012/05/08		107	%	85 - 115
	Spiked Blank DUP	Combined Train Lead (Pb)	2012/05/08		106	%	85 - 115
	RPD	Combined Train Lead (Pb)	2012/05/08	0.7		%	20
	Method Blank	Combined Train Arsenic (As)	2012/05/08	<0.40		ug	
	Method Blank DUP	Combined Train Arsenic (As)	2012/05/08	<0.40		ug	
	RPD	Combined Train Arsenic (As)	2012/05/08	NC		%	20
	Method Blank	Combined Train Beryllium (Be)	2012/05/08	<0.10		ug	
	Method Blank DUP	Combined Train Beryllium (Be)	2012/05/08	<0.10		ug	
	RPD	Combined Train Beryllium (Be)	2012/05/08	NC		%	20
	Method Blank	Combined Train Cadmium (Cd)	2012/05/08	<0.10		ug	
	Method Blank DUP	Combined Train Cadmium (Cd)	2012/05/08	<0.10		ug	
	RPD	Combined Train Cadmium (Cd)	2012/05/08	NC		%	20
	Method Blank	Combined Train Chromium (Cr)	2012/05/08	<0.30		ug	
	Method Blank DUP	Combined Train Chromium (Cr)	2012/05/08	<0.30		ug	
	RPD	Combined Train Chromium (Cr)	2012/05/08	NC		%	20
	Method Blank	Combined Train Lead (Pb)	2012/05/08	<0.20		ug	
	Method Blank DUP	Combined Train Lead (Pb)	2012/05/08	<0.20		ug	
	RPD	Combined Train Lead (Pb)	2012/05/08	NC		%	20

Maxxam Analytics International Corporation o/a Maxxam Analytics 6740 Campobello Road, Mississauga, Ontario, L5N 2L8 Tel: (905) 817-5700 Toll-Free: 800-563-6266 Fax: (905) 817-5777 www.maxxam.ca

O'Brien & Gere Engineers Inc
Attention: Jeff Gorman
Client Project #: 49064-001.001
P.O. #:
Site Location: GENERAL DYNAMICS - JOPLIN, MO

Quality Assurance Report (Continued)

Maxxam Job Number: GB262138

QA/QC Batch Num Init	QC Type	Parameter	Date Analyzed yyyy/mm/dd	Value	%Recovery	Units	QC Limits
2839839 N_R	RPD - Sample/Sample Dup	Combined Train Arsenic (As)	2012/05/08	NC		%	20
		Combined Train Beryllium (Be)	2012/05/08	NC		%	20
		Combined Train Cadmium (Cd)	2012/05/08	NC		%	20
		Combined Train Chromium (Cr)	2012/05/08	NC		%	20
		Combined Train Lead (Pb)	2012/05/08	NC		%	20

Duplicate: Paired analysis of a separate portion of the same sample. Used to evaluate the variance in the measurement.
Matrix Spike: A sample to which a known amount of the analyte of interest has been added. Used to evaluate sample matrix interference.
Spiked Blank: A blank matrix to which a known amount of the analyte has been added. Used to evaluate analyte recovery.
Method Blank: A blank matrix containing all reagents used in the analytical procedure. Used to identify laboratory contamination.
NC (RPD): The RPD was not calculated. The level of analyte detected in the parent sample and its duplicate was not sufficiently significant to permit a reliable calculation.

Maxxam Analytics International Corporation o/a Maxxam Analytics 6740 Campobello Road, Mississauga, Ontario, L5N 2L8 Tel: (905) 817-5700 Toll-Free: 800-563-6266 Fax: (905) 817-5777 www.maxxam.ca

Validation Signature Page

Maxxam Job #: B262138

The analytical data and all QC contained in this report were reviewed and validated by the following individual(s).

FRANK MO, B.Sc., Inorganic Lab. Manager

Maxxam has procedures in place to guard against improper use of the electronic signature and have the required "signatories", as per section 5.10.2 of ISO/IEC 17025:2005(E), signing the reports. For Service Group specific validation please refer to the Validation Signature Page.

Maxxam Analytics International Corporation o/a Maxxam Analytics 6740 Campobello Road, Mississauga, Ontario, L5N 2L8 Tel: (905) 817-5700 Toll-Free: 800-563-6266 Fax: (905) 817-5777 www.maxxam.ca

Method 23/0010 – Initial CPT

Maxxam

Success Through Science®

Your P.O. #: 11210378EST
Your Project #: 49064-001.001
Site Location: GENERAL DYNAMICS-JOPLIN,MO
Your C.O.C. #: N/A

Attention: Jeff Gorman
O'Brien & Gere Engineers Inc
7600 Morgan Rd.
Liverpool, NY
USA 13090

Report Date: 2012/05/23

CERTIFICATE OF ANALYSIS

MAXXAM JOB #: B262123
Received: 2012/05/01, 18:00

Sample Matrix: Stack Sampling Train
Samples Received: 4

Analyses	Quantity	Date Extracted	Date Analyzed	Laboratory Method	Method Reference
SVOCs in MM5 SamplingTrain (EPA0010)	4	2012/05/07	2012/05/15	BRL SOP-00200	EPA 8270D mod(M0010)
2,3,7,8-TCDF Confirmation (M23)	3	N/A	2012/05/22	BRL SOP-00404	EPA1613Bmod(M23/23A)
Dioxins/Furans in Air (Method 23)	4	2012/05/07	2012/05/18	BRL SOP-00404	EPA1613Bmod(M23/23A)

* RPDs calculated using raw data. The rounding of final results may result in the apparent difference.

U = Undetected at the limit of quantitation.
J = Estimated concentration between the EDL & RDL.
B = Blank Contamination.
Q = One or more quality control criteria failed.

Encryption Key

Please direct all questions regarding this Certificate of Analysis to your Project Manager.

MIKE CHALLIS, CET, B.Sc, C.Chem, Customer Service Manager, US Air Toxics
Email: MChallis@maxxam.ca
Phone# (905) 817-5790

==========
Maxxam has procedures in place to guard against improper use of the electronic signature and have the required "signatories", as per section 5.10.2 of ISO/IEC 17025:2005(E), signing the reports. For Service Group specific validation please refer to the Validation Signature Page.

Total cover pages: 1

Maxxam Analytics International Corporation o/a Maxxam Analytics 6740 Campobello Road, Mississauga, Ontario, L5N 2L8 Tel: (905) 817-5700 Toll-Free: 800-563-6266 Fax: (905) 817-5777 www.maxxam.ca

Maxxam

Success Through Science®

Maxxam Job #: B262123
Report Date: 2012/05/23

O'Brien & Gere Engineers Inc
Client Project #: 49064-001.001
Site Location: GENERAL DYNAMICS-JOPLIN,MO
Your P.O. #: 11210378EST

EPA M0010 SEMIVOLATILES IN MM5 TRAINS (STACK SAMPLING TRAIN)

Maxxam ID		NH5943		NH6285	NH6286	NH6287		
Sampling Date		2012/04/26		2012/04/25	2012/04/25	2012/04/26		
COC Number		N/A		N/A	N/A	N/A		
	Units	R.BLANK-BLDG 3-M23/M0010	RDL	RUN 1-BLDG 3-M23/M0010	RUN 2-BLDG 3-M23/M0010	RUN 3-BLDG 3-M23/M0010	RDL	QC Batch
1,2,4-Trichlorobenzene	ug	1 U	6	2 J	2 J	3 J	6	2846286
1,2-Dichlorobenzene	ug	1 U	6	3 J	4 J	3 J	6	2846286
1,3-Dichlorobenzene	ug	1 U	6	1 J	1 J	1 J	6	2846286
1,4-Dichlorobenzene	ug	1 U	6	1 J	1 J	3 J	6	2846286
1-Chloronaphthalene	ug	1 U	6	2 J	2 J	3 J	6	2846286
1-Methylnaphthalene	ug	2 U	9	3 J	2 J	3 J	9	2846286
2,4,5-Trichlorophenol	ug	1 U	6	1 U	1 U	1 U	6	2846286
2,4,6-Trichlorophenol	ug	0.8 U	5	4.5 J	3.2 J	2.8 J	5	2846286
2,4-Dichlorophenol	ug	1 U	4	1 U	1 U	1 U	4	2846286
2,4-Dimethylphenol	ug	1 U	6	1 U	1 U	1 U	6	2846286
2,4-Dinitrophenol	ug	2 U	10	2 U	2 U	2 U	10	2846286
2,4-Dinitrotoluene	ug	0.3 U	2	0.3 U	0.3 U	0.3 U	2	2846286
2,6-Dinitrotoluene	ug	1 U	3	1 U	1 U	1 U	3	2846286
2-Chloronaphthalene	ug	0.7 U	3	0.7 U	0.7 U	0.9 J	3	2846286
2-Chlorophenol	ug	1 U	8	1 U	1 U	1 U	8	2846286
2-Methylnaphthalene	ug	1 U	5	3 J	2 J	3 J	5	2846286
2-Methylphenol	ug	2 U	9	2 U	2 U	2 U	9	2846286
2-Nitroaniline	ug	4 U	20	4 U	4 U	4 U	20	2846286
2-Nitrophenol	ug	0.8 U	5	0.8 U	0.8 U	2.9 J	5	2846286
3 & 4-methylphenol	ug	2 U	10	6 J	4 J	9 J	10	2846286
3,3'-Dichlorobenzidine	ug	1 U	8	1 U	1 U	1 U	8	2846286
3-Nitroaniline	ug	4 U	20	4 U	4 U	4 U	20	2846286
4,6-Dinitro-2-methylphenol	ug	2 U	10	2 U	2 U	2 U	10	2846286
4-Bromophenyl phenyl ether	ug	0.3 U	2	0.3 U	0.3 U	0.3 U	2	2846286
4-Chloro-3-Methylphenol	ug	0.8 U	5	0.8 U	0.8 U	0.8 U	5	2846286
4-Chloroaniline	ug	4 U	20	4 U	4 U	4 U	20	2846286
4-Chlorophenyl phenyl ether	ug	0.7 U	3	0.7 U	0.7 U	0.7 U	3	2846286
4-Nitroaniline	ug	4 U	20	4 U	4 U	4 U	20	2846286
4-Nitrophenol	ug	2 U	10	2 U	2 U	2 J	10	2846286
Acenaphthene	ug	0.3 U	2	0.3 U	0.3 U	0.3 U	2	2846286
Acenaphthylene	ug	0.4 U	2	0.4 U	0.4 U	0.4 U	2	2846286

N/A = Not Applicable
RDL = Reportable Detection Limit
QC Batch = Quality Control Batch

Maxxam Analytics International Corporation o/a Maxxam Analytics 6740 Campobello Road, Mississauga, Ontario, L5N 2L8 Tel: (905) 817-5700 Toll-Free: 800-563-6266 Fax: (905) 817-5777 www.maxxam.ca

Maxxam

Success Through Science®

Maxxam Job #: B262123
Report Date: 2012/05/23

O'Brien & Gere Engineers Inc
Client Project #: 49064-001.001
Site Location: GENERAL DYNAMICS-JOPLIN,MO
Your P.O. #: 11210378EST

EPA M0010 SEMIVOLATILES IN MM5 TRAINS (STACK SAMPLING TRAIN)

Maxxam ID		NH5943		NH6285	NH6286	NH6287		
Sampling Date		2012/04/26		2012/04/25	2012/04/25	2012/04/26		
COC Number		N/A		N/A	N/A	N/A		
	Units	R.BLANK-BLDG 3-M23/M0010	RDL	RUN 1-BLDG 3-M23/M0010	RUN 2-BLDG 3-M23/M0010	RUN 3-BLDG 3-M23/M0010	RDL	QC Batch
Aniline	ug	4 U	20	4 U	4 U	4 U	20	2846286
Anthracene	ug	0.3 U	1	0.3 U	0.3 U	0.3 U	1	2846286
Benzidine	ug	10 U	60	10 U	10 U	10 U	60	2846286
Benzo(a)anthracene	ug	0.3 U	1	0.3 U	0.3 U	0.3 U	1	2846286
Benzo(a)pyrene	ug	0.4 U	2	0.4 U	0.4 U	0.4 U	2	2846286
Benzo(b)fluoranthene	ug	0.3 U	1	0.3 U	0.3 U	0.3 U	1	2846286
Benzo(g,h,i)perylene	ug	0.3 U	1	0.3 U	0.3 U	0.3 U	1	2846286
Benzo(k)fluoranthene	ug	0.4 U	2	0.4 U	0.4 U	0.4 U	2	2846286
Benzoic Acid	ug	2 U	10	659	418	608	60	2846286
Benzyl Alcohol	ug	1 U	6	211	176	234	30	2846286
Benzyl butyl phthalate	ug	0.5 J	2	0.6 J	0.3 U	0.3 U	2	2846286
Biphenyl	ug	1 U	6	3 J	2 J	3 J	6	2846286
Bis(2-chloroethoxy)methane	ug	1 U	4	1 U	1 U	1 U	4	2846286
Bis(2-chloroethyl)ether	ug	1 U	5	1 U	1 U	1 U	5	2846286
Bis(2-chloroisopropyl)ether	ug	0.8 U	5	0.8 U	0.8 U	0.8 U	5	2846286
Bis(2-ethylhexyl)phthalate	ug	78	8	3 J	5 J	2 U	8	2846286
Carbazole	ug	4 U	20	4 U	4 U	4 U	20	2846286
Chrysene	ug	0.3 U	1	0.3 U	0.3 U	0.3 U	1	2846286
Dibenz(a,h)anthracene	ug	0.3 U	1	0.3 U	0.3 U	0.3 U	1	2846286
Dibenzofuran	ug	4 U	20	4 U	4 U	4 U	20	2846286
Diethyl phthalate	ug	0.6 U	3	0.6 U	0.6 U	0.6 U	3	2846286
Dimethyl phthalate	ug	0.6 U	3	0.6 U	0.6 U	0.6 U	3	2846286
Di-N-butyl phthalate	ug	0.6 U	3	0.7 J	0.8 J	0.6 U	3	2846286
Di-N-octyl phthalate	ug	0.6 U	3	0.6 U	0.6 U	0.6 U	3	2846286
Fluoranthene	ug	0.3 U	1	0.3 U	0.3 U	0.3 U	1	2846286
Fluorene	ug	0.3 U	1	0.6 J	0.3 U	0.6 J	1	2846286
Hexachlorobenzene	ug	1 U	6	2 J	2 J	2 J	6	2846286
Hexachlorobutadiene	ug	1 U	6	1 J	2 J	1 J	6	2846286
Hexachlorocyclopentadiene	ug	1 U	6	25	30	26	6	2846286
Hexachloroethane	ug	1 U	6	1 U	1 U	1 U	6	2846286
Indeno(1,2,3-cd)pyrene	ug	0.3 U	2	0.3 U	0.3 U	0.3 U	2	2846286

N/A = Not Applicable
RDL = Reportable Detection Limit
QC Batch = Quality Control Batch

Maxxam Analytics International Corporation o/a Maxxam Analytics 6740 Campobello Road, Mississauga, Ontario, L5N 2L8 Tel: (905) 817-5700 Toll-Free: 800-563-6266 Fax: (905) 817-5777 www.maxxam.ca

Maxxam

Success Through Science®

Maxxam Job #: B262123
Report Date: 2012/05/23

O'Brien & Gere Engineers Inc
Client Project #: 49064-001.001
Site Location: GENERAL DYNAMICS-JOPLIN,MO
Your P.O. #: 11210378EST

EPA M0010 SEMIVOLATILES IN MM5 TRAINS (STACK SAMPLING TRAIN)

Maxxam ID		NH5943		NH6285	NH6286	NH6287		
Sampling Date		2012/04/26		2012/04/25	2012/04/25	2012/04/26		
COC Number		N/A		N/A	N/A	N/A		
	Units	**R.BLANK-BLDG 3-M23/M0010**	**RDL**	**RUN 1-BLDG 3-M23/M0010**	**RUN 2-BLDG 3-M23/M0010**	**RUN 3-BLDG 3-M23/M0010**	**RDL**	**QC Batch**
Isophorone	ug	2 U	10	2 U	2 U	2 U	10	2846286
Naphthalene	ug	0.3 U	2	30	16	35	2	2846286
Nitrobenzene	ug	1 U	6	1 U	1 U	1 U	6	2846286
N-Nitrosodimethylamine	ug	6 U	30	6 U	6 U	6 U	30	2846286
N-Nitroso-di-n-propylamine	ug	1 U	6	1 U	1 U	1 U	6	2846286
N-Nitrosodiphenylamine	ug	1 U	6	1 U	1 U	1 U	6	2846286
Pentachlorophenol	ug	2 U	9	2 U	2 U	2 U	9	2846286
Phenanthrene	ug	0.3 U	1	0.3 U	0.3 U	0.3 U	1	2846286
Phenol	ug	0.8 U	5	6	7	8	5	2846286
Pyrene	ug	0.4 U	2	0.4 U	0.4 U	0.4 U	2	2846286
Surrogate Recovery (%)								
2,4,6-Tribromophenol	%	81	N/A	91	73	84	N/A	2846286
2,6-Dibromo-4-fluorophenol (FS)	%	87	N/A	79	83	59	N/A	2846286
2-Fluorobiphenyl	%	105	N/A	121 (1)	103	85	N/A	2846286
2-Fluorophenol	%	73	N/A	64	46	46	N/A	2846286
D10-Pyrene (FS)	%	103	N/A	103	104	99	N/A	2846286
D14-Terphenyl	%	109	N/A	126	112	104	N/A	2846286
D5-Nitrobenzene	%	88	N/A	86	97	86	N/A	2846286
D5-Phenol	%	86	N/A	64	68	63	N/A	2846286

N/A = Not Applicable
RDL = Reportable Detection Limit
QC Batch = Quality Control Batch
(1) Recovery or RPD for this parameter is outside control limits. The overall quality control for this analysis meets acceptability criteria.

Maxxam Analytics International Corporation o/a Maxxam Analytics 6740 Campobello Road, Mississauga, Ontario, L5N 2L8 Tel: (905) 817-5700 Toll-Free: 800-563-6266 Fax: (905) 817-5777 www.maxxam.ca

Maxxam Job #: B262123
Report Date: 2012/05/23

O'Brien & Gere Engineers Inc
Client Project #: 49064-001.001
Site Location: GENERAL DYNAMICS-JOPLIN,MO
Your P.O. #: 11210378EST

EPA M23 DIOXINS AND FURANS (STACK SAMPLING TRAIN)

Maxxam ID		NH5943						
Sampling Date		2012/04/26						
COC Number		N/A			TOXIC EQUIVALENCY		# of	
	Units	R.BLANK-BLDG 3-M23/M0010	EDL	RDL	TEF (2005 WHO)	TEQ(DL)	Isomers	QC Batch
2,3,7,8-Tetra CDD *	pg	2.8 J (1)	1.6	30	1.00	2.80	N/A	2850026
1,2,3,7,8-Penta CDD	pg	2.2 U	2.2	30	1.00	2.20	N/A	2850026
1,2,3,4,7,8-Hexa CDD	pg	1.7 U	1.7	30	0.100	0.170	N/A	2850026
1,2,3,6,7,8-Hexa CDD	pg	1.7 U	1.7	30	0.100	0.170	N/A	2850026
1,2,3,7,8,9-Hexa CDD	pg	1.6 U	1.6	30	0.100	0.160	N/A	2850026
1,2,3,4,6,7,8-Hepta CDD	pg	3.8 J	1.6	30	0.0100	0.0380	N/A	2850026
1,2,3,4,6,7,8,9-Octa CDD	pg	18.3 J	3.3	300	0.000300	0.00549	N/A	2850026
Total Tetra CDD	pg	2.8 J	1.6	30	N/A	N/A	N/A	2850026
Total Penta CDD	pg	2.2 U	2.2	30	N/A	N/A	N/A	2850026
Total Hexa CDD	pg	4.6 U (2)	4.6	30	N/A	N/A	N/A	2850026
Total Hepta CDD	pg	3.8 J	1.6	30	N/A	N/A	N/A	2850026
2,3,7,8-Tetra CDF **	pg	2.5 J	1.8	30	0.100	0.250	N/A	2850026
1,2,3,7,8-Penta CDF	pg	1.7 U	1.7	30	0.0300	0.0510	N/A	2850026
2,3,4,7,8-Penta CDF	pg	3.5 J (1)	1.7	30	0.300	1.05	N/A	2850026
1,2,3,4,7,8-Hexa CDF	pg	1.7 U	1.7	30	0.100	0.170	N/A	2850026
1,2,3,6,7,8-Hexa CDF	pg	1.6 U	1.6	30	0.100	0.160	N/A	2850026
2,3,4,6,7,8-Hexa CDF	pg	1.9 U	1.9	30	0.100	0.190	N/A	2850026
1,2,3,7,8,9-Hexa CDF	pg	1.9 U	1.9	30	0.100	0.190	N/A	2850026
1,2,3,4,6,7,8-Hepta CDF	pg	1.5 J (1)	1.4	30	0.0100	0.0150	N/A	2850026
1,2,3,4,7,8,9-Hepta CDF	pg	1.9 U	1.9	30	0.0100	0.0190	N/A	2850026
1,2,3,4,6,7,8,9-Octa CDF	pg	3.2 U	3.2	300	0.000300	0.000960	N/A	2850026
Total Tetra CDF	pg	4.7 J	1.8	30	N/A	N/A	N/A	2850026
Total Penta CDF	pg	3.5 J	1.7	30	N/A	N/A	N/A	2850026
Total Hexa CDF	pg	1.7 U	1.7	30	N/A	N/A	N/A	2850026
Total Hepta CDF	pg	1.6 U	1.6	30	N/A	N/A	N/A	2850026

N/A = Not Applicable
RDL = Reportable Detection Limit
EDL = Estimated Detection Limit
QC Batch = Quality Control Batch
* CDD = Chloro Dibenzo-p-Dioxin, ** CDF = Chloro Dibenzo-p-Furan
TEF = Toxic Equivalency Factor, TEQ = Toxic Equivalency Quotient,
The Total Toxic Equivalency (TEQ) value reported is the sum of Toxic Equivalent Quotients for the congeners tested.
WHO(2005): The 2005 World Health Organization, Human and Mammalian Toxic Equivalency Factors for Dioxins and Dioxin-like Compounds
(1) EMPC / Ratio - Isotopic ratio adjusted to meet theoretical
(2) EMPC / NDR - Peak detected does not meet ratio criteria and has resulted in an elevated detection limit.

Maxxam Analytics International Corporation o/a Maxxam Analytics 6740 Campobello Road, Mississauga, Ontario, L5N 2L8 Tel: (905) 817-5700 Toll-Free: 800-563-6266 Fax: (905) 817-5777 www.maxxam.ca

Maxxam Job #: B262123
Report Date: 2012/05/23

O'Brien & Gere Engineers Inc
Client Project #: 49064-001.001
Site Location: GENERAL DYNAMICS-JOPLIN,MO
Your P.O. #: 11210378EST

EPA M23 DIOXINS AND FURANS (STACK SAMPLING TRAIN)

Maxxam ID		NH5943						
Sampling Date		2012/04/26						
COC Number		N/A			TOXIC EQUIVALENCY		# of	
	Units	R.BLANK-BLDG 3-M23/M0010	EDL	RDL	TEF (2005 WHO)	TEQ(DL)	Isomers	QC Batch
TOTAL TOXIC EQUIVALENCY	pg	N/A	N/A	N/A	N/A	7.64	N/A	N/A
Surrogate Recovery (%)								
C13-1234678 HeptaCDD *	%	85	N/A	N/A	N/A	N/A	N/A	2850026
C13-1234678 HeptaCDF **	%	97	N/A	N/A	N/A	N/A	N/A	2850026
C13-123478 HexaCDD	%	104	N/A	N/A	N/A	N/A	N/A	2850026
C13-123478 HexaCDF	%	122	N/A	N/A	N/A	N/A	N/A	2850026
C13-1234789 HeptaCDF	%	77	N/A	N/A	N/A	N/A	N/A	2850026
C13-123678 HexaCDD	%	93	N/A	N/A	N/A	N/A	N/A	2850026
C13-123678 HexaCDF	%	95	N/A	N/A	N/A	N/A	N/A	2850026
C13-12378 PentaCDD	%	89	N/A	N/A	N/A	N/A	N/A	2850026
C13-12378 PentaCDF	%	90	N/A	N/A	N/A	N/A	N/A	2850026
C13-123789 HexaCDF	%	102	N/A	N/A	N/A	N/A	N/A	2850026
C13-23478 PentaCDF	%	113	N/A	N/A	N/A	N/A	N/A	2850026
C13-2378 TetraCDD	%	82	N/A	N/A	N/A	N/A	N/A	2850026
C13-2378 TetraCDF	%	78	N/A	N/A	N/A	N/A	N/A	2850026
C13-Octachlorodibenzo-p-Dioxin	%	91	N/A	N/A	N/A	N/A	N/A	2850026
Cl37-2378 TetraCDD	%	107	N/A	N/A	N/A	N/A	N/A	2850026

N/A = Not Applicable
RDL = Reportable Detection Limit
EDL = Estimated Detection Limit
QC Batch = Quality Control Batch
* CDD = Chloro Dibenzo-p-Dioxin, ** CDF = Chloro Dibenzo-p-Furan
TEF = Toxic Equivalency Factor, TEQ = Toxic Equivalency Quotient,
The Total Toxic Equivalency (TEQ) value reported is the sum of Toxic Equivalent Quotients for the congeners tested.
WHO(2005): The 2005 World Health Organization, Human and Mammalian Toxic Equivalency Factors for Dioxins and Dioxin-like Compounds

Maxxam Analytics International Corporation o/a Maxxam Analytics 6740 Campobello Road, Mississauga, Ontario, L5N 2L8 Tel: (905) 817-5700 Toll-Free: 800-563-6266 Fax: (905) 817-5777 www.maxxam.ca

Maxxam Job #: B262123
Report Date: 2012/05/23

O'Brien & Gere Engineers Inc
Client Project #: 49064-001.001
Site Location: GENERAL DYNAMICS-JOPLIN,MO
Your P.O. #: 11210378EST

EPA M23 DIOXINS AND FURANS (STACK SAMPLING TRAIN)

Maxxam ID		NH6285						
Sampling Date		2012/04/25						
COC Number		N/A			TOXIC EQUIVALENCY		# of	
	Units	RUN 1-BLDG 3-M23/M0010	EDL	RDL	TEF (2005 WHO)	TEQ(DL)	Isomers	QC Batch
2,3,7,8-Tetra CDD *	pg	37 (1)	1.6	30	1.00	37.0	N/A	2850026
1,2,3,7,8-Penta CDD	pg	27.8 J	1.9	30	1.00	27.8	N/A	2850026
1,2,3,4,7,8-Hexa CDD	pg	3.7 J	1.7	30	0.100	0.370	N/A	2850026
1,2,3,6,7,8-Hexa CDD	pg	3.1 J (1)	1.7	30	0.100	0.310	N/A	2850026
1,2,3,7,8,9-Hexa CDD	pg	2.2 J	1.5	30	0.100	0.220	N/A	2850026
1,2,3,4,6,7,8-Hepta CDD	pg	3.3 J	1.6	30	0.0100	0.0330	N/A	2850026
1,2,3,4,6,7,8,9-Octa CDD	pg	11.1 J	3.1	300	0.000300	0.00333	N/A	2850026
Total Tetra CDD	pg	937	1.6	30	N/A	N/A	N/A	2850026
Total Penta CDD	pg	162	1.9	30	N/A	N/A	N/A	2850026
Total Hexa CDD	pg	8.9 J	1.6	30	N/A	N/A	N/A	2850026
Total Hepta CDD	pg	5.4 J	1.6	30	N/A	N/A	N/A	2850026
2,3,7,8-Tetra CDF **	pg	4940	1.6	30	0.100	494	N/A	2850026
1,2,3,7,8-Penta CDF	pg	957	1.9	30	0.0300	28.7	N/A	2850026
2,3,4,7,8-Penta CDF	pg	559	1.8	30	0.300	168	N/A	2850026
1,2,3,4,7,8-Hexa CDF	pg	455	1.6	30	0.100	45.5	N/A	2850026
1,2,3,6,7,8-Hexa CDF	pg	136	1.5	30	0.100	13.6	N/A	2850026
2,3,4,6,7,8-Hexa CDF	pg	24.2 J	1.8	30	0.100	2.42	N/A	2850026
1,2,3,7,8,9-Hexa CDF	pg	14.1 J	1.8	30	0.100	1.41	N/A	2850026
1,2,3,4,6,7,8-Hepta CDF	pg	62 (1)	1.4	30	0.0100	0.620	N/A	2850026
1,2,3,4,7,8,9-Hepta CDF	pg	17.2 J	1.7	30	0.0100	0.172	N/A	2850026
1,2,3,4,6,7,8,9-Octa CDF	pg	14.1 J	3.1	300	0.000300	0.00423	N/A	2850026
Total Tetra CDF	pg	23500	1.6	30	N/A	N/A	N/A	2850026
Total Penta CDF	pg	7250	1.9	30	N/A	N/A	N/A	2850026
Total Hexa CDF	pg	1320	1.7	30	N/A	N/A	N/A	2850026
Total Hepta CDF	pg	120	1.5	30	N/A	N/A	N/A	2850026
Confirmation 2,3,7,8-Tetra CDF	pg	2780	13	30	0.100	278	N/A	2856201

N/A = Not Applicable
RDL = Reportable Detection Limit
EDL = Estimated Detection Limit
QC Batch = Quality Control Batch
* CDD = Chloro Dibenzo-p-Dioxin, ** CDF = Chloro Dibenzo-p-Furan
TEF = Toxic Equivalency Factor, TEQ = Toxic Equivalency Quotient,
The Total Toxic Equivalency (TEQ) value reported is the sum of Toxic Equivalent Quotients for the congeners tested.
WHO(2005): The 2005 World Health Organization, Human and Mammalian Toxic Equivalency Factors for Dioxins and Dioxin-like Compounds
(1) EMPC / Ratio - Isotopic ratio adjusted to meet theoretical

Maxxam Analytics International Corporation o/a Maxxam Analytics 6740 Campobello Road, Mississauga, Ontario, L5N 2L8 Tel: (905) 817-5700 Toll-Free: 800-563-6266 Fax: (905) 817-5777 www.maxxam.ca

Maxxam

Success Through Science®

Maxxam Job #: B262123
Report Date: 2012/05/23

O'Brien & Gere Engineers Inc
Client Project #: 49064-001.001
Site Location: GENERAL DYNAMICS-JOPLIN,MO
Your P.O. #: 11210378EST

EPA M23 DIOXINS AND FURANS (STACK SAMPLING TRAIN)

Maxxam ID		NH6285						
Sampling Date		2012/04/25						
COC Number		N/A			TOXIC EQUIVALENCY		# of	
	Units	RUN 1-BLDG 3-M23/M0010	EDL	RDL	TEF (2005 WHO)	TEQ(DL)	Isomers	QC Batch
TOTAL TOXIC EQUIVALENCY	pg	N/A	N/A	N/A	N/A	604	N/A	N/A
Surrogate Recovery (%)								
Confirmation C13-2378 TetraCDF **	%	70	N/A	N/A	N/A	N/A	N/A	2856201
C13-1234678 HeptaCDD *	%	88	N/A	N/A	N/A	N/A	N/A	2850026
C13-1234678 HeptaCDF	%	99	N/A	N/A	N/A	N/A	N/A	2850026
C13-123478 HexaCDD	%	100	N/A	N/A	N/A	N/A	N/A	2850026
C13-123478 HexaCDF	%	118	N/A	N/A	N/A	N/A	N/A	2850026
C13-1234789 HeptaCDF	%	73	N/A	N/A	N/A	N/A	N/A	2850026
C13-123678 HexaCDD	%	93	N/A	N/A	N/A	N/A	N/A	2850026
C13-123678 HexaCDF	%	95	N/A	N/A	N/A	N/A	N/A	2850026
C13-12378 PentaCDD	%	89	N/A	N/A	N/A	N/A	N/A	2850026
C13-12378 PentaCDF	%	88	N/A	N/A	N/A	N/A	N/A	2850026
C13-123789 HexaCDF	%	101	N/A	N/A	N/A	N/A	N/A	2850026
C13-23478 PentaCDF	%	114	N/A	N/A	N/A	N/A	N/A	2850026
C13-2378 TetraCDD	%	70	N/A	N/A	N/A	N/A	N/A	2850026
C13-2378 TetraCDF	%	66	N/A	N/A	N/A	N/A	N/A	2850026
C13-Octachlorodibenzo-p-Dioxin	%	96	N/A	N/A	N/A	N/A	N/A	2850026
Cl37-2378 TetraCDD	%	108	N/A	N/A	N/A	N/A	N/A	2850026

N/A = Not Applicable
RDL = Reportable Detection Limit
EDL = Estimated Detection Limit
QC Batch = Quality Control Batch
* CDD = Chloro Dibenzo-p-Dioxin, ** CDF = Chloro Dibenzo-p-Furan
TEF = Toxic Equivalency Factor, TEQ = Toxic Equivalency Quotient,
The Total Toxic Equivalency (TEQ) value reported is the sum of Toxic Equivalent Quotients for the congeners tested.
WHO(2005): The 2005 World Health Organization, Human and Mammalian Toxic Equivalency Factors for Dioxins and Dioxin-like Compounds

Maxxam Analytics International Corporation o/a Maxxam Analytics 6740 Campobello Road, Mississauga, Ontario, L5N 2L8 Tel: (905) 817-5700 Toll-Free: 800-563-6266 Fax: (905) 817-5777 www.maxxam.ca

Maxxam Job #: B262123
Report Date: 2012/05/23

O'Brien & Gere Engineers Inc
Client Project #: 49064-001.001
Site Location: GENERAL DYNAMICS-JOPLIN,MO
Your P.O. #: 11210378EST

EPA M23 DIOXINS AND FURANS (STACK SAMPLING TRAIN)

Maxxam ID		NH6286						
Sampling Date		2012/04/25						
COC Number		N/A			TOXIC EQUIVALENCY		# of	
	Units	RUN 2-BLDG 3-M23/M0010	EDL	RDL	TEF (2005 WHO)	TEQ(DL)	Isomers	QC Batch
2,3,7,8-Tetra CDD *	pg	42 (1)	2.0	30	1.00	42.0	N/A	2850026
1,2,3,7,8-Penta CDD	pg	25.1 J (1)	2.0	30	1.00	25.1	N/A	2850026
1,2,3,4,7,8-Hexa CDD	pg	2.7 J (1)	1.7	30	0.100	0.270	N/A	2850026
1,2,3,6,7,8-Hexa CDD	pg	3.5 J	1.7	30	0.100	0.350	N/A	2850026
1,2,3,7,8,9-Hexa CDD	pg	1.5 U	1.5	30	0.100	0.150	N/A	2850026
1,2,3,4,6,7,8-Hepta CDD	pg	3.2 J (1)	1.6	30	0.0100	0.0320	N/A	2850026
1,2,3,4,6,7,8,9-Octa CDD	pg	10.6 J	3.1	300	0.000300	0.00318	N/A	2850026
Total Tetra CDD	pg	646	2.0	30	N/A	N/A	N/A	2850026
Total Penta CDD	pg	140	2.0	30	N/A	N/A	N/A	2850026
Total Hexa CDD	pg	6.2 J	1.6	30	N/A	N/A	N/A	2850026
Total Hepta CDD	pg	4.9 J	1.6	30	N/A	N/A	N/A	2850026
2,3,7,8-Tetra CDF **	pg	4310	1.9	30	0.100	431	N/A	2850026
1,2,3,7,8-Penta CDF	pg	906	2.1	30	0.0300	27.2	N/A	2850026
2,3,4,7,8-Penta CDF	pg	560	2.0	30	0.300	168	N/A	2850026
1,2,3,4,7,8-Hexa CDF	pg	436	1.6	30	0.100	43.6	N/A	2850026
1,2,3,6,7,8-Hexa CDF	pg	130	1.5	30	0.100	13.0	N/A	2850026
2,3,4,6,7,8-Hexa CDF	pg	24.5 J	1.8	30	0.100	2.45	N/A	2850026
1,2,3,7,8,9-Hexa CDF	pg	13.2 J	1.8	30	0.100	1.32	N/A	2850026
1,2,3,4,6,7,8-Hepta CDF	pg	52 (1)	1.4	30	0.0100	0.520	N/A	2850026
1,2,3,4,7,8,9-Hepta CDF	pg	15.5 J	1.8	30	0.0100	0.155	N/A	2850026
1,2,3,4,6,7,8,9-Octa CDF	pg	11.3 J	3.2	300	0.000300	0.00339	N/A	2850026
Total Tetra CDF	pg	22900	1.9	30	N/A	N/A	N/A	2850026
Total Penta CDF	pg	7060	2.1	30	N/A	N/A	N/A	2850026
Total Hexa CDF	pg	1220	1.7	30	N/A	N/A	N/A	2850026
Total Hepta CDF	pg	100	1.6	30	N/A	N/A	N/A	2850026
Confirmation 2,3,7,8-Tetra CDF	pg	2330	14	30	0.100	233	N/A	2856201

N/A = Not Applicable
RDL = Reportable Detection Limit
EDL = Estimated Detection Limit
QC Batch = Quality Control Batch
* CDD = Chloro Dibenzo-p-Dioxin, ** CDF = Chloro Dibenzo-p-Furan
TEF = Toxic Equivalency Factor, TEQ = Toxic Equivalency Quotient,
The Total Toxic Equivalency (TEQ) value reported is the sum of Toxic Equivalent Quotients for the congeners tested.
WHO(2005): The 2005 World Health Organization, Human and Mammalian Toxic Equivalency Factors for Dioxins and Dioxin-like Compounds
(1) EMPC / Ratio - Isotopic ratio adjusted to meet theoretical

Maxxam Analytics International Corporation o/a Maxxam Analytics 6740 Campobello Road, Mississauga, Ontario, L5N 2L8 Tel. (905) 817-5700 Toll-Free: 800-563-6266 Fax (905) 817-5777 www.maxxam.ca

Maxxam Job #: B262123
Report Date: 2012/05/23

O'Brien & Gere Engineers Inc
Client Project #: 49064-001.001
Site Location: GENERAL DYNAMICS-JOPLIN,MO
Your P.O. #: 11210378EST

EPA M23 DIOXINS AND FURANS (STACK SAMPLING TRAIN)

Maxxam ID		NH6286						
Sampling Date		2012/04/25						
COC Number		N/A			TOXIC EQUIVALENCY		# of	
	Units	RUN 2-BLDG 3-M23/M0010	EDL	RDL	TEF (2005 WHO)	TEQ(DL)	Isomers	QC Batch
TOTAL TOXIC EQUIVALENCY	pg	N/A	N/A	N/A	N/A	557	N/A	N/A
Surrogate Recovery (%)								
Confirmation C13-2378 TetraCDF **	%	83	N/A	N/A	N/A	N/A	N/A	2856201
C13-1234678 HeptaCDD *	%	90	N/A	N/A	N/A	N/A	N/A	2850026
C13-1234678 HeptaCDF	%	120	N/A	N/A	N/A	N/A	N/A	2850026
C13-123478 HexaCDD	%	106	N/A	N/A	N/A	N/A	N/A	2850026
C13-123478 HexaCDF	%	117	N/A	N/A	N/A	N/A	N/A	2850026
C13-1234789 HeptaCDF	%	76	N/A	N/A	N/A	N/A	N/A	2850026
C13-123678 HexaCDD	%	94	N/A	N/A	N/A	N/A	N/A	2850026
C13-123678 HexaCDF	%	98	N/A	N/A	N/A	N/A	N/A	2850026
C13-12378 PentaCDD	%	88	N/A	N/A	N/A	N/A	N/A	2850026
C13-12378 PentaCDF	%	88	N/A	N/A	N/A	N/A	N/A	2850026
C13-123789 HexaCDF	%	103	N/A	N/A	N/A	N/A	N/A	2850026
C13-23478 PentaCDF	%	117	N/A	N/A	N/A	N/A	N/A	2850026
C13-2378 TetraCDD	%	78	N/A	N/A	N/A	N/A	N/A	2850026
C13-2378 TetraCDF	%	76	N/A	N/A	N/A	N/A	N/A	2850026
C13-Octachlorodibenzo-p-Dioxin	%	108	N/A	N/A	N/A	N/A	N/A	2850026
Cl37-2378 TetraCDD	%	108	N/A	N/A	N/A	N/A	N/A	2850026

N/A = Not Applicable
RDL = Reportable Detection Limit
EDL = Estimated Detection Limit
QC Batch = Quality Control Batch
* CDD = Chloro Dibenzo-p-Dioxin, ** CDF = Chloro Dibenzo-p-Furan
TEF = Toxic Equivalency Factor, TEQ = Toxic Equivalency Quotient,
The Total Toxic Equivalency (TEQ) value reported is the sum of Toxic Equivalent Quotients for the congeners tested.
WHO(2005): The 2005 World Health Organization, Human and Mammalian Toxic Equivalency Factors for Dioxins and Dioxin-like Compounds

Maxxam Analytics International Corporation o/a Maxxam Analytics 6740 Campobello Road, Mississauga, Ontario, L5N 2L8 Tel: (905) 817-5700 Toll-Free: 800-563-6266 Fax (905) 817-5777 www.maxxam.ca

Maxxam Job #: B262123
Report Date: 2012/05/23

O'Brien & Gere Engineers Inc
Client Project #: 49064-001.001
Site Location: GENERAL DYNAMICS-JOPLIN,MO
Your P.O. #: 11210378EST

EPA M23 DIOXINS AND FURANS (STACK SAMPLING TRAIN)

Maxxam ID		NH6287						
Sampling Date		2012/04/26						
COC Number		N/A			TOXIC EQUIVALENCY		# of	
	Units	RUN 3-BLDG 3-M23/M0010	EDL	RDL	TEF (2005 WHO)	TEQ(DL)	Isomers	QC Batch
2,3,7,8-Tetra CDD *	pg	54 (1)	1.7	30	1.00	54.0	N/A	2850026
1,2,3,7,8-Penta CDD	pg	36	1.8	30	1.00	36.0	N/A	2850026
1,2,3,4,7,8-Hexa CDD	pg	4.6 J	1.8	30	0.100	0.460	N/A	2850026
1,2,3,6,7,8-Hexa CDD	pg	4.6 J	1.8	30	0.100	0.460	N/A	2850026
1,2,3,7,8,9-Hexa CDD	pg	2.0 J (1)	1.6	30	0.100	0.200	N/A	2850026
1,2,3,4,6,7,8-Hepta CDD	pg	4.7 J (1)	1.6	30	0.0100	0.0470	N/A	2850026
1,2,3,4,6,7,8,9-Octa CDD	pg	13.5 J	3.0	300	0.000300	0.00405	N/A	2850026
Total Tetra CDD	pg	1600	1.7	30	N/A	N/A	N/A	2850026
Total Penta CDD	pg	289	1.8	30	N/A	N/A	N/A	2850026
Total Hexa CDD	pg	19.6 J	1.7	30	N/A	N/A	N/A	2850026
Total Hepta CDD	pg	4.7 J	1.6	30	N/A	N/A	N/A	2850026
2,3,7,8-Tetra CDF **	pg	6730	1.6	30	0.100	673	N/A	2850026
1,2,3,7,8-Penta CDF	pg	1450	2.8	30	0.0300	43.5	N/A	2850026
2,3,4,7,8-Penta CDF	pg	809	2.7	30	0.300	243	N/A	2850026
1,2,3,4,7,8-Hexa CDF	pg	696	1.6	30	0.100	69.6	N/A	2850026
1,2,3,6,7,8-Hexa CDF	pg	210	1.5	30	0.100	21.0	N/A	2850026
2,3,4,6,7,8-Hexa CDF	pg	41	1.8	30	0.100	4.10	N/A	2850026
1,2,3,7,8,9-Hexa CDF	pg	19.0 J	1.9	30	0.100	1.90	N/A	2850026
1,2,3,4,6,7,8-Hepta CDF	pg	84 (1)	1.4	30	0.0100	0.840	N/A	2850026
1,2,3,4,7,8,9-Hepta CDF	pg	24.2 J	1.8	30	0.0100	0.242	N/A	2850026
1,2,3,4,6,7,8,9-Octa CDF	pg	19.4 J	3.2	300	0.000300	0.00582	N/A	2850026
Total Tetra CDF	pg	39400	1.6	30	N/A	N/A	N/A	2850026
Total Penta CDF	pg	12000	2.8	30	N/A	N/A	N/A	2850026
Total Hexa CDF	pg	2100	1.7	30	N/A	N/A	N/A	2850026
Total Hepta CDF	pg	162	1.6	30	N/A	N/A	N/A	2850026
Confirmation 2,3,7,8-Tetra CDF	pg	3270	9.3	30	0.100	327	N/A	2856201

N/A = Not Applicable
RDL = Reportable Detection Limit
EDL = Estimated Detection Limit
QC Batch = Quality Control Batch
* CDD = Chloro Dibenzo-p-Dioxin, ** CDF = Chloro Dibenzo-p-Furan
TEF = Toxic Equivalency Factor, TEQ = Toxic Equivalency Quotient,
The Total Toxic Equivalency (TEQ) value reported is the sum of Toxic Equivalent Quotients for the congeners tested.
WHO(2005): The 2005 World Health Organization, Human and Mammalian Toxic Equivalency Factors for Dioxins and Dioxin-like Compounds
(1) EMPC / Ratio.- Isotopic ratio adjusted to meet theoretical

Maxxam Analytics International Corporation o/a Maxxam Analytics 6740 Campobello Road, Mississauga, Ontario, L5N 2L8 Tel: (905) 817-5700 Toll-Free: 800-563-6266 Fax (905) 817-5777 www.maxxam.ca

Maxxam

Success Through Science®

Maxxam Job #: B262123
Report Date: 2012/05/23

O'Brien & Gere Engineers Inc
Client Project #: 49064-001.001
Site Location: GENERAL DYNAMICS-JOPLIN,MO
Your P.O. #: 11210378EST

EPA M23 DIOXINS AND FURANS (STACK SAMPLING TRAIN)

Maxxam ID		NH6287						
Sampling Date		2012/04/26						
COC Number		N/A			TOXIC EQUIVALENCY		# of	
	Units	RUN 3-BLDG 3-M23/M0010	EDL	RDL	TEF (2005 WHO)	TEQ(DL)	Isomers	QC Batch
TOTAL TOXIC EQUIVALENCY	pg	N/A	N/A	N/A	N/A	802	N/A	N/A
Surrogate Recovery (%)								
Confirmation C13-2378 TetraCDF **	%	83	N/A	N/A	N/A	N/A	N/A	2856201
C13-1234678 HeptaCDD *	%	90	N/A	N/A	N/A	N/A	N/A	2850026
C13-1234678 HeptaCDF	%	104	N/A	N/A	N/A	N/A	N/A	2850026
C13-123478 HexaCDD	%	100	N/A	N/A	N/A	N/A	N/A	2850026
C13-123478 HexaCDF	%	126	N/A	N/A	N/A	N/A	N/A	2850026
C13-1234789 HeptaCDF	%	75	N/A	N/A	N/A	N/A	N/A	2850026
C13-123678 HexaCDD	%	103	N/A	N/A	N/A	N/A	N/A	2850026
C13-123678 HexaCDF	%	97	N/A	N/A	N/A	N/A	N/A	2850026
C13-12378 PentaCDD	%	90	N/A	N/A	N/A	N/A	N/A	2850026
C13-12378 PentaCDF	%	92	N/A	N/A	N/A	N/A	N/A	2850026
C13-123789 HexaCDF	%	108	N/A	N/A	N/A	N/A	N/A	2850026
C13-23478 PentaCDF	%	113	N/A	N/A	N/A	N/A	N/A	2850026
C13-2378 TetraCDD	%	84	N/A	N/A	N/A	N/A	N/A	2850026
C13-2378 TetraCDF	%	88	N/A	N/A	N/A	N/A	N/A	2850026
C13-Octachlorodibenzo-p-Dioxin	%	101	N/A	N/A	N/A	N/A	N/A	2850026
Cl37-2378 TetraCDD	%	108	N/A	N/A	N/A	N/A	N/A	2850026

N/A = Not Applicable
RDL = Reportable Detection Limit
EDL = Estimated Detection Limit
QC Batch = Quality Control Batch
* CDD = Chloro Dibenzo-p-Dioxin, ** CDF = Chloro Dibenzo-p-Furan
TEF = Toxic Equivalency Factor, TEQ = Toxic Equivalency Quotient,
The Total Toxic Equivalency (TEQ) value reported is the sum of Toxic Equivalent Quotients for the congeners tested.
WHO(2005): The 2005 World Health Organization, Human and Mammalian Toxic Equivalency Factors for Dioxins and Dioxin-like Compounds

Maxxam Analytics International Corporation o/a Maxxam Analytics 6740 Campobello Road, Mississauga, Ontario, L5N 2L8 Tel: (905) 817-5700 Toll-Free: 800-563-6266 Fax: (905) 817-5777 www.maxxam.ca

Maxxam Job #: B262123
Report Date: 2012/05/23

O'Brien & Gere Engineers Inc
Client Project #: 49064-001.001
Site Location: GENERAL DYNAMICS-JOPLIN,MO
Your P.O. #: 11210378EST

Test Summary

Maxxam ID NH5943 **Collected** 2012/04/26
Sample ID R.BLANK-BLDG 3-M23/M0010 **Shipped**
Matrix Stack Sampling Train **Received** 2012/05/01

Test Description	Instrumentation	Batch	Extracted	Analyzed	Analyst
SVOCs in MM5 SamplingTrain (EPA0010)	GC/MS	2846286	2012/05/07	2012/05/15	WENDY ZHAO
Dioxins/Furans in Air (Method 23)	HRMS/MS	2850026	2012/05/07	2012/05/18	OWEN COSBY

Maxxam ID NH6285 **Collected** 2012/04/25
Sample ID RUN 1-BLDG 3-M23/M0010 **Shipped**
Matrix Stack Sampling Train **Received** 2012/05/01

Test Description	Instrumentation	Batch	Extracted	Analyzed	Analyst
SVOCs in MM5 SamplingTrain (EPA0010)	GC/MS	2846286	2012/05/07	2012/05/15	WENDY ZHAO
2,3,7,8-TCDF Confirmation (M23)	HRMS/MS	2856201	N/A	2012/05/22	ANGEL GUERRERO
Dioxins/Furans in Air (Method 23)	HRMS/MS	2850026	2012/05/07	2012/05/18	OWEN COSBY

Maxxam ID NH6286 **Collected** 2012/04/25
Sample ID RUN 2-BLDG 3-M23/M0010 **Shipped**
Matrix Stack Sampling Train **Received** 2012/05/01

Test Description	Instrumentation	Batch	Extracted	Analyzed	Analyst
SVOCs in MM5 SamplingTrain (EPA0010)	GC/MS	2846286	2012/05/07	2012/05/15	WENDY ZHAO
2,3,7,8-TCDF Confirmation (M23)	HRMS/MS	2856201	N/A	2012/05/22	ANGEL GUERRERO
Dioxins/Furans in Air (Method 23)	HRMS/MS	2850026	2012/05/07	2012/05/18	OWEN COSBY

Maxxam ID NH6287 **Collected** 2012/04/26
Sample ID RUN 3-BLDG 3-M23/M0010 **Shipped**
Matrix Stack Sampling Train **Received** 2012/05/01

Test Description	Instrumentation	Batch	Extracted	Analyzed	Analyst
SVOCs in MM5 SamplingTrain (EPA0010)	GC/MS	2846286	2012/05/07	2012/05/15	WENDY ZHAO
2,3,7,8-TCDF Confirmation (M23)	HRMS/MS	2856201	N/A	2012/05/22	ANGEL GUERRERO
Dioxins/Furans in Air (Method 23)	HRMS/MS	2850026	2012/05/07	2012/05/18	OWEN COSBY

Maxxam Analytics International Corporation o/a Maxxam Analytics 6740 Campobello Road, Mississauga, Ontario, L5N 2L8 Tel: (905) 817-5700 Toll-Free: 800-563-6266 Fax: (905) 817-5777 www.maxxam.ca

Maxxam Job #: B262123
Report Date: 2012/05/23

O'Brien & Gere Engineers Inc
Client Project #: 49064-001.001
Site Location: GENERAL DYNAMICS-JOPLIN,MO
Your P.O. #: 11210378EST

GENERAL COMMENTS

ABNMM5-TR

Reference std is above 30% RSD

Phenol is statistically out of control at 58.2% recovery in the spike:dup. Spike recovery is in control. Acceptance criteria met for both spike and dup. Data reported and flagged.

Sample NH6285-01: ABNMM5-TR

High recovery of surrgote 2-Fluorobiphenyl in sample.

Sample was rerun at a 5x dilution for Benzyl Alcohol and Benzoic Acid due to exceedence of linear range. Mdls were raised accordingly.

Sample NH6286-01: ABNMM5-TR

Sample was rerun at a 5x dilution for Benzyl Alcohol and Benzoic Acid due to exceedence of linear range. Mdls were raised accordingly.

Sample NH6287-01: ABNMM5-TR

Sample was rerun at a 5x dilution for Benzyl Alcohol and Benzoic Acid due to exceedence of linear range. Mdls were raised accordingly.

Results relate only to the items tested.

Maxxam Analytics International Corporation o/a Maxxam Analytics 6740 Campobello Road, Mississauga, Ontario, L5N 2L8 Tel: (905) 817-5700 Toll-Free: 800-563-6266 Fax: (905) 817-5777 www.maxxam.ca

Maxxam

Success Through Science®

O'Brien & Gere Engineers Inc
Attention: Jeff Gorman
Client Project #: 49064-001.001
P.O. #: 11210378EST
Site Location: GENERAL DYNAMICS-JOPLIN,MO

Quality Assurance Report

Maxxam Job Number: GB262123

QA/QC Batch Num Init	QC Type	Parameter	Date Analyzed yyyy/mm/dd	Value	%Recovery	Units	QC Limits
2846286 WZ	Spiked Blank	2,4,6-Tribromophenol	2012/05/15		88	%	24 - 121
	Spiked Blank DUP	2,4,6-Tribromophenol	2012/05/15		94	%	24 - 121
	Spiked Blank	2-Fluorobiphenyl	2012/05/15		90	%	30 - 115
	Spiked Blank DUP	2-Fluorobiphenyl	2012/05/15		94	%	30 - 115
	Spiked Blank	2-Fluorophenol	2012/05/15		51	%	30 - 130
	Spiked Blank DUP	2-Fluorophenol	2012/05/15		45	%	30 - 130
	Spiked Blank	D14-Terphenyl	2012/05/15		104	%	18 - 137
	Spiked Blank DUP	D14-Terphenyl	2012/05/15		110	%	18 - 137
	Spiked Blank	D5-Nitrobenzene	2012/05/15		77	%	23 - 120
	Spiked Blank DUP	D5-Nitrobenzene	2012/05/15		77	%	23 - 120
	Spiked Blank	D5-Phenol	2012/05/15		67	%	24 - 113
	Spiked Blank DUP	D5-Phenol	2012/05/15		63	%	24 - 113
	Spiked Blank	1,2,4-Trichlorobenzene	2012/05/15		83	%	40 - 125
	Spiked Blank DUP	1,2,4-Trichlorobenzene	2012/05/15		87	%	40 - 125
	RPD	1,2,4-Trichlorobenzene	2012/05/15	4.4		%	50
	Spiked Blank	1,4-Dichlorobenzene	2012/05/15		82	%	40 - 125
	Spiked Blank DUP	1,4-Dichlorobenzene	2012/05/15		82	%	40 - 125
	RPD	1,4-Dichlorobenzene	2012/05/15	0.1		%	50
	Spiked Blank	2,4-Dinitrotoluene	2012/05/15		92	%	40 - 125
	Spiked Blank DUP	2,4-Dinitrotoluene	2012/05/15		97	%	40 - 125
	RPD	2,4-Dinitrotoluene	2012/05/15	5.7		%	50
	Spiked Blank	2-Chlorophenol	2012/05/15		76	%	10 - 125
	Spiked Blank DUP	2-Chlorophenol	2012/05/15		77	%	10 - 125
	RPD	2-Chlorophenol	2012/05/15	0.4		%	50
	Spiked Blank	4-Chloro-3-Methylphenol	2012/05/15		70	%	10 - 125
	Spiked Blank DUP	4-Chloro-3-Methylphenol	2012/05/15		74	%	10 - 125
	RPD	4-Chloro-3-Methylphenol	2012/05/15	5.1		%	50
	Spiked Blank	4-Nitrophenol	2012/05/15		77	%	10 - 125
	Spiked Blank DUP	4-Nitrophenol	2012/05/15		83	%	10 - 125
	RPD	4-Nitrophenol	2012/05/15	7.8		%	50
	Spiked Blank	Acenaphthene	2012/05/15		88	%	40 - 125
	Spiked Blank DUP	Acenaphthene	2012/05/15		92	%	40 - 125
	RPD	Acenaphthene	2012/05/15	3.9		%	50
	Spiked Blank	N-Nitroso-di-n-propylamine	2012/05/15		69	%	40 - 125
	Spiked Blank DUP	N-Nitroso-di-n-propylamine	2012/05/15		71	%	40 - 125
	RPD	N-Nitroso-di-n-propylamine	2012/05/15	3.1		%	50
	Spiked Blank	Pentachlorophenol	2012/05/15		101	%	10 - 125
	Spiked Blank DUP	Pentachlorophenol	2012/05/15		108	%	10 - 125
	RPD	Pentachlorophenol	2012/05/15	7.3		%	50
	Spiked Blank	Phenol	2012/05/15		62	%	10 - 125
	Spiked Blank DUP	Phenol	2012/05/15		58	%	10 - 125
	RPD	Phenol	2012/05/15	6.6		%	50
	Spiked Blank	Pyrene	2012/05/15		95	%	40 - 125
	Spiked Blank DUP	Pyrene	2012/05/15		99	%	40 - 125
	RPD	Pyrene	2012/05/15	4.1		%	50
	Method Blank	2,4,6-Tribromophenol	2012/05/15		86	%	24 - 121
		2-Fluorobiphenyl	2012/05/15		98	%	30 - 115
		2-Fluorophenol	2012/05/15		51	%	30 - 130
		D14-Terphenyl	2012/05/15		103	%	18 - 137
		D5-Nitrobenzene	2012/05/15		80	%	23 - 120
		D5-Phenol	2012/05/15		68	%	24 - 113
		1,2,4-Trichlorobenzene	2012/05/15	1 U, MDL=1		ug	
		1,2-Dichlorobenzene	2012/05/15	1 U, MDL=1		ug	
		1,3-Dichlorobenzene	2012/05/15	1 U, MDL=1		ug	
		1,4-Dichlorobenzene	2012/05/15	1 U, MDL=1		ug	

Maxxam Analytics International Corporation o/a Maxxam Analytics 6740 Campobello Road, Mississauga, Ontario, L5N 2L8 Tel: (905) 817-5700 Toll-Free: 800-563-6266 Fax: (905) 817-5777 www.maxxam.ca

Maxxam

Success Through Science®

O'Brien & Gere Engineers Inc
Attention: Jeff Gorman
Client Project #: 49064-001.001
P.O. #: 11210378EST
Site Location: GENERAL DYNAMICS-JOPLIN,MO

Quality Assurance Report (Continued)

Maxxam Job Number: GB262123

QA/QC Batch Num Init	QC Type	Parameter	Date Analyzed yyyy/mm/dd	Value	%Recovery	Units	QC Limits
2846286 WZ	Method Blank	1-Chloronaphthalene	2012/05/15	1 U, MDL=1		ug	
		1-Methylnaphthalene	2012/05/15	2 U, MDL=2		ug	
		2,4,5-Trichlorophenol	2012/05/15	1 U, MDL=1		ug	
		2,4,6-Trichlorophenol	2012/05/15	0.8 U, MDL=0.8		ug	
		2,4-Dichlorophenol	2012/05/15	1 U, MDL=1		ug	
		2,4-Dimethylphenol	2012/05/15	1 U, MDL=1		ug	
		2,4-Dinitrophenol	2012/05/15	2 U, MDL=2		ug	
		2,4-Dinitrotoluene	2012/05/15	0.3 U, MDL=0.3		ug	
		2,6-Dinitrotoluene	2012/05/15	1 U, MDL=1		ug	
		2-Chloronaphthalene	2012/05/15	0.7 U, MDL=0.7		ug	
		2-Chlorophenol	2012/05/15	1 U, MDL=1		ug	
		2-Methylnaphthalene	2012/05/15	1 U, MDL=1		ug	
		2-Methylphenol	2012/05/15	2 U, MDL=2		ug	
		2-Nitroaniline	2012/05/15	4 U, MDL=4		ug	
		2-Nitrophenol	2012/05/15	0.8 U, MDL=0.8		ug	
		3 & 4-methylphenol	2012/05/15	2 U, MDL=2		ug	
		3,3'-Dichlorobenzidine	2012/05/15	1 U, MDL=1		ug	
		3-Nitroaniline	2012/05/15	4 U, MDL=4		ug	
		4,6-Dinitro-2-methylphenol	2012/05/15	2 U, MDL=2		ug	
		4-Bromophenyl phenyl ether	2012/05/15	0.3 U, MDL=0.3		ug	
		4-Chloro-3-Methylphenol	2012/05/15	0.8 U, MDL=0.8		ug	
		4-Chloroaniline	2012/05/15	4 U, MDL=4		ug	
		4-Chlorophenyl phenyl ether	2012/05/15	0.7 U, MDL=0.7		ug	
		4-Nitroaniline	2012/05/15	4 U, MDL=4		ug	
		4-Nitrophenol	2012/05/15	2 U, MDL=2		ug	
		Acenaphthene	2012/05/15	0.3 U, MDL=0.3		ug	
		Acenaphthylene	2012/05/15	0.4 U, MDL=0.4		ug	
		Aniline	2012/05/15	4 U, MDL=4		ug	
		Anthracene	2012/05/15	0.3 U, MDL=0.3		ug	
		Benzidine	2012/05/15	10 U, MDL=10		ug	
		Benzo(a)anthracene	2012/05/15	0.3 U, MDL=0.3		ug	
		Benzo(a)pyrene	2012/05/15	0.4 U, MDL=0.4		ug	
		Benzo(b)fluoranthene	2012/05/15	0.3 U, MDL=0.3		ug	
		Benzo(g,h,i)perylene	2012/05/15	0.3 U, MDL=0.3		ug	
		Benzo(k)fluoranthene	2012/05/15	0.4 U, MDL=0.4		ug	
		Benzoic Acid	2012/05/15	2 U, MDL=2		ug	
		Benzyl Alcohol	2012/05/15	1 U, MDL=1		ug	
		Benzyl butyl phthalate	2012/05/15	0.3 U, MDL=0.3		ug	
		Biphenyl	2012/05/15	1 U, MDL=1		ug	
		Bis(2-chloroethoxy)methane	2012/05/15	1 U, MDL=1		ug	
		Bis(2-chloroethyl)ether	2012/05/15	1 U, MDL=1		ug	
		Bis(2-chloroisopropyl)ether	2012/05/15	0.8 U, MDL=0.8		ug	
		Bis(2-ethylhexyl)phthalate	2012/05/15	2 U, MDL=2		ug	
		Carbazole	2012/05/15	4 U, MDL=4		ug	
		Chrysene	2012/05/15	0.3 U, MDL=0.3		ug	
		Dibenz(a,h)anthracene	2012/05/15	0.3 U, MDL=0.3		ug	
		Dibenzofuran	2012/05/15	4 U, MDL=4		ug	
		Diethyl phthalate	2012/05/15	0.6 U, MDL=0.6		ug	
		Dimethyl phthalate	2012/05/15	0.6 U, MDL=0.6		ug	
		Di-N-butyl phthalate	2012/05/15	0.6 U, MDL=0.6		ug	
		Di-N-octyl phthalate	2012/05/15	0.6 U, MDL=0.6		ug	
		Fluoranthene	2012/05/15	0.3 U, MDL=0.3		ug	
		Fluorene	2012/05/15	0.3 U, MDL=0.3		ug	
		Hexachlorobenzene	2012/05/15	1 U, MDL=1		ug	
		Hexachlorobutadiene	2012/05/15	1 U, MDL=1		ug	

Maxxam Analytics International Corporation o/a Maxxam Analytics 6740 Campobello Road, Mississauga, Ontario, L5N 2L8 Tel: (905) 817-5700 Toll-Free: 800-563-6266 Fax: (905) 817-5777 www.maxxam.ca

O'Brien & Gere Engineers Inc
Attention: Jeff Gorman
Client Project #: 49064-001.001
P.O. #: 11210378EST
Site Location: GENERAL DYNAMICS-JOPLIN,MO

Quality Assurance Report (Continued)

Maxxam Job Number: GB262123

QA/QC Batch Num Init	QC Type	Parameter	Date Analyzed yyyy/mm/dd	Value	%Recovery	Units	QC Limits
2846286 WZ	Method Blank	Hexachlorocyclopentadiene	2012/05/15	1 U, MDL=1		ug	
		Hexachloroethane	2012/05/15	1 U, MDL=1		ug	
		Indeno(1,2,3-cd)pyrene	2012/05/15	0.3 U, MDL=0.3		ug	
		Isophorone	2012/05/15	2 U, MDL=2		ug	
		Naphthalene	2012/05/15	0.3 U, MDL=0.3		ug	
		Nitrobenzene	2012/05/15	1 U, MDL=1		ug	
		N-Nitrosodimethylamine	2012/05/15	6 U, MDL=6		ug	
		N-Nitroso-di-n-propylamine	2012/05/15	1 U, MDL=1		ug	
		N-Nitrosodiphenylamine	2012/05/15	1 U, MDL=1		ug	
		Pentachlorophenol	2012/05/15	2 U, MDL=2		ug	
		Phenanthrene	2012/05/15	0.3 U, MDL=0.3		ug	
		Phenol	2012/05/15	0.8 U, MDL=0.8		ug	
		Pyrene	2012/05/15	0.4 U, MDL=0.4		ug	
2850026 OBC	Spiked Blank	C13-1234678 HeptaCDD	2012/05/18		88	%	25 - 130
	Spiked Blank DUP	C13-1234678 HeptaCDD	2012/05/18		77	%	25 - 130
	Spiked Blank	C13-1234678 HeptaCDF	2012/05/18		100	%	25 - 130
	Spiked Blank DUP	C13-1234678 HeptaCDF	2012/05/18		100	%	25 - 130
	Spiked Blank	C13-123678 HexaCDD	2012/05/18		97	%	40 - 130
	Spiked Blank DUP	C13-123678 HexaCDD	2012/05/18		85	%	40 - 130
	Spiked Blank	C13-123678 HexaCDF	2012/05/18		89	%	40 - 130
	Spiked Blank DUP	C13-123678 HexaCDF	2012/05/18		80	%	40 - 130
	Spiked Blank	C13-12378 PentaCDD	2012/05/18		79	%	40 - 130
	Spiked Blank DUP	C13-12378 PentaCDD	2012/05/18		85	%	40 - 130
	Spiked Blank	C13-12378 PentaCDF	2012/05/18		72	%	40 - 130
	Spiked Blank DUP	C13-12378 PentaCDF	2012/05/18		79	%	40 - 130
	Spiked Blank	C13-123789 HexaCDF	2012/05/18		98	%	40 - 130
	Spiked Blank DUP	C13-123789 HexaCDF	2012/05/18		98	%	40 - 130
	Spiked Blank	C13-2378 TetraCDD	2012/05/18		41	%	40 - 130
	Spiked Blank DUP	C13-2378 TetraCDD	2012/05/18		67	%	40 - 130
	Spiked Blank	C13-2378 TetraCDF	2012/05/18		45	%	40 - 130
	Spiked Blank DUP	C13-2378 TetraCDF	2012/05/18		62	%	40 - 130
	Spiked Blank	C13-Octachlorodibenzo-p-Dioxin	2012/05/18		92	%	25 - 130
	Spiked Blank DUP	C13-Octachlorodibenzo-p-Dioxin	2012/05/18		89	%	25 - 130
	Spiked Blank	2,3,7,8-Tetra CDD	2012/05/18		113	%	80 - 140
	Spiked Blank DUP	2,3,7,8-Tetra CDD	2012/05/18		116	%	80 - 140
	RPD	2,3,7,8-Tetra CDD	2012/05/18	NC		%	20
	Spiked Blank	1,2,3,7,8-Penta CDD	2012/05/18		122	%	80 - 140
	Spiked Blank DUP	1,2,3,7,8-Penta CDD	2012/05/18		120	%	80 - 140
	RPD	1,2,3,7,8-Penta CDD	2012/05/18	NC		%	20
	Spiked Blank	1,2,3,4,7,8-Hexa CDD	2012/05/18		110	%	80 - 140
	Spiked Blank DUP	1,2,3,4,7,8-Hexa CDD	2012/05/18		111	%	80 - 140
	RPD	1,2,3,4,7,8-Hexa CDD	2012/05/18	NC		%	20
	Spiked Blank	1,2,3,6,7,8-Hexa CDD	2012/05/18		115	%	80 - 140
	Spiked Blank DUP	1,2,3,6,7,8-Hexa CDD	2012/05/18		118	%	80 - 140
	RPD	1,2,3,6,7,8-Hexa CDD	2012/05/18	NC		%	20
	Spiked Blank	1,2,3,7,8,9-Hexa CDD	2012/05/18		115	%	80 - 140
	Spiked Blank DUP	1,2,3,7,8,9-Hexa CDD	2012/05/18		128	%	80 - 140
	RPD	1,2,3,7,8,9-Hexa CDD	2012/05/18	NC		%	20
	Spiked Blank	1,2,3,4,6,7,8-Hepta CDD	2012/05/18		109	%	80 - 140
	Spiked Blank DUP	1,2,3,4,6,7,8-Hepta CDD	2012/05/18		115	%	80 - 140
	RPD	1,2,3,4,6,7,8-Hepta CDD	2012/05/18	NC		%	20
	Spiked Blank	1,2,3,4,6,7,8,9-Octa CDD	2012/05/18		113	%	80 - 140
	Spiked Blank DUP	1,2,3,4,6,7,8,9-Octa CDD	2012/05/18		115	%	80 - 140
	RPD	1,2,3,4,6,7,8,9-Octa CDD	2012/05/18	NC		%	20
	Spiked Blank	2,3,7,8-Tetra CDF	2012/05/18		120	%	80 - 140

Maxxam Analytics International Corporation o/a Maxxam Analytics 6740 Campobello Road, Mississauga, Ontario, L5N 2L8 Tel: (905) 817-5700 Toll-Free: 800-563-6266 Fax: (905) 817-5777 www.maxxam.ca

O'Brien & Gere Engineers Inc
Attention: Jeff Gorman
Client Project #: 49064-001.001
P.O. #: 11210378EST
Site Location: GENERAL DYNAMICS-JOPLIN,MO

Quality Assurance Report (Continued)

Maxxam Job Number: GB262123

QA/QC Batch Num Init	QC Type	Parameter	Date Analyzed yyyy/mm/dd	Value	%Recovery	Units	QC Limits
2850026 OBC	Spiked Blank DUP	2,3,7,8-Tetra CDF	2012/05/18		122	%	80 - 140
	RPD	2,3,7,8-Tetra CDF	2012/05/18	NC		%	20
	Spiked Blank	1,2,3,7,8-Penta CDF	2012/05/18		123	%	80 - 140
	Spiked Blank DUP	1,2,3,7,8-Penta CDF	2012/05/18		123	%	80 - 140
	RPD	1,2,3,7,8-Penta CDF	2012/05/18	NC		%	20
	Spiked Blank	2,3,4,7,8-Penta CDF	2012/05/18		125	%	80 - 140
	Spiked Blank DUP	2,3,4,7,8-Penta CDF	2012/05/18		132	%	80 - 140
	RPD	2,3,4,7,8-Penta CDF	2012/05/18	NC		%	20
	Spiked Blank	1,2,3,4,7,8-Hexa CDF	2012/05/18		122	%	80 - 140
	Spiked Blank DUP	1,2,3,4,7,8-Hexa CDF	2012/05/18		121	%	80 - 140
	RPD	1,2,3,4,7,8-Hexa CDF	2012/05/18	NC		%	20
	Spiked Blank	1,2,3,6,7,8-Hexa CDF	2012/05/18		123	%	80 - 140
	Spiked Blank DUP	1,2,3,6,7,8-Hexa CDF	2012/05/18		124	%	80 - 140
	RPD	1,2,3,6,7,8-Hexa CDF	2012/05/18	NC		%	20
	Spiked Blank	2,3,4,6,7,8-Hexa CDF	2012/05/18		128	%	80 - 140
	Spiked Blank DUP	2,3,4,6,7,8-Hexa CDF	2012/05/18		133	%	80 - 140
	RPD	2,3,4,6,7,8-Hexa CDF	2012/05/18	NC		%	20
	Spiked Blank	1,2,3,7,8,9-Hexa CDF	2012/05/18		124	%	80 - 140
	Spiked Blank DUP	1,2,3,7,8,9-Hexa CDF	2012/05/18		135	%	80 - 140
	RPD	1,2,3,7,8,9-Hexa CDF	2012/05/18	NC		%	20
	Spiked Blank	1,2,3,4,6,7,8-Hepta CDF	2012/05/18		112	%	80 - 140
	Spiked Blank DUP	1,2,3,4,6,7,8-Hepta CDF	2012/05/18		108	%	80 - 14[illegible]
	RPD	1,2,3,4,6,7,8-Hepta CDF	2012/05/18	NC		%	2[illegible]
	Spiked Blank	1,2,3,4,7,8,9-Hepta CDF	2012/05/18		109	%	80 - 140
	Spiked Blank DUP	1,2,3,4,7,8,9-Hepta CDF	2012/05/18		104	%	80 - 140
	RPD	1,2,3,4,7,8,9-Hepta CDF	2012/05/18	NC		%	20
	Spiked Blank	1,2,3,4,6,7,8,9-Octa CDF	2012/05/18		116	%	80 - 140
	Spiked Blank DUP	1,2,3,4,6,7,8,9-Octa CDF	2012/05/18		118	%	80 - 140
	RPD	1,2,3,4,6,7,8,9-Octa CDF	2012/05/18	NC		%	20
	Method Blank	C13-1234678 HeptaCDD	2012/05/18		87	%	25 - 130
		C13-1234678 HeptaCDF	2012/05/18		98	%	25 - 130
		C13-123678 HexaCDD	2012/05/18		84	%	40 - 130
		C13-123678 HexaCDF	2012/05/18		78	%	40 - 130
		C13-12378 PentaCDD	2012/05/18		73	%	40 - 130
		C13-12378 PentaCDF	2012/05/18		66	%	40 - 130
		C13-123789 HexaCDF	2012/05/18		93	%	40 - 130
		C13-2378 TetraCDD	2012/05/18		42	%	40 - 130
		C13-2378 TetraCDF	2012/05/18		41	%	40 - 130
		C13-Octachlorodibenzo-p-Dioxin	2012/05/18		103	%	25 - 130
		2,3,7,8-Tetra CDD	2012/05/18	2.6 U, EDL=2.6		pg	
		1,2,3,7,8-Penta CDD	2012/05/18	2.1 U, EDL=2.1		pg	
		1,2,3,4,7,8-Hexa CDD	2012/05/18	2.1 U, EDL=2.1		pg	
		1,2,3,6,7,8-Hexa CDD	2012/05/18	2.1 U, EDL=2.1		pg	
		1,2,3,7,8,9-Hexa CDD	2012/05/18	1.9 U, EDL=1.9		pg	
		1,2,3,4,6,7,8-Hepta CDD	2012/05/18	1.6 U, EDL=1.6		pg	
		1,2,3,4,6,7,8,9-Octa CDD	2012/05/18	3.1 U, EDL=3.1		pg	
		Total Tetra CDD	2012/05/18	5.5 U, EDL=5.5 (1)		pg	
		Total Penta CDD	2012/05/18	2.1 U, EDL=2.1		pg	
		Total Hexa CDD	2012/05/18	3.9 U, EDL=3.9 (1)		pg	
		Total Hepta CDD	2012/05/18	1.6 U, EDL=1.6		pg	
		2,3,7,8-Tetra CDF	2012/05/18	2.4 U, EDL=2.4		pg	
		1,2,3,7,8-Penta CDF	2012/05/18	1.7 U, EDL=1.7		pg	
		2,3,4,7,8-Penta CDF	2012/05/18	4.8 J, EDL=1.6 (2)		pg	
		1,2,3,4,7,8-Hexa CDF	2012/05/18	1.6 U, EDL=1.6		pg	
		1,2,3,6,7,8-Hexa CDF	2012/05/18	1.5 U, EDL=1.5		pg	

Maxxam Analytics International Corporation o/a Maxxam Analytics 6740 Campobello Road, Mississauga, Ontario, L5N 2L8 Tel: (905) 817-5700 Toll-Free: 800-563-6266 Fax: (905) 817-5777 www.maxxam.ca

Maxxam

Success Through Science®

O'Brien & Gere Engineers Inc
Attention: Jeff Gorman
Client Project #: 49064-001.001
P.O. #: 11210378EST
Site Location: GENERAL DYNAMICS-JOPLIN,MO

Quality Assurance Report (Continued)

Maxxam Job Number: GB262123

QA/QC Batch Num Init	QC Type	Parameter	Date Analyzed yyyy/mm/dd	Value	%Recovery	Units	QC Limits
2850026 OBC	Method Blank	2,3,4,6,7,8-Hexa CDF	2012/05/18	1.8 U, EDL=1.8		pg	
		1,2,3,7,8,9-Hexa CDF	2012/05/18	1.8 U, EDL=1.8		pg	
		1,2,3,4,6,7,8-Hepta CDF	2012/05/18	1.3 U, EDL=1.3		pg	
		1,2,3,4,7,8,9-Hepta CDF	2012/05/18	1.7 U, EDL=1.7		pg	
		1,2,3,4,6,7,8,9-Octa CDF	2012/05/18	3.1 U, EDL=3.1		pg	
		Total Tetra CDF	2012/05/18	13.9 J, EDL=2.4		pg	
		Total Penta CDF	2012/05/18	7.9 J, EDL=1.7		pg	
		Total Hexa CDF	2012/05/18	1.7 U, EDL=1.7		pg	
		Total Hepta CDF	2012/05/18	1.5 U, EDL=1.5		pg	
2856201 AGU	Method Blank	Confirmation C13-2378 TetraCDF	2012/05/22		40	%	40 - 135
		Confirmation 2,3,7,8-Tetra CDF	2012/05/22	5.8 U, EDL=5.8		pg	

Duplicate: Paired analysis of a separate portion of the same sample. Used to evaluate the variance in the measurement.
Spiked Blank: A blank matrix to which a known amount of the analyte has been added. Used to evaluate analyte recovery.
Method Blank: A blank matrix containing all reagents used in the analytical procedure. Used to identify laboratory contamination.
Surrogate: A pure or isotopically labeled compound whose behavior mirrors the analytes of interest. Used to evaluate extraction efficiency.
NC (RPD): The RPD was not calculated. The level of analyte detected in the parent sample and its duplicate was not sufficiently significant to permit a reliable calculation.
(1) EMPC / NDR - Peak detected does not meet ratio criteria and has resulted in an elevated detection limit.
(2) EMPC / Ratio - Isotopic ratio adjusted to meet theoretical

Maxxam Analytics International Corporation o/a Maxxam Analytics 6740 Campobello Road, Mississauga, Ontario, L5N 2L8 Tel: (905) 817-5700 Toll-Free: 800-563-6266 Fax: (905) 817-5777 www.maxxam.ca

Validation Signature Page

Maxxam Job #: B262123

The analytical data and all QC contained in this report were reviewed and validated by the following individual(s).

Karen Nicol

KAREN NICOL, Supervisor, Semi-Volatiles

OWEN COSBY, BSc.C.Chem, Supervisor, HRMS Services

Maxxam has procedures in place to guard against improper use of the electronic signature and have the required "signatories", as per section 5.10.2 of ISO/IEC 17025:2005(E), signing the reports. For Service Group specific validation please refer to the Validation Signature Page.

Maxxam Analytics International Corporation o/a Maxxam Analytics 6740 Campobello Road, Mississauga, Ontario, L5N 2L8 Tel: (905) 817-5700 Toll-Free: 800-563-6266 Fax: (905) 817-5777 www.maxxam.ca

Method 23 – Retest No. 1

Maxxam

Success Through Science®

Your Project #: 49064-001.001
Site Location: GENERAL DYNAMICS-JOPLIN,MO
Your C.O.C. #: N/A

Attention: Jeff Gorman
O'Brien & Gere Engineers Inc
7600 Morgan Rd.
Liverpool, NY
USA 13090

Report Date: 2012/06/11

CERTIFICATE OF ANALYSIS

MAXXAM JOB #: B281237
Received: 2012/06/04, 11:20

Sample Matrix: Stack Sampling Train
Samples Received: 4

Analyses	Quantity	Date Extracted	Date Analyzed	Laboratory Method	Method Reference
2,3,7,8-TCDF Confirmation (M23)	3	N/A	2012/06/08	BRL SOP-00404	EPA1613Bmod(M23/23A)
Dioxins/Furans in Air (Method 23)	4	2012/06/04	2012/06/07	BRL SOP-00404	EPA1613Bmod(M23/23A)

* RPDs calculated using raw data. The rounding of final results may result in the apparent difference.

U = Undetected at the limit of quantitation.
J = Estimated concentration between the EDL & RDL.
B = Blank Contamination.
Q = One or more quality control criteria failed.

Encryption Key

Please direct all questions regarding this Certificate of Analysis to your Project Manager.

MIKE CHALLIS, CET, B.Sc, C.Chem, Customer Service Manager, US Air Toxics
Email: MChallis@maxxam.ca
Phone# (905) 817-5790

==========
Maxxam has procedures in place to guard against improper use of the electronic signature and have the required "signatories", as per section 5.10.2 of ISO/IEC 17025:2005(E), signing the reports. For Service Group specific validation please refer to the Validation Signature Page.

Total cover pages: 1

Maxxam Analytics International Corporation o/a Maxxam Analytics 6740 Campobello Road, Mississauga, Ontario, L5N 2L8 Tel: (905) 817-5700 Toll-Free: 800-563-6266 Fax: (905) 817-5777 www.maxxam.ca

Maxxam Job #: B281237
Report Date: 2012/06/11

O'Brien & Gere Engineers Inc
Client Project #: 49064-001.001
Site Location: GENERAL DYNAMICS-JOPLIN,MO

EPA M23 DIOXINS AND FURANS (STACK SAMPLING TRAIN)

Maxxam ID		NR3587						
Sampling Date		2012/05/31						
COC Number		N/A			TOXIC EQUIVALENCY		# of	
	Units	R.BLANK-BLDG 3-M23	EDL	RDL	TEF (2005 WHO)	TEQ(DL)	Isomers	QC Batch
2,3,7,8-Tetra CDD *	pg	1.3 J (1)	1.2	20	1.00	1.30	N/A	2873214
1,2,3,7,8-Penta CDD	pg	1.0 U	1.0	20	1.00	1.00	N/A	2873214
1,2,3,4,7,8-Hexa CDD	pg	1.1 U	1.1	20	0.100	0.110	N/A	2873214
1,2,3,6,7,8-Hexa CDD	pg	1.2 U	1.2	20	0.100	0.120	N/A	2873214
1,2,3,7,8,9-Hexa CDD	pg	1.0 U	1.0	20	0.100	0.100	N/A	2873214
1,2,3,4,6,7,8-Hepta CDD	pg	1.7 J	1.1	20	0.0100	0.0170	N/A	2873214
1,2,3,4,6,7,8,9-Octa CDD	pg	8.7 J	2.0	200	0.000300	0.00261	N/A	2873214
Total Tetra CDD	pg	1.3 J (1)	1.2	20	N/A	N/A	N/A	2873214
Total Penta CDD	pg	1.0 U	1.0	20	N/A	N/A	N/A	2873214
Total Hexa CDD	pg	2.9 U (2)	2.9	20	N/A	N/A	N/A	2873214
Total Hepta CDD	pg	1.7 J	1.1	20	N/A	N/A	N/A	2873214
2,3,7,8-Tetra CDF **	pg	1.3 J	1.2	20	0.100	0.130	N/A	2873214
1,2,3,7,8-Penta CDF	pg	1.1 U	1.1	20	0.0300	0.0330	N/A	2873214
2,3,4,7,8-Penta CDF	pg	1.8 J	1.1	20	0.300	0.540	N/A	2873214
1,2,3,4,7,8-Hexa CDF	pg	1.0 U	1.0	20	0.100	0.100	N/A	2873214
1,2,3,6,7,8-Hexa CDF	pg	0.96 U	0.96	20	0.100	0.0960	N/A	2873214
2,3,4,6,7,8-Hexa CDF	pg	1.1 U	1.1	20	0.100	0.110	N/A	2873214
1,2,3,7,8,9-Hexa CDF	pg	1.2 U	1.2	20	0.100	0.120	N/A	2873214
1,2,3,4,6,7,8-Hepta CDF	pg	1.0 U	1.0	20	0.0100	0.0100	N/A	2873214
1,2,3,4,7,8,9-Hepta CDF	pg	1.3 U	1.3	20	0.0100	0.0130	N/A	2873214
1,2,3,4,6,7,8,9-Octa CDF	pg	2.1 U	2.1	200	0.000300	0.000630	N/A	2873214
Total Tetra CDF	pg	5.2 J	1.2	20	N/A	N/A	N/A	2873214
Total Penta CDF	pg	1.8 J	1.1	20	N/A	N/A	N/A	2873214
Total Hexa CDF	pg	1.1 U	1.1	20	N/A	N/A	N/A	2873214
Total Hepta CDF	pg	1.2 U (1)	1.2	20	N/A	N/A	N/A	2873214
TOTAL TOXIC EQUIVALENCY	pg	N/A	N/A	N/A	N/A	3.80	N/A	N/A

N/A = Not Applicable
RDL = Reportable Detection Limit
EDL = Estimated Detection Limit
QC Batch = Quality Control Batch
* CDD = Chloro Dibenzo-p-Dioxin, ** CDF = Chloro Dibenzo-p-Furan
TEF = Toxic Equivalency Factor, TEQ = Toxic Equivalency Quotient,
The Total Toxic Equivalency (TEQ) value reported is the sum of Toxic Equivalent Quotients for the congeners tested.
WHO(2005): The 2005 World Health Organization, Human and Mammalian Toxic Equivalency Factors for Dioxins and Dioxin-like Compounds
(1) EMPC / Ratio - Isotopic ratio adjusted to meet theoretical
(2) EMPC / NDR - Peak detected does not meet ratio criteria and has resulted in an elevated detection limit.

Maxxam Analytics International Corporation o/a Maxxam Analytics 6740 Campobello Road, Mississauga, Ontario, L5N 2L8 Tel: (905) 817-5700 Toll-Free: 800-563-6266 Fax (905) 817-5777 www.maxxam.ca

Maxxam Job #: B281237
Report Date: 2012/06/11

O'Brien & Gere Engineers Inc
Client Project #: 49064-001.001
Site Location: GENERAL DYNAMICS-JOPLIN,MO

EPA M23 DIOXINS AND FURANS (STACK SAMPLING TRAIN)

Maxxam ID		NR3587						
Sampling Date		2012/05/31						
COC Number		N/A			TOXIC EQUIVALENCY		# of	
	Units	R.BLANK-BLDG 3-M23	EDL	RDL	TEF (2005 WHO)	TEQ(DL)	Isomers	QC Batch
Surrogate Recovery (%)								
C13-1234678 HeptaCDD *	%	101	N/A	N/A	N/A	N/A	N/A	2873214
C13-1234678 HeptaCDF **	%	94	N/A	N/A	N/A	N/A	N/A	2873214
C13-123478 HexaCDD	%	95	N/A	N/A	N/A	N/A	N/A	2873214
C13-123478 HexaCDF	%	123	N/A	N/A	N/A	N/A	N/A	2873214
C13-1234789 HeptaCDF	%	70	N/A	N/A	N/A	N/A	N/A	2873214
C13-123678 HexaCDD	%	89	N/A	N/A	N/A	N/A	N/A	2873214
C13-123678 HexaCDF	%	78	N/A	N/A	N/A	N/A	N/A	2873214
C13-12378 PentaCDD	%	83	N/A	N/A	N/A	N/A	N/A	2873214
C13-12378 PentaCDF	%	73	N/A	N/A	N/A	N/A	N/A	2873214
C13-123789 HexaCDF	%	91	N/A	N/A	N/A	N/A	N/A	2873214
C13-23478 PentaCDF	%	116	N/A	N/A	N/A	N/A	N/A	2873214
C13-2378 TetraCDD	%	51	N/A	N/A	N/A	N/A	N/A	2873214
C13-2378 TetraCDF	%	51	N/A	N/A	N/A	N/A	N/A	2873214
C13-Octachlorodibenzo-p-Dioxin	%	92	N/A	N/A	N/A	N/A	N/A	2873214
Cl37-2378 TetraCDD	%	105	N/A	N/A	N/A	N/A	N/A	2873214

N/A = Not Applicable
RDL = Reportable Detection Limit
EDL = Estimated Detection Limit
QC Batch = Quality Control Batch
* CDD = Chloro Dibenzo-p-Dioxin, ** CDF = Chloro Dibenzo-p-Furan
TEF = Toxic Equivalency Factor, TEQ = Toxic Equivalency Quotient,
The Total Toxic Equivalency (TEQ) value reported is the sum of Toxic Equivalent Quotients for the congeners tested.
WHO(2005): The 2005 World Health Organization, Human and Mammalian Toxic Equivalency Factors for Dioxins and Dioxin-like Compounds

Maxxam Analytics International Corporation o/a Maxxam Analytics 6740 Campobello Road, Mississauga, Ontario, L5N 2L8 Tel: (905) 817-5700 Toll-Free: 800-563-6266 Fax: (905) 817-5777 www.maxxam.ca

Maxxam Job #: B281237
Report Date: 2012/06/11

O'Brien & Gere Engineers Inc
Client Project #: 49064-001.001
Site Location: GENERAL DYNAMICS-JOPLIN,MO

EPA M23 DIOXINS AND FURANS (STACK SAMPLING TRAIN)

Maxxam ID		NR3588						
Sampling Date		2012/05/31						
COC Number		N/A			TOXIC EQUIVALENCY		# of	
	Units	RUN 1-BLDG 3-M23	EDL	RDL	TEF (2005 WHO)	TEQ(DL)	Isomers	QC Batch
2,3,7,8-Tetra CDD *	pg	58 (1)	1.1	20	1.00	58.0	N/A	2873214
1,2,3,7,8-Penta CDD	pg	23 (1)	1.1	20	1.00	23.0	N/A	2873214
1,2,3,4,7,8-Hexa CDD	pg	3.6 J	1.1	20	0.100	0.360	N/A	2873214
1,2,3,6,7,8-Hexa CDD	pg	3.2 J	1.1	20	0.100	0.320	N/A	2873214
1,2,3,7,8,9-Hexa CDD	pg	2.17 J (2)	0.99	20	0.100	0.217	N/A	2873214
1,2,3,4,6,7,8-Hepta CDD	pg	3.3 J (1)	1.1	20	0.0100	0.0330	N/A	2873214
1,2,3,4,6,7,8,9-Octa CDD	pg	11.2 J	2.2	200	0.000300	0.00336	N/A	2873214
Total Tetra CDD	pg	609	1.1	20	N/A	N/A	N/A	2873214
Total Penta CDD	pg	146	1.1	20	N/A	N/A	N/A	2873214
Total Hexa CDD	pg	12.5 J	1.1	20	N/A	N/A	N/A	2873214
Total Hepta CDD	pg	3.3 J	1.1	20	N/A	N/A	N/A	2873214
2,3,7,8-Tetra CDF **	pg	4990 (3)	1.1	20	0.100	499	N/A	2873214
1,2,3,7,8-Penta CDF	pg	1070	1.1	20	0.0300	32.1	N/A	2873214
2,3,4,7,8-Penta CDF	pg	553	1.1	20	0.300	166	N/A	2873214
1,2,3,4,7,8-Hexa CDF	pg	693 (2)	1.0	20	0.100	69.3	N/A	2873214
1,2,3,6,7,8-Hexa CDF	pg	157	0.96	20	0.100	15.7	N/A	2873214
2,3,4,6,7,8-Hexa CDF	pg	20	1.1	20	0.100	2.00	N/A	2873214
1,2,3,7,8,9-Hexa CDF	pg	12.7 J	1.2	20	0.100	1.27	N/A	2873214
1,2,3,4,6,7,8-Hepta CDF	pg	72 (1)	0.95	20	0.0100	0.720	N/A	2873214
1,2,3,4,7,8,9-Hepta CDF	pg	22	1.2	20	0.0100	0.220	N/A	2873214
1,2,3,4,6,7,8,9-Octa CDF	pg	13.0 J	2.2	200	0.000300	0.00390	N/A	2873214
Total Tetra CDF	pg	21800	1.1	20	N/A	N/A	N/A	2873214
Total Penta CDF	pg	6080	1.1	20	N/A	N/A	N/A	2873214
Total Hexa CDF	pg	1410	1.1	20	N/A	N/A	N/A	2873214
Total Hepta CDF	pg	126	1.1	20	N/A	N/A	N/A	2873214

N/A = Not Applicable
RDL = Reportable Detection Limit
EDL = Estimated Detection Limit
QC Batch = Quality Control Batch
* CDD = Chloro Dibenzo-p-Dioxin, ** CDF = Chloro Dibenzo-p-Furan
TEF = Toxic Equivalency Factor, TEQ = Toxic Equivalency Quotient,
The Total Toxic Equivalency (TEQ) value reported is the sum of Toxic Equivalent Quotients for the congeners tested.
WHO(2005): The 2005 World Health Organization, Human and Mammalian Toxic Equivalency Factors for Dioxins and Dioxin-like Compounds
(1) EMPC / Ratio - Isotopic ratio adjusted to meet theoretical
(2) EMPC / Merged Peak
(3) EMCL - PCDD/DF analysis - Exceeds Maximum Calibration Limit

Maxxam Analytics International Corporation o/a Maxxam Analytics 6740 Campobello Road, Mississauga, Ontario, L5N 2L8 Tel: (905) 817-5700 Toll-Free: 800-563-6266 Fax: (905) 817-5777 www.maxxam.ca

Maxxam Job #: B281237
Report Date: 2012/06/11

O'Brien & Gere Engineers Inc
Client Project #: 49064-001.001
Site Location: GENERAL DYNAMICS-JOPLIN,MO

EPA M23 DIOXINS AND FURANS (STACK SAMPLING TRAIN)

Maxxam ID		NR3588						
Sampling Date		2012/05/31						
COC Number		N/A			TOXIC EQUIVALENCY		# of	
	Units	RUN 1-BLDG 3-M23	EDL	RDL	TEF (2005 WHO)	TEQ(DL)	Isomers	QC Batch
Confirmation 2,3,7,8-Tetra CDF **	pg	2640	5.2	20	0.100	264	N/A	2876518
TOTAL TOXIC EQUIVALENCY	pg	N/A	N/A	N/A	N/A	633	N/A	N/A
Surrogate Recovery (%)								
Confirmation C13-2378 TetraCDF	%	90	N/A	N/A	N/A	N/A	N/A	2876518
C13-1234678 HeptaCDD *	%	105	N/A	N/A	N/A	N/A	N/A	2873214
C13-1234678 HeptaCDF	%	108	N/A	N/A	N/A	N/A	N/A	2873214
C13-123478 HexaCDD	%	98	N/A	N/A	N/A	N/A	N/A	2873214
C13-123478 HexaCDF	%	120	N/A	N/A	N/A	N/A	N/A	2873214
C13-1234789 HeptaCDF	%	71	N/A	N/A	N/A	N/A	N/A	2873214
C13-123678 HexaCDD	%	111	N/A	N/A	N/A	N/A	N/A	2873214
C13-123678 HexaCDF	%	103	N/A	N/A	N/A	N/A	N/A	2873214
C13-12378 PentaCDD	%	112	N/A	N/A	N/A	N/A	N/A	2873214
C13-12378 PentaCDF	%	111	N/A	N/A	N/A	N/A	N/A	2873214
C13-123789 HexaCDF	%	104	N/A	N/A	N/A	N/A	N/A	2873214
C13-23478 PentaCDF	%	112	N/A	N/A	N/A	N/A	N/A	2873214
C13-2378 TetraCDD	%	93	N/A	N/A	N/A	N/A	N/A	2873214
C13-2378 TetraCDF	%	102	N/A	N/A	N/A	N/A	N/A	2873214
C13-Octachlorodibenzo-p-Dioxin	%	100	N/A	N/A	N/A	N/A	N/A	2873214
Cl37-2378 TetraCDD	%	106	N/A	N/A	N/A	N/A	N/A	2873214

N/A = Not Applicable
RDL = Reportable Detection Limit
EDL = Estimated Detection Limit
QC Batch = Quality Control Batch
* CDD = Chloro Dibenzo-p-Dioxin, ** CDF = Chloro Dibenzo-p-Furan
TEF = Toxic Equivalency Factor, TEQ = Toxic Equivalency Quotient,
The Total Toxic Equivalency (TEQ) value reported is the sum of Toxic Equivalent Quotients for the congeners tested.
WHO(2005): The 2005 World Health Organization, Human and Mammalian Toxic Equivalency Factors for Dioxins and Dioxin-like Compounds

Maxxam Analytics International Corporation o/a Maxxam Analytics 6740 Campobello Road, Mississauga, Ontario, L5N 2L8 Tel: (905) 817-5700 Toll-Free: 800-563-6266 Fax: (905) 817-5777 www.maxxam.ca

Maxxam Job #: B281237
Report Date: 2012/06/11

O'Brien & Gere Engineers Inc
Client Project #: 49064-001.001
Site Location: GENERAL DYNAMICS-JOPLIN,MO

EPA M23 DIOXINS AND FURANS (STACK SAMPLING TRAIN)

Maxxam ID		NR3589						
Sampling Date		2012/06/01						
COC Number		N/A			TOXIC EQUIVALENCY		# of	
	Units	RUN 2-BLDG 3-M23	EDL	RDL	TEF (2005 WHO)	TEQ(DL)	Isomers	QC Batch
2,3,7,8-Tetra CDD *	pg	116	1.1	20	1.00	116	N/A	2873214
1,2,3,7,8-Penta CDD	pg	46	1.1	20	1.00	46.0	N/A	2873214
1,2,3,4,7,8-Hexa CDD	pg	6.5 J	1.1	20	0.100	0.650	N/A	2873214
1,2,3,6,7,8-Hexa CDD	pg	7.3 J	1.1	20	0.100	0.730	N/A	2873214
1,2,3,7,8,9-Hexa CDD	pg	9.69 J (1)	0.96	20	0.100	0.969	N/A	2873214
1,2,3,4,6,7,8-Hepta CDD	pg	11.3 J	1.1	20	0.0100	0.113	N/A	2873214
1,2,3,4,6,7,8,9-Octa CDD	pg	13.3 J	2.1	200	0.000300	0.00399	N/A	2873214
Total Tetra CDD	pg	896	1.1	20	N/A	N/A	N/A	2873214
Total Penta CDD	pg	208	1.1	20	N/A	N/A	N/A	2873214
Total Hexa CDD	pg	48	1.0	20	N/A	N/A	N/A	2873214
Total Hepta CDD	pg	21	1.1	20	N/A	N/A	N/A	2873214
2,3,7,8-Tetra CDF **	pg	5670 (2)	1.0	20	0.100	567	N/A	2873214
1,2,3,7,8-Penta CDF	pg	1130	1.1	20	0.0300	33.9	N/A	2873214
2,3,4,7,8-Penta CDF	pg	557	1.1	20	0.300	167	N/A	2873214
1,2,3,4,7,8-Hexa CDF	pg	697 (1)	1.1	20	0.100	69.7	N/A	2873214
1,2,3,6,7,8-Hexa CDF	pg	176	1.0	20	0.100	17.6	N/A	2873214
2,3,4,6,7,8-Hexa CDF	pg	43	1.2	20	0.100	4.30	N/A	2873214
1,2,3,7,8,9-Hexa CDF	pg	13.1 J	1.2	20	0.100	1.31	N/A	2873214
1,2,3,4,6,7,8-Hepta CDF	pg	114	0.97	20	0.0100	1.14	N/A	2873214
1,2,3,4,7,8,9-Hepta CDF	pg	24	1.2	20	0.0100	0.240	N/A	2873214
1,2,3,4,6,7,8,9-Octa CDF	pg	16.9 J	2.1	200	0.000300	0.00507	N/A	2873214
Total Tetra CDF	pg	25800	1.0	20	N/A	N/A	N/A	2873214
Total Penta CDF	pg	6300	1.1	20	N/A	N/A	N/A	2873214
Total Hexa CDF	pg	1530	1.1	20	N/A	N/A	N/A	2873214
Total Hepta CDF	pg	138	1.1	20	N/A	N/A	N/A	2873214

N/A = Not Applicable
RDL = Reportable Detection Limit
EDL = Estimated Detection Limit
QC Batch = Quality Control Batch
* CDD = Chloro Dibenzo-p-Dioxin, ** CDF = Chloro Dibenzo-p-Furan
TEF = Toxic Equivalency Factor, TEQ = Toxic Equivalency Quotient,
The Total Toxic Equivalency (TEQ) value reported is the sum of Toxic Equivalent Quotients for the congeners tested.
WHO(2005): The 2005 World Health Organization, Human and Mammalian Toxic Equivalency Factors for Dioxins and Dioxin-like Compounds
(1) EMPC / Merged Peak
(2) EMCL - PCDD/DF analysis - Exceeds Maximum Calibration Limit

Maxxam Analytics International Corporation o/a Maxxam Analytics 6740 Campobello Road, Mississauga, Ontario, L5N 2L8 Tel: (905) 817-5700 Toll-Free: 800-563-6266 Fax: (905) 817-5777 www.maxxam.ca

Maxxam Job #: B281237
Report Date: 2012/06/11

O'Brien & Gere Engineers Inc
Client Project #: 49064-001.001
Site Location: GENERAL DYNAMICS-JOPLIN,MO

EPA M23 DIOXINS AND FURANS (STACK SAMPLING TRAIN)

Maxxam ID		NR3589						
Sampling Date		2012/06/01						
COC Number		N/A			TOXIC EQUIVALENCY		# of	
	Units	RUN 2-BLDG 3-M23	EDL	RDL	TEF (2005 WHO)	TEQ(DL)	Isomers	QC Batch
Confirmation 2,3,7,8-Tetra CDF **	pg	2900	5.1	20	0.100	290	N/A	2876518
TOTAL TOXIC EQUIVALENCY	pg	N/A	N/A	N/A	N/A	750	N/A	N/A
Surrogate Recovery (%)								
Confirmation C13-2378 TetraCDF	%	79	N/A	N/A	N/A	N/A	N/A	2876518
C13-1234678 HeptaCDD *	%	112	N/A	N/A	N/A	N/A	N/A	2873214
C13-1234678 HeptaCDF	%	100	N/A	N/A	N/A	N/A	N/A	2873214
C13-123478 HexaCDD	%	98	N/A	N/A	N/A	N/A	N/A	2873214
C13-123478 HexaCDF	%	122	N/A	N/A	N/A	N/A	N/A	2873214
C13-1234789 HeptaCDF	%	76	N/A	N/A	N/A	N/A	N/A	2873214
C13-123678 HexaCDD	%	102	N/A	N/A	N/A	N/A	N/A	2873214
C13-123678 HexaCDF	%	92	N/A	N/A	N/A	N/A	N/A	2873214
C13-12378 PentaCDD	%	106	N/A	N/A	N/A	N/A	N/A	2873214
C13-12378 PentaCDF	%	104	N/A	N/A	N/A	N/A	N/A	2873214
C13-123789 HexaCDF	%	99	N/A	N/A	N/A	N/A	N/A	2873214
C13-23478 PentaCDF	%	110	N/A	N/A	N/A	N/A	N/A	2873214
C13-2378 TetraCDD	%	87	N/A	N/A	N/A	N/A	N/A	2873214
C13-2378 TetraCDF	%	92	N/A	N/A	N/A	N/A	N/A	2873214
C13-Octachlorodibenzo-p-Dioxin	%	99	N/A	N/A	N/A	N/A	N/A	2873214
Cl37-2378 TetraCDD	%	106	N/A	N/A	N/A	N/A	N/A	2873214

N/A = Not Applicable
RDL = Reportable Detection Limit
EDL = Estimated Detection Limit
QC Batch = Quality Control Batch
* CDD = Chloro Dibenzo-p-Dioxin, ** CDF = Chloro Dibenzo-p-Furan
TEF = Toxic Equivalency Factor, TEQ = Toxic Equivalency Quotient,
The Total Toxic Equivalency (TEQ) value reported is the sum of Toxic Equivalent Quotients for the congeners tested.
WHO(2005): The 2005 World Health Organization, Human and Mammalian Toxic Equivalency Factors for Dioxins and Dioxin-like Compounds

Maxxam Analytics International Corporation o/a Maxxam Analytics 6740 Campobello Road, Mississauga, Ontario, L5N 2L8 Tel: (905) 817-5700 Toll-Free: 800-563-6266 Fax: (905) 817-5777 www.maxxam.ca

Maxxam Job #: B281237
Report Date: 2012/06/11

O'Brien & Gere Engineers Inc
Client Project #: 49064-001.001
Site Location: GENERAL DYNAMICS-JOPLIN,MO

EPA M23 DIOXINS AND FURANS (STACK SAMPLING TRAIN)

Maxxam ID		NR3590						
Sampling Date		2012/06/01						
COC Number		N/A			TOXIC EQUIVALENCY		# of	
	Units	RUN 3-BLDG 3-M23	EDL	RDL	TEF (2005 WHO)	TEQ(DL)	Isomers	QC Batch
2,3,7,8-Tetra CDD *	pg	52 (1)	1.6	20	1.00	52.0	N/A	2873214
1,2,3,7,8-Penta CDD	pg	20	1.1	20	1.00	20.0	N/A	2873214
1,2,3,4,7,8-Hexa CDD	pg	2.3 J	1.1	20	0.100	0.230	N/A	2873214
1,2,3,6,7,8-Hexa CDD	pg	2.2 J	1.1	20	0.100	0.220	N/A	2873214
1,2,3,7,8,9-Hexa CDD	pg	1.74 J	0.97	20	0.100	0.174	N/A	2873214
1,2,3,4,6,7,8-Hepta CDD	pg	2.1 J	1.2	20	0.0100	0.0210	N/A	2873214
1,2,3,4,6,7,8,9-Octa CDD	pg	7.3 J	2.1	200	0.000300	0.00219	N/A	2873214
Total Tetra CDD	pg	572	1.6	20	N/A	N/A	N/A	2873214
Total Penta CDD	pg	96	1.1	20	N/A	N/A	N/A	2873214
Total Hexa CDD	pg	9.0 J	1.0	20	N/A	N/A	N/A	2873214
Total Hepta CDD	pg	3.3 J	1.2	20	N/A	N/A	N/A	2873214
2,3,7,8-Tetra CDF **	pg	4630 (2)	1.5	20	0.100	463	N/A	2873214
1,2,3,7,8-Penta CDF	pg	835	1.2	20	0.0300	25.1	N/A	2873214
2,3,4,7,8-Penta CDF	pg	411	1.2	20	0.300	123	N/A	2873214
1,2,3,4,7,8-Hexa CDF	pg	475	1.2	20	0.100	47.5	N/A	2873214
1,2,3,6,7,8-Hexa CDF	pg	105	1.1	20	0.100	10.5	N/A	2873214
2,3,4,6,7,8-Hexa CDF	pg	14.5 J	1.3	20	0.100	1.45	N/A	2873214
1,2,3,7,8,9-Hexa CDF	pg	8.9 J	1.4	20	0.100	0.890	N/A	2873214
1,2,3,4,6,7,8-Hepta CDF	pg	47	1.4	20	0.0100	0.470	N/A	2873214
1,2,3,4,7,8,9-Hepta CDF	pg	14.0 J	1.8	20	0.0100	0.140	N/A	2873214
1,2,3,4,6,7,8,9-Octa CDF	pg	7.6 J	2.3	200	0.000300	0.00228	N/A	2873214
Total Tetra CDF	pg	20900	1.5	20	N/A	N/A	N/A	2873214
Total Penta CDF	pg	4450	1.2	20	N/A	N/A	N/A	2873214
Total Hexa CDF	pg	959	1.3	20	N/A	N/A	N/A	2873214
Total Hepta CDF	pg	76	1.6	20	N/A	N/A	N/A	2873214

N/A = Not Applicable
RDL = Reportable Detection Limit
EDL = Estimated Detection Limit
QC Batch = Quality Control Batch
* CDD = Chloro Dibenzo-p-Dioxin, ** CDF = Chloro Dibenzo-p-Furan
TEF = Toxic Equivalency Factor, TEQ = Toxic Equivalency Quotient,
The Total Toxic Equivalency (TEQ) value reported is the sum of Toxic Equivalent Quotients for the congeners tested.
WHO(2005): The 2005 World Health Organization, Human and Mammalian Toxic Equivalency Factors for Dioxins and Dioxin-like Compounds
(1) EMPC / Ratio - Isotopic ratio adjusted to meet theoretical
(2) EMCL - PCDD/DF analysis - Exceeds Maximum Calibration Limit

Maxxam Analytics International Corporation o/a Maxxam Analytics 6740 Campobello Road, Mississauga, Ontario, L5N 2L8 Tel: (905) 817-5700 Toll-Free: 800-563-6266 Fax: (905) 817-5777 www.maxxam.ca

Maxxam Job #: B281237
Report Date: 2012/06/11

O'Brien & Gere Engineers Inc
Client Project #: 49064-001.001
Site Location: GENERAL DYNAMICS-JOPLIN,MO

EPA M23 DIOXINS AND FURANS (STACK SAMPLING TRAIN)

Maxxam ID		NR3590						
Sampling Date		2012/06/01						
COC Number		N/A			TOXIC EQUIVALENCY		# of	
	Units	RUN 3-BLDG 3-M23	EDL	RDL	TEF (2005 WHO)	TEQ(DL)	Isomers	QC Batch
Confirmation 2,3,7,8-Tetra CDF **	pg	2600	5.6	20	0.100	260	N/A	2876518
TOTAL TOXIC EQUIVALENCY	pg	N/A	N/A	N/A	N/A	542	N/A	N/A
Surrogate Recovery (%)								
Confirmation C13-2378 TetraCDF	%	86	N/A	N/A	N/A	N/A	N/A	2876518
C13-1234678 HeptaCDD *	%	110	N/A	N/A	N/A	N/A	N/A	2873214
C13-1234678 HeptaCDF	%	110	N/A	N/A	N/A	N/A	N/A	2873214
C13-123478 HexaCDD	%	92	N/A	N/A	N/A	N/A	N/A	2873214
C13-123478 HexaCDF	%	121	N/A	N/A	N/A	N/A	N/A	2873214
C13-1234789 HeptaCDF	%	73	N/A	N/A	N/A	N/A	N/A	2873214
C13-123678 HexaCDD	%	112	N/A	N/A	N/A	N/A	N/A	2873214
C13-123678 HexaCDF	%	98	N/A	N/A	N/A	N/A	N/A	2873214
C13-12378 PentaCDD	%	105	N/A	N/A	N/A	N/A	N/A	2873214
C13-12378 PentaCDF	%	102	N/A	N/A	N/A	N/A	N/A	2873214
C13-123789 HexaCDF	%	101	N/A	N/A	N/A	N/A	N/A	2873214
C13-23478 PentaCDF	%	110	N/A	N/A	N/A	N/A	N/A	2873214
C13-2378 TetraCDD	%	83	N/A	N/A	N/A	N/A	N/A	2873214
C13-2378 TetraCDF	%	88	N/A	N/A	N/A	N/A	N/A	2873214
C13-Octachlorodibenzo-p-Dioxin	%	97	N/A	N/A	N/A	N/A	N/A	2873214
Cl37-2378 TetraCDD	%	105	N/A	N/A	N/A	N/A	N/A	2873214

N/A = Not Applicable
RDL = Reportable Detection Limit
EDL = Estimated Detection Limit
QC Batch = Quality Control Batch
* CDD = Chloro Dibenzo-p-Dioxin, ** CDF = Chloro Dibenzo-p-Furan
TEF = Toxic Equivalency Factor, TEQ = Toxic Equivalency Quotient,
The Total Toxic Equivalency (TEQ) value reported is the sum of Toxic Equivalent Quotients for the congeners tested.
WHO(2005): The 2005 World Health Organization, Human and Mammalian Toxic Equivalency Factors for Dioxins and Dioxin-like Compounds

Maxxam Analytics International Corporation o/a Maxxam Analytics 6740 Campobello Road, Mississauga, Ontario, L5N 2L8 Tel: (905) 817-5700 Toll-Free: 800-563-6266 Fax: (905) 817-5777 www.maxxam.ca

Maxxam Job #: B281237
Report Date: 2012/06/11

O'Brien & Gere Engineers Inc
Client Project #: 49064-001.001
Site Location: GENERAL DYNAMICS-JOPLIN,MO

Test Summary

Maxxam ID NR3587 **Collected** 2012/05/31
Sample ID R.BLANK-BLDG 3-M23 **Shipped**
Matrix Stack Sampling Train **Received** 2012/06/04

Test Description	Instrumentation	Batch	Extracted	Analyzed	Analyst
Dioxins/Furans in Air (Method 23)	HRMS/MS	2873214	2012/06/04	2012/06/07	OWEN COSBY

Maxxam ID NR3588 **Collected** 2012/05/31
Sample ID RUN 1-BLDG 3-M23 **Shipped**
Matrix Stack Sampling Train **Received** 2012/06/04

Test Description	Instrumentation	Batch	Extracted	Analyzed	Analyst
2,3,7,8-TCDF Confirmation (M23)	HRMS/MS	2876518	N/A	2012/06/08	ANGEL GUERRERO
Dioxins/Furans in Air (Method 23)	HRMS/MS	2873214	2012/06/04	2012/06/07	OWEN COSBY

Maxxam ID NR3589 **Collected** 2012/06/01
Sample ID RUN 2-BLDG 3-M23 **Shipped**
Matrix Stack Sampling Train **Received** 2012/06/04

Test Description	Instrumentation	Batch	Extracted	Analyzed	Analyst
2,3,7,8-TCDF Confirmation (M23)	HRMS/MS	2876518	N/A	2012/06/08	ANGEL GUERRERO
Dioxins/Furans in Air (Method 23)	HRMS/MS	2873214	2012/06/04	2012/06/07	OWEN COSBY

Maxxam ID NR3590 **Collected** 2012/06/01
Sample ID RUN 3-BLDG 3-M23 **Shipped**
Matrix Stack Sampling Train **Received** 2012/06/04

Test Description	Instrumentation	Batch	Extracted	Analyzed	Analyst
2,3,7,8-TCDF Confirmation (M23)	HRMS/MS	2876518	N/A	2012/06/08	ANGEL GUERRERO
Dioxins/Furans in Air (Method 23)	HRMS/MS	2873214	2012/06/04	2012/06/07	OWEN COSBY

Maxxam Analytics International Corporation o/a Maxxam Analytics, 6740 Campobello Road, Mississauga, Ontario, L5N 2L8 Tel: (905) 817-5700 Toll-Free: 800-563-6266 Fax: (905) 817-5777 www.maxxam.ca

Maxxam Job #: B281237
Report Date: 2012/06/11

O'Brien & Gere Engineers Inc
Client Project #: 49064-001.001
Site Location: GENERAL DYNAMICS-JOPLIN,MO

GENERAL COMMENTS

Results relate only to the items tested.

Maxxam Analytics International Corporation o/a Maxxam Analytics 6740 Campobello Road, Mississauga, Ontario, L5N 2L8 Tel: (905) 817-5700 Toll-Free: 800-563-6266 Fax: (905) 817-5777 www.maxxam.ca

Maxxam

Success Through Science®

O'Brien & Gere Engineers Inc
Attention: Jeff Gorman
Client Project #: 49064-001.001
P.O. #:
Site Location: GENERAL DYNAMICS-JOPLIN,MO

Quality Assurance Report

Maxxam Job Number: GB281237

QA/QC Batch Num Init	QC Type	Parameter	Date Analyzed yyyy/mm/dd	Value	%Recovery	Units	QC Limits
2873214 OBC	Spiked Blank	C13-1234678 HeptaCDD	2012/06/07		104	%	25 - 130
	Spiked Blank DUP	C13-1234678 HeptaCDD	2012/06/07		81	%	25 - 130
	Spiked Blank	C13-1234678 HeptaCDF	2012/06/07		109	%	25 - 130
	Spiked Blank DUP	C13-1234678 HeptaCDF	2012/06/07		94	%	25 - 130
	Spiked Blank	C13-123678 HexaCDD	2012/06/07		101	%	40 - 130
	Spiked Blank DUP	C13-123678 HexaCDD	2012/06/07		93	%	40 - 130
	Spiked Blank	C13-123678 HexaCDF	2012/06/07		87	%	40 - 130
	Spiked Blank DUP	C13-123678 HexaCDF	2012/06/07		78	%	40 - 130
	Spiked Blank	C13-12378 PentaCDD	2012/06/07		89	%	40 - 130
	Spiked Blank DUP	C13-12378 PentaCDD	2012/06/07		90	%	40 - 130
	Spiked Blank	C13-12378 PentaCDF	2012/06/07		82	%	40 - 130
	Spiked Blank DUP	C13-12378 PentaCDF	2012/06/07		85	%	40 - 130
	Spiked Blank	C13-123789 HexaCDF	2012/06/07		93	%	40 - 130
	Spiked Blank DUP	C13-123789 HexaCDF	2012/06/07		96	%	40 - 130
	Spiked Blank	C13-2378 TetraCDD	2012/06/07		58	%	40 - 130
	Spiked Blank DUP	C13-2378 TetraCDD	2012/06/07		64	%	40 - 130
	Spiked Blank	C13-2378 TetraCDF	2012/06/07		60	%	40 - 130
	Spiked Blank DUP	C13-2378 TetraCDF	2012/06/07		66	%	40 - 130
	Spiked Blank	C13-Octachlorodibenzo-p-Dioxin	2012/06/07		104	%	25 - 130
	Spiked Blank DUP	C13-Octachlorodibenzo-p-Dioxin	2012/06/07		96	%	25 - 130
	Spiked Blank	2,3,7,8-Tetra CDD	2012/06/07		100	%	80 - 140
	Spiked Blank DUP	2,3,7,8-Tetra CDD	2012/06/07		101	%	80 - 140
	RPD	2,3,7,8-Tetra CDD	2012/06/07	NC		%	20
	Spiked Blank	1,2,3,7,8-Penta CDD	2012/06/07		102	%	80 - 140
	Spiked Blank DUP	1,2,3,7,8-Penta CDD	2012/06/07		103	%	80 - 140
	RPD	1,2,3,7,8-Penta CDD	2012/06/07	1		%	20
	Spiked Blank	1,2,3,4,7,8-Hexa CDD	2012/06/07		98	%	80 - 140
	Spiked Blank DUP	1,2,3,4,7,8-Hexa CDD	2012/06/07		99	%	80 - 140
	RPD	1,2,3,4,7,8-Hexa CDD	2012/06/07	NC		%	20
	Spiked Blank	1,2,3,6,7,8-Hexa CDD	2012/06/07		99	%	80 - 140
	Spiked Blank DUP	1,2,3,6,7,8-Hexa CDD	2012/06/07		100	%	80 - 140
	RPD	1,2,3,6,7,8-Hexa CDD	2012/06/07	NC		%	20
	Spiked Blank	1,2,3,7,8,9-Hexa CDD	2012/06/07		106	%	80 - 140
	Spiked Blank DUP	1,2,3,7,8,9-Hexa CDD	2012/06/07		105	%	80 - 140
	RPD	1,2,3,7,8,9-Hexa CDD	2012/06/07	0.9		%	20
	Spiked Blank	1,2,3,4,6,7,8-Hepta CDD	2012/06/07		112	%	80 - 140
	Spiked Blank DUP	1,2,3,4,6,7,8-Hepta CDD	2012/06/07		157 (1)	%	80 - 140
	RPD	1,2,3,4,6,7,8-Hepta CDD	2012/06/07	33.5 (1)		%	20
	Spiked Blank	1,2,3,4,6,7,8,9-Octa CDD	2012/06/07		101	%	80 - 140
	Spiked Blank DUP	1,2,3,4,6,7,8,9-Octa CDD	2012/06/07		101	%	80 - 140
	RPD	1,2,3,4,6,7,8,9-Octa CDD	2012/06/07	NC		%	20
	Spiked Blank	2,3,7,8-Tetra CDF	2012/06/07		103	%	80 - 140
	Spiked Blank DUP	2,3,7,8-Tetra CDF	2012/06/07		103	%	80 - 140
	RPD	2,3,7,8-Tetra CDF	2012/06/07	0		%	20
	Spiked Blank	1,2,3,7,8-Penta CDF	2012/06/07		103	%	80 - 140
	Spiked Blank DUP	1,2,3,7,8-Penta CDF	2012/06/07		102	%	80 - 140
	RPD	1,2,3,7,8-Penta CDF	2012/06/07	1		%	20
	Spiked Blank	2,3,4,7,8-Penta CDF	2012/06/07		110	%	80 - 140
	Spiked Blank DUP	2,3,4,7,8-Penta CDF	2012/06/07		109	%	80 - 140
	RPD	2,3,4,7,8-Penta CDF	2012/06/07	0.9		%	20
	Spiked Blank	1,2,3,4,7,8-Hexa CDF	2012/06/07		104	%	80 - 140
	Spiked Blank DUP	1,2,3,4,7,8-Hexa CDF	2012/06/07		105	%	80 - 140
	RPD	1,2,3,4,7,8-Hexa CDF	2012/06/07	1		%	20
	Spiked Blank	1,2,3,6,7,8-Hexa CDF	2012/06/07		108	%	80 - 140
	Spiked Blank DUP	1,2,3,6,7,8-Hexa CDF	2012/06/07		110	%	80 - 140

Maxxam Analytics International Corporation o/a Maxxam Analytics 6740 Campobello Road, Mississauga, Ontario, L5N 2L8 Tel: (905) 817-5700 Toll-Free: 800-563-6266 Fax (905) 817-5777 www.maxxam.ca

Maxxam

Success Through Science®

O'Brien & Gere Engineers Inc
Attention: Jeff Gorman
Client Project #: 49064-001.001
P.O. #:
Site Location: GENERAL DYNAMICS-JOPLIN,MO

Quality Assurance Report (Continued)

Maxxam Job Number: GB281237

QA/QC Batch Num Init	QC Type	Parameter	Date Analyzed yyyy/mm/dd	Value	%Recovery	Units	QC Limits
2873214 OBC	RPD	1,2,3,6,7,8-Hexa CDF	2012/06/07	1.8		%	20
	Spiked Blank	2,3,4,6,7,8-Hexa CDF	2012/06/07		114	%	80 - 140
	Spiked Blank DUP	2,3,4,6,7,8-Hexa CDF	2012/06/07		116	%	80 - 140
	RPD	2,3,4,6,7,8-Hexa CDF	2012/06/07	1.7		%	20
	Spiked Blank	1,2,3,7,8,9-Hexa CDF	2012/06/07		114	%	80 - 140
	Spiked Blank DUP	1,2,3,7,8,9-Hexa CDF	2012/06/07		129	%	80 - 140
	RPD	1,2,3,7,8,9-Hexa CDF	2012/06/07	12.3		%	20
	Spiked Blank	1,2,3,4,6,7,8-Hepta CDF	2012/06/07		102	%	80 - 140
	Spiked Blank DUP	1,2,3,4,6,7,8-Hepta CDF	2012/06/07		103	%	80 - 140
	RPD	1,2,3,4,6,7,8-Hepta CDF	2012/06/07	1		%	20
	Spiked Blank	1,2,3,4,7,8,9-Hepta CDF	2012/06/07		108	%	80 - 140
	Spiked Blank DUP	1,2,3,4,7,8,9-Hepta CDF	2012/06/07		111	%	80 - 140
	RPD	1,2,3,4,7,8,9-Hepta CDF	2012/06/07	2.7		%	20
	Spiked Blank	1,2,3,4,6,7,8,9-Octa CDF	2012/06/07		103	%	80 - 140
	Spiked Blank DUP	1,2,3,4,6,7,8,9-Octa CDF	2012/06/07		102	%	80 - 140
	RPD	1,2,3,4,6,7,8,9-Octa CDF	2012/06/07	NC		%	20
	Method Blank	C13-1234678 HeptaCDD	2012/06/07		118	%	25 - 130
		C13-1234678 HeptaCDF	2012/06/07		100	%	25 - 130
		C13-123678 HexaCDD	2012/06/07		95	%	40 - 130
		C13-123678 HexaCDF	2012/06/07		84	%	40 - 130
		C13-12378 PentaCDD	2012/06/07		97	%	40 - 130
		C13-12378 PentaCDF	2012/06/07		91	%	40 - 130
		C13-123789 HexaCDF	2012/06/07		95	%	40 - 130
		C13-2378 TetraCDD	2012/06/07		69	%	40 - 130
		C13-2378 TetraCDF	2012/06/07		73	%	40 - 130
		C13-Octachlorodibenzo-p-Dioxin	2012/06/07		98	%	25 - 130
		2,3,7,8-Tetra CDD	2012/06/07	1.1 U, EDL=1.1		pg	
		1,2,3,7,8-Penta CDD	2012/06/07	1.1 U, EDL=1.1		pg	
		1,2,3,4,7,8-Hexa CDD	2012/06/07	1.1 U, EDL=1.1		pg	
		1,2,3,6,7,8-Hexa CDD	2012/06/07	1.2 U, EDL=1.2		pg	
		1,2,3,7,8,9-Hexa CDD	2012/06/07	1.0 U, EDL=1.0		pg	
		1,2,3,4,6,7,8-Hepta CDD	2012/06/07	1.4 J, EDL=1.2		pg	
		1,2,3,4,6,7,8,9-Octa CDD	2012/06/07	2.7 J, EDL=2.2		pg	
		Total Tetra CDD	2012/06/07	1.5 U, EDL=1.5 (2)		pg	
		Total Penta CDD	2012/06/07	1.1 U, EDL=1.1		pg	
		Total Hexa CDD	2012/06/07	1.9 U, EDL=1.9 (2)		pg	
		Total Hepta CDD	2012/06/07	1.4 J, EDL=1.2		pg	
		2,3,7,8-Tetra CDF	2012/06/07	1.5 J, EDL=1.1		pg	
		1,2,3,7,8-Penta CDF	2012/06/07	1.1 U, EDL=1.1		pg	
		2,3,4,7,8-Penta CDF	2012/06/07	1.3 J, EDL=1.1 (3)		pg	
		1,2,3,4,7,8-Hexa CDF	2012/06/07	1.1 U, EDL=1.1		pg	
		1,2,3,6,7,8-Hexa CDF	2012/06/07	1.0 U, EDL=1.0		pg	
		2,3,4,6,7,8-Hexa CDF	2012/06/07	1.2 U, EDL=1.2		pg	
		1,2,3,7,8,9-Hexa CDF	2012/06/07	1.2 U, EDL=1.2		pg	
		1,2,3,4,6,7,8-Hepta CDF	2012/06/07	0.93 U, EDL=0.93		pg	
		1,2,3,4,7,8,9-Hepta CDF	2012/06/07	1.2 U, EDL=1.2		pg	
		1,2,3,4,6,7,8,9-Octa CDF	2012/06/07	2.2 U, EDL=2.2		pg	
		Total Tetra CDF	2012/06/07	3.3 J, EDL=1.1		pg	
		Total Penta CDF	2012/06/07	1.3 J, EDL=1.1		pg	
		Total Hexa CDF	2012/06/07	1.1 U, EDL=1.1		pg	
		Total Hepta CDF	2012/06/07	1.0 U, EDL=1.0		pg	
2876518 AGU	Method Blank	Confirmation C13-2378 TetraCDF	2012/06/08		66	%	40 - 135
		Confirmation 2,3,7,8-Tetra CDF	2012/06/08	2.3 U, EDL=2.3		pg	

Duplicate: Paired analysis of a separate portion of the same sample. Used to evaluate the variance in the measurement.
Spiked Blank: A blank matrix to which a known amount of the analyte has been added. Used to evaluate analyte recovery.

Maxxam Analytics International Corporation o/a Maxxam Analytics 6740 Campobello Road, Mississauga, Ontario, L5N 2L8 Tel: (905) 817-5700 Toll-Free: 800-563-6266 Fax: (905) 817-5777 www.maxxam.ca

Maxxam

Success Through Science®

O'Brien & Gere Engineers Inc
Attention: Jeff Gorman
Client Project #: 49064-001.001
P.O. #:
Site Location: GENERAL DYNAMICS-JOPLIN,MO

Quality Assurance Report (Continued)

Maxxam Job Number: GB281237

Method Blank: A blank matrix containing all reagents used in the analytical procedure. Used to identify laboratory contamination.
Surrogate: A pure or isotopically labeled compound whose behavior mirrors the analytes of interest. Used to evaluate extraction efficiency.
NC (RPD): The RPD was not calculated. The level of analyte detected in the parent sample and its duplicate was not sufficiently significant to permit a reliable calculation.
(1) HRMS:

Exceeds upper limit of 140%
(2) EMPC / NDR - Peak detected does not meet ratio criteria and has resulted in an elevated detection limit.
(3) EMPC / Ratio - Isotopic ratio adjusted to meet theoretical

Maxxam Analytics International Corporation o/a Maxxam Analytics 6740 Campobello Road, Mississauga, Ontario, L5N 2L8 Tel: (905) 817-5700 Toll-Free: 800-563-6266 Fax: (905) 817-5777 www.maxxam.ca

Validation Signature Page

Maxxam Job #: B281237

The analytical data and all QC contained in this report were reviewed and validated by the following individual(s).

Kay Shaw

KAY SHAW, C. Chem, Scientific Specialist, HRMS Services

Maxxam has procedures in place to guard against improper use of the electronic signature and have the required "signatories", as per section 5.10.2 of ISO/IEC 17025:2005(E), signing the reports. For Service Group specific validation please refer to the Validation Signature Page.

Maxxam Analytics International Corporation o/a Maxxam Analytics 6740 Campobello Road, Mississauga, Ontario, L5N 2L8 Tel: (905) 817-5700 Toll-Free: 800-563-6266 Fax: (905) 817-5777 www.maxxam.ca

Method 23 – Retest No. 2

Maxxam

Success Through Science®

Your Project #: 49064-001.001
Site Location: GENERAL DYNAMICS-JOPLIN,MO
Your C.O.C. #: N/A

Attention: Jeff Gorman
O'Brien & Gere Engineers Inc
7600 Morgan Rd.
Liverpool, NY
USA 13090

Report Date: 2012/06/28

CERTIFICATE OF ANALYSIS

MAXXAM JOB #: B293726
Received: 2012/06/23, 11:30

Sample Matrix: Stack Sampling Train
Samples Received: 13

Analyses	Quantity	Date Extracted	Date Analyzed	Laboratory Method	Method Reference
2,3,7,8-TCDF Confirmation (M23)	12	N/A	2012/06/26	BRL SOP-00404	EPA1613Bmod(M23/23A)
Dioxins/Furans in Air (Method 23)	8	2012/06/23	2012/06/27	BRL SOP-00404	EPA1613Bmod(M23/23A)
Dioxins/Furans in Air (Method 23)	5	2012/06/23	2012/06/28	BRL SOP-00404	EPA1613Bmod(M23/23A)

* RPDs calculated using raw data. The rounding of final results may result in the apparent difference.

Encryption Key

Please direct all questions regarding this Certificate of Analysis to your Project Manager.

Mike Challis, CET, B.Sc, C.Chem, Customer Service Manager, US Air Toxics
Email: MChallis@maxxam.ca
Phone# (905) 817-5790

==========

Maxxam has procedures in place to guard against improper use of the electronic signature and have the required "signatories", as per section 5.10.2 of ISO/IEC 17025:2005(E), signing the reports. For Service Group specific validation please refer to the Validation Signature Page.

Total cover pages: 1

Maxxam Analytics International Corporation o/a Maxxam Analytics 6740 Campobello Road, Mississauga, Ontario, L5N 2L8 Tel: (905) 817-5700 Toll-Free: 800-563-6266 Fax: (905) 817-5777 www.maxxam.ca

Maxxam Job #: B293726
Report Date: 2012/06/28

O'Brien & Gere Engineers Inc
Client Project #: 49064-001.001
Site Location: GENERAL DYNAMICS-JOPLIN,MO

DIOXINS AND FURANS BY HRMS (STACK SAMPLING TRAIN)

Maxxam ID		NX2176						
Sampling Date		2012/06/20						
COC Number		N/A			TOXIC EQUIVALENCY		# of	
	Units	R.BLANK--M23	EDL	RDL	TEF (2005 WHO)	TEQ(DL)	Isomers	QC Batch
2,3,7,8-Tetra CDD *	pg	5 (1)	1.4	20	1.00	5.00	N/A	2891949
1,2,3,7,8-Penta CDD	pg	<1.3	1.3	20	1.00	1.30	N/A	2891949
1,2,3,4,7,8-Hexa CDD	pg	<1.4	1.4	20	0.100	0.140	N/A	2891949
1,2,3,6,7,8-Hexa CDD	pg	<1.3	1.3	20	0.100	0.130	N/A	2891949
1,2,3,7,8,9-Hexa CDD	pg	<1.3	1.3	20	0.100	0.130	N/A	2891949
1,2,3,4,6,7,8-Hepta CDD	pg	<1.2	1.2	20	0.0100	0.0120	N/A	2891949
1,2,3,4,6,7,8,9-Octa CDD	pg	5	2.1	200	0.000300	0.00150	N/A	2891949
Total Tetra CDD	pg	5	1.4	20	N/A	N/A	N/A	2891949
Total Penta CDD	pg	<1.3	1.3	20	N/A	N/A	N/A	2891949
Total Hexa CDD	pg	<1.5 (2)	1.5	20	N/A	N/A	N/A	2891949
Total Hepta CDD	pg	<1.2	1.2	20	N/A	N/A	N/A	2891949
2,3,7,8-Tetra CDF **	pg	<2.9 (3)	2.9	20	0.100	0.290	N/A	2891949
1,2,3,7,8-Penta CDF	pg	<1.4	1.4	20	0.0300	0.0420	N/A	2891949
2,3,4,7,8-Penta CDF	pg	<1.3	1.3	20	0.300	0.390	N/A	2891949
1,2,3,4,7,8-Hexa CDF	pg	<1.1	1.1	20	0.100	0.110	N/A	2891949
1,2,3,6,7,8-Hexa CDF	pg	<1.0	1.0	20	0.100	0.100	N/A	2891949
2,3,4,6,7,8-Hexa CDF	pg	<1.3	1.3	20	0.100	0.130	N/A	2891949
1,2,3,7,8,9-Hexa CDF	pg	<1.3	1.3	20	0.100	0.130	N/A	2891949
1,2,3,4,6,7,8-Hepta CDF	pg	5	1.2	20	0.0100	0.0500	N/A	2891949
1,2,3,4,7,8,9-Hepta CDF	pg	<1.4	1.4	20	0.0100	0.0140	N/A	2891949
1,2,3,4,6,7,8,9-Octa CDF	pg	12	2.0	200	0.000300	0.00360	N/A	2891949
Total Tetra CDF	pg	8	1.2	20	N/A	N/A	N/A	2891949
Total Penta CDF	pg	<1.3	1.3	20	N/A	N/A	N/A	2891949
Total Hexa CDF	pg	<1.2	1.2	20	N/A	N/A	N/A	2891949
Total Hepta CDF	pg	12	1.3	20	N/A	N/A	N/A	2891949

N/A = Not Applicable
RDL = Reportable Detection Limit
EDL = Estimated Detection Limit
QC Batch = Quality Control Batch
* CDD = Chloro Dibenzo-p-Dioxin, ** CDF = Chloro Dibenzo-p-Furan
TEF = Toxic Equivalency Factor, TEQ = Toxic Equivalency Quotient,
The Total Toxic Equivalency (TEQ) value reported is the sum of Toxic Equivalent Quotients for the congeners tested.
WHO(2005): The 2005 World Health Organization, Human and Mammalian Toxic Equivalency Factors for Dioxins and Dioxin-like Compounds
(1) EMPC / Ratio - Isotopic ratio adjusted to meet theoretical
(2) EMPC / NDR - Peak detected does not meet ratio criteria and has resulted in an elevated detection limit.
(3) RT > 3 seconds - PCDD/DF analysis - Peak detected exceeds expected retention time (from internal standard) by greater than 3 seconds.

Maxxam Analytics International Corporation o/a Maxxam Analytics 6740 Campobello Road, Mississauga, Ontario, L5N 2L8 Tel: (905) 817-5700 Toll-Free: 800-563-6266 Fax: (905) 817-5777 www.maxxam.ca

Maxxam Job #: B293726
Report Date: 2012/06/28

O'Brien & Gere Engineers Inc
Client Project #: 49064-001.001
Site Location: GENERAL DYNAMICS-JOPLIN,MO

DIOXINS AND FURANS BY HRMS (STACK SAMPLING TRAIN)

Maxxam ID		NX2176						
Sampling Date		2012/06/20						
COC Number		N/A			TOXIC EQUIVALENCY		# of	
	Units	R.BLANK--M23	EDL	RDL	TEF (2005 WHO)	TEQ(DL)	Isomers	QC Batch
TOTAL TOXIC EQUIVALENCY	pg	N/A	N/A	N/A	N/A	7.97	N/A	N/A
Surrogate Recovery (%)								
C13-1234678 HeptaCDD *	%	96	N/A	N/A	N/A	N/A	N/A	2891949
C13-1234678 HeptaCDF **	%	103	N/A	N/A	N/A	N/A	N/A	2891949
C13-123478 HexaCDD	%	124	N/A	N/A	N/A	N/A	N/A	2891949
C13-123478 HexaCDF	%	114	N/A	N/A	N/A	N/A	N/A	2891949
C13-1234789 HeptaCDF	%	60 (1)	N/A	N/A	N/A	N/A	N/A	2891949
C13-123678 HexaCDD	%	94	N/A	N/A	N/A	N/A	N/A	2891949
C13-123678 HexaCDF	%	95	N/A	N/A	N/A	N/A	N/A	2891949
C13-12378 PentaCDD	%	103	N/A	N/A	N/A	N/A	N/A	2891949
C13-12378 PentaCDF	%	91	N/A	N/A	N/A	N/A	N/A	2891949
C13-123789 HexaCDF	%	79	N/A	N/A	N/A	N/A	N/A	2891949
C13-23478 PentaCDF	%	110	N/A	N/A	N/A	N/A	N/A	2891949
C13-2378 TetraCDD	%	91	N/A	N/A	N/A	N/A	N/A	2891949
C13-2378 TetraCDF	%	85	N/A	N/A	N/A	N/A	N/A	2891949
C13-Octachlorodibenzo-p-Dioxin	%	128	N/A	N/A	N/A	N/A	N/A	2891949
Cl37-2378 TetraCDD	%	101	N/A	N/A	N/A	N/A	N/A	2891949

N/A = Not Applicable
RDL = Reportable Detection Limit
EDL = Estimated Detection Limit
QC Batch = Quality Control Batch
* CDD = Chloro Dibenzo-p-Dioxin, ** CDF = Chloro Dibenzo-p-Furan
TEF = Toxic Equivalency Factor, TEQ = Toxic Equivalency Quotient,
The Total Toxic Equivalency (TEQ) value reported is the sum of Toxic Equivalent Quotients for the congeners tested.
WHO(2005): The 2005 World Health Organization, Human and Mammalian Toxic Equivalency Factors for Dioxins and Dioxin-like Compounds
(1) Surrogate recovery was below the lower control limit (70-130%)

Maxxam Analytics International Corporation o/a Maxxam Analytics 6740 Campobello Road, Mississauga, Ontario, L5N 2L8 Tel. (905) 817-5700 Toll-Free: 800-563-6266 Fax (905) 817-5777 www.maxxam.ca

Maxxam

Success Through Science®

Maxxam Job #: B293726
Report Date: 2012/06/28

O'Brien & Gere Engineers Inc
Client Project #: 49064-001.001
Site Location: GENERAL DYNAMICS-JOPLIN,MO

DIOXINS AND FURANS BY HRMS (STACK SAMPLING TRAIN)

Maxxam ID		NX2177						
Sampling Date		2012/06/19						
COC Number		N/A			TOXIC EQUIVALENCY		# of	
	Units	RUN 1-IN-C1-M23	EDL	RDL	TEF (2005 WHO)	TEQ(DL)	Isomers	QC Batch
2,3,7,8-Tetra CDD *	pg	<1.2	1.2	20	1.00	1.20	N/A	2891949
1,2,3,7,8-Penta CDD	pg	3	1.3	20	1.00	3.00	N/A	2891949
1,2,3,4,7,8-Hexa CDD	pg	2	1.2	20	0.100	0.200	N/A	2891949
1,2,3,6,7,8-Hexa CDD	pg	8	1.2	20	0.100	0.800	N/A	2891949
1,2,3,7,8,9-Hexa CDD	pg	5	1.2	20	0.100	0.500	N/A	2891949
1,2,3,4,6,7,8-Hepta CDD	pg	12	1.3	20	0.0100	0.120	N/A	2891949
1,2,3,4,6,7,8,9-Octa CDD	pg	28	2.2	200	0.000300	0.00840	N/A	2891949
Total Tetra CDD	pg	147	1.2	20	N/A	N/A	N/A	2891949
Total Penta CDD	pg	108	1.3	20	N/A	N/A	N/A	2891949
Total Hexa CDD	pg	47	1.2	20	N/A	N/A	N/A	2891949
Total Hepta CDD	pg	21	1.3	20	N/A	N/A	N/A	2891949
2,3,7,8-Tetra CDF **	pg	135	1.2	20	0.100	13.5	N/A	2891949
1,2,3,7,8-Penta CDF	pg	127	1.3	20	0.0300	3.81	N/A	2891949
2,3,4,7,8-Penta CDF	pg	53	1.2	20	0.300	15.9	N/A	2891949
1,2,3,4,7,8-Hexa CDF	pg	230	1.2	20	0.100	23.0	N/A	2891949
1,2,3,6,7,8-Hexa CDF	pg	49	1.0	20	0.100	4.90	N/A	2891949
2,3,4,6,7,8-Hexa CDF	pg	11	1.3	20	0.100	1.10	N/A	2891949
1,2,3,7,8,9-Hexa CDF	pg	5	1.4	20	0.100	0.500	N/A	2891949
1,2,3,4,6,7,8-Hepta CDF	pg	68 (1)	1.1	20	0.0100	0.680	N/A	2891949
1,2,3,4,7,8,9-Hepta CDF	pg	25	1.3	20	0.0100	0.250	N/A	2891949
1,2,3,4,6,7,8,9-Octa CDF	pg	37	2.1	200	0.000300	0.0111	N/A	2891949
Total Tetra CDF	pg	337	1.2	20	N/A	N/A	N/A	2891949
Total Penta CDF	pg	341	1.3	20	N/A	N/A	N/A	2891949
Total Hexa CDF	pg	361	1.2	20	N/A	N/A	N/A	2891949
Total Hepta CDF	pg	112	1.2	20	N/A	N/A	N/A	2891949
Confirmation 2,3,7,8-Tetra CDF	pg	122	2.1	20	0.100	12.2	N/A	2892629
TOTAL TOXIC EQUIVALENCY	pg	N/A	N/A	N/A	N/A	68.2	N/A	N/A

N/A = Not Applicable
RDL = Reportable Detection Limit
EDL = Estimated Detection Limit
QC Batch = Quality Control Batch
* CDD = Chloro Dibenzo-p-Dioxin, ** CDF = Chloro Dibenzo-p-Furan
TEF = Toxic Equivalency Factor, TEQ = Toxic Equivalency Quotient,
The Total Toxic Equivalency (TEQ) value reported is the sum of Toxic Equivalent Quotients for the congeners tested.
WHO(2005): The 2005 World Health Organization, Human and Mammalian Toxic Equivalency Factors for Dioxins and Dioxin-like Compounds
(1) EMPC / Ratio - Isotopic ratio adjusted to meet theoretical

Maxxam Analytics International Corporation o/a Maxxam Analytics 6740 Campobello Road, Mississauga, Ontario, L5N 2L8 Tel: (905) 817-5700 Toll-Free: 800-563-6266 Fax: (905) 817-5777 www.maxxam.ca

Maxxam Job #: B293726
Report Date: 2012/06/28

O'Brien & Gere Engineers Inc
Client Project #: 49064-001.001
Site Location: GENERAL DYNAMICS-JOPLIN,MO

DIOXINS AND FURANS BY HRMS (STACK SAMPLING TRAIN)

Maxxam ID		NX2177						
Sampling Date		2012/06/19						
COC Number		N/A			TOXIC EQUIVALENCY		# of	
	Units	RUN 1-IN-C1-M23	EDL	RDL	TEF (2005 WHO)	TEQ(DL)	Isomers	QC Batch
Surrogate Recovery (%)								
Confirmation C13-2378 TetraCDF **	%	88	N/A	N/A	N/A	N/A	N/A	2892629
C13-1234678 HeptaCDD *	%	89	N/A	N/A	N/A	N/A	N/A	2891949
C13-1234678 HeptaCDF	%	97	N/A	N/A	N/A	N/A	N/A	2891949
C13-123478 HexaCDD	%	123	N/A	N/A	N/A	N/A	N/A	2891949
C13-123478 HexaCDF	%	110	N/A	N/A	N/A	N/A	N/A	2891949
C13-1234789 HeptaCDF	%	80	N/A	N/A	N/A	N/A	N/A	2891949
C13-123678 HexaCDD	%	84	N/A	N/A	N/A	N/A	N/A	2891949
C13-123678 HexaCDF	%	84	N/A	N/A	N/A	N/A	N/A	2891949
C13-12378 PentaCDD	%	102	N/A	N/A	N/A	N/A	N/A	2891949
C13-12378 PentaCDF	%	93	N/A	N/A	N/A	N/A	N/A	2891949
C13-123789 HexaCDF	%	93	N/A	N/A	N/A	N/A	N/A	2891949
C13-23478 PentaCDF	%	105	N/A	N/A	N/A	N/A	N/A	2891949
C13-2378 TetraCDD	%	98	N/A	N/A	N/A	N/A	N/A	2891949
C13-2378 TetraCDF	%	89	N/A	N/A	N/A	N/A	N/A	2891949
C13-Octachlorodibenzo-p-Dioxin	%	112	N/A	N/A	N/A	N/A	N/A	2891949
Cl37-2378 TetraCDD	%	101	N/A	N/A	N/A	N/A	N/A	2891949

N/A = Not Applicable
RDL = Reportable Detection Limit
EDL = Estimated Detection Limit
QC Batch = Quality Control Batch
* CDD = Chloro Dibenzo-p-Dioxin, ** CDF = Chloro Dibenzo-p-Furan
TEF = Toxic Equivalency Factor, TEQ = Toxic Equivalency Quotient,
The Total Toxic Equivalency (TEQ) value reported is the sum of Toxic Equivalent Quotients for the congeners tested.
WHO(2005): The 2005 World Health Organization, Human and Mammalian Toxic Equivalency Factors for Dioxins and Dioxin-like Compounds

Maxxam Analytics International Corporation o/a Maxxam Analytics 6740 Campobello Road, Mississauga, Ontario, L5N 2L8 Tel: (905) 817-5700 Toll-Free: 800-563-6266 Fax: (905) 817-5777 www.maxxam.ca

Maxxam Job #: B293726
Report Date: 2012/06/28

O'Brien & Gere Engineers Inc
Client Project #: 49064-001.001
Site Location: GENERAL DYNAMICS-JOPLIN,MO

DIOXINS AND FURANS BY HRMS (STACK SAMPLING TRAIN)

Maxxam ID		NX2178						
Sampling Date		2012/06/19						
COC Number		N/A			TOXIC EQUIVALENCY		# of	
	Units	RUN 2-IN-C1-M23	EDL	RDL	TEF (2005 WHO)	TEQ(DL)	Isomers	QC Batch
2,3,7,8-Tetra CDD *	pg	2 (1)	1.4	20	1.00	2.00	N/A	2891949
1,2,3,7,8-Penta CDD	pg	4	1.3	20	1.00	4.00	N/A	2891949
1,2,3,4,7,8-Hexa CDD	pg	3	1.3	20	0.100	0.300	N/A	2891949
1,2,3,6,7,8-Hexa CDD	pg	3 (1)	1.3	20	0.100	0.300	N/A	2891949
1,2,3,7,8,9-Hexa CDD	pg	3	1.3	20	0.100	0.300	N/A	2891949
1,2,3,4,6,7,8-Hepta CDD	pg	14	1.3	20	0.0100	0.140	N/A	2891949
1,2,3,4,6,7,8,9-Octa CDD	pg	31	2.1	200	0.000300	0.00930	N/A	2891949
Total Tetra CDD	pg	19	1.4	20	N/A	N/A	N/A	2891949
Total Penta CDD	pg	16	1.3	20	N/A	N/A	N/A	2891949
Total Hexa CDD	pg	20	1.3	20	N/A	N/A	N/A	2891949
Total Hepta CDD	pg	26	1.3	20	N/A	N/A	N/A	2891949
2,3,7,8-Tetra CDF **	pg	235	1.2	20	0.100	23.5	N/A	2891949
1,2,3,7,8-Penta CDF	pg	244	1.4	20	0.0300	7.32	N/A	2891949
2,3,4,7,8-Penta CDF	pg	95	1.3	20	0.300	28.5	N/A	2891949
1,2,3,4,7,8-Hexa CDF	pg	414	1.2	20	0.100	41.4	N/A	2891949
1,2,3,6,7,8-Hexa CDF	pg	86	1.1	20	0.100	8.60	N/A	2891949
2,3,4,6,7,8-Hexa CDF	pg	16	1.4	20	0.100	1.60	N/A	2891949
1,2,3,7,8,9-Hexa CDF	pg	7	1.5	20	0.100	0.700	N/A	2891949
1,2,3,4,6,7,8-Hepta CDF	pg	104 (1)	1.1	20	0.0100	1.04	N/A	2891949
1,2,3,4,7,8,9-Hepta CDF	pg	29	1.2	20	0.0100	0.290	N/A	2891949
1,2,3,4,6,7,8,9-Octa CDF	pg	42	2.1	200	0.000300	0.0126	N/A	2891949
Total Tetra CDF	pg	538	1.2	20	N/A	N/A	N/A	2891949
Total Penta CDF	pg	655	1.3	20	N/A	N/A	N/A	2891949
Total Hexa CDF	pg	650	1.3	20	N/A	N/A	N/A	2891949
Total Hepta CDF	pg	158	1.1	20	N/A	N/A	N/A	2891949
Confirmation 2,3,7,8-Tetra CDF	pg	198	2.0	20	0.100	19.8	N/A	2892629
TOTAL TOXIC EQUIVALENCY	pg	N/A	N/A	N/A	N/A	116	N/A	N/A

N/A = Not Applicable
RDL = Reportable Detection Limit
EDL = Estimated Detection Limit
QC Batch = Quality Control Batch
* CDD = Chloro Dibenzo-p-Dioxin, ** CDF = Chloro Dibenzo-p-Furan
TEF = Toxic Equivalency Factor, TEQ = Toxic Equivalency Quotient,
The Total Toxic Equivalency (TEQ) value reported is the sum of Toxic Equivalent Quotients for the congeners tested.
WHO(2005): The 2005 World Health Organization, Human and Mammalian Toxic Equivalency Factors for Dioxins and Dioxin-like Compounds
(1) EMPC / Ratio - Isotopic ratio adjusted to meet theoretical

Maxxam Analytics International Corporation o/a Maxxam Analytics 6740 Campobello Road, Mississauga, Ontario, L5N 2L8 Tel: (905) 817-5700 Toll-Free: 800-563-6266 Fax: (905) 817-5777 www.maxxam.ca

Maxxam Job #: B293726
Report Date: 2012/06/28

O'Brien & Gere Engineers Inc
Client Project #: 49064-001.001
Site Location: GENERAL DYNAMICS-JOPLIN,MO

DIOXINS AND FURANS BY HRMS (STACK SAMPLING TRAIN)

Maxxam ID		NX2178						
Sampling Date		2012/06/19						
COC Number		N/A			TOXIC EQUIVALENCY		# of	
	Units	RUN 2-IN-C1-M23	EDL	RDL	TEF (2005 WHO)	TEQ(DL)	Isomers	QC Batch
Surrogate Recovery (%)								
Confirmation C13-2378 TetraCDF **	%	92	N/A	N/A	N/A	N/A	N/A	2892629
C13-1234678 HeptaCDD *	%	94	N/A	N/A	N/A	N/A	N/A	2891949
C13-1234678 HeptaCDF	%	97	N/A	N/A	N/A	N/A	N/A	2891949
C13-123478 HexaCDD	%	125	N/A	N/A	N/A	N/A	N/A	2891949
C13-123478 HexaCDF	%	111	N/A	N/A	N/A	N/A	N/A	2891949
C13-1234789 HeptaCDF	%	82	N/A	N/A	N/A	N/A	N/A	2891949
C13-123678 HexaCDD	%	85	N/A	N/A	N/A	N/A	N/A	2891949
C13-123678 HexaCDF	%	83	N/A	N/A	N/A	N/A	N/A	2891949
C13-12378 PentaCDD	%	105	N/A	N/A	N/A	N/A	N/A	2891949
C13-12378 PentaCDF	%	95	N/A	N/A	N/A	N/A	N/A	2891949
C13-123789 HexaCDF	%	94	N/A	N/A	N/A	N/A	N/A	2891949
C13-23478 PentaCDF	%	104	N/A	N/A	N/A	N/A	N/A	2891949
C13-2378 TetraCDD	%	103	N/A	N/A	N/A	N/A	N/A	2891949
C13-2378 TetraCDF	%	94	N/A	N/A	N/A	N/A	N/A	2891949
C13-Octachlorodibenzo-p-Dioxin	%	114	N/A	N/A	N/A	N/A	N/A	2891949
Cl37-2378 TetraCDD	%	98	N/A	N/A	N/A	N/A	N/A	2891949

N/A = Not Applicable
RDL = Reportable Detection Limit
EDL = Estimated Detection Limit
QC Batch = Quality Control Batch
* CDD = Chloro Dibenzo-p-Dioxin, ** CDF = Chloro Dibenzo-p-Furan
TEF = Toxic Equivalency Factor, TEQ = Toxic Equivalency Quotient,
The Total Toxic Equivalency (TEQ) value reported is the sum of Toxic Equivalent Quotients for the congeners tested.
WHO(2005): The 2005 World Health Organization, Human and Mammalian Toxic Equivalency Factors for Dioxins and Dioxin-like Compounds

Maxxam Analytics International Corporation o/a Maxxam Analytics 6740 Campobello Road, Mississauga, Ontario, L5N 2L8 Tel: (905) 817-5700 Toll-Free: 800-563-6266 Fax (905) 817-5777 www.maxxam.ca

Maxxam Job #: B293726
Report Date: 2012/06/28

O'Brien & Gere Engineers Inc
Client Project #: 49064-001.001
Site Location: GENERAL DYNAMICS-JOPLIN,MO

DIOXINS AND FURANS BY HRMS (STACK SAMPLING TRAIN)

Maxxam ID		NX2179						
Sampling Date		2012/06/19						
COC Number		N/A			TOXIC EQUIVALENCY		# of	
	Units	RUN 3-IN-C1-M23	EDL	RDL	TEF (2005 WHO)	TEQ(DL)	Isomers	QC Batch
2,3,7,8-Tetra CDD *	pg	2 (1)	1.3	20	1.00	2.00	N/A	2891949
1,2,3,7,8-Penta CDD	pg	3 (1)	1.2	20	1.00	3.00	N/A	2891949
1,2,3,4,7,8-Hexa CDD	pg	2 (1)	1.2	20	0.100	0.200	N/A	2891949
1,2,3,6,7,8-Hexa CDD	pg	5	1.2	20	0.100	0.500	N/A	2891949
1,2,3,7,8,9-Hexa CDD	pg	3	1.1	20	0.100	0.300	N/A	2891949
1,2,3,4,6,7,8-Hepta CDD	pg	9	1.2	20	0.0100	0.0900	N/A	2891949
1,2,3,4,6,7,8,9-Octa CDD	pg	17	2.1	200	0.000300	0.00510	N/A	2891949
Total Tetra CDD	pg	148	1.3	20	N/A	N/A	N/A	2891949
Total Penta CDD	pg	68	1.2	20	N/A	N/A	N/A	2891949
Total Hexa CDD	pg	18	1.2	20	N/A	N/A	N/A	2891949
Total Hepta CDD	pg	15	1.2	20	N/A	N/A	N/A	2891949
2,3,7,8-Tetra CDF **	pg	220	1.3	20	0.100	22.0	N/A	2891949
1,2,3,7,8-Penta CDF	pg	215	1.3	20	0.0300	6.45	N/A	2891949
2,3,4,7,8-Penta CDF	pg	87	1.2	20	0.300	26.1	N/A	2891949
1,2,3,4,7,8-Hexa CDF	pg	414	1.1	20	0.100	41.4	N/A	2891949
1,2,3,6,7,8-Hexa CDF	pg	81	1.0	20	0.100	8.10	N/A	2891949
2,3,4,6,7,8-Hexa CDF	pg	12	1.3	20	0.100	1.20	N/A	2891949
1,2,3,7,8,9-Hexa CDF	pg	9	1.4	20	0.100	0.900	N/A	2891949
1,2,3,4,6,7,8-Hepta CDF	pg	103 (1)	1.1	20	0.0100	1.03	N/A	2891949
1,2,3,4,7,8,9-Hepta CDF	pg	39	1.3	20	0.0100	0.390	N/A	2891949
1,2,3,4,6,7,8,9-Octa CDF	pg	57	2.1	200	0.000300	0.0171	N/A	2891949
Total Tetra CDF	pg	540	1.3	20	N/A	N/A	N/A	2891949
Total Penta CDF	pg	589	1.3	20	N/A	N/A	N/A	2891949
Total Hexa CDF	pg	639	1.2	20	N/A	N/A	N/A	2891949
Total Hepta CDF	pg	170	1.2	20	N/A	N/A	N/A	2891949
Confirmation 2,3,7,8-Tetra CDF	pg	180	2.5	20	0.100	18.0	N/A	2892629
TOTAL TOXIC EQUIVALENCY	pg	N/A	N/A	N/A	N/A	110	N/A	N/A

N/A = Not Applicable
RDL = Reportable Detection Limit
EDL = Estimated Detection Limit
QC Batch = Quality Control Batch
* CDD = Chloro Dibenzo-p-Dioxin, ** CDF = Chloro Dibenzo-p-Furan
TEF = Toxic Equivalency Factor, TEQ = Toxic Equivalency Quotient,
The Total Toxic Equivalency (TEQ) value reported is the sum of Toxic Equivalent Quotients for the congeners tested.
WHO(2005): The 2005 World Health Organization, Human and Mammalian Toxic Equivalency Factors for Dioxins and Dioxin-like Compounds
(1) EMPC / Ratio - Isotopic ratio adjusted to meet theoretical

Maxxam Analytics International Corporation o/a Maxxam Analytics 6740 Campobello Road, Mississauga, Ontario, L5N 2L8 Tel: (905) 817-5700 Toll-Free: 800-563-6266 Fax: (905) 817-5777 www.maxxam.ca

Maxxam Job #: B293726
Report Date: 2012/06/28

O'Brien & Gere Engineers Inc
Client Project #: 49064-001.001
Site Location: GENERAL DYNAMICS-JOPLIN,MO

DIOXINS AND FURANS BY HRMS (STACK SAMPLING TRAIN)

Maxxam ID		NX2179						
Sampling Date		2012/06/19						
COC Number		N/A			TOXIC EQUIVALENCY		# of	
	Units	RUN 3-IN-C1-M23	EDL	RDL	TEF (2005 WHO)	TEQ(DL)	Isomers	QC Batch
Surrogate Recovery (%)								
Confirmation C13-2378 TetraCDF **	%	94	N/A	N/A	N/A	N/A	N/A	2892629
C13-1234678 HeptaCDD *	%	90	N/A	N/A	N/A	N/A	N/A	2891949
C13-1234678 HeptaCDF	%	96	N/A	N/A	N/A	N/A	N/A	2891949
C13-123478 HexaCDD	%	125	N/A	N/A	N/A	N/A	N/A	2891949
C13-123478 HexaCDF	%	112	N/A	N/A	N/A	N/A	N/A	2891949
C13-1234789 HeptaCDF	%	80	N/A	N/A	N/A	N/A	N/A	2891949
C13-123678 HexaCDD	%	83	N/A	N/A	N/A	N/A	N/A	2891949
C13-123678 HexaCDF	%	82	N/A	N/A	N/A	N/A	N/A	2891949
C13-12378 PentaCDD	%	103	N/A	N/A	N/A	N/A	N/A	2891949
C13-12378 PentaCDF	%	93	N/A	N/A	N/A	N/A	N/A	2891949
C13-123789 HexaCDF	%	95	N/A	N/A	N/A	N/A	N/A	2891949
C13-23478 PentaCDF	%	104	N/A	N/A	N/A	N/A	N/A	2891949
C13-2378 TetraCDD	%	101	N/A	N/A	N/A	N/A	N/A	2891949
C13-2378 TetraCDF	%	92	N/A	N/A	N/A	N/A	N/A	2891949
C13-Octachlorodibenzo-p-Dioxin	%	115	N/A	N/A	N/A	N/A	N/A	2891949
Cl37-2378 TetraCDD	%	100	N/A	N/A	N/A	N/A	N/A	2891949

N/A = Not Applicable
RDL = Reportable Detection Limit
EDL = Estimated Detection Limit
QC Batch = Quality Control Batch
* CDD = Chloro Dibenzo-p-Dioxin, ** CDF = Chloro Dibenzo-p-Furan
TEF = Toxic Equivalency Factor, TEQ = Toxic Equivalency Quotient,
The Total Toxic Equivalency (TEQ) value reported is the sum of Toxic Equivalent Quotients for the congeners tested.
WHO(2005): The 2005 World Health Organization, Human and Mammalian Toxic Equivalency Factors for Dioxins and Dioxin-like Compounds

Maxxam Analytics International Corporation o/a Maxxam Analytics 6740 Campobello Road, Mississauga, Ontario, L5N 2L8 Tel: (905) 817-5700 Toll-Free: 800-563-6266 Fax: (905) 817-5777 www.maxxam.ca

Maxxam Job #: B293726
Report Date: 2012/06/28

O'Brien & Gere Engineers Inc
Client Project #: 49064-001.001
Site Location: GENERAL DYNAMICS-JOPLIN,MO

DIOXINS AND FURANS BY HRMS (STACK SAMPLING TRAIN)

Maxxam ID		NX2214						
Sampling Date		2012/06/19						
COC Number		N/A			TOXIC EQUIVALENCY		# of	
	Units	RUN 1-OUT-C1-M23	EDL	RDL	TEF (2005 WHO)	TEQ(DL)	Isomers	QC Batch
2,3,7,8-Tetra CDD *	pg	2 (1)	1.5	20	1.00	2.00	N/A	2891949
1,2,3,7,8-Penta CDD	pg	3	1.2	20	1.00	3.00	N/A	2891949
1,2,3,4,7,8-Hexa CDD	pg	<1.1	1.1	20	0.100	0.110	N/A	2891949
1,2,3,6,7,8-Hexa CDD	pg	1	1.1	20	0.100	0.100	N/A	2891949
1,2,3,7,8,9-Hexa CDD	pg	<1.1	1.1	20	0.100	0.110	N/A	2891949
1,2,3,4,6,7,8-Hepta CDD	pg	3 (1)	1.7	20	0.0100	0.0300	N/A	2891949
1,2,3,4,6,7,8,9-Octa CDD	pg	10	3.8	200	0.000300	0.00300	N/A	2891949
Total Tetra CDD	pg	13	1.5	20	N/A	N/A	N/A	2891949
Total Penta CDD	pg	6	1.2	20	N/A	N/A	N/A	2891949
Total Hexa CDD	pg	3	1.1	20	N/A	N/A	N/A	2891949
Total Hepta CDD	pg	5	1.7	20	N/A	N/A	N/A	2891949
2,3,7,8-Tetra CDF **	pg	221	1.2	20	0.100	22.1	N/A	2891949
1,2,3,7,8-Penta CDF	pg	131	1.6	20	0.0300	3.93	N/A	2891949
2,3,4,7,8-Penta CDF	pg	65	1.5	20	0.300	19.5	N/A	2891949
1,2,3,4,7,8-Hexa CDF	pg	140	0.97	20	0.100	14.0	N/A	2891949
1,2,3,6,7,8-Hexa CDF	pg	38	0.88	20	0.100	3.80	N/A	2891949
2,3,4,6,7,8-Hexa CDF	pg	7	1.1	20	0.100	0.700	N/A	2891949
1,2,3,7,8,9-Hexa CDF	pg	4	1.2	20	0.100	0.400	N/A	2891949
1,2,3,4,6,7,8-Hepta CDF	pg	28 (1)	1.4	20	0.0100	0.280	N/A	2891949
1,2,3,4,7,8,9-Hepta CDF	pg	8	1.6	20	0.0100	0.0800	N/A	2891949
1,2,3,4,6,7,8,9-Octa CDF	pg	6	2.4	200	0.000300	0.00180	N/A	2891949
Total Tetra CDF	pg	590	1.2	20	N/A	N/A	N/A	2891949
Total Penta CDF	pg	432	1.5	20	N/A	N/A	N/A	2891949
Total Hexa CDF	pg	254	1.0	20	N/A	N/A	N/A	2891949
Total Hepta CDF	pg	42	1.5	20	N/A	N/A	N/A	2891949
Confirmation 2,3,7,8-Tetra CDF	pg	155	2.0	20	0.100	15.5	N/A	2892629
TOTAL TOXIC EQUIVALENCY	pg	N/A	N/A	N/A	N/A	63.5	N/A	N/A

N/A = Not Applicable
RDL = Reportable Detection Limit
EDL = Estimated Detection Limit
QC Batch = Quality Control Batch
* CDD = Chloro Dibenzo-p-Dioxin, ** CDF = Chloro Dibenzo-p-Furan
TEF = Toxic Equivalency Factor, TEQ = Toxic Equivalency Quotient,
The Total Toxic Equivalency (TEQ) value reported is the sum of Toxic Equivalent Quotients for the congeners tested.
WHO(2005): The 2005 World Health Organization, Human and Mammalian Toxic Equivalency Factors for Dioxins and Dioxin-like Compounds
(1) EMPC / Ratio - Isotopic ratio adjusted to meet theoretical

Maxxam Analytics International Corporation o/a Maxxam Analytics 6740 Campobello Road, Mississauga, Ontario, L5N 2L8 Tel: (905) 817-5700 Toll-Free: 800-563-6266 Fax: (905) 817-5777 www.maxxam.ca

Maxxam Job #: B293726
Report Date: 2012/06/28

O'Brien & Gere Engineers Inc
Client Project #: 49064-001.001
Site Location: GENERAL DYNAMICS-JOPLIN,MO

DIOXINS AND FURANS BY HRMS (STACK SAMPLING TRAIN)

Maxxam ID		NX2214						
Sampling Date		2012/06/19						
COC Number		N/A			TOXIC EQUIVALENCY		# of	
	Units	RUN 1-OUT-C1-M23	EDL	RDL	TEF (2005 WHO)	TEQ(DL)	Isomers	QC Batch
Surrogate Recovery (%)								
Confirmation C13-2378 TetraCDF **	%	93	N/A	N/A	N/A	N/A	N/A	2892629
C13-1234678 HeptaCDD *	%	88	N/A	N/A	N/A	N/A	N/A	2891949
C13-1234678 HeptaCDF	%	95	N/A	N/A	N/A	N/A	N/A	2891949
C13-123478 HexaCDD	%	128	N/A	N/A	N/A	N/A	N/A	2891949
C13-123478 HexaCDF	%	108	N/A	N/A	N/A	N/A	N/A	2891949
C13-1234789 HeptaCDF	%	80	N/A	N/A	N/A	N/A	N/A	2891949
C13-123678 HexaCDD	%	85	N/A	N/A	N/A	N/A	N/A	2891949
C13-123678 HexaCDF	%	87	N/A	N/A	N/A	N/A	N/A	2891949
C13-12378 PentaCDD	%	101	N/A	N/A	N/A	N/A	N/A	2891949
C13-12378 PentaCDF	%	92	N/A	N/A	N/A	N/A	N/A	2891949
C13-123789 HexaCDF	%	97	N/A	N/A	N/A	N/A	N/A	2891949
C13-23478 PentaCDF	%	104	N/A	N/A	N/A	N/A	N/A	2891949
C13-2378 TetraCDD	%	100	N/A	N/A	N/A	N/A	N/A	2891949
C13-2378 TetraCDF	%	90	N/A	N/A	N/A	N/A	N/A	2891949
C13-Octachlorodibenzo-p-Dioxin	%	109	N/A	N/A	N/A	N/A	N/A	2891949
Cl37-2378 TetraCDD	%	101	N/A	N/A	N/A	N/A	N/A	2891949

N/A = Not Applicable
RDL = Reportable Detection Limit
EDL = Estimated Detection Limit
QC Batch = Quality Control Batch
* CDD = Chloro Dibenzo-p-Dioxin, ** CDF = Chloro Dibenzo-p-Furan
TEF = Toxic Equivalency Factor, TEQ = Toxic Equivalency Quotient,
The Total Toxic Equivalency (TEQ) value reported is the sum of Toxic Equivalent Quotients for the congeners tested.
WHO(2005): The 2005 World Health Organization, Human and Mammalian Toxic Equivalency Factors for Dioxins and Dioxin-like Compounds

Maxxam Analytics International Corporation o/a Maxxam Analytics 6740 Campobello Road, Mississauga, Ontario, L5N 2L8 Tel: (905) 817-5700 Toll-Free: 800-563-6266 Fax: (905) 817-5777 www.maxxam.ca

Maxxam Job #: B293726
Report Date: 2012/06/28

O'Brien & Gere Engineers Inc
Client Project #: 49064-001.001
Site Location: GENERAL DYNAMICS-JOPLIN,MO

DIOXINS AND FURANS BY HRMS (STACK SAMPLING TRAIN)

Maxxam ID		NX2215						
Sampling Date		2012/06/19						
COC Number		N/A			TOXIC EQUIVALENCY		# of	
	Units	RUN 2-OUT-C1-M23	EDL	RDL	TEF (2005 WHO)	TEQ(DL)	Isomers	QC Batch
2,3,7,8-Tetra CDD *	pg	2 (1)	1.2	20	1.00	2.00	N/A	2891949
1,2,3,7,8-Penta CDD	pg	3 (1)	1.3	20	1.00	3.00	N/A	2891949
1,2,3,4,7,8-Hexa CDD	pg	<1.4	1.4	20	0.100	0.140	N/A	2891949
1,2,3,6,7,8-Hexa CDD	pg	<1.3	1.3	20	0.100	0.130	N/A	2891949
1,2,3,7,8,9-Hexa CDD	pg	<1.3	1.3	20	0.100	0.130	N/A	2891949
1,2,3,4,6,7,8-Hepta CDD	pg	2	1.1	20	0.0100	0.0200	N/A	2891949
1,2,3,4,6,7,8,9-Octa CDD	pg	6	2.1	200	0.000300	0.00180	N/A	2891949
Total Tetra CDD	pg	10	1.2	20	N/A	N/A	N/A	2891949
Total Penta CDD	pg	3 (1)	1.3	20	N/A	N/A	N/A	2891949
Total Hexa CDD	pg	<1.3	1.3	20	N/A	N/A	N/A	2891949
Total Hepta CDD	pg	2	1.1	20	N/A	N/A	N/A	2891949
2,3,7,8-Tetra CDF **	pg	191	1.4	20	0.100	19.1	N/A	2891949
1,2,3,7,8-Penta CDF	pg	108	1.8	20	0.0300	3.24	N/A	2891949
2,3,4,7,8-Penta CDF	pg	57	1.7	20	0.300	17.1	N/A	2891949
1,2,3,4,7,8-Hexa CDF	pg	135	1.2	20	0.100	13.5	N/A	2891949
1,2,3,6,7,8-Hexa CDF	pg	33	1.1	20	0.100	3.30	N/A	2891949
2,3,4,6,7,8-Hexa CDF	pg	7	1.4	20	0.100	0.700	N/A	2891949
1,2,3,7,8,9-Hexa CDF	pg	4	1.4	20	0.100	0.400	N/A	2891949
1,2,3,4,6,7,8-Hepta CDF	pg	29 (1)	1.3	20	0.0100	0.290	N/A	2891949
1,2,3,4,7,8,9-Hepta CDF	pg	9	1.6	20	0.0100	0.0900	N/A	2891949
1,2,3,4,6,7,8,9-Octa CDF	pg	5	2.5	200	0.000300	0.00150	N/A	2891949
Total Tetra CDF	pg	506	1.4	20	N/A	N/A	N/A	2891949
Total Penta CDF	pg	373	1.7	20	N/A	N/A	N/A	2891949
Total Hexa CDF	pg	242	1.3	20	N/A	N/A	N/A	2891949
Total Hepta CDF	pg	44	1.4	20	N/A	N/A	N/A	2891949
Confirmation 2,3,7,8-Tetra CDF	pg	70	1.2	20	0.100	7.00	N/A	2892629
TOTAL TOXIC EQUIVALENCY	pg	N/A	N/A	N/A	N/A	51.0	N/A	N/A

N/A = Not Applicable
RDL = Reportable Detection Limit
EDL = Estimated Detection Limit
QC Batch = Quality Control Batch
* CDD = Chloro Dibenzo-p-Dioxin, ** CDF = Chloro Dibenzo-p-Furan
TEF = Toxic Equivalency Factor, TEQ = Toxic Equivalency Quotient,
The Total Toxic Equivalency (TEQ) value reported is the sum of Toxic Equivalent Quotients for the congeners tested.
WHO(2005): The 2005 World Health Organization, Human and Mammalian Toxic Equivalency Factors for Dioxins and Dioxin-like Compounds
(1) EMPC / Ratio - Isotopic ratio adjusted to meet theoretical

Maxxam Analytics International Corporation o/a Maxxam Analytics 6740 Campobello Road, Mississauga, Ontario, L5N 2L8 Tel: (905) 817-5700 Toll-Free: 800-563-6266 Fax: (905) 817-5777 www.maxxam.ca

Maxxam Job #: B293726
Report Date: 2012/06/28

O'Brien & Gere Engineers Inc
Client Project #: 49064-001.001
Site Location: GENERAL DYNAMICS-JOPLIN,MO

DIOXINS AND FURANS BY HRMS (STACK SAMPLING TRAIN)

Maxxam ID		NX2215						
Sampling Date		2012/06/19						
COC Number		N/A			TOXIC EQUIVALENCY		# of	
	Units	RUN 2-OUT-C1-M23	EDL	RDL	TEF (2005 WHO)	TEQ(DL)	Isomers	QC Batch
Surrogate Recovery (%)								
Confirmation C13-2378 TetraCDF **	%	83	N/A	N/A	N/A	N/A	N/A	2892629
C13-1234678 HeptaCDD *	%	93	N/A	N/A	N/A	N/A	N/A	2891949
C13-1234678 HeptaCDF	%	96	N/A	N/A	N/A	N/A	N/A	2891949
C13-123478 HexaCDD	%	124	N/A	N/A	N/A	N/A	N/A	2891949
C13-123478 HexaCDF	%	107	N/A	N/A	N/A	N/A	N/A	2891949
C13-1234789 HeptaCDF	%	80	N/A	N/A	N/A	N/A	N/A	2891949
C13-123678 HexaCDD	%	86	N/A	N/A	N/A	N/A	N/A	2891949
C13-123678 HexaCDF	%	86	N/A	N/A	N/A	N/A	N/A	2891949
C13-12378 PentaCDD	%	95	N/A	N/A	N/A	N/A	N/A	2891949
C13-12378 PentaCDF	%	84	N/A	N/A	N/A	N/A	N/A	2891949
C13-123789 HexaCDF	%	92	N/A	N/A	N/A	N/A	N/A	2891949
C13-23478 PentaCDF	%	106	N/A	N/A	N/A	N/A	N/A	2891949
C13-2378 TetraCDD	%	90	N/A	N/A	N/A	N/A	N/A	2891949
C13-2378 TetraCDF	%	80	N/A	N/A	N/A	N/A	N/A	2891949
C13-Octachlorodibenzo-p-Dioxin	%	119	N/A	N/A	N/A	N/A	N/A	2891949
Cl37-2378 TetraCDD	%	99	N/A	N/A	N/A	N/A	N/A	2891949

N/A = Not Applicable
RDL = Reportable Detection Limit
EDL = Estimated Detection Limit
QC Batch = Quality Control Batch
* CDD = Chloro Dibenzo-p-Dioxin, ** CDF = Chloro Dibenzo-p-Furan
TEF = Toxic Equivalency Factor, TEQ = Toxic Equivalency Quotient,
The Total Toxic Equivalency (TEQ) value reported is the sum of Toxic Equivalent Quotients for the congeners tested.
WHO(2005): The 2005 World Health Organization, Human and Mammalian Toxic Equivalency Factors for Dioxins and Dioxin-like Compounds

Maxxam Analytics International Corporation o/a Maxxam Analytics 6740 Campobello Road, Mississauga, Ontario, L5N 2L8 Tel. (905) 817-5700 Toll-Free: 800-563-6266 Fax: (905) 817-5777 www.maxxam.ca

Maxxam Job #: B293726
Report Date: 2012/06/28

O'Brien & Gere Engineers Inc
Client Project #: 49064-001.001
Site Location: GENERAL DYNAMICS-JOPLIN,MO

DIOXINS AND FURANS BY HRMS (STACK SAMPLING TRAIN)

Maxxam ID		NX2216						
Sampling Date		2012/06/19						
COC Number		N/A			TOXIC EQUIVALENCY		# of	
	Units	RUN 3-OUT-C1-M23	EDL	RDL	TEF (2005 WHO)	TEQ(DL)	Isomers	QC Batch
2,3,7,8-Tetra CDD *	pg	2 (1)	1.2	20	1.00	2.00	N/A	2891949
1,2,3,7,8-Penta CDD	pg	3	1.3	20	1.00	3.00	N/A	2891949
1,2,3,4,7,8-Hexa CDD	pg	<1.3	1.3	20	0.100	0.130	N/A	2891949
1,2,3,6,7,8-Hexa CDD	pg	<1.2	1.2	20	0.100	0.120	N/A	2891949
1,2,3,7,8,9-Hexa CDD	pg	<1.2	1.2	20	0.100	0.120	N/A	2891949
1,2,3,4,6,7,8-Hepta CDD	pg	2	1.1	20	0.0100	0.0200	N/A	2891949
1,2,3,4,6,7,8,9-Octa CDD	pg	4	2.4	200	0.000300	0.00120	N/A	2891949
Total Tetra CDD	pg	9	1.2	20	N/A	N/A	N/A	2891949
Total Penta CDD	pg	3	1.3	20	N/A	N/A	N/A	2891949
Total Hexa CDD	pg	<1.4 (2)	1.4	20	N/A	N/A	N/A	2891949
Total Hepta CDD	pg	2	1.1	20	N/A	N/A	N/A	2891949
2,3,7,8-Tetra CDF **	pg	216	1.5	20	0.100	21.6	N/A	2891949
1,2,3,7,8-Penta CDF	pg	120	1.6	20	0.0300	3.60	N/A	2891949
2,3,4,7,8-Penta CDF	pg	60	1.5	20	0.300	18.0	N/A	2891949
1,2,3,4,7,8-Hexa CDF	pg	150	1.1	20	0.100	15.0	N/A	2891949
1,2,3,6,7,8-Hexa CDF	pg	37	0.96	20	0.100	3.70	N/A	2891949
2,3,4,6,7,8-Hexa CDF	pg	7	1.2	20	0.100	0.700	N/A	2891949
1,2,3,7,8,9-Hexa CDF	pg	5	1.3	20	0.100	0.500	N/A	2891949
1,2,3,4,6,7,8-Hepta CDF	pg	30 (1)	1.3	20	0.0100	0.300	N/A	2891949
1,2,3,4,7,8,9-Hepta CDF	pg	12	1.5	20	0.0100	0.120	N/A	2891949
1,2,3,4,6,7,8,9-Octa CDF	pg	6	2.1	200	0.000300	0.00180	N/A	2891949
Total Tetra CDF	pg	573	1.5	20	N/A	N/A	N/A	2891949
Total Penta CDF	pg	391	1.5	20	N/A	N/A	N/A	2891949
Total Hexa CDF	pg	270	1.1	20	N/A	N/A	N/A	2891949
Total Hepta CDF	pg	51	1.4	20	N/A	N/A	N/A	2891949
Confirmation 2,3,7,8-Tetra CDF	pg	78	1.5	20	0.100	7.80	N/A	2892629

N/A = Not Applicable
RDL = Reportable Detection Limit
EDL = Estimated Detection Limit
QC Batch = Quality Control Batch
* CDD = Chloro Dibenzo-p-Dioxin, ** CDF = Chloro Dibenzo-p-Furan
TEF = Toxic Equivalency Factor, TEQ = Toxic Equivalency Quotient,
The Total Toxic Equivalency (TEQ) value reported is the sum of Toxic Equivalent Quotients for the congeners tested.
WHO(2005): The 2005 World Health Organization, Human and Mammalian Toxic Equivalency Factors for Dioxins and Dioxin-like Compounds
(1) EMPC / Ratio - Isotopic ratio adjusted to meet theoretical
(2) EMPC / NDR - Peak detected does not meet ratio criteria and has resulted in an elevated detection limit.

Maxxam Analytics International Corporation o/a Maxxam Analytics 6740 Campobello Road, Mississauga, Ontario, L5N 2L8 Tel. (905) 817-5700 Toll-Free: 800-563-6266 Fax: (905) 817-5777 www.maxxam.ca

Maxxam Job #: B293726
Report Date: 2012/06/28

O'Brien & Gere Engineers Inc
Client Project #: 49064-001.001
Site Location: GENERAL DYNAMICS-JOPLIN,MO

DIOXINS AND FURANS BY HRMS (STACK SAMPLING TRAIN)

Maxxam ID		NX2216						
Sampling Date		2012/06/19						
COC Number		N/A			TOXIC EQUIVALENCY		# of	
	Units	RUN 3-OUT-C1-M23	EDL	RDL	TEF (2005 WHO)	TEQ(DL)	Isomers	QC Batch
TOTAL TOXIC EQUIVALENCY	pg	N/A	N/A	N/A	N/A	55.1	N/A	N/A
Surrogate Recovery (%)								
Confirmation C13-2378 TetraCDF **	%	78	N/A	N/A	N/A	N/A	N/A	2892629
C13-1234678 HeptaCDD *	%	88	N/A	N/A	N/A	N/A	N/A	2891949
C13-1234678 HeptaCDF	%	92	N/A	N/A	N/A	N/A	N/A	2891949
C13-123478 HexaCDD	%	125	N/A	N/A	N/A	N/A	N/A	2891949
C13-123478 HexaCDF	%	109	N/A	N/A	N/A	N/A	N/A	2891949
C13-1234789 HeptaCDF	%	81	N/A	N/A	N/A	N/A	N/A	2891949
C13-123678 HexaCDD	%	81	N/A	N/A	N/A	N/A	N/A	2891949
C13-123678 HexaCDF	%	79	N/A	N/A	N/A	N/A	N/A	2891949
C13-12378 PentaCDD	%	91	N/A	N/A	N/A	N/A	N/A	2891949
C13-12378 PentaCDF	%	82	N/A	N/A	N/A	N/A	N/A	2891949
C13-123789 HexaCDF	%	90	N/A	N/A	N/A	N/A	N/A	2891949
C13-23478 PentaCDF	%	105	N/A	N/A	N/A	N/A	N/A	2891949
C13-2378 TetraCDD	%	84	N/A	N/A	N/A	N/A	N/A	2891949
C13-2378 TetraCDF	%	75	N/A	N/A	N/A	N/A	N/A	2891949
C13-Octachlorodibenzo-p-Dioxin	%	113	N/A	N/A	N/A	N/A	N/A	2891949
Cl37-2378 TetraCDD	%	100	N/A	N/A	N/A	N/A	N/A	2891949

N/A = Not Applicable
RDL = Reportable Detection Limit
EDL = Estimated Detection Limit
QC Batch = Quality Control Batch
* CDD = Chloro Dibenzo-p-Dioxin, ** CDF = Chloro Dibenzo-p-Furan
TEF = Toxic Equivalency Factor, TEQ = Toxic Equivalency Quotient,
The Total Toxic Equivalency (TEQ) value reported is the sum of Toxic Equivalent Quotients for the congeners tested.
WHO(2005): The 2005 World Health Organization, Human and Mammalian Toxic Equivalency Factors for Dioxins and, Dioxin-like Compounds

Maxxam Analytics International Corporation o/a Maxxam Analytics 6740 Campobello Road, Mississauga, Ontario, L5N 2L8 Tel: (905) 817-5700 Toll-Free: 800-563-6266 Fax: (905) 817-5777 www.maxxam.ca

Maxxam Job #: B293726
Report Date: 2012/06/28

O'Brien & Gere Engineers Inc
Client Project #: 49064-001.001
Site Location: GENERAL DYNAMICS-JOPLIN,MO

DIOXINS AND FURANS BY HRMS (STACK SAMPLING TRAIN)

Maxxam ID		NX2217						
Sampling Date		2012/06/20						
COC Number		N/A			TOXIC EQUIVALENCY		# of	
	Units	RUN 1-IN-C2-M23	EDL	RDL	TEF (2005 WHO)	TEQ(DL)	Isomers	QC Batch
2,3,7,8-Tetra CDD *	pg	2 (1)	1.0	20	1.00	2.00	N/A	2891949
1,2,3,7,8-Penta CDD	pg	3 (1)	1.1	20	1.00	3.00	N/A	2891949
1,2,3,4,7,8-Hexa CDD	pg	3 (1)	1.2	20	0.100	0.300	N/A	2891949
1,2,3,6,7,8-Hexa CDD	pg	2 (1)	1.2	20	0.100	0.200	N/A	2891949
1,2,3,7,8,9-Hexa CDD	pg	<1.1	1.1	20	0.100	0.110	N/A	2891949
1,2,3,4,6,7,8-Hepta CDD	pg	7	1.6	20	0.0100	0.0700	N/A	2891949
1,2,3,4,6,7,8,9-Octa CDD	pg	13	2.6	200	0.000300	0.00390	N/A	2891949
Total Tetra CDD	pg	12	1.0	20	N/A	N/A	N/A	2891949
Total Penta CDD	pg	15	1.1	20	N/A	N/A	N/A	2891949
Total Hexa CDD	pg	11	1.1	20	N/A	N/A	N/A	2891949
Total Hepta CDD	pg	12	1.6	20	N/A	N/A	N/A	2891949
2,3,7,8-Tetra CDF **	pg	270	1.4	20	0.100	27.0	N/A	2891949
1,2,3,7,8-Penta CDF	pg	319	1.3	20	0.0300	9.57	N/A	2891949
2,3,4,7,8-Penta CDF	pg	101	1.2	20	0.300	30.3	N/A	2891949
1,2,3,4,7,8-Hexa CDF	pg	444	1.0	20	0.100	44.4	N/A	2891949
1,2,3,6,7,8-Hexa CDF	pg	90	0.92	20	0.100	9.00	N/A	2891949
2,3,4,6,7,8-Hexa CDF	pg	12	1.2	20	0.100	1.20	N/A	2891949
1,2,3,7,8,9-Hexa CDF	pg	11	1.2	20	0.100	1.10	N/A	2891949
1,2,3,4,6,7,8-Hepta CDF	pg	90 (1)	1.2	20	0.0100	0.900	N/A	2891949
1,2,3,4,7,8,9-Hepta CDF	pg	35	1.4	20	0.0100	0.350	N/A	2891949
1,2,3,4,6,7,8,9-Octa CDF	pg	35	2.2	200	0.000300	0.0105	N/A	2891949
Total Tetra CDF	pg	594	1.4	20	N/A	N/A	N/A	2891949
Total Penta CDF	pg	752	1.3	20	N/A	N/A	N/A	2891949
Total Hexa CDF	pg	680	1.1	20	N/A	N/A	N/A	2891949
Total Hepta CDF	pg	149	1.3	20	N/A	N/A	N/A	2891949
Confirmation 2,3,7,8-Tetra CDF	pg	233	3.0	20	0.100	23.3	N/A	2892629
TOTAL TOXIC EQUIVALENCY	pg	N/A	N/A	N/A	N/A	126	N/A	N/A

N/A = Not Applicable
RDL = Reportable Detection Limit
EDL = Estimated Detection Limit
QC Batch = Quality Control Batch
* CDD = Chloro Dibenzo-p-Dioxin, ** CDF = Chloro Dibenzo-p-Furan
TEF = Toxic Equivalency Factor, TEQ = Toxic Equivalency Quotient,
The Total Toxic Equivalency (TEQ) value reported is the sum of Toxic Equivalent Quotients for the congeners tested.
WHO(2005): The 2005 World Health Organization, Human and Mammalian Toxic Equivalency Factors for Dioxins and Dioxin-like Compounds
(1) EMPC / Ratio - Isotopic ratio adjusted to meet theoretical

Maxxam Analytics International Corporation o/a Maxxam Analytics 6740 Campobello Road, Mississauga, Ontario, L5N 2L8 Tel: (905) 817-5700 Toll-Free: 800-563-6266 Fax: (905) 817-5777 www.maxxam.ca

Maxxam Job #: B293726
Report Date: 2012/06/28

O'Brien & Gere Engineers Inc
Client Project #: 49064-001.001
Site Location: GENERAL DYNAMICS-JOPLIN,MO

DIOXINS AND FURANS BY HRMS (STACK SAMPLING TRAIN)

Maxxam ID		NX2217						
Sampling Date		2012/06/20						
COC Number		N/A			TOXIC EQUIVALENCY		# of	
	Units	RUN 1-IN-C2-M23	EDL	RDL	TEF (2005 WHO)	TEQ(DL)	Isomers	QC Batch
Surrogate Recovery (%)								
Confirmation C13-2378 TetraCDF **	%	77	N/A	N/A	N/A	N/A	N/A	2892629
C13-1234678 HeptaCDD *	%	90	N/A	N/A	N/A	N/A	N/A	2891949
C13-1234678 HeptaCDF	%	92	N/A	N/A	N/A	N/A	N/A	2891949
C13-123478 HexaCDD	%	127	N/A	N/A	N/A	N/A	N/A	2891949
C13-123478 HexaCDF	%	111	N/A	N/A	N/A	N/A	N/A	2891949
C13-1234789 HeptaCDF	%	80	N/A	N/A	N/A	N/A	N/A	2891949
C13-123678 HexaCDD	%	84	N/A	N/A	N/A	N/A	N/A	2891949
C13-123678 HexaCDF	%	80	N/A	N/A	N/A	N/A	N/A	2891949
C13-12378 PentaCDD	%	90	N/A	N/A	N/A	N/A	N/A	2891949
C13-12378 PentaCDF	%	74	N/A	N/A	N/A	N/A	N/A	2891949
C13-123789 HexaCDF	%	92	N/A	N/A	N/A	N/A	N/A	2891949
C13-23478 PentaCDF	%	112	N/A	N/A	N/A	N/A	N/A	2891949
C13-2378 TetraCDD	%	83	N/A	N/A	N/A	N/A	N/A	2891949
C13-2378 TetraCDF	%	76	N/A	N/A	N/A	N/A	N/A	2891949
C13-Octachlorodibenzo-p-Dioxin	%	113	N/A	N/A	N/A	N/A	N/A	2891949
Cl37-2378 TetraCDD	%	100	N/A	N/A	N/A	N/A	N/A	2891949

N/A = Not Applicable
RDL = Reportable Detection Limit
EDL = Estimated Detection Limit
QC Batch = Quality Control Batch
* CDD = Chloro Dibenzo-p-Dioxin, ** CDF = Chloro Dibenzo-p-Furan
TEF = Toxic Equivalency Factor, TEQ = Toxic Equivalency Quotient,
The Total Toxic Equivalency (TEQ) value reported is the sum of Toxic Equivalent Quotients for the congeners tested.
WHO(2005): The 2005 World Health Organization, Human and Mammalian Toxic Equivalency Factors for Dioxins and Dioxin-like Compounds

Maxxam Analytics International Corporation o/a Maxxam Analytics 6740 Campobello Road, Mississauga, Ontario, L5N 2L8 Tel: (905) 817-5700 Toll-Free: 800-563-6266 Fax: (905) 817-5777 www.maxxam.ca

Maxxam Job #: B293726
Report Date: 2012/06/28

O'Brien & Gere Engineers Inc
Client Project #: 49064-001.001
Site Location: GENERAL DYNAMICS-JOPLIN,MO

DIOXINS AND FURANS BY HRMS (STACK SAMPLING TRAIN)

Maxxam ID		NX2218						
Sampling Date		2012/06/20						
COC Number		N/A			TOXIC EQUIVALENCY		# of	
	Units	RUN 2-IN-C2-M23	EDL	RDL	TEF (2005 WHO)	TEQ(DL)	Isomers	QC Batch
2,3,7,8-Tetra CDD *	pg	2 (1)	1.5	20	1.00	2.00	N/A	2891949
1,2,3,7,8-Penta CDD	pg	3	1.4	20	1.00	3.00	N/A	2891949
1,2,3,4,7,8-Hexa CDD	pg	2 (1)	1.6	20	0.100	0.200	N/A	2891949
1,2,3,6,7,8-Hexa CDD	pg	3	1.6	20	0.100	0.300	N/A	2891949
1,2,3,7,8,9-Hexa CDD	pg	2 (1)	1.5	20	0.100	0.200	N/A	2891949
1,2,3,4,6,7,8-Hepta CDD	pg	6	1.0	20	0.0100	0.0600	N/A	2891949
1,2,3,4,6,7,8,9-Octa CDD	pg	14	2.1	200	0.000300	0.00420	N/A	2891949
Total Tetra CDD	pg	31	1.5	20	N/A	N/A	N/A	2891949
Total Penta CDD	pg	28	1.4	20	N/A	N/A	N/A	2891949
Total Hexa CDD	pg	11	1.6	20	N/A	N/A	N/A	2891949
Total Hepta CDD	pg	11	1.0	20	N/A	N/A	N/A	2891949
2,3,7,8-Tetra CDF **	pg	174	1.2	20	0.100	17.4	N/A	2891949
1,2,3,7,8-Penta CDF	pg	177	1.1	20	0.0300	5.31	N/A	2891949
2,3,4,7,8-Penta CDF	pg	71	1.1	20	0.300	21.3	N/A	2891949
1,2,3,4,7,8-Hexa CDF	pg	332	1.2	20	0.100	33.2	N/A	2891949
1,2,3,6,7,8-Hexa CDF	pg	67	1.0	20	0.100	6.70	N/A	2891949
2,3,4,6,7,8-Hexa CDF	pg	9	1.3	20	0.100	0.900	N/A	2891949
1,2,3,7,8,9-Hexa CDF	pg	6	1.4	20	0.100	0.600	N/A	2891949
1,2,3,4,6,7,8-Hepta CDF	pg	86	0.99	20	0.0100	0.860	N/A	2891949
1,2,3,4,7,8,9-Hepta CDF	pg	28	1.2	20	0.0100	0.280	N/A	2891949
1,2,3,4,6,7,8,9-Octa CDF	pg	33	2.1	200	0.000300	0.00990	N/A	2891949
Total Tetra CDF	pg	415	1.2	20	N/A	N/A	N/A	2891949
Total Penta CDF	pg	472	1.1	20	N/A	N/A	N/A	2891949
Total Hexa CDF	pg	506	1.2	20	N/A	N/A	N/A	2891949
Total Hepta CDF	pg	136	1.1	20	N/A	N/A	N/A	2891949
Confirmation 2,3,7,8-Tetra CDF	pg	16	2.3	20	0.100	1.60	N/A	2892629
TOTAL TOXIC EQUIVALENCY	pg	N/A	N/A	N/A	N/A	76.5	N/A	N/A

N/A = Not Applicable
RDL = Reportable Detection Limit
EDL = Estimated Detection Limit
QC Batch = Quality Control Batch
* CDD = Chloro Dibenzo-p-Dioxin, ** CDF = Chloro Dibenzo-p-Furan
TEF = Toxic Equivalency Factor, TEQ = Toxic Equivalency Quotient,
The Total Toxic Equivalency (TEQ) value reported is the sum of Toxic Equivalent Quotients for the congeners tested.
WHO(2005): The 2005 World Health Organization, Human and Mammalian Toxic Equivalency Factors for Dioxins and Dioxin-like Compounds
(1) EMPC / Ratio - Isotopic ratio adjusted to meet theoretical

Maxxam Analytics International Corporation o/a Maxxam Analytics 6740 Campobello Road, Mississauga, Ontario, L5N 2L8 Tel: (905) 817-5700 Toll-Free: 800-563-6266 Fax: (905) 817-5777 www.maxxam.ca

Maxxam Job #: B293726
Report Date: 2012/06/28

O'Brien & Gere Engineers Inc
Client Project #: 49064-001.001
Site Location: GENERAL DYNAMICS-JOPLIN,MO

DIOXINS AND FURANS BY HRMS (STACK SAMPLING TRAIN)

Maxxam ID		NX2218						
Sampling Date		2012/06/20						
COC Number		N/A			TOXIC EQUIVALENCY		# of	
	Units	RUN 2-IN-C2-M23	EDL	RDL	TEF (2005 WHO)	TEQ(DL)	Isomers	QC Batch
Surrogate Recovery (%)								
Confirmation C13-2378 TetraCDF **	%	89	N/A	N/A	N/A	N/A	N/A	2892629
C13-1234678 HeptaCDD *	%	99	N/A	N/A	N/A	N/A	N/A	2891949
C13-1234678 HeptaCDF	%	100	N/A	N/A	N/A	N/A	N/A	2891949
C13-123478 HexaCDD	%	119	N/A	N/A	N/A	N/A	N/A	2891949
C13-123478 HexaCDF	%	110	N/A	N/A	N/A	N/A	N/A	2891949
C13-1234789 HeptaCDF	%	80	N/A	N/A	N/A	N/A	N/A	2891949
C13-123678 HexaCDD	%	93	N/A	N/A	N/A	N/A	N/A	2891949
C13-123678 HexaCDF	%	88	N/A	N/A	N/A	N/A	N/A	2891949
C13-12378 PentaCDD	%	104	N/A	N/A	N/A	N/A	N/A	2891949
C13-12378 PentaCDF	%	92	N/A	N/A	N/A	N/A	N/A	2891949
C13-123789 HexaCDF	%	95	N/A	N/A	N/A	N/A	N/A	2891949
C13-23478 PentaCDF	%	105	N/A	N/A	N/A	N/A	N/A	2891949
C13-2378 TetraCDD	%	98	N/A	N/A	N/A	N/A	N/A	2891949
C13-2378 TetraCDF	%	88	N/A	N/A	N/A	N/A	N/A	2891949
C13-Octachlorodibenzo-p-Dioxin	%	127	N/A	N/A	N/A	N/A	N/A	2891949
Cl37-2378 TetraCDD	%	98	N/A	N/A	N/A	N/A	N/A	2891949

N/A = Not Applicable
RDL = Reportable Detection Limit
EDL = Estimated Detection Limit
QC Batch = Quality Control Batch
* CDD = Chloro Dibenzo-p-Dioxin, ** CDF = Chloro Dibenzo-p-Furan
TEF = Toxic Equivalency Factor, TEQ = Toxic Equivalency Quotient,
The Total Toxic Equivalency (TEQ) value reported is the sum of Toxic Equivalent Quotients for the congeners tested.
WHO(2005): The 2005 World Health Organization, Human and Mammalian Toxic Equivalency Factors for Dioxins and Dioxin-like Compounds

Maxxam Analytics International Corporation o/a Maxxam Analytics 6740 Campobello Road, Mississauga, Ontario, L5N 2L8 Tel. (905) 817-5700 Toll-Free: 800-563-6266 Fax (905) 817-5777 www.maxxam.ca

Maxxam Job #: B293726
Report Date: 2012/06/28

O'Brien & Gere Engineers Inc
Client Project #: 49064-001.001
Site Location: GENERAL DYNAMICS-JOPLIN,MO

DIOXINS AND FURANS BY HRMS (STACK SAMPLING TRAIN)

Maxxam ID		NX2219						
Sampling Date		2012/06/20						
COC Number		N/A			TOXIC EQUIVALENCY		# of	
	Units	RUN 3-IN-C2-M23	EDL	RDL	TEF (2005 WHO)	TEQ(DL)	Isomers	QC Batch
2,3,7,8-Tetra CDD *	pg	2 (1)	1.4	20	1.00	2.00	N/A	2891949
1,2,3,7,8-Penta CDD	pg	3 (1)	1.2	20	1.00	3.00	N/A	2891949
1,2,3,4,7,8-Hexa CDD	pg	2 (1)	1.1	20	0.100	0.200	N/A	2891949
1,2,3,6,7,8-Hexa CDD	pg	2	1.1	20	0.100	0.200	N/A	2891949
1,2,3,7,8,9-Hexa CDD	pg	2	1.1	20	0.100	0.200	N/A	2891949
1,2,3,4,6,7,8-Hepta CDD	pg	7	1.0	20	0.0100	0.0700	N/A	2891949
1,2,3,4,6,7,8,9-Octa CDD	pg	15	2.8	200	0.000300	0.00450	N/A	2891949
Total Tetra CDD	pg	12	1.4	20	N/A	N/A	N/A	2891949
Total Penta CDD	pg	8	1.2	20	N/A	N/A	N/A	2891949
Total Hexa CDD	pg	12	1.1	20	N/A	N/A	N/A	2891949
Total Hepta CDD	pg	13	1.0	20	N/A	N/A	N/A	2891949
2,3,7,8-Tetra CDF **	pg	249	1.2	20	0.100	24.9	N/A	2891949
1,2,3,7,8-Penta CDF	pg	259	1.2	20	0.0300	7.77	N/A	2891949
2,3,4,7,8-Penta CDF	pg	89	1.1	20	0.300	26.7	N/A	2891949
1,2,3,4,7,8-Hexa CDF	pg	423	1.3	20	0.100	42.3	N/A	2891949
1,2,3,6,7,8-Hexa CDF	pg	79	1.2	20	0.100	7.90	N/A	2891949
2,3,4,6,7,8-Hexa CDF	pg	12	1.5	20	0.100	1.20	N/A	2891949
1,2,3,7,8,9-Hexa CDF	pg	10	1.6	20	0.100	1.00	N/A	2891949
1,2,3,4,6,7,8-Hepta CDF	pg	91 (1)	1.3	20	0.0100	0.910	N/A	2891949
1,2,3,4,7,8,9-Hepta CDF	pg	42	1.5	20	0.0100	0.420	N/A	2891949
1,2,3,4,6,7,8,9-Octa CDF	pg	47	2.0	200	0.000300	0.0141	N/A	2891949
Total Tetra CDF	pg	532	1.2	20	N/A	N/A	N/A	2891949
Total Penta CDF	pg	629	1.2	20	N/A	N/A	N/A	2891949
Total Hexa CDF	pg	643	1.4	20	N/A	N/A	N/A	2891949
Total Hepta CDF	pg	165	1.4	20	N/A	N/A	N/A	2891949
Confirmation 2,3,7,8-Tetra CDF	pg	207	2.2	20	0.100	20.7	N/A	2892629
TOTAL TOXIC EQUIVALENCY	pg	N/A	N/A	N/A	N/A	115	N/A	N/A

N/A = Not Applicable
RDL = Reportable Detection Limit
EDL = Estimated Detection Limit
QC Batch = Quality Control Batch
* CDD = Chloro Dibenzo-p-Dioxin, ** CDF = Chloro Dibenzo-p-Furan
TEF = Toxic Equivalency Factor, TEQ = Toxic Equivalency Quotient,
The Total Toxic Equivalency (TEQ) value reported is the sum of Toxic Equivalent Quotients for the congeners tested.
WHO(2005): The 2005 World Health Organization, Human and Mammalian Toxic Equivalency Factors for Dioxins and Dioxin-like Compounds
(1) EMPC / Ratio - Isotopic ratio adjusted to meet theoretical

Maxxam Analytics International Corporation o/a Maxxam Analytics 6740 Campobello Road, Mississauga, Ontario, L5N 2L8 Tel: (905) 817-5700 Toll-Free: 800-563-6266 Fax: (905) 817-5777 www.maxxam.ca

Maxxam Job #: B293726
Report Date: 2012/06/28

O'Brien & Gere Engineers Inc
Client Project #: 49064-001.001
Site Location: GENERAL DYNAMICS-JOPLIN,MO

DIOXINS AND FURANS BY HRMS (STACK SAMPLING TRAIN)

Maxxam ID		NX2219						
Sampling Date		2012/06/20						
COC Number		N/A			TOXIC EQUIVALENCY		# of	
	Units	RUN 3-IN-C2-M23	EDL	RDL	TEF (2005 WHO)	TEQ(DL)	Isomers	QC Batch
Surrogate Recovery (%)								
Confirmation C13-2378 TetraCDF **	%	93	N/A	N/A	N/A	N/A	N/A	2892629
C13-1234678 HeptaCDD *	%	94	N/A	N/A	N/A	N/A	N/A	2891949
C13-1234678 HeptaCDF	%	95	N/A	N/A	N/A	N/A	N/A	2891949
C13-123478 HexaCDD	%	123	N/A	N/A	N/A	N/A	N/A	2891949
C13-123478 HexaCDF	%	111	N/A	N/A	N/A	N/A	N/A	2891949
C13-1234789 HeptaCDF	%	81	N/A	N/A	N/A	N/A	N/A	2891949
C13-123678 HexaCDD	%	89	N/A	N/A	N/A	N/A	N/A	2891949
C13-123678 HexaCDF	%	84	N/A	N/A	N/A	N/A	N/A	2891949
C13-12378 PentaCDD	%	102	N/A	N/A	N/A	N/A	N/A	2891949
C13-12378 PentaCDF	%	91	N/A	N/A	N/A	N/A	N/A	2891949
C13-123789 HexaCDF	%	95	N/A	N/A	N/A	N/A	N/A	2891949
C13-23478 PentaCDF	%	105	N/A	N/A	N/A	N/A	N/A	2891949
C13-2378 TetraCDD	%	98	N/A	N/A	N/A	N/A	N/A	2891949
C13-2378 TetraCDF	%	87	N/A	N/A	N/A	N/A	N/A	2891949
C13-Octachlorodibenzo-p-Dioxin	%	125	N/A	N/A	N/A	N/A	N/A	2891949
Cl37-2378 TetraCDD	%	99	N/A	N/A	N/A	N/A	N/A	2891949

N/A = Not Applicable
RDL = Reportable Detection Limit
EDL = Estimated Detection Limit
QC Batch = Quality Control Batch
* CDD = Chloro Dibenzo-p-Dioxin, ** CDF = Chloro Dibenzo-p-Furan
TEF = Toxic Equivalency Factor, TEQ = Toxic Equivalency Quotient,
The Total Toxic Equivalency (TEQ) value reported is the sum of Toxic Equivalent Quotients for the congeners tested.
WHO(2005): The 2005 World Health Organization, Human and Mammalian Toxic Equivalency Factors for Dioxins and Dioxin-like Compounds

Maxxam Analytics International Corporation o/a Maxxam Analytics 6740 Campobello Road, Mississauga, Ontario, L5N 2L8 Tel. (905) 817-5700 Toll-Free: 800-563-6266 Fax (905) 817-5777 www.maxxam.ca

Maxxam Job #: B293726
Report Date: 2012/06/28

O'Brien & Gere Engineers Inc
Client Project #: 49064-001.001
Site Location: GENERAL DYNAMICS-JOPLIN,MO

DIOXINS AND FURANS BY HRMS (STACK SAMPLING TRAIN)

Maxxam ID		NX2220						
Sampling Date		2012/06/20						
COC Number		N/A			TOXIC EQUIVALENCY		# of	
	Units	RUN 1-OUT-C2-M23	EDL	RDL	TEF (2005 WHO)	TEQ(DL)	Isomers	QC Batch
2,3,7,8-Tetra CDD *	pg	2 (1)	1.1	20	1.00	2.00	N/A	2891949
1,2,3,7,8-Penta CDD	pg	<1.4	1.4	20	1.00	1.40	N/A	2891949
1,2,3,4,7,8-Hexa CDD	pg	<1.3	1.3	20	0.100	0.130	N/A	2891949
1,2,3,6,7,8-Hexa CDD	pg	<1.3	1.3	20	0.100	0.130	N/A	2891949
1,2,3,7,8,9-Hexa CDD	pg	<1.2	1.2	20	0.100	0.120	N/A	2891949
1,2,3,4,6,7,8-Hepta CDD	pg	<1.1	1.1	20	0.0100	0.0110	N/A	2891949
1,2,3,4,6,7,8,9-Octa CDD	pg	3	2.0	200	0.000300	0.000900	N/A	2891949
Total Tetra CDD	pg	7	1.1	20	N/A	N/A	N/A	2891949
Total Penta CDD	pg	<1.4	1.4	20	N/A	N/A	N/A	2891949
Total Hexa CDD	pg	<1.4 (2)	1.4	20	N/A	N/A	N/A	2891949
Total Hepta CDD	pg	<1.1	1.1	20	N/A	N/A	N/A	2891949
2,3,7,8-Tetra CDF **	pg	161	1.1	20	0.100	16.1	N/A	2891949
1,2,3,7,8-Penta CDF	pg	90	1.6	20	0.0300	2.70	N/A	2891949
2,3,4,7,8-Penta CDF	pg	41	1.5	20	0.300	12.3	N/A	2891949
1,2,3,4,7,8-Hexa CDF	pg	106	1.2	20	0.100	10.6	N/A	2891949
1,2,3,6,7,8-Hexa CDF	pg	25	1.1	20	0.100	2.50	N/A	2891949
2,3,4,6,7,8-Hexa CDF	pg	4	1.4	20	0.100	0.400	N/A	2891949
1,2,3,7,8,9-Hexa CDF	pg	3	1.4	20	0.100	0.300	N/A	2891949
1,2,3,4,6,7,8-Hepta CDF	pg	19 (1)	1.0	20	0.0100	0.190	N/A	2891949
1,2,3,4,7,8,9-Hepta CDF	pg	7	1.2	20	0.0100	0.0700	N/A	2891949
1,2,3,4,6,7,8,9-Octa CDF	pg	3	2.6	200	0.000300	0.000900	N/A	2891949
Total Tetra CDF	pg	423	1.1	20	N/A	N/A	N/A	2891949
Total Penta CDF	pg	273	1.5	20	N/A	N/A	N/A	2891949
Total Hexa CDF	pg	183	1.2	20	N/A	N/A	N/A	2891949
Total Hepta CDF	pg	32	1.1	20	N/A	N/A	N/A	2891949
Confirmation 2,3,7,8-Tetra CDF	pg	137	2.2	20	0.100	13.7	N/A	2892629

N/A = Not Applicable
RDL = Reportable Detection Limit
EDL = Estimated Detection Limit
QC Batch = Quality Control Batch
* CDD = Chloro Dibenzo-p-Dioxin, ** CDF = Chloro Dibenzo-p-Furan
TEF = Toxic Equivalency Factor, TEQ = Toxic Equivalency Quotient,
The Total Toxic Equivalency (TEQ) value reported is the sum of Toxic Equivalent Quotients for the congeners tested.
WHO(2005): The 2005 World Health Organization, Human and Mammalian Toxic Equivalency Factors for Dioxins and Dioxin-like Compounds
(1) EMPC / Ratio - Isotopic ratio adjusted to meet theoretical
(2) EMPC / NDR - Peak detected does not meet ratio criteria and has resulted in an elevated detection limit.

Maxxam Analytics International Corporation o/a Maxxam Analytics 6740 Campobello Road, Mississauga, Ontario, L5N 2L8 Tel: (905) 817-5700 Toll-Free: 800-563-6266 Fax: (905) 817-5777 www.maxxam.ca

Maxxam Job #: B293726
Report Date: 2012/06/28

O'Brien & Gere Engineers Inc
Client Project #: 49064-001.001
Site Location: GENERAL DYNAMICS-JOPLIN,MO

DIOXINS AND FURANS BY HRMS (STACK SAMPLING TRAIN)

Maxxam ID		NX2220						
Sampling Date		2012/06/20						
COC Number		N/A			TOXIC EQUIVALENCY		# of	
	Units	RUN 1-OUT-C2-M23	EDL	RDL	TEF (2005 WHO)	TEQ(DL)	Isomers	QC Batch
TOTAL TOXIC EQUIVALENCY	pg	N/A	N/A	N/A	N/A	46.6	N/A	N/A
Surrogate Recovery (%)								
Confirmation C13-2378 TetraCDF **	%	78	N/A	N/A	N/A	N/A	N/A	2892629
C13-1234678 HeptaCDD *	%	92	N/A	N/A	N/A	N/A	N/A	2891949
C13-1234678 HeptaCDF	%	93	N/A	N/A	N/A	N/A	N/A	2891949
C13-123478 HexaCDD	%	128	N/A	N/A	N/A	N/A	N/A	2891949
C13-123478 HexaCDF	%	112	N/A	N/A	N/A	N/A	N/A	2891949
C13-1234789 HeptaCDF	%	80	N/A	N/A	N/A	N/A	N/A	2891949
C13-123678 HexaCDD	%	82	N/A	N/A	N/A	N/A	N/A	2891949
C13-123678 HexaCDF	%	78	N/A	N/A	N/A	N/A	N/A	2891949
C13-12378 PentaCDD	%	96	N/A	N/A	N/A	N/A	N/A	2891949
C13-12378 PentaCDF	%	84	N/A	N/A	N/A	N/A	N/A	2891949
C13-123789 HexaCDF	%	93	N/A	N/A	N/A	N/A	N/A	2891949
C13-23478 PentaCDF	%	106	N/A	N/A	N/A	N/A	N/A	2891949
C13-2378 TetraCDD	%	82	N/A	N/A	N/A	N/A	N/A	2891949
C13-2378 TetraCDF	%	78	N/A	N/A	N/A	N/A	N/A	2891949
C13-Octachlorodibenzo-p-Dioxin	%	116	N/A	N/A	N/A	N/A	N/A	2891949
Cl37-2378 TetraCDD	%	99	N/A	N/A	N/A	N/A	N/A	2891949

N/A = Not Applicable
RDL = Reportable Detection Limit
EDL = Estimated Detection Limit
QC Batch = Quality Control Batch
* CDD = Chloro Dibenzo-p-Dioxin, ** CDF = Chloro Dibenzo-p-Furan
TEF = Toxic Equivalency Factor, TEQ = Toxic Equivalency Quotient,
The Total Toxic Equivalency (TEQ) value reported is the sum of Toxic Equivalent Quotients for the congeners tested.
WHO(2005): The 2005 World Health Organization, Human and Mammalian Toxic Equivalency Factors for Dioxins and Dioxin-like Compounds

Maxxam Analytics International Corporation o/a Maxxam Analytics 6740 Campobello Road, Mississauga, Ontario, L5N 2L8 Tel: (905) 817-5700 Toll-Free: 800-563-6266 Fax: (905) 817-5777 www.maxxam.ca

Maxxam Job #: B293726
Report Date: 2012/06/28

O'Brien & Gere Engineers Inc
Client Project #: 49064-001.001
Site Location: GENERAL DYNAMICS-JOPLIN,MO

DIOXINS AND FURANS BY HRMS (STACK SAMPLING TRAIN)

Maxxam ID		NX2221						
Sampling Date		2012/06/20						
COC Number		N/A			TOXIC EQUIVALENCY		# of	
	Units	RUN 2-OUT-C2-M23	EDL	RDL	TEF (2005 WHO)	TEQ(DL)	Isomers	QC Batch
2,3,7,8-Tetra CDD *	pg	1 (1)	1.1	20	1.00	1.00	N/A	2891949
1,2,3,7,8-Penta CDD	pg	<1.2	1.2	20	1.00	1.20	N/A	2891949
1,2,3,4,7,8-Hexa CDD	pg	<1.2	1.2	20	0.100	0.120	N/A	2891949
1,2,3,6,7,8-Hexa CDD	pg	<1.1	1.1	20	0.100	0.110	N/A	2891949
1,2,3,7,8,9-Hexa CDD	pg	<1.1	1.1	20	0.100	0.110	N/A	2891949
1,2,3,4,6,7,8-Hepta CDD	pg	<1.2	1.2	20	0.0100	0.0120	N/A	2891949
1,2,3,4,6,7,8,9-Octa CDD	pg	4	3.1	200	0.000300	0.00120	N/A	2891949
Total Tetra CDD	pg	5	1.1	20	N/A	N/A	N/A	2891949
Total Penta CDD	pg	<1.2	1.2	20	N/A	N/A	N/A	2891949
Total Hexa CDD	pg	<1.9 (2)	1.9	20	N/A	N/A	N/A	2891949
Total Hepta CDD	pg	<1.2	1.2	20	N/A	N/A	N/A	2891949
2,3,7,8-Tetra CDF **	pg	183	1.1	20	0.100	18.3	N/A	2891949
1,2,3,7,8-Penta CDF	pg	92	1.8	20	0.0300	2.76	N/A	2891949
2,3,4,7,8-Penta CDF	pg	43	1.7	20	0.300	12.9	N/A	2891949
1,2,3,4,7,8-Hexa CDF	pg	98	1.0	20	0.100	9.80	N/A	2891949
1,2,3,6,7,8-Hexa CDF	pg	23	0.90	20	0.100	2.30	N/A	2891949
2,3,4,6,7,8-Hexa CDF	pg	5	1.2	20	0.100	0.500	N/A	2891949
1,2,3,7,8,9-Hexa CDF	pg	3	1.2	20	0.100	0.300	N/A	2891949
1,2,3,4,6,7,8-Hepta CDF	pg	19 (1)	1.1	20	0.0100	0.190	N/A	2891949
1,2,3,4,7,8,9-Hepta CDF	pg	7	1.3	20	0.0100	0.0700	N/A	2891949
1,2,3,4,6,7,8,9-Octa CDF	pg	4	2.1	200	0.000300	0.00120	N/A	2891949
Total Tetra CDF	pg	481	1.1	20	N/A	N/A	N/A	2891949
Total Penta CDF	pg	283	1.7	20	N/A	N/A	N/A	2891949
Total Hexa CDF	pg	170	1.0	20	N/A	N/A	N/A	2891949
Total Hepta CDF	pg	31	1.2	20	N/A	N/A	N/A	2891949
Confirmation 2,3,7,8-Tetra CDF	pg	148	1.8	20	0.100	14.8	N/A	2892629

N/A = Not Applicable
RDL = Reportable Detection Limit
EDL = Estimated Detection Limit
QC Batch = Quality Control Batch
* CDD = Chloro Dibenzo-p-Dioxin, ** CDF = Chloro Dibenzo-p-Furan
TEF = Toxic Equivalency Factor, TEQ = Toxic Equivalency Quotient,
The Total Toxic Equivalency (TEQ) value reported is the sum of Toxic Equivalent Quotients for the congeners tested.
WHO(2005): The 2005 World Health Organization, Human and Mammalian Toxic Equivalency Factors for Dioxins and Dioxin-like Compounds
(1) EMPC / Ratio - Isotopic ratio adjusted to meet theoretical
(2) EMPC / NDR - Peak detected does not meet ratio criteria and has resulted in an elevated detection limit.

Maxxam Analytics International Corporation o/a Maxxam Analytics 6740 Campobello Road, Mississauga, Ontario, L5N 2L8 Tel: (905) 817-5700 Toll-Free: 800-563-6266 Fax: (905) 817-5777 www.maxxam.ca

Maxxam Job #: B293726
Report Date: 2012/06/28

O'Brien & Gere Engineers Inc
Client Project #: 49064-001.001
Site Location: GENERAL DYNAMICS-JOPLIN,MO

DIOXINS AND FURANS BY HRMS (STACK SAMPLING TRAIN)

Maxxam ID		NX2221						
Sampling Date		2012/06/20						
COC Number		N/A			TOXIC EQUIVALENCY		# of	
	Units	RUN 2-OUT-C2-M23	EDL	RDL	TEF (2005 WHO)	TEQ(DL)	Isomers	QC Batch
TOTAL TOXIC EQUIVALENCY	pg	N/A	N/A	N/A	N/A	46.2	N/A	N/A
Surrogate Recovery (%)								
Confirmation C13-2378 TetraCDF **	%	89	N/A	N/A	N/A	N/A	N/A	2892629
C13-1234678 HeptaCDD *	%	100	N/A	N/A	N/A	N/A	N/A	2891949
C13-1234678 HeptaCDF	%	99	N/A	N/A	N/A	N/A	N/A	2891949
C13-123478 HexaCDD	%	124	N/A	N/A	N/A	N/A	N/A	2891949
C13-123478 HexaCDF	%	109	N/A	N/A	N/A	N/A	N/A	2891949
C13-1234789 HeptaCDF	%	80	N/A	N/A	N/A	N/A	N/A	2891949
C13-123678 HexaCDD	%	88	N/A	N/A	N/A	N/A	N/A	2891949
C13-123678 HexaCDF	%	86	N/A	N/A	N/A	N/A	N/A	2891949
C13-12378 PentaCDD	%	103	N/A	N/A	N/A	N/A	N/A	2891949
C13-12378 PentaCDF	%	91	N/A	N/A	N/A	N/A	N/A	2891949
C13-123789 HexaCDF	%	96	N/A	N/A	N/A	N/A	N/A	2891949
C13-23478 PentaCDF	%	106	N/A	N/A	N/A	N/A	N/A	2891949
C13-2378 TetraCDD	%	95	N/A	N/A	N/A	N/A	N/A	2891949
C13-2378 TetraCDF	%	81	N/A	N/A	N/A	N/A	N/A	2891949
C13-Octachlorodibenzo-p-Dioxin	%	126	N/A	N/A	N/A	N/A	N/A	2891949
Cl37-2378 TetraCDD	%	99	N/A	N/A	N/A	N/A	N/A	2891949

N/A = Not Applicable
RDL = Reportable Detection Limit
EDL = Estimated Detection Limit
QC Batch = Quality Control Batch
* CDD = Chloro Dibenzo-p-Dioxin, ** CDF = Chloro Dibenzo-p-Furan
TEF = Toxic Equivalency Factor, TEQ = Toxic Equivalency Quotient,
The Total Toxic Equivalency (TEQ) value reported is the sum of Toxic Equivalent Quotients for the congeners tested.
WHO(2005): The 2005 World Health Organization, Human and Mammalian Toxic Equivalency Factors for Dioxins and Dioxin-like Compounds

Maxxam Analytics International Corporation o/a Maxxam Analytics 6740 Campobello Road, Mississauga, Ontario, L5N 2L8 Tel: (905) 817-5700 Toll-Free: 800-563-6266 Fax: (905) 817-5777 www.maxxam.ca

Maxxam Job #: B293726
Report Date: 2012/06/28

O'Brien & Gere Engineers Inc
Client Project #: 49064-001.001
Site Location: GENERAL DYNAMICS-JOPLIN,MO

DIOXINS AND FURANS BY HRMS (STACK SAMPLING TRAIN)

Maxxam ID		NX2222						
Sampling Date		2012/06/20						
COC Number		N/A			TOXIC EQUIVALENCY		# of	
	Units	RUN 3-OUT-C2-M23	EDL	RDL	TEF (2005 WHO)	TEQ(DL)	Isomers	QC Batch
2,3,7,8-Tetra CDD *	pg	1 (1)	1.3	20	1.00	1.00	N/A	2891949
1,2,3,7,8-Penta CDD	pg	<1.3	1.3	20	1.00	1.30	N/A	2891949
1,2,3,4,7,8-Hexa CDD	pg	<1.3	1.3	20	0.100	0.130	N/A	2891949
1,2,3,6,7,8-Hexa CDD	pg	<1.3	1.3	20	0.100	0.130	N/A	2891949
1,2,3,7,8,9-Hexa CDD	pg	<1.2	1.2	20	0.100	0.120	N/A	2891949
1,2,3,4,6,7,8-Hepta CDD	pg	2	1.2	20	0.0100	0.0200	N/A	2891949
1,2,3,4,6,7,8,9-Octa CDD	pg	7	2.1	200	0.000300	0.00210	N/A	2891949
Total Tetra CDD	pg	5	1.3	20	N/A	N/A	N/A	2891949
Total Penta CDD	pg	1	1.3	20	N/A	N/A	N/A	2891949
Total Hexa CDD	pg	<3.6 (2)	3.6	20	N/A	N/A	N/A	2891949
Total Hepta CDD	pg	2	1.2	20	N/A	N/A	N/A	2891949
2,3,7,8-Tetra CDF **	pg	128	1.2	20	0.100	12.8	N/A	2891949
1,2,3,7,8-Penta CDF	pg	70	1.6	20	0.0300	2.10	N/A	2891949
2,3,4,7,8-Penta CDF	pg	33	1.5	20	0.300	9.90	N/A	2891949
1,2,3,4,7,8-Hexa CDF	pg	89	1.1	20	0.100	8.90	N/A	2891949
1,2,3,6,7,8-Hexa CDF	pg	20	1.0	20	0.100	2.00	N/A	2891949
2,3,4,6,7,8-Hexa CDF	pg	3	1.3	20	0.100	0.300	N/A	2891949
1,2,3,7,8,9-Hexa CDF	pg	3	1.3	20	0.100	0.300	N/A	2891949
1,2,3,4,6,7,8-Hepta CDF	pg	18 (1)	1.0	20	0.0100	0.180	N/A	2891949
1,2,3,4,7,8,9-Hepta CDF	pg	7	1.2	20	0.0100	0.0700	N/A	2891949
1,2,3,4,6,7,8,9-Octa CDF	pg	5	2.1	200	0.000300	0.00150	N/A	2891949
Total Tetra CDF	pg	323	1.2	20	N/A	N/A	N/A	2891949
Total Penta CDF	pg	216	1.5	20	N/A	N/A	N/A	2891949
Total Hexa CDF	pg	153	1.2	20	N/A	N/A	N/A	2891949
Total Hepta CDF	pg	31	1.1	20	N/A	N/A	N/A	2891949
Confirmation 2,3,7,8-Tetra CDF	pg	105	1.5	20	0.100	10.5	N/A	2892629

N/A = Not Applicable
RDL = Reportable Detection Limit
EDL = Estimated Detection Limit
QC Batch = Quality Control Batch
* CDD = Chloro Dibenzo-p-Dioxin, ** CDF = Chloro Dibenzo-p-Furan
TEF = Toxic Equivalency Factor, TEQ = Toxic Equivalency Quotient,
The Total Toxic Equivalency (TEQ) value reported is the sum of Toxic Equivalent Quotients for the congeners tested.
WHO(2005): The 2005 World Health Organization, Human and Mammalian Toxic Equivalency Factors for Dioxins and Dioxin-like Compounds
(1) EMPC / Ratio - Isotopic ratio adjusted to meet theoretical
(2) EMPC / NDR - Peak detected does not meet ratio criteria and has resulted in an elevated detection limit.

Maxxam Analytics International Corporation o/a Maxxam Analytics 6740 Campobello Road, Mississauga, Ontario, L5N 2L8 Tel: (905) 817-5700 Toll-Free: 800-563-6266 Fax: (905) 817-5777 www.maxxam.ca

Maxxam Job #: B293726
Report Date: 2012/06/28

O'Brien & Gere Engineers Inc
Client Project #: 49064-001.001
Site Location: GENERAL DYNAMICS-JOPLIN,MO

DIOXINS AND FURANS BY HRMS (STACK SAMPLING TRAIN)

Maxxam ID		NX2222						
Sampling Date		2012/06/20						
COC Number		N/A			TOXIC EQUIVALENCY		# of	
	Units	RUN 3-OUT-C2-M23	EDL	RDL	TEF (2005 WHO)	TEQ(DL)	Isomers	QC Batch
TOTAL TOXIC EQUIVALENCY	pg	N/A	N/A	N/A	N/A	37.0	N/A	N/A
Surrogate Recovery (%)								
Confirmation C13-2378 TetraCDF **	%	90	N/A	N/A	N/A	N/A	N/A	2892629
C13-1234678 HeptaCDD *	%	94	N/A	N/A	N/A	N/A	N/A	2891949
C13-1234678 HeptaCDF	%	97	N/A	N/A	N/A	N/A	N/A	2891949
C13-123478 HexaCDD	%	129	N/A	N/A	N/A	N/A	N/A	2891949
C13-123478 HexaCDF	%	113	N/A	N/A	N/A	N/A	N/A	2891949
C13-1234789 HeptaCDF	%	80	N/A	N/A	N/A	N/A	N/A	2891949
C13-123678 HexaCDD	%	89	N/A	N/A	N/A	N/A	N/A	2891949
C13-123678 HexaCDF	%	85	N/A	N/A	N/A	N/A	N/A	2891949
C13-12378 PentaCDD	%	92	N/A	N/A	N/A	N/A	N/A	2891949
C13-12378 PentaCDF	%	85	N/A	N/A	N/A	N/A	N/A	2891949
C13-123789 HexaCDF	%	95	N/A	N/A	N/A	N/A	N/A	2891949
C13-23478 PentaCDF	%	103	N/A	N/A	N/A	N/A	N/A	2891949
C13-2378 TetraCDD	%	97	N/A	N/A	N/A	N/A	N/A	2891949
C13-2378 TetraCDF	%	89	N/A	N/A	N/A	N/A	N/A	2891949
C13-Octachlorodibenzo-p-Dioxin	%	122	N/A	N/A	N/A	N/A	N/A	2891949
Cl37-2378 TetraCDD	%	103	N/A	N/A	N/A	N/A	N/A	2891949

N/A = Not Applicable
RDL = Reportable Detection Limit
EDL = Estimated Detection Limit
QC Batch = Quality Control Batch
* CDD = Chloro Dibenzo-p-Dioxin, ** CDF = Chloro Dibenzo-p-Furan
TEF = Toxic Equivalency Factor, TEQ = Toxic Equivalency Quotient,
The Total Toxic Equivalency (TEQ) value reported is the sum of Toxic Equivalent Quotients for the congeners tested.
WHO(2005): The 2005 World Health Organization, Human and Mammalian Toxic Equivalency Factors for Dioxins and Dioxin-like Compounds

Maxxam Analytics International Corporation o/a Maxxam Analytics 6740 Campobello Road, Mississauga, Ontario, L5N 2L8 Tel: (905) 817-5700 Toll-Free: 800-563-6266 Fax: (905) 817-5777 www.maxxam.ca

Maxxam Job #: B293726
Report Date: 2012/06/28

O'Brien & Gere Engineers Inc
Client Project #: 49064-001.001
Site Location: GENERAL DYNAMICS-JOPLIN,MO

Test Summary

Maxxam ID NX2176 **Collected** 2012/06/20
Sample ID R.BLANK--M23 **Shipped**
Matrix Stack Sampling Train **Received** 2012/06/23

Test Description	Instrumentation	Batch	Extracted	Analyzed	Analyst
Dioxins/Furans in Air (Method 23)	HRMS/MS	2891949	2012/06/23	2012/06/27	Kay Shaw

Maxxam ID NX2177 **Collected** 2012/06/19
Sample ID RUN 1-IN-C1-M23 **Shipped**
Matrix Stack Sampling Train **Received** 2012/06/23

Test Description	Instrumentation	Batch	Extracted	Analyzed	Analyst
2,3,7,8-TCDF Confirmation (M23)	HRMS/MS	2892629	N/A	2012/06/26	Angel Guerrero
Dioxins/Furans in Air (Method 23)	HRMS/MS	2891949	2012/06/23	2012/06/27	Kay Shaw

Maxxam ID NX2178 **Collected** 2012/06/19
Sample ID RUN 2-IN-C1-M23 **Shipped**
Matrix Stack Sampling Train **Received** 2012/06/23

Test Description	Instrumentation	Batch	Extracted	Analyzed	Analyst
2,3,7,8-TCDF Confirmation (M23)	HRMS/MS	2892629	N/A	2012/06/26	Angel Guerrero
Dioxins/Furans in Air (Method 23)	HRMS/MS	2891949	2012/06/23	2012/06/27	Kay Shaw

Maxxam ID NX2179 **Collected** 2012/06/19
Sample ID RUN 3-IN-C1-M23 **Shipped**
Matrix Stack Sampling Train **Received** 2012/06/23

Test Description	Instrumentation	Batch	Extracted	Analyzed	Analyst
2,3,7,8-TCDF Confirmation (M23)	HRMS/MS	2892629	N/A	2012/06/26	Angel Guerrero
Dioxins/Furans in Air (Method 23)	HRMS/MS	2891949	2012/06/23	2012/06/27	Kay Shaw

Maxxam ID NX2214 **Collected** 2012/06/19
Sample ID RUN 1-OUT-C1-M23 **Shipped**
Matrix Stack Sampling Train **Received** 2012/06/23

Test Description	Instrumentation	Batch	Extracted	Analyzed	Analyst
2,3,7,8-TCDF Confirmation (M23)	HRMS/MS	2892629	N/A	2012/06/26	Angel Guerrero
Dioxins/Furans in Air (Method 23)	HRMS/MS	2891949	2012/06/23	2012/06/27	Kay Shaw

Maxxam ID NX2215 **Collected** 2012/06/19
Sample ID RUN 2-OUT-C1-M23 **Shipped**
Matrix Stack Sampling Train **Received** 2012/06/23

Test Description	Instrumentation	Batch	Extracted	Analyzed	Analyst
2,3,7,8-TCDF Confirmation (M23)	HRMS/MS	2892629	N/A	2012/06/26	Angel Guerrero
Dioxins/Furans in Air (Method 23)	HRMS/MS	2891949	2012/06/23	2012/06/27	Kay Shaw

Maxxam Analytics International Corporation o/a Maxxam Analytics 6740 Campobello Road, Mississauga, Ontario, L5N 2L8 Tel: (905) 817-5700 Toll-Free: 800-563-6266 Fax: (905) 817-5777 www.maxxam.ca

Maxxam Job #: B293726
Report Date: 2012/06/28

O'Brien & Gere Engineers Inc
Client Project #: 49064-001.001
Site Location: GENERAL DYNAMICS-JOPLIN,MO

Test Summary

Maxxam ID NX2216 **Collected** 2012/06/19
Sample ID RUN 3-OUT-C1-M23 **Shipped**
Matrix Stack Sampling Train **Received** 2012/06/23

Test Description	Instrumentation	Batch	Extracted	Analyzed	Analyst
2,3,7,8-TCDF Confirmation (M23)	HRMS/MS	2892629	N/A	2012/06/26	Angel Guerrero
Dioxins/Furans in Air (Method 23)	HRMS/MS	2891949	2012/06/23	2012/06/27	Kay Shaw

Maxxam ID NX2217 **Collected** 2012/06/20
Sample ID RUN 1-IN-C2-M23 **Shipped**
Matrix Stack Sampling Train **Received** 2012/06/23

Test Description	Instrumentation	Batch	Extracted	Analyzed	Analyst
2,3,7,8-TCDF Confirmation (M23)	HRMS/MS	2892629	N/A	2012/06/26	Angel Guerrero
Dioxins/Furans in Air (Method 23)	HRMS/MS	2891949	2012/06/23	2012/06/27	Kay Shaw

Maxxam ID NX2218 **Collected** 2012/06/20
Sample ID RUN 2-IN-C2-M23 **Shipped**
Matrix Stack Sampling Train **Received** 2012/06/23

Test Description	Instrumentation	Batch	Extracted	Analyzed	Analyst
2,3,7,8-TCDF Confirmation (M23)	HRMS/MS	2892629	N/A	2012/06/26	Angel Guerrero
Dioxins/Furans in Air (Method 23)	HRMS/MS	2891949	2012/06/23	2012/06/28	Kay Shaw

Maxxam ID NX2219 **Collected** 2012/06/20
Sample ID RUN 3-IN-C2-M23 **Shipped**
Matrix Stack Sampling Train **Received** 2012/06/23

Test Description	Instrumentation	Batch	Extracted	Analyzed	Analyst
2,3,7,8-TCDF Confirmation (M23)	HRMS/MS	2892629	N/A	2012/06/26	Angel Guerrero
Dioxins/Furans in Air (Method 23)	HRMS/MS	2891949	2012/06/23	2012/06/28	Kay Shaw

Maxxam ID NX2220 **Collected** 2012/06/20
Sample ID RUN 1-OUT-C2-M23 **Shipped**
Matrix Stack Sampling Train **Received** 2012/06/23

Test Description	Instrumentation	Batch	Extracted	Analyzed	Analyst
2,3,7,8-TCDF Confirmation (M23)	HRMS/MS	2892629	N/A	2012/06/26	Angel Guerrero
Dioxins/Furans in Air (Method 23)	HRMS/MS	2891949	2012/06/23	2012/06/28	Kay Shaw

Maxxam ID NX2221 **Collected** 2012/06/20
Sample ID RUN 2-OUT-C2-M23 **Shipped**
Matrix Stack Sampling Train **Received** 2012/06/23

Test Description	Instrumentation	Batch	Extracted	Analyzed	Analyst
2,3,7,8-TCDF Confirmation (M23)	HRMS/MS	2892629	N/A	2012/06/26	Angel Guerrero
Dioxins/Furans in Air (Method 23)	HRMS/MS	2891949	2012/06/23	2012/06/28	Kay Shaw

Maxxam Analytics International Corporation o/a Maxxam Analytics 6740 Campobello Road, Mississauga, Ontario, L5N 2L8 Tel: (905) 817-5700 Toll-Free: 800-563-6266 Fax: (905) 817-5777 www.maxxam.ca

Maxxam

Success Through Science®

Maxxam Job #: B293726
Report Date: 2012/06/28

O'Brien & Gere Engineers Inc
Client Project #: 49064-001.001
Site Location: GENERAL DYNAMICS-JOPLIN,MO

Test Summary

Maxxam ID NX2222
Sample ID RUN 3-OUT-C2-M23
Matrix Stack Sampling Train

Collected 2012/06/20
Shipped
Received 2012/06/23

Test Description	Instrumentation	Batch	Extracted	Analyzed	Analyst
2,3,7,8-TCDF Confirmation (M23)	HRMS/MS	2892629	N/A	2012/06/26	Angel Guerrero
Dioxins/Furans in Air (Method 23)	HRMS/MS	2891949	2012/06/23	2012/06/28	Kay Shaw

Maxxam Analytics International Corporation o/a Maxxam Analytics 6740 Campobello Road, Mississauga, Ontario, L5N 2L8 Tel: (905) 817-5700 Toll-Free: 800-563-6266 Fax: (905) 817-5777 www.maxxam.ca

Maxxam Job #: B293726
Report Date: 2012/06/28

O'Brien & Gere Engineers Inc
Client Project #: 49064-001.001
Site Location: GENERAL DYNAMICS-JOPLIN,MO

GENERAL COMMENTS

Results relate only to the items tested.

Maxxam Analytics International Corporation o/a Maxxam Analytics 6740 Campobello Road, Mississauga, Ontario, L5N 2L8 Tel: (905) 817-5700 Toll-Free: 800-563-6266 Fax: (905) 817-5777 www.maxxam.ca

Maxxam

Success Through Science®

O'Brien & Gere Engineers Inc
Attention: Jeff Gorman
Client Project #: 49064-001.001
P.O. #:
Site Location: GENERAL DYNAMICS-JOPLIN,MO

Quality Assurance Report

Maxxam Job Number: GB293726

QA/QC Batch Num Init	QC Type	Parameter	Date Analyzed yyyy/mm/dd	Value	%Recovery	Units	QC Limits
2891949 KKS	Spiked Blank	C13-1234678 HeptaCDD	2012/06/27		90	%	25 - 130
	Spiked Blank DUP	C13-1234678 HeptaCDD	2012/06/27		85	%	25 - 130
	Spiked Blank	C13-1234678 HeptaCDF	2012/06/27		96	%	25 - 130
	Spiked Blank DUP	C13-1234678 HeptaCDF	2012/06/27		91	%	25 - 130
	Spiked Blank	C13-123678 HexaCDD	2012/06/27		81	%	40 - 130
	Spiked Blank DUP	C13-123678 HexaCDD	2012/06/27		76	%	40 - 130
	Spiked Blank	C13-123678 HexaCDF	2012/06/27		80	%	40 - 130
	Spiked Blank DUP	C13-123678 HexaCDF	2012/06/27		74	%	40 - 130
	Spiked Blank	C13-12378 PentaCDD	2012/06/27		100	%	40 - 130
	Spiked Blank DUP	C13-12378 PentaCDD	2012/06/27		97	%	40 - 130
	Spiked Blank	C13-12378 PentaCDF	2012/06/27		86	%	40 - 130
	Spiked Blank DUP	C13-12378 PentaCDF	2012/06/27		84	%	40 - 130
	Spiked Blank	C13-123789 HexaCDF	2012/06/27		92	%	40 - 130
	Spiked Blank DUP	C13-123789 HexaCDF	2012/06/27		88	%	40 - 130
	Spiked Blank	C13-2378 TetraCDD	2012/06/27		81	%	40 - 130
	Spiked Blank DUP	C13-2378 TetraCDD	2012/06/27		81	%	40 - 130
	Spiked Blank	C13-2378 TetraCDF	2012/06/27		74	%	40 - 130
	Spiked Blank DUP	C13-2378 TetraCDF	2012/06/27		72	%	40 - 130
	Spiked Blank	C13-Octachlorodibenzo-p-Dioxin	2012/06/27		111	%	25 - 130
	Spiked Blank DUP	C13-Octachlorodibenzo-p-Dioxin	2012/06/27		103	%	25 - 130
	Spiked Blank	2,3,7,8-Tetra CDD	2012/06/27		99	%	80 - 140
	Spiked Blank DUP	2,3,7,8-Tetra CDD	2012/06/27		98	%	80 - 14[illegible]
	RPD	2,3,7,8-Tetra CDD	2012/06/27	NC		%	2[illegible]
	Spiked Blank	1,2,3,7,8-Penta CDD	2012/06/27		101	%	80 - 140
	Spiked Blank DUP	1,2,3,7,8-Penta CDD	2012/06/27		101	%	80 - 140
	RPD	1,2,3,7,8-Penta CDD	2012/06/27	0		%	20
	Spiked Blank	1,2,3,4,7,8-Hexa CDD	2012/06/27		106	%	80 - 140
	Spiked Blank DUP	1,2,3,4,7,8-Hexa CDD	2012/06/27		105	%	80 - 140
	RPD	1,2,3,4,7,8-Hexa CDD	2012/06/27	0.9		%	20
	Spiked Blank	1,2,3,6,7,8-Hexa CDD	2012/06/27		104	%	80 - 140
	Spiked Blank DUP	1,2,3,6,7,8-Hexa CDD	2012/06/27		102	%	80 - 140
	RPD	1,2,3,6,7,8-Hexa CDD	2012/06/27	1.9		%	20
	Spiked Blank	1,2,3,7,8,9-Hexa CDD	2012/06/27		113	%	80 - 140
	Spiked Blank DUP	1,2,3,7,8,9-Hexa CDD	2012/06/27		116	%	80 - 140
	RPD	1,2,3,7,8,9-Hexa CDD	2012/06/27	2.6		%	20
	Spiked Blank	1,2,3,4,6,7,8-Hepta CDD	2012/06/27		100	%	80 - 140
	Spiked Blank DUP	1,2,3,4,6,7,8-Hepta CDD	2012/06/27		99	%	80 - 140
	RPD	1,2,3,4,6,7,8-Hepta CDD	2012/06/27	NC		%	20
	Spiked Blank	1,2,3,4,6,7,8,9-Octa CDD	2012/06/27		101	%	80 - 140
	Spiked Blank DUP	1,2,3,4,6,7,8,9-Octa CDD	2012/06/27		101	%	80 - 140
	RPD	1,2,3,4,6,7,8,9-Octa CDD	2012/06/27	NC		%	20
	Spiked Blank	2,3,7,8-Tetra CDF	2012/06/27		101	%	80 - 140
	Spiked Blank DUP	2,3,7,8-Tetra CDF	2012/06/27		101	%	80 - 140
	RPD	2,3,7,8-Tetra CDF	2012/06/27	0		%	20
	Spiked Blank	1,2,3,7,8-Penta CDF	2012/06/27		102	%	80 - 140
	Spiked Blank DUP	1,2,3,7,8-Penta CDF	2012/06/27		102	%	80 - 140
	RPD	1,2,3,7,8-Penta CDF	2012/06/27	0		%	20
	Spiked Blank	2,3,4,7,8-Penta CDF	2012/06/27		100	%	80 - 140
	Spiked Blank DUP	2,3,4,7,8-Penta CDF	2012/06/27		100	%	80 - 140
	RPD	2,3,4,7,8-Penta CDF	2012/06/27	NC		%	20
	Spiked Blank	1,2,3,4,7,8-Hexa CDF	2012/06/27		104	%	80 - 140
	Spiked Blank DUP	1,2,3,4,7,8-Hexa CDF	2012/06/27		105	%	80 - 140
	RPD	1,2,3,4,7,8-Hexa CDF	2012/06/27	1		%	20
	Spiked Blank	1,2,3,6,7,8-Hexa CDF	2012/06/27		106	%	80 - 140
	Spiked Blank DUP	1,2,3,6,7,8-Hexa CDF	2012/06/27		106	%	80 - 140

Maxxam Analytics International Corporation o/a Maxxam Analytics 6740 Campobello Road, Mississauga, Ontario, L5N 2L8 Tel: (905) 817-5700 Toll-Free: 800-563-6266 Fax (905) 817-5777 www.maxxam.ca

Maxxam

Success Through Science®

O'Brien & Gere Engineers Inc
Attention: Jeff Gorman
Client Project #: 49064-001.001
P.O. #:
Site Location: GENERAL DYNAMICS-JOPLIN,MO

Quality Assurance Report (Continued)

Maxxam Job Number: GB293726

QA/QC Batch Num Init	QC Type	Parameter	Date Analyzed yyyy/mm/dd	Value	%Recovery	Units	QC Limits
2891949 KKS	RPD	1,2,3,6,7,8-Hexa CDF	2012/06/27	0		%	20
	Spiked Blank	2,3,4,6,7,8-Hexa CDF	2012/06/27		107	%	80 - 140
	Spiked Blank DUP	2,3,4,6,7,8-Hexa CDF	2012/06/27		107	%	80 - 140
	RPD	2,3,4,6,7,8-Hexa CDF	2012/06/27	0		%	20
	Spiked Blank	1,2,3,7,8,9-Hexa CDF	2012/06/27		111	%	80 - 140
	Spiked Blank DUP	1,2,3,7,8,9-Hexa CDF	2012/06/27		112	%	80 - 140
	RPD	1,2,3,7,8,9-Hexa CDF	2012/06/27	0.9		%	20
	Spiked Blank	1,2,3,4,6,7,8-Hepta CDF	2012/06/27		101	%	80 - 140
	Spiked Blank DUP	1,2,3,4,6,7,8-Hepta CDF	2012/06/27		99	%	80 - 140
	RPD	1,2,3,4,6,7,8-Hepta CDF	2012/06/27	NC		%	20
	Spiked Blank	1,2,3,4,7,8,9-Hepta CDF	2012/06/27		100	%	80 - 140
	Spiked Blank DUP	1,2,3,4,7,8,9-Hepta CDF	2012/06/27		100	%	80 - 140
	RPD	1,2,3,4,7,8,9-Hepta CDF	2012/06/27	NC		%	20
	Spiked Blank	1,2,3,4,6,7,8,9-Octa CDF	2012/06/27		98	%	80 - 140
	Spiked Blank DUP	1,2,3,4,6,7,8,9-Octa CDF	2012/06/27		99	%	80 - 140
	RPD	1,2,3,4,6,7,8,9-Octa CDF	2012/06/27	NC		%	20
	Method Blank	C13-1234678 HeptaCDD	2012/06/27		84	%	25 - 130
		C13-1234678 HeptaCDF	2012/06/27		92	%	25 - 130
		C13-123678 HexaCDD	2012/06/27		77	%	40 - 130
		C13-123678 HexaCDF	2012/06/27		75	%	40 - 130
		C13-12378 PentaCDD	2012/06/27		92	%	40 - 130
		C13-12378 PentaCDF	2012/06/27		82	%	40 - 130
		C13-123789 HexaCDF	2012/06/27		90	%	40 - 130
		C13-2378 TetraCDD	2012/06/27		78	%	40 - 130
		C13-2378 TetraCDF	2012/06/27		70	%	40 - 130
		C13-Octachlorodibenzo-p-Dioxin	2012/06/27		100	%	25 - 130
		2,3,7,8-Tetra CDD	2012/06/27	<1.1, EDL=1.1		pg	
		1,2,3,7,8-Penta CDD	2012/06/27	<1.2, EDL=1.2		pg	
		1,2,3,4,7,8-Hexa CDD	2012/06/27	<1.2, EDL=1.2		pg	
		1,2,3,6,7,8-Hexa CDD	2012/06/27	<1.2, EDL=1.2		pg	
		1,2,3,7,8,9-Hexa CDD	2012/06/27	<1.1, EDL=1.1		pg	
		1,2,3,4,6,7,8-Hepta CDD	2012/06/27	<1.2, EDL=1.2		pg	
		1,2,3,4,6,7,8,9-Octa CDD	2012/06/27	<2.2, EDL=2.2		pg	
		Total Tetra CDD	2012/06/27	<1.1, EDL=1.1		pg	
		Total Penta CDD	2012/06/27	<1.2, EDL=1.2		pg	
		Total Hexa CDD	2012/06/27	<1.2, EDL=1.2		pg	
		Total Hepta CDD	2012/06/27	<1.2, EDL=1.2		pg	
		2,3,7,8-Tetra CDF	2012/06/27	<1.1, EDL=1.1		pg	
		1,2,3,7,8-Penta CDF	2012/06/27	<1.2, EDL=1.2		pg	
		2,3,4,7,8-Penta CDF	2012/06/27	<1.2, EDL=1.2		pg	
		1,2,3,4,7,8-Hexa CDF	2012/06/27	<1.1, EDL=1.1		pg	
		1,2,3,6,7,8-Hexa CDF	2012/06/27	<1.0, EDL=1.0		pg	
		2,3,4,6,7,8-Hexa CDF	2012/06/27	<1.3, EDL=1.3		pg	
		1,2,3,7,8,9-Hexa CDF	2012/06/27	<1.4, EDL=1.4		pg	
		1,2,3,4,6,7,8-Hepta CDF	2012/06/27	<1.0, EDL=1.0		pg	
		1,2,3,4,7,8,9-Hepta CDF	2012/06/27	<1.2, EDL=1.2		pg	
		1,2,3,4,6,7,8,9-Octa CDF	2012/06/27	<2.1, EDL=2.1		pg	
		Total Tetra CDF	2012/06/27	<1.1, EDL=1.1		pg	
		Total Penta CDF	2012/06/27	<1.2, EDL=1.2		pg	
		Total Hexa CDF	2012/06/27	<1.2, EDL=1.2		pg	
		Total Hepta CDF	2012/06/27	<1.1, EDL=1.1		pg	
2892629 AGU	Method Blank	Confirmation C13-2378 TetraCDF	2012/06/26		70	%	40 - 135
		Confirmation 2,3,7,8-Tetra CDF	2012/06/26	<2.6, EDL=2.6		pg	

Duplicate: Paired analysis of a separate portion of the same sample. Used to evaluate the variance in the measurement.
Spiked Blank: A blank matrix to which a known amount of the analyte has been added. Used to evaluate analyte recovery.

Maxxam Analytics International Corporation o/a Maxxam Analytics 6740 Campobello Road, Mississauga, Ontario, L5N 2L8 Tel. (905) 817-5700 Toll-Free: 800-563-6266 Fax: (905) 817-5777 www.maxxam.ca

O'Brien & Gere Engineers Inc
Attention: Jeff Gorman
Client Project #: 49064-001.001
P.O. #:
Site Location: GENERAL DYNAMICS-JOPLIN,MO

Quality Assurance Report (Continued)

Maxxam Job Number: GB293726

Method Blank: A blank matrix containing all reagents used in the analytical procedure. Used to identify laboratory contamination.
Surrogate: A pure or isotopically labeled compound whose behavior mirrors the analytes of interest. Used to evaluate extraction efficiency.
NC (RPD): The RPD was not calculated. The level of analyte detected in the parent sample and its duplicate was not sufficiently significant to permit a reliable calculation.

Maxxam Analytics International Corporation o/a Maxxam Analytics 6740 Campobello Road, Mississauga, Ontario, L5N 2L8 Tel: (905) 817-5700 Toll-Free: 800-563-6266 Fax: (905) 817-5777 www.maxxam.ca

Validation Signature Page

Maxxam Job #: B293726

The analytical data and all QC contained in this report were reviewed and validated by the following individual(s).

Kay Shaw

Kay Shaw, C. Chem, Scientific Specialist, HRMS Services

Owen Cosby, BSc.C.Chem, Supervisor, HRMS Services

Maxxam has procedures in place to guard against improper use of the electronic signature and have the required "signatories", as per section 5.10.2 of ISO/IEC 17025:2005(E), signing the reports. For Service Group specific validation please refer to the Validation Signature Page.

Maxxam Analytics International Corporation o/a Maxxam Analytics 6740 Campobello Road, Mississauga, Ontario, L5N 2L8 Tel: (905) 817-5700 Toll-Free: 800-563-6266 Fax: (905) 817-5777 www.maxxam.ca

VOST

Maxxam

Success Through Science®

Your Project #: 49064-001.001
Site Location: GENERAL DYNAMICS-JOPLIN, MO
Your C.O.C. #: N/A

Attention: Jeff Gorman
O'Brien & Gere Engineers Inc
7600 Morgan Rd.
Liverpool, NY
USA 13090

Report Date: 2012/05/14

CERTIFICATE OF ANALYSIS

MAXXAM JOB #: B261977
Received: 2012/05/01, 18:00

Sample Matrix: AIR
Samples Received: 11

Analyses	Quantity	Date Extracted	Date Analyzed	Laboratory Method	Method Reference
VOST Analysis (5041mod)	6	N/A	2012/05/03	BRL SOP-00302	EPA 5041mod(M0030)
VOST Analysis (5041mod)	5	N/A	2012/05/04	BRL SOP-00302	EPA 5041mod(M0030)

Sample Matrix: Water
Samples Received: 4

Analyses	Quantity	Date Extracted	Date Analyzed	Laboratory Method	Method Reference
VOST Condensate (8260Cmod)	4	N/A	2012/05/07	CAM SOP-00226	EPA 8260Cmod(M0030)

* RPDs calculated using raw data. The rounding of final results may result in the apparent difference.

Encryption Key

Please direct all questions regarding this Certificate of Analysis to your Project Manager.

MIKE CHALLIS, CET, B.Sc, C.Chem, Customer Service Manager, US Air Toxics
Email: MChallis@maxxam.ca
Phone# (905) 817-5790

==========

Maxxam has procedures in place to guard against improper use of the electronic signature and have the required "signatories", as per section 5.10.2 of ISO/IEC 17025:2005(E), signing the reports. For Service Group specific validation please refer to the Validation Signature Page.

Total cover pages: 1

Maxxam Analytics International Corporation o/a Maxxam Analytics 6740 Campobello Road, Mississauga, Ontario, L5N 2L8 Tel: (905) 817-5700 Toll-Free: 800-563-6266 Fax: (905) 817-5777 www.maxxam.ca

Maxxam

Success Through Science®

Maxxam Job #: B261977
Report Date: 2012/05/14

O'Brien & Gere Engineers Inc
Client Project #: 49064-001.001
Site Location: GENERAL DYNAMICS-JOPLIN, MO

VOLATILE ORGANICS BY GC/MS (AIR)

Maxxam ID		NH5148	NH5149	NH5150		NH5151		
Sampling Date		2012/04/26	2012/04/26	2012/04/26		2012/04/26		
COC Number		N/A	N/A	N/A		N/A		
	Units	**FBLANK-BLDG 3-M0031**	**TBLANK-BLDG 3-M0031**	**R1-A-BLDG 3-M0031**	**QC Batch**	**R1-B-BLDG 3-M0031**	**RDL**	**QC Batch**
Dichlorodifluoromethane (FREON 12)	ug	<0.020	<0.020	0.073	2838160	0.062	0.020	2839269
Chloromethane	ug	<0.015	<0.015	1.07	2838160	2.16	0.015	2839269
Vinyl Chloride	ug	<0.013	<0.013	0.132	2838160	0.116	0.013	2839269
Bromomethane	ug	0.017	<0.015	0.047	2838160	0.042	0.015	2839269
Chloroethane	ug	<0.0090	<0.0090	0.0288	2838160	0.0172	0.0090	2839269
Trichlorofluoromethane (FREON 11)	ug	<0.010	<0.010	0.072	2838160	0.063	0.010	2839269
Acetone (2-Propanone)	ug	<0.045	0.285	0.374	2838160	0.146	0.045	2839269
1,1-Dichloroethylene	ug	<0.011	<0.011	0.060	2838160	0.059	0.011	2839269
Iodomethane	ug	<0.015	<0.015	0.017	2838160	0.017	0.015	2839269
Carbon Disulfide	ug	<0.026	<0.026	0.182	2838160	0.169	0.026	2839269
Methylene Chloride(Dichloromethane)	ug	<0.019	<0.019	0.294	2838160	0.266	0.019	2839269
1,1-Dichloroethane	ug	<0.012	<0.012	0.032	2838160	0.029	0.012	2839269
trans-1,2-Dichloroethylene	ug	<0.010	<0.010	<0.010	2838160	<0.010	0.010	2839269
cis-1,2-Dichloroethylene	ug	<0.010	<0.010	<0.010	2838160	<0.010	0.010	2839269
Chloroform	ug	<0.011	<0.011	2.80	2838160	2.82	0.011	2839269
1,2-Dichloroethane	ug	<0.0070	<0.0070	<0.0070	2838160	<0.0070	0.0070	2839269
Methyl Ethyl Ketone (2-Butanone)	ug	<0.036	<0.036	0.062	2838160	0.038	0.036	2839269
1,1,1-Trichloroethane	ug	<0.014	<0.014	0.023	2838160	0.029	0.014	2839269
Carbon Tetrachloride	ug	<0.016	<0.016	0.960	2838160	1.77	0.016	2839269
Benzene	ug	<0.0090	<0.0090	1.31	2838160	0.708	0.0090	2839269
1,1,2-Trichloroethane	ug	<0.016	<0.016	<0.016	2838160	<0.016	0.016	2839269
1,2-Dichloropropane	ug	<0.011	<0.011	0.042	2838160	0.038	0.011	2839269
Trichloroethylene	ug	<0.011	<0.011	0.029	2838160	0.032	0.011	2839269
Dibromomethane	ug	<0.010	<0.010	<0.010	2838160	<0.010	0.010	2839269
Bromodichloromethane	ug	<0.011	<0.011	0.222	2838160	0.174	0.011	2839269
cis-1,3-Dichloropropene	ug	<0.010	<0.010	0.031	2838160	0.038	0.010	2839269
trans-1,3-Dichloropropene	ug	<0.0070	<0.0070	0.0317	2838160	0.0316	0.0070	2839269
Dibromochloromethane	ug	<0.0090	<0.0090	0.0171	2838160	0.0130	0.0090	2839269
Methyl Isobutyl Ketone	ug	<0.019	<0.019	0.041	2838160	0.055	0.019	2839269
Methyl Butyl Ketone (2-Hexanone)	ug	<0.031	<0.031	<0.031	2838160	<0.031	0.031	2839269
Toluene	ug	<0.014	0.034	0.592	2838160	0.298	0.014	2839269
Ethylene Dibromide	ug	<0.010	<0.010	<0.010	2838160	<0.010	0.010	2839269

N/A = Not Applicable
RDL = Reportable Detection Limit
QC Batch = Quality Control Batch

Maxxam Analytics International Corporation o/a Maxxam Analytics 6740 Campobello Road, Mississauga, Ontario, L5N 2L8 Tel: (905) 817-5700 Toll-Free: 800-563-6266 Fax: (905) 817-5777 www.maxxam.ca

Maxxam Job #: B261977
Report Date: 2012/05/14

O'Brien & Gere Engineers Inc
Client Project #: 49064-001.001
Site Location: GENERAL DYNAMICS-JOPLIN, MO

VOLATILE ORGANICS BY GC/MS (AIR)

Maxxam ID		NH5148	NH5149	NH5150		NH5151		
Sampling Date		2012/04/26	2012/04/26	2012/04/26		2012/04/26		
COC Number		N/A	N/A	N/A		N/A		
	Units	**FBLANK-BLDG 3-M0031**	**TBLANK-BLDG 3-M0031**	**R1-A-BLDG 3-M0031**	**QC Batch**	**R1-B-BLDG 3-M0031**	**RDL**	**QC Batch**
Tetrachloroethylene	ug	<0.018	<0.018	0.032	2838160	0.054	0.018	2839269
Chlorobenzene	ug	<0.011	<0.011	0.091	2838160	0.069	0.011	2839269
1,1,1,2-Tetrachloroethane	ug	<0.010	<0.010	<0.010	2838160	<0.010	0.010	2839269
Ethylbenzene	ug	<0.014	<0.014	0.134	2838160	0.133	0.014	2839269
m / p-Xylene	ug	<0.015	<0.015	0.413	2838160	0.362	0.015	2839269
Styrene	ug	<0.012	<0.012	<0.012	2838160	<0.012	0.012	2839269
o-Xylene	ug	<0.015	<0.015	0.193	2838160	0.206	0.015	2839269
Bromoform	ug	<0.014	<0.014	<0.014	2838160	<0.014	0.014	2839269
1,1,2,2-Tetrachloroethane	ug	<0.014	<0.014	<0.014	2838160	<0.014	0.014	2839269
1,2,3-Trichloropropane	ug	<0.015	<0.015	<0.015	2838160	<0.015	0.015	2839269
1,3-Dichlorobenzene	ug	<0.020	<0.020	<0.020	2838160	<0.020	0.020	2839269
1,4-Dichlorobenzene	ug	<0.020	<0.020	0.031	2838160	<0.020	0.020	2839269
1,2-Dichlorobenzene	ug	<0.020	<0.020	0.023	2838160	0.024	0.020	2839269
Surrogate Recovery (%)								
Bromofluorobenzene	%	99	100	98	2838160	98	N/A	2839269
D10-Ethylbenzene (FS)	%	126	98	108	2838160	115	N/A	2839269
D4-1,2-Dichloroethane	%	110	111	110	2838160	107	N/A	2839269
D8-Toluene	%	103	99	96	2838160	98	N/A	2839269

N/A = Not Applicable
RDL = Reportable Detection Limit
QC Batch = Quality Control Batch

Maxxam Analytics International Corporation o/a Maxxam Analytics 6740 Campobello Road, Mississauga, Ontario, L5N 2L8 Tel: (905) 817-5700 Toll-Free: 800-563-6266 Fax (905) 817-5777 www.maxxam.ca

Maxxam Job #: B261977
Report Date: 2012/05/14

O'Brien & Gere Engineers Inc
Client Project #: 49064-001.001
Site Location: GENERAL DYNAMICS-JOPLIN, MO

VOLATILE ORGANICS BY GC/MS (AIR)

Maxxam ID		NH5152		NH5153		NH5154	NH5155		
Sampling Date		2012/04/26		2012/04/26		2012/04/26	2012/04/26		
COC Number		N/A		N/A		N/A	N/A		
	Units	R1-C-BLDG 3-M0031	QC Batch	R2-A-BLDG 3-M0031	QC Batch	R2-B-BLDG 3-M0031	R2-C-BLDG 3-M0031	RDL	QC Batch
Dichlorodifluoromethane (FREON 12)	ug	<0.020	2839269	0.045	2838160	0.044	0.041	0.020	2839269
Chloromethane	ug	0.868	2839269	0.351	2838160	0.333	0.391	0.015	2839269
Vinyl Chloride	ug	0.024	2839269	0.112	2838160	0.101	0.088	0.013	2839269
Bromomethane	ug	0.017	2839269	<0.015	2838160	0.017	0.020	0.015	2839269
Chloroethane	ug	<0.0090	2839269	<0.0090	2838160	0.0163	0.0187	0.0090	2839269
Trichlorofluoromethane (FREON 11)	ug	0.041	2839269	0.073	2838160	0.069	0.075	0.010	2839269
Acetone (2-Propanone)	ug	0.135	2839269	0.165	2838160	0.134	0.334	0.045	2839269
1,1-Dichloroethylene	ug	0.047	2839269	0.072	2838160	0.063	0.069	0.011	2839269
Iodomethane	ug	<0.015	2839269	<0.015	2838160	<0.015	<0.015	0.015	2839269
Carbon Disulfide	ug	0.193	2839269	0.327	2838160	0.351	0.283	0.026	2839269
Methylene Chloride(Dichloromethane)	ug	0.185	2839269	0.168	2838160	0.144	0.168	0.019	2839269
1,1-Dichloroethane	ug	0.028	2839269	0.015	2838160	0.017	0.016	0.012	2839269
trans-1,2-Dichloroethylene	ug	<0.010	2839269	<0.010	2838160	<0.010	<0.010	0.010	2839269
cis-1,2-Dichloroethylene	ug	<0.010	2839269	<0.010	2838160	<0.010	<0.010	0.010	2839269
Chloroform	ug	2.89	2839269	2.37	2838160	3.00	3.19	0.011	2839269
1,2-Dichloroethane	ug	<0.0070	2839269	<0.0070	2838160	<0.0070	<0.0070	0.0070	2839269
Methyl Ethyl Ketone (2-Butanone)	ug	0.038	2839269	<0.036	2838160	0.036	0.085	0.036	2839269
1,1,1-Trichloroethane	ug	0.027	2839269	<0.014	2838160	<0.014	<0.014	0.014	2839269
Carbon Tetrachloride	ug	1.00	2839269	1.08	2838160	1.02	1.10	0.016	2839269
Benzene	ug	1.14	2839269	0.997	2838160	1.24	1.49	0.0090	2839269
1,1,2-Trichloroethane	ug	<0.016	2839269	<0.016	2838160	<0.016	<0.016	0.016	2839269
1,2-Dichloropropane	ug	0.034	2839269	0.022	2838160	0.018	0.018	0.011	2839269
Trichloroethylene	ug	0.031	2839269	0.052	2838160	0.048	0.047	0.011	2839269
Dibromomethane	ug	<0.010	2839269	<0.010	2838160	<0.010	<0.010	0.010	2839269
Bromodichloromethane	ug	0.303	2839269	0.110	2838160	0.125	0.124	0.011	2839269
cis-1,3-Dichloropropene	ug	0.036	2839269	0.014	2838160	0.013	0.018	0.010	2839269
trans-1,3-Dichloropropene	ug	0.0309	2839269	0.0133	2838160	0.0131	0.0192	0.0070	2839269
Dibromochloromethane	ug	0.0296	2839269	<0.0090	2838160	<0.0090	<0.0090	0.0090	2839269
Methyl Isobutyl Ketone	ug	0.069	2839269	0.050	2838160	0.050	0.085	0.019	2839269
Methyl Butyl Ketone (2-Hexanone)	ug	<0.031	2839269	<0.031	2838160	<0.031	<0.031	0.031	2839269
Toluene	ug	0.507	2839269	0.364	2838160	0.447	0.575	0.014	2839269
Ethylene Dibromide	ug	<0.010	2839269	<0.010	2838160	<0.010	<0.010	0.010	2839269

N/A = Not Applicable
RDL = Reportable Detection Limit
QC Batch = Quality Control Batch

Maxxam Analytics International Corporation o/a Maxxam Analytics 6740 Campobello Road, Mississauga, Ontario, L5N 2L8 Tel: (905) 817-5700 Toll-Free: 800-563-6266 Fax: (905) 817-5777 www.maxxam.ca

Maxxam Job #: B261977
Report Date: 2012/05/14

O'Brien & Gere Engineers Inc
Client Project #: 49064-001.001
Site Location: GENERAL DYNAMICS-JOPLIN, MO

VOLATILE ORGANICS BY GC/MS (AIR)

Maxxam ID		NH5152		NH5153		NH5154	NH5155		
Sampling Date		2012/04/26		2012/04/26		2012/04/26	2012/04/26		
COC Number		N/A		N/A		N/A	N/A		
	Units	**R1-C-BLDG 3-M0031**	**QC Batch**	**R2-A-BLDG 3-M0031**	**QC Batch**	**R2-B-BLDG 3-M0031**	**R2-C-BLDG 3-M0031**	**RDL**	**QC Batch**
Tetrachloroethylene	ug	0.051	2839269	0.070	2838160	0.065	0.064	0.018	2839269
Chlorobenzene	ug	0.067	2839269	0.053	2838160	0.062	0.089	0.011	2839269
1,1,1,2-Tetrachloroethane	ug	<0.010	2839269	<0.010	2838160	<0.010	<0.010	0.010	2839269
Ethylbenzene	ug	0.164	2839269	0.088	2838160	0.103	0.154	0.014	2839269
m / p-Xylene	ug	0.477	2839269	0.279	2838160	0.295	0.382	0.015	2839269
Styrene	ug	<0.012	2839269	<0.012	2838160	<0.012	<0.012	0.012	2839269
o-Xylene	ug	0.246	2839269	0.125	2838160	0.135	0.192	0.015	2839269
Bromoform	ug	<0.014	2839269	<0.014	2838160	<0.014	<0.014	0.014	2839269
1,1,2,2-Tetrachloroethane	ug	<0.014	2839269	<0.014	2838160	<0.014	<0.014	0.014	2839269
1,2,3-Trichloropropane	ug	<0.015	2839269	<0.015	2838160	<0.015	<0.015	0.015	2839269
1,3-Dichlorobenzene	ug	<0.020	2839269	<0.020	2838160	<0.020	<0.020	0.020	2839269
1,4-Dichlorobenzene	ug	0.024	2839269	<0.020	2838160	<0.020	0.024	0.020	2839269
1,2-Dichlorobenzene	ug	0.025	2839269	0.029	2838160	0.037	0.062	0.020	2839269
Surrogate Recovery (%)									
Bromofluorobenzene	%	98	2839269	98	2838160	99	97	N/A	2839269
D10-Ethylbenzene (FS)	%	109	2839269	110	2838160	112	106	N/A	2839269
D4-1,2-Dichloroethane	%	106	2839269	109	2838160	111	109	N/A	2839269
D8-Toluene	%	96	2839269	98	2838160	97	95	N/A	2839269

N/A = Not Applicable
RDL = Reportable Detection Limit
QC Batch = Quality Control Batch

Maxxam Analytics International Corporation o/a Maxxam Analytics 6740 Campobello Road, Mississauga, Ontario, L5N 2L8 Tel: (905) 817-5700 Toll-Free: 800-563-6266 Fax: (905) 817-5777 www.maxxam.ca

Maxxam Job #: B261977
Report Date: 2012/05/14

O'Brien & Gere Engineers Inc
Client Project #: 49064-001.001
Site Location: GENERAL DYNAMICS-JOPLIN, MO

VOLATILE ORGANICS BY GC/MS (AIR)

Maxxam ID		NH5156		NH5157	NH5681		
Sampling Date		2012/04/26		2012/04/26	2012/04/26		
COC Number		N/A		N/A	N/A		
	Units	**R3-A-BLDG 3-M0031**	**QC Batch**	**R3-B-BLDG 3-M0031**	**R3-C-BLDG 3-M0031**	**RDL**	**QC Batch**
Dichlorodifluoromethane (FREON 12)	ug	0.051	2838160	0.045	0.041	0.020	2839269
Chloromethane	ug	0.345	2838160	0.500	0.411	0.015	2839269
Vinyl Chloride	ug	0.118	2838160	0.101	0.097	0.013	2839269
Bromomethane	ug	<0.015	2838160	0.017	0.016	0.015	2839269
Chloroethane	ug	0.0159	2838160	0.0189	0.0168	0.0090	2839269
Trichlorofluoromethane (FREON 11)	ug	0.053	2838160	0.055	0.068	0.010	2839269
Acetone (2-Propanone)	ug	0.226	2838160	0.250	0.278	0.045	2839269
1,1-Dichloroethylene	ug	0.071	2838160	0.083	0.085	0.011	2839269
Iodomethane	ug	<0.015	2838160	<0.015	<0.015	0.015	2839269
Carbon Disulfide	ug	0.227	2838160	0.244	0.199	0.026	2839269
Methylene Chloride(Dichloromethane)	ug	0.174	2838160	0.158	0.184	0.019	2839269
1,1-Dichloroethane	ug	0.016	2838160	0.018	0.024	0.012	2839269
trans-1,2-Dichloroethylene	ug	<0.010	2838160	<0.010	<0.010	0.010	2839269
cis-1,2-Dichloroethylene	ug	<0.010	2838160	<0.010	<0.010	0.010	2839269
Chloroform	ug	3.24	2838160	3.25	3.42	0.011	2839269
1,2-Dichloroethane	ug	<0.0070	2838160	<0.0070	<0.0070	0.0070	2839269
Methyl Ethyl Ketone (2-Butanone)	ug	0.042	2838160	0.068	0.063	0.036	2839269
1,1,1-Trichloroethane	ug	<0.014	2838160	<0.014	<0.014	0.014	2839269
Carbon Tetrachloride	ug	1.27	2838160	1.17	1.21	0.016	2839269
Benzene	ug	1.44	2838160	1.38	1.11	0.0090	2839269
1,1,2-Trichloroethane	ug	<0.016	2838160	<0.016	<0.016	0.016	2839269
1,2-Dichloropropane	ug	0.016	2838160	0.018	0.018	0.011	2839269
Trichloroethylene	ug	0.050	2838160	0.049	0.052	0.011	2839269
Dibromomethane	ug	<0.010	2838160	<0.010	<0.010	0.010	2839269
Bromodichloromethane	ug	0.139	2838160	0.134	0.111	0.011	2839269
cis-1,3-Dichloropropene	ug	0.016	2838160	0.016	0.019	0.010	2839269
trans-1,3-Dichloropropene	ug	0.0127	2838160	0.0147	0.0178	0.0070	2839269
Dibromochloromethane	ug	<0.0090	2838160	<0.0090	<0.0090	0.0090	2839269
Methyl Isobutyl Ketone	ug	0.039	2838160	0.034	<0.019	0.019	2839269
Methyl Butyl Ketone (2-Hexanone)	ug	<0.031	2838160	<0.031	<0.031	0.031	2839269
Toluene	ug	0.486	2838160	0.479	0.438	0.014	2839269
Ethylene Dibromide	ug	<0.010	2838160	<0.010	<0.010	0.010	2839269

N/A = Not Applicable
RDL = Reportable Detection Limit
QC Batch = Quality Control Batch

Maxxam Analytics International Corporation o/a Maxxam Analytics 6740 Campobello Road, Mississauga, Ontario, L5N 2L8 Tel: (905) 817-5700 Toll-Free: 800-563-6266 Fax: (905) 817-5777 www.maxxam.ca

Maxxam Job #: B261977
Report Date: 2012/05/14

O'Brien & Gere Engineers Inc
Client Project #: 49064-001.001
Site Location: GENERAL DYNAMICS-JOPLIN, MO

VOLATILE ORGANICS BY GC/MS (AIR)

Maxxam ID		NH5156		NH5157	NH5681		
Sampling Date		2012/04/26		2012/04/26	2012/04/26		
COC Number		N/A		N/A	N/A		
	Units	**R3-A-BLDG 3-M0031**	**QC Batch**	**R3-B-BLDG 3-M0031**	**R3-C-BLDG 3-M0031**	**RDL**	**QC Batch**
Tetrachloroethylene	ug	0.067	2838160	0.073	0.072	0.018	2839269
Chlorobenzene	ug	0.069	2838160	0.082	0.075	0.011	2839269
1,1,1,2-Tetrachloroethane	ug	<0.010	2838160	<0.010	<0.010	0.010	2839269
Ethylbenzene	ug	0.112	2838160	0.109	0.098	0.014	2839269
m / p-Xylene	ug	0.318	2838160	0.299	0.256	0.015	2839269
Styrene	ug	<0.012	2838160	<0.012	<0.012	0.012	2839269
o-Xylene	ug	0.141	2838160	0.135	0.123	0.015	2839269
Bromoform	ug	<0.014	2838160	<0.014	<0.014	0.014	2839269
1,1,2,2-Tetrachloroethane	ug	<0.014	2838160	<0.014	<0.014	0.014	2839269
1,2,3-Trichloropropane	ug	<0.015	2838160	<0.015	<0.015	0.015	2839269
1,3-Dichlorobenzene	ug	<0.020	2838160	<0.020	<0.020	0.020	2839269
1,4-Dichlorobenzene	ug	0.021	2838160	0.020	<0.020	0.020	2839269
1,2-Dichlorobenzene	ug	0.059	2838160	0.044	0.023	0.020	2839269
Surrogate Recovery (%)							
Bromofluorobenzene	%	96	2838160	99	101	N/A	2839269
D10-Ethylbenzene (FS)	%	123	2838160	100	114	N/A	2839269
D4-1,2-Dichloroethane	%	109	2838160	107	105	N/A	2839269
D8-Toluene	%	97	2838160	97	97	N/A	2839269

N/A = Not Applicable
RDL = Reportable Detection Limit
QC Batch = Quality Control Batch

Maxxam Analytics International Corporation o/a Maxxam Analytics 6740 Campobello Road, Mississauga, Ontario, L5N 2L8 Tel: (905) 817-5700 Toll-Free: 800-563-6266 Fax: (905) 817-5777 www.maxxam.ca

Maxxam Job #: B261977
Report Date: 2012/05/14

O'Brien & Gere Engineers Inc
Client Project #: 49064-001.001
Site Location: GENERAL DYNAMICS-JOPLIN, MO

VOLATILE ORGANICS BY GC/MS (WATER)

Maxxam ID		NH5695		NH5696	NH5697	NH5705		
Sampling Date		2012/04/26		2012/04/26	2012/04/26	2012/04/26		
COC Number		N/A		N/A	N/A	N/A		
	Units	FBLANK-BLDG 3-COND-M0031	RDL	RUN 1-BLDG 3-COND-M0031	RUN 2-BLDG 3-COND-M0031	RUN 3-BLDG 3-COND-M0031	RDL	QC Batch
Dichlorodifluoromethane (FREON 12)	ug/L	<25	25	<25	<25	<25	25	2837268
Chloromethane	ug/L	<50	50	<50	<50	<50	50	2837268
Vinyl Chloride	ug/L	<10	10	<10	<10	<10	10	2837268
Bromomethane	ug/L	<75	75	<75	<75	<75	75	2837268
Chloroethane	ug/L	<25	25	<25	<25	<25	25	2837268
Trichlorofluoromethane (FREON 11)	ug/L	<50	50	<50	<50	<50	50	2837268
Acetone (2-Propanone)	ug/L	750	380	540	870	800	380	2837268
1,1-Dichloroethylene	ug/L	<13	13	<13	<13	<13	13	2837268
Iodomethane	ug/L	<0.60	0.60	<15	<15	<15	15	2837268
Carbon Disulfide	ug/L	<0.50	0.50	<13	<13	<13	13	2837268
Methylene Chloride(Dichloromethane)	ug/L	<25	25	<25	<25	<25	25	2837268
1,1-Dichloroethane	ug/L	<10	10	<10	<10	<10	10	2837268
trans-1,2-Dichloroethylene	ug/L	<25	25	<25	<25	<25	25	2837268
cis-1,2-Dichloroethylene	ug/L	<25	25	<25	<25	<25	25	2837268
Chloroform	ug/L	<10	10	<10	<10	<10	10	2837268
1,2-Dichloroethane	ug/L	<13	13	<13	<13	<13	13	2837268
Methyl Ethyl Ketone (2-Butanone)	ug/L	<250	250	<250	<250	<250	250	2837268
1,1,1-Trichloroethane	ug/L	<13	13	<13	<13	<13	13	2837268
Carbon Tetrachloride	ug/L	<13	13	<13	<13	<13	13	2837268
Benzene	ug/L	<13	13	<13	<13	<13	13	2837268
1,1,2-Trichloroethane	ug/L	<13	13	<13	<13	<13	13	2837268
1,2-Dichloropropane	ug/L	<13	13	<13	<13	<13	13	2837268
Trichloroethylene	ug/L	<13	13	<13	<13	<13	13	2837268
Dibromomethane	ug/L	<0.50	0.50	<13	<13	<13	13	2837268
Bromodichloromethane	ug/L	<10	10	<10	<10	<10	10	2837268
cis-1,3-Dichloropropene	ug/L	<10	10	<10	<10	<10	10	2837268
trans-1,3-Dichloropropene	ug/L	<15	15	<15	<15	<15	15	2837268
Dibromochloromethane	ug/L	<10	10	<10	<10	<10	10	2837268
Methyl Isobutyl Ketone	ug/L	<250	250	<250	<250	<250	250	2837268
Methyl Butyl Ketone (2-Hexanone)	ug/L	<250	250	<250	<250	<250	250	2837268
Toluene	ug/L	<13	13	<13	<13	<13	13	2837268
Ethylene Dibromide	ug/L	<13	13	<13	<13	<13	13	2837268

N/A = Not Applicable
RDL = Reportable Detection Limit
QC Batch = Quality Control Batch

Maxxam Analytics International Corporation o/a Maxxam Analytics 6740 Campobello Road, Mississauga, Ontario, L5N 2L8 Tel: (905) 817-5700 Toll-Free: 800-563-6266 Fax: (905) 817-5777 www.maxxam.ca

Maxxam Job #: B261977
Report Date: 2012/05/14

O'Brien & Gere Engineers Inc
Client Project #: 49064-001.001
Site Location: GENERAL DYNAMICS-JOPLIN, MO

VOLATILE ORGANICS BY GC/MS (WATER)

Maxxam ID		NH5695		NH5696	NH5697	NH5705		
Sampling Date		2012/04/26		2012/04/26	2012/04/26	2012/04/26		
COC Number		N/A		N/A	N/A	N/A		
	Units	**FBLANK-BLDG 3-COND-M0031**	**RDL**	**RUN 1-BLDG 3-COND-M0031**	**RUN 2-BLDG 3-COND-M0031**	**RUN 3-BLDG 3-COND-M0031**	**RDL**	**QC Batch**
Tetrachloroethylene	ug/L	<13	13	<13	<13	<13	13	2837268
Chlorobenzene	ug/L	<13	13	<13	<13	<13	13	2837268
1,1,1,2-Tetrachloroethane	ug/L	<13	13	<13	<13	<13	13	2837268
Ethylbenzene	ug/L	<13	13	<13	<13	<13	13	2837268
p+m-Xylene	ug/L	<13	13	<13	<13	<13	13	2837268
Styrene	ug/L	<13	13	<13	<13	<13	13	2837268
o-Xylene	ug/L	<13	13	<13	<13	<13	13	2837268
Bromoform	ug/L	<10	10	<10	<10	<10	10	2837268
1,1,2,2-Tetrachloroethane	ug/L	<25	25	<25	<25	<25	25	2837268
1,2,3-Trichloropropane	ug/L	<0.60	0.60	<15	<15	<15	15	2837268
1,3-Dichlorobenzene	ug/L	<13	13	<13	<13	<13	13	2837268
1,4-Dichlorobenzene	ug/L	<13	13	<13	<13	<13	13	2837268
1,2-Dichlorobenzene	ug/L	<13	13	<13	<13	<13	13	2837268
Surrogate Recovery (%)								
4-Bromofluorobenzene	%	97	N/A	96	97	97	N/A	2837268
D4-1,2-Dichloroethane	%	101	N/A	100	102	102	N/A	2837268
D8-Toluene	%	102	N/A	99	99	99	N/A	2837268

N/A = Not Applicable
RDL = Reportable Detection Limit
QC Batch = Quality Control Batch

Maxxam Analytics International Corporation o/a Maxxam Analytics 6740 Campobello Road, Mississauga, Ontario, L5N 2L8 Tel: (905) 817-5700 Toll-Free: 800-563-6266 Fax: (905) 817-5777 www.maxxam.ca

Maxxam Job #: B261977
Report Date: 2012/05/14

O'Brien & Gere Engineers Inc
Client Project #: 49064-001.001
Site Location: GENERAL DYNAMICS-JOPLIN, MO

Test Summary

Maxxam ID NH5148 **Collected** 2012/04/26
Sample ID FBLANK-BLDG 3-M0031 **Shipped**
Matrix AIR **Received** 2012/05/01

Test Description	Instrumentation	Batch	Extracted	Analyzed	Analyst
VOST Analysis (5041mod)	GC/MS	2838160	N/A	2012/05/03	YUJIE YAN

Maxxam ID NH5149 **Collected** 2012/04/26
Sample ID TBLANK-BLDG 3-M0031 **Shipped**
Matrix AIR **Received** 2012/05/01

Test Description	Instrumentation	Batch	Extracted	Analyzed	Analyst
VOST Analysis (5041mod)	GC/MS	2838160	N/A	2012/05/03	YUJIE YAN

Maxxam ID NH5150 **Collected** 2012/04/26
Sample ID R1-A-BLDG 3-M0031 **Shipped**
Matrix AIR **Received** 2012/05/01

Test Description	Instrumentation	Batch	Extracted	Analyzed	Analyst
VOST Analysis (5041mod)	GC/MS	2838160	N/A	2012/05/03	YUJIE YAN

Maxxam ID NH5151 **Collected** 2012/04/26
Sample ID R1-B-BLDG 3-M0031 **Shipped**
Matrix AIR **Received** 2012/05/01

Test Description	Instrumentation	Batch	Extracted	Analyzed	Analyst
VOST Analysis (5041mod)	GC/MS	2839269	N/A	2012/05/03	YUJIE YAN

Maxxam ID NH5152 **Collected** 2012/04/26
Sample ID R1-C-BLDG 3-M0031 **Shipped**
Matrix AIR **Received** 2012/05/01

Test Description	Instrumentation	Batch	Extracted	Analyzed	Analyst
VOST Analysis (5041mod)	GC/MS	2839269	N/A	2012/05/04	YUJIE YAN

Maxxam ID NH5153 **Collected** 2012/04/26
Sample ID R2-A-BLDG 3-M0031 **Shipped**
Matrix AIR **Received** 2012/05/01

Test Description	Instrumentation	Batch	Extracted	Analyzed	Analyst
VOST Analysis (5041mod)	GC/MS	2838160	N/A	2012/05/03	YUJIE YAN

Maxxam ID NH5154 **Collected** 2012/04/26
Sample ID R2-B-BLDG 3-M0031 **Shipped**
Matrix AIR **Received** 2012/05/01

Test Description	Instrumentation	Batch	Extracted	Analyzed	Analyst
VOST Analysis (5041mod)	GC/MS	2839269	N/A	2012/05/04	YUJIE YAN

Maxxam Analytics International Corporation o/a Maxxam Analytics 6740 Campobello Road, Mississauga, Ontario, L5N 2L8 Tel: (905) 817-5700 Toll-Free: 800-563-6266 Fax: (905) 817-5777 www.maxxam.ca

Maxxam Job #: B261977
Report Date: 2012/05/14

O'Brien & Gere Engineers Inc
Client Project #: 49064-001.001
Site Location: GENERAL DYNAMICS-JOPLIN, MO

Test Summary

Maxxam ID NH5155 **Collected** 2012/04/26
Sample ID R2-C-BLDG 3-M0031 **Shipped**
Matrix AIR **Received** 2012/05/01

Test Description	Instrumentation	Batch	Extracted	Analyzed	Analyst
VOST Analysis (5041mod)	GC/MS	2839269	N/A	2012/05/04	YUJIE YAN

Maxxam ID NH5156 **Collected** 2012/04/26
Sample ID R3-A-BLDG 3-M0031 **Shipped**
Matrix AIR **Received** 2012/05/01

Test Description	Instrumentation	Batch	Extracted	Analyzed	Analyst
VOST Analysis (5041mod)	GC/MS	2838160	N/A	2012/05/03	YUJIE YAN

Maxxam ID NH5157 **Collected** 2012/04/26
Sample ID R3-B-BLDG 3-M0031 **Shipped**
Matrix AIR **Received** 2012/05/01

Test Description	Instrumentation	Batch	Extracted	Analyzed	Analyst
VOST Analysis (5041mod)	GC/MS	2839269	N/A	2012/05/04	YUJIE YAN

Maxxam ID NH5681 **Collected** 2012/04/26
Sample ID R3-C-BLDG 3-M0031 **Shipped**
Matrix AIR **Received** 2012/05/01

Test Description	Instrumentation	Batch	Extracted	Analyzed	Analyst
VOST Analysis (5041mod)	GC/MS	2839269	N/A	2012/05/04	YUJIE YAN

Maxxam ID NH5695 **Collected** 2012/04/26
Sample ID FBLANK-BLDG 3-COND-M0031 **Shipped**
Matrix Water **Received** 2012/05/01

Test Description	Instrumentation	Batch	Extracted	Analyzed	Analyst
VOST Condensate (8260Cmod)	P&T/MS	2837268	N/A	2012/05/07	VIVEK AKOLKAR

Maxxam ID NH5696 **Collected** 2012/04/26
Sample ID RUN 1-BLDG 3-COND-M0031 **Shipped**
Matrix Water **Received** 2012/05/01

Test Description	Instrumentation	Batch	Extracted	Analyzed	Analyst
VOST Condensate (8260Cmod)	P&T/MS	2837268	N/A	2012/05/07	VIVEK AKOLKAR

Maxxam ID NH5697 **Collected** 2012/04/26
Sample ID RUN 2-BLDG 3-COND-M0031 **Shipped**
Matrix Water **Received** 2012/05/01

Test Description	Instrumentation	Batch	Extracted	Analyzed	Analyst
VOST Condensate (8260Cmod)	P&T/MS	2837268	N/A	2012/05/07	VIVEK AKOLKAR

Maxxam Analytics International Corporation o/a Maxxam Analytics 6740 Campobello Road, Mississauga, Ontario, L5N 2L8 Tel: (905) 817-5700 Toll-Free: 800-563-6266 Fax: (905) 817-5777 www.maxxam.ca

Maxxam

Success Through Science®

Maxxam Job #: B261977
Report Date: 2012/05/14

O'Brien & Gere Engineers Inc
Client Project #: 49064-001.001
Site Location: GENERAL DYNAMICS-JOPLIN, MO

Test Summary

Maxxam ID NH5705
Sample ID RUN 3-BLDG 3-COND-M0031
Matrix Water

Collected 2012/04/26
Shipped
Received 2012/05/01

Test Description	Instrumentation	Batch	Extracted	Analyzed	Analyst
VOST Condensate (8260Cmod)	P&T/MS	2837268	N/A	2012/05/07	VIVEK AKOLKAR

Maxxam Analytics International Corporation o/a Maxxam Analytics 6740 Campobello Road, Mississauga, Ontario, L5N 2L8 Tel: (905) 817-5700 Toll-Free: 800-563-6266 Fax: (905) 817-5777 www.maxxam.ca

Maxxam Job #: B261977
Report Date: 2012/05/14

O'Brien & Gere Engineers Inc
Client Project #: 49064-001.001
Site Location: GENERAL DYNAMICS-JOPLIN, MO

GENERAL COMMENTS

VOC Analysis: Due to high concentrations of non target analytes, sample required dilution. Detection limits were adjusted accordingly.

Sample NH5150-01: Chloromethane, chloroform and benzene exceed calibration range in this sample, result for these analytes are estimates only.

Sample NH5151-01: Chloromethane, chloroform, carbontetrachloride exceed calibration range in this sample, result for these analytes are estimates only.

Sample NH5152-01: Chloroform, carbontetrachloride, benzene exceed calibration range in this sample, result for these analytes are estimates only.

Sample NH5153-01: Chloroform and carbontetrachloride exceed calibration range in this sample, result for these analytes are estimates only.

Sample NH5154-01: Chloroform, carbontetrachloride, benzene exceed calibration range in this sample, result for these analytes are estimates only.

Sample NH5155-01: Chloroform, carbontetrachloride, benzene exceed calibration range in this sample, result for these analytes are estimates only.

Sample NH5156-01: Chloroform, carbontetrachloride and benzene exceed calibration range in this sample, result for these analytes are estimates only.

Sample NH5157-01: Chloroform, carbontetrachloride, benzene exceed calibration range in this sample, result for these analytes are estimates only.

Sample NH5681-01: Chloroform, carbontetrachloride, benzene exceed calibration range in this sample, result for these analytes are estimates only.

Results relate only to the items tested.

Maxxam Analytics International Corporation o/a Maxxam Analytics 6740 Campobello Road, Mississauga, Ontario, L5N 2L8 Tel: (905) 817-5700 Toll-Free: 800-563-6266 Fax: (905) 817-5777 www.maxxam.ca

Maxxam

Success Through Science®

O'Brien & Gere Engineers Inc
Attention: Jeff Gorman
Client Project #: 49064-001.001
P.O. #:
Site Location: GENERAL DYNAMICS-JOPLIN, MO

Quality Assurance Report

Maxxam Job Number: GB261977

QA/QC Batch Num Init	QC Type	Parameter	Date Analyzed yyyy/mm/dd	Value	%Recovery	Units	QC Limits
2837268 VAK	Spiked Blank	4-Bromofluorobenzene	2012/05/07		100	%	70 - 130
		D4-1,2-Dichloroethane	2012/05/07		101	%	70 - 130
		D8-Toluene	2012/05/07		100	%	70 - 130
		Dichlorodifluoromethane (FREON 12)	2012/05/07		84	%	60 - 140
		Chloromethane	2012/05/07		87	%	60 - 140
		Vinyl Chloride	2012/05/07		86	%	70 - 130
		Bromomethane	2012/05/07		102	%	60 - 140
		Chloroethane	2012/05/07		89	%	70 - 130
		Trichlorofluoromethane (FREON 11)	2012/05/07		92	%	70 - 130
		Acetone (2-Propanone)	2012/05/07		87	%	60 - 140
		1,1-Dichloroethylene	2012/05/07		96	%	70 - 130
		Iodomethane	2012/05/07		100	%	N/A
		Carbon Disulfide	2012/05/07		99	%	N/A
		Methylene Chloride(Dichloromethane)	2012/05/07		89	%	70 - 130
		1,1-Dichloroethane	2012/05/07		91	%	70 - 130
		trans-1,2-Dichloroethylene	2012/05/07		92	%	70 - 130
		cis-1,2-Dichloroethylene	2012/05/07		92	%	70 - 130
		Chloroform	2012/05/07		99	%	70 - 130
		1,2-Dichloroethane	2012/05/07		93	%	70 - 130
		Methyl Ethyl Ketone (2-Butanone)	2012/05/07		94	%	60 - 140
		1,1,1-Trichloroethane	2012/05/07		91	%	70 - 130
		Carbon Tetrachloride	2012/05/07		95	%	70 - 130
		Benzene	2012/05/07		93	%	70 - 130
		1,1,2-Trichloroethane	2012/05/07		91	%	70 - 130
		1,2-Dichloropropane	2012/05/07		94	%	70 - 130
		Trichloroethylene	2012/05/07		89	%	70 - 130
		Dibromomethane	2012/05/07		99	%	N/A
		Bromodichloromethane	2012/05/07		94	%	70 - 130
		cis-1,3-Dichloropropene	2012/05/07		95	%	70 - 130
		trans-1,3-Dichloropropene	2012/05/07		91	%	70 - 130
		Dibromochloromethane	2012/05/07		92	%	70 - 130
		Methyl Isobutyl Ketone	2012/05/07		92	%	70 - 130
		Methyl Butyl Ketone (2-Hexanone)	2012/05/07		95	%	N/A
		Toluene	2012/05/07		91	%	70 - 130
		Ethylene Dibromide	2012/05/07		91	%	70 - 130
		Tetrachloroethylene	2012/05/07		91	%	70 - 130
		Chlorobenzene	2012/05/07		89	%	70 - 130
		1,1,1,2-Tetrachloroethane	2012/05/07		91	%	70 - 130
		Ethylbenzene	2012/05/07		90	%	70 - 130
		p+m-Xylene	2012/05/07		88	%	70 - 130
		Styrene	2012/05/07		92	%	70 - 130
		o-Xylene	2012/05/07		91	%	70 - 130
		Bromoform	2012/05/07		96	%	70 - 130
		1,1,2,2-Tetrachloroethane	2012/05/07		89	%	70 - 130
		1,2,3-Trichloropropane	2012/05/07		99	%	N/A
		1,3-Dichlorobenzene	2012/05/07		88	%	70 - 130
		1,4-Dichlorobenzene	2012/05/07		87	%	70 - 130
		1,2-Dichlorobenzene	2012/05/07		89	%	70 - 130
	Method Blank	4-Bromofluorobenzene	2012/05/07		97	%	70 - 130
		D4-1,2-Dichloroethane	2012/05/07		100	%	70 - 130
		D8-Toluene	2012/05/07		99	%	70 - 130
		Dichlorodifluoromethane (FREON 12)	2012/05/07	<25		ug/L	
		Chloromethane	2012/05/07	<50		ug/L	
		Vinyl Chloride	2012/05/07	<10		ug/L	
		Bromomethane	2012/05/07	<75		ug/L	

Maxxam Analytics International Corporation o/a Maxxam Analytics 6740 Campobello Road, Mississauga, Ontario, L5N 2L8 Tel: (905) 817-5700 Toll-Free: 800-563-6266 Fax: (905) 817-5777 www.maxxam.ca

Maxxam

Success Through Science®

O'Brien & Gere Engineers Inc
Attention: Jeff Gorman
Client Project #: 49064-001.001
P.O. #:
Site Location: GENERAL DYNAMICS-JOPLIN, MO

Quality Assurance Report (Continued)

Maxxam Job Number: GB261977

QA/QC Batch Num Init	QC Type	Parameter	Date Analyzed yyyy/mm/dd	Value	%Recovery	Units	QC Limits
2837268 VAK	Method Blank	Chloroethane	2012/05/07	<25		ug/L	
		Trichlorofluoromethane (FREON 11)	2012/05/07	<50		ug/L	
		Acetone (2-Propanone)	2012/05/07	<380		ug/L	
		1,1-Dichloroethylene	2012/05/07	<13		ug/L	
		Iodomethane	2012/05/07	<15		ug/L	
		Carbon Disulfide	2012/05/07	<13		ug/L	
		Methylene Chloride(Dichloromethane)	2012/05/07	<25		ug/L	
		1,1-Dichloroethane	2012/05/07	<10		ug/L	
		trans-1,2-Dichloroethylene	2012/05/07	<25		ug/L	
		cis-1,2-Dichloroethylene	2012/05/07	<25		ug/L	
		Chloroform	2012/05/07	<10		ug/L	
		1,2-Dichloroethane	2012/05/07	<13		ug/L	
		Methyl Ethyl Ketone (2-Butanone)	2012/05/07	<250		ug/L	
		1,1,1-Trichloroethane	2012/05/07	<13		ug/L	
		Carbon Tetrachloride	2012/05/07	<13		ug/L	
		Benzene	2012/05/07	<13		ug/L	
		1,1,2-Trichloroethane	2012/05/07	<13		ug/L	
		1,2-Dichloropropane	2012/05/07	<13		ug/L	
		Trichloroethylene	2012/05/07	<13		ug/L	
		Dibromomethane	2012/05/07	<13		ug/L	
		Bromodichloromethane	2012/05/07	<10		ug/L	
		cis-1,3-Dichloropropene	2012/05/07	<10		ug/L	
		trans-1,3-Dichloropropene	2012/05/07	<15		ug/L	
		Dibromochloromethane	2012/05/07	<10		ug/L	
		Methyl Isobutyl Ketone	2012/05/07	<250		ug/L	
		Methyl Butyl Ketone (2-Hexanone)	2012/05/07	<250		ug/L	
		Toluene	2012/05/07	<13		ug/L	
		Ethylene Dibromide	2012/05/07	<13		ug/L	
		Tetrachloroethylene	2012/05/07	<13		ug/L	
		Chlorobenzene	2012/05/07	<13		ug/L	
		1,1,1,2-Tetrachloroethane	2012/05/07	<13		ug/L	
		Ethylbenzene	2012/05/07	<13		ug/L	
		p+m-Xylene	2012/05/07	<13		ug/L	
		Styrene	2012/05/07	<13		ug/L	
		o-Xylene	2012/05/07	<13		ug/L	
		Bromoform	2012/05/07	<10		ug/L	
		1,1,2,2-Tetrachloroethane	2012/05/07	<25		ug/L	
		1,2,3-Trichloropropane	2012/05/07	<15		ug/L	
		1,3-Dichlorobenzene	2012/05/07	<13		ug/L	
		1,4-Dichlorobenzene	2012/05/07	<13		ug/L	
		1,2-Dichlorobenzene	2012/05/07	<13		ug/L	
2838160 YYA	Spiked Blank	Bromofluorobenzene	2012/05/03		99	%	36 - 141
		D10-Ethylbenzene (FS)	2012/05/03		99	%	54 - 152
		D4-1,2-Dichloroethane	2012/05/03		106	%	74 - 122
		D8-Toluene	2012/05/03		99	%	80 - 114
		Dichlorodifluoromethane (FREON 12)	2012/05/03		128	%	50 - 150
		Chloromethane	2012/05/03		113	%	50 - 150
		Vinyl Chloride	2012/05/03		99	%	50 - 150
		Bromomethane	2012/05/03		88	%	50 - 150
		Chloroethane	2012/05/03		97	%	50 - 150
		Trichlorofluoromethane (FREON 11)	2012/05/03		104	%	50 - 150
		Acetone (2-Propanone)	2012/05/03		64	%	50 - 150
		1,1-Dichloroethylene	2012/05/03		100	%	50 - 150
		Iodomethane	2012/05/03		87	%	N/A
		Carbon Disulfide	2012/05/03		80	%	50 - 150

Maxxam Analytics International Corporation o/a Maxxam Analytics 6740 Campobello Road, Mississauga, Ontario, L5N 2L8 Tel. (905) 817-5700 Toll-Free: 800-563-6266 Fax: (905) 817-5777 www.maxxam.ca

Maxxam

Success Through Science®

O'Brien & Gere Engineers Inc
Attention: Jeff Gorman
Client Project #: 49064-001.001
P.O. #:
Site Location: GENERAL DYNAMICS-JOPLIN, MO

Quality Assurance Report (Continued)

Maxxam Job Number: GB261977

QA/QC Batch Num Init	QC Type	Parameter	Date Analyzed yyyy/mm/dd	Value	%Recovery	Units	QC Limits
2838160 YYA	Spiked Blank	Methylene Chloride(Dichloromethane)	2012/05/03		103	%	50 - 150
		1,1-Dichloroethane	2012/05/03		105	%	50 - 150
		trans-1,2-Dichloroethylene	2012/05/03		101	%	50 - 150
		cis-1,2-Dichloroethylene	2012/05/03		103	%	50 - 150
		Chloroform	2012/05/03		108	%	50 - 150
		1,2-Dichloroethane	2012/05/03		106	%	50 - 150
		Methyl Ethyl Ketone (2-Butanone)	2012/05/03		93	%	50 - 150
		1,1,1-Trichloroethane	2012/05/03		102	%	50 - 150
		Carbon Tetrachloride	2012/05/03		104	%	50 - 150
		Benzene	2012/05/03		101	%	50 - 150
		1,1,2-Trichloroethane	2012/05/03		103	%	50 - 150
		1,2-Dichloropropane	2012/05/03		102	%	50 - 150
		Trichloroethylene	2012/05/03		104	%	50 - 150
		Dibromomethane	2012/05/03		102	%	50 - 150
		Bromodichloromethane	2012/05/03		106	%	50 - 150
		cis-1,3-Dichloropropene	2012/05/03		99	%	50 - 150
		trans-1,3-Dichloropropene	2012/05/03		107	%	50 - 150
		Dibromochloromethane	2012/05/03		105	%	50 - 150
		Methyl Isobutyl Ketone	2012/05/03		107	%	50 - 150
		Methyl Butyl Ketone (2-Hexanone)	2012/05/03		105	%	50 - 150
		Toluene	2012/05/03		100	%	50 - 150
		Ethylene Dibromide	2012/05/03		104	%	50 - 150
		Tetrachloroethylene	2012/05/03		102	%	50 - 150
		Chlorobenzene	2012/05/03		108	%	50 - 150
		1,1,1,2-Tetrachloroethane	2012/05/03		105	%	50 - 150
		Ethylbenzene	2012/05/03		102	%	50 - 150
		m / p-Xylene	2012/05/03		105	%	50 - 150
		Styrene	2012/05/03		100	%	50 - 150
		o-Xylene	2012/05/03		109	%	50 - 150
		Bromoform	2012/05/03		102	%	50 - 150
		1,1,2,2-Tetrachloroethane	2012/05/03		101	%	50 - 150
		1,2,3-Trichloropropane	2012/05/03		107	%	50 - 150
		1,3-Dichlorobenzene	2012/05/03		105	%	50 - 150
		1,4-Dichlorobenzene	2012/05/03		100	%	50 - 150
		1,2-Dichlorobenzene	2012/05/03		106	%	50 - 150
	Method Blank	Bromofluorobenzene	2012/05/03		101	%	36 - 141
		D10-Ethylbenzene (FS)	2012/05/03		100	%	54 - 152
		D4-1,2-Dichloroethane	2012/05/03		108	%	74 - 122
		D8-Toluene	2012/05/03		100	%	80 - 114
		Dichlorodifluoromethane (FREON 12)	2012/05/03	<0.020		ug	
		Chloromethane	2012/05/03	<0.015		ug	
		Vinyl Chloride	2012/05/03	<0.013		ug	
		Bromomethane	2012/05/03	<0.015		ug	
		Chloroethane	2012/05/03	<0.0090		ug	
		Trichlorofluoromethane (FREON 11)	2012/05/03	<0.010		ug	
		Acetone (2-Propanone)	2012/05/03	<0.045		ug	
		1,1-Dichloroethylene	2012/05/03	<0.011		ug	
		Iodomethane	2012/05/03	<0.015		ug	
		Carbon Disulfide	2012/05/03	<0.026		ug	
		Methylene Chloride(Dichloromethane)	2012/05/03	<0.019		ug	
		1,1-Dichloroethane	2012/05/03	<0.012		ug	
		trans-1,2-Dichloroethylene	2012/05/03	<0.010		ug	
		cis-1,2-Dichloroethylene	2012/05/03	<0.010		ug	
		Chloroform	2012/05/03	<0.011		ug	
		1,2-Dichloroethane	2012/05/03	<0.0070		ug	

Maxxam Analytics International Corporation o/a Maxxam Analytics 6740,Campobello Road, Mississauga, Ontario, L5N 2L8 Tel: (905) 817-5700 Toll-Free: 800-563-6266 Fax: (905) 817-5777 www.maxxam.ca

O'Brien & Gere Engineers Inc
Attention: Jeff Gorman
Client Project #: 49064-001.001
P.O. #:
Site Location: GENERAL DYNAMICS-JOPLIN, MO

Quality Assurance Report (Continued)

Maxxam Job Number: GB261977

QA/QC Batch Num Init	QC Type	Parameter	Date Analyzed yyyy/mm/dd	Value	%Recovery	Units	QC Limits
2838160 YYA	Method Blank	Methyl Ethyl Ketone (2-Butanone)	2012/05/03	<0.036		ug	
		1,1,1-Trichloroethane	2012/05/03	<0.014		ug	
		Carbon Tetrachloride	2012/05/03	<0.016		ug	
		Benzene	2012/05/03	<0.0090		ug	
		1,1,2-Trichloroethane	2012/05/03	<0.016		ug	
		1,2-Dichloropropane	2012/05/03	<0.011		ug	
		Trichloroethylene	2012/05/03	<0.011		ug	
		Dibromomethane	2012/05/03	<0.010		ug	
		Bromodichloromethane	2012/05/03	<0.011		ug	
		cis-1,3-Dichloropropene	2012/05/03	<0.010		ug	
		trans-1,3-Dichloropropene	2012/05/03	<0.0070		ug	
		Dibromochloromethane	2012/05/03	<0.0090		ug	
		Methyl Isobutyl Ketone	2012/05/03	<0.019		ug	
		Methyl Butyl Ketone (2-Hexanone)	2012/05/03	<0.031		ug	
		Toluene	2012/05/03	<0.014		ug	
		Ethylene Dibromide	2012/05/03	<0.010		ug	
		Tetrachloroethylene	2012/05/03	<0.018		ug	
		Chlorobenzene	2012/05/03	<0.011		ug	
		1,1,1,2-Tetrachloroethane	2012/05/03	<0.010		ug	
		Ethylbenzene	2012/05/03	<0.014		ug	
		m / p-Xylene	2012/05/03	<0.015		ug	
		Styrene	2012/05/03	<0.012		ug	
		o-Xylene	2012/05/03	<0.015		ug	
		Bromoform	2012/05/03	<0.014		ug	
		1,1,2,2-Tetrachloroethane	2012/05/03	<0.014		ug	
		1,2,3-Trichloropropane	2012/05/03	<0.015		ug	
		1,3-Dichlorobenzene	2012/05/03	<0.020		ug	
		1,4-Dichlorobenzene	2012/05/03	<0.020		ug	
		1,2-Dichlorobenzene	2012/05/03	<0.020		ug	
2839269 YYA	Spiked Blank	Bromofluorobenzene	2012/05/04		101	%	36 - 141
		D10-Ethylbenzene (FS)	2012/05/04		100	%	54 - 152
		D4-1,2-Dichloroethane	2012/05/04		108	%	74 - 122
		D8-Toluene	2012/05/04		100	%	80 - 114
		Dichlorodifluoromethane (FREON 12)	2012/05/04		119	%	50 - 150
		Chloromethane	2012/05/04		119	%	50 - 150
		Vinyl Chloride	2012/05/04		99	%	50 - 150
		Bromomethane	2012/05/04		87	%	50 - 150
		Chloroethane	2012/05/04		99	%	50 - 150
		Trichlorofluoromethane (FREON 11)	2012/05/04		106	%	50 - 150
		Acetone (2-Propanone)	2012/05/04		65	%	50 - 150
		1,1-Dichloroethylene	2012/05/04		101	%	50 - 150
		Iodomethane	2012/05/04		90	%	N/A
		Carbon Disulfide	2012/05/04		82	%	50 - 150
		Methylene Chloride(Dichloromethane)	2012/05/04		104	%	50 - 150
		1,1-Dichloroethane	2012/05/04		104	%	50 - 150
		trans-1,2-Dichloroethylene	2012/05/04		101	%	50 - 150
		cis-1,2-Dichloroethylene	2012/05/04		103	%	50 - 150
		Chloroform	2012/05/04		108	%	50 - 150
		1,2-Dichloroethane	2012/05/04		109	%	50 - 150
		Methyl Ethyl Ketone (2-Butanone)	2012/05/04		93	%	50 - 150
		1,1,1-Trichloroethane	2012/05/04		105	%	50 - 150
		Carbon Tetrachloride	2012/05/04		103	%	50 - 150
		Benzene	2012/05/04		101	%	50 - 150
		1,1,2-Trichloroethane	2012/05/04		103	%	50 - 150
		1,2-Dichloropropane	2012/05/04		103	%	50 - 150

Maxxam Analytics International Corporation o/a Maxxam Analytics 6740 Campobello Road, Mississauga, Ontario, L5N 2L8 Tel: (905) 817-5700 Toll-Free: 800-563-6266 Fax: (905) 817-5777 www.maxxam.ca

Maxxam

Success Through Science®

O'Brien & Gere Engineers Inc
Attention: Jeff Gorman
Client Project #: 49064-001.001
P.O. #:
Site Location: GENERAL DYNAMICS-JOPLIN, MO

Quality Assurance Report (Continued)

Maxxam Job Number: GB261977

QA/QC Batch Num Init	QC Type	Parameter	Date Analyzed yyyy/mm/dd	Value	%Recovery	Units	QC Limits
2839269 YYA	Spiked Blank	Trichloroethylene	2012/05/04		103	%	50 - 150
		Dibromomethane	2012/05/04		103	%	50 - 150
		Bromodichloromethane	2012/05/04		107	%	50 - 150
		cis-1,3-Dichloropropene	2012/05/04		99	%	50 - 150
		trans-1,3-Dichloropropene	2012/05/04		109	%	50 - 150
		Dibromochloromethane	2012/05/04		106	%	50 - 150
		Methyl Isobutyl Ketone	2012/05/04		111	%	50 - 150
		Methyl Butyl Ketone (2-Hexanone)	2012/05/04		107	%	50 - 150
		Toluene	2012/05/04		101	%	50 - 150
		Ethylene Dibromide	2012/05/04		104	%	50 - 150
		Tetrachloroethylene	2012/05/04		102	%	50 - 150
		Chlorobenzene	2012/05/04		107	%	50 - 150
		1,1,1,2-Tetrachloroethane	2012/05/04		106	%	50 - 150
		Ethylbenzene	2012/05/04		103	%	50 - 150
		m / p-Xylene	2012/05/04		108	%	50 - 150
		Styrene	2012/05/04		102	%	50 - 150
		o-Xylene	2012/05/04		111	%	50 - 150
		Bromoform	2012/05/04		103	%	50 - 150
		1,1,2,2-Tetrachloroethane	2012/05/04		103	%	50 - 150
		1,2,3-Trichloropropane	2012/05/04		108	%	50 - 150
		1,3-Dichlorobenzene	2012/05/04		107	%	50 - 150
		1,4-Dichlorobenzene	2012/05/04		102	%	50 - 150
		1,2-Dichlorobenzene	2012/05/04		107	%	50 - 15[illegible]
	Method Blank	Bromofluorobenzene	2012/05/04		100	%	36 - 141
		D10-Ethylbenzene (FS)	2012/05/04		103	%	54 - 152
		D4-1,2-Dichloroethane	2012/05/04		111	%	74 - 122
		D8-Toluene	2012/05/04		99	%	80 - 114
		Dichlorodifluoromethane (FREON 12)	2012/05/04	<0.020		ug	
		Chloromethane	2012/05/04	<0.015		ug	
		Vinyl Chloride	2012/05/04	<0.013		ug	
		Bromomethane	2012/05/04	<0.015		ug	
		Chloroethane	2012/05/04	<0.0090		ug	
		Trichlorofluoromethane (FREON 11)	2012/05/04	<0.010		ug	
		Acetone (2-Propanone)	2012/05/04	<0.045		ug	
		1,1-Dichloroethylene	2012/05/04	<0.011		ug	
		Iodomethane	2012/05/04	<0.015		ug	
		Carbon Disulfide	2012/05/04	<0.026		ug	
		Methylene Chloride(Dichloromethane)	2012/05/04	<0.019		ug	
		1,1-Dichloroethane	2012/05/04	<0.012		ug	
		trans-1,2-Dichloroethylene	2012/05/04	<0.010		ug	
		cis-1,2-Dichloroethylene	2012/05/04	<0.010		ug	
		Chloroform	2012/05/04	<0.011		ug	
		1,2-Dichloroethane	2012/05/04	<0.0070		ug	
		Methyl Ethyl Ketone (2-Butanone)	2012/05/04	<0.036		ug	
		1,1,1-Trichloroethane	2012/05/04	<0.014		ug	
		Carbon Tetrachloride	2012/05/04	<0.016		ug	
		Benzene	2012/05/04	<0.0090		ug	
		1,1,2-Trichloroethane	2012/05/04	<0.016		ug	
		1,2-Dichloropropane	2012/05/04	<0.011		ug	
		Trichloroethylene	2012/05/04	<0.011		ug	
		Dibromomethane	2012/05/04	<0.010		ug	
		Bromodichloromethane	2012/05/04	<0.011		ug	
		cis-1,3-Dichloropropene	2012/05/04	<0.010		ug	
		trans-1,3-Dichloropropene	2012/05/04	<0.0070		ug	
		Dibromochloromethane	2012/05/04	<0.0090		ug	

Maxxam Analytics International Corporation o/a Maxxam Analytics 6740 Campobello Road, Mississauga, Ontario, L5N 2L8 Tel: (905) 817-5700 Toll-Free: 800-563-6266 Fax (905) 817-5777 www.maxxam.ca

Maxxam

Success Through Science®

O'Brien & Gere Engineers Inc
Attention: Jeff Gorman
Client Project #: 49064-001.001
P.O. #:
Site Location: GENERAL DYNAMICS-JOPLIN, MO

Quality Assurance Report (Continued)

Maxxam Job Number: GB261977

QA/QC Batch Num Init	QC Type	Parameter	Date Analyzed yyyy/mm/dd	Value	%Recovery	Units	QC Limits
2839269 YYA	Method Blank	Methyl Isobutyl Ketone	2012/05/04	<0.019		ug	
		Methyl Butyl Ketone (2-Hexanone)	2012/05/04	<0.031		ug	
		Toluene	2012/05/04	<0.014		ug	
		Ethylene Dibromide	2012/05/04	<0.010		ug	
		Tetrachloroethylene	2012/05/04	<0.018		ug	
		Chlorobenzene	2012/05/04	<0.011		ug	
		1,1,1,2-Tetrachloroethane	2012/05/04	<0.010		ug	
		Ethylbenzene	2012/05/04	<0.014		ug	
		m / p-Xylene	2012/05/04	<0.015		ug	
		Styrene	2012/05/04	<0.012		ug	
		o-Xylene	2012/05/04	<0.015		ug	
		Bromoform	2012/05/04	<0.014		ug	
		1,1,2,2-Tetrachloroethane	2012/05/04	<0.014		ug	
		1,2,3-Trichloropropane	2012/05/04	<0.015		ug	
		1,3-Dichlorobenzene	2012/05/04	<0.020		ug	
		1,4-Dichlorobenzene	2012/05/04	<0.020		ug	
		1,2-Dichlorobenzene	2012/05/04	<0.020		ug	

Spiked Blank: A blank matrix to which a known amount of the analyte has been added. Used to evaluate analyte recovery.
Method Blank: A blank matrix containing all reagents used in the analytical procedure. Used to identify laboratory contamination.
Surrogate: A pure or isotopically labeled compound whose behavior mirrors the analytes of interest. Used to evaluate extraction efficiency.

Maxxam Analytics International Corporation o/a Maxxam Analytics 6740 Campobello Road, Mississauga, Ontario, L5N 2L8 Tel: (905) 817-5700 Toll-Free: 800-563-6266 Fax: (905) 817-5777 www.maxxam.ca

Maxxam

Success Through Science®

Validation Signature Page

Maxxam Job #: B261977

The analytical data and all QC contained in this report were reviewed and validated by the following individual(s).

Cristina Carriere

CRISTINA CARRIERE, Scientific Services

Maureen Smith

MAUREEN SMITH, Supervisor, Volatiles

Maxxam has procedures in place to guard against improper use of the electronic signature and have the required "signatories", as per section 5.10.2 of ISO/IEC 17025:2005(E), signing the reports. For Service Group specific validation please refer to the Validation Signature Page.

Maxxam Analytics International Corporation o/a Maxxam Analytics 6740 Campobello Road, Mississauga, Ontario, L5N 2L8 Tel: (905) 817-5700 Toll-Free: 800-563-6266 Fax: (905) 817-5777 www.maxxam.ca