SUPPLEMENTAL INVESTIGATION ADDENDUM REPORT
AND
PILOT STUDY WORK PLAN
FOR THE
SWMU 33 NAIL MILL DEGREASING AREA SOIL INVESTIGATION
AK STEEL
KANSAS CITY, MISSOURI

EPA ID# MOD007118029

September 2010

Prepared for

AK Steel

By

Burns & McDonnell
SINCE 1898

Burns & McDonnell Project No. 47458
Burns & McDonnell Engineering Company
Engineers-Architects-Consultants
Kansas City, Missouri

A242
501969
RCRA

AK Steel Corporation
Environmental Affairs
9227 Centre Pointe Drive
West Chester, Ohio 45069

September 22, 2010

Ms. Lynn Slugantz
Branch Chief, RCRA Corrective Action and Permits
United States Environmental Protection Agency - Region VII
901 North 5th Street
Kansas City, Kansas 66101

Re: HSWA Corrective Action Permit Number MOD 007 118 029
Supplemental Investigation Addendum Report and Pilot Study Work Plan for the SWMU 33 Nail Mill Degreasing Area Soil Investigation
AK Steel, Kansas City, Missouri

Dear Mr. Spratlin:

AK Steel is submitting to the Environmental Protection Agency (EPA) and the Missouri Department of Natural Resources (MDNR) the *Supplemental Investigation Addendum Report and Pilot Study Work Plan for the SWMU 33 Nail Mill Degreasing Area Soil Investigation,* which was prepared by Burns & McDonnell Engineering Company, Inc. at our direction. This report is the deliverable required to complete activities outlined in the *Quality Assurance Sampling and Analysis Plan, Supplemental Investigation Addendum, SWMU 33 Nail Mill Degreasing Area Soil Investigation* (Burns & McDonnell, 2010).

CERTIFICATION:

I certify under penalty of law that this document and all attachments were prepared under my direction or supervision according to a system designed to assure that qualified personnel properly gather and evaluate the information submitted. Based on my inquiry of the person or persons who manage the system, or those persons directly responsible for gathering the information, the information submitted is, to the best of my knowledge and belief, true, accurate, and complete. I am aware that there are significant penalties for submitting false information, including the possibility of fine and imprisonment for knowing violations.

This Report and Certification are submitted on behalf of AK Steel Corporation.

Very truly yours,

Dave Miracle

Dave Miracle
Corporate Manager of Environmental Affairs

cc: B. Morrison – EPA Region VII (2 Copies)
C. Kump-Mitchell – MDNR (1 Copy)
B. Stuart – MDNR (2 Copies)
C. Batliner – AK Steel
S. L. Shelton – Burns & McDonnell

{00007068 v 1}

SUPPLEMENTAL INVESTIGATION ADDENDUM REPORT
AND
PILOT STUDY WORK PLAN
FOR THE
SWMU 33 NAIL MILL DEGREASING AREA SOIL INVESTIGATION
AK STEEL
KANSAS CITY, MISSOURI

EPA ID# MOD007118029

September 2010

Prepared for

AK Steel

Burns & McDonnell Project No. 54200
Burns & McDonnell Engineering Company
Engineers-Architects-Consultants
Kansas City, Missouri

TABLE OF CONTENTS

Page No.

TABLE OF CONTENTS TC-1

LIST OF TABLES TC-3

LIST OF FIGURES TC-3

LIST OF ACRONYMS AND ABBREVIATIONS TC-4

DOCUMENT DISTRIBUTION TC-6

1.0 INTRODUCTION 1-1
- 1.1 Purpose and Scope 1-1
- 1.2 Background 1-2
  - 1.2.1 Facility Location 1-2
  - 1.2.2 Facility History 1-2
  - 1.2.3 Environmental Setting 1-3
- 1.3 Report Organization 1-3

2.0 INTRODUCTION TO THE DATA PRESENTATION 2-1
- 2.1 Data Analysis 2-1
  - 2.1.1 Quality Control Evaluations 2-1
  - 2.1.2 Screening of Data 2-2
- 2.2 Data Presentation 2-3

3.0 SWMU 33 – Nail Mill Degreasing Area 3-1
- 3.1 SWMU Background 3-1
- 3.2 Summary of Previous Soil Investigations 3-2
- 3.3 Scope of Activities Completed 3-3
- 3.4 Investigation Results 3-3
- 3.5 Comparison to Previous Data 3-6

4.0 Pilot Study Work Plan 4-1
- 4.1 Introduction and Background 4-2
  - 4.1.1 Subsurface Conditions 4-2
  - 4.1.2 SVE Technology and Description 4-2
  - 4.1.3 Pilot Test Objectives and Rationale 4-3
- 4.2 Well Installation and Completion 4-3
  - 4.2.1 Drilling Activities 4-4
  - 4.2.2 Well Completion 4-4
  - 4.2.3 Horizontal Well Installation 4-5
- 4.3 Pilot Test Equipment and Procedures 4-6
  - 4.3.1 Pilot Test Equipment 4-6
  - 4.3.2 SVE Vacuum Step Testing 4-7
  - 4.3.3 SVE Air Sampling 4-9
- 4.4 Data Evaluation and Report Preparation 4-10

5.0 REFERENCES 5-1

LIST OF APPENDICES

APPENDIX A - Relevant Information for SWMU 33 from the RFI Report (Submitted on CD)
Table of Contents
Section 2 – Environmental Setting
Section 22 – SWMU 33 – Nail Mill Degreasing Area
Appendix B – Drilling Logs
Appendix C – Conductivity Logs
Appendix D – Physical Data Analytical Lab Reports
Appendix E – Geophysical Logs
Appendix F – Monitoring Well Construction Diagrams
Appendix M – Monitoring Well Water-Level Hydrographs
Appendix N – Saturated Zone Slug Test Results
Appendix O – Saturated Zone Pump Test Results
Appendix R – On-Site Analytical GC VOC Results
Appendix T – Analytical Results for Natural Attenuation Parameters (SWMU 33)

APPENDIX B - Historical and/or Additional SWMU 33 Information (Submitted on CD)
SWMU 33
Draft Report, Idled Facilities Environmental Investigation, Kansas City Works, Kansas City, Missouri (Remcor 1990)

Armco Phase I and II Soil Vapor Survey (Terracon, 1991a)

Nail Mill Phase II Investigation Report, Worldwide Grinding Systems, Armco, Inc., Kansas City, Missouri (Terracon, 1991b)

Groundwater Monitoring Report – February 2001 Sampling Event, AK Steel, Kansas City Facility (BMcD, 2001)

Relevant Information for SWMU 33 from Supplemental Investigation Report (BMcD, 2008) – Section 13.0 – SWMU 33 Nail Mill Degreasing Area

APPENDIX C - Comprehensive Analytical Result Tables
C-1 2010 Soil Results – Volatile Organic Compounds
C-2 2010 Soil Results – Synthetic Precipitation Leaching Procedure VOCs
C-3 Historical Soil Results – Volatile Organic Compounds

APPENDIX D - QA/QC Review of Analytical Data

APPENDIX E - Drilling Logs

APPENDIX F - Field Log Book

APPENDIX G - Survey Data

APPENDIX H - Analytical Laboratory Reports

LIST OF TABLES

Table No.	Title
2-1	Description of Data Qualifiers
2-2	Screening Levels
3-1	Comprehensive Investigation Summary
3-2	RFI Soil Detections – Volatile Organic Compounds
3-3	2010 Soil Samples
3-4	2010 Soil Detections – Volatile Organic Compounds
3-5	Soil Results for TCE – 2010 Investigation vs. RFI
3-6	Soil Results for cis-1,2-DCE – 2010 Investigation vs. RFI
4-1	Comparison of Pilot Study Alternatives
4-2	Summary of Data Collection Parameters, Instrumentation, Frequency, and Locations

LIST OF FIGURES

Figure No.	Title
1-1	Facility Location Map
1-2	Facility Map
1-3	Ownership Status
3-1	Soil Sample Locations
3-2	Select VOCs in Soil
3-3	SPLP VOC Detections in Soil
3-4	TCE in Soil – Current and Historical Data
4-1	Proposed Treatment Area and Pilot Study Well Locations
4-2	Typical SVE Observation Well Schematic
4-3	Typical SVE Extraction Well Schematic
4-4	Horizontal Extraction Well Profile
4-5	Horizontal Extraction Well Schematic
4-6	SVE Pilot Testing System Layout Schematic
4-7	SVE Pilot Testing System P&ID

LIST OF ACRONYMS AND ABBREVIATIONS

American	American Properties LLP
bgs	below ground surface
BMcD	Burns & McDonnell Engineering Company, Inc.
BMWCI	Burns & McDonnell Waste Consultants, Inc.
CBB	Compass Big Blue LLC
cis-1,2-DCE	cis-1,2-Dichloroethene
CO_2	carbon dioxide
1,1-DCA	1,1-Dichloroethane
1,1-DCE	1,1-Dichloroethene
1,2-DCE	1,2-Dichloroethene (Total)
DQI	Data Quality Indicator
Facility	AK Steel Facility, Kansas City, Missouri
ft	feet
GCAL	Gulf Coast Analytical Laboratories, Inc. of Baton Rogue, Lousiana
GPS	Global Positioning System
GST	GST Steel Company
Hansen	Hansen Property Development, Inc.
hp	horsepower
HSWA	Hazardous and Solid Waste Amendments
I-435	Interstate Highway 435
IM	Interim Measures
in. Hg	inches of mercury
MCL	Maximum Contaminant Level
MDNR	Missouri Department of Natural Resources
µg/L	micrograms per liter
mg/kg	milligrams per kilogram
MS	Matrix Spike
MSD	Matrix Spike Duplicate
NELAP	National Environmental Laboratory Accreditation Program
NFGO	*Contract Laboratory Program National Function Guidelines for Superfund Organic Methods Data Review*
O_2	oxygen
PCE	Tetrachloroethene
Permit	HWSA Part B Post-Closure Permit, Part II
PID	Photoionization Detector
PVC	polyvinyl-chloride

LIST OF ACRONYMS AND ABBREVIATIONS
(continued)

QA	Quality Assurance
QA SAP	Quality Assurance Sampling and Analysis Plan
QA SAP Addendum	QA SAP, Supplemental Investigation Addendum, SWMU 33 Nail Mill Degreasing Area Soil Investigation, AK Steel Kansas City, Missouri
QC	Quality Control
RCRA	Resource Conservation and Recovery Act
RFI	RCRA Facility Investigation
RFI Report	*RCRA Facility Investigation Report, Armco Kansas City Facility*
ROI	Radius of Influent
RSL	Regional Screening Level
scfm	standard cubic foot per minute
SPLP	Synthetic Precipitation Leaching Procedure
SVE	Soil Vapor Extraction
SWMU	Solid Waste Management Unit
TB	Trip Blank
1,1,1-TCA	1,1,1-Trichloroethane
1,1,2-TCA	1,1,2-Trichloroethane
TCE	Trichloroethene
Terracon	Terracon Environmental
USCS	Unified Soil Classification System
USDOT	United States Department of Transportation
USEPA	United States Environmental Protection Agency
VLS	vapor liquid separator
VOC	Volatile Organic Compound

DOCUMENT DISTRIBUTION

USEPA Region 7 – Bruce A. Morrison

Missouri Department of Natural Resources – Christine Kump-Mitchell

AK Steel Corporation – Carl Batliner and Dave Miracle

Burns & McDonnell Engineering Company, Inc. – Sharon Shelton

* * * * *

1.0 INTRODUCTION

Burns & McDonnell Engineering Company, Inc. (BMcD) has prepared this *SWMU 33 Soil Investigation Report/Pilot Study Work Plan* on behalf of AK Steel (formerly Armco Inc.[1]) to describe activities that were performed as part of a Supplemental Investigation Addendum to add to information obtained during a Resource Conservation and Recovery Act (RCRA) facility investigation (RFI) at its former Kansas City, Missouri Works (Facility) and to outline activities to be performed as part of a Pilot Study for remediation of chlorinated volatile organic compounds (VOCs) in soil. The activities covered by this investigation were outlined in the *Quality Assurance Sampling and Analysis Plan, Supplemental Investigation Addendum, SWMU 33 Nail Mill Degreasing Area Soil Investigation, AK Steel Kansas City, Missouri* ([QA SAP Addendum] BMcD, 2010).

AK Steel previously conducted an RFI at the Facility to satisfy the "Special Permit Conditions" presented in Part II of AK Steel's final Hazardous and Solid Waste Amendments (HSWA) Part B Post-Closure Permit (Permit), which was issued by the United States Environmental Protection Agency (USEPA) Region 7 on November 30, 1994 (USEPA ID# MOD 007118029). The USEPA and Missouri Department of Natural Resources (MDNR) have approved both the *RCRA Facility Investigation Report, Armco Kansas City Facility* (RFI Report) (Burns & McDonnell Waste Consultants, Inc. [BMWCI], 1999) and the *Supplemental Investigation Report, AK Steel, Kansas City, Missouri* (BMcD, 2008) in combination to satisfy Special Permit Condition XXX presented in Part II of the Permit.

1.1 PURPOSE AND SCOPE

This *SWMU 33 Soil Investigation Report/Pilot Study Work Plan* presents the results of Supplemental Investigation Addendum soil sampling activities conducted in 2010 at Solid Waste Management Unit (SWMU) 33 Nail Mill Degreasing Area. Data are evaluated to determine if Interim Measures (IM) are needed for the vadose zone soil of SWMU 33, and, if needed, the most appropriate method for the IM. In addition, the data are compared to results of previous data collection efforts to determine whether the data sets are similar or if degradation has occurred since the 1997 RFI data collection.

[1] Effective September 30, 1999, Armco Inc. was merged with and into AK Steel Corporation, a Delaware Corporation with headquarters in West Chester, Ohio.

1.2 BACKGROUND

1.2.1 Facility Location

Figure 1-1 presents a Facility location map. The Facility is located in northeast Kansas City, Missouri within the Blue River and Missouri River floodplains. Portions of the Facility are located both east and west of Interstate Highway 435 (I-435). Industrial activities were performed exclusively in the area west of I-435, north of 12th Street, and east of Ewing Avenue. Figure 1-2 depicts the Facility, and presents ownership and operational changes that have occurred since issuance of the Permit.

The current physical address for the AK Steel Kansas City Facility is:

AK Steel
7000 Winner Road
Kansas City, Missouri 64125

The current mailing address for the AK Steel Kansas City Facility is:

AK Asset Management Company
5050 Section Avenue
Cincinnati, Ohio 45212

1.2.2 Facility History

The Kansas City Bolt and Nut Company first occupied the property in 1888. Iron bolts and nuts were manufactured from purchased iron until the early 1920s when open-hearth furnaces were installed. The company's name was changed in 1925 to Sheffield Steel Corporation, and the company became a subsidiary of Armco Steel Corporation in 1930. The steel maker pioneered the production of carbon steel products from 100-percent recycled scrap iron and steel in the 1950s.

Armco's Kansas City operations included the production of steel from iron ore and scrap in open hearth furnaces and from 100 percent scrap in the electric arc furnaces. Additionally, production included steel ingots that were then rolled to produce billets used primarily as feed stock for the other plant operations. Production of steel in open-hearth furnaces was discontinued in 1959, and these furnaces were later demolished. By 1977, production operations included six electric arc furnaces in two melt shops, a blooming mill, and a continuous caster. Other semi-finished and finished products were also produced. By 1983, production was limited to semi-finished steel products and a minor amount of finished steel products.

Historically, the plant operations and property owned by Armco (now AK Steel) totaled approximately 860 acres. However, certain property and operations were sold to GS Technologies Operating Company,

Inc., doing business as GST Steel Company (GST) in November 1993. Armco retained ownership of approximately 560 acres, of which GST leased approximately 100 acres. GST had operations on property that they either owned or leased until they ceased operations and filed for bankruptcy in April 2001. As part of the bankruptcy proceedings, GST sold the majority of their holdings to Compass Big Blue LLC (CBB). In the intervening years, portions of the CBB tracts have been sold to House of Burgesses LLC, CTE Properties LLC, and/or OneSteel Limited. Additionally, approximately 20 acres of GST's property were sold to American Properties LLP (American), and this property has subsequently been sold to Hansen Property Development, Inc. (Hansen). The ownership and operation of these former GST tracts are now the responsibility of CBB, Hansen, House of Burgesses LLC, CTE Properties LLC, and/or OneSteel Limited. The property ownership and operational changes since the initial permit application and issuance are shown on Figures 1-2 and 1-3.

1.2.3 Environmental Setting

The environmental setting for the Facility was previously described in Section 2 of the RFI Report (BMWCI, 1999). Relevant sections of the RFI Report, including Section 2, are presented on CD in Appendix A for the ease of the reader.

1.3 REPORT ORGANIZATION

This *SWMU 33 Soil Investigation Report/Pilot Study Work Plan* has been prepared by BMcD and consists of one volume. This document is organized as follows:

- Section 1.0 – Introduction
- Section 2.0 – Introduction to the Data Presentation
- Section 3.0 – SWMU 33 Nail Mill Degreasing Area Soil Investigation Results
- Section 4.0 – Pilot Study Work Plan
- Section 5.0 – References
- Tables
- Figures
- Appendices

* * * * *

2.0 INTRODUCTION TO THE DATA PRESENTATION

During the Supplemental Investigation Addendum, samples were collected for chemical analyses in accordance with the QA SAP Addendum. The findings for SWMU 33 are presented in Section 3.0. During the investigation 46 soil samples were collected and submitted for laboratory analysis of volatile organic compounds (VOCs). Samples were also prepared using the synthetic precipitation leaching procedure (SPLP) and analyzed for VOCs. General supporting information for the data and text provided in this *SWMU 33 Soil Investigation Report/Pilot Study Work Plan* is provided in the following Appendices:

- Appendix A – Relevant Information from the RFI Report (Submitted on CD)
- Appendix B – Historical and/or Additional SWMU 33 Information (Submitted on CD)
- Appendix C – Comprehensive Analytical Result Tables
- Appendix D – Quality Assurance (QA)/Quality Control (QC) Review of Analytical Data
- Appendix E – Drilling Logs
- Appendix F – Field Log Book
- Appendix G – Survey Data
- Appendix H – Analytical Laboratory Reports

2.1 DATA ANALYSIS

2.1.1 Quality Control Evaluations

Gulf Coast Analytical Laboratories, Inc. of Baton Rogue, Louisiana (GCAL) provided laboratory services for the Supplemental Investigation Addendum. GCAL is certified as part of the National Environmental Laboratory Accreditation Program (NELAP).

The laboratory data were reviewed for achievement of QA/QC criteria. Field QC samples included field duplicates, matrix spike/matrix spike duplicates (MS/MSDs), and a temperature blank. Data quality indicators (DQIs) that were evaluated include: precision, accuracy, representativeness, comparability, and completeness. Data verification and validation were performed following procedures outlined in the

QA SAP Addendum. Data qualifiers, when appropriate, were added to the data in accordance with *USEPA's National Functional Guidelines for Superfund Organic Methods Data Review* ([NFGO] USEPA, 2008). A description of data qualifiers assigned by the analytical laboratories and during data verification and validation are provided on Table 2-1.

Based upon the results of the data verification and validation, the majority of the data were considered valid to use in reporting the results of the Supplemental Investigation Addendum, and only limited data were rejected. As indicated in the QA/QC Review of Analytical Data (Appendix D), all of the SPLP methylene chloride data were rejected since it was determined that the detections were the result of laboratory contamination during the SPLP extraction step (i.e., There were no corresponding methylene chloride detections in the Total VOC analysis.). In addition, chloroethane results for Sample 33B102/SB3 (21005134805) was rejected due to no recovery in the MS/MSD. No other data were rejected as a result of the QA/QC data review. The overall objectives for precision, accuracy, representativeness, completeness, and comparability were met.

2.1.2 Screening of Data

The soil screening levels used to determine the need for remediation are presented on Table 2-2. The discussion in Section 3.0 includes a comparison of sample results to the screening levels. Constituents that exceed screening levels are highlighted in the data summary for each media of interest. Important details regarding the screening include:

- Non-detect results are not included in the screening
- Exceedences of screening levels are color-coded on the summary tables.

Soil screening was performed to evaluate exposures related to inhalation, ingestion, or dermal absorption of compounds by an industrial worker population. Because the Facility is zoned M2A Heavy Industrial by the city of Kansas City, Missouri, industrial worker screening levels were deemed appropriate. Soil screening levels for the industrial worker population (i.e., Industrial Soil Regional Screening Levels [RSLs]) were obtained from the *USEPA Regional Screening Level (RSL) Table* (USEPA, 2010).

Results for samples analyzed using the SPLP extraction were used to evaluate the potential for VOCs present in soil at SWMU 33 to leach to groundwater. SPLP VOC results were compared to Safe Drinking Water Act Maximum Contaminant Levels (MCLs). SPLP VOC results greater than MCLs indicate that VOCs have the potential to leach to groundwater.

2.2 DATA PRESENTATION

Analytical data are presented in analytical results data tables, on figures, and in text discussions. Analytical result data tables have been condensed to show only the constituents detected in one or more of the samples for the SWMU. Comprehensive analytical result tables that provide results for both detected constituents and reporting limits for undetected constituents are provided in Appendix C. Figures are provided to indicate the sampling locations within SWMU 33. Sampling locations from the previous RFI are also indicated on the sampling location figures. In addition, figure(s) are provided that present results for constituent(s) of interest at the particular SWMU.

* * * * *

3.0 SWMU 33 – NAIL MILL DEGREASING AREA

3.1 SWMU BACKGROUND

The Nail Mill Degreasing Area (SWMU 33), located on AK Steel property (see Figure 1-2), was used for the removal of residue during the production of nails. The degreasing operation was located in the northwest portion of the Nail Mill at the current location of Monitoring Well Cluster 33MW2S/2/3 (see Figure 3-1). The presence of chlorinated VOCs in the surrounding area was discovered and reported in 1991 while Armco was preparing for the closure and conversion of the mill into a warehouse. The nail mill was subsequently demolished and a wood block floor contaminated with trichloroethene (TCE) was removed and properly disposed. The area currently consists of rubble over the concrete floor of the former building. The defined SWMU 33 area is approximately 2.5 acres in size.

During preparation for the closure of the nail mill, Remcor collected samples of the wood block floor, concrete floor, and soil from beneath the floor in June 1990. All samples were analyzed for VOCs. TCE, 1,1,1-trichloroethane (1,1,1-TCA), tetrachloroethene (PCE), 1,1-dichloroethene (1,1-DCE), and benzene were detected in the samples (Remcor, 1990). A copy of Remcor's *Draft Report, Idled Facilities Environmental Investigation, Kansas City Works, Kansas City, Missouri* is provided in Appendix B.

In July 1991, Terracon Environmental (Terracon) conducted a Phase I and Phase II soil vapor survey of the area for TCE, 1,1,1-TCA, and total volatile organics. Terracon concluded that degreasing materials remain sorbed onto the shallower soils underlying the degreaser area and that a groundwater plume of VOCs was present in the area (Terracon , 1991a). A copy of Terracon's *Armco Phase I and Phase II Soil Vapor Survey* is provided in Appendix B.

Terracon conducted a Phase II Investigation in September 1991 and collected soil and groundwater samples for VOC analysis (Terracon, 1991b). TCE, Total 1,2-Dichloroethene (1,2-DCE), 1,1,1-TCA, and chloroform were detected in soil samples. In addition, TCE and 1,2-DCE were detected in groundwater samples. Terracon concluded that TCE was present in soil near the degreaser location and decreased with depth and distance from the degreaser. Terracon also concluded that existing data were too limited to provide precise delineation of groundwater contamination. Four monitoring wells were installed during the Phase II Investigation. Monitoring Well MW1 was located northeast of the previous degreaser location but was destroyed during demolition activities completed in that vicinity. Wells MW2 through MW4 (now labeled 33MW2 through 33MW4) still exist at the SWMU. A copy of Terracon's *Nail Mill Phase II Investigation Report, Worldwide Grinding Systems, Armco, Inc., Kansas City, Missouri* is provided in Appendix B.

3.2 SUMMARY OF PREVIOUS SOIL INVESTIGATIONS

A comprehensive summary of the RFI and supplemental soil investigations conducted at SWMU 33 is provided on Table 3-1, and the locations for these samples are provided on Figure 3-1. Subsurface soil samples were collected and analyzed for VOCs in 1997 during the RFI (See RFI Section 22.0 in Appendix A). Fifty-eight (58) subsurface soil samples were analyzed for VOCs during the RFI. Total VOC detections ranged from 0.00201 to 24.423 milligrams per kilogram (mg/kg). The primary compounds detected were chlorinated VOCs, including 1,1,1-TCA, 1,1,2-trichloroethane (1,1,2-TCA), 1,1-dichloroethane (1,1-DCA), 1,1-DCE, cis-1,2-dichloroethene (cis-1,2-DCE), trans-1,2-dichloroethene, TCE, methylene chloride, and vinyl chloride. Total VOC concentrations greater than 1.0 mg/kg (15 samples) were located nearest the former degreaser location (i.e., location of Monitoring Well cluster 33MW2S/2/3), and chlorinated VOCs were the predominant fraction detected. Total VOC concentrations decreased around the perimeter of the SWMU area. The horizontal extent of VOC contamination in soil was well defined by borings south, west, and east of the former degreaser location, but was less clearly defined to the north. At sampling locations in the immediate vicinity of the former degreaser, VOC contamination was encountered at all depth intervals (down to 20 feet below ground surface [ft bgs]). The vertical extent of contamination was delineated down to the water table. In peripheral areas surrounding the former degreaser location, VOC contamination was generally limited to soil depths above 8 ft bgs. Historical RFI detections of VOCs in soil are presented on Table 3-2, and comprehensive results are provided in Appendix C.

These RFI findings were comparable to those presented within the historical documents (See Appendix B), as follows:

- *Idled Facilities Environmental Investigation* (Remcor, 1990) – Samples were collected in the immediate vicinity of the degreaser. Matrices included the wood floor, concrete subfloor, and soil beneath the concrete subfloor. These sampling locations most closely corresponded to RFI monitoring well 33MW2S.

- *Phase I and Phase II Soil Vapor Survey* (Terracon, 1991a) – During the Phase I investigation, 15 soil gas probes were advanced in a radial pattern that extended approximately 60 ft from the former degreaser location. Soil gas samples were collected from two depth intervals: 5-6 ft bgs and 9-12 ft bgs or 10-15 ft bgs. During the Phase II Investigation, 10 additional soil gas borings were placed outside of the Nail Mill Building and to the east along the driveway. Results of the soil gas indicate the presence of chlorinated VOCs and associated degradation products in the subsurface soils and groundwater.

- *Nail Mill Phase II Investigation Report* (Terracon, 1991b) – The Phase II investigation involved the installation and sampling of four monitoring wells. Soil samples were collected during the installation of the monitoring wells. Chlorinated VOCs were present in both the

soil and groundwater samples. Soil samples from Phase II Well MW-2 exhibited similar results to soil samples collected during the installation of RFI Well 33MW2S.

The historical evaluations concluded that a source of chlorinated VOCs existed in soils under the former degreaser location. Soil concentrations decreased moving radially outward from the former degreaser. In addition, a groundwater plume of chlorinated VOCs and associated degradation products was identified. These historical conclusions support conclusions made in the RFI Report regarding the type and magnitude of constituents present in the subsurface and their apparent distribution.

3.3 SCOPE OF ACTIVITIES COMPLETED

For the Supplemental Investigation Addendum, 14 soil borings were advanced using direct-push techniques in areas that previously had VOCs present within the vadose zone at concentrations that indicated potential leaching to groundwater. The previous investigation was conducted during the RFI in 1997-1998, and current VOC data was needed to determine if the vadose zone soil concentrations remained as a potential source of chlorinated VOCs present in the groundwater at SWMU 33. Soil boring locations are presented on Figure 3-1, and this figure also includes the location of the 1997 RFI soil borings. The drilling logs and a copy of the field log book are provided in Appendices E and F, respectively. For ease of the reader, similar information for the 1997-1998 RFI soil borings are provided in Appendix B.

The sample collection matrix is outlined on Table 3-3. Prior to the start of soil sampling, the depth to groundwater was determined to be 8.25 ft bgs at Monitoring Well 33MW2S. Since groundwater was detected at less than 9 ft bgs, soil sampling intervals were adjusted from those indicated in the QA SAP Addendum (BMcD, 2010) to allow for collection of samples from above the groundwater interface at three distinct intervals – 2 to 4, 4 to 6, and 6 to 8 ft bgs. At Borings 33B102 and 33B108, the 4 to 6 ft bgs interval was not recovered, and no sample could be collected. Soil samples were submitted for analysis of VOCs and SPLP VOCs. Field QC samples included four field duplicates, two MS/MSD pairs, and cooler temperature blanks. Boreholes were abandoned upon completion with bentonite and a concrete patch. Borehole locations were located using a handheld Global Positioning System (GPS, Appendix G).

3.4 INVESTIGATION RESULTS

Soil sample results for SWMU 33 are presented on Table 3-4. VOC detections were screened against the USEPA RSL for Industrial Soil, and results for the SPLP analysis were screened against MCLs. Comprehensive data tables that present both constituent detections and the reporting limits for undetected constituents are provided on Tables C-1 and C-2 in Appendix C.

Total VOCs

VOCs were detected in samples collected from all borings except 33B111 and 33B114. The following table summarizes the Total VOC detections in soil samples collected during this event:

Summary of Detected VOCs			
Parameter	**Number of Samples**	**Number of Detections**	**Number of Exceedances USEPA Industrial Soil RSL**
2-Butanone	44	2	0
Acetone	44	2	0
cis-1,2-DCE	44	14	0
trans-1,2-DCE	44	1	0
TCE	44	31	3
Vinyl Chloride	44	2	0
Number of Samples includes field duplicates.			

Similar to previous sampling, TCE and its associated degradation product cis-1,2-DCE were the primary constituents detected. Results for cis-1,2-DCE, TCE, and vinyl chloride are presented on Figure 3-2. The highest concentrations of VOCs were noted in samples collected from Boring 33B105, which was the closest location north of the former degreaser. As indicated below, TCE results for samples collected from each depth interval at this location exceeded the USEPA industrial soil RSL:

Samples with Exceedances of USEPA Industrial Soil RSL		
Sample ID	**Depth (ft bgs)**	**TCE (RSL = 14)**
33B105/SB01	2-4	25.3
33B105/SB02	4-6	26.7
33B105/SB03	6-8	42.8
Units are mg/kg.		

These were the only USEPA industrial soil RSL exceedances. Samples collected from Boring 33B107, which was the closest location northeast of the degreaser, also exhibited elevated VOC results, but these results were below the USEPA industrial soil RSL. As indicated on Figure 3-2, cis-1,2-DCE and TCE were detected throughout the area with concentrations degreasing at increased distance from the former degreaser location.

SPLP VOCs

For samples prepared using the SPLP extraction, VOCs were only detected in samples collected from locations that exhibited the highest Total VOC results (i.e., Borings 33B105 and 33B107). As indicated on Figure 3-3, VOCs were not detected in SPLP extracts for samples collected from all other boring locations. cis-1,2-DCE and TCE were the only VOCs detected in the SPLP extracts, and detections were limited to samples collected from the 2 to 4 and 4 to 6 ft bgs intervals at Borings 33B105 and 33B107. As indicated below, SPLP TCE results for samples collected from these depth intervals exceeded the USEPA MCL:

Samples with Exceedances of USEPA MCL		
Sample ID	**Depth (ft bgs)**	**SPLP TCE (MCL = 5)**
33B105/SB01	2-4	18.8
33B105/SB02	4-6	19.2
33B107/SB01	2-4	9.88
33B107/SB02	4-6	7.49
Units are micrograms per liter (µg/L).		

These were the only USEPA MCL exceedances for samples prepared using the SPLP extraction. Although cis-1,2-DCE was also detected in these samples, the results for cis-1,2-DCE were below the applicable MCL. The data indicate that TCE present in soils in the vicinity of Boring 33B105 and 33B107 have the potential to leach to groundwater and produce a concentration in excess of the drinking water standard. The decision criteria established in the QA SAP Addendum (BMcD, 2010) state that remediation of soil in the vadose soil will be recommended if SPLP results exceed MCLs. Therefore, based on the decision criteria, remediation of soil in the vadose zone is recommended.

Based upon a comparison of the Total VOC and SPLP VOC results for SWMU 33, it appears that Total TCE concentrations of 5 mg/kg or higher will yield SPLP TCE results that exceed the MCL. The only exception to this observation was noted in Sample 33B105/SB03 which exhibited a TCE result of 42.8 mg/kg, but TCE was not detected in the SPLP extract.

Comparison of TCE and SPLP TCE Results			
Sample ID	**Depth (ft bgs)**	**TCE (mg/kg)**	**SPLP TCE (µg/L)**
33B105/SB01	2-4	25.3	18.8
33B105/SB02	4-6	26.7	19.2
33B105/SB03	6-8	42.8	Not Detected (5)
33B107/SB01	2-4	7.8	9.88
33B107/SB02	4-6	5.62	7.49

Comparison of TCE and SPLP TCE Results			
Sample ID	Depth (ft bgs)	TCE (mg/kg)	SPLP TCE (µg/L)
33B107/SB03	6-8	4.86	Not Detected (5)

Since SPLP extraction data are not available for the historical information, 5 mg/kg TCE was used as a basis for evaluation of the historical TCE data for its potential leachability. A compilation of 2010 and historical TCE data is presented on Figure 3-4. Borings highlighted in red exhibited TCE results in samples from one or more depth intervals in excess of 5 mg/kg, indicating the potential for soils present at these locations to act as a source of contamination to groundwater. The Borings meeting the criteria included: 1) RFI – 33B01, 33B02, 33B05, 33B14, and 33MW2S and 2) 2010 Investigation – 33B105 and 33B107.

3.5 COMPARISON TO PREVIOUS DATA

Data from this investigation were compared with soil samples collected in 1997 during the RFI. RFI soil results are presented on Table 3-2 and 2010 investigation results are presented on Table 3-4. Data from this monitoring event correlated well with previous sampling for the locations and type of VOC detections. A comparison of TCE results for samples collected in close proximity to each other is provided on Table 3-5. With one exception at locations where RFI sample results exceeded 1 mg/kg, results for samples collected in 2010 were higher than those collected during the RFI. The same trend was observed for cis-1,2-DCE (Table 3-6). This may be due to the use of USEPA 5035 method for soil collection, which provides for better VOC preservation than the USEPA 5030 which was used during the RFI. There does not appear to have been significant degradation of chlorinated VOCs in subsurface soil at SWMU 33 since the 1997-1998 RFI. Similarities to previous events included:

- TCE and related degradation products of cis-1,2-DCE and vinyl chloride were the predominant VOCs detected.
- Samples collected from borings located closest to the former degreaser contained the highest levels of VOCs.
- Samples from both events exhibited TCE concentrations that indicated the potential for TCE to leach to groundwater at similar locations.

* * * * *

4.0 PILOT STUDY WORK PLAN

Data from the SWMU 33 soil investigation indicate that TCE is present in soils at SWMU 33 at concentrations that could result in leaching of contamination to groundwater. Comparison of data collected in 1997-1998 during the RFI to data collected in 2010 indicates that significant degradation has not occurred. Based on these exceedances, remediation of soil in the vadose zone is recommended.

Four remedial options were initially evaluated for the Pilot Study, including: 1) soil vapor extraction (SVE); 2) excavation and off-site disposal; 3) excavation and on-site landfarming; and 4) in-situ thermal treatment. Consideration was given to the following evaluation criteria:

- Protection of human health and the environment
- Attainment of media cleanup standards
- Control source of release
- Compliance with applicable standards for waste management
- Long-term reliability and effectiveness
- Reduction of toxicity, mobility or volume
- Short-term effectiveness
- Implementability
- Economic feasibility

A comparison of these criteria is provided on Table 4-1. The main difference noted for the four options was economic feasibility. Since soil contaminated by the former degreasing operations would be considered to contain F001 listed waste (spent halogenated solvents used in degreasing), excavation and off-site disposal was determined to be cost prohibitive. Excavation and on-site landfarming and in-situ thermal treatment were also removed from consideration for a pilot study after an evaluation of their respective costs.

SVE was preliminarily selected as the most appropriate remedial alternative based on its ability to favorably meet the evaluation criteria, including economic feasibility. A pilot test will be required to confirm the feasibility and effectiveness of SVE implementation under site-specific conditions. If the results of the pilot test confirm that SVE is an effective alternative for soil remediation, data obtained during the test will be used to develop the full-scale SVE system design and implementation plan. This section presents a work plan for conducting the SVE pilot test within the area exhibiting the aforementioned TCE soil concentration exceedance.

4.1 INTRODUCTION AND BACKGROUND

Based on the results of the SWMU 33 soil investigation, an area of approximately 7,500 square feet has been targeted for treatment via SVE (see Figure 4-1). This area contains VOC-impacted soil with TCE concentrations presenting a potential threat to human health and/or groundwater quality. Contaminants of concern within the targeted treatment area include TCE, cis-1,2-DCE, and vinyl chloride. AK Steel intends to install and operate an SVE system that will actively remove the mobile fraction of contaminant mass from the impacted soil source area, thereby reducing or eliminating the threat to groundwater quality. SVE is a proven technology that should accomplish removal of contaminants from impacted soil in an effective and timely manner.

4.1.1 Subsurface Conditions

The majority of the ground surface within the area targeted for SVE treatment consists of a concrete slab with a thickness of approximately 8 to 10 inches. Subsurface geology within the targeted soil source area generally consists of a 1 to 2 foot thick layer of clay, brick, and/or slag fill overlying clayey soil of low to high plasticity. The clayey soils are present from approximately 1 foot bgs to the shale bedrock surface encountered at approximately 65 feet bgs (BMWCI, 1999). The typical depth to groundwater in the area is approximately 10 feet bgs. However, based on a review of historical data, the groundwater surface elevation is variable and can range from approximately 6 to 12 feet bgs.

4.1.2 SVE Technology Description

SVE is the presumptive remedy for sites where VOCs are present in soil and remediation is appropriate (USEPA, September 1993). SVE is the process by which soil vapor is extracted and contaminants are volatilized within the vadose zone. Soil vapor is vented through SVE wells screened in the unsaturated zone above the groundwater surface. A venting blower produces negative pressure (vacuum) conditions in the well and the surrounding soil, drawing soil vapor from the subsurface. SVE wells are connected to the venting blower via aboveground flexible hoses or rigid pipe, or underground rigid piping. As the venting blower produces vacuum conditions in the SVE well, contaminant vapor is drawn into the well from the surrounding subsurface and through the piping to an SVE intake manifold. The extracted soil vapor passes through the manifold and a vapor-liquid separator and is exhausted to the atmosphere by the blower, effectively removing the bulk of VOC contamination in vapor form. Condensate entrained in the vapor stream, either from SVE wells or piping, accumulates in the vapor-liquid separator. Depending on contaminant concentrations and applicable regulations, treatment of SVE emissions, prior to discharge to the atmosphere, and treatment of collected condensate, prior to discharge or disposal, may be required.

4.1.3 Pilot Test Objectives and Rationale

Pilot testing will be conducted to verify the feasibility of SVE and provide information and data needed to develop the full-scale remedial design. Specific performance criteria will be measured to assess SVE feasibility and effectiveness. Data recorded during the test will be used to evaluate site-specific conditions, particularly those associated with geology, contaminant mass distribution, and subsurface flow characteristics. Data will also be recorded to determine the zone of influence for SVE wells to ensure optimal well spacing, appropriate well construction specifications, and efficient system operation.

Prior to pilot testing, three vertical extraction wells, one horizontal extraction well, and three observation wells will be installed within the proposed SWMU 33 vadose zone soil treatment area (See Figure 4-1). A mobile SVE pilot testing system will be used to extract soil vapor from the proposed extraction wells.

The SVE pilot test is designed to determine the following:

- Soil air permeability in the vadose zone.
- Radius of influence (ROI) for each extraction well under typical operating conditions.
- Response to SVE in two vertical treatment intervals.
- Site-specific SVE system head curve.
- Optimal SVE vacuum pressures and flow rates.
- SVE vadose zone contaminant mass removal rates.

4.2 WELL INSTALLATION AND COMPLETION

The installation of three vertical extraction wells, one horizontal extraction well, and three observation wells will be required for completion of the SVE pilot test. The proposed extraction wells will also serve as observation wells during different phases of the pilot test. Assuming the results of the pilot test confirm the feasibility and effectiveness of SVE, the proposed pilot test extraction wells will be utilized for full-scale SVE implementation at the Site.

4.2.1 Drilling Activities

The vertical extraction wells (SVE-1 through SVE-3), and observation wells (OBS-1 through OBS-3) will be installed using cable-tool drilling techniques. During well installation, a cable-tool rig will advance a core barrel to the predetermined total depth. BMcD personnel will provide oversight of all drilling activities. The borehole and breathing zone will be continuously monitored for VOCs during boring

installation with a photo-ionization detector (PID). Field classification will be performed on recovered soil cores by an experienced BMcD field engineer or geologist using the Unified Soil Classification System (USCS). Soil classification and drilling observations will be documented on boring logs. In addition to the logs, a field logbook will be used to document the drilling activities. All soil generated during boring installation will be containerized in United States Department of Transportation (USDOT) approved, 55-gallon drums and stored on-site pending proper characterization and disposal.

The borings for SVE-1 through SVE-3 and OBS-1 through OBS-3 will be advanced to approximately 9 feet bgs. The total depth was selected based on an average groundwater surface depth of approximately 10 feet bgs within the proposed treatment area. SVE-1 through SVE-3 will be completed with 4-inch diameter screen from approximately 5 to 9 feet bgs and OBS-1 through OBS-3 will be completed with 2-inch diameter screen from approximately 3 to 9 feet bgs. Boring depths and screen intervals may be adjusted based on field observations including lithology observed during drilling and depth to groundwater as determined from water level measurements recorded in existing monitoring wells.

4.2.2 Well Completion

SVE extraction and observation wells will be installed following boring installation. Each observation well will consist of 2-inch diameter, Schedule 40 polyvinyl-chloride (PVC), threaded screens and risers and each extraction well will consist of 4-inch diameter, Schedule 40 PVC, threaded screens and risers. Well construction diagrams and MDNR well registration records will be completed for each well. In addition to the construction diagrams, a field logbook will be used to document the well installation and all field activities.

Observation wells will be completed with approximately 6 feet of 0.020-inch slot PVC well screen and a threaded end cap. Following placement of the well screen and casing, an 8/16 silica sand filter pack will be tremied into place to the fill the annular space. Due to shallow screen depth, the filter pack for each observation well will extend a limited distance (approximately 6 inches) above the top of the screen. Hydrated bentonite chips will be placed in 1-foot lifts from the top of the sand filter pack to approximately 1 foot bgs and each well will be completed with a flush-mounted well vault secured in concrete. A construction schematic for a typical SVE observation well is presented in Figure 4-2.

Extraction wells will be completed with approximately 4 feet of 0.020-inch slot PVC well screen and a threaded end cap. The actual total depths and screen lengths for the extraction wells may be modified based groundwater levels, soil types, and other subsurface conditions observed during drilling activities. Following placement of the well screen and casing, an 8/16 silica sand filter pack will be tremied into

place to the fill the annular space. Due to shallow screen depth, the filter pack for each extraction well will extend a limited distance (approximately 1 foot) above the top of the screen. Hydrated bentonite chips will be placed in 1-foot lifts from the top of the sand filter pack to approximately 1 foot bgs and each well will be completed with a flush-mounted well vault secured in concrete. A construction schematic for a typical SVE extraction well is presented in Figure 4-3.

4.2.3 Horizontal Well Installation

The horizontal SVE well will be installed in an approximately 24-inch wide shallow trench excavated with a backhoe or other excavation equipment. Since the horizontal well is intended to target impacted soil in the interval between approximately 2 and 4 feet bgs, the trench will be completed with a total depth of approximately 4 feet bgs. The trench will also be completed with a total length of approximately 20 feet. All soil generated during horizontal well trench excavation activities will be stockpiled on-site pending proper characterization and disposal. A portion of the soil may be used to backfill the horizontal well trench if contaminant concentrations are determined to be below allowable levels.

The horizontal SVE well will be constructed with 4-inch diameter, 0.020-inch machine-slotted screen placed in the base of the excavation. Vertical riser pipes, consisting of 4-inch, Schedule 40 PVC well casing, will be installed on both ends of the screen and extended to just below ground surface to allow for the connection of vacuum piping (at the suction end) and access (at the terminal end) of the horizontal well (see Figure 4-4). Each riser will be completed with a flush-mounted well vault secured in a concrete pad. The riser pipe at the terminal end of the horizontal SVE well will be fitted with a 4-inch diameter, expandable, watertight J-plug.

During installation, the horizontal well screen will be placed on a sand bed consisting of approximately 3 inches of 8/16 silica filter pack. Following well screen placement, the trench will be backfilled with the 8/16 silica sand filter pack to approximately 2 feet bgs. A synthetic liner consisting of 10-mil polyethylene sheeting will be placed on top of the filter pack. The liner will extend a minimum of 1 foot beyond each end of the trench, and minimum of 1 foot beyond each side of the trench (see Figures 4-4 and 4-5). This will be accomplished by extending both the length and the width of the upper 2 feet of the trench by approximately 2 feet. Approximately 2 feet of compacted clay will be placed on top of the synthetic liner to complete backfilling of the trench to the ground surface. Schematics including the construction details and specifications for the horizontal SVE well are presented in Figures 4-4 and 4-5.

4.3 PILOT TEST EQUIPMENT AND PROCEDURES

The following procedures will be used for each phase of the SVE pilot test. The procedures are subject to modification based on observations made in the field.

4.3.1 Pilot Test Equipment

The remediation equipment to be used for SVE pilot testing activities at the Site is housed in an enclosed trailer. The trailer contains all the mechanical and electrical controls required for automated operation of the system. The performance specifications for the remediation system are described below. An equipment layout schematic for the pilot testing unit is provided in Figure 4-6 and a process and instrumentation diagram for the unit is provided in Figure 4-7. While the pilot testing unit contains water treatment equipment, these portions of the unit will not be needed for this pilot study.

The pilot system will consist of a regenerative blower or carbon-vane vacuum pump, vapor liquid separator (VLS), and an intake manifold for the connection of up to four extraction wells. Vacuum will be applied to the extraction wells using either a 7.5-horsepower (hp) regenerative blower with a maximum capacity of approximately 405 standard cubic ft per minute (scfm) and a maximum vacuum of 7.7-inches of mercury (in. Hg); or a 10-hp carbon-vane vacuum pump with a maximum capacity of approximately 95 scfm and a maximum vacuum 22-in. Hg. This equipment allows for either a high vacuum (carbon-vane pump) or low vacuum (regenerative blower) application during the pilot test. High vacuum equipment is commonly required to achieve sufficient extraction rates in fine-grained soil formations while low vacuum equipment is typically sufficient for coarse-grained (unconsolidated) formations. The selection of vacuum equipment (regenerative blower or carbon-vane vacuum pump) will be based on initial SVE step test results. Applied vacuum will be controlled during vacuum step testing by adjusting either a dilution valve (regenerative blower), or a vacuum relief valve (carbon-vane pump).

Each individual SVE intake manifold line is equipped with a flow control valve, vacuum gauge, sample port, and airflow meter. The extraction flow rate for individual SVE wells will be monitored and adjusted using the intake manifold system. The vacuum level and influent vapor concentrations will also be monitored using the manifold system.

Each SVE well will be connected to the intake manifold via an aboveground, flexible, 2-inch diameter PVC suction hose. Soil vapor extracted from the SVE wells will flow through the PVC hose and intake manifold to the VLS. The VLS will separate free liquids from the vapor stream prior to the soil vapor passing through the regenerative blower/carbon-vane pump and exhaust stack. If the VLS becomes full during operation, the SVE system will automatically shut down, liquids will be manually drained from the

VLS, and the system will be restarted. The SVE system will be operated at a vacuum pressure that will minimize the potential for groundwater upwelling and recovery. However, some condensate and perched groundwater recovery during system operation is possible.

The SVE pilot testing unit does not include any emissions treatment equipment. SVE pilot system emissions rates are anticipated to be below *de minimis* values, thereby eliminating the need for emissions treatment. Estimated VOC vapor emissions will be calculated in the field using measured influent vapor flow rates and influent VOC concentrations as determined from PID readings.

The remediation equipment trailer will require a 480-volt, three-phase, 100-amperage power supply. Electrical power will be supplied by a portable generator. The generator will be connected and grounded on-site by a qualified electrical contractor.

4.3.2 SVE Vacuum Step Testing

Three separate phases of SVE vacuum step testing will be performed at the Site during pilot testing activities. A different SVE extraction well will be utilized for each step testing phase to allow for a spatial and vertical evaluation of the vadose zone interval targeted for remediation. During each step testing phase, a minimum of three successively increasing vacuum pressures will be applied to the corresponding extraction well while data are recorded from the SVE system and observation wells. The location and spacing of the SVE and monitoring wells are illustrated on Figure 4-1.

During the first SVE step testing phase, vacuum will be applied to HW-1 and monitoring will be conducted using observation wells OBS-1 through OBS-3. This phase will be conducted to determine the vacuum response in the shallow (2 to 4 foot bgs) portion of the vadose zone while applying vacuum to the shallow horizontal extraction well.

During the second step testing phase, vacuum will be applied to SVE-1 and monitoring will be conducted using SVE-2, SVE-3, and OBS-1 through OBS-3. This phase will be conducted to assess the performance of a vertical extraction well targeting the deeper (4 to 9 foot bgs) portion of the vadose zone.

During the third step testing phase, vacuum will be applied to SVE-3 and monitoring will be conducted using SVE-1, SVE-2, and OBS-1 through OBS-3. This phase will be conducted to confirm the results of the tests conducted on SVE-1, and add spatial variation to the pilot test data set. By applying vacuum to a different extraction well, this testing phase will also provide additional data and observations from areas not impacted by the tests conducted on SVE-1.

The following table provides a summary of the SVE vacuum step testing:

Step Test Phase	Extraction Well	Monitoring Points
Phase 1	HW-1	OBS-1, OBS-2, and OBS-3
Phase 2	SVE-1	SVE-2, SVE-3, OBS-1, OBS-2, and OBS-3
Phase 3	SVE-3	SVE-1, SVE-2, OBS-1, OBS-2, and OBS-3

Prior to initiating step testing at each extraction well, headspace in the extraction well and each corresponding monitoring point will be sampled and field-analyzed for total VOCs, carbon dioxide (CO_2), and oxygen (O_2) concentrations using the instruments identified in Table 4-2. These field-analyzed samples will be collected in a Tedlar® bag using an oil-less vacuum sample pump, airtight wellhead seal, and sample tubing. In addition, depth to water (if present) will be measured in each well and the wellhead pressure (differential pressure) for each well will be equalized (zeroed) and confirmed by recording baseline measurements using an airtight wellhead seal and a Magnehelic® gauge or digital manometer (see Table 4-2).

Each step testing phase will consist of a minimum of three individual vacuum step tests, each conducted with a successively higher applied vacuum pressure. Measured vacuum pressure and extraction flow rate recorded during each step test will be used to develop the site-specific head curve and determine the optimum site-specific vacuum pressure for soil vapor recovery. During each step of the corresponding testing phase, extraction well vacuum pressure, soil vapor extraction (flow) rate, temperature, influent CO_2 and O_2 concentrations, and influent VOC concentration will be recorded at the SVE system intake manifold. Vacuum pressure will also be recorded at the extraction wellhead. Differential pressure will be measured at each of the corresponding monitoring point wellheads. The frequency of data collection and instrumentation used is provided in Table 4-2.

During each step of the corresponding testing phase, a minimum of one influent soil vapor sample will be collected for laboratory analysis using a Summa® canister. Summa® canister sample collection will be conducted in accordance with the procedures presented in Section 4.3.3. The samples will be shipped to a certified off-site laboratory for VOC analysis using USEPA Method TO-15 for known contaminants.

Depending on site conditions, it is anticipated that steady state vacuum pressure, extraction flow rate, and vadose zone differential pressure conditions will be achieved within one to several hours following the start of each step test. After steady state is achieved, the step test will be concluded and a subsequent test will be performed at a higher vacuum pressure. Post-test sampling will include CO_2, O_2, and total VOC concentration measurements at each corresponding monitoring point. Depth to water (if present) will also be measured in each well and the wellhead pressure (differential pressure) for each well will be equalized and confirmed by recording baseline measurements.

4.3.3 SVE Air Sampling

The Summa® canisters required for analytical vapor sample collection during the SVE pilot test will be prepared and provided by the laboratory. Prior to sampling, each canister will be cleaned and blanked in the laboratory. The laboratory will provide Summa® canister trip blanks (TBs) to accompany the samples. Each canister will be preset with a vacuum of approximately 27 to 29-in. Hg. A sample collection manifold assembly equipped with a vacuum gauge will be used to verify the vacuum setting prior to sample collection. Summa® canister sample collection will be conducted according to the following procedure:

1. Remove the Summa® canister from its shipping package. Check to insure that the canister vacuum is set at approximately 27 to 29-in. Hg.

2. Using the sample collection manifold assembly, airtight fittings, and new, clean ¼-inch Teflon® tubing, connect the Summa® canister inlet to the sample port located on the SVE intake manifold line connected to the corresponding extraction well.

3. Open the Summa® canister inlet valve.

4. If necessary, open the valve on SVE intake manifold line sample port to begin air sample collection.

5. Check the Summa® canister vacuum gauge to verify that the canister vacuum pressure is decreasing, thereby ensuring proper sample collection.

6. Close the Summa® canister inlet valve when the vacuum pressure reads approximately 2-in. Hg.

7. Properly label and package the Summa® canister for shipment to the laboratory. No ice is required during shipment.

4.4 DATA EVALUATION & REPORT PREPARATION

An analysis will be performed on data obtained from each phase of SVE vacuum step testing to determine the optimum applied vacuum pressure setting for each well tested. The vapor flow rates observed during each phase of SVE step testing will be plotted against the corresponding vacuum pressures to obtain the site-specific SVE head curve for each extraction well tested. For each extraction well, a line will be drawn through the plotted points on the head curve to evaluate the observed flow conditions. A change in the slope of the vacuum-flow rate line will indicate a transition from laminar to turbulent flow. The extraction well SVE head curve analysis will be compared to influent VOC vapor concentration data to determine the flow rate that produces the highest influent vapor concentrations under non-turbulent conditions. This flow rate will indicate the optimum applied vacuum pressure range for applying SVE to the corresponding extraction well.

Extraction flow rates and analytical vapor sample results will be used to calculate contaminant mass removal rates for each vacuum step test. The calculated removal rates will be used to estimate full-scale SVE system treatment efficiency and emissions rates. Further evaluation of the estimated emissions rates will be used to identify potential air emissions controls and/or permitting requirements.

The differential pressure and soil gas monitoring point data obtained during the vacuum step testing will be used to determine the SVE ROI for each corresponding extraction well, at each applied vacuum pressure setting. Differential pressures will be normalized using the vacuum pressure observed at the extraction wellhead. The monitoring point differential pressure data will then be plotted on a semi-log chart versus distance from the extraction well. A criterion of one percent of the vacuum pressure observed at the extraction wellhead will be applied to the plotted monitoring point data to estimate the SVE ROI for the corresponding extraction well. The monitoring point soil gas data will be used to confirm the differential pressure data. Changes in total VOC concentrations will indicate SVE influence at the monitoring points while changes in O_2 and CO_2 concentrations will indicate SVE influence and atmospheric air infiltration at the monitoring points.

The applied vacuum pressure that will produce the most efficient contaminant removal rate for each extraction well will be determined through a comparison of the SVE head curve, influent VOC vapor concentration data, calculated mass removal rates, and ROI data. This evaluation will be used to determine full-scale SVE system design criteria including vacuum equipment sizing and extraction well spacing.

* * * * *

5.0 REFERENCES

Burns & McDonnell Engineering Co. Inc. (BMcD). 2010. Quality Assurance Sampling and Analysis Plan, Supplemental Investigation Addendum, SWMU 33 Nail Mill Degreasing Area Soil Investigation, AK Steel, Kansas City, Missouri, EPA ID# MOD007118029. April.

Burns & McDonnell Engineering Co. Inc. (BMcD). 2008. Supplemental Investigation Report, AK Steel, Kansas City, Missouri. March.

Burns & McDonnell Engineering Co. Inc. (BMcD). 2007. Quality Assurance Sampling and Analysis Plan, Supplemental Investigation, AK Steel, Kansas City, Missouri. March.

Burns & McDonnell Engineering Company, Inc. (BMcD). 2001. Groundwater Monitoring Report – February 2001 Sampling Event, Nail Mill Degreasing Area, AK Steel, Kansas City Facility. March 30.

Burns & McDonnell Waste Consultants, Inc. (BMWCI). 1999. RCRA Facility Investigation Report, Armco Kansas City Facility (RFI Report). September 14.

Remcor, 1990. Draft Report, Idled Facilities Environmental Investigation, Kansas City Works, Kansas City, Missouri. November 2.

Terracon Environmental (Terracon), 1991a. Armco Phase I and Phase II Soil Vapor Survey. July 3.

Terracon Environmental (Terracon), 1991b. Nail Mill Phase II Investigation Report, Worldwide Grinding Systems, Armco, Inc., Kansas City, Missouri. November 18.

United States Environmental Protection Agency (USEPA), 2010. Regional Screening Levels (RSL) for Chemical Contaminants at Superfund Sites. RSL Table Update. May 2010.

United States Environmental Protection Agency (USEPA), 2009. National Primary Drinking Water Standards, EPA 816-F-09-004. May.

United States Environmental Protection Agency (USEPA), 2008. USEPA Contract Laboratory Program National Functional Guidelines for Superfund Organic Data Review. June. (NFGO)

United States Environmental Protection Agency (USEPA), 1993. Presumptive Remedies: Site Characterization and Technology Selection For CERCLA Sites With Volatile Organic Compounds In Soils. EPA 540-F-93-048. September.

* * * * *

TABLES

Table 2-1
Description of Data Qualifiers
SWMU 33 Nail Mill Degreasing Area
AK Steel Kansas City Facility

Qualifier	Description
Qualifiers Added by the Laboratories	
D	Samples was diluted prior to analysis (used in historical data).
J	The compound was detected. The result is less than the reporting limit (RL) but greater than or equal to the method detection limit (MDL), and the reported concentration is an estimated value.
U	The compound was analyzed, but was not detected above the reporting limit.
Qualifiers Assigned during Data Review	
J*	The result is an estimated value. Quality control (QC) results exhibit accuracy and/or precision criteria outside of limits.
R	The data are unusable. The sample results are rejected due to inability to meet QC criteria.
UR	Contamination noted. The result is considered non-detect and rejected.
Possible Combinations of Qualifiers (Lab and Data Review)	
DJ	Samples was diluted prior to analysis, and result is between the MDL and RL (used in historical data).
DU	Samples was diluted prior to analysis, and the constituent was not detected (used in historical data).
UR	The analyte was not detected above the reporting limit. However, the data is unusable/rejected due to inability to meet QC criteria.

Table 2-2
Screening Levels
SWMU 33 Nail Mill Degreasing Area
AK Steel Kansas City Facility

Parameters	Screening Level			
	Soil EPA Industrial RSL		SPLP Extract SDWA MCL	
Volatile Organic Compounds - SW-846 8260B				
1,1,1-Trichloroethane	**38000**	**mg/kg**	200	µg/L
1,1,2,2-Tetrachloroethane	2.8	mg/kg	--	µg/L
1,1,2-Trichloroethane	**5.3**	**mg/kg**	5	µg/L
1,1-Dichloroethane	**17**	**mg/kg**	--	µg/L
1,1-Dichloroethene	**1100**	**mg/kg**	7	µg/L
1,2-Dichloroethane	**2.2**	**mg/kg**	5	µg/L
1,2-Dichloropropane	4.5	mg/kg	5	µg/L
2-Butanone	**200000**	**mg/kg**	--	µg/L
2-Hexanone	**--**	**mg/kg**	--	µg/L
4-Methyl-2-pentanone	53000	mg/kg	--	µg/L
Acetone	**630000**	**mg/kg**	--	µg/L
Benzene	5.4	mg/kg	5	µg/L
Bromodichloromethane	1.4	mg/kg	80	µg/L
Bromoform	220	mg/kg	80	µg/L
Bromomethane	32	mg/kg	--	µg/L
Carbon disulfide	3700	mg/kg	--	µg/L
Carbon tetrachloride	3	mg/kg	5	µg/L
Chlorobenzene	1400	mg/kg	100	µg/L
Chloroethane	61000	mg/kg	--	µg/L
Chloroform	**1.5**	**mg/kg**	80	µg/L
cis-1,2-Dichloroethene	**10000**	**mg/kg**	**70**	**µg/L**
cis-1,3-Dichloropropene	8.1	mg/kg	--	µg/L
Dibromochloromethane	3.3	mg/kg	80	µg/L
Ethylbenzene	**27**	**mg/kg**	70	µg/L
Methyl chloride	500	mg/kg	--	µg/L
Methylene chloride	**53**	**mg/kg**	5	µg/L
Styrene	36000	mg/kg	100	µg/L
Tetrachloroethene	2.6	mg/kg	5	µg/L
Toluene	45000	mg/kg	1000	µg/L
trans-1,2-Dichloroethene	**690**	**mg/kg**	100	µg/L
trans-1,3-Dichloropropene	8.1	mg/kg	--	µg/L
Trichloroethene	**14**	**mg/kg**	**5**	**µg/L**
Vinyl acetate	4100	mg/kg	--	µg/L
Vinyl chloride	**1.7**	**mg/kg**	2	µg/L
Xylenes (Total)	**2700**	**mg/kg**	10000	µg/L

Bold - Constituent detected in historical or 2010 samples.
mg/kg - milligrams per kilogram
µg/L - micrograms per liter
SPLP - Synthetic Precipitation Leaching Procedure

EPA RSL - Regional Screening Level Table (May, 2010)
SDWA MCL - Safe Drinking Water Act Maximum Contaminant Level (May, 2009)

Table 3-1
Comprehensive Investigation Summary
SWMU 33 Nail Mill Degreasing Area
AK Steel Kansas City Facility

Boring	Year	Soil Analytical	
		VOC	SPLP VOC
May 2010 Investigation			
33B101	2010	X	X
33B102	2010	X	X
33B103	2010	X	X
33B104	2010	X	X
33B105	2010	X	X
33B106	2010	X	X
33B107	2010	X	X
33B108	2010	X	X
33B109	2010	X	X
33B110	2010	X	X
33B111	2010	X	X
33B112	2010	X	X
33B113	2010	X	X
33B114	2010	X	X
Historical Investigations			
33B01	1997	X	
33B02	1997	X	
33B03	1997	X	
33B04	1997	X	
33B05	1997	X	
33B06	1997	X	
33B07	1997	X	
33B08	1997	X	
33B09	1997	X	
33B10	1997	X	
33B11	1997	Note 1	
33B13	1997	X	
33B14	1997	X	
33B15	1997	X	
33B16	1997	X	
33B17	1997	X	
33B18	1997	X	
33B19	1997	X	
33B20	1997	Note 1	
33B24	1997	Note 1	
33B25	1997	Note 1	
33B26	1997	Note 1	
33B27	1997	Note 1	
33B28	1997	Note 1	
33B29	1997	Note 1	
33B29A	1997	X	
33B30	1997	Note 1	
33B30A	1997	X	
33B37	1997	Note 1	
33B43	1997	Note 1	
33B44	1997	Note 1	
33B45	1997	Note 1	
33B57	1998	Note 2	
33B58	1998	Note 2	
33B59	1998	Note 2	
33MW2	1991	X	
33MW2S	1997	X	
33MW3	1991	Note 3	

Table 3-1
Comprehensive Investigation Summary
SWMU 33 Nail Mill Degreasing Area
AK Steel Kansas City Facility

Boring	Year	Soil Analytical	
		VOC	SPLP VOC
33MW7D	1997	Note 3	
33MW7S	1997	Note 3	
33MW8S	1997	Note 3	

Note 1 - No soil samples. Groundwater samples screened on-site.

Note 2 - No soil samples for chemical analysis. Geophysical information only.

Note 3 - No soil samples. Groundwater samples only.

VOC - Volatile Organic Compound

SPLP VOC - Synthetic Precipitation Leaching Procedure VOC

Table 3-2
RFI Soil Detections - Volatile Organic Compounds
SWMU 33 Nail Mill Degreasing Area
AK Steel Kansas City Facility

Parameter	EPA Industrial Soil RSL	Sample ID: / Date Collected: / Depth (ft bgs): / Lab ID:	33B01-DP1 3/31/1997 1 - 5 D97-3879-1	33B01-DP2 3/31/1997 5 - 9 D97-3879-2	33B01-DP3 3/31/1997 9 - 13 D97-3879-3	33B02-DP1 3/31/1997 1 - 5 D97-3879-5	33B02-DP2 3/31/1997 5 - 9 D97-3879-6	33B02-DP3 3/31/1997 9 - 13 D97-3879-7	33B03-DP1 4/8/1997 3.2 - 4.2 D97-4264-4	33B03-DP2 4/8/1997 7 - 8 D97-4264-5	33B04-DP1 4/7/1997 1.7 - 2.4 D97-4256-1
Volatile Organic Compounds		**Units**									
1,1,1-Trichloroethane	38000	mg/Kg	0.00663 U	**0.0138**	0.00649 U	0.00628 U	**0.0655**	**0.0619**	0.00614 U	0.0063 U	0.00627 U
1,1,2-Trichloroethane	5.3	mg/Kg	0.00663 U	0.00627 U	**0.0107**	0.00628 U	**0.00637**	**0.00937**	0.00614 U	0.0063 U	0.00627 U
1,1-Dichloroethane	17	mg/Kg	0.00663 U	**0.00925**	0.00649 U	0.00628 U	**0.0148**	**0.0174**	0.00614 U	0.0063 U	0.00627 U
1,1-Dichloroethene	1100	mg/Kg	**0.0263**	**0.0619**	**0.0124**	0.00628 U	**0.0246**	**0.0215**	0.00614 U	0.0063 U	0.00627 U
1,2-Dichloroethane	2.2	mg/Kg	0.00663 U	0.00627 U	0.00649 U	0.00628 U	0.00621 U	**0.00781**	0.00614 U	0.0063 U	0.00627 U
2-Butanone	200000	mg/Kg	0.00663 U	0.00627 U	0.00649 U	0.00628 U	0.00621 U	0.00701 U	0.00614 U	0.0063 U	0.00627 U
2-Hexanone	--	mg/Kg	**0.018 J**	0.0627 U	0.0649 U	0.0628 U	0.0621 U	0.0701 U	0.0614 U	0.063 U	0.0627 U
Acetone	630000	mg/Kg	0.133 U	0.125 U	0.13 U	0.126 U	0.124 U	0.14 U	0.123 U	0.126 U	0.125 U
Chloroform	1.5	mg/Kg	0.00663 U	**0.00851**	0.00649 U	0.00628 U	0.00621 U	0.00701 U	0.00614 U	0.0063 U	0.00627 U
cis-1,2-Dichloroethene	10000	mg/Kg	**2.57 D**	**4.51 D**	**1.44 D**	**1.7 D**	**5.07 D**	**1.75 D**	0.00614 U	0.0063 U	0.00627 U
trans-1,2-Dichloroethene	690	mg/Kg	**0.00999**	**0.0193**	0.00649 U	0.00628 U	0.00621 U	0.00701 U	0.00614 U	0.0063 U	0.00627 U
Ethylbenzene	27	mg/Kg	0.00663 U	0.00627 U	0.00649 U	0.00628 U	0.00621 U	0.00701 U	0.00614 U	0.0063 U	0.00627 U
Methylene chloride	53	mg/Kg	0.00663 U	0.00627 U	0.00649 U	0.00628 U	0.00621 U	0.00701 U	0.00614 U	0.0063 U	0.00627 U
Trichloroethene	14	mg/Kg	**8.1 D**	**19.8 D**	**8.26 D**	**3.29 D**	**12.4 D**	**6.73 D**	**0.0136**	**0.176**	0.00627 U
Vinyl chloride	1.7	mg/Kg	**0.00924**	0.00251 U	0.00259 U	**0.00907**	0.00248 U	0.00281 U	0.00246 U	0.00252 U	0.00251 U
m,p-Xylene	17000	mg/Kg	0.00663 U	0.00627 U	0.00649 U	0.00628 U	0.00621 U	0.00701 U	0.00614 U	0.0063 U	0.00627 U
o-Xylene	19000	mg/Kg	0.00663 U	0.00627 U	0.00649 U	0.00628 U	0.00621 U	0.00701 U	0.00614 U	0.0063 U	0.00627 U

-- Value not available.
Detections are **bold**.
Values that exceed a screening level are highlighted.
ft bgs - feet below ground surface
mg/Kg - milligrams per Kilogram

Data qualifiers are described on Table 2-1.

RSL - EPA Regional Screening Level Table (May 2010)

Table 3-2
RFI Soil Detections - Volatile Organic Compounds
SWMU 33 Nail Mill Degreasing Area
AK Steel Kansas City Facility

Parameter	EPA Industrial Soil RSL	Sample ID:	33B04-DP1D	33B04-DP2	33B05-DP1	33B05-DP2	33B06-DP1	33B06-DP2	33B06-DP3	33B07-DP1	33B07-DP2
		Date Collected:	4/7/1997	4/7/1997	4/7/1997	4/7/1997	4/7/1997	4/7/1997	4/7/1997	4/7/1997	4/7/1997
		Depth (ft bgs):	1.7 - 2.4	8 - 9	2.5 - 3.5	7 - 8	1.6 - 2.6	6 - 7	9 - 10	2.5 - 3.5	6.8 - 7.8
		Lab ID:	D97-4256-2	D97-4256-3	D97-4256-5	D97-4256-6	D97-4256-7	D97-4256-8	D97-4256-9	D97-4256-10	D97-4256-11
Volatile Organic Compounds		**Units**									
1,1,1-Trichloroethane	38000	mg/Kg	0.00604 U	0.00636 U	0.00622 U	0.0059 U	0.00624 U	0.0065 U	0.00645 U	0.00635 U	0.00631 U
1,1,2-Trichloroethane	5.3	mg/Kg	0.00604 U	0.00636 U	0.00622 U	**0.0102**	0.00624 U	0.0065 U	0.00645 U	0.00635 U	0.00631 U
1,1-Dichloroethane	17	mg/Kg	0.00604 U	0.00636 U	0.00622 U	0.0059 U	0.00624 U	0.0065 U	0.00645 U	0.00635 U	0.00631 U
1,1-Dichloroethene	1100	mg/Kg	0.00604 U	0.00636 U	**0.00714**	**0.0165**	0.00624 U	0.0065 U	0.00645 U	0.00635 U	0.00631 U
1,2-Dichloroethane	2.2	mg/Kg	0.00604 U	0.00636 U	0.00622 U	0.0059 U	0.00624 U	0.0065 U	0.00645 U	0.00635 U	0.00631 U
2-Butanone	200000	mg/Kg	0.00604 U	0.00636 U	0.00622 U	0.0059 U	0.00624 U	0.0065 U	0.00645 U	0.00635 U	0.00631 U
2-Hexanone	--	mg/Kg	0.0604 U	0.0636 U	0.0622 U	0.059 U	0.0624 U	0.065 U	0.0645 U	0.0635 U	0.0631 U
Acetone	630000	mg/Kg	0.121 U	**0.0695 J**	0.124 U	0.118 U	0.125 U	0.13 U	0.129 U	0.127 U	**0.0439 J**
Chloroform	1.5	mg/Kg	0.00604 U	0.00636 U	**0.0077**	**0.00988**	0.00624 U	0.0065 U	0.00645 U	0.00635 U	0.00631 U
cis-1,2-Dichloroethene	10000	mg/Kg	0.00604 U	0.00636 U	**0.377 D**	**0.54 D**	**0.024**	**0.112**	**0.111**	**0.0213**	**0.00705**
trans-1,2-Dichloroethene	690	mg/Kg	0.00604 U	0.00636 U	0.00622 U	0.0059 U	0.00624 U	0.0065 U	0.00645 U	0.00635 U	0.00631 U
Ethylbenzene	27	mg/Kg	0.00604 U	0.00636 U	0.00622 U	0.0059 U	0.00624 U	0.0065 U	0.00645 U	0.00635 U	0.00631 U
Methylene chloride	53	mg/Kg	0.00604 U	0.00636 U	0.00622 U	0.0059 U	0.00624 U	0.0065 U	0.00645 U	0.00635 U	0.00631 U
Trichloroethene	14	mg/Kg	0.00604 U	0.00636 U	**2.56 D**	**5.86 D**	**0.297**	**0.296 D**	**0.261 D**	**0.0376**	0.00631 U
Vinyl chloride	1.7	mg/Kg	0.00242 U	0.00254 U	0.00249 U	0.00236 U	0.0025 U	0.0026 U	0.00258 U	0.00254 U	0.00253 U
m,p-Xylene	17000	mg/Kg	0.00604 U	0.00636 U	0.00622 U	0.0059 U	0.00624 U	0.0065 U	0.00645 U	0.00635 U	0.00631 U
o-Xylene	19000	mg/Kg	0.00604 U	0.00636 U	0.00622 U	0.0059 U	0.00624 U	0.0065 U	0.00645 U	0.00635 U	0.00631 U

-- Value not available.
Detections are **bold**.
Values that exceed a screening level are highlighted.
ft bgs - feet below ground surface
mg/Kg - milligrams per Kilogram

Data qualifiers are described on Table 2-1.

RSL - EPA Regional Screening Level Table (May 2010)

Table 3-2
RFI Soil Detections - Volatile Organic Compounds
SWMU 33 Nail Mill Degreasing Area
AK Steel Kansas City Facility

Parameter	EPA Industrial Soil RSL	Sample ID: / Date Collected: / Depth (ft bgs): / Lab ID:	33B08-DP1 4/7/1997 1.5 - 2.5 D97-4256-12	33B08-DP2 4/7/1997 6.5 - 7.5 D97-4256-13	33B08-DP2D 4/7/1997 6.5 - 7.5 D97-4256-14	33B09-DP1 4/7/1997 0.8 - 1.8 D97-4256-15	33B09-DP2 4/7/1997 6 - 7 D97-4256-16	33B10-DP1 4/8/1997 1 - 2 D97-4264-1	33B10-DP2 4/8/1997 7.5 - 8.5 D97-4264-2	33B13-DP1 4/8/1997 4 - 5 D97-4264-10	33B13-DP2 4/8/1997 8 - 9 D97-4264-11
Volatile Organic Compounds		**Units**									
1,1,1-Trichloroethane	38000	mg/Kg	0.00671 U	0.0066 U	0.00675 U	0.00647 U	0.00639 U	0.00525 U	0.00647 U	0.00702 U	0.00683 U
1,1,2-Trichloroethane	5.3	mg/Kg	0.00671 U	0.0066 U	0.00675 U	0.00647 U	0.00639 U	0.00525 U	0.00647 U	0.00702 U	0.00683 U
1,1-Dichloroethane	17	mg/Kg	0.00671 U	0.0066 U	0.00675 U	0.00647 U	0.00639 U	0.00525 U	0.00647 U	0.00702 U	0.00683 U
1,1-Dichloroethene	1100	mg/Kg	0.00671 U	0.0066 U	0.00675 U	0.00647 U	0.00639 U	0.00525 U	0.00647 U	0.00702 U	0.00683 U
1,2-Dichloroethane	2.2	mg/Kg	0.00671 U	0.0066 U	0.00675 U	0.00647 U	0.00639 U	0.00525 U	0.00647 U	0.00702 U	0.00683 U
2-Butanone	200000	mg/Kg	0.00671 U	0.0066 U	0.00675 U	0.00647 U	0.00639 U	0.00525 U	0.00647 U	0.00702 U	0.00683 U
2-Hexanone	--	mg/Kg	0.0671 U	0.066 U	0.0675 U	0.0647 U	0.0639 U	0.0525 U	0.0647 U	0.0702 U	0.0683 U
Acetone	630000	mg/Kg	0.134 U	0.132 U	**0.056 J**	**0.422**	0.128 U	**0.124**	**0.157**	**0.0541 J**	0.137 U
Chloroform	1.5	mg/Kg	0.00671 U	0.0066 U	0.00675 U	0.00647 U	0.00639 U	0.00525 U	0.00647 U	0.00702 U	0.00683 U
cis-1,2-Dichloroethene	10000	mg/Kg	0.00671 U	0.0066 U	0.00675 U	0.00647 U	0.00639 U	0.00525 U	0.00647 U	0.00702 U	0.00683 U
trans-1,2-Dichloroethene	690	mg/Kg	0.00671 U	0.0066 U	0.00675 U	0.00647 U	0.00639 U	0.00525 U	0.00647 U	0.00702 U	0.00683 U
Ethylbenzene	27	mg/Kg	0.00671 U	0.0066 U	0.00675 U	0.00647 U	0.00639 U	0.00525 U	0.00647 U	0.00702 U	0.00683 U
Methylene chloride	53	mg/Kg	0.00671 U	0.0066 U	0.00675 U	0.00647 U	0.00639 U	0.00525 U	0.00647 U	0.00702 U	0.00683 U
Trichloroethene	14	mg/Kg	0.00671 U	0.0066 U	0.00675 U	0.00647 U	0.00639 U	0.00525 U	0.00647 U	**0.0277**	**0.0332**
Vinyl chloride	1.7	mg/Kg	0.00268 U	0.00264 U	0.0027 U	0.00259 U	0.00255 U	0.0021 U	0.00259 U	0.00281 U	0.00273 U
m,p-Xylene	17000	mg/Kg	0.00671 U	0.0066 U	0.00675 U	0.00647 U	0.00639 U	0.00525 U	0.00647 U	0.00702 U	0.00683 U
o-Xylene	19000	mg/Kg	0.00671 U	0.0066 U	0.00675 U	0.00647 U	0.00639 U	0.00525 U	0.00647 U	0.00702 U	0.00683 U

-- Value not available.
Detections are **bold**.
Values that exceed a screening level are highlighted.
ft bgs - feet below ground surface
mg/Kg - milligrams per Kilogram

Data qualifiers are described on Table 2-1.

RSL - EPA Regional Screening Level Table (May 2010)

Table 3-2
RFI Soil Detections - Volatile Organic Compounds
SWMU 33 Nail Mill Degreasing Area
AK Steel Kansas City Facility

Parameter	EPA Industrial Soil RSL	Sample ID: / Date Collected: / Depth (ft bgs): / Lab ID:	33B14-DP1 4/8/1997 2.1 - 3.1 D97-4264-12	33B14-DP2 4/8/1997 5 - 6 D97-4264-13	33B15-DP1 4/9/1997 1.5 - 2.5 D97-4344-1	33B15-DP2 4/9/1997 6.5 - 7.5 D97-4344-2	33B15-DP3 4/9/1997 9.5 - 10.5 D97-4344-3	33B16-DP1 4/9/1997 1 - 2 D97-4344-4	33B16-DP2 4/9/1997 6 - 7 D97-4344-5	33B17-DP1 4/9/1997 3 - 4 D97-4344-6	33B17-DP2 4/9/1997 5 - 6.5 D97-4344-7
Volatile Organic Compounds		**Units**									
1,1,1-Trichloroethane	38000	mg/Kg	0.00673 U	0.00639 U	0.00655 U	0.00617 U	0.00635 U	0.00661 U	0.00635 U	0.00652 U	0.0305 DU
1,1,2-Trichloroethane	5.3	mg/Kg	0.00673 U	0.00639 U	0.00655 U	0.00617 U	0.00635 U	0.00661 U	0.00635 U	0.00652 U	0.0305 DU
1,1-Dichloroethane	17	mg/Kg	0.00673 U	0.00639 U	0.00655 U	0.00617 U	0.00635 U	0.00661 U	0.00635 U	**0.0172**	0.0305 DU
1,1-Dichloroethene	1100	mg/Kg	0.00673 U	0.00639 U	0.00655 U	0.00617 U	0.00635 U	0.00661 U	0.00635 U	0.00652 U	0.0305 DU
1,2-Dichloroethane	2.2	mg/Kg	0.00673 U	0.00639 U	0.00655 U	0.00617 U	0.00635 U	0.00661 U	0.00635 U	0.00652 U	0.0305 DU
2-Butanone	200000	mg/Kg	0.00673 U	0.00639 U	0.00655 U	0.00617 U	0.00635 U	0.00661 U	0.00635 U	0.00652 U	0.0305 DU
2-Hexanone	--	mg/Kg	0.0673 U	0.0639 U	0.0655 U	0.0617 U	0.0635 U	0.0661 U	0.0635 U	0.0652 U	0.305 DU
Acetone	630000	mg/Kg	**0.0643 J**	0.128 U	**0.0599 J**	**0.063 J**	0.127 U	**0.0528 J**	0.127 U	**0.0892 J**	**0.127 DJ**
Chloroform	1.5	mg/Kg	0.00673 U	0.00639 U	0.00655 U	0.00617 U	0.00635 U	0.00661 U	0.00635 U	0.00652 U	0.0305 DU
cis-1,2-Dichloroethene	10000	mg/Kg	**0.0832**	**0.123**	**0.0553**	**0.168**	**0.195**	**0.0316**	**0.00865**	0.00652 U	0.0305 DU
trans-1,2-Dichloroethene	690	mg/Kg	0.00673 U	0.00639 U	0.00655 U	0.00617 U	0.00635 U	0.00661 U	0.00635 U	0.00652 U	0.0305 DU
Ethylbenzene	27	mg/Kg	0.00673 U	0.00639 U	0.00655 U	0.00617 U	0.00635 U	0.00661 U	0.00635 U	0.00652 U	0.0305 DU
Methylene chloride	53	mg/Kg	0.00673 U	0.00639 U	0.00655 U	0.00617 U	0.00635 U	0.00661 U	0.00635 U	0.00652 U	0.0305 DU
Trichloroethene	14	mg/Kg	**5.07 D**	**2.31 D**	**0.577 D**	**1.01 D**	**0.404 D**	**0.202**	**0.398 D**	0.00652 U	0.0305 DU
Vinyl chloride	1.7	mg/Kg	0.00269 U	0.00255 U	0.00262 U	0.00247 U	0.00254 U	0.00264 U	0.00254 U	0.00261 U	0.0122 DU
m,p-Xylene	17000	mg/Kg	0.00673 U	0.00639 U	0.00655 U	0.00617 U	0.00635 U	0.00661 U	0.00635 U	0.00652 U	0.0305 DU
o-Xylene	19000	mg/Kg	0.00673 U	0.00639 U	0.00655 U	0.00617 U	0.00635 U	0.00661 U	0.00635 U	0.00652 U	0.0305 DU

-- Value not available.
Detections are **bold**.
Values that exceed a screening level are highlighted.
ft bgs - feet below ground surface
mg/Kg - milligrams per Kilogram

Data qualifiers are described on Table 2-1.

RSL - EPA Regional Screening Level Table (May 2010)

Table 3-2
RFI Soil Detections - Volatile Organic Compounds
SWMU 33 Nail Mill Degreasing Area
AK Steel Kansas City Facility

Parameter	EPA Industrial Soil RSL	Sample ID:	33B18-DP1	33B18-DP2	33B19-DP1	33B19-DP2	33B29A-DP1	33B29A-DP2	33B29A-DP3	33B29A-DP4	33B30A-DP1
		Date Collected:	4/9/1997	4/9/1997	4/9/1997	4/9/1997	6/4/1998	6/4/1998	6/4/1998	6/4/1998	6/4/1998
		Depth (ft bgs):	2.5 - 5	5 - 6	4 - 5	5.5 - 8	0 - 4	4 - 8	8 - 12	12 - 16	0 - 4
		Lab ID:	D97-4344-8	D97-4344-11	D97-4344-13	D97-4344-14	D98-4166-7	D98-4166-8	D98-4166-11	D98-4166-12	D98-4166-2
Volatile Organic Compounds		**Units**									
1,1,1-Trichloroethane	38000	mg/Kg	0.00641 U	0.00677 U	0.00727 U	0.0063 U	0.00635 U	0.00638 U	0.00684 U	0.00674 U	0.00633 U
1,1,2-Trichloroethane	5.3	mg/Kg	0.00641 U	0.00677 U	0.00727 U	0.0063 U	0.00635 U	0.00638 U	0.00684 U	0.00674 U	0.00633 U
1,1-Dichloroethane	17	mg/Kg	0.00641 U	0.00677 U	0.00727 U	0.0063 U	0.00635 U	0.00638 U	0.00684 U	0.00674 U	0.00633 U
1,1-Dichloroethene	1100	mg/Kg	0.00641 U	0.00677 U	0.00727 U	0.0063 U	0.00635 U	0.00638 U	0.00684 U	0.00674 U	0.00633 U
1,2-Dichloroethane	2.2	mg/Kg	0.00641 U	0.00677 U	0.00727 U	0.0063 U	0.00635 U	0.00638 U	0.00684 U	0.00674 U	0.00633 U
2-Butanone	200000	mg/Kg	0.00641 U	0.00677 U	0.00727 U	0.0063 U	**0.00509 J**	0.00638 U	0.00684 U	0.00674 U	0.00633 U
2-Hexanone	--	mg/Kg	0.0641 U	0.0677 U	0.0727 U	0.063 U	**0.0281 J**	0.0638 U	0.0684 U	0.0674 U	0.0633 U
Acetone	630000	mg/Kg	0.128 U	**0.7 D**	**0.201**	**0.0577 J**	0.127 U	0.128 U	0.137 U	0.135 U	0.127 U
Chloroform	1.5	mg/Kg	0.00641 U	0.00677 U	0.00727 U	0.0063 U	0.00635 U	0.00638 U	0.00684 U	0.00674 U	0.00633 U
cis-1,2-Dichloroethene	10000	mg/Kg	0.00641 U	0.00677 U	**0.0576**	**0.0856**	0.00635 U	0.00638 U	0.00684 U	0.00674 U	0.00633 U
trans-1,2-Dichloroethene	690	mg/Kg	0.00641 U	0.00677 U	0.00727 U	0.0063 U	0.00635 U	0.00638 U	0.00684 U	0.00674 U	0.00633 U
Ethylbenzene	27	mg/Kg	0.00641 U	0.00677 U	0.00727 U	0.0063 U	0.00635 U	0.00638 U	0.00684 U	**0.00141 J**	0.00633 U
Methylene chloride	53	mg/Kg	0.00641 U	0.00677 U	0.00727 U	0.0063 U	0.00635 U	0.00638 U	**0.00557 J**	**0.00536 J**	0.00633 U
Trichloroethene	14	mg/Kg	0.00641 U	0.00677 U	**0.0198**	0.0063 U	**0.0366**	**0.00844**	**0.0319 J***	**0.335 DJ***	**0.00675**
Vinyl chloride	1.7	mg/Kg	0.00256 U	0.00271 U	0.00291 U	0.00252 U	0.00254 U	0.00255 U	0.00274 U	0.00269 U	0.00253 U
m,p-Xylene	17000	mg/Kg	0.00641 U	0.00677 U	0.00727 U	0.0063 U	0.00635 U	0.00638 U	0.00684 U	**0.0104**	0.00633 U
o-Xylene	19000	mg/Kg	0.00641 U	0.00677 U	0.00727 U	0.0063 U	0.00635 U	0.00638 U	0.00684 U	**0.00396 J**	0.00633 U

-- Value not available.
Detections are **bold**.
Values that exceed a screening level are highlighted.
ft bgs - feet below ground surface
mg/Kg - milligrams per Kilogram

Data qualifiers are described on Table 2-1.

RSL - EPA Regional Screening Level Table (May 2010)

Table 3-2
RFI Soil Detections - Volatile Organic Compounds
SWMU 33 Nail Mill Degreasing Area
AK Steel Kansas City Facility

Parameter	EPA Industrial Soil RSL	Sample ID: / Date Collected: / Depth (ft bgs): / Lab ID:	33B30A-DP2 6/4/1998 4 - 8 D98-4166-3	33B30A-DP2D 6/4/1998 4 - 8 D98-4166-4	33B30A-DP3 6/4/1998 8 - 12 D98-4166-5	33B30A-DP4 6/4/1998 12 - 16 D98-4166-6	33MW2S-CS1 5/7/1997 1 - 5 D97-5623-2	33MW2S-CS2 5/7/1997 7 - 7.5 D97-5623-3	33MW2S-CS3 5/7/1997 14 - 15 D97-5623-4	33MW2S-CS4 5/7/1997 19 - 20 D97-5623-5
Volatile Organic Compounds		**Units**								
1,1,1-Trichloroethane	38000	mg/Kg	0.00588 U	0.00587 U	0.0062 U	0.032 DU	**0.0128**	**0.0227**	0.00745 U	0.00713 U
1,1,2-Trichloroethane	5.3	mg/Kg	0.00588 U	0.00587 U	0.0062 U	0.032 DU	**0.0107**	**0.0142**	**0.0121**	0.00713 U
1,1-Dichloroethane	17	mg/Kg	0.00588 U	0.00587 U	0.0062 U	0.032 DU	**0.0217**	**0.0228**	**0.0144**	0.00713 U
1,1-Dichloroethene	1100	mg/Kg	0.00588 U	0.00587 U	0.0062 U	0.032 DU	**0.0279**	**0.0378**	**0.0171**	**0.008**
1,2-Dichloroethane	2.2	mg/Kg	0.00588 U	0.00587 U	0.0062 U	0.032 DU	0.0062 U	0.00641 U	0.00745 U	0.00713 U
2-Butanone	200000	mg/Kg	**0.005 J**	**0.00339 J**	**0.0134 J***	0.032 DU	0.0062 U	0.00641 U	0.00745 U	0.00713 U
2-Hexanone	--	mg/Kg	0.0588 U	0.0587 U	0.062 U	0.32 DU	0.062 U	**0.0069 J**	0.0745 U	0.0713 U
Acetone	630000	mg/Kg	0.118 U	0.117 U	0.124 U	0.64 DU	0.124 U	0.128 U	0.149 U	**0.0459 J**
Chloroform	1.5	mg/Kg	0.00588 U	0.00587 U	0.0062 U	0.032 DU	0.0062 U	0.00641 U	0.00745 U	0.00713 U
cis-1,2-Dichloroethene	10000	mg/Kg	**0.114**	**0.0673 J***	**0.0185 J***	**0.0657 D**	**4.44 D**	**6.18 D**	**0.778 D**	**0.215**
trans-1,2-Dichloroethene	690	mg/Kg	0.00588 U	0.00587 U	0.0062 U	0.032 DU	**0.0456**	**0.0364**	**0.00978**	0.00713 U
Ethylbenzene	27	mg/Kg	0.00588 U	0.00587 U	0.0062 U	0.032 DU	0.0062 U	0.00641 U	0.00745 U	0.00713 U
Methylene chloride	53	mg/Kg	0.00588 U	0.00587 U	0.0062 U	**0.00843 DJ**	0.0062 U	0.00641 U	0.00745 U	0.00713 U
Trichloroethene	14	mg/Kg	**0.0383**	**0.0295 J***	**0.101 J***	**0.325 D**	**2.6 D**	**10.8 D**	**4.95 D**	**1.21 D**
Vinyl chloride	1.7	mg/Kg	0.00235 U	0.00235 U	0.00248 U	0.0128 DU	**0.195**	**0.132**	0.00298 U	0.00285 U
m,p-Xylene	17000	mg/Kg	0.00588 U	0.00587 U	0.0062 U	0.032 DU	0.0062 U	0.00641 U	0.00745 U	0.00713 U
o-Xylene	19000	mg/Kg	0.00588 U	0.00587 U	0.0062 U	0.032 DU	0.0062 U	0.00641 U	0.00745 U	0.00713 U

-- Value not available.
Detections are **bold**.
Values that exceed a screening level are highlighted.
ft bgs - feet below ground surface
mg/Kg - milligrams per Kilogram

Data qualifiers are described on Table 2-1.

RSL - EPA Regional Screening Level Table (May 2010)

Table 3-3
2010 Soil Samples
SWMU 33 Nail Mill Degreasing Area
AK Steel Kansas City Facility

Sample Point	Sample Designator	Date collected	Depth (ft bgs)	Laboratory Number VOC SW-846 8260B	Laboratory Number SPLP VOC SW-846 1312/8260B	Comments
33B101	SB1	5/11/2010	2 - 4	21005134801	21005134901	
33B101	SB2	5/11/2010	4 - 6	21005134802	21005134902	
33B101	SB3	5/11/2010	6 - 8	21005134803	21005134903	
33B102	SB1	5/11/2010	2 - 4	21005134804	21005134904	
33B102	SB2			Not Collected	Not Collected	No Recovery
33B102	SB3	5/11/2010	6 - 8	21005134805	21005134905	MS/MSD
33B103	SB1	5/11/2010	2 - 4	21005134808	21005134908	
33B103	SB1D	5/11/2010	2 - 4	21005134809	21005134909	Field Duplicate
33B103	SB2	5/11/2010	4 - 6	21005134810	21005134910	
33B103	SB3	5/11/2010	6 - 8	21005134811	21005134911	
33B104	SB1	5/11/2010	2 - 4	21005134812	21005134912	
33B104	SB2	5/11/2010	4 - 6	21005134813	21005134913	
33B104	SB2D	5/11/2010	4 - 6	21005134814	21005134914	Field Duplicate
33B104	SB3	5/11/2010	6 - 8	21005134815	21005134915	
33B105	SB1	5/11/2010	2 - 4	21005134816	21005134916	
33B105	SB2	5/11/2010	4 - 6	21005134817	21005134917	
33B105	SB3	5/11/2010	6 - 8	21005134818	21005134918	
33B106	SB1	5/11/2010	2 - 4	21005134819	21005134919	
33B106	SB2	5/11/2010	4 - 6	21005134820	21005134920	
33B106	SB3	5/11/2010	6 - 8	21005134821	21005134921	
33B107	SB1	5/11/2010	2 - 4	21005134822	21005134922	
33B107	SB2	5/11/2010	4 - 6	21005134823	21005134923	
33B107	SB3	5/11/2010	6 - 8	21005134824	21005134924	
33B108	SB1	5/11/2010	2 - 4	21005134825	21005134925	MS/MSD
33B108	SB2			Not Collected	Not Collected	No Recovery
33B108	SB3	5/11/2010	6 - 8	21005134828	21005134928	
33B109	SB1	5/11/2010	2 - 4	21005134829	21005134929	
33B109	SB2	5/11/2010	4 - 6	21005134830	21005134930	
33B109	SB3	5/11/2010	6 - 8	21005134831	21005134931	
33B109	SB3D	5/11/2010	6 - 8	21005134832	21005134932	Field Duplicate
33B110	SB1	5/11/2010	2 - 4	21005134833	21005134933	
33B110	SB2	5/11/2010	4 - 6	21005134834	21005134934	
33B110	SB3	5/11/2010	6 - 8	21005134835	21005134935	
33B111	SB1	5/11/2010	2 - 4	21005134836	21005134936	
33B111	SB2	5/11/2010	4 - 6	21005134837	21005134937	
33B111	SB3	5/11/2010	6 - 8	21005134838	21005134938	
33B112	SB1	5/12/2010	2 - 4	21005134839	21005134939	
33B112	SB1D	5/12/2010	2 - 4	21005134840	21005134940	Field Duplicate
33B112	SB2	5/12/2010	4 - 6	21005134841	21005134941	
33B112	SB3	5/12/2010	6 - 8	21005134842	21005134942	
33B113	SB1	5/11/2010	2 - 4	21005134843	21005134943	
33B113	SB2	5/11/2010	4 - 6	21005134844	21005134944	
33B113	SB3	5/11/2010	6 - 8	21005134845	21005134945	
33B114	SB1	5/12/2010	2 - 4	21005134846	21005134946	
33B114	SB2	5/12/2010	4 - 6	21005134847	21005134947	
33B114	SB3	5/12/2010	6 - 8	21005134848	21005134948	

ft bgs - feet below ground surface
MS/MSD - matrix spike/matrix spike duplicate
SPLP - synthetic precipitation leaching procedure
VOC - volatile organic compound

Table 3-4
2010 Soil Detections - Volatile Organic Compounds
SWMU 33 Nail Mill Degreasing Area
AK Steel Kansas City Facility

Parameter	Screening Level	Sample ID Lab Number Depth (ft bgs) Date	33B101/SB1 21005134801 21005134901 2-4 5/11/2010	33B101/SB2 21005134802 21005134902 4-6 5/11/2010	33B101/SB3 21005134803 21005134903 6-8 5/11/2010	33B102/SB1 21005134804 21005134904 2-4 5/11/2010	33B102/SB3 21005134805 21005134905 6-8 5/11/2010	33B103/SB1 21005134808 21005134908 2-4 5/11/2010	33B103/SB1D 21005134809 21005134909 2-4 5/11/2010
VOCs	**EPA RSL for Industrial Soil**	Units							
2-Butanone	200,000	mg/kg	0.004 U	0.004 U	0.220 U	0.230 U	0.220 U	0.004 U	0.005 U
Acetone	630,000	mg/kg	0.022 U	0.022 U	1.100 U	1.200 U	1.100 U	0.021 U	0.023 U
cis-1,2-Dichloroethene	10,000	mg/kg	0.004 U	0.004 U	**1.880**	**1.100**	0.220 U	**0.0955**	**0.0915**
trans-1,2-Dichloroethene	690	mg/kg	0.004 U	0.004 U	0.220 U	0.230 U	0.220 U	**0.00503**	0.005 U
Trichloroethene	14	mg/kg	**0.0184 J**	**0.0102**	0.220 U	**0.281**	**0.238 J**	**0.00876**	**0.00914**
Vinyl chloride	1.7	mg/kg	0.004 U	0.004 U	0.220 U	0.230 U	0.220 U	**0.0051**	**0.00466 J**
SPLP VOCs	**SDWA MCL**	Units							
cis-1,2-Dichloroethene	70	µg/L	5 U	5 U	5 U	5 U	5 U	5 U	5 U
Trichloroethene	5	µg/L	5 U	5 U	5 U	5 U	5 U	5 U	5 U

Detections are **bold**.
Values that exceed a screening level are highlighted.
ft bgs - feet below ground surface
mg/Kg - milligrams per Kilogram
µg/L - micrograms per liter
SPLP - Synthetic Precipitation Leaching Procedure
VOC - Volatile Organic Compound

Data qualifiers are described on Table 2-1.

RSL - EPA Regional Screening Level Table (May, 2010)
SDWA MCL - Safe Drinking Water Act Maximum Contaminant Level (May, 2009)

Table 3-4
2010 Soil Detections - Volatile Organic Compounds
SWMU 33 Nail Mill Degreasing Area
AK Steel Kansas City Facility

Parameter	Screening Level	Sample ID Lab Number Depth (ft bgs) Date	33B103/SB2 21005134810 21005134910 4-6 5/11/2010	33B103/SB3 21005134811 21005134911 6-8 5/11/2010	33B104/SB1 21005134812 21005134912 2-4 5/11/2010	33B104/SB2 21005134813 21005134913 4-6 5/11/2010	33B104/SB2D 21005134814 21005134914 4-6 5/11/2010	33B104/SB3 21005134815 21005134915 6-8 5/11/2010	33B105/SB1 21005134816 21005134916 2-4 5/11/2010
VOCs	**EPA RSL for Industrial Soil**	Units							
2-Butanone	200,000	mg/kg	0.210 U	0.210 U	0.200 U	0.260 U	0.210 U	0.230 U	1.000 U
Acetone	630,000	mg/kg	1.100 U	1.100 U	0.980 U	1.300 U	1.100 U	1.100 U	5.200 U
cis-1,2-Dichloroethene	10,000	mg/kg	0.210 U	0.210 U	0.200 U	0.260 U	0.210 U	0.230 U	**8.910**
trans-1,2-Dichloroethene	690	mg/kg	0.210 U	0.210 U	0.200 U	0.260 U	0.210 U	0.230 U	1.000 U
Trichloroethene	14	mg/kg	0.210 U	0.210 U	**0.199**	0.260 U	**0.239**	**0.291**	**25.300**
Vinyl chloride	1.7	mg/kg	0.210 U	0.210 U	0.200 U	0.260 U	0.210 U	0.230 U	1.000 U
SPLP VOCs	**SDWA MCL**	Units							
cis-1,2-Dichloroethene	70	µg/L	5 U	5 U	5 U	5 U	5 U	5 U	**24**
Trichloroethene	5	µg/L	5 U	5 U	5 U	5 U	5 U	5 U	**18.8**

Detections are **bold**.
Values that exceed a screening level are highlighted.
ft bgs - feet below ground surface
mg/Kg - milligrams per Kilogram
µg/L - micrograms per liter
SPLP - Synthetic Precipitation Leaching Procedure
VOC - Volatile Organic Compound

Data qualifiers are described on Table 2-1.

RSL - EPA Regional Screening Level Table (May, 2010)
SDWA MCL - Safe Drinking Water Act Maximum Contaminant Level (May, 2009)

Table 3-4
2010 Soil Detections - Volatile Organic Compounds
SWMU 33 Nail Mill Degreasing Area
AK Steel Kansas City Facility

Parameter	Screening Level	Sample ID Lab Number Depth (ft bgs) Date	33B105/SB2 21005134817 21005134917 4-6 5/11/2010	33B105/SB3 21005134818 21005134918 6-8 5/11/2010	33B106/SB1 21005134819 21005134919 2-4 5/11/2010	33B106/SB2 21005134820 21005134920 4-6 5/11/2010	33B106/SB3 21005134821 21005134921 6-8 5/11/2010	33B107/SB1 21005134822 21005134922 2-4 5/11/2010	33B107/SB2 21005134823 21005134923 4-6 5/11/2010
VOCs	**EPA RSL for Industrial Soil**	Units							
2-Butanone	200,000	mg/kg	2.100 U	2.100 U	0.210 U	0.210 U	0.220 U	0.490 U	0.240 U
Acetone	630,000	mg/kg	10.000 U	11.000 U	1.000 U	1.100 U	1.100 U	2.500 U	1.200 U
cis-1,2-Dichloroethene	10,000	mg/kg	**8.810**	**15.600**	0.210 U	0.210 U	0.220 U	**1.480**	**1.480**
trans-1,2-Dichloroethene	690	mg/kg	2.100 U	2.100 U	0.210 U	0.210 U	0.220 U	0.490 U	0.240 U
Trichloroethene	14	mg/kg	**26.700**	**42.800**	**0.349**	**0.289**	**0.235**	**7.800**	**5.620**
Vinyl chloride	1.7	mg/kg	2.100 U	2.100 U	0.210 U	0.210 U	0.220 U	0.490 U	0.240 U
SPLP VOCs	**SDWA MCL**	Units							
cis-1,2-Dichloroethene	70	µg/L	**28.1**	5 U	5 U	5 U	5 U	**6.98**	**7.69**
Trichloroethene	5	µg/L	**19.2**	5 U	5 U	5 U	5 U	**9.88**	**7.49**

Detections are **bold**.
Values that exceed a screening level are highlighted.
ft bgs - feet below ground surface
mg/Kg - milligrams per Kilogram
µg/L - micrograms per liter
SPLP - Synthetic Precipitation Leaching Procedure
VOC - Volatile Organic Compound

Data qualifiers are described on Table 2-1.

RSL - EPA Regional Screening Level Table (May, 2010)
SDWA MCL - Safe Drinking Water Act Maximum Contaminant Level (May, 2009)

Table 3-4
2010 Soil Detections - Volatile Organic Compounds
SWMU 33 Nail Mill Degreasing Area
AK Steel Kansas City Facility

Parameter	Screening Level	Sample ID Lab Number Depth (ft bgs) Date	33B107/SB3 21005134824 21005134924 6-8 5/11/2010	33B108/SB1 21005134825 21005134925 2-4 5/11/2010	33B108/SB3 21005134828 21005134928 6-8 5/11/2010	33B109/SB1 21005134829 21005134929 2-4 5/11/2010	33B109/SB2 21005134830 21005134930 4-6 5/11/2010	33B109/SB3 21005134831 21005134931 6-8 5/11/2010	33B109/SB3D 21005134832 21005134932 6-8 5/11/2010
VOCs	**EPA RSL for Industrial Soil**	Units							
2-Butanone	200,000	mg/kg	0.210 U	**0.00997 J**	0.004 U	0.250 U	0.250 U	0.220 U	0.220 U
Acetone	630,000	mg/kg	1.000 U	**0.0527 J**	0.022 U	1.200 U	1.200 U	1.100 U	1.100 U
cis-1,2-Dichloroethene	10,000	mg/kg	**1.120**	0.004 U	0.004 U	**0.315**	**0.598**	**0.471**	**0.515**
trans-1,2-Dichloroethene	690	mg/kg	0.210 U	0.004 U	0.004 U	0.250 U	0.250 U	0.220 U	0.220 U
Trichloroethene	14	mg/kg	**4.860**	**0.0399 J**	**0.0129**	**1.010**	**2.580**	**1.440**	**1.610**
Vinyl chloride	1.7	mg/kg	0.210 U	0.004 UJ	0.004 U	0.250 U	0.250 U	0.220 U	0.220 U
SPLP VOCs	**SDWA MCL**	Units							
cis-1,2-Dichloroethene	70	µg/L	5 U	5 U	5 U	5 U	5 U	5 U	5 U
Trichloroethene	5	µg/L	5 U	5 U	5 U	5 U	5 U	5 U	5 U

Detections are **bold**.
Values that exceed a screening level are highlighted.
ft bgs - feet below ground surface
mg/Kg - milligrams per Kilogram
µg/L - micrograms per liter
SPLP - Synthetic Precipitation Leaching Procedure
VOC - Volatile Organic Compound

Data qualifiers are described on Table 2-1.

RSL - EPA Regional Screening Level Table (May, 2010)
SDWA MCL - Safe Drinking Water Act Maximum Contaminant Level (May, 2009)

Table 3-4
2010 Soil Detections - Volatile Organic Compounds
SWMU 33 Nail Mill Degreasing Area
AK Steel Kansas City Facility

Parameter	Screening Level	Sample ID Lab Number Depth (ft bgs) Date	33B110/SB1 21005134833 21005134933 2-4 5/11/2010	33B110/SB2 21005134834 21005134934 4-6 5/11/2010	33B110/SB3 21005134835 21005134935 6-8 5/11/2010	33B111/SB1 21005134836 21005134936 2-4 5/11/2010	33B111/SB2 21005134837 21005134937 4-6 5/11/2010	33B111/SB3 21005134838 21005134938 6-8 5/11/2010	33B112/SB1 21005134839 21005134939 2-4 5/12/2010
VOCs	**EPA RSL for Industrial Soil**	Units							
2-Butanone	200,000	mg/kg	0.210 U	0.210 U	0.220 U	0.004 U	0.004 U	0.005 U	0.004 U
Acetone	630,000	mg/kg	1.000 U	1.000 U	1.100 U	0.022 U	0.021 U	0.024 U	0.022 U
cis-1,2-Dichloroethene	10,000	mg/kg	0.210 U	0.210 U	0.220 U	0.004 U	0.004 U	0.005 U	0.004 U
trans-1,2-Dichloroethene	690	mg/kg	0.210 U	0.210 U	0.220 U	0.004 U	0.004 U	0.005 U	0.004 U
Trichloroethene	14	mg/kg	**0.361**	**0.294**	**0.318**	0.004 U	0.004 U	0.005 U	0.004 U
Vinyl chloride	1.7	mg/kg	0.210 U	0.210 U	0.220 U	0.004 U	0.004 U	0.005 U	0.004 U
SPLP VOCs	**SDWA MCL**	Units							
cis-1,2-Dichloroethene	70	µg/L	5 U	5 U	5 U	5 U	5 U	5 U	5 U
Trichloroethene	5	µg/L	5 U	5 U	5 U	5 U	5 U	5 U	5 U

Detections are **bold**.
Values that exceed a screening level are highlighted.
ft bgs - feet below ground surface
mg/Kg - milligrams per Kilogram
µg/L - micrograms per liter
SPLP - Synthetic Precipitation Leaching Procedure
VOC - Volatile Organic Compound

Data qualifiers are described on Table 2-1.

RSL - EPA Regional Screening Level Table (May, 2010)
SDWA MCL - Safe Drinking Water Act Maximum Contaminant Level (May, 2009)

Table 3-4
2010 Soil Detections - Volatile Organic Compounds
SWMU 33 Nail Mill Degreasing Area
AK Steel Kansas City Facility

Parameter	Screening Level	Sample ID Lab Number Depth (ft bgs) Date	33B112/SB1D 21005134840 21005134940 2-4 5/12/2010	33B112/SB2 21005134841 21005134941 4-6 5/12/2010	33B112/SB3 21005134842 21005134942 6-8 5/12/2010	33B113/SB1 21005134843 21005134943 2-4 5/11/2010	33B113/SB2 21005134844 21005134944 4-6 5/11/2010	33B113/SB3 21005134845 21005134945 6-8 5/11/2010	33B114/SB1 21005134846 21005134946 2-4 5/12/2010
VOCs	**EPA RSL for Industrial Soil**	Units							
2-Butanone	200,000	mg/kg	0.004 U	0.006 U	0.004 U	0.004 U	0.004 U	0.004 U	**0.00535**
Acetone	630,000	mg/kg	0.020 U	0.030 U	0.022 U	0.022 U	0.022 U	0.020 U	**0.0357**
cis-1,2-Dichloroethene	10,000	mg/kg	0.004 U	0.006 U	0.004 U	0.004 U	0.004 U	0.004 U	0.005 U
trans-1,2-Dichloroethene	690	mg/kg	0.004 U	0.006 U	0.004 U	0.004 U	0.004 U	0.004 U	0.005 U
Trichloroethene	14	mg/kg	0.004 U	**0.00601**	0.004 U	**0.0982**	**0.105**	**0.0694**	0.005 U
Vinyl chloride	1.7	mg/kg	0.004 U	0.006 U	0.004 U	0.004 U	0.004 U	0.004 U	0.005 U
SPLP VOCs	**SDWA MCL**	Units							
cis-1,2-Dichloroethene	70	µg/L	5 U	5 U	5 U	5 U	5 U	5 U	5 U
Trichloroethene	5	µg/L	5 U	5 U	5 U	5 U	5 U	5 U	5 U

Detections are **bold**.
Values that exceed a screening level are highlighted.
ft bgs - feet below ground surface
mg/Kg - milligrams per Kilogram
µg/L - micrograms per liter
SPLP - Synthetic Precipitation Leaching Procedure
VOC - Volatile Organic Compound

Data qualifiers are described on Table 2-1.

RSL - EPA Regional Screening Level Table (May, 2010)
SDWA MCL - Safe Drinking Water Act Maximum Contaminant Level (May, 2009)

Table 3-4
2010 Soil Detections - Volatile Organic Compounds
SWMU 33 Nail Mill Degreasing Area
AK Steel Kansas City Facility

Parameter	Screening Level	Sample ID Lab Number Depth (ft bgs) Date	33B114/SB2 21005134847 21005134947 4-6 5/12/2010	33B114/SB3 21005134848 21005134948 6-8 5/12/2010
VOCs	**EPA RSL for Industrial Soil**	Units		
2-Butanone	200,000	mg/kg	0.005 U	0.004 U
Acetone	630,000	mg/kg	0.026 U	0.021 U
cis-1,2-Dichloroethene	10,000	mg/kg	0.005 U	0.004 U
trans-1,2-Dichloroethene	690	mg/kg	0.005 U	0.004 U
Trichloroethene	14	mg/kg	0.005 U	0.004 U
Vinyl chloride	1.7	mg/kg	0.005 U	0.004 U
SPLP VOCs	**SDWA MCL**	Units		
cis-1,2-Dichloroethene	70	µg/L	5 U	5 U
Trichloroethene	5	µg/L	5 U	5 U

Detections are **bold**.
Values that exceed a screening level are highlighted.
ft bgs - feet below ground surface
mg/Kg - milligrams per Kilogram
µg/L - micrograms per liter
SPLP - Synthetic Precipitation Leaching Procedure
VOC - Volatile Organic Compound

Data qualifiers are described on Table 2-1.

RSL - EPA Regional Screening Level Table (May, 2010)
SDWA MCL - Safe Drinking Water Act Maximum Contaminant Level (May, 2009)

Table 3-5
Soil Results for TCE - 2010 Investigation vs. RFI
SWMU 33 Nail Mill Degreasing Area
AK Steel Kansas City Facility

2010 Investigation			RFI					
Boring	Depth	TCE	Boring	Depth	TCE	Boring	Depth	TCE
33B101	2-4	0.0184	33B06	1.6-2.6	0.297	--	--	--
	4-6	0.0102		--	--			
	6-8	ND (0.22)		6-7	0.296 D			
	--	--		9-10	0.261 D			
33B105	2-4	25.3	33B01	1-5	8.1 D	33B02	1-5	3.29 D
	4-6	26.7		5-9	19.8 D		5-9	12.4 D
	6-8	42.8		--	--		--	--
	--	--		9-13	8.26 D		9-13	6.73 D
33B106	2-4	0.349	33B15	1.5-2.5	0.577 D	33B19	--	--
	4-6	0.289		--	--		4-5	0.0198
	6-8	0.235		6.5-75	1.01 D		5.5-8	ND (0.0063)
	--	--		9.5-10.5	0.404 D		--	--
33B107	2-4	7.8	33B14	2.1-3.1	5.07 D	--	--	--
	4-6	5.62		5-6	2.31 D			
	6-8	4.86		--	--			
33B113	2-4	0.0982	33B29A	0-4	0.0366	--	--	--
	4-6	0.105		4-8	0.00844			
	6-8	0.0694		--	--			
	--	--		8-12	0.0319			
	--	--		12-16	0.335 D			

-- Not Applicable
The 2010 sample location is provided on the left side of the table. The closest corresponding RFI sampling location(s) is shown on the right for comparison.

Depth is in feet below ground surface.
Results are in milligrams per kilogram.

TCE - Trichloroethene
RFI - RCRA Facility Investigation
ND - Not Detected. Reporting limit is in parenthesis.

Data Qualifiers are described on Table 2-1.

Table 3-6
Soil Results for cis-1,2-DCE - 2010 Investigation vs. RFI
SWMU 33 Nail Mill Degreasing Area
AK Steel Kansas City Facility

2010 Investigation			RFI					
Boring	Depth	cis-1,2-DCE	Boring	Depth	cis-1,2-DCE	Boring	Depth	cis-1,2-DCE
33B101	2-4	ND (0.004)	33B06	1.6-2.6	0.024	--	--	--
	4-6	ND (0.004)		--	--			
	6-8	1.88		6-7	0.112			
	--	--		9-10	0.111			
33B105	2-4	8.91	33B01	1-5	2.57 D	33B02	1-5	1.7 D
	4-6	8.81		5-9	4.51 D		5-9	5.07 D
	6-8	15.6		--	--		--	--
	--	--		9-13	1.44 D		9-13	1.75 D
33B106	2-4	ND (0.21)	33B15	1.5-2.5	0.0553	33B19	--	--
	4-6	ND (0.21)		--	--		4-5	0.0576
	6-8	ND (0.22)		6.5-75	0.168		5.5-8	0.0856
	--	--		9.5-10.5	0.195		--	--
33B107	2-4	1.48	33B14	2.1-3.1	0.0832	--	--	--
	4-6	1.48		5-6	0.123			
	6-8	1.12		--	--			
33B113	2-4	ND (0.004)	33B29A	0-4	ND (0.00635)	--	--	--
	4-6	ND (0.004)		4-8	ND (0.00638)			
	6-8	ND (0.004)		--	--			
	--	--		8-12	ND (0.00684)			
	--	--		12-16	ND (0.00674)			

-- Not Applicable
The 2010 sample location is provided on the left side of the table. The closest corresponding RFI sampling location(s) is shown on the right for comparison.

Depth is in feet below ground surface.
Results are in milligrams per kilogram.

cis-1,2-DCE - cis-1,2-Dichloroethene
RFI - RCRA Facility Investigation
ND - Not Detected. Reporting limit is in parenthesis.

Data Qualifiers are described on Table 2-1.

Table 4-1
Comparison of Pilot Study Alternatives
SWMU 33 Nail Mill Degreasing Area
AK Steel Kansas City Facility

Alternative	Evaluation Criteria								
	Threshold Criteria				Balancing Criteria				
	Protection of Human Health & the Environment Ideal Good Adequate Unfeasible	**Attainment of Media Cleanup Standards** Ideal Good Adequate Unfeasible	**Control Source of Release** Ideal Adequate Unfeasible	**Compliance with Applicable Standards for Waste Management** Ideal Adequate Unfeasible	**Long-Term Reliability and Effectiveness** Ideal Good Adequate Poor Unfeasible	**Reduction of Toxicity, Mobility, or Volume** Ideal Adequate Unfeasible	**Short-Term Effectiveness** Ideal Good Adequate Poor Unfeasible	**Implementability** Ideal Good Adequate Poor Unfeasible	**Economic Feasibility** Ideal Good Adequate Poor Unfeasible
1 Soil Vapor Extraction	Good to Ideal	Good to Ideal	Adequate to Ideal	Adequate to Ideal	Good	Adequate to Ideal	Adequate to Good	Adequate to Good	Good to Ideal
2 Excavation and Off-Site Disposal	Good to Ideal	Good to Ideal	Adequate to Ideal	Adequate to Ideal	Good to Ideal	Adequate to Ideal	Good to Ideal	Good to Ideal	Unfeasible to Poor
3 Excavation and On-Site Landfarming	Adequate to Good	Good to Ideal	Adequate to Ideal	Adequate	Good to Ideal	Adequate to Ideal	Adequate to Good	Adequate to Good	Adequate to Good
4 In-Situ Thermal Treament	Good to Ideal	Good to Ideal	Adequate to Ideal	Adequate to Ideal	Good	Adequate to Ideal	Adequate to Good	Adequate to Good	Poor to Adequate

Table 4-2
Summary of Data Collection Parameters, Instrumentation, Frequency and Locations
SVE Pilot Test

Parameter	Measurement / Collection Device	Sampling Location	Frequency
Extraction Flow Rate	In-line Flow Meter	SVE Intake Manifold	Approximately every 5 min during start of test and up to 60 min near end of test
SVE Vacuum Pressure	Vacuum Gauge	SVE Intake Manifold	Approximately every 5 min during start of test and up to 60 min near end of test
SVE Vacuum Pressure	Vacuum Gauge	Extraction Wellhead	Approximately every 5 min during start of test and up to 60 min near end of test
Influent Temperature	Temperature Gauge	SVE Intake Manifold	Approximately every 5 min during start of test and up to 60 min near end of test
Influent VOC Concentration	PID	SVE Intake Manifold	Approximately every 5 min during start of test and up to 60 min near end of test
Influent VOC Concentration	Summa® Canister	SVE Intake Manifold	Once for each vacuum step test
Influent Soil Gas Concentrations (CO_2, and O_2)	CO_2/O_2 Meter	SVE Intake Manifold	Approximately every 5 min during start of test and up to 60 min near end of test
Differential Pressure	Digital Manometer or Magnehelic® Gauge	Monitoring Point Wellheads	Approximately every 5 min during start of test and up to 60 min near end of test
Well Headspace Soil Gas Concentrations (VOCs, CO_2, and O_2)	PID and CO_2/O_2 Meter	Monitoring Point Wellheads	Prior to initiation of test and after completion of test

Notes:
- All gauges and instruments will be properly zeroed and/or calibrated, if necessary, before each test.
- The data collection frequency may be adjusted depending upon the length of each test and field observations.

FIGURES

COPYRIGHT © 2 URNS & McDONNELL ENGINEERING COMPANY, INC.

LEGEND:

AK STEEL PROPERTY BOUNDARY

NORTH

0 2000' 4000'

SCALE IN FEET

Burns & McDonnell
SINCE 1898

Figure 1-1

FACILITY LOCATION MAP
AK STEEL
KANSAS CITY, MISSOURI

C:\DRAWING1.DWG 11-25-2008 11:06 KSCHUTTE

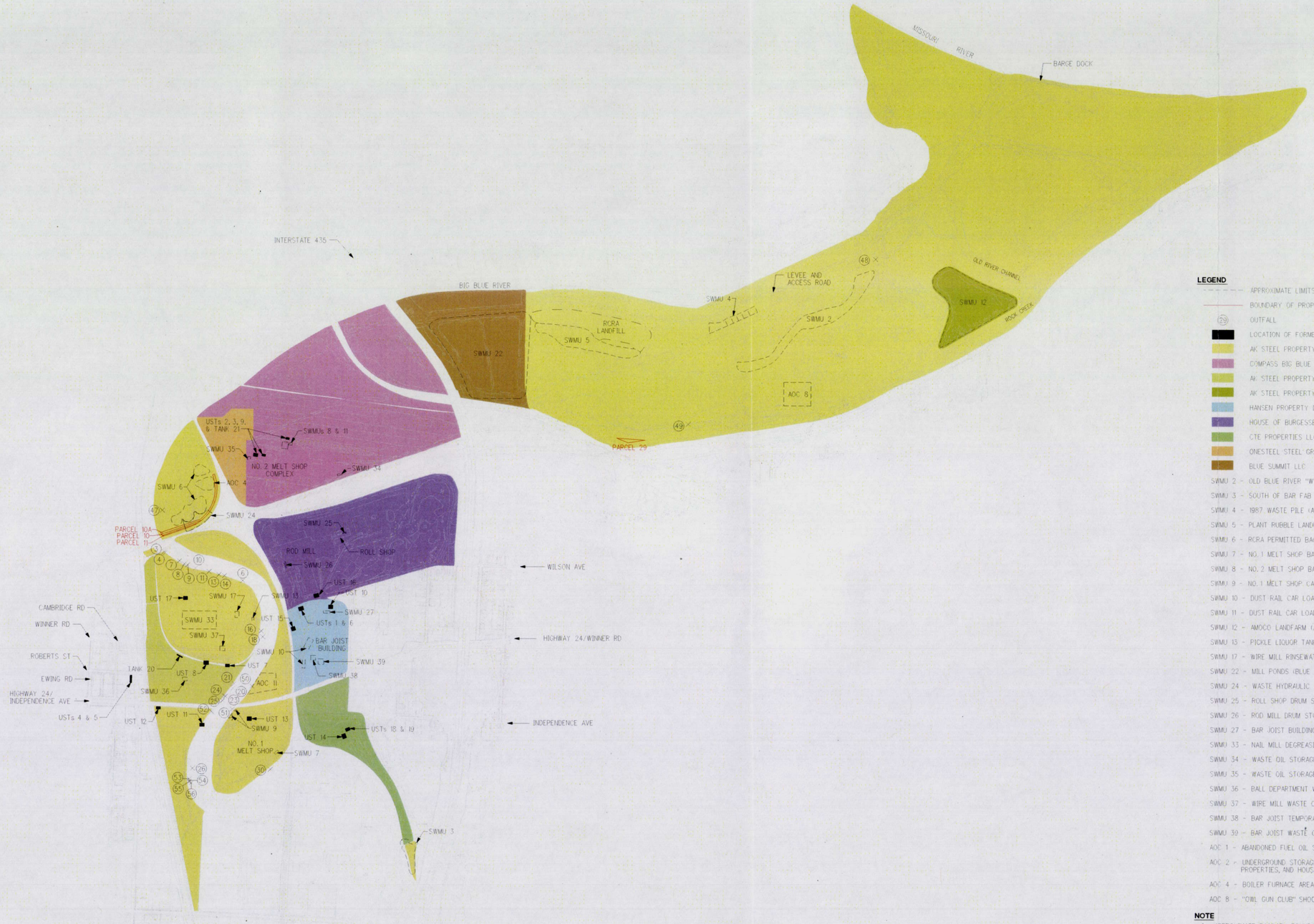

LEGEND

- APPROXIMATE LIMITS OF SWMU OR AOC AREA
- BOUNDARY OF PROPERTY SOLD TO KC TERMINAL RAILROAD
- (29) OUTFALL
- LOCATION OF FORMER USTs BELONGING TO AOC 2
- AK STEEL PROPERTY
- COMPASS BIG BLUE LLC PROPERTY (FORMERLY GST)
- AK STEEL PROPERTY FORMERLY LEASED TO GST
- AK STEEL PROPERTY FORMERLY LEASED TO AMOCO
- HANSEN PROPERTY DEVELOPMENT, INC.
- HOUSE OF BURGESSES LLC PROPERTY (FORMERLY GST)
- CTE PROPERTIES LLC PROPERTY (FORMERLY GST)
- ONESTEEL STEEL GRINDING SYSTEMS LLC PROPERTY (FORMERLY GST)
- BLUE SUMMIT LLC

SWMU 2 - OLD BLUE RIVER "W" LANDFILL (AK STEEL PROPERTY)
SWMU 3 - SOUTH OF BAR FAB LANDFILL (AK STEEL PROPERTY)
SWMU 4 - 1987 WASTE PILE (AK STEEL PROPERTY)
SWMU 5 - PLANT RUBBLE LANDFILL (AK STEEL PROPERTY)
SWMU 6 - RCRA PERMITTED BAGHOUSE DUST STORAGE TANKS (AK STEEL PROPERTY)
SWMU 7 - NO. 1 MELT SHOP BAGHOUSE DUST TANK (AK STEEL PROPERTY)
SWMU 8 - NO. 2 MELT SHOP BAGHOUSE DUST TANK (COMPASS PROPERTY)
SWMU 9 - NO. 1 MELT SHOP CANOPY BAGHOUSE DUST CONVEYOR (AK STEEL PROPERTY)
SWMU 10 - DUST RAIL CAR LOADING AREA - BAR JOIST BUILDING (HANSEN PROPERTY)
SWMU 11 - DUST RAIL CAR LOADING AREA - NO. 2 MELT SHOP (COMPASS PROPERTY)
SWMU 12 - AMOCO LANDFARM (AK STEEL PROPERTY, AMOCO LEASED 1973 TO 1980)
SWMU 13 - PICKLE LIQUOR TANKS (AK STEEL PROPERTY)
SWMU 17 - WIRE MILL RINSEWATER NEUTRALIZATION TANK (AK STEEL PROPERTY)
SWMU 22 - MILL PONDS (BLUE SUMMIT PROPERTY)
SWMU 24 - WASTE HYDRAULIC AND LUBRICATING OIL STORAGE TANKS (AK STEEL PROPERTY)
SWMU 25 - ROLL SHOP DRUM STORAGE AREA (HOUSE OF BURGESSES PROPERTY)
SWMU 26 - ROD MILL DRUM STORAGE AREA (HOUSE OF BURGESSES PROPERTY)
SWMU 27 - BAR JOIST BUILDING HAZARDOUS WASTE STORAGE AREA (HANSEN PROPERTY)
SWMU 33 - NAIL MILL DEGREASING AREA (AK STEEL PROPERTY)
SWMU 34 - WASTE OIL STORAGE AREA EAST OF GST's NO. 2 MELT SHOP (COMPASS PROPERTY)
SWMU 35 - WASTE OIL STORAGE AREA ON NORTH SIDE OF GST's 19" MILL (COMPASS PROPERTY)
SWMU 36 - BALL DEPARTMENT WASTE OIL STORAGE AREA (AK STEEL PROPERTY, FORMERLY GST LEASED)
SWMU 37 - WIRE MILL WASTE OIL STORAGE AREA (AK STEEL PROPERTY)
SWMU 38 - BAR JOIST TEMPORARY GREASE STORAGE AREA (HANSEN PROPERTY)
SWMU 39 - BAR JOIST WASTE OIL AND GREASE STORAGE AREA (HANSEN PROPERTY)
AOC 1 - ABANDONED FUEL OIL STORAGE TANK (AK STEEL PROPERTY)
AOC 2 - UNDERGROUND STORAGE TANKS (USTs) (AK STEEL, COMPASS, HANSEN, CTE PROPERTIES, AND HOUSE OF BURGESSES LLC PROPERTIES)
AOC 4 - BOILER FURNACE AREA (AK STEEL PROPERTY)
AOC 8 - "OWL GUN CLUB" SHOOTING PARK (AK STEEL PROPERTY)

NOTE

1. APPROXIMATE FACILITY BOUNDARY, AS DEFINED IN PERMIT, IS SHOWN. AS INDICATED, PORTIONS OF THE FACILITY ARE NO LONGER OWNED BY AK STEEL.

NORTH

500' 0 500' 1000'
SCALE IN FEET

Burns & McDonnell

Figure 1-2
FACILITY MAP

AK STEEL KANSAS CITY FACILITY

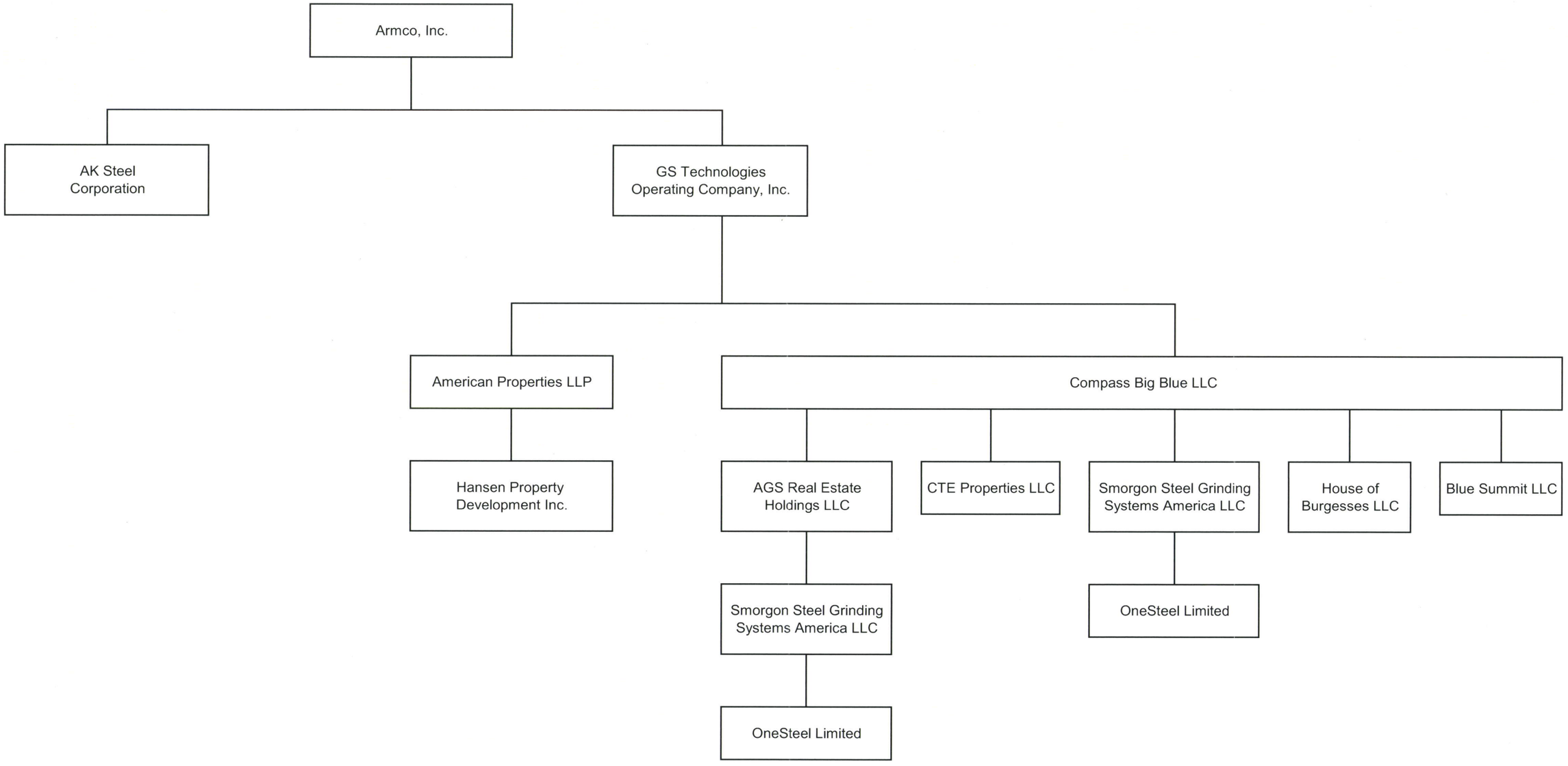

Note: Ownership based on search of Jackson County, Missouri online public records (http://records.co.jackson.mo.us/localization/menu.asp).
Most recent Warranty Deed was dated December 30, 2008 (Blue Summit LLC).
American Grinding Systems (AGS) was sold to Smorgon Steel in October 2004, and Smorgon Steel merged with OneSteel Limited in August 2007.

Burns & McDonnell
SINCE 1898

Figure 1-3

Ownership Status

AK Steel Kansas City Facility

K:\ENV\AK STEEL\Site\54200\Deliver\Soil Investigation Report\Figure 1-3_Ownership Status.xls

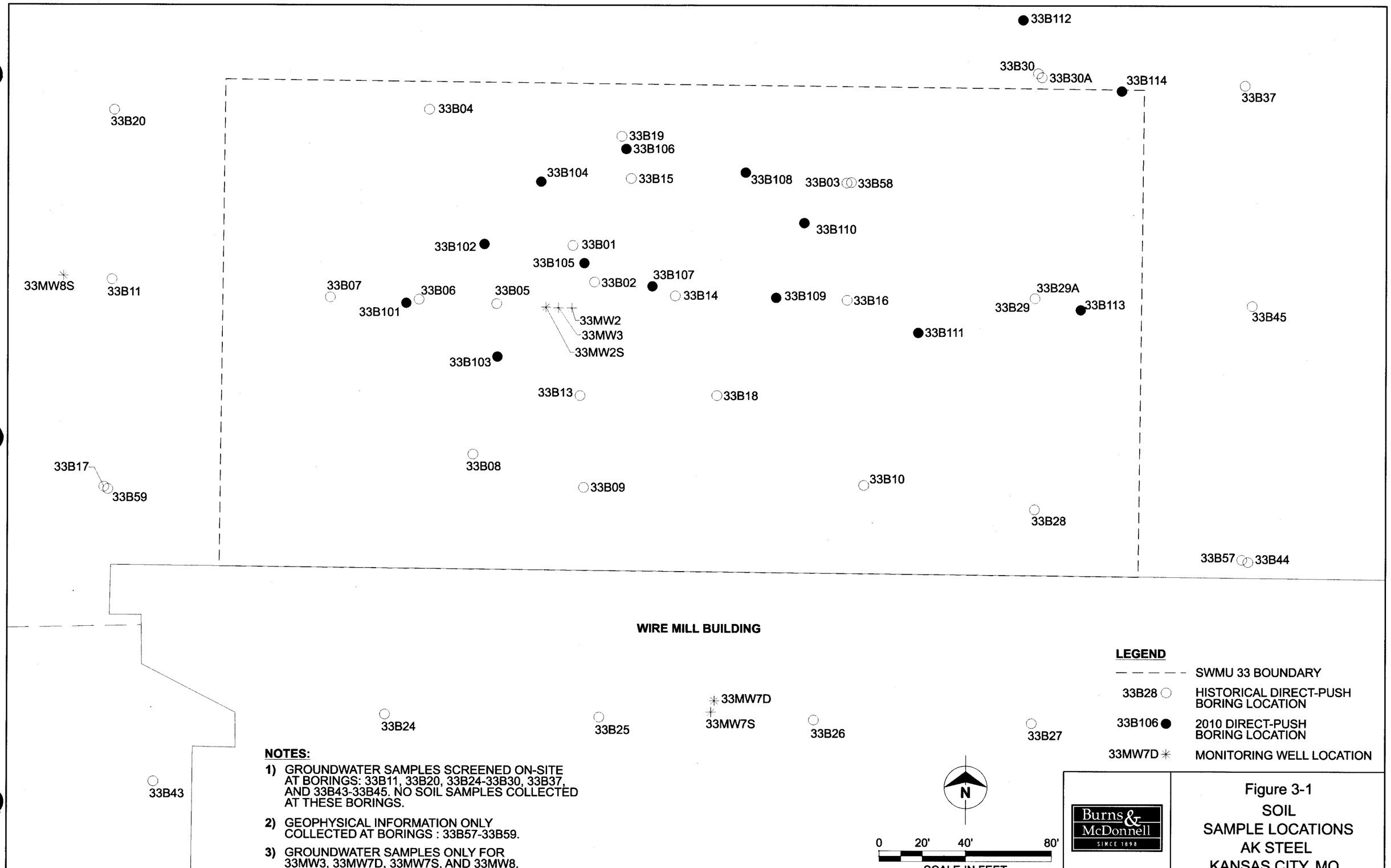

LEGEND

— — — — —	SWMU 33 BOUNDARY
33B28 ○	HISTORICAL DIRECT-PUSH BORING LOCATION
33B106 ●	2010 DIRECT-PUSH BORING LOCATION
33MW7D ✳	MONITORING WELL LOCATION

NOTES:

1) GROUNDWATER SAMPLES SCREENED ON-SITE AT BORINGS: 33B11, 33B20, 33B24-33B30, 33B37, AND 33B43-33B45. NO SOIL SAMPLES COLLECTED AT THESE BORINGS.

2) GEOPHYSICAL INFORMATION ONLY COLLECTED AT BORINGS : 33B57-33B59.

3) GROUNDWATER SAMPLES ONLY FOR 33MW3, 33MW7D, 33MW7S, AND 33MW8.

Burns & McDonnell
SINCE 1898

Figure 3-1
SOIL
SAMPLE LOCATIONS
AK STEEL
KANSAS CITY, MO

COPYRIGHT © 20 RNS & McDONNELL ENGINEERING COMPANY, INC.

K:\ENV\AK STEEL\Site\54200\Cad\54200_FG3-1.dgn 09/08/2010 2:15 RPHILLIPS

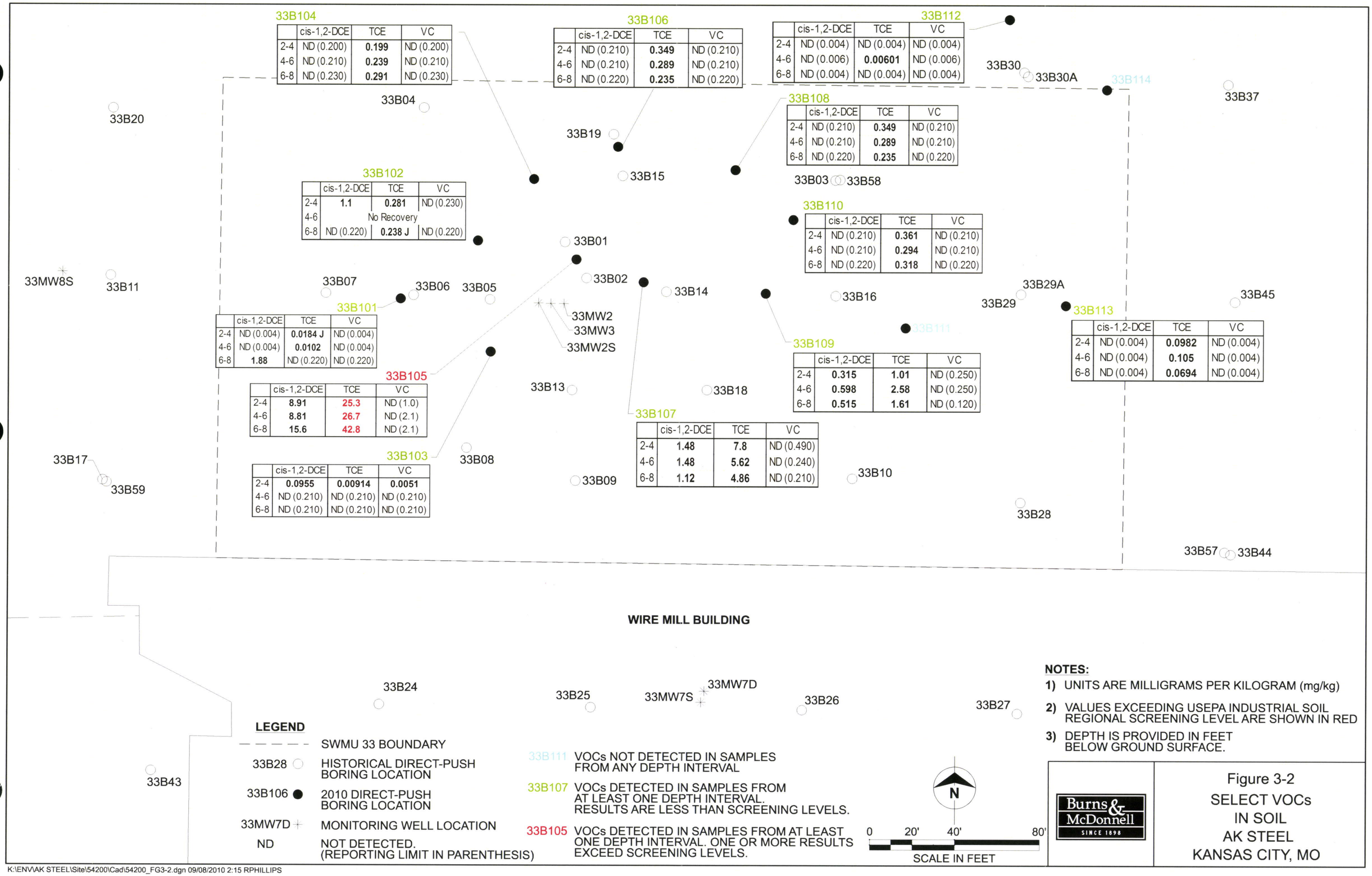

33B104	cis-1,2-DCE	TCE	VC
2-4	ND (0.200)	**0.199**	ND (0.200)
4-6	ND (0.210)	**0.239**	ND (0.210)
6-8	ND (0.230)	**0.291**	ND (0.230)

33B106	cis-1,2-DCE	TCE	VC
2-4	ND (0.210)	**0.349**	ND (0.210)
4-6	ND (0.210)	**0.289**	ND (0.210)
6-8	ND (0.220)	**0.235**	ND (0.220)

33B112	cis-1,2-DCE	TCE	VC
2-4	ND (0.004)	ND (0.004)	ND (0.004)
4-6	ND (0.006)	**0.00601**	ND (0.006)
6-8	ND (0.004)	ND (0.004)	ND (0.004)

33B108	cis-1,2-DCE	TCE	VC
2-4	ND (0.210)	**0.349**	ND (0.210)
4-6	ND (0.210)	**0.289**	ND (0.210)
6-8	ND (0.220)	**0.235**	ND (0.220)

33B102	cis-1,2-DCE	TCE	VC
2-4	**1.1**	**0.281**	ND (0.230)
4-6	No Recovery		
6-8	ND (0.220)	**0.238 J**	ND (0.220)

33B110	cis-1,2-DCE	TCE	VC
2-4	ND (0.210)	**0.361**	ND (0.210)
4-6	ND (0.210)	**0.294**	ND (0.210)
6-8	ND (0.220)	**0.318**	ND (0.220)

33B101	cis-1,2-DCE	TCE	VC
2-4	ND (0.004)	**0.0184 J**	ND (0.004)
4-6	ND (0.004)	**0.0102**	ND (0.004)
6-8	**1.88**	ND (0.220)	ND (0.220)

33B113	cis-1,2-DCE	TCE	VC
2-4	ND (0.004)	**0.0982**	ND (0.004)
4-6	ND (0.004)	**0.105**	ND (0.004)
6-8	ND (0.004)	**0.0694**	ND (0.004)

33B109	cis-1,2-DCE	TCE	VC
2-4	**0.315**	**1.01**	ND (0.250)
4-6	**0.598**	**2.58**	ND (0.250)
6-8	**0.515**	**1.61**	ND (0.120)

33B105	cis-1,2-DCE	TCE	VC
2-4	**8.91**	**25.3**	ND (1.0)
4-6	**8.81**	**26.7**	ND (2.1)
6-8	**15.6**	**42.8**	ND (2.1)

33B107	cis-1,2-DCE	TCE	VC
2-4	**1.48**	**7.8**	ND (0.490)
4-6	**1.48**	**5.62**	ND (0.240)
6-8	**1.12**	**4.86**	ND (0.210)

33B103	cis-1,2-DCE	TCE	VC
2-4	**0.0955**	**0.00914**	**0.0051**
4-6	ND (0.210)	ND (0.210)	ND (0.210)
6-8	ND (0.210)	ND (0.210)	ND (0.210)

LEGEND

- SWMU 33 BOUNDARY
- 33B28 HISTORICAL DIRECT-PUSH BORING LOCATION
- 33B106 2010 DIRECT-PUSH BORING LOCATION
- 33MW7D MONITORING WELL LOCATION
- ND NOT DETECTED. (REPORTING LIMIT IN PARENTHESIS)
- 33B111 VOCs NOT DETECTED IN SAMPLES FROM ANY DEPTH INTERVAL
- 33B107 VOCs DETECTED IN SAMPLES FROM AT LEAST ONE DEPTH INTERVAL. RESULTS ARE LESS THAN SCREENING LEVELS.
- 33B105 VOCs DETECTED IN SAMPLES FROM AT LEAST ONE DEPTH INTERVAL. ONE OR MORE RESULTS EXCEED SCREENING LEVELS.

N

0 20' 40' 80'

SCALE IN FEET

NOTES:

1) UNITS ARE MILLIGRAMS PER KILOGRAM (mg/kg)
2) VALUES EXCEEDING USEPA INDUSTRIAL SOIL REGIONAL SCREENING LEVEL ARE SHOWN IN RED
3) DEPTH IS PROVIDED IN FEET BELOW GROUND SURFACE.

Burns & McDonnell SINCE 1898

Figure 3-2
SELECT VOCs
IN SOIL
AK STEEL
KANSAS CITY, MO

COPYRIGHT © 2010 BURNS & McDONNELL ENGINEERING COMPANY, INC.

K:\ENV\AK STEEL\Site\54200\Cad\54200_FG3-2.dgn 09/08/2010 2:15 RPHILLIPS

33B112
33B30
33B30A
33B114
33B37
33B04
33B20
33B19
33B106
33B108
33B104
33B15
33B03
33B58
33B105

	cis-1,2-DCE	TCE
2-4	**24**	**18.8**
4-6	**28.1**	**19.2**
6-8	ND (5)	ND (5)

33B110
33B102
33B01
33MW8S
33B11
33B07
33B06
33B05
33B02
33B14
33B109
33B16
33B29A
33B29
33B113
33B45
33B101
33MW2
33MW3
33MW2S
33B107

	cis-1,2-DCE	TCE
2-4	**6.98**	**9.88**
4-6	**7.69**	**7.49**
6-8	ND (5)	ND (5)

33B111
33B103
33B13
33B18
33B17
33B59
33B08
33B09
33B10
33B28
33B57
33B44

WIRE MILL BUILDING

33B24
33B25
33MW7S
33MW7D
33B26
33B27
33B43

LEGEND

SWMU 33 BOUNDARY

33B28 HISTORICAL DIRECT-PUSH BORING LOCATION

33B106 2010 DIRECT-PUSH BORING LOCATION

33MW7D MONITORING WELL LOCATION

ND NOT DETECTED. (REPORTING LIMIT IN PARENTHESIS)

33B111 SPLP VOCs NOT DETECTED IN SAMPLES FROM ANY DEPTH INTERVAL.

33B105 SPLP VOCs DETECTED IN SAMPLES FROM AT LEAST ONE DEPTH INTERVAL. ONE OR MORE RESULTS EXCEED SCREENING LEVELS.

N

0 20' 40' 80'

SCALE IN FEET

NOTES:

1) UNITS ARE MICROGRAMS PER LITER (ug/L)
2) VALUES EXCEEDING USEPA MAXIMUM CONTAINMENT LEVEL ARE SHOWN IN RED
3) DEPTH IS PROVIDED IN FEET BELOW GROUND SURFACE.

Burns & McDonnell SINCE 1898

Figure 3-3
SPLP VOC DETECTIONS IN SOIL
AK STEEL
KANSAS CITY, MO

COPYRIGHT © 20 RNS & McDONNELL ENGINEERING COMPANY, INC.

K:\ENV\AK STEEL\Site\54200\Cad\54200_FG3-3.dgn 09/14/2010 2:15 RPHILLIPS

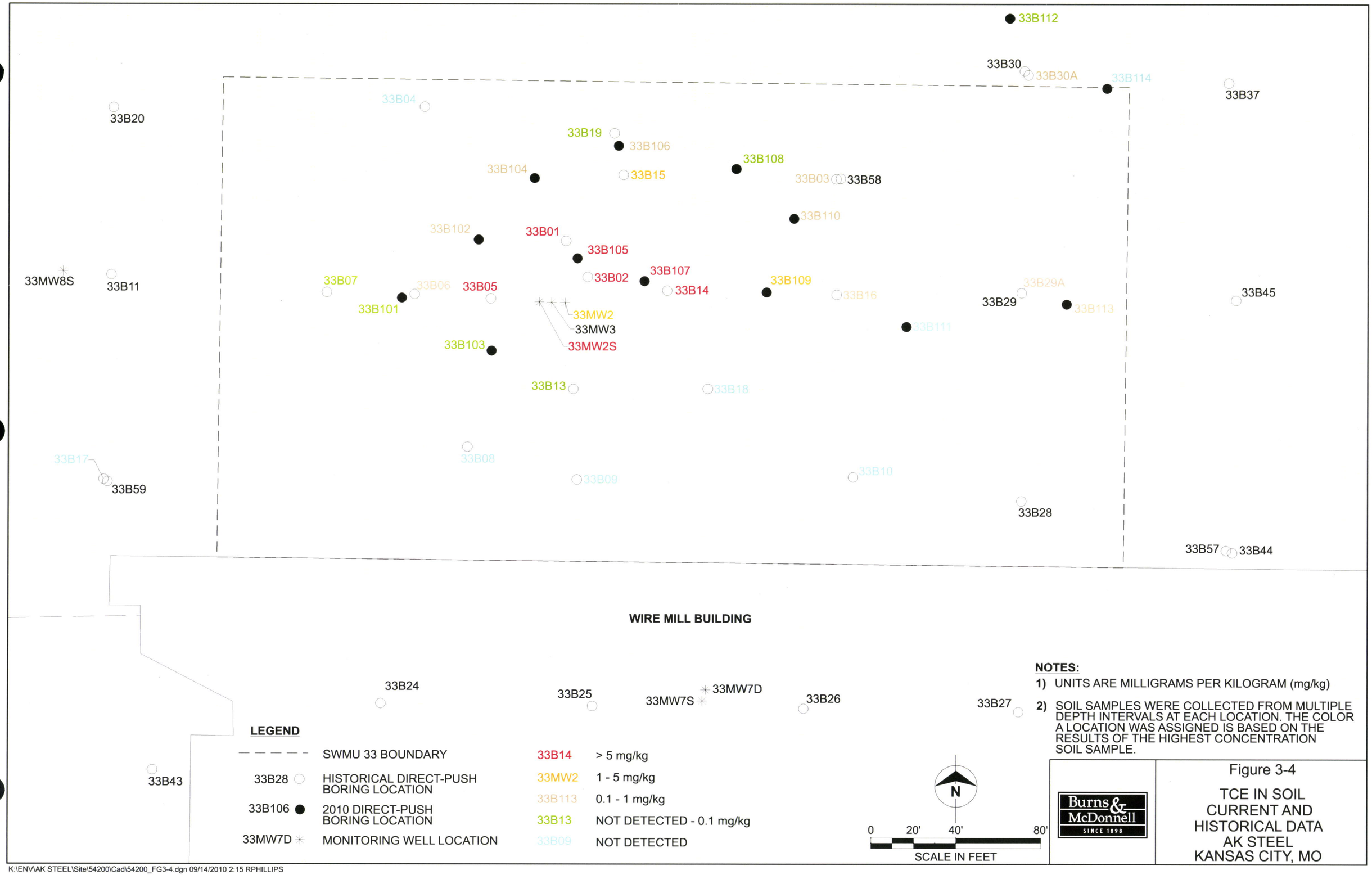

NOTES:

1) UNITS ARE MILLIGRAMS PER KILOGRAM (mg/kg)
2) SOIL SAMPLES WERE COLLECTED FROM MULTIPLE DEPTH INTERVALS AT EACH LOCATION. THE COLOR A LOCATION WAS ASSIGNED IS BASED ON THE RESULTS OF THE HIGHEST CONCENTRATION SOIL SAMPLE.

Burns & McDonnell SINCE 1898

Figure 3-4

TCE IN SOIL CURRENT AND HISTORICAL DATA AK STEEL KANSAS CITY, MO

COPYRIGHT © 2010 BURNS & McDONNELL ENGINEERING COMPANY, INC.

K:\ENV\AK STEEL\Site\54200\Cad\54200_FG3-4.dgn 09/14/2010 2:15 RPHILLIPS

33B112
33B30
33B30A
33B114
33B37
33B20
33B04
33B19
33B106
33B104
33B15
33B108
33B03
33B58
33B110
33B102
33B01
SVE-2
OBS-2
33B105
OBS-1
SVE-1
33B02
SVE-3
33MW8S
33B11
33B07
33B06
33B05
HW-1
33B14
33B109
33B16
33B29A
33B29
33B113
33B45
33B101
33MW2
33B107
33MW3
33B111
OBS-3
33MW2S
33B103
33B13
33B18
33B17
33B08
33B09
33B10
33B59
33B28
33B57
33B44
WIRE MILL BUILDING
33MW7D
33B24
33B25
33MW7S
33B26
33B27
33B43

LEGEND

	TREATMENT AREA	33B28 ○	HISTORICAL DIRECT-PUSH BORING LOCATION
— — — —	SWMU 33 BOUNDARY	33B106 ●	2010 DIRECT-PUSH BORING LOCATION
OBS-3	2" OBSERVATION WELL (9-3 FT.)	33MW7D ✳	MONITORING WELL LOCATION
SVE-3	4" EXTRACTION WELL (9-5 FT.)		
HW-1	4" HORIZONTAL EXTRACTION WELL (TD= 4 FT.)		

N

0 20' 40' 80'
SCALE IN FEET

Burns & McDonnell
SINCE 1898

Figure 4-1

PROPOSED TREATMENT AREA AND PILOT STUDY WELL LOCATIONS
AK STEEL
KANSAS CITY, MO

COPYRIGHT © 2010 BURNS & McDONNELL ENGINEERING COMPANY, INC.

K:\ENV\AK STEEL\Site\54200\Cad\54200_FG3-1.dgn 09/08/2010 2:15 RPHILLIPS

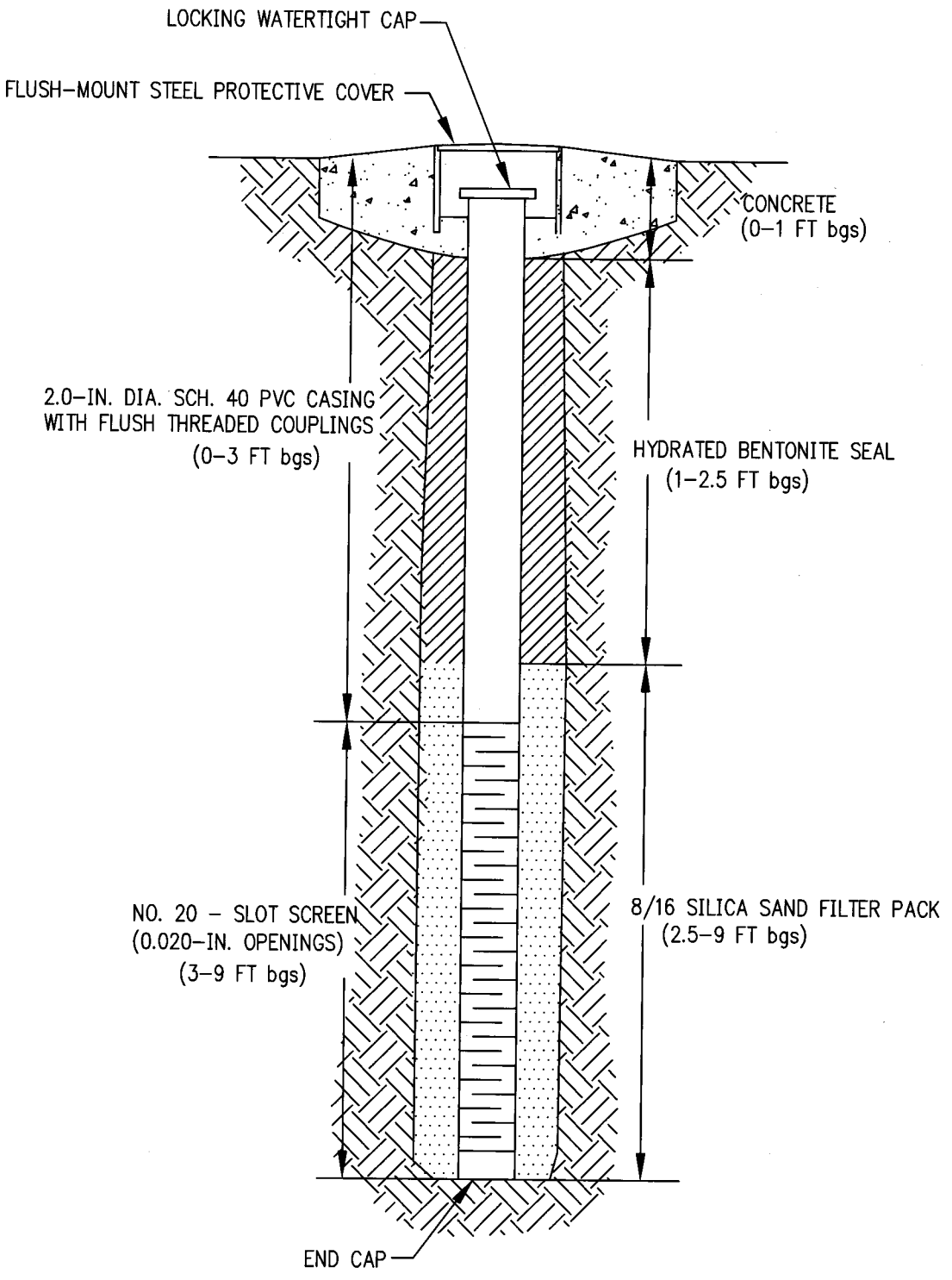

NOT TO SCALE

Burns & McDonnell
SINCE 1898

Figure 4-2
TYPICAL SVE OBSERVATION
WELL SCHEMATIC
AK STEEL
KANSAS CITY, MISSOURI

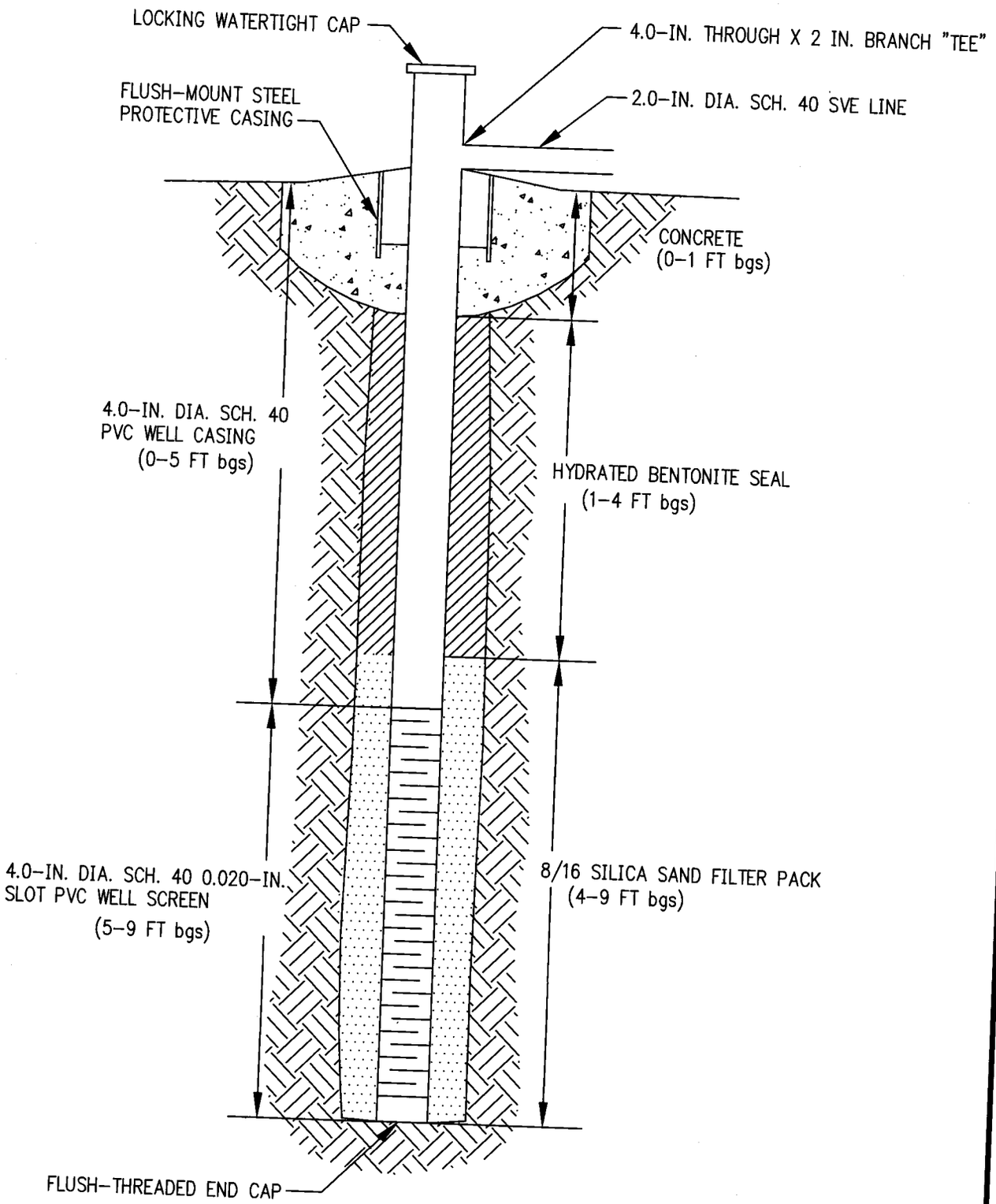

NOT TO SCALE

Burns & McDonnell
SINCE 1898

Figure 4-3
TYPICAL SVE EXTRACTION WELL SCHEMATIC
AK STEEL
KANSAS CITY, MISSOURI

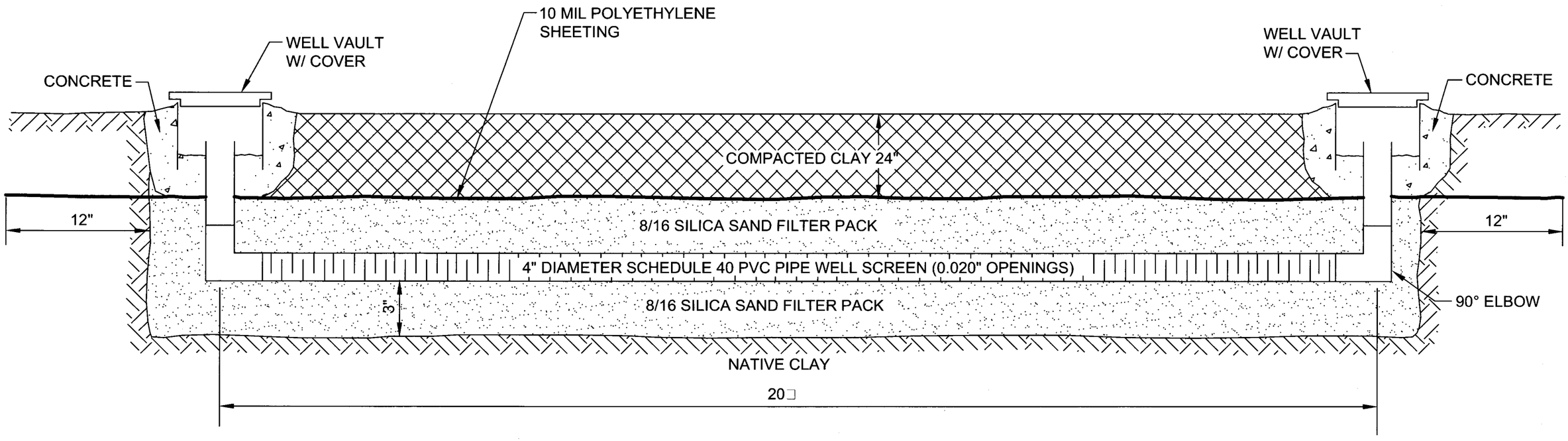

NOT TO SCALE

Burns & McDonnell SINCE 1898

Figure 4-4
HORIZONTAL EXTRACTION WELL PROFILE
AK STEEL
KANSAS CITY, MISSOURI

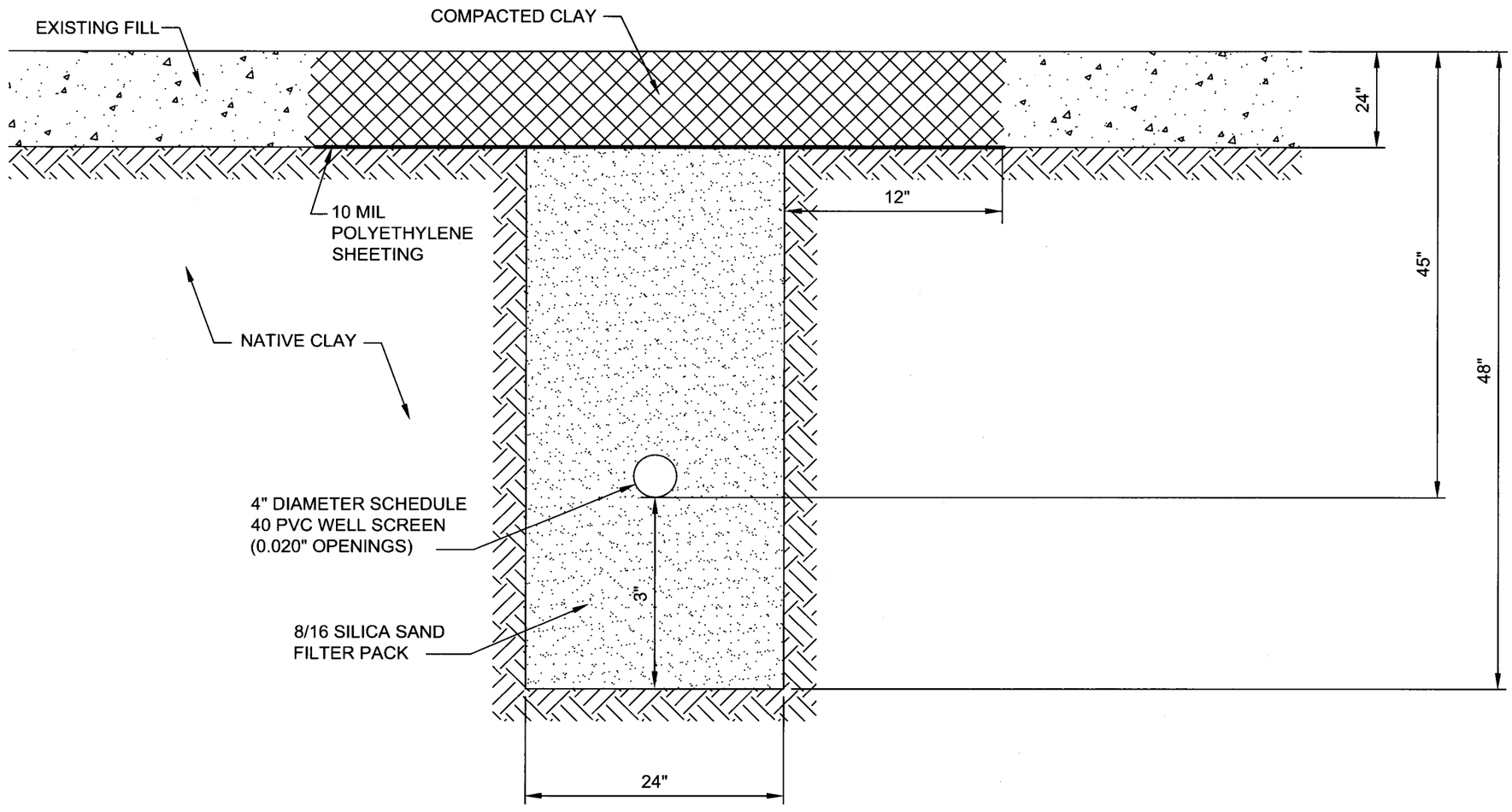

NOT TO SCALE

Burns & McDonnell
SINCE 1898

Figure 4-5
HORIZONTAL EXTRACTION
WELL SCHEMATIC
AK STEEL
KANSAS CITY, MISSOURI

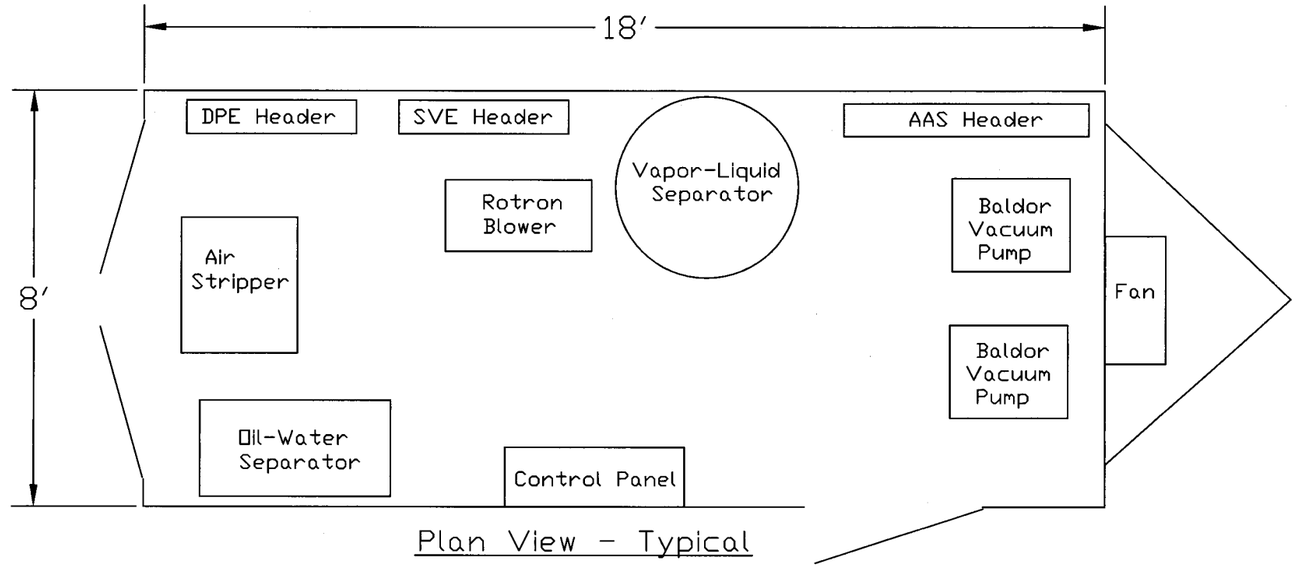

Plan View - Typical

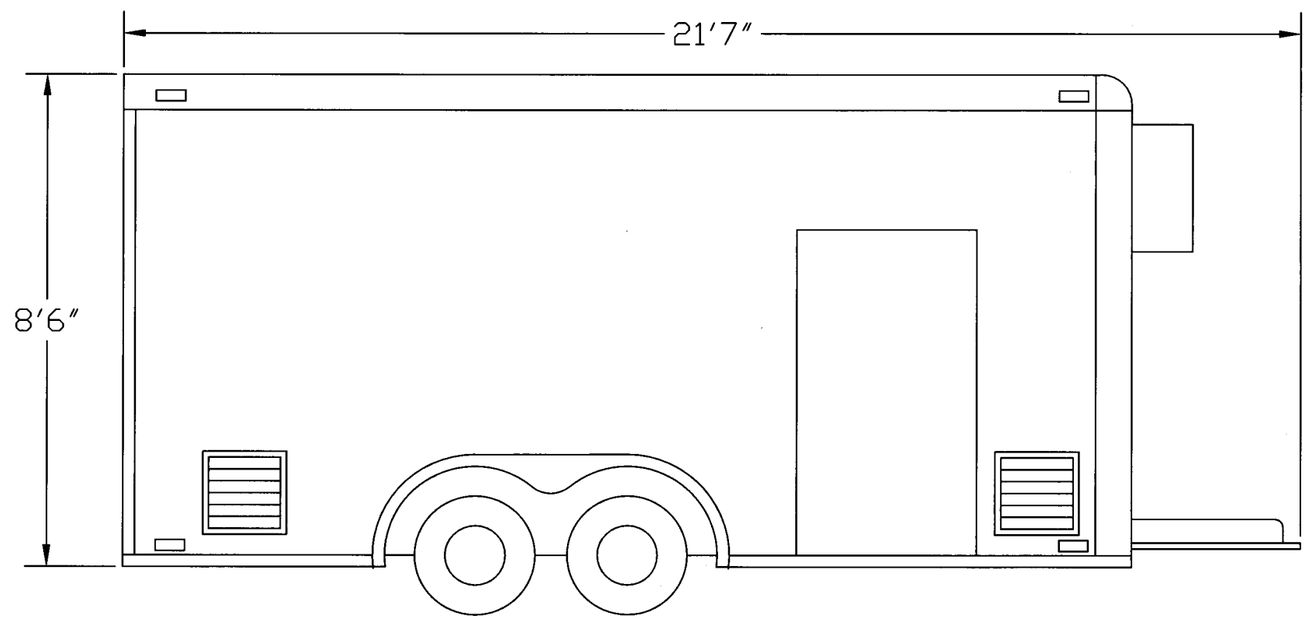

Profile View - Typical

SVE = Soil Vapor Extraction

AAS = Aquifer Air Sparge

DPE = Dual Phase Extraction

Note: Trailer will be secured with tie-downs and leveling jacks. Trailer doors shall be equipped with locks for security.

Burns & McDonnell
SINCE 1898

Figure 4-6
SVE PILOT TESTING SYSTEM
LAYOUT SCHEMATIC
AK STEEL
KANSAS CITY, MISSOURI

k:\env\ecc\site\37799\del\WP\388\draft\WP\draw\PDIL-UST\Figure 2-2 Equipment Layout.dwg

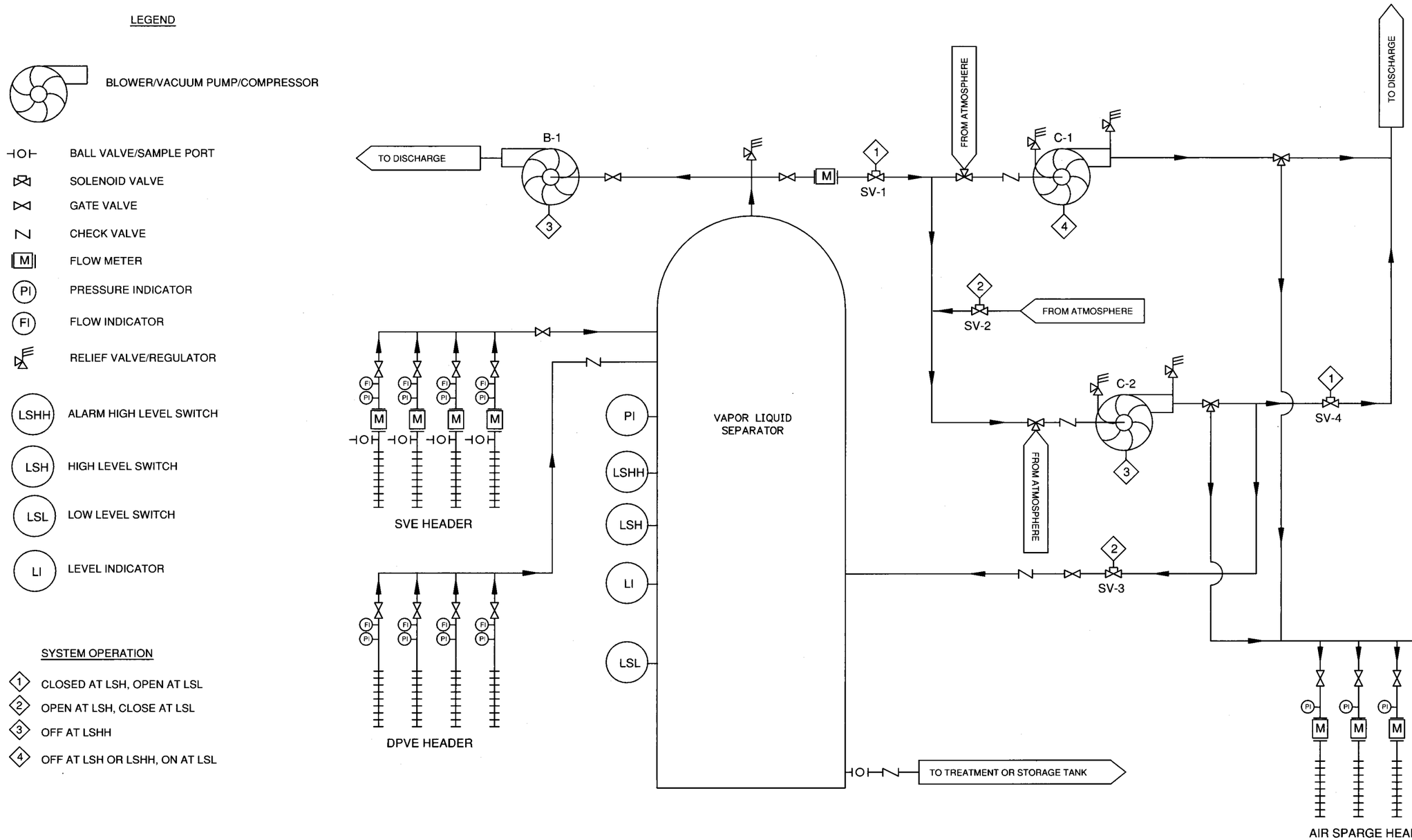

Burns & McDonnell
SINCE 1898

Figure 4-7
SVE PILOT TESTING SYSTEM
P&ID
AK STEEL
KANSAS CITY, MISSOURI

APPENDIX A

Relevant Information for SWMU 33 From the RFI Report

(Submitted on CD)

APPENDIX B

Historical and/or Additional SWMU 33 Information
(Submitted on CD)

APPENDIX C

Comprehensive Analytical Results Tables

Table C-1
2010 Soil Results - Volatile Organic Compounds
SWMU 33 Nail Mill Degreasing Area
AK Steel Kansas City Facility

Parameter	Sample ID: Date Collected: Depth (ft bgs): Lab ID:	33B101-SB1 5/11/2010 2 - 4 21005134801	33B101-SB2 5/11/2010 4 - 6 21005134802	33B101-SB3 5/11/2010 6 - 8 21005134803	33B102-SB1 5/11/2010 2 - 4 21005134804	33B102-SB3 5/11/2010 6 - 8 21005134805	33B103-SB1 5/11/2010 2 - 4 21005134808	33B103-SB1D 5/11/2010 2 - 4 21005134809	33B103-SB2 5/11/2010 4 - 6 21005134810	33B103-SB3 5/11/2010 6 - 8 21005134811
Volatile Organic Compounds	**Units**									
1,1,1-Trichloroethane	mg/kg	0.004 U	0.004 U	0.22 U	0.23 U	0.22 U	0.004 U	0.005 U	0.21 U	0.21 U
1,1,2,2-Tetrachloroethane	mg/kg	0.004 U	0.004 U	0.22 U	0.23 U	0.22 U	0.004 U	0.005 U	0.21 U	0.21 U
1,1,2-Trichloroethane	mg/kg	0.004 U	0.004 U	0.22 U	0.23 U	0.22 U	0.004 U	0.005 U	0.21 U	0.21 U
1,1-Dichloroethane	mg/kg	0.004 U	0.004 U	0.22 U	0.23 U	0.22 U	0.004 U	0.005 U	0.21 U	0.21 U
1,1-Dichloroethene	mg/kg	0.004 U	0.004 U	0.22 U	0.23 U	0.22 U	0.004 U	0.005 U	0.21 U	0.21 U
1,2-Dichloroethane	mg/kg	0.004 U	0.004 U	0.22 U	0.23 U	0.22 U	0.004 U	0.005 U	0.21 U	0.21 U
1,2-Dichloropropane	mg/kg	0.004 U	0.004 U	0.22 U	0.23 U	0.22 U	0.004 U	0.005 U	0.21 U	0.21 U
2-Butanone	mg/kg	0.004 U	0.004 U	0.22 U	0.23 U	0.22 U	0.004 U	0.005 U	0.21 U	0.21 U
2-Hexanone	mg/kg	0.004 U	0.004 U	0.22 U	0.23 U	0.22 U	0.004 U	0.005 U	0.21 U	0.21 U
4-Methyl-2-pentanone	mg/kg	0.004 U	0.004 U	0.22 U	0.23 U	0.22 U	0.004 U	0.005 U	0.21 U	0.21 U
Acetone	mg/kg	0.022 U	0.022 U	1.1 U	1.2 U	1.1 U	0.021 U	0.023 U	1.1 U	1.1 U
Benzene	mg/kg	0.004 U	0.004 U	0.22 U	0.23 U	0.22 U	0.004 U	0.005 U	0.21 U	0.21 U
Bromodichloromethane	mg/kg	0.004 U	0.004 U	0.22 U	0.23 U	0.22 U	0.004 U	0.005 U	0.21 U	0.21 U
Bromoform	mg/kg	0.004 U	0.004 U	0.22 U	0.23 U	0.22 U	0.004 U	0.005 U	0.21 U	0.21 U
Bromomethane	mg/kg	0.004 U	0.004 U	0.22 U	0.23 U	0.22 UJ	0.004 U	0.005 U	0.21 U	0.21 U
Carbon disulfide	mg/kg	0.004 U	0.004 U	0.22 U	0.23 U	0.22 U	0.004 U	0.005 U	0.21 U	0.21 U
Carbon tetrachloride	mg/kg	0.004 U	0.004 U	0.22 U	0.23 U	0.22 U	0.004 U	0.005 U	0.21 U	0.21 U
Chlorobenzene	mg/kg	0.004 U	0.004 U	0.22 U	0.23 U	0.22 U	0.004 U	0.005 U	0.21 U	0.21 U
Chloroethane	mg/kg	0.004 U	0.004 U	0.22 U	0.23 U	0.22 UR	0.004 U	0.005 U	0.21 U	0.21 U
Chloroform	mg/kg	0.004 U	0.004 U	0.22 U	0.23 U	0.22 U	0.004 U	0.005 U	0.21 U	0.21 U
Chloromethane	mg/kg	0.004 U	0.004 U	0.22 U	0.23 U	0.22 U	0.004 U	0.005 U	0.21 U	0.21 U
cis-1,2-Dichloroethene	mg/kg	0.004 U	0.004 U	**1.88**	**1.1**	0.22 U	**0.0955**	**0.0915**	0.21 U	0.21 U
cis-1,3-Dichloropropene	mg/kg	0.004 U	0.004 U	0.22 U	0.23 U	0.22 U	0.004 U	0.005 U	0.21 U	0.21 U
Dibromochloromethane	mg/kg	0.004 U	0.004 U	0.22 U	0.23 U	0.22 U	0.004 U	0.005 U	0.21 U	0.21 U
Ethylbenzene	mg/kg	0.004 U	0.004 U	0.22 U	0.23 U	0.22 U	0.004 U	0.005 U	0.21 U	0.21 U
Methylene chloride	mg/kg	0.009 U	0.009 U	0.44 U	0.46 U	0.44 U	0.008 U	0.009 U	0.43 U	0.43 U
Styrene	mg/kg	0.004 U	0.004 U	0.22 U	0.23 U	0.22 U	0.004 U	0.005 U	0.21 U	0.21 U
Tetrachloroethene	mg/kg	0.004 U	0.004 U	0.22 U	0.23 U	0.22 U	0.004 U	0.005 U	0.21 U	0.21 U
Toluene	mg/kg	0.004 U	0.004 U	0.22 U	0.23 U	0.22 U	0.004 U	0.005 U	0.21 U	0.21 U
trans-1,2-Dichloroethene	mg/kg	0.004 U	0.004 U	0.22 U	0.23 U	0.22 U	**0.00503**	0.005 U	0.21 U	0.21 U
trans-1,3-Dichloropropene	mg/kg	0.004 U	0.004 U	0.22 U	0.23 U	0.22 U	0.004 U	0.005 U	0.21 U	0.21 U
Trichloroethene	mg/kg	**0.0184 J**	**0.0102**	0.22 U	**0.281**	**0.238 J**	**0.00876**	**0.00914**	0.21 U	0.21 U
Vinyl acetate	mg/kg	0.004 U	0.004 U	0.22 U	0.23 U	0.22 U	0.004 U	0.005 U	0.21 U	0.21 U
Vinyl chloride	mg/kg	0.004 U	0.004 U	0.22 U	0.23 U	0.22 U	**0.0051**	**0.00466 J**	0.21 U	0.21 U
Xylene (total)	mg/kg	0.009 U	0.009 U	0.44 U	0.46 U	0.44 U	0.008 U	0.009 U	0.43 U	0.43 U

Detections are **bold**.
Data qualifiers are described on Table 2-1.

ft bgs - feet below ground surface
mg/kg - milligrams per kilogram

Table C-1
2010 Soil Results - Volatile Organic Compounds
SWMU 33 Nail Mill Degreasing Area
AK Steel Kansas City Facility

Parameter	Sample ID: Date Collected: Depth (ft bgs): Lab ID:	33B104-SB1 5/11/2010 2 - 4 21005134812	33B104-SB2 5/11/2010 4 - 6 21005134813	33B104-SB2D 5/11/2010 4 - 6 21005134814	33B104-SB3 5/11/2010 6 - 8 21005134815	33B105-SB1 5/11/2010 2 - 4 21005134816	33B105-SB2 5/11/2010 4 - 6 21005134817	33B105-SB3 5/11/2010 6 - 8 21005134818	33B106-SB1 5/11/2010 2 - 4 21005134819	33B106-SB2 5/11/2010 4 - 6 21005134820
Volatile Organic Compounds	**Units**									
1,1,1-Trichloroethane	mg/kg	0.2 U	0.26 U	0.21 U	0.23 U	1 U	2.1 U	2.1 U	0.21 U	0.21 U
1,1,2,2-Tetrachloroethane	mg/kg	0.2 U	0.26 U	0.21 U	0.23 U	1 U	2.1 U	2.1 U	0.21 U	0.21 U
1,1,2-Trichloroethane	mg/kg	0.2 U	0.26 U	0.21 U	0.23 U	1 U	2.1 U	2.1 U	0.21 U	0.21 U
1,1-Dichloroethane	mg/kg	0.2 U	0.26 U	0.21 U	0.23 U	1 U	2.1 U	2.1 U	0.21 U	0.21 U
1,1-Dichloroethene	mg/kg	0.2 U	0.26 U	0.21 U	0.23 U	1 U	2.1 U	2.1 U	0.21 U	0.21 U
1,2-Dichloroethane	mg/kg	0.2 U	0.26 U	0.21 U	0.23 U	1 U	2.1 U	2.1 U	0.21 U	0.21 U
1,2-Dichloropropane	mg/kg	0.2 U	0.26 U	0.21 U	0.23 U	1 U	2.1 U	2.1 U	0.21 U	0.21 U
2-Butanone	mg/kg	0.2 U	0.26 U	0.21 U	0.23 U	1 U	2.1 U	2.1 U	0.21 U	0.21 U
2-Hexanone	mg/kg	0.2 U	0.26 U	0.21 U	0.23 U	1 U	2.1 U	2.1 U	0.21 U	0.21 U
4-Methyl-2-pentanone	mg/kg	0.2 U	0.26 U	0.21 U	0.23 U	1 U	2.1 U	2.1 U	0.21 U	0.21 U
Acetone	mg/kg	0.98 U	1.3 U	1.1 U	1.1 U	5.2 U	10 U	11 U	1 U	1.1 U
Benzene	mg/kg	0.2 U	0.26 U	0.21 U	0.23 U	1 U	2.1 U	2.1 U	0.21 U	0.21 U
Bromodichloromethane	mg/kg	0.2 U	0.26 U	0.21 U	0.23 U	1 U	2.1 U	2.1 U	0.21 U	0.21 U
Bromoform	mg/kg	0.2 U	0.26 U	0.21 U	0.23 U	1 U	2.1 U	2.1 U	0.21 U	0.21 U
Bromomethane	mg/kg	0.2 U	0.26 U	0.21 U	0.23 U	1 U	2.1 U	2.1 U	0.21 U	0.21 U
Carbon disulfide	mg/kg	0.2 U	0.26 U	0.21 U	0.23 U	1 U	2.1 U	2.1 U	0.21 U	0.21 U
Carbon tetrachloride	mg/kg	0.2 U	0.26 U	0.21 U	0.23 U	1 U	2.1 U	2.1 U	0.21 U	0.21 U
Chlorobenzene	mg/kg	0.2 U	0.26 U	0.21 U	0.23 U	1 U	2.1 U	2.1 U	0.21 U	0.21 U
Chloroethane	mg/kg	0.2 U	0.26 U	0.21 U	0.23 U	1 U	2.1 U	2.1 U	0.21 U	0.21 U
Chloroform	mg/kg	0.2 U	0.26 U	0.21 U	0.23 U	1 U	2.1 U	2.1 U	0.21 U	0.21 U
Chloromethane	mg/kg	0.2 U	0.26 U	0.21 U	0.23 U	1 U	2.1 U	2.1 U	0.21 U	0.21 U
cis-1,2-Dichloroethene	mg/kg	0.2 U	0.26 U	0.21 U	0.23 U	**8.91**	**8.81**	**15.6**	0.21 U	0.21 U
cis-1,3-Dichloropropene	mg/kg	0.2 U	0.26 U	0.21 U	0.23 U	1 U	2.1 U	2.1 U	0.21 U	0.21 U
Dibromochloromethane	mg/kg	0.2 U	0.26 U	0.21 U	0.23 U	1 U	2.1 U	2.1 U	0.21 U	0.21 U
Ethylbenzene	mg/kg	0.2 U	0.26 U	0.21 U	0.23 U	1 U	2.1 U	2.1 U	0.21 U	0.21 U
Methylene chloride	mg/kg	0.39 U	0.52 U	0.43 U	0.45 U	2.1 U	4.2 U	4.3 U	0.42 U	0.43 U
Styrene	mg/kg	0.2 U	0.26 U	0.21 U	0.23 U	1 U	2.1 U	2.1 U	0.21 U	0.21 U
Tetrachloroethene	mg/kg	0.2 U	0.26 U	0.21 U	0.23 U	1 U	2.1 U	2.1 U	0.21 U	0.21 U
Toluene	mg/kg	0.2 U	0.26 U	0.21 U	0.23 U	1 U	2.1 U	2.1 U	0.21 U	0.21 U
trans-1,2-Dichloroethene	mg/kg	0.2 U	0.26 U	0.21 U	0.23 U	1 U	2.1 U	2.1 U	0.21 U	0.21 U
trans-1,3-Dichloropropene	mg/kg	0.2 U	0.26 U	0.21 U	0.23 U	1 U	2.1 U	2.1 U	0.21 U	0.21 U
Trichloroethene	mg/kg	**0.199**	0.26 U	**0.239**	**0.291**	**25.3**	**26.7**	**42.8**	**0.349**	**0.289**
Vinyl acetate	mg/kg	0.2 U	0.26 U	0.21 U	0.23 U	1 U	2.1 U	2.1 U	0.21 U	0.21 U
Vinyl chloride	mg/kg	0.2 U	0.26 U	0.21 U	0.23 U	1 U	2.1 U	2.1 U	0.21 U	0.21 U
Xylene (total)	mg/kg	0.39 U	0.52 U	0.43 U	0.45 U	2.1 U	4.2 U	4.3 U	0.42 U	0.43 U

Detections are **bold**.
Data qualifiers are described on Table 2-1.

ft bgs - feet below ground surface
mg/kg - milligrams per kilogram

Table C-1
2010 Soil Results - Volatile Organic Compounds
SWMU 33 Nail Mill Degreasing Area
AK Steel Kansas City Facility

Parameter	Sample ID: / Date Collected: / Depth (ft bgs): / Lab ID:	33B106-SB3 5/11/2010 6 - 8 21005134821	33B107-SB1 5/11/2010 2 - 4 21005134822	33B107-SB2 5/11/2010 4 - 6 21005134823	33B107-SB3 5/11/2010 6 - 8 21005134824	33B108-SB1 5/11/2010 2 - 4 21005134825	33B108-SB3 5/11/2010 6 - 8 21005134828	33B109-SB1 5/11/2010 2 - 4 21005134829	33B109-SB2 5/11/2010 4 - 6 21005134830	33B109-SB3 5/11/2010 6 - 8 21005134831
Volatile Organic Compounds	**Units**									
1,1,1-Trichloroethane	mg/kg	0.22 U	0.49 U	0.24 U	0.21 U	0.004 U	0.004 U	0.25 U	0.25 U	0.22 U
1,1,2,2-Tetrachloroethane	mg/kg	0.22 U	0.49 U	0.24 U	0.21 U	0.004 U	0.004 U	0.25 U	0.25 U	0.22 U
1,1,2-Trichloroethane	mg/kg	0.22 U	0.49 U	0.24 U	0.21 U	0.004 U	0.004 U	0.25 U	0.25 U	0.22 U
1,1-Dichloroethane	mg/kg	0.22 U	0.49 U	0.24 U	0.21 U	0.004 U	0.004 U	0.25 U	0.25 U	0.22 U
1,1-Dichloroethene	mg/kg	0.22 U	0.49 U	0.24 U	0.21 U	0.004 U	0.004 U	0.25 U	0.25 U	0.22 U
1,2-Dichloroethane	mg/kg	0.22 U	0.49 U	0.24 U	0.21 U	0.004 U	0.004 U	0.25 U	0.25 U	0.22 U
1,2-Dichloropropane	mg/kg	0.22 U	0.49 U	0.24 U	0.21 U	0.004 U	0.004 U	0.25 U	0.25 U	0.22 U
2-Butanone	mg/kg	0.22 U	0.49 U	0.24 U	0.21 U	0.00997 J	0.004 U	0.25 U	0.25 U	0.22 U
2-Hexanone	mg/kg	0.22 U	0.49 U	0.24 U	0.21 U	0.004 U	0.004 U	0.25 U	0.25 U	0.22 U
4-Methyl-2-pentanone	mg/kg	0.22 U	0.49 U	0.24 U	0.21 U	0.004 U	0.004 U	0.25 U	0.25 U	0.22 U
Acetone	mg/kg	1.1 U	2.5 U	1.2 U	1 U	0.0527 J	0.022 U	1.2 U	1.2 U	1.1 U
Benzene	mg/kg	0.22 U	0.49 U	0.24 U	0.21 U	0.004 U	0.004 U	0.25 U	0.25 U	0.22 U
Bromodichloromethane	mg/kg	0.22 U	0.49 U	0.24 U	0.21 U	0.004 U	0.004 U	0.25 U	0.25 U	0.22 U
Bromoform	mg/kg	0.22 U	0.49 U	0.24 U	0.21 U	0.004 U	0.004 U	0.25 U	0.25 U	0.22 U
Bromomethane	mg/kg	0.22 U	0.49 U	0.24 U	0.21 U	0.004 U	0.004 U	0.25 U	0.25 U	0.22 U
Carbon disulfide	mg/kg	0.22 U	0.49 U	0.24 U	0.21 U	0.004 U	0.004 U	0.25 U	0.25 U	0.22 U
Carbon tetrachloride	mg/kg	0.22 U	0.49 U	0.24 U	0.21 U	0.004 U	0.004 U	0.25 U	0.25 U	0.22 U
Chlorobenzene	mg/kg	0.22 U	0.49 U	0.24 U	0.21 U	0.004 U	0.004 U	0.25 U	0.25 U	0.22 U
Chloroethane	mg/kg	0.22 U	0.49 U	0.24 U	0.21 U	0.004 U	0.004 U	0.25 U	0.25 U	0.22 U
Chloroform	mg/kg	0.22 U	0.49 U	0.24 U	0.21 U	0.004 U	0.004 U	0.25 U	0.25 U	0.22 U
Chloromethane	mg/kg	0.22 U	0.49 U	0.24 U	0.21 U	0.004 UJ	0.004 U	0.25 U	0.25 U	0.22 U
cis-1,2-Dichloroethene	mg/kg	0.22 U	**1.48**	**1.48**	**1.12**	0.004 U	0.004 U	**0.315**	**0.598**	**0.471**
cis-1,3-Dichloropropene	mg/kg	0.22 U	0.49 U	0.24 U	0.21 U	0.004 U	0.004 U	0.25 U	0.25 U	0.22 U
Dibromochloromethane	mg/kg	0.22 U	0.49 U	0.24 U	0.21 U	0.004 U	0.004 U	0.25 U	0.25 U	0.22 U
Ethylbenzene	mg/kg	0.22 U	0.49 U	0.24 U	0.21 U	0.004 U	0.004 U	0.25 U	0.25 U	0.22 U
Methylene chloride	mg/kg	0.44 U	0.99 U	0.47 U	0.41 U	0.009 U	0.009 U	0.5 U	0.5 U	0.44 U
Styrene	mg/kg	0.22 U	0.49 U	0.24 U	0.21 U	0.004 UJ	0.004 U	0.25 U	0.25 U	0.22 U
Tetrachloroethene	mg/kg	0.22 U	0.49 U	0.24 U	0.21 U	0.004 U	0.004 U	0.25 U	0.25 U	0.22 U
Toluene	mg/kg	0.22 U	0.49 U	0.24 U	0.21 U	0.004 U	0.004 U	0.25 U	0.25 U	0.22 U
trans-1,2-Dichloroethene	mg/kg	0.22 U	0.49 U	0.24 U	0.21 U	0.004 U	0.004 U	0.25 U	0.25 U	0.22 U
trans-1,3-Dichloropropene	mg/kg	0.22 U	0.49 U	0.24 U	0.21 U	0.004 U	0.004 U	0.25 U	0.25 U	0.22 U
Trichloroethene	mg/kg	**0.235**	**7.8**	**5.62**	**4.86**	0.0399 J	**0.0129**	**1.01**	**2.58**	**1.44**
Vinyl acetate	mg/kg	0.22 U	0.49 U	0.24 U	0.21 U	0.004 U	0.004 U	0.25 U	0.25 U	0.22 U
Vinyl chloride	mg/kg	0.22 U	0.49 U	0.24 U	0.21 U	0.004 UJ	0.004 U	0.25 U	0.25 U	0.22 U
Xylene (total)	mg/kg	0.44 U	0.99 U	0.47 U	0.41 U	0.009 U	0.009 U	0.5 U	0.5 U	0.44 U

Detections are **bold**.
Data qualifiers are described on Table 2-1.

ft bgs - feet below ground surface
mg/kg - milligrams per kilogram

Table C-1
2010 Soil Results - Volatile Organic Compounds
SWMU 33 Nail Mill Degreasing Area
AK Steel Kansas City Facility

Parameter	Sample ID:	33B109-SB3D	33B110-SB1	33B110-SB2	33B110-SB3	33B111-SB1	33B111-SB2	33B111-SB3	33B112-SB1	33B112-SB1D
	Date Collected:	5/11/2010	5/11/2010	5/11/2010	5/11/2010	5/11/2010	5/11/2010	5/11/2010	5/12/2010	5/12/2010
	Depth (ft bgs):	6 - 8	2 - 4	4 - 6	6 - 8	2 - 4	4 - 6	6 - 8	2 - 4	2 - 4
	Lab ID:	21005134832	21005134833	21005134834	21005134835	21005134836	21005134837	21005134838	21005134839	21005134840
Volatile Organic Compounds	**Units**									
1,1,1-Trichloroethane	mg/kg	0.22 U	0.21 U	0.21 U	0.22 U	0.004 U	0.004 U	0.005 U	0.004 U	0.004 U
1,1,2,2-Tetrachloroethane	mg/kg	0.22 U	0.21 U	0.21 U	0.22 U	0.004 U	0.004 U	0.005 U	0.004 U	0.004 U
1,1,2-Trichloroethane	mg/kg	0.22 U	0.21 U	0.21 U	0.22 U	0.004 U	0.004 U	0.005 U	0.004 U	0.004 U
1,1-Dichloroethane	mg/kg	0.22 U	0.21 U	0.21 U	0.22 U	0.004 U	0.004 U	0.005 U	0.004 U	0.004 U
1,1-Dichloroethene	mg/kg	0.22 U	0.21 U	0.21 U	0.22 U	0.004 U	0.004 U	0.005 U	0.004 U	0.004 U
1,2-Dichloroethane	mg/kg	0.22 U	0.21 U	0.21 U	0.22 U	0.004 U	0.004 U	0.005 U	0.004 U	0.004 U
1,2-Dichloropropane	mg/kg	0.22 U	0.21 U	0.21 U	0.22 U	0.004 U	0.004 U	0.005 U	0.004 U	0.004 U
2-Butanone	mg/kg	0.22 U	0.21 U	0.21 U	0.22 U	0.004 U	0.004 U	0.005 U	0.004 U	0.004 U
2-Hexanone	mg/kg	0.22 U	0.21 U	0.21 U	0.22 U	0.004 U	0.004 U	0.005 U	0.004 U	0.004 U
4-Methyl-2-pentanone	mg/kg	0.22 U	0.21 U	0.21 U	0.22 U	0.004 U	0.004 U	0.005 U	0.004 U	0.004 U
Acetone	mg/kg	1.1 U	1 U	1 U	1.1 U	0.022 U	0.021 U	0.024 U	0.022 U	0.02 U
Benzene	mg/kg	0.22 U	0.21 U	0.21 U	0.22 U	0.004 U	0.004 U	0.005 U	0.004 U	0.004 U
Bromodichloromethane	mg/kg	0.22 U	0.21 U	0.21 U	0.22 U	0.004 U	0.004 U	0.005 U	0.004 U	0.004 U
Bromoform	mg/kg	0.22 U	0.21 U	0.21 U	0.22 U	0.004 U	0.004 U	0.005 U	0.004 U	0.004 U
Bromomethane	mg/kg	0.22 U	0.21 U	0.21 U	0.22 U	0.004 U	0.004 U	0.005 U	0.004 U	0.004 U
Carbon disulfide	mg/kg	0.22 U	0.21 U	0.21 U	0.22 U	0.004 U	0.004 U	0.005 U	0.004 U	0.004 U
Carbon tetrachloride	mg/kg	0.22 U	0.21 U	0.21 U	0.22 U	0.004 U	0.004 U	0.005 U	0.004 U	0.004 U
Chlorobenzene	mg/kg	0.22 U	0.21 U	0.21 U	0.22 U	0.004 U	0.004 U	0.005 U	0.004 U	0.004 U
Chloroethane	mg/kg	0.22 U	0.21 U	0.21 U	0.22 U	0.004 U	0.004 U	0.005 U	0.004 U	0.004 U
Chloroform	mg/kg	0.22 U	0.21 U	0.21 U	0.22 U	0.004 U	0.004 U	0.005 U	0.004 U	0.004 U
Chloromethane	mg/kg	0.22 U	0.21 U	0.21 U	0.22 U	0.004 U	0.004 U	0.005 U	0.004 U	0.004 U
cis-1,2-Dichloroethene	mg/kg	**0.515**	0.21 U	0.21 U	0.22 U	0.004 U	0.004 U	0.005 U	0.004 U	0.004 U
cis-1,3-Dichloropropene	mg/kg	0.22 U	0.21 U	0.21 U	0.22 U	0.004 U	0.004 U	0.005 U	0.004 U	0.004 U
Dibromochloromethane	mg/kg	0.22 U	0.21 U	0.21 U	0.22 U	0.004 U	0.004 U	0.005 U	0.004 U	0.004 U
Ethylbenzene	mg/kg	0.22 U	0.21 U	0.21 U	0.22 U	0.004 U	0.004 U	0.005 U	0.004 U	0.004 U
Methylene chloride	mg/kg	0.44 U	0.42 U	0.42 U	0.44 U	0.009 U	0.008 U	0.01 U	0.009 U	0.008 U
Styrene	mg/kg	0.22 U	0.21 U	0.21 U	0.22 U	0.004 U	0.004 U	0.005 U	0.004 U	0.004 U
Tetrachloroethene	mg/kg	0.22 U	0.21 U	0.21 U	0.22 U	0.004 U	0.004 U	0.005 U	0.004 U	0.004 U
Toluene	mg/kg	0.22 U	0.21 U	0.21 U	0.22 U	0.004 U	0.004 U	0.005 U	0.004 U	0.004 U
trans-1,2-Dichloroethene	mg/kg	0.22 U	0.21 U	0.21 U	0.22 U	0.004 U	0.004 U	0.005 U	0.004 U	0.004 U
trans-1,3-Dichloropropene	mg/kg	0.22 U	0.21 U	0.21 U	0.22 U	0.004 U	0.004 U	0.005 U	0.004 U	0.004 U
Trichloroethene	mg/kg	**1.61**	**0.361**	**0.294**	**0.318**	0.004 U	0.004 U	0.005 U	0.004 U	0.004 U
Vinyl acetate	mg/kg	0.22 U	0.21 U	0.21 U	0.22 U	0.004 U	0.004 U	0.005 U	0.004 U	0.004 U
Vinyl chloride	mg/kg	0.22 U	0.21 U	0.21 U	0.22 U	0.004 U	0.004 U	0.005 U	0.004 U	0.004 U
Xylene (total)	mg/kg	0.44 U	0.42 U	0.42 U	0.44 U	0.009 U	0.008 U	0.01 U	0.009 U	0.008 U

Detections are **bold**.
Data qualifiers are described on Table 2-1.

ft bgs - feet below ground surface
mg/kg - milligrams per kilogram

Table C-1
2010 Soil Results - Volatile Organic Compounds
SWMU 33 Nail Mill Degreasing Area
AK Steel Kansas City Facility

Parameter	Sample ID:	33B112-SB2	33B112-SB3	33B113-SB1	33B113-SB2	33B113-SB3	33B114-SB1	33B114-SB2	33B114-SB3
	Date Collected:	5/12/2010	5/12/2010	5/11/2010	5/11/2010	5/11/2010	5/12/2010	5/12/2010	5/12/2010
	Depth (ft bgs):	4 - 6	6 - 8	2 - 4	4 - 6	6 - 8	2 - 4	4 - 6	6 - 8
	Lab ID:	21005134841	21005134842	21005134843	21005134844	21005134845	21005134846	21005134847	21005134848
Volatile Organic Compounds	**Units**								
1,1,1-Trichloroethane	mg/kg	0.006 U	0.004 U	0.004 U	0.004 U	0.004 U	0.005 U	0.005 U	0.004 U
1,1,2,2-Tetrachloroethane	mg/kg	0.006 U	0.004 U	0.004 U	0.004 U	0.004 U	0.005 U	0.005 U	0.004 U
1,1,2-Trichloroethane	mg/kg	0.006 U	0.004 U	0.004 U	0.004 U	0.004 U	0.005 U	0.005 U	0.004 U
1,1-Dichloroethane	mg/kg	0.006 U	0.004 U	0.004 U	0.004 U	0.004 U	0.005 U	0.005 U	0.004 U
1,1-Dichloroethene	mg/kg	0.006 U	0.004 U	0.004 U	0.004 U	0.004 U	0.005 U	0.005 U	0.004 U
1,2-Dichloroethane	mg/kg	0.006 U	0.004 U	0.004 U	0.004 U	0.004 U	0.005 U	0.005 U	0.004 U
1,2-Dichloropropane	mg/kg	0.006 U	0.004 U	0.004 U	0.004 U	0.004 U	0.005 U	0.005 U	0.004 U
2-Butanone	mg/kg	0.006 U	0.004 U	0.004 U	0.004 U	0.004 U	**0.00535**	0.005 U	0.004 U
2-Hexanone	mg/kg	0.006 U	0.004 U	0.004 U	0.004 U	0.004 U	0.005 U	0.005 U	0.004 U
4-Methyl-2-pentanone	mg/kg	0.006 U	0.004 U	0.004 U	0.004 U	0.004 U	0.005 U	0.005 U	0.004 U
Acetone	mg/kg	0.03 U	0.022 U	0.022 U	0.022 U	0.02 U	**0.0357**	0.026 U	0.021 U
Benzene	mg/kg	0.006 U	0.004 U	0.004 U	0.004 U	0.004 U	0.005 U	0.005 U	0.004 U
Bromodichloromethane	mg/kg	0.006 U	0.004 U	0.004 U	0.004 U	0.004 U	0.005 U	0.005 U	0.004 U
Bromoform	mg/kg	0.006 U	0.004 U	0.004 U	0.004 U	0.004 U	0.005 U	0.005 U	0.004 U
Bromomethane	mg/kg	0.006 U	0.004 U	0.004 U	0.004 U	0.004 U	0.005 U	0.005 U	0.004 U
Carbon disulfide	mg/kg	0.006 U	0.004 U	0.004 U	0.004 U	0.004 U	0.005 U	0.005 U	0.004 U
Carbon tetrachloride	mg/kg	0.006 U	0.004 U	0.004 U	0.004 U	0.004 U	0.005 U	0.005 U	0.004 U
Chlorobenzene	mg/kg	0.006 U	0.004 U	0.004 U	0.004 U	0.004 U	0.005 U	0.005 U	0.004 U
Chloroethane	mg/kg	0.006 U	0.004 U	0.004 U	0.004 U	0.004 U	0.005 U	0.005 U	0.004 U
Chloroform	mg/kg	0.006 U	0.004 U	0.004 U	0.004 U	0.004 U	0.005 U	0.005 U	0.004 U
Chloromethane	mg/kg	0.006 U	0.004 U	0.004 U	0.004 U	0.004 U	0.005 U	0.005 U	0.004 U
cis-1,2-Dichloroethene	mg/kg	0.006 U	0.004 U	0.004 U	0.004 U	0.004 U	0.005 U	0.005 U	0.004 U
cis-1,3-Dichloropropene	mg/kg	0.006 U	0.004 U	0.004 U	0.004 U	0.004 U	0.005 U	0.005 U	0.004 U
Dibromochloromethane	mg/kg	0.006 U	0.004 U	0.004 U	0.004 U	0.004 U	0.005 U	0.005 U	0.004 U
Ethylbenzene	mg/kg	0.006 U	0.004 U	0.004 U	0.004 U	0.004 U	0.005 U	0.005 U	0.004 U
Methylene chloride	mg/kg	0.012 U	0.009 U	0.009 U	0.009 U	0.008 U	0.01 U	0.01 U	0.008 U
Styrene	mg/kg	0.006 U	0.004 U	0.004 U	0.004 U	0.004 U	0.005 U	0.005 U	0.004 U
Tetrachloroethene	mg/kg	0.006 U	0.004 U	0.004 U	0.004 U	0.004 U	0.005 U	0.005 U	0.004 U
Toluene	mg/kg	0.006 U	0.004 U	0.004 U	0.004 U	0.004 U	0.005 U	0.005 U	0.004 U
trans-1,2-Dichloroethene	mg/kg	0.006 U	0.004 U	0.004 U	0.004 U	0.004 U	0.005 U	0.005 U	0.004 U
trans-1,3-Dichloropropene	mg/kg	0.006 U	0.004 U	0.004 U	0.004 U	0.004 U	0.005 U	0.005 U	0.004 U
Trichloroethene	mg/kg	**0.00601**	0.004 U	**0.0982**	**0.105**	**0.0694**	0.005 U	0.005 U	0.004 U
Vinyl acetate	mg/kg	0.006 U	0.004 U	0.004 U	0.004 U	0.004 U	0.005 U	0.005 U	0.004 U
Vinyl chloride	mg/kg	0.006 U	0.004 U	0.004 U	0.004 U	0.004 U	0.005 U	0.005 U	0.004 U
Xylene (total)	mg/kg	0.012 U	0.009 U	0.009 U	0.009 U	0.008 U	0.01 U	0.01 U	0.008 U

Detections are **bold**.
Data qualifiers are described on Table 2-1.

ft bgs - feet below ground surface
mg/kg - milligrams per kilogram

Table C-2
2010 Soil Results - Synthetic Precipitaion Leaching Procedure Volatile Organic Compounds
SWMU 33 Nail Mill Degreasing Area
AK Steel Kansas City Facility

Parameter	Sample ID:	33B101-SB1	33B101-SB2	33B101-SB3	33B102-SB1	33B102-SB3	33B103-SB1	33B103-SB1D	33B103-SB2	33B103-SB3
	Date Collected:	5/11/2010	5/11/2010	5/11/2010	5/11/2010	5/11/2010	5/11/2010	5/11/2010	5/11/2010	5/11/2010
	Depth (ft bgs):	2 - 4	4 - 6	6 - 8	2 - 4	6 - 8	2 - 4	2 - 4	4 - 6	6 - 8
	Lab ID:	21005134901	21005134902	21005134903	21005134904	21005134905	21005134908	21005134909	21005134910	21005134911
Synthetic Precipitation Leaching Procedure VOCs										
1,1,1-Trichloroethane	µg/L	5 U	5 U	5 U	5 U	5 U	5 U	5 U	5 U	5 U
1,1,2,2-Tetrachloroethane	µg/L	5 U	5 U	5 U	5 U	5 U	5 U	5 U	5 U	5 U
1,1,2-Trichloroethane	µg/L	5 U	5 U	5 U	5 U	5 U	5 U	5 U	5 U	5 U
1,1-Dichloroethane	µg/L	5 U	5 U	5 U	5 U	5 U	5 U	5 U	5 U	5 U
1,1-Dichloroethene	µg/L	5 U	5 U	5 U	5 U	5 U	5 U	5 U	5 U	5 U
1,2-Dichloroethane	µg/L	5 U	5 U	5 U	5 U	5 U	5 U	5 U	5 U	5 U
1,2-Dichloropropane	µg/L	5 U	5 U	5 U	5 U	5 U	5 U	5 U	5 U	5 U
2-Butanone	µg/L	25 U	25 U	25 U	25 U	25 U	25 U	25 U	25 U	25 U
2-Hexanone	µg/L	5 U	5 U	5 U	5 U	5 U	5 U	5 U	5 U	5 U
4-Methyl-2-pentanone	µg/L	5 U	5 U	5 U	5 U	5 U	5 U	5 U	5 U	5 U
Acetone	µg/L	25 U	25 U	25 U	25 U	25 U	25 U	25 U	25 U	25 U
Benzene	µg/L	5 U	5 U	5 U	5 U	5 U	5 U	5 U	5 U	5 U
Bromodichloromethane	µg/L	5 U	5 U	5 U	5 U	5 U	5 U	5 U	5 U	5 U
Bromoform	µg/L	5 U	5 U	5 U	5 U	5 U	5 U	5 U	5 U	5 U
Bromomethane	µg/L	5 U	5 U	5 U	5 U	5 U	5 U	5 U	5 U	5 U
Carbon disulfide	µg/L	5 U	5 U	5 U	5 U	5 U	5 U	5 U	5 U	5 U
Carbon tetrachloride	µg/L	5 U	5 U	5 U	5 U	5 U	5 U	5 U	5 U	5 U
Chlorobenzene	µg/L	5 U	5 U	5 U	5 U	5 U	5 U	5 U	5 U	5 U
Chloroethane	µg/L	5 U	5 U	5 U	5 U	5 U	5 U	5 U	5 U	5 U
Chloroform	µg/L	5 U	5 U	5 U	5 U	5 U	5 U	5 U	5 U	5 U
Chloromethane	µg/L	5 U	5 U	5 U	5 U	5 U	5 U	5 U	5 U	5 U
cis-1,2-Dichloroethene	µg/L	5 U	5 U	5 U	5 U	5 U	5 U	5 U	5 U	5 U
cis-1,3-Dichloropropene	µg/L	5 U	5 U	5 U	5 U	5 U	5 U	5 U	5 U	5 U
Dibromochloromethane	µg/L	5 U	5 U	5 U	5 U	5 U	5 U	5 U	5 U	5 U
Ethylbenzene	µg/L	5 U	5 U	5 U	5 U	5 U	5 U	5 U	5 U	5 U
Methylene chloride	µg/L	48.9 UR	30.3 UR	28.6 UR	25.3 UR	21 UR	26.3 UR	22 UR	22.3 UR	17.7 UR
Styrene	µg/L	5 U	5 U	5 U	5 U	5 U	5 U	5 U	5 U	5 U
Tetrachloroethene	µg/L	5 U	5 U	5 U	5 U	5 U	5 U	5 U	5 U	5 U
Toluene	µg/L	5 U	5 U	5 U	5 U	5 U	5 U	5 U	5 U	5 U
trans-1,2-Dichloroethene	µg/L	5 U	5 U	5 U	5 U	5 U	5 U	5 U	5 U	5 U
trans-1,3-Dichloropropene	µg/L	5 U	5 U	5 U	5 U	5 U	5 U	5 U	5 U	5 U
Trichloroethene	µg/L	5 U	5 U	5 U	5 U	5 U	5 U	5 U	5 U	5 U
Vinyl acetate	µg/L	5 U	5 U	5 U	5 U	5 UJ	5 U	5 U	5 U	5 U
Vinyl chloride	µg/L	5 U	5 U	5 U	5 U	5 U	5 U	5 U	5 U	5 U
Xylene (total)	µg/L	10 U	10 U	10 U	10 U	10 U	10 U	10 U	10 U	10 U

Detections are **bold**.
Data qualifiers are described on Table 2-1.

Table C-2
2010 Soil Results - Synthetic Precipitaion Leaching Procedure Volatile Organic Compounds
SWMU 33 Nail Mill Degreasing Area
AK Steel Kansas City Facility

Parameter	Sample ID: Date Collected: Depth (ft bgs): Lab ID:	33B104-SB1 5/11/2010 2 - 4 21005134912	33B104-SB2 5/11/2010 4 - 6 21005134913	33B104-SB2D 5/11/2010 4 - 6 21005134914	33B104-SB3 5/11/2010 6 - 8 21005134915	33B105-SB1 5/11/2010 2 - 4 21005134916	33B105-SB2 5/11/2010 4 - 6 21005134917	33B105-SB3 5/11/2010 6 - 8 21005134918	33B106-SB1 5/11/2010 2 - 4 21005134919	33B106-SB2 5/11/2010 4 - 6 21005134920
Synthetic Precipitation Leaching Procedure VOCs										
1,1,1-Trichloroethane	µg/L	5 U	5 U	5 U	5 U	5 U	5 U	5 U	5 U	5 U
1,1,2,2-Tetrachloroethane	µg/L	5 U	5 U	5 U	5 U	5 U	5 U	5 U	5 U	5 U
1,1,2-Trichloroethane	µg/L	5 U	5 U	5 U	5 U	5 U	5 U	5 U	5 U	5 U
1,1-Dichloroethane	µg/L	5 U	5 U	5 U	5 U	5 U	5 U	5 U	5 U	5 U
1,1-Dichloroethene	µg/L	5 U	5 U	5 U	5 U	5 U	5 U	5 U	5 U	5 U
1,2-Dichloroethane	µg/L	5 U	5 U	5 U	5 U	5 U	5 U	5 U	5 U	5 U
1,2-Dichloropropane	µg/L	5 U	5 U	5 U	5 U	5 U	5 U	5 U	5 U	5 U
2-Butanone	µg/L	25 U	25 U	25 U	25 U	25 U	25 U	25 U	25 U	25 U
2-Hexanone	µg/L	5 U	5 U	5 U	5 U	5 U	5 U	5 U	5 U	5 U
4-Methyl-2-pentanone	µg/L	5 U	5 U	5 U	5 U	5 U	5 U	5 U	5 U	5 U
Acetone	µg/L	25 U	25 U	25 U	25 U	25 U	25 U	25 U	25 U	25 U
Benzene	µg/L	5 U	5 U	5 U	5 U	5 U	5 U	5 U	5 U	5 U
Bromodichloromethane	µg/L	5 U	5 U	5 U	5 U	5 U	5 U	5 U	5 U	5 U
Bromoform	µg/L	5 U	5 U	5 U	5 U	5 U	5 U	5 U	5 U	5 U
Bromomethane	µg/L	5 U	5 U	5 U	5 U	5 U	5 U	5 U	5 U	5 U
Carbon disulfide	µg/L	5 U	5 U	5 U	5 U	5 U	5 U	5 U	5 U	5 U
Carbon tetrachloride	µg/L	5 U	5 U	5 U	5 U	5 U	5 U	5 U	5 U	5 U
Chlorobenzene	µg/L	5 U	5 U	5 U	5 U	5 U	5 U	5 U	5 U	5 U
Chloroethane	µg/L	5 U	5 U	5 U	5 U	5 U	5 U	5 U	5 U	5 U
Chloroform	µg/L	5 U	5 U	5 U	5 U	5 U	5 U	5 U	5 U	5 U
Chloromethane	µg/L	5 U	5 U	5 U	5 U	5 U	5 U	5 U	5 U	5 U
cis-1,2-Dichloroethene	µg/L	5 U	5 U	5 U	5 U	**24**	**28.1**	5 U	5 U	5 U
cis-1,3-Dichloropropene	µg/L	5 U	5 U	5 U	5 U	5 U	5 U	5 U	5 U	5 U
Dibromochloromethane	µg/L	5 U	5 U	5 U	5 U	5 U	5 U	5 U	5 U	5 U
Ethylbenzene	µg/L	5 U	5 U	5 U	5 U	5 U	5 U	5 U	5 U	5 U
Methylene chloride	µg/L	24.3 UR	27.5 UR	22.1 UR	18.6 UR	14.4 UR	21.7 UR	16.6 UR	16.8 UR	28.9 UR
Styrene	µg/L	5 U	5 U	5 U	5 U	5 U	5 U	5 U	5 U	5 U
Tetrachloroethene	µg/L	5 U	5 U	5 U	5 U	5 U	5 U	5 U	5 U	5 U
Toluene	µg/L	5 U	5 U	5 U	5 U	5 U	5 U	5 U	5 U	5 U
trans-1,2-Dichloroethene	µg/L	5 U	5 U	5 U	5 U	5 U	5 U	5 U	5 U	5 U
trans-1,3-Dichloropropene	µg/L	5 U	5 U	5 U	5 U	5 U	5 U	5 U	5 U	5 U
Trichloroethene	µg/L	5 U	5 U	5 U	5 U	**18.8**	**19.2**	5 U	5 U	5 U
Vinyl acetate	µg/L	5 U	5 U	5 U	5 U	5 U	5 U	5 U	5 U	5 U
Vinyl chloride	µg/L	5 U	5 U	5 U	5 U	5 U	5 U	5 U	5 U	5 U
Xylene (total)	µg/L	10 U	10 U	10 U	10 U	10 U	10 U	10 U	10 U	10 U

Detections are **bold**.
Data qualifiers are described on Table 2-1.

ft bgs - feet below ground surface
µg/L - micrograms per liter

Table C-2
2010 Soil Results - Synthetic Precipitaion Leaching Procedure Volatile Organic Compounds
SWMU 33 Nail Mill Degreasing Area
AK Steel Kansas City Facility

Parameter	Sample ID: / Date Collected: / Depth (ft bgs): / Lab ID:	33B106-SB3 5/11/2010 6 - 8 21005134921	33B107-SB1 5/11/2010 2 - 4 21005134922	33B107-SB2 5/11/2010 4 - 6 21005134923	33B107-SB3 5/11/2010 6 - 8 21005134924	33B108-SB1 5/11/2010 2 - 4 21005134925	33B108-SB3 5/11/2010 6 - 8 21005134928	33B109-SB1 5/11/2010 2 - 4 21005134929	33B109-SB2 5/11/2010 4 - 6 21005134930	33B109-SB3 5/11/2010 6 - 8 21005134931
Synthetic Precipitation Leaching Procedure VOCs										
1,1,1-Trichloroethane	µg/L	5 U	5 U	5 U	5 U	5 U	5 U	5 U	5 U	5 U
1,1,2,2-Tetrachloroethane	µg/L	5 U	5 U	5 U	5 U	5 U	5 U	5 U	5 U	5 U
1,1,2-Trichloroethane	µg/L	5 U	5 U	5 U	5 U	5 U	5 U	5 U	5 U	5 U
1,1-Dichloroethane	µg/L	5 U	5 U	5 U	5 U	5 U	5 U	5 U	5 U	5 U
1,1-Dichloroethene	µg/L	5 U	5 U	5 U	5 U	5 UJ	5 U	5 U	5 U	5 U
1,2-Dichloroethane	µg/L	5 U	5 U	5 U	5 U	5 U	5 U	5 U	5 U	5 U
1,2-Dichloropropane	µg/L	5 U	5 U	5 U	5 U	5 U	5 U	5 U	5 U	5 U
2-Butanone	µg/L	25 U	25 U	25 U	25 U	25 U	25 U	25 U	25 U	25 U
2-Hexanone	µg/L	5 U	5 U	5 U	5 U	5 U	5 U	5 U	5 U	5 U
4-Methyl-2-pentanone	µg/L	5 U	5 U	5 U	5 U	5 U	5 U	5 U	5 U	5 U
Acetone	µg/L	25 U	25 U	25 U	25 U	25 UJ	25 U	25 U	25 U	25 U
Benzene	µg/L	5 U	5 U	5 U	5 U	5 U	5 U	5 U	5 U	5 U
Bromodichloromethane	µg/L	5 U	5 U	5 U	5 U	5 U	5 U	5 U	5 U	5 U
Bromoform	µg/L	5 U	5 U	5 U	5 U	5 U	5 U	5 U	5 U	5 U
Bromomethane	µg/L	5 U	5 U	5 U	5 U	5 U	5 U	5 U	5 U	5 U
Carbon disulfide	µg/L	5 U	5 U	5 U	5 U	5 UJ	5 U	5 U	5 U	5 U
Carbon tetrachloride	µg/L	5 U	5 U	5 U	5 U	5 U	5 U	5 U	5 U	5 U
Chlorobenzene	µg/L	5 U	5 U	5 U	5 U	5 U	5 U	5 U	5 U	5 U
Chloroethane	µg/L	5 U	5 U	5 U	5 U	5 U	5 U	5 U	5 U	5 U
Chloroform	µg/L	5 U	5 U	5 U	5 U	5 U	5 U	5 U	5 U	5 U
Chloromethane	µg/L	5 U	5 U	5 U	5 U	5 U	5 U	5 U	5 U	5 U
cis-1,2-Dichloroethene	µg/L	5 U	**6.98**	**7.69**	5 U	5 U	5 U	5 U	5 U	5 U
cis-1,3-Dichloropropene	µg/L	5 U	5 U	5 U	5 U	5 U	5 U	5 U	5 U	5 U
Dibromochloromethane	µg/L	5 U	5 U	5 U	5 U	5 U	5 U	5 U	5 U	5 U
Ethylbenzene	µg/L	5 U	5 U	5 U	5 U	5 U	5 U	5 U	5 U	5 U
Methylene chloride	µg/L	13.6 UR	18.7 UR	20 UR	20 UR	46.6 UR	38.1 UR	52.3 UR	37.9 UR	42.7 UR
Styrene	µg/L	5 U	5 U	5 U	5 U	5 U	5 U	5 U	5 U	5 U
Tetrachloroethene	µg/L	5 U	5 U	5 U	5 U	5 U	5 U	5 U	5 U	5 U
Toluene	µg/L	5 U	5 U	5 U	5 U	5 U	5 U	5 U	5 U	5 U
trans-1,2-Dichloroethene	µg/L	5 U	5 U	5 U	5 U	5 U	5 U	5 U	5 U	5 U
trans-1,3-Dichloropropene	µg/L	5 U	5 U	5 U	5 U	5 U	5 U	5 U	5 U	5 U
Trichloroethene	µg/L	5 U	**9.88**	**7.49**	5 U	5 U	5 U	5 U	5 U	5 U
Vinyl acetate	µg/L	5 U	5 U	5 U	5 U	5 U	5 U	5 U	5 U	5 U
Vinyl chloride	µg/L	5 U	5 U	5 U	5 U	5 U	5 U	5 U	5 U	5 U
Xylene (total)	µg/L	10 U	10 U	10 U	10 U	10 U	10 U	10 U	10 U	10 U

Detections are **bold**.
Data qualifiers are described on Table 2-1.

ft bgs - feet below ground surface
µg/L - micrograms per liter

Table C-2
2010 Soil Results - Synthetic Precipitaion Leaching Procedure Volatile Organic Compounds
SWMU 33 Nail Mill Degreasing Area
AK Steel Kansas City Facility

Parameter	Sample ID: Date Collected: Depth (ft bgs): Lab ID:	33B109-SB3D 5/11/2010 6 - 8 21005134932	33B110-SB1 5/11/2010 2 - 4 21005134933	33B110-SB2 5/11/2010 4 - 6 21005134934	33B110-SB3 5/11/2010 6 - 8 21005134935	33B111-SB1 5/11/2010 2 - 4 21005134936	33B111-SB2 5/11/2010 4 - 6 21005134937	33B111-SB3 5/11/2010 6 - 8 21005134938	33B112-SB1 5/12/2010 2 - 4 21005134939	33B112-SB1D 5/12/2010 2 - 4 21005134940
Synthetic Precipitation Leaching Procedure VOCs										
1,1,1-Trichloroethane	µg/L	5 U	5 U	5 U	5 U	5 U	5 U	5 U	5 U	5 U
1,1,2,2-Tetrachloroethane	µg/L	5 U	5 U	5 U	5 U	5 U	5 U	5 U	5 U	5 U
1,1,2-Trichloroethane	µg/L	5 U	5 U	5 U	5 U	5 U	5 U	5 U	5 U	5 U
1,1-Dichloroethane	µg/L	5 U	5 U	5 U	5 U	5 U	5 U	5 U	5 U	5 U
1,1-Dichloroethene	µg/L	5 U	5 U	5 U	5 U	5 U	5 U	5 U	5 U	5 U
1,2-Dichloroethane	µg/L	5 U	5 U	5 U	5 U	5 U	5 U	5 U	5 U	5 U
1,2-Dichloropropane	µg/L	5 U	5 U	5 U	5 U	5 U	5 U	5 U	5 U	5 U
2-Butanone	µg/L	25 U	25 U	25 U	25 U	25 U	25 U	25 U	25 U	25 U
2-Hexanone	µg/L	5 U	5 U	5 U	5 U	5 U	5 U	5 U	5 U	5 U
4-Methyl-2-pentanone	µg/L	5 U	5 U	5 U	5 U	5 U	5 U	5 U	5 U	5 U
Acetone	µg/L	25 U	25 U	25 U	25 U	25 U	25 U	25 U	25 U	25 U
Benzene	µg/L	5 U	5 U	5 U	5 U	5 U	5 U	5 U	5 U	5 U
Bromodichloromethane	µg/L	5 U	5 U	5 U	5 U	5 U	5 U	5 U	5 U	5 U
Bromoform	µg/L	5 U	5 U	5 U	5 U	5 U	5 U	5 U	5 U	5 U
Bromomethane	µg/L	5 U	5 U	5 U	5 U	5 U	5 U	5 U	5 U	5 U
Carbon disulfide	µg/L	5 U	5 U	5 U	5 U	5 U	5 U	5 U	5 U	5 U
Carbon tetrachloride	µg/L	5 U	5 U	5 U	5 U	5 U	5 U	5 U	5 U	5 U
Chlorobenzene	µg/L	5 U	5 U	5 U	5 U	5 U	5 U	5 U	5 U	5 U
Chloroethane	µg/L	5 U	5 U	5 U	5 U	5 U	5 U	5 U	5 U	5 U
Chloroform	µg/L	5 U	5 U	5 U	5 U	5 U	5 U	5 U	5 U	5 U
Chloromethane	µg/L	5 U	5 U	5 U	5 U	5 U	5 U	5 U	5 U	5 U
cis-1,2-Dichloroethene	µg/L	5 U	5 U	5 U	5 U	5 U	5 U	5 U	5 U	5 U
cis-1,3-Dichloropropene	µg/L	5 U	5 U	5 U	5 U	5 U	5 U	5 U	5 U	5 U
Dibromochloromethane	µg/L	5 U	5 U	5 U	5 U	5 U	5 U	5 U	5 U	5 U
Ethylbenzene	µg/L	5 U	5 U	5 U	5 U	5 U	5 U	5 U	5 U	5 U
Methylene chloride	µg/L	20.8 UR	36.6 UR	46.5 UR	27 UR	30.9 UR	18.3 UR	38.1 UR	33.6 UR	28.6 UR
Styrene	µg/L	5 U	5 U	5 U	5 U	5 U	5 U	5 U	5 U	5 U
Tetrachloroethene	µg/L	5 U	5 U	5 U	5 U	5 U	5 U	5 U	5 U	5 U
Toluene	µg/L	5 U	5 U	5 U	5 U	5 U	5 U	5 U	5 U	5 U
trans-1,2-Dichloroethene	µg/L	5 U	5 U	5 U	5 U	5 U	5 U	5 U	5 U	5 U
trans-1,3-Dichloropropene	µg/L	5 U	5 U	5 U	5 U	5 U	5 U	5 U	5 U	5 U
Trichloroethene	µg/L	5 U	5 U	5 U	5 U	5 U	5 U	5 U	5 U	5 U
Vinyl acetate	µg/L	5 U	5 U	5 U	5 U	5 U	5 U	5 U	5 U	5 U
Vinyl chloride	µg/L	5 U	5 U	5 U	5 U	5 U	5 U	5 U	5 U	5 U
Xylene (total)	µg/L	10 U	10 U	10 U	10 U	10 U	10 U	10 U	10 U	10 U

Detections are **bold**.
Data qualifiers are described on Table 2-1.

ft bgs - feet below ground surface
µg/L - micrograms per liter

Table C-2

2010 Soil Results - Synthetic Precipitaion Leaching Procedure Volatile Organic Compounds

SWMU 33 Nail Mill Degreasing Area

AK Steel Kansas City Facility

Parameter	Sample ID: / Date Collected: / Depth (ft bgs): / Lab ID:	33B112-SB2 5/12/2010 4 - 6 21005134941	33B112-SB3 5/12/2010 6 - 8 21005134942	33B113-SB1 5/11/2010 2 - 4 21005134943	33B113-SB2 5/11/2010 4 - 6 21005134944	33B113-SB3 5/11/2010 6 - 8 21005134945	33B114-SB1 5/12/2010 2 - 4 21005134946	33B114-SB2 5/12/2010 4 - 6 21005134947	33B114-SB3 5/12/2010 6 - 8 21005134948
Synthetic Precipitation Leaching Procedure VOCs									
1,1,1-Trichloroethane	µg/L	5 U	5 U	5 U	5 U	5 U	5 U	5 U	5 U
1,1,2,2-Tetrachloroethane	µg/L	5 U	5 U	5 U	5 U	5 U	5 U	5 U	5 U
1,1,2-Trichloroethane	µg/L	5 U	5 U	5 U	5 U	5 U	5 U	5 U	5 U
1,1-Dichloroethane	µg/L	5 U	5 U	5 U	5 U	5 U	5 U	5 U	5 U
1,1-Dichloroethene	µg/L	5 U	5 U	5 U	5 U	5 U	5 U	5 U	5 U
1,2-Dichloroethane	µg/L	5 U	5 U	5 U	5 U	5 U	5 U	5 U	5 U
1,2-Dichloropropane	µg/L	5 U	5 U	5 U	5 U	5 U	5 U	5 U	5 U
2-Butanone	µg/L	25 U	25 U	25 U	25 U	25 U	25 U	25 U	25 U
2-Hexanone	µg/L	5 U	5 U	5 U	5 U	5 U	5 U	5 U	5 U
4-Methyl-2-pentanone	µg/L	5 U	5 U	5 U	5 U	5 U	5 U	5 U	5 U
Acetone	µg/L	25 U	25 U	25 U	25 U	25 U	25 U	25 U	25 U
Benzene	µg/L	5 U	5 U	5 U	5 U	5 U	5 U	5 U	5 U
Bromodichloromethane	µg/L	5 U	5 U	5 U	5 U	5 U	5 U	5 U	5 U
Bromoform	µg/L	5 U	5 U	5 U	5 U	5 U	5 U	5 U	5 U
Bromomethane	µg/L	5 U	5 U	5 U	5 U	5 U	5 U	5 U	5 U
Carbon disulfide	µg/L	5 U	5 U	5 U	5 U	5 U	5 U	5 U	5 U
Carbon tetrachloride	µg/L	5 U	5 U	5 U	5 U	5 U	5 U	5 U	5 U
Chlorobenzene	µg/L	5 U	5 U	5 U	5 U	5 U	5 U	5 U	5 U
Chloroethane	µg/L	5 U	5 U	5 U	5 U	5 U	5 U	5 U	5 U
Chloroform	µg/L	5 U	5 U	5 U	5 U	5 U	5 U	5 U	5 U
Chloromethane	µg/L	5 U	5 U	5 U	5 U	5 U	5 U	5 U	5 U
cis-1,2-Dichloroethene	µg/L	5 U	5 U	5 U	5 U	5 U	5 U	5 U	5 U
cis-1,3-Dichloropropene	µg/L	5 U	5 U	5 U	5 U	5 U	5 U	5 U	5 U
Dibromochloromethane	µg/L	5 U	5 U	5 U	5 U	5 U	5 U	5 U	5 U
Ethylbenzene	µg/L	5 U	5 U	5 U	5 U	5 U	5 U	5 U	5 U
Methylene chloride	µg/L	43.6 UR	29.6 UR	14.2 UR	14 UR	19.4 UR	14.7 UR	12 UR	20.5 UR
Styrene	µg/L	5 U	5 U	5 U	5 U	5 U	5 U	5 U	5 U
Tetrachloroethene	µg/L	5 U	5 U	5 U	5 U	5 U	5 U	5 U	5 U
Toluene	µg/L	5 U	5 U	5 U	5 U	5 U	5 U	5 U	5 U
trans-1,2-Dichloroethene	µg/L	5 U	5 U	5 U	5 U	5 U	5 U	5 U	5 U
trans-1,3-Dichloropropene	µg/L	5 U	5 U	5 U	5 U	5 U	5 U	5 U	5 U
Trichloroethene	µg/L	5 U	5 U	5 U	5 U	5 U	5 U	5 U	5 U
Vinyl acetate	µg/L	5 U	5 U	5 U	5 U	5 U	5 U	5 U	5 U
Vinyl chloride	µg/L	5 U	5 U	5 U	5 U	5 U	5 U	5 U	5 U
Xylene (total)	µg/L	10 U	10 U	10 U	10 U	10 U	10 U	10 U	10 U

Detections are **bold**.

Data qualifiers are described on Table 2-1.

ft bgs - feet below ground surface

µg/L - micrograms per liter

Table C-3
Historical Soil Results - Volatile Organic Compounds
SWMU 33 Nail Mill Degreasing Area
AK Steel Kansas City Facility

Parameter	Sample ID: / Date Collected: / Depth (ft bgs): / Lab ID:	33B01-DP1 3/31/1997 1 - 5 D97-3879-1	33B01-DP2 3/31/1997 5 - 9 D97-3879-2	33B01-DP3 3/31/1997 9 - 13 D97-3879-3	33B02-DP1 3/31/1997 1 - 5 D97-3879-5	33B02-DP2 3/31/1997 5 - 9 D97-3879-6	33B02-DP3 3/31/1997 9 - 13 D97-3879-7	33B03-DP1 4/8/1997 3.2 - 4.2 D97-4264-4	33B03-DP2 4/8/1997 7 - 8 D97-4264-5	33B04-DP1 4/7/1997 1.7 - 2.4 D97-4256-1	33B04-DP1D 4/7/1997 1.7 - 2.4 D97-4256-2
Volatile Organic Compounds	**Units**										
1,1,1-Trichloroethane	mg/Kg	0.00663 U	**0.0138**	0.00649 U	0.00628 U	**0.0655**	**0.0619**	0.00614 U	0.0063 U	0.00627 U	0.00604 U
1,1,2,2-Tetrachloroethane	mg/Kg	0.00663 U	0.00627 U	0.00649 U	0.00628 U	0.00621 U	0.00701 U	0.00614 U	0.0063 U	0.00627 U	0.00604 U
1,1,2-Trichloroethane	mg/Kg	0.00663 U	0.00627 U	**0.0107**	0.00628 U	**0.00637**	**0.00937**	0.00614 U	0.0063 U	0.00627 U	0.00604 U
1,1-Dichloroethane	mg/Kg	0.00663 U	**0.00925**	0.00649 U	0.00628 U	**0.0148**	**0.0174**	0.00614 U	0.0063 U	0.00627 U	0.00604 U
1,1-Dichloroethene	mg/Kg	**0.0263**	**0.0619**	**0.0124**	0.00628 U	**0.0246**	**0.0215**	0.00614 U	0.0063 U	0.00627 U	0.00604 U
1,2-Dichloroethane	mg/Kg	0.00663 U	0.00627 U	0.00649 U	0.00628 U	0.00621 U	**0.00781**	0.00614 U	0.0063 U	0.00627 U	0.00604 U
1,2-Dichloropropane	mg/Kg	0.00663 U	0.00627 U	0.00649 U	0.00628 U	0.00621 U	0.00701 U	0.00614 U	0.0063 U	0.00627 U	0.00604 U
2-Butanone	mg/Kg	0.00663 U	0.00627 U	0.00649 U	0.00628 U	0.00621 U	0.00701 U	0.00614 U	0.0063 U	0.00627 U	0.00604 U
2-Chloroethylvinyl ether	mg/Kg	0.00663 U	0.00627 U	0.00649 U	0.00628 U	0.00621 U	0.00701 U	0.00614 U	0.0063 U	0.00627 U	0.00604 U
2-Hexanone	mg/Kg	**0.018 J**	0.0627 U	0.0649 U	0.0628 U	0.0621 U	0.0701 U	0.0614 U	0.063 U	0.0627 U	0.0604 U
4-Methyl-2-pentanone	mg/Kg	0.133 U	0.125 U	0.13 U	0.126 U	0.124 U	0.14 U	0.123 U	0.126 U	0.125 U	0.121 U
Acetone	mg/Kg	0.133 U	0.125 U	0.13 U	0.126 U	0.124 U	0.14 U	0.123 U	0.126 U	0.125 U	0.121 U
Benzene	mg/Kg	0.00663 U	0.00627 U	0.00649 U	0.00628 U	0.00621 U	0.00701 U	0.00614 U	0.0063 U	0.00627 U	0.00604 U
Bromodichloromethane	mg/Kg	0.00663 U	0.00627 U	0.00649 U	0.00628 U	0.00621 U	0.00701 U	0.00614 U	0.0063 U	0.00627 U	0.00604 U
Bromoform	mg/Kg	0.00663 U	0.00627 U	0.00649 U	0.00628 U	0.00621 U	0.00701 U	0.00614 U	0.0063 U	0.00627 U	0.00604 U
Bromomethane	mg/Kg	0.00663 U	0.00627 U	0.00649 U	0.00628 U	0.00621 U	0.00701 U	0.00614 U	0.0063 U	0.00627 U	0.00604 U
Carbon disulfide	mg/Kg	0.00663 U	0.00627 U	0.00649 U	0.00628 U	0.00621 U	0.00701 U	0.00614 U	0.0063 U	0.00627 U	0.00604 U
Carbon tetrachloride	mg/Kg	0.00663 U	0.00627 U	0.00649 U	0.00628 U	0.00621 U	0.00701 U	0.00614 U	0.0063 U	0.00627 U	0.00604 U
Chlorobenzene	mg/Kg	0.00663 U	0.00627 U	0.00649 U	0.00628 U	0.00621 U	0.00701 U	0.00614 U	0.0063 U	0.00627 U	0.00604 U
Chloroethane	mg/Kg	0.00663 U	0.00627 U	0.00649 U	0.00628 U	0.00621 U	0.00701 U	0.00614 U	0.0063 U	0.00627 U	0.00604 U
Chloroform	mg/Kg	0.00663 U	**0.00851**	0.00649 U	0.00628 U	0.00621 U	0.00701 U	0.00614 U	0.0063 U	0.00627 U	0.00604 U
Chloromethane	mg/Kg	0.00663 U	0.00627 U	0.00649 U	0.00628 U	0.00621 U	0.00701 U	0.00614 U	0.0063 U	0.00627 U	0.00604 U
cis-1,2-Dichloroethene	mg/Kg	**2.57 D**	**4.51 D**	**1.44 D**	**1.7 D**	**5.07 D**	**1.75 D**	0.00614 U	0.0063 U	0.00627 U	0.00604 U
trans-1,2-Dichloroethene	mg/Kg	**0.00999**	**0.0193**	0.00649 U	0.00628 U	0.00621 U	0.00701 U	0.00614 U	0.0063 U	0.00627 U	0.00604 U
cis-1,3-Dichloropropene	mg/Kg	0.00663 U	0.00627 U	0.00649 U	0.00628 U	0.00621 U	0.00701 U	0.00614 U	0.0063 U	0.00627 U	0.00604 U
trans-1,3-Dichloropropene	mg/Kg	0.00663 U	0.00627 U	0.00649 U	0.00628 U	0.00621 U	0.00701 U	0.00614 U	0.0063 U	0.00627 U	0.00604 U
Dibromochloromethane	mg/Kg	0.00663 U	0.00627 U	0.00649 U	0.00628 U	0.00621 U	0.00701 U	0.00614 U	0.0063 U	0.00627 U	0.00604 U
Ethylbenzene	mg/Kg	0.00663 U	0.00627 U	0.00649 U	0.00628 U	0.00621 U	0.00701 U	0.00614 U	0.0063 U	0.00627 U	0.00604 U
Methylene chloride	mg/Kg	0.00663 U	0.00627 U	0.00649 U	0.00628 U	0.00621 U	0.00701 U	0.00614 U	0.0063 U	0.00627 U	0.00604 U
Styrene	mg/Kg	0.00663 U	0.00627 U	0.00649 U	0.00628 U	0.00621 U	0.00701 U	0.00614 U	0.0063 U	0.00627 U	0.00604 U
Tetrachloroethene	mg/Kg	0.00663 U	0.00627 U	0.00649 U	0.00628 U	0.00621 U	0.00701 U	0.00614 U	0.0063 U	0.00627 U	0.00604 U
Toluene	mg/Kg	0.00663 U	0.00627 U	0.00649 U	0.00628 U	0.00621 U	0.00701 U	0.00614 U	0.0063 U	0.00627 U	0.00604 U
Trichloroethene	mg/Kg	**8.1 D**	**19.8 D**	**8.26 D**	**3.29 D**	**12.4 D**	**6.73 D**	**0.0136**	**0.176**	0.00627 U	0.00604 U
Vinyl acetate	mg/Kg	0.0663 U	0.0627 U	0.0649 U	0.0628 U	0.0621 U	0.0701 U	0.0614 U	0.063 U	0.0627 U	0.0604 U
Vinyl chloride	mg/Kg	**0.00924**	0.00251 U	0.00259 U	**0.00907**	0.00248 U	0.00281 U	0.00246 U	0.00252 U	0.00251 U	0.00242 U
m,p-Xylene	mg/Kg	0.00663 U	0.00627 U	0.00649 U	0.00628 U	0.00621 U	0.00701 U	0.00614 U	0.0063 U	0.00627 U	0.00604 U
o-Xylene	mg/Kg	0.00663 U	0.00627 U	0.00649 U	0.00628 U	0.00621 U	0.00701 U	0.00614 U	0.0063 U	0.00627 U	0.00604 U

Detections are **bold**.
Data qualifiers are described on Table 2-1.

Table C-3
Historical Soil Results - Volatile Organic Compounds
SWMU 33 Nail Mill Degreasing Area
AK Steel Kansas City Facility

Parameter	Sample ID: / Date Collected: / Depth (ft bgs): / Lab ID:	33B04-DP2 4/7/1997 8 - 9 D97-4256-3	33B05-DP1 4/7/1997 2.5 - 3.5 D97-4256-5	33B05-DP2 4/7/1997 7 - 8 D97-4256-6	33B06-DP1 4/7/1997 1.6 - 2.6 D97-4256-7	33B06-DP2 4/7/1997 6 - 7 D97-4256-8	33B06-DP3 4/7/1997 9 - 10 D97-4256-9	33B07-DP1 4/7/1997 2.5 - 3.5 D97-4256-10	33B07-DP2 4/7/1997 6.8 - 7.8 D97-4256-11	33B08-DP1 4/7/1997 1.5 - 2.5 D97-4256-12	33B08-DP2 4/7/1997 6.5 - 7.5 D97-4256-13
Volatile Organic Compounds	**Units**										
1,1,1-Trichloroethane	mg/Kg	0.00636 U	0.00622 U	0.0059 U	0.00624 U	0.0065 U	0.00645 U	0.00635 U	0.00631 U	0.00671 U	0.0066 U
1,1,2,2-Tetrachloroethane	mg/Kg	0.00636 U	0.00622 U	0.0059 U	0.00624 U	0.0065 U	0.00645 U	0.00635 U	0.00631 U	0.00671 U	0.0066 U
1,1,2-Trichloroethane	mg/Kg	0.00636 U	0.00622 U	**0.0102**	0.00624 U	0.0065 U	0.00645 U	0.00635 U	0.00631 U	0.00671 U	0.0066 U
1,1-Dichloroethane	mg/Kg	0.00636 U	0.00622 U	0.0059 U	0.00624 U	0.0065 U	0.00645 U	0.00635 U	0.00631 U	0.00671 U	0.0066 U
1,1-Dichloroethene	mg/Kg	0.00636 U	**0.00714**	**0.0165**	0.00624 U	0.0065 U	0.00645 U	0.00635 U	0.00631 U	0.00671 U	0.0066 U
1,2-Dichloroethane	mg/Kg	0.00636 U	0.00622 U	0.0059 U	0.00624 U	0.0065 U	0.00645 U	0.00635 U	0.00631 U	0.00671 U	0.0066 U
1,2-Dichloropropane	mg/Kg	0.00636 U	0.00622 U	0.0059 U	0.00624 U	0.0065 U	0.00645 U	0.00635 U	0.00631 U	0.00671 U	0.0066 U
2-Butanone	mg/Kg	0.00636 U	0.00622 U	0.0059 U	0.00624 U	0.0065 U	0.00645 U	0.00635 U	0.00631 U	0.00671 U	0.0066 U
2-Chloroethylvinyl ether	mg/Kg	0.00636 U	0.00622 U	0.0059 U	0.00624 U	0.0065 U	0.00645 U	0.00635 U	0.00631 U	0.00671 U	0.0066 U
2-Hexanone	mg/Kg	0.0636 U	0.0622 U	0.059 U	0.0624 U	0.065 U	0.0645 U	0.0635 U	0.0631 U	0.0671 U	0.066 U
4-Methyl-2-pentanone	mg/Kg	0.127 U	0.124 U	0.118 U	0.125 U	0.13 U	0.129 U	0.127 U	0.126 U	0.134 U	0.132 U
Acetone	mg/Kg	**0.0695 J**	0.124 U	0.118 U	0.125 U	0.13 U	0.129 U	0.127 U	**0.0439 J**	0.134 U	0.132 U
Benzene	mg/Kg	0.00636 U	0.00622 U	0.0059 U	0.00624 U	0.0065 U	0.00645 U	0.00635 U	0.00631 U	0.00671 U	0.0066 U
Bromodichloromethane	mg/Kg	0.00636 U	0.00622 U	0.0059 U	0.00624 U	0.0065 U	0.00645 U	0.00635 U	0.00631 U	0.00671 U	0.0066 U
Bromoform	mg/Kg	0.00636 U	0.00622 U	0.0059 U	0.00624 U	0.0065 U	0.00645 U	0.00635 U	0.00631 U	0.00671 U	0.0066 U
Bromomethane	mg/Kg	0.00636 U	0.00622 U	0.0059 U	0.00624 U	0.0065 U	0.00645 U	0.00635 U	0.00631 U	0.00671 U	0.0066 U
Carbon disulfide	mg/Kg	0.00636 U	0.00622 U	0.0059 U	0.00624 U	0.0065 U	0.00645 U	0.00635 U	0.00631 U	0.00671 U	0.0066 U
Carbon tetrachloride	mg/Kg	0.00636 U	0.00622 U	0.0059 U	0.00624 U	0.0065 U	0.00645 U	0.00635 U	0.00631 U	0.00671 U	0.0066 U
Chlorobenzene	mg/Kg	0.00636 U	0.00622 U	0.0059 U	0.00624 U	0.0065 U	0.00645 U	0.00635 U	0.00631 U	0.00671 U	0.0066 U
Chloroethane	mg/Kg	0.00636 U	0.00622 U	0.0059 U	0.00624 U	0.0065 U	0.00645 U	0.00635 U	0.00631 U	0.00671 U	0.0066 U
Chloroform	mg/Kg	0.00636 U	**0.0077**	**0.00988**	0.00624 U	0.0065 U	0.00645 U	0.00635 U	0.00631 U	0.00671 U	0.0066 U
Chloromethane	mg/Kg	0.00636 U	0.00622 U	0.0059 U	0.00624 U	0.0065 U	0.00645 U	0.00635 U	0.00631 U	0.00671 U	0.0066 U
cis-1,2-Dichloroethene	mg/Kg	0.00636 U	**0.377 D**	**0.54 D**	**0.024**	**0.112**	**0.111**	**0.0213**	**0.00705**	0.00671 U	0.0066 U
trans-1,2-Dichloroethene	mg/Kg	0.00636 U	0.00622 U	0.0059 U	0.00624 U	0.0065 U	0.00645 U	0.00635 U	0.00631 U	0.00671 U	0.0066 U
cis-1,3-Dichloropropene	mg/Kg	0.00636 U	0.00622 U	0.0059 U	0.00624 U	0.0065 U	0.00645 U	0.00635 U	0.00631 U	0.00671 U	0.0066 U
trans-1,3-Dichloropropene	mg/Kg	0.00636 U	0.00622 U	0.0059 U	0.00624 U	0.0065 U	0.00645 U	0.00635 U	0.00631 U	0.00671 U	0.0066 U
Dibromochloromethane	mg/Kg	0.00636 U	0.00622 U	0.0059 U	0.00624 U	0.0065 U	0.00645 U	0.00635 U	0.00631 U	0.00671 U	0.0066 U
Ethylbenzene	mg/Kg	0.00636 U	0.00622 U	0.0059 U	0.00624 U	0.0065 U	0.00645 U	0.00635 U	0.00631 U	0.00671 U	0.0066 U
Methylene chloride	mg/Kg	0.00636 U	0.00622 U	0.0059 U	0.00624 U	0.0065 U	0.00645 U	0.00635 U	0.00631 U	0.00671 U	0.0066 U
Styrene	mg/Kg	0.00636 U	0.00622 U	0.0059 U	0.00624 U	0.0065 U	0.00645 U	0.00635 U	0.00631 U	0.00671 U	0.0066 U
Tetrachloroethene	mg/Kg	0.00636 U	0.00622 U	0.0059 U	0.00624 U	0.0065 U	0.00645 U	0.00635 U	0.00631 U	0.00671 U	0.0066 U
Toluene	mg/Kg	0.00636 U	0.00622 U	0.0059 U	0.00624 U	0.0065 U	0.00645 U	0.00635 U	0.00631 U	0.00671 U	0.0066 U
Trichloroethene	mg/Kg	0.00636 U	**2.56 D**	**5.86 D**	**0.297**	**0.296 D**	**0.261 D**	**0.0376**	0.00631 U	0.00671 U	0.0066 U
Vinyl acetate	mg/Kg	0.0636 U	0.0622 U	0.059 U	0.0624 U	0.065 U	0.0645 U	0.0635 U	0.0631 U	0.0671 U	0.066 U
Vinyl chloride	mg/Kg	0.00254 U	0.00249 U	0.00236 U	0.0025 U	0.0026 U	0.00258 U	0.00254 U	0.00253 U	0.00268 U	0.00264 U
m,p-Xylene	mg/Kg	0.00636 U	0.00622 U	0.0059 U	0.00624 U	0.0065 U	0.00645 U	0.00635 U	0.00631 U	0.00671 U	0.0066 U
o-Xylene	mg/Kg	0.00636 U	0.00622 U	0.0059 U	0.00624 U	0.0065 U	0.00645 U	0.00635 U	0.00631 U	0.00671 U	0.0066 U

Detections are **bold**.
Data qualifiers are described on Table 2-1.

ft bgs - feet below ground surface
mg/kg - milligrams per kilogram

Table C-3
Historical Soil Results - Volatile Organic Compounds
SWMU 33 Nail Mill Degreasing Area
AK Steel Kansas City Facility

Parameter	Sample ID: / Date Collected: / Depth (ft bgs): / Lab ID:	33B08-DP2D 4/7/1997 6.5 - 7.5 D97-4256-14	33B09-DP1 4/7/1997 0.8 - 1.8 D97-4256-15	33B09-DP2 4/7/1997 6 - 7 D97-4256-16	33B10-DP1 4/8/1997 1 - 2 D97-4264-1	33B10-DP2 4/8/1997 7.5 - 8.5 D97-4264-2	33B13-DP1 4/8/1997 4 - 5 D97-4264-10	33B13-DP2 4/8/1997 8 - 9 D97-4264-11	33B14-DP1 4/8/1997 2.1 - 3.1 D97-4264-12	33B14-DP2 4/8/1997 5 - 6 D97-4264-13	33B15-DP1 4/9/1997 1.5 - 2.5 D97-4344-1
Volatile Organic Compounds	**Units**										
1,1,1-Trichloroethane	mg/Kg	0.00675 U	0.00647 U	0.00639 U	0.00525 U	0.00647 U	0.00702 U	0.00683 U	0.00673 U	0.00639 U	0.00655 U
1,1,2,2-Tetrachloroethane	mg/Kg	0.00675 U	0.00647 U	0.00639 U	0.00525 U	0.00647 U	0.00702 U	0.00683 U	0.00673 U	0.00639 U	0.00655 U
1,1,2-Trichloroethane	mg/Kg	0.00675 U	0.00647 U	0.00639 U	0.00525 U	0.00647 U	0.00702 U	0.00683 U	0.00673 U	0.00639 U	0.00655 U
1,1-Dichloroethane	mg/Kg	0.00675 U	0.00647 U	0.00639 U	0.00525 U	0.00647 U	0.00702 U	0.00683 U	0.00673 U	0.00639 U	0.00655 U
1,1-Dichloroethene	mg/Kg	0.00675 U	0.00647 U	0.00639 U	0.00525 U	0.00647 U	0.00702 U	0.00683 U	0.00673 U	0.00639 U	0.00655 U
1,2-Dichloroethane	mg/Kg	0.00675 U	0.00647 U	0.00639 U	0.00525 U	0.00647 U	0.00702 U	0.00683 U	0.00673 U	0.00639 U	0.00655 U
1,2-Dichloropropane	mg/Kg	0.00675 U	0.00647 U	0.00639 U	0.00525 U	0.00647 U	0.00702 U	0.00683 U	0.00673 U	0.00639 U	0.00655 U
2-Butanone	mg/Kg	0.00675 U	0.00647 U	0.00639 U	0.00525 U	0.00647 U	0.00702 U	0.00683 U	0.00673 U	0.00639 U	0.00655 U
2-Chloroethylvinyl ether	mg/Kg	0.00675 U	0.00647 U	0.00639 U	0.00525 U	0.00647 U	0.00702 U	0.00683 U	0.00673 U	0.00639 U	0.00655 U
2-Hexanone	mg/Kg	0.0675 U	0.0647 U	0.0639 U	0.0525 U	0.0647 U	0.0702 U	0.0683 U	0.0673 U	0.0639 U	0.0655 U
4-Methyl-2-pentanone	mg/Kg	0.135 U	0.129 U	0.128 U	0.105 U	0.129 U	0.14 U	0.137 U	0.135 U	0.128 U	0.131 U
Acetone	mg/Kg	**0.056 J**	**0.422**	0.128 U	**0.124**	**0.157**	**0.0541 J**	0.137 U	**0.0643 J**	0.128 U	**0.0599 J**
Benzene	mg/Kg	0.00675 U	0.00647 U	0.00639 U	0.00525 U	0.00647 U	0.00702 U	0.00683 U	0.00673 U	0.00639 U	0.00655 U
Bromodichloromethane	mg/Kg	0.00675 U	0.00647 U	0.00639 U	0.00525 U	0.00647 U	0.00702 U	0.00683 U	0.00673 U	0.00639 U	0.00655 U
Bromoform	mg/Kg	0.00675 U	0.00647 U	0.00639 U	0.00525 U	0.00647 U	0.00702 U	0.00683 U	0.00673 U	0.00639 U	0.00655 U
Bromomethane	mg/Kg	0.00675 U	0.00647 U	0.00639 U	0.00525 U	0.00647 U	0.00702 U	0.00683 U	0.00673 U	0.00639 U	0.00655 U
Carbon disulfide	mg/Kg	0.00675 U	0.00647 U	0.00639 U	0.00525 U	0.00647 U	0.00702 U	0.00683 U	0.00673 U	0.00639 U	0.00655 U
Carbon tetrachloride	mg/Kg	0.00675 U	0.00647 U	0.00639 U	0.00525 U	0.00647 U	0.00702 U	0.00683 U	0.00673 U	0.00639 U	0.00655 U
Chlorobenzene	mg/Kg	0.00675 U	0.00647 U	0.00639 U	0.00525 U	0.00647 U	0.00702 U	0.00683 U	0.00673 U	0.00639 U	0.00655 U
Chloroethane	mg/Kg	0.00675 U	0.00647 U	0.00639 U	0.00525 U	0.00647 U	0.00702 U	0.00683 U	0.00673 U	0.00639 U	0.00655 U
Chloroform	mg/Kg	0.00675 U	0.00647 U	0.00639 U	0.00525 U	0.00647 U	0.00702 U	0.00683 U	0.00673 U	0.00639 U	0.00655 U
Chloromethane	mg/Kg	0.00675 U	0.00647 U	0.00639 U	0.00525 U	0.00647 U	0.00702 U	0.00683 U	0.00673 U	0.00639 U	0.00655 U
cis-1,2-Dichloroethene	mg/Kg	0.00675 U	0.00647 U	0.00639 U	0.00525 U	0.00647 U	0.00702 U	0.00683 U	**0.0832**	**0.123**	**0.0553**
trans-1,2-Dichloroethene	mg/Kg	0.00675 U	0.00647 U	0.00639 U	0.00525 U	0.00647 U	0.00702 U	0.00683 U	0.00673 U	0.00639 U	0.00655 U
cis-1,3-Dichloropropene	mg/Kg	0.00675 U	0.00647 U	0.00639 U	0.00525 U	0.00647 U	0.00702 U	0.00683 U	0.00673 U	0.00639 U	0.00655 U
trans-1,3-Dichloropropene	mg/Kg	0.00675 U	0.00647 U	0.00639 U	0.00525 U	0.00647 U	0.00702 U	0.00683 U	0.00673 U	0.00639 U	0.00655 U
Dibromochloromethane	mg/Kg	0.00675 U	0.00647 U	0.00639 U	0.00525 U	0.00647 U	0.00702 U	0.00683 U	0.00673 U	0.00639 U	0.00655 U
Ethylbenzene	mg/Kg	0.00675 U	0.00647 U	0.00639 U	0.00525 U	0.00647 U	0.00702 U	0.00683 U	0.00673 U	0.00639 U	0.00655 U
Methylene chloride	mg/Kg	0.00675 U	0.00647 U	0.00639 U	0.00525 U	0.00647 U	0.00702 U	0.00683 U	0.00673 U	0.00639 U	0.00655 U
Styrene	mg/Kg	0.00675 U	0.00647 U	0.00639 U	0.00525 U	0.00647 U	0.00702 U	0.00683 U	0.00673 U	0.00639 U	0.00655 U
Tetrachloroethene	mg/Kg	0.00675 U	0.00647 U	0.00639 U	0.00525 U	0.00647 U	0.00702 U	0.00683 U	0.00673 U	0.00639 U	0.00655 U
Toluene	mg/Kg	0.00675 U	0.00647 U	0.00639 U	0.00525 U	0.00647 U	0.00702 U	0.00683 U	0.00673 U	0.00639 U	0.00655 U
Trichloroethene	mg/Kg	0.00675 U	0.00647 U	0.00639 U	0.00525 U	0.00647 U	**0.0277**	**0.0332**	**5.07 D**	**2.31 D**	**0.577 D**
Vinyl acetate	mg/Kg	0.0675 U	0.0647 U	0.0639 U	0.0525 U	0.0647 U	0.0702 U	0.0683 U	0.0673 U	0.0639 U	0.0655 U
Vinyl chloride	mg/Kg	0.0027 U	0.00259 U	0.00255 U	0.0021 U	0.00259 U	0.00281 U	0.00273 U	0.00269 U	0.00255 U	0.00262 U
m,p-Xylene	mg/Kg	0.00675 U	0.00647 U	0.00639 U	0.00525 U	0.00647 U	0.00702 U	0.00683 U	0.00673 U	0.00639 U	0.00655 U
o-Xylene	mg/Kg	0.00675 U	0.00647 U	0.00639 U	0.00525 U	0.00647 U	0.00702 U	0.00683 U	0.00673 U	0.00639 U	0.00655 U

Detections are **bold**.
Data qualifiers are described on Table 2-1.

ft bgs - feet below ground surface
mg/kg - milligrams per kilogram

Table C-3
Historical Soil Results - Volatile Organic Compounds
SWMU 33 Nail Mill Degreasing Area
AK Steel Kansas City Facility

Parameter	Sample ID: / Date Collected: / Depth (ft bgs): / Lab ID:	33B15-DP2 4/9/1997 6.5 - 7.5 D97-4344-2	33B15-DP3 4/9/1997 9.5 - 10.5 D97-4344-3	33B16-DP1 4/9/1997 1 - 2 D97-4344-4	33B16-DP2 4/9/1997 6 - 7 D97-4344-5	33B17-DP1 4/9/1997 3 - 4 D97-4344-6	33B17-DP2 4/9/1997 5.5 - 6.5 D97-4344-7	33B18-DP1 4/9/1997 2.5 - 5 D97-4344-8	33B18-DP2 4/9/1997 5 - 6 D97-4344-11	33B19-DP1 4/9/1997 4 - 5 D97-4344-13	33B19-DP2 4/9/1997 5.5 - 8 D97-4344-14
Volatile Organic Compounds	**Units**										
1,1,1-Trichloroethane	mg/Kg	0.00617 U	0.00635 U	0.00661 U	0.00635 U	0.00652 U	0.0305 DU	0.00641 U	0.00677 U	0.00727 U	0.0063 U
1,1,2,2-Tetrachloroethane	mg/Kg	0.00617 U	0.00635 U	0.00661 U	0.00635 U	0.00652 U	0.0305 DU	0.00641 U	0.00677 U	0.00727 U	0.0063 U
1,1,2-Trichloroethane	mg/Kg	0.00617 U	0.00635 U	0.00661 U	0.00635 U	0.00652 U	0.0305 DU	0.00641 U	0.00677 U	0.00727 U	0.0063 U
1,1-Dichloroethane	mg/Kg	0.00617 U	0.00635 U	0.00661 U	0.00635 U	**0.0172**	0.0305 DU	0.00641 U	0.00677 U	0.00727 U	0.0063 U
1,1-Dichloroethene	mg/Kg	0.00617 U	0.00635 U	0.00661 U	0.00635 U	0.00652 U	0.0305 DU	0.00641 U	0.00677 U	0.00727 U	0.0063 U
1,2-Dichloroethane	mg/Kg	0.00617 U	0.00635 U	0.00661 U	0.00635 U	0.00652 U	0.0305 DU	0.00641 U	0.00677 U	0.00727 U	0.0063 U
1,2-Dichloropropane	mg/Kg	0.00617 U	0.00635 U	0.00661 U	0.00635 U	0.00652 U	0.0305 DU	0.00641 U	0.00677 U	0.00727 U	0.0063 U
2-Butanone	mg/Kg	0.00617 U	0.00635 U	0.00661 U	0.00635 U	0.00652 U	0.0305 DU	0.00641 U	0.00677 U	0.00727 U	0.0063 U
2-Chloroethylvinyl ether	mg/Kg	0.00617 U	0.00635 U	0.00661 U	0.00635 U	0.00652 U	0.0305 DU	0.00641 U	0.00677 U	0.00727 U	0.0063 U
2-Hexanone	mg/Kg	0.0617 U	0.0635 U	0.0661 U	0.0635 U	0.0652 U	0.305 DU	0.0641 U	0.0677 U	0.0727 U	0.063 U
4-Methyl-2-pentanone	mg/Kg	0.123 U	0.127 U	0.132 U	0.127 U	0.13 U	0.611 DU	0.128 U	0.135 U	0.145 U	0.126 U
Acetone	mg/Kg	**0.063 J**	0.127 U	**0.0528 J**	0.127 U	**0.0892 J**	**0.127 DJ**	0.128 U	**0.7 D**	**0.201**	**0.0577 J**
Benzene	mg/Kg	0.00617 U	0.00635 U	0.00661 U	0.00635 U	0.00652 U	0.0305 DU	0.00641 U	0.00677 U	0.00727 U	0.0063 U
Bromodichloromethane	mg/Kg	0.00617 U	0.00635 U	0.00661 U	0.00635 U	0.00652 U	0.0305 DU	0.00641 U	0.00677 U	0.00727 U	0.0063 U
Bromoform	mg/Kg	0.00617 U	0.00635 U	0.00661 U	0.00635 U	0.00652 U	0.0305 DU	0.00641 U	0.00677 U	0.00727 U	0.0063 U
Bromomethane	mg/Kg	0.00617 U	0.00635 U	0.00661 U	0.00635 U	0.00652 U	0.0305 DU	0.00641 U	0.00677 U	0.00727 U	0.0063 U
Carbon disulfide	mg/Kg	0.00617 U	0.00635 U	0.00661 U	0.00635 U	0.00652 U	0.0305 DU	0.00641 U	0.00677 U	0.00727 U	0.0063 U
Carbon tetrachloride	mg/Kg	0.00617 U	0.00635 U	0.00661 U	0.00635 U	0.00652 U	0.0305 DU	0.00641 U	0.00677 U	0.00727 U	0.0063 U
Chlorobenzene	mg/Kg	0.00617 U	0.00635 U	0.00661 U	0.00635 U	0.00652 U	0.0305 DU	0.00641 U	0.00677 U	0.00727 U	0.0063 U
Chloroethane	mg/Kg	0.00617 U	0.00635 U	0.00661 U	0.00635 U	0.00652 U	0.0305 DU	0.00641 U	0.00677 U	0.00727 U	0.0063 U
Chloroform	mg/Kg	0.00617 U	0.00635 U	0.00661 U	0.00635 U	0.00652 U	0.0305 DU	0.00641 U	0.00677 U	0.00727 U	0.0063 U
Chloromethane	mg/Kg	0.00617 U	0.00635 U	0.00661 U	0.00635 U	0.00652 U	0.0305 DU	0.00641 U	0.00677 U	0.00727 U	0.0063 U
cis-1,2-Dichloroethene	mg/Kg	**0.168**	**0.195**	**0.0316**	**0.00865**	0.00652 U	0.0305 DU	0.00641 U	0.00677 U	**0.0576**	**0.0856**
trans-1,2-Dichloroethene	mg/Kg	0.00617 U	0.00635 U	0.00661 U	0.00635 U	0.00652 U	0.0305 DU	0.00641 U	0.00677 U	0.00727 U	0.0063 U
cis-1,3-Dichloropropene	mg/Kg	0.00617 U	0.00635 U	0.00661 U	0.00635 U	0.00652 U	0.0305 DU	0.00641 U	0.00677 U	0.00727 U	0.0063 U
trans-1,3-Dichloropropene	mg/Kg	0.00617 U	0.00635 U	0.00661 U	0.00635 U	0.00652 U	0.0305 DU	0.00641 U	0.00677 U	0.00727 U	0.0063 U
Dibromochloromethane	mg/Kg	0.00617 U	0.00635 U	0.00661 U	0.00635 U	0.00652 U	0.0305 DU	0.00641 U	0.00677 U	0.00727 U	0.0063 U
Ethylbenzene	mg/Kg	0.00617 U	0.00635 U	0.00661 U	0.00635 U	0.00652 U	0.0305 DU	0.00641 U	0.00677 U	0.00727 U	0.0063 U
Methylene chloride	mg/Kg	0.00617 U	0.00635 U	0.00661 U	0.00635 U	0.00652 U	0.0305 DU	0.00641 U	0.00677 U	0.00727 U	0.0063 U
Styrene	mg/Kg	0.00617 U	0.00635 U	0.00661 U	0.00635 U	0.00652 U	0.0305 DU	0.00641 U	0.00677 U	0.00727 U	0.0063 U
Tetrachloroethene	mg/Kg	0.00617 U	0.00635 U	0.00661 U	0.00635 U	0.00652 U	0.0305 DU	0.00641 U	0.00677 U	0.00727 U	0.0063 U
Toluene	mg/Kg	0.00617 U	0.00635 U	0.00661 U	0.00635 U	0.00652 U	0.0305 DU	0.00641 U	0.00677 U	0.00727 U	0.0063 U
Trichloroethene	mg/Kg	**1.01 D**	**0.404 D**	**0.202**	**0.398 D**	0.00652 U	0.0305 DU	0.00641 U	0.00677 U	**0.0198**	0.0063 U
Vinyl acetate	mg/Kg	0.0617 U	0.0635 U	0.0661 U	0.0635 U	0.0652 U	0.305 DU	0.0641 U	0.0677 U	0.0727 U	0.063 U
Vinyl chloride	mg/Kg	0.00247 U	0.00254 U	0.00264 U	0.00254 U	0.00261 U	0.0122 DU	0.00256 U	0.00271 U	0.00291 U	0.00252 U
m,p-Xylene	mg/Kg	0.00617 U	0.00635 U	0.00661 U	0.00635 U	0.00652 U	0.0305 DU	0.00641 U	0.00677 U	0.00727 U	0.0063 U
o-Xylene	mg/Kg	0.00617 U	0.00635 U	0.00661 U	0.00635 U	0.00652 U	0.0305 DU	0.00641 U	0.00677 U	0.00727 U	0.0063 U

Detections are **bold**.
Data qualifiers are described on Table 2-1.

ft bgs - feet below ground surface
mg/kg - milligrams per kilogram

Table C-3
Historical Soil Results - Volatile Organic Compounds
SWMU 33 Nail Mill Degreasing Area
AK Steel Kansas City Facility

Parameter	Sample ID: / Date Collected: / Depth (ft bgs): / Lab ID:	33B29A-DP1 6/4/1998 0 - 4 D98-4166-7	33B29A-DP2 6/4/1998 4 - 8 D98-4166-8	33B29A-DP3 6/4/1998 8 - 12 D98-4166-11	33B29A-DP4 6/4/1998 12 - 16 D98-4166-12	33B30A-DP1 6/4/1998 0 - 4 D98-4166-2	33B30A-DP2 6/4/1998 4 - 8 D98-4166-3	33B30A-DP2D 6/4/1998 4 - 8 D98-4166-4	33B30A-DP3 6/4/1998 8 - 12 D98-4166-5	33B30A-DP4 6/4/1998 12 - 16 D98-4166-6
Volatile Organic Compounds	**Units**									
1,1,1-Trichloroethane	mg/Kg	0.00635 U	0.00638 U	0.00684 U	0.00674 U	0.00633 U	0.00588 U	0.00587 U	0.0062 U	0.032 DU
1,1,2,2-Tetrachloroethane	mg/Kg	0.00635 U	0.00638 U	0.00684 U	0.00674 U	0.00633 U	0.00588 U	0.00587 U	0.0062 U	0.032 DU
1,1,2-Trichloroethane	mg/Kg	0.00635 U	0.00638 U	0.00684 U	0.00674 U	0.00633 U	0.00588 U	0.00587 U	0.0062 U	0.032 DU
1,1-Dichloroethane	mg/Kg	0.00635 U	0.00638 U	0.00684 U	0.00674 U	0.00633 U	0.00588 U	0.00587 U	0.0062 U	0.032 DU
1,1-Dichloroethene	mg/Kg	0.00635 U	0.00638 U	0.00684 U	0.00674 U	0.00633 U	0.00588 U	0.00587 U	0.0062 U	0.032 DU
1,2-Dichloroethane	mg/Kg	0.00635 U	0.00638 U	0.00684 U	0.00674 U	0.00633 U	0.00588 U	0.00587 U	0.0062 U	0.032 DU
1,2-Dichloropropane	mg/Kg	0.00635 U	0.00638 U	0.00684 U	0.00674 U	0.00633 U	0.00588 U	0.00587 U	0.0062 U	0.032 DU
2-Butanone	mg/Kg	**0.00509 J**	0.00638 U	0.00684 U	0.00674 U	0.00633 U	**0.005 J**	**0.00339 J**	**0.0134 J***	0.032 DU
2-Chloroethylvinyl ether	mg/Kg	0.00635 U	0.00638 U	0.00684 U	0.00674 U	0.00633 U	0.00588 U	0.00587 U	0.0062 U	0.032 DU
2-Hexanone	mg/Kg	**0.0281 J**	0.0638 U	0.0684 U	0.0674 U	0.0633 U	0.0588 U	0.0587 U	0.062 U	0.32 DU
4-Methyl-2-pentanone	mg/Kg	0.127 U	0.128 U	0.137 U	0.135 U	0.127 U	0.118 U	0.117 U	0.124 U	0.64 DU
Acetone	mg/Kg	0.127 U	0.128 U	0.137 U	0.135 U	0.127 U	0.118 U	0.117 U	0.124 U	0.64 DU
Benzene	mg/Kg	0.00635 U	0.00638 U	0.00684 U	0.00674 U	0.00633 U	0.00588 U	0.00587 U	0.0062 U	0.032 DU
Bromodichloromethane	mg/Kg	0.00635 U	0.00638 U	0.00684 U	0.00674 U	0.00633 U	0.00588 U	0.00587 U	0.0062 U	0.032 DU
Bromoform	mg/Kg	0.00635 U	0.00638 U	0.00684 U	0.00674 U	0.00633 U	0.00588 U	0.00587 U	0.0062 U	0.032 DU
Bromomethane	mg/Kg	0.00635 U	0.00638 U	0.00684 U	0.00674 U	0.00633 U	0.00588 U	0.00587 U	0.0062 U	0.032 DU
Carbon disulfide	mg/Kg	0.00635 U	0.00638 U	0.00684 U	0.00674 U	0.00633 U	0.00588 U	0.00587 U	0.0062 U	0.032 DU
Carbon tetrachloride	mg/Kg	0.00635 U	0.00638 U	0.00684 U	0.00674 U	0.00633 U	0.00588 U	0.00587 U	0.0062 U	0.032 DU
Chlorobenzene	mg/Kg	0.00635 U	0.00638 U	0.00684 U	0.00674 U	0.00633 U	0.00588 U	0.00587 U	0.0062 U	0.032 DU
Chloroethane	mg/Kg	0.00635 U	0.00638 U	0.00684 U	0.00674 U	0.00633 U	0.00588 U	0.00587 U	0.0062 U	0.032 DU
Chloroform	mg/Kg	0.00635 U	0.00638 U	0.00684 U	0.00674 U	0.00633 U	0.00588 U	0.00587 U	0.0062 U	0.032 DU
Chloromethane	mg/Kg	0.00635 U	0.00638 U	0.00684 U	0.00674 U	0.00633 U	0.00588 U	0.00587 U	0.0062 U	0.032 DU
cis-1,2-Dichloroethene	mg/Kg	0.00635 U	0.00638 U	0.00684 U	0.00674 U	0.00633 U	**0.114**	**0.0673 J***	**0.0185 J***	**0.0657 D**
trans-1,2-Dichloroethene	mg/Kg	0.00635 U	0.00638 U	0.00684 U	0.00674 U	0.00633 U	0.00588 U	0.00587 U	0.0062 U	0.032 DU
cis-1,3-Dichloropropene	mg/Kg	0.00635 U	0.00638 U	0.00684 U	0.00674 U	0.00633 U	0.00588 U	0.00587 U	0.0062 U	0.032 DU
trans-1,3-Dichloropropene	mg/Kg	0.00635 U	0.00638 U	0.00684 U	0.00674 U	0.00633 U	0.00588 U	0.00587 U	0.0062 U	0.032 DU
Dibromochloromethane	mg/Kg	0.00635 U	0.00638 U	0.00684 U	0.00674 U	0.00633 U	0.00588 U	0.00587 U	0.0062 U	0.032 DU
Ethylbenzene	mg/Kg	0.00635 U	0.00638 U	0.00684 U	**0.00141 J**	0.00633 U	0.00588 U	0.00587 U	0.0062 U	0.032 DU
Methylene chloride	mg/Kg	0.00635 U	0.00638 U	**0.00557 J**	**0.00536 J**	0.00633 U	0.00588 U	0.00587 U	0.0062 U	**0.00843 DJ**
Styrene	mg/Kg	0.00635 U	0.00638 U	0.00684 U	0.00674 U	0.00633 U	0.00588 U	0.00587 U	0.0062 U	0.032 DU
Tetrachloroethene	mg/Kg	0.00635 U	0.00638 U	0.00684 U	0.00674 U	0.00633 U	0.00588 U	0.00587 U	0.0062 U	0.032 DU
Toluene	mg/Kg	0.00635 U	0.00638 U	0.00684 U	0.00674 U	0.00633 U	0.00588 U	0.00587 U	0.0062 U	0.032 DU
Trichloroethene	mg/Kg	**0.0366**	**0.00844**	**0.0319 J***	**0.335 DJ***	**0.00675**	**0.0383**	**0.0295 J***	**0.101 J***	**0.325 D**
Vinyl acetate	mg/Kg	0.0635 U	0.0638 U	0.0684 U	0.0674 U	0.0633 U	0.0588 U	0.0587 U	0.062 U	0.32 DU
Vinyl chloride	mg/Kg	0.00254 U	0.00255 U	0.00274 U	0.00269 U	0.00253 U	0.00235 U	0.00235 U	0.00248 U	0.0128 DU
m,p-Xylene	mg/Kg	0.00635 U	0.00638 U	0.00684 U	**0.0104**	0.00633 U	0.00588 U	0.00587 U	0.0062 U	0.032 DU
o-Xylene	mg/Kg	0.00635 U	0.00638 U	0.00684 U	**0.00396 J**	0.00633 U	0.00588 U	0.00587 U	0.0062 U	0.032 DU

Detections are **bold**.
Data qualifiers are described on Table 2-1.

ft bgs - feet below ground surface
mg/kg - milligrams per kilogram

Table C-3
Historical Soil Results - Volatile Organic Compounds
SWMU 33 Nail Mill Degreasing Area
AK Steel Kansas City Facility

Parameter	Sample ID: / Date Collected: / Depth (ft bgs): / Lab ID:	33MW2S-CS1 5/7/1997 1 - 5 D97-5623-2	33MW2S-CS2 5/7/1997 7 - 7.5 D97-5623-3	33MW2S-CS3 5/7/1997 14 - 15 D97-5623-4	33MW2S-CS4 5/7/1997 19 - 20 D97-5623-5
Volatile Organic Compounds	**Units**				
1,1,1-Trichloroethane	mg/Kg	**0.0128**	**0.0227**	0.00745 U	0.00713 U
1,1,2,2-Tetrachloroethane	mg/Kg	0.0062 U	0.00641 U	0.00745 U	0.00713 U
1,1,2-Trichloroethane	mg/Kg	**0.0107**	**0.0142**	**0.0121**	0.00713 U
1,1-Dichloroethane	mg/Kg	**0.0217**	**0.0228**	**0.0144**	0.00713 U
1,1-Dichloroethene	mg/Kg	**0.0279**	**0.0378**	**0.0171**	**0.008**
1,2-Dichloroethane	mg/Kg	0.0062 U	0.00641 U	0.00745 U	0.00713 U
1,2-Dichloropropane	mg/Kg	0.0062 U	0.00641 U	0.00745 U	0.00713 U
2-Butanone	mg/Kg	0.0062 U	0.00641 U	0.00745 U	0.00713 U
2-Chloroethylvinyl ether	mg/Kg	0.0062 U	0.00641 U	0.00745 U	0.00713 U
2-Hexanone	mg/Kg	0.062 U	**0.0069 J**	0.0745 U	0.0713 U
4-Methyl-2-pentanone	mg/Kg	0.124 U	0.128 U	0.149 U	0.143 U
Acetone	mg/Kg	0.124 U	0.128 U	0.149 U	**0.0459 J**
Benzene	mg/Kg	0.0062 U	0.00641 U	0.00745 U	0.00713 U
Bromodichloromethane	mg/Kg	0.0062 U	0.00641 U	0.00745 U	0.00713 U
Bromoform	mg/Kg	0.0062 U	0.00641 U	0.00745 U	0.00713 U
Bromomethane	mg/Kg	0.0062 U	0.00641 U	0.00745 U	0.00713 U
Carbon disulfide	mg/Kg	0.0062 U	0.00641 U	0.00745 U	0.00713 U
Carbon tetrachloride	mg/Kg	0.0062 U	0.00641 U	0.00745 U	0.00713 U
Chlorobenzene	mg/Kg	0.0062 U	0.00641 U	0.00745 U	0.00713 U
Chloroethane	mg/Kg	0.0062 U	0.00641 U	0.00745 U	0.00713 U
Chloroform	mg/Kg	0.0062 U	0.00641 U	0.00745 U	0.00713 U
Chloromethane	mg/Kg	0.0062 U	0.00641 U	0.00745 U	0.00713 U
cis-1,2-Dichloroethene	mg/Kg	**4.44 D**	**6.18 D**	**0.778 D**	**0.215**
trans-1,2-Dichloroethene	mg/Kg	**0.0456**	**0.0364**	**0.00978**	0.00713 U
cis-1,3-Dichloropropene	mg/Kg	0.0062 U	0.00641 U	0.00745 U	0.00713 U
trans-1,3-Dichloropropene	mg/Kg	0.0062 U	0.00641 U	0.00745 U	0.00713 U
Dibromochloromethane	mg/Kg	0.0062 U	0.00641 U	0.00745 U	0.00713 U
Ethylbenzene	mg/Kg	0.0062 U	0.00641 U	0.00745 U	0.00713 U
Methylene chloride	mg/Kg	0.0062 U	0.00641 U	0.00745 U	0.00713 U
Styrene	mg/Kg	0.0062 U	0.00641 U	0.00745 U	0.00713 U
Tetrachloroethene	mg/Kg	0.0062 U	0.00641 U	0.00745 U	0.00713 U
Toluene	mg/Kg	0.0062 U	0.00641 U	0.00745 U	0.00713 U
Trichloroethene	mg/Kg	**2.6 D**	**10.8 D**	**4.95 D**	**1.21 D**
Vinyl acetate	mg/Kg	0.062 U	0.0641 U	0.0745 U	0.0713 U
Vinyl chloride	mg/Kg	**0.195**	**0.132**	0.00298 U	0.00285 U
m,p-Xylene	mg/Kg	0.0062 U	0.00641 U	0.00745 U	0.00713 U
o-Xylene	mg/Kg	0.0062 U	0.00641 U	0.00745 U	0.00713 U

Detections are **bold**.
Data qualifiers are described on Table 2-1.

ft bgs - feet below ground surface
mg/kg - milligrams per kilogram

APPENDIX D

QA/QC Review of Analytical Data

Burns & McDonnell
SINCE 1898

Date: June 16, 2010

To: Sharon Shelton

From: Michelle Beckman

Re: QA/QC Review of Analytical Data
May 2010 Soil Sampling Event
SWMU 33 Nail Mill Degreasing Area
AK Steel – Kansas City, MO
Project No. 54200

Soil samples were collected on May 11 and 12, 2010 at AK Steel in Kansas City, Missouri. A sample collection summary is presented on Table 1. The samples were analyzed by Gulf Coast Analytical Laboratories, Inc. (GCAL) of Baton Rouge, Louisiana, as indicated on Table 1.

The following data sets were reviewed in support of this investigation:

Lab	Data Set	Date Collected
GCAL	210051348	5/11/2010 and 5/12/2010
GCAL	210051349	5/11/2010 and 5/12/2010

The quality assurance/quality control (QA/QC) results in association with the soil samples were examined for any method-specific requirements. Data qualifiers, when appropriate, were added to the data as recommended in USEPA's *National Functional Guidelines for Organic Data Review* (NFGO, 1999 and 2008). Table 2 presents the data qualifiers that were added as a result of the QA/QC review.

1. Chain-of-Custody (COC) – The COCs were reviewed for any errors or omissions. No problems were noted with the COCs.

2. Requested Analyses Completed – All analyses were completed as requested.

3. Holding Times Met – All samples were analyzed within method holding time:

4. Sample Preservation Acceptable – Samples were received by the laboratories within the recommended sample preservation temperature of 4 degrees Celsius (°C) ± 2 °C.

5. Method Requirements – A summary of data qualifiers assigned during data review is provided on Table 2. The laboratory qualified Any detection between the method detection limit (MDL) and the reporting limit (RL) with a "J."

   For the Synthetic Precipitation Leaching Procedure (SPLP) VOC analysis, only those VOCs that are detected in the corresponding Total VOC analysis are considered legitimate detections for the SPLP leaching procedure. Therefore, any compound detected as part of the SPLP VOC analysis that was not detected in the corresponding Total VOC analysis was

qualified as a false positive and rejected (i.e., UR qualifier). This included all SPLP methylene chloride detections, as shown on Table 2.

6. Laboratory Method Blanks – No detections of target analytes were noted in the laboratory method blanks.

7. Surrogates – Surrogates are added for organic analyses. Surrogates are compounds not normally found in the environment that are added (spiked) into samples and analyzed for the percent recovery (REC). A summary of samples that exhibited surrogate RECs outside of QC limits and any data qualification that was required is provided below and summarized on Table 2.

   - Volatile Organic Compounds (VOCs) – Samples 33B101/SB1 (21005134801), 33B111/SB2 (21005134837), 33B111/SB3 (21005134838), and 33B112/SB1 (21005134839) exhibited surrogate 1,2-dichloroethane-d4 RECs that exceeded QC limits. The detection of trichloroethene in Sample 33B101/SB1 (21005134801) was qualified as an estimated value (J). No qualifiers were added to the other samples, as there were no detections and high bias was not an issue.

   All other field sample surrogate RECs were within their respective QC limits.

8. Laboratory Control Sample (LCS)/Laboratory Control Sample Duplicate (LCSD) – The LCS contains a matrix similar to that of the sample that has been spiked with known concentrations of target analytes. The LCS is prepared and analyzed by the same method as the samples. As a measure of analytical accuracy, the results of the LCS are compared against the known analyte concentrations in the spike to determine the REC. The purpose of the LCS is to determine the performance of the laboratory with respect to analyte recovery, independent of field sample matrix interference. The LCSD is a duplicate preparation and analysis of the LCS. Results of the LCS and LCSD are compared to each other to determine analytical precision using the relative percent difference (RPD). A summary of batches that exhibited LCS/LCSD results outside of QC limits and any data qualification that was required is provided below and summarized on Table 2.

   - VOCs – LCS RECs were within QC limits. The LCSD REC for trichloroethene in QC Batch 432388 was below the QC limit, indicating a low bias. As a result, trichloroethene in associated Samples 33B101/SB1 (21005134801) and 33B108/SB1 (21005134825) was qualified as estimated.

   - VOCs – The LCS and LCSD RECs for acetone and the LCSD for bromoform in QC Batch 432468 exceeded QC limits, indicating a high bias. As neither acetone nor bromoform were detected in any of the associated samples, no data required qualification, as high bias was not an issue.

- VOCs – The LCS REC for 2-butanone in QC Batch 432508 exceeded QC limits, indicating a high bias. As 2-butanone was not detected in any of the associated samples, no data required qualification, as high bias was not an issue.

- SPLP VOCs – The LCS and LCSD RECs for acetone in QC Batch 432316 exceeded QC limits, indicating a high bias. As acetone was not detected in any of the associated samples, no data required qualification, as high bias was not an issue.

All other LCS/LCSD results were within their respective QC limits.

9. Matrix Spike/Matrix Spike Duplicate (MS/MSD) – MS/MSDs are run for organic and inorganic analyses. A sample is split into three portions (original, MS, and MSD), and a known amount of an analyte is added (spiked) to two portions (MS and MSD) of the sample. The results of these two portions are compared with each other for reproducibility using the RPD. They are also compared against the unspiked portion for REC of the spike. Samples 33B102/SB3 (21005134806 and -807) and 33B108/SB1 (21005134826 and -827) were submitted to the laboratory for MS/MSD analysis. A summary of site-specific MS/MSDs follows:

Lab	Analysis	QC Batch	Spiked Sample
GCAL	VOCs	432388	33B108/SB1
		432421	33B102/SB3
		432508	33B105/SB3
	SPLP VOCs	432467	33B108/SB1
		432420	33B102/SB3

A summary of site-specific MS/MSDs that exhibited results outside of QC limits and any data qualification that was required is provided below and is summarized on Table 2.

- VOCs – RECs for 2-butanone, acetone, styrene, and trichloroethene were below QC limits for the MS/MSD analyses conducted on Sample 33B108/SB1 (21005134826 and -27), which indicates the potential for low bias. In addition, RPDs exceeded QC limits for acetone, chloromethane, trichloroethene, and vinyl chloride. The non-detect results for these parameters were qualified as estimated at the reporting limit (UJ flag) and detected results for these parameters were qualified as estimated (J flag) for primary sample 33B108/SB1 (21005134825).

- VOCs – RECs for bromomethane and trichloroethene were below QC limits for the MS/MSD analyses conducted on Sample 33B102/SB3 (21005134806 and -07), which indicates the potential for low bias. In addition, zero RECs were reported for chloroethane, which resulted in rejection (UR) of the chloroethane data for primary sample 33B102/SB3 (21005134805). Bromomethane was qualified as estimated at the reporting limit (UJ flag) and trichloroethene was qualified as estimated (J flag) for primary sample 33B102/SB3 (21005134805).

- SPLP VOCs – The RECs for vinyl acetate was below QC limits for the MS/MSD analyses conducted on Sample 33B102/SB3 (21005134906 and -07), which indicates the potential for low bias. SPLP vinyl acetate was qualified as estimated at the reporting limit (UJ flag) for primary sample 33B102/SB3 (21005134905).

- SPLP VOCs – The MS REC and the MS/MSD RPD for methylene chloride exceeded QC limits for the MS/MSD analyses conducted on Sample 33B108/SB1 (21005134926 and -27), which indicates the potential for high bias. As all methylene chloride results were qualified as non-detected and rejected (UR), no further qualification of the methylene chloride data was required. Additionally, RPDs for 1,1-dichloroethene, acetone, and carbon disulfide exceeded QC limits; as a result, these parameters were qualified as estimated at the reporting limit (UJ flag) in primary sample 33B108/SB1 (2100513425).

All other project-specific MS/MSD results were within QC limits.

10. Field Duplicate Results – Field duplicates provide information on the ability to reproduce field results and account for error introduced from handling, shipping, storage, preparation, and analysis of field samples. The following field duplicate pairs were collected during the sampling event and their results are presented on Tables 3 through 6.

    - 33B103/SB1 // 33B103/SB1D - The results for the field duplicate pair are presented on Table 7. All constituents met the duplicate criteria (Table 3).

    - 33B104/SB2 // 33B104/SB2D - The results for the field duplicate pair are presented on Table 7. All constituents met the duplicate criteria (Table 4).

    - 33B109/SB3 // 33B103/SB3D - The results for the field duplicate pair are presented on Table 7. All constituents met the duplicate criteria (Table 5).

    - 33B112/SB1 // 33B112/SB1D - The results for the field duplicate pair are presented on Table 7. All constituents met the duplicate criteria (Table 6).

11. Detection Limits – Table 7 presents the samples which required a dilution. These dilutions were necessary in order to bring concentration of target analytes within the calibration range and/or account for matrix interference. With the exception of the methanol-preserved vials used for Samples 33B103/SB2, 33B103/SB3, and 33B104/SB2, trichloroethene was detected at concentrations of approximately 200 to 43,000 micrograms per kilogram (µg/kg) in each of the diluted samples. However, these dilutions did result in elevated reporting limits for undetected parameters.

12. Conclusion –Table 2 presents the data that required qualification as a result of the data review. All of the SPLP methylene chloride data were rejected since it was determined that the detections were the result of laboratory contamination. In addition, chloroethane in Sample 33B102/SB3 (21005134805) was rejected due to no recovery in the MS/MSD. No

other data were rejected as a result of the QA/QC data review. The remaining data are valid for use, as qualified, in reporting results of this soil sampling event.

Attachments
Table 1 – Sampling Summary
Table 2 – Data Review Qualifiers
Table 3 – Field Duplicate Results – 33B103/SB1 and 33B103/SB1D
Table 4 – Field Duplicate Results – 33B104/SB2 and 33B104/SB2D
Table 5 – Field Duplicate Results – 33B109/SB3 and 33B109/SB3D
Table 6 – Field Duplicate Results – 33B112/SB1 and 33B112/SB1D
Table 7 – Sample Dilutions

Table 1
Sampling Summary
SWMU 33 Nail Mill Degreasing Area
AK Steel Kansas City Facility

Sample Point	Sample Designator	Sample Type	Chemical Analysis	
			VOCs	SPLP VOCs
33B101	SB1		X	X
	SB2		X	X
	SB3		X	X
33B102	SB1		X	X
	SB3		X	X
	SB3MS	Matrix Spike	X	X
	SB3MSD	Matrix Spike Duplicate	X	X
33B103	SB1		X	X
	SB1D	Field Duplicate	X	X
	SB2		X	X
	SB3		X	X
33B104	SB1		X	X
	SB2		X	X
	SB2D	Field Duplicate	X	X
	SB3		X	X
33B105	SB1		X	X
	SB2		X	X
	SB3		X	X
33B106	SB1		X	X
	SB2		X	X
	SB3		X	X
33B107	SB1		X	X
	SB2		X	X
	SB3		X	X
33B108	SB1		X	X
	SB1MS	Matrix Spike	X	X
	SB1MSD	Matrix Spike Duplicate	X	X
	SB3		X	X
33B109	SB1		X	X
	SB2		X	X
	SB3		X	X
	SB3D	Field Duplicate	X	X
33B110	SB1		X	X
	SB2		X	X
	SB3		X	X
33B111	SB1		X	X
	SB2		X	X
	SB3		X	X
33B112	SB1		X	X
	SB1D	Field Duplicate	X	X
	SB2		X	X
	SB3		X	X
33B113	SB1		X	X
	SB2		X	X
	SB3		X	X
33B114	SB1		X	X
	SB2		X	X
	SB3		X	X

SPLP - synthetic precipitation leaching procedure
VOCs - volatile organic compounds

Table 2
Data Review Qualifiers
SWMU 33 Nail Mill Degreasing Area
AK Steel Kansas City Facility

Sample Number	Date Sampled	Lab	Data Package	Lab Number	Analysis	Parameter	Units	Result	Qualifier	Data Review Qualifier	Reason for Data Review Qualifier					Reporting for Subsequent Documents
											HT	Sur	LCS/LCSD	MS/MSD	Other	
33B101 / SB1	11-May-10	GCAL	210051348	21005134801	VOC	Trichloroethene	ug/kg	18.4		J		X	X			18.4 J
			210051349	21005134901	SPLP VOC	Methylene chloride	ug/L	48.9		UR					X	48.9 UR
33B101 / SB2	11-May-10	GCAL	210051349	21005134902	SPLP VOC	Methylene chloride	ug/L	30.3		UR					X	30.3 UR
33B101 / SB3	11-May-10	GCAL	210051349	21005134903	SPLP VOC	Methylene chloride	ug/L	28.6		UR					X	28.6 UR
33B102 / SB1	11-May-10	GCAL	210051349	21005134904	SPLP VOC	Methylene chloride	ug/L	25.3		UR					X	25.3 UR
33B102 / SB3	11-May-10	GCAL	210051348	21005134805	VOC	Trichloroethene	ug/kg	238		J				X		238 J
						Bromomethane	ug/kg	220	U	J				X		220 UJ
						Chloroethane	ug/kg	220	U	R				X		220 UR
			210051349	21005134905	SPLP VOC	Vinyl acetate	ug/L	5	U	J				X		5 UJ
						Methylene chloride	ug/L	21.0		UR					X	21.0 UR
33B103 / SB1	11-May-10	GCAL	210051349	21005134908	SPLP VOC	Methylene chloride	ug/L	26.3		UR					X	26.3 UR
33B103 / SB1D	11-May-10	GCAL	210051348	21005134809	VOC	Vinyl chloride	ug/kg	4.66		J					X	4.66 J
				21005134909	SPLP VOC	Methylene chloride	ug/L	22.0		UR					X	22.0 UR
33B103 / SB2	11-May-10	GCAL	210051349	21005134910	SPLP VOC	Methylene chloride	ug/L	22.3		UR					X	22.3 UR
33B103 / SB3	11-May-10	GCAL	210051349	21005134911	SPLP VOC	Methylene chloride	ug/L	17.7		UR					X	17.7 UR
33B104 / SB1	11-May-10	GCAL	210051349	21005134912	SPLP VOC	Methylene chloride	ug/L	24.3		UR					X	24.3 UR
33B104 / SB2	11-May-10	GCAL	210051349	21005134913	SPLP VOC	Methylene chloride	ug/L	27.5		UR					X	27.5 UR
33B104 / SB2D	11-May-10	GCAL	210051349	21005134914	SPLP VOC	Methylene chloride	ug/L	22.1		UR					X	22.1 UR
33B104 / SB3	11-May-10	GCAL	210051349	21005134915	SPLP VOC	Methylene chloride	ug/L	18.6		UR					X	18.6 UR
33B105 / SB1	11-May-10	GCAL	210051349	21005134916	SPLP VOC	Methylene chloride	ug/L	14.4		UR					X	14.4 UR
33B105 / SB2	11-May-10	GCAL	210051349	21005134917	SPLP VOC	Methylene chloride	ug/L	21.7		UR					X	21.7 UR

Table 2
Data Review Qualifiers
SWMU 33 Nail Mill Degreasing Area
AK Steel Kansas City Facility

Sample Number	Date Sampled	Lab	Data Package	Lab Number	Analysis	Parameter	Units	Result	Qualifier	Data Review Qualifier	Reason for Data Review Qualifier					Reporting for Subsequent Documents
											HT	Sur	LCS/LCSD	MS/MSD	Other	
33B105 / SB3	11-May-10	GCAL	210051349	21005134918	SPLP VOC	Methylene chloride	ug/L	16.6		UR					X	16.6 UR
33B106 / SB1	11-May-10	GCAL	210051349	21005134919	SPLP VOC	Methylene chloride	ug/L	16.8		UR					X	16.8 UR
33B106 / SB2	11-May-10	GCAL	210051349	21005134920	SPLP VOC	Methylene chloride	ug/L	28.9		UR					X	28.9 UR
33B106 / SB3	11-May-10	GCAL	210051349	21005134921	SPLP VOC	Methylene chloride	ug/L	13.6		UR					X	13.6 UR
33B107 / SB1	11-May-10	GCAL	210051349	21005134922	SPLP VOC	Methylene chloride	ug/L	18.7		UR					X	18.7 UR
33B107 / SB2	11-May-10	GCAL	210051349	21005134923	SPLP VOC	Methylene chloride	ug/L	20.0		UR					X	20.0 UR
33B107 / SB3	11-May-10	GCAL	210051349	21005134924	SPLP VOC	Methylene chloride	ug/L	20.0		UR					X	20.0 UR
33B108 / SB1	11-May-10	GCAL	210051348	21005134825	VOC	Trichloroethene	ug/kg	39.9		J			X	X		39.9 J
						2-Butanone	ug/kg	9.97		J				X		9.97 J
						Acetone	ug/kg	52.7		J				X		52.7 J
						Chloromethane	ug/kg	4	U	J				X		4 UJ
						Styrene	ug/kg	4	U	J				X		4 UJ
						Vinyl chloride	ug/kg	4	U	J				X		4 UJ
			210051349	21005134925	SPLP VOC	1,1-Dichloroethene	ug/L	5	U	J				X		5 UJ
						Acetone	ug/L	25	U	J				X		25 UJ
						Carbon disulfide	ug/L	5	U	J				X		5 UJ
						Methylene chloride	ug/L	46.6		UR					X	46.6 UR
33B108 / SB3	11-May-10	GCAL	210051349	21005134928	SPLP VOC	Methylene chloride	ug/L	38.1		UR					X	38.1 UR
33B109 / SB1	11-May-10	GCAL	210051349	21005134929	SPLP VOC	Methylene chloride	ug/L	52.3		UR					X	52.3 UR
33B109 / SB2	11-May-10	GCAL	210051349	21005134930	SPLP VOC	Methylene chloride	ug/L	37.9		UR					X	37.9 UR
33B109 / SB3	11-May-10	GCAL	210051349	21005134931	SPLP VOC	Methylene chloride	ug/L	42.7		UR					X	42.7 UR
33B109 / SB3D	11-May-10	GCAL	210051349	21005134932	SPLP VOC	Methylene chloride	ug/L	20.8		UR					X	20.8 UR
33B110 / SB1	11-May-10	GCAL	210051349	21005134933	SPLP VOC	Methylene chloride	ug/L	36.6		UR					X	36.6 UR

Table 2
Data Review Qualifiers
SWMU 33 Nail Mill Degreasing Area
AK Steel Kansas City Facility

Sample Number	Date Sampled	Lab	Data Package	Lab Number	Analysis	Parameter	Units	Result	Qualifier	Data Review Qualifier	Reason for Data Review Qualifier					Reporting for Subsequent Documents
											HT	Sur	LCS/LCSD	MS/MSD	Other	
33B110 / SB2	11-May-10	GCAL	210051349	21005134934	SPLP VOC	Methylene chloride	ug/L	46.5		UR					X	46.5 UR
33B110 / SB3	11-May-10	GCAL	210051349	21005134935	SPLP VOC	Methylene chloride	ug/L	27.0		UR					X	27.0 UR
33B111 / SB1	11-May-10	GCAL	210051349	21005134936	SPLP VOC	Methylene chloride	ug/L	30.9		UR					X	30.9 UR
33B111 / SB2	11-May-10	GCAL	210051349	21005134937	SPLP VOC	Methylene chloride	ug/L	18.3		UR					X	18.3 UR
33B111 / SB3	11-May-10	GCAL	210051349	21005134938	SPLP VOC	Methylene chloride	ug/L	38.1		UR					X	38.1 UR
33B112 / SB1	12-May-10	GCAL	210051349	21005134939	SPLP VOC	Methylene chloride	ug/L	33.6		UR					X	33.6 UR
33B112 / SB1D	12-May-10	GCAL	210051349	21005134940	SPLP VOC	Methylene chloride	ug/L	28.6		UR					X	28.6 UR
33B112 / SB2	12-May-10	GCAL	210051349	21005134941	SPLP VOC	Methylene chloride	ug/L	43.6		UR					X	43.6 UR
33B112 / SB3	12-May-10	GCAL	210051349	21005134942	SPLP VOC	Methylene chloride	ug/L	29.6		UR					X	29.6 UR
33B113 / SB1	12-May-10	GCAL	210051349	21005134943	SPLP VOC	Methylene chloride	ug/L	14.2		UR					X	14.2 UR
33B113 / SB2	12-May-10	GCAL	210051349	21005134944	SPLP VOC	Methylene chloride	ug/L	14.0		UR					X	14.0 UR
33B113 / SB3	12-May-10	GCAL	210051349	21005134945	SPLP VOC	Methylene chloride	ug/L	19.4		UR					X	19.4 UR
33B114 / SB1	12-May-10	GCAL	210051349	21005134946	SPLP VOC	Methylene chloride	ug/L	14.7		UR					X	14.7 UR
33B114 / SB2	12-May-10	GCAL	210051349	21005134947	SPLP VOC	Methylene chloride	ug/L	12.0		UR					X	12.0 UR
33B114 / SB3	12-May-10	GCAL	210051349	21005134948	SPLP VOC	Methylene chloride	ug/L	20.5		UR					X	20.5 UR

Data Review Qualifiers
J = Estimated value.
U = Not detected
UR = Not detected and rejected

Acronyms
GCAL = Gulf Coast Analytical Laboratory
SPLP = Synthetic precipitation leaching procedure
VOC = volatile organic compound
ug/kg = micrograms per kilogram
ug/L = micrograms per liter

Reason for Data Review Qualifiers
HT = Holding Time
Sur = Surrogate Recovery
LCS/LCSD = Laboratory Control Sample/Laboratory Control Sample Duplicate
MS/MSD = Matrix Spike/Matrix Spike Duplicate
Other = Detection less than the reporting limit (J) or dection in the SPLP VOC analysis, but not in the VOC analysis-contaminated sample (UR)

Table 3
Field Duplicate Results - 33B103/SB1 and 33B103/SB1D
SWMU 33 Nail Mill Degreasing Area
AK Steel Kansas City Facility

Parameter	Sample ID: / Date Collected: / Lab ID: / Units	33B103/SB1 5/11/2010 21005134808 21005134908	33B103/SB1D 5/11/2010 21005134809 21005134909	Meets Field Dup Comparison Criteria?
Volatile Organic Compounds				
1,1,1-Trichloroethane	ug/kg	4 U	5 U	Yes
1,1,2,2-Tetrachloroethane	ug/kg	4 U	5 U	Yes
1,1,2-Trichloroethane	ug/kg	4 U	5 U	Yes
1,1-Dichloroethane	ug/kg	4 U	5 U	Yes
1,1-Dichloroethene	ug/kg	4 U	5 U	Yes
1,2-Dichloroethane	ug/kg	4 U	5 U	Yes
1,2-Dichloropropane	ug/kg	4 U	5 U	Yes
2-Butanone	ug/kg	4 U	5 U	Yes
2-Hexanone	ug/kg	4 U	5 U	Yes
4-Methyl-2-pentanone	ug/kg	4 U	5 U	Yes
Acetone	ug/kg	21 U	23 U	Yes
Benzene	ug/kg	4 U	5 U	Yes
Bromodichloromethane	ug/kg	4 U	5 U	Yes
Bromoform	ug/kg	4 U	5 U	Yes
Bromomethane	ug/kg	4 U	5 U	Yes
Carbon disulfide	ug/kg	4 U	5 U	Yes
Carbon tetrachloride	ug/kg	4 U	5 U	Yes
Chlorobenzene	ug/kg	4 U	5 U	Yes
Chloroethane	ug/kg	4 U	5 U	Yes
Chloroform	ug/kg	4 U	5 U	Yes
Chloromethane	ug/kg	4 U	5 U	Yes
cis-1,2-Dichloroethene	ug/kg	**95.5**	**91.5**	Yes
cis-1,3-Dichloropropene	ug/kg	4 U	5 U	Yes
Dibromochloromethane	ug/kg	4 U	5 U	Yes
Ethylbenzene	ug/kg	4 U	5 U	Yes
Methylene chloride	ug/kg	8 U	9 U	Yes
Styrene	ug/kg	4 U	5 U	Yes
Tetrachloroethene	ug/kg	4 U	5 U	Yes
Toluene	ug/kg	4 U	5 U	Yes
trans-1,2-Dichloroethene	ug/kg	**5.03**	5 U	Yes
trans-1,3-Dichloropropene	ug/kg	4 U	5 U	Yes
Trichloroethene	ug/kg	**8.76**	**9.14**	Yes
Vinyl acetate	ug/kg	4 U	5 U	Yes
Vinyl chloride	ug/kg	**5.10**	**4.66 J**	Yes
Xylene (total)	ug/kg	8 U	9 U	Yes
Synthetic Precipitation Leaching Procedure Volatile Organic Compounds				
1,1,1-Trichloroethane	ug/L	5 U	5 U	Yes
1,1,2,2-Tetrachloroethane	ug/L	5 U	5 U	Yes
1,1,2-Trichloroethane	ug/L	5 U	5 U	Yes
1,1-Dichloroethane	ug/L	5 U	5 U	Yes
1,1-Dichloroethene	ug/L	5 U	5 U	Yes
1,2-Dichloroethane	ug/L	5 U	5 U	Yes
1,2-Dichloropropane	ug/L	5 U	5 U	Yes
2-Butanone	ug/L	25 U	25 U	Yes
2-Hexanone	ug/L	5 U	5 U	Yes
4-Methyl-2-pentanone	ug/L	5 U	5 U	Yes
Acetone	ug/L	25 U	25 U	Yes
Benzene	ug/L	5 U	5 U	Yes
Bromodichloromethane	ug/L	5 U	5 U	Yes
Bromoform	ug/L	5 U	5 U	Yes

Table 3
Field Duplicate Results - 33B103/SB1 and 33B103/SB1D
SWMU 33 Nail Mill Degreasing Area
AK Steel Kansas City Facility

Parameter	Sample ID: Date Collected: Lab ID: Units	33B103/SB1 5/11/2010 21005134808 21005134908	33B103/SB1D 5/11/2010 21005134809 21005134909	Meets Field Dup Comparison Criteria?
Bromomethane	ug/L	5 U	5 U	Yes
Carbon disulfide	ug/L	5 U	5 U	Yes
Carbon tetrachloride	ug/L	5 U	5 U	Yes
Chlorobenzene	ug/L	5 U	5 U	Yes
Chloroethane	ug/L	5 U	5 U	Yes
Chloroform	ug/L	5 U	5 U	Yes
Chloromethane	ug/L	5 U	5 U	Yes
cis-1,2-Dichloroethene	ug/L	5 U	5 U	Yes
cis-1,3-Dichloropropene	ug/L	5 U	5 U	Yes
Dibromochloromethane	ug/L	5 U	5 U	Yes
Ethylbenzene	ug/L	5 U	5 U	Yes
Methylene chloride	ug/L	26.3 UR	22.0 UR	Yes
Styrene	ug/L	5 U	5 U	Yes
Tetrachloroethene	ug/L	5 U	5 U	Yes
Toluene	ug/L	5 U	5 U	Yes
trans-1,2-Dichloroethene	ug/L	5 U	5 U	Yes
trans-1,3-Dichloropropene	ug/L	5 U	5 U	Yes
Trichloroethene	ug/L	5 U	5 U	Yes
Vinyl acetate	ug/L	5 U	5 U	Yes
Vinyl chloride	ug/L	5 U	5 U	Yes
Xylene (total)	ug/L	10 U	10 U	Yes

Bold = Constituent was detected.

ID = Identification
J = Estimated value. Result is between the method detection limit and reporting limit.
U = Not detected. Value is the reporting limit.
UR = Qualified as not detected and rejected.
ug/kg = micrograms per kilogram
ug/L = micrograms per liter

Duplicate evaluation criteria:

1. Is the compound detected in both samples?

2. If the sample concentrations are greater than 5 times the detection limit, then the maximum allowable relative percent difference (RPD) is 35 percent for soil samples.

3. If the sample concentrations are less than 5 times the detection limit, then a sensitivity test is applied. For the sensitivity test, the sample concentrations must agree within plus or minus (±) two times the lower detection limit for soil.

Table 4
Field Duplicate Results - 33B104/SB2 and 33B104/SB2D
SWMU 33 Nail Mill Degreasing Area
AK Steel Kansas City Facility

Parameter	Sample ID: Date Collected: Lab ID: Units	33B104/SB2 5/11/2010 21005134813 21005134913	33B104/SB2D 5/11/2010 21005134814 21005134914	Meets Field Dup Comparison Criteria?
Volatile Organic Compounds				
1,1,1-Trichloroethane	ug/kg	260 U	210 U	Yes
1,1,2,2-Tetrachloroethane	ug/kg	260 U	210 U	Yes
1,1,2-Trichloroethane	ug/kg	260 U	210 U	Yes
1,1-Dichloroethane	ug/kg	260 U	210 U	Yes
1,1-Dichloroethene	ug/kg	260 U	210 U	Yes
1,2-Dichloroethane	ug/kg	260 U	210 U	Yes
1,2-Dichloropropane	ug/kg	260 U	210 U	Yes
2-Butanone	ug/kg	260 U	210 U	Yes
2-Hexanone	ug/kg	260 U	210 U	Yes
4-Methyl-2-pentanone	ug/kg	260 U	210 U	Yes
Acetone	ug/kg	1,300 U	1,100 U	Yes
Benzene	ug/kg	260 U	210 U	Yes
Bromodichloromethane	ug/kg	260 U	210 U	Yes
Bromoform	ug/kg	260 U	210 U	Yes
Bromomethane	ug/kg	260 U	210 U	Yes
Carbon disulfide	ug/kg	260 U	210 U	Yes
Carbon tetrachloride	ug/kg	260 U	210 U	Yes
Chlorobenzene	ug/kg	260 U	210 U	Yes
Chloroethane	ug/kg	260 U	210 U	Yes
Chloroform	ug/kg	260 U	210 U	Yes
Chloromethane	ug/kg	260 U	210 U	Yes
cis-1,2-Dichloroethene	ug/kg	260 U	210 U	Yes
cis-1,3-Dichloropropene	ug/kg	260 U	210 U	Yes
Dibromochloromethane	ug/kg	260 U	210 U	Yes
Ethylbenzene	ug/kg	260 U	210 U	Yes
Methylene chloride	ug/kg	520 U	430 U	Yes
Styrene	ug/kg	260 U	210 U	Yes
Tetrachloroethene	ug/kg	260 U	210 U	Yes
Toluene	ug/kg	260 U	210 U	Yes
trans-1,2-Dichloroethene	ug/kg	260 U	210 U	Yes
trans-1,3-Dichloropropene	ug/kg	260 U	210 U	Yes
Trichloroethene	ug/kg	260 U	**239**	Yes
Vinyl acetate	ug/kg	260 U	210 U	Yes
Vinyl chloride	ug/kg	260 U	210 U	Yes
Xylene (total)	ug/kg	520 U	430 U	Yes
Synthetic Precipitation Leaching Procedure Volatile Organic Compounds				
1,1,1-Trichloroethane	ug/L	5 U	5 U	Yes
1,1,2,2-Tetrachloroethane	ug/L	5 U	5 U	Yes
1,1,2-Trichloroethane	ug/L	5 U	5 U	Yes
1,1-Dichloroethane	ug/L	5 U	5 U	Yes
1,1-Dichloroethene	ug/L	5 U	5 U	Yes
1,2-Dichloroethane	ug/L	5 U	5 U	Yes
1,2-Dichloropropane	ug/L	5 U	5 U	Yes
2-Butanone	ug/L	25 U	25 U	Yes
2-Hexanone	ug/L	5 U	5 U	Yes
4-Methyl-2-pentanone	ug/L	5 U	5 U	Yes
Acetone	ug/L	25 U	25 U	Yes
Benzene	ug/L	5 U	5 U	Yes
Bromodichloromethane	ug/L	5 U	5 U	Yes
Bromoform	ug/L	5 U	5 U	Yes

Table 4
Field Duplicate Results - 33B104/SB2 and 33B104/SB2D
SWMU 33 Nail Mill Degreasing Area
AK Steel Kansas City Facility

Parameter	Sample ID: Date Collected: Lab ID: Units	33B104/SB2 5/11/2010 21005134813 21005134913	33B104/SB2D 5/11/2010 21005134814 21005134914	Meets Field Dup Comparison Criteria?
Bromomethane	ug/L	5 U	5 U	Yes
Carbon disulfide	ug/L	5 U	5 U	Yes
Carbon tetrachloride	ug/L	5 U	5 U	Yes
Chlorobenzene	ug/L	5 U	5 U	Yes
Chloroethane	ug/L	5 U	5 U	Yes
Chloroform	ug/L	5 U	5 U	Yes
Chloromethane	ug/L	5 U	5 U	Yes
cis-1,2-Dichloroethene	ug/L	5 U	5 U	Yes
cis-1,3-Dichloropropene	ug/L	5 U	5 U	Yes
Dibromochloromethane	ug/L	5 U	5 U	Yes
Ethylbenzene	ug/L	5 U	5 U	Yes
Methylene chloride	ug/L	27.5 UR	22.1 UR	Yes
Styrene	ug/L	5 U	5 U	Yes
Tetrachloroethene	ug/L	5 U	5 U	Yes
Toluene	ug/L	5 U	5 U	Yes
trans-1,2-Dichloroethene	ug/L	5 U	5 U	Yes
trans-1,3-Dichloropropene	ug/L	5 U	5 U	Yes
Trichloroethene	ug/L	5 U	5 U	Yes
Vinyl acetate	ug/L	5 U	5 U	Yes
Vinyl chloride	ug/L	5 U	5 U	Yes
Xylene (total)	ug/L	10 U	10 U	Yes

Bold = Constituent was detected.

ID = Identification
J = Estimated value. Result is between the method detection limit and reporting limit.
U = Not detected. Value is the reporting limit.
UR = Qualified as not detected and rejected.
ug/kg = micrograms per kilogram
ug/L = micrograms per liter

Duplicate evaluation criteria:

1. Is the compound detected in both samples?
2. If the sample concentrations are greater than 5 times the detection limit, then the maximum allowable relative percent difference (RPD) is 35 percent for soil samples.
3. If the sample concentrations are less than 5 times the detection limit, then a sensitivity test is applied. For the sensitivity test, the sample concentrations must agree within plus or minus (±) two times the lower detection limit for soil.

Table 5
Field Duplicate Results - 33B109/SB3 and 33B109/SB3D
SWMU 33 Nail Mill Degreasing Area
AK Steel Kansas City Facility

Parameter	Sample ID: Date Collected: Lab ID: Units	33B109/SB3 5/11/2010 21005134831 21005134931	33B109/SB3D 5/11/2010 21005134832 21005134932	Meets Field Dup Comparison Criteria?
Volatile Organic Compounds				
1,1,1-Trichloroethane	ug/kg	220 U	220 U	Yes
1,1,2,2-Tetrachloroethane	ug/kg	220 U	220 U	Yes
1,1,2-Trichloroethane	ug/kg	220 U	220 U	Yes
1,1-Dichloroethane	ug/kg	220 U	220 U	Yes
1,1-Dichloroethene	ug/kg	220 U	220 U	Yes
1,2-Dichloroethane	ug/kg	220 U	220 U	Yes
1,2-Dichloropropane	ug/kg	220 U	220 U	Yes
2-Butanone	ug/kg	220 U	220 U	Yes
2-Hexanone	ug/kg	220 U	220 U	Yes
4-Methyl-2-pentanone	ug/kg	220 U	220 U	Yes
Acetone	ug/kg	1,100 U	1,100 U	Yes
Benzene	ug/kg	220 U	220 U	Yes
Bromodichloromethane	ug/kg	220 U	220 U	Yes
Bromoform	ug/kg	220 U	220 U	Yes
Bromomethane	ug/kg	220 U	220 U	Yes
Carbon disulfide	ug/kg	220 U	220 U	Yes
Carbon tetrachloride	ug/kg	220 U	220 U	Yes
Chlorobenzene	ug/kg	220 U	220 U	Yes
Chloroethane	ug/kg	220 U	220 U	Yes
Chloroform	ug/kg	220 U	220 U	Yes
Chloromethane	ug/kg	220 U	220 U	Yes
cis-1,2-Dichloroethene	ug/kg	**471**	**515**	Yes
cis-1,3-Dichloropropene	ug/kg	220 U	220 U	Yes
Dibromochloromethane	ug/kg	220 U	220 U	Yes
Ethylbenzene	ug/kg	220 U	220 U	Yes
Methylene chloride	ug/kg	440 U	440 U	Yes
Styrene	ug/kg	220 U	220 U	Yes
Tetrachloroethene	ug/kg	220 U	220 U	Yes
Toluene	ug/kg	220 U	220 U	Yes
trans-1,2-Dichloroethene	ug/kg	220 U	220 U	Yes
trans-1,3-Dichloropropene	ug/kg	220 U	220 U	Yes
Trichloroethene	ug/kg	**1,440**	**1,610**	Yes
Vinyl acetate	ug/kg	220 U	220 U	Yes
Vinyl chloride	ug/kg	220 U	220 U	Yes
Xylene (total)	ug/kg	440 U	440 U	Yes
Synthetic Precipitation Leaching Procedure Volatile Organic Compounds				
1,1,1-Trichloroethane	ug/L	5 U	5 U	Yes
1,1,2,2-Tetrachloroethane	ug/L	5 U	5 U	Yes
1,1,2-Trichloroethane	ug/L	5 U	5 U	Yes
1,1-Dichloroethane	ug/L	5 U	5 U	Yes
1,1-Dichloroethene	ug/L	5 U	5 U	Yes
1,2-Dichloroethane	ug/L	5 U	5 U	Yes
1,2-Dichloropropane	ug/L	5 U	5 U	Yes
2-Butanone	ug/L	25 U	25 U	Yes
2-Hexanone	ug/L	5 U	5 U	Yes
4-Methyl-2-pentanone	ug/L	5 U	5 U	Yes
Acetone	ug/L	25 U	25 U	Yes
Benzene	ug/L	5 U	5 U	Yes
Bromodichloromethane	ug/L	5 U	5 U	Yes
Bromoform	ug/L	5 U	5 U	Yes

Table 5
Field Duplicate Results - 33B109/SB3 and 33B109/SB3D
SWMU 33 Nail Mill Degreasing Area
AK Steel Kansas City Facility

Parameter	Sample ID: Date Collected: Lab ID: Units	33B109/SB3 5/11/2010 21005134831 21005134931	33B109/SB3D 5/11/2010 21005134832 21005134932	Meets Field Dup Comparison Criteria?
Bromomethane	ug/L	5 U	5 U	Yes
Carbon disulfide	ug/L	5 U	5 U	Yes
Carbon tetrachloride	ug/L	5 U	5 U	Yes
Chlorobenzene	ug/L	5 U	5 U	Yes
Chloroethane	ug/L	5 U	5 U	Yes
Chloroform	ug/L	5 U	5 U	Yes
Chloromethane	ug/L	5 U	5 U	Yes
cis-1,2-Dichloroethene	ug/L	5 U	5 U	Yes
cis-1,3-Dichloropropene	ug/L	5 U	5 U	Yes
Dibromochloromethane	ug/L	5 U	5 U	Yes
Ethylbenzene	ug/L	5 U	5 U	Yes
Methylene chloride	ug/L	42.7 UR	20.8 UR	Yes
Styrene	ug/L	5 U	5 U	Yes
Tetrachloroethene	ug/L	5 U	5 U	Yes
Toluene	ug/L	5 U	5 U	Yes
trans-1,2-Dichloroethene	ug/L	5 U	5 U	Yes
trans-1,3-Dichloropropene	ug/L	5 U	5 U	Yes
Trichloroethene	ug/L	5 U	5 U	Yes
Vinyl acetate	ug/L	5 U	5 U	Yes
Vinyl chloride	ug/L	5 U	5 U	Yes
Xylene (total)	ug/L	10 U	10 U	Yes

Bold = Constituent was detected.

ID = Identification
J = Estimated value. Result is between the method detection limit and reporting limit.
U = Not detected. Value is the reporting limit.
UR = Qualified as not detected and rejected.
ug/kg = micrograms per kilogram
ug/L = micrograms per liter

Duplicate evaluation criteria:

1. Is the compound detected in both samples?

2. If the sample concentrations are greater than 5 times the detection limit, then the maximum allowable relative percent difference (RPD) is 35 percent for soil samples.

3. If the sample concentrations are less than 5 times the detection limit, then a sensitivity test is applied. For the sensitivity test, the sample concentrations must agree within plus or minus (±) two times the lower detection limit for soil.

Table 6
Field Duplicate Results - 33B112/SB1 and 33B112/SB1D
SWMU 33 Nail Mill Degreasing Area
AK Steel Kansas City Facility

Parameter	Sample ID: / Date Collected: / Lab ID: / Units	33B112/SB1 5/12/2010 21005134839 21005134939	33B112/SB1D 5/12/2010 21005134840 21005134940	Meets Field Dup Comparison Criteria?
Volatile Organic Compounds				
1,1,1-Trichloroethane	ug/kg	4 U	4 U	Yes
1,1,2,2-Tetrachloroethane	ug/kg	4 U	4 U	Yes
1,1,2-Trichloroethane	ug/kg	4 U	4 U	Yes
1,1-Dichloroethane	ug/kg	4 U	4 U	Yes
1,1-Dichloroethene	ug/kg	4 U	4 U	Yes
1,2-Dichloroethane	ug/kg	4 U	4 U	Yes
1,2-Dichloropropane	ug/kg	4 U	4 U	Yes
2-Butanone	ug/kg	4 U	4 U	Yes
2-Hexanone	ug/kg	4 U	4 U	Yes
4-Methyl-2-pentanone	ug/kg	4 U	4 U	Yes
Acetone	ug/kg	22 U	20 U	Yes
Benzene	ug/kg	4 U	4 U	Yes
Bromodichloromethane	ug/kg	4 U	4 U	Yes
Bromoform	ug/kg	4 U	4 U	Yes
Bromomethane	ug/kg	4 U	4 U	Yes
Carbon disulfide	ug/kg	4 U	4 U	Yes
Carbon tetrachloride	ug/kg	4 U	4 U	Yes
Chlorobenzene	ug/kg	4 U	4 U	Yes
Chloroethane	ug/kg	4 U	4 U	Yes
Chloroform	ug/kg	4 U	4 U	Yes
Chloromethane	ug/kg	4 U	4 U	Yes
cis-1,2-Dichloroethene	ug/kg	4 U	4 U	Yes
cis-1,3-Dichloropropene	ug/kg	4 U	4 U	Yes
Dibromochloromethane	ug/kg	4 U	4 U	Yes
Ethylbenzene	ug/kg	4 U	4 U	Yes
Methylene chloride	ug/kg	9 U	8 U	Yes
Styrene	ug/kg	4 U	4 U	Yes
Tetrachloroethene	ug/kg	4 U	4 U	Yes
Toluene	ug/kg	4 U	4 U	Yes
trans-1,2-Dichloroethene	ug/kg	4 U	4 U	Yes
trans-1,3-Dichloropropene	ug/kg	4 U	4 U	Yes
Trichloroethene	ug/kg	4 U	4 U	Yes
Vinyl acetate	ug/kg	4 U	4 U	Yes
Vinyl chloride	ug/kg	4 U	4 U	Yes
Xylene (total)	ug/kg	9 U	8 U	Yes
Synthetic Precipitation Leaching Procedure Volatile Organic Compounds				
1,1,1-Trichloroethane	ug/L	5 U	5 U	Yes
1,1,2,2-Tetrachloroethane	ug/L	5 U	5 U	Yes
1,1,2-Trichloroethane	ug/L	5 U	5 U	Yes
1,1-Dichloroethane	ug/L	5 U	5 U	Yes
1,1-Dichloroethene	ug/L	5 U	5 U	Yes
1,2-Dichloroethane	ug/L	5 U	5 U	Yes
1,2-Dichloropropane	ug/L	5 U	5 U	Yes
2-Butanone	ug/L	25 U	25 U	Yes
2-Hexanone	ug/L	5 U	5 U	Yes
4-Methyl-2-pentanone	ug/L	5 U	5 U	Yes
Acetone	ug/L	25 U	25 U	Yes
Benzene	ug/L	5 U	5 U	Yes
Bromodichloromethane	ug/L	5 U	5 U	Yes
Bromoform	ug/L	5 U	5 U	Yes

Table 6
Field Duplicate Results - 33B112/SB1 and 33B112/SB1D
SWMU 33 Nail Mill Degreasing Area
AK Steel Kansas City Facility

Parameter	Sample ID: / Date Collected: / Lab ID: / Units	33B112/SB1 5/12/2010 21005134839 21005134939	33B112/SB1D 5/12/2010 21005134840 21005134940	Meets Field Dup Comparison Criteria?
Bromomethane	ug/L	5 U	5 U	Yes
Carbon disulfide	ug/L	5 U	5 U	Yes
Carbon tetrachloride	ug/L	5 U	5 U	Yes
Chlorobenzene	ug/L	5 U	5 U	Yes
Chloroethane	ug/L	5 U	5 U	Yes
Chloroform	ug/L	5 U	5 U	Yes
Chloromethane	ug/L	5 U	5 U	Yes
cis-1,2-Dichloroethene	ug/L	5 U	5 U	Yes
cis-1,3-Dichloropropene	ug/L	5 U	5 U	Yes
Dibromochloromethane	ug/L	5 U	5 U	Yes
Ethylbenzene	ug/L	5 U	5 U	Yes
Methylene chloride	ug/L	33.6 UR	28.6 UR	Yes
Styrene	ug/L	5 U	5 U	Yes
Tetrachloroethene	ug/L	5 U	5 U	Yes
Toluene	ug/L	5 U	5 U	Yes
trans-1,2-Dichloroethene	ug/L	5 U	5 U	Yes
trans-1,3-Dichloropropene	ug/L	5 U	5 U	Yes
Trichloroethene	ug/L	5 U	5 U	Yes
Vinyl acetate	ug/L	5 U	5 U	Yes
Vinyl chloride	ug/L	5 U	5 U	Yes
Xylene (total)	ug/L	10 U	10 U	Yes

Bold = Constituent was detected.

ID = Identification
J = Estimated value. Result is between the method detection limit and reporting limit.
U = Not detected. Value is the reporting limit.
UR = Qualified as not detected and rejected.
ug/kg = micrograms per kilogram
ug/L = micrograms per liter

Duplicate evaluation criteria:

1. Is the compound detected in both samples?

2. If the sample concentrations are greater than 5 times the detection limit, then the maximum allowable relative percent difference (RPD) is 35 percent for soil samples.

3. If the sample concentrations are less than 5 times the detection limit, then a sensitivity test is applied. For the sensitivity test, the sample concentrations must agree within plus or minus (±) two times the lower detection limit for soil.

Table 7
Sample Dilutions
SWMU 33 Nail Mill Degreasing Area
AK Steel Kansas City Facility

Sample ID	Lab	Lab ID	Analysis	Parameter	Dilution Factor
33B101 / SB3	GCAL	21005134803	VOC	All VOC analytes	50
33B102 / SB1	GCAL	21005134804	VOC	All VOC analytes	50
33B102 / SB3	GCAL	21005134805	VOC	All VOC analytes	50
33B103 / SB2	GCAL	21005134810	VOC	All VOC analytes	50
33B103 / SB3	GCAL	21005134811	VOC	All VOC analytes	50
33B104 / SB1	GCAL	21005134812	VOC	All VOC analytes	50
33B104 / SB2	GCAL	21005134813	VOC	All VOC analytes	50
33B104 / SB2D	GCAL	21005134814	VOC	All VOC analytes	50
33B104 / SB3	GCAL	21005134815	VOC	All VOC analytes	50
33B105 / SB1	GCAL	21005134816	VOC	All VOC analytes	250
33B105 / SB2	GCAL	21005134817	VOC	All VOC analytes	500
33B105 / SB3	GCAL	21005134818	VOC	All VOC analytes	500
33B106 / SB1	GCAL	21005134819	VOC	All VOC analytes	50
33B106 / SB2	GCAL	21005134820	VOC	All VOC analytes	50
33B106 / SB3	GCAL	21005134821	VOC	All VOC analytes	50
33B107 / SB1	GCAL	21005134822	VOC	All VOC analytes	100
33B107 / SB2	GCAL	21005134823	VOC	All VOC analytes	50
33B107 / SB3	GCAL	21005134824	VOC	All VOC analytes	50
33B109 / SB1	GCAL	21005134829	VOC	All VOC analytes	50
33B109 / SB2	GCAL	21005134830	VOC	All VOC analytes	50
33B109 / SB3	GCAL	21005134831	VOC	All VOC analytes	50
33B109 / SB3D	GCAL	21005134832	VOC	All VOC analytes	50
33B110 / SB1	GCAL	21005134833	VOC	All VOC analytes	50
33B110 / SB2	GCAL	21005134834	VOC	All VOC analytes	50
33B110 / SB3	GCAL	21005134835	VOC	All VOC analytes	50

GCAL = Gulf Coast Analytical Laboratory
ID = Identification
VOC = Volatile organic compound

APPENDIX E

Drilling Logs

Drilling Log

Project Name	Project Number	Boring Number
AK STEEL	54200	33B101

Ground Elevation	Location	Page
NOT SURVEYED	KANSAS CITY, MO	1 OF 1

Air Monitoring Equipment	Total Footage
PID	8'

Drilling Type	Hole Size	Overburden Footage	Bedrock Footage	No. of Samples	No. of Core Boxes
DIRECT-PUSH	2"	8'	Ø'	3	—

Drilling Company	Driller(s)
RAZEK ENVIRONMENTAL	T. POULTER, S. FARRIS

Drilling Rig	Type of Sampler
GEOPROBE 6620 DT	5' MACROCORE

Date	To	Field Observer(s)
05/11/10	05/11/10	D. BARKER

Depth (feet)	Description	Class	Blow Count	Recov.	Run/ Time	Sample Desig.	PID (ppm) BZ	PID (ppm) BH	PID (ppm) S	Remarks/ Water Levels
	CONCRETE				05/10/10					CONCRETE CORING MACHINE USED
1	FILL, SLAG, Clay matrix, Yellowish Red 5YR 5/6 to White 5YR 8/1, Moist, Soft, Medium to High Plasticity								0.0	RAIN WATER IN COREHOLE
	CLAY, Dark Greenish Gray 5GY 4/1 to Black 10YR 2/1, Damp, Soft, Medium Plasticity	CL			05/11/10 0938					
2	CLAY, Dark Grayish Brown 10YR 4/2 to Brown 10YR 4/3, Damp, Stiff, Medium Plasticity	CL		4/5					0.0	
	Very Stiff @ 3'					SB1				
3	CLAY, trace Sand, Dark Grayish Brown 10YR 4/2 to Brown, 10YR 4/3, Damp, Soft, Medium Plasticity	CL				0941			0.0	
4									0.0	
						SB2				
5					0940	0946			0.0	
					0950					
6	Black Nodules			3/3					0.0	
						SB3				
7	CLAY, Mottled Dark Gray 10YR 4/1 to Dark Yellowish Brown 10YR 4/4, Damp, Very Stiff, Medium Plasticity, Iron Staining, Black Nodules	CL				0956			0.0	
8					0954				0.0	
	BOTTOM OF BORING 8' bgs									ABANDON BORING WITH BENTONITE AND CONCRETE PATCH
9										
10										
11										
12										
13										
14										

BZ=Breathing Zone BH=Bore Hole S=Sample

Burns & McDonnell

051601 Form WCD-2-1

Drilling Log

Project Name	Project Number	Boring Number
AK STEEL SWMU 33	54200	33B102

Ground Elevation	Location	Page
NOT SURVEYED	KANSAS CITY, MO	1 OF 1

Air Monitoring Equipment	Total Footage
PID	8'

Drilling Type	Hole Size	Overburden Footage	Bedrock Footage	No. of Samples	No. of Core Boxes
DIRECT-PUSH	2"	8'	Ø'	2 + MS/MSD	—

Drilling Company	Driller(s)
RAZEK ENVIRONMENTAL	T. POULTER, S. FARRIS

Drilling Rig	Type of Sampler
GEOPROBE 6620 DT	5' MACROCORE

Date	To	Field Observer(s)
05/11/10	05/11/10	D. BARKER

Depth (feet)	Description	Class	Blow Count	Recov.	Run/ Time	Sample Desig.	PID (ppm) BZ	PID (ppm) BH	PID (ppm) S	Remarks/ Water Levels
	CONCRETE			~~05/11/10~~ DB	05/11/10					CONCRETE CORING MACHINE USED
1	FILL, SLAG, clay matrix, Yellowish Red 5YR5/6 to White 5YR 8/1, Moist, Soft, Medium to High Plasticity			~~05/11/10~~	05/11/10				0.0	RAIN WATER IN COREHOLE
	CLAY, Dark Yellowish Brown 10YR 3/4, Damp, Medium, Medium Plasticity	CL		~~1020~~ DB	1020					
2									0.0	
3	CLAY, trace sand, Dark Yellowish Brown 10YR 3/4 to Dark Grayish Brown 10YR 4/2, Damp, Soft, Medium Plasticity	CL		2.5/5		SB1 1025			0.0	
4										
5				~~1024~~ DB ~~1040~~ DB	1024 1040					
6	CLAY, trace sand, Dark Gray 10YR 4/1 to Dark Yellowish Brown 10YR 4/4, Damp, Very Soft to Soft, Medium to High Plasticity	CL-CH		2/3		SB3				
7	CLAY, trace sand, Dark Gray 10YR 4/1 to Dark Yellowish Brown 10YR 4/4, ~~Very~~ Damp, Very Soft, High Plasticity	CH				SB3MS SB3MSD			0.0	
8				~~1042~~ DB	1042	1044			0.0	ABANDON BORING WITH BENTONITE AND CONCRETE PATCH
	BOTTOM OF BORING 8' bgs									
9										
10										
11										
12										
13										
14										

BZ=Breathing Zone BH=Bore Hole S=Sample

Barris & McDonnell

051601 Form WCD-2-1

Drilling Log

Project Name: AK STEEL SWMU 33	Project Number: 54200	Boring Number: 33B103
Ground Elevation: NOT SURVEYED	Location: KANSAS CITY, MO	Page: 1 OF 1
Air Monitoring Equipment: PID		Total Footage: 8'

Drilling Type	Hole Size	Overburden Footage	Bedrock Footage	No. of Samples	No. of Core Boxes
DIRECT-PUSH	2"	~~0~~ 8'	0'	3 + 1 DUP	—

Drilling Company: RAZEK ENVIRONMENTAL	Driller(s): T. POULTER, S. FARRIS
Drilling Rig: GEOPROBE 6620 DT	Type of Sampler: 5' MACROCORE
Date: 05/11/10 To: 05/11/10	Field Observer(s): D. BARKER

Depth (feet)	Description	Class	Blow Count	Recov.	Run/ Time	Sample Desig.	PID (ppm) BZ	PID (ppm) BH	PID (ppm) S	Remarks/ Water Levels
	CONCRETE				05/10/10					CONCRETE CORING MACHINE USED
1	FILL, SLAG, Clay matrix, Yellowish Red 5YR 5/6 to White 5YR 4/1, Moist, Soft, Medium to High Plasticity				05/11/10				0.0	RAINWATER INCOREVOLE
	CLAY, Dark Greenish Gray 5GY 4/1 to Black 10YR 4/1, Damp, Soft, Medium Plasticity	CL			0848					
2	CLAY, Dark Grayish Brown 10YR 4/2 to Brown 10YR 4/3, Damp, Stiff, Medium Plasticity	CL		4/5		SB1			0.0	
3	CLAY, trace Sand, Dark Grayish Brown 10YR 4/2 to Brown 10YR 4/3, Damp, Soft, Medium Plasticity	CL				SB1D 0850			0.0	
4									0.0	
5					0850 0908	SB2 0858			0.0	
6	Black Nodules			3/3		SB3			0.0	
7	CLAY, mottled Dark Gray 10YR 4/1 to Dark Yellowish Brown 10YR 4/4, Damp, Very Stiff, Medium Plasticity, Iron Staining, Black Nodules	CL			0912	0912			0.0	
8	BOTTOM OF BORING 8' bgs									ABANDON WITH BENTONITE AND CONCRETE PATCH
9										
10										
11										
12										
13										
14										

BZ=Breathing Zone BH=Bore Hole S=Sample

Burns & McDonnell

051601 Form WCD-2-1

Drilling Log

Project Name: AK STEEL SWMU 33	Project Number: 54200	Boring Number: 33B104
Ground Elevation: NOT SURVEYED	Location: KANSAS CITY, MO	Page: 1 OF 1
Air Monitoring Equipment: PID		Total Footage: 8'

Drilling Type	Hole Size	Overburden Footage	Bedrock Footage	No. of Samples	No. of Core Boxes
DIRECT-PUSH	2"	8'	Ø'	3 + 1 DUP	—

Drilling Company: RAZEK ENVIRONMENTAL	Driller(s): T. POULTER, S. FARRIS
Drilling Rig: GEOPROBE 6620 DT	Type of Sampler: 5' MACROCORE
Date: 05/11/10 To: 05/11/10	Field Observer(s): D. BARKER

Depth (feet)	Description	Class	Blow Count	Recov.	Run/ Time	Sample Desig.	PID (ppm) BZ	PID (ppm) BH	PID (ppm) S	Remarks/ Water Levels
	CONCRETE				05/10/10					CONCRETE CORING MACHINE USED
	FILL, SLAG				05/11/10					
1	CLAY, Dark Yellowish Brown 10YR 3/4, Damp, Stiff, Trace to Medium Plasticity	CL			1110				0.0	RAIN WATER IN COREHOLE
2				3.5/5					0.0	
3	CLAY, trace Sand, Dark Yellowish Brown 10YR 4/2, Damp, Soft to Medium Medium Plasticity	CL			1114	SB1			0.0	
4										
5					1112	SB2				
					1134	SB2D			0.0	
6	CLAY, Dark Gray 10YR 4/1, to Dark Yellowish Brown 10YR 4/4, Damp, Soft, Medium Plasticity	CL		3/3		1121			0.0	
7	CLAY, Dark Gray 10YR 4/1, to Dark Yellowish Brown 10YR 4/4, Damp, Very Soft, High Plasticity	CH				SB3 1138			0.0	
8					1136				0.0	
	BOTTOM OF BORING 8' bgs									ABANDON BORING WITH BENTONITE AND CONCRETE PATCH
9										
10										
11										
12										
13										
14										

BZ=Breathing Zone BH=Bore Hole S=Sample

Burns & McDonnell

051601 Form WCD-2-1

Drilling Log

Project Name: AK STEEL SWMU 33	Project Number: 54200	Boring Number: 33B105
Ground Elevation: NOT SURVEYED	Location: KANSAS CITY, MO	Page: 1 OF 1
Air Monitoring Equipment: PID		Total Footage: 8'

Drilling Type	Hole Size	Overburden Footage	Bedrock Footage	No. of Samples	No. of Core Boxes
DIRECT-PUSH	2"	8'	Ø'	3	—

Drilling Company: RAZEK ENVIRONMENTAL	Driller(s): T. POULTER, S. FARRIS
Drilling Rig: GEOPROBE 6620 DT	Type of Sampler: 5' MACROCORE
Date: 05/11/10 To: 05/11/10	Field Observer(s): D. BARKER

Depth (feet)	Description	Class	Blow Count	Recov.	Run/ Time	Sample Desig.	PID (ppm) BZ	PID (ppm) BH	PID (ppm) S	Remarks/ Water Levels
	CONCRETE				05/10/10					CONCRETE CORING MACHINE USED
1	CLAY, Very Dark Grayish Brown 10YR 3/2 to Dark Grayish Brown 2.5Y 4/2, Damp, Very Soft to Soft, High Plasticity	CH			05/11/10 1157				4.0	OFFSET TO EAST ~8' DUE TO REFUSAL AT 1.5' 3 TIMES
	SLAG, Fine grained, Gray 5YR 4/1 to White 5YR 8/1								12.0	
2	CLAY, Dark Gray 10YR 4/1 to Dark Yellowish Brown 10YR 4/4, Damp, Stiff, Medium Plasticity	CL		3/5		SB1			7.0	
3	CLAY, trace Sand, Dark Grayish Brown 10YR 4/2, Damp, Medium, Trace Plasticity	CL				1210			~~7.0~~ 52.7	
4					1205	SB2				
5					1225	1230			2.2	
				3/3					25.3	
6	6.25-6.75 Medium to Stiff					SB3			24.7	
7	becoming moist					1240			49.9	
8	CLAY, mottled, Dark Gray 10YR 4/1 to Dark Yellowish Brown 10YR 4/4, Damp, Medium to Stiff, Medium to High Plasticity, Iron Staining	CL-CH			1226				6.3	
	BOTTOM OF BORING 8' bgs									ABANDON WITH BENTONITE AND CONCRETE PATCH
9										
10										
11										
12										
13										
14										

BZ=Breathing Zone BH=Bore Hole S=Sample

051601 Form WCD-2-1

Drilling Log

Project Name: AK STEEL SWMU 33	Project Number: 54200	Boring Number: 33B106
Ground Elevation: NOT SURVEYED	Location: KANSAS CITY, MO	Page: 1 of 1
Air Monitoring Equipment: PID		Total Footage: 8'

Drilling Type	Hole Size	Overburden Footage	Bedrock Footage	No. of Samples	No. of Core Boxes
DIRECT-PUSH	2"	8'	Ø'	3	—

Drilling Company: RAZEK ENVIRONMENTAL	Driller(s): TONY POULTER, SCOTT FARRIS
Drilling Rig: GEOPROBE 6620DT	Type of Sampler: 5' MACROCORE
Date: 05/10/10 To: 05/11/10	Field Observer(s): DAVID BARKER

Depth (feet)	Description	Class	Blow Count	Recov.	Run/ Time	Sample Desig.	PID (ppm) BZ	PID (ppm) BH	PID (ppm) S	Remarks/ Water Levels
	CONCRETE				05/10/10					CONCRETE CORING MACHINE USED
1	SLAG, FILL				1244				0.0	RAIN WATER IN BOREHOLE
	CLAY, Dark Yellowish Brown 10YR 4/4, Damp, Stiff, Medium Plasticity	CL			05/11/10					
2									0.0	
				3/5		SB1				
3	CLAY, trace Sand, Dark Yellowish Brown 10YR 4/4, Damp, Medium, trace to medium plasticity	CL				1248			0.0	
4									0.0	
5					1247	SB2				
					1258	1300			0.0	
6									0.0	
				2.5/3						
7						SB3			0.0	
						1308				
8					1300					
	BOTTOM OF BORING 8' bgs									ABANDON WITH BENTONITE AND CONCRETE PATCH
9										
10										
11										
12										
13										
14										

BZ=Breathing Zone BH=Bore Hole S=Sample

051601 Form WCD-2-1

Drilling Log

Project Name: AK STEEL SWMU 33	Project Number: 54200	Boring Number: 33B107
Ground Elevation: NOT SURVEYED	Location: KANSAS CITY, MO	Page: 1 of 1
Air Monitoring Equipment: PID		Total Footage: 8'

Drilling Type	Hole Size	Overburden Footage	Bedrock Footage	No. of Samples	No. of Core Boxes
DIRECT-PUSH	2"	8'	0'	3	—

Drilling Company: RAZEK ENVIRONMENTAL	Driller(s): TONY POULTER, SCOTT FARRIS
Drilling Rig: GEOPROBE 6620 DT	Type of Sampler: 5' MACROCORE
Date: 05/10/10 To: 05/11/10	Field Observer(s): DAVID BARKER

Depth (feet)	Description	Class	Blow Count	Recov.	Run/ Time	Sample Desig.	PID (ppm) BZ	PID (ppm) BH	PID (ppm) S	Remarks/ Water Levels
	CONCRETE				05/10/10					CONCRETE CORING MACHINE USED
1	CLAY, Dark Yellowish Brown 10YR 4/4, Damp, Stiff, Medium to High Plasticity	CL-CH		4/55	1320 05/11/10				0.8	RAIN WATER IN COREHOLE
2									4.1	
3						SB1 1322			2.7	
4									0.4	
5	CLAY, trace sand, Dark Yellowish Brown 10YR 4/4, Damp, Medium, Trace Plasticity	CL			1321 1337	SB2 1327			0.5	
6									6.4	
7				2.5/3	1338	SB3 1340			1.5	
8	BOTTOM OF BORING 8' bgs									ABANDON WITH BENTONITE AND CONCRETE PATCH
9										
10					1329	DB				
11										
12										
13										
14										

BZ=Breathing Zone BH=Bore Hole S=Sample

051601 Form WCD-2-1

Drilling Log

Project Name	Project Number	Boring Number
AK STEEL SWMU 33	54200	33B108

Ground Elevation	Location	Page
NOT SURVEYED	KANSAS CITY, MO	1 of 1

Air Monitoring Equipment	Total Footage
PID	8'

Drilling Type	Hole Size	Overburden Footage	Bedrock Footage	No. of Samples	No. of Core Boxes
DIRECT-PUSH	2"	8'	Ø'	2 + MS MSD	—

Drilling Company	Driller(s)
RAZEK ENVIRONMENTAL	TONY POULTER, SCOTT FARRES

Drilling Rig	Type of Sampler
GEOPROBE 6620DT	5' MACROCORE

Date	To	Field Observer(s)
05/11/10	05/11/10	DAVID BARKER

Depth (feet)	Description	Class	Blow Count	Recov.	Run/ Time	Sample Desig.	PID (ppm) BZ	PID (ppm) BH	PID (ppm) S	Remarks/ Water Levels
	CONCRETE				05/10/10					CONCRETE CORING MACHINE USED
1	CLAY, Dark Yellowish Brown (10YR 4/4) to Yellowish Brown (10YR 5/4), ~~Dark~~ Moist, Very Soft to Soft, High plasticity	CH			1456				0.0	RAIN WATER IN CORE HOLE
2									0.0	
	SLAG, fine grained, Gray 5YR 6/1 to White 5YR 8/1, brick (red)			3/5		SB1 SB1MS SB1MSD 1500				
3									0.0	
4									0.0	SB 2 NOT COLLECTED DUE TO SLAG
5		DB			1457 1522	~~SB2~~ DB				0.5' RECOVERY ON 1ST ATTEMPT 1' OFFSET, DRIVE TO 8' AGAIN
6	CLAY, Dark Yellowish Brown 10YR 4/4, Damp, Soft, Medium to High Plasticity	CL-CH		2.5/3					0.0	
7	becoming moist					SB3 1535			0.0	
8					1530					
	BOTTOM OF BORING 8' bgs									ABANDON WITH BENTONITE AND CONCRETE PATCH
9										
10										
11										
12										
13										
14										

BZ=Breathing Zone BH=Bore Hole S=Sample

Burns & McDonnell

051601 Form WCD-2-1

Drilling Log

Project Name: AK STEEL SWMU 33	Project Number: 54200	Boring Number: 33B109
Ground Elevation: NOT SURVEYED	Location: KANSAS CITY, MO	Page: 1 of 1
Air Monitoring Equipment: PID		Total Footage: 8'

Drilling Type	Hole Size	Overburden Footage	Bedrock Footage	No. of Samples	No. of Core Boxes
DIRECT-PUSH	2"	8'	Ø'	3 + 1 DUP	—

Drilling Company: RAZEK ENVIRONMENTAL	Driller(s): TONY POULTER, SCOTT FARRIS
Drilling Rig: GEOPROBE 6620 DT	Type of Sampler: 5' MACROCORE
Date: 05/10/10 To: 05/10/10	Field Observer(s): DAVID BARKER

Depth (feet)	Description	Class	Blow Count	Recov.	Run/ Time	Sample Desig.	PID (ppm) BZ	PID (ppm) BH	PID (ppm) S	Remarks/ Water Levels
	CONCRETE				05/10/10					CONCRETE CORING MACHINE USED
1	CLAY, Very Dark Grayish Brown 10YR 3/2, Damp, Soft to Medium, Trace to Medium Plasticity	CL		~~1348~~	1348 05/11/10				0.0	RAIN WATER IN COREHOLE
2	becoming Highly Plastic			3/5					0.0	
						SB1 1352				
3	CLAY, Dark Yellowish Brown 10YR 4/4, Damp, Stiff, Medium to High Plasticity	CL-CH							0.0	
4									0.0	
5				~~1349~~	1349	SB2				
					1404	1408			0.0	
6				2.5/3					0.0	
						SB3				
7						SB3D 1420			0.0	
8					1406					
	BOTTOM OF BORING 8' bgs									ABANDON WITH BENTONITE AND CONCRETE PATCH
9										
10										
11										
12										
13										
14										

BZ=Breathing Zone BH=Bore Hole S=Sample

051601 Form WCD-2-1

Drilling Log

Project Name: AK STEEL SWMU 33	Project Number: 54200	Boring Number: 33B110
Ground Elevation: NOT SURVEYED	Location: KANSAS CITY, MO	Page: 1 OF 1
Air Monitoring Equipment: PID		Total Footage: 8'

Drilling Type	Hole Size	Overburden Footage	Bedrock Footage	No. of Samples	No. of Core Boxes
DIRECT-PUSH	2"	8'	Ø'	3	—

Drilling Company: RAZEK ENVIRONMENTAL	Driller(s): TONY POULTER, SCOTT FARRIS
Drilling Rig: GEOPROBE 6620 DT	Type of Sampler: 5' MACROCORE
Date: 05/10/10 To: 05/10/10	Field Observer(s): DAVID BARKER

Depth (feet)	Description	Class	Blow Count	Recov.	Run/ Time	Sample Desig.	PID (ppm) BZ	PID (ppm) BH	PID (ppm) S	Remarks/ Water Levels
	CONCRETE				05/10/10					CONCRETE CORING MACHINE USED
1	SLAG FILL				1428				0.0	RAIN WATER IN CORE HOLE
	CLAY, Very Dark Grayish Brown 10YR 3/2, Damp, Medium to Stiff, ~~Trace to~~ Medium Plasticity	CL			05/10/10					
2									0.0	
				4/5						
3						SB1 1433			0.0	
4									0.0	
	CLAY, Dark Yellowish Brown 10YR 4/4, Damp, ~~Medium~~ Soft, Medium Plasticity trace Sand	CL			1429	SB2			0.0	
5					1445	1438				
6				3/3					0.0	
7						SB3 1450			0.0	
8					1447				0.0	
	BOTTOM OF BORING 8' bgs									ABANDON WITH BENTONITE AND CONCRETE PATCH
9										
10										
11										
12										
13										
14										

BZ=Breathing Zone BH=Bore Hole S=Sample

051601 Form WCD-2-1

Burns & McDonnell

Drilling Log

Project Name	Project Number	Boring Number
AK STEEL SWMU 33	54200	33B111

Ground Elevation	Location	Page
NOT SURVEYED	KANSAS CITY, MO	1 of 1

Air Monitoring Equipment	Total Footage
PID	8'

Drilling Type	Hole Size	Overburden Footage	Bedrock Footage	No. of Samples	No. of Core Boxes
DIRECT-PUSH	2"	8'	0'	3	—

Drilling Company	Driller(s)
RAZEK ENVIRONMENTAL	TONY POULTER, SCOTT FARRIS

Drilling Rig	Type of Sampler
GEOPROBE 6620DT	5' MACROCORE

Date	To	Field Observer(s)
05/10/10	05/10/10	DAVID BARKER

Depth (feet)	Description	Class	Blow Count	Recov.	Run/ Time	Sample Desig.	PID (ppm) BZ	PID (ppm) BH	PID (ppm) S	Remarks/ Water Levels
	CONCRETE				05/10/10					CONCRETE CORING MACHINE USED
1	CLAY, trace sand, Very Dark Grayish Brown 10YR 3/2 to Dark Yellowish Brown 10YR 4/4, Damp, Stiff, Trace to Medium Plasticity	CL			1547 05/11/10				0.0	RAINWATER IN COREHOLE
2				4/5					0.0	
3						SB1 1552			0.0	
4									0.0	
5	CLAY ~~Damp~~ trace Sand, Dark Yellowish Brown 10YR 4/4, Damp, Soft, High Plasticity	CH			1550 1607	SB2 1558			0.0	
6	CLAY, Dark Grayish Brown (10YR 4/2), Damp, Stiff to Very Stiff, Medium to High Plasticity, Trace Iron Staining	CL-CH		3/3					0.0	
7						SB3 1613			0.0	
8					1609				0.0	
	BOTTOM OF BORING 8' bgs									ABANDON WITH BENTONITE AND CONCRETE PATCH
9										
10										
11										
12										
13										
14										

BZ=Breathing Zone BH=Bore Hole S=Sample

Burns & McDonnell

051601 Form WCD-2-1

Drilling Log

Project Name: AK STEEL SWMU 33	Project Number: 54200	Boring Number: 33B112
Ground Elevation: NOT SURVEYED	Location: KANSAS CITY, MO	Page: 1 OF 1
Air Monitoring Equipment: PID		Total Footage: 8'

Drilling Type	Hole Size	Overburden Footage	Bedrock Footage	No. of Samples	No. of Core Boxes
DIRECT-PUSH	2"	8'	Ø'	3 + 1 DUP	—

Drilling Company: RAZEK ENVIRONMENTAL	Driller(s): TONY POULTER, SCOTT FARRES
Drilling Rig: GEOPROBE 6620 DT	Type of Sampler: 5' MACROCORE
Date: 05/12/10 To: 05/12/10	Field Observer(s): DAVID BARKER

Depth (feet)	Description	Class	Blow Count	Recov.	Run/ Time	Sample Desig.	PID (ppm) BZ	PID (ppm) BH	PID (ppm) S	Remarks/ Water Levels
	CONCRETE				05/10/10					CONCRETE CORING MACHINE USED
1	CLAY, Very Dark Grayish Brown (10YR 4/2), Damp, Very Stiff, Medium Plasticity	CL			0810 05/12/10				0.0	RAIN WATER IN COREHOLE
2				4/4					0.0	
3						SB1 SB1D 0820			0.0	
4									0.0	
5	5-5.5 STIFF				0812 0830	SB2 0837			0.0	
6				3/3					0.0	
7	Plasticity increasing 7.6-7.8 Medium					SB3 0842			0.0	6.5-8' WATER ON SLEEVE
8					0831				0.0	
	BOTTOM OF BORING 8' bgs									ABANDON WITH BENTONITE AND CONCRETE PATCH
9										
10										
11										
12										
13										
14										

BZ=Breathing Zone BH=Bore Hole S=Sample

Burns & McDonnell

051601 Form WCD-2-1

Drilling Log

Project Name: AK STEEL SWMU 33	Project Number: 54200	Boring Number: 33B113
Ground Elevation: NOT SURVEYED	Location: KANSAS CITY, MO	Page: 1 OF 1
Air Monitoring Equipment: PID		Total Footage: ~~1 of 8~~ 8'

Drilling Type	Hole Size	Overburden Footage	Bedrock Footage	No. of Samples	No. of Core Boxes
DIRECT-PUSH	2"	8'	Ø'	3	—

Drilling Company: RAZEK ENVIRONMENTAL	Driller(s): TONY POULTER, SCOTT FARRIS
Drilling Rig: GEOPROBE 6620 DT	Type of Sampler: 5' MACROCORE
Date: 05/10/10 To: 05/11/10	Field Observer(s): DAVID BARKER

Depth (feet)	Description	Class	Blow Count	Recov.	Run/ Time	Sample Desig.	PID (ppm) BZ	BH	S	Remarks/ Water Levels
	CONCRETE				05/10/10					CONCRETE CORING MACHINE USED
1	CLAY, Dark Grayish Brown (10YR 4/2), Damp, Medium Medium to High Plasticity	CL-CH			1620 05/11/10				0.0	RAIN WATER IN COREHOLE
2				3/5					0.0	
3						SB1 1624			0.0	
	3.6' bgs 1-2 cm of Sand, Yellowish Brown 10YR 5/4, Damp, Loose, Subrounded to Subangular, Moderately Sorted									
4									0.0	
5	CLAY, ~~Dark Grayish~~ trace Sand, Dark Grayish Brown (10YR 4/2), Damp, Soft to medium, Medium to ~~High Plasticity~~	CL			1621 1633	SB2 1640			0.0	
6				3/3					0.0	
7	becoming Stiff					SB3 1647			0.0	
8					1636				0.0	
	BOTTOM OF BORING 8' bgs									ABANDON WITH BENTONITE AND CONCRETE PATCH
9										
10										
11										
12										
13										
14										

BZ=Breathing Zone BH=Bore Hole S=Sample

Burns & McDonnell

051601 Form WCD-2-1

Drilling Log

Project Name: AK STEEL SWMU 33	Project Number: 54200	Boring Number: 33B114
Ground Elevation: NOT SURVEYED	Location: KANSAS CITY, MO	Page: 1 of 1
Air Monitoring Equipment: PID		Total Footage: 8'

Drilling Type	Hole Size	Overburden Footage	Bedrock Footage	No. of Samples	No. of Core Boxes
DIRECT-PUSH	2"	8'	Ø'	3	—

Drilling Company: RAZEK ENVIRONMENTAL	Driller(s): TONY POULTER, SCOTT FARRIS
Drilling Rig: GEOPROBE 6620 DT	Type of Sampler: 5' MACROCORE
Date: 05/12/10 To: 05/12/10	Field Observer(s): DAVID BARKER

Depth (feet)	Description	Class	Blow Count	Recov.	Run/ Time	Sample Desig.	PID (ppm) BZ	PID (ppm) BH	PID (ppm) S	Remarks/ Water Levels
	CONCRETE				05/10/10					CONCRETE CORING MACHINE USED
1	CLAY Dark Gray (10YR 4/1), Damp, Stiff, Medium Plasticity	CL			0854 05/12/10				0.0	RAINWATER IN COREHOLE
2									0.0	
				3/5		SB1 0900				
3	CLAY, Dark Brown (10YR 3/3), Damp, Medium, Medium to High Plasticity	CL CH							0.0	
4									0.0	
					0856	SB2 0903				
5					0905				0.0	OBSTRUCTION AT 5', OFFSET 3' EAST PUSH TO 8'
	SLAG, fine grained, Brick (red/orange)								0.0	
6				2.5/3						
	CLAY, trace Sand, Dark Gray 10YR 4/1, to Brown 10YR 4/3 Damp, Stiff to Very Stiff, trace to Medium Plasticity	CL				SB3 0915			0.0	
7										
8					0910					
	BOTTOM OF BORING, 8' bgs									ABANDON WITH BENTONITE AND CONCRETE PATCH
9										
10										
11										
12										
13										
14										

BZ=Breathing Zone BH=Bore Hole S=Sample

051601 Form WCD-2-1

Burns & McDonnell Since 1898

APPENDIX F

Field Log Book

MONDAY, MAY 10, 2010

TASK: MARK SAMPLE AND UTILITY LOCATIONS, CORE CONCRETE AT SAMPLE LOCATIONS FOR SOIL INVESTIGATION

PERSONNEL: DAVID BARKER

WEATHER: AM - 40s/50s, OVERCAST/RAIN, E 10 MPH
PM - 50s, OVERCAST/RAIN, E 10 MPH

0815 DEPART KANSAS CITY OFFICE

0845 ARRIVE ONSITE; CHECK-IN WITH SKIP O.

0857 BEGIN LOCATING PREVIOUS LOCATIONS AND MARKING NEW LOCATIONS (TRIMBLE GEOXH)

0954 COMPLETE MARKING SAMPLE LOCATIONS; CALL SHARON SHELTON (BMCD); LOCATIONS 33B112 AND 33B114 MAY NEED TO BE OFFSET PENDING UTILITY LOCATE AND CORING CAPABILITIES

1023 KC CORING & CUTTING CONCRETE ONSITE; THUNDERSTORMS AND HEAVY RAIN, WILL WAIT FOR WEATHER TO CLEAR

1054 SET UP TO BEGIN CONCRETE CORING

1058 DELAY DUE TO WEATHER

1114 BEGIN CORING AT ~~33B12 (DUP)~~ DB; COLLECT GPS COORDINATES AND CONCRETE DEPTH MEASUREMENTS AFTER CORING

1331 COMPLETE CORING LOCATIONS

05/10/10 54200 D. BARKER

LATE ENTRY: 1314 GAUGE WATER LEVEL AT 33MW25
WL: 8.00' BTOC ; 8.25' BGS
TD: 18.58' BTOC ; 18.83 BGS

BORING	CONCRETE THICKNESS	
33B101	10"/10"	DUP
33B102	8"	
33B103	11"/11"	MS/MSD
33B104	10"/10"	DUP
33B105	7"	
33B106	9"	
33B107	10"	
33B108	10"/13"	MS/MSD
33B109	12"/12"	DUP
33B110	10"	
33B111	10"	
33B112	12"/12"	DUP
33B113	12"	
33B114	12"	

1328 KC CORING & CUTTING CONCRETE OFFSITE

1340 CALL MISSOURI ONE CALL REGARDING UTILITIES THAT DID NOT RESPOND TO TICKET 101231377 TO MEET ONSITE; NOTIFY UTILITIES WITH TICKET 101301914

1401 DEPART SITE

1436 ARRIVE AT KANSAS CITY OFFICE

DBarker 05/10/10

TUESDAY, MAY 11, 2010

TASK: SWMU 33 SOIL INVESTIGATION, BEGIN SOIL SAMPLING

PERSONNEL: DAVID BARKER

WEATHER: AM - OVERCAST, 50s, S 5-10
PM - SUNNY/P.CLOUDY, 60s, S 5-10

SUBCONTRACTORS: RAZEK ENVIRONMENTAL - TONY POULTER, SCOTT FARRIS

EQUIPMENT: GEOPROBE

INSTRUMENTS: MINIRAE 2000 PID 99/100 ppm ISOBUTYLENE

0745 ARRIVE ONSITE, CALIBRATE PID

0751 RAZEK ON SITE, TRAIN BLOCKING ENTRANCE TO MAIN ENTRANCE

0806 DEPART TO LOOK FOR ALTERNATE ENTRANCE

0823 TRAIN MOVES, ENTER SITE

0828 HEALTH & SAFETY BRIEFING; SET UP FOR PROBING

0850 COLLECT 33B103/SB1 FOR VOC, SPLP VOC AND 33B103/SB1D

0858 COLLECT 33B103/SB2 FOR VOC, SPLP VOC

0912 COLLECT 33B103/SB3 FOR VOC, SPLP VOC

0920 DECON GEOPROBE EQUIPMENT

0934 SET UP AT 33B101

0941 COLLECT 33B101/SB1 FOR VOC, SPLP VOC

0946 COLLECT 33B101/SB2 FOR VOC, SPLP VOC

DB

05/11/10 54200 D. BARKER

0956 COLLECT 33B101/SB3 FOR VOC, SPLP VOC

1000 DECON SAMPLING EQUIPMENT

1015 SET UP AT 33B102

1025 COLLECT 33B102/SB1 FOR VOC, SPLP VOC

1030 NO RECOVERY 3.5-6' (SB2)

1044 COLLECT 33B102/SB3, 33B102/SB3MS, 33B102/SB3MSD FOR VOC, SPLP VOC

1098 DECON SAMPLING EQUIPMENT

1105 SET UP AT 33B104

1114 COLLECT 33B104/SB1 FOR VOC, SPLP VOC

1121 COLLECT 33B104/SB2, 33B104/SB2D FOR VOC, SPLP VOC

1138 COLLECT 33B104/SB3 FOR VOC, SPLP VOC

1143 DECON SAMPLING EQUIPMENT

1153 SET UP AT 33B105; OFFSET ~8' EAST DUE TO REFUSAL AT ~1.5' bgs AT MARKED LOCATION

1210 COLLECT 33B105/SB1 FOR VOC, SPLP VOC

1230 COLLECT 33B105/SB2 FOR VOC, SPLP VOC

1240 COLLECT 33B105/SB3 FOR VOC, SPLP VOC

1242 DECON SAMPLING EQUIPMENT

1244 SET UP AT 33B106 ~~FOR DB~~

1248 COLLECT 33B106/SB1 FOR VOC, SPLP VOC

1300 COLLECT 33B106/SB2 FOR VOC, SPLP VOC

1308 COLLECT 33B106/SB3 FOR VOC, SPLP VOC

DB

05/11/10 54200 D.BARKER

1312 DECON SAMPLING EQUIPMENT
1318 SET UP AT 33B107
1322 COLLECT 33B107/SB1 FOR VOC, SPLP VOC
1327 COLLECT 33B107/SB2 FOR VOC, SPLP VOC
1340 COLLECT 33B107/SB3 FOR VOC, SPLP VOC
1342 DECON SAMPLING EQUIPMENT
1348 SET UP AT 33B109
1352 COLLECT 33B109/SB1 FOR VOC, SPLP VOC
1408 COLLECT 33B109/SB2 FOR VOC, SPLP VOC
1420 COLLECT 33B109/SB3, 33B109/SB3D FOR VOC, SPLP VOC
1422 DECON SAMPLING EQUIPMENT
1427 SET UP AT 33B110
1433 COLLECT 33B110/SB1 FOR VOC, SPLP VOC
1438 COLLECT 33B110/SB2 FOR VOC, SPLP VOC
1450 COLLECT 33B110/SB3 FOR VOC, SPLP VOC
1452 DECON SAMPLING EQUIPMENT
1456 SET UP AT 33B108
1500 COLLECT 33B108/SB1, 33B108/SB1MS, 33B108/SB1MSD FOR VOC, SPLP VOC
1512 INITIAL RECOVERY FROM 5-8' bgs ~ 0.5'; OFFSET AND PROBE TO 8' AGAIN; NO SB2 INTERVAL COLLECTED (SLAG)
1535 COLLECT 33B108/SB3 FOR VOC, SPLP VOC
1537 DECON SAMPLING EQUIPMENT

DB

05/11/10 54200 D.BARKER

1543 SET UP AT 33B111
1552 COLLECT 33B111/SB1 FOR VOC, SPLP VOC
1558 COLLECT 33B111/SB2 FOR VOC, SPLP VOC
1613 COLLECT 33B111/SB3 FOR VOC, SPLP VOC
1615 DECON SAMPLING EQUIPMENT
1620 SET UP AT 33B113/~~SB~~ DB
1624 ~~SET UP AT 3~~ DB COLLECT 33B113/SB1 FOR VOC, SPLP VOC
1640 COLLECT 33B113/SB2 FOR VOC, SPLP VOC
1647 COLLECT 33B113/SB3 FOR VOC, SPLP VOC
1650 DECON SAMPLING EQUIPMENT
1658 RAZEK OFFSITE; REMAIN ONSITE TO WORK ON PAPERWORK
1845 DEPART SITE
1913 AT KANSAS CITY OFFICE; RE-ICE SAMPLES

DTBenson 05/12/10

WEDNESDAY, MAY 12, 2010

TASK: SWMU 33 SOIL INVESTIGATION, CONCLUDE SOIL SAMPLING

PERSONNEL: DAVID BARKER

WEATHER: AM - OVERCAST, 50s, E 5-10 MPH
PM - OVERCAST, 60s, E 5-10 MPH

SUBCONTRACTORS: RAZEK ENVIRONMENTAL - TONY POULTER, SCOTT FARRIS

EQUIPMENT: GEOPROBE

INSTRUMENTS: PID MINERAE 2000 100/100ppm ISOBUTYLENE

0734 ARRIVE ONSITE ; CALIBRATE PID

0751 RAZEK ONSITE

0800 SETUP AT 33B112

0820 COLLECT 33B112/SB1, 33B112/SB1D FOR VOC, SPLP VOC

0837 COLLECT 33B112/SB2 FOR VOC, SPLP VOC

0842 COLLECT 33B112/SB3 FOR VOC, SPLP VOC

0845 DECON SAMPLING EQUIPMENT

0850 SETUP AT 33B114 ~~1st~~ DG

0900 COLLECT 33B114/SB1 FOR VOC, SPLP VOC

0903 OBSTRUCTION AT 5' BGS ; OFFSET 3' TO EAST, PUSH TO 5' TO SAMPLE ; COLLECT 33B114/SB2 FOR VOC, SPLP VOC

0915 COLLECT 33B114/SB3 FOR VOC, SPLP VOC

0920 DECON SAMPLING EQUIPMENT

DB

05/12/10 54200 D BARKER

0930 ALL SOIL IDW CONTAINERIZED IN ONE DRUM (~ 1/4 FULL); ALL LIQUID IDW CONTAINERIZED IN ONE DRUM (~ 1/4 FULL); DRUMS LABELED, THEN MOVED BY RAZEK TO NW CORNER OF WIRE MILL BUILDING (NEAR EMPTY DRUMS FROM PREVIOUS SAMPLING); ALL BORINGS ABANDONED AFTER SAMPLED USING BENTONITE AND CONCRETE (TOP ~ 1')

0956 RAZEK OFFSITE ; REMAIN ON SITE TO COMPLETE PAPERWORK, SITE CLEANUP

1330 DEPART SITE (SKID O. NOT AT OFFICE TO INFORM FIELD ACTIVITIES ARE COMPLETED)

1350 STOP TO BUY PACKING SUPPLIES & ICE

1415 AT KANSAS CITY OFFICE, PACK COOLERS

1700 DROP OFF 5 SAMPLE COOLERS AT BMCD MAILROOM FOR FEDEX SHIPMENT TO GULF COAST ANALYTICAL, FEDEX SHIPPING #S 8715 7114 8650, 8700 8482 6584, 8700 8482 6610, 8700 8482 6600, 8700 8482 6595

1715 UNLOAD TRUCK

D Barker
05/12/10

APPENDIX G

Survey Data

Appendix G
Survey Data
SWMU 33 Nail Mill Degreasing Area
AK Steel Kansas City Facility

	State Plane Nad 27 Missouri West			UTM83Ft	
Boring	X	Y	Z	UTM_X	UTM_Y
33B101	500525.84808300000	1070794.71359000000	737.03163218300	370446.38816100000	4329778.42708000000
33B102	500561.24047900000	1070821.31057000000	740.56711948200	370457.30676300000	4329786.35359000000
33B103	500567.65247500000	1070768.70575000000	738.29016939600	370458.99577800000	4329770.29162000000
33B104	500587.80755900000	1070851.02520000000	734.50736607900	370465.55182800000	4329795.27452000000
33B105	500607.94352200000	1070812.77955000000	736.75998248400	370471.49507300000	4329783.51900000000
33B106	500627.30558100000	1070859.60528000000	738.06571413400	370477.63078300000	4329797.69027000000
33B107	500639.53879600000	1070801.03796000000	736.00260372200	370481.06361000000	4329779.78212000000
33B108	500682.76334300000	1070855.44510000000	742.18939031500	370494.50881800000	4329796.14351000000
33B109	500697.12880100000	1070796.69923000000	739.97875737400	370498.59047900000	4329778.17022000000
33B110	500710.59471200000	1070831.80893000000	737.51874318700	370502.87054200000	4329788.80106000000
33B111	500762.53225800000	1070780.12147000000	740.71059188600	370518.43662900000	4329772.78954000000
33B112	500811.66735000000	1070927.06552000000	739.97130664600	370534.14875600000	4329817.31896000000
33B113	500838.65161100000	1070791.06374000000	743.12362480600	370541.68665200000	4329775.74081000000
33B114	500857.51550800000	1070893.63065000000	739.86076946400	370547.95118700000	4329806.89999000000

UTM - Universal Transverse Mercator

APPENDIX H

Analytical Lab Reports

GCAL 210051348

NELAP CERTIFICATE NUMBER 01955

ANALYTICAL RESULTS

PERFORMED BY

GULF COAST ANALYTICAL LABORATORIES, INC.
7979 GSRI Rd.
Baton Rouge, LA 70820

Report Date 06/01/2010

GCAL Report 210051348

Deliver To	Burns & McDonnell 9400 Ward Parkway Kansas City, MO 64114 816-822-3168
Attn	Sharon Shelton

Project AK Steel

CASE NARRATIVE

Client: Burns & McDonnell **Report:** 210051348

Gulf Coast Analytical Laboratories received and analyzed the sample(s) listed on the sample cross-reference page of this report. Receipt of the sample(s) is documented by the attached chain of custody. This applies only to the sample(s) listed in this report. No sample integrity or quality control exceptions were identified unless noted below.

VOLATILES MASS SPECTROMETRY

In the SW-846 8260B analysis, samples 21005134810 (33B103/SB2), 21005134811 (33B103/SB3), 21005134812 (33B104/SB1) and 21005134813 (33B104/SB2) was analyzed at a 50 (Methanol extract) dilution.

In the SW-846 8260B analysis, samples 21005134818 (33B105/SB3), 21005134831 (33B109/SB3), 21005134832 (33B109/SB3D), 21005134833 (33B110/SB1), 21005134834 (33B110/SB2), 21005134835 (33B110/SB3), 21005134805 (33B102/SB3), 21005134803 (33B101/SB3), 21005134804 (33B102/SB1), 21005134814 (33B104/SB2D), 21005134806 (33B102/SB3MS), 21005134807 (33B102/SB3MSD), 21005134815 (33B104/SB3), 21005134816 (33B105/SB1), 21005134817 (33B105/SB2), 21005134819 (33B106/SB1), 21005134820 (33B106/SB2), 21005134821 (33B106/SB3), 21005134822 (33B107/SB1), 21005134823 (33B107/SB2), 21005134824 (33B107/SB3), 21005134829 (33B109/SB1) and 21005134830 (33B109/SB2) had to be diluted to bracket the concentration of target compounds within the calibration range of the instrument.

In the SW-846 8260B analysis of samples 21005134801 (33B101/SB1), 21005134837 (33B111/SB2), 21005134838 (33B111/SB3) and 21005134839 (33B112/SB1), the recovery for the surrogate 1,2-Dichloroethane-d4 was above the upper control limit. The remaining surrogates were all within control limits.

In the SW-846 8260B analysis for analytical batch 432421, the MS/MSD exhibited recovery failures.

In the SW-846 8260B analysis for analytical batch 432388, the MS/MSD exhibited recovery and RPD failures. The LCS/LCSD exhibited marginal sporadic recovery failures for the extended list of spike compounds.

In the SW-846 8260B analysis for analytical batch 432468 and 432508, the LCS/LCSD exhibited marginal sporadic recovery failures for the extended list of spike compounds.

Laboratory Endorsement

Sample analysis was performed in accordance with approved methodologies provided by the Environmental Protection Agency or other recognized agencies. The samples and their corresponding extracts will be maintained for a period of 30 days unless otherwise arranged. Following this retention period the samples will be disposed in accordance with GCAL's Standard Operating Procedures.

Common Abbreviations Utilized in this Report

ND	Indicates the result was Not Detected at the specified RDL
DO	Indicates the result was Diluted Out
MI	Indicates the result was subject to Matrix Interference
TNTC	Indicates the result was Too Numerous To Count
SUBC	Indicates the analysis was Sub-Contracted
FLD	Indicates the analysis was performed in the Field
PQL	Practical Quantitation Limit
MDL	Method Detection Limit
RDL	Reporting Detection Limit
00:00	Reported as a time equivalent to 12:00 AM

Reporting Flags Utilized in this Report

J	Indicates an estimated value
U	Indicates the compound was analyzed for but not detected
B	(ORGANICS) Indicates the analyte was detected in the associated Method Blank
B	(INORGANICS) Indicates the result is between the RDL and MDL

Sample receipt at GCAL is documented through the attached chain of custody. In accordance with NELAC, this report shall be reproduced only in full and with the written permission of GCAL. The results contained within this report relate only to the samples reported. The documented results are presented within this report.

This report pertains only to the samples listed in the Report Sample Summary and should be retained as a permanent record thereof. The results contained within this report are intended for the use of the client. Any unauthorized use of the information contained in this report is prohibited.

I certify that this data package is in compliance with the NELAC standard and terms and conditions of the contract and Statement of Work both technically and for completeness, for other than the conditions in the case narrative. Release of the data contained in this hardcopy data package and in the computer-readable data submitted has been authorized by the Quality Assurance Manager or his/her designee, as verified by the following signature.

Estimated uncertainty of measurement is available upon request. This report is in compliance with the DOD QSM as specified in the contract if applicable.

Robyn Migues
Technical Director
GCAL REPORT 210051348

Report Sample Summary

GCAL ID	Client ID	Matrix	Collect Date/Time	Receive Date/Time
21005134801	33B101/SB1	Solid	05/11/2010 09:41	05/13/2010 10:20
21005134802	33B101/SB2	Solid	05/11/2010 09:46	05/13/2010 10:20
21005134803	33B101/SB3	Solid	05/11/2010 09:56	05/13/2010 10:20
21005134804	33B102/SB1	Solid	05/11/2010 10:25	05/13/2010 10:20
21005134805	33B102/SB3	Solid	05/11/2010 10:44	05/13/2010 10:20
21005134806	33B102/SB3MS	Solid	05/11/2010 10:44	05/13/2010 10:20
21005134807	33B102/SB3MSD	Solid	05/11/2010 10:44	05/13/2010 10:20
21005134808	33B103/SB1	Solid	05/11/2010 08:50	05/13/2010 10:20
21005134809	33B103/SB1D	Solid	05/11/2010 08:50	05/13/2010 10:20
21005134810	33B103/SB2	Solid	05/11/2010 08:58	05/13/2010 10:20
21005134811	33B103/SB3	Solid	05/11/2010 09:12	05/13/2010 10:20
21005134812	33B104/SB1	Solid	05/11/2010 11:14	05/13/2010 10:20
21005134813	33B104/SB2	Solid	05/11/2010 11:21	05/13/2010 10:20
21005134814	33B104/SB2D	Solid	05/11/2010 11:21	05/13/2010 10:20
21005134815	33B104/SB3	Solid	05/11/2010 11:38	05/13/2010 10:20
21005134816	33B105/SB1	Solid	05/11/2010 12:10	05/13/2010 10:20
21005134817	33B105/SB2	Solid	05/11/2010 12:30	05/13/2010 10:20
21005134818	33B105/SB3	Solid	05/11/2010 12:40	05/13/2010 10:20
21005134819	33B106/SB1	Solid	05/11/2010 12:48	05/13/2010 10:20
21005134820	33B106/SB2	Solid	05/11/2010 13:00	05/13/2010 10:20
21005134821	33B106/SB3	Solid	05/11/2010 13:08	05/13/2010 10:20
21005134822	33B107/SB1	Solid	05/11/2010 13:22	05/13/2010 10:20
21005134823	33B107/SB2	Solid	05/11/2010 13:27	05/13/2010 10:20
21005134824	33B107/SB3	Solid	05/11/2010 13:40	05/13/2010 10:20
21005134825	33B108/SB1	Solid	05/11/2010 15:00	05/13/2010 10:20
21005134826	33B108/SB1MS	Solid	05/11/2010 15:00	05/13/2010 10:20
21005134827	33B108/SB1MSD	Solid	05/11/2010 15:00	05/13/2010 10:20
21005134828	33B108/SB3	Solid	05/11/2010 15:35	05/13/2010 10:20
21005134829	33B109/SB1	Solid	05/11/2010 13:52	05/13/2010 10:20
21005134830	33B109/SB2	Solid	05/11/2010 14:08	05/13/2010 10:20
21005134831	33B109/SB3	Solid	05/11/2010 14:20	05/13/2010 10:20
21005134832	33B109/SB3D	Solid	05/11/2010 14:20	05/13/2010 10:20
21005134833	33B110/SB1	Solid	05/11/2010 14:33	05/13/2010 10:20
21005134834	33B110/SB2	Solid	05/11/2010 14:38	05/13/2010 10:20
21005134835	33B110/SB3	Solid	05/11/2010 14:50	05/13/2010 10:20
21005134836	33B111/SB1	Solid	05/11/2010 15:52	05/13/2010 10:20
21005134837	33B111/SB2	Solid	05/11/2010 15:58	05/13/2010 10:20
21005134838	33B111/SB3	Solid	05/11/2010 16:13	05/13/2010 10:20
21005134839	33B112/SB1	Solid	05/12/2010 08:20	05/13/2010 10:20
21005134840	33B112/SB1D	Solid	05/12/2010 08:20	05/13/2010 10:20
21005134841	33B112/SB2	Solid	05/12/2010 08:37	05/13/2010 10:20
21005134842	33B112/SB3	Solid	05/12/2010 08:42	05/13/2010 10:20
21005134843	33B113/SB1	Solid	05/11/2010 16:24	05/13/2010 10:20
21005134844	33B113/SB2	Solid	05/11/2010 16:40	05/13/2010 10:20
21005134845	33B113/SB3	Solid	05/11/2010 16:47	05/13/2010 10:20
21005134846	33B114/SB1	Solid	05/12/2010 09:00	05/13/2010 10:20

Report Sample Summary (con't)

GCAL ID	Client ID	Matrix	Collect Date/Time	Receive Date/Time
21005134847	33B114/SB2	Solid	05/12/2010 09:03	05/13/2010 10:20
21005134848	33B114/SB3	Solid	05/12/2010 09:15	05/13/2010 10:20

Summary of Compounds Detected

GCAL ID	Client ID	Matrix	Collect Date/Time	Receive Date/Time
21005134801	33B101/SB1	Solid	05/11/2010 09:41	05/13/2010 10:20

SW-846 8260B

CAS#	Parameter	Result	RDL	REG LIMIT	Units
79-01-6	Trichloroethene	18.4	4		ug/Kg

GCAL ID	Client ID	Matrix	Collect Date/Time	Receive Date/Time
21005134802	33B101/SB2	Solid	05/11/2010 09:46	05/13/2010 10:20

SW-846 8260B

CAS#	Parameter	Result	RDL	REG LIMIT	Units
79-01-6	Trichloroethene	10.2	4		ug/Kg

GCAL ID	Client ID	Matrix	Collect Date/Time	Receive Date/Time
21005134803	33B101/SB3	Solid	05/11/2010 09:56	05/13/2010 10:20

SW-846 8260B

CAS#	Parameter	Result	RDL	REG LIMIT	Units
156-59-2	cis-1,2-Dichloroethene	1880	220		ug/Kg

GCAL ID	Client ID	Matrix	Collect Date/Time	Receive Date/Time
21005134804	33B102/SB1	Solid	05/11/2010 10:25	05/13/2010 10:20

SW-846 8260B

CAS#	Parameter	Result	RDL	REG LIMIT	Units
79-01-6	Trichloroethene	281	230		ug/Kg
156-59-2	cis-1,2-Dichloroethene	1100	230		ug/Kg

GCAL ID	Client ID	Matrix	Collect Date/Time	Receive Date/Time
21005134805	33B102/SB3	Solid	05/11/2010 10:44	05/13/2010 10:20

SW-846 8260B

CAS#	Parameter	Result	RDL	REG LIMIT	Units
79-01-6	Trichloroethene	238	220		ug/Kg

GCAL ID	Client ID	Matrix	Collect Date/Time	Receive Date/Time
21005134806	33B102/SB3MS	Solid	05/11/2010 10:44	05/13/2010 10:20

SW-846 8260B

CAS#	Parameter	Result	RDL	REG LIMIT	Units
71-55-6	1,1,1-Trichloroethane	2120	230		ug/Kg
79-34-5	1,1,2,2-Tetrachloroethane	2000	230		ug/Kg
79-00-5	1,1,2-Trichloroethane	2080	230		ug/Kg

Summary of Compounds Detected (con't)

GCAL ID	Client ID	Matrix	Collect Date/Time	Receive Date/Time
21005134806	33B102/SB3MS	Solid	05/11/2010 10:44	05/13/2010 10:20

SW-846 8260B

CAS#	Parameter	Result	RDL	REG LIMIT	Units
75-34-3	1,1-Dichloroethane	2250	230		ug/Kg
75-35-4	1,1-Dichloroethene	2180	230		ug/Kg
107-06-2	1,2-Dichloroethane	2120	230		ug/Kg
78-87-5	1,2-Dichloropropane	1850	230		ug/Kg
78-93-3	2-Butanone	1930	230		ug/Kg
591-78-6	2-Hexanone	2110	230		ug/Kg
108-10-1	4-Methyl-2-pentanone	1640	230		ug/Kg
67-64-1	Acetone	2940	1100		ug/Kg
71-43-2	Benzene	1910	230		ug/Kg
75-27-4	Bromodichloromethane	1970	230		ug/Kg
75-25-2	Bromoform	2080	230		ug/Kg
74-83-9	Bromomethane	1070	230		ug/Kg
75-15-0	Carbon disulfide	2000	230		ug/Kg
56-23-5	Carbon tetrachloride	2210	230		ug/Kg
108-90-7	Chlorobenzene	2220	230		ug/Kg
67-66-3	Chloroform	1900	230		ug/Kg
74-87-3	Chloromethane	1790	230		ug/Kg
124-48-1	Dibromochloromethane	2030	230		ug/Kg
10061-01-5	cis-1,3-Dichloropropene	1890	230		ug/Kg
10061-02-6	trans-1,3-Dichloropropene	1970	230		ug/Kg
100-41-4	Ethylbenzene	2160	230		ug/Kg
75-09-2	Methylene chloride	2290	450		ug/Kg
100-42-5	Styrene	2210	230		ug/Kg
127-18-4	Tetrachloroethene	2070	230		ug/Kg
108-88-3	Toluene	2140	230		ug/Kg
79-01-6	Trichloroethene	2020	230		ug/Kg
108-05-4	Vinyl acetate	1960	230		ug/Kg
75-01-4	Vinyl chloride	1900	230		ug/Kg
1330-20-7	Xylene (total)	6660	450		ug/Kg
156-59-2	cis-1,2-Dichloroethene	2880	230		ug/Kg
156-60-5	trans-1,2-Dichloroethene	2210	230		ug/Kg

GCAL ID	Client ID	Matrix	Collect Date/Time	Receive Date/Time
21005134807	33B102/SB3MSD	Solid	05/11/2010 10:44	05/13/2010 10:20

SW-846 8260B

CAS#	Parameter	Result	RDL	REG LIMIT	Units
71-55-6	1,1,1-Trichloroethane	1810	210		ug/Kg
79-34-5	1,1,2,2-Tetrachloroethane	1950	210		ug/Kg
79-00-5	1,1,2-Trichloroethane	1790	210		ug/Kg
75-34-3	1,1-Dichloroethane	1990	210		ug/Kg
75-35-4	1,1-Dichloroethene	1940	210		ug/Kg
107-06-2	1,2-Dichloroethane	1820	210		ug/Kg
78-87-5	1,2-Dichloropropane	1570	210		ug/Kg
78-93-3	2-Butanone	1780	210		ug/Kg
591-78-6	2-Hexanone	1920	210		ug/Kg
108-10-1	4-Methyl-2-pentanone	1590	210		ug/Kg

Summary of Compounds Detected (con't)

GCAL ID	Client ID	Matrix	Collect Date/Time	Receive Date/Time
21005134807	33B102/SB3MSD	Solid	05/11/2010 10:44	05/13/2010 10:20

SW-846 8260B

CAS#	Parameter	Result	RDL	REG LIMIT	Units
67-64-1	Acetone	2720	1000		ug/Kg
71-43-2	Benzene	1680	210		ug/Kg
75-27-4	Bromodichloromethane	1690	210		ug/Kg
75-25-2	Bromoform	1730	210		ug/Kg
74-83-9	Bromomethane	1090	210		ug/Kg
75-15-0	Carbon disulfide	1670	210		ug/Kg
56-23-5	Carbon tetrachloride	1900	210		ug/Kg
108-90-7	Chlorobenzene	1860	210		ug/Kg
67-66-3	Chloroform	1640	210		ug/Kg
74-87-3	Chloromethane	1510	210		ug/Kg
124-48-1	Dibromochloromethane	1770	210		ug/Kg
10061-01-5	cis-1,3-Dichloropropene	1590	210		ug/Kg
10061-02-6	trans-1,3-Dichloropropene	1810	210		ug/Kg
100-41-4	Ethylbenzene	1780	210		ug/Kg
75-09-2	Methylene chloride	1990	420		ug/Kg
100-42-5	Styrene	1930	210		ug/Kg
127-18-4	Tetrachloroethene	1790	210		ug/Kg
108-88-3	Toluene	1840	210		ug/Kg
79-01-6	Trichloroethene	1790	210		ug/Kg
108-05-4	Vinyl acetate	1680	210		ug/Kg
75-01-4	Vinyl chloride	1740	210		ug/Kg
1330-20-7	Xylene (total)	5410	420		ug/Kg
156-59-2	cis-1,2-Dichloroethene	2680	210		ug/Kg
156-60-5	trans-1,2-Dichloroethene	1910	210		ug/Kg

GCAL ID	Client ID	Matrix	Collect Date/Time	Receive Date/Time
21005134808	33B103/SB1	Solid	05/11/2010 08:50	05/13/2010 10:20

SW-846 8260B

CAS#	Parameter	Result	RDL	REG LIMIT	Units
79-01-6	Trichloroethene	8.76	4		ug/Kg
75-01-4	Vinyl chloride	5.10	4		ug/Kg
156-59-2	cis-1,2-Dichloroethene	95.5	4		ug/Kg
156-60-5	trans-1,2-Dichloroethene	5.03	4		ug/Kg

GCAL ID	Client ID	Matrix	Collect Date/Time	Receive Date/Time
21005134809	33B103/SB1D	Solid	05/11/2010 08:50	05/13/2010 10:20

SW-846 8260B

CAS#	Parameter	Result	RDL	REG LIMIT	Units
79-01-6	Trichloroethene	9.14	5		ug/Kg
75-01-4	Vinyl chloride	4.66	5		ug/Kg
156-59-2	cis-1,2-Dichloroethene	91.5	5		ug/Kg

Summary of Compounds Detected (con't)

GCAL ID	Client ID	Matrix	Collect Date/Time	Receive Date/Time
21005134812	33B104/SB1	Solid	05/11/2010 11:14	05/13/2010 10:20

SW-846 8260B

CAS#	Parameter	Result	RDL	REG LIMIT	Units
79-01-6	Trichloroethene	199	200		ug/Kg

GCAL ID	Client ID	Matrix	Collect Date/Time	Receive Date/Time
21005134814	33B104/SB2D	Solid	05/11/2010 11:21	05/13/2010 10:20

SW-846 8260B

CAS#	Parameter	Result	RDL	REG LIMIT	Units
79-01-6	Trichloroethene	239	210		ug/Kg

GCAL ID	Client ID	Matrix	Collect Date/Time	Receive Date/Time
21005134815	33B104/SB3	Solid	05/11/2010 11:38	05/13/2010 10:20

SW-846 8260B

CAS#	Parameter	Result	RDL	REG LIMIT	Units
79-01-6	Trichloroethene	291	230		ug/Kg

GCAL ID	Client ID	Matrix	Collect Date/Time	Receive Date/Time
21005134816	33B105/SB1	Solid	05/11/2010 12:10	05/13/2010 10:20

SW-846 8260B

CAS#	Parameter	Result	RDL	REG LIMIT	Units
79-01-6	Trichloroethene	25300	1000		ug/Kg
156-59-2	cis-1,2-Dichloroethene	8910	1000		ug/Kg

GCAL ID	Client ID	Matrix	Collect Date/Time	Receive Date/Time
21005134817	33B105/SB2	Solid	05/11/2010 12:30	05/13/2010 10:20

SW-846 8260B

CAS#	Parameter	Result	RDL	REG LIMIT	Units
79-01-6	Trichloroethene	26700	2100		ug/Kg
156-59-2	cis-1,2-Dichloroethene	8810	2100		ug/Kg

GCAL ID	Client ID	Matrix	Collect Date/Time	Receive Date/Time
21005134818	33B105/SB3	Solid	05/11/2010 12:40	05/13/2010 10:20

SW-846 8260B

CAS#	Parameter	Result	RDL	REG LIMIT	Units
79-01-6	Trichloroethene	42800	2100		ug/Kg
156-59-2	cis-1,2-Dichloroethene	15600	2100		ug/Kg

Summary of Compounds Detected (con't)

GCAL ID	Client ID	Matrix	Collect Date/Time	Receive Date/Time
21005134819	33B106/SB1	Solid	05/11/2010 12:48	05/13/2010 10:20

SW-846 8260B

CAS#	Parameter	Result	RDL	REG LIMIT	Units
79-01-6	Trichloroethene	349	210		ug/Kg

GCAL ID	Client ID	Matrix	Collect Date/Time	Receive Date/Time
21005134820	33B106/SB2	Solid	05/11/2010 13:00	05/13/2010 10:20

SW-846 8260B

CAS#	Parameter	Result	RDL	REG LIMIT	Units
79-01-6	Trichloroethene	289	210		ug/Kg

GCAL ID	Client ID	Matrix	Collect Date/Time	Receive Date/Time
21005134821	33B106/SB3	Solid	05/11/2010 13:08	05/13/2010 10:20

SW-846 8260B

CAS#	Parameter	Result	RDL	REG LIMIT	Units
79-01-6	Trichloroethene	235	220		ug/Kg

GCAL ID	Client ID	Matrix	Collect Date/Time	Receive Date/Time
21005134822	33B107/SB1	Solid	05/11/2010 13:22	05/13/2010 10:20

SW-846 8260B

CAS#	Parameter	Result	RDL	REG LIMIT	Units
79-01-6	Trichloroethene	7800	490		ug/Kg
156-59-2	cis-1,2-Dichloroethene	1480	490		ug/Kg

GCAL ID	Client ID	Matrix	Collect Date/Time	Receive Date/Time
21005134823	33B107/SB2	Solid	05/11/2010 13:27	05/13/2010 10:20

SW-846 8260B

CAS#	Parameter	Result	RDL	REG LIMIT	Units
79-01-6	Trichloroethene	5620	240		ug/Kg
156-59-2	cis-1,2-Dichloroethene	1480	240		ug/Kg

GCAL ID	Client ID	Matrix	Collect Date/Time	Receive Date/Time
21005134824	33B107/SB3	Solid	05/11/2010 13:40	05/13/2010 10:20

SW-846 8260B

CAS#	Parameter	Result	RDL	REG LIMIT	Units
79-01-6	Trichloroethene	4860	210		ug/Kg
156-59-2	cis-1,2-Dichloroethene	1120	210		ug/Kg

Summary of Compounds Detected (con't)

GCAL ID	Client ID	Matrix	Collect Date/Time	Receive Date/Time
21005134825	33B108/SB1	Solid	05/11/2010 15:00	05/13/2010 10:20

SW-846 8260B

CAS#	Parameter	Result	RDL	REG LIMIT	Units
78-93-3	2-Butanone	9.97	4		ug/Kg
67-64-1	Acetone	52.7	21		ug/Kg
79-01-6	Trichloroethene	39.9	4		ug/Kg

GCAL ID	Client ID	Matrix	Collect Date/Time	Receive Date/Time
21005134826	33B108/SB1MS	Solid	05/11/2010 15:00	05/13/2010 10:20

SW-846 8260B

CAS#	Parameter	Result	RDL	REG LIMIT	Units
71-55-6	1,1,1-Trichloroethane	40.6	4		ug/Kg
79-34-5	1,1,2,2-Tetrachloroethane	44.9	4		ug/Kg
79-00-5	1,1,2-Trichloroethane	43.5	4		ug/Kg
75-34-3	1,1-Dichloroethane	40.3	4		ug/Kg
75-35-4	1,1-Dichloroethene	37.9	4		ug/Kg
107-06-2	1,2-Dichloroethane	39.9	4		ug/Kg
78-87-5	1,2-Dichloropropane	37.7	4		ug/Kg
78-93-3	2-Butanone	27.5	4		ug/Kg
591-78-6	2-Hexanone	29.6	4		ug/Kg
108-10-1	4-Methyl-2-pentanone	42.2	4		ug/Kg
67-64-1	Acetone	27.4	20		ug/Kg
71-43-2	Benzene	36.5	4		ug/Kg
75-27-4	Bromodichloromethane	40.5	4		ug/Kg
75-25-2	Bromoform	48.1	4		ug/Kg
74-83-9	Bromomethane	34.5	4		ug/Kg
75-15-0	Carbon disulfide	37.5	4		ug/Kg
56-23-5	Carbon tetrachloride	42.4	4		ug/Kg
108-90-7	Chlorobenzene	44.9	4		ug/Kg
75-00-3	Chloroethane	38.8	4		ug/Kg
67-66-3	Chloroform	35.9	4		ug/Kg
74-87-3	Chloromethane	31.6	4		ug/Kg
124-48-1	Dibromochloromethane	46.2	4		ug/Kg
10061-01-5	cis-1,3-Dichloropropene	35.2	4		ug/Kg
10061-02-6	trans-1,3-Dichloropropene	43.4	4		ug/Kg
100-41-4	Ethylbenzene	41.5	4		ug/Kg
75-09-2	Methylene chloride	38.1	8		ug/Kg
100-42-5	Styrene	27.4	4		ug/Kg
127-18-4	Tetrachloroethene	46.0	4		ug/Kg
108-88-3	Toluene	42.1	4		ug/Kg
79-01-6	Trichloroethene	48.5	4		ug/Kg
108-05-4	Vinyl acetate	37.4	4		ug/Kg
75-01-4	Vinyl chloride	34.2	4		ug/Kg
1330-20-7	Xylene (total)	128	8		ug/Kg
156-59-2	cis-1,2-Dichloroethene	33.5	4		ug/Kg
156-60-5	trans-1,2-Dichloroethene	37.9	4		ug/Kg

Summary of Compounds Detected (con't)

GCAL ID	Client ID	Matrix	Collect Date/Time	Receive Date/Time
21005134827	33B108/SB1MSD	Solid	05/11/2010 15:00	05/13/2010 10:20

SW-846 8260B

CAS#	Parameter	Result	RDL	REG LIMIT	Units
71-55-6	1,1,1-Trichloroethane	51.2	5		ug/Kg
79-34-5	1,1,2,2-Tetrachloroethane	56.4	5		ug/Kg
79-00-5	1,1,2-Trichloroethane	51.5	5		ug/Kg
75-34-3	1,1-Dichloroethane	46.6	5		ug/Kg
75-35-4	1,1-Dichloroethene	47.0	5		ug/Kg
107-06-2	1,2-Dichloroethane	45.8	5		ug/Kg
78-87-5	1,2-Dichloropropane	42.5	5		ug/Kg
78-93-3	2-Butanone	37.3	5		ug/Kg
591-78-6	2-Hexanone	35.6	5		ug/Kg
108-10-1	4-Methyl-2-pentanone	52.1	5		ug/Kg
67-64-1	Acetone	62.1	25		ug/Kg
71-43-2	Benzene	43.4	5		ug/Kg
75-27-4	Bromodichloromethane	46.6	5		ug/Kg
75-25-2	Bromoform	57.4	5		ug/Kg
74-83-9	Bromomethane	45.9	5		ug/Kg
75-15-0	Carbon disulfide	46.1	5		ug/Kg
56-23-5	Carbon tetrachloride	49.7	5		ug/Kg
108-90-7	Chlorobenzene	53.5	5		ug/Kg
75-00-3	Chloroethane	43.4	5		ug/Kg
67-66-3	Chloroform	42.1	5		ug/Kg
74-87-3	Chloromethane	44.6	5		ug/Kg
124-48-1	Dibromochloromethane	52.6	5		ug/Kg
10061-01-5	cis-1,3-Dichloropropene	43.6	5		ug/Kg
10061-02-6	trans-1,3-Dichloropropene	49.2	5		ug/Kg
100-41-4	Ethylbenzene	50.6	5		ug/Kg
75-09-2	Methylene chloride	45.4	10		ug/Kg
100-42-5	Styrene	23.6	5		ug/Kg
127-18-4	Tetrachloroethene	52.8	5		ug/Kg
108-88-3	Toluene	48.5	5		ug/Kg
79-01-6	Trichloroethene	68.8	5		ug/Kg
108-05-4	Vinyl acetate	39.6	5		ug/Kg
75-01-4	Vinyl chloride	48.2	5		ug/Kg
1330-20-7	Xylene (total)	151	10		ug/Kg
156-59-2	cis-1,2-Dichloroethene	39.9	5		ug/Kg
156-60-5	trans-1,2-Dichloroethene	45.9	5		ug/Kg

GCAL ID	Client ID	Matrix	Collect Date/Time	Receive Date/Time
21005134828	33B108/SB3	Solid	05/11/2010 15:35	05/13/2010 10:20

SW-846 8260B

CAS#	Parameter	Result	RDL	REG LIMIT	Units
79-01-6	Trichloroethene	12.9	4		ug/Kg

Summary of Compounds Detected (con't)

GCAL ID	Client ID	Matrix	Collect Date/Time	Receive Date/Time
21005134829	33B109/SB1	Solid	05/11/2010 13:52	05/13/2010 10:20

SW-846 8260B

CAS#	Parameter	Result	RDL	REG LIMIT	Units
79-01-6	Trichloroethene	1010	250		ug/Kg
156-59-2	cis-1,2-Dichloroethene	315	250		ug/Kg

GCAL ID	Client ID	Matrix	Collect Date/Time	Receive Date/Time
21005134830	33B109/SB2	Solid	05/11/2010 14:08	05/13/2010 10:20

SW-846 8260B

CAS#	Parameter	Result	RDL	REG LIMIT	Units
79-01-6	Trichloroethene	2580	250		ug/Kg
156-59-2	cis-1,2-Dichloroethene	598	250		ug/Kg

GCAL ID	Client ID	Matrix	Collect Date/Time	Receive Date/Time
21005134831	33B109/SB3	Solid	05/11/2010 14:20	05/13/2010 10:20

SW-846 8260B

CAS#	Parameter	Result	RDL	REG LIMIT	Units
79-01-6	Trichloroethene	1440	220		ug/Kg
156-59-2	cis-1,2-Dichloroethene	471	220		ug/Kg

GCAL ID	Client ID	Matrix	Collect Date/Time	Receive Date/Time
21005134832	33B109/SB3D	Solid	05/11/2010 14:20	05/13/2010 10:20

SW-846 8260B

CAS#	Parameter	Result	RDL	REG LIMIT	Units
79-01-6	Trichloroethene	1610	220		ug/Kg
156-59-2	cis-1,2-Dichloroethene	515	220		ug/Kg

GCAL ID	Client ID	Matrix	Collect Date/Time	Receive Date/Time
21005134833	33B110/SB1	Solid	05/11/2010 14:33	05/13/2010 10:20

SW-846 8260B

CAS#	Parameter	Result	RDL	REG LIMIT	Units
79-01-6	Trichloroethene	361	210		ug/Kg

Summary of Compounds Detected (con't)

GCAL ID	Client ID	Matrix	Collect Date/Time	Receive Date/Time
21005134834	33B110/SB2	Solid	05/11/2010 14:38	05/13/2010 10:20

SW-846 8260B

CAS#	Parameter	Result	RDL	REG LIMIT	Units
79-01-6	Trichloroethene	294	210		ug/Kg

GCAL ID	Client ID	Matrix	Collect Date/Time	Receive Date/Time
21005134835	33B110/SB3	Solid	05/11/2010 14:50	05/13/2010 10:20

SW-846 8260B

CAS#	Parameter	Result	RDL	REG LIMIT	Units
79-01-6	Trichloroethene	318	220		ug/Kg

GCAL ID	Client ID	Matrix	Collect Date/Time	Receive Date/Time
21005134841	33B112/SB2	Solid	05/12/2010 08:37	05/13/2010 10:20

SW-846 8260B

CAS#	Parameter	Result	RDL	REG LIMIT	Units
79-01-6	Trichloroethene	6.01	6		ug/Kg

GCAL ID	Client ID	Matrix	Collect Date/Time	Receive Date/Time
21005134843	33B113/SB1	Solid	05/11/2010 16:24	05/13/2010 10:20

SW-846 8260B

CAS#	Parameter	Result	RDL	REG LIMIT	Units
79-01-6	Trichloroethene	98.2	4		ug/Kg

GCAL ID	Client ID	Matrix	Collect Date/Time	Receive Date/Time
21005134844	33B113/SB2	Solid	05/11/2010 16:40	05/13/2010 10:20

SW-846 8260B

CAS#	Parameter	Result	RDL	REG LIMIT	Units
79-01-6	Trichloroethene	105	4		ug/Kg

GCAL ID	Client ID	Matrix	Collect Date/Time	Receive Date/Time
21005134845	33B113/SB3	Solid	05/11/2010 16:47	05/13/2010 10:20

SW-846 8260B

CAS#	Parameter	Result	RDL	REG LIMIT	Units
79-01-6	Trichloroethene	69.4	4		ug/Kg

Summary of Compounds Detected (con't)

GCAL ID	Client ID	Matrix	Collect Date/Time	Receive Date/Time
21005134846	33B114/SB1	Solid	05/12/2010 09:00	05/13/2010 10:20

SW-846 8260B

CAS#	Parameter	Result	RDL	REG LIMIT	Units
78-93-3	2-Butanone	5.35	5		ug/Kg
67-64-1	Acetone	35.7	24		ug/Kg

GCAL ID	Client ID	Matrix	Collect Date/Time	Receive Date/Time
21005134801	33B101/SB1	Solid	05/11/2010 09:41	05/13/2010 10:20

SW-846 8260B

Prep Date	Prep Batch	Prep Method	Dilution	Analyzed	By	Analytical Batch
			1	05/21/2010 20:18	JCK	432388

CAS#	Parameter	Result	RDL	REG LIMIT	Units
71-55-6	1,1,1-Trichloroethane	ND	4		ug/Kg
79-34-5	1,1,2,2-Tetrachloroethane	ND	4		ug/Kg
79-00-5	1,1,2-Trichloroethane	ND	4		ug/Kg
75-34-3	1,1-Dichloroethane	ND	4		ug/Kg
75-35-4	1,1-Dichloroethene	ND	4		ug/Kg
107-06-2	1,2-Dichloroethane	ND	4		ug/Kg
78-87-5	1,2-Dichloropropane	ND	4		ug/Kg
78-93-3	2-Butanone	ND	4		ug/Kg
591-78-6	2-Hexanone	ND	4		ug/Kg
108-10-1	4-Methyl-2-pentanone	ND	4		ug/Kg
67-64-1	Acetone	ND	22		ug/Kg
71-43-2	Benzene	ND	4		ug/Kg
75-27-4	Bromodichloromethane	ND	4		ug/Kg
75-25-2	Bromoform	ND	4		ug/Kg
74-83-9	Bromomethane	ND	4		ug/Kg
75-15-0	Carbon disulfide	ND	4		ug/Kg
56-23-5	Carbon tetrachloride	ND	4		ug/Kg
108-90-7	Chlorobenzene	ND	4		ug/Kg
75-00-3	Chloroethane	ND	4		ug/Kg
67-66-3	Chloroform	ND	4		ug/Kg
74-87-3	Chloromethane	ND	4		ug/Kg
124-48-1	Dibromochloromethane	ND	4		ug/Kg
10061-01-5	cis-1,3-Dichloropropene	ND	4		ug/Kg
10061-02-6	trans-1,3-Dichloropropene	ND	4		ug/Kg
100-41-4	Ethylbenzene	ND	4		ug/Kg
75-09-2	Methylene chloride	ND	9		ug/Kg
100-42-5	Styrene	ND	4		ug/Kg
127-18-4	Tetrachloroethene	ND	4		ug/Kg
108-88-3	Toluene	ND	4		ug/Kg
79-01-6	**Trichloroethene**	**18.4**	**4**		**ug/Kg**
108-05-4	Vinyl acetate	ND	4		ug/Kg
75-01-4	Vinyl chloride	ND	4		ug/Kg
1330-20-7	Xylene (total)	ND	9		ug/Kg
156-59-2	cis-1,2-Dichloroethene	ND	4		ug/Kg
156-60-5	trans-1,2-Dichloroethene	ND	4		ug/Kg

CAS#	Surrogate	Conc. Spiked	Conc. Rec	Units	% Recovery	Rec Limits
460-00-4	4-Bromofluorobenzene	43	44.4	ug/Kg	103	62 - 127
1868-53-7	Dibromofluoromethane	43	45.9	ug/Kg	107	65 - 130
2037-26-5	Toluene d8	43	44.3	ug/Kg	103	71 - 132
17060-07-0	1,2-Dichloroethane-d4	43	54.7	ug/Kg	**127***	62 - 125

RESULTS REPORTED ON A WET WEIGHT BASIS

GCAL ID	Client ID	Matrix	Collect Date/Time	Receive Date/Time
21005134802	33B101/SB2	Solid	05/11/2010 09:46	05/13/2010 10:20

SW-846 8260B

Prep Date	Prep Batch	Prep Method	Dilution	Analyzed	By	Analytical Batch
			1	05/22/2010 19:33	AGC	432468

CAS#	Parameter	Result	RDL	REG LIMIT	Units
71-55-6	1,1,1-Trichloroethane	ND	4		ug/Kg
79-34-5	1,1,2,2-Tetrachloroethane	ND	4		ug/Kg
79-00-5	1,1,2-Trichloroethane	ND	4		ug/Kg
75-34-3	1,1-Dichloroethane	ND	4		ug/Kg
75-35-4	1,1-Dichloroethene	ND	4		ug/Kg
107-06-2	1,2-Dichloroethane	ND	4		ug/Kg
78-87-5	1,2-Dichloropropane	ND	4		ug/Kg
78-93-3	2-Butanone	ND	4		ug/Kg
591-78-6	2-Hexanone	ND	4		ug/Kg
108-10-1	4-Methyl-2-pentanone	ND	4		ug/Kg
67-64-1	Acetone	ND	22		ug/Kg
71-43-2	Benzene	ND	4		ug/Kg
75-27-4	Bromodichloromethane	ND	4		ug/Kg
75-25-2	Bromoform	ND	4		ug/Kg
74-83-9	Bromomethane	ND	4		ug/Kg
75-15-0	Carbon disulfide	ND	4		ug/Kg
56-23-5	Carbon tetrachloride	ND	4		ug/Kg
108-90-7	Chlorobenzene	ND	4		ug/Kg
75-00-3	Chloroethane	ND	4		ug/Kg
67-66-3	Chloroform	ND	4		ug/Kg
74-87-3	Chloromethane	ND	4		ug/Kg
124-48-1	Dibromochloromethane	ND	4		ug/Kg
10061-01-5	cis-1,3-Dichloropropene	ND	4		ug/Kg
10061-02-6	trans-1,3-Dichloropropene	ND	4		ug/Kg
100-41-4	Ethylbenzene	ND	4		ug/Kg
75-09-2	Methylene chloride	ND	9		ug/Kg
100-42-5	Styrene	ND	4		ug/Kg
127-18-4	Tetrachloroethene	ND	4		ug/Kg
108-88-3	Toluene	ND	4		ug/Kg
79-01-6	**Trichloroethene**	**10.2**	**4**		**ug/Kg**
108-05-4	Vinyl acetate	ND	4		ug/Kg
75-01-4	Vinyl chloride	ND	4		ug/Kg
1330-20-7	Xylene (total)	ND	9		ug/Kg
156-59-2	cis-1,2-Dichloroethene	ND	4		ug/Kg
156-60-5	trans-1,2-Dichloroethene	ND	4		ug/Kg

CAS#	Surrogate	Conc. Spiked	Conc. Rec	Units	% Recovery	Rec Limits
460-00-4	4-Bromofluorobenzene	43.9	47.3	ug/Kg	108	62 - 127
1868-53-7	Dibromofluoromethane	43.9	46	ug/Kg	105	65 - 130
2037-26-5	Toluene d8	43.9	45.1	ug/Kg	103	71 - 132
17060-07-0	1,2-Dichloroethane-d4	43.9	53.1	ug/Kg	121	62 - 125

RESULTS REPORTED ON A WET WEIGHT BASIS

GCAL ID	Client ID	Matrix	Collect Date/Time	Receive Date/Time
21005134803	33B101/SB3	Solid	05/11/2010 09:56	05/13/2010 10:20

SW-846 8260B

Prep Date	Prep Batch	Prep Method	Dilution	Analyzed	By	Analytical Batch
			50	05/22/2010 01:23	CLH	432421

CAS#	Parameter	Result	RDL	REG LIMIT	Units
71-55-6	1,1,1-Trichloroethane	ND	220		ug/Kg
79-34-5	1,1,2,2-Tetrachloroethane	ND	220		ug/Kg
79-00-5	1,1,2-Trichloroethane	ND	220		ug/Kg
75-34-3	1,1-Dichloroethane	ND	220		ug/Kg
75-35-4	1,1-Dichloroethene	ND	220		ug/Kg
107-06-2	1,2-Dichloroethane	ND	220		ug/Kg
78-87-5	1,2-Dichloropropane	ND	220		ug/Kg
78-93-3	2-Butanone	ND	220		ug/Kg
591-78-6	2-Hexanone	ND	220		ug/Kg
108-10-1	4-Methyl-2-pentanone	ND	220		ug/Kg
67-64-1	Acetone	ND	1100		ug/Kg
71-43-2	Benzene	ND	220		ug/Kg
75-27-4	Bromodichloromethane	ND	220		ug/Kg
75-25-2	Bromoform	ND	220		ug/Kg
74-83-9	Bromomethane	ND	220		ug/Kg
75-15-0	Carbon disulfide	ND	220		ug/Kg
56-23-5	Carbon tetrachloride	ND	220		ug/Kg
108-90-7	Chlorobenzene	ND	220		ug/Kg
75-00-3	Chloroethane	ND	220		ug/Kg
67-66-3	Chloroform	ND	220		ug/Kg
74-87-3	Chloromethane	ND	220		ug/Kg
124-48-1	Dibromochloromethane	ND	220		ug/Kg
10061-01-5	cis-1,3-Dichloropropene	ND	220		ug/Kg
10061-02-6	trans-1,3-Dichloropropene	ND	220		ug/Kg
100-41-4	Ethylbenzene	ND	220		ug/Kg
75-09-2	Methylene chloride	ND	440		ug/Kg
100-42-5	Styrene	ND	220		ug/Kg
127-18-4	Tetrachloroethene	ND	220		ug/Kg
108-88-3	Toluene	ND	220		ug/Kg
79-01-6	Trichloroethene	ND	220		ug/Kg
108-05-4	Vinyl acetate	ND	220		ug/Kg
75-01-4	Vinyl chloride	ND	220		ug/Kg
1330-20-7	Xylene (total)	ND	440		ug/Kg
156-59-2	**cis-1,2-Dichloroethene**	**1880**	**220**		**ug/Kg**
156-60-5	trans-1,2-Dichloroethene	ND	220		ug/Kg

CAS#	Surrogate	Conc. Spiked	Conc. Rec	Units	% Recovery	Rec Limits
460-00-4	4-Bromofluorobenzene	2220	2190	ug/Kg	98	62 - 127
1868-53-7	Dibromofluoromethane	2220	2250	ug/Kg	101	65 - 130
2037-26-5	Toluene d8	2220	2350	ug/Kg	106	71 - 132
17060-07-0	1,2-Dichloroethane-d4	2220	2370	ug/Kg	107	62 - 125

RESULTS REPORTED ON A WET WEIGHT BASIS

GCAL ID	Client ID	Matrix	Collect Date/Time	Receive Date/Time
21005134804	33B102/SB1	Solid	05/11/2010 10:25	05/13/2010 10:20

SW-846 8260B

Prep Date	Prep Batch	Prep Method	Dilution	Analyzed	By	Analytical Batch
			50	05/22/2010 01:46	CLH	432421

CAS#	Parameter	Result	RDL	REG LIMIT	Units
71-55-6	1,1,1-Trichloroethane	ND	230		ug/Kg
79-34-5	1,1,2,2-Tetrachloroethane	ND	230		ug/Kg
79-00-5	1,1,2-Trichloroethane	ND	230		ug/Kg
75-34-3	1,1-Dichloroethane	ND	230		ug/Kg
75-35-4	1,1-Dichloroethene	ND	230		ug/Kg
107-06-2	1,2-Dichloroethane	ND	230		ug/Kg
78-87-5	1,2-Dichloropropane	ND	230		ug/Kg
78-93-3	2-Butanone	ND	230		ug/Kg
591-78-6	2-Hexanone	ND	230		ug/Kg
108-10-1	4-Methyl-2-pentanone	ND	230		ug/Kg
67-64-1	Acetone	ND	1200		ug/Kg
71-43-2	Benzene	ND	230		ug/Kg
75-27-4	Bromodichloromethane	ND	230		ug/Kg
75-25-2	Bromoform	ND	230		ug/Kg
74-83-9	Bromomethane	ND	230		ug/Kg
75-15-0	Carbon disulfide	ND	230		ug/Kg
56-23-5	Carbon tetrachloride	ND	230		ug/Kg
108-90-7	Chlorobenzene	ND	230		ug/Kg
75-00-3	Chloroethane	ND	230		ug/Kg
67-66-3	Chloroform	ND	230		ug/Kg
74-87-3	Chloromethane	ND	230		ug/Kg
124-48-1	Dibromochloromethane	ND	230		ug/Kg
10061-01-5	cis-1,3-Dichloropropene	ND	230		ug/Kg
10061-02-6	trans-1,3-Dichloropropene	ND	230		ug/Kg
100-41-4	Ethylbenzene	ND	230		ug/Kg
75-09-2	Methylene chloride	ND	460		ug/Kg
100-42-5	Styrene	ND	230		ug/Kg
127-18-4	Tetrachloroethene	ND	230		ug/Kg
108-88-3	Toluene	ND	230		ug/Kg
79-01-6	**Trichloroethene**	**281**	**230**		**ug/Kg**
108-05-4	Vinyl acetate	ND	230		ug/Kg
75-01-4	Vinyl chloride	ND	230		ug/Kg
1330-20-7	Xylene (total)	ND	460		ug/Kg
156-59-2	**cis-1,2-Dichloroethene**	**1100**	**230**		**ug/Kg**
156-60-5	trans-1,2-Dichloroethene	ND	230		ug/Kg

CAS#	Surrogate	Conc. Spiked	Conc. Rec	Units	% Recovery	Rec Limits
460-00-4	4-Bromofluorobenzene	2310	2140	ug/Kg	93	62 - 127
1868-53-7	Dibromofluoromethane	2310	2410	ug/Kg	104	65 - 130
2037-26-5	Toluene d8	2310	2330	ug/Kg	101	71 - 132
17060-07-0	1,2-Dichloroethane-d4	2310	2330	ug/Kg	101	62 - 125

RESULTS REPORTED ON A WET WEIGHT BASIS

GCAL ID	Client ID	Matrix	Collect Date/Time	Receive Date/Time
21005134805	33B102/SB3	Solid	05/11/2010 10:44	05/13/2010 10:20

SW-846 8260B

Prep Date	Prep Batch	Prep Method	Dilution	Analyzed	By	Analytical Batch
			50	05/22/2010 01:01	CLH	432421

CAS#	Parameter	Result	RDL	REG LIMIT	Units
71-55-6	1,1,1-Trichloroethane	ND	220		ug/Kg
79-34-5	1,1,2,2-Tetrachloroethane	ND	220		ug/Kg
79-00-5	1,1,2-Trichloroethane	ND	220		ug/Kg
75-34-3	1,1-Dichloroethane	ND	220		ug/Kg
75-35-4	1,1-Dichloroethene	ND	220		ug/Kg
107-06-2	1,2-Dichloroethane	ND	220		ug/Kg
78-87-5	1,2-Dichloropropane	ND	220		ug/Kg
78-93-3	2-Butanone	ND	220		ug/Kg
591-78-6	2-Hexanone	ND	220		ug/Kg
108-10-1	4-Methyl-2-pentanone	ND	220		ug/Kg
67-64-1	Acetone	ND	1100		ug/Kg
71-43-2	Benzene	ND	220		ug/Kg
75-27-4	Bromodichloromethane	ND	220		ug/Kg
75-25-2	Bromoform	ND	220		ug/Kg
74-83-9	Bromomethane	ND	220		ug/Kg
75-15-0	Carbon disulfide	ND	220		ug/Kg
56-23-5	Carbon tetrachloride	ND	220		ug/Kg
108-90-7	Chlorobenzene	ND	220		ug/Kg
75-00-3	Chloroethane	ND	220		ug/Kg
67-66-3	Chloroform	ND	220		ug/Kg
74-87-3	Chloromethane	ND	220		ug/Kg
124-48-1	Dibromochloromethane	ND	220		ug/Kg
10061-01-5	cis-1,3-Dichloropropene	ND	220		ug/Kg
10061-02-6	trans-1,3-Dichloropropene	ND	220		ug/Kg
100-41-4	Ethylbenzene	ND	220		ug/Kg
75-09-2	Methylene chloride	ND	440		ug/Kg
100-42-5	Styrene	ND	220		ug/Kg
127-18-4	Tetrachloroethene	ND	220		ug/Kg
108-88-3	Toluene	ND	220		ug/Kg
79-01-6	**Trichloroethene**	**238**	**220**		**ug/Kg**
108-05-4	Vinyl acetate	ND	220		ug/Kg
75-01-4	Vinyl chloride	ND	220		ug/Kg
1330-20-7	Xylene (total)	ND	440		ug/Kg
156-59-2	cis-1,2-Dichloroethene	ND	220		ug/Kg
156-60-5	trans-1,2-Dichloroethene	ND	220		ug/Kg

CAS#	Surrogate	Conc. Spiked	Conc. Rec	Units	% Recovery	Rec Limits
460-00-4	4-Bromofluorobenzene	2190	2230	ug/Kg	102	62 - 127
1868-53-7	Dibromofluoromethane	2190	2160	ug/Kg	98	65 - 130
2037-26-5	Toluene d8	2190	2280	ug/Kg	104	71 - 132
17060-07-0	1,2-Dichloroethane-d4	2190	2210	ug/Kg	101	62 - 125

RESULTS REPORTED ON A WET WEIGHT BASIS

GCAL ID	Client ID	Matrix	Collect Date/Time	Receive Date/Time
21005134806	33B102/SB3MS	Solid	05/11/2010 10:44	05/13/2010 10:20

SW-846 8260B

Prep Date	Prep Batch	Prep Method	Dilution	Analyzed	By	Analytical Batch
			50	05/22/2010 04:02	SLR	432421

CAS#	Parameter	Result	RDL	REG LIMIT	Units
71-55-6	1,1,1-Trichloroethane	2120	230		ug/Kg
79-34-5	1,1,2,2-Tetrachloroethane	2000	230		ug/Kg
79-00-5	1,1,2-Trichloroethane	2080	230		ug/Kg
75-34-3	1,1-Dichloroethane	2250	230		ug/Kg
75-35-4	1,1-Dichloroethene	2180	230		ug/Kg
107-06-2	1,2-Dichloroethane	2120	230		ug/Kg
78-87-5	1,2-Dichloropropane	1850	230		ug/Kg
78-93-3	2-Butanone	1930	230		ug/Kg
591-78-6	2-Hexanone	2110	230		ug/Kg
108-10-1	4-Methyl-2-pentanone	1640	230		ug/Kg
67-64-1	Acetone	2940	1100		ug/Kg
71-43-2	Benzene	1910	230		ug/Kg
75-27-4	Bromodichloromethane	1970	230		ug/Kg
75-25-2	Bromoform	2080	230		ug/Kg
74-83-9	Bromomethane	1070	230		ug/Kg
75-15-0	Carbon disulfide	2000	230		ug/Kg
56-23-5	Carbon tetrachloride	2210	230		ug/Kg
108-90-7	Chlorobenzene	2220	230		ug/Kg
75-00-3	Chloroethane	ND	230		ug/Kg
67-66-3	Chloroform	1900	230		ug/Kg
74-87-3	Chloromethane	1790	230		ug/Kg
124-48-1	Dibromochloromethane	2030	230		ug/Kg
10061-01-5	cis-1,3-Dichloropropene	1890	230		ug/Kg
10061-02-6	trans-1,3-Dichloropropene	1970	230		ug/Kg
100-41-4	Ethylbenzene	2160	230		ug/Kg
75-09-2	Methylene chloride	2290	450		ug/Kg
100-42-5	Styrene	2210	230		ug/Kg
127-18-4	Tetrachloroethene	2070	230		ug/Kg
108-88-3	Toluene	2140	230		ug/Kg
79-01-6	Trichloroethene	2020	230		ug/Kg
108-05-4	Vinyl acetate	1960	230		ug/Kg
75-01-4	Vinyl chloride	1900	230		ug/Kg
1330-20-7	Xylene (total)	6660	450		ug/Kg
156-59-2	cis-1,2-Dichloroethene	2880	230		ug/Kg
156-60-5	trans-1,2-Dichloroethene	2210	230		ug/Kg

CAS#	Surrogate	Conc. Spiked	Conc. Rec	Units	% Recovery	Rec Limits
460-00-4	4-Bromofluorobenzene	2260	2450	ug/Kg	108	62 - 127
1868-53-7	Dibromofluoromethane	2260	2320	ug/Kg	103	65 - 130
2037-26-5	Toluene d8	2260	2370	ug/Kg	105	71 - 132
17060-07-0	1,2-Dichloroethane-d4	2260	2370	ug/Kg	105	62 - 125

RESULTS REPORTED ON A WET WEIGHT BASIS

GCAL ID	Client ID	Matrix	Collect Date/Time	Receive Date/Time
21005134807	33B102/SB3MSD	Solid	05/11/2010 10:44	05/13/2010 10:20

SW-846 8260B

Prep Date	Prep Batch	Prep Method	Dilution	Analyzed	By	Analytical Batch
			50	05/22/2010 04:24	SLR	432421

CAS#	Parameter	Result	RDL	REG LIMIT	Units
71-55-6	1,1,1-Trichloroethane	1810	210		ug/Kg
79-34-5	1,1,2,2-Tetrachloroethane	1950	210		ug/Kg
79-00-5	1,1,2-Trichloroethane	1790	210		ug/Kg
75-34-3	1,1-Dichloroethane	1990	210		ug/Kg
75-35-4	1,1-Dichloroethene	1940	210		ug/Kg
107-06-2	1,2-Dichloroethane	1820	210		ug/Kg
78-87-5	1,2-Dichloropropane	1570	210		ug/Kg
78-93-3	2-Butanone	1780	210		ug/Kg
591-78-6	2-Hexanone	1920	210		ug/Kg
108-10-1	4-Methyl-2-pentanone	1590	210		ug/Kg
67-64-1	Acetone	2720	1000		ug/Kg
71-43-2	Benzene	1680	210		ug/Kg
75-27-4	Bromodichloromethane	1690	210		ug/Kg
75-25-2	Bromoform	1730	210		ug/Kg
74-83-9	Bromomethane	1090	210		ug/Kg
75-15-0	Carbon disulfide	1670	210		ug/Kg
56-23-5	Carbon tetrachloride	1900	210		ug/Kg
108-90-7	Chlorobenzene	1860	210		ug/Kg
75-00-3	Chloroethane	ND	210		ug/Kg
67-66-3	Chloroform	1640	210		ug/Kg
74-87-3	Chloromethane	1510	210		ug/Kg
124-48-1	Dibromochloromethane	1770	210		ug/Kg
10061-01-5	cis-1,3-Dichloropropene	1590	210		ug/Kg
10061-02-6	trans-1,3-Dichloropropene	1810	210		ug/Kg
100-41-4	Ethylbenzene	1780	210		ug/Kg
75-09-2	Methylene chloride	1990	420		ug/Kg
100-42-5	Styrene	1930	210		ug/Kg
127-18-4	Tetrachloroethene	1790	210		ug/Kg
108-88-3	Toluene	1840	210		ug/Kg
79-01-6	Trichloroethene	1790	210		ug/Kg
108-05-4	Vinyl acetate	1680	210		ug/Kg
75-01-4	Vinyl chloride	1740	210		ug/Kg
1330-20-7	Xylene (total)	5410	420		ug/Kg
156-59-2	cis-1,2-Dichloroethene	2680	210		ug/Kg
156-60-5	trans-1,2-Dichloroethene	1910	210		ug/Kg

CAS#	Surrogate	Conc. Spiked	Conc. Rec	Units	% Recovery	Rec Limits
460-00-4	4-Bromofluorobenzene	2090	2170	ug/Kg	104	62 - 127
1868-53-7	Dibromofluoromethane	2090	2140	ug/Kg	103	65 - 130
2037-26-5	Toluene d8	2090	2240	ug/Kg	107	71 - 132
17060-07-0	1,2-Dichloroethane-d4	2090	2130	ug/Kg	102	62 - 125

RESULTS REPORTED ON A WET WEIGHT BASIS

GCAL ID	Client ID	Matrix	Collect Date/Time	Receive Date/Time
21005134808	33B103/SB1	Solid	05/11/2010 08:50	05/13/2010 10:20

SW-846 8260B

Prep Date	Prep Batch	Prep Method	Dilution	Analyzed	By	Analytical Batch
			1	05/22/2010 19:56	AGC	432468

CAS#	Parameter	Result	RDL	REG LIMIT	Units
71-55-6	1,1,1-Trichloroethane	ND	4		ug/Kg
79-34-5	1,1,2,2-Tetrachloroethane	ND	4		ug/Kg
79-00-5	1,1,2-Trichloroethane	ND	4		ug/Kg
75-34-3	1,1-Dichloroethane	ND	4		ug/Kg
75-35-4	1,1-Dichloroethene	ND	4		ug/Kg
107-06-2	1,2-Dichloroethane	ND	4		ug/Kg
78-87-5	1,2-Dichloropropane	ND	4		ug/Kg
78-93-3	2-Butanone	ND	4		ug/Kg
591-78-6	2-Hexanone	ND	4		ug/Kg
108-10-1	4-Methyl-2-pentanone	ND	4		ug/Kg
67-64-1	Acetone	ND	21		ug/Kg
71-43-2	Benzene	ND	4		ug/Kg
75-27-4	Bromodichloromethane	ND	4		ug/Kg
75-25-2	Bromoform	ND	4		ug/Kg
74-83-9	Bromomethane	ND	4		ug/Kg
75-15-0	Carbon disulfide	ND	4		ug/Kg
56-23-5	Carbon tetrachloride	ND	4		ug/Kg
108-90-7	Chlorobenzene	ND	4		ug/Kg
75-00-3	Chloroethane	ND	4		ug/Kg
67-66-3	Chloroform	ND	4		ug/Kg
74-87-3	Chloromethane	ND	4		ug/Kg
124-48-1	Dibromochloromethane	ND	4		ug/Kg
10061-01-5	cis-1,3-Dichloropropene	ND	4		ug/Kg
10061-02-6	trans-1,3-Dichloropropene	ND	4		ug/Kg
100-41-4	Ethylbenzene	ND	4		ug/Kg
75-09-2	Methylene chloride	ND	8		ug/Kg
100-42-5	Styrene	ND	4		ug/Kg
127-18-4	Tetrachloroethene	ND	4		ug/Kg
108-88-3	Toluene	ND	4		ug/Kg
79-01-6	**Trichloroethene**	**8.76**	**4**		**ug/Kg**
108-05-4	Vinyl acetate	ND	4		ug/Kg
75-01-4	**Vinyl chloride**	**5.10**	**4**		**ug/Kg**
1330-20-7	Xylene (total)	ND	8		ug/Kg
156-59-2	**cis-1,2-Dichloroethene**	**95.5**	**4**		**ug/Kg**
156-60-5	**trans-1,2-Dichloroethene**	**5.03**	**4**		**ug/Kg**

CAS#	Surrogate	Conc. Spiked	Conc. Rec	Units	% Recovery	Rec Limits
460-00-4	4-Bromofluorobenzene	41.9	42.2	ug/Kg	101	62 - 127
1868-53-7	Dibromofluoromethane	41.9	44.9	ug/Kg	107	65 - 130
2037-26-5	Toluene d8	41.9	42.4	ug/Kg	101	71 - 132
17060-07-0	1,2-Dichloroethane-d4	41.9	50.1	ug/Kg	120	62 - 125

RESULTS REPORTED ON A WET WEIGHT BASIS

GCAL ID	Client ID	Matrix	Collect Date/Time	Receive Date/Time
21005134809	33B103/SB1D	Solid	05/11/2010 08:50	05/13/2010 10:20

SW-846 8260B

Prep Date	Prep Batch	Prep Method	Dilution	Analyzed	By	Analytical Batch
			1	05/22/2010 20:18	AGC	432468

CAS#	Parameter	Result	RDL	REG LIMIT	Units
71-55-6	1,1,1-Trichloroethane	ND	5		ug/Kg
79-34-5	1,1,2,2-Tetrachloroethane	ND	5		ug/Kg
79-00-5	1,1,2-Trichloroethane	ND	5		ug/Kg
75-34-3	1,1-Dichloroethane	ND	5		ug/Kg
75-35-4	1,1-Dichloroethene	ND	5		ug/Kg
107-06-2	1,2-Dichloroethane	ND	5		ug/Kg
78-87-5	1,2-Dichloropropane	ND	5		ug/Kg
78-93-3	2-Butanone	ND	5		ug/Kg
591-78-6	2-Hexanone	ND	5		ug/Kg
108-10-1	4-Methyl-2-pentanone	ND	5		ug/Kg
67-64-1	Acetone	ND	23		ug/Kg
71-43-2	Benzene	ND	5		ug/Kg
75-27-4	Bromodichloromethane	ND	5		ug/Kg
75-25-2	Bromoform	ND	5		ug/Kg
74-83-9	Bromomethane	ND	5		ug/Kg
75-15-0	Carbon disulfide	ND	5		ug/Kg
56-23-5	Carbon tetrachloride	ND	5		ug/Kg
108-90-7	Chlorobenzene	ND	5		ug/Kg
75-00-3	Chloroethane	ND	5		ug/Kg
67-66-3	Chloroform	ND	5		ug/Kg
74-87-3	Chloromethane	ND	5		ug/Kg
124-48-1	Dibromochloromethane	ND	5		ug/Kg
10061-01-5	cis-1,3-Dichloropropene	ND	5		ug/Kg
10061-02-6	trans-1,3-Dichloropropene	ND	5		ug/Kg
100-41-4	Ethylbenzene	ND	5		ug/Kg
75-09-2	Methylene chloride	ND	9		ug/Kg
100-42-5	Styrene	ND	5		ug/Kg
127-18-4	Tetrachloroethene	ND	5		ug/Kg
108-88-3	Toluene	ND	5		ug/Kg
79-01-6	**Trichloroethene**	**9.14**	**5**		**ug/Kg**
108-05-4	Vinyl acetate	ND	5		ug/Kg
75-01-4	**Vinyl chloride**	**4.66**	**5**		**ug/Kg**
1330-20-7	Xylene (total)	ND	9		ug/Kg
156-59-2	**cis-1,2-Dichloroethene**	**91.5**	**5**		**ug/Kg**
156-60-5	trans-1,2-Dichloroethene	ND	5		ug/Kg

CAS#	Surrogate	Conc. Spiked	Conc. Rec	Units	% Recovery	Rec Limits
460-00-4	4-Bromofluorobenzene	46.5	50.3	ug/Kg	108	62 - 127
1868-53-7	Dibromofluoromethane	46.5	51.1	ug/Kg	110	65 - 130
2037-26-5	Toluene d8	46.5	47.9	ug/Kg	103	71 - 132
17060-07-0	1,2-Dichloroethane-d4	46.5	55.9	ug/Kg	120	62 - 125

RESULTS REPORTED ON A WET WEIGHT BASIS

GCAL ID	Client ID	Matrix	Collect Date/Time	Receive Date/Time
21005134810	33B103/SB2	Solid	05/11/2010 08:58	05/13/2010 10:20

SW-846 8260B

Prep Date	Prep Batch	Prep Method	Dilution	Analyzed	By	Analytical Batch
			50	05/22/2010 02:09	CLH	432421

CAS#	Parameter	Result	RDL	REG LIMIT	Units
71-55-6	1,1,1-Trichloroethane	ND	210		ug/Kg
79-34-5	1,1,2,2-Tetrachloroethane	ND	210		ug/Kg
79-00-5	1,1,2-Trichloroethane	ND	210		ug/Kg
75-34-3	1,1-Dichloroethane	ND	210		ug/Kg
75-35-4	1,1-Dichloroethene	ND	210		ug/Kg
107-06-2	1,2-Dichloroethane	ND	210		ug/Kg
78-87-5	1,2-Dichloropropane	ND	210		ug/Kg
78-93-3	2-Butanone	ND	210		ug/Kg
591-78-6	2-Hexanone	ND	210		ug/Kg
108-10-1	4-Methyl-2-pentanone	ND	210		ug/Kg
67-64-1	Acetone	ND	1100		ug/Kg
71-43-2	Benzene	ND	210		ug/Kg
75-27-4	Bromodichloromethane	ND	210		ug/Kg
75-25-2	Bromoform	ND	210		ug/Kg
74-83-9	Bromomethane	ND	210		ug/Kg
75-15-0	Carbon disulfide	ND	210		ug/Kg
56-23-5	Carbon tetrachloride	ND	210		ug/Kg
108-90-7	Chlorobenzene	ND	210		ug/Kg
75-00-3	Chloroethane	ND	210		ug/Kg
67-66-3	Chloroform	ND	210		ug/Kg
74-87-3	Chloromethane	ND	210		ug/Kg
124-48-1	Dibromochloromethane	ND	210		ug/Kg
10061-01-5	cis-1,3-Dichloropropene	ND	210		ug/Kg
10061-02-6	trans-1,3-Dichloropropene	ND	210		ug/Kg
100-41-4	Ethylbenzene	ND	210		ug/Kg
75-09-2	Methylene chloride	ND	430		ug/Kg
100-42-5	Styrene	ND	210		ug/Kg
127-18-4	Tetrachloroethene	ND	210		ug/Kg
108-88-3	Toluene	ND	210		ug/Kg
79-01-6	Trichloroethene	ND	210		ug/Kg
108-05-4	Vinyl acetate	ND	210		ug/Kg
75-01-4	Vinyl chloride	ND	210		ug/Kg
1330-20-7	Xylene (total)	ND	430		ug/Kg
156-59-2	cis-1,2-Dichloroethene	ND	210		ug/Kg
156-60-5	trans-1,2-Dichloroethene	ND	210		ug/Kg

CAS#	Surrogate	Conc. Spiked	Conc. Rec	Units	% Recovery	Rec Limits
460-00-4	4-Bromofluorobenzene	2130	2070	ug/Kg	97	62 - 127
1868-53-7	Dibromofluoromethane	2130	2200	ug/Kg	103	65 - 130
2037-26-5	Toluene d8	2130	2280	ug/Kg	107	71 - 132
17060-07-0	1,2-Dichloroethane-d4	2130	2220	ug/Kg	104	62 - 125

RESULTS REPORTED ON A WET WEIGHT BASIS

GCAL ID	Client ID	Matrix	Collect Date/Time	Receive Date/Time
21005134811	33B103/SB3	Solid	05/11/2010 09:12	05/13/2010 10:20

SW-846 8260B

Prep Date	Prep Batch	Prep Method	Dilution	Analyzed	By	Analytical Batch
			50	05/22/2010 02:31	CLH	432421

CAS#	Parameter	Result	RDL	REG LIMIT	Units
71-55-6	1,1,1-Trichloroethane	ND	210		ug/Kg
79-34-5	1,1,2,2-Tetrachloroethane	ND	210		ug/Kg
79-00-5	1,1,2-Trichloroethane	ND	210		ug/Kg
75-34-3	1,1-Dichloroethane	ND	210		ug/Kg
75-35-4	1,1-Dichloroethene	ND	210		ug/Kg
107-06-2	1,2-Dichloroethane	ND	210		ug/Kg
78-87-5	1,2-Dichloropropane	ND	210		ug/Kg
78-93-3	2-Butanone	ND	210		ug/Kg
591-78-6	2-Hexanone	ND	210		ug/Kg
108-10-1	4-Methyl-2-pentanone	ND	210		ug/Kg
67-64-1	Acetone	ND	1100		ug/Kg
71-43-2	Benzene	ND	210		ug/Kg
75-27-4	Bromodichloromethane	ND	210		ug/Kg
75-25-2	Bromoform	ND	210		ug/Kg
74-83-9	Bromomethane	ND	210		ug/Kg
75-15-0	Carbon disulfide	ND	210		ug/Kg
56-23-5	Carbon tetrachloride	ND	210		ug/Kg
108-90-7	Chlorobenzene	ND	210		ug/Kg
75-00-3	Chloroethane	ND	210		ug/Kg
67-66-3	Chloroform	ND	210		ug/Kg
74-87-3	Chloromethane	ND	210		ug/Kg
124-48-1	Dibromochloromethane	ND	210		ug/Kg
10061-01-5	cis-1,3-Dichloropropene	ND	210		ug/Kg
10061-02-6	trans-1,3-Dichloropropene	ND	210		ug/Kg
100-41-4	Ethylbenzene	ND	210		ug/Kg
75-09-2	Methylene chloride	ND	430		ug/Kg
100-42-5	Styrene	ND	210		ug/Kg
127-18-4	Tetrachloroethene	ND	210		ug/Kg
108-88-3	Toluene	ND	210		ug/Kg
79-01-6	Trichloroethene	ND	210		ug/Kg
108-05-4	Vinyl acetate	ND	210		ug/Kg
75-01-4	Vinyl chloride	ND	210		ug/Kg
1330-20-7	Xylene (total)	ND	430		ug/Kg
156-59-2	cis-1,2-Dichloroethene	ND	210		ug/Kg
156-60-5	trans-1,2-Dichloroethene	ND	210		ug/Kg

CAS#	Surrogate	Conc. Spiked	Conc. Rec	Units	% Recovery	Rec Limits
460-00-4	4-Bromofluorobenzene	2140	2100	ug/Kg	98	62 - 127
1868-53-7	Dibromofluoromethane	2140	2220	ug/Kg	104	65 - 130
2037-26-5	Toluene d8	2140	2290	ug/Kg	107	71 - 132
17060-07-0	1,2-Dichloroethane-d4	2140	2280	ug/Kg	106	62 - 125

RESULTS REPORTED ON A WET WEIGHT BASIS

GCAL ID	Client ID	Matrix	Collect Date/Time	Receive Date/Time
21005134812	33B104/SB1	Solid	05/11/2010 11:14	05/13/2010 10:20

SW-846 8260B

Prep Date	Prep Batch	Prep Method	Dilution	Analyzed	By	Analytical Batch
			50	05/22/2010 02:54	CLH	432421

CAS#	Parameter	Result	RDL	REG LIMIT	Units
71-55-6	1,1,1-Trichloroethane	ND	200		ug/Kg
79-34-5	1,1,2,2-Tetrachloroethane	ND	200		ug/Kg
79-00-5	1,1,2-Trichloroethane	ND	200		ug/Kg
75-34-3	1,1-Dichloroethane	ND	200		ug/Kg
75-35-4	1,1-Dichloroethene	ND	200		ug/Kg
107-06-2	1,2-Dichloroethane	ND	200		ug/Kg
78-87-5	1,2-Dichloropropane	ND	200		ug/Kg
78-93-3	2-Butanone	ND	200		ug/Kg
591-78-6	2-Hexanone	ND	200		ug/Kg
108-10-1	4-Methyl-2-pentanone	ND	200		ug/Kg
67-64-1	Acetone	ND	980		ug/Kg
71-43-2	Benzene	ND	200		ug/Kg
75-27-4	Bromodichloromethane	ND	200		ug/Kg
75-25-2	Bromoform	ND	200		ug/Kg
74-83-9	Bromomethane	ND	200		ug/Kg
75-15-0	Carbon disulfide	ND	200		ug/Kg
56-23-5	Carbon tetrachloride	ND	200		ug/Kg
108-90-7	Chlorobenzene	ND	200		ug/Kg
75-00-3	Chloroethane	ND	200		ug/Kg
67-66-3	Chloroform	ND	200		ug/Kg
74-87-3	Chloromethane	ND	200		ug/Kg
124-48-1	Dibromochloromethane	ND	200		ug/Kg
10061-01-5	cis-1,3-Dichloropropene	ND	200		ug/Kg
10061-02-6	trans-1,3-Dichloropropene	ND	200		ug/Kg
100-41-4	Ethylbenzene	ND	200		ug/Kg
75-09-2	Methylene chloride	ND	390		ug/Kg
100-42-5	Styrene	ND	200		ug/Kg
127-18-4	Tetrachloroethene	ND	200		ug/Kg
108-88-3	Toluene	ND	200		ug/Kg
79-01-6	**Trichloroethene**	**199**	**200**		**ug/Kg**
108-05-4	Vinyl acetate	ND	200		ug/Kg
75-01-4	Vinyl chloride	ND	200		ug/Kg
1330-20-7	Xylene (total)	ND	390		ug/Kg
156-59-2	cis-1,2-Dichloroethene	ND	200		ug/Kg
156-60-5	trans-1,2-Dichloroethene	ND	200		ug/Kg

CAS#	Surrogate	Conc. Spiked	Conc. Rec	Units	% Recovery	Rec Limits
460-00-4	4-Bromofluorobenzene	1960	1960	ug/Kg	100	62 - 127
1868-53-7	Dibromofluoromethane	1960	2030	ug/Kg	103	65 - 130
2037-26-5	Toluene d8	1960	2110	ug/Kg	108	71 - 132
17060-07-0	1,2-Dichloroethane-d4	1960	2060	ug/Kg	105	62 - 125

RESULTS REPORTED ON A WET WEIGHT BASIS

GCAL ID	Client ID	Matrix	Collect Date/Time	Receive Date/Time
21005134813	33B104/SB2	Solid	05/11/2010 11:21	05/13/2010 10:20

SW-846 8260B

Prep Date	Prep Batch	Prep Method	Dilution	Analyzed	By	Analytical Batch
			50	05/22/2010 03:17	SLR	432421

CAS#	Parameter	Result	RDL	REG LIMIT	Units
71-55-6	1,1,1-Trichloroethane	ND	260		ug/Kg
79-34-5	1,1,2,2-Tetrachloroethane	ND	260		ug/Kg
79-00-5	1,1,2-Trichloroethane	ND	260		ug/Kg
75-34-3	1,1-Dichloroethane	ND	260		ug/Kg
75-35-4	1,1-Dichloroethene	ND	260		ug/Kg
107-06-2	1,2-Dichloroethane	ND	260		ug/Kg
78-87-5	1,2-Dichloropropane	ND	260		ug/Kg
78-93-3	2-Butanone	ND	260		ug/Kg
591-78-6	2-Hexanone	ND	260		ug/Kg
108-10-1	4-Methyl-2-pentanone	ND	260		ug/Kg
67-64-1	Acetone	ND	1300		ug/Kg
71-43-2	Benzene	ND	260		ug/Kg
75-27-4	Bromodichloromethane	ND	260		ug/Kg
75-25-2	Bromoform	ND	260		ug/Kg
74-83-9	Bromomethane	ND	260		ug/Kg
75-15-0	Carbon disulfide	ND	260		ug/Kg
56-23-5	Carbon tetrachloride	ND	260		ug/Kg
108-90-7	Chlorobenzene	ND	260		ug/Kg
75-00-3	Chloroethane	ND	260		ug/Kg
67-66-3	Chloroform	ND	260		ug/Kg
74-87-3	Chloromethane	ND	260		ug/Kg
124-48-1	Dibromochloromethane	ND	260		ug/Kg
10061-01-5	cis-1,3-Dichloropropene	ND	260		ug/Kg
10061-02-6	trans-1,3-Dichloropropene	ND	260		ug/Kg
100-41-4	Ethylbenzene	ND	260		ug/Kg
75-09-2	Methylene chloride	ND	520		ug/Kg
100-42-5	Styrene	ND	260		ug/Kg
127-18-4	Tetrachloroethene	ND	260		ug/Kg
108-88-3	Toluene	ND	260		ug/Kg
79-01-6	Trichloroethene	ND	260		ug/Kg
108-05-4	Vinyl acetate	ND	260		ug/Kg
75-01-4	Vinyl chloride	ND	260		ug/Kg
1330-20-7	Xylene (total)	ND	520		ug/Kg
156-59-2	cis-1,2-Dichloroethene	ND	260		ug/Kg
156-60-5	trans-1,2-Dichloroethene	ND	260		ug/Kg

CAS#	Surrogate	Conc. Spiked	Conc. Rec	Units	% Recovery	Rec Limits
460-00-4	4-Bromofluorobenzene	2600	2560	ug/Kg	99	62 - 127
1868-53-7	Dibromofluoromethane	2600	2650	ug/Kg	102	65 - 130
2037-26-5	Toluene d8	2600	2800	ug/Kg	108	71 - 132
17060-07-0	1,2-Dichloroethane-d4	2600	2600	ug/Kg	100	62 - 125

RESULTS REPORTED ON A WET WEIGHT BASIS

GCAL ID	Client ID	Matrix	Collect Date/Time	Receive Date/Time
21005134814	33B104/SB2D	Solid	05/11/2010 11:21	05/13/2010 10:20

SW-846 8260B

Prep Date	Prep Batch	Prep Method	Dilution	Analyzed	By	Analytical Batch
			50	05/22/2010 03:39	SLR	432421

CAS#	Parameter	Result	RDL	REG LIMIT	Units
71-55-6	1,1,1-Trichloroethane	ND	210		ug/Kg
79-34-5	1,1,2,2-Tetrachloroethane	ND	210		ug/Kg
79-00-5	1,1,2-Trichloroethane	ND	210		ug/Kg
75-34-3	1,1-Dichloroethane	ND	210		ug/Kg
75-35-4	1,1-Dichloroethene	ND	210		ug/Kg
107-06-2	1,2-Dichloroethane	ND	210		ug/Kg
78-87-5	1,2-Dichloropropane	ND	210		ug/Kg
78-93-3	2-Butanone	ND	210		ug/Kg
591-78-6	2-Hexanone	ND	210		ug/Kg
108-10-1	4-Methyl-2-pentanone	ND	210		ug/Kg
67-64-1	Acetone	ND	1100		ug/Kg
71-43-2	Benzene	ND	210		ug/Kg
75-27-4	Bromodichloromethane	ND	210		ug/Kg
75-25-2	Bromoform	ND	210		ug/Kg
74-83-9	Bromomethane	ND	210		ug/Kg
75-15-0	Carbon disulfide	ND	210		ug/Kg
56-23-5	Carbon tetrachloride	ND	210		ug/Kg
108-90-7	Chlorobenzene	ND	210		ug/Kg
75-00-3	Chloroethane	ND	210		ug/Kg
67-66-3	Chloroform	ND	210		ug/Kg
74-87-3	Chloromethane	ND	210		ug/Kg
124-48-1	Dibromochloromethane	ND	210		ug/Kg
10061-01-5	cis-1,3-Dichloropropene	ND	210		ug/Kg
10061-02-6	trans-1,3-Dichloropropene	ND	210		ug/Kg
100-41-4	Ethylbenzene	ND	210		ug/Kg
75-09-2	Methylene chloride	ND	430		ug/Kg
100-42-5	Styrene	ND	210		ug/Kg
127-18-4	Tetrachloroethene	ND	210		ug/Kg
108-88-3	Toluene	ND	210		ug/Kg
79-01-6	**Trichloroethene**	**239**	**210**		**ug/Kg**
108-05-4	Vinyl acetate	ND	210		ug/Kg
75-01-4	Vinyl chloride	ND	210		ug/Kg
1330-20-7	Xylene (total)	ND	430		ug/Kg
156-59-2	cis-1,2-Dichloroethene	ND	210		ug/Kg
156-60-5	trans-1,2-Dichloroethene	ND	210		ug/Kg

CAS#	Surrogate	Conc. Spiked	Conc. Rec	Units	% Recovery	Rec Limits
460-00-4	4-Bromofluorobenzene	2140	1960	ug/Kg	92	62 - 127
1868-53-7	Dibromofluoromethane	2140	2180	ug/Kg	102	65 - 130
2037-26-5	Toluene d8	2140	2110	ug/Kg	99	71 - 132
17060-07-0	1,2-Dichloroethane-d4	2140	2100	ug/Kg	98	62 - 125

RESULTS REPORTED ON A WET WEIGHT BASIS

GCAL ID	Client ID	Matrix	Collect Date/Time	Receive Date/Time
21005134815	33B104/SB3	Solid	05/11/2010 11:38	05/13/2010 10:20

SW-846 8260B

Prep Date	Prep Batch	Prep Method	Dilution	Analyzed	By	Analytical Batch
			50	05/22/2010 05:12	SLR	432421

CAS#	Parameter	Result	RDL	REG LIMIT	Units
71-55-6	1,1,1-Trichloroethane	ND	230		ug/Kg
79-34-5	1,1,2,2-Tetrachloroethane	ND	230		ug/Kg
79-00-5	1,1,2-Trichloroethane	ND	230		ug/Kg
75-34-3	1,1-Dichloroethane	ND	230		ug/Kg
75-35-4	1,1-Dichloroethene	ND	230		ug/Kg
107-06-2	1,2-Dichloroethane	ND	230		ug/Kg
78-87-5	1,2-Dichloropropane	ND	230		ug/Kg
78-93-3	2-Butanone	ND	230		ug/Kg
591-78-6	2-Hexanone	ND	230		ug/Kg
108-10-1	4-Methyl-2-pentanone	ND	230		ug/Kg
67-64-1	Acetone	ND	1100		ug/Kg
71-43-2	Benzene	ND	230		ug/Kg
75-27-4	Bromodichloromethane	ND	230		ug/Kg
75-25-2	Bromoform	ND	230		ug/Kg
74-83-9	Bromomethane	ND	230		ug/Kg
75-15-0	Carbon disulfide	ND	230		ug/Kg
56-23-5	Carbon tetrachloride	ND	230		ug/Kg
108-90-7	Chlorobenzene	ND	230		ug/Kg
75-00-3	Chloroethane	ND	230		ug/Kg
67-66-3	Chloroform	ND	230		ug/Kg
74-87-3	Chloromethane	ND	230		ug/Kg
124-48-1	Dibromochloromethane	ND	230		ug/Kg
10061-01-5	cis-1,3-Dichloropropene	ND	230		ug/Kg
10061-02-6	trans-1,3-Dichloropropene	ND	230		ug/Kg
100-41-4	Ethylbenzene	ND	230		ug/Kg
75-09-2	Methylene chloride	ND	450		ug/Kg
100-42-5	Styrene	ND	230		ug/Kg
127-18-4	Tetrachloroethene	ND	230		ug/Kg
108-88-3	Toluene	ND	230		ug/Kg
79-01-6	**Trichloroethene**	**291**	**230**		**ug/Kg**
108-05-4	Vinyl acetate	ND	230		ug/Kg
75-01-4	Vinyl chloride	ND	230		ug/Kg
1330-20-7	Xylene (total)	ND	450		ug/Kg
156-59-2	cis-1,2-Dichloroethene	ND	230		ug/Kg
156-60-5	trans-1,2-Dichloroethene	ND	230		ug/Kg

CAS#	Surrogate	Conc. Spiked	Conc. Rec	Units	% Recovery	Rec Limits
460-00-4	4-Bromofluorobenzene	2260	2240	ug/Kg	99	62 - 127
1868-53-7	Dibromofluoromethane	2260	2450	ug/Kg	108	65 - 130
2037-26-5	Toluene d8	2260	2270	ug/Kg	100	71 - 132
17060-07-0	1,2-Dichloroethane-d4	2260	2370	ug/Kg	105	62 - 125

RESULTS REPORTED ON A WET WEIGHT BASIS

GCAL ID	Client ID	Matrix	Collect Date/Time	Receive Date/Time
21005134816	33B105/SB1	Solid	05/11/2010 12:10	05/13/2010 10:20

SW-846 8260B

Prep Date	Prep Batch	Prep Method	Dilution	Analyzed	By	Analytical Batch
			250	05/22/2010 05:35	SLR	432421

CAS#	Parameter	Result	RDL	REG LIMIT	Units
71-55-6	1,1,1-Trichloroethane	ND	1000		ug/Kg
79-34-5	1,1,2,2-Tetrachloroethane	ND	1000		ug/Kg
79-00-5	1,1,2-Trichloroethane	ND	1000		ug/Kg
75-34-3	1,1-Dichloroethane	ND	1000		ug/Kg
75-35-4	1,1-Dichloroethene	ND	1000		ug/Kg
107-06-2	1,2-Dichloroethane	ND	1000		ug/Kg
78-87-5	1,2-Dichloropropane	ND	1000		ug/Kg
78-93-3	2-Butanone	ND	1000		ug/Kg
591-78-6	2-Hexanone	ND	1000		ug/Kg
108-10-1	4-Methyl-2-pentanone	ND	1000		ug/Kg
67-64-1	Acetone	ND	5200		ug/Kg
71-43-2	Benzene	ND	1000		ug/Kg
75-27-4	Bromodichloromethane	ND	1000		ug/Kg
75-25-2	Bromoform	ND	1000		ug/Kg
74-83-9	Bromomethane	ND	1000		ug/Kg
75-15-0	Carbon disulfide	ND	1000		ug/Kg
56-23-5	Carbon tetrachloride	ND	1000		ug/Kg
108-90-7	Chlorobenzene	ND	1000		ug/Kg
75-00-3	Chloroethane	ND	1000		ug/Kg
67-66-3	Chloroform	ND	1000		ug/Kg
74-87-3	Chloromethane	ND	1000		ug/Kg
124-48-1	Dibromochloromethane	ND	1000		ug/Kg
10061-01-5	cis-1,3-Dichloropropene	ND	1000		ug/Kg
10061-02-6	trans-1,3-Dichloropropene	ND	1000		ug/Kg
100-41-4	Ethylbenzene	ND	1000		ug/Kg
75-09-2	Methylene chloride	ND	2100		ug/Kg
100-42-5	Styrene	ND	1000		ug/Kg
127-18-4	Tetrachloroethene	ND	1000		ug/Kg
108-88-3	Toluene	ND	1000		ug/Kg
79-01-6	**Trichloroethene**	**25300**	**1000**		**ug/Kg**
108-05-4	Vinyl acetate	ND	1000		ug/Kg
75-01-4	Vinyl chloride	ND	1000		ug/Kg
1330-20-7	Xylene (total)	ND	2100		ug/Kg
156-59-2	**cis-1,2-Dichloroethene**	**8910**	**1000**		**ug/Kg**
156-60-5	trans-1,2-Dichloroethene	ND	1000		ug/Kg

CAS#	Surrogate	Conc. Spiked	Conc. Rec	Units	% Recovery	Rec Limits
460-00-4	4-Bromofluorobenzene	10400	9710	ug/Kg	94	62 - 127
1868-53-7	Dibromofluoromethane	10400	11200	ug/Kg	108	65 - 130
2037-26-5	Toluene d8	10400	10900	ug/Kg	105	71 - 132
17060-07-0	1,2-Dichloroethane-d4	10400	10900	ug/Kg	105	62 - 125

RESULTS REPORTED ON A WET WEIGHT BASIS

GCAL ID	Client ID	Matrix	Collect Date/Time	Receive Date/Time
21005134817	33B105/SB2	Solid	05/11/2010 12:30	05/13/2010 10:20

SW-846 8260B

Prep Date	Prep Batch	Prep Method	Dilution	Analyzed	By	Analytical Batch
			500	05/22/2010 05:58	SLR	432421

CAS#	Parameter	Result	RDL	REG LIMIT	Units
71-55-6	1,1,1-Trichloroethane	ND	2100		ug/Kg
79-34-5	1,1,2,2-Tetrachloroethane	ND	2100		ug/Kg
79-00-5	1,1,2-Trichloroethane	ND	2100		ug/Kg
75-34-3	1,1-Dichloroethane	ND	2100		ug/Kg
75-35-4	1,1-Dichloroethene	ND	2100		ug/Kg
107-06-2	1,2-Dichloroethane	ND	2100		ug/Kg
78-87-5	1,2-Dichloropropane	ND	2100		ug/Kg
78-93-3	2-Butanone	ND	2100		ug/Kg
591-78-6	2-Hexanone	ND	2100		ug/Kg
108-10-1	4-Methyl-2-pentanone	ND	2100		ug/Kg
67-64-1	Acetone	ND	10000		ug/Kg
71-43-2	Benzene	ND	2100		ug/Kg
75-27-4	Bromodichloromethane	ND	2100		ug/Kg
75-25-2	Bromoform	ND	2100		ug/Kg
74-83-9	Bromomethane	ND	2100		ug/Kg
75-15-0	Carbon disulfide	ND	2100		ug/Kg
56-23-5	Carbon tetrachloride	ND	2100		ug/Kg
108-90-7	Chlorobenzene	ND	2100		ug/Kg
75-00-3	Chloroethane	ND	2100		ug/Kg
67-66-3	Chloroform	ND	2100		ug/Kg
74-87-3	Chloromethane	ND	2100		ug/Kg
124-48-1	Dibromochloromethane	ND	2100		ug/Kg
10061-01-5	cis-1,3-Dichloropropene	ND	2100		ug/Kg
10061-02-6	trans-1,3-Dichloropropene	ND	2100		ug/Kg
100-41-4	Ethylbenzene	ND	2100		ug/Kg
75-09-2	Methylene chloride	ND	4200		ug/Kg
100-42-5	Styrene	ND	2100		ug/Kg
127-18-4	Tetrachloroethene	ND	2100		ug/Kg
108-88-3	Toluene	ND	2100		ug/Kg
79-01-6	**Trichloroethene**	**26700**	**2100**		**ug/Kg**
108-05-4	Vinyl acetate	ND	2100		ug/Kg
75-01-4	Vinyl chloride	ND	2100		ug/Kg
1330-20-7	Xylene (total)	ND	4200		ug/Kg
156-59-2	**cis-1,2-Dichloroethene**	**8810**	**2100**		**ug/Kg**
156-60-5	trans-1,2-Dichloroethene	ND	2100		ug/Kg

CAS#	Surrogate	Conc. Spiked	Conc. Rec	Units	% Recovery	Rec Limits
460-00-4	4-Bromofluorobenzene	20900	19600	ug/Kg	94	62 - 127
1868-53-7	Dibromofluoromethane	20900	21800	ug/Kg	104	65 - 130
2037-26-5	Toluene d8	20900	22900	ug/Kg	109	71 - 132
17060-07-0	1,2-Dichloroethane-d4	20900	20900	ug/Kg	100	62 - 125

RESULTS REPORTED ON A WET WEIGHT BASIS

GCAL ID	Client ID	Matrix	Collect Date/Time	Receive Date/Time
21005134818	33B105/SB3	Solid	05/11/2010 12:40	05/13/2010 10:20

SW-846 8260B

Prep Date	Prep Batch	Prep Method	Dilution	Analyzed	By	Analytical Batch
			500	05/24/2010 18:18	JCK	432508

CAS#	Parameter	Result	RDL	REG LIMIT	Units
71-55-6	1,1,1-Trichloroethane	ND	2100		ug/Kg
79-34-5	1,1,2,2-Tetrachloroethane	ND	2100		ug/Kg
79-00-5	1,1,2-Trichloroethane	ND	2100		ug/Kg
75-34-3	1,1-Dichloroethane	ND	2100		ug/Kg
75-35-4	1,1-Dichloroethene	ND	2100		ug/Kg
107-06-2	1,2-Dichloroethane	ND	2100		ug/Kg
78-87-5	1,2-Dichloropropane	ND	2100		ug/Kg
78-93-3	2-Butanone	ND	2100		ug/Kg
591-78-6	2-Hexanone	ND	2100		ug/Kg
108-10-1	4-Methyl-2-pentanone	ND	2100		ug/Kg
67-64-1	Acetone	ND	11000		ug/Kg
71-43-2	Benzene	ND	2100		ug/Kg
75-27-4	Bromodichloromethane	ND	2100		ug/Kg
75-25-2	Bromoform	ND	2100		ug/Kg
74-83-9	Bromomethane	ND	2100		ug/Kg
75-15-0	Carbon disulfide	ND	2100		ug/Kg
56-23-5	Carbon tetrachloride	ND	2100		ug/Kg
108-90-7	Chlorobenzene	ND	2100		ug/Kg
75-00-3	Chloroethane	ND	2100		ug/Kg
67-66-3	Chloroform	ND	2100		ug/Kg
74-87-3	Chloromethane	ND	2100		ug/Kg
124-48-1	Dibromochloromethane	ND	2100		ug/Kg
10061-01-5	cis-1,3-Dichloropropene	ND	2100		ug/Kg
10061-02-6	trans-1,3-Dichloropropene	ND	2100		ug/Kg
100-41-4	Ethylbenzene	ND	2100		ug/Kg
75-09-2	Methylene chloride	ND	4300		ug/Kg
100-42-5	Styrene	ND	2100		ug/Kg
127-18-4	Tetrachloroethene	ND	2100		ug/Kg
108-88-3	Toluene	ND	2100		ug/Kg
79-01-6	**Trichloroethene**	**42800**	**2100**		**ug/Kg**
108-05-4	Vinyl acetate	ND	2100		ug/Kg
75-01-4	Vinyl chloride	ND	2100		ug/Kg
1330-20-7	Xylene (total)	ND	4300		ug/Kg
156-59-2	**cis-1,2-Dichloroethene**	**15600**	**2100**		**ug/Kg**
156-60-5	trans-1,2-Dichloroethene	ND	2100		ug/Kg

CAS#	Surrogate	Conc. Spiked	Conc. Rec	Units	% Recovery	Rec Limits
460-00-4	4-Bromofluorobenzene	21300	19700	ug/Kg	92	62 - 127
1868-53-7	Dibromofluoromethane	21300	21700	ug/Kg	102	65 - 130
2037-26-5	Toluene d8	21300	23500	ug/Kg	110	71 - 132
17060-07-0	1,2-Dichloroethane-d4	21300	22800	ug/Kg	107	62 - 125

RESULTS REPORTED ON A WET WEIGHT BASIS

GCAL ID	Client ID	Matrix	Collect Date/Time	Receive Date/Time
21005134819	33B106/SB1	Solid	05/11/2010 12:48	05/13/2010 10:20

SW-846 8260B

Prep Date	Prep Batch	Prep Method	Dilution	Analyzed	By	Analytical Batch
			50	05/22/2010 06:43	SLR	432421

CAS#	Parameter	Result	RDL	REG LIMIT	Units
71-55-6	1,1,1-Trichloroethane	ND	210		ug/Kg
79-34-5	1,1,2,2-Tetrachloroethane	ND	210		ug/Kg
79-00-5	1,1,2-Trichloroethane	ND	210		ug/Kg
75-34-3	1,1-Dichloroethane	ND	210		ug/Kg
75-35-4	1,1-Dichloroethene	ND	210		ug/Kg
107-06-2	1,2-Dichloroethane	ND	210		ug/Kg
78-87-5	1,2-Dichloropropane	ND	210		ug/Kg
78-93-3	2-Butanone	ND	210		ug/Kg
591-78-6	2-Hexanone	ND	210		ug/Kg
108-10-1	4-Methyl-2-pentanone	ND	210		ug/Kg
67-64-1	Acetone	ND	1000		ug/Kg
71-43-2	Benzene	ND	210		ug/Kg
75-27-4	Bromodichloromethane	ND	210		ug/Kg
75-25-2	Bromoform	ND	210		ug/Kg
74-83-9	Bromomethane	ND	210		ug/Kg
75-15-0	Carbon disulfide	ND	210		ug/Kg
56-23-5	Carbon tetrachloride	ND	210		ug/Kg
108-90-7	Chlorobenzene	ND	210		ug/Kg
75-00-3	Chloroethane	ND	210		ug/Kg
67-66-3	Chloroform	ND	210		ug/Kg
74-87-3	Chloromethane	ND	210		ug/Kg
124-48-1	Dibromochloromethane	ND	210		ug/Kg
10061-01-5	cis-1,3-Dichloropropene	ND	210		ug/Kg
10061-02-6	trans-1,3-Dichloropropene	ND	210		ug/Kg
100-41-4	Ethylbenzene	ND	210		ug/Kg
75-09-2	Methylene chloride	ND	420		ug/Kg
100-42-5	Styrene	ND	210		ug/Kg
127-18-4	Tetrachloroethene	ND	210		ug/Kg
108-88-3	Toluene	ND	210		ug/Kg
79-01-6	**Trichloroethene**	**349**	**210**		**ug/Kg**
108-05-4	Vinyl acetate	ND	210		ug/Kg
75-01-4	Vinyl chloride	ND	210		ug/Kg
1330-20-7	Xylene (total)	ND	420		ug/Kg
156-59-2	cis-1,2-Dichloroethene	ND	210		ug/Kg
156-60-5	trans-1,2-Dichloroethene	ND	210		ug/Kg

CAS#	Surrogate	Conc. Spiked	Conc. Rec	Units	% Recovery	Rec Limits
460-00-4	4-Bromofluorobenzene	2080	2040	ug/Kg	98	62 - 127
1868-53-7	Dibromofluoromethane	2080	2110	ug/Kg	101	65 - 130
2037-26-5	Toluene d8	2080	2170	ug/Kg	104	71 - 132
17060-07-0	1,2-Dichloroethane-d4	2080	2260	ug/Kg	108	62 - 125

RESULTS REPORTED ON A WET WEIGHT BASIS

GCAL ID	Client ID	Matrix	Collect Date/Time	Receive Date/Time
21005134820	33B106/SB2	Solid	05/11/2010 13:00	05/13/2010 10:20

SW-846 8260B

Prep Date	Prep Batch	Prep Method	Dilution	Analyzed	By	Analytical Batch
			50	05/22/2010 07:06	SLR	432421

CAS#	Parameter	Result	RDL	REG LIMIT	Units
71-55-6	1,1,1-Trichloroethane	ND	210		ug/Kg
79-34-5	1,1,2,2-Tetrachloroethane	ND	210		ug/Kg
79-00-5	1,1,2-Trichloroethane	ND	210		ug/Kg
75-34-3	1,1-Dichloroethane	ND	210		ug/Kg
75-35-4	1,1-Dichloroethene	ND	210		ug/Kg
107-06-2	1,2-Dichloroethane	ND	210		ug/Kg
78-87-5	1,2-Dichloropropane	ND	210		ug/Kg
78-93-3	2-Butanone	ND	210		ug/Kg
591-78-6	2-Hexanone	ND	210		ug/Kg
108-10-1	4-Methyl-2-pentanone	ND	210		ug/Kg
67-64-1	Acetone	ND	1100		ug/Kg
71-43-2	Benzene	ND	210		ug/Kg
75-27-4	Bromodichloromethane	ND	210		ug/Kg
75-25-2	Bromoform	ND	210		ug/Kg
74-83-9	Bromomethane	ND	210		ug/Kg
75-15-0	Carbon disulfide	ND	210		ug/Kg
56-23-5	Carbon tetrachloride	ND	210		ug/Kg
108-90-7	Chlorobenzene	ND	210		ug/Kg
75-00-3	Chloroethane	ND	210		ug/Kg
67-66-3	Chloroform	ND	210		ug/Kg
74-87-3	Chloromethane	ND	210		ug/Kg
124-48-1	Dibromochloromethane	ND	210		ug/Kg
10061-01-5	cis-1,3-Dichloropropene	ND	210		ug/Kg
10061-02-6	trans-1,3-Dichloropropene	ND	210		ug/Kg
100-41-4	Ethylbenzene	ND	210		ug/Kg
75-09-2	Methylene chloride	ND	430		ug/Kg
100-42-5	Styrene	ND	210		ug/Kg
127-18-4	Tetrachloroethene	ND	210		ug/Kg
108-88-3	Toluene	ND	210		ug/Kg
79-01-6	**Trichloroethene**	**289**	**210**		**ug/Kg**
108-05-4	Vinyl acetate	ND	210		ug/Kg
75-01-4	Vinyl chloride	ND	210		ug/Kg
1330-20-7	Xylene (total)	ND	430		ug/Kg
156-59-2	cis-1,2-Dichloroethene	ND	210		ug/Kg
156-60-5	trans-1,2-Dichloroethene	ND	210		ug/Kg

CAS#	Surrogate	Conc. Spiked	Conc. Rec	Units	% Recovery	Rec Limits
460-00-4	4-Bromofluorobenzene	2130	1930	ug/Kg	91	62 - 127
1868-53-7	Dibromofluoromethane	2130	2180	ug/Kg	103	65 - 130
2037-26-5	Toluene d8	2130	2210	ug/Kg	104	71 - 132
17060-07-0	1,2-Dichloroethane-d4	2130	2240	ug/Kg	105	62 - 125

RESULTS REPORTED ON A WET WEIGHT BASIS

GCAL ID	Client ID	Matrix	Collect Date/Time	Receive Date/Time
21005134821	33B106/SB3	Solid	05/11/2010 13:08	05/13/2010 10:20

SW-846 8260B

Prep Date	Prep Batch	Prep Method	Dilution	Analyzed	By	Analytical Batch
			50	05/22/2010 07:29	SLR	432421

CAS#	Parameter	Result	RDL	REG LIMIT	Units
71-55-6	1,1,1-Trichloroethane	ND	220		ug/Kg
79-34-5	1,1,2,2-Tetrachloroethane	ND	220		ug/Kg
79-00-5	1,1,2-Trichloroethane	ND	220		ug/Kg
75-34-3	1,1-Dichloroethane	ND	220		ug/Kg
75-35-4	1,1-Dichloroethene	ND	220		ug/Kg
107-06-2	1,2-Dichloroethane	ND	220		ug/Kg
78-87-5	1,2-Dichloropropane	ND	220		ug/Kg
78-93-3	2-Butanone	ND	220		ug/Kg
591-78-6	2-Hexanone	ND	220		ug/Kg
108-10-1	4-Methyl-2-pentanone	ND	220		ug/Kg
67-64-1	Acetone	ND	1100		ug/Kg
71-43-2	Benzene	ND	220		ug/Kg
75-27-4	Bromodichloromethane	ND	220		ug/Kg
75-25-2	Bromoform	ND	220		ug/Kg
74-83-9	Bromomethane	ND	220		ug/Kg
75-15-0	Carbon disulfide	ND	220		ug/Kg
56-23-5	Carbon tetrachloride	ND	220		ug/Kg
108-90-7	Chlorobenzene	ND	220		ug/Kg
75-00-3	Chloroethane	ND	220		ug/Kg
67-66-3	Chloroform	ND	220		ug/Kg
74-87-3	Chloromethane	ND	220		ug/Kg
124-48-1	Dibromochloromethane	ND	220		ug/Kg
10061-01-5	cis-1,3-Dichloropropene	ND	220		ug/Kg
10061-02-6	trans-1,3-Dichloropropene	ND	220		ug/Kg
100-41-4	Ethylbenzene	ND	220		ug/Kg
75-09-2	Methylene chloride	ND	440		ug/Kg
100-42-5	Styrene	ND	220		ug/Kg
127-18-4	Tetrachloroethene	ND	220		ug/Kg
108-88-3	Toluene	ND	220		ug/Kg
79-01-6	**Trichloroethene**	**235**	**220**		**ug/Kg**
108-05-4	Vinyl acetate	ND	220		ug/Kg
75-01-4	Vinyl chloride	ND	220		ug/Kg
1330-20-7	Xylene (total)	ND	440		ug/Kg
156-59-2	cis-1,2-Dichloroethene	ND	220		ug/Kg
156-60-5	trans-1,2-Dichloroethene	ND	220		ug/Kg

CAS#	Surrogate	Conc. Spiked	Conc. Rec	Units	% Recovery	Rec Limits
460-00-4	4-Bromofluorobenzene	2180	2170	ug/Kg	99	62 - 127
1868-53-7	Dibromofluoromethane	2180	2250	ug/Kg	103	65 - 130
2037-26-5	Toluene d8	2180	2350	ug/Kg	108	71 - 132
17060-07-0	1,2-Dichloroethane-d4	2180	2140	ug/Kg	98	62 - 125

RESULTS REPORTED ON A WET WEIGHT BASIS

GCAL ID	Client ID	Matrix	Collect Date/Time	Receive Date/Time
21005134822	33B107/SB1	Solid	05/11/2010 13:22	05/13/2010 10:20

SW-846 8260B

Prep Date	Prep Batch	Prep Method	Dilution	Analyzed	By	Analytical Batch
			100	05/22/2010 07:51	SLR	432421

CAS#	Parameter	Result	RDL	REG LIMIT	Units
71-55-6	1,1,1-Trichloroethane	ND	490		ug/Kg
79-34-5	1,1,2,2-Tetrachloroethane	ND	490		ug/Kg
79-00-5	1,1,2-Trichloroethane	ND	490		ug/Kg
75-34-3	1,1-Dichloroethane	ND	490		ug/Kg
75-35-4	1,1-Dichloroethene	ND	490		ug/Kg
107-06-2	1,2-Dichloroethane	ND	490		ug/Kg
78-87-5	1,2-Dichloropropane	ND	490		ug/Kg
78-93-3	2-Butanone	ND	490		ug/Kg
591-78-6	2-Hexanone	ND	490		ug/Kg
108-10-1	4-Methyl-2-pentanone	ND	490		ug/Kg
67-64-1	Acetone	ND	2500		ug/Kg
71-43-2	Benzene	ND	490		ug/Kg
75-27-4	Bromodichloromethane	ND	490		ug/Kg
75-25-2	Bromoform	ND	490		ug/Kg
74-83-9	Bromomethane	ND	490		ug/Kg
75-15-0	Carbon disulfide	ND	490		ug/Kg
56-23-5	Carbon tetrachloride	ND	490		ug/Kg
108-90-7	Chlorobenzene	ND	490		ug/Kg
75-00-3	Chloroethane	ND	490		ug/Kg
67-66-3	Chloroform	ND	490		ug/Kg
74-87-3	Chloromethane	ND	490		ug/Kg
124-48-1	Dibromochloromethane	ND	490		ug/Kg
10061-01-5	cis-1,3-Dichloropropene	ND	490		ug/Kg
10061-02-6	trans-1,3-Dichloropropene	ND	490		ug/Kg
100-41-4	Ethylbenzene	ND	490		ug/Kg
75-09-2	Methylene chloride	ND	990		ug/Kg
100-42-5	Styrene	ND	490		ug/Kg
127-18-4	Tetrachloroethene	ND	490		ug/Kg
108-88-3	Toluene	ND	490		ug/Kg
79-01-6	**Trichloroethene**	**7800**	**490**		**ug/Kg**
108-05-4	Vinyl acetate	ND	490		ug/Kg
75-01-4	Vinyl chloride	ND	490		ug/Kg
1330-20-7	Xylene (total)	ND	990		ug/Kg
156-59-2	**cis-1,2-Dichloroethene**	**1480**	**490**		**ug/Kg**
156-60-5	trans-1,2-Dichloroethene	ND	490		ug/Kg

CAS#	Surrogate	Conc. Spiked	Conc. Rec	Units	% Recovery	Rec Limits
460-00-4	4-Bromofluorobenzene	4930	4680	ug/Kg	95	62 - 127
1868-53-7	Dibromofluoromethane	4930	5070	ug/Kg	103	65 - 130
2037-26-5	Toluene d8	4930	5360	ug/Kg	109	71 - 132
17060-07-0	1,2-Dichloroethane-d4	4930	5120	ug/Kg	104	62 - 125

RESULTS REPORTED ON A WET WEIGHT BASIS

GCAL ID	Client ID	Matrix	Collect Date/Time	Receive Date/Time
21005134823	33B107/SB2	Solid	05/11/2010 13:27	05/13/2010 10:20

SW-846 8260B

Prep Date	Prep Batch	Prep Method	Dilution	Analyzed	By	Analytical Batch
			50	05/22/2010 08:14	SLR	432421

CAS#	Parameter	Result	RDL	REG LIMIT	Units
71-55-6	1,1,1-Trichloroethane	ND	240		ug/Kg
79-34-5	1,1,2,2-Tetrachloroethane	ND	240		ug/Kg
79-00-5	1,1,2-Trichloroethane	ND	240		ug/Kg
75-34-3	1,1-Dichloroethane	ND	240		ug/Kg
75-35-4	1,1-Dichloroethene	ND	240		ug/Kg
107-06-2	1,2-Dichloroethane	ND	240		ug/Kg
78-87-5	1,2-Dichloropropane	ND	240		ug/Kg
78-93-3	2-Butanone	ND	240		ug/Kg
591-78-6	2-Hexanone	ND	240		ug/Kg
108-10-1	4-Methyl-2-pentanone	ND	240		ug/Kg
67-64-1	Acetone	ND	1200		ug/Kg
71-43-2	Benzene	ND	240		ug/Kg
75-27-4	Bromodichloromethane	ND	240		ug/Kg
75-25-2	Bromoform	ND	240		ug/Kg
74-83-9	Bromomethane	ND	240		ug/Kg
75-15-0	Carbon disulfide	ND	240		ug/Kg
56-23-5	Carbon tetrachloride	ND	240		ug/Kg
108-90-7	Chlorobenzene	ND	240		ug/Kg
75-00-3	Chloroethane	ND	240		ug/Kg
67-66-3	Chloroform	ND	240		ug/Kg
74-87-3	Chloromethane	ND	240		ug/Kg
124-48-1	Dibromochloromethane	ND	240		ug/Kg
10061-01-5	cis-1,3-Dichloropropene	ND	240		ug/Kg
10061-02-6	trans-1,3-Dichloropropene	ND	240		ug/Kg
100-41-4	Ethylbenzene	ND	240		ug/Kg
75-09-2	Methylene chloride	ND	470		ug/Kg
100-42-5	Styrene	ND	240		ug/Kg
127-18-4	Tetrachloroethene	ND	240		ug/Kg
108-88-3	Toluene	ND	240		ug/Kg
79-01-6	**Trichloroethene**	**5620**	**240**		**ug/Kg**
108-05-4	Vinyl acetate	ND	240		ug/Kg
75-01-4	Vinyl chloride	ND	240		ug/Kg
1330-20-7	Xylene (total)	ND	470		ug/Kg
156-59-2	**cis-1,2-Dichloroethene**	**1480**	**240**		**ug/Kg**
156-60-5	trans-1,2-Dichloroethene	ND	240		ug/Kg

CAS#	Surrogate	Conc. Spiked	Conc. Rec	Units	% Recovery	Rec Limits
460-00-4	4-Bromofluorobenzene	2360	2310	ug/Kg	98	62 - 127
1868-53-7	Dibromofluoromethane	2360	2500	ug/Kg	106	65 - 130
2037-26-5	Toluene d8	2360	2600	ug/Kg	110	71 - 132
17060-07-0	1,2-Dichloroethane-d4	2360	2550	ug/Kg	108	62 - 125

RESULTS REPORTED ON A WET WEIGHT BASIS

GCAL ID	Client ID	Matrix	Collect Date/Time	Receive Date/Time
21005134824	33B107/SB3	Solid	05/11/2010 13:40	05/13/2010 10:20

SW-846 8260B

Prep Date	Prep Batch	Prep Method	Dilution	Analyzed	By	Analytical Batch
			50	05/22/2010 08:36	SLR	432421

CAS#	Parameter	Result	RDL	REG LIMIT	Units
71-55-6	1,1,1-Trichloroethane	ND	210		ug/Kg
79-34-5	1,1,2,2-Tetrachloroethane	ND	210		ug/Kg
79-00-5	1,1,2-Trichloroethane	ND	210		ug/Kg
75-34-3	1,1-Dichloroethane	ND	210		ug/Kg
75-35-4	1,1-Dichloroethene	ND	210		ug/Kg
107-06-2	1,2-Dichloroethane	ND	210		ug/Kg
78-87-5	1,2-Dichloropropane	ND	210		ug/Kg
78-93-3	2-Butanone	ND	210		ug/Kg
591-78-6	2-Hexanone	ND	210		ug/Kg
108-10-1	4-Methyl-2-pentanone	ND	210		ug/Kg
67-64-1	Acetone	ND	1000		ug/Kg
71-43-2	Benzene	ND	210		ug/Kg
75-27-4	Bromodichloromethane	ND	210		ug/Kg
75-25-2	Bromoform	ND	210		ug/Kg
74-83-9	Bromomethane	ND	210		ug/Kg
75-15-0	Carbon disulfide	ND	210		ug/Kg
56-23-5	Carbon tetrachloride	ND	210		ug/Kg
108-90-7	Chlorobenzene	ND	210		ug/Kg
75-00-3	Chloroethane	ND	210		ug/Kg
67-66-3	Chloroform	ND	210		ug/Kg
74-87-3	Chloromethane	ND	210		ug/Kg
124-48-1	Dibromochloromethane	ND	210		ug/Kg
10061-01-5	cis-1,3-Dichloropropene	ND	210		ug/Kg
10061-02-6	trans-1,3-Dichloropropene	ND	210		ug/Kg
100-41-4	Ethylbenzene	ND	210		ug/Kg
75-09-2	Methylene chloride	ND	410		ug/Kg
100-42-5	Styrene	ND	210		ug/Kg
127-18-4	Tetrachloroethene	ND	210		ug/Kg
108-88-3	Toluene	ND	210		ug/Kg
79-01-6	**Trichloroethene**	**4860**	**210**		**ug/Kg**
108-05-4	Vinyl acetate	ND	210		ug/Kg
75-01-4	Vinyl chloride	ND	210		ug/Kg
1330-20-7	Xylene (total)	ND	410		ug/Kg
156-59-2	**cis-1,2-Dichloroethene**	**1120**	**210**		**ug/Kg**
156-60-5	trans-1,2-Dichloroethene	ND	210		ug/Kg

CAS#	Surrogate	Conc. Spiked	Conc. Rec	Units	% Recovery	Rec Limits
460-00-4	4-Bromofluorobenzene	2070	2000	ug/Kg	97	62 - 127
1868-53-7	Dibromofluoromethane	2070	2180	ug/Kg	105	65 - 130
2037-26-5	Toluene d8	2070	2130	ug/Kg	103	71 - 132
17060-07-0	1,2-Dichloroethane-d4	2070	2170	ug/Kg	105	62 - 125

RESULTS REPORTED ON A WET WEIGHT BASIS

GCAL ID	Client ID	Matrix	Collect Date/Time	Receive Date/Time
21005134825	33B108/SB1	Solid	05/11/2010 15:00	05/13/2010 10:20

SW-846 8260B

Prep Date	Prep Batch	Prep Method	Dilution	Analyzed	By	Analytical Batch
			1	05/21/2010 19:56	JCK	432388

CAS#	Parameter	Result	RDL	REG LIMIT	Units
71-55-6	1,1,1-Trichloroethane	ND	4		ug/Kg
79-34-5	1,1,2,2-Tetrachloroethane	ND	4		ug/Kg
79-00-5	1,1,2-Trichloroethane	ND	4		ug/Kg
75-34-3	1,1-Dichloroethane	ND	4		ug/Kg
75-35-4	1,1-Dichloroethene	ND	4		ug/Kg
107-06-2	1,2-Dichloroethane	ND	4		ug/Kg
78-87-5	1,2-Dichloropropane	ND	4		ug/Kg
78-93-3	**2-Butanone**	**9.97**	**4**		**ug/Kg**
591-78-6	2-Hexanone	ND	4		ug/Kg
108-10-1	4-Methyl-2-pentanone	ND	4		ug/Kg
67-64-1	**Acetone**	**52.7**	**21**		**ug/Kg**
71-43-2	Benzene	ND	4		ug/Kg
75-27-4	Bromodichloromethane	ND	4		ug/Kg
75-25-2	Bromoform	ND	4		ug/Kg
74-83-9	Bromomethane	ND	4		ug/Kg
75-15-0	Carbon disulfide	ND	4		ug/Kg
56-23-5	Carbon tetrachloride	ND	4		ug/Kg
108-90-7	Chlorobenzene	ND	4		ug/Kg
75-00-3	Chloroethane	ND	4		ug/Kg
67-66-3	Chloroform	ND	4		ug/Kg
74-87-3	Chloromethane	ND	4		ug/Kg
124-48-1	Dibromochloromethane	ND	4		ug/Kg
10061-01-5	cis-1,3-Dichloropropene	ND	4		ug/Kg
10061-02-6	trans-1,3-Dichloropropene	ND	4		ug/Kg
100-41-4	Ethylbenzene	ND	4		ug/Kg
75-09-2	Methylene chloride	ND	9		ug/Kg
100-42-5	Styrene	ND	4		ug/Kg
127-18-4	Tetrachloroethene	ND	4		ug/Kg
108-88-3	Toluene	ND	4		ug/Kg
79-01-6	**Trichloroethene**	**39.9**	**4**		**ug/Kg**
108-05-4	Vinyl acetate	ND	4		ug/Kg
75-01-4	Vinyl chloride	ND	4		ug/Kg
1330-20-7	Xylene (total)	ND	9		ug/Kg
156-59-2	cis-1,2-Dichloroethene	ND	4		ug/Kg
156-60-5	trans-1,2-Dichloroethene	ND	4		ug/Kg

CAS#	Surrogate	Conc. Spiked	Conc. Rec	Units	% Recovery	Rec Limits
460-00-4	4-Bromofluorobenzene	42.7	44.5	ug/Kg	104	62 - 127
1868-53-7	Dibromofluoromethane	42.7	44.7	ug/Kg	105	65 - 130
2037-26-5	Toluene d8	42.7	44.8	ug/Kg	105	71 - 132
17060-07-0	1,2-Dichloroethane-d4	42.7	50	ug/Kg	117	62 - 125

RESULTS REPORTED ON A WET WEIGHT BASIS

GCAL ID	Client ID	Matrix	Collect Date/Time	Receive Date/Time
21005134826	33B108/SB1MS	Solid	05/11/2010 15:00	05/13/2010 10:20

SW-846 8260B

Prep Date	Prep Batch	Prep Method	Dilution	Analyzed	By	Analytical Batch
			1	05/21/2010 20:40	JCK	432388

CAS#	Parameter	Result	RDL	REG LIMIT	Units
71-55-6	1,1,1-Trichloroethane	40.6	4		ug/Kg
79-34-5	1,1,2,2-Tetrachloroethane	44.9	4		ug/Kg
79-00-5	1,1,2-Trichloroethane	43.5	4		ug/Kg
75-34-3	1,1-Dichloroethane	40.3	4		ug/Kg
75-35-4	1,1-Dichloroethene	37.9	4		ug/Kg
107-06-2	1,2-Dichloroethane	39.9	4		ug/Kg
78-87-5	1,2-Dichloropropane	37.7	4		ug/Kg
78-93-3	2-Butanone	27.5	4		ug/Kg
591-78-6	2-Hexanone	29.6	4		ug/Kg
108-10-1	4-Methyl-2-pentanone	42.2	4		ug/Kg
67-64-1	Acetone	27.4	20		ug/Kg
71-43-2	Benzene	36.5	4		ug/Kg
75-27-4	Bromodichloromethane	40.5	4		ug/Kg
75-25-2	Bromoform	48.1	4		ug/Kg
74-83-9	Bromomethane	34.5	4		ug/Kg
75-15-0	Carbon disulfide	37.5	4		ug/Kg
56-23-5	Carbon tetrachloride	42.4	4		ug/Kg
108-90-7	Chlorobenzene	44.9	4		ug/Kg
75-00-3	Chloroethane	38.8	4		ug/Kg
67-66-3	Chloroform	35.9	4		ug/Kg
74-87-3	Chloromethane	31.6	4		ug/Kg
124-48-1	Dibromochloromethane	46.2	4		ug/Kg
10061-01-5	cis-1,3-Dichloropropene	35.2	4		ug/Kg
10061-02-6	trans-1,3-Dichloropropene	43.4	4		ug/Kg
100-41-4	Ethylbenzene	41.5	4		ug/Kg
75-09-2	Methylene chloride	38.1	8		ug/Kg
100-42-5	Styrene	27.4	4		ug/Kg
127-18-4	Tetrachloroethene	46.0	4		ug/Kg
108-88-3	Toluene	42.1	4		ug/Kg
79-01-6	Trichloroethene	48.5	4		ug/Kg
108-05-4	Vinyl acetate	37.4	4		ug/Kg
75-01-4	Vinyl chloride	34.2	4		ug/Kg
1330-20-7	Xylene (total)	128	8		ug/Kg
156-59-2	cis-1,2-Dichloroethene	33.5	4		ug/Kg
156-60-5	trans-1,2-Dichloroethene	37.9	4		ug/Kg

CAS#	Surrogate	Conc. Spiked	Conc. Rec	Units	% Recovery	Rec Limits
460-00-4	4-Bromofluorobenzene	40.6	41.4	ug/Kg	102	62 - 127
1868-53-7	Dibromofluoromethane	40.6	42.3	ug/Kg	104	65 - 130
2037-26-5	Toluene d8	40.6	41.6	ug/Kg	103	71 - 132
17060-07-0	1,2-Dichloroethane-d4	40.6	42.3	ug/Kg	104	62 - 125

RESULTS REPORTED ON A WET WEIGHT BASIS

GCAL ID	Client ID	Matrix	Collect Date/Time	Receive Date/Time
21005134827	33B108/SB1MSD	Solid	05/11/2010 15:00	05/13/2010 10:20

SW-846 8260B

Prep Date	Prep Batch	Prep Method	Dilution	Analyzed	By	Analytical Batch
			1	05/21/2010 21:06	CLH	432388

CAS#	Parameter	Result	RDL	REG LIMIT	Units
71-55-6	1,1,1-Trichloroethane	51.2	5		ug/Kg
79-34-5	1,1,2,2-Tetrachloroethane	56.4	5		ug/Kg
79-00-5	1,1,2-Trichloroethane	51.5	5		ug/Kg
75-34-3	1,1-Dichloroethane	46.6	5		ug/Kg
75-35-4	1,1-Dichloroethene	47.0	5		ug/Kg
107-06-2	1,2-Dichloroethane	45.8	5		ug/Kg
78-87-5	1,2-Dichloropropane	42.5	5		ug/Kg
78-93-3	2-Butanone	37.3	5		ug/Kg
591-78-6	2-Hexanone	35.6	5		ug/Kg
108-10-1	4-Methyl-2-pentanone	52.1	5		ug/Kg
67-64-1	Acetone	62.1	25		ug/Kg
71-43-2	Benzene	43.4	5		ug/Kg
75-27-4	Bromodichloromethane	46.6	5		ug/Kg
75-25-2	Bromoform	57.4	5		ug/Kg
74-83-9	Bromomethane	45.9	5		ug/Kg
75-15-0	Carbon disulfide	46.1	5		ug/Kg
56-23-5	Carbon tetrachloride	49.7	5		ug/Kg
108-90-7	Chlorobenzene	53.5	5		ug/Kg
75-00-3	Chloroethane	43.4	5		ug/Kg
67-66-3	Chloroform	42.1	5		ug/Kg
74-87-3	Chloromethane	44.6	5		ug/Kg
124-48-1	Dibromochloromethane	52.6	5		ug/Kg
10061-01-5	cis-1,3-Dichloropropene	43.6	5		ug/Kg
10061-02-6	trans-1,3-Dichloropropene	49.2	5		ug/Kg
100-41-4	Ethylbenzene	50.6	5		ug/Kg
75-09-2	Methylene chloride	45.4	10		ug/Kg
100-42-5	Styrene	23.6	5		ug/Kg
127-18-4	Tetrachloroethene	52.8	5		ug/Kg
108-88-3	Toluene	48.5	5		ug/Kg
79-01-6	Trichloroethene	68.8	5		ug/Kg
108-05-4	Vinyl acetate	39.6	5		ug/Kg
75-01-4	Vinyl chloride	48.2	5		ug/Kg
1330-20-7	Xylene (total)	151	10		ug/Kg
156-59-2	cis-1,2-Dichloroethene	39.9	5		ug/Kg
156-60-5	trans-1,2-Dichloroethene	45.9	5		ug/Kg

CAS#	Surrogate	Conc. Spiked	Conc. Rec	Units	% Recovery	Rec Limits
460-00-4	4-Bromofluorobenzene	50	48.5	ug/Kg	97	62 - 127
1868-53-7	Dibromofluoromethane	50	48.4	ug/Kg	97	65 - 130
2037-26-5	Toluene d8	50	49.7	ug/Kg	99	71 - 132
17060-07-0	1,2-Dichloroethane-d4	50	48.2	ug/Kg	96	62 - 125

RESULTS REPORTED ON A WET WEIGHT BASIS

GCAL ID	Client ID	Matrix	Collect Date/Time	Receive Date/Time
21005134828	33B108/SB3	Solid	05/11/2010 15:35	05/13/2010 10:20

SW-846 8260B

Prep Date	Prep Batch	Prep Method	Dilution	Analyzed	By	Analytical Batch
			1	05/24/2010 15:53	WAS	432582

CAS#	Parameter	Result	RDL	REG LIMIT	Units
71-55-6	1,1,1-Trichloroethane	ND	4		ug/Kg
79-34-5	1,1,2,2-Tetrachloroethane	ND	4		ug/Kg
79-00-5	1,1,2-Trichloroethane	ND	4		ug/Kg
75-34-3	1,1-Dichloroethane	ND	4		ug/Kg
75-35-4	1,1-Dichloroethene	ND	4		ug/Kg
107-06-2	1,2-Dichloroethane	ND	4		ug/Kg
78-87-5	1,2-Dichloropropane	ND	4		ug/Kg
78-93-3	2-Butanone	ND	4		ug/Kg
591-78-6	2-Hexanone	ND	4		ug/Kg
108-10-1	4-Methyl-2-pentanone	ND	4		ug/Kg
67-64-1	Acetone	ND	22		ug/Kg
71-43-2	Benzene	ND	4		ug/Kg
75-27-4	Bromodichloromethane	ND	4		ug/Kg
75-25-2	Bromoform	ND	4		ug/Kg
74-83-9	Bromomethane	ND	4		ug/Kg
75-15-0	Carbon disulfide	ND	4		ug/Kg
56-23-5	Carbon tetrachloride	ND	4		ug/Kg
108-90-7	Chlorobenzene	ND	4		ug/Kg
75-00-3	Chloroethane	ND	4		ug/Kg
67-66-3	Chloroform	ND	4		ug/Kg
74-87-3	Chloromethane	ND	4		ug/Kg
124-48-1	Dibromochloromethane	ND	4		ug/Kg
10061-01-5	cis-1,3-Dichloropropene	ND	4		ug/Kg
10061-02-6	trans-1,3-Dichloropropene	ND	4		ug/Kg
100-41-4	Ethylbenzene	ND	4		ug/Kg
75-09-2	Methylene chloride	ND	9		ug/Kg
100-42-5	Styrene	ND	4		ug/Kg
127-18-4	Tetrachloroethene	ND	4		ug/Kg
108-88-3	Toluene	ND	4		ug/Kg
79-01-6	**Trichloroethene**	**12.9**	**4**		**ug/Kg**
108-05-4	Vinyl acetate	ND	4		ug/Kg
75-01-4	Vinyl chloride	ND	4		ug/Kg
1330-20-7	Xylene (total)	ND	9		ug/Kg
156-59-2	cis-1,2-Dichloroethene	ND	4		ug/Kg
156-60-5	trans-1,2-Dichloroethene	ND	4		ug/Kg

CAS#	Surrogate	Conc. Spiked	Conc. Rec	Units	% Recovery	Rec Limits
460-00-4	4-Bromofluorobenzene	43.5	45.6	ug/Kg	105	62 - 127
1868-53-7	Dibromofluoromethane	43.5	47	ug/Kg	108	65 - 130
2037-26-5	Toluene d8	43.5	46.4	ug/Kg	107	71 - 132
17060-07-0	1,2-Dichloroethane-d4	43.5	48.1	ug/Kg	111	62 - 125

RESULTS REPORTED ON A WET WEIGHT BASIS

GCAL ID	Client ID	Matrix	Collect Date/Time	Receive Date/Time
21005134829	33B109/SB1	Solid	05/11/2010 13:52	05/13/2010 10:20

SW-846 8260B

Prep Date	Prep Batch	Prep Method	Dilution	Analyzed	By	Analytical Batch
			50	05/22/2010 08:59	SLR	432421

CAS#	Parameter	Result	RDL	REG LIMIT	Units
71-55-6	1,1,1-Trichloroethane	ND	250		ug/Kg
79-34-5	1,1,2,2-Tetrachloroethane	ND	250		ug/Kg
79-00-5	1,1,2-Trichloroethane	ND	250		ug/Kg
75-34-3	1,1-Dichloroethane	ND	250		ug/Kg
75-35-4	1,1-Dichloroethene	ND	250		ug/Kg
107-06-2	1,2-Dichloroethane	ND	250		ug/Kg
78-87-5	1,2-Dichloropropane	ND	250		ug/Kg
78-93-3	2-Butanone	ND	250		ug/Kg
591-78-6	2-Hexanone	ND	250		ug/Kg
108-10-1	4-Methyl-2-pentanone	ND	250		ug/Kg
67-64-1	Acetone	ND	1200		ug/Kg
71-43-2	Benzene	ND	250		ug/Kg
75-27-4	Bromodichloromethane	ND	250		ug/Kg
75-25-2	Bromoform	ND	250		ug/Kg
74-83-9	Bromomethane	ND	250		ug/Kg
75-15-0	Carbon disulfide	ND	250		ug/Kg
56-23-5	Carbon tetrachloride	ND	250		ug/Kg
108-90-7	Chlorobenzene	ND	250		ug/Kg
75-00-3	Chloroethane	ND	250		ug/Kg
67-66-3	Chloroform	ND	250		ug/Kg
74-87-3	Chloromethane	ND	250		ug/Kg
124-48-1	Dibromochloromethane	ND	250		ug/Kg
10061-01-5	cis-1,3-Dichloropropene	ND	250		ug/Kg
10061-02-6	trans-1,3-Dichloropropene	ND	250		ug/Kg
100-41-4	Ethylbenzene	ND	250		ug/Kg
75-09-2	Methylene chloride	ND	500		ug/Kg
100-42-5	Styrene	ND	250		ug/Kg
127-18-4	Tetrachloroethene	ND	250		ug/Kg
108-88-3	Toluene	ND	250		ug/Kg
79-01-6	**Trichloroethene**	**1010**	**250**		**ug/Kg**
108-05-4	Vinyl acetate	ND	250		ug/Kg
75-01-4	Vinyl chloride	ND	250		ug/Kg
1330-20-7	Xylene (total)	ND	500		ug/Kg
156-59-2	**cis-1,2-Dichloroethene**	**315**	**250**		**ug/Kg**
156-60-5	trans-1,2-Dichloroethene	ND	250		ug/Kg

CAS#	Surrogate	Conc. Spiked	Conc. Rec	Units	% Recovery	Rec Limits
460-00-4	4-Bromofluorobenzene	2480	2410	ug/Kg	97	62 - 127
1868-53-7	Dibromofluoromethane	2480	2560	ug/Kg	103	65 - 130
2037-26-5	Toluene d8	2480	2510	ug/Kg	101	71 - 132
17060-07-0	1,2-Dichloroethane-d4	2480	2380	ug/Kg	96	62 - 125

RESULTS REPORTED ON A WET WEIGHT BASIS

GCAL ID	Client ID	Matrix	Collect Date/Time	Receive Date/Time
21005134830	33B109/SB2	Solid	05/11/2010 14:08	05/13/2010 10:20

SW-846 8260B

Prep Date	Prep Batch	Prep Method	Dilution	Analyzed	By	Analytical Batch
			50	05/22/2010 09:22	SLR	432421

CAS#	Parameter	Result	RDL	REG LIMIT	Units
71-55-6	1,1,1-Trichloroethane	ND	250		ug/Kg
79-34-5	1,1,2,2-Tetrachloroethane	ND	250		ug/Kg
79-00-5	1,1,2-Trichloroethane	ND	250		ug/Kg
75-34-3	1,1-Dichloroethane	ND	250		ug/Kg
75-35-4	1,1-Dichloroethene	ND	250		ug/Kg
107-06-2	1,2-Dichloroethane	ND	250		ug/Kg
78-87-5	1,2-Dichloropropane	ND	250		ug/Kg
78-93-3	2-Butanone	ND	250		ug/Kg
591-78-6	2-Hexanone	ND	250		ug/Kg
108-10-1	4-Methyl-2-pentanone	ND	250		ug/Kg
67-64-1	Acetone	ND	1200		ug/Kg
71-43-2	Benzene	ND	250		ug/Kg
75-27-4	Bromodichloromethane	ND	250		ug/Kg
75-25-2	Bromoform	ND	250		ug/Kg
74-83-9	Bromomethane	ND	250		ug/Kg
75-15-0	Carbon disulfide	ND	250		ug/Kg
56-23-5	Carbon tetrachloride	ND	250		ug/Kg
108-90-7	Chlorobenzene	ND	250		ug/Kg
75-00-3	Chloroethane	ND	250		ug/Kg
67-66-3	Chloroform	ND	250		ug/Kg
74-87-3	Chloromethane	ND	250		ug/Kg
124-48-1	Dibromochloromethane	ND	250		ug/Kg
10061-01-5	cis-1,3-Dichloropropene	ND	250		ug/Kg
10061-02-6	trans-1,3-Dichloropropene	ND	250		ug/Kg
100-41-4	Ethylbenzene	ND	250		ug/Kg
75-09-2	Methylene chloride	ND	500		ug/Kg
100-42-5	Styrene	ND	250		ug/Kg
127-18-4	Tetrachloroethene	ND	250		ug/Kg
108-88-3	Toluene	ND	250		ug/Kg
79-01-6	**Trichloroethene**	**2580**	**250**		**ug/Kg**
108-05-4	Vinyl acetate	ND	250		ug/Kg
75-01-4	Vinyl chloride	ND	250		ug/Kg
1330-20-7	Xylene (total)	ND	500		ug/Kg
156-59-2	**cis-1,2-Dichloroethene**	**598**	**250**		**ug/Kg**
156-60-5	trans-1,2-Dichloroethene	ND	250		ug/Kg

CAS#	Surrogate	Conc. Spiked	Conc. Rec	Units	% Recovery	Rec Limits
460-00-4	4-Bromofluorobenzene	2480	2380	ug/Kg	96	62 - 127
1868-53-7	Dibromofluoromethane	2480	2540	ug/Kg	102	65 - 130
2037-26-5	Toluene d8	2480	2710	ug/Kg	109	71 - 132
17060-07-0	1,2-Dichloroethane-d4	2480	2560	ug/Kg	103	62 - 125

RESULTS REPORTED ON A WET WEIGHT BASIS

GCAL ID	Client ID	Matrix	Collect Date/Time	Receive Date/Time
21005134831	33B109/SB3	Solid	05/11/2010 14:20	05/13/2010 10:20

SW-846 8260B

Prep Date	Prep Batch	Prep Method	Dilution	Analyzed	By	Analytical Batch
			50	05/24/2010 18:41	JCK	432508

CAS#	Parameter	Result	RDL	REG LIMIT	Units
71-55-6	1,1,1-Trichloroethane	ND	220		ug/Kg
79-34-5	1,1,2,2-Tetrachloroethane	ND	220		ug/Kg
79-00-5	1,1,2-Trichloroethane	ND	220		ug/Kg
75-34-3	1,1-Dichloroethane	ND	220		ug/Kg
75-35-4	1,1-Dichloroethene	ND	220		ug/Kg
107-06-2	1,2-Dichloroethane	ND	220		ug/Kg
78-87-5	1,2-Dichloropropane	ND	220		ug/Kg
78-93-3	2-Butanone	ND	220		ug/Kg
591-78-6	2-Hexanone	ND	220		ug/Kg
108-10-1	4-Methyl-2-pentanone	ND	220		ug/Kg
67-64-1	Acetone	ND	1100		ug/Kg
71-43-2	Benzene	ND	220		ug/Kg
75-27-4	Bromodichloromethane	ND	220		ug/Kg
75-25-2	Bromoform	ND	220		ug/Kg
74-83-9	Bromomethane	ND	220		ug/Kg
75-15-0	Carbon disulfide	ND	220		ug/Kg
56-23-5	Carbon tetrachloride	ND	220		ug/Kg
108-90-7	Chlorobenzene	ND	220		ug/Kg
75-00-3	Chloroethane	ND	220		ug/Kg
67-66-3	Chloroform	ND	220		ug/Kg
74-87-3	Chloromethane	ND	220		ug/Kg
124-48-1	Dibromochloromethane	ND	220		ug/Kg
10061-01-5	cis-1,3-Dichloropropene	ND	220		ug/Kg
10061-02-6	trans-1,3-Dichloropropene	ND	220		ug/Kg
100-41-4	Ethylbenzene	ND	220		ug/Kg
75-09-2	Methylene chloride	ND	440		ug/Kg
100-42-5	Styrene	ND	220		ug/Kg
127-18-4	Tetrachloroethene	ND	220		ug/Kg
108-88-3	Toluene	ND	220		ug/Kg
79-01-6	**Trichloroethene**	**1440**	**220**		**ug/Kg**
108-05-4	Vinyl acetate	ND	220		ug/Kg
75-01-4	Vinyl chloride	ND	220		ug/Kg
1330-20-7	Xylene (total)	ND	440		ug/Kg
156-59-2	**cis-1,2-Dichloroethene**	**471**	**220**		**ug/Kg**
156-60-5	trans-1,2-Dichloroethene	ND	220		ug/Kg

CAS#	Surrogate	Conc. Spiked	Conc. Rec	Units	% Recovery	Rec Limits
460-00-4	4-Bromofluorobenzene	2220	2040	ug/Kg	92	62 - 127
1868-53-7	Dibromofluoromethane	2220	2110	ug/Kg	95	65 - 130
2037-26-5	Toluene d8	2220	2260	ug/Kg	102	71 - 132
17060-07-0	1,2-Dichloroethane-d4	2220	2340	ug/Kg	105	62 - 125

RESULTS REPORTED ON A WET WEIGHT BASIS

GCAL ID	Client ID	Matrix	Collect Date/Time	Receive Date/Time
21005134832	33B109/SB3D	Solid	05/11/2010 14:20	05/13/2010 10:20

SW-846 8260B

Prep Date	Prep Batch	Prep Method	Dilution	Analyzed	By	Analytical Batch
			50	05/24/2010 19:28	JCK	432508

CAS#	Parameter	Result	RDL	REG LIMIT	Units
71-55-6	1,1,1-Trichloroethane	ND	220		ug/Kg
79-34-5	1,1,2,2-Tetrachloroethane	ND	220		ug/Kg
79-00-5	1,1,2-Trichloroethane	ND	220		ug/Kg
75-34-3	1,1-Dichloroethane	ND	220		ug/Kg
75-35-4	1,1-Dichloroethene	ND	220		ug/Kg
107-06-2	1,2-Dichloroethane	ND	220		ug/Kg
78-87-5	1,2-Dichloropropane	ND	220		ug/Kg
78-93-3	2-Butanone	ND	220		ug/Kg
591-78-6	2-Hexanone	ND	220		ug/Kg
108-10-1	4-Methyl-2-pentanone	ND	220		ug/Kg
67-64-1	Acetone	ND	1100		ug/Kg
71-43-2	Benzene	ND	220		ug/Kg
75-27-4	Bromodichloromethane	ND	220		ug/Kg
75-25-2	Bromoform	ND	220		ug/Kg
74-83-9	Bromomethane	ND	220		ug/Kg
75-15-0	Carbon disulfide	ND	220		ug/Kg
56-23-5	Carbon tetrachloride	ND	220		ug/Kg
108-90-7	Chlorobenzene	ND	220		ug/Kg
75-00-3	Chloroethane	ND	220		ug/Kg
67-66-3	Chloroform	ND	220		ug/Kg
74-87-3	Chloromethane	ND	220		ug/Kg
124-48-1	Dibromochloromethane	ND	220		ug/Kg
10061-01-5	cis-1,3-Dichloropropene	ND	220		ug/Kg
10061-02-6	trans-1,3-Dichloropropene	ND	220		ug/Kg
100-41-4	Ethylbenzene	ND	220		ug/Kg
75-09-2	Methylene chloride	ND	440		ug/Kg
100-42-5	Styrene	ND	220		ug/Kg
127-18-4	Tetrachloroethene	ND	220		ug/Kg
108-88-3	Toluene	ND	220		ug/Kg
79-01-6	**Trichloroethene**	**1610**	**220**		**ug/Kg**
108-05-4	Vinyl acetate	ND	220		ug/Kg
75-01-4	Vinyl chloride	ND	220		ug/Kg
1330-20-7	Xylene (total)	ND	440		ug/Kg
156-59-2	**cis-1,2-Dichloroethene**	**515**	**220**		**ug/Kg**
156-60-5	trans-1,2-Dichloroethene	ND	220		ug/Kg

CAS#	Surrogate	Conc. Spiked	Conc. Rec	Units	% Recovery	Rec Limits
460-00-4	4-Bromofluorobenzene	2220	2070	ug/Kg	93	62 - 127
1868-53-7	Dibromofluoromethane	2220	2220	ug/Kg	100	65 - 130
2037-26-5	Toluene d8	2220	2400	ug/Kg	108	71 - 132
17060-07-0	1,2-Dichloroethane-d4	2220	2340	ug/Kg	106	62 - 125

RESULTS REPORTED ON A WET WEIGHT BASIS

GCAL ID	Client ID	Matrix	Collect Date/Time	Receive Date/Time
21005134833	33B110/SB1	Solid	05/11/2010 14:33	05/13/2010 10:20

SW-846 8260B

Prep Date	Prep Batch	Prep Method	Dilution	Analyzed	By	Analytical Batch
			50	05/24/2010 19:50	JCK	432508

CAS#	Parameter	Result	RDL	REG LIMIT	Units
71-55-6	1,1,1-Trichloroethane	ND	210		ug/Kg
79-34-5	1,1,2,2-Tetrachloroethane	ND	210		ug/Kg
79-00-5	1,1,2-Trichloroethane	ND	210		ug/Kg
75-34-3	1,1-Dichloroethane	ND	210		ug/Kg
75-35-4	1,1-Dichloroethene	ND	210		ug/Kg
107-06-2	1,2-Dichloroethane	ND	210		ug/Kg
78-87-5	1,2-Dichloropropane	ND	210		ug/Kg
78-93-3	2-Butanone	ND	210		ug/Kg
591-78-6	2-Hexanone	ND	210		ug/Kg
108-10-1	4-Methyl-2-pentanone	ND	210		ug/Kg
67-64-1	Acetone	ND	1000		ug/Kg
71-43-2	Benzene	ND	210		ug/Kg
75-27-4	Bromodichloromethane	ND	210		ug/Kg
75-25-2	Bromoform	ND	210		ug/Kg
74-83-9	Bromomethane	ND	210		ug/Kg
75-15-0	Carbon disulfide	ND	210		ug/Kg
56-23-5	Carbon tetrachloride	ND	210		ug/Kg
108-90-7	Chlorobenzene	ND	210		ug/Kg
75-00-3	Chloroethane	ND	210		ug/Kg
67-66-3	Chloroform	ND	210		ug/Kg
74-87-3	Chloromethane	ND	210		ug/Kg
124-48-1	Dibromochloromethane	ND	210		ug/Kg
10061-01-5	cis-1,3-Dichloropropene	ND	210		ug/Kg
10061-02-6	trans-1,3-Dichloropropene	ND	210		ug/Kg
100-41-4	Ethylbenzene	ND	210		ug/Kg
75-09-2	Methylene chloride	ND	420		ug/Kg
100-42-5	Styrene	ND	210		ug/Kg
127-18-4	Tetrachloroethene	ND	210		ug/Kg
108-88-3	Toluene	ND	210		ug/Kg
79-01-6	**Trichloroethene**	**361**	**210**		**ug/Kg**
108-05-4	Vinyl acetate	ND	210		ug/Kg
75-01-4	Vinyl chloride	ND	210		ug/Kg
1330-20-7	Xylene (total)	ND	420		ug/Kg
156-59-2	cis-1,2-Dichloroethene	ND	210		ug/Kg
156-60-5	trans-1,2-Dichloroethene	ND	210		ug/Kg

CAS#	Surrogate	Conc. Spiked	Conc. Rec	Units	% Recovery	Rec Limits
460-00-4	4-Bromofluorobenzene	2100	1940	ug/Kg	92	62 - 127
1868-53-7	Dibromofluoromethane	2100	2050	ug/Kg	98	65 - 130
2037-26-5	Toluene d8	2100	2230	ug/Kg	106	71 - 132
17060-07-0	1,2-Dichloroethane-d4	2100	2160	ug/Kg	103	62 - 125

RESULTS REPORTED ON A WET WEIGHT BASIS

GCAL ID	Client ID	Matrix	Collect Date/Time	Receive Date/Time
21005134834	33B110/SB2	Solid	05/11/2010 14:38	05/13/2010 10:20

SW-846 8260B

Prep Date	Prep Batch	Prep Method	Dilution	Analyzed	By	Analytical Batch
			50	05/24/2010 20:13	JCK	432508

CAS#	Parameter	Result	RDL	REG LIMIT	Units
71-55-6	1,1,1-Trichloroethane	ND	210		ug/Kg
79-34-5	1,1,2,2-Tetrachloroethane	ND	210		ug/Kg
79-00-5	1,1,2-Trichloroethane	ND	210		ug/Kg
75-34-3	1,1-Dichloroethane	ND	210		ug/Kg
75-35-4	1,1-Dichloroethene	ND	210		ug/Kg
107-06-2	1,2-Dichloroethane	ND	210		ug/Kg
78-87-5	1,2-Dichloropropane	ND	210		ug/Kg
78-93-3	2-Butanone	ND	210		ug/Kg
591-78-6	2-Hexanone	ND	210		ug/Kg
108-10-1	4-Methyl-2-pentanone	ND	210		ug/Kg
67-64-1	Acetone	ND	1000		ug/Kg
71-43-2	Benzene	ND	210		ug/Kg
75-27-4	Bromodichloromethane	ND	210		ug/Kg
75-25-2	Bromoform	ND	210		ug/Kg
74-83-9	Bromomethane	ND	210		ug/Kg
75-15-0	Carbon disulfide	ND	210		ug/Kg
56-23-5	Carbon tetrachloride	ND	210		ug/Kg
108-90-7	Chlorobenzene	ND	210		ug/Kg
75-00-3	Chloroethane	ND	210		ug/Kg
67-66-3	Chloroform	ND	210		ug/Kg
74-87-3	Chloromethane	ND	210		ug/Kg
124-48-1	Dibromochloromethane	ND	210		ug/Kg
10061-01-5	cis-1,3-Dichloropropene	ND	210		ug/Kg
10061-02-6	trans-1,3-Dichloropropene	ND	210		ug/Kg
100-41-4	Ethylbenzene	ND	210		ug/Kg
75-09-2	Methylene chloride	ND	420		ug/Kg
100-42-5	Styrene	ND	210		ug/Kg
127-18-4	Tetrachloroethene	ND	210		ug/Kg
108-88-3	Toluene	ND	210		ug/Kg
79-01-6	**Trichloroethene**	**294**	**210**		**ug/Kg**
108-05-4	Vinyl acetate	ND	210		ug/Kg
75-01-4	Vinyl chloride	ND	210		ug/Kg
1330-20-7	Xylene (total)	ND	420		ug/Kg
156-59-2	cis-1,2-Dichloroethene	ND	210		ug/Kg
156-60-5	trans-1,2-Dichloroethene	ND	210		ug/Kg

CAS#	Surrogate	Conc. Spiked	Conc. Rec	Units	% Recovery	Rec Limits
460-00-4	4-Bromofluorobenzene	2080	1900	ug/Kg	91	62 - 127
1868-53-7	Dibromofluoromethane	2080	2110	ug/Kg	101	65 - 130
2037-26-5	Toluene d8	2080	2160	ug/Kg	104	71 - 132
17060-07-0	1,2-Dichloroethane-d4	2080	2230	ug/Kg	107	62 - 125

RESULTS REPORTED ON A WET WEIGHT BASIS

GCAL ID	Client ID	Matrix	Collect Date/Time	Receive Date/Time
21005134835	33B110/SB3	Solid	05/11/2010 14:50	05/13/2010 10:20

SW-846 8260B

Prep Date	Prep Batch	Prep Method	Dilution	Analyzed	By	Analytical Batch
			50	05/24/2010 20:35	JCK	432508

CAS#	Parameter	Result	RDL	REG LIMIT	Units
71-55-6	1,1,1-Trichloroethane	ND	220		ug/Kg
79-34-5	1,1,2,2-Tetrachloroethane	ND	220		ug/Kg
79-00-5	1,1,2-Trichloroethane	ND	220		ug/Kg
75-34-3	1,1-Dichloroethane	ND	220		ug/Kg
75-35-4	1,1-Dichloroethene	ND	220		ug/Kg
107-06-2	1,2-Dichloroethane	ND	220		ug/Kg
78-87-5	1,2-Dichloropropane	ND	220		ug/Kg
78-93-3	2-Butanone	ND	220		ug/Kg
591-78-6	2-Hexanone	ND	220		ug/Kg
108-10-1	4-Methyl-2-pentanone	ND	220		ug/Kg
67-64-1	Acetone	ND	1100		ug/Kg
71-43-2	Benzene	ND	220		ug/Kg
75-27-4	Bromodichloromethane	ND	220		ug/Kg
75-25-2	Bromoform	ND	220		ug/Kg
74-83-9	Bromomethane	ND	220		ug/Kg
75-15-0	Carbon disulfide	ND	220		ug/Kg
56-23-5	Carbon tetrachloride	ND	220		ug/Kg
108-90-7	Chlorobenzene	ND	220		ug/Kg
75-00-3	Chloroethane	ND	220		ug/Kg
67-66-3	Chloroform	ND	220		ug/Kg
74-87-3	Chloromethane	ND	220		ug/Kg
124-48-1	Dibromochloromethane	ND	220		ug/Kg
10061-01-5	cis-1,3-Dichloropropene	ND	220		ug/Kg
10061-02-6	trans-1,3-Dichloropropene	ND	220		ug/Kg
100-41-4	Ethylbenzene	ND	220		ug/Kg
75-09-2	Methylene chloride	ND	440		ug/Kg
100-42-5	Styrene	ND	220		ug/Kg
127-18-4	Tetrachloroethene	ND	220		ug/Kg
108-88-3	Toluene	ND	220		ug/Kg
79-01-6	**Trichloroethene**	**318**	**220**		**ug/Kg**
108-05-4	Vinyl acetate	ND	220		ug/Kg
75-01-4	Vinyl chloride	ND	220		ug/Kg
1330-20-7	Xylene (total)	ND	440		ug/Kg
156-59-2	cis-1,2-Dichloroethene	ND	220		ug/Kg
156-60-5	trans-1,2-Dichloroethene	ND	220		ug/Kg

CAS#	Surrogate	Conc. Spiked	Conc. Rec	Units	% Recovery	Rec Limits
460-00-4	4-Bromofluorobenzene	2190	2030	ug/Kg	93	62 - 127
1868-53-7	Dibromofluoromethane	2190	2220	ug/Kg	101	65 - 130
2037-26-5	Toluene d8	2190	2290	ug/Kg	104	71 - 132
17060-07-0	1,2-Dichloroethane-d4	2190	2390	ug/Kg	109	62 - 125

RESULTS REPORTED ON A WET WEIGHT BASIS

GCAL ID	Client ID	Matrix	Collect Date/Time	Receive Date/Time
21005134836	33B111/SB1	Solid	05/11/2010 15:52	05/13/2010 10:20

SW-846 8260B

Prep Date	Prep Batch	Prep Method	Dilution	Analyzed	By	Analytical Batch
			1	05/22/2010 21:03	AGC	432468

CAS#	Parameter	Result	RDL	REG LIMIT	Units
71-55-6	1,1,1-Trichloroethane	ND	4		ug/Kg
79-34-5	1,1,2,2-Tetrachloroethane	ND	4		ug/Kg
79-00-5	1,1,2-Trichloroethane	ND	4		ug/Kg
75-34-3	1,1-Dichloroethane	ND	4		ug/Kg
75-35-4	1,1-Dichloroethene	ND	4		ug/Kg
107-06-2	1,2-Dichloroethane	ND	4		ug/Kg
78-87-5	1,2-Dichloropropane	ND	4		ug/Kg
78-93-3	2-Butanone	ND	4		ug/Kg
591-78-6	2-Hexanone	ND	4		ug/Kg
108-10-1	4-Methyl-2-pentanone	ND	4		ug/Kg
67-64-1	Acetone	ND	22		ug/Kg
71-43-2	Benzene	ND	4		ug/Kg
75-27-4	Bromodichloromethane	ND	4		ug/Kg
75-25-2	Bromoform	ND	4		ug/Kg
74-83-9	Bromomethane	ND	4		ug/Kg
75-15-0	Carbon disulfide	ND	4		ug/Kg
56-23-5	Carbon tetrachloride	ND	4		ug/Kg
108-90-7	Chlorobenzene	ND	4		ug/Kg
75-00-3	Chloroethane	ND	4		ug/Kg
67-66-3	Chloroform	ND	4		ug/Kg
74-87-3	Chloromethane	ND	4		ug/Kg
124-48-1	Dibromochloromethane	ND	4		ug/Kg
10061-01-5	cis-1,3-Dichloropropene	ND	4		ug/Kg
10061-02-6	trans-1,3-Dichloropropene	ND	4		ug/Kg
100-41-4	Ethylbenzene	ND	4		ug/Kg
75-09-2	Methylene chloride	ND	9		ug/Kg
100-42-5	Styrene	ND	4		ug/Kg
127-18-4	Tetrachloroethene	ND	4		ug/Kg
108-88-3	Toluene	ND	4		ug/Kg
79-01-6	Trichloroethene	ND	4		ug/Kg
108-05-4	Vinyl acetate	ND	4		ug/Kg
75-01-4	Vinyl chloride	ND	4		ug/Kg
1330-20-7	Xylene (total)	ND	9		ug/Kg
156-59-2	cis-1,2-Dichloroethene	ND	4		ug/Kg
156-60-5	trans-1,2-Dichloroethene	ND	4		ug/Kg

CAS#	Surrogate	Conc. Spiked	Conc. Rec	Units	% Recovery	Rec Limits
460-00-4	4-Bromofluorobenzene	43.6	45.3	ug/Kg	104	62 - 127
1868-53-7	Dibromofluoromethane	43.6	49.3	ug/Kg	113	65 - 130
2037-26-5	Toluene d8	43.6	45.1	ug/Kg	104	71 - 132
17060-07-0	1,2-Dichloroethane-d4	43.6	52.1	ug/Kg	120	62 - 125

RESULTS REPORTED ON A WET WEIGHT BASIS

GCAL ID	Client ID	Matrix	Collect Date/Time	Receive Date/Time
21005134837	33B111/SB2	Solid	05/11/2010 15:58	05/13/2010 10:20

SW-846 8260B

Prep Date	Prep Batch	Prep Method	Dilution	Analyzed	By	Analytical Batch
			1	05/22/2010 21:25	AGC	432468

CAS#	Parameter	Result	RDL	REG LIMIT	Units
71-55-6	1,1,1-Trichloroethane	ND	4		ug/Kg
79-34-5	1,1,2,2-Tetrachloroethane	ND	4		ug/Kg
79-00-5	1,1,2-Trichloroethane	ND	4		ug/Kg
75-34-3	1,1-Dichloroethane	ND	4		ug/Kg
75-35-4	1,1-Dichloroethene	ND	4		ug/Kg
107-06-2	1,2-Dichloroethane	ND	4		ug/Kg
78-87-5	1,2-Dichloropropane	ND	4		ug/Kg
78-93-3	2-Butanone	ND	4		ug/Kg
591-78-6	2-Hexanone	ND	4		ug/Kg
108-10-1	4-Methyl-2-pentanone	ND	4		ug/Kg
67-64-1	Acetone	ND	21		ug/Kg
71-43-2	Benzene	ND	4		ug/Kg
75-27-4	Bromodichloromethane	ND	4		ug/Kg
75-25-2	Bromoform	ND	4		ug/Kg
74-83-9	Bromomethane	ND	4		ug/Kg
75-15-0	Carbon disulfide	ND	4		ug/Kg
56-23-5	Carbon tetrachloride	ND	4		ug/Kg
108-90-7	Chlorobenzene	ND	4		ug/Kg
75-00-3	Chloroethane	ND	4		ug/Kg
67-66-3	Chloroform	ND	4		ug/Kg
74-87-3	Chloromethane	ND	4		ug/Kg
124-48-1	Dibromochloromethane	ND	4		ug/Kg
10061-01-5	cis-1,3-Dichloropropene	ND	4		ug/Kg
10061-02-6	trans-1,3-Dichloropropene	ND	4		ug/Kg
100-41-4	Ethylbenzene	ND	4		ug/Kg
75-09-2	Methylene chloride	ND	8		ug/Kg
100-42-5	Styrene	ND	4		ug/Kg
127-18-4	Tetrachloroethene	ND	4		ug/Kg
108-88-3	Toluene	ND	4		ug/Kg
79-01-6	Trichloroethene	ND	4		ug/Kg
108-05-4	Vinyl acetate	ND	4		ug/Kg
75-01-4	Vinyl chloride	ND	4		ug/Kg
1330-20-7	Xylene (total)	ND	8		ug/Kg
156-59-2	cis-1,2-Dichloroethene	ND	4		ug/Kg
156-60-5	trans-1,2-Dichloroethene	ND	4		ug/Kg

CAS#	Surrogate	Conc. Spiked	Conc. Rec	Units	% Recovery	Rec Limits
460-00-4	4-Bromofluorobenzene	41.5	43.5	ug/Kg	105	62 - 127
1868-53-7	Dibromofluoromethane	41.5	46.1	ug/Kg	111	65 - 130
2037-26-5	Toluene d8	41.5	45.2	ug/Kg	109	71 - 132
17060-07-0	1,2-Dichloroethane-d4	41.5	52.4	ug/Kg	126*	62 - 125

RESULTS REPORTED ON A WET WEIGHT BASIS

GCAL ID	Client ID	Matrix	Collect Date/Time	Receive Date/Time
21005134838	33B111/SB3	Solid	05/11/2010 16:13	05/13/2010 10:20

SW-846 8260B

Prep Date	Prep Batch	Prep Method	Dilution	Analyzed	By	Analytical Batch
			1	05/22/2010 21:48	AGC	432468

CAS#	Parameter	Result	RDL	REG LIMIT	Units
71-55-6	1,1,1-Trichloroethane	ND	5		ug/Kg
79-34-5	1,1,2,2-Tetrachloroethane	ND	5		ug/Kg
79-00-5	1,1,2-Trichloroethane	ND	5		ug/Kg
75-34-3	1,1-Dichloroethane	ND	5		ug/Kg
75-35-4	1,1-Dichloroethene	ND	5		ug/Kg
107-06-2	1,2-Dichloroethane	ND	5		ug/Kg
78-87-5	1,2-Dichloropropane	ND	5		ug/Kg
78-93-3	2-Butanone	ND	5		ug/Kg
591-78-6	2-Hexanone	ND	5		ug/Kg
108-10-1	4-Methyl-2-pentanone	ND	5		ug/Kg
67-64-1	Acetone	ND	24		ug/Kg
71-43-2	Benzene	ND	5		ug/Kg
75-27-4	Bromodichloromethane	ND	5		ug/Kg
75-25-2	Bromoform	ND	5		ug/Kg
74-83-9	Bromomethane	ND	5		ug/Kg
75-15-0	Carbon disulfide	ND	5		ug/Kg
56-23-5	Carbon tetrachloride	ND	5		ug/Kg
108-90-7	Chlorobenzene	ND	5		ug/Kg
75-00-3	Chloroethane	ND	5		ug/Kg
67-66-3	Chloroform	ND	5		ug/Kg
74-87-3	Chloromethane	ND	5		ug/Kg
124-48-1	Dibromochloromethane	ND	5		ug/Kg
10061-01-5	cis-1,3-Dichloropropene	ND	5		ug/Kg
10061-02-6	trans-1,3-Dichloropropene	ND	5		ug/Kg
100-41-4	Ethylbenzene	ND	5		ug/Kg
75-09-2	Methylene chloride	ND	10		ug/Kg
100-42-5	Styrene	ND	5		ug/Kg
127-18-4	Tetrachloroethene	ND	5		ug/Kg
108-88-3	Toluene	ND	5		ug/Kg
79-01-6	Trichloroethene	ND	5		ug/Kg
108-05-4	Vinyl acetate	ND	5		ug/Kg
75-01-4	Vinyl chloride	ND	5		ug/Kg
1330-20-7	Xylene (total)	ND	10		ug/Kg
156-59-2	cis-1,2-Dichloroethene	ND	5		ug/Kg
156-60-5	trans-1,2-Dichloroethene	ND	5		ug/Kg

CAS#	Surrogate	Conc. Spiked	Conc. Rec	Units	% Recovery	Rec Limits
460-00-4	4-Bromofluorobenzene	48.3	49	ug/Kg	102	62 - 127
1868-53-7	Dibromofluoromethane	48.3	51.7	ug/Kg	107	65 - 130
2037-26-5	Toluene d8	48.3	48.2	ug/Kg	100	71 - 132
17060-07-0	1,2-Dichloroethane-d4	48.3	61.7	ug/Kg	128*	62 - 125

RESULTS REPORTED ON A WET WEIGHT BASIS

GCAL ID	Client ID	Matrix	Collect Date/Time	Receive Date/Time
21005134839	33B112/SB1	Solid	05/12/2010 08:20	05/13/2010 10:20

SW-846 8260B

Prep Date	Prep Batch	Prep Method	Dilution	Analyzed	By	Analytical Batch
			1	05/22/2010 22:10	AGC	432468

CAS#	Parameter	Result	RDL	REG LIMIT	Units
71-55-6	1,1,1-Trichloroethane	ND	4		ug/Kg
79-34-5	1,1,2,2-Tetrachloroethane	ND	4		ug/Kg
79-00-5	1,1,2-Trichloroethane	ND	4		ug/Kg
75-34-3	1,1-Dichloroethane	ND	4		ug/Kg
75-35-4	1,1-Dichloroethene	ND	4		ug/Kg
107-06-2	1,2-Dichloroethane	ND	4		ug/Kg
78-87-5	1,2-Dichloropropane	ND	4		ug/Kg
78-93-3	2-Butanone	ND	4		ug/Kg
591-78-6	2-Hexanone	ND	4		ug/Kg
108-10-1	4-Methyl-2-pentanone	ND	4		ug/Kg
67-64-1	Acetone	ND	22		ug/Kg
71-43-2	Benzene	ND	4		ug/Kg
75-27-4	Bromodichloromethane	ND	4		ug/Kg
75-25-2	Bromoform	ND	4		ug/Kg
74-83-9	Bromomethane	ND	4		ug/Kg
75-15-0	Carbon disulfide	ND	4		ug/Kg
56-23-5	Carbon tetrachloride	ND	4		ug/Kg
108-90-7	Chlorobenzene	ND	4		ug/Kg
75-00-3	Chloroethane	ND	4		ug/Kg
67-66-3	Chloroform	ND	4		ug/Kg
74-87-3	Chloromethane	ND	4		ug/Kg
124-48-1	Dibromochloromethane	ND	4		ug/Kg
10061-01-5	cis-1,3-Dichloropropene	ND	4		ug/Kg
10061-02-6	trans-1,3-Dichloropropene	ND	4		ug/Kg
100-41-4	Ethylbenzene	ND	4		ug/Kg
75-09-2	Methylene chloride	ND	9		ug/Kg
100-42-5	Styrene	ND	4		ug/Kg
127-18-4	Tetrachloroethene	ND	4		ug/Kg
108-88-3	Toluene	ND	4		ug/Kg
79-01-6	Trichloroethene	ND	4		ug/Kg
108-05-4	Vinyl acetate	ND	4		ug/Kg
75-01-4	Vinyl chloride	ND	4		ug/Kg
1330-20-7	Xylene (total)	ND	9		ug/Kg
156-59-2	cis-1,2-Dichloroethene	ND	4		ug/Kg
156-60-5	trans-1,2-Dichloroethene	ND	4		ug/Kg

CAS#	Surrogate	Conc. Spiked	Conc. Rec	Units	% Recovery	Rec Limits
460-00-4	4-Bromofluorobenzene	43.2	42.8	ug/Kg	99	62 - 127
1868-53-7	Dibromofluoromethane	43.2	49.1	ug/Kg	114	65 - 130
2037-26-5	Toluene d8	43.2	42.6	ug/Kg	99	71 - 132
17060-07-0	1,2-Dichloroethane-d4	43.2	57.9	ug/Kg	134*	62 - 125

RESULTS REPORTED ON A WET WEIGHT BASIS

GCAL ID	Client ID	Matrix	Collect Date/Time	Receive Date/Time
21005134840	33B112/SB1D	Solid	05/12/2010 08:20	05/13/2010 10:20

SW-846 8260B

Prep Date	Prep Batch	Prep Method	Dilution	Analyzed	By	Analytical Batch
			1	05/22/2010 22:32	AGC	432468

CAS#	Parameter	Result	RDL	REG LIMIT	Units
71-55-6	1,1,1-Trichloroethane	ND	4		ug/Kg
79-34-5	1,1,2,2-Tetrachloroethane	ND	4		ug/Kg
79-00-5	1,1,2-Trichloroethane	ND	4		ug/Kg
75-34-3	1,1-Dichloroethane	ND	4		ug/Kg
75-35-4	1,1-Dichloroethene	ND	4		ug/Kg
107-06-2	1,2-Dichloroethane	ND	4		ug/Kg
78-87-5	1,2-Dichloropropane	ND	4		ug/Kg
78-93-3	2-Butanone	ND	4		ug/Kg
591-78-6	2-Hexanone	ND	4		ug/Kg
108-10-1	4-Methyl-2-pentanone	ND	4		ug/Kg
67-64-1	Acetone	ND	20		ug/Kg
71-43-2	Benzene	ND	4		ug/Kg
75-27-4	Bromodichloromethane	ND	4		ug/Kg
75-25-2	Bromoform	ND	4		ug/Kg
74-83-9	Bromomethane	ND	4		ug/Kg
75-15-0	Carbon disulfide	ND	4		ug/Kg
56-23-5	Carbon tetrachloride	ND	4		ug/Kg
108-90-7	Chlorobenzene	ND	4		ug/Kg
75-00-3	Chloroethane	ND	4		ug/Kg
67-66-3	Chloroform	ND	4		ug/Kg
74-87-3	Chloromethane	ND	4		ug/Kg
124-48-1	Dibromochloromethane	ND	4		ug/Kg
10061-01-5	cis-1,3-Dichloropropene	ND	4		ug/Kg
10061-02-6	trans-1,3-Dichloropropene	ND	4		ug/Kg
100-41-4	Ethylbenzene	ND	4		ug/Kg
75-09-2	Methylene chloride	ND	8		ug/Kg
100-42-5	Styrene	ND	4		ug/Kg
127-18-4	Tetrachloroethene	ND	4		ug/Kg
108-88-3	Toluene	ND	4		ug/Kg
79-01-6	Trichloroethene	ND	4		ug/Kg
108-05-4	Vinyl acetate	ND	4		ug/Kg
75-01-4	Vinyl chloride	ND	4		ug/Kg
1330-20-7	Xylene (total)	ND	8		ug/Kg
156-59-2	cis-1,2-Dichloroethene	ND	4		ug/Kg
156-60-5	trans-1,2-Dichloroethene	ND	4		ug/Kg

CAS#	Surrogate	Conc. Spiked	Conc. Rec	Units	% Recovery	Rec Limits
460-00-4	4-Bromofluorobenzene	40.8	44.5	ug/Kg	109	62 - 127
1868-53-7	Dibromofluoromethane	40.8	43.1	ug/Kg	106	65 - 130
2037-26-5	Toluene d8	40.8	44	ug/Kg	108	71 - 132
17060-07-0	1,2-Dichloroethane-d4	40.8	51.2	ug/Kg	125	62 - 125

RESULTS REPORTED ON A WET WEIGHT BASIS

GCAL ID	Client ID	Matrix	Collect Date/Time	Receive Date/Time
21005134841	33B112/SB2	Solid	05/12/2010 08:37	05/13/2010 10:20

SW-846 8260B

Prep Date	Prep Batch	Prep Method	Dilution	Analyzed	By	Analytical Batch
			1	05/24/2010 17:45	WAS	432582

CAS#	Parameter	Result	RDL	REG LIMIT	Units
71-55-6	1,1,1-Trichloroethane	ND	6		ug/Kg
79-34-5	1,1,2,2-Tetrachloroethane	ND	6		ug/Kg
79-00-5	1,1,2-Trichloroethane	ND	6		ug/Kg
75-34-3	1,1-Dichloroethane	ND	6		ug/Kg
75-35-4	1,1-Dichloroethene	ND	6		ug/Kg
107-06-2	1,2-Dichloroethane	ND	6		ug/Kg
78-87-5	1,2-Dichloropropane	ND	6		ug/Kg
78-93-3	2-Butanone	ND	6		ug/Kg
591-78-6	2-Hexanone	ND	6		ug/Kg
108-10-1	4-Methyl-2-pentanone	ND	6		ug/Kg
67-64-1	Acetone	ND	30		ug/Kg
71-43-2	Benzene	ND	6		ug/Kg
75-27-4	Bromodichloromethane	ND	6		ug/Kg
75-25-2	Bromoform	ND	6		ug/Kg
74-83-9	Bromomethane	ND	6		ug/Kg
75-15-0	Carbon disulfide	ND	6		ug/Kg
56-23-5	Carbon tetrachloride	ND	6		ug/Kg
108-90-7	Chlorobenzene	ND	6		ug/Kg
75-00-3	Chloroethane	ND	6		ug/Kg
67-66-3	Chloroform	ND	6		ug/Kg
74-87-3	Chloromethane	ND	6		ug/Kg
124-48-1	Dibromochloromethane	ND	6		ug/Kg
10061-01-5	cis-1,3-Dichloropropene	ND	6		ug/Kg
10061-02-6	trans-1,3-Dichloropropene	ND	6		ug/Kg
100-41-4	Ethylbenzene	ND	6		ug/Kg
75-09-2	Methylene chloride	ND	12		ug/Kg
100-42-5	Styrene	ND	6		ug/Kg
127-18-4	Tetrachloroethene	ND	6		ug/Kg
108-88-3	Toluene	ND	6		ug/Kg
79-01-6	**Trichloroethene**	**6.01**	**6**		**ug/Kg**
108-05-4	Vinyl acetate	ND	6		ug/Kg
75-01-4	Vinyl chloride	ND	6		ug/Kg
1330-20-7	Xylene (total)	ND	12		ug/Kg
156-59-2	cis-1,2-Dichloroethene	ND	6		ug/Kg
156-60-5	trans-1,2-Dichloroethene	ND	6		ug/Kg

CAS#	Surrogate	Conc. Spiked	Conc. Rec	Units	% Recovery	Rec Limits
460-00-4	4-Bromofluorobenzene	59.8	52.3	ug/Kg	87	62 - 127
1868-53-7	Dibromofluoromethane	59.8	66	ug/Kg	110	65 - 130
2037-26-5	Toluene d8	59.8	65.2	ug/Kg	109	71 - 132
17060-07-0	1,2-Dichloroethane-d4	59.8	65	ug/Kg	109	62 - 125

RESULTS REPORTED ON A WET WEIGHT BASIS

GCAL ID	Client ID	Matrix	Collect Date/Time	Receive Date/Time
21005134842	33B112/SB3	Solid	05/12/2010 08:42	05/13/2010 10:20

SW-846 8260B

Prep Date	Prep Batch	Prep Method	Dilution	Analyzed	By	Analytical Batch
			1	05/24/2010 18:08	WAS	432582

CAS#	Parameter	Result	RDL	REG LIMIT	Units
71-55-6	1,1,1-Trichloroethane	ND	4		ug/Kg
79-34-5	1,1,2,2-Tetrachloroethane	ND	4		ug/Kg
79-00-5	1,1,2-Trichloroethane	ND	4		ug/Kg
75-34-3	1,1-Dichloroethane	ND	4		ug/Kg
75-35-4	1,1-Dichloroethene	ND	4		ug/Kg
107-06-2	1,2-Dichloroethane	ND	4		ug/Kg
78-87-5	1,2-Dichloropropane	ND	4		ug/Kg
78-93-3	2-Butanone	ND	4		ug/Kg
591-78-6	2-Hexanone	ND	4		ug/Kg
108-10-1	4-Methyl-2-pentanone	ND	4		ug/Kg
67-64-1	Acetone	ND	22		ug/Kg
71-43-2	Benzene	ND	4		ug/Kg
75-27-4	Bromodichloromethane	ND	4		ug/Kg
75-25-2	Bromoform	ND	4		ug/Kg
74-83-9	Bromomethane	ND	4		ug/Kg
75-15-0	Carbon disulfide	ND	4		ug/Kg
56-23-5	Carbon tetrachloride	ND	4		ug/Kg
108-90-7	Chlorobenzene	ND	4		ug/Kg
75-00-3	Chloroethane	ND	4		ug/Kg
67-66-3	Chloroform	ND	4		ug/Kg
74-87-3	Chloromethane	ND	4		ug/Kg
124-48-1	Dibromochloromethane	ND	4		ug/Kg
10061-01-5	cis-1,3-Dichloropropene	ND	4		ug/Kg
10061-02-6	trans-1,3-Dichloropropene	ND	4		ug/Kg
100-41-4	Ethylbenzene	ND	4		ug/Kg
75-09-2	Methylene chloride	ND	9		ug/Kg
100-42-5	Styrene	ND	4		ug/Kg
127-18-4	Tetrachloroethene	ND	4		ug/Kg
108-88-3	Toluene	ND	4		ug/Kg
79-01-6	Trichloroethene	ND	4		ug/Kg
108-05-4	Vinyl acetate	ND	4		ug/Kg
75-01-4	Vinyl chloride	ND	4		ug/Kg
1330-20-7	Xylene (total)	ND	9		ug/Kg
156-59-2	cis-1,2-Dichloroethene	ND	4		ug/Kg
156-60-5	trans-1,2-Dichloroethene	ND	4		ug/Kg

CAS#	Surrogate	Conc. Spiked	Conc. Rec	Units	% Recovery	Rec Limits
460-00-4	4-Bromofluorobenzene	43.6	43.4	ug/Kg	99	62 - 127
1868-53-7	Dibromofluoromethane	43.6	45	ug/Kg	103	65 - 130
2037-26-5	Toluene d8	43.6	44	ug/Kg	101	71 - 132
17060-07-0	1,2-Dichloroethane-d4	43.6	46.1	ug/Kg	106	62 - 125

RESULTS REPORTED ON A WET WEIGHT BASIS

GCAL ID	Client ID	Matrix	Collect Date/Time	Receive Date/Time
21005134843	33B113/SB1	Solid	05/11/2010 16:24	05/13/2010 10:20

SW-846 8260B

Prep Date	Prep Batch	Prep Method	Dilution	Analyzed	By	Analytical Batch
			1	05/24/2010 16:15	WAS	432582

CAS#	Parameter	Result	RDL	REG LIMIT	Units
71-55-6	1,1,1-Trichloroethane	ND	4		ug/Kg
79-34-5	1,1,2,2-Tetrachloroethane	ND	4		ug/Kg
79-00-5	1,1,2-Trichloroethane	ND	4		ug/Kg
75-34-3	1,1-Dichloroethane	ND	4		ug/Kg
75-35-4	1,1-Dichloroethene	ND	4		ug/Kg
107-06-2	1,2-Dichloroethane	ND	4		ug/Kg
78-87-5	1,2-Dichloropropane	ND	4		ug/Kg
78-93-3	2-Butanone	ND	4		ug/Kg
591-78-6	2-Hexanone	ND	4		ug/Kg
108-10-1	4-Methyl-2-pentanone	ND	4		ug/Kg
67-64-1	Acetone	ND	22		ug/Kg
71-43-2	Benzene	ND	4		ug/Kg
75-27-4	Bromodichloromethane	ND	4		ug/Kg
75-25-2	Bromoform	ND	4		ug/Kg
74-83-9	Bromomethane	ND	4		ug/Kg
75-15-0	Carbon disulfide	ND	4		ug/Kg
56-23-5	Carbon tetrachloride	ND	4		ug/Kg
108-90-7	Chlorobenzene	ND	4		ug/Kg
75-00-3	Chloroethane	ND	4		ug/Kg
67-66-3	Chloroform	ND	4		ug/Kg
74-87-3	Chloromethane	ND	4		ug/Kg
124-48-1	Dibromochloromethane	ND	4		ug/Kg
10061-01-5	cis-1,3-Dichloropropene	ND	4		ug/Kg
10061-02-6	trans-1,3-Dichloropropene	ND	4		ug/Kg
100-41-4	Ethylbenzene	ND	4		ug/Kg
75-09-2	Methylene chloride	ND	9		ug/Kg
100-42-5	Styrene	ND	4		ug/Kg
127-18-4	Tetrachloroethene	ND	4		ug/Kg
108-88-3	Toluene	ND	4		ug/Kg
79-01-6	**Trichloroethene**	**98.2**	**4**		**ug/Kg**
108-05-4	Vinyl acetate	ND	4		ug/Kg
75-01-4	Vinyl chloride	ND	4		ug/Kg
1330-20-7	Xylene (total)	ND	9		ug/Kg
156-59-2	cis-1,2-Dichloroethene	ND	4		ug/Kg
156-60-5	trans-1,2-Dichloroethene	ND	4		ug/Kg

CAS#	Surrogate	Conc. Spiked	Conc. Rec	Units	% Recovery	Rec Limits
460-00-4	4-Bromofluorobenzene	43	40.8	ug/Kg	95	62 - 127
1868-53-7	Dibromofluoromethane	43	43.8	ug/Kg	102	65 - 130
2037-26-5	Toluene d8	43	44.7	ug/Kg	104	71 - 132
17060-07-0	1,2-Dichloroethane-d4	43	49.9	ug/Kg	116	62 - 125

RESULTS REPORTED ON A WET WEIGHT BASIS

GCAL ID	Client ID	Matrix	Collect Date/Time	Receive Date/Time
21005134844	33B113/SB2	Solid	05/11/2010 16:40	05/13/2010 10:20

SW-846 8260B

Prep Date	Prep Batch	Prep Method	Dilution	Analyzed	By	Analytical Batch
			1	05/24/2010 16:38	WAS	432582

CAS#	Parameter	Result	RDL	REG LIMIT	Units
71-55-6	1,1,1-Trichloroethane	ND	4		ug/Kg
79-34-5	1,1,2,2-Tetrachloroethane	ND	4		ug/Kg
79-00-5	1,1,2-Trichloroethane	ND	4		ug/Kg
75-34-3	1,1-Dichloroethane	ND	4		ug/Kg
75-35-4	1,1-Dichloroethene	ND	4		ug/Kg
107-06-2	1,2-Dichloroethane	ND	4		ug/Kg
78-87-5	1,2-Dichloropropane	ND	4		ug/Kg
78-93-3	2-Butanone	ND	4		ug/Kg
591-78-6	2-Hexanone	ND	4		ug/Kg
108-10-1	4-Methyl-2-pentanone	ND	4		ug/Kg
67-64-1	Acetone	ND	22		ug/Kg
71-43-2	Benzene	ND	4		ug/Kg
75-27-4	Bromodichloromethane	ND	4		ug/Kg
75-25-2	Bromoform	ND	4		ug/Kg
74-83-9	Bromomethane	ND	4		ug/Kg
75-15-0	Carbon disulfide	ND	4		ug/Kg
56-23-5	Carbon tetrachloride	ND	4		ug/Kg
108-90-7	Chlorobenzene	ND	4		ug/Kg
75-00-3	Chloroethane	ND	4		ug/Kg
67-66-3	Chloroform	ND	4		ug/Kg
74-87-3	Chloromethane	ND	4		ug/Kg
124-48-1	Dibromochloromethane	ND	4		ug/Kg
10061-01-5	cis-1,3-Dichloropropene	ND	4		ug/Kg
10061-02-6	trans-1,3-Dichloropropene	ND	4		ug/Kg
100-41-4	Ethylbenzene	ND	4		ug/Kg
75-09-2	Methylene chloride	ND	9		ug/Kg
100-42-5	Styrene	ND	4		ug/Kg
127-18-4	Tetrachloroethene	ND	4		ug/Kg
108-88-3	Toluene	ND	4		ug/Kg
79-01-6	**Trichloroethene**	**105**	**4**		**ug/Kg**
108-05-4	Vinyl acetate	ND	4		ug/Kg
75-01-4	Vinyl chloride	ND	4		ug/Kg
1330-20-7	Xylene (total)	ND	9		ug/Kg
156-59-2	cis-1,2-Dichloroethene	ND	4		ug/Kg
156-60-5	trans-1,2-Dichloroethene	ND	4		ug/Kg

CAS#	Surrogate	Conc. Spiked	Conc. Rec	Units	% Recovery	Rec Limits
460-00-4	4-Bromofluorobenzene	43.3	42.4	ug/Kg	98	62 - 127
1868-53-7	Dibromofluoromethane	43.3	45	ug/Kg	104	65 - 130
2037-26-5	Toluene d8	43.3	43.9	ug/Kg	101	71 - 132
17060-07-0	1,2-Dichloroethane-d4	43.3	46.6	ug/Kg	108	62 - 125

RESULTS REPORTED ON A WET WEIGHT BASIS

GCAL ID	Client ID	Matrix	Collect Date/Time	Receive Date/Time
21005134845	33B113/SB3	Solid	05/11/2010 16:47	05/13/2010 10:20

SW-846 8260B

Prep Date	Prep Batch	Prep Method	Dilution	Analyzed	By	Analytical Batch
			1	05/24/2010 17:01	WAS	432582

CAS#	Parameter	Result	RDL	REG LIMIT	Units
71-55-6	1,1,1-Trichloroethane	ND	4		ug/Kg
79-34-5	1,1,2,2-Tetrachloroethane	ND	4		ug/Kg
79-00-5	1,1,2-Trichloroethane	ND	4		ug/Kg
75-34-3	1,1-Dichloroethane	ND	4		ug/Kg
75-35-4	1,1-Dichloroethene	ND	4		ug/Kg
107-06-2	1,2-Dichloroethane	ND	4		ug/Kg
78-87-5	1,2-Dichloropropane	ND	4		ug/Kg
78-93-3	2-Butanone	ND	4		ug/Kg
591-78-6	2-Hexanone	ND	4		ug/Kg
108-10-1	4-Methyl-2-pentanone	ND	4		ug/Kg
67-64-1	Acetone	ND	20		ug/Kg
71-43-2	Benzene	ND	4		ug/Kg
75-27-4	Bromodichloromethane	ND	4		ug/Kg
75-25-2	Bromoform	ND	4		ug/Kg
74-83-9	Bromomethane	ND	4		ug/Kg
75-15-0	Carbon disulfide	ND	4		ug/Kg
56-23-5	Carbon tetrachloride	ND	4		ug/Kg
108-90-7	Chlorobenzene	ND	4		ug/Kg
75-00-3	Chloroethane	ND	4		ug/Kg
67-66-3	Chloroform	ND	4		ug/Kg
74-87-3	Chloromethane	ND	4		ug/Kg
124-48-1	Dibromochloromethane	ND	4		ug/Kg
10061-01-5	cis-1,3-Dichloropropene	ND	4		ug/Kg
10061-02-6	trans-1,3-Dichloropropene	ND	4		ug/Kg
100-41-4	Ethylbenzene	ND	4		ug/Kg
75-09-2	Methylene chloride	ND	8		ug/Kg
100-42-5	Styrene	ND	4		ug/Kg
127-18-4	Tetrachloroethene	ND	4		ug/Kg
108-88-3	Toluene	ND	4		ug/Kg
79-01-6	**Trichloroethene**	**69.4**	**4**		**ug/Kg**
108-05-4	Vinyl acetate	ND	4		ug/Kg
75-01-4	Vinyl chloride	ND	4		ug/Kg
1330-20-7	Xylene (total)	ND	8		ug/Kg
156-59-2	cis-1,2-Dichloroethene	ND	4		ug/Kg
156-60-5	trans-1,2-Dichloroethene	ND	4		ug/Kg

CAS#	Surrogate	Conc. Spiked	Conc. Rec	Units	% Recovery	Rec Limits
460-00-4	4-Bromofluorobenzene	40	40.1	ug/Kg	100	62 - 127
1868-53-7	Dibromofluoromethane	40	42.8	ug/Kg	107	65 - 130
2037-26-5	Toluene d8	40	40.2	ug/Kg	101	71 - 132
17060-07-0	1,2-Dichloroethane-d4	40	48.8	ug/Kg	122	62 - 125

RESULTS REPORTED ON A WET WEIGHT BASIS

GCAL ID	Client ID	Matrix	Collect Date/Time	Receive Date/Time
21005134846	33B114/SB1	Solid	05/12/2010 09:00	05/13/2010 10:20

SW-846 8260B

Prep Date	Prep Batch	Prep Method	Dilution	Analyzed	By	Analytical Batch
			1	05/24/2010 22:03	CLH	432630

CAS#	Parameter	Result	RDL	REG LIMIT	Units
71-55-6	1,1,1-Trichloroethane	ND	5		ug/Kg
79-34-5	1,1,2,2-Tetrachloroethane	ND	5		ug/Kg
79-00-5	1,1,2-Trichloroethane	ND	5		ug/Kg
75-34-3	1,1-Dichloroethane	ND	5		ug/Kg
75-35-4	1,1-Dichloroethene	ND	5		ug/Kg
107-06-2	1,2-Dichloroethane	ND	5		ug/Kg
78-87-5	1,2-Dichloropropane	ND	5		ug/Kg
78-93-3	**2-Butanone**	**5.35**	**5**		**ug/Kg**
591-78-6	2-Hexanone	ND	5		ug/Kg
108-10-1	4-Methyl-2-pentanone	ND	5		ug/Kg
67-64-1	**Acetone**	**35.7**	**24**		**ug/Kg**
71-43-2	Benzene	ND	5		ug/Kg
75-27-4	Bromodichloromethane	ND	5		ug/Kg
75-25-2	Bromoform	ND	5		ug/Kg
74-83-9	Bromomethane	ND	5		ug/Kg
75-15-0	Carbon disulfide	ND	5		ug/Kg
56-23-5	Carbon tetrachloride	ND	5		ug/Kg
108-90-7	Chlorobenzene	ND	5		ug/Kg
75-00-3	Chloroethane	ND	5		ug/Kg
67-66-3	Chloroform	ND	5		ug/Kg
74-87-3	Chloromethane	ND	5		ug/Kg
124-48-1	Dibromochloromethane	ND	5		ug/Kg
10061-01-5	cis-1,3-Dichloropropene	ND	5		ug/Kg
10061-02-6	trans-1,3-Dichloropropene	ND	5		ug/Kg
100-41-4	Ethylbenzene	ND	5		ug/Kg
75-09-2	Methylene chloride	ND	10		ug/Kg
100-42-5	Styrene	ND	5		ug/Kg
127-18-4	Tetrachloroethene	ND	5		ug/Kg
108-88-3	Toluene	ND	5		ug/Kg
79-01-6	Trichloroethene	ND	5		ug/Kg
108-05-4	Vinyl acetate	ND	5		ug/Kg
75-01-4	Vinyl chloride	ND	5		ug/Kg
1330-20-7	Xylene (total)	ND	10		ug/Kg
156-59-2	cis-1,2-Dichloroethene	ND	5		ug/Kg
156-60-5	trans-1,2-Dichloroethene	ND	5		ug/Kg

CAS#	Surrogate	Conc. Spiked	Conc. Rec	Units	% Recovery	Rec Limits
460-00-4	4-Bromofluorobenzene	48.5	50.5	ug/Kg	104	62 - 127
1868-53-7	Dibromofluoromethane	48.5	51.7	ug/Kg	107	65 - 130
2037-26-5	Toluene d8	48.5	48.8	ug/Kg	101	71 - 132
17060-07-0	1,2-Dichloroethane-d4	48.5	57.7	ug/Kg	119	62 - 125

RESULTS REPORTED ON A WET WEIGHT BASIS

GCAL ID	Client ID	Matrix	Collect Date/Time	Receive Date/Time
21005134847	33B114/SB2	Solid	05/12/2010 09:03	05/13/2010 10:20

SW-846 8260B

Prep Date	Prep Batch	Prep Method	Dilution	Analyzed	By	Analytical Batch
			1	05/24/2010 22:25	CLH	432630

CAS#	Parameter	Result	RDL	REG LIMIT	Units
71-55-6	1,1,1-Trichloroethane	ND	5		ug/Kg
79-34-5	1,1,2,2-Tetrachloroethane	ND	5		ug/Kg
79-00-5	1,1,2-Trichloroethane	ND	5		ug/Kg
75-34-3	1,1-Dichloroethane	ND	5		ug/Kg
75-35-4	1,1-Dichloroethene	ND	5		ug/Kg
107-06-2	1,2-Dichloroethane	ND	5		ug/Kg
78-87-5	1,2-Dichloropropane	ND	5		ug/Kg
78-93-3	2-Butanone	ND	5		ug/Kg
591-78-6	2-Hexanone	ND	5		ug/Kg
108-10-1	4-Methyl-2-pentanone	ND	5		ug/Kg
67-64-1	Acetone	ND	26		ug/Kg
71-43-2	Benzene	ND	5		ug/Kg
75-27-4	Bromodichloromethane	ND	5		ug/Kg
75-25-2	Bromoform	ND	5		ug/Kg
74-83-9	Bromomethane	ND	5		ug/Kg
75-15-0	Carbon disulfide	ND	5		ug/Kg
56-23-5	Carbon tetrachloride	ND	5		ug/Kg
108-90-7	Chlorobenzene	ND	5		ug/Kg
75-00-3	Chloroethane	ND	5		ug/Kg
67-66-3	Chloroform	ND	5		ug/Kg
74-87-3	Chloromethane	ND	5		ug/Kg
124-48-1	Dibromochloromethane	ND	5		ug/Kg
10061-01-5	cis-1,3-Dichloropropene	ND	5		ug/Kg
10061-02-6	trans-1,3-Dichloropropene	ND	5		ug/Kg
100-41-4	Ethylbenzene	ND	5		ug/Kg
75-09-2	Methylene chloride	ND	10		ug/Kg
100-42-5	Styrene	ND	5		ug/Kg
127-18-4	Tetrachloroethene	ND	5		ug/Kg
108-88-3	Toluene	ND	5		ug/Kg
79-01-6	Trichloroethene	ND	5		ug/Kg
108-05-4	Vinyl acetate	ND	5		ug/Kg
75-01-4	Vinyl chloride	ND	5		ug/Kg
1330-20-7	Xylene (total)	ND	10		ug/Kg
156-59-2	cis-1,2-Dichloroethene	ND	5		ug/Kg
156-60-5	trans-1,2-Dichloroethene	ND	5		ug/Kg

CAS#	Surrogate	Conc. Spiked	Conc. Rec	Units	% Recovery	Rec Limits
460-00-4	4-Bromofluorobenzene	52.1	49.2	ug/Kg	94	62 - 127
1868-53-7	Dibromofluoromethane	52.1	57.8	ug/Kg	111	65 - 130
2037-26-5	Toluene d8	52.1	47.6	ug/Kg	91	71 - 132
17060-07-0	1,2-Dichloroethane-d4	52.1	60.2	ug/Kg	116	62 - 125

RESULTS REPORTED ON A WET WEIGHT BASIS

GCAL ID	Client ID	Matrix	Collect Date/Time	Receive Date/Time
21005134848	33B114/SB3	Solid	05/12/2010 09:15	05/13/2010 10:20

SW-846 8260B

Prep Date	Prep Batch	Prep Method	Dilution	Analyzed	By	Analytical Batch
			1	05/24/2010 22:47	CLH	432630

CAS#	Parameter	Result	RDL	REG LIMIT	Units
71-55-6	1,1,1-Trichloroethane	ND	4		ug/Kg
79-34-5	1,1,2,2-Tetrachloroethane	ND	4		ug/Kg
79-00-5	1,1,2-Trichloroethane	ND	4		ug/Kg
75-34-3	1,1-Dichloroethane	ND	4		ug/Kg
75-35-4	1,1-Dichloroethene	ND	4		ug/Kg
107-06-2	1,2-Dichloroethane	ND	4		ug/Kg
78-87-5	1,2-Dichloropropane	ND	4		ug/Kg
78-93-3	2-Butanone	ND	4		ug/Kg
591-78-6	2-Hexanone	ND	4		ug/Kg
108-10-1	4-Methyl-2-pentanone	ND	4		ug/Kg
67-64-1	Acetone	ND	21		ug/Kg
71-43-2	Benzene	ND	4		ug/Kg
75-27-4	Bromodichloromethane	ND	4		ug/Kg
75-25-2	Bromoform	ND	4		ug/Kg
74-83-9	Bromomethane	ND	4		ug/Kg
75-15-0	Carbon disulfide	ND	4		ug/Kg
56-23-5	Carbon tetrachloride	ND	4		ug/Kg
108-90-7	Chlorobenzene	ND	4		ug/Kg
75-00-3	Chloroethane	ND	4		ug/Kg
67-66-3	Chloroform	ND	4		ug/Kg
74-87-3	Chloromethane	ND	4		ug/Kg
124-48-1	Dibromochloromethane	ND	4		ug/Kg
10061-01-5	cis-1,3-Dichloropropene	ND	4		ug/Kg
10061-02-6	trans-1,3-Dichloropropene	ND	4		ug/Kg
100-41-4	Ethylbenzene	ND	4		ug/Kg
75-09-2	Methylene chloride	ND	4		ug/Kg
100-42-5	Styrene	ND	8		ug/Kg
127-18-4	Tetrachloroethene	ND	4		ug/Kg
108-88-3	Toluene	ND	4		ug/Kg
79-01-6	Trichloroethene	ND	4		ug/Kg
108-05-4	Vinyl acetate	ND	4		ug/Kg
75-01-4	Vinyl chloride	ND	4		ug/Kg
1330-20-7	Xylene (total)	ND	8		ug/Kg
156-59-2	cis-1,2-Dichloroethene	ND	4		ug/Kg
156-60-5	trans-1,2-Dichloroethene	ND	4		ug/Kg

CAS#	Surrogate	Conc. Spiked	Conc. Rec	Units	% Recovery	Rec Limits
460-00-4	4-Bromofluorobenzene	42.4	40.3	ug/Kg	95	62 - 127
1868-53-7	Dibromofluoromethane	42.4	48.4	ug/Kg	114	65 - 130
2037-26-5	Toluene d8	42.4	42.3	ug/Kg	100	71 - 132
17060-07-0	1,2-Dichloroethane-d4	42.4	49	ug/Kg	115	62 - 125

RESULTS REPORTED ON A WET WEIGHT BASIS

GC/MS Volatiles Quality Control Summary

Analytical Batch 432388	**Client ID**	MB432388			LCS432388			LCSD432388			
Prep Batch N/A	**GCAL ID**	834161			834162			834163			
	Sample Type	Method Blank			LCS			LCSD			
	Analytical Date	05/21/2010 13:55			05/21/2010 11:32			05/21/2010 11:55			
	Matrix	Solid			Solid			Solid			
SW-846 8260B		**Units**	ug/Kg	**Spike**	**Result**		**Control**	**Result**			**RPD**
		Result	**RDL**	**Added**		**% R**	**Limits % R**		**% R**	**RPD**	**Limit**
67-64-1	Acetone	ND	25	50.0	66.7	133	38 - 152	69.3	139	4	30
75-27-4	Bromodichloromethane	ND	5	50.0	46.6	93	74 - 126	42.8	86	9	30
75-25-2	Bromoform	ND	5	50.0	52.3	105	67 - 122	52.5	105	0.4	30
74-83-9	Bromomethane	ND	5	50.0	48.7	97	48 - 139	42.9	86	13	30
75-15-0	Carbon disulfide	ND	5	50.0	45.1	90	68 - 133	39.6	79	13	30
56-23-5	Carbon tetrachloride	ND	5	50.0	47.5	95	71 - 133	42.9	86	10	30
75-00-3	Chloroethane	ND	5	50.0	44.1	88	57 - 144	41.7	83	6	30
67-66-3	Chloroform	ND	5	50.0	47.2	94	74 - 124	44.0	88	7	30
74-87-3	Chloromethane	ND	5	50.0	43.2	86	61 - 130	40.2	80	7	30
124-48-1	Dibromochloromethane	ND	5	50.0	52.2	104	74 - 122	52.7	105	1	30
75-34-3	1,1-Dichloroethane	ND	5	50.0	46.2	92	71 - 126	40.5	81	13	30
107-06-2	1,2-Dichloroethane	ND	5	50.0	45.5	91	68 - 126	41.6	83	9	30
156-59-2	cis-1,2-Dichloroethene	ND	5	50.0	41.6	83	72 - 130	38.3	77	8	30
156-60-5	trans-1,2-Dichloroethene	ND	5	50.0	45.3	91	67 - 134	42.0	84	8	30
75-09-2	Methylene chloride	ND	10	50.0	49.7	99	66 - 130	47.0	94	6	30
78-87-5	1,2-Dichloropropane	ND	5	50.0	41.5	83	72 - 129	37.8	76	9	30
10061-01-5	cis-1,3-Dichloropropene	ND	5	50.0	44.9	90	72 - 129	38.7	77	15	30
10061-02-6	trans-1,3-Dichloropropene	ND	5	50.0	51.7	103	72 - 126	48.2	96	7	30
100-41-4	Ethylbenzene	ND	5	50.0	51.7	103	74 - 130	47.9	96	8	30
591-78-6	2-Hexanone	ND	5	50.0	56.9	114	47 - 137	57.0	114	0.2	30
78-93-3	2-Butanone	ND	5	50.0	55.4	111	47 - 142	53.3	107	4	30
108-10-1	4-Methyl-2-pentanone	ND	5	50.0	47.8	96	52 - 136	47.2	94	1	30
100-42-5	Styrene	ND	5	50.0	55.4	111	72 - 128	53.1	106	4	30
127-18-4	Tetrachloroethene	ND	5	50.0	54.0	108	70 - 127	50.8	102	6	30
79-34-5	1,1,2,2-Tetrachloroethane	ND	5	50.0	46.9	94	66 - 129	50.7	101	8	30
71-55-6	1,1,1-Trichloroethane	ND	5	50.0	48.7	97	70 - 130	43.1	86	12	30
79-00-5	1,1,2-Trichloroethane	ND	5	50.0	49.0	98	74 - 120	48.7	97	0.6	30
75-01-4	Vinyl chloride	ND	5	50.0	46.6	93	67 - 131	41.7	83	11	30
108-05-4	Vinyl acetate	ND	5	50.0	42.1	84	53 - 140	40.4	81	4	30
1330-20-7	Xylene (total)	ND	10	150	153	102	71 - 129	153	102	0	30
75-35-4	1,1-Dichloroethene	ND	5	50.0	46.8	94	68 - 129	37.9	76	21	30
71-43-2	Benzene	ND	5	50.0	43.2	86	73 - 128	38.8	78	11	30
79-01-6	Trichloroethene	ND	5	50.0	43.6	87	78 - 127	37.6	75*	15	30

GC/MS Volatiles Quality Control Summary

Analytical Batch 432388	Client ID	MB432388			LCS432388			LCSD432388			
Prep Batch N/A	GCAL ID	834161			834162			834163			
	Sample Type	Method Blank			LCS			LCSD			
	Analytical Date	05/21/2010 13:55			05/21/2010 11:32			05/21/2010 11:55			
	Matrix	Solid			Solid			Solid			
SW-846 8260B		Units Result	ug/Kg RDL	Spike Added	Result	% R	Control Limits % R	Result	% R	RPD	RPD Limit
108-88-3	Toluene	ND	5	50.0	50.1	100	74 - 121	49.8	100	0.6	30
108-90-7	Chlorobenzene	ND	5	50.0	54.8	110	75 - 121	53.7	107	2	30
Surrogate											
460-00-4	4-Bromofluorobenzene	49.1	98	50	52.1	104	62 - 127	55	110		
1868-53-7	Dibromofluoromethane	53.4	107	50	50.9	102	65 - 130	46.8	94		
2037-26-5	Toluene d8	48.9	98	50	52.4	105	71 - 132	53.5	107		
17060-07-0	1,2-Dichloroethane-d4	59.2	118	50	50.1	100	62 - 125	47.5	95		

Analytical Batch 432388	Client ID	33B108/SB1			33B108/SB1MS			33B108/SB1MSD			
Prep Batch N/A	GCAL ID	21005134825			21005134826			21005134827			
	Sample Type	SAMPLE			MS			MSD			
	Analytical Date	05/21/2010 19:56			05/21/2010 20:40			05/21/2010 21:06			
	Matrix	Solid			Solid			Solid			
SW-846 8260B		Units Result	ug/Kg RDL	Spike Added	Result	% R	Control Limits % R	Result	% R	RPD	RPD Limit
71-55-6	1,1,1-Trichloroethane	0.00	4	40.6	40.6	100	70 - 130	51.2	102	23	30
79-34-5	1,1,2,2-Tetrachloroethane	0.00	4	40.6	44.9	111	66 - 129	56.4	113	23	30
79-00-5	1,1,2-Trichloroethane	0.00	4	40.6	43.5	107	74 - 120	51.5	103	17	30
75-34-3	1,1-Dichloroethane	0.00	4	40.6	40.3	99	71 - 126	46.6	93	14	30
75-35-4	1,1-Dichloroethene	0.00	4	40.6	37.9	93	68 - 129	47.0	94	21	22
107-06-2	1,2-Dichloroethane	0.00	4	40.6	39.9	98	68 - 126	45.8	92	14	30
78-87-5	1,2-Dichloropropane	0.00	4	40.6	37.7	93	72 - 129	42.5	85	12	30
78-93-3	2-Butanone	9.97	4	40.6	27.5	**43***	47 - 142	37.3	55	30	30
591-78-6	2-Hexanone	0.00	4	40.6	29.6	73	47 - 137	35.6	71	18	30
108-10-1	4-Methyl-2-pentanone	0.00	4	40.6	42.2	104	52 - 136	52.1	104	21	30
67-64-1	Acetone	52.7	21	40.6	27.4	**-60***	38 - 152	62.1	**19***	**78***	30
71-43-2	Benzene	0.00	4	40.6	36.5	90	73 - 128	43.4	87	17	21
75-27-4	Bromodichloromethane	0.00	4	40.6	40.5	100	74 - 126	46.6	93	14	30
75-25-2	Bromoform	0.00	4	40.6	48.1	119	67 - 122	57.4	115	18	30
74-83-9	Bromomethane	0.00	4	40.6	34.5	85	48 - 139	45.9	92	28	30
75-15-0	Carbon disulfide	0.00	4	40.6	37.5	92	68 - 133	46.1	92	21	30
56-23-5	Carbon tetrachloride	0.00	4	40.6	42.4	104	71 - 133	49.7	99	16	30

GC/MS Volatiles Quality Control Summary

Analytical Batch 432388	**Client ID**	33B108/SB1			33B108/SB1MS			33B108/SB1MSD			
Prep Batch N/A	**GCAL ID**	21005134825			21005134826			21005134827			
	Sample Type	SAMPLE			MS			MSD			
	Analytical Date	05/21/2010 19:56			05/21/2010 20:40			05/21/2010 21:06			
	Matrix	Solid			Solid			Solid			
SW-846 8260B		**Units** Result	ug/Kg RDL	**Spike Added**	**Result**	**% R**	**Control Limits % R**	**Result**	**% R**	**RPD**	**RPD Limit**
108-90-7	Chlorobenzene	0.00	4	40.6	44.9	111	75 - 121	53.5	107	17	21
75-00-3	Chloroethane	0.00	4	40.6	38.8	96	57 - 144	43.4	87	11	30
67-66-3	Chloroform	0.00	4	40.6	35.9	88	74 - 124	42.1	84	16	30
74-87-3	Chloromethane	0.00	4	40.6	31.6	78	61 - 130	44.6	89	**34***	30
124-48-1	Dibromochloromethane	0.00	4	40.6	46.2	114	74 - 122	52.6	105	13	30
10061-01-5	cis-1,3-Dichloropropene	0.00	4	40.6	35.2	87	72 - 129	43.6	87	21	30
10061-02-6	trans-1,3-Dichloropropene	0.00	4	40.6	43.4	107	72 - 126	49.2	98	13	30
100-41-4	Ethylbenzene	0.00	4	40.6	41.5	102	74 - 130	50.6	101	20	30
75-09-2	Methylene chloride	0.00	9	40.6	38.1	94	66 - 130	45.4	91	17	30
100-42-5	Styrene	0.00	4	40.6	27.4	**68***	72 - 128	23.6	**47***	15	30
127-18-4	Tetrachloroethene	0.00	4	40.6	46.0	113	70 - 127	52.8	106	14	30
108-88-3	Toluene	0.00	4	40.6	42.1	104	74 - 121	48.5	97	14	21
79-01-6	Trichloroethene	39.9	4	40.6	48.5	**21***	78 - 127	68.8	**58***	**35***	24
108-05-4	Vinyl acetate	0.00	4	40.6	37.4	92	53 - 140	39.6	79	6	30
75-01-4	Vinyl chloride	0.00	4	40.6	34.2	84	67 - 131	48.2	96	**34***	30
1330-20-7	Xylene (total)	0.00	9	122	128	105	71 - 129	151	101	16	30
156-59-2	cis-1,2-Dichloroethene	0.00	4	40.6	33.5	83	72 - 130	39.9	80	17	30
156-60-5	trans-1,2-Dichloroethene	0.00	4	40.6	37.9	93	67 - 134	45.9	92	19	30
Surrogate											
460-00-4	4-Bromofluorobenzene	44.5	104	40.6	41.4	102	62 - 127	48.5	97		
1868-53-7	Dibromofluoromethane	44.7	105	40.6	42.3	104	65 - 130	48.4	97		
2037-26-5	Toluene d8	44.8	105	40.6	41.6	103	71 - 132	49.7	99		
17060-07-0	1,2-Dichloroethane-d4	50	117	40.6	42.3	104	62 - 125	48.2	96		

Analytical Batch 432421	**Client ID**	MB432421			LCS432421			LCSD432421			
Prep Batch N/A	**GCAL ID**	834327			834328			834329			
	Sample Type	Method Blank			LCS			LCSD			
	Analytical Date	05/22/2010 00:38			05/21/2010 23:30			05/21/2010 23:52			
	Matrix	Solid			Solid			Solid			
SW-846 8260B		**Units** Result	ug/Kg RDL	**Spike Added**	**Result**	**% R**	**Control Limits % R**	**Result**	**% R**	**RPD**	**RPD Limit**
67-64-1	Acetone	ND	1300	2500	3480	139	38 - 152	3690	148	6	30

GC/MS Volatiles Quality Control Summary

Analytical Batch 432421	Client ID	MB432421	LCS432421	LCSD432421
Prep Batch N/A	GCAL ID	834327	834328	834329
	Sample Type	Method Blank	LCS	LCSD
	Analytical Date	05/22/2010 00:38	05/21/2010 23:30	05/21/2010 23:52
	Matrix	Solid	Solid	Solid

SW-846 8260B		Units	ug/Kg	Spike							
		Result	RDL	Added	Result	% R	Control Limits % R	Result	% R	RPD	RPD Limit
75-27-4	Bromodichloromethane	ND	250	2500	2390	96	74 - 126	2370	95	0.8	30
75-25-2	Bromoform	ND	250	2500	2690	108	67 - 122	2380	95	12	30
74-83-9	Bromomethane	ND	250	2500	2530	101	48 - 139	2760	110	9	30
75-15-0	Carbon disulfide	ND	250	2500	2670	107	68 - 133	2340	94	13	30
56-23-5	Carbon tetrachloride	ND	250	2500	2900	116	71 - 133	2600	104	11	30
75-00-3	Chloroethane	ND	250	2500	2910	116	57 - 144	2860	114	2	30
67-66-3	Chloroform	ND	250	2500	2330	93	74 - 124	2250	90	3	30
74-87-3	Chloromethane	ND	250	2500	2620	105	61 - 130	2580	103	2	30
124-48-1	Dibromochloromethane	ND	250	2500	2570	103	74 - 122	2330	93	10	30
75-34-3	1,1-Dichloroethane	ND	250	2500	2780	111	71 - 126	2720	109	2	30
107-06-2	1,2-Dichloroethane	ND	250	2500	2490	100	68 - 126	2450	98	2	30
156-59-2	cis-1,2-Dichloroethene	ND	250	2500	2380	95	72 - 130	2200	88	8	30
156-60-5	trans-1,2-Dichloroethene	ND	250	2500	2680	107	67 - 134	2640	106	2	30
75-09-2	Methylene chloride	ND	500	2500	2680	107	66 - 130	2730	109	2	30
78-87-5	1,2-Dichloropropane	ND	250	2500	2220	89	72 - 129	2250	90	1	30
10061-01-5	cis-1,3-Dichloropropene	ND	250	2500	2260	90	72 - 129	2260	90	0	30
10061-02-6	trans-1,3-Dichloropropene	ND	250	2500	2560	102	72 - 126	2300	92	11	30
100-41-4	Ethylbenzene	ND	250	2500	2690	108	74 - 130	2150	86	22	30
591-78-6	2-Hexanone	ND	250	2500	2430	97	47 - 137	2260	90	7	30
78-93-3	2-Butanone	ND	250	2500	2260	90	47 - 142	2260	90	0	30
108-10-1	4-Methyl-2-pentanone	ND	250	2500	2190	88	52 - 136	2390	96	9	30
100-42-5	Styrene	ND	250	2500	2770	111	72 - 128	2560	102	8	30
127-18-4	Tetrachloroethene	ND	250	2500	2730	109	70 - 127	2300	92	17	30
79-34-5	1,1,2,2-Tetrachloroethane	ND	250	2500	2650	106	66 - 129	2750	110	4	30
71-55-6	1,1,1-Trichloroethane	ND	250	2500	2710	108	70 - 130	2490	100	8	30
79-00-5	1,1,2-Trichloroethane	ND	250	2500	2630	105	74 - 120	2320	93	13	30
75-01-4	Vinyl chloride	ND	250	2500	2600	104	67 - 131	2410	96	8	30
108-05-4	Vinyl acetate	ND	250	2500	2510	100	53 - 140	2520	101	0.4	30
1330-20-7	Xylene (total)	ND	500	7500	8420	112	71 - 129	7070	94	17	30
75-35-4	1,1-Dichloroethene	ND	250	2500	2870	115	68 - 129	2760	110	4	30
71-43-2	Benzene	ND	250	2500	2540	102	73 - 128	2320	93	9	30
79-01-6	Trichloroethene	ND	250	2500	2440	98	78 - 127	2090	84	15	30
108-88-3	Toluene	ND	250	2500	2760	110	74 - 121	2360	94	16	30

GC/MS Volatiles Quality Control Summary

Analytical Batch 432421	Client ID	MB432421	LCS432421	LCSD432421
Prep Batch N/A	GCAL ID	834327	834328	834329
	Sample Type	Method Blank	LCS	LCSD
	Analytical Date	05/22/2010 00:38	05/21/2010 23:30	05/21/2010 23:52
	Matrix	Solid	Solid	Solid

SW-846 8260B		Units Result	ug/Kg RDL	Spike Added	Result	% R	Control Limits % R	Result	% R	RPD	RPD Limit
108-90-7	Chlorobenzene	ND	250	2500	2890	116	75 - 121	2340	94	21	30
Surrogate											
460-00-4	4-Bromofluorobenzene	2370	95	2500	2680	107	62 - 127	2430	97		
1868-53-7	Dibromofluoromethane	2620	105	2500	2460	98	65 - 130	2580	103		
2037-26-5	Toluene d8	2530	101	2500	2580	103	71 - 132	2390	96		
17060-07-0	1,2-Dichloroethane-d4	2560	102	2500	2610	104	62 - 125	2500	100		

Analytical Batch 432421	Client ID	33B102/SB3	33B102/SB3MS	33B102/SB3MSD
Prep Batch N/A	GCAL ID	21005134805	21005134806	21005134807
	Sample Type	SAMPLE	MS	MSD
	Analytical Date	05/22/2010 01:01	05/22/2010 04:02	05/22/2010 04:24
	Matrix	Solid	Solid	Solid

SW-846 8260B		Units Result	ug/Kg RDL	Spike Added	Result	% R	Control Limits % R	Result	% R	RPD	RPD Limit
71-55-6	1,1,1-Trichloroethane	0.00	220	2260	2120	94	70 - 130	1810	87	16	30
79-34-5	1,1,2,2-Tetrachloroethane	0.00	220	2260	2000	88	66 - 129	1950	93	3	30
79-00-5	1,1,2-Trichloroethane	0.00	220	2260	2080	92	74 - 120	1790	86	15	30
75-34-3	1,1-Dichloroethane	0.00	220	2260	2250	100	71 - 126	1990	95	12	30
75-35-4	1,1-Dichloroethene	0.00	220	2260	2180	96	68 - 129	1940	93	12	22
107-06-2	1,2-Dichloroethane	0.00	220	2260	2120	94	68 - 126	1820	87	15	30
78-87-5	1,2-Dichloropropane	0.00	220	2260	1850	82	72 - 129	1570	75	16	30
78-93-3	2-Butanone	48.8	220	2260	1930	83	47 - 142	1780	83	8	30
591-78-6	2-Hexanone	0.00	220	2260	2110	93	47 - 137	1920	92	9	30
108-10-1	4-Methyl-2-pentanone	0.00	220	2260	1640	73	52 - 136	1590	76	3	30
67-64-1	Acetone	0.00	1100	2260	2940	130	38 - 152	2720	130	8	30
71-43-2	Benzene	0.00	220	2260	1910	84	73 - 128	1680	81	13	21
75-27-4	Bromodichloromethane	0.00	220	2260	1970	87	74 - 126	1690	81	15	30
75-25-2	Bromoform	0.00	220	2260	2080	92	67 - 122	1730	83	18	30
74-83-9	Bromomethane	0.00	220	2260	1070	**47***	48 - 139	1090	52	2	30
75-15-0	Carbon disulfide	0.00	220	2260	2000	88	68 - 133	1670	80	18	30
56-23-5	Carbon tetrachloride	0.00	220	2260	2210	98	71 - 133	1900	91	15	30
108-90-7	Chlorobenzene	0.00	220	2260	2220	98	75 - 121	1860	89	18	21

GC/MS Volatiles Quality Control Summary

Analytical Batch 432421	Client ID	33B102/SB3	33B102/SB3MS	33B102/SB3MSD
Prep Batch N/A	GCAL ID	21005134805	21005134806	21005134807
	Sample Type	SAMPLE	MS	MSD
	Analytical Date	05/22/2010 01:01	05/22/2010 04:02	05/22/2010 04:24
	Matrix	Solid	Solid	Solid

SW-846 8260B		Units	ug/Kg	Spike			Control				
		Result	RDL	Added	Result	% R	Limits % R	Result	% R	RPD	RPD Limit
75-00-3	Chloroethane	0.00	220	2260	0.00	**0***	57 - 144	0.00	**0***	0	30
67-66-3	Chloroform	0.00	220	2260	1900	84	74 - 124	1640	79	15	30
74-87-3	Chloromethane	0.00	220	2260	1790	79	61 - 130	1510	72	17	30
124-48-1	Dibromochloromethane	0.00	220	2260	2030	90	74 - 122	1770	85	14	30
10061-01-5	cis-1,3-Dichloropropene	0.00	220	2260	1890	84	72 - 129	1590	76	17	30
10061-02-6	trans-1,3-Dichloropropene	0.00	220	2260	1970	87	72 - 126	1810	87	8	30
100-41-4	Ethylbenzene	0.00	220	2260	2160	96	74 - 130	1780	85	19	30
75-09-2	Methylene chloride	0.00	440	2260	2290	101	66 - 130	1990	95	14	30
100-42-5	Styrene	0.00	220	2260	2210	98	72 - 128	1930	92	14	30
127-18-4	Tetrachloroethene	0.00	220	2260	2070	92	70 - 127	1790	86	15	30
108-88-3	Toluene	0.00	220	2260	2140	95	74 - 121	1840	88	15	21
79-01-6	Trichloroethene	238	220	2260	2020	79	78 - 127	1790	**74***	12	24
108-05-4	Vinyl acetate	0.00	220	2260	1960	87	53 - 140	1680	81	15	30
75-01-4	Vinyl chloride	0.00	220	2260	1900	84	67 - 131	1740	83	9	30
1330-20-7	Xylene (total)	0.00	440	6780	6660	98	71 - 129	5410	86	21	30
156-59-2	cis-1,2-Dichloroethene	0.00	220	2260	2880	127	72 - 130	2680	128	7	30
156-60-5	trans-1,2-Dichloroethene	0.00	220	2260	2210	98	67 - 134	1910	92	15	30
Surrogate											
460-00-4	4-Bromofluorobenzene	2230	102	2260	2450	108	62 - 127	2170	104		
1868-53-7	Dibromofluoromethane	2160	98	2260	2320	103	65 - 130	2140	103		
2037-26-5	Toluene d8	2280	104	2260	2370	105	71 - 132	2240	107		
17060-07-0	1,2-Dichloroethane-d4	2210	101	2260	2370	105	62 - 125	2130	102		

Analytical Batch 432468	Client ID	MB432468	LCS432468	LCSD432468
Prep Batch N/A	GCAL ID	834485	834486	834487
	Sample Type	Method Blank	LCS	LCSD
	Analytical Date	05/22/2010 18:15	05/22/2010 17:06	05/22/2010 17:29
	Matrix	Solid	Solid	Solid

SW-846 8260B		Units	ug/Kg	Spike			Control				
		Result	RDL	Added	Result	% R	Limits % R	Result	% R	RPD	RPD Limit
67-64-1	Acetone	ND	25	50.0	78.8	**158***	38 - 152	79.7	**159***	1	30
75-27-4	Bromodichloromethane	ND	5	50.0	49.1	98	74 - 126	49.5	99	0.8	30

GC/MS Volatiles Quality Control Summary

Analytical Batch 432468	**Client ID**	MB432468	LCS432468	LCSD432468
Prep Batch N/A	**GCAL ID**	834485	834486	834487
	Sample Type	Method Blank	LCS	LCSD
	Analytical Date	05/22/2010 18:15	05/22/2010 17:06	05/22/2010 17:29
	Matrix	Solid	Solid	Solid

SW-846 8260B		**Units**	ug/Kg	**Spike**	**Result**		**Control**	**Result**			**RPD**
		Result	**RDL**	**Added**		**% R**	**Limits % R**		**% R**	**RPD**	**Limit**
75-25-2	Bromoform	ND	5	50.0	60.2	120	67 - 122	63.6	127*	5	30
74-83-9	Bromomethane	ND	5	50.0	42.7	85	48 - 139	46.5	93	9	30
75-15-0	Carbon disulfide	ND	5	50.0	44.6	89	68 - 133	44.1	88	1	30
56-23-5	Carbon tetrachloride	ND	5	50.0	54.5	109	71 - 133	47.5	95	14	30
75-00-3	Chloroethane	ND	5	50.0	44.2	88	57 - 144	44.9	90	2	30
67-66-3	Chloroform	ND	5	50.0	45.2	90	74 - 124	41.9	84	8	30
74-87-3	Chloromethane	ND	5	50.0	38.0	76	61 - 130	40.6	81	7	30
124-48-1	Dibromochloromethane	ND	5	50.0	53.0	106	74 - 122	58.6	117	10	30
75-34-3	1,1-Dichloroethane	ND	5	50.0	48.7	97	71 - 126	45.1	90	8	30
107-06-2	1,2-Dichloroethane	ND	5	50.0	51.2	102	68 - 126	50.3	101	2	30
156-59-2	cis-1,2-Dichloroethene	ND	5	50.0	42.8	86	72 - 130	42.1	84	2	30
156-60-5	trans-1,2-Dichloroethene	ND	5	50.0	45.4	91	67 - 134	45.0	90	0.9	30
75-09-2	Methylene chloride	ND	10	50.0	49.6	99	66 - 130	47.1	94	5	30
78-87-5	1,2-Dichloropropane	ND	5	50.0	41.6	83	72 - 129	43.7	87	5	30
10061-01-5	cis-1,3-Dichloropropene	ND	5	50.0	46.4	93	72 - 129	44.7	89	4	30
10061-02-6	trans-1,3-Dichloropropene	ND	5	50.0	48.1	96	72 - 126	54.0	108	12	30
100-41-4	Ethylbenzene	ND	5	50.0	49.4	99	74 - 130	48.6	97	2	30
591-78-6	2-Hexanone	ND	5	50.0	52.8	106	47 - 137	56.1	112	6	30
78-93-3	2-Butanone	ND	5	50.0	59.1	118	47 - 142	54.2	108	9	30
108-10-1	4-Methyl-2-pentanone	ND	5	50.0	62.2	124	52 - 136	59.2	118	5	30
100-42-5	Styrene	ND	5	50.0	52.9	106	72 - 128	52.9	106	0	30
127-18-4	Tetrachloroethene	ND	5	50.0	55.1	110	70 - 127	52.5	105	5	30
79-34-5	1,1,2,2-Tetrachloroethane	ND	5	50.0	62.4	125	66 - 129	58.4	117	7	30
71-55-6	1,1,1-Trichloroethane	ND	5	50.0	55.7	111	70 - 130	49.2	98	12	30
79-00-5	1,1,2-Trichloroethane	ND	5	50.0	53.0	106	74 - 120	54.5	109	3	30
75-01-4	Vinyl chloride	ND	5	50.0	45.0	90	67 - 131	44.2	88	2	30
108-05-4	Vinyl acetate	ND	5	50.0	48.8	98	53 - 140	47.1	94	4	30
1330-20-7	Xylene (total)	ND	10	150	148	99	71 - 129	148	99	0	30
75-35-4	1,1-Dichloroethene	ND	5	50.0	45.8	92	68 - 129	44.1	88	4	30
71-43-2	Benzene	ND	5	50.0	44.4	89	73 - 128	41.3	83	7	30
79-01-6	Trichloroethene	ND	5	50.0	47.3	95	78 - 127	41.8	84	12	30
108-88-3	Toluene	ND	5	50.0	46.5	93	74 - 121	47.8	96	3	30
108-90-7	Chlorobenzene	ND	5	50.0	52.9	106	75 - 121	54.7	109	3	30

GC/MS Volatiles Quality Control Summary

Analytical Batch 432468	Client ID	MB432468	LCS432468	LCSD432468
Prep Batch N/A	GCAL ID	834485	834486	834487
	Sample Type	Method Blank	LCS	LCSD
	Analytical Date	05/22/2010 18:15	05/22/2010 17:06	05/22/2010 17:29
	Matrix	Solid	Solid	Solid

SW-846 8260B		Units	ug/Kg								
		Result	RDL	Spike Added	Result	% R	Control Limits % R	Result	% R	RPD	RPD Limit
Surrogate											
460-00-4	4-Bromofluorobenzene	52	104	50	52.1	104	62 - 127	52.3	105		
1868-53-7	Dibromofluoromethane	51.5	103	50	54	108	65 - 130	49.7	99		
2037-26-5	Toluene d8	55.4	111	50	47.5	95	71 - 132	51.7	103		
17060-07-0	1,2-Dichloroethane-d4	54.7	109	50	55.5	111	62 - 125	57.1	114		

Analytical Batch 432508	Client ID	MB432508	LCS432508	LCSD432508
Prep Batch N/A	GCAL ID	834611	834612	834613
	Sample Type	Method Blank	LCS	LCSD
	Analytical Date	05/24/2010 16:54	05/24/2010 10:35	05/24/2010 11:13
	Matrix	Solid	Solid	Solid

SW-846 8260B		Units	ug/Kg								
		Result	RDL	Spike Added	Result	% R	Control Limits % R	Result	% R	RPD	RPD Limit
67-64-1	Acetone	ND	1300	2500	3320	133	38 - 152	3550	142	7	30
75-27-4	Bromodichloromethane	ND	250	2500	2640	106	74 - 126	2660	106	0.8	30
75-25-2	Bromoform	ND	250	2500	2040	82	67 - 122	2070	83	1	30
74-83-9	Bromomethane	ND	250	2500	2200	88	48 - 139	2580	103	16	30
75-15-0	Carbon disulfide	ND	250	2500	2640	106	68 - 133	2590	104	2	30
56-23-5	Carbon tetrachloride	ND	250	2500	1980	79	71 - 133	1970	79	0.5	30
75-00-3	Chloroethane	ND	250	2500	2250	90	57 - 144	2700	108	18	30
67-66-3	Chloroform	ND	250	2500	2570	103	74 - 124	2530	101	2	30
74-87-3	Chloromethane	ND	250	2500	2050	82	61 - 130	2170	87	6	30
124-48-1	Dibromochloromethane	ND	250	2500	2050	82	74 - 122	2150	86	5	30
75-34-3	1,1-Dichloroethane	ND	250	2500	2620	105	71 - 126	2460	98	6	30
107-06-2	1,2-Dichloroethane	ND	250	2500	2440	98	68 - 126	2470	99	1	30
156-59-2	cis-1,2-Dichloroethene	ND	250	2500	2610	104	72 - 130	2570	103	2	30
156-60-5	trans-1,2-Dichloroethene	ND	250	2500	2700	108	67 - 134	2780	111	3	30
75-09-2	Methylene chloride	ND	500	2500	2570	103	66 - 130	2680	107	4	30
78-87-5	1,2-Dichloropropane	ND	250	2500	2320	93	72 - 129	2370	95	2	30
10061-01-5	cis-1,3-Dichloropropene	ND	250	2500	2340	94	72 - 129	2360	94	0.9	30
10061-02-6	trans-1,3-Dichloropropene	ND	250	2500	2450	98	72 - 126	2380	95	3	30
100-41-4	Ethylbenzene	ND	250	2500	2600	104	74 - 130	2600	104	0	30

GC/MS Volatiles Quality Control Summary

Analytical Batch 432508	**Client ID**	MB432508	LCS432508	LCSD432508
Prep Batch N/A	**GCAL ID**	834611	834612	834613
	Sample Type	Method Blank	LCS	LCSD
	Analytical Date	05/24/2010 16:54	05/24/2010 10:35	05/24/2010 11:13
	Matrix	Solid	Solid	Solid

SW-846 8260B		**Units**	ug/Kg	**Spike**							
		Result	**RDL**	**Added**	**Result**	**% R**	**Control Limits % R**	**Result**	**% R**	**RPD**	**RPD Limit**
591-78-6	2-Hexanone	ND	250	2500	3000	120	47 - 137	3070	123	2	30
78-93-3	2-Butanone	ND	250	2500	3630	**145***	47 - 142	3380	135	7	30
108-10-1	4-Methyl-2-pentanone	ND	250	2500	2570	103	52 - 136	2530	101	2	30
100-42-5	Styrene	ND	250	2500	2300	92	72 - 128	2350	94	2	30
127-18-4	Tetrachloroethene	ND	250	2500	2060	82	70 - 127	2080	83	1	30
79-34-5	1,1,2,2-Tetrachloroethane	ND	250	2500	2560	102	66 - 129	2660	106	4	30
71-55-6	1,1,1-Trichloroethane	ND	250	2500	2260	90	70 - 130	2250	90	0.4	30
79-00-5	1,1,2-Trichloroethane	ND	250	2500	2280	91	74 - 120	2280	91	0	30
75-01-4	Vinyl chloride	ND	250	2500	2500	100	67 - 131	2540	102	2	30
108-05-4	Vinyl acetate	ND	250	2500	2170	87	53 - 140	2340	94	8	30
1330-20-7	Xylene (total)	ND	500	7500	6930	92	71 - 129	7100	95	2	30
75-35-4	1,1-Dichloroethene	ND	250	2500	2390	96	68 - 129	2450	98	2	30
71-43-2	Benzene	ND	250	2500	2590	104	73 - 128	2560	102	1	30
79-01-6	Trichloroethene	ND	250	2500	2500	100	78 - 127	2420	97	3	30
108-88-3	Toluene	ND	250	2500	2310	92	74 - 121	2350	94	2	30
108-90-7	Chlorobenzene	ND	250	2500	2340	94	75 - 121	2340	94	0	30
Surrogate											
460-00-4	4-Bromofluorobenzene	2240	90	2500	2430	97	62 - 127	2420	97		
1868-53-7	Dibromofluoromethane	2530	101	2500	2450	98	65 - 130	2420	97		
2037-26-5	Toluene d8	2680	107	2500	2320	93	71 - 132	2330	93		
17060-07-0	1,2-Dichloroethane-d4	2660	106	2500	2690	108	62 - 125	2700	108		

Analytical Batch 432508	**Client ID**	33B105/SB3	830462MS	830462MSD
Prep Batch N/A	**GCAL ID**	21005134818	835242	835243
	Sample Type	SAMPLE	MS	MSD
	Analytical Date	05/24/2010 18:18	05/24/2010 20:57	05/24/2010 21:20
	Matrix	Solid	Solid	Solid

SW-846 8260B		**Units**	ug/Kg	**Spike**							
		Result	**RDL**	**Added**	**Result**	**% R**	**Control Limits % R**	**Result**	**% R**	**RPD**	**RPD Limit**
67-64-1	Acetone	0.00	11000	21300	17400	82	38 - 152	17800	83	2	30
75-27-4	Bromodichloromethane	0.00	2100	21300	23500	110	74 - 126	22500	105	4	30
75-25-2	Bromoform	0.00	2100	21300	17800	83	67 - 122	18000	84	1	30

GC/MS Volatiles Quality Control Summary

Analytical Batch 432508	Client ID	33B105/SB3	830462MS	830462MSD
Prep Batch N/A	GCAL ID	21005134818	835242	835243
	Sample Type	SAMPLE	MS	MSD
	Analytical Date	05/24/2010 18:18	05/24/2010 20:57	05/24/2010 21:20
	Matrix	Solid	Solid	Solid

SW-846 8260B		Units Result	ug/Kg RDL	Spike Added	Result	% R	Control Limits % R	Result	% R	RPD	RPD Limit
74-83-9	Bromomethane	0.00	2100	21300	19500	91	48 - 139	20200	95	4	30
75-15-0	Carbon disulfide	0.00	2100	21300	21700	102	68 - 133	22300	105	3	30
56-23-5	Carbon tetrachloride	0.00	2100	21300	19000	89	71 - 133	18600	87	2	30
75-00-3	Chloroethane	0.00	2100	21300	25300	119	57 - 144	23200	109	9	30
67-66-3	Chloroform	0.00	2100	21300	23000	108	74 - 124	21800	102	5	30
74-87-3	Chloromethane	0.00	2100	21300	17500	82	61 - 130	19300	90	10	30
124-48-1	Dibromochloromethane	0.00	2100	21300	18500	87	74 - 122	19600	92	6	30
75-34-3	1,1-Dichloroethane	0.00	2100	21300	23000	108	71 - 126	21600	101	6	30
107-06-2	1,2-Dichloroethane	0.00	2100	21300	20300	95	68 - 126	21000	98	3	30
156-59-2	cis-1,2-Dichloroethene	15600	2100	21300	37400	102	72 - 130	35800	95	4	30
156-60-5	trans-1,2-Dichloroethene	0.00	2100	21300	22900	107	67 - 134	22000	103	4	30
75-09-2	Methylene chloride	0.00	4300	21300	20800	98	66 - 130	21700	102	4	30
78-87-5	1,2-Dichloropropane	0.00	2100	21300	21000	98	72 - 129	20300	95	3	30
10061-01-5	cis-1,3-Dichloropropene	0.00	2100	21300	20200	95	72 - 129	20100	94	0.5	30
10061-02-6	trans-1,3-Dichloropropene	0.00	2100	21300	20200	95	72 - 126	19700	92	3	30
100-41-4	Ethylbenzene	0.00	2100	21300	22000	103	74 - 130	21100	99	4	30
591-78-6	2-Hexanone	0.00	2100	21300	17000	80	47 - 137	17700	83	4	30
78-93-3	2-Butanone	0.00	2100	21300	18700	88	47 - 142	18500	87	1	30
108-10-1	4-Methyl-2-pentanone	0.00	2100	21300	18400	86	52 - 136	19200	90	4	30
100-42-5	Styrene	0.00	2100	21300	20100	94	72 - 128	19300	90	4	30
127-18-4	Tetrachloroethene	0.00	2100	21300	18300	86	70 - 127	18200	85	0.5	30
79-34-5	1,1,2,2-Tetrachloroethane	0.00	2100	21300	21000	98	66 - 129	21000	98	0	30
71-55-6	1,1,1-Trichloroethane	0.00	2100	21300	19900	93	70 - 130	18900	89	5	30
79-00-5	1,1,2-Trichloroethane	0.00	2100	21300	20700	97	74 - 120	21300	100	3	30
75-01-4	Vinyl chloride	0.00	2100	21300	19900	93	67 - 131	18800	88	6	30
108-05-4	Vinyl acetate	0.00	2100	21300	17400	82	53 - 140	17900	84	3	30
1330-20-7	Xylene (total)	0.00	4300	64000	59800	93	71 - 129	58500	91	2	30
75-35-4	1,1-Dichloroethene	0.00	2100	21300	20800	98	68 - 129	21100	99	1	22
71-43-2	Benzene	0.00	2100	21300	22300	105	73 - 128	21200	99	5	21
79-01-6	Trichloroethene	42800	2100	21300	68500	120	78 - 127	63900	99	7	24
108-88-3	Toluene	0.00	2100	21300	20300	95	74 - 121	19700	92	3	21
108-90-7	Chlorobenzene	0.00	2100	21300	20700	97	75 - 121	19600	92	5	21
Surrogate											

GC/MS Volatiles Quality Control Summary

Analytical Batch 432508	**Client ID**	33B105/SB3			830462MS			830462MSD			
Prep Batch N/A	**GCAL ID**	21005134818			835242			835243			
	Sample Type	SAMPLE			MS			MSD			
	Analytical Date	05/24/2010 18:18			05/24/2010 20:57			05/24/2010 21:20			
	Matrix	Solid			Solid			Solid			
SW-846 8260B		**Units**	ug/Kg	**Spike**	**Result**	**% R**	**Control Limits % R**	**Result**	**% R**	**RPD**	**RPD Limit**
		Result	**RDL**	**Added**							
460-00-4	4-Bromofluorobenzene	19700	92	21300	22100	104	62 - 127	21700	102		
1868-53-7	Dibromofluoromethane	21700	102	21300	21400	100	65 - 130	21100	99		
2037-26-5	Toluene d8	23500	110	21300	19900	93	71 - 132	20100	94		
17060-07-0	1,2-Dichloroethane-d4	22800	107	21300	22400	105	62 - 125	22500	105		

Analytical Batch 432582	**Client ID**	MB432582			LCS432582			LCSD432582			
Prep Batch N/A	**GCAL ID**	834906			834907			834908			
	Sample Type	Method Blank			LCS			LCSD			
	Analytical Date	05/24/2010 14:07			05/24/2010 11:38			05/24/2010 12:00			
	Matrix	Solid			Solid			Solid			
SW-846 8260B		**Units**	ug/Kg	**Spike**	**Result**	**% R**	**Control Limits % R**	**Result**	**% R**	**RPD**	**RPD Limit**
		Result	**RDL**	**Added**							
67-64-1	Acetone	ND	25	50.0	47.5	95	38 - 152	43.5	87	9	30
75-27-4	Bromodichloromethane	ND	5	50.0	47.8	96	74 - 126	48.1	96	0.6	30
75-25-2	Bromoform	ND	5	50.0	53.7	107	67 - 122	48.6	97	10	30
74-83-9	Bromomethane	ND	5	50.0	50.4	101	48 - 139	47.1	94	7	30
75-15-0	Carbon disulfide	ND	5	50.0	49.4	99	68 - 133	47.8	96	3	30
56-23-5	Carbon tetrachloride	ND	5	50.0	51.3	103	71 - 133	47.2	94	8	30
75-00-3	Chloroethane	ND	5	50.0	54.6	109	57 - 144	48.7	97	11	30
67-66-3	Chloroform	ND	5	50.0	47.9	96	74 - 124	48.2	96	0.6	30
74-87-3	Chloromethane	ND	5	50.0	59.8	120	61 - 130	58.2	116	3	30
124-48-1	Dibromochloromethane	ND	5	50.0	49.1	98	74 - 122	45.1	90	8	30
75-34-3	1,1-Dichloroethane	ND	5	50.0	49.4	99	71 - 126	47.1	94	5	30
107-06-2	1,2-Dichloroethane	ND	5	50.0	43.4	87	68 - 126	42.9	86	1	30
156-59-2	cis-1,2-Dichloroethene	ND	5	50.0	49.8	100	72 - 130	50.5	101	1	30
156-60-5	trans-1,2-Dichloroethene	ND	5	50.0	48.9	98	67 - 134	47.9	96	2	30
75-09-2	Methylene chloride	ND	10	50.0	46.5	93	66 - 130	44.6	89	4	30
78-87-5	1,2-Dichloropropane	ND	5	50.0	49.0	98	72 - 129	48.7	97	0.6	30
10061-01-5	cis-1,3-Dichloropropene	ND	5	50.0	52.6	105	72 - 129	49.5	99	6	30
10061-02-6	trans-1,3-Dichloropropene	ND	5	50.0	52.0	104	72 - 126	50.3	101	3	30
100-41-4	Ethylbenzene	ND	5	50.0	51.5	103	74 - 130	49.7	99	4	30
591-78-6	2-Hexanone	ND	5	50.0	49.9	100	47 - 137	49.0	98	2	30

GC/MS Volatiles Quality Control Summary

Analytical Batch 432582	Client ID	MB432582	LCS432582	LCSD432582
Prep Batch N/A	GCAL ID	834906	834907	834908
	Sample Type	Method Blank	LCS	LCSD
	Analytical Date	05/24/2010 14:07	05/24/2010 11:38	05/24/2010 12:00
	Matrix	Solid	Solid	Solid

SW-846 8260B		Units	ug/Kg	Spike							
		Result	RDL	Added	Result	% R	Control Limits % R	Result	% R	RPD	RPD Limit
78-93-3	2-Butanone	ND	5	50.0	47.1	94	47 - 142	43.4	87	8	30
108-10-1	4-Methyl-2-pentanone	ND	5	50.0	51.0	102	52 - 136	47.2	94	8	30
100-42-5	Styrene	ND	5	50.0	53.4	107	72 - 128	51.7	103	3	30
127-18-4	Tetrachloroethene	ND	5	50.0	44.3	89	70 - 127	41.7	83	6	30
79-34-5	1,1,2,2-Tetrachloroethane	ND	5	50.0	46.3	93	66 - 129	49.3	99	6	30
71-55-6	1,1,1-Trichloroethane	ND	5	50.0	45.9	92	70 - 130	46.3	93	0.9	30
79-00-5	1,1,2-Trichloroethane	ND	5	50.0	48.2	96	74 - 120	45.0	90	7	30
75-01-4	Vinyl chloride	ND	5	50.0	53.0	106	67 - 131	46.8	94	12	30
108-05-4	Vinyl acetate	ND	5	50.0	50.2	100	53 - 140	46.0	92	9	30
1330-20-7	Xylene (total)	ND	10	150	155	103	71 - 129	152	101	2	30
75-35-4	1,1-Dichloroethene	ND	5	50.0	49.9	100	68 - 129	48.4	97	3	30
71-43-2	Benzene	ND	5	50.0	49.6	99	73 - 128	47.5	95	4	30
79-01-6	Trichloroethene	ND	5	50.0	51.5	103	78 - 127	46.3	93	11	30
108-88-3	Toluene	ND	5	50.0	48.2	96	74 - 121	46.6	93	3	30
108-90-7	Chlorobenzene	ND	5	50.0	50.4	101	75 - 121	47.2	94	7	30
Surrogate											
460-00-4	4-Bromofluorobenzene	48.6	97	50	49.4	99	62 - 127	49.1	98		
1868-53-7	Dibromofluoromethane	48	96	50	47.8	96	65 - 130	49.3	99		
2037-26-5	Toluene d8	55.9	112	50	49.7	99	71 - 132	48.4	97		
17060-07-0	1,2-Dichloroethane-d4	47	94	50	47.8	96	62 - 125	46.6	93		

Analytical Batch 432630	Client ID	MB432630	LCS432630	LCSD432630
Prep Batch N/A	GCAL ID	835239	835240	835241
	Sample Type	Method Blank	LCS	LCSD
	Analytical Date	05/24/2010 21:41	05/24/2010 20:32	05/24/2010 20:54
	Matrix	Solid	Solid	Solid

SW-846 8260B		Units	ug/Kg	Spike							
		Result	RDL	Added	Result	% R	Control Limits % R	Result	% R	RPD	RPD Limit
67-64-1	Acetone	ND	25	50.0	32.3	65	38 - 152	33.1	66	2	30
75-27-4	Bromodichloromethane	ND	5	50.0	42.9	86	74 - 126	43.2	86	0.7	30
75-25-2	Bromoform	ND	5	50.0	40.3	81	67 - 122	40.7	81	1	30
74-83-9	Bromomethane	ND	5	50.0	47.2	94	48 - 139	49.3	99	4	30

GC/MS Volatiles Quality Control Summary

Analytical Batch 432630	**Client ID**	MB432630	LCS432630	LCSD432630
Prep Batch N/A	**GCAL ID**	835239	835240	835241
	Sample Type	Method Blank	LCS	LCSD
	Analytical Date	05/24/2010 21:41	05/24/2010 20:32	05/24/2010 20:54
	Matrix	Solid	Solid	Solid

SW-846 8260B		**Units**	ug/Kg	**Spike**	**Result**		**Control**	**Result**			**RPD**
		Result	**RDL**	**Added**		**% R**	**Limits % R**		**% R**	**RPD**	**Limit**
75-15-0	Carbon disulfide	ND	5	50.0	45.9	92	68 - 133	45.9	92	0	30
56-23-5	Carbon tetrachloride	ND	5	50.0	55.7	111	71 - 133	47.8	96	15	30
75-00-3	Chloroethane	ND	5	50.0	50.5	101	57 - 144	45.9	92	10	30
67-66-3	Chloroform	ND	5	50.0	51.0	102	74 - 124	43.9	88	15	30
74-87-3	Chloromethane	ND	5	50.0	46.0	92	61 - 130	47.4	95	3	30
124-48-1	Dibromochloromethane	ND	5	50.0	38.7	77	74 - 122	38.1	76	2	30
75-34-3	1,1-Dichloroethane	ND	5	50.0	47.0	94	71 - 126	45.5	91	3	30
107-06-2	1,2-Dichloroethane	ND	5	50.0	35.5	71	68 - 126	37.1	74	4	30
156-59-2	cis-1,2-Dichloroethene	ND	5	50.0	44.1	88	72 - 130	45.7	91	4	30
156-60-5	trans-1,2-Dichloroethene	ND	5	50.0	44.7	89	67 - 134	43.9	88	2	30
75-09-2	Methylene chloride	ND	10	50.0	42.4	85	66 - 130	44.1	88	4	30
78-87-5	1,2-Dichloropropane	ND	5	50.0	42.5	85	72 - 129	42.9	86	0.9	30
10061-01-5	cis-1,3-Dichloropropene	ND	5	50.0	43.4	87	72 - 129	43.5	87	0.2	30
10061-02-6	trans-1,3-Dichloropropene	ND	5	50.0	43.5	87	72 - 126	43.2	86	0.7	30
100-41-4	Ethylbenzene	ND	5	50.0	47.1	94	74 - 130	45.0	90	5	30
591-78-6	2-Hexanone	ND	5	50.0	35.3	71	47 - 137	38.4	77	8	30
78-93-3	2-Butanone	ND	5	50.0	30.6	61	47 - 142	33.1	66	8	30
108-10-1	4-Methyl-2-pentanone	ND	5	50.0	33.9	68	52 - 136	37.1	74	9	30
100-42-5	Styrene	ND	5	50.0	45.3	91	72 - 128	44.6	89	2	30
127-18-4	Tetrachloroethene	ND	5	50.0	44.8	90	70 - 127	43.5	87	3	30
79-34-5	1,1,2,2-Tetrachloroethane	ND	5	50.0	36.4	73	66 - 129	34.5	69	5	30
71-55-6	1,1,1-Trichloroethane	ND	5	50.0	46.5	93	70 - 130	45.8	92	2	30
79-00-5	1,1,2-Trichloroethane	ND	5	50.0	41.4	83	74 - 120	38.2	76	8	30
75-01-4	Vinyl chloride	ND	5	50.0	44.7	89	67 - 131	46.0	92	3	30
108-05-4	Vinyl acetate	ND	5	50.0	39.2	78	53 - 140	41.9	84	7	30
1330-20-7	Xylene (total)	ND	10	150	144	96	71 - 129	136	91	6	30
75-35-4	1,1-Dichloroethene	ND	5	50.0	50.6	101	68 - 129	47.2	94	7	30
71-43-2	Benzene	ND	5	50.0	45.2	90	73 - 128	45.1	90	0.2	30
79-01-6	Trichloroethene	ND	5	50.0	44.9	90	78 - 127	41.8	84	7	30
108-88-3	Toluene	ND	5	50.0	44.3	89	74 - 121	43.0	86	3	30
108-90-7	Chlorobenzene	ND	5	50.0	42.7	85	75 - 121	42.6	85	0.2	30
Surrogate											
460-00-4	4-Bromofluorobenzene	46.9	94	50	48.4	97	62 - 127	48.4	97		

GC/MS Volatiles Quality Control Summary

Analytical Batch 432630	Client ID	MB432630			LCS432630			LCSD432630			
Prep Batch N/A	GCAL ID	835239			835240			835241			
	Sample Type	Method Blank			LCS			LCSD			
	Analytical Date	05/24/2010 21:41			05/24/2010 20:32			05/24/2010 20:54			
	Matrix	Solid			Solid			Solid			
SW-846 8260B		**Units**	ug/Kg	**Spike**	**Result**		**Control**	**Result**			**RPD**
		Result	**RDL**	**Added**		**% R**	**Limits % R**		**% R**	**RPD**	**Limit**
1868-53-7	Dibromofluoromethane	51.2	102	50	49.8	100	65 - 130	48.3	97		
2037-26-5	Toluene d8	51.8	104	50	50.6	101	71 - 132	49.4	99		
17060-07-0	1,2-Dichloroethane-d4	49.2	98	50	45.6	91	62 - 125	44.2	88		

GCAL

GULF COAST ANALYTICAL LABORATORIES, INC
7979 GSRI Avenue, Baton Rouge, Louisiana 70820-7402
Phone 225.769.4900 • Fax 225.767.5717

CHAIN OF CUSTODY RECORD

Lab use only			
Burns & McDonnell	4435	20051346	5.24.10
Client Name	Client #	Workorder #	Due Date

Report to:
Client: BURNS & MCDONNELL
Address: 9400 WARD PARKWAY
KANSAS CITY MO 64114
Contact: SHARON SHELTON
Phone: 816 822 3168
Fax: 816 822 3494

Bill to:
Client: BURNS & MCDONNELL
Address: 9400 WARD PARKWAY
KANSAS CITY MO 64114
Contact: SHARON SHELTON
Phone: 816 822 3168
Fax: 816 822 3494

P.O. Number:
Project Name/Number: AK STEEL 54200

Sampled By: DAVID BARKER

Analytical Requests & Method

Lab use only:
Custody Seal used ☐ yes ☐ no
in tact ☐ yes ☐ no
Temperature °C 5.8

Matrix[1]	Date	Time (2400)	Comp	Grab	Sample Description	Preservatives	No Containers	VOC 8260/5035	SPLP VOC *	Remarks:	Lab ID
W	5/11/10	0800		X	TEMPERATURE BLANK	—	1				
S	5/11/10	0941		X	33B101 / SB1	SODIUM BISULFATE / MeOH	5	X	X		1
S	5/11/10	0946		X	33B101 / SB2		5	X	X		2
S	5/11/10	0956		X	33B101 / SB3		5	X	X		3
S	5/11/10	1025		X	33B102 / SB1		5	X	X		4
S	5/11/10	1044		X	33B102 / SB3		5	X	X		5
S	5/11/10	1044		X	33B102 / SB3MS		5	X	X	use for MS	6
S	5/11/10	1044		X	33B102 / SB3MSD		5	X	X	use for MSD	7
S	5/11/10	0850		X	33B103 / SB1		5	X	X		8
S	5/11/10	0850		X	33B103 / SB1D		5	X	X		9
S	5/11/10	0858		X	33B103 / SB2		5	X	X		10
S	5/11/10	0902		X	33B103 / SB3		5	X	X		11
S	5/11/10	1114		X	33B104 / SB1		5	X	X		12
S	5/11/10	1121		X	33B104 / SB2		5	X	X		13

Turn Around Time: ☐ 24-48 hrs. ☐ 3 days ☐ 1 week ☒ Standard ☐ Other

Relinquished by: (Signature)	Received by: (Signature)	Date:	Time:
[signature]		5/12/10	1700
Relinquished by: (Signature) [signature]	Received by: (Signature) [signature]	Date: 5-13-10	Time: 1020
Relinquished by: (Signature)	Received by: (Signature)	Date:	Time:

Note: SHIPPED IN 5 COOLERS
* SPLP VOC's in a separate workorder

PAGE 1 OF 4

By submitting these samples, you agree to the terms and conditions contained in our most recent schedule of services.

Matrix[1]: W = water, S = soil, SD = solid, L = liquid, SL = sludge, o = oil, CT = charcoal tube, A = air bag

We cannot accept verbal changes. Please fax written changes to (225) 767-5717

WHITE: CLIENT FINAL REPORT — CANARY: LABORATORY — PINK: CLIENT

GCAL-06 11/98

GCAL

GULF COAST ANALYTICAL LABORATORIES, INC
7979 GSRI Avenue, Baton Rouge, Louisiana 70820-7402
Phone 225.769.4900 • Fax 225.767.5717

CHAIN OF CUSTODY RECORD

Lab use only

Client Name	Client #	Workorder #	Due Date
Burns & McDonnell	4435	210051346	5-24-10

Report to:
Client: BURNS & MCDONNELL
Address: 9400 WARD PARKWAY
KANSAS CITY MO 64114
Contact: SHARON SHELTON
Phone: 816 822 ~~3494~~ 3168
Fax: 816 822 3494

Bill to:
Client: SAME
Address:
Contact:
Phone:
Fax:

P.O. Number:
Project Name/Number: AK STEEL 54200
Sampled By: DAVID BARKER

Analytical Requests & Method

Lab use only:
Custody Seal
used ☐ yes ☐ no
in tact ☐ yes ☐ no
Temperature °C 5.8

Matrix[1]	Date	Time (2400)	Comp	Grab	Sample Description	Preservatives	No Containers	VOC 8260/5035	SPLP VOC *	Remarks:	Lab ID
S	5/11/10	1121		X	33B104/SB2D	SODIUM DISULFATE MeOH	5	X	X		14
S	5/11/10	1138		X	33B104/SB3		5	X	X		15
S	5/11/10	1210		X	33B105/SB1		5	X	X		16
S	5/11/10	1230		X	33B105/SB2		5	X	X		17
S	5/11/10	1240		X	33B105/SB3		5	X	X		18
S	5/11/10	1248		X	33B106/SB1		5	X	X		19
S	5/11/10	1300		X	33B106/SB2		5	X	X		20
S	5/11/10	1308		X	33B106/SB3		5	X	X		21
S	5/11/10	1322		X	33B107/SB1		5	X	X		22
S	5/11/10	1327		X	33B107/SB2		5	X	X		23
S	5/11/10	1340		X	33B107/SB3		5	X	X		24
S	5/11/10	1500		X	33B108/SB1		5	X	X		25
S	5/11/10	1500		X	33B108/SB1MS		5	X	X	Use for MS	26
S	5/11/10	1500		X	33B108/SB1MSD		5	X	X	Use for MSD	27

Turn Around Time: ☐ 24-48 hrs. ☐ 3 days ☐ 1 week ☒ Standard ☐ Other

Relinquished by: (Signature)	Received by: (Signature)	Date:	Time:
[signature]		5/12/10	1700
Foley	[signature]	5-12-10	1020

Note: SHIPPED IN 5 COOLERS

PAGE 2 OF 4

* SPLP VOC's are in a separate workord

By submitting these samples, you agree to the terms and conditions contained in our most recent schedule of services.

Matrix[1]: W = water, S = soil, SD = solid, L = liquid, SL = sludge, o = oil, CT = charcoal tube, A = air bag

We cannot accept verbal changes. Please fax written changes to (225) 767-5717

WHITE: CLIENT FINAL REPORT — CANARY: LABORATORY — PINK: CLIENT

GCAL-06 11/98

GCAL

GULF COAST ANALYTICAL LABORATORIES, INC
7979 GSRI Avenue, Baton Rouge, Louisiana 70820-7402
Phone 225.769.4900 • Fax 225.767.5717

CHAIN OF CUSTODY RECORD

Lab use only			
Burns & McDonnell	4435	21005134E	5-24-10
Client Name	Client #	Workorder #	Due Date

Report to:
Client: BURNS & MCDONNELL
Address: 9400 WARD PARKWAY
KANSAS CITY MO 64114
Contact: SHARON SHELTON
Phone: 816 822 3168
Fax: 816 822 3494

Bill to:
Client: SAME
Address:
Contact:
Phone:
Fax:

P.O. Number:
Project Name/Number: AK STEEL 54200
Sampled By: DAVID BARKER

Analytical Requests & Method

Lab use only:
Custody Seal used ☐ yes ☐ no
in tact ☐ yes ☐ no
Temperature °C 58

Matrix[1]	Date	Time (2400)	Comp	Grab	Sample Description	Preservatives	No Containers	VOC 8260/5035	SPLP VOC *	Remarks:	Lab ID
S	5/11/10	1535		X	33B108 / SB3	SODIUM BISULFATE MeOH	5	X	X		28
S	5/11/10	1352		X	33B109 / SB1		5	X	X		29
S	5/11/10	1408		X	33B109 / SB2		5	X	X		30
S	5/11/10	1420		X	33B109 / SB3		5	X	X		31
S	5/11/10	1420		X	33B109 / SB3D		5	X	X		32
S	5/11/10	1433		X	33B110 / SB1		5	X	X		33
S	5/11/10	1438		X	33B110 / SB2		5	X	X		34
S	5/11/10	1450		X	33B110 / SB3		5	X	X		35
S	5/11/10	1552		X	33B111 / SB1		5	X	X		36
S	5/11/10	1558		X	33B111 / SB2		5	X	X		37
S	5/11/10	1613		X	33B111 / SB3		5	X	X		38
S	5/12/10	0820		X	33B112 / SB1		5	X	X		39
S	5/12/10	0820		X	33B112 / SB1D		5	X	X		40
S	5/12/10	0837		X	33B112 / SB2		5	X	X		41

Turn Around Time: ☐ 24-48 hrs. ☐ 3 days ☐ 1 week ☒ Standard ☐ Other

Relinquished by: (Signature)	Received by: (Signature)	Date:	Time:
[signature]		5/12/10	1700
Relinquished by: (Signature) [signature]	Received by: (Signature) [signature]	Date: 5-13-10	Time: 1020
Relinquished by: (Signature)	Received by: (Signature)	Date:	Time:

Note: SHIPPED IN 5 COOLERS
* SPLPVOCs are in aqueous matrix

PAGE 3 OF 4

By submitting these samples, you agree to the terms and conditions contained in our most recent schedule of services.

Matrix[1]: W = water, S = soil, SD = solid, L = liquid, SL = sludge, o = oil, CT = charcoal tube, A = air bag

We cannot accept verbal changes. Please fax written changes to (225) 767-5717

WHITE: CLIENT FINAL REPORT — CANARY: LABORATORY — PINK: CLIENT

GCAL-06 11/98

GCAL

GULF COAST ANALYTICAL LABORATORIES, INC
7979 GSRI Avenue, Baton Rouge, Louisiana 70820-7402
Phone 225.769.4900 • Fax 225.767.5717

CHAIN OF CUSTODY RECORD

Lab use only

Client Name	Client #	Workorder #	Due Date
Burns & McDonnell	4435	210051348	5/24/10

Report to:
Client: BURNS & MCDONNELL
Address: 9400 WARD PARKWAY
KANSAS CITY MO 64114
Contact: SHARON SYLETON
Phone: 816 822 3168
Fax: 816 822 3494

Bill to:
Client: SAME
Address:
Contact:
Phone:
Fax:

P.O. Number
Project Name/Number: AK STEEL 54200
Sampled By: DAVID BARKER

Analytical Requests & Method

Lab use only:
Custody Seal used ☐ yes ☐ no
in tact ☐ yes ☐ no
Temperature °C 5.5

Matrix[1]	Date	Time (2400)	Comp	Grab	Sample Description	Preservatives	No Containers	VOC 8260/5035	SPLP VOC *	Remarks:	Lab ID
S	5/12/10	0842		X	33B112 / SB3	SODIUM BISULFATE MeOH	5	X	X		42
S	5/11/10	1624		X	33B113 / SB1		5	X	X		43
S	5/11/10	1640		X	33B113 / SB2		5	X	X		44
S	5/11/10	1647		X	33B113 / SB3		5	X	X		45
S	5/12/10	0900		X	33B114 / SB1		5	X	X		46
S	5/12/10	0903		X	33B114 / SB2		5	X	X		47
S	5/12/10	0915		X	33B114 / SB3		5	X	X		48

05/12/10

Turn Around Time: ☐ 24-48 hrs. ☐ 3 days ☐ 1 week ☒ Standard ☐ Other

Relinquished by: (Signature)	Received by: (Signature)	Date:	Time:
		5/12/10	1700
Relinquished by: (Signature)	Received by: (Signature)	Date:	Time:
		5/13/10	1070
Relinquished by: (Signature)	Received by: (Signature)	Date:	Time:

Note: SHIPPED IN 5 COOLERS PAGE 4 of 4
* SPLP VOCs are in separate workorder

By submitting these samples, you agree to the terms and conditions contained in our most recent schedule of services.

Matrix[1]: W = water, S = soil, SD = solid, L = liquid, SL = sludge, o = oil, CT = charcoal tube, A = air bag

We cannot accept verbal changes. Please fax written changes to (225) 767-5717

WHITE: CLIENT FINAL REPORT — CANARY: LABORATORY — PINK: CLIENT

GCAL-06 11/98

GCAL 210051349

NELAP CERTIFICATE NUMBER 01955

ANALYTICAL RESULTS

PERFORMED BY

GULF COAST ANALYTICAL LABORATORIES, INC.
7979 GSRI Rd.
Baton Rouge, LA 70820

Report Date 05/26/2010

GCAL Report 210051349

Deliver To	Burns & McDonnell 9400 Ward Parkway Kansas City, MO 64114 816-822-3168
Attn	Sharon Shelton

Project AK Steel

CASE NARRATIVE

Client: Burns & McDonnell **Report:** 210051349

Gulf Coast Analytical Laboratories received and analyzed the sample(s) listed on the sample cross-reference page of this report. Receipt of the sample(s) is documented by the attached chain of custody. This applies only to the sample(s) listed in this report. No sample integrity or quality control exceptions were identified unless noted below.

This report was resubmitted on 06/10/10. The narrative was revised to address methylene chloride contamination for SPLP extracts.

VOLATILES MASS SPECTROMETRY

In the SW-846 1312/8260B analysis, Methylene chloride detected in the SPLP extracts is laboratory contamination. The SPLP extraction procedure is performed in the organics prep laboratory where methylene chloride is used as a solvent. Additionally, Methylene chloride was not detected in the total volatiles analysis performed on these samples (included in report 210051348).

In the SW-846 1312/8260B analysis for analytical batch 432316, the LCS/LCSD recoveries are above the upper control limit for Acetone. Acetone was not detected in the associated samples.

In the SW-846 1312/8260B analysis for analytical batch 432420, the MS/MSD exhibited recovery failures. All LCS/LCSD recoveries are acceptable.

In the SW-846 1312/8260B analysis for analytical batch 432467, the MS/MSD exhibited recovery and RPD failures. All LCS recoveries are acceptable.

Laboratory Endorsement

Sample analysis was performed in accordance with approved methodologies provided by the Environmental Protection Agency or other recognized agencies. The samples and their corresponding extracts will be maintained for a period of 30 days unless otherwise arranged. Following this retention period the samples will be disposed in accordance with GCAL's Standard Operating Procedures.

Common Abbreviations Utilized in this Report

ND	Indicates the result was Not Detected at the specified RDL
DO	Indicates the result was Diluted Out
MI	Indicates the result was subject to Matrix Interference
TNTC	Indicates the result was Too Numerous To Count
SUBC	Indicates the analysis was Sub-Contracted
FLD	Indicates the analysis was performed in the Field
PQL	Practical Quantitation Limit
MDL	Method Detection Limit
RDL	Reporting Detection Limit
00:00	Reported as a time equivalent to 12:00 AM

Reporting Flags Utilized in this Report

J	Indicates an estimated value
U	Indicates the compound was analyzed for but not detected
B	(ORGANICS) Indicates the analyte was detected in the associated Method Blank
B	(INORGANICS) Indicates the result is between the RDL and MDL

Sample receipt at GCAL is documented through the attached chain of custody. In accordance with NELAC, this report shall be reproduced only in full and with the written permission of GCAL. The results contained within this report relate only to the samples reported. The documented results are presented within this report.

This report pertains only to the samples listed in the Report Sample Summary and should be retained as a permanent record thereof. The results contained within this report are intended for the use of the client. Any unauthorized use of the information contained in this report is prohibited.

I certify that this data package is in compliance with the NELAC standard and terms and conditions of the contract and Statement of Work both technically and for completeness, for other than the conditions in the case narrative. Release of the data contained in this hardcopy data package and in the computer-readable data submitted has been authorized by the Quality Assurance Manager or his/her designee, as verified by the following signature.

Estimated uncertainty of measurement is available upon request. This report is in compliance with the DOD QSM as specified in the contract if applicable.

Robyn Migues
Technical Director
GCAL REPORT 210051349

Report Sample Summary

GCAL ID	Client ID	Matrix	Collect Date/Time	Receive Date/Time
21005134901	33B101/SB1	Solid	05/11/2010 09:41	05/13/2010 10:20
21005134902	33B101/SB2	Solid	05/11/2010 09:46	05/13/2010 10:20
21005134903	33B101/SB3	Solid	05/11/2010 09:56	05/13/2010 10:20
21005134904	33B102/SB1	Solid	05/11/2010 10:25	05/13/2010 10:20
21005134905	33B102/SB3	Solid	05/11/2010 10:44	05/13/2010 10:20
21005134906	33B102/SB3MS	Solid	05/11/2010 10:44	05/13/2010 10:20
21005134907	33B102/SB3MSD	Solid	05/11/2010 10:44	05/13/2010 10:20
21005134908	33B103/SB1	Solid	05/11/2010 08:50	05/13/2010 10:20
21005134909	33B103/SB1D	Solid	05/11/2010 08:50	05/13/2010 10:20
21005134910	33B103/SB2	Solid	05/11/2010 08:58	05/13/2010 10:20
21005134911	33B103/SB3	Solid	05/11/2010 09:12	05/13/2010 10:20
21005134912	33B104/SB1	Solid	05/11/2010 11:14	05/13/2010 10:20
21005134913	33B104/SB2	Solid	05/11/2010 11:21	05/13/2010 10:20
21005134914	33B104/SB2D	Solid	05/11/2010 11:21	05/13/2010 10:20
21005134915	33B104/SB3	Solid	05/11/2010 11:38	05/13/2010 10:20
21005134916	33B105/SB1	Solid	05/11/2010 12:10	05/13/2010 10:20
21005134917	33B105/SB2	Solid	05/11/2010 12:30	05/13/2010 10:20
21005134918	33B105/SB3	Solid	05/11/2010 12:40	05/13/2010 10:20
21005134919	33B106/SB1	Solid	05/11/2010 12:48	05/13/2010 10:20
21005134920	33B106/SB2	Solid	05/11/2010 13:00	05/13/2010 10:20
21005134921	33B106/SB3	Solid	05/11/2010 13:08	05/13/2010 10:20
21005134922	33B107/SB1	Solid	05/11/2010 13:22	05/13/2010 10:20
21005134923	33B107/SB2	Solid	05/11/2010 13:27	05/13/2010 10:20
21005134924	33B107/SB3	Solid	05/11/2010 13:40	05/13/2010 10:20
21005134925	33B108/SB1	Solid	05/11/2010 15:00	05/13/2010 10:20
21005134926	33B108/SB1MS	Solid	05/11/2010 15:00	05/13/2010 10:20
21005134927	33B108/SB1MSD	Solid	05/11/2010 15:00	05/13/2010 10:20
21005134928	33B108/SB3	Solid	05/11/2010 15:35	05/13/2010 10:20
21005134929	33B109/SB1	Solid	05/11/2010 13:52	05/13/2010 10:20
21005134930	33B109/SB2	Solid	05/11/2010 14:08	05/13/2010 10:20
21005134931	33B109/SB3	Solid	05/11/2010 14:20	05/13/2010 10:20
21005134932	33B109/SB3D	Solid	05/11/2010 14:20	05/13/2010 10:20
21005134933	33B110/SB1	Solid	05/11/2010 14:33	05/13/2010 10:20
21005134934	33B110/SB2	Solid	05/11/2010 14:38	05/13/2010 10:20
21005134935	33B110/SB3	Solid	05/11/2010 14:50	05/13/2010 10:20
21005134936	33B111/SB1	Solid	05/11/2010 15:52	05/13/2010 10:20
21005134937	33B111/SB2	Solid	05/11/2010 15:58	05/13/2010 10:20
21005134938	33B111/SB3	Solid	05/11/2010 16:13	05/13/2010 10:20
21005134939	33B112/SB1	Solid	05/12/2010 08:20	05/13/2010 10:20
21005134940	33B112/SB1D	Solid	05/12/2010 08:20	05/13/2010 10:20
21005134941	33B112/SB2	Solid	05/12/2010 08:37	05/13/2010 10:20
21005134942	33B112/SB3	Solid	05/12/2010 08:42	05/13/2010 10:20
21005134943	33B113/SB1	Solid	05/11/2010 16:24	05/13/2010 10:20
21005134944	33B113/SB2	Solid	05/11/2010 16:40	05/13/2010 10:20
21005134945	33B113/SB3	Solid	05/11/2010 16:47	05/13/2010 10:20
21005134946	33B114/SB1	Solid	05/12/2010 09:00	05/13/2010 10:20

Report Sample Summary (con't)

GCAL ID	Client ID	Matrix	Collect Date/Time	Receive Date/Time
21005134947	33B114/SB2	Solid	05/12/2010 09:03	05/13/2010 10:20
21005134948	33B114/SB3	Solid	05/12/2010 09:15	05/13/2010 10:20

Summary of Compounds Detected

GCAL ID	Client ID	Matrix	Collect Date/Time	Receive Date/Time
21005134901	33B101/SB1	Solid	05/11/2010 09:41	05/13/2010 10:20

SW-846 8260B SPLP

CAS#	Parameter	Result	RDL	REG LIMIT	Units
75-09-2	Methylene chloride	48.9	10		ug/L

GCAL ID	Client ID	Matrix	Collect Date/Time	Receive Date/Time
21005134902	33B101/SB2	Solid	05/11/2010 09:46	05/13/2010 10:20

SW-846 8260B SPLP

CAS#	Parameter	Result	RDL	REG LIMIT	Units
75-09-2	Methylene chloride	30.3	10		ug/L

GCAL ID	Client ID	Matrix	Collect Date/Time	Receive Date/Time
21005134903	33B101/SB3	Solid	05/11/2010 09:56	05/13/2010 10:20

SW-846 8260B SPLP

CAS#	Parameter	Result	RDL	REG LIMIT	Units
75-09-2	Methylene chloride	28.6	10		ug/L

GCAL ID	Client ID	Matrix	Collect Date/Time	Receive Date/Time
21005134904	33B102/SB1	Solid	05/11/2010 10:25	05/13/2010 10:20

SW-846 8260B SPLP

CAS#	Parameter	Result	RDL	REG LIMIT	Units
75-09-2	Methylene chloride	25.3	10		ug/L

GCAL ID	Client ID	Matrix	Collect Date/Time	Receive Date/Time
21005134905	33B102/SB3	Solid	05/11/2010 10:44	05/13/2010 10:20

SW-846 8260B SPLP

CAS#	Parameter	Result	RDL	REG LIMIT	Units
75-09-2	Methylene chloride	21.0	10		ug/L

GCAL ID	Client ID	Matrix	Collect Date/Time	Receive Date/Time
21005134906	33B102/SB3MS	Solid	05/11/2010 10:44	05/13/2010 10:20

SW-846 8260B SPLP

CAS#	Parameter	Result	RDL	REG LIMIT	Units
71-55-6	1,1,1-Trichloroethane	47.4	5		ug/L
79-34-5	1,1,2,2-Tetrachloroethane	47.0	5		ug/L
79-00-5	1,1,2-Trichloroethane	46.7	5		ug/L
75-34-3	1,1-Dichloroethane	46.9	5		ug/L

Summary of Compounds Detected (con't)

GCAL ID	Client ID	Matrix	Collect Date/Time	Receive Date/Time
21005134906	33B102/SB3MS	Solid	05/11/2010 10:44	05/13/2010 10:20

SW-846 8260B SPLP

CAS#	Parameter	Result	RDL	REG LIMIT	Units
75-35-4	1,1-Dichloroethene	44.5	5		ug/L
107-06-2	1,2-Dichloroethane	48.3	5		ug/L
78-87-5	1,2-Dichloropropane	47.5	5		ug/L
78-93-3	2-Butanone	35.7	25		ug/L
591-78-6	2-Hexanone	39.6	5		ug/L
108-10-1	4-Methyl-2-pentanone	42.6	5		ug/L
67-64-1	Acetone	40.3	25		ug/L
71-43-2	Benzene	46.2	5		ug/L
75-27-4	Bromodichloromethane	48.8	5		ug/L
75-25-2	Bromoform	45.7	5		ug/L
74-83-9	Bromomethane	38.2	5		ug/L
75-15-0	Carbon disulfide	47.1	5		ug/L
56-23-5	Carbon tetrachloride	46.7	5		ug/L
108-90-7	Chlorobenzene	47.1	5		ug/L
75-00-3	Chloroethane	43.7	5		ug/L
67-66-3	Chloroform	48.3	5		ug/L
74-87-3	Chloromethane	35.3	5		ug/L
124-48-1	Dibromochloromethane	50.8	5		ug/L
10061-01-5	cis-1,3-Dichloropropene	48.9	5		ug/L
10061-02-6	trans-1,3-Dichloropropene	51.0	5		ug/L
100-41-4	Ethylbenzene	48.6	5		ug/L
75-09-2	Methylene chloride	64.2	10		ug/L
100-42-5	Styrene	49.2	5		ug/L
127-18-4	Tetrachloroethene	47.5	5		ug/L
108-88-3	Toluene	46.3	5		ug/L
79-01-6	Trichloroethene	47.2	5		ug/L
108-05-4	Vinyl acetate	19.6	5		ug/L
75-01-4	Vinyl chloride	40.8	5		ug/L
1330-20-7	Xylene (total)	150	10		ug/L
156-59-2	cis-1,2-Dichloroethene	50.8	5		ug/L
156-60-5	trans-1,2-Dichloroethene	47.6	5		ug/L

GCAL ID	Client ID	Matrix	Collect Date/Time	Receive Date/Time
21005134907	33B102/SB3MSD	Solid	05/11/2010 10:44	05/13/2010 10:20

SW-846 8260B SPLP

CAS#	Parameter	Result	RDL	REG LIMIT	Units
71-55-6	1,1,1-Trichloroethane	45.5	5		ug/L
79-34-5	1,1,2,2-Tetrachloroethane	46.4	5		ug/L
79-00-5	1,1,2-Trichloroethane	45.3	5		ug/L
75-34-3	1,1-Dichloroethane	45.3	5		ug/L
75-35-4	1,1-Dichloroethene	42.5	5		ug/L
107-06-2	1,2-Dichloroethane	47.9	5		ug/L
78-87-5	1,2-Dichloropropane	46.1	5		ug/L
78-93-3	2-Butanone	35.2	25		ug/L
591-78-6	2-Hexanone	38.7	5		ug/L
108-10-1	4-Methyl-2-pentanone	42.1	5		ug/L

Summary of Compounds Detected (con't)

GCAL ID	Client ID	Matrix	Collect Date/Time	Receive Date/Time
21005134907	33B102/SB3MSD	Solid	05/11/2010 10:44	05/13/2010 10:20

SW-846 8260B SPLP

CAS#	Parameter	Result	RDL	REG LIMIT	Units
67-64-1	Acetone	38.5	25		ug/L
71-43-2	Benzene	45.1	5		ug/L
75-27-4	Bromodichloromethane	47.8	5		ug/L
75-25-2	Bromoform	45.4	5		ug/L
74-83-9	Bromomethane	39.5	5		ug/L
75-15-0	Carbon disulfide	42.7	5		ug/L
56-23-5	Carbon tetrachloride	44.9	5		ug/L
108-90-7	Chlorobenzene	45.3	5		ug/L
75-00-3	Chloroethane	41.5	5		ug/L
67-66-3	Chloroform	46.7	5		ug/L
74-87-3	Chloromethane	35.1	5		ug/L
124-48-1	Dibromochloromethane	48.9	5		ug/L
10061-01-5	cis-1,3-Dichloropropene	47.6	5		ug/L
10061-02-6	trans-1,3-Dichloropropene	50.9	5		ug/L
100-41-4	Ethylbenzene	45.6	5		ug/L
75-09-2	Methylene chloride	61.7	10		ug/L
100-42-5	Styrene	47.9	5		ug/L
127-18-4	Tetrachloroethene	43.2	5		ug/L
108-88-3	Toluene	44.0	5		ug/L
79-01-6	Trichloroethene	44.8	5		ug/L
108-05-4	Vinyl acetate	22.7	5		ug/L
75-01-4	Vinyl chloride	38.8	5		ug/L
1330-20-7	Xylene (total)	142	10		ug/L
156-59-2	cis-1,2-Dichloroethene	49.7	5		ug/L
156-60-5	trans-1,2-Dichloroethene	44.9	5		ug/L

GCAL ID	Client ID	Matrix	Collect Date/Time	Receive Date/Time
21005134908	33B103/SB1	Solid	05/11/2010 08:50	05/13/2010 10:20

SW-846 8260B SPLP

CAS#	Parameter	Result	RDL	REG LIMIT	Units
75-09-2	Methylene chloride	26.3	10		ug/L

GCAL ID	Client ID	Matrix	Collect Date/Time	Receive Date/Time
21005134909	33B103/SB1D	Solid	05/11/2010 08:50	05/13/2010 10:20

SW-846 8260B SPLP

CAS#	Parameter	Result	RDL	REG LIMIT	Units
75-09-2	Methylene chloride	22.0	10		ug/L

Summary of Compounds Detected (con't)

GCAL ID	Client ID	Matrix	Collect Date/Time	Receive Date/Time
21005134910	33B103/SB2	Solid	05/11/2010 08:58	05/13/2010 10:20

SW-846 8260B SPLP

CAS#	Parameter	Result	RDL	REG LIMIT	Units
75-09-2	Methylene chloride	22.3	10		ug/L

GCAL ID	Client ID	Matrix	Collect Date/Time	Receive Date/Time
21005134911	33B103/SB3	Solid	05/11/2010 09:12	05/13/2010 10:20

SW-846 8260B SPLP

CAS#	Parameter	Result	RDL	REG LIMIT	Units
75-09-2	Methylene chloride	17.7	10		ug/L

GCAL ID	Client ID	Matrix	Collect Date/Time	Receive Date/Time
21005134912	33B104/SB1	Solid	05/11/2010 11:14	05/13/2010 10:20

SW-846 8260B SPLP

CAS#	Parameter	Result	RDL	REG LIMIT	Units
75-09-2	Methylene chloride	24.3	10		ug/L

GCAL ID	Client ID	Matrix	Collect Date/Time	Receive Date/Time
21005134913	33B104/SB2	Solid	05/11/2010 11:21	05/13/2010 10:20

SW-846 8260B SPLP

CAS#	Parameter	Result	RDL	REG LIMIT	Units
75-09-2	Methylene chloride	27.5	10		ug/L

GCAL ID	Client ID	Matrix	Collect Date/Time	Receive Date/Time
21005134914	33B104/SB2D	Solid	05/11/2010 11:21	05/13/2010 10:20

SW-846 8260B SPLP

CAS#	Parameter	Result	RDL	REG LIMIT	Units
75-09-2	Methylene chloride	22.1	10		ug/L

GCAL ID	Client ID	Matrix	Collect Date/Time	Receive Date/Time
21005134915	33B104/SB3	Solid	05/11/2010 11:38	05/13/2010 10:20

SW-846 8260B SPLP

CAS#	Parameter	Result	RDL	REG LIMIT	Units
75-09-2	Methylene chloride	18.6	10		ug/L

Summary of Compounds Detected (con't)

GCAL ID	Client ID	Matrix	Collect Date/Time	Receive Date/Time
21005134916	33B105/SB1	Solid	05/11/2010 12:10	05/13/2010 10:20

SW-846 8260B SPLP

CAS#	Parameter	Result	RDL	REG LIMIT	Units
75-09-2	Methylene chloride	14.4	10		ug/L
79-01-6	Trichloroethene	18.8	5		ug/L
156-59-2	cis-1,2-Dichloroethene	24.0	5		ug/L

GCAL ID	Client ID	Matrix	Collect Date/Time	Receive Date/Time
21005134917	33B105/SB2	Solid	05/11/2010 12:30	05/13/2010 10:20

SW-846 8260B SPLP

CAS#	Parameter	Result	RDL	REG LIMIT	Units
75-09-2	Methylene chloride	21.7	10		ug/L
79-01-6	Trichloroethene	19.2	5		ug/L
156-59-2	cis-1,2-Dichloroethene	28.1	5		ug/L

GCAL ID	Client ID	Matrix	Collect Date/Time	Receive Date/Time
21005134918	33B105/SB3	Solid	05/11/2010 12:40	05/13/2010 10:20

SW-846 8260B SPLP

CAS#	Parameter	Result	RDL	REG LIMIT	Units
75-09-2	Methylene chloride	16.6	10		ug/L

GCAL ID	Client ID	Matrix	Collect Date/Time	Receive Date/Time
21005134919	33B106/SB1	Solid	05/11/2010 12:48	05/13/2010 10:20

SW-846 8260B SPLP

CAS#	Parameter	Result	RDL	REG LIMIT	Units
75-09-2	Methylene chloride	16.8	10		ug/L

GCAL ID	Client ID	Matrix	Collect Date/Time	Receive Date/Time
21005134920	33B106/SB2	Solid	05/11/2010 13:00	05/13/2010 10:20

SW-846 8260B SPLP

CAS#	Parameter	Result	RDL	REG LIMIT	Units
75-09-2	Methylene chloride	28.9	10		ug/L

Summary of Compounds Detected (con't)

GCAL ID	Client ID	Matrix	Collect Date/Time	Receive Date/Time
21005134921	33B106/SB3	Solid	05/11/2010 13:08	05/13/2010 10:20

SW-846 8260B SPLP

CAS#	Parameter	Result	RDL	REG LIMIT	Units
75-09-2	Methylene chloride	13.6	10		ug/L

GCAL ID	Client ID	Matrix	Collect Date/Time	Receive Date/Time
21005134922	33B107/SB1	Solid	05/11/2010 13:22	05/13/2010 10:20

SW-846 8260B SPLP

CAS#	Parameter	Result	RDL	REG LIMIT	Units
75-09-2	Methylene chloride	18.7	10		ug/L
79-01-6	Trichloroethene	9.88	5		ug/L
156-59-2	cis-1,2-Dichloroethene	6.98	5		ug/L

GCAL ID	Client ID	Matrix	Collect Date/Time	Receive Date/Time
21005134923	33B107/SB2	Solid	05/11/2010 13:27	05/13/2010 10:20

SW-846 8260B SPLP

CAS#	Parameter	Result	RDL	REG LIMIT	Units
75-09-2	Methylene chloride	20.0	10		ug/L
79-01-6	Trichloroethene	7.49	5		ug/L
156-59-2	cis-1,2-Dichloroethene	7.69	5		ug/L

GCAL ID	Client ID	Matrix	Collect Date/Time	Receive Date/Time
21005134924	33B107/SB3	Solid	05/11/2010 13:40	05/13/2010 10:20

SW-846 8260B SPLP

CAS#	Parameter	Result	RDL	REG LIMIT	Units
75-09-2	Methylene chloride	20.0	10		ug/L

GCAL ID	Client ID	Matrix	Collect Date/Time	Receive Date/Time
21005134925	33B108/SB1	Solid	05/11/2010 15:00	05/13/2010 10:20

SW-846 8260B SPLP

CAS#	Parameter	Result	RDL	REG LIMIT	Units
75-09-2	Methylene chloride	46.6	10		ug/L

Summary of Compounds Detected (con't)

GCAL ID	Client ID	Matrix	Collect Date/Time	Receive Date/Time
21005134926	33B108/SB1MS	Solid	05/11/2010 15:00	05/13/2010 10:20

SW-846 8260B SPLP

CAS#	Parameter	Result	RDL	REG LIMIT	Units
71-55-6	1,1,1-Trichloroethane	56.4	5		ug/L
79-34-5	1,1,2,2-Tetrachloroethane	50.0	5		ug/L
79-00-5	1,1,2-Trichloroethane	50.8	5		ug/L
75-34-3	1,1-Dichloroethane	48.4	5		ug/L
75-35-4	1,1-Dichloroethene	62.6	5		ug/L
107-06-2	1,2-Dichloroethane	55.0	5		ug/L
78-87-5	1,2-Dichloropropane	60.4	5		ug/L
78-93-3	2-Butanone	39.9	25		ug/L
591-78-6	2-Hexanone	34.0	5		ug/L
108-10-1	4-Methyl-2-pentanone	47.7	5		ug/L
67-64-1	Acetone	73.1	25		ug/L
71-43-2	Benzene	60.4	5		ug/L
75-27-4	Bromodichloromethane	60.4	5		ug/L
75-25-2	Bromoform	58.6	5		ug/L
74-83-9	Bromomethane	55.2	5		ug/L
75-15-0	Carbon disulfide	62.1	5		ug/L
56-23-5	Carbon tetrachloride	57.0	5		ug/L
108-90-7	Chlorobenzene	53.0	5		ug/L
75-00-3	Chloroethane	55.7	5		ug/L
67-66-3	Chloroform	58.0	5		ug/L
74-87-3	Chloromethane	40.0	5		ug/L
124-48-1	Dibromochloromethane	54.3	5		ug/L
10061-01-5	cis-1,3-Dichloropropene	51.0	5		ug/L
10061-02-6	trans-1,3-Dichloropropene	58.3	5		ug/L
100-41-4	Ethylbenzene	58.5	5		ug/L
75-09-2	Methylene chloride	141	10		ug/L
100-42-5	Styrene	57.2	5		ug/L
127-18-4	Tetrachloroethene	55.2	5		ug/L
108-88-3	Toluene	53.3	5		ug/L
79-01-6	Trichloroethene	57.4	5		ug/L
108-05-4	Vinyl acetate	39.7	5		ug/L
75-01-4	Vinyl chloride	40.9	5		ug/L
1330-20-7	Xylene (total)	168	10		ug/L
156-59-2	cis-1,2-Dichloroethene	53.5	5		ug/L
156-60-5	trans-1,2-Dichloroethene	56.0	5		ug/L

GCAL ID	Client ID	Matrix	Collect Date/Time	Receive Date/Time
21005134927	33B108/SB1MSD	Solid	05/11/2010 15:00	05/13/2010 10:20

SW-846 8260B SPLP

CAS#	Parameter	Result	RDL	REG LIMIT	Units
71-55-6	1,1,1-Trichloroethane	50.7	5		ug/L
79-34-5	1,1,2,2-Tetrachloroethane	51.2	5		ug/L
79-00-5	1,1,2-Trichloroethane	50.4	5		ug/L
75-34-3	1,1-Dichloroethane	48.6	5		ug/L
75-35-4	1,1-Dichloroethene	38.0	5		ug/L
107-06-2	1,2-Dichloroethane	51.0	5		ug/L

Summary of Compounds Detected (con't)

GCAL ID	Client ID	Matrix	Collect Date/Time	Receive Date/Time
21005134927	33B108/SB1MSD	Solid	05/11/2010 15:00	05/13/2010 10:20

SW-846 8260B SPLP

CAS#	Parameter	Result	RDL	REG LIMIT	Units
78-87-5	1,2-Dichloropropane	56.2	5		ug/L
78-93-3	2-Butanone	45.2	25		ug/L
591-78-6	2-Hexanone	38.1	5		ug/L
108-10-1	4-Methyl-2-pentanone	49.8	5		ug/L
67-64-1	Acetone	47.8	25		ug/L
71-43-2	Benzene	57.7	5		ug/L
75-27-4	Bromodichloromethane	55.7	5		ug/L
75-25-2	Bromoform	58.0	5		ug/L
74-83-9	Bromomethane	54.1	5		ug/L
75-15-0	Carbon disulfide	37.4	5		ug/L
56-23-5	Carbon tetrachloride	51.9	5		ug/L
108-90-7	Chlorobenzene	50.9	5		ug/L
75-00-3	Chloroethane	54.4	5		ug/L
67-66-3	Chloroform	53.1	5		ug/L
74-87-3	Chloromethane	39.9	5		ug/L
124-48-1	Dibromochloromethane	55.7	5		ug/L
10061-01-5	cis-1,3-Dichloropropene	49.7	5		ug/L
10061-02-6	trans-1,3-Dichloropropene	53.9	5		ug/L
100-41-4	Ethylbenzene	54.9	5		ug/L
75-09-2	Methylene chloride	89.0	10		ug/L
100-42-5	Styrene	53.8	5		ug/L
127-18-4	Tetrachloroethene	53.6	5		ug/L
108-88-3	Toluene	50.4	5		ug/L
79-01-6	Trichloroethene	54.4	5		ug/L
108-05-4	Vinyl acetate	44.5	5		ug/L
75-01-4	Vinyl chloride	46.3	5		ug/L
1330-20-7	Xylene (total)	159	10		ug/L
156-59-2	cis-1,2-Dichloroethene	52.1	5		ug/L
156-60-5	trans-1,2-Dichloroethene	55.3	5		ug/L

GCAL ID	Client ID	Matrix	Collect Date/Time	Receive Date/Time
21005134928	33B108/SB3	Solid	05/11/2010 15:35	05/13/2010 10:20

SW-846 8260B SPLP

CAS#	Parameter	Result	RDL	REG LIMIT	Units
75-09-2	Methylene chloride	38.1	10		ug/L

GCAL ID	Client ID	Matrix	Collect Date/Time	Receive Date/Time
21005134929	33B109/SB1	Solid	05/11/2010 13:52	05/13/2010 10:20

SW-846 8260B SPLP

CAS#	Parameter	Result	RDL	REG LIMIT	Units
75-09-2	Methylene chloride	52.3	10		ug/L

Summary of Compounds Detected (con't)

GCAL ID	Client ID	Matrix	Collect Date/Time	Receive Date/Time
21005134930	33B109/SB2	Solid	05/11/2010 14:08	05/13/2010 10:20

SW-846 8260B SPLP

CAS#	Parameter	Result	RDL	REG LIMIT	Units
75-09-2	Methylene chloride	37.9	10		ug/L

GCAL ID	Client ID	Matrix	Collect Date/Time	Receive Date/Time
21005134931	33B109/SB3	Solid	05/11/2010 14:20	05/13/2010 10:20

SW-846 8260B SPLP

CAS#	Parameter	Result	RDL	REG LIMIT	Units
75-09-2	Methylene chloride	42.7	10		ug/L

GCAL ID	Client ID	Matrix	Collect Date/Time	Receive Date/Time
21005134932	33B109/SB3D	Solid	05/11/2010 14:20	05/13/2010 10:20

SW-846 8260B SPLP

CAS#	Parameter	Result	RDL	REG LIMIT	Units
75-09-2	Methylene chloride	20.8	10		ug/L

GCAL ID	Client ID	Matrix	Collect Date/Time	Receive Date/Time
21005134933	33B110/SB1	Solid	05/11/2010 14:33	05/13/2010 10:20

SW-846 8260B SPLP

CAS#	Parameter	Result	RDL	REG LIMIT	Units
75-09-2	Methylene chloride	36.6	10		ug/L

GCAL ID	Client ID	Matrix	Collect Date/Time	Receive Date/Time
21005134934	33B110/SB2	Solid	05/11/2010 14:38	05/13/2010 10:20

SW-846 8260B SPLP

CAS#	Parameter	Result	RDL	REG LIMIT	Units
75-09-2	Methylene chloride	46.5	10		ug/L

GCAL ID	Client ID	Matrix	Collect Date/Time	Receive Date/Time
21005134935	33B110/SB3	Solid	05/11/2010 14:50	05/13/2010 10:20

SW-846 8260B SPLP

CAS#	Parameter	Result	RDL	REG LIMIT	Units
75-09-2	Methylene chloride	27.0	10		ug/L

Summary of Compounds Detected (con't)

GCAL ID	Client ID	Matrix	Collect Date/Time	Receive Date/Time
21005134936	33B111/SB1	Solid	05/11/2010 15:52	05/13/2010 10:20

SW-846 8260B SPLP

CAS#	Parameter	Result	RDL	REG LIMIT	Units
75-09-2	Methylene chloride	30.9	10		ug/L

GCAL ID	Client ID	Matrix	Collect Date/Time	Receive Date/Time
21005134937	33B111/SB2	Solid	05/11/2010 15:58	05/13/2010 10:20

SW-846 8260B SPLP

CAS#	Parameter	Result	RDL	REG LIMIT	Units
75-09-2	Methylene chloride	18.3	10		ug/L

GCAL ID	Client ID	Matrix	Collect Date/Time	Receive Date/Time
21005134938	33B111/SB3	Solid	05/11/2010 16:13	05/13/2010 10:20

SW-846 8260B SPLP

CAS#	Parameter	Result	RDL	REG LIMIT	Units
75-09-2	Methylene chloride	38.1	10		ug/L

GCAL ID	Client ID	Matrix	Collect Date/Time	Receive Date/Time
21005134939	33B112/SB1	Solid	05/12/2010 08:20	05/13/2010 10:20

SW-846 8260B SPLP

CAS#	Parameter	Result	RDL	REG LIMIT	Units
75-09-2	Methylene chloride	33.6	10		ug/L

GCAL ID	Client ID	Matrix	Collect Date/Time	Receive Date/Time
21005134940	33B112/SB1D	Solid	05/12/2010 08:20	05/13/2010 10:20

SW-846 8260B SPLP

CAS#	Parameter	Result	RDL	REG LIMIT	Units
75-09-2	Methylene chloride	28.6	10		ug/L

GCAL ID	Client ID	Matrix	Collect Date/Time	Receive Date/Time
21005134941	33B112/SB2	Solid	05/12/2010 08:37	05/13/2010 10:20

SW-846 8260B SPLP

CAS#	Parameter	Result	RDL	REG LIMIT	Units
75-09-2	Methylene chloride	43.6	10		ug/L

Summary of Compounds Detected (con't)

GCAL ID	Client ID	Matrix	Collect Date/Time	Receive Date/Time
21005134942	33B112/SB3	Solid	05/12/2010 08:42	05/13/2010 10:20

SW-846 8260B SPLP

CAS#	Parameter	Result	RDL	REG LIMIT	Units
75-09-2	Methylene chloride	29.6	10		ug/L

GCAL ID	Client ID	Matrix	Collect Date/Time	Receive Date/Time
21005134943	33B113/SB1	Solid	05/11/2010 16:24	05/13/2010 10:20

SW-846 8260B SPLP

CAS#	Parameter	Result	RDL	REG LIMIT	Units
75-09-2	Methylene chloride	14.2	10		ug/L

GCAL ID	Client ID	Matrix	Collect Date/Time	Receive Date/Time
21005134944	33B113/SB2	Solid	05/11/2010 16:40	05/13/2010 10:20

SW-846 8260B SPLP

CAS#	Parameter	Result	RDL	REG LIMIT	Units
75-09-2	Methylene chloride	14.0	10		ug/L

GCAL ID	Client ID	Matrix	Collect Date/Time	Receive Date/Time
21005134945	33B113/SB3	Solid	05/11/2010 16:47	05/13/2010 10:20

SW-846 8260B SPLP

CAS#	Parameter	Result	RDL	REG LIMIT	Units
75-09-2	Methylene chloride	19.4	10		ug/L

GCAL ID	Client ID	Matrix	Collect Date/Time	Receive Date/Time
21005134946	33B114/SB1	Solid	05/12/2010 09:00	05/13/2010 10:20

SW-846 8260B SPLP

CAS#	Parameter	Result	RDL	REG LIMIT	Units
75-09-2	Methylene chloride	14.7	10		ug/L

GCAL ID	Client ID	Matrix	Collect Date/Time	Receive Date/Time
21005134947	33B114/SB2	Solid	05/12/2010 09:03	05/13/2010 10:20

SW-846 8260B SPLP

CAS#	Parameter	Result	RDL	REG LIMIT	Units
75-09-2	Methylene chloride	12.0	10		ug/L

Summary of Compounds Detected (con't)

GCAL ID	Client ID	Matrix	Collect Date/Time	Receive Date/Time
21005134948	33B114/SB3	Solid	05/12/2010 09:15	05/13/2010 10:20

SW-846 8260B SPLP

CAS#	Parameter	Result	RDL	REG LIMIT	Units
75-09-2	Methylene chloride	20.5	10		ug/L

GCAL ID	Client ID	Matrix	Collect Date/Time	Receive Date/Time
21005134901	**33B101/SB1**	Solid	05/11/2010 09:41	05/13/2010 10:20

SW-846 8260B SPLP

Prep Date	Prep Batch	Prep Method	Dilution	Analyzed	By	Analytical Batch
			1	05/21/2010 08:01	AGC	432316

CAS#	Parameter	Result	RDL	REG LIMIT	Units
71-55-6	1,1,1-Trichloroethane	ND	5		ug/L
79-34-5	1,1,2,2-Tetrachloroethane	ND	5		ug/L
79-00-5	1,1,2-Trichloroethane	ND	5		ug/L
75-34-3	1,1-Dichloroethane	ND	5		ug/L
75-35-4	1,1-Dichloroethene	ND	5		ug/L
107-06-2	1,2-Dichloroethane	ND	5		ug/L
78-87-5	1,2-Dichloropropane	ND	5		ug/L
78-93-3	2-Butanone	ND	25		ug/L
591-78-6	2-Hexanone	ND	5		ug/L
108-10-1	4-Methyl-2-pentanone	ND	5		ug/L
67-64-1	Acetone	ND	25		ug/L
71-43-2	Benzene	ND	5		ug/L
75-27-4	Bromodichloromethane	ND	5		ug/L
75-25-2	Bromoform	ND	5		ug/L
74-83-9	Bromomethane	ND	5		ug/L
75-15-0	Carbon disulfide	ND	5		ug/L
56-23-5	Carbon tetrachloride	ND	5		ug/L
108-90-7	Chlorobenzene	ND	5		ug/L
75-00-3	Chloroethane	ND	5		ug/L
67-66-3	Chloroform	ND	5		ug/L
74-87-3	Chloromethane	ND	5		ug/L
124-48-1	Dibromochloromethane	ND	5		ug/L
10061-01-5	cis-1,3-Dichloropropene	ND	5		ug/L
10061-02-6	trans-1,3-Dichloropropene	ND	5		ug/L
100-41-4	Ethylbenzene	ND	5		ug/L
75-09-2	**Methylene chloride**	**48.9**	**10**		**ug/L**
100-42-5	Styrene	ND	5		ug/L
127-18-4	Tetrachloroethene	ND	5		ug/L
108-88-3	Toluene	ND	5		ug/L
79-01-6	Trichloroethene	ND	5		ug/L
108-05-4	Vinyl acetate	ND	5		ug/L
75-01-4	Vinyl chloride	ND	5		ug/L
1330-20-7	Xylene (total)	ND	10		ug/L
156-59-2	cis-1,2-Dichloroethene	ND	5		ug/L
156-60-5	trans-1,2-Dichloroethene	ND	5		ug/L

CAS#	Surrogate	Conc. Spiked	Conc. Rec	Units	% Recovery	Rec Limits
460-00-4	4-Bromofluorobenzene	50	52.3	ug/L	105	62 - 127
1868-53-7	Dibromofluoromethane	50	55.8	ug/L	112	65 - 130
2037-26-5	Toluene d8	50	51.4	ug/L	103	71 - 132
17060-07-0	1,2-Dichloroethane-d4	50	54.3	ug/L	109	62 - 125

RESULTS REPORTED ON A WET WEIGHT BASIS

GCAL ID	Client ID	Matrix	Collect Date/Time	Receive Date/Time
21005134902	33B101/SB2	Solid	05/11/2010 09:46	05/13/2010 10:20

SW-846 8260B SPLP

Prep Date	Prep Batch	Prep Method	Dilution	Analyzed	By	Analytical Batch
			1	05/21/2010 08:23	AGC	432316

CAS#	Parameter	Result	RDL	REG LIMIT	Units
71-55-6	1,1,1-Trichloroethane	ND	5		ug/L
79-34-5	1,1,2,2-Tetrachloroethane	ND	5		ug/L
79-00-5	1,1,2-Trichloroethane	ND	5		ug/L
75-34-3	1,1-Dichloroethane	ND	5		ug/L
75-35-4	1,1-Dichloroethene	ND	5		ug/L
107-06-2	1,2-Dichloroethane	ND	5		ug/L
78-87-5	1,2-Dichloropropane	ND	5		ug/L
78-93-3	2-Butanone	ND	25		ug/L
591-78-6	2-Hexanone	ND	5		ug/L
108-10-1	4-Methyl-2-pentanone	ND	5		ug/L
67-64-1	Acetone	ND	25		ug/L
71-43-2	Benzene	ND	5		ug/L
75-27-4	Bromodichloromethane	ND	5		ug/L
75-25-2	Bromoform	ND	5		ug/L
74-83-9	Bromomethane	ND	5		ug/L
75-15-0	Carbon disulfide	ND	5		ug/L
56-23-5	Carbon tetrachloride	ND	5		ug/L
108-90-7	Chlorobenzene	ND	5		ug/L
75-00-3	Chloroethane	ND	5		ug/L
67-66-3	Chloroform	ND	5		ug/L
74-87-3	Chloromethane	ND	5		ug/L
124-48-1	Dibromochloromethane	ND	5		ug/L
10061-01-5	cis-1,3-Dichloropropene	ND	5		ug/L
10061-02-6	trans-1,3-Dichloropropene	ND	5		ug/L
100-41-4	Ethylbenzene	ND	5		ug/L
75-09-2	**Methylene chloride**	**30.3**	**10**		**ug/L**
100-42-5	Styrene	ND	5		ug/L
127-18-4	Tetrachloroethene	ND	5		ug/L
108-88-3	Toluene	ND	5		ug/L
79-01-6	Trichloroethene	ND	5		ug/L
108-05-4	Vinyl acetate	ND	5		ug/L
75-01-4	Vinyl chloride	ND	5		ug/L
1330-20-7	Xylene (total)	ND	10		ug/L
156-59-2	cis-1,2-Dichloroethene	ND	5		ug/L
156-60-5	trans-1,2-Dichloroethene	ND	5		ug/L

CAS#	Surrogate	Conc. Spiked	Conc. Rec	Units	% Recovery	Rec Limits
460-00-4	4-Bromofluorobenzene	50	49.8	ug/L	100	62 - 127
1868-53-7	Dibromofluoromethane	50	55.8	ug/L	112	65 - 130
2037-26-5	Toluene d8	50	48.8	ug/L	98	71 - 132
17060-07-0	1,2-Dichloroethane-d4	50	52	ug/L	104	62 - 125

RESULTS REPORTED ON A WET WEIGHT BASIS

GCAL ID	Client ID	Matrix	Collect Date/Time	Receive Date/Time
21005134903	33B101/SB3	Solid	05/11/2010 09:56	05/13/2010 10:20

SW-846 8260B SPLP

Prep Date	Prep Batch	Prep Method	Dilution	Analyzed	By	Analytical Batch
			1	05/22/2010 02:46	CLH	432420

CAS#	Parameter	Result	RDL	REG LIMIT	Units
71-55-6	1,1,1-Trichloroethane	ND	5		ug/L
79-34-5	1,1,2,2-Tetrachloroethane	ND	5		ug/L
79-00-5	1,1,2-Trichloroethane	ND	5		ug/L
75-34-3	1,1-Dichloroethane	ND	5		ug/L
75-35-4	1,1-Dichloroethene	ND	5		ug/L
107-06-2	1,2-Dichloroethane	ND	5		ug/L
78-87-5	1,2-Dichloropropane	ND	5		ug/L
78-93-3	2-Butanone	ND	25		ug/L
591-78-6	2-Hexanone	ND	5		ug/L
108-10-1	4-Methyl-2-pentanone	ND	5		ug/L
67-64-1	Acetone	ND	25		ug/L
71-43-2	Benzene	ND	5		ug/L
75-27-4	Bromodichloromethane	ND	5		ug/L
75-25-2	Bromoform	ND	5		ug/L
74-83-9	Bromomethane	ND	5		ug/L
75-15-0	Carbon disulfide	ND	5		ug/L
56-23-5	Carbon tetrachloride	ND	5		ug/L
108-90-7	Chlorobenzene	ND	5		ug/L
75-00-3	Chloroethane	ND	5		ug/L
67-66-3	Chloroform	ND	5		ug/L
74-87-3	Chloromethane	ND	5		ug/L
124-48-1	Dibromochloromethane	ND	5		ug/L
10061-01-5	cis-1,3-Dichloropropene	ND	5		ug/L
10061-02-6	trans-1,3-Dichloropropene	ND	5		ug/L
100-41-4	Ethylbenzene	ND	5		ug/L
75-09-2	**Methylene chloride**	**28.6**	**10**		**ug/L**
100-42-5	Styrene	ND	5		ug/L
127-18-4	Tetrachloroethene	ND	5		ug/L
108-88-3	Toluene	ND	5		ug/L
79-01-6	Trichloroethene	ND	5		ug/L
108-05-4	Vinyl acetate	ND	5		ug/L
75-01-4	Vinyl chloride	ND	5		ug/L
1330-20-7	Xylene (total)	ND	10		ug/L
156-59-2	cis-1,2-Dichloroethene	ND	5		ug/L
156-60-5	trans-1,2-Dichloroethene	ND	5		ug/L

CAS#	Surrogate	Conc. Spiked	Conc. Rec	Units	% Recovery	Rec Limits
460-00-4	4-Bromofluorobenzene	50	47.7	ug/L	95	62 - 127
1868-53-7	Dibromofluoromethane	50	49.9	ug/L	100	65 - 130
2037-26-5	Toluene d8	50	49.4	ug/L	99	71 - 132
17060-07-0	1,2-Dichloroethane-d4	50	50.5	ug/L	101	62 - 125

RESULTS REPORTED ON A WET WEIGHT BASIS

GCAL ID	Client ID	Matrix	Collect Date/Time	Receive Date/Time
21005134904	33B102/SB1	Solid	05/11/2010 10:25	05/13/2010 10:20

SW-846 8260B SPLP

Prep Date	Prep Batch	Prep Method	Dilution	Analyzed	By	Analytical Batch
			1	05/22/2010 03:12	CLH	432420

CAS#	Parameter	Result	RDL	REG LIMIT	Units
71-55-6	1,1,1-Trichloroethane	ND	5		ug/L
79-34-5	1,1,2,2-Tetrachloroethane	ND	5		ug/L
79-00-5	1,1,2-Trichloroethane	ND	5		ug/L
75-34-3	1,1-Dichloroethane	ND	5		ug/L
75-35-4	1,1-Dichloroethene	ND	5		ug/L
107-06-2	1,2-Dichloroethane	ND	5		ug/L
78-87-5	1,2-Dichloropropane	ND	5		ug/L
78-93-3	2-Butanone	ND	25		ug/L
591-78-6	2-Hexanone	ND	5		ug/L
108-10-1	4-Methyl-2-pentanone	ND	5		ug/L
67-64-1	Acetone	ND	25		ug/L
71-43-2	Benzene	ND	5		ug/L
75-27-4	Bromodichloromethane	ND	5		ug/L
75-25-2	Bromoform	ND	5		ug/L
74-83-9	Bromomethane	ND	5		ug/L
75-15-0	Carbon disulfide	ND	5		ug/L
56-23-5	Carbon tetrachloride	ND	5		ug/L
108-90-7	Chlorobenzene	ND	5		ug/L
75-00-3	Chloroethane	ND	5		ug/L
67-66-3	Chloroform	ND	5		ug/L
74-87-3	Chloromethane	ND	5		ug/L
124-48-1	Dibromochloromethane	ND	5		ug/L
10061-01-5	cis-1,3-Dichloropropene	ND	5		ug/L
10061-02-6	trans-1,3-Dichloropropene	ND	5		ug/L
100-41-4	Ethylbenzene	ND	5		ug/L
75-09-2	**Methylene chloride**	**25.3**	**10**		**ug/L**
100-42-5	Styrene	ND	5		ug/L
127-18-4	Tetrachloroethene	ND	5		ug/L
108-88-3	Toluene	ND	5		ug/L
79-01-6	Trichloroethene	ND	5		ug/L
108-05-4	Vinyl acetate	ND	5		ug/L
75-01-4	Vinyl chloride	ND	5		ug/L
1330-20-7	Xylene (total)	ND	5		ug/L
156-59-2	cis-1,2-Dichloroethene	ND	10		ug/L
156-60-5	trans-1,2-Dichloroethene	ND	5		ug/L

CAS#	Surrogate	Conc. Spiked	Conc. Rec	Units	% Recovery	Rec Limits
460-00-4	4-Bromofluorobenzene	50	47.6	ug/L	95	62 - 127
1868-53-7	Dibromofluoromethane	50	50.1	ug/L	100	65 - 130
2037-26-5	Toluene d8	50	49.5	ug/L	99	71 - 132
17060-07-0	1,2-Dichloroethane-d4	50	50.5	ug/L	101	62 - 125

RESULTS REPORTED ON A WET WEIGHT BASIS

GCAL ID	Client ID	Matrix	Collect Date/Time	Receive Date/Time
21005134905	**33B102/SB3**	Solid	05/11/2010 10:44	05/13/2010 10:20

SW-846 8260B SPLP

Prep Date	Prep Batch	Prep Method	Dilution	Analyzed	By	Analytical Batch
			1	05/22/2010 02:20	CLH	432420

CAS#	Parameter	Result	RDL	REG LIMIT	Units
71-55-6	1,1,1-Trichloroethane	ND	5		ug/L
79-34-5	1,1,2,2-Tetrachloroethane	ND	5		ug/L
79-00-5	1,1,2-Trichloroethane	ND	5		ug/L
75-34-3	1,1-Dichloroethane	ND	5		ug/L
75-35-4	1,1-Dichloroethene	ND	5		ug/L
107-06-2	1,2-Dichloroethane	ND	5		ug/L
78-87-5	1,2-Dichloropropane	ND	5		ug/L
78-93-3	2-Butanone	ND	25		ug/L
591-78-6	2-Hexanone	ND	5		ug/L
108-10-1	4-Methyl-2-pentanone	ND	5		ug/L
67-64-1	Acetone	ND	25		ug/L
71-43-2	Benzene	ND	5		ug/L
75-27-4	Bromodichloromethane	ND	5		ug/L
75-25-2	Bromoform	ND	5		ug/L
74-83-9	Bromomethane	ND	5		ug/L
75-15-0	Carbon disulfide	ND	5		ug/L
56-23-5	Carbon tetrachloride	ND	5		ug/L
108-90-7	Chlorobenzene	ND	5		ug/L
75-00-3	Chloroethane	ND	5		ug/L
67-66-3	Chloroform	ND	5		ug/L
74-87-3	Chloromethane	ND	5		ug/L
124-48-1	Dibromochloromethane	ND	5		ug/L
10061-01-5	cis-1,3-Dichloropropene	ND	5		ug/L
10061-02-6	trans-1,3-Dichloropropene	ND	5		ug/L
100-41-4	Ethylbenzene	ND	5		ug/L
75-09-2	**Methylene chloride**	**21.0**	**10**		**ug/L**
100-42-5	Styrene	ND	5		ug/L
127-18-4	Tetrachloroethene	ND	5		ug/L
108-88-3	Toluene	ND	5		ug/L
79-01-6	Trichloroethene	ND	5		ug/L
108-05-4	Vinyl acetate	ND	5		ug/L
75-01-4	Vinyl chloride	ND	5		ug/L
1330-20-7	Xylene (total)	ND	10		ug/L
156-59-2	cis-1,2-Dichloroethene	ND	5		ug/L
156-60-5	trans-1,2-Dichloroethene	ND	5		ug/L

CAS#	Surrogate	Conc. Spiked	Conc. Rec	Units	% Recovery	Rec Limits
460-00-4	4-Bromofluorobenzene	50	47.7	ug/L	95	62 - 127
1868-53-7	Dibromofluoromethane	50	49	ug/L	98	65 - 130
2037-26-5	Toluene d8	50	50	ug/L	100	71 - 132
17060-07-0	1,2-Dichloroethane-d4	50	50.1	ug/L	100	62 - 125

RESULTS REPORTED ON A WET WEIGHT BASIS

GCAL ID	Client ID	Matrix	Collect Date/Time	Receive Date/Time
21005134906	33B102/SB3MS	Solid	05/11/2010 10:44	05/13/2010 10:20

SW-846 8260B SPLP

Prep Date	Prep Batch	Prep Method	Dilution	Analyzed	By	Analytical Batch
			1	05/22/2010 04:30	RJU	432420

CAS#	Parameter	Result	RDL	REG LIMIT	Units
71-55-6	1,1,1-Trichloroethane	47.4	5		ug/L
79-34-5	1,1,2,2-Tetrachloroethane	47.0	5		ug/L
79-00-5	1,1,2-Trichloroethane	46.7	5		ug/L
75-34-3	1,1-Dichloroethane	46.9	5		ug/L
75-35-4	1,1-Dichloroethene	44.5	5		ug/L
107-06-2	1,2-Dichloroethane	48.3	5		ug/L
78-87-5	1,2-Dichloropropane	47.5	5		ug/L
78-93-3	2-Butanone	35.7	25		ug/L
591-78-6	2-Hexanone	39.6	5		ug/L
108-10-1	4-Methyl-2-pentanone	42.6	5		ug/L
67-64-1	Acetone	40.3	25		ug/L
71-43-2	Benzene	46.2	5		ug/L
75-27-4	Bromodichloromethane	48.8	5		ug/L
75-25-2	Bromoform	45.7	5		ug/L
74-83-9	Bromomethane	38.2	5		ug/L
75-15-0	Carbon disulfide	47.1	5		ug/L
56-23-5	Carbon tetrachloride	46.7	5		ug/L
108-90-7	Chlorobenzene	47.1	5		ug/L
75-00-3	Chloroethane	43.7	5		ug/L
67-66-3	Chloroform	48.3	5		ug/L
74-87-3	Chloromethane	35.3	5		ug/L
124-48-1	Dibromochloromethane	50.8	5		ug/L
10061-01-5	cis-1,3-Dichloropropene	48.9	5		ug/L
10061-02-6	trans-1,3-Dichloropropene	51.0	5		ug/L
100-41-4	Ethylbenzene	48.6	5		ug/L
75-09-2	Methylene chloride	64.2	10		ug/L
100-42-5	Styrene	49.2	5		ug/L
127-18-4	Tetrachloroethene	47.5	5		ug/L
108-88-3	Toluene	46.3	5		ug/L
79-01-6	Trichloroethene	47.2	5		ug/L
108-05-4	Vinyl acetate	19.6	5		ug/L
75-01-4	Vinyl chloride	40.8	5		ug/L
1330-20-7	Xylene (total)	150	10		ug/L
156-59-2	cis-1,2-Dichloroethene	50.8	5		ug/L
156-60-5	trans-1,2-Dichloroethene	47.6	5		ug/L

CAS#	Surrogate	Conc. Spiked	Conc. Rec	Units	% Recovery	Rec Limits
460-00-4	4-Bromofluorobenzene	50	48.8	ug/L	98	62 - 127
1868-53-7	Dibromofluoromethane	50	50.1	ug/L	100	65 - 130
2037-26-5	Toluene d8	50	49.9	ug/L	100	71 - 132
17060-07-0	1,2-Dichloroethane-d4	50	50.6	ug/L	101	62 - 125

RESULTS REPORTED ON A WET WEIGHT BASIS

GCAL ID	Client ID	Matrix	Collect Date/Time	Receive Date/Time
21005134907	33B102/SB3MSD	Solid	05/11/2010 10:44	05/13/2010 10:20

SW-846 8260B SPLP

Prep Date	Prep Batch	Prep Method	Dilution	Analyzed	By	Analytical Batch
			1	05/22/2010 04:56	RJU	432420

CAS#	Parameter	Result	RDL	REG LIMIT	Units
71-55-6	1,1,1-Trichloroethane	45.5	5		ug/L
79-34-5	1,1,2,2-Tetrachloroethane	46.4	5		ug/L
79-00-5	1,1,2-Trichloroethane	45.3	5		ug/L
75-34-3	1,1-Dichloroethane	45.3	5		ug/L
75-35-4	1,1-Dichloroethene	42.5	5		ug/L
107-06-2	1,2-Dichloroethane	47.9	5		ug/L
78-87-5	1,2-Dichloropropane	46.1	5		ug/L
78-93-3	2-Butanone	35.2	25		ug/L
591-78-6	2-Hexanone	38.7	5		ug/L
108-10-1	4-Methyl-2-pentanone	42.1	5		ug/L
67-64-1	Acetone	38.5	25		ug/L
71-43-2	Benzene	45.1	5		ug/L
75-27-4	Bromodichloromethane	47.8	5		ug/L
75-25-2	Bromoform	45.4	5		ug/L
74-83-9	Bromomethane	39.5	5		ug/L
75-15-0	Carbon disulfide	42.7	5		ug/L
56-23-5	Carbon tetrachloride	44.9	5		ug/L
108-90-7	Chlorobenzene	45.3	5		ug/L
75-00-3	Chloroethane	41.5	5		ug/L
67-66-3	Chloroform	46.7	5		ug/L
74-87-3	Chloromethane	35.1	5		ug/L
124-48-1	Dibromochloromethane	48.9	5		ug/L
10061-01-5	cis-1,3-Dichloropropene	47.6	5		ug/L
10061-02-6	trans-1,3-Dichloropropene	50.9	5		ug/L
100-41-4	Ethylbenzene	45.6	5		ug/L
75-09-2	Methylene chloride	61.7	10		ug/L
100-42-5	Styrene	47.9	5		ug/L
127-18-4	Tetrachloroethene	43.2	5		ug/L
108-88-3	Toluene	44.0	5		ug/L
79-01-6	Trichloroethene	44.8	5		ug/L
108-05-4	Vinyl acetate	22.7	5		ug/L
75-01-4	Vinyl chloride	38.8	5		ug/L
1330-20-7	Xylene (total)	142	10		ug/L
156-59-2	cis-1,2-Dichloroethene	49.7	5		ug/L
156-60-5	trans-1,2-Dichloroethene	44.9	5		ug/L

CAS#	Surrogate	Conc. Spiked	Conc. Rec	Units	% Recovery	Rec Limits
460-00-4	4-Bromofluorobenzene	50	49.5	ug/L	99	62 - 127
1868-53-7	Dibromofluoromethane	50	49.6	ug/L	99	65 - 130
2037-26-5	Toluene d8	50	49.4	ug/L	99	71 - 132
17060-07-0	1,2-Dichloroethane-d4	50	50.4	ug/L	101	62 - 125

RESULTS REPORTED ON A WET WEIGHT BASIS

GCAL ID	Client ID	Matrix	Collect Date/Time	Receive Date/Time
21005134908	33B103/SB1	Solid	05/11/2010 08:50	05/13/2010 10:20

SW-846 8260B SPLP

Prep Date	Prep Batch	Prep Method	Dilution	Analyzed	By	Analytical Batch
			1	05/21/2010 08:46	AGC	432316

CAS#	Parameter	Result	RDL	REG LIMIT	Units
71-55-6	1,1,1-Trichloroethane	ND	5		ug/L
79-34-5	1,1,2,2-Tetrachloroethane	ND	5		ug/L
79-00-5	1,1,2-Trichloroethane	ND	5		ug/L
75-34-3	1,1-Dichloroethane	ND	5		ug/L
75-35-4	1,1-Dichloroethene	ND	5		ug/L
107-06-2	1,2-Dichloroethane	ND	5		ug/L
78-87-5	1,2-Dichloropropane	ND	5		ug/L
78-93-3	2-Butanone	ND	25		ug/L
591-78-6	2-Hexanone	ND	5		ug/L
108-10-1	4-Methyl-2-pentanone	ND	5		ug/L
67-64-1	Acetone	ND	25		ug/L
71-43-2	Benzene	ND	5		ug/L
75-27-4	Bromodichloromethane	ND	5		ug/L
75-25-2	Bromoform	ND	5		ug/L
74-83-9	Bromomethane	ND	5		ug/L
75-15-0	Carbon disulfide	ND	5		ug/L
56-23-5	Carbon tetrachloride	ND	5		ug/L
108-90-7	Chlorobenzene	ND	5		ug/L
75-00-3	Chloroethane	ND	5		ug/L
67-66-3	Chloroform	ND	5		ug/L
74-87-3	Chloromethane	ND	5		ug/L
124-48-1	Dibromochloromethane	ND	5		ug/L
10061-01-5	cis-1,3-Dichloropropene	ND	5		ug/L
10061-02-6	trans-1,3-Dichloropropene	ND	5		ug/L
100-41-4	Ethylbenzene	ND	5		ug/L
75-09-2	**Methylene chloride**	**26.3**	**10**		**ug/L**
100-42-5	Styrene	ND	5		ug/L
127-18-4	Tetrachloroethene	ND	5		ug/L
108-88-3	Toluene	ND	5		ug/L
79-01-6	Trichloroethene	ND	5		ug/L
108-05-4	Vinyl acetate	ND	5		ug/L
75-01-4	Vinyl chloride	ND	5		ug/L
1330-20-7	Xylene (total)	ND	10		ug/L
156-59-2	cis-1,2-Dichloroethene	ND	5		ug/L
156-60-5	trans-1,2-Dichloroethene	ND	5		ug/L

CAS#	Surrogate	Conc. Spiked	Conc. Rec	Units	% Recovery	Rec Limits
460-00-4	4-Bromofluorobenzene	50	48.9	ug/L	98	62 - 127
1868-53-7	Dibromofluoromethane	50	55.1	ug/L	110	65 - 130
2037-26-5	Toluene d8	50	48	ug/L	96	71 - 132
17060-07-0	1,2-Dichloroethane-d4	50	51.5	ug/L	103	62 - 125

RESULTS REPORTED ON A WET WEIGHT BASIS

GCAL ID	Client ID	Matrix	Collect Date/Time	Receive Date/Time
21005134909	33B103/SB1D	Solid	05/11/2010 08:50	05/13/2010 10:20

SW-846 8260B SPLP

Prep Date	Prep Batch	Prep Method	Dilution	Analyzed	By	Analytical Batch
			1	05/21/2010 09:09	AGC	432316

CAS#	Parameter	Result	RDL	REG LIMIT	Units
71-55-6	1,1,1-Trichloroethane	ND	5		ug/L
79-34-5	1,1,2,2-Tetrachloroethane	ND	5		ug/L
79-00-5	1,1,2-Trichloroethane	ND	5		ug/L
75-34-3	1,1-Dichloroethane	ND	5		ug/L
75-35-4	1,1-Dichloroethene	ND	5		ug/L
107-06-2	1,2-Dichloroethane	ND	5		ug/L
78-87-5	1,2-Dichloropropane	ND	5		ug/L
78-93-3	2-Butanone	ND	25		ug/L
591-78-6	2-Hexanone	ND	5		ug/L
108-10-1	4-Methyl-2-pentanone	ND	5		ug/L
67-64-1	Acetone	ND	25		ug/L
71-43-2	Benzene	ND	5		ug/L
75-27-4	Bromodichloromethane	ND	5		ug/L
75-25-2	Bromoform	ND	5		ug/L
74-83-9	Bromomethane	ND	5		ug/L
75-15-0	Carbon disulfide	ND	5		ug/L
56-23-5	Carbon tetrachloride	ND	5		ug/L
108-90-7	Chlorobenzene	ND	5		ug/L
75-00-3	Chloroethane	ND	5		ug/L
67-66-3	Chloroform	ND	5		ug/L
74-87-3	Chloromethane	ND	5		ug/L
124-48-1	Dibromochloromethane	ND	5		ug/L
10061-01-5	cis-1,3-Dichloropropene	ND	5		ug/L
10061-02-6	trans-1,3-Dichloropropene	ND	5		ug/L
100-41-4	Ethylbenzene	ND	5		ug/L
75-09-2	**Methylene chloride**	**22.0**	**10**		**ug/L**
100-42-5	Styrene	ND	5		ug/L
127-18-4	Tetrachloroethene	ND	5		ug/L
108-88-3	Toluene	ND	5		ug/L
79-01-6	Trichloroethene	ND	5		ug/L
108-05-4	Vinyl acetate	ND	5		ug/L
75-01-4	Vinyl chloride	ND	5		ug/L
1330-20-7	Xylene (total)	ND	10		ug/L
156-59-2	cis-1,2-Dichloroethene	ND	5		ug/L
156-60-5	trans-1,2-Dichloroethene	ND	5		ug/L

CAS#	Surrogate	Conc. Spiked	Conc. Rec	Units	% Recovery	Rec Limits
460-00-4	4-Bromofluorobenzene	50	52.1	ug/L	104	62 - 127
1868-53-7	Dibromofluoromethane	50	59.2	ug/L	118	65 - 130
2037-26-5	Toluene d8	50	47.4	ug/L	95	71 - 132
17060-07-0	1,2-Dichloroethane-d4	50	57.7	ug/L	115	62 - 125

RESULTS REPORTED ON A WET WEIGHT BASIS

GCAL ID	Client ID	Matrix	Collect Date/Time	Receive Date/Time
21005134910	33B103/SB2	Solid	05/11/2010 08:58	05/13/2010 10:20

SW-846 8260B SPLP

Prep Date	Prep Batch	Prep Method	Dilution	Analyzed	By	Analytical Batch
			1	05/22/2010 03:38	RJU	432420

CAS#	Parameter	Result	RDL	REG LIMIT	Units
71-55-6	1,1,1-Trichloroethane	ND	5		ug/L
79-34-5	1,1,2,2-Tetrachloroethane	ND	5		ug/L
79-00-5	1,1,2-Trichloroethane	ND	5		ug/L
75-34-3	1,1-Dichloroethane	ND	5		ug/L
75-35-4	1,1-Dichloroethene	ND	5		ug/L
107-06-2	1,2-Dichloroethane	ND	5		ug/L
78-87-5	1,2-Dichloropropane	ND	5		ug/L
78-93-3	2-Butanone	ND	25		ug/L
591-78-6	2-Hexanone	ND	5		ug/L
108-10-1	4-Methyl-2-pentanone	ND	5		ug/L
67-64-1	Acetone	ND	25		ug/L
71-43-2	Benzene	ND	5		ug/L
75-27-4	Bromodichloromethane	ND	5		ug/L
75-25-2	Bromoform	ND	5		ug/L
74-83-9	Bromomethane	ND	5		ug/L
75-15-0	Carbon disulfide	ND	5		ug/L
56-23-5	Carbon tetrachloride	ND	5		ug/L
108-90-7	Chlorobenzene	ND	5		ug/L
75-00-3	Chloroethane	ND	5		ug/L
67-66-3	Chloroform	ND	5		ug/L
74-87-3	Chloromethane	ND	5		ug/L
124-48-1	Dibromochloromethane	ND	5		ug/L
10061-01-5	cis-1,3-Dichloropropene	ND	5		ug/L
10061-02-6	trans-1,3-Dichloropropene	ND	5		ug/L
100-41-4	Ethylbenzene	ND	5		ug/L
75-09-2	**Methylene chloride**	**22.3**	**10**		**ug/L**
100-42-5	Styrene	ND	5		ug/L
127-18-4	Tetrachloroethene	ND	5		ug/L
108-88-3	Toluene	ND	5		ug/L
79-01-6	Trichloroethene	ND	5		ug/L
108-05-4	Vinyl acetate	ND	5		ug/L
75-01-4	Vinyl chloride	ND	5		ug/L
1330-20-7	Xylene (total)	ND	10		ug/L
156-59-2	cis-1,2-Dichloroethene	ND	5		ug/L
156-60-5	trans-1,2-Dichloroethene	ND	5		ug/L

CAS#	Surrogate	Conc. Spiked	Conc. Rec	Units	% Recovery	Rec Limits
460-00-4	4-Bromofluorobenzene	50	47.3	ug/L	95	62 - 127
1868-53-7	Dibromofluoromethane	50	49.8	ug/L	100	65 - 130
2037-26-5	Toluene d8	50	49.5	ug/L	99	71 - 132
17060-07-0	1,2-Dichloroethane-d4	50	50.8	ug/L	102	62 - 125

RESULTS REPORTED ON A WET WEIGHT BASIS

GCAL ID	Client ID	Matrix	Collect Date/Time	Receive Date/Time
21005134911	**33B103/SB3**	Solid	05/11/2010 09:12	05/13/2010 10:20

SW-846 8260B SPLP

Prep Date	Prep Batch	Prep Method	Dilution	Analyzed	By	Analytical Batch
			1	05/22/2010 04:03	RJU	432420

CAS#	Parameter	Result	RDL	REG LIMIT	Units
71-55-6	1,1,1-Trichloroethane	ND	5		ug/L
79-34-5	1,1,2,2-Tetrachloroethane	ND	5		ug/L
79-00-5	1,1,2-Trichloroethane	ND	5		ug/L
75-34-3	1,1-Dichloroethane	ND	5		ug/L
75-35-4	1,1-Dichloroethene	ND	5		ug/L
107-06-2	1,2-Dichloroethane	ND	5		ug/L
78-87-5	1,2-Dichloropropane	ND	5		ug/L
78-93-3	2-Butanone	ND	25		ug/L
591-78-6	2-Hexanone	ND	5		ug/L
108-10-1	4-Methyl-2-pentanone	ND	5		ug/L
67-64-1	Acetone	ND	25		ug/L
71-43-2	Benzene	ND	5		ug/L
75-27-4	Bromodichloromethane	ND	5		ug/L
75-25-2	Bromoform	ND	5		ug/L
74-83-9	Bromomethane	ND	5		ug/L
75-15-0	Carbon disulfide	ND	5		ug/L
56-23-5	Carbon tetrachloride	ND	5		ug/L
108-90-7	Chlorobenzene	ND	5		ug/L
75-00-3	Chloroethane	ND	5		ug/L
67-66-3	Chloroform	ND	5		ug/L
74-87-3	Chloromethane	ND	5		ug/L
124-48-1	Dibromochloromethane	ND	5		ug/L
10061-01-5	cis-1,3-Dichloropropene	ND	5		ug/L
10061-02-6	trans-1,3-Dichloropropene	ND	5		ug/L
100-41-4	Ethylbenzene	ND	5		ug/L
75-09-2	**Methylene chloride**	**17.7**	**10**		**ug/L**
100-42-5	Styrene	ND	5		ug/L
127-18-4	Tetrachloroethene	ND	5		ug/L
108-88-3	Toluene	ND	5		ug/L
79-01-6	Trichloroethene	ND	5		ug/L
108-05-4	Vinyl acetate	ND	5		ug/L
75-01-4	Vinyl chloride	ND	5		ug/L
1330-20-7	Xylene (total)	ND	10		ug/L
156-59-2	cis-1,2-Dichloroethene	ND	5		ug/L
156-60-5	trans-1,2-Dichloroethene	ND	5		ug/L

CAS#	Surrogate	Conc. Spiked	Conc. Rec	Units	% Recovery	Rec Limits
460-00-4	4-Bromofluorobenzene	50	47	ug/L	94	62 - 127
1868-53-7	Dibromofluoromethane	50	49.4	ug/L	99	65 - 130
2037-26-5	Toluene d8	50	49.5	ug/L	99	71 - 132
17060-07-0	1,2-Dichloroethane-d4	50	51.4	ug/L	103	62 - 125

RESULTS REPORTED ON A WET WEIGHT BASIS

GCAL ID	Client ID	Matrix	Collect Date/Time	Receive Date/Time
21005134912	33B104/SB1	Solid	05/11/2010 11:14	05/13/2010 10:20

SW-846 8260B SPLP

Prep Date	Prep Batch	Prep Method	Dilution	Analyzed	By	Analytical Batch
			1	05/22/2010 05:47	RJU	432420

CAS#	Parameter	Result	RDL	REG LIMIT	Units
71-55-6	1,1,1-Trichloroethane	ND	5		ug/L
79-34-5	1,1,2,2-Tetrachloroethane	ND	5		ug/L
79-00-5	1,1,2-Trichloroethane	ND	5		ug/L
75-34-3	1,1-Dichloroethane	ND	5		ug/L
75-35-4	1,1-Dichloroethene	ND	5		ug/L
107-06-2	1,2-Dichloroethane	ND	5		ug/L
78-87-5	1,2-Dichloropropane	ND	5		ug/L
78-93-3	2-Butanone	ND	25		ug/L
591-78-6	2-Hexanone	ND	5		ug/L
108-10-1	4-Methyl-2-pentanone	ND	5		ug/L
67-64-1	Acetone	ND	25		ug/L
71-43-2	Benzene	ND	5		ug/L
75-27-4	Bromodichloromethane	ND	5		ug/L
75-25-2	Bromoform	ND	5		ug/L
74-83-9	Bromomethane	ND	5		ug/L
75-15-0	Carbon disulfide	ND	5		ug/L
56-23-5	Carbon tetrachloride	ND	5		ug/L
108-90-7	Chlorobenzene	ND	5		ug/L
75-00-3	Chloroethane	ND	5		ug/L
67-66-3	Chloroform	ND	5		ug/L
74-87-3	Chloromethane	ND	5		ug/L
124-48-1	Dibromochloromethane	ND	5		ug/L
10061-01-5	cis-1,3-Dichloropropene	ND	5		ug/L
10061-02-6	trans-1,3-Dichloropropene	ND	5		ug/L
100-41-4	Ethylbenzene	ND	5		ug/L
75-09-2	**Methylene chloride**	**24.3**	**10**		**ug/L**
100-42-5	Styrene	ND	5		ug/L
127-18-4	Tetrachloroethene	ND	5		ug/L
108-88-3	Toluene	ND	5		ug/L
79-01-6	Trichloroethene	ND	5		ug/L
108-05-4	Vinyl acetate	ND	5		ug/L
75-01-4	Vinyl chloride	ND	5		ug/L
1330-20-7	Xylene (total)	ND	10		ug/L
156-59-2	cis-1,2-Dichloroethene	ND	5		ug/L
156-60-5	trans-1,2-Dichloroethene	ND	5		ug/L

CAS#	Surrogate	Conc. Spiked	Conc. Rec	Units	% Recovery	Rec Limits
460-00-4	4-Bromofluorobenzene	50	48.2	ug/L	96	62 - 127
1868-53-7	Dibromofluoromethane	50	49.5	ug/L	99	65 - 130
2037-26-5	Toluene d8	50	49.8	ug/L	100	71 - 132
17060-07-0	1,2-Dichloroethane-d4	50	50.1	ug/L	100	62 - 125

RESULTS REPORTED ON A WET WEIGHT BASIS

GCAL ID	Client ID	Matrix	Collect Date/Time	Receive Date/Time
21005134913	**33B104/SB2**	Solid	05/11/2010 11:21	05/13/2010 10:20

SW-846 8260B SPLP

Prep Date	Prep Batch	Prep Method	Dilution	Analyzed	By	Analytical Batch
			1	05/22/2010 06:12	RJU	432420

CAS#	Parameter	Result	RDL	REG LIMIT	Units
71-55-6	1,1,1-Trichloroethane	ND	5		ug/L
79-34-5	1,1,2,2-Tetrachloroethane	ND	5		ug/L
79-00-5	1,1,2-Trichloroethane	ND	5		ug/L
75-34-3	1,1-Dichloroethane	ND	5		ug/L
75-35-4	1,1-Dichloroethene	ND	5		ug/L
107-06-2	1,2-Dichloroethane	ND	5		ug/L
78-87-5	1,2-Dichloropropane	ND	5		ug/L
78-93-3	2-Butanone	ND	25		ug/L
591-78-6	2-Hexanone	ND	5		ug/L
108-10-1	4-Methyl-2-pentanone	ND	5		ug/L
67-64-1	Acetone	ND	25		ug/L
71-43-2	Benzene	ND	5		ug/L
75-27-4	Bromodichloromethane	ND	5		ug/L
75-25-2	Bromoform	ND	5		ug/L
74-83-9	Bromomethane	ND	5		ug/L
75-15-0	Carbon disulfide	ND	5		ug/L
56-23-5	Carbon tetrachloride	ND	5		ug/L
108-90-7	Chlorobenzene	ND	5		ug/L
75-00-3	Chloroethane	ND	5		ug/L
67-66-3	Chloroform	ND	5		ug/L
74-87-3	Chloromethane	ND	5		ug/L
124-48-1	Dibromochloromethane	ND	5		ug/L
10061-01-5	cis-1,3-Dichloropropene	ND	5		ug/L
10061-02-6	trans-1,3-Dichloropropene	ND	5		ug/L
100-41-4	Ethylbenzene	ND	5		ug/L
75-09-2	**Methylene chloride**	**27.5**	**10**		**ug/L**
100-42-5	Styrene	ND	5		ug/L
127-18-4	Tetrachloroethene	ND	5		ug/L
108-88-3	Toluene	ND	5		ug/L
79-01-6	Trichloroethene	ND	5		ug/L
108-05-4	Vinyl acetate	ND	5		ug/L
75-01-4	Vinyl chloride	ND	5		ug/L
1330-20-7	Xylene (total)	ND	10		ug/L
156-59-2	cis-1,2-Dichloroethene	ND	5		ug/L
156-60-5	trans-1,2-Dichloroethene	ND	5		ug/L

CAS#	Surrogate	Conc. Spiked	Conc. Rec	Units	% Recovery	Rec Limits
460-00-4	4-Bromofluorobenzene	50	47.9	ug/L	96	62 - 127
1868-53-7	Dibromofluoromethane	50	49.9	ug/L	100	65 - 130
2037-26-5	Toluene d8	50	49.5	ug/L	99	71 - 132
17060-07-0	1,2-Dichloroethane-d4	50	50.7	ug/L	101	62 - 125

RESULTS REPORTED ON A WET WEIGHT BASIS

GCAL ID	Client ID	Matrix	Collect Date/Time	Receive Date/Time
21005134914	33B104/SB2D	Solid	05/11/2010 11:21	05/13/2010 10:20

SW-846 8260B SPLP

Prep Date	Prep Batch	Prep Method	Dilution	Analyzed	By	Analytical Batch
			1	05/22/2010 06:38	RJU	432420

CAS#	Parameter	Result	RDL	REG LIMIT	Units
71-55-6	1,1,1-Trichloroethane	ND	5		ug/L
79-34-5	1,1,2,2-Tetrachloroethane	ND	5		ug/L
79-00-5	1,1,2-Trichloroethane	ND	5		ug/L
75-34-3	1,1-Dichloroethane	ND	5		ug/L
75-35-4	1,1-Dichloroethene	ND	5		ug/L
107-06-2	1,2-Dichloroethane	ND	5		ug/L
78-87-5	1,2-Dichloropropane	ND	5		ug/L
78-93-3	2-Butanone	ND	25		ug/L
591-78-6	2-Hexanone	ND	5		ug/L
108-10-1	4-Methyl-2-pentanone	ND	5		ug/L
67-64-1	Acetone	ND	25		ug/L
71-43-2	Benzene	ND	5		ug/L
75-27-4	Bromodichloromethane	ND	5		ug/L
75-25-2	Bromoform	ND	5		ug/L
74-83-9	Bromomethane	ND	5		ug/L
75-15-0	Carbon disulfide	ND	5		ug/L
56-23-5	Carbon tetrachloride	ND	5		ug/L
108-90-7	Chlorobenzene	ND	5		ug/L
75-00-3	Chloroethane	ND	5		ug/L
67-66-3	Chloroform	ND	5		ug/L
74-87-3	Chloromethane	ND	5		ug/L
124-48-1	Dibromochloromethane	ND	5		ug/L
10061-01-5	cis-1,3-Dichloropropene	ND	5		ug/L
10061-02-6	trans-1,3-Dichloropropene	ND	5		ug/L
100-41-4	Ethylbenzene	ND	5		ug/L
75-09-2	**Methylene chloride**	**22.1**	**10**		**ug/L**
100-42-5	Styrene	ND	5		ug/L
127-18-4	Tetrachloroethene	ND	5		ug/L
108-88-3	Toluene	ND	5		ug/L
79-01-6	Trichloroethene	ND	5		ug/L
108-05-4	Vinyl acetate	ND	5		ug/L
75-01-4	Vinyl chloride	ND	5		ug/L
1330-20-7	Xylene (total)	ND	10		ug/L
156-59-2	cis-1,2-Dichloroethene	ND	5		ug/L
156-60-5	trans-1,2-Dichloroethene	ND	5		ug/L

CAS#	Surrogate	Conc. Spiked	Conc. Rec	Units	% Recovery	Rec Limits
460-00-4	4-Bromofluorobenzene	50	46.9	ug/L	94	62 - 127
1868-53-7	Dibromofluoromethane	50	49.4	ug/L	99	65 - 130
2037-26-5	Toluene d8	50	49	ug/L	98	71 - 132
17060-07-0	1,2-Dichloroethane-d4	50	50.8	ug/L	102	62 - 125

RESULTS REPORTED ON A WET WEIGHT BASIS

GCAL ID	Client ID	Matrix	Collect Date/Time	Receive Date/Time
21005134915	33B104/SB3	Solid	05/11/2010 11:38	05/13/2010 10:20

SW-846 8260B SPLP

Prep Date	Prep Batch	Prep Method	Dilution	Analyzed	By	Analytical Batch
			1	05/22/2010 07:04	RJU	432420

CAS#	Parameter	Result	RDL	REG LIMIT	Units
71-55-6	1,1,1-Trichloroethane	ND	5		ug/L
79-34-5	1,1,2,2-Tetrachloroethane	ND	5		ug/L
79-00-5	1,1,2-Trichloroethane	ND	5		ug/L
75-34-3	1,1-Dichloroethane	ND	5		ug/L
75-35-4	1,1-Dichloroethene	ND	5		ug/L
107-06-2	1,2-Dichloroethane	ND	5		ug/L
78-87-5	1,2-Dichloropropane	ND	5		ug/L
78-93-3	2-Butanone	ND	25		ug/L
591-78-6	2-Hexanone	ND	5		ug/L
108-10-1	4-Methyl-2-pentanone	ND	5		ug/L
67-64-1	Acetone	ND	25		ug/L
71-43-2	Benzene	ND	5		ug/L
75-27-4	Bromodichloromethane	ND	5		ug/L
75-25-2	Bromoform	ND	5		ug/L
74-83-9	Bromomethane	ND	5		ug/L
75-15-0	Carbon disulfide	ND	5		ug/L
56-23-5	Carbon tetrachloride	ND	5		ug/L
108-90-7	Chlorobenzene	ND	5		ug/L
75-00-3	Chloroethane	ND	5		ug/L
67-66-3	Chloroform	ND	5		ug/L
74-87-3	Chloromethane	ND	5		ug/L
124-48-1	Dibromochloromethane	ND	5		ug/L
10061-01-5	cis-1,3-Dichloropropene	ND	5		ug/L
10061-02-6	trans-1,3-Dichloropropene	ND	5		ug/L
100-41-4	Ethylbenzene	ND	5		ug/L
75-09-2	**Methylene chloride**	**18.6**	**10**		**ug/L**
100-42-5	Styrene	ND	5		ug/L
127-18-4	Tetrachloroethene	ND	5		ug/L
108-88-3	Toluene	ND	5		ug/L
79-01-6	Trichloroethene	ND	5		ug/L
108-05-4	Vinyl acetate	ND	5		ug/L
75-01-4	Vinyl chloride	ND	5		ug/L
1330-20-7	Xylene (total)	ND	10		ug/L
156-59-2	cis-1,2-Dichloroethene	ND	5		ug/L
156-60-5	trans-1,2-Dichloroethene	ND	5		ug/L

CAS#	Surrogate	Conc. Spiked	Conc. Rec	Units	% Recovery	Rec Limits
460-00-4	4-Bromofluorobenzene	50	47.7	ug/L	95	62 - 127
1868-53-7	Dibromofluoromethane	50	50.3	ug/L	101	65 - 130
2037-26-5	Toluene d8	50	49.1	ug/L	98	71 - 132
17060-07-0	1,2-Dichloroethane-d4	50	50.7	ug/L	101	62 - 125

RESULTS REPORTED ON A WET WEIGHT BASIS

GCAL ID	Client ID	Matrix	Collect Date/Time	Receive Date/Time
21005134916	33B105/SB1	Solid	05/11/2010 12:10	05/13/2010 10:20

SW-846 8260B SPLP

Prep Date	Prep Batch	Prep Method	Dilution	Analyzed	By	Analytical Batch
			1	05/22/2010 07:30	RJU	432420

CAS#	Parameter	Result	RDL	REG LIMIT	Units
71-55-6	1,1,1-Trichloroethane	ND	5		ug/L
79-34-5	1,1,2,2-Tetrachloroethane	ND	5		ug/L
79-00-5	1,1,2-Trichloroethane	ND	5		ug/L
75-34-3	1,1-Dichloroethane	ND	5		ug/L
75-35-4	1,1-Dichloroethene	ND	5		ug/L
107-06-2	1,2-Dichloroethane	ND	5		ug/L
78-87-5	1,2-Dichloropropane	ND	5		ug/L
78-93-3	2-Butanone	ND	25		ug/L
591-78-6	2-Hexanone	ND	5		ug/L
108-10-1	4-Methyl-2-pentanone	ND	5		ug/L
67-64-1	Acetone	ND	25		ug/L
71-43-2	Benzene	ND	5		ug/L
75-27-4	Bromodichloromethane	ND	5		ug/L
75-25-2	Bromoform	ND	5		ug/L
74-83-9	Bromomethane	ND	5		ug/L
75-15-0	Carbon disulfide	ND	5		ug/L
56-23-5	Carbon tetrachloride	ND	5		ug/L
108-90-7	Chlorobenzene	ND	5		ug/L
75-00-3	Chloroethane	ND	5		ug/L
67-66-3	Chloroform	ND	5		ug/L
74-87-3	Chloromethane	ND	5		ug/L
124-48-1	Dibromochloromethane	ND	5		ug/L
10061-01-5	cis-1,3-Dichloropropene	ND	5		ug/L
10061-02-6	trans-1,3-Dichloropropene	ND	5		ug/L
100-41-4	Ethylbenzene	ND	5		ug/L
75-09-2	**Methylene chloride**	**14.4**	**10**		**ug/L**
100-42-5	Styrene	ND	5		ug/L
127-18-4	Tetrachloroethene	ND	5		ug/L
108-88-3	Toluene	ND	5		ug/L
79-01-6	**Trichloroethene**	**18.8**	**5**		**ug/L**
108-05-4	Vinyl acetate	ND	5		ug/L
75-01-4	Vinyl chloride	ND	5		ug/L
1330-20-7	Xylene (total)	ND	10		ug/L
156-59-2	**cis-1,2-Dichloroethene**	**24.0**	**5**		**ug/L**
156-60-5	trans-1,2-Dichloroethene	ND	5		ug/L

CAS#	Surrogate	Conc. Spiked	Conc. Rec	Units	% Recovery	Rec Limits
460-00-4	4-Bromofluorobenzene	50	47	ug/L	94	62 - 127
1868-53-7	Dibromofluoromethane	50	49.3	ug/L	99	65 - 130
2037-26-5	Toluene d8	50	49.3	ug/L	99	71 - 132
17060-07-0	1,2-Dichloroethane-d4	50	51.3	ug/L	103	62 - 125

RESULTS REPORTED ON A WET WEIGHT BASIS

GCAL ID	Client ID	Matrix	Collect Date/Time	Receive Date/Time
21005134917	**33B105/SB2**	Solid	05/11/2010 12:30	05/13/2010 10:20

SW-846 8260B SPLP

Prep Date	Prep Batch	Prep Method	Dilution	Analyzed	By	Analytical Batch
			1	05/22/2010 07:56	RJU	432420

CAS#	Parameter	Result	RDL	REG LIMIT	Units
71-55-6	1,1,1-Trichloroethane	ND	5		ug/L
79-34-5	1,1,2,2-Tetrachloroethane	ND	5		ug/L
79-00-5	1,1,2-Trichloroethane	ND	5		ug/L
75-34-3	1,1-Dichloroethane	ND	5		ug/L
75-35-4	1,1-Dichloroethene	ND	5		ug/L
107-06-2	1,2-Dichloroethane	ND	5		ug/L
78-87-5	1,2-Dichloropropane	ND	5		ug/L
78-93-3	2-Butanone	ND	25		ug/L
591-78-6	2-Hexanone	ND	5		ug/L
108-10-1	4-Methyl-2-pentanone	ND	5		ug/L
67-64-1	Acetone	ND	25		ug/L
71-43-2	Benzene	ND	5		ug/L
75-27-4	Bromodichloromethane	ND	5		ug/L
75-25-2	Bromoform	ND	5		ug/L
74-83-9	Bromomethane	ND	5		ug/L
75-15-0	Carbon disulfide	ND	5		ug/L
56-23-5	Carbon tetrachloride	ND	5		ug/L
108-90-7	Chlorobenzene	ND	5		ug/L
75-00-3	Chloroethane	ND	5		ug/L
67-66-3	Chloroform	ND	5		ug/L
74-87-3	Chloromethane	ND	5		ug/L
124-48-1	Dibromochloromethane	ND	5		ug/L
10061-01-5	cis-1,3-Dichloropropene	ND	5		ug/L
10061-02-6	trans-1,3-Dichloropropene	ND	5		ug/L
100-41-4	Ethylbenzene	ND	5		ug/L
75-09-2	**Methylene chloride**	**21.7**	**10**		**ug/L**
100-42-5	Styrene	ND	5		ug/L
127-18-4	Tetrachloroethene	ND	5		ug/L
108-88-3	Toluene	ND	5		ug/L
79-01-6	**Trichloroethene**	**19.2**	**5**		**ug/L**
108-05-4	Vinyl acetate	ND	5		ug/L
75-01-4	Vinyl chloride	ND	5		ug/L
1330-20-7	Xylene (total)	ND	10		ug/L
156-59-2	**cis-1,2-Dichloroethene**	**28.1**	**5**		**ug/L**
156-60-5	trans-1,2-Dichloroethene	ND	5		ug/L

CAS#	Surrogate	Conc. Spiked	Conc. Rec	Units	% Recovery	Rec Limits
460-00-4	4-Bromofluorobenzene	50	46.9	ug/L	94	62 - 127
1868-53-7	Dibromofluoromethane	50	49.1	ug/L	98	65 - 130
2037-26-5	Toluene d8	50	49.8	ug/L	100	71 - 132
17060-07-0	1,2-Dichloroethane-d4	50	51	ug/L	102	62 - 125

RESULTS REPORTED ON A WET WEIGHT BASIS

GCAL ID	Client ID	Matrix	Collect Date/Time	Receive Date/Time
21005134918	33B105/SB3	Solid	05/11/2010 12:40	05/13/2010 10:20

SW-846 8260B SPLP

Prep Date	Prep Batch	Prep Method	Dilution	Analyzed	By	Analytical Batch
			1	05/22/2010 08:22	RJU	432420

CAS#	Parameter	Result	RDL	REG LIMIT	Units
71-55-6	1,1,1-Trichloroethane	ND	5		ug/L
79-34-5	1,1,2,2-Tetrachloroethane	ND	5		ug/L
79-00-5	1,1,2-Trichloroethane	ND	5		ug/L
75-34-3	1,1-Dichloroethane	ND	5		ug/L
75-35-4	1,1-Dichloroethene	ND	5		ug/L
107-06-2	1,2-Dichloroethane	ND	5		ug/L
78-87-5	1,2-Dichloropropane	ND	5		ug/L
78-93-3	2-Butanone	ND	25		ug/L
591-78-6	2-Hexanone	ND	5		ug/L
108-10-1	4-Methyl-2-pentanone	ND	5		ug/L
67-64-1	Acetone	ND	25		ug/L
71-43-2	Benzene	ND	5		ug/L
75-27-4	Bromodichloromethane	ND	5		ug/L
75-25-2	Bromoform	ND	5		ug/L
74-83-9	Bromomethane	ND	5		ug/L
75-15-0	Carbon disulfide	ND	5		ug/L
56-23-5	Carbon tetrachloride	ND	5		ug/L
108-90-7	Chlorobenzene	ND	5		ug/L
75-00-3	Chloroethane	ND	5		ug/L
67-66-3	Chloroform	ND	5		ug/L
74-87-3	Chloromethane	ND	5		ug/L
124-48-1	Dibromochloromethane	ND	5		ug/L
10061-01-5	cis-1,3-Dichloropropene	ND	5		ug/L
10061-02-6	trans-1,3-Dichloropropene	ND	5		ug/L
100-41-4	Ethylbenzene	ND	5		ug/L
75-09-2	**Methylene chloride**	**16.6**	**10**		**ug/L**
100-42-5	Styrene	ND	5		ug/L
127-18-4	Tetrachloroethene	ND	5		ug/L
108-88-3	Toluene	ND	5		ug/L
79-01-6	Trichloroethene	ND	5		ug/L
108-05-4	Vinyl acetate	ND	5		ug/L
75-01-4	Vinyl chloride	ND	5		ug/L
1330-20-7	Xylene (total)	ND	10		ug/L
156-59-2	cis-1,2-Dichloroethene	ND	5		ug/L
156-60-5	trans-1,2-Dichloroethene	ND	5		ug/L

CAS#	Surrogate	Conc. Spiked	Conc. Rec	Units	% Recovery	Rec Limits
460-00-4	4-Bromofluorobenzene	50	48	ug/L	96	62 - 127
1868-53-7	Dibromofluoromethane	50	49	ug/L	98	65 - 130
2037-26-5	Toluene d8	50	50	ug/L	100	71 - 132
17060-07-0	1,2-Dichloroethane-d4	50	51.3	ug/L	103	62 - 125

RESULTS REPORTED ON A WET WEIGHT BASIS

GCAL ID	Client ID	Matrix	Collect Date/Time	Receive Date/Time
21005134919	**33B106/SB1**	Solid	05/11/2010 12:48	05/13/2010 10:20

SW-846 8260B SPLP

Prep Date	Prep Batch	Prep Method	Dilution	Analyzed	By	Analytical Batch
			1	05/22/2010 08:48	RJU	432420

CAS#	Parameter	Result	RDL	REG LIMIT	Units
71-55-6	1,1,1-Trichloroethane	ND	5		ug/L
79-34-5	1,1,2,2-Tetrachloroethane	ND	5		ug/L
79-00-5	1,1,2-Trichloroethane	ND	5		ug/L
75-34-3	1,1-Dichloroethane	ND	5		ug/L
75-35-4	1,1-Dichloroethene	ND	5		ug/L
107-06-2	1,2-Dichloroethane	ND	5		ug/L
78-87-5	1,2-Dichloropropane	ND	5		ug/L
78-93-3	2-Butanone	ND	25		ug/L
591-78-6	2-Hexanone	ND	5		ug/L
108-10-1	4-Methyl-2-pentanone	ND	5		ug/L
67-64-1	Acetone	ND	25		ug/L
71-43-2	Benzene	ND	5		ug/L
75-27-4	Bromodichloromethane	ND	5		ug/L
75-25-2	Bromoform	ND	5		ug/L
74-83-9	Bromomethane	ND	5		ug/L
75-15-0	Carbon disulfide	ND	5		ug/L
56-23-5	Carbon tetrachloride	ND	5		ug/L
108-90-7	Chlorobenzene	ND	5		ug/L
75-00-3	Chloroethane	ND	5		ug/L
67-66-3	Chloroform	ND	5		ug/L
74-87-3	Chloromethane	ND	5		ug/L
124-48-1	Dibromochloromethane	ND	5		ug/L
10061-01-5	cis-1,3-Dichloropropene	ND	5		ug/L
10061-02-6	trans-1,3-Dichloropropene	ND	5		ug/L
100-41-4	Ethylbenzene	ND	5		ug/L
75-09-2	**Methylene chloride**	**16.8**	**10**		**ug/L**
100-42-5	Styrene	ND	5		ug/L
127-18-4	Tetrachloroethene	ND	5		ug/L
108-88-3	Toluene	ND	5		ug/L
79-01-6	Trichloroethene	ND	5		ug/L
108-05-4	Vinyl acetate	ND	5		ug/L
75-01-4	Vinyl chloride	ND	5		ug/L
1330-20-7	Xylene (total)	ND	10		ug/L
156-59-2	cis-1,2-Dichloroethene	ND	5		ug/L
156-60-5	trans-1,2-Dichloroethene	ND	5		ug/L

CAS#	Surrogate	Conc. Spiked	Conc. Rec	Units	% Recovery	Rec Limits
460-00-4	4-Bromofluorobenzene	50	46.9	ug/L	94	62 - 127
1868-53-7	Dibromofluoromethane	50	50.4	ug/L	101	65 - 130
2037-26-5	Toluene d8	50	49.3	ug/L	99	71 - 132
17060-07-0	1,2-Dichloroethane-d4	50	51.1	ug/L	102	62 - 125

RESULTS REPORTED ON A WET WEIGHT BASIS

GCAL ID	Client ID	Matrix	Collect Date/Time	Receive Date/Time
21005134920	33B106/SB2	Solid	05/11/2010 13:00	05/13/2010 10:20

SW-846 8260B SPLP

Prep Date	Prep Batch	Prep Method	Dilution	Analyzed	By	Analytical Batch
			1	05/22/2010 09:13	RJU	432420

CAS#	Parameter	Result	RDL	REG LIMIT	Units
71-55-6	1,1,1-Trichloroethane	ND	5		ug/L
79-34-5	1,1,2,2-Tetrachloroethane	ND	5		ug/L
79-00-5	1,1,2-Trichloroethane	ND	5		ug/L
75-34-3	1,1-Dichloroethane	ND	5		ug/L
75-35-4	1,1-Dichloroethene	ND	5		ug/L
107-06-2	1,2-Dichloroethane	ND	5		ug/L
78-87-5	1,2-Dichloropropane	ND	5		ug/L
78-93-3	2-Butanone	ND	25		ug/L
591-78-6	2-Hexanone	ND	5		ug/L
108-10-1	4-Methyl-2-pentanone	ND	5		ug/L
67-64-1	Acetone	ND	25		ug/L
71-43-2	Benzene	ND	5		ug/L
75-27-4	Bromodichloromethane	ND	5		ug/L
75-25-2	Bromoform	ND	5		ug/L
74-83-9	Bromomethane	ND	5		ug/L
75-15-0	Carbon disulfide	ND	5		ug/L
56-23-5	Carbon tetrachloride	ND	5		ug/L
108-90-7	Chlorobenzene	ND	5		ug/L
75-00-3	Chloroethane	ND	5		ug/L
67-66-3	Chloroform	ND	5		ug/L
74-87-3	Chloromethane	ND	5		ug/L
124-48-1	Dibromochloromethane	ND	5		ug/L
10061-01-5	cis-1,3-Dichloropropene	ND	5		ug/L
10061-02-6	trans-1,3-Dichloropropene	ND	5		ug/L
100-41-4	Ethylbenzene	ND	5		ug/L
75-09-2	**Methylene chloride**	**28.9**	**10**		**ug/L**
100-42-5	Styrene	ND	5		ug/L
127-18-4	Tetrachloroethene	ND	5		ug/L
108-88-3	Toluene	ND	5		ug/L
79-01-6	Trichloroethene	ND	5		ug/L
108-05-4	Vinyl acetate	ND	5		ug/L
75-01-4	Vinyl chloride	ND	5		ug/L
1330-20-7	Xylene (total)	ND	10		ug/L
156-59-2	cis-1,2-Dichloroethene	ND	5		ug/L
156-60-5	trans-1,2-Dichloroethene	ND	5		ug/L

CAS#	Surrogate	Conc. Spiked	Conc. Rec	Units	% Recovery	Rec Limits
460-00-4	4-Bromofluorobenzene	50	47.2	ug/L	94	62 - 127
1868-53-7	Dibromofluoromethane	50	49.9	ug/L	100	65 - 130
2037-26-5	Toluene d8	50	49.2	ug/L	98	71 - 132
17060-07-0	1,2-Dichloroethane-d4	50	50.9	ug/L	102	62 - 125

RESULTS REPORTED ON A WET WEIGHT BASIS

GCAL ID	Client ID	Matrix	Collect Date/Time	Receive Date/Time
21005134921	**33B106/SB3**	Solid	05/11/2010 13:08	05/13/2010 10:20

SW-846 8260B SPLP

Prep Date	Prep Batch	Prep Method	Dilution	Analyzed	By	Analytical Batch
			1	05/22/2010 09:39	RJU	432420

CAS#	Parameter	Result	RDL	REG LIMIT	Units
71-55-6	1,1,1-Trichloroethane	ND	5		ug/L
79-34-5	1,1,2,2-Tetrachloroethane	ND	5		ug/L
79-00-5	1,1,2-Trichloroethane	ND	5		ug/L
75-34-3	1,1-Dichloroethane	ND	5		ug/L
75-35-4	1,1-Dichloroethene	ND	5		ug/L
107-06-2	1,2-Dichloroethane	ND	5		ug/L
78-87-5	1,2-Dichloropropane	ND	5		ug/L
78-93-3	2-Butanone	ND	25		ug/L
591-78-6	2-Hexanone	ND	5		ug/L
108-10-1	4-Methyl-2-pentanone	ND	5		ug/L
67-64-1	Acetone	ND	25		ug/L
71-43-2	Benzene	ND	5		ug/L
75-27-4	Bromodichloromethane	ND	5		ug/L
75-25-2	Bromoform	ND	5		ug/L
74-83-9	Bromomethane	ND	5		ug/L
75-15-0	Carbon disulfide	ND	5		ug/L
56-23-5	Carbon tetrachloride	ND	5		ug/L
108-90-7	Chlorobenzene	ND	5		ug/L
75-00-3	Chloroethane	ND	5		ug/L
67-66-3	Chloroform	ND	5		ug/L
74-87-3	Chloromethane	ND	5		ug/L
124-48-1	Dibromochloromethane	ND	5		ug/L
10061-01-5	cis-1,3-Dichloropropene	ND	5		ug/L
10061-02-6	trans-1,3-Dichloropropene	ND	5		ug/L
100-41-4	Ethylbenzene	ND	5		ug/L
75-09-2	**Methylene chloride**	**13.6**	**10**		**ug/L**
100-42-5	Styrene	ND	5		ug/L
127-18-4	Tetrachloroethene	ND	5		ug/L
108-88-3	Toluene	ND	5		ug/L
79-01-6	Trichloroethene	ND	5		ug/L
108-05-4	Vinyl acetate	ND	5		ug/L
75-01-4	Vinyl chloride	ND	5		ug/L
1330-20-7	Xylene (total)	ND	10		ug/L
156-59-2	cis-1,2-Dichloroethene	ND	5		ug/L
156-60-5	trans-1,2-Dichloroethene	ND	5		ug/L

CAS#	Surrogate	Conc. Spiked	Conc. Rec	Units	% Recovery	Rec Limits
460-00-4	4-Bromofluorobenzene	50	47	ug/L	94	62 - 127
1868-53-7	Dibromofluoromethane	50	49.5	ug/L	99	65 - 130
2037-26-5	Toluene d8	50	49.5	ug/L	99	71 - 132
17060-07-0	1,2-Dichloroethane-d4	50	51.1	ug/L	102	62 - 125

RESULTS REPORTED ON A WET WEIGHT BASIS

GCAL ID	Client ID	Matrix	Collect Date/Time	Receive Date/Time
21005134922	33B107/SB1	Solid	05/11/2010 13:22	05/13/2010 10:20

SW-846 8260B SPLP

Prep Date	Prep Batch	Prep Method	Dilution	Analyzed	By	Analytical Batch
			1	05/22/2010 10:05	RJU	432420

CAS#	Parameter	Result	RDL	REG LIMIT	Units
71-55-6	1,1,1-Trichloroethane	ND	5		ug/L
79-34-5	1,1,2,2-Tetrachloroethane	ND	5		ug/L
79-00-5	1,1,2-Trichloroethane	ND	5		ug/L
75-34-3	1,1-Dichloroethane	ND	5		ug/L
75-35-4	1,1-Dichloroethene	ND	5		ug/L
107-06-2	1,2-Dichloroethane	ND	5		ug/L
78-87-5	1,2-Dichloropropane	ND	5		ug/L
78-93-3	2-Butanone	ND	25		ug/L
591-78-6	2-Hexanone	ND	5		ug/L
108-10-1	4-Methyl-2-pentanone	ND	5		ug/L
67-64-1	Acetone	ND	25		ug/L
71-43-2	Benzene	ND	5		ug/L
75-27-4	Bromodichloromethane	ND	5		ug/L
75-25-2	Bromoform	ND	5		ug/L
74-83-9	Bromomethane	ND	5		ug/L
75-15-0	Carbon disulfide	ND	5		ug/L
56-23-5	Carbon tetrachloride	ND	5		ug/L
108-90-7	Chlorobenzene	ND	5		ug/L
75-00-3	Chloroethane	ND	5		ug/L
67-66-3	Chloroform	ND	5		ug/L
74-87-3	Chloromethane	ND	5		ug/L
124-48-1	Dibromochloromethane	ND	5		ug/L
10061-01-5	cis-1,3-Dichloropropene	ND	5		ug/L
10061-02-6	trans-1,3-Dichloropropene	ND	5		ug/L
100-41-4	Ethylbenzene	ND	5		ug/L
75-09-2	**Methylene chloride**	**18.7**	**10**		**ug/L**
100-42-5	Styrene	ND	5		ug/L
127-18-4	Tetrachloroethene	ND	5		ug/L
108-88-3	Toluene	ND	5		ug/L
79-01-6	**Trichloroethene**	**9.88**	**5**		**ug/L**
108-05-4	Vinyl acetate	ND	5		ug/L
75-01-4	Vinyl chloride	ND	5		ug/L
1330-20-7	Xylene (total)	ND	10		ug/L
156-59-2	**cis-1,2-Dichloroethene**	**6.98**	**5**		**ug/L**
156-60-5	trans-1,2-Dichloroethene	ND	5		ug/L

CAS#	Surrogate	Conc. Spiked	Conc. Rec	Units	% Recovery	Rec Limits
460-00-4	4-Bromofluorobenzene	50	48.1	ug/L	96	62 - 127
1868-53-7	Dibromofluoromethane	50	49.8	ug/L	100	65 - 130
2037-26-5	Toluene d8	50	49.4	ug/L	99	71 - 132
17060-07-0	1,2-Dichloroethane-d4	50	50.9	ug/L	102	62 - 125

RESULTS REPORTED ON A WET WEIGHT BASIS

GCAL ID	Client ID	Matrix	Collect Date/Time	Receive Date/Time
21005134923	33B107/SB2	Solid	05/11/2010 13:27	05/13/2010 10:20

SW-846 8260B SPLP

Prep Date	Prep Batch	Prep Method	Dilution	Analyzed	By	Analytical Batch
			1	05/22/2010 10:32	RJU	432420

CAS#	Parameter	Result	RDL	REG LIMIT	Units
71-55-6	1,1,1-Trichloroethane	ND	5		ug/L
79-34-5	1,1,2,2-Tetrachloroethane	ND	5		ug/L
79-00-5	1,1,2-Trichloroethane	ND	5		ug/L
75-34-3	1,1-Dichloroethane	ND	5		ug/L
75-35-4	1,1-Dichloroethene	ND	5		ug/L
107-06-2	1,2-Dichloroethane	ND	5		ug/L
78-87-5	1,2-Dichloropropane	ND	5		ug/L
78-93-3	2-Butanone	ND	25		ug/L
591-78-6	2-Hexanone	ND	5		ug/L
108-10-1	4-Methyl-2-pentanone	ND	5		ug/L
67-64-1	Acetone	ND	25		ug/L
71-43-2	Benzene	ND	5		ug/L
75-27-4	Bromodichloromethane	ND	5		ug/L
75-25-2	Bromoform	ND	5		ug/L
74-83-9	Bromomethane	ND	5		ug/L
75-15-0	Carbon disulfide	ND	5		ug/L
56-23-5	Carbon tetrachloride	ND	5		ug/L
108-90-7	Chlorobenzene	ND	5		ug/L
75-00-3	Chloroethane	ND	5		ug/L
67-66-3	Chloroform	ND	5		ug/L
74-87-3	Chloromethane	ND	5		ug/L
124-48-1	Dibromochloromethane	ND	5		ug/L
10061-01-5	cis-1,3-Dichloropropene	ND	5		ug/L
10061-02-6	trans-1,3-Dichloropropene	ND	5		ug/L
100-41-4	Ethylbenzene	ND	5		ug/L
75-09-2	**Methylene chloride**	**20.0**	**10**		**ug/L**
100-42-5	Styrene	ND	5		ug/L
127-18-4	Tetrachloroethene	ND	5		ug/L
108-88-3	Toluene	ND	5		ug/L
79-01-6	**Trichloroethene**	**7.49**	**5**		**ug/L**
108-05-4	Vinyl acetate	ND	5		ug/L
75-01-4	Vinyl chloride	ND	5		ug/L
1330-20-7	Xylene (total)	ND	10		ug/L
156-59-2	**cis-1,2-Dichloroethene**	**7.69**	**5**		**ug/L**
156-60-5	trans-1,2-Dichloroethene	ND	5		ug/L

CAS#	Surrogate	Conc. Spiked	Conc. Rec	Units	% Recovery	Rec Limits
460-00-4	4-Bromofluorobenzene	50	47	ug/L	94	62 - 127
1868-53-7	Dibromofluoromethane	50	49	ug/L	98	65 - 130
2037-26-5	Toluene d8	50	49.7	ug/L	99	71 - 132
17060-07-0	1,2-Dichloroethane-d4	50	49.9	ug/L	100	62 - 125

RESULTS REPORTED ON A WET WEIGHT BASIS

GCAL ID	Client ID	Matrix	Collect Date/Time	Receive Date/Time
21005134924	33B107/SB3	Solid	05/11/2010 13:40	05/13/2010 10:20

SW-846 8260B SPLP

Prep Date	Prep Batch	Prep Method	Dilution	Analyzed	By	Analytical Batch
			1	05/22/2010 10:58	RJU	432420

CAS#	Parameter	Result	RDL	REG LIMIT	Units
71-55-6	1,1,1-Trichloroethane	ND	5		ug/L
79-34-5	1,1,2,2-Tetrachloroethane	ND	5		ug/L
79-00-5	1,1,2-Trichloroethane	ND	5		ug/L
75-34-3	1,1-Dichloroethane	ND	5		ug/L
75-35-4	1,1-Dichloroethene	ND	5		ug/L
107-06-2	1,2-Dichloroethane	ND	5		ug/L
78-87-5	1,2-Dichloropropane	ND	5		ug/L
78-93-3	2-Butanone	ND	25		ug/L
591-78-6	2-Hexanone	ND	5		ug/L
108-10-1	4-Methyl-2-pentanone	ND	5		ug/L
67-64-1	Acetone	ND	25		ug/L
71-43-2	Benzene	ND	5		ug/L
75-27-4	Bromodichloromethane	ND	5		ug/L
75-25-2	Bromoform	ND	5		ug/L
74-83-9	Bromomethane	ND	5		ug/L
75-15-0	Carbon disulfide	ND	5		ug/L
56-23-5	Carbon tetrachloride	ND	5		ug/L
108-90-7	Chlorobenzene	ND	5		ug/L
75-00-3	Chloroethane	ND	5		ug/L
67-66-3	Chloroform	ND	5		ug/L
74-87-3	Chloromethane	ND	5		ug/L
124-48-1	Dibromochloromethane	ND	5		ug/L
10061-01-5	cis-1,3-Dichloropropene	ND	5		ug/L
10061-02-6	trans-1,3-Dichloropropene	ND	5		ug/L
100-41-4	Ethylbenzene	ND	5		ug/L
75-09-2	**Methylene chloride**	**20.0**	**10**		**ug/L**
100-42-5	Styrene	ND	5		ug/L
127-18-4	Tetrachloroethene	ND	5		ug/L
108-88-3	Toluene	ND	5		ug/L
79-01-6	Trichloroethene	ND	5		ug/L
108-05-4	Vinyl acetate	ND	5		ug/L
75-01-4	Vinyl chloride	ND	5		ug/L
1330-20-7	Xylene (total)	ND	10		ug/L
156-59-2	cis-1,2-Dichloroethene	ND	5		ug/L
156-60-5	trans-1,2-Dichloroethene	ND	5		ug/L

CAS#	Surrogate	Conc. Spiked	Conc. Rec	Units	% Recovery	Rec Limits
460-00-4	4-Bromofluorobenzene	50	46.9	ug/L	94	62 - 127
1868-53-7	Dibromofluoromethane	50	49.1	ug/L	98	65 - 130
2037-26-5	Toluene d8	50	49.5	ug/L	99	71 - 132
17060-07-0	1,2-Dichloroethane-d4	50	50.2	ug/L	100	62 - 125

RESULTS REPORTED ON A WET WEIGHT BASIS

GCAL ID	Client ID	Matrix	Collect Date/Time	Receive Date/Time
21005134925	**33B108/SB1**	Solid	05/11/2010 15:00	05/13/2010 10:20

SW-846 8260B SPLP

Prep Date	Prep Batch	Prep Method	Dilution	Analyzed	By	Analytical Batch
			1	05/22/2010 18:22	AGC	432467

CAS#	Parameter	Result	RDL	REG LIMIT	Units
71-55-6	1,1,1-Trichloroethane	ND	5		ug/L
79-34-5	1,1,2,2-Tetrachloroethane	ND	5		ug/L
79-00-5	1,1,2-Trichloroethane	ND	5		ug/L
75-34-3	1,1-Dichloroethane	ND	5		ug/L
75-35-4	1,1-Dichloroethene	ND	5		ug/L
107-06-2	1,2-Dichloroethane	ND	5		ug/L
78-87-5	1,2-Dichloropropane	ND	5		ug/L
78-93-3	2-Butanone	ND	25		ug/L
591-78-6	2-Hexanone	ND	5		ug/L
108-10-1	4-Methyl-2-pentanone	ND	5		ug/L
67-64-1	Acetone	ND	25		ug/L
71-43-2	Benzene	ND	5		ug/L
75-27-4	Bromodichloromethane	ND	5		ug/L
75-25-2	Bromoform	ND	5		ug/L
74-83-9	Bromomethane	ND	5		ug/L
75-15-0	Carbon disulfide	ND	5		ug/L
56-23-5	Carbon tetrachloride	ND	5		ug/L
108-90-7	Chlorobenzene	ND	5		ug/L
75-00-3	Chloroethane	ND	5		ug/L
67-66-3	Chloroform	ND	5		ug/L
74-87-3	Chloromethane	ND	5		ug/L
124-48-1	Dibromochloromethane	ND	5		ug/L
10061-01-5	cis-1,3-Dichloropropene	ND	5		ug/L
10061-02-6	trans-1,3-Dichloropropene	ND	5		ug/L
100-41-4	Ethylbenzene	ND	5		ug/L
75-09-2	**Methylene chloride**	**46.6**	**10**		**ug/L**
100-42-5	Styrene	ND	5		ug/L
127-18-4	Tetrachloroethene	ND	5		ug/L
108-88-3	Toluene	ND	5		ug/L
79-01-6	Trichloroethene	ND	5		ug/L
108-05-4	Vinyl acetate	ND	5		ug/L
75-01-4	Vinyl chloride	ND	5		ug/L
1330-20-7	Xylene (total)	ND	10		ug/L
156-59-2	cis-1,2-Dichloroethene	ND	5		ug/L
156-60-5	trans-1,2-Dichloroethene	ND	5		ug/L

CAS#	Surrogate	Conc. Spiked	Conc. Rec	Units	% Recovery	Rec Limits
460-00-4	4-Bromofluorobenzene	50	45.2	ug/L	90	62 - 127
1868-53-7	Dibromofluoromethane	50	51.6	ug/L	103	65 - 130
2037-26-5	Toluene d8	50	56	ug/L	112	71 - 132
17060-07-0	1,2-Dichloroethane-d4	50	52.6	ug/L	105	62 - 125

RESULTS REPORTED ON A WET WEIGHT BASIS

GCAL ID	Client ID	Matrix	Collect Date/Time	Receive Date/Time
21005134926	33B108/SB1MS	Solid	05/11/2010 15:00	05/13/2010 10:20

SW-846 8260B SPLP

Prep Date	Prep Batch	Prep Method	Dilution	Analyzed	By	Analytical Batch
			1	05/22/2010 18:45	AGC	432467

CAS#	Parameter	Result	RDL	REG LIMIT	Units
71-55-6	1,1,1-Trichloroethane	56.4	5		ug/L
79-34-5	1,1,2,2-Tetrachloroethane	50.0	5		ug/L
79-00-5	1,1,2-Trichloroethane	50.8	5		ug/L
75-34-3	1,1-Dichloroethane	48.4	5		ug/L
75-35-4	1,1-Dichloroethene	62.6	5		ug/L
107-06-2	1,2-Dichloroethane	55.0	5		ug/L
78-87-5	1,2-Dichloropropane	60.4	5		ug/L
78-93-3	2-Butanone	39.9	25		ug/L
591-78-6	2-Hexanone	34.0	5		ug/L
108-10-1	4-Methyl-2-pentanone	47.7	5		ug/L
67-64-1	Acetone	73.1	25		ug/L
71-43-2	Benzene	60.4	5		ug/L
75-27-4	Bromodichloromethane	60.4	5		ug/L
75-25-2	Bromoform	58.6	5		ug/L
74-83-9	Bromomethane	55.2	5		ug/L
75-15-0	Carbon disulfide	62.1	5		ug/L
56-23-5	Carbon tetrachloride	57.0	5		ug/L
108-90-7	Chlorobenzene	53.0	5		ug/L
75-00-3	Chloroethane	55.7	5		ug/L
67-66-3	Chloroform	58.0	5		ug/L
74-87-3	Chloromethane	40.0	5		ug/L
124-48-1	Dibromochloromethane	54.3	5		ug/L
10061-01-5	cis-1,3-Dichloropropene	51.0	5		ug/L
10061-02-6	trans-1,3-Dichloropropene	58.3	5		ug/L
100-41-4	Ethylbenzene	58.5	5		ug/L
75-09-2	Methylene chloride	141	10		ug/L
100-42-5	Styrene	57.2	5		ug/L
127-18-4	Tetrachloroethene	55.2	5		ug/L
108-88-3	Toluene	53.3	5		ug/L
79-01-6	Trichloroethene	57.4	5		ug/L
108-05-4	Vinyl acetate	39.7	5		ug/L
75-01-4	Vinyl chloride	40.9	5		ug/L
1330-20-7	Xylene (total)	168	10		ug/L
156-59-2	cis-1,2-Dichloroethene	53.5	5		ug/L
156-60-5	trans-1,2-Dichloroethene	56.0	5		ug/L

CAS#	Surrogate	Conc. Spiked	Conc. Rec	Units	% Recovery	Rec Limits
460-00-4	4-Bromofluorobenzene	50	50.9	ug/L	102	62 - 127
1868-53-7	Dibromofluoromethane	50	50.8	ug/L	102	65 - 130
2037-26-5	Toluene d8	50	48.3	ug/L	97	71 - 132
17060-07-0	1,2-Dichloroethane-d4	50	51.2	ug/L	102	62 - 125

RESULTS REPORTED ON A WET WEIGHT BASIS

GCAL ID	Client ID	Matrix	Collect Date/Time	Receive Date/Time
21005134927	33B108/SB1MSD	Solid	05/11/2010 15:00	05/13/2010 10:20

SW-846 8260B SPLP

Prep Date	Prep Batch	Prep Method	Dilution	Analyzed	By	Analytical Batch
			1	05/22/2010 19:07	AGC	432467

CAS#	Parameter	Result	RDL	REG LIMIT	Units
71-55-6	1,1,1-Trichloroethane	50.7	5		ug/L
79-34-5	1,1,2,2-Tetrachloroethane	51.2	5		ug/L
79-00-5	1,1,2-Trichloroethane	50.4	5		ug/L
75-34-3	1,1-Dichloroethane	48.6	5		ug/L
75-35-4	1,1-Dichloroethene	38.0	5		ug/L
107-06-2	1,2-Dichloroethane	51.0	5		ug/L
78-87-5	1,2-Dichloropropane	56.2	5		ug/L
78-93-3	2-Butanone	45.2	25		ug/L
591-78-6	2-Hexanone	38.1	5		ug/L
108-10-1	4-Methyl-2-pentanone	49.8	5		ug/L
67-64-1	Acetone	47.8	25		ug/L
71-43-2	Benzene	57.7	5		ug/L
75-27-4	Bromodichloromethane	55.7	5		ug/L
75-25-2	Bromoform	58.0	5		ug/L
74-83-9	Bromomethane	54.1	5		ug/L
75-15-0	Carbon disulfide	37.4	5		ug/L
56-23-5	Carbon tetrachloride	51.9	5		ug/L
108-90-7	Chlorobenzene	50.9	5		ug/L
75-00-3	Chloroethane	54.4	5		ug/L
67-66-3	Chloroform	53.1	5		ug/L
74-87-3	Chloromethane	39.9	5		ug/L
124-48-1	Dibromochloromethane	55.7	5		ug/L
10061-01-5	cis-1,3-Dichloropropene	49.7	5		ug/L
10061-02-6	trans-1,3-Dichloropropene	53.9	5		ug/L
100-41-4	Ethylbenzene	54.9	5		ug/L
75-09-2	Methylene chloride	89.0	10		ug/L
100-42-5	Styrene	53.8	5		ug/L
127-18-4	Tetrachloroethene	53.6	5		ug/L
108-88-3	Toluene	50.4	5		ug/L
79-01-6	Trichloroethene	54.4	5		ug/L
108-05-4	Vinyl acetate	44.5	5		ug/L
75-01-4	Vinyl chloride	46.3	5		ug/L
1330-20-7	Xylene (total)	159	10		ug/L
156-59-2	cis-1,2-Dichloroethene	52.1	5		ug/L
156-60-5	trans-1,2-Dichloroethene	55.3	5		ug/L

CAS#	Surrogate	Conc. Spiked	Conc. Rec	Units	% Recovery	Rec Limits
460-00-4	4-Bromofluorobenzene	50	51	ug/L	102	62 - 127
1868-53-7	Dibromofluoromethane	50	51.1	ug/L	102	65 - 130
2037-26-5	Toluene d8	50	48.6	ug/L	97	71 - 132
17060-07-0	1,2-Dichloroethane-d4	50	50.4	ug/L	101	62 - 125

RESULTS REPORTED ON A WET WEIGHT BASIS

GCAL ID	Client ID	Matrix	Collect Date/Time	Receive Date/Time
21005134928	33B108/SB3	Solid	05/11/2010 15:35	05/13/2010 10:20

SW-846 8260B SPLP

Prep Date	Prep Batch	Prep Method	Dilution	Analyzed	By	Analytical Batch
			1	05/22/2010 20:15	AGC	432467

CAS#	Parameter	Result	RDL	REG LIMIT	Units
71-55-6	1,1,1-Trichloroethane	ND	5		ug/L
79-34-5	1,1,2,2-Tetrachloroethane	ND	5		ug/L
79-00-5	1,1,2-Trichloroethane	ND	5		ug/L
75-34-3	1,1-Dichloroethane	ND	5		ug/L
75-35-4	1,1-Dichloroethene	ND	5		ug/L
107-06-2	1,2-Dichloroethane	ND	5		ug/L
78-87-5	1,2-Dichloropropane	ND	5		ug/L
78-93-3	2-Butanone	ND	25		ug/L
591-78-6	2-Hexanone	ND	5		ug/L
108-10-1	4-Methyl-2-pentanone	ND	5		ug/L
67-64-1	Acetone	ND	25		ug/L
71-43-2	Benzene	ND	5		ug/L
75-27-4	Bromodichloromethane	ND	5		ug/L
75-25-2	Bromoform	ND	5		ug/L
74-83-9	Bromomethane	ND	5		ug/L
75-15-0	Carbon disulfide	ND	5		ug/L
56-23-5	Carbon tetrachloride	ND	5		ug/L
108-90-7	Chlorobenzene	ND	5		ug/L
75-00-3	Chloroethane	ND	5		ug/L
67-66-3	Chloroform	ND	5		ug/L
74-87-3	Chloromethane	ND	5		ug/L
124-48-1	Dibromochloromethane	ND	5		ug/L
10061-01-5	cis-1,3-Dichloropropene	ND	5		ug/L
10061-02-6	trans-1,3-Dichloropropene	ND	5		ug/L
100-41-4	Ethylbenzene	ND	5		ug/L
75-09-2	**Methylene chloride**	**38.1**	**10**		**ug/L**
100-42-5	Styrene	ND	5		ug/L
127-18-4	Tetrachloroethene	ND	5		ug/L
108-88-3	Toluene	ND	5		ug/L
79-01-6	Trichloroethene	ND	5		ug/L
108-05-4	Vinyl acetate	ND	5		ug/L
75-01-4	Vinyl chloride	ND	5		ug/L
1330-20-7	Xylene (total)	ND	10		ug/L
156-59-2	cis-1,2-Dichloroethene	ND	5		ug/L
156-60-5	trans-1,2-Dichloroethene	ND	5		ug/L

CAS#	Surrogate	Conc. Spiked	Conc. Rec	Units	% Recovery	Rec Limits
460-00-4	4-Bromofluorobenzene	50	44.2	ug/L	88	62 - 127
1868-53-7	Dibromofluoromethane	50	53.5	ug/L	107	65 - 130
2037-26-5	Toluene d8	50	56	ug/L	112	71 - 132
17060-07-0	1,2-Dichloroethane-d4	50	51.2	ug/L	102	62 - 125

RESULTS REPORTED ON A WET WEIGHT BASIS

GCAL ID	Client ID	Matrix	Collect Date/Time	Receive Date/Time
21005134929	**33B109/SB1**	Solid	05/11/2010 13:52	05/13/2010 10:20

SW-846 8260B SPLP

Prep Date	Prep Batch	Prep Method	Dilution	Analyzed	By	Analytical Batch
			1	05/22/2010 20:38	AGC	432467

CAS#	Parameter	Result	RDL	REG LIMIT	Units
71-55-6	1,1,1-Trichloroethane	ND	5		ug/L
79-34-5	1,1,2,2-Tetrachloroethane	ND	5		ug/L
79-00-5	1,1,2-Trichloroethane	ND	5		ug/L
75-34-3	1,1-Dichloroethane	ND	5		ug/L
75-35-4	1,1-Dichloroethene	ND	5		ug/L
107-06-2	1,2-Dichloroethane	ND	5		ug/L
78-87-5	1,2-Dichloropropane	ND	5		ug/L
78-93-3	2-Butanone	ND	25		ug/L
591-78-6	2-Hexanone	ND	5		ug/L
108-10-1	4-Methyl-2-pentanone	ND	5		ug/L
67-64-1	Acetone	ND	25		ug/L
71-43-2	Benzene	ND	5		ug/L
75-27-4	Bromodichloromethane	ND	5		ug/L
75-25-2	Bromoform	ND	5		ug/L
74-83-9	Bromomethane	ND	5		ug/L
75-15-0	Carbon disulfide	ND	5		ug/L
56-23-5	Carbon tetrachloride	ND	5		ug/L
108-90-7	Chlorobenzene	ND	5		ug/L
75-00-3	Chloroethane	ND	5		ug/L
67-66-3	Chloroform	ND	5		ug/L
74-87-3	Chloromethane	ND	5		ug/L
124-48-1	Dibromochloromethane	ND	5		ug/L
10061-01-5	cis-1,3-Dichloropropene	ND	5		ug/L
10061-02-6	trans-1,3-Dichloropropene	ND	5		ug/L
100-41-4	Ethylbenzene	ND	5		ug/L
75-09-2	**Methylene chloride**	**52.3**	**10**		**ug/L**
100-42-5	Styrene	ND	5		ug/L
127-18-4	Tetrachloroethene	ND	5		ug/L
108-88-3	Toluene	ND	5		ug/L
79-01-6	Trichloroethene	ND	5		ug/L
108-05-4	Vinyl acetate	ND	5		ug/L
75-01-4	Vinyl chloride	ND	5		ug/L
1330-20-7	Xylene (total)	ND	10		ug/L
156-59-2	cis-1,2-Dichloroethene	ND	5		ug/L
156-60-5	trans-1,2-Dichloroethene	ND	5		ug/L

CAS#	Surrogate	Conc. Spiked	Conc. Rec	Units	% Recovery	Rec Limits
460-00-4	4-Bromofluorobenzene	50	43.5	ug/L	87	62 - 127
1868-53-7	Dibromofluoromethane	50	51.9	ug/L	104	65 - 130
2037-26-5	Toluene d8	50	47.6	ug/L	95	71 - 132
17060-07-0	1,2-Dichloroethane-d4	50	51.9	ug/L	104	62 - 125

RESULTS REPORTED ON A WET WEIGHT BASIS

GCAL ID	Client ID	Matrix	Collect Date/Time	Receive Date/Time
21005134930	33B109/SB2	Solid	05/11/2010 14:08	05/13/2010 10:20

SW-846 8260B SPLP

Prep Date	Prep Batch	Prep Method	Dilution	Analyzed	By	Analytical Batch
			1	05/22/2010 21:00	AGC	432467

CAS#	Parameter	Result	RDL	REG LIMIT	Units
71-55-6	1,1,1-Trichloroethane	ND	5		ug/L
79-34-5	1,1,2,2-Tetrachloroethane	ND	5		ug/L
79-00-5	1,1,2-Trichloroethane	ND	5		ug/L
75-34-3	1,1-Dichloroethane	ND	5		ug/L
75-35-4	1,1-Dichloroethene	ND	5		ug/L
107-06-2	1,2-Dichloroethane	ND	5		ug/L
78-87-5	1,2-Dichloropropane	ND	5		ug/L
78-93-3	2-Butanone	ND	25		ug/L
591-78-6	2-Hexanone	ND	5		ug/L
108-10-1	4-Methyl-2-pentanone	ND	5		ug/L
67-64-1	Acetone	ND	25		ug/L
71-43-2	Benzene	ND	5		ug/L
75-27-4	Bromodichloromethane	ND	5		ug/L
75-25-2	Bromoform	ND	5		ug/L
74-83-9	Bromomethane	ND	5		ug/L
75-15-0	Carbon disulfide	ND	5		ug/L
56-23-5	Carbon tetrachloride	ND	5		ug/L
108-90-7	Chlorobenzene	ND	5		ug/L
75-00-3	Chloroethane	ND	5		ug/L
67-66-3	Chloroform	ND	5		ug/L
74-87-3	Chloromethane	ND	5		ug/L
124-48-1	Dibromochloromethane	ND	5		ug/L
10061-01-5	cis-1,3-Dichloropropene	ND	5		ug/L
10061-02-6	trans-1,3-Dichloropropene	ND	5		ug/L
100-41-4	Ethylbenzene	ND	5		ug/L
75-09-2	**Methylene chloride**	**37.9**	**10**		**ug/L**
100-42-5	Styrene	ND	5		ug/L
127-18-4	Tetrachloroethene	ND	5		ug/L
108-88-3	Toluene	ND	5		ug/L
79-01-6	Trichloroethene	ND	5		ug/L
108-05-4	Vinyl acetate	ND	5		ug/L
75-01-4	Vinyl chloride	ND	5		ug/L
1330-20-7	Xylene (total)	ND	10		ug/L
156-59-2	cis-1,2-Dichloroethene	ND	5		ug/L
156-60-5	trans-1,2-Dichloroethene	ND	5		ug/L

CAS#	Surrogate	Conc. Spiked	Conc. Rec	Units	% Recovery	Rec Limits
460-00-4	4-Bromofluorobenzene	50	45.2	ug/L	90	62 - 127
1868-53-7	Dibromofluoromethane	50	53.7	ug/L	107	65 - 130
2037-26-5	Toluene d8	50	54.6	ug/L	109	71 - 132
17060-07-0	1,2-Dichloroethane-d4	50	51	ug/L	102	62 - 125

RESULTS REPORTED ON A WET WEIGHT BASIS

GCAL ID	Client ID	Matrix	Collect Date/Time	Receive Date/Time
21005134931	33B109/SB3	Solid	05/11/2010 14:20	05/13/2010 10:20

SW-846 8260B SPLP

Prep Date	Prep Batch	Prep Method	Dilution	Analyzed	By	Analytical Batch
			1	05/22/2010 21:23	AGC	432467

CAS#	Parameter	Result	RDL	REG LIMIT	Units
71-55-6	1,1,1-Trichloroethane	ND	5		ug/L
79-34-5	1,1,2,2-Tetrachloroethane	ND	5		ug/L
79-00-5	1,1,2-Trichloroethane	ND	5		ug/L
75-34-3	1,1-Dichloroethane	ND	5		ug/L
75-35-4	1,1-Dichloroethene	ND	5		ug/L
107-06-2	1,2-Dichloroethane	ND	5		ug/L
78-87-5	1,2-Dichloropropane	ND	5		ug/L
78-93-3	2-Butanone	ND	25		ug/L
591-78-6	2-Hexanone	ND	5		ug/L
108-10-1	4-Methyl-2-pentanone	ND	5		ug/L
67-64-1	Acetone	ND	25		ug/L
71-43-2	Benzene	ND	5		ug/L
75-27-4	Bromodichloromethane	ND	5		ug/L
75-25-2	Bromoform	ND	5		ug/L
74-83-9	Bromomethane	ND	5		ug/L
75-15-0	Carbon disulfide	ND	5		ug/L
56-23-5	Carbon tetrachloride	ND	5		ug/L
108-90-7	Chlorobenzene	ND	5		ug/L
75-00-3	Chloroethane	ND	5		ug/L
67-66-3	Chloroform	ND	5		ug/L
74-87-3	Chloromethane	ND	5		ug/L
124-48-1	Dibromochloromethane	ND	5		ug/L
10061-01-5	cis-1,3-Dichloropropene	ND	5		ug/L
10061-02-6	trans-1,3-Dichloropropene	ND	5		ug/L
100-41-4	Ethylbenzene	ND	5		ug/L
75-09-2	**Methylene chloride**	**42.7**	**10**		**ug/L**
100-42-5	Styrene	ND	5		ug/L
127-18-4	Tetrachloroethene	ND	5		ug/L
108-88-3	Toluene	ND	5		ug/L
79-01-6	Trichloroethene	ND	5		ug/L
108-05-4	Vinyl acetate	ND	5		ug/L
75-01-4	Vinyl chloride	ND	5		ug/L
1330-20-7	Xylene (total)	ND	10		ug/L
156-59-2	cis-1,2-Dichloroethene	ND	5		ug/L
156-60-5	trans-1,2-Dichloroethene	ND	5		ug/L

CAS#	Surrogate	Conc. Spiked	Conc. Rec	Units	% Recovery	Rec Limits
460-00-4	4-Bromofluorobenzene	50	44.8	ug/L	90	62 - 127
1868-53-7	Dibromofluoromethane	50	52.6	ug/L	105	65 - 130
2037-26-5	Toluene d8	50	56.3	ug/L	113	71 - 132
17060-07-0	1,2-Dichloroethane-d4	50	51.3	ug/L	103	62 - 125

RESULTS REPORTED ON A WET WEIGHT BASIS

GCAL ID	Client ID	Matrix	Collect Date/Time	Receive Date/Time
21005134932	33B109/SB3D	Solid	05/11/2010 14:20	05/13/2010 10:20

SW-846 8260B SPLP

Prep Date	Prep Batch	Prep Method	Dilution	Analyzed	By	Analytical Batch
			1	05/22/2010 21:45	AGC	432467

CAS#	Parameter	Result	RDL	REG LIMIT	Units
71-55-6	1,1,1-Trichloroethane	ND	5		ug/L
79-34-5	1,1,2,2-Tetrachloroethane	ND	5		ug/L
79-00-5	1,1,2-Trichloroethane	ND	5		ug/L
75-34-3	1,1-Dichloroethane	ND	5		ug/L
75-35-4	1,1-Dichloroethene	ND	5		ug/L
107-06-2	1,2-Dichloroethane	ND	5		ug/L
78-87-5	1,2-Dichloropropane	ND	5		ug/L
78-93-3	2-Butanone	ND	25		ug/L
591-78-6	2-Hexanone	ND	5		ug/L
108-10-1	4-Methyl-2-pentanone	ND	5		ug/L
67-64-1	Acetone	ND	25		ug/L
71-43-2	Benzene	ND	5		ug/L
75-27-4	Bromodichloromethane	ND	5		ug/L
75-25-2	Bromoform	ND	5		ug/L
74-83-9	Bromomethane	ND	5		ug/L
75-15-0	Carbon disulfide	ND	5		ug/L
56-23-5	Carbon tetrachloride	ND	5		ug/L
108-90-7	Chlorobenzene	ND	5		ug/L
75-00-3	Chloroethane	ND	5		ug/L
67-66-3	Chloroform	ND	5		ug/L
74-87-3	Chloromethane	ND	5		ug/L
124-48-1	Dibromochloromethane	ND	5		ug/L
10061-01-5	cis-1,3-Dichloropropene	ND	5		ug/L
10061-02-6	trans-1,3-Dichloropropene	ND	5		ug/L
100-41-4	Ethylbenzene	ND	5		ug/L
75-09-2	**Methylene chloride**	**20.8**	**10**		**ug/L**
100-42-5	Styrene	ND	5		ug/L
127-18-4	Tetrachloroethene	ND	5		ug/L
108-88-3	Toluene	ND	5		ug/L
79-01-6	Trichloroethene	ND	5		ug/L
108-05-4	Vinyl acetate	ND	5		ug/L
75-01-4	Vinyl chloride	ND	5		ug/L
1330-20-7	Xylene (total)	ND	10		ug/L
156-59-2	cis-1,2-Dichloroethene	ND	5		ug/L
156-60-5	trans-1,2-Dichloroethene	ND	5		ug/L

CAS#	Surrogate	Conc. Spiked	Conc. Rec	Units	% Recovery	Rec Limits
460-00-4	4-Bromofluorobenzene	50	43.5	ug/L	87	62 - 127
1868-53-7	Dibromofluoromethane	50	53.3	ug/L	107	65 - 130
2037-26-5	Toluene d8	50	54.7	ug/L	109	71 - 132
17060-07-0	1,2-Dichloroethane-d4	50	52.1	ug/L	104	62 - 125

RESULTS REPORTED ON A WET WEIGHT BASIS

GCAL ID	Client ID	Matrix	Collect Date/Time	Receive Date/Time
21005134933	33B110/SB1	Solid	05/11/2010 14:33	05/13/2010 10:20

SW-846 8260B SPLP

Prep Date	Prep Batch	Prep Method	Dilution	Analyzed	By	Analytical Batch
			1	05/22/2010 22:08	AGC	432467

CAS#	Parameter	Result	RDL	REG LIMIT	Units
71-55-6	1,1,1-Trichloroethane	ND	5		ug/L
79-34-5	1,1,2,2-Tetrachloroethane	ND	5		ug/L
79-00-5	1,1,2-Trichloroethane	ND	5		ug/L
75-34-3	1,1-Dichloroethane	ND	5		ug/L
75-35-4	1,1-Dichloroethene	ND	5		ug/L
107-06-2	1,2-Dichloroethane	ND	5		ug/L
78-87-5	1,2-Dichloropropane	ND	5		ug/L
78-93-3	2-Butanone	ND	25		ug/L
591-78-6	2-Hexanone	ND	5		ug/L
108-10-1	4-Methyl-2-pentanone	ND	5		ug/L
67-64-1	Acetone	ND	25		ug/L
71-43-2	Benzene	ND	5		ug/L
75-27-4	Bromodichloromethane	ND	5		ug/L
75-25-2	Bromoform	ND	5		ug/L
74-83-9	Bromomethane	ND	5		ug/L
75-15-0	Carbon disulfide	ND	5		ug/L
56-23-5	Carbon tetrachloride	ND	5		ug/L
108-90-7	Chlorobenzene	ND	5		ug/L
75-00-3	Chloroethane	ND	5		ug/L
67-66-3	Chloroform	ND	5		ug/L
74-87-3	Chloromethane	ND	5		ug/L
124-48-1	Dibromochloromethane	ND	5		ug/L
10061-01-5	cis-1,3-Dichloropropene	ND	5		ug/L
10061-02-6	trans-1,3-Dichloropropene	ND	5		ug/L
100-41-4	Ethylbenzene	ND	5		ug/L
75-09-2	**Methylene chloride**	**36.6**	**10**		**ug/L**
100-42-5	Styrene	ND	5		ug/L
127-18-4	Tetrachloroethene	ND	5		ug/L
108-88-3	Toluene	ND	5		ug/L
79-01-6	Trichloroethene	ND	5		ug/L
108-05-4	Vinyl acetate	ND	5		ug/L
75-01-4	Vinyl chloride	ND	5		ug/L
1330-20-7	Xylene (total)	ND	10		ug/L
156-59-2	cis-1,2-Dichloroethene	ND	5		ug/L
156-60-5	trans-1,2-Dichloroethene	ND	5		ug/L

CAS#	Surrogate	Conc. Spiked	Conc. Rec	Units	% Recovery	Rec Limits
460-00-4	4-Bromofluorobenzene	50	42	ug/L	84	62 - 127
1868-53-7	Dibromofluoromethane	50	51.7	ug/L	103	65 - 130
2037-26-5	Toluene d8	50	54.6	ug/L	109	71 - 132
17060-07-0	1,2-Dichloroethane-d4	50	51.4	ug/L	103	62 - 125

RESULTS REPORTED ON A WET WEIGHT BASIS

GCAL ID	Client ID	Matrix	Collect Date/Time	Receive Date/Time
21005134934	33B110/SB2	Solid	05/11/2010 14:38	05/13/2010 10:20

SW-846 8260B SPLP

Prep Date	Prep Batch	Prep Method	Dilution	Analyzed	By	Analytical Batch
			1	05/22/2010 22:30	AGC	432467

CAS#	Parameter	Result	RDL	REG LIMIT	Units
71-55-6	1,1,1-Trichloroethane	ND	5		ug/L
79-34-5	1,1,2,2-Tetrachloroethane	ND	5		ug/L
79-00-5	1,1,2-Trichloroethane	ND	5		ug/L
75-34-3	1,1-Dichloroethane	ND	5		ug/L
75-35-4	1,1-Dichloroethene	ND	5		ug/L
107-06-2	1,2-Dichloroethane	ND	5		ug/L
78-87-5	1,2-Dichloropropane	ND	5		ug/L
78-93-3	2-Butanone	ND	25		ug/L
591-78-6	2-Hexanone	ND	5		ug/L
108-10-1	4-Methyl-2-pentanone	ND	5		ug/L
67-64-1	Acetone	ND	25		ug/L
71-43-2	Benzene	ND	5		ug/L
75-27-4	Bromodichloromethane	ND	5		ug/L
75-25-2	Bromoform	ND	5		ug/L
74-83-9	Bromomethane	ND	5		ug/L
75-15-0	Carbon disulfide	ND	5		ug/L
56-23-5	Carbon tetrachloride	ND	5		ug/L
108-90-7	Chlorobenzene	ND	5		ug/L
75-00-3	Chloroethane	ND	5		ug/L
67-66-3	Chloroform	ND	5		ug/L
74-87-3	Chloromethane	ND	5		ug/L
124-48-1	Dibromochloromethane	ND	5		ug/L
10061-01-5	cis-1,3-Dichloropropene	ND	5		ug/L
10061-02-6	trans-1,3-Dichloropropene	ND	5		ug/L
100-41-4	Ethylbenzene	ND	5		ug/L
75-09-2	**Methylene chloride**	**46.5**	**10**		**ug/L**
100-42-5	Styrene	ND	5		ug/L
127-18-4	Tetrachloroethene	ND	5		ug/L
108-88-3	Toluene	ND	5		ug/L
79-01-6	Trichloroethene	ND	5		ug/L
108-05-4	Vinyl acetate	ND	5		ug/L
75-01-4	Vinyl chloride	ND	5		ug/L
1330-20-7	Xylene (total)	ND	10		ug/L
156-59-2	cis-1,2-Dichloroethene	ND	5		ug/L
156-60-5	trans-1,2-Dichloroethene	ND	5		ug/L

CAS#	Surrogate	Conc. Spiked	Conc. Rec	Units	% Recovery	Rec Limits
460-00-4	4-Bromofluorobenzene	50	43.9	ug/L	88	62 - 127
1868-53-7	Dibromofluoromethane	50	52.6	ug/L	105	65 - 130
2037-26-5	Toluene d8	50	55.3	ug/L	111	71 - 132
17060-07-0	1,2-Dichloroethane-d4	50	49.5	ug/L	99	62 - 125

RESULTS REPORTED ON A WET WEIGHT BASIS

GCAL ID	Client ID	Matrix	Collect Date/Time	Receive Date/Time
21005134935	33B110/SB3	Solid	05/11/2010 14:50	05/13/2010 10:20

SW-846 8260B SPLP

Prep Date	Prep Batch	Prep Method	Dilution	Analyzed	By	Analytical Batch
			1	05/22/2010 22:53	AGC	432467

CAS#	Parameter	Result	RDL	REG LIMIT	Units
71-55-6	1,1,1-Trichloroethane	ND	5		ug/L
79-34-5	1,1,2,2-Tetrachloroethane	ND	5		ug/L
79-00-5	1,1,2-Trichloroethane	ND	5		ug/L
75-34-3	1,1-Dichloroethane	ND	5		ug/L
75-35-4	1,1-Dichloroethene	ND	5		ug/L
107-06-2	1,2-Dichloroethane	ND	5		ug/L
78-87-5	1,2-Dichloropropane	ND	5		ug/L
78-93-3	2-Butanone	ND	25		ug/L
591-78-6	2-Hexanone	ND	5		ug/L
108-10-1	4-Methyl-2-pentanone	ND	5		ug/L
67-64-1	Acetone	ND	25		ug/L
71-43-2	Benzene	ND	5		ug/L
75-27-4	Bromodichloromethane	ND	5		ug/L
75-25-2	Bromoform	ND	5		ug/L
74-83-9	Bromomethane	ND	5		ug/L
75-15-0	Carbon disulfide	ND	5		ug/L
56-23-5	Carbon tetrachloride	ND	5		ug/L
108-90-7	Chlorobenzene	ND	5		ug/L
75-00-3	Chloroethane	ND	5		ug/L
67-66-3	Chloroform	ND	5		ug/L
74-87-3	Chloromethane	ND	5		ug/L
124-48-1	Dibromochloromethane	ND	5		ug/L
10061-01-5	cis-1,3-Dichloropropene	ND	5		ug/L
10061-02-6	trans-1,3-Dichloropropene	ND	5		ug/L
100-41-4	Ethylbenzene	ND	5		ug/L
75-09-2	**Methylene chloride**	**27.0**	**10**		**ug/L**
100-42-5	Styrene	ND	5		ug/L
127-18-4	Tetrachloroethene	ND	5		ug/L
108-88-3	Toluene	ND	5		ug/L
79-01-6	Trichloroethene	ND	5		ug/L
108-05-4	Vinyl acetate	ND	5		ug/L
75-01-4	Vinyl chloride	ND	5		ug/L
1330-20-7	Xylene (total)	ND	10		ug/L
156-59-2	cis-1,2-Dichloroethene	ND	5		ug/L
156-60-5	trans-1,2-Dichloroethene	ND	5		ug/L

CAS#	Surrogate	Conc. Spiked	Conc. Rec	Units	% Recovery	Rec Limits
460-00-4	4-Bromofluorobenzene	50	44.1	ug/L	88	62 - 127
1868-53-7	Dibromofluoromethane	50	51.6	ug/L	103	65 - 130
2037-26-5	Toluene d8	50	55.8	ug/L	112	71 - 132
17060-07-0	1,2-Dichloroethane-d4	50	51.2	ug/L	102	62 - 125

RESULTS REPORTED ON A WET WEIGHT BASIS

GCAL ID	Client ID	Matrix	Collect Date/Time	Receive Date/Time
21005134936	33B111/SB1	Solid	05/11/2010 15:52	05/13/2010 10:20

SW-846 8260B SPLP

Prep Date	Prep Batch	Prep Method	Dilution	Analyzed	By	Analytical Batch
			1	05/22/2010 23:15	AGC	432467

CAS#	Parameter	Result	RDL	REG LIMIT	Units
71-55-6	1,1,1-Trichloroethane	ND	5		ug/L
79-34-5	1,1,2,2-Tetrachloroethane	ND	5		ug/L
79-00-5	1,1,2-Trichloroethane	ND	5		ug/L
75-34-3	1,1-Dichloroethane	ND	5		ug/L
75-35-4	1,1-Dichloroethene	ND	5		ug/L
107-06-2	1,2-Dichloroethane	ND	5		ug/L
78-87-5	1,2-Dichloropropane	ND	5		ug/L
78-93-3	2-Butanone	ND	25		ug/L
591-78-6	2-Hexanone	ND	5		ug/L
108-10-1	4-Methyl-2-pentanone	ND	5		ug/L
67-64-1	Acetone	ND	25		ug/L
71-43-2	Benzene	ND	5		ug/L
75-27-4	Bromodichloromethane	ND	5		ug/L
75-25-2	Bromoform	ND	5		ug/L
74-83-9	Bromomethane	ND	5		ug/L
75-15-0	Carbon disulfide	ND	5		ug/L
56-23-5	Carbon tetrachloride	ND	5		ug/L
108-90-7	Chlorobenzene	ND	5		ug/L
75-00-3	Chloroethane	ND	5		ug/L
67-66-3	Chloroform	ND	5		ug/L
74-87-3	Chloromethane	ND	5		ug/L
124-48-1	Dibromochloromethane	ND	5		ug/L
10061-01-5	cis-1,3-Dichloropropene	ND	5		ug/L
10061-02-6	trans-1,3-Dichloropropene	ND	5		ug/L
100-41-4	Ethylbenzene	ND	5		ug/L
75-09-2	**Methylene chloride**	**30.9**	**10**		**ug/L**
100-42-5	Styrene	ND	5		ug/L
127-18-4	Tetrachloroethene	ND	5		ug/L
108-88-3	Toluene	ND	5		ug/L
79-01-6	Trichloroethene	ND	5		ug/L
108-05-4	Vinyl acetate	ND	5		ug/L
75-01-4	Vinyl chloride	ND	5		ug/L
1330-20-7	Xylene (total)	ND	10		ug/L
156-59-2	cis-1,2-Dichloroethene	ND	5		ug/L
156-60-5	trans-1,2-Dichloroethene	ND	5		ug/L

CAS#	Surrogate	Conc. Spiked	Conc. Rec	Units	% Recovery	Rec Limits
460-00-4	4-Bromofluorobenzene	50	42.5	ug/L	85	62 - 127
1868-53-7	Dibromofluoromethane	50	52.9	ug/L	106	65 - 130
2037-26-5	Toluene d8	50	53.6	ug/L	107	71 - 132
17060-07-0	1,2-Dichloroethane-d4	50	50.6	ug/L	101	62 - 125

RESULTS REPORTED ON A WET WEIGHT BASIS

GCAL ID	Client ID	Matrix	Collect Date/Time	Receive Date/Time
21005134937	33B111/SB2	Solid	05/11/2010 15:58	05/13/2010 10:20

SW-846 8260B SPLP

Prep Date	Prep Batch	Prep Method	Dilution	Analyzed	By	Analytical Batch
			1	05/22/2010 23:38	AGC	432467

CAS#	Parameter	Result	RDL	REG LIMIT	Units
71-55-6	1,1,1-Trichloroethane	ND	5		ug/L
79-34-5	1,1,2,2-Tetrachloroethane	ND	5		ug/L
79-00-5	1,1,2-Trichloroethane	ND	5		ug/L
75-34-3	1,1-Dichloroethane	ND	5		ug/L
75-35-4	1,1-Dichloroethene	ND	5		ug/L
107-06-2	1,2-Dichloroethane	ND	5		ug/L
78-87-5	1,2-Dichloropropane	ND	5		ug/L
78-93-3	2-Butanone	ND	25		ug/L
591-78-6	2-Hexanone	ND	5		ug/L
108-10-1	4-Methyl-2-pentanone	ND	5		ug/L
67-64-1	Acetone	ND	25		ug/L
71-43-2	Benzene	ND	5		ug/L
75-27-4	Bromodichloromethane	ND	5		ug/L
75-25-2	Bromoform	ND	5		ug/L
74-83-9	Bromomethane	ND	5		ug/L
75-15-0	Carbon disulfide	ND	5		ug/L
56-23-5	Carbon tetrachloride	ND	5		ug/L
108-90-7	Chlorobenzene	ND	5		ug/L
75-00-3	Chloroethane	ND	5		ug/L
67-66-3	Chloroform	ND	5		ug/L
74-87-3	Chloromethane	ND	5		ug/L
124-48-1	Dibromochloromethane	ND	5		ug/L
10061-01-5	cis-1,3-Dichloropropene	ND	5		ug/L
10061-02-6	trans-1,3-Dichloropropene	ND	5		ug/L
100-41-4	Ethylbenzene	ND	5		ug/L
75-09-2	**Methylene chloride**	**18.3**	**10**		**ug/L**
100-42-5	Styrene	ND	5		ug/L
127-18-4	Tetrachloroethene	ND	5		ug/L
108-88-3	Toluene	ND	5		ug/L
79-01-6	Trichloroethene	ND	5		ug/L
108-05-4	Vinyl acetate	ND	5		ug/L
75-01-4	Vinyl chloride	ND	5		ug/L
1330-20-7	Xylene (total)	ND	10		ug/L
156-59-2	cis-1,2-Dichloroethene	ND	5		ug/L
156-60-5	trans-1,2-Dichloroethene	ND	5		ug/L

CAS#	Surrogate	Conc. Spiked	Conc. Rec	Units	% Recovery	Rec Limits
460-00-4	4-Bromofluorobenzene	50	43.2	ug/L	86	62 - 127
1868-53-7	Dibromofluoromethane	50	51.5	ug/L	103	65 - 130
2037-26-5	Toluene d8	50	54.6	ug/L	109	71 - 132
17060-07-0	1,2-Dichloroethane-d4	50	48.9	ug/L	98	62 - 125

RESULTS REPORTED ON A WET WEIGHT BASIS

GCAL ID	Client ID	Matrix	Collect Date/Time	Receive Date/Time
21005134938	33B111/SB3	Solid	05/11/2010 16:13	05/13/2010 10:20

SW-846 8260B SPLP

Prep Date	Prep Batch	Prep Method	Dilution	Analyzed	By	Analytical Batch
			1	05/23/2010 00:00	AGC	432467

CAS#	Parameter	Result	RDL	REG LIMIT	Units
71-55-6	1,1,1-Trichloroethane	ND	5		ug/L
79-34-5	1,1,2,2-Tetrachloroethane	ND	5		ug/L
79-00-5	1,1,2-Trichloroethane	ND	5		ug/L
75-34-3	1,1-Dichloroethane	ND	5		ug/L
75-35-4	1,1-Dichloroethene	ND	5		ug/L
107-06-2	1,2-Dichloroethane	ND	5		ug/L
78-87-5	1,2-Dichloropropane	ND	5		ug/L
78-93-3	2-Butanone	ND	25		ug/L
591-78-6	2-Hexanone	ND	5		ug/L
108-10-1	4-Methyl-2-pentanone	ND	5		ug/L
67-64-1	Acetone	ND	25		ug/L
71-43-2	Benzene	ND	5		ug/L
75-27-4	Bromodichloromethane	ND	5		ug/L
75-25-2	Bromoform	ND	5		ug/L
74-83-9	Bromomethane	ND	5		ug/L
75-15-0	Carbon disulfide	ND	5		ug/L
56-23-5	Carbon tetrachloride	ND	5		ug/L
108-90-7	Chlorobenzene	ND	5		ug/L
75-00-3	Chloroethane	ND	5		ug/L
67-66-3	Chloroform	ND	5		ug/L
74-87-3	Chloromethane	ND	5		ug/L
124-48-1	Dibromochloromethane	ND	5		ug/L
10061-01-5	cis-1,3-Dichloropropene	ND	5		ug/L
10061-02-6	trans-1,3-Dichloropropene	ND	5		ug/L
100-41-4	Ethylbenzene	ND	5		ug/L
75-09-2	**Methylene chloride**	**38.1**	**10**		**ug/L**
100-42-5	Styrene	ND	5		ug/L
127-18-4	Tetrachloroethene	ND	5		ug/L
108-88-3	Toluene	ND	5		ug/L
79-01-6	Trichloroethene	ND	5		ug/L
108-05-4	Vinyl acetate	ND	5		ug/L
75-01-4	Vinyl chloride	ND	5		ug/L
1330-20-7	Xylene (total)	ND	10		ug/L
156-59-2	cis-1,2-Dichloroethene	ND	5		ug/L
156-60-5	trans-1,2-Dichloroethene	ND	5		ug/L

CAS#	Surrogate	Conc. Spiked	Conc. Rec	Units	% Recovery	Rec Limits
460-00-4	4-Bromofluorobenzene	50	45.2	ug/L	90	62 - 127
1868-53-7	Dibromofluoromethane	50	52.3	ug/L	105	65 - 130
2037-26-5	Toluene d8	50	55.6	ug/L	111	71 - 132
17060-07-0	1,2-Dichloroethane-d4	50	50.8	ug/L	102	62 - 125

RESULTS REPORTED ON A WET WEIGHT BASIS

GCAL ID	Client ID	Matrix	Collect Date/Time	Receive Date/Time
21005134939	33B112/SB1	Solid	05/12/2010 08:20	05/13/2010 10:20

SW-846 8260B SPLP

Prep Date	Prep Batch	Prep Method	Dilution	Analyzed	By	Analytical Batch
			1	05/23/2010 00:22	AGC	432467

CAS#	Parameter	Result	RDL	REG LIMIT	Units
71-55-6	1,1,1-Trichloroethane	ND	5		ug/L
79-34-5	1,1,2,2-Tetrachloroethane	ND	5		ug/L
79-00-5	1,1,2-Trichloroethane	ND	5		ug/L
75-34-3	1,1-Dichloroethane	ND	5		ug/L
75-35-4	1,1-Dichloroethene	ND	5		ug/L
107-06-2	1,2-Dichloroethane	ND	5		ug/L
78-87-5	1,2-Dichloropropane	ND	5		ug/L
78-93-3	2-Butanone	ND	25		ug/L
591-78-6	2-Hexanone	ND	5		ug/L
108-10-1	4-Methyl-2-pentanone	ND	5		ug/L
67-64-1	Acetone	ND	25		ug/L
71-43-2	Benzene	ND	5		ug/L
75-27-4	Bromodichloromethane	ND	5		ug/L
75-25-2	Bromoform	ND	5		ug/L
74-83-9	Bromomethane	ND	5		ug/L
75-15-0	Carbon disulfide	ND	5		ug/L
56-23-5	Carbon tetrachloride	ND	5		ug/L
108-90-7	Chlorobenzene	ND	5		ug/L
75-00-3	Chloroethane	ND	5		ug/L
67-66-3	Chloroform	ND	5		ug/L
74-87-3	Chloromethane	ND	5		ug/L
124-48-1	Dibromochloromethane	ND	5		ug/L
10061-01-5	cis-1,3-Dichloropropene	ND	5		ug/L
10061-02-6	trans-1,3-Dichloropropene	ND	5		ug/L
100-41-4	Ethylbenzene	ND	5		ug/L
75-09-2	**Methylene chloride**	**33.6**	**10**		**ug/L**
100-42-5	Styrene	ND	5		ug/L
127-18-4	Tetrachloroethene	ND	5		ug/L
108-88-3	Toluene	ND	5		ug/L
79-01-6	Trichloroethene	ND	5		ug/L
108-05-4	Vinyl acetate	ND	5		ug/L
75-01-4	Vinyl chloride	ND	5		ug/L
1330-20-7	Xylene (total)	ND	10		ug/L
156-59-2	cis-1,2-Dichloroethene	ND	5		ug/L
156-60-5	trans-1,2-Dichloroethene	ND	5		ug/L

CAS#	Surrogate	Conc. Spiked	Conc. Rec	Units	% Recovery	Rec Limits
460-00-4	4-Bromofluorobenzene	50	43.9	ug/L	88	62 - 127
1868-53-7	Dibromofluoromethane	50	52.5	ug/L	105	65 - 130
2037-26-5	Toluene d8	50	55.6	ug/L	111	71 - 132
17060-07-0	1,2-Dichloroethane-d4	50	51.6	ug/L	103	62 - 125

RESULTS REPORTED ON A WET WEIGHT BASIS

GCAL ID	Client ID	Matrix	Collect Date/Time	Receive Date/Time
21005134940	33B112/SB1D	Solid	05/12/2010 08:20	05/13/2010 10:20

SW-846 8260B SPLP

Prep Date	Prep Batch	Prep Method	Dilution	Analyzed	By	Analytical Batch
			1	05/23/2010 00:45	AGC	432467

CAS#	Parameter	Result	RDL	REG LIMIT	Units
71-55-6	1,1,1-Trichloroethane	ND	5		ug/L
79-34-5	1,1,2,2-Tetrachloroethane	ND	5		ug/L
79-00-5	1,1,2-Trichloroethane	ND	5		ug/L
75-34-3	1,1-Dichloroethane	ND	5		ug/L
75-35-4	1,1-Dichloroethene	ND	5		ug/L
107-06-2	1,2-Dichloroethane	ND	5		ug/L
78-87-5	1,2-Dichloropropane	ND	5		ug/L
78-93-3	2-Butanone	ND	25		ug/L
591-78-6	2-Hexanone	ND	5		ug/L
108-10-1	4-Methyl-2-pentanone	ND	5		ug/L
67-64-1	Acetone	ND	25		ug/L
71-43-2	Benzene	ND	5		ug/L
75-27-4	Bromodichloromethane	ND	5		ug/L
75-25-2	Bromoform	ND	5		ug/L
74-83-9	Bromomethane	ND	5		ug/L
75-15-0	Carbon disulfide	ND	5		ug/L
56-23-5	Carbon tetrachloride	ND	5		ug/L
108-90-7	Chlorobenzene	ND	5		ug/L
75-00-3	Chloroethane	ND	5		ug/L
67-66-3	Chloroform	ND	5		ug/L
74-87-3	Chloromethane	ND	5		ug/L
124-48-1	Dibromochloromethane	ND	5		ug/L
10061-01-5	cis-1,3-Dichloropropene	ND	5		ug/L
10061-02-6	trans-1,3-Dichloropropene	ND	5		ug/L
100-41-4	Ethylbenzene	ND	5		ug/L
75-09-2	**Methylene chloride**	**28.6**	**10**		**ug/L**
100-42-5	Styrene	ND	5		ug/L
127-18-4	Tetrachloroethene	ND	5		ug/L
108-88-3	Toluene	ND	5		ug/L
79-01-6	Trichloroethene	ND	5		ug/L
108-05-4	Vinyl acetate	ND	5		ug/L
75-01-4	Vinyl chloride	ND	5		ug/L
1330-20-7	Xylene (total)	ND	5		ug/L
156-59-2	cis-1,2-Dichloroethene	ND	10		ug/L
156-60-5	trans-1,2-Dichloroethene	ND	5		ug/L

CAS#	Surrogate	Conc. Spiked	Conc. Rec	Units	% Recovery	Rec Limits
460-00-4	4-Bromofluorobenzene	50	44.8	ug/L	90	62 - 127
1868-53-7	Dibromofluoromethane	50	52.8	ug/L	106	65 - 130
2037-26-5	Toluene d8	50	55.8	ug/L	112	71 - 132
17060-07-0	1,2-Dichloroethane-d4	50	50.3	ug/L	101	62 - 125

RESULTS REPORTED ON A WET WEIGHT BASIS

GCAL ID	Client ID	Matrix	Collect Date/Time	Receive Date/Time
21005134941	33B112/SB2	Solid	05/12/2010 08:37	05/13/2010 10:20

SW-846 8260B SPLP

Prep Date	Prep Batch	Prep Method	Dilution	Analyzed	By	Analytical Batch
			1	05/23/2010 01:07	AGC	432467

CAS#	Parameter	Result	RDL	REG LIMIT	Units
71-55-6	1,1,1-Trichloroethane	ND	5		ug/L
79-34-5	1,1,2,2-Tetrachloroethane	ND	5		ug/L
79-00-5	1,1,2-Trichloroethane	ND	5		ug/L
75-34-3	1,1-Dichloroethane	ND	5		ug/L
75-35-4	1,1-Dichloroethene	ND	5		ug/L
107-06-2	1,2-Dichloroethane	ND	5		ug/L
78-87-5	1,2-Dichloropropane	ND	5		ug/L
78-93-3	2-Butanone	ND	25		ug/L
591-78-6	2-Hexanone	ND	5		ug/L
108-10-1	4-Methyl-2-pentanone	ND	5		ug/L
67-64-1	Acetone	ND	25		ug/L
71-43-2	Benzene	ND	5		ug/L
75-27-4	Bromodichloromethane	ND	5		ug/L
75-25-2	Bromoform	ND	5		ug/L
74-83-9	Bromomethane	ND	5		ug/L
75-15-0	Carbon disulfide	ND	5		ug/L
56-23-5	Carbon tetrachloride	ND	5		ug/L
108-90-7	Chlorobenzene	ND	5		ug/L
75-00-3	Chloroethane	ND	5		ug/L
67-66-3	Chloroform	ND	5		ug/L
74-87-3	Chloromethane	ND	5		ug/L
124-48-1	Dibromochloromethane	ND	5		ug/L
10061-01-5	cis-1,3-Dichloropropene	ND	5		ug/L
10061-02-6	trans-1,3-Dichloropropene	ND	5		ug/L
100-41-4	Ethylbenzene	ND	5		ug/L
75-09-2	**Methylene chloride**	**43.6**	**10**		**ug/L**
100-42-5	Styrene	ND	5		ug/L
127-18-4	Tetrachloroethene	ND	5		ug/L
108-88-3	Toluene	ND	5		ug/L
79-01-6	Trichloroethene	ND	5		ug/L
108-05-4	Vinyl acetate	ND	5		ug/L
75-01-4	Vinyl chloride	ND	5		ug/L
1330-20-7	Xylene (total)	ND	10		ug/L
156-59-2	cis-1,2-Dichloroethene	ND	5		ug/L
156-60-5	trans-1,2-Dichloroethene	ND	5		ug/L

CAS#	Surrogate	Conc. Spiked	Conc. Rec	Units	% Recovery	Rec Limits
460-00-4	4-Bromofluorobenzene	50	46.4	ug/L	93	62 - 127
1868-53-7	Dibromofluoromethane	50	53	ug/L	106	65 - 130
2037-26-5	Toluene d8	50	54.8	ug/L	110	71 - 132
17060-07-0	1,2-Dichloroethane-d4	50	51.5	ug/L	103	62 - 125

RESULTS REPORTED ON A WET WEIGHT BASIS

GCAL ID	Client ID	Matrix	Collect Date/Time	Receive Date/Time
21005134942	33B112/SB3	Solid	05/12/2010 08:42	05/13/2010 10:20

SW-846 8260B SPLP

Prep Date	Prep Batch	Prep Method	Dilution	Analyzed	By	Analytical Batch
			1	05/23/2010 01:29	AGC	432467

CAS#	Parameter	Result	RDL	REG LIMIT	Units
71-55-6	1,1,1-Trichloroethane	ND	5		ug/L
79-34-5	1,1,2,2-Tetrachloroethane	ND	5		ug/L
79-00-5	1,1,2-Trichloroethane	ND	5		ug/L
75-34-3	1,1-Dichloroethane	ND	5		ug/L
75-35-4	1,1-Dichloroethene	ND	5		ug/L
107-06-2	1,2-Dichloroethane	ND	5		ug/L
78-87-5	1,2-Dichloropropane	ND	5		ug/L
78-93-3	2-Butanone	ND	25		ug/L
591-78-6	2-Hexanone	ND	5		ug/L
108-10-1	4-Methyl-2-pentanone	ND	5		ug/L
67-64-1	Acetone	ND	25		ug/L
71-43-2	Benzene	ND	5		ug/L
75-27-4	Bromodichloromethane	ND	5		ug/L
75-25-2	Bromoform	ND	5		ug/L
74-83-9	Bromomethane	ND	5		ug/L
75-15-0	Carbon disulfide	ND	5		ug/L
56-23-5	Carbon tetrachloride	ND	5		ug/L
108-90-7	Chlorobenzene	ND	5		ug/L
75-00-3	Chloroethane	ND	5		ug/L
67-66-3	Chloroform	ND	5		ug/L
74-87-3	Chloromethane	ND	5		ug/L
124-48-1	Dibromochloromethane	ND	5		ug/L
10061-01-5	cis-1,3-Dichloropropene	ND	5		ug/L
10061-02-6	trans-1,3-Dichloropropene	ND	5		ug/L
100-41-4	Ethylbenzene	ND	5		ug/L
75-09-2	**Methylene chloride**	**29.6**	**10**		**ug/L**
100-42-5	Styrene	ND	5		ug/L
127-18-4	Tetrachloroethene	ND	5		ug/L
108-88-3	Toluene	ND	5		ug/L
79-01-6	Trichloroethene	ND	5		ug/L
108-05-4	Vinyl acetate	ND	5		ug/L
75-01-4	Vinyl chloride	ND	5		ug/L
1330-20-7	Xylene (total)	ND	10		ug/L
156-59-2	cis-1,2-Dichloroethene	ND	5		ug/L
156-60-5	trans-1,2-Dichloroethene	ND	5		ug/L

CAS#	Surrogate	Conc. Spiked	Conc. Rec	Units	% Recovery	Rec Limits
460-00-4	4-Bromofluorobenzene	50	44.5	ug/L	89	62 - 127
1868-53-7	Dibromofluoromethane	50	51.4	ug/L	103	65 - 130
2037-26-5	Toluene d8	50	54.5	ug/L	109	71 - 132
17060-07-0	1,2-Dichloroethane-d4	50	50.7	ug/L	101	62 - 125

RESULTS REPORTED ON A WET WEIGHT BASIS

GCAL ID	Client ID	Matrix	Collect Date/Time	Receive Date/Time
21005134943	33B113/SB1	Solid	05/11/2010 16:24	05/13/2010 10:20

SW-846 8260B SPLP

Prep Date	Prep Batch	Prep Method	Dilution	Analyzed	By	Analytical Batch
			1	05/23/2010 01:52	AGC	432467

CAS#	Parameter	Result	RDL	REG LIMIT	Units
71-55-6	1,1,1-Trichloroethane	ND	5		ug/L
79-34-5	1,1,2,2-Tetrachloroethane	ND	5		ug/L
79-00-5	1,1,2-Trichloroethane	ND	5		ug/L
75-34-3	1,1-Dichloroethane	ND	5		ug/L
75-35-4	1,1-Dichloroethene	ND	5		ug/L
107-06-2	1,2-Dichloroethane	ND	5		ug/L
78-87-5	1,2-Dichloropropane	ND	5		ug/L
78-93-3	2-Butanone	ND	25		ug/L
591-78-6	2-Hexanone	ND	5		ug/L
108-10-1	4-Methyl-2-pentanone	ND	5		ug/L
67-64-1	Acetone	ND	25		ug/L
71-43-2	Benzene	ND	5		ug/L
75-27-4	Bromodichloromethane	ND	5		ug/L
75-25-2	Bromoform	ND	5		ug/L
74-83-9	Bromomethane	ND	5		ug/L
75-15-0	Carbon disulfide	ND	5		ug/L
56-23-5	Carbon tetrachloride	ND	5		ug/L
108-90-7	Chlorobenzene	ND	5		ug/L
75-00-3	Chloroethane	ND	5		ug/L
67-66-3	Chloroform	ND	5		ug/L
74-87-3	Chloromethane	ND	5		ug/L
124-48-1	Dibromochloromethane	ND	5		ug/L
10061-01-5	cis-1,3-Dichloropropene	ND	5		ug/L
10061-02-6	trans-1,3-Dichloropropene	ND	5		ug/L
100-41-4	Ethylbenzene	ND	5		ug/L
75-09-2	**Methylene chloride**	**14.2**	**10**		**ug/L**
100-42-5	Styrene	ND	5		ug/L
127-18-4	Tetrachloroethene	ND	5		ug/L
108-88-3	Toluene	ND	5		ug/L
79-01-6	Trichloroethene	ND	5		ug/L
108-05-4	Vinyl acetate	ND	5		ug/L
75-01-4	Vinyl chloride	ND	5		ug/L
1330-20-7	Xylene (total)	ND	10		ug/L
156-59-2	cis-1,2-Dichloroethene	ND	5		ug/L
156-60-5	trans-1,2-Dichloroethene	ND	5		ug/L

CAS#	Surrogate	Conc. Spiked	Conc. Rec	Units	% Recovery	Rec Limits
460-00-4	4-Bromofluorobenzene	50	44.7	ug/L	89	62 - 127
1868-53-7	Dibromofluoromethane	50	51.7	ug/L	103	65 - 130
2037-26-5	Toluene d8	50	55.5	ug/L	111	71 - 132
17060-07-0	1,2-Dichloroethane-d4	50	51.3	ug/L	103	62 - 125

RESULTS REPORTED ON A WET WEIGHT BASIS

GCAL ID	Client ID	Matrix	Collect Date/Time	Receive Date/Time
21005134944	33B113/SB2	Solid	05/11/2010 16:40	05/13/2010 10:20

SW-846 8260B SPLP

Prep Date	Prep Batch	Prep Method	Dilution	Analyzed	By	Analytical Batch
			1	05/23/2010 02:14	AGC	432467

CAS#	Parameter	Result	RDL	REG LIMIT	Units
71-55-6	1,1,1-Trichloroethane	ND	5		ug/L
79-34-5	1,1,2,2-Tetrachloroethane	ND	5		ug/L
79-00-5	1,1,2-Trichloroethane	ND	5		ug/L
75-34-3	1,1-Dichloroethane	ND	5		ug/L
75-35-4	1,1-Dichloroethene	ND	5		ug/L
107-06-2	1,2-Dichloroethane	ND	5		ug/L
78-87-5	1,2-Dichloropropane	ND	5		ug/L
78-93-3	2-Butanone	ND	25		ug/L
591-78-6	2-Hexanone	ND	5		ug/L
108-10-1	4-Methyl-2-pentanone	ND	5		ug/L
67-64-1	Acetone	ND	25		ug/L
71-43-2	Benzene	ND	5		ug/L
75-27-4	Bromodichloromethane	ND	5		ug/L
75-25-2	Bromoform	ND	5		ug/L
74-83-9	Bromomethane	ND	5		ug/L
75-15-0	Carbon disulfide	ND	5		ug/L
56-23-5	Carbon tetrachloride	ND	5		ug/L
108-90-7	Chlorobenzene	ND	5		ug/L
75-00-3	Chloroethane	ND	5		ug/L
67-66-3	Chloroform	ND	5		ug/L
74-87-3	Chloromethane	ND	5		ug/L
124-48-1	Dibromochloromethane	ND	5		ug/L
10061-01-5	cis-1,3-Dichloropropene	ND	5		ug/L
10061-02-6	trans-1,3-Dichloropropene	ND	5		ug/L
100-41-4	Ethylbenzene	ND	5		ug/L
75-09-2	**Methylene chloride**	**14.0**	**10**		**ug/L**
100-42-5	Styrene	ND	5		ug/L
127-18-4	Tetrachloroethene	ND	5		ug/L
108-88-3	Toluene	ND	5		ug/L
79-01-6	Trichloroethene	ND	5		ug/L
108-05-4	Vinyl acetate	ND	5		ug/L
75-01-4	Vinyl chloride	ND	5		ug/L
1330-20-7	Xylene (total)	ND	10		ug/L
156-59-2	cis-1,2-Dichloroethene	ND	5		ug/L
156-60-5	trans-1,2-Dichloroethene	ND	5		ug/L

CAS#	Surrogate	Conc. Spiked	Conc. Rec	Units	% Recovery	Rec Limits
460-00-4	4-Bromofluorobenzene	50	42.4	ug/L	85	62 - 127
1868-53-7	Dibromofluoromethane	50	51.6	ug/L	103	65 - 130
2037-26-5	Toluene d8	50	53.4	ug/L	107	71 - 132
17060-07-0	1,2-Dichloroethane-d4	50	51	ug/L	102	62 - 125

RESULTS REPORTED ON A WET WEIGHT BASIS

GCAL ID	Client ID	Matrix	Collect Date/Time	Receive Date/Time
21005134945	33B113/SB3	Solid	05/11/2010 16:47	05/13/2010 10:20

SW-846 8260B SPLP

Prep Date	Prep Batch	Prep Method	Dilution	Analyzed	By	Analytical Batch
			1	05/23/2010 02:37	AGC	432467

CAS#	Parameter	Result	RDL	REG LIMIT	Units
71-55-6	1,1,1-Trichloroethane	ND	5		ug/L
79-34-5	1,1,2,2-Tetrachloroethane	ND	5		ug/L
79-00-5	1,1,2-Trichloroethane	ND	5		ug/L
75-34-3	1,1-Dichloroethane	ND	5		ug/L
75-35-4	1,1-Dichloroethene	ND	5		ug/L
107-06-2	1,2-Dichloroethane	ND	5		ug/L
78-87-5	1,2-Dichloropropane	ND	5		ug/L
78-93-3	2-Butanone	ND	25		ug/L
591-78-6	2-Hexanone	ND	5		ug/L
108-10-1	4-Methyl-2-pentanone	ND	5		ug/L
67-64-1	Acetone	ND	25		ug/L
71-43-2	Benzene	ND	5		ug/L
75-27-4	Bromodichloromethane	ND	5		ug/L
75-25-2	Bromoform	ND	5		ug/L
74-83-9	Bromomethane	ND	5		ug/L
75-15-0	Carbon disulfide	ND	5		ug/L
56-23-5	Carbon tetrachloride	ND	5		ug/L
108-90-7	Chlorobenzene	ND	5		ug/L
75-00-3	Chloroethane	ND	5		ug/L
67-66-3	Chloroform	ND	5		ug/L
74-87-3	Chloromethane	ND	5		ug/L
124-48-1	Dibromochloromethane	ND	5		ug/L
10061-01-5	cis-1,3-Dichloropropene	ND	5		ug/L
10061-02-6	trans-1,3-Dichloropropene	ND	5		ug/L
100-41-4	Ethylbenzene	ND	5		ug/L
75-09-2	**Methylene chloride**	**19.4**	**10**		**ug/L**
100-42-5	Styrene	ND	5		ug/L
127-18-4	Tetrachloroethene	ND	5		ug/L
108-88-3	Toluene	ND	5		ug/L
79-01-6	Trichloroethene	ND	5		ug/L
108-05-4	Vinyl acetate	ND	5		ug/L
75-01-4	Vinyl chloride	ND	5		ug/L
1330-20-7	Xylene (total)	ND	10		ug/L
156-59-2	cis-1,2-Dichloroethene	ND	5		ug/L
156-60-5	trans-1,2-Dichloroethene	ND	5		ug/L

CAS#	Surrogate	Conc. Spiked	Conc. Rec	Units	% Recovery	Rec Limits
460-00-4	4-Bromofluorobenzene	50	44.1	ug/L	88	62 - 127
1868-53-7	Dibromofluoromethane	50	52.6	ug/L	105	65 - 130
2037-26-5	Toluene d8	50	53.6	ug/L	107	71 - 132
17060-07-0	1,2-Dichloroethane-d4	50	52.3	ug/L	105	62 - 125

RESULTS REPORTED ON A WET WEIGHT BASIS

GCAL ID	Client ID	Matrix	Collect Date/Time	Receive Date/Time
21005134946	33B114/SB1	Solid	05/12/2010 09:00	05/13/2010 10:20

SW-846 8260B SPLP

Prep Date	Prep Batch	Prep Method	Dilution	Analyzed	By	Analytical Batch
			1	05/24/2010 00:54	CLH	432518

CAS#	Parameter	Result	RDL	REG LIMIT	Units
71-55-6	1,1,1-Trichloroethane	ND	5		ug/L
79-34-5	1,1,2,2-Tetrachloroethane	ND	5		ug/L
79-00-5	1,1,2-Trichloroethane	ND	5		ug/L
75-34-3	1,1-Dichloroethane	ND	5		ug/L
75-35-4	1,1-Dichloroethene	ND	5		ug/L
107-06-2	1,2-Dichloroethane	ND	5		ug/L
78-87-5	1,2-Dichloropropane	ND	5		ug/L
78-93-3	2-Butanone	ND	25		ug/L
591-78-6	2-Hexanone	ND	5		ug/L
108-10-1	4-Methyl-2-pentanone	ND	5		ug/L
67-64-1	Acetone	ND	25		ug/L
71-43-2	Benzene	ND	5		ug/L
75-27-4	Bromodichloromethane	ND	5		ug/L
75-25-2	Bromoform	ND	5		ug/L
74-83-9	Bromomethane	ND	5		ug/L
75-15-0	Carbon disulfide	ND	5		ug/L
56-23-5	Carbon tetrachloride	ND	5		ug/L
108-90-7	Chlorobenzene	ND	5		ug/L
75-00-3	Chloroethane	ND	5		ug/L
67-66-3	Chloroform	ND	5		ug/L
74-87-3	Chloromethane	ND	5		ug/L
124-48-1	Dibromochloromethane	ND	5		ug/L
10061-01-5	cis-1,3-Dichloropropene	ND	5		ug/L
10061-02-6	trans-1,3-Dichloropropene	ND	5		ug/L
100-41-4	Ethylbenzene	ND	5		ug/L
75-09-2	**Methylene chloride**	**14.7**	**10**		**ug/L**
100-42-5	Styrene	ND	5		ug/L
127-18-4	Tetrachloroethene	ND	5		ug/L
108-88-3	Toluene	ND	5		ug/L
79-01-6	Trichloroethene	ND	5		ug/L
108-05-4	Vinyl acetate	ND	5		ug/L
75-01-4	Vinyl chloride	ND	5		ug/L
1330-20-7	Xylene (total)	ND	10		ug/L
156-59-2	cis-1,2-Dichloroethene	ND	5		ug/L
156-60-5	trans-1,2-Dichloroethene	ND	5		ug/L

CAS#	Surrogate	Conc. Spiked	Conc. Rec	Units	% Recovery	Rec Limits
460-00-4	4-Bromofluorobenzene	50	46.1	ug/L	92	62 - 127
1868-53-7	Dibromofluoromethane	50	49.1	ug/L	98	65 - 130
2037-26-5	Toluene d8	50	54	ug/L	108	71 - 132
17060-07-0	1,2-Dichloroethane-d4	50	53.3	ug/L	107	62 - 125

RESULTS REPORTED ON A WET WEIGHT BASIS

GCAL ID	Client ID	Matrix	Collect Date/Time	Receive Date/Time
21005134947	33B114/SB2	Solid	05/12/2010 09:03	05/13/2010 10:20

SW-846 8260B SPLP

Prep Date	Prep Batch	Prep Method	Dilution	Analyzed	By	Analytical Batch
			1	05/24/2010 01:16	CLH	432518

CAS#	Parameter	Result	RDL	REG LIMIT	Units
71-55-6	1,1,1-Trichloroethane	ND	5		ug/L
79-34-5	1,1,2,2-Tetrachloroethane	ND	5		ug/L
79-00-5	1,1,2-Trichloroethane	ND	5		ug/L
75-34-3	1,1-Dichloroethane	ND	5		ug/L
75-35-4	1,1-Dichloroethene	ND	5		ug/L
107-06-2	1,2-Dichloroethane	ND	5		ug/L
78-87-5	1,2-Dichloropropane	ND	5		ug/L
78-93-3	2-Butanone	ND	25		ug/L
591-78-6	2-Hexanone	ND	5		ug/L
108-10-1	4-Methyl-2-pentanone	ND	5		ug/L
67-64-1	Acetone	ND	25		ug/L
71-43-2	Benzene	ND	5		ug/L
75-27-4	Bromodichloromethane	ND	5		ug/L
75-25-2	Bromoform	ND	5		ug/L
74-83-9	Bromomethane	ND	5		ug/L
75-15-0	Carbon disulfide	ND	5		ug/L
56-23-5	Carbon tetrachloride	ND	5		ug/L
108-90-7	Chlorobenzene	ND	5		ug/L
75-00-3	Chloroethane	ND	5		ug/L
67-66-3	Chloroform	ND	5		ug/L
74-87-3	Chloromethane	ND	5		ug/L
124-48-1	Dibromochloromethane	ND	5		ug/L
10061-01-5	cis-1,3-Dichloropropene	ND	5		ug/L
10061-02-6	trans-1,3-Dichloropropene	ND	5		ug/L
100-41-4	Ethylbenzene	ND	5		ug/L
75-09-2	**Methylene chloride**	**12.0**	**10**		**ug/L**
100-42-5	Styrene	ND	5		ug/L
127-18-4	Tetrachloroethene	ND	5		ug/L
108-88-3	Toluene	ND	5		ug/L
79-01-6	Trichloroethene	ND	5		ug/L
108-05-4	Vinyl acetate	ND	5		ug/L
75-01-4	Vinyl chloride	ND	5		ug/L
1330-20-7	Xylene (total)	ND	10		ug/L
156-59-2	cis-1,2-Dichloroethene	ND	5		ug/L
156-60-5	trans-1,2-Dichloroethene	ND	5		ug/L

CAS#	Surrogate	Conc. Spiked	Conc. Rec	Units	% Recovery	Rec Limits
460-00-4	4-Bromofluorobenzene	50	45.3	ug/L	91	62 - 127
1868-53-7	Dibromofluoromethane	50	48.8	ug/L	98	65 - 130
2037-26-5	Toluene d8	50	54.6	ug/L	109	71 - 132
17060-07-0	1,2-Dichloroethane-d4	50	52	ug/L	104	62 - 125

RESULTS REPORTED ON A WET WEIGHT BASIS

GCAL ID	Client ID	Matrix	Collect Date/Time	Receive Date/Time
21005134948	33B114/SB3	Solid	05/12/2010 09:15	05/13/2010 10:20

SW-846 8260B SPLP

Prep Date	Prep Batch	Prep Method	Dilution	Analyzed	By	Analytical Batch
			1	05/24/2010 01:39	AGC	432518

CAS#	Parameter	Result	RDL	REG LIMIT	Units
71-55-6	1,1,1-Trichloroethane	ND	5		ug/L
79-34-5	1,1,2,2-Tetrachloroethane	ND	5		ug/L
79-00-5	1,1,2-Trichloroethane	ND	5		ug/L
75-34-3	1,1-Dichloroethane	ND	5		ug/L
75-35-4	1,1-Dichloroethene	ND	5		ug/L
107-06-2	1,2-Dichloroethane	ND	5		ug/L
78-87-5	1,2-Dichloropropane	ND	5		ug/L
78-93-3	2-Butanone	ND	25		ug/L
591-78-6	2-Hexanone	ND	5		ug/L
108-10-1	4-Methyl-2-pentanone	ND	5		ug/L
67-64-1	Acetone	ND	25		ug/L
71-43-2	Benzene	ND	5		ug/L
75-27-4	Bromodichloromethane	ND	5		ug/L
75-25-2	Bromoform	ND	5		ug/L
74-83-9	Bromomethane	ND	5		ug/L
75-15-0	Carbon disulfide	ND	5		ug/L
56-23-5	Carbon tetrachloride	ND	5		ug/L
108-90-7	Chlorobenzene	ND	5		ug/L
75-00-3	Chloroethane	ND	5		ug/L
67-66-3	Chloroform	ND	5		ug/L
74-87-3	Chloromethane	ND	5		ug/L
124-48-1	Dibromochloromethane	ND	5		ug/L
10061-01-5	cis-1,3-Dichloropropene	ND	5		ug/L
10061-02-6	trans-1,3-Dichloropropene	ND	5		ug/L
100-41-4	Ethylbenzene	ND	5		ug/L
75-09-2	**Methylene chloride**	**20.5**	**10**		**ug/L**
100-42-5	Styrene	ND	5		ug/L
127-18-4	Tetrachloroethene	ND	5		ug/L
108-88-3	Toluene	ND	5		ug/L
79-01-6	Trichloroethene	ND	5		ug/L
108-05-4	Vinyl acetate	ND	5		ug/L
75-01-4	Vinyl chloride	ND	5		ug/L
1330-20-7	Xylene (total)	ND	10		ug/L
156-59-2	cis-1,2-Dichloroethene	ND	5		ug/L
156-60-5	trans-1,2-Dichloroethene	ND	5		ug/L

CAS#	Surrogate	Conc. Spiked	Conc. Rec	Units	% Recovery	Rec Limits
460-00-4	4-Bromofluorobenzene	50	45	ug/L	90	62 - 127
1868-53-7	Dibromofluoromethane	50	48.5	ug/L	97	65 - 130
2037-26-5	Toluene d8	50	53.3	ug/L	107	71 - 132
17060-07-0	1,2-Dichloroethane-d4	50	53.4	ug/L	107	62 - 125

RESULTS REPORTED ON A WET WEIGHT BASIS

GC/MS Volatiles Quality Control Summary

Analytical Batch 432316	**Client ID**	MB432316	LCS432316	LCSD432316
Prep Batch N/A	**GCAL ID**	833862	833863	833864
	Sample Type	Method Blank	LCS	LCSD
	Analytical Date	05/21/2010 00:16	05/20/2010 23:08	05/20/2010 23:31
	Matrix	Water	Water	Water

SW-846 8260B SPLP		**Units**	ug/L	**Spike**			**Control**				
		Result	**RDL**	**Added**	**Result**	**% R**	**Limits % R**	**Result**	**% R**	**RPD**	**RPD Limit**
67-64-1	Acetone	ND	25	50.0	108	**216***	44 - 156	97.3	**195***	10	30
75-27-4	Bromodichloromethane	ND	5	50.0	54.0	108	74 - 125	56.1	112	4	30
75-25-2	Bromoform	ND	5	50.0	50.6	101	64 - 122	50.1	100	1	30
74-83-9	Bromomethane	ND	5	50.0	50.7	101	47 - 138	59.6	119	16	30
75-15-0	Carbon disulfide	ND	5	50.0	48.6	97	69 - 136	56.8	114	16	30
56-23-5	Carbon tetrachloride	ND	5	50.0	55.1	110	76 - 128	62.6	125	13	30
75-00-3	Chloroethane	ND	5	50.0	55.0	110	62 - 141	61.1	122	11	30
67-66-3	Chloroform	ND	5	50.0	48.6	97	75 - 122	51.9	104	7	30
74-87-3	Chloromethane	ND	5	50.0	48.2	96	59 - 132	56.8	114	16	30
124-48-1	Dibromochloromethane	ND	5	50.0	47.2	94	71 - 123	48.9	98	4	30
75-34-3	1,1-Dichloroethane	ND	5	50.0	57.5	115	74 - 127	60.5	121	5	30
107-06-2	1,2-Dichloroethane	ND	5	50.0	55.2	110	71 - 129	52.6	105	5	30
156-59-2	cis-1,2-Dichloroethene	ND	5	50.0	53.2	106	73 - 130	58.3	117	9	30
156-60-5	trans-1,2-Dichloroethene	ND	5	50.0	55.9	112	69 - 132	60.3	121	8	30
75-09-2	Methylene chloride	ND	10	50.0	58.0	116	68 - 132	58.5	117	0.9	30
78-87-5	1,2-Dichloropropane	ND	5	50.0	54.4	109	72 - 128	55.1	110	1	30
10061-01-5	cis-1,3-Dichloropropene	ND	5	50.0	55.0	110	71 - 132	57.1	114	4	30
10061-02-6	trans-1,3-Dichloropropene	ND	5	50.0	48.0	96	71 - 131	50.1	100	4	30
100-41-4	Ethylbenzene	ND	5	50.0	45.7	91	74 - 126	50.4	101	10	30
591-78-6	2-Hexanone	ND	5	50.0	53.2	106	50 - 135	50.8	102	5	30
78-93-3	2-Butanone	ND	25	50.0	60.7	121	58 - 137	54.8	110	10	30
108-10-1	4-Methyl-2-pentanone	ND	5	50.0	54.7	109	57 - 132	50.6	101	8	30
100-42-5	Styrene	ND	5	50.0	53.6	107	71 - 127	55.4	111	3	30
127-18-4	Tetrachloroethene	ND	5	50.0	44.7	89	68 - 128	54.1	108	19	30
79-34-5	1,1,2,2-Tetrachloroethane	ND	5	50.0	50.3	101	70 - 122	47.3	95	6	30
71-55-6	1,1,1-Trichloroethane	ND	5	50.0	51.5	103	76 - 126	58.6	117	13	30
79-00-5	1,1,2-Trichloroethane	ND	5	50.0	49.7	99	72 - 121	50.0	100	0.6	30
75-01-4	Vinyl chloride	ND	5	50.0	53.8	108	68 - 132	58.8	118	9	30
108-05-4	Vinyl acetate	ND	5	50.0	56.0	112	54 - 147	63.7	127	13	30
1330-20-7	Xylene (total)	ND	10	150	146	97	74 - 127	160	107	9	30
75-35-4	1,1-Dichloroethene	ND	5	50.0	55.5	111	69 - 129	57.0	114	3	22
71-43-2	Benzene	ND	5	50.0	55.9	112	70 - 129	58.2	116	4	21
79-01-6	Trichloroethene	ND	5	50.0	49.2	98	76 - 129	53.5	107	8	24

GC/MS Volatiles Quality Control Summary

Analytical Batch 432316	Client ID	MB432316			LCS432316			LCSD432316			
Prep Batch N/A	GCAL ID	833862			833863			833864			
	Sample Type	Method Blank			LCS			LCSD			
	Analytical Date	05/21/2010 00:16			05/20/2010 23:08			05/20/2010 23:31			
	Matrix	Water			Water			Water			
SW-846 8260B SPLP		**Units Result**	ug/L **RDL**	**Spike Added**	**Result**	**% R**	**Control Limits % R**	**Result**	**% R**	**RPD**	**RPD Limit**
108-88-3	Toluene	ND	5	50.0	50.5	101	72 - 120	54.1	108	7	21
108-90-7	Chlorobenzene	ND	5	50.0	48.9	98	74 - 123	53.2	106	8	21
Surrogate											
460-00-4	4-Bromofluorobenzene	50.5	101	50	54.7	109	78 - 130	56.3	113		
1868-53-7	Dibromofluoromethane	53.3	107	50	53.1	106	77 - 127	51.8	104		
2037-26-5	Toluene d8	46.3	93	50	51	102	76 - 134	51	102		
17060-07-0	1,2-Dichloroethane-d4	49.3	99	50	51.2	102	71 - 127	52.3	105		

Analytical Batch 432420	Client ID	MB432420			LCS432420			LCSD432420			
Prep Batch N/A	GCAL ID	834324			834325			834326			
	Sample Type	Method Blank			LCS			LCSD			
	Analytical Date	05/22/2010 01:54			05/22/2010 00:36			05/22/2010 01:03			
	Matrix	Water			Water			Water			
SW-846 8260B SPLP		**Units Result**	ug/L **RDL**	**Spike Added**	**Result**	**% R**	**Control Limits % R**	**Result**	**% R**	**RPD**	**RPD Limit**
67-64-1	Acetone	ND	25	50.0	39.5	79	44 - 156	41.2	82	4	30
75-27-4	Bromodichloromethane	ND	5	50.0	49.0	98	74 - 125	47.2	94	4	30
75-25-2	Bromoform	ND	5	50.0	46.7	93	64 - 122	45.9	92	2	30
74-83-9	Bromomethane	ND	5	50.0	41.9	84	47 - 138	39.4	79	6	30
75-15-0	Carbon disulfide	ND	5	50.0	44.9	90	69 - 136	41.4	83	8	30
56-23-5	Carbon tetrachloride	ND	5	50.0	46.6	93	76 - 128	43.2	86	8	30
75-00-3	Chloroethane	ND	5	50.0	43.9	88	62 - 141	41.1	82	7	30
67-66-3	Chloroform	ND	5	50.0	49.4	99	75 - 122	46.8	94	5	30
74-87-3	Chloromethane	ND	5	50.0	38.1	76	59 - 132	33.5	67	13	30
124-48-1	Dibromochloromethane	ND	5	50.0	50.9	102	71 - 123	49.1	98	4	30
75-34-3	1,1-Dichloroethane	ND	5	50.0	46.6	93	74 - 127	44.1	88	6	30
107-06-2	1,2-Dichloroethane	ND	5	50.0	48.4	97	71 - 129	47.4	95	2	30
156-59-2	cis-1,2-Dichloroethene	ND	5	50.0	47.6	95	73 - 130	45.0	90	6	30
156-60-5	trans-1,2-Dichloroethene	ND	5	50.0	46.6	93	69 - 132	43.9	88	6	30
75-09-2	Methylene chloride	ND	10	50.0	45.9	92	68 - 132	43.1	86	6	30
78-87-5	1,2-Dichloropropane	ND	5	50.0	47.5	95	72 - 128	45.2	90	5	30
10061-01-5	cis-1,3-Dichloropropene	ND	5	50.0	49.2	98	71 - 132	46.6	93	5	30

GC/MS Volatiles Quality Control Summary

Analytical Batch 432420	**Client ID**	MB432420	LCS432420	LCSD432420
Prep Batch N/A	**GCAL ID**	834324	834325	834326
	Sample Type	Method Blank	LCS	LCSD
	Analytical Date	05/22/2010 01:54	05/22/2010 00:36	05/22/2010 01:03
	Matrix	Water	Water	Water

SW-846 8260B SPLP		**Units**	ug/L	**Spike**			**Control**			**RPD**
		Result	**RDL**	**Added**	**Result**	**% R**	**Limits % R**	**Result**	**% R**	**RPD**	**Limit**
10061-02-6	trans-1,3-Dichloropropene	ND	5	50.0	52.0	104	71 - 131	50.1	100	4	30
100-41-4	Ethylbenzene	ND	5	50.0	47.5	95	74 - 126	44.1	88	7	30
591-78-6	2-Hexanone	ND	5	50.0	42.0	84	50 - 135	41.4	83	1	30
78-93-3	2-Butanone	ND	25	50.0	37.5	75	58 - 137	38.0	76	1	30
108-10-1	4-Methyl-2-pentanone	ND	5	50.0	44.4	89	57 - 132	43.9	88	1	30
100-42-5	Styrene	ND	5	50.0	49.5	99	71 - 127	46.4	93	6	30
127-18-4	Tetrachloroethene	ND	5	50.0	45.1	90	68 - 128	41.9	84	7	30
79-34-5	1,1,2,2-Tetrachloroethane	ND	5	50.0	47.8	96	70 - 122	46.5	93	3	30
71-55-6	1,1,1-Trichloroethane	ND	5	50.0	47.4	95	76 - 126	43.6	87	8	30
79-00-5	1,1,2-Trichloroethane	ND	5	50.0	47.1	94	72 - 121	45.6	91	3	30
75-01-4	Vinyl chloride	ND	5	50.0	41.7	83	68 - 132	38.1	76	9	30
108-05-4	Vinyl acetate	ND	5	50.0	34.7	69	54 - 147	36.2	72	4	30
1330-20-7	Xylene (total)	ND	10	150	146	97	74 - 127	137	91	6	30
75-35-4	1,1-Dichloroethene	ND	5	50.0	44.1	88	69 - 129	41.7	83	6	22
71-43-2	Benzene	ND	5	50.0	46.6	93	70 - 129	43.5	87	7	21
79-01-6	Trichloroethene	ND	5	50.0	46.2	92	76 - 129	43.3	87	6	24
108-88-3	Toluene	ND	5	50.0	45.7	91	72 - 120	43.0	86	6	21
108-90-7	Chlorobenzene	ND	5	50.0	47.0	94	74 - 123	44.0	88	7	21
Surrogate											
460-00-4	4-Bromofluorobenzene	48	96	50	49.6	99	78 - 130	48.9	98		
1868-53-7	Dibromofluoromethane	49.8	100	50	50.4	101	77 - 127	50	100		
2037-26-5	Toluene d8	50.1	100	50	49.9	100	76 - 134	49.3	99		
17060-07-0	1,2-Dichloroethane-d4	50.1	100	50	50.8	102	71 - 127	49.4	99		

Analytical Batch 432420	**Client ID**	33B102/SB3	33B102/SB3MS	33B102/SB3MSD
Prep Batch N/A	**GCAL ID**	21005134905	21005134906	21005134907
	Sample Type	SAMPLE	MS	MSD
	Analytical Date	05/22/2010 02:20	05/22/2010 04:30	05/22/2010 04:56
	Matrix	Solid	Solid	Solid

SW-846 8260B SPLP		**Units**	ug/L	**Spike**			**Control**			**RPD**
		Result	**RDL**	**Added**	**Result**	**% R**	**Limits % R**	**Result**	**% R**	**RPD**	**Limit**
71-55-6	1,1,1-Trichloroethane	0.00	5	50.0	47.4	95	76 - 126	45.5	91	4	30

GC/MS Volatiles Quality Control Summary

Analytical Batch 432420	Client ID	33B102/SB3	33B102/SB3MS	33B102/SB3MSD
Prep Batch N/A	GCAL ID	21005134905	21005134906	21005134907
	Sample Type	SAMPLE	MS	MSD
	Analytical Date	05/22/2010 02:20	05/22/2010 04:30	05/22/2010 04:56
	Matrix	Solid	Solid	Solid

SW-846 8260B SPLP		Units	ug/L	Spike							
		Result	RDL	Added	Result	% R	Control Limits % R	Result	% R	RPD	RPD Limit
79-34-5	1,1,2,2-Tetrachloroethane	0.00	5	50.0	47.0	94	70 - 122	46.4	93	1	30
79-00-5	1,1,2-Trichloroethane	0.00	5	50.0	46.7	93	72 - 121	45.3	91	3	30
75-34-3	1,1-Dichloroethane	0.00	5	50.0	46.9	94	74 - 127	45.3	91	3	30
75-35-4	1,1-Dichloroethene	0.00	5	50.0	44.5	89	69 - 129	42.5	85	5	22
107-06-2	1,2-Dichloroethane	0.00	5	50.0	48.3	97	71 - 129	47.9	96	0.8	30
78-87-5	1,2-Dichloropropane	0.00	5	50.0	47.5	95	72 - 128	46.1	92	3	30
78-93-3	2-Butanone	0.00	25	50.0	35.7	71	58 - 137	35.2	70	1	30
591-78-6	2-Hexanone	0.00	5	50.0	39.6	79	50 - 135	38.7	77	2	30
108-10-1	4-Methyl-2-pentanone	0.00	5	50.0	42.6	85	57 - 132	42.1	84	1	30
67-64-1	Acetone	1.56	25	50.0	40.3	77	44 - 156	38.5	74	5	30
71-43-2	Benzene	0.00	5	50.0	46.2	92	70 - 129	45.1	90	2	21
75-27-4	Bromodichloromethane	0.00	5	50.0	48.8	98	74 - 125	47.8	96	2	30
75-25-2	Bromoform	0.00	5	50.0	45.7	91	64 - 122	45.4	91	0.7	30
74-83-9	Bromomethane	0.00	5	50.0	38.2	76	47 - 138	39.5	79	3	30
75-15-0	Carbon disulfide	0.00	5	50.0	47.1	94	69 - 136	42.7	85	10	30
56-23-5	Carbon tetrachloride	0.00	5	50.0	46.7	93	76 - 128	44.9	90	4	30
108-90-7	Chlorobenzene	0.00	5	50.0	47.1	94	74 - 123	45.3	91	4	21
75-00-3	Chloroethane	0.00	5	50.0	43.7	87	62 - 141	41.5	83	5	30
67-66-3	Chloroform	0.00	5	50.0	48.3	97	75 - 122	46.7	93	3	30
74-87-3	Chloromethane	0.00	5	50.0	35.3	71	59 - 132	35.1	70	0.6	30
124-48-1	Dibromochloromethane	0.00	5	50.0	50.8	102	71 - 123	48.9	98	4	30
10061-01-5	cis-1,3-Dichloropropene	0.00	5	50.0	48.9	98	71 - 132	47.6	95	3	30
10061-02-6	trans-1,3-Dichloropropene	0.00	5	50.0	51.0	102	71 - 131	50.9	102	0.2	30
100-41-4	Ethylbenzene	0.00	5	50.0	48.6	97	74 - 126	45.6	91	6	30
75-09-2	Methylene chloride	21.0	10	50.0	64.2	86	68 - 132	61.7	81	4	30
100-42-5	Styrene	0.00	5	50.0	49.2	98	71 - 127	47.9	96	3	30
127-18-4	Tetrachloroethene	0.00	5	50.0	47.5	95	68 - 128	43.2	86	9	30
108-88-3	Toluene	0.00	5	50.0	46.3	93	72 - 120	44.0	88	5	21
79-01-6	Trichloroethene	0.00	5	50.0	47.2	94	76 - 129	44.8	90	5	24
108-05-4	Vinyl acetate	0.00	5	50.0	19.6	**39***	54 - 147	22.7	**45***	15	30
75-01-4	Vinyl chloride	0.00	5	50.0	40.8	82	68 - 132	38.8	78	5	30
1330-20-7	Xylene (total)	0.00	10	150	150	100	74 - 127	142	95	5	30
156-59-2	cis-1,2-Dichloroethene	3.65	5	50.0	50.8	94	73 - 130	49.7	92	2	30

GC/MS Volatiles Quality Control Summary

Analytical Batch 432420	Client ID	33B102/SB3	33B102/SB3MS	33B102/SB3MSD
Prep Batch N/A	GCAL ID	21005134905	21005134906	21005134907
	Sample Type	SAMPLE	MS	MSD
	Analytical Date	05/22/2010 02:20	05/22/2010 04:30	05/22/2010 04:56
	Matrix	Solid	Solid	Solid

SW-846 8260B SPLP		Units	ug/L	Spike	Result		Control	Result			RPD
		Result	RDL	Added		% R	Limits % R		% R	RPD	Limit
156-60-5	trans-1,2-Dichloroethene	0.00	5	50.0	47.6	95	69 - 132	44.9	90	6	30
Surrogate											
460-00-4	4-Bromofluorobenzene	47.7	95	50	48.8	98	62 - 127	49.5	99		
1868-53-7	Dibromofluoromethane	49	98	50	50.1	100	65 - 130	49.6	99		
2037-26-5	Toluene d8	50	100	50	49.9	100	71 - 132	49.4	99		
17060-07-0	1,2-Dichloroethane-d4	50.1	100	50	50.6	101	62 - 125	50.4	101		

Analytical Batch 432467	Client ID	MB432467	LCS432467
Prep Batch N/A	GCAL ID	834480	834481
	Sample Type	Method Blank	LCS
	Analytical Date	05/22/2010 17:58	05/22/2010 16:48
	Matrix	Water	Water

SW-846 8260B SPLP		Units	ug/L	Spike	Result		Control
		Result	RDL	Added		% R	Limits % R
67-64-1	Acetone	ND	25	50.0	40.1	80	44 - 156
75-27-4	Bromodichloromethane	ND	5	50.0	61.2	122	74 - 125
75-25-2	Bromoform	ND	5	50.0	59.9	120	64 - 122
74-83-9	Bromomethane	ND	5	50.0	50.9	102	47 - 138
75-15-0	Carbon disulfide	ND	5	50.0	59.3	119	69 - 136
56-23-5	Carbon tetrachloride	ND	5	50.0	58.1	116	76 - 128
75-00-3	Chloroethane	ND	5	50.0	55.8	112	62 - 141
67-66-3	Chloroform	ND	5	50.0	58.7	117	75 - 122
74-87-3	Chloromethane	ND	5	50.0	48.0	96	59 - 132
124-48-1	Dibromochloromethane	ND	5	50.0	55.1	110	71 - 123
75-34-3	1,1-Dichloroethane	ND	5	50.0	48.4	97	74 - 127
107-06-2	1,2-Dichloroethane	ND	5	50.0	54.2	108	71 - 129
156-59-2	cis-1,2-Dichloroethene	ND	5	50.0	51.7	103	73 - 130
156-60-5	trans-1,2-Dichloroethene	ND	5	50.0	58.3	117	69 - 132
75-09-2	Methylene chloride	ND	10	50.0	55.3	111	68 - 132
78-87-5	1,2-Dichloropropane	ND	5	50.0	59.5	119	72 - 128
10061-01-5	cis-1,3-Dichloropropene	ND	5	50.0	55.5	111	71 - 132
10061-02-6	trans-1,3-Dichloropropene	ND	5	50.0	57.9	116	71 - 131

GC/MS Volatiles Quality Control Summary

Analytical Batch 432467	Client ID	MB432467	LCS432467
Prep Batch N/A	GCAL ID	834480	834481
	Sample Type	Method Blank	LCS
	Analytical Date	05/22/2010 17:58	05/22/2010 16:48
	Matrix	Water	Water

SW-846 8260B SPLP		Units Result	ug/L RDL	Spike Added	Result	% R	Control Limits % R
100-41-4	Ethylbenzene	ND	5	50.0	57.1	114	74 - 126
591-78-6	2-Hexanone	ND	5	50.0	35.3	71	50 - 135
78-93-3	2-Butanone	ND	25	50.0	40.8	82	58 - 137
108-10-1	4-Methyl-2-pentanone	ND	5	50.0	50.2	100	57 - 132
100-42-5	Styrene	ND	5	50.0	56.0	112	71 - 127
127-18-4	Tetrachloroethene	ND	5	50.0	55.3	111	68 - 128
79-34-5	1,1,2,2-Tetrachloroethane	ND	5	50.0	50.9	102	70 - 122
71-55-6	1,1,1-Trichloroethane	ND	5	50.0	55.2	110	76 - 126
79-00-5	1,1,2-Trichloroethane	ND	5	50.0	51.3	103	72 - 121
75-01-4	Vinyl chloride	ND	5	50.0	45.8	92	68 - 132
108-05-4	Vinyl acetate	ND	5	50.0	41.7	83	54 - 147
1330-20-7	Xylene (total)	ND	10	150	168	112	74 - 127
75-35-4	1,1-Dichloroethene	ND	5	50.0	58.2	116	69 - 129
71-43-2	Benzene	ND	5	50.0	58.0	116	70 - 129
79-01-6	Trichloroethene	ND	5	50.0	59.3	119	76 - 129
108-88-3	Toluene	ND	5	50.0	52.3	105	72 - 120
108-90-7	Chlorobenzene	ND	5	50.0	52.6	105	74 - 123
Surrogate							
460-00-4	4-Bromofluorobenzene	45.3	91	50	51.6	103	78 - 130
1868-53-7	Dibromofluoromethane	50.6	101	50	52.2	104	77 - 127
2037-26-5	Toluene d8	55.1	110	50	48.6	97	76 - 134
17060-07-0	1,2-Dichloroethane-d4	49.3	99	50	52.2	104	71 - 127

Analytical Batch 432467	Client ID	33B108/SB1	33B108/SB1MS	33B108/SB1MSD
Prep Batch N/A	GCAL ID	21005134925	21005134926	21005134927
	Sample Type	SAMPLE	MS	MSD
	Analytical Date	05/22/2010 18:22	05/22/2010 18:45	05/22/2010 19:07
	Matrix	Solid	Solid	Solid

SW-846 8260B SPLP		Units Result	ug/L RDL	Spike Added	Result	% R	Control Limits % R	Result	% R	RPD	RPD Limit
71-55-6	1,1,1-Trichloroethane	0.00	5	50.0	56.4	113	76 - 126	50.7	101	11	30
79-34-5	1,1,2,2-Tetrachloroethane	0.00	5	50.0	50.0	100	70 - 122	51.2	102	2	30

GC/MS Volatiles Quality Control Summary

Analytical Batch 432467	Client ID	33B108/SB1	33B108/SB1MS	33B108/SB1MSD
Prep Batch N/A	GCAL ID	21005134925	21005134926	21005134927
	Sample Type	SAMPLE	MS	MSD
	Analytical Date	05/22/2010 18:22	05/22/2010 18:45	05/22/2010 19:07
	Matrix	Solid	Solid	Solid

SW-846 8260B SPLP		Units	ug/L	Spike			Control				
		Result	RDL	Added	Result	% R	Limits % R	Result	% R	RPD	RPD Limit
79-00-5	1,1,2-Trichloroethane	0.00	5	50.0	50.8	102	72 - 121	50.4	101	0.8	30
75-34-3	1,1-Dichloroethane	0.00	5	50.0	48.4	97	74 - 127	48.6	97	0.4	30
75-35-4	1,1-Dichloroethene	0.00	5	50.0	62.6	125	69 - 129	38.0	76	**49***	22
107-06-2	1,2-Dichloroethane	0.00	5	50.0	55.0	110	71 - 129	51.0	102	8	30
78-87-5	1,2-Dichloropropane	0.00	5	50.0	60.4	121	72 - 128	56.2	112	7	30
78-93-3	2-Butanone	0.00	25	50.0	39.9	80	58 - 137	45.2	90	12	30
591-78-6	2-Hexanone	0.00	5	50.0	34.0	68	50 - 135	38.1	76	11	30
108-10-1	4-Methyl-2-pentanone	0.00	5	50.0	47.7	95	57 - 132	49.8	100	4	30
67-64-1	Acetone	0.978	25	50.0	73.1	144	44 - 156	47.8	94	**42***	30
71-43-2	Benzene	0.924	5	50.0	60.4	119	70 - 129	57.7	114	5	21
75-27-4	Bromodichloromethane	0.00	5	50.0	60.4	121	74 - 125	55.7	111	8	30
75-25-2	Bromoform	0.00	5	50.0	58.6	117	64 - 122	58.0	116	1	30
74-83-9	Bromomethane	0.00	5	50.0	55.2	110	47 - 138	54.1	108	2	30
75-15-0	Carbon disulfide	0.00	5	50.0	62.1	124	69 - 136	37.4	75	**50***	30
56-23-5	Carbon tetrachloride	0.00	5	50.0	57.0	114	76 - 128	51.9	104	9	30
108-90-7	Chlorobenzene	0.00	5	50.0	53.0	106	74 - 123	50.9	102	4	21
75-00-3	Chloroethane	0.00	5	50.0	55.7	111	62 - 141	54.4	109	2	30
67-66-3	Chloroform	0.00	5	50.0	58.0	116	75 - 122	53.1	106	9	30
74-87-3	Chloromethane	0.00	5	50.0	40.0	80	59 - 132	39.9	80	0.3	30
124-48-1	Dibromochloromethane	0.00	5	50.0	54.3	109	71 - 123	55.7	111	3	30
10061-01-5	cis-1,3-Dichloropropene	0.00	5	50.0	51.0	102	71 - 132	49.7	99	3	30
10061-02-6	trans-1,3-Dichloropropene	0.00	5	50.0	58.3	117	71 - 131	53.9	108	8	30
100-41-4	Ethylbenzene	0.00	5	50.0	58.5	117	74 - 126	54.9	110	6	30
75-09-2	Methylene chloride	46.6	10	50.0	141	**189***	68 - 132	89.0	85	**45***	30
100-42-5	Styrene	0.00	5	50.0	57.2	114	71 - 127	53.8	108	6	30
127-18-4	Tetrachloroethene	0.00	5	50.0	55.2	110	68 - 128	53.6	107	3	30
108-88-3	Toluene	0.00	5	50.0	53.3	107	72 - 120	50.4	101	6	21
79-01-6	Trichloroethene	0.00	5	50.0	57.4	115	76 - 129	54.4	109	5	24
108-05-4	Vinyl acetate	0.00	5	50.0	39.7	79	54 - 147	44.5	89	11	30
75-01-4	Vinyl chloride	0.00	5	50.0	40.9	82	68 - 132	46.3	93	12	30
1330-20-7	Xylene (total)	0.00	10	150	168	112	74 - 127	159	106	6	30
156-59-2	cis-1,2-Dichloroethene	0.00	5	50.0	53.5	107	73 - 130	52.1	104	3	30
156-60-5	trans-1,2-Dichloroethene	0.00	5	50.0	56.0	112	69 - 132	55.3	111	1	30

GC/MS Volatiles Quality Control Summary

Analytical Batch 432467	Client ID	33B108/SB1	33B108/SB1MS	33B108/SB1MSD
Prep Batch N/A	GCAL ID	21005134925	21005134926	21005134927
	Sample Type	SAMPLE	MS	MSD
	Analytical Date	05/22/2010 18:22	05/22/2010 18:45	05/22/2010 19:07
	Matrix	Solid	Solid	Solid

SW-846 8260B SPLP		Units	ug/L	Spike			Control				
		Result	RDL	Added	Result	% R	Limits % R	Result	% R	RPD	RPD Limit
Surrogate											
460-00-4	4-Bromofluorobenzene	45.2	90	50	50.9	102	62 - 127	51	102		
1868-53-7	Dibromofluoromethane	51.6	103	50	50.8	102	65 - 130	51.1	102		
2037-26-5	Toluene d8	56	112	50	48.3	97	71 - 132	48.6	97		
17060-07-0	1,2-Dichloroethane-d4	52.6	105	50	51.2	102	62 - 125	50.4	101		

Analytical Batch 432518	Client ID	MB432518	LCS432518	LCSD432518
Prep Batch N/A	GCAL ID	834666	834667	834668
	Sample Type	Method Blank	LCS	LCSD
	Analytical Date	05/24/2010 00:31	05/23/2010 23:24	05/23/2010 23:47
	Matrix	Water	Water	Water

SW-846 8260B SPLP		Units	ug/L	Spike			Control				
		Result	RDL	Added	Result	% R	Limits % R	Result	% R	RPD	RPD Limit
67-64-1	Acetone	ND	25	50.0	54.7	109	44 - 156	57.4	115	5	30
75-27-4	Bromodichloromethane	ND	5	50.0	57.7	115	74 - 125	57.1	114	1	30
75-25-2	Bromoform	ND	5	50.0	42.4	85	64 - 122	42.7	85	0.7	30
74-83-9	Bromomethane	ND	5	50.0	48.4	97	47 - 138	52.4	105	8	30
75-15-0	Carbon disulfide	ND	5	50.0	58.1	116	69 - 136	58.2	116	0.2	30
56-23-5	Carbon tetrachloride	ND	5	50.0	56.1	112	76 - 128	54.3	109	3	30
75-00-3	Chloroethane	ND	5	50.0	50.2	100	62 - 141	49.6	99	1	30
67-66-3	Chloroform	ND	5	50.0	54.4	109	75 - 122	53.8	108	1	30
74-87-3	Chloromethane	ND	5	50.0	44.5	89	59 - 132	47.8	96	7	30
124-48-1	Dibromochloromethane	ND	5	50.0	43.0	86	71 - 123	46.1	92	7	30
75-34-3	1,1-Dichloroethane	ND	5	50.0	57.1	114	74 - 127	54.6	109	4	30
107-06-2	1,2-Dichloroethane	ND	5	50.0	53.7	107	71 - 129	52.4	105	2	30
156-59-2	cis-1,2-Dichloroethene	ND	5	50.0	56.0	112	73 - 130	51.1	102	9	30
156-60-5	trans-1,2-Dichloroethene	ND	5	50.0	55.8	112	69 - 132	57.3	115	3	30
75-09-2	Methylene chloride	ND	10	50.0	52.9	106	68 - 132	54.0	108	2	30
78-87-5	1,2-Dichloropropane	ND	5	50.0	51.4	103	72 - 128	50.0	100	3	30
10061-01-5	cis-1,3-Dichloropropene	ND	5	50.0	50.8	102	71 - 132	48.9	98	4	30
10061-02-6	trans-1,3-Dichloropropene	ND	5	50.0	51.3	103	71 - 131	48.0	96	7	30
100-41-4	Ethylbenzene	ND	5	50.0	57.9	116	74 - 126	54.7	109	6	30

GC/MS Volatiles Quality Control Summary

Analytical Batch 432518	**Client ID**	MB432518			LCS432518			LCSD432518			
Prep Batch N/A	**GCAL ID**	834666			834667			834668			
	Sample Type	Method Blank			LCS			LCSD			
	Analytical Date	05/24/2010 00:31			05/23/2010 23:24			05/23/2010 23:47			
	Matrix	Water			Water			Water			
SW-846 8260B SPLP		**Units**	ug/L	**Spike**	**Result**		**Control**	**Result**			**RPD**
		Result	**RDL**	**Added**		**% R**	**Limits % R**		**% R**	**RPD**	**Limit**
591-78-6	2-Hexanone	ND	5	50.0	46.6	93	50 - 135	47.8	96	3	30
78-93-3	2-Butanone	ND	25	50.0	58.2	116	58 - 137	52.5	105	10	30
108-10-1	4-Methyl-2-pentanone	ND	5	50.0	47.9	96	57 - 132	45.7	91	5	30
100-42-5	Styrene	ND	5	50.0	49.3	99	71 - 127	48.4	97	2	30
127-18-4	Tetrachloroethene	ND	5	50.0	44.5	89	68 - 128	45.7	91	3	30
79-34-5	1,1,2,2-Tetrachloroethane	ND	5	50.0	53.4	107	70 - 122	52.8	106	1	30
71-55-6	1,1,1-Trichloroethane	ND	5	50.0	50.6	101	76 - 126	49.7	99	2	30
79-00-5	1,1,2-Trichloroethane	ND	5	50.0	49.2	98	72 - 121	50.7	101	3	30
75-01-4	Vinyl chloride	ND	5	50.0	56.2	112	68 - 132	53.4	107	5	30
108-05-4	Vinyl acetate	ND	5	50.0	44.1	88	54 - 147	45.4	91	3	30
1330-20-7	Xylene (total)	ND	10	150	151	101	74 - 127	146	97	3	30
75-35-4	1,1-Dichloroethene	ND	5	50.0	51.2	102	69 - 129	55.4	111	8	22
71-43-2	Benzene	ND	5	50.0	58.2	116	70 - 129	54.4	109	7	21
79-01-6	Trichloroethene	ND	5	50.0	56.8	114	76 - 129	53.4	107	6	24
108-88-3	Toluene	ND	5	50.0	52.0	104	72 - 120	50.3	101	3	21
108-90-7	Chlorobenzene	ND	5	50.0	52.0	104	74 - 123	49.7	99	5	21
Surrogate											
460-00-4	4-Bromofluorobenzene	46.6	93	50	47.8	96	78 - 130	50.4	101		
1868-53-7	Dibromofluoromethane	49.5	99	50	48.5	97	77 - 127	48.4	97		
2037-26-5	Toluene d8	55	110	50	45.9	92	76 - 134	46.9	94		
17060-07-0	1,2-Dichloroethane-d4	51.9	104	50	54.4	109	71 - 127	52	104		

GCAL

GULF COAST ANALYTICAL LABORATORIES, INC
7979 GSRI Avenue, Baton Rouge, Louisiana 70820-7402
Phone 225.769.4900 • Fax 225.767.5717

CHAIN OF CUSTODY RECORD

Lab use only			
Burns & McDonnell	4435	210051349	5-24-10
Client Name	Client #	Workorder #	Due Date

Report to:
Client: BURNS & MCDONNELL
Address: 9400 WARD PARKWAY
KANSAS CITY MO 64114
Contact: SHARON SHELTON
Phone: 816 822 3168
Fax: 816 822 3494

Bill to:
Client: BURNS & MCDONNELL
Address: 9400 WARD PARKWAY
KANSAS CITY MO 64114
Contact: SHARON SHELTON
Phone: 816 822 3168
Fax: 816 822 3494

P.O. Number:
Project Name/Number: AK STEEL 54200

Sampled By: DAVID BARKER

Analytical Requests & Method

Lab use only:
Custody Seal used ☐ yes ☐ no
in tact ☐ yes ☐ no
Temperature °C 5.5

Matrix[1]	Date	Time (2400)	Comp	Grab	Sample Description	Preservatives	No Containers	VOC 8260/5035	SPLP VOC *	Remarks:	Lab ID
W	5/11/10	0800		X	TEMPERATURE BLANK	—	1				
S	5/11/10	0941		X	33B101/SB1	SODIUM BISULFATE/MeOH	5	X	X		1
S	5/11/10	0946		X	33B101/SB2		5	X	X		2
S	5/11/10	0956		X	33B101/SB3		5	X	X		3
S	5/11/10	1025		X	33B102/SB1		5	X	X		4
S	5/11/10	1044		X	33B102/SB3		5	X	X		5
S	5/11/10	1044		X	33B102/SB3MS		5	X	X	use for MS	6
S	5/11/10	1044		X	33B102/SB3MSD		5	X	X	use for MSD	7
S	5/11/10	0850		X	33B103/SB1		5	X	X		8
S	5/11/10	0850		X	33B103/SB1D		5	X	X		9
S	5/11/10	0858		X	33B103/SB2		5	X	X		10
S	5/11/10	0912		X	33B103/SB3		5	X	X		11
S	5/11/10	1114		X	33B104/SB1		5	X	X		12
S	5/11/10	1121		X	33B104/SB2		5	X	X		13

Turn Around Time: ☐ 24-48 hrs. ☐ 3 days ☐ 1 week ☒ Standard ☐ Other

Relinquished by: (Signature)	Received by: (Signature)	Date:	Time:
[signature]		5/12/10	1700
Relinquished by: (Signature)	Received by: (Signature)	Date:	Time:
Fedex	[signature]	5/13/10	1020
Relinquished by: (Signature)	Received by: (Signature)	Date:	Time:

Note: SHIPPED IN 5 COOLERS
* SPLP VOCs are in the workorder only

PAGE 1 OF 4

By submitting these samples, you agree to the terms and conditions contained in our most recent schedule of services.

We cannot accept verbal changes. Please fax written changes to (225) 767-5717

Matrix[1]: W = water, S = soil, SD = solid, L = liquid, SL = sludge, o = oil, CT = charcoal tube, A = air bag

WHITE: CLIENT FINAL REPORT — CANARY: LABORATORY — PINK: CLIENT

GCAL-06 11/98

GCAL

GULF COAST ANALYTICAL LABORATORIES, INC
7979 GSRI Avenue, Baton Rouge, Louisiana 70820-7402
Phone 225.769.4900 • Fax 225.767.5717

CHAIN OF CUSTODY RECORD

Lab use only

Client Name	Client #	Workorder #	Due Date
Burns & McDonnell	4435	210051349	5-24-10

Report to:
Client: BURNS & MCDONNELL
Address: 9400 WARD PARKWAY
KANSAS CITY MO 64114
Contact: SHANON SYLETON
Phone: 816 822 3168
Fax: 816 822 3444

Bill to:
Client: SAME
Address:
Contact:
Phone:
Fax:

P.O. Number:
Project Name/Number: AK STEEL 54200
Sampled By: DAVID BARKER

Analytical Requests & Method

Lab use only:
Custody Seal used ☐ yes ☐ no
in tact ☐ yes ☐ no
Temperature °C 5.8

Matrix[1]	Date	Time (2400)	Comp	Grab	Sample Description	Preservatives	No Containers	VOC 8260/5035	SPLP VOC *	Remarks:	Lab ID
S	5/11/10	1121		X	33B104 / SB2D	SODIUM BISULFATE MeOH	5	X	X		14
S	5/11/10	1138		X	33B104 / SB3		5	X	X		15
S	5/11/10	1210		X	33B105 / SB1		5	X	X		16
S	5/11/10	1230		X	33B105 / SB2		5	X	X		17
S	5/11/10	1240		X	33B105 / SB3		5	X	X		18
S	5/11/10	1249		X	33B106 / SB1		5	X	X		19
S	5/11/10	1300		X	33B106 / SB2		5	X	X		20
S	5/11/10	1308		X	33B106 / SB3		5	X	X		21
S	5/11/10	1322		X	33B107 / SB1		5	X	X		22
S	5/11/10	1327		X	33B107 / SB2		5	X	X		23
S	5/11/10	1340		X	33B107 / SB3		5	X	X		24
S	5/11/10	1500		X	33B108 / SB1		5	X	X		25
S	5/11/10	1500		X	33B108 / SB1MS		5	X	X	Use for MS	26
S	5/11/10	1500		X	33B108 / SB1MSD		5	X	X	Use for MSD	27

Turn Around Time: ☐ 24-48 hrs. ☐ 3 days ☐ 1 week ☒ Standard ☐ Other

Relinquished by: (Signature)	Received by: (Signature)	Date:	Time:
[signature]		5/12/10	1700
Relinquished by: (Signature)	Received by: (Signature)	Date:	Time:
[signature]	[signature]	5/12/10	1020
Relinquished by: (Signature)	Received by: (Signature)	Date:	Time:

Note: SHIPPED IN 5 COOLERS
* SPLP VOCs are in this workorder

PAGE 2 OF 4

By submitting these samples, you agree to the terms and conditions contained in our most recent schedule of services.

Matrix[1]: W = water, S = soil, SD = solid, L = liquid, SL = sludge, o = oil, CT = charcoal tube, A = air bag

We cannot accept verbal changes. Please fax written changes to (225) 767-5717

WHITE: CLIENT FINAL REPORT — CANARY: LABORATORY — PINK: CLIENT

GCAL-06 11/98

GCAL

GULF COAST ANALYTICAL LABORATORIES, INC
7979 GSRI Avenue, Baton Rouge, Louisiana 70820-7402
Phone 225.769.4900 • Fax 225.767.5717

CHAIN OF CUSTODY RECORD

Lab use only

Client Name	Client #	Workorder #	Due Date
Burns & McDonnell	4435	21005139	5-24-10

Report to:
Client: BURNS & MCDONNELL
Address: 9400 WARD PARKWAY
KANSAS CITY MO 64114
Contact: SHARON SHELTON
Phone: 816 822 3468
Fax: 216 822 3494

Bill to:
Client: SAME
Address:
Contact:
Phone:
Fax:

P.O. Number:
Project Name/Number: AK STEEL 54200
Sampled By: DAVID BARKER

Analytical Requests & Method

Lab use only:
Custody Seal used ☐ yes ☐ no
in tact ☐ yes ☐ no
Temperature °C 58

Matrix[1]	Date	Time (2400)	Comp	Grab	Sample Description	Preservatives	No Containers	VOC 8260/5035	SPLP VOC	Remarks:	Lab ID
S	5/11/10	1535		X	33B108 / SB3	SODIUM BISULFATE MeOH	5	X	X		28
S	5/11/10	1352		X	33B109 / SB1		5	X	X		29
S	5/11/10	1408		X	33B109 / SB2		5	X	X		30
S	5/11/10	1420		X	33B109 / SB3		5	X	X		31
S	5/11/10	1420		X	33B109 / SB3D		5	X	X		32
S	5/11/10	1433		X	33B110 / SB1		5	X	X		33
S	5/11/10	1438		X	33B110 / SB2		5	X	X		34
S	5/11/10	1450		X	33B110 / SB3		5	X	X		35
S	5/11/10	1552		X	33B111 / SB1		5	X	X		36
S	5/11/10	1558		X	33B111 / SB2		5	X	X		37
S	5/11/10	1613		X	33B111 / SB3		5	X	X		38
S	5/12/10	0820		X	33B112 / SB1		5	X	X		39
S	5/12/10	0820		X	33B112 / SB1D		5	X	X		40
S	5/12/10	0837		X	33B112 / SB2		5	X	X		41

Turn Around Time: ☐ 24-48 hrs. ☐ 3 days ☐ 1 week ☒ Standard ☐ Other

Relinquished by: (Signature)	Received by: (Signature)	Date:	Time:
[signature]		5/12/10	1700
Relinquished by: (Signature)	Received by: (Signature)	Date:	Time:
[signature]	[signature]	5/13/10	1070
Relinquished by: (Signature)	Received by: (Signature)	Date:	Time:

Note: SHIPPED IN 5 COOLERS
* SPLP VOC's are in the workorder

PAGE 3 OF 4

By submitting these samples, you agree to the terms and conditions contained in our most recent schedule of services.

Matrix[1]: W = water, S = soil, SD = solid, L = liquid, SL = sludge, o = oil, CT = charcoal tube, A = air bag

We cannot accept verbal changes. Please fax written changes to (225) 767-5717

WHITE: CLIENT FINAL REPORT — CANARY: LABORATORY — PINK: CLIENT

GCAL-06 11/98

GCAL

GULF COAST ANALYTICAL LABORATORIES, INC
7979 GSRI Avenue, Baton Rouge, Louisiana 70820-7402
Phone 225.769.4900 • Fax 225.767.5717

CHAIN OF CUSTODY RECORD

Lab use only

Client Name	Client #	Workorder #	Due Date
Burns & McDonnell	4435	210051349	5.24.10

Report to:
Client: BURNS & MCDONNELL
Address: 9400 WARD PARKWAY
KANSAS CITY MO 64114
Contact: SHARON SHELTON
Phone: 816 822 3168
Fax: 816 822 3494

Bill to:
Client: SAME
Address:
Contact:
Phone:
Fax:

P.O. Number:
Project Name/Number: AK STEEL 54200
Sampled By: DAVID BARKER

Analytical Requests & Method

Lab use only:
Custody Seal used ☐ yes ☐ no
in tact ☐ yes ☐ no
Temperature °C 5.3

Matrix[1]	Date	Time (2400)	Comp	Grab	Sample Description	Preservatives	No Containers	VOC 8260/5035	SPLP VOC *	Remarks:	Lab ID
S	5/12/10	0842		X	33B112 / SB3	SODIUM BISULFATE MeOH	5	X	X		42
S	5/11/10	1624		X	33B113 / SB1		5	X	X		43
S	5/11/10	1640		X	33B113 / SB2		5	X	X		44
S	5/11/10	1647		X	33B113 / SB3		5	X	X		45
S	5/12/10	0900		X	33B114 / SB1		5	X	X		46
S	5/12/10	0903		X	33B114 / SB2		5	X	X		47
S	5/12/10	0915		X	33B114 / SB3		5	X	X		48

05/12/10

Turn Around Time: ☐ 24-48 hrs. ☐ 3 days. ☐ 1 week ☒ Standard ☐ Other

Relinquished by: (Signature)	Received by: (Signature)	Date:	Time:
		5/12/10	1700
Relinquished by: (Signature)	Received by: (Signature)	Date:	Time:
Foley		5/12	107
Relinquished by: (Signature)	Received by: (Signature)	Date:	Time:

Note: SHIPPED IN 5 COOLERS

PAGE 4 of 4

* SPLP VOCs are in this workorder

By submitting these samples, you agree to the terms and conditions contained in our most recent schedule of services.

Matrix[1]: W = water, S = soil, SD = solid, L = liquid, SL = sludge, o = oil, CT = charcoal tube, A = air bag

We cannot accept verbal changes. Please fax written changes to (225) 767-5717

WHITE: CLIENT FINAL REPORT — CANARY: LABORATORY — PINK: CLIENT

GCAL-06 11/98