TABLE OF CONTENTS

4 INJECTION WELL CONSTRUCTION PLAN 3
Facility Information 3
4.1. Injection Well Construction Overview 3
4.2. Proposed Stimulation Program [40 CFR § 146.82(a)(9)] 4
4.3. Construction Procedures [40 CFR § 146.82(a)(12)] 4
4.4. Maximum Wellhead Injection Pressure 5
4.5. Casing Program 10
4.6. Injection Well Tubing and Packer Program 19
4.7. Injection Well Cementing Program 22
4.8. Injection Well Annular Fluid 25
4.9. Injection Wellhead and Valve Program 25
4.10. Injection Well Routine Maintenance 29
4.11. Injection Well Perforation Program 29
4.12. Summary of Monitoring Technologies Deployed in Injection Wells 29
4.13. Schematic of the Subsurface Construction Details of the HGSS Injection Wells 30

LIST OF FIGURES

Figure 4-1. Nodal analysis results showing the operating points for the three tubing sizes modelled. 7
Figure 4-2. Tubing and casing design based on the nodal analysis results. 8
Figure 4-3. Pressure versus depth for injection of the maximum injection rate with wellhead pressure set to 1200 psi. 9
Figure 4-4. Pressure versus depth for injection of the average injection rate with wellhead pressure set to 1200 psi. 9
Figure 4-5. A design schematic of the HGSS injection wellhead and Christmas tree used for the NCV-3 CO_2 injection well. 29
Figure 4-6. Design schematic of HGSS NCV-3 CO_2 injection well. 32

LIST OF TABLES

Table 4-1.Summary Table of Well Information for NCV-3. 3
Table 4-2. Summary Table of Generalized Completion Depth Intervals for NCV-3 4
Table 4-3. NCV-3 Parameters Used in the Nodal Analysis Simulation 6
Table 4-4. Minimum Design Factors. 11

Table 4-5. Surface Casing Load Scenarios Evaluated showing the design factors for each scenario. 13
Table 4-6. Intermediate Casing Load Scenarios Evaluated showing the design factors for each scenario. 14
Table 4-7. Long-String Casing Load Scenarios evaluated showing the design factors for each scenario. 15
Table 4-8. Tubing load scenarios evaluated showing the design factors for each scenario. 16
Table 4-9. HGSS Injection Well Casing Program and Properties of Materials..... 20
Table 4-10. Required Specifications for Tubing and Packer Selection and Placement (§146.86(c)) 21
Table 4-11. Specifications of the Anticipated CO_2 Stream Composition..... 21
Table 4-12. Tubing and Packer Details..... 22
Table 4-13. Specifications of the HGSS Cementing Program..... 24
Table 4-14. Materials Specification of Wellhead and Christmas Tree..... 26
Table 4-15. Material Classes from API 6A (Spec. for Wellhead and Christmas Tree Equipment). 27
Table 4-16. *Technologies Deployed in NCV-3 Injection Well for Monitoring Purposes..... 29

4 INJECTION WELL CONSTRUCTION PLAN
40 CFR 146.82(a) (9), (11), (12)

Heartland Greenway Storage Site NCV-3 Injection Well

Facility Information

Facility name: Heartland Greenway Storage Site (HGSS)
NCV-3
Facility Operator: Heartland Greenway Carbon Storage, LLC (HGCS)
Facility Contact: David Giles, President and COO
2626 Cole Ave., Dallas, Texas, USA 75204
Phone: (210) 880-6000; Email: dgiles@navco2.com
Project Location: Taylorville, Christian County, Illinois
39.647516 / -89.269584

4.1. Injection Well Construction Overview

Heartland Greenway Carbon Storage LLC. (HGCS) seeks to drill and construct a new Class VI CO_2 Injection well, NCV-3, within the Heartland Greenway Storage Site (HGSS) to support CO_2 storage operations and has designed this well construction plan in accordance with 40 CFR §146.86, pursuant to 40 CFR §146.82. HGCS has implemented well design strategies and materials focused on (1) preventing movement of fluids into or between USDWS or into any authorized zones; (2) permitting the use of appropriate testing devices and workover tools and; (3) permit continuous monitoring of the annulus space between the tubing and long string casing. Any necessary changes to this well plan due to logistical or geological conditions encountered within the field will be communicated to the Director prior to well construction. A summary of the spatial location, coordinates and well API/UWI values for NCV-3 are shown below **in Table 4-1**, and general well construction details are detailed below in **Table 4-2.**

Table 4-1.Summary Table of Well Information for NCV-3.

Well Name	Location (LAT/LONG) ±300 ft	API	Operator	Completion Footages	Total Depth
NCV-3	39.647516 / -89.269584	*TBD*	*Heartland Greenway Carbon Storage, LLC*	5964-6268	6508

Table 4-2. Summary Table of Generalized Completion Depth Intervals for NCV-3

Casing	T.O.C-Shoe Depth (ft. MD.)	Open Hole Diameter (inches)	Comment
30" Conductor	0-40	34"	Driven or drilled into shallow soils until refusal
20" Surface	0-500	24"	Ran through shallow USDWs
13 3/8" Intermediate	0-4847	17 ½"	Ran through deepest USDW to top of Eau Claire Caprock
9 5/8" Long String	0-6508	12 ¼"	Ran to well terminal depth (Precambrian)

4.2. Proposed Stimulation Program [40 CFR § 146.82(a)(9)]

While not anticipated based on existing interpolations of reservoir quality, a well stimulation program (such as an acid wash) may be proposed by HGCS based on geologic conditions and data identified during drilling and well testing/logging operations. If well stimulation is determined to be required to meet injection goals of the NCV-3 well, HGCS will complete the required stimulation plan [attached to this permit] and communicate the details of the well stimulation program to the Director. HGCS will not proceed with well stimulation operations until approval is received.

4.3. Construction Procedures [40 CFR § 146.82(a)(12)]

The NCV-3 injection well has been designed to accommodate the mass of CO_2 that will be delivered to it, while considering critical characteristics of the CO_2 storage reservoir which affect the well design. Well design principals and materials detailed in subsequent sections were selected and vetted to ensure construction materials have sufficient structural strength to provide sustained mechanical integrity throughout the life of the CCS project in addition to permitting the use of appropriate testing devices, workover tools and continuous monitoring of the annulus space between the injection tubing and long string casing. All well construction materials were selected to be compatible with fluids of which they may be expected to come into contact (e.g., corrosion-resistant cement) and meet or exceed API and ASTM International standards.
This plan illustrates the comprehensive analysis performed to comply with and exceed the standards detailed in 40 CFR §146.86 and other related sections (§146.87, 146.88, 146.89, 146.90, 146.94 (a), 146.91), in pursuant to 40 CFR § 146.82 regarding the design of the injection well casing, cement, and wellhead and their relation to subsequent testing, monitoring, and reporting activities.

The construction of the NCV-3 injection well within the Heartland Greenway Storage site will be performed using best practices and will conform to all requirements of Class VI Rule VI at 40 CFR 146.86(b). The drilling of the injection well in this part of the Illinois Basin is

straightforward with very few known drilling hazards apart from a possible lost circulation zone in the Potosi formation within the intermediate section of the well. The surface casing will be set to +/-500 ft bgs and will be cemented to surface so that any shallow USDW aquifers will be protected. A normal 8.5 ppg-9.0 ppg mud weight will prevent any movement of fluids from one aquifer to another. An intermediate section is planned from the base of the surface casing to the top of the Eau Claire formation which will also cover the St. Peter formation. This section will pass through the Potosi formation, previously recognized as a potential lost circulation zone. If a loss of circulation is encountered, lost circulation materials will be used to regain circulation. If lost circulation materials are not successful, cement plugs will be placed across the zone to enable the well to be drilled to casing point. The intermediate casing will be cemented in two stages with the first stage covering from T.D. at the top of the Eau Claire formation to just above the Potosi formation. The well will be circulated until the first stage cement is set through a stage collar and then the second stage will place cement from the stage collar to surface. The T.D. section will then be drilled through the Eau Claire formation, through the Mt. Simon formation and reaching total depth in basement rocks. The long string casing will then be cemented from T.D. back to surface. While drilling each section of the well the deviation will be checked to ensure that the well stays as close to vertical as possible with the deviation staying below five degrees and no section of the well will have a dog-leg severity greater than 1.9 degrees/100 ft. Should a deviation correction be required directional drilling tools will be employed. There are no know abnormal pressure formation in this area so mud weights of +/- 9,0 ppg will provide well control. The casing and cements to be used in construction of the NCV-3 well will be compatible with the injected CO_2. A minimum of CR-13 casing will be used across the injection zone and caprock and on the lower section of the intermediate casing. This design has been confirmed with manufacturer testing performed to ASTM and Corrosion Standards. Cement across these sections will be CO_2 resistant as shown by API and ASTM testing.

The targeted injection formation will be tested prior to final completion by step-rate and pressure-falloff testing. These tests will confirm that the proposed injection zone will be able to receive the required volume of CO_2 while injection pressures will stay below fracturing pressure. The injection tubing will be a minimum of CR-13 and will be sized to accommodate the expected injection rate. The size of the wellbore will allow monitoring equipment to be placed in the wellbore so that injection and annular pressure can be monitored. The tubing will also be sized such that surveillance logging can be accommodated. More detail of the well construction methods and materials will be found in the following sections.

4.4. Maximum Wellhead Injection Pressure

A nodal analysis was conducted to determine the injection tubing diameter for the NCV-3 CO_2 injection well. Nodal analysis identifies the operating point where inflow at the top of the well and outflow at the bottom of the well match for different sizes of tubing, allowing a tubing size

to be selected that meets the project needs of approximately one million metric tons per year (2740 metric tons per day) injected per well on average and a maximum rate of 1.34 million metric tons per year (3671 metric tons per day). Schlumberger's PIPESIM software was used to size the injection tubing. The simulation was generated using parameters listed in **Table 4-3.** The simulation employed a 9 5/8-inch casing perforated for 250 ft using six shots per foot centered on 6063 ft below ground. The reservoir was assumed to be at 130°f with a permeability of 200 mD and a reservoir pressure gradient of 0.44 psi/ft. The wellhead pressure was set to 1300 psi. Three tubing sizes were included in the analysis: 4 inch 11lb/ft (3.476 in ID), 4.5 inch 12.5 lb/ft (3.958 in ID), and 5.5 inch 17 lb/ft (4.892 in ID). The result of the nodal analysis, **Figure 4-1**, shows that the maximum injection rate would require a tubing size larger than 5 inches but less than 5.5 inches. The 5.5 inch 17 lb/ft tubing was selected.

Table 4-3. NCV-3 Parameters Used in the Nodal Analysis Simulation

Nodal Analysis Assumption	Value
Long Casing Size	9 5/8"
Perforation Zone	250 feet
Perforation Specifics	Six shots per foot centered on 6063 feet MD
Reservoir Temperature	130°f
Permeability	200 mD
Reservoir pressure gradient	0.44 psi/ft
Wellhead Pressure	1300 psi

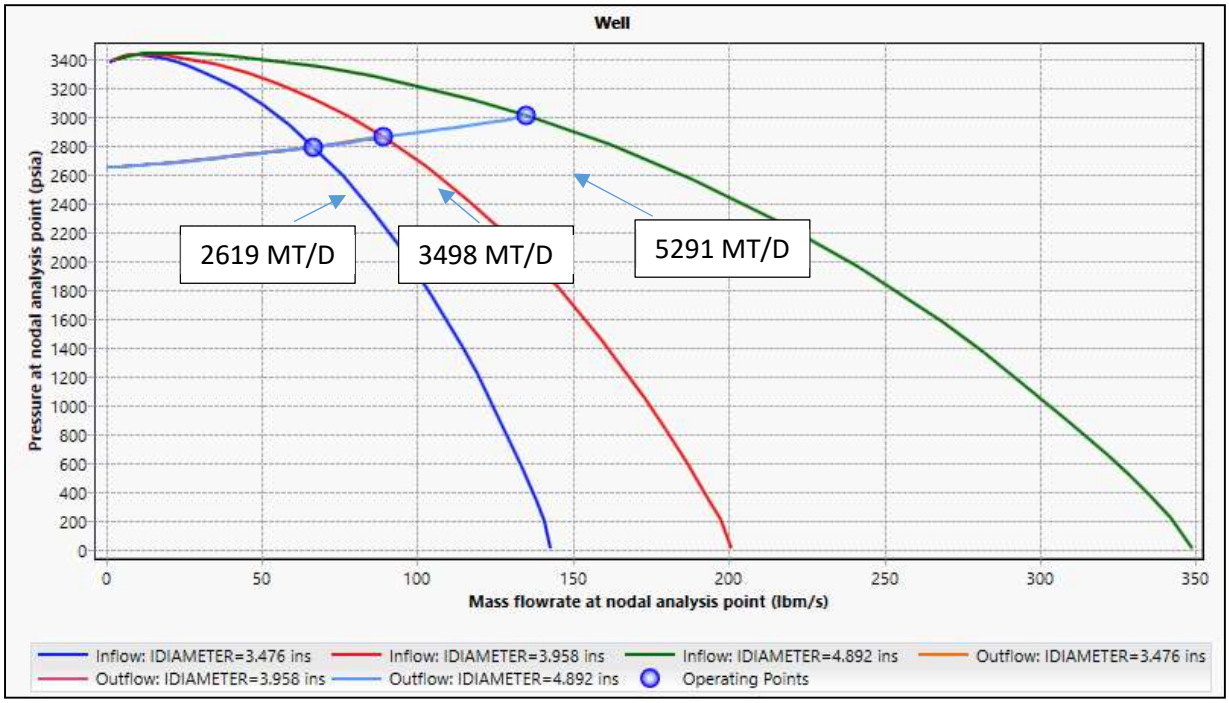

Figure 4-1. Nodal analysis results showing the operating points for the three tubing sizes modelled.

The results of the nodal analysis were used to update the PIPESIM flow model to have a 13 3/8 inch 61 lb/ft intermediate casing set at 4948 ft and a 9 5/8 inch 47 lb/ft long-string casing set at 6431 ft that contains a 5 ½ inch 17lb/ft with a packer set at 5900 ft. This design is illustrated in **Figure 4-2** below. Using this design injection was modeled and the results for both the maximum rate (**Figure 4-3**) and average rate (**Figure 4-4**) show that 5 ½ 17 lb/ft tubing will meet the project requirements.

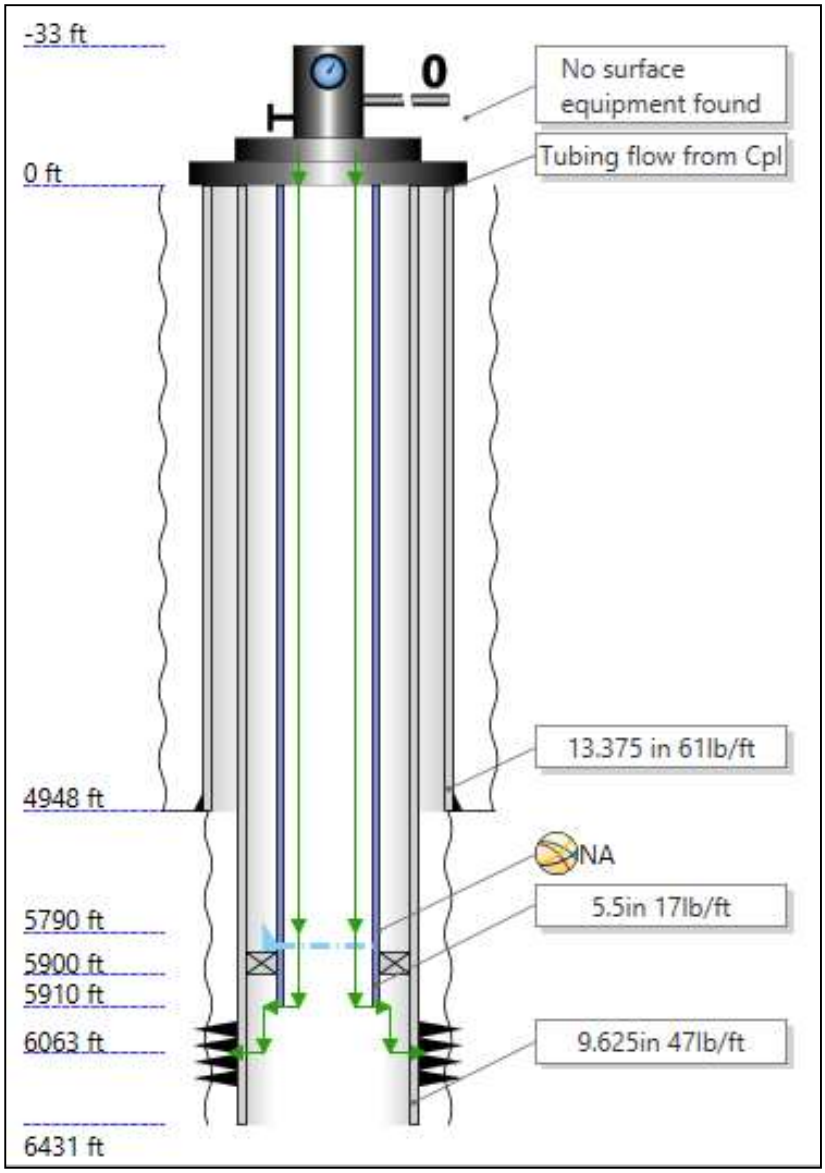

Figure 4-2. Tubing and casing design based on the nodal analysis results.

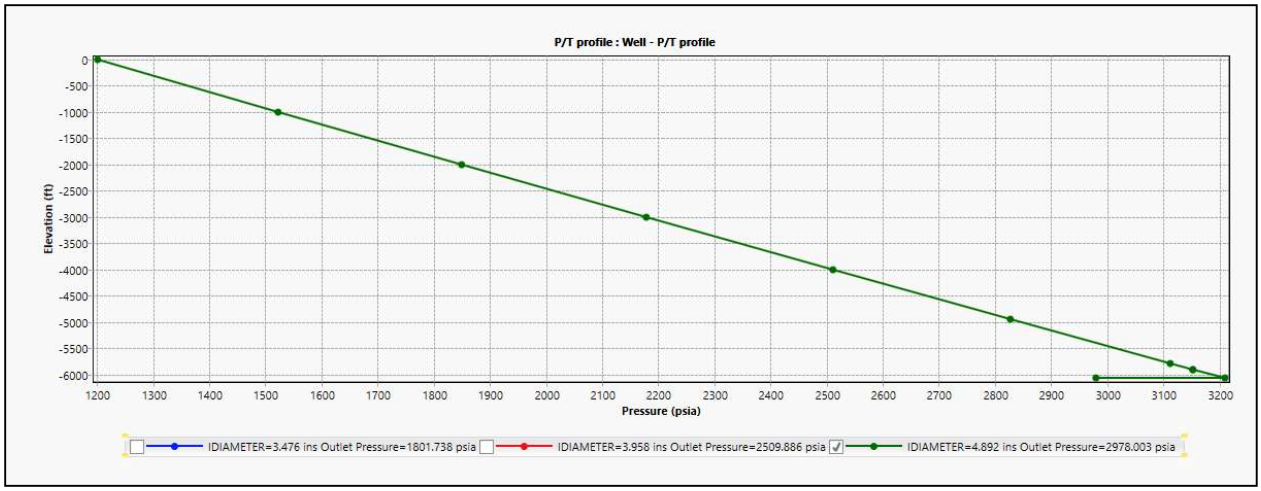

Figure 4-3. Pressure versus depth for injection of the maximum injection rate with wellhead pressure set to 1200 psi.

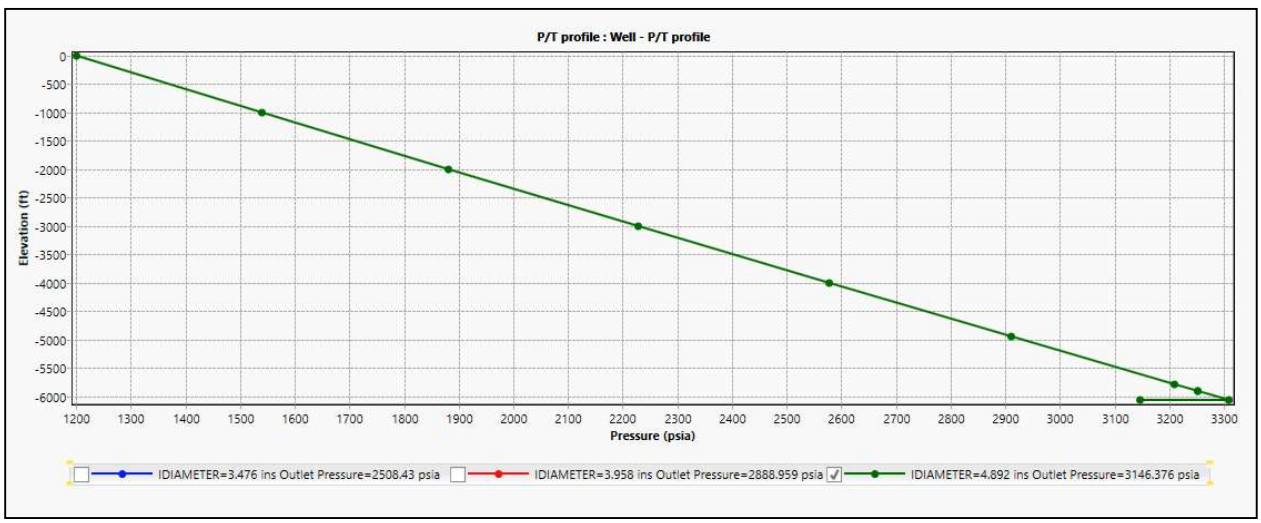

Figure 4-4. Pressure versus depth for injection of the average injection rate with wellhead pressure set to 1200 psi.

4.5. Casing Program

The NCV-3 injection well design has been developed to accommodate a 5 1/2-inch outer diameter (OD) tubing string, based on the nodal analysis presented in the previous section and was designed to accommodate the concentric casing sizes required to isolate the injection reservoir from USDWs and prevent fluid flow into any unauthorized zones. In accordance with 40 CFR § 146.86, the casing program was designed while considering the following factors:

1) Depth to the injection zone;
2) Injection pressure, external pressure, internal pressure, and axial loading;
3) Hole sizes;
4) Size and grade of all casing strings (wall thickness, external diameter, nominal weight, length, joint specification, and construction material);
5) Corrosiveness of the CO_2 stream and formation fluids;
6) Downhole temperatures;
7) Lithology of injection and confining zones;
8) Type or grade of cement and cement additives;
9) Quantity, chemical composition, and temperature of the CO_2 stream;

In accordance with 40 CFR §146.87, prior to running each casing string, all open-hole logging and testing operations (deviation surveys, open hole logging, formation testing) will be completed. Please see the *Pre-operations Formation Testing section* of this permit for a detailed breakdown of which specific methods and tools will be utilized for the well.

To prevent unintended fluid migration and protect USDW integrity, the surface casing string will extend through shallow USDWs, the intermediate casing string will extend through the lowermost USDW aquifer (St. Peter Sandstone), and the long string casing will extend from the surface through the injection interval with a sufficient number of centralizers. All casing strings will be cemented in place to the surface in one or more stages (see the cementing program below for additional detail).

The metallurgy for each casing string was selected to be compatible with the fluids and stresses encountered within the well and meet or exceed API and ASTM standards. The tubing will be 13CrL80 steel which is 13% chrome and will be corrosion resistant. The 9 5/8-inch-long string casing will be constructed of 13CrL80 steel from the injection zone to 500 feet above the confining zone (top of Eau Claire) where the casing grade will change to L80 (mild steel).

Casing loadings were modelled using Schlumberger's Tubing Design and Analysis (TDAS) software. To ensure sufficient structural strength and mechanical integrity throughout the life of the HGSS project, stresses were analyzed and calculated according to worst-case scenarios and tubular specifications were selected accordingly. Minimum design factors are presented **in Table 4-1**. **Table 4-5** through **Table 4-8** below summarize the results of this stress analysis. The burst,

collapse, and tensile strength of each tubular was calculated according to the scenarios defined below and was dependent on fracture gradients, mud weight, depths, and minimum safety factors.

As demonstrated, these safety factors are sufficient in the worst-case scenarios to prevent migration of fluids into or out of USDWs or unauthorized zones. The casing and tubing materials are designed to be compatible with the fluids encountered and the stresses induced throughout the sequestration project. Schlumberger Integrated Drilling Systems design standards were incorporated for the casing design calculations, and Schlumberger Completions group standards were incorporated for the tubing design calculations.

Table 4-4. Minimum Design Factors.

Load	Casing Design Criteria	Tubing Design Criteria
Burst	1.1	1.1
Collapse	1.1	1.1
Tension	1.6	1.4
Compression	1.2	1.2
VME	1.25	1.25

The casing installed in any well should be designed to withstand collapse loading based on the following assumption:

1. The hydrostatic head of the drilling fluid in which the casing is run acts on the exterior of the casing at any given depth;
2. Subject to the casing is 1/3 evacuated;
3. The production casing is completely evacuated;
4. The effect of axial stresses on collapse resistance shall be considered; and
5. The effect of temperature deration and casing wear shall be considered.

Any casing/liner that creates an annular space with the production tubing shall be treated as a production casing/liner. The casing installed in any well shall be designed to withstand tensile loading based on the following assumptions:

1. The weight of casing is its weight in air; and
2. The tensile strength of the casing is the yield strength of the casing wall or of the joint, whichever is the lesser.

The following additional assumptions were made during the design process for the Injection wells:

1. A 5% casing wear due to Bottomhole Assembly (BHA) rotation is assumed on all casing design segments with consecutive hole sections;
2. Wall tolerance of 87.5% is assumed as per API standards;

3. Temperature deration is considered on the design of the 13-3/8-inch and 9-5/8- inch casing strings; and
4. The 13-3/8-inch casing is being proposed and engineered to be required to comply with a casing design to pass a 1/3 evacuation loading on collapse.

If the casing recommended is not available, final casing selection would be based on what other technical options are currently available and what might in stock in US-based tubular suppliers' inventory. The minimum criteria for an alternate design would be to exceed standard design criteria.

Table 4-5. Surface Casing Load Scenarios Evaluated showing the design factors for each scenario.

Load Case	Pressure Profile		Temperature Profile	Wear Percentage	Minimum Design Factor				
					Pressure		Axial		Triaxial
	Internal	External			Load	Factor	Load	Factor	Factor
Green Cement Press Test	9.6 ppg	Cement	Static	5	Burst	3.09	Tension	7.82	3.45
As Cemented	9.6 ppg	Cement	Static	5	Collapse	2.87	Compression	9.32	13.03
1/3 Evacuation - 4948 ft	1/3 Evacuation	9.2 ppg	Static	5	Collapse	1.84	Compression	7.38	9.42
Pressure Test - 500 ft	9.2 ppg + 2000 psi	Pore pressure	Static	5	Burst	1.39	Tension	5.8	1.51
100 bbl Gas Kick - 4948 ft	Gas kick	Pore pressure	Circulating	5	Burst	3.04	Compression	6.81	2.82
1/3 Replacement - 4948 ft - Circulating	1/3 Replacement	Pore pressure	Circulating	5	Burst	2.42	Compression	11.9	2.28
1/3 Replacement - 4948 ft - Static	1/3 Replacement	Pore pressure	Static	5	Burst	2.43	Tension	10.66	2.63

Table 4-6. Intermediate Casing Load Scenarios Evaluated showing the design factors for each scenario.

Load Case	Pressure Profile		Temperature Profile	Wear Percentage	Minimum Design Factor				
					Pressure		Axial		Triaxial
	Internal	External			Load	Factor	Load	Factor	Factor
Green Cement Press Test	9.2 ppg	Cement	Static	5	Burst	2.3	Tension	3.36	2.38
As Cemented	9.2 ppg	Cement	Static	5	Collapse	1.82	Compression	2.35	4.04
1/3 Evacuation - 6600 ft	1/3 Evacuation	9.2 ppg	Static	5	Collapse	1.18	Compression	1.9	2.75
Pressure Test - 4948 ft	9.2 ppg + 2000 psi	Pore pressure	Static	5	Burst	1.33	Tension	3.56	1.42
100 bbl Gas Kick - 6600 ft	Gas kick	Pore pressure	Circulating	5	Burst	2.7	Tension	8.68	2.99
1/3 Replacement - 6600 ft - Circulating	1/3 Replacement	Pore pressure	Circulating	5	Burst	2.78	Tension	8.86	3.08
1/3 Replacement - 6600 ft - Static	1/3 Replacement	Pore pressure	Static	5	Burst	2.79	Tension	4.47	2.97

Table 4-7. Long-String Casing Load Scenarios evaluated showing the design factors for each scenario.

Load Case	Pressure Profile		Temperature Profile	Wear Percentage	Minimum Design Factor				
					Pressure		Axial		Triaxial
	Internal	External			Load	Factor	Load	Factor	Factor
Green Cement Press Test	9.2 ppg + 1728 psi	Cement	Static	5	Burst	3.98	Tension	3.49	3.43
As Cemented	9.2 ppg	Cement	Static	5	Collapse	3.88	Tension	5.08	5.43
Full Evacuation - Static	Full Evacuation	9.2 ppg	Static	5	Collapse	1.32	Tension	4.8	2.26
Pressure Test - 6600 ft	9.2 ppg + 5000 psi	Pore pressure	Static	5	Burst	1.31	Tension	3.05	1.38

Table 4-8. Tubing load scenarios evaluated showing the design factors for each scenario.

Load Case	Pressure Profile		Temperature Profile	Wear Percentage	Minimum Design Factor				
	Internal	External			Pressure		Axial		Triaxial
					Load	Factor	Load	Factor	Factor
As Run	10 ppg	10 ppg	Static	5	-	-	Tension	4.54	4.04
Tubing Pressure Test	10 ppg + 6,000 psi	10 ppg	Static	5	Burst	1.29	Tension	1.98	1.34
Installed Load	10 ppg	10 ppg	Static	5	-	-	Tension	4.42	3.94
Annular Pressure Test	10 ppg	10 ppg + 1500 psi	Static	5	Collapse	3.35	Tension	4.01	2.32
Full Evacuation - Static	Full Evacuation	10 ppg	Static	5	Collapse	1.76	Tension	3.23	2.11
Water Shut-In - Cold	8.47 ppg	10 ppg	Static	5	Collapse	11.67	Tension	4.11	3.66
Water Shut-In - Static	8.47 ppg	10 ppg	Static	5	Collapse	11.67	Tension	4.11	3.66
Surface Tubing Leak - Static	8.47 ppg	10 ppg + 2665 psi	Static	5	Collapse	1.76	Tension	3.64	1.66

4.5.1. Casing Summary

The NCV-3 injection well design includes the following casing strings:

- A 30-inch-diameter conductor string set inside a 34-inch borehole;
- A 20-inch-diameter surface string set inside a 24-inch borehole;
- A 13 3/8-inch-diameter intermediate string set inside a 17 1/2-inch borehole;
- A 9 5/8-inch-diameter long string set inside a 12 ¼-inch borehole.

Please refer to

Table 4-11. Specifications of the Anticipated CO2 Stream Composition

Component	Specification	Unit
Minimum CO2	98	mole%, dry basis
Water content	< / = 20	lb/MMscf
Impurities (dry basis):		
Total Hydrocarbons	< / = 2	mol%
Inert Gases (N2, Ar, O2)	< / = 2	mol%
Hydrogen	< / = 1	mol%
Alcohols, aldehydes, esters	< / = 500	ppmv
Hydrogen Sulfide	< / = 100	ppmv
Total Sulfur	< / = 100	ppmv
Oxygen	< / = 100	ppmv
Carbon monoxide	< / = 100	ppmv
Glycol	< / = 1	ppmv

below for a summary of the properties and placement of casing strings within the casing program. All casing strings will be cemented to the surface in one or more stages in accordance with 40 CFR §146.86. The borehole diameters are considered conventional sizes for the sizes of casing that will be used and should allow ample clearance between the outside of the casing and the borehole wall to ensure that a continuous cement seal can be emplaced along the entire length of the casing string. Each section of the well is discussed in a separate subsection below.

4.5.2. Conductor Casing

The conductor casing consists of 30-inch, B-grade carbon steel pipe which will provide the stable base required for drilling activities in unconsolidated sediment. Depending on wellsite conditions, the conductor casing will be driven or drilled into shallow soils until striking bedrock

or casing can advance no further below the ground surface. The conductor casing will then be cemented in place.

4.5.3. Surface Casing

The surface casing consists of 20-inch-diameter 94-lb/ft J55 grade pipe with buttress thread couplings (BTC). The metallurgy of this casing string will be carbon steel and the surface casing string will be cemented to the surface. Prior to running the surface casing downhole, all appropriate logging and testing operations will be completed. The surface string casing will then be run and cemented to the surface to isolate and protect USDW zones. After an appropriate amount of time for cement setting, a cement bond log will be run to ensure a sufficient seal is in place to prevent fluid migration into USDWs. Please refer to the *Pre-operations Formation Testing section* of this permit for further details.

4.5.4. Intermediate Casing

The intermediate casing consists of 13 3/8-inch-diameter 61-lb/ft J55 grade pipe with BTC couplings. The intermediate string will extend from the ground surface to the top of the confining zone (Eau Claire). The metallurgy of this casing string will be carbon steel and the intermediate casing string will be cemented to the surface to isolate and protect USDW zones. Prior to running the intermediate casing downhole, all appropriate logging and testing operations will be completed. The intermediate string casing will then be run and cemented to the surface to isolate and protect USDW zones. After an appropriate amount of time for cement setting, a cement bond log will be run to ensure a sufficient seal is in place to prevent fluid migration into USDWs. Please refer to the *Pre-operations Formation Testing* section of this permit for further details.

4.5.5. Long String Casing

The long-string casing will be 9 5/8-inch-diameter pipe composed of two sections. The uppermost section will extend from the ground surface to 500-feet from the top of the confining unit (Eau Claire) and will be comprised of 47-lb/ft L80 or N80 grade carbon steel pipe with either long thread coupling (LTC) or BTC connections. The lower long string section will extend from 500' above the confining zone to the wells terminal depth (Precambrian). The lower long string section will be comprised of 47-lb/ft, 13CrL80 or 13CrN80 grade pipe with a premium metal-to-metal gas tight seal such as JFEBEAR™. Upon selection of the proprietary seal type, the seal type will be communicated to the Director and HGCS will utilize such seal pending approval from the Director. Prior to running the intermediate casing downhole, all appropriate logging and testing operations will be completed. The long string casing will then be run and cemented to the surface to isolate and protect USDW zones. After an appropriate amount of time for cement setting, a cement bond log will be run to ensure a sufficient seal is in place to prevent

fluid migration into USDWs. Please refer to the *Pre-operations Formation Testing Section* of this permit for further details.

4.6. Injection Well Tubing and Packer Program

The tubing connects the injection zone to the wellhead, providing a pathway for safely injecting and storing CO_2. In accordance with 40 CFR § 146.86 (c), the tubing and packer material used for construction of the NCV-3 injection well will be compatible with fluids with which the material may be expected to come into contact with and will meet or exceed API and ASTM international standards. HGCS will inject CO_2 through corrosion-resistant tubing with a packer set at a depth opposite a cemented interval a location approved by the Director. While selecting the tubing and packers for the NCV-3 injection, the following factors were taken into consideration:

1. Depth of setting;
2. Characteristics of the CO_2 stream (chemical content, corrosiveness, temperature, and density) and formation fluids;
3. Maximum proposed injection pressure;
4. Maximum proposed annular pressure;
5. Proposed injection rate (intermittent or continuous) and volume and/or mass of the CO_2 stream;
6. Size of tubing and casing; and
7. Tubing tensile strength, burst and collapse pressures.

A summary of these factors is available in **Table 4-10**, **Table 4-11**, and **Table 4-12**. Any change to the tubing and packer specifics detailed in the below will be communicated to the Director.

The HGSS injection wells will utilize 5 ½-inch 17 lb/ft, 13CrL80 or 13CrN80 tubing, which will resist corrosion from the injectate. The packer for injection wells will consist of a Baker Hughes 3-foot long, 8.218” OD, 6.0” ID, Model F Permanent Packer with a BMS-S210 13Cr80 Mandrel and 70hd Nitrile Element System rated for pressures up to 5000 psi. The packer with be connected to a 10 foot-long, 6.250” OD, 4.875” ID model G-22 locator type seal assembly for easy workover operations. Both the packer and locator seal assembly with feature VAM couplings and will be comprised of 13CR80 alloy. Please refer to **Table 4-8**, **Table 4-10**, **Table 4-11** and **Table 4-12** for modelled load scenarios and specifications for the tubing and packer. The annulus between the tubing and long-string casing will be filled with noncorrosive fluid described in further detail within the annular fluid program in Section 4.8 below.

Table 4-9. HGSS Injection Well Casing Program and Properties of Materials.

Tubular	Hole size (in)	Approximate Shoe Depth (ft, MD)	Tubular OD/ID Size (in)	Wall Thickness (in)	Weight (lb/ft)	Grade	Metallurgy	Connection Type	Connection OD (in)	Burst / Collapse (psi)	Body Yield Stress (KSI)
Conductor	34	40 +/- 0	30.000 / 29.000	0.5	157.53	B	Carbon steel	Welded	NA	1020 / 220	35
Surface	24	500 +/- 0	20.000 / 19.124	0.438	94	J55	Carbon steel	BTC	21.000	2110 / 520	55
Intermediate	17.5	4847 +/-200	13.375 / 12.515	0.430	61	J55	Carbon steel	BTC	14.375	3090 / 1540	55
Long-string	12.25	4347+/-200	9.625 / 8.681	0.472	47	L80 or N80	Carbon steel	LTC	10.625	6870 / 4760	80
Long-string	12.25	6508 +/-200	9.625 / 8.681	0.472	47	13cr L80 or N80	Chrome Alloy	*JFE BEAR	10.625	6870 / 4760	80
Tubing	-	5994 +/-200	5.500 / 4.892	0.304	17	13cr L80 or N80	Chrome Alloy	*JFE BEAR	6.050	7740 / 6290	80

* *JFEBEAR™ or similar premium connection*

Table 4-10. Required Specifications for Tubing and Packer Selection and Placement (§146.86(c))

Parameter		Attribute
Characteristics of the CO_2 Stream	Chemical Content	Please refer to Table 4-11 below.
	Corrosiveness	*Stream will contain <50ppm of water and likely not to cause CO2-driven corrosion*
	Temperature	50 ºF (At wellhead) 131ºF (Injection Zone)
	Density	57.26 lb/ft^3 (at wellhead, under 1400 psi) 49.65 lb/ft^3 (at injection zone, under 3,395 psi)
Characteristics of Formation Fluids (Mount Simon Reservoir)	Temperature	131 ºF
	Formation Pressure	2,634 psi
	Fluid Density	68.5 lb/ft^3
	Salinity	160,000 Mg/L
Maximum Proposed Injection Pressure (Downhole)		3,753 psi
Maximum Proposed Annular Pressure		4,003 psi
Average Proposed Injection Rate (CO_2)		2,740 Metric Tons/day
Volume of CO_2 Stream		53 MMCF/day

Table 4-11. Specifications of the Anticipated CO_2 Stream Composition

Component	Specification	Unit
Minimum CO_2	98	mole%, dry basis
Water content	< / = 20	lb/MMscf
Impurities (dry basis):		
Total Hydrocarbons	< / = 2	mol%
Inert Gases (N_2, Ar, O_2)	< / = 2	mol%
Hydrogen	< / = 1	mol%
Alcohols, aldehydes, esters	< / = 500	ppmv
Hydrogen Sulfide	< / = 100	ppmv
Total Sulfur	< / = 100	ppmv
Oxygen	< / = 100	ppmv
Carbon monoxide	< / = 100	ppmv
Glycol	< / = 1	ppmv

Table 4-12. Tubing and Packer Details.

Item	Setting Depth (Approximate)	Tensile Strength (psi)	Burst Strength (psi)	Collapse Strength (psi)	Material (weight/grade/connection)
Tubing	0-*5994	95,000	7,740	6,290	17 lb ft^{-1} /13Cr80 or N80 / **JFEBEAR™
Packer (Baker Hughes Model F Permanent Packer)	*5964	-	7,000	5,000	13Cr80/ VAM Coupling

***Setting depth interval is dependent on geological conditions observed in the field and is subject to change.**

** JFEBEAR™ or similar premium connection

4.7. Injection Well Cementing Program

This section discusses the types and quantities of cement that will be used for each string of casing during construction of the HGSS NCV-3 injection well. In accordance with 40 CFR §146.86, the cement and cement additives were designed to have sufficient quality and quantity to maintain seal integrity throughout the life of the HGSS project and are compatible with the fluids (CO_2 stream and formation fluids) with which the materials may be expected to come into contact and meet or exceed API and ASTM standards. The cementing program has been designed to prevent the movement of fluids out of the sequestration zone into overlying USDWs. The cementing program was designed while considering the following critical factors:

1. Depth to the sequestration zone;
2. Injection pressure, external pressure, internal pressure, and axial loading;
3. Hole sizes;
4. Size and grade of all casing strings (wall thickness, external diameter, nominal weight, length, joint specification, and construction material);
5. Corrosiveness of the CO_2 stream and formation fluids;
6. Downhole temperatures;
7. Lithology of sequestration and confining zones;
8. Type or grade of cement and cement additives; and
9. Quantity, chemical composition, and temperature of the CO_2 stream.

After cementing each casing string to the surface, the integrity and location of cement will be verified using a cement-bond log capable of evaluating the cemental quality radially and

identifying the presence/location of channels to ensure against the likelihood of unintended release of CO_2 from the sequestration zone into the storage complex. Please refer to the pre-operational formation testing plan for further details. Any changes to the cement program will be communicated to the Director prior to well construction operations.

Table 4-13 below features the cement types, cement additives, quantities, and staging depths for each casing string. Each casing string will be cemented to the surface in one or more stages using the balance method. A sufficient number of casing centralizers will be used on all casing strings to centralize the casing in the hole and help ensure that cement completely surrounds the casing along the entire length of pipe. Except for the conductor casing, a guide shoe or float shoe will be run on the bottom of the bottom joint of casing and a float collar will be run on the top of the bottom joint of casing.

Due to the technical challenges involving cementing within geologic formations such as the Potosi Dolomite, the intermediate casing string of each HGSS injection well will be cemented in two stages. To facilitate a two-stage cement job, a multiple-stage cementing tool will be installed approximately 200 ft above the top of the Potosi Formation. After the completion of the first-stage cement job for the intermediate casing string, the multiple-stage cementing tool will be opened and fluid will be circulated down the casing and up the annulus above the cementing tool for a minimum of 8 hours to allow the first-stage cement job to acquire sufficient gel strength.

Due to its presence within the storage complex, the lower 2161 ft (approximately 4347 to 6508-ft from terminal depth to 500 ft above the confining layer) of the 9 5/8–inch long string casing will be cemented with "EverCRETE" (or a similar product) CO_2 corrosion-resistant cement. Additionally, the excess space ("rathole") from the top of the Argenta to the well's terminal depth will be plugged back with EverCRETE to avoid unintended pressure transmission from the injection zone into the basement or near-basement zones. This will be likely be accomplished by setting the float shoe just above the top of the Argenta during long string cementing operations, however other methods may be considered. After an appropriate amount of setting time, cement-bond logs will be run and analyzed for each casing string as detailed in *Pre-operations Formation Testing Plan.*

Table 4-13. Specifications of the HGSS Cementing Program.

Casing String	Approximate Casing Depth (ft, MD)	Borehole Diameter (in.)	Casing O.D. (in.)	Cement Interval (feet, MD)	Cement
Conductor Casing	40 ±0	34”	30”	0-40	**System:** Grouted in with Portland cement
Surface Casing	500±0	24”	20”	0-500	**System:** Class A with 2% $CaCl_2$ and 0.25 lb/sack cell flake; weight: 15.6 lb/gal; yield: 1.18 ft^3/sack; quantity: *805 sacks
Intermediate Casing	4847±200	17.5”	13.375”	**Stage 2 Lead-in**: 0-4112 **Stage 2 Tail:** 4112-4362	**Stage 2 Lead-in:** 65/35 Pozmix with 6% gel; weight 12.5 lb/gal; yield: 1.95 ft^3/sack; quantity: *2056 sks **Stage 2 Tail:** 50/50 Pozmix, no gel, 2% Cal Seal, 10% salt; weight: 15.6 lb/gal; yield: 1.26 ft^3/sack; quantity: *517 sacks
	4847±200	17.5”	13.375”	**Stage 1 system:** 4362-4847 (Eau Claire Top to 200’ above Potosi Dolomite)	**Stage 1 system:** 50/50 Pozmix, no gel, 2% Cal Seal, 10% salt, 0.75% dispersant, 0.25% defoamer; weight: 15.6 lb/gal; yield 1.1 ft^3/sack; quantity: *910 sacks.
Long string Casing	6508±200	12.25”	9.625	**Lead-in**: 0-4347 (500’ above Eau Claire to Surface) **Tail:** 4347-6508 (TD to 500’ above Eau Claire)	**System Lead-in:** 65/35 Pozmix with 6% gel; weight: 12.5 lb/gal; yield: 1.95 ft^3/sack; quantity: 910 sacks. **System Tail:** EverCRETE CO_2- resistant cement (or similar); weight: 15.82 lb/gal; yield: 1.12 ft^3/sack; quantity: **1039 sacks.

*** Number of calculated cement sacks are based on the deepest HGSS injection well, NCV-1, and are subject to change based on geological conditions encountered in the field.**

**Value represents total sacks of EverCRETE needed to fill annular space (962 sacks) plus an additional estimated 77 sacks to plug-back rathole.

4.8. Injection Well Annular Fluid

The annular space above the packer between the 9 5/8-inch long-string casing and the 5 1/2-inch injection tubing will be filled with a non-corrosive fluid to provide a positive pressure differential to stabilize the injection tubing and inhibit corrosion. The annular fluid will be a dilute salt solution such as potassium chloride (KCl), sodium chloride (NaCl), calcium chloride ($CaCl_2$), or similar solution. The fluid will be mixed onsite from dry salt and good quality (clean) freshwater, or it will be acquired pre-mixed. The fluid will also be filtered to ensure that solids do not interfere with the packer or other components of the annular protection system. The final choice of the type of fluid will depend on availability.

The annulus fluid will contain additives and inhibitors including a corrosion inhibitor, biocide (to prevent growth of harmful bacteria), and an oxygen scavenger. Example additives and inhibitors are listed below along with approximate mix rates:

- TETRAHib Plus (corrosion inhibitor for carbon steel tubulars [i.e., casings, tubing]) – 10 gal per 100 bbl of packer fluid; or
- CORSAF™ SF (corrosion inhibitor for use with 13Cr stainless steel tubulars or a combination of stainless steel and carbon steel tubulars) – 20 gal per 100 bbl of packer fluid; or
- Spec-cide 50 (biocide) – 1 gal per 100 bbl of packer fluid; or
- Oxban-HB (non-sulfite oxygen scavenger) – 10 gal per 100 bbl of packer fluid.

These products recommendations were provided by Tetra Technologies, Inc., of Houston, Texas. Actual products may vary from those described above.

4.9. Injection Wellhead and Valve Program

This section details the specifications of the injection wellheads and valves to be used for the NCV-3 injection well. All wellheads, valves, piping and surface facilities have been designed to meet or exceed API and ASTM international standards for the maximum anticipated injection pressure and will be maintained in a safe and leak-free condition. HGCS will equip all ports on the wellhead assembly above the casing bowl of injection wells with valves, blind flanges, or similar equipment. HGCS will also equip the injection well with valves to provide isolation of wells from the pipeline system and allow entry into the wells.

The HGSS NCV-3 injection wellhead will consist of the following components, from bottom to top:

- 20-3/4-in. x 13-3/8-in., 3,000-psi casing head
- 13-5/8-in. x 11-in, 5,000-psi casing head
- 11-in. x 5-1/8-in., 5,000-psi tubing head

- 5-1/8-in. 5,000-psi full-open master control gate valve
- 5-1/8-in. 5,000-psi automated tubing flow control valve
- 5-1/8-in. 5,000-psi cross with one (1) 5-1/8-in. X 5,000-psi 2 1/16' gate valve with 2" LPT adapter flange and 5-1/8 -in. 5,000-psi automated tubing flow control valve
- 5-1/8 -in. 5,000-psi Crown (swab) valve

The wellhead and Christmas tree will be composed of materials that are designed to be compatible with the injection fluid upon which the material may be expected to come into contact with. All components that encounter the CO_2 injection fluid will be made of a corrosion-resistant alloy such as stainless steel. Because the CO_2 injection fluid will be very dry, use of stainless-steel components for the flow-wetted components is a conservative measure to minimize corrosion and increase the life expectancy of this equipment. Materials that will not have contact with the injection fluid, such as the surface casing and shallow portion of the long string, will be manufactured of carbon steel. A preliminary materials specification for the wellhead and Christmas tree assembly is described in **Table 4-14** using material classes as defined in American Petroleum Institute (API) Specification 6A (Specification for Wellhead and Christmas Tree Equipment). A summary of material class definitions is provided in **Table 4-15**. The final wellhead and Christmas tree materials specification may vary slightly from the information given below because neither has been selected yet. A generalized illustration of the wellhead and Christmas tree is provided in **Figure 4-5**. If any changes are made to the wellhead and valve program, HGSC will communicate these changes to the Director and will finalize program specifics upon approval from the Director.

Table 4-14. Materials Specification of Wellhead and Christmas Tree.

Component		Material Class[(a)]
Casing Head Housing (for 20-in. surface casing)		DD, EE
Casing Head Spool (for 13-3/8-in. intermediate casing	Casing spool (20-3/4 in. 3K X 13-5/8 5K)	AA, BB, DD, EE
	Casing hanger (20 in. X 13-3/8 in.)	AA, DD
Tubing Spool Assembly (for 9-5/8-in. long-string casing)	Spool	AA
	Casing hanger	AA, DD
Christmas Tree	Tubing head adapter	DD, EE
	Manual gate valve	BB
	Pneumatic actuated gate valves (2)	BB
	Tubing hangar (for 5-1/2-in. tubing)	CC

(a) When multiple classes are given, the highest class applies. Cameron uses this convention because not all components are available in all class types.

Table 4-15. Material Classes from API 6A (Spec. for Wellhead and Christmas Tree Equipment).

API Material Class	Body, Bonnet, End & Outlet Connections	Pressure Controlling Parts, Stems, & Mandrel Hangers
AA – General Service	Carbon or alloy steel	Carbon or low-alloy steel
BB – General Service	Carbon or low-alloy steel	Stainless steel
CC – General Service	Stainless steel	Stainless steel
DD – Sour Service[(a)]	Carbon or low-alloy steel[(b)]	Carbon or low-alloy steel[(b)]
EE – Sour Service[(a)]	Carbon or low-alloy steel[(b)]	Stainless steel[(b)]
FF – Sour Service[(a)]	Stainless steel[(b)]	Stainless steel[(b)]
HH – Sour Service[(a)]	Corrosion-resistant alloy[(b)]	Corrosion-resistant alloy[(b)]

Source: Cameron Surface Systems, Houston, Texas

(a) As defined by National Association of Corrosion Engineers (NACE) Standard MR075.

(b) In compliance with NACE Standard MR0175.

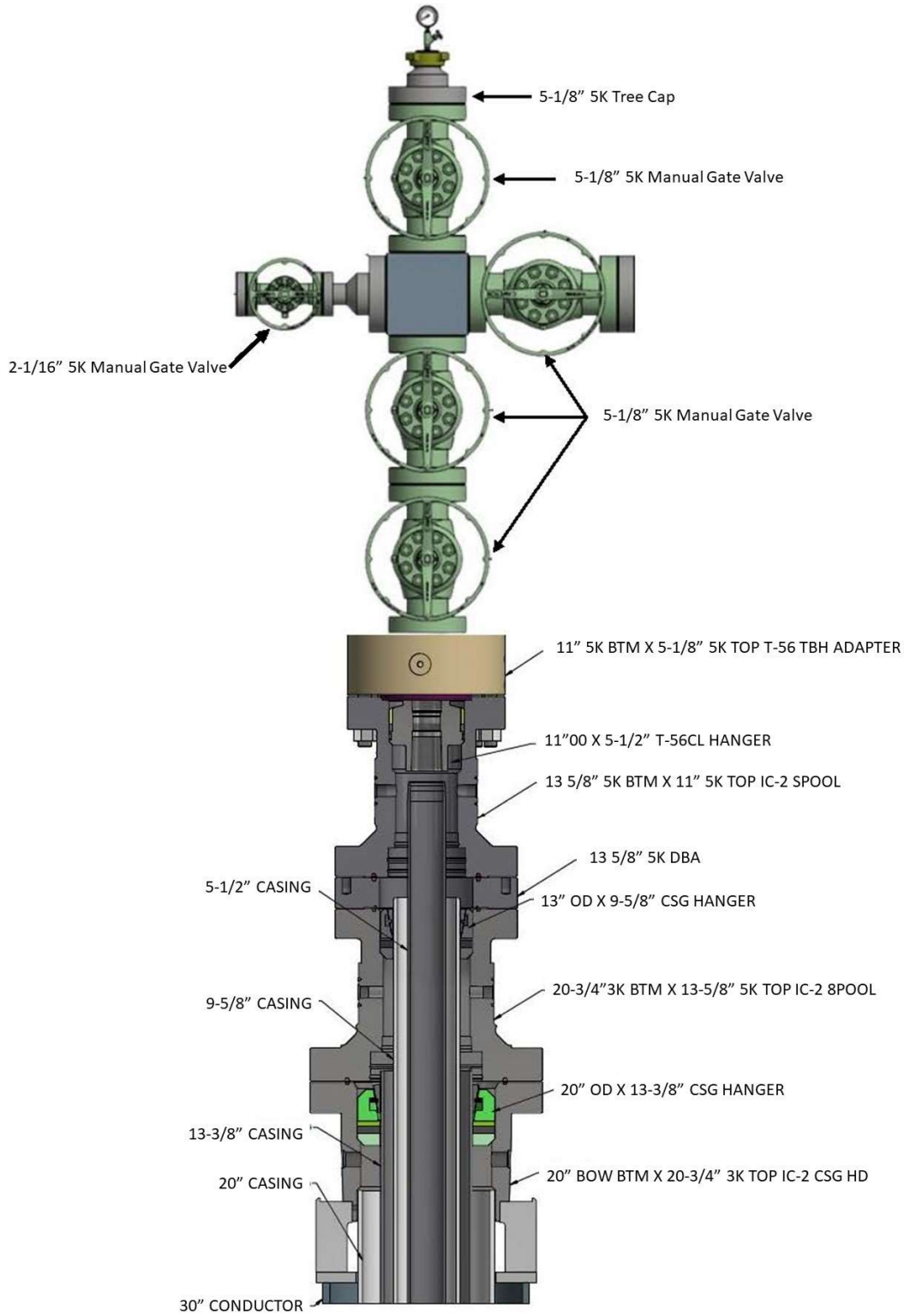

HGSS CO_2 INJECTOR WELLS

Figure 4-5. A design schematic of the HGSS injection wellhead and Christmas tree used for the NCV-3 CO_2 injection well.

4.10. Injection Well Routine Maintenance

HGCS will perform routine well maintenance on all injection wells. Routine maintenance will consist of wellhead valve maintenance and a review of recorded casing annular pressure measurements. If a significant deviation is noted (such that the mechanical integrity of the well is comprised or may become compromised), the appropriate remediation plan will be triggered. Please see the *Injection Well Operational Plan* and the *Emergency and Remedial Response Plan* sections for additional details.

4.11. Injection Well Perforation Program

The long-string casing will be perforated across the Mount Simon Sandstone with deep-penetrating shaped charges. The exact perforation interval will be determined after the well is drilled and characterized with geophysical logging/formation testing techniques. The planned perforations for the NCV-3 injection well are anticipated to be between 5964 feet and 6268 feet with 6 shots-per-foot and 60-degree phasing. Perforation diameters are 0.5 inches, and lengths are 15 inches.

4.12. Summary of Monitoring Technologies Deployed in Injection Wells

To meet monitoring and operational requirements of 40 CFR §146.90 and §146.88, several technologies will be deployed within-and-around the NCV-3 injection well to monitor critical parameters needed to ensure sustained integrity of the HGSS storage complex and protection of overlying USDWs. **Table 4-16** below details the suite of monitoring technologies that will be deployed directly within or around injection wellbore and surface injection wellhead/tree assemblies. Please refer to the testing and monitoring section of this permit for a more detailed breakdown of the HGSS monitoring network, monitoring technologies and monitoring strategies.

Table 4-16. *Technologies Deployed in NCV-3 Injection Well for Monitoring Purposes

Device(s)	Location	Purpose	Monitoring category
Wellhead Pressure-Temperature Gauge	Surface	Wellhead Injection Pressure and temperature	CO_2 Injection Process Monitoring
Downhole Pressure - Temperature Gauge	Reservoir-Just Above Packer (ported for formation monitoring)	Reservoir & Bottom-Hole Pressure/Temperature	
Continuous Annular Pressure Gauge	Surface	Annular Pressure Monitoring	
Downhole Pressure-Temperature Gauge	Reservoir-Just Above Packer (Ported for annular monitoring)	Annular Pressure Monitoring	

Device(s)	Location	Purpose	Monitoring category
Distributed Temperature Sensing (DTS)	Ran Along Outside of Long-String Casing (Surface to TD)	Distributed Temperature Monitoring (Reservoir, Upper Mt. Simon, Eau Claire, Argenta, Precambrian Basement)	CO_2 Injection Process Monitoring & In-direct Plume Monitoring
Daniel Sr Orifice Mass Flow Meter	Surface	Injection Rate and Volume	CO_2 Injection Process Monitoring
Distributed Acoustic Sensing Fiber Optics (DAS)	Ran Along Outside of Long-String Casing (Surface to TD)	3D/4D VSP & Microseismic	In-direct Plume Monitoring & Seismicity Monitoring
Boreal Laser Gas Detection System	Area Surrounding Wellhead/Tree Assembly	Leak Detection	Surface or Near Surface Monitoring

*Note this list of technology does not encompass all monitoring technologies deployed within the HGSS monitoring network; please refer to the testing and monitoring section for a detailed breakdown of the HGSS monitoring network and strategy.

4.13. Schematic of the Subsurface Construction Details of the HGSS Injection Wells

A generalized schematic of the HGSS NCV-3 injection well is shown in **Figure 4-6**. As discussed in the previous sections, the injection well will include the following casing strings:

- A 30-inch-diameter conductor casing string will be driven or drilled into shallow soils until striking bedrock or casing can advance no further below the ground surface;
- A 20-inch-diameter surface string set at a depth of approximately 500 ft bgs;
- A 13-3/8-inch.-diameter intermediate string set at a depth of approximately 4847 ft bgs (top of the confining zone); and
- A 9 5/8-inch.-diameter long string set at an approximate depth of 6508 ft bgs (Precambrian).

All depths are preliminary and will be adjusted based on additional characterization data obtained while drilling the CO_2 injection wells. The conductor, surface, intermediate, and long casing strings will be cemented to surface in accordance with 40 CFR §146.86. The purpose of the conductor string is to provide a stable borehole across the near-surface, unconsolidated glacial deposits before drilling the remaining deeper casing strings and to help protect the USDWs. Groundwater in the vicinity of the site is normally obtained from sand and gravel deposits that are contained within the unconsolidated Quaternary-aged material above bedrock. According to the Illinois Geological Survey ILWATER map, unconsolidated sand, and gravel

deposits within the vicinity of the proposed site can range in depth from about 0 to 500 ft bgs and bedrock can range in depth from 400-600 feet bgs. The surface string will extend across the uppermost bedrock layers (Pennsylvanian age) and will help to further isolate and protect the USDWs. The intermediate casing string will extend across and isolate deeper potentially unstable layers or layers where there is potential for lost circulation to ensure that the well can be drilled to total depth, in addition to isolating and protecting the deeper USDWs (St. Peter Sandstone). The deepest casing string will extend to approximately 100 ft into the underlying Precambrian-age bedrock, and (after open-hole well logging/testing is completed) the rathole will be plugged-back with EverCRETE Cement during long-string cementing operations.

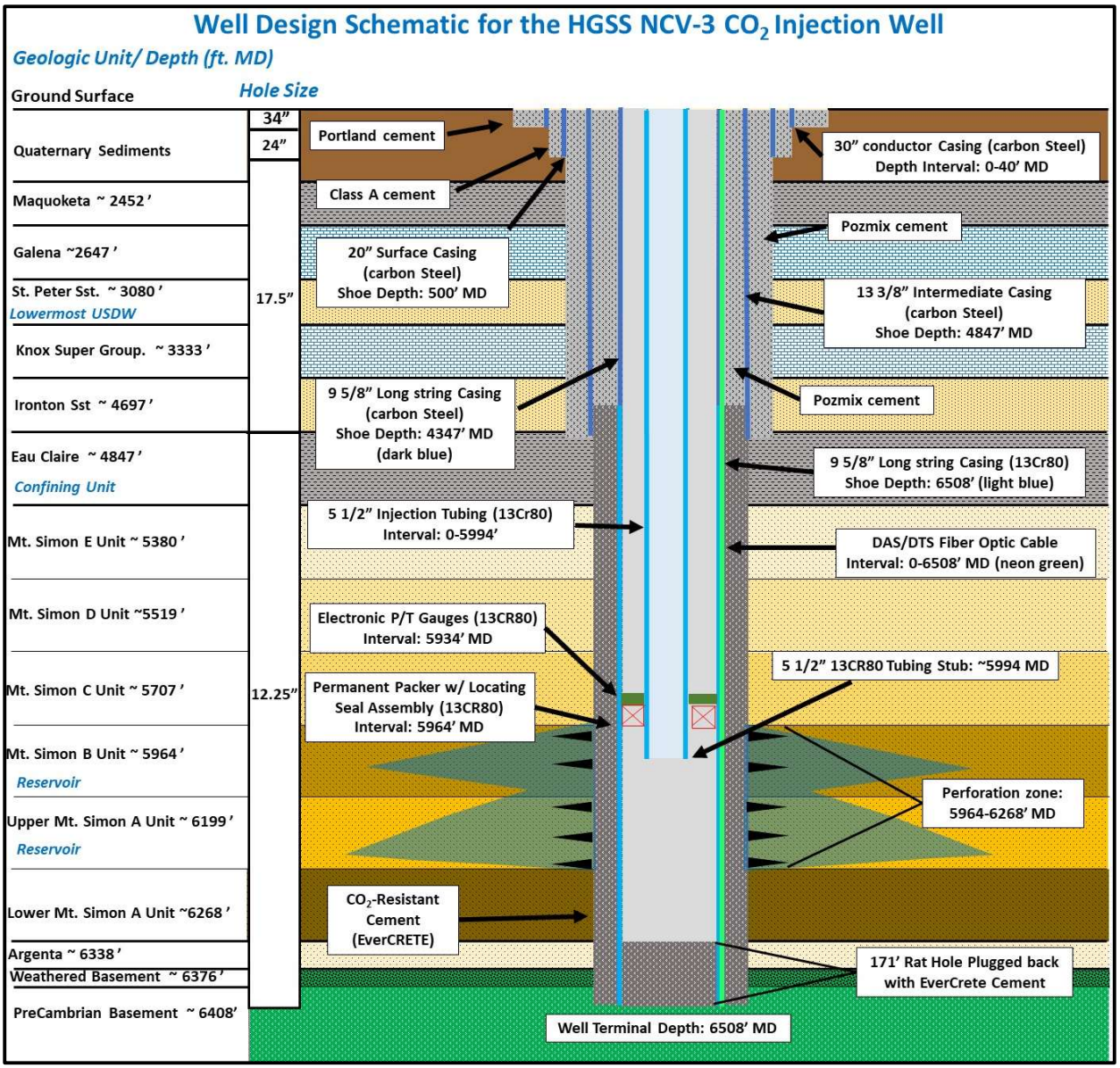

Figure 4-6. Design schematic of HGSS NCV-3 CO_2 injection well.